0083719

STATE OF WASHINGTON
DEPARTMENT OF ECOLOGY
3100 Port of Benton Blvd • Richland, WA 99354 • (509) 372-7950

August 20, 2009

Ms. Shirley J. Olinger, Manager
Office of River Protection
United States Department of Energy
P.O. Box 450, MSIN: H6-60
Richland, Washington 99352

Mr. David A. Brockman, Manager
Richland Operations Office
United States Department of Energy
P.O. Box 550, MSIN: A7-50
Richland, Washington 99352

Mr. Ted C. Feigenbaum, Project Director
Bechtel National, Inc.
2435 Stevens Center Place, MSIN: H4-02
Richland, Washington 99354

Re: DVD or CD-ROM Distribution of the Hanford Waste Treatment and Immobilization Plant Dangerous Waste Permit (WTP Permit) Issued July 31, 2009

Reference: Letter dated July 31, 2009, from Jane A. Hedges, Ecology, "Final Permit Decision on the April 20 through June 5, 2009, comment period for the Hanford Waste Treatment and Immobilization Plant Dangerous Waste Permit (WTP Permit)"

Dear Ms. Olinger, Mr. Brockman, and Mr. Feigenbaum:

The referenced letter stated "If you are receiving a copy of the WTP Permit on DVD or CD-ROM (see cc w/CD ROM, page 5), the disk will be mailed in a couple of weeks."

Enclosed is a DVD or CD-ROM of the WTP Permit, which was issued on July 31, 2009. Additional copies will be provided if requested.

If there are any questions, contact Tanya Williams at 509-372-7883.

Sincerely,

E. Fredenburg

Ed Fredenburg
Acting Tank Waste Disposal Project Manager
Nuclear Waste Program

RECEIVED
AUG 20 2009
EDMC

trw:jc
Enclosure

cc: See page 2

cc w/enc:
Dave Bartus, EPA
Barry Curn, BNI
Stuart Harris, CTUIR
Gabriel Bohnee, NPT
Russell Jim, YN
Susan Leckband, HAB
Ken Niles, ODOE
Administrative Record: Waste Treatment Plant (TSD #H-0-08)
BNI Correspondence Control
Environmental Portal
Hanford Operating Record
USDOE-ORP Correspondence Control
USDOE-RL Correspondence Control

Public Comment Period

DEPARTMENT OF ECOLOGY
State of Washington

Nuclear Waste Program | **April 2009**

Proposed Modification of the Waste Treatment and Immobilization Plant Permit

The Washington State Department of Ecology is proposing a permit modification to the *Hanford Facility Resource Conservation and Recovery Act (RCRA) Permit, Dangerous Waste Portion for the Treatment, Storage, and Disposal of Dangerous Waste for the Waste Treatment and Immobilization Plant (WTP)*. The proposed changes are located in Part III, Operating Unit 10 for the WTP.

Proposed Modification

The WTP is under construction. It is designed to treat dangerous and high-level radioactive waste in Hanford's aging underground tanks. Treating the waste will reduce risk to human health and the environment.

This proposal is one of several changes to the original permit. It allows the U.S. Department of Energy Office of River Protection to move ahead quickly and safely with WTP construction.

The proposed changes include the following:

- **Low-Activity Waste (LAW) Design Package LAW-018** addresses ancillary equipment for the LAW melter process system such as piping and instrumentation for the melters.
- **Pretreatment Facility (PTF) Design Package PTF-095** addresses the Pretreatment In-Cell Handling System decontamination soak tank and its jet pump and sparger. This allows failed equipment to be decontaminated for repair or replacement.
- **The document *Leak Detection Capability in the LAW Facility*** describes how the leak detection system will 1) detect the failure of primary containment structures and subsequent release of dangerous or mixed waste within twenty-four hours, and 2) detect accumulated liquids within twenty-four hours.
- **The document *Waste Removal Capability for the LAW Vitrification Facility*** describes how spilled or leaked waste and accumulated liquids will be removed from the secondary containment systems within twenty-four hours of detection.
- **The document, Pipe Stress Design Criteria Including "Pipe Stress Criteria" and "Span Method Criteria"** provides design criteria for piping throughout the WTP.
- Diagrams and data sheets for seven mechanical handling systems in the High-Level Waste (HLW) building and for two mechanical handling systems in the LAW building. The mechanical handling systems are used for securing, lifting, manipulating, transferring,

MORE INFORMATION

Public Comment Period
April 20 through June 5, 2009

Review of the Documents
Visit the Information Repositories listed on the back

or

Washington State Department of Ecology Nuclear Waste Program
3100 Port of Benton Blvd
Richland, WA 99354
(Call 509-372-7920 for an appointment.)

or

http://www.ecy.wa.gov/programs/nwp/commentperiods.htm

To Submit Comments
Send comments by e-mail, U.S. mail, or hand-deliver them to:
Annette Carlson
3100 Port of Benton Blvd
Richland, WA 99354
anca461@ecy.wa.gov

Public Hearing
A public hearing is not scheduled, but if there is enough interest, we will consider holding one.

To request a hearing or for more information, contact
Annette Carlson
(509) 372-7897
anca461@ecy.wa.gov

Or call the Hanford Cleanup line at 800-321-2008

Publication Number: 09-05-002

Proposed Modification (continued)

and in decontamination processes for containers of HLW and LAW glass.

- Piping and instrumentation diagrams for the HLW melter system film cooler utilities and mechanical drawings for the HLW melter assemblies.
- Instruments identified in the document System Logic Description for Low-Activity Waste Facility Melter Process (LMP) System were added to Permit Table III.10.H.C.

View the Full Proposal

This is a brief summary of the proposed changes. The full proposal is available beginning April 20, on Ecology's website at www.ecy.wa.gov/programs/nwp/index.html, or at one of the Hanford information repositories.

Hanford Information Repositories

Portland
Portland State University
Branford Price Millar Library
1875 SW Park Ave.
Attn: Don Frank 503-725-4709
Map: http://www.pdx.edu/map.html

Richland
U.S. Department of Energy Reading Room
Consolidated Information Center, Room 101-L
2770 University Dr.
Attn: Janice Parthree 509-372-7443
Map: http://tinyurl.com/2axam2

Spokane
Gonzaga University
Foley Center
502 E. Boone Ave.
Attn: Linda Pierce 509-313-3834
Map: http://tinyurl.com/2c6bpm

Seattle
University of Washington
Suzzallo Library
Government Publications Division
Attn: Eleanor Chase 206-543-4664
Map: http://tinyurl.com/m8ebj

Special accommodations: If you need this publication in an alternative format, call the Nuclear Waste Program at 509-372-7950. Persons with hearing loss, call 711 for Washington Relay Service. Persons with speech disability call 877-833-6341.

DEPARTMENT OF ECOLOGY
State of Washington
3100 Port of Benton Blvd
Richland WA 99354

Publication Number: 09-05-002

Please reuse and recycle

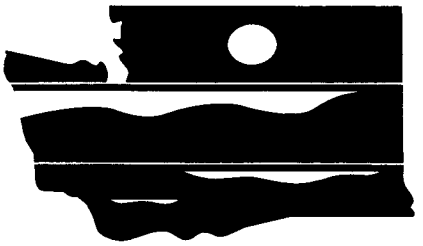

Statement of Basis

For the Modification of Waste Treatment and Immobilization Plant-Specific Conditions in the Dangerous Waste Portion of the Hanford Resource Conservation and Recovery Act Permit

April, 2009

This page intentionally left blank.

STATEMENT OF BASIS FOR MODIFICATION OF
THE DANGEROUS WASTE PORTION OF THE
RESOURCE CONSERVATION AND RECOVERY ACT PERMIT
FOR THE TREATMENT, STORAGE, AND DISPOSAL
OF DANGEROUS WASTE, PART III, OPERATING UNIT 10 (WA7890008967),
WASTE TREATMENT AND IMMOBILIZATION PLANT

Permittees

United States Department of Energy
(Owner/Operator)
Office of River Protection/Richland Operations Office
P.O. Box 550
Richland, Washington 99352

Bechtel National, Inc.
(Co-Operator)
2535 Stevens Center Place
Richland, Washington 99354

The Washington State Department of Ecology (Ecology) has developed this Statement of Basis in accordance with the requirements of Washington Administrative Code (WAC) 173-303-840(2)(f)(iv). Its purpose is to present information on Ecology's tentative decision to modify Part III, Operating Unit 10, Waste Treatment and Immobilization Plant (WTP) of the Hanford Facility's Dangerous Waste Portion of the Resource Conservation and Recovery Act (RCRA) Permit for the Treatment, Storage, and Disposal (TSD) of Dangerous Waste, hereafter called "the Permit". This modification includes supporting technical information and engineering drawings for construction on the regulated portions of the WTP Pretreatment (PT) Building, Low-Activity Waste (LAW) Building, and High-Level Waste (HLW) Building. In addition, this modification incorporates format changes to the Permit Appendices and changes to supporting information. Pursuant to WAC 173-303-830(3), only the conditions that are subject to this modification are reopened for comment.

Ecology has elected to prepare a Statement of Basis pursuant to WAC 173-303-840(2)(f)(iv) rather than a Fact Sheet. A Statement of Basis was prepared for previous major WTP Permit modifications. This process is being followed for permit modifications initiated by Ecology to incorporate similar design package information and other changes to the WTP Permit conditions. The September 25, 2002, Fact Sheet is available from Ecology upon request (Ecology Publication Number 01-05-006).

This Statement of Basis is divided into four sections:

1.0 Hanford Facility Permit Background

2.0 The WTP Permitting Process

3.0 Procedures for Reaching a Final Decision on the Draft Permit

4.0 Proposed Modifications to the Hanford Facility Permit

1.0 Hanford Facility Permit Background

Ecology initially issued the Permit for the Hanford Facility in 1994. The Permit provides standard and general facility conditions, as well as unit-specific conditions for the operation, closure, and post-closure care of mixed and dangerous waste TSD units at Hanford.

The Permit is normally modified annually to incorporate newly permitted units, reflect Class 1/2/3 Modifications, and include minor changes in grammar, consistency, and presentation. The Washington State Dangerous Waste Regulations in WAC 173-303-830 describe the types of changes or modifications that may be made to a dangerous waste permit issued by Ecology.

Approximately 50 TSD units at Hanford are operating or closing under RCRA final status standards.

Conditions of the Permit are presented in six parts:

- Standard Conditions (Part I)
- General Facility Conditions (Part II)
- Unit-Specific Conditions for Final Status Operations (Part III)
- Corrective Action for Past Practices (Part IV)
- Unit-Specific Conditions for Units Undergoing Closure (Part V)
- Unit-Specific Conditions for Units in Post-Closure (Part VI)

The WTP TSD Unit was added to the Unit-Specific Conditions for Final Status Operations (Part III) portion of the Permit on September 25, 2002. The Permit modification was effective on October 25, 2002. The WTP Unit is currently being constructed under final status standards.

2.0 The WTP Permitting Process

The permitting of the WTP Unit is using a phased (or stepped) approach. The first phase was completed on September 25, 2002, with issuance of a final Permit allowing construction of the WTP LAW, PT, and HLW Buildings to commence, and a compliance schedule to provide additional detailed information to Ecology. The compliance schedule addresses submittal of information necessary for construction of the rest of the WTP Unit, and eventual operation.

The second phase of permitting is implementation of the compliance schedule, which requires design and other information be submitted for Ecology approval before regulated portions of the WTP Unit are constructed. The third phase of permitting is implementation of the last portion of the compliance schedule, which requires updating portions of the Dangerous Waste Permit Application prior to facility start of operations. These portions of the Permit are administrative in nature, and cannot be completed before the design is nearly complete (e.g., Contingency Plan, Closure Plan, and Training Plan). At the completion of the three phases, the WTP Unit will comply with all the applicable requirements of WAC 173-303, and after receiving written permission from Ecology, can begin treatment and/or storage of dangerous and/or mixed waste. For more details on the WTP permitting process, see the September 25, 2002, Fact Sheet (Ecology Publication Number 01-05-006).

The design submittals (second phase described above) have been structured to allow the Permittees to provide design information in roughly the same order as the buildings are constructed. Therefore, the packages start at the lowest level of the building (i.e., below-grade levels) and are submitted for regulated areas of each level of the building before construction begins. This process has been adjusted for some design packages. If the process system in the design package is located on more than one level in a WTP Building, the design package can address components on more than one building level. This will prevent the confusion caused by one process system description being segmented into multiple design packages.

The Permit breaks out design packages into three general groups by the type of regulated equipment: (1) secondary containment; (2) primary containment (e.g., tanks, miscellaneous units [i.e., evaporators and melters], containment buildings); and (3) other associated, regulated equipment (e.g., ancillary equipment, equipment associated with miscellaneous units). Using tank systems as an example, secondary containment packages include details of the design of secondary containment that must be in place in regulated areas when the floors and walls are built for that level of the building (e.g., floor slope, sump location). The installation of tanks and other large equipment usually follows construction of the floors and walls. Therefore, a tank package on that level will be included in the Permit before installation (e.g., structural details for those tanks or miscellaneous units showing nozzle locations, unit volumes, and tank shell thickness). The last equipment usually installed on a level for a tank system is the ancillary equipment (e.g., piping, pumps, process instrumentation, and electrical equipment). Therefore, the ancillary equipment package that provides details for equipment on that level will be included in the Permit before installation (e.g., materials of construction, pipe support details, pump types and their operating limits).

With each WTP Building consisting of multiple levels, the total number of design packages is large. The Permittees estimate about 150 packages will have to be incorporated into the Permit. This could potentially trigger 150 public comment periods. Ecology intends to group packages, where possible, to reduce the number of public comment periods.

The secondary containment, primary containment, and other associated, regulated equipment packages for different levels require repetitive information submittals in each package. Again, using tank systems as an example, the method of installation of secondary containment liners on each level should be the same and most tanks will use the same construction specifications. The Permit allows the Permittees to reference the previously submitted design information. Therefore, some design packages may consist mostly of references to information already provided.

Ecology is authorized, pursuant to WAC 173-303-830(4)(e), to grant temporary authorizations for the Permittees to start construction on a design package after Ecology approval, but before the draft permit modification process is complete. A Permittee is allowed to request a Temporary Authorization (TA) to implement a modification prior to public notice and comment, pursuant to WAC 173-303-830(4)(e)(ii)(A). To issue a TA, Ecology must find it meets the criteria as described in WAC 173-303-830(4)(e)(ii)(A) and -830(4)(e)(iii). The term of a TA is limited to 180 days with the potential for Ecology approval of two terms, with a maximum combined duration of 360 days, provided that the modification could be classified as a Class 2 or 3 for the activity covered in the TA (WAC 173-303-830(4)(e)(iv)). The purpose of a TA is to allow the timely implementation of a permit modification. Construction that takes place under a TA is at the Permittees' risk because public comment may require the Permittees to modify

something they have already built. The submittal schedule developed by the Permittees will allow most design packages to undergo public comment and be incorporated into the Permit prior to construction of those areas.

3.0 Procedures for Reaching a Final Decision on the Draft Permit Modification

The Washington State Hazardous Waste Management Act, Chapter 70.105 Revised Code of Washington (RCW), and the rules promulgated in Chapter 173-303 of the WAC, regulate the management of dangerous waste in Washington. In accordance with WAC 173-303-800, facilities that treat, store, and/or dispose of dangerous waste must obtain a permit for these activities.

As required by WAC 173-303-840(3)(d) draft permit modifications to Part III, Operating Unit 10, WTP, of the Permit will have a 45-day public comment period. The public comment period for this permit modification begins on April 20, 2009, and ends on June 5, 2009. All comments received during the public comment period will be considered and responded to before final decisions are made on the proposed modifications. Regulatory requirements for public notice and involvement (for this Permit modification) are described in WAC 173-303-840(3) and (4). Comments must be post-marked or received by e-mail no later than close of business June 5, 2009. Comments hand-delivered by June 5, 2009, to the address below will be accepted. Direct all written comments to:

Ms. Annette Carlson
Department of Ecology
3100 Port of Benton Blvd.
Richland, Washington 99354
E-mail address: anca461@ecy.wa.gov

Ecology will consider and respond to all written comments submitted by the deadline. Ecology will then make a final permit decision, which will become effective 30 days after Ecology provides notice of the decision to the Permittees and all who commented. If Ecology's decision includes substantial changes to the Permit because of public comment, Ecology will initiate a new public comment period.

All commenters and the Permittees will receive a copy of the Responsiveness Summary and a notification of the final permit decision. Ecology's final permit decision may be appealed within 30 days after notice of the final permit decision has been provided.

Copies of the Permit for the Hanford Facility, including the proposed draft permit modifications are available for review at the Hanford Public Information Repositories listed below. [For additional information, call the Hanford Cleanup Hotline toll-free at (800) 321-2008].

HANFORD PUBLIC INFORMATION REPOSITORIES

Portland
Portland State University
Branford Price Millar Library
1875 SW Park Ave
Portland, Oregon 97201-3220
(503) 725-3690
Attn: Michael Bowman/Jocelyn Kramer
E-mail: bowman@lib.pdx.edu

Richland
Public Reading Room
2770 University Drive
Consolidated Information Center, Rm. 101L
Richland, Washington 99352
(509) 372-7443
Attn: Terri Traub
E-mail: readingroom@pnl.gov

Spokane
Gonzaga University
Foley Center
East 502 Boone
Spokane, Washington 99258-0001
(509) 323-3839
Attn: Connie Scarppelli
E-mail: carter@its.gonzaga.edu

Seattle
University of Washington Suzzallo Library
Government Publication Division
Seattle, Washington 98195
(206) 543-4664
Attn: Eleanor Chase
E-mail: echase@u.washington.edu
Public Service: (206) 543-4664

This Statement of Basis for the proposed draft Permit modification is also available on the internet at http://www.ecy.wa.gov/programs/nwp/.

If special accommodations are needed for public comment, please contact Annette Carlson, Department of Ecology, Nuclear Waste Program, at (509) 372-7897 (voice), or (360) 407-6006 (TDD).

4.0 Proposed Permit Modification to Part III, Operating Unit 10, WTP of the Permit

This draft permit modification contains the following design packages (see Table 1 for the entire list of documents):

- Low-Activity Waste Design Package LAW-018 addresses ancillary equipment for the LAW melter process system such as piping and instrumentation for the melters.
- Pretreatment Facility Design Package PTF-095 addresses the Pretreatment In-Cell Handling System decontamination soak tank and its jet pump and sparger. This allows failed equipment to be decontaminated for repair or replacement.

The following additional items are also included in this draft modification (see Table 1 for the entire list of documents):

- The document *Leak Detection Capability in the LAW Facility* describes how the leak detection system will 1) detect the failure of primary containment structures and subsequent release of dangerous or mixed waste within twenty-four hours, and 2) detect accumulated liquids within twenty-four hours.
- The document *Waste Removal Capability for the LAW Vitrification Facility* describes how spilled or leaked waste and accumulated liquids will be removed from the secondary containment systems within twenty-four hours of detection.

- The document *Pipe Stress Design Criteria Including "Pipe Stress Criteria" and "Span Method Criteria"* provides design criteria for piping throughout the WTP.

- Diagrams and data sheets for seven mechanical handling systems in the HLW building and for two mechanical handling systems in the LAW building. The mechanical handling systems are used for securing, lifting, manipulating, transferring, and in decontamination processes for containers of HLW and LAW glass.

- Piping and instrumentation diagrams for the HLW melter system film cooler utilities and mechanical drawings for the HLW melter assemblies.

- Instruments identified in the document *System Logic Description for Low-Activity Waste Facility Melter Process (LMP) System* were added to Permit Table III.10.H.C.

4.1 Incorporation of several Class 1 and Class [1]1 Permit Modifications

This draft permit modification incorporates the Class 1 and Class [1]1 Permit modifications shown below. These were previously approved by Ecology in accordance with WAC 173-303-830(4)(a), and are listed here as a courtesy.

- 24590-HLW-PCN-ENV-06-005 Class [1]1 Modification: Updates the process flow diagram (24590-HLW-M5-V17T-P0006, Rev 3) for the HLW Canister Decontamination Handling System in Appendix 10.1.

- 24590-HLW-PCN-ENV-06-012 Class 1 Modification: Updates eighteen piping and instrumentation diagrams for the HLW Offgas System for Melters 1 and 2 in Appendix 10.2.

- 24590-HLW-PCN-ENV-06-013 Class [1]1 Modification: Updates the piping and instrumentation diagrams (24590-HLW-M6-HDH-P0001, Rev 2, 24590-HLW-M6-HDH-P0002, Rev 2, and 24590-HLW-M6-HDH-P20001, Rev 2) for the HLW Facility Canister Decontamination Handling System vessels (HDH-VSL-00001/00002/00003/00004) in Appendix 10.2.

- 24590-HLW-PCN-ENV-06-014 Class 1 Modification: Updates the process flow diagram for the HLW Receipt and Feed Preparation Systems (24590-HLW-M5-V17T-P0001, Rev 4) in Appendix 10.1.

- 24590-HLW-PCN-ENV-06-015 Class [1]1 Modification: Updates fourteen piping and instrumentation diagrams for the HLW Facility Radioactive Liquid Waste Disposal System in Appendix 10.2.

- 24590-HLW-PCN-ENV-06-017 Class 1 Modification: Updates the HLW vitrification building piping and instrumentation diagrams (24590-HLW-M6-HFP -P0001, Rev 2, -P0002, Rev 2, -P0007, Rev 1, -P0008, Rev 1, -P20001, Rev 2, -P20002, Rev 2, -P20007, Rev 1, -P20008, Rev 1) for HLW Melter Feed Process System Vessels (HFP-VSL-00001/2/5/6) in Appendix 10.2.

- 24590-HLW-PCN-ENV-06-018 Class 1 Modification: Updates the piping and instrumentation diagrams (24590-HLW-M6-PJV-00001, Rev 4 and 24590-HLW-M6-PJV-00002, Rev 4) for the HLW Pulse Jet Ventilation System in Appendix 10.2.

- 24590-HLW-PCN-ENV-06-019 Class 1 Modification: Updates piping and instrumentation diagrams for the HLW Process Vessel Vent Exhaust System (24590-HLW-M6-PVV-00001, Rev 4, and -20001, Rev 2) in Appendix 10.2.

- 24590-HLW-PCN-ENV-06-020 Class 1 Modification : Updates the HLW Facility general arrangement plan and section drawings (24590-HLW-P1-P01T -00001, Rev 7, -00002, Rev 6, -00004, Rev 6, -00005, Rev 5, -00008, Rev 11, -00009, Rev 11, -00010, Rev 11, -00011, Rev 11) in Appendix 10.4.

- 24590-HLW-PCN-ENV-06-026 Class 1 Modification : Updates the HLW Facility design by adding two new piping and instrumentation diagrams (P&IDs) (24590-HLW-M6-HSH -P0004, Rev 0, and -P20004, Rev 0) showing the HLW Facility Decontamination Tanks (HSH-TK-00001 and HSH-TK-00002) previously shown on the Radioactive Liquid Waste Disposal System P&IDs (24590-HLW-M6-RLD-P0003 and 24590-HLW-M6-RLD-P20003). The updated P&IDs are in Appendix 10.2.

- 24590-HLW-PCN-ENV-07-003 Class 1 Modification: Updates the Leak Detection Capability in the HLW Facility (24590-HLW-PER-M-04-002, Rev 3) in Appendix 10.18.

- 24590-HLW-PCN-ENV-07-004 Class 1 Modification: Updates the mechanical systems data sheets (24590-HLW-MKD-HOP-00014 Rev 6, and 24590-HLW-MKD-HOP-00017 Rev 6) for the Silver Mordenite Columns in Appendix 10.6.

- 24590-HLW-PCN-ENV-08-001 Class 1 Modification: Updates the equipment assembly drawing for the HLW Offgas Drains Collection Vessel (24590-HLW-MV-RLD-00002, Rev 2) in Appendix 10.6.

- 24590-HLW-PCN-ENV-08-002 Class 1 Modification: Updates two piping and instrumentation diagrams (24590-HLW-M6-HCP -P0001 Rev 3, and -P0002 Rev 3) for the HLW Concentrate Receipt Process System Transfer Piping in Appendix 10.2.

- 24590-HLW-PCN-ENV-08-006 Class 1 Modification: Provides mechanical data sheet 24590-HLW-MVD-HOP-00007 for the HLW High Efficiency Mist Eliminators (HOP-HEME-00001 A/B and HOP-HEME-00002 A/B) in Appendix 10.6

- 24590-HLW-PCN-ENV-08-007 Class 1 Modification: Updates eighteen piping and instrumentation diagrams for the HLW Melter Process System in Appendix 10.2.

- 24590-LAW-PCN-ENV-06-008 Class 1 Modification: Updates the structural integrity assessment (CCN 139510 / AREVA-IA-103) of LAW Primary Offgas Process System Plant Items (LOP-VSL-00001/2, LOP-SCB-00001/2, and LOP-WESP-00001/2) in Appendix 9.11.

- 24590-LAW-PCN-ENV-06-010 Class [1]1 Modification: Updates the integrity assessment (CCN 139509 / AREVA-IA-102, Rev 0) for the LAW Concentrate Receipt Process

System Concentrate Receipt Vessels (LCP-VSL-00001 and LCP-VSL-00002) in Appendix 9.11.

- 24590-LAW-PCN-ENV-06-015 Class 1 Modification: Updates LAW vitrification building piping and instrumentation diagrams for the LAW Radioactive Liquid Waste Disposal System (24590-LAW-M6-RLD-P0001, Rev 3, 24590-LAW-M6-RLD-P0002, Rev 3, and 24590-LAW-M6-RLD-P0003, Rev 3) in Appendix 9.2.

- 24590-LAW-PCN-ENV-07-004 Class 1 Modification: Updates the LAW vitrification building piping and instrumentation diagrams (24590-LAW-M6-LVP-P000,1 Rev 1, -P0002, Rev 3, -P0003, Rev 1, -P0004, Rev 1, and -P0005, Rev 1) for the LAW Secondary Offgas/Vessel Vent Process System in Appendix 9.2.

- 24590-LAW-PCN-ENV-07-006 Class 1 Modification: Updates the integrity assessment (CCN 139508 / AREVA-IA-101, Rev 0) for the LAW Secondary Offgas/Vessel Vent Process System, Caustic Collection Tank (LVP-TK-00001) in Appendix 9.11.

- 24590-LAW-PCN-ENV-07-009 Class 1 Modification: Updates the independent, qualified, registered professional engineer integrity assessment (AREVA-IA-105, Rev 1) for the Low Activity Waste Primary Offgas System ancillary equipment in Appendix 9.11.

- 24590-LAW-PCN-ENV-07-014 Class 1 Modification: Updates the LAW vitrification building process flow diagram for the LAW Liquid Effluent (RLD) System (24590-LAW-M5-V17T-P0014, Rev 2) in Appendix 9.1.

- 24590-LAW-PCN-ENV-08-001 Class 1 Modification: Updates the LAW *Facility Sump Data* document (24590-LAW-PER-M-02-001, Rev 5) in Appendix 9.5.

- 24590-PTF-PCN-ENV-05-006 Class 1 Modification: Updates *Engineering Specification for PTF Hot Cell Slurry Pumps to Meet Requirements of API Standard 610, Eighth Edition* (24590-PTF-3PS-MPC0-T0001, Rev 1) in Appendix 8.7.

- 24590-PTF-PCN-ENV-05-015 Class 1 Modification: Updates *Engineering Specification for Cesium Nitric Acid Recovery Forced Circulation Vacuum Evaporator System* (24590-PTF-3PS-MEVV-T0002, Rev 4) in Appendix 8.7.

- 24590-PTF-PCN-ENV-07-001 Class 1 Modification: Updates *PTF General Arrangement Plan for the 56'-0" Elevation* (24590-PTF-P1-P01T-00003, Rev 3) in Appendix 8.4.

- 24590-PTF-PCN-ENV-07-013 Class 1 Modification: Updates *Mechanical Systems Data Sheet for the PTF Treated LAW Evaporator Condensate Vessel* (24590-PTF-MVD-TLP-00004, Rev 1) in Appendix 8.6.

- 24590-PTF-PCN-ENV-07-015 Class 1 Modification: Updates *Plant Item Material Selection Data Sheet for the Spent Resin Dewatering Moisture Separation Vessel* (24590-PTF-N1D-RDP-00002, Rev 3) in Appendix 8.9.

- 24590-PTF-PCN-ENV-08-001 Class [1]1 Modification: Updates the nine piping and instrumentation diagrams for the Waste Feed Receipt Process System in Appendix 8.2.

- 24590-PTF-PCN-ENV-08-002 Class [1]1 Modification: Updates the piping and instrumentation diagrams (24590-PTF-M6-RDP-00001, Rev 3, 24590-PTF-M6-RDP-00002, Rev 4, 24590-PTF-M6-RDP-00006, Rev 3) for the Ion Exchange Resin Collection & Dewatering Process system in Appendix 8.2.

- 24590-PTF-PCN-ENV-08-003 Class [1]1 Modification: Updates the *Engineering Specification for the PTF Forced Circulation Vacuum Evaporator System* (24590-PTF-3PS-MEVV-T0001, Rev 2) in Appendix 8.7.

- 24590-PTF-PCN-ENV-08-016 Class 1 Modification: Updates the PTF material selection data sheet (24590-PTF-N1D-RDP-00001, Rev 6) for the Spent Resin Slurry Vessels (RDP-VSL-00002 A/B/C) in Appendix 8.9.

- 24590-WTP-PCN-ENV-05-013 Class 1 Modification: Updates the *Engineering Specification for Activated Carbon Bed Adsorbers* (24590-WTP-3PS-MWK0-T0001, Rev 3) in Appendix 7.7.

- 24590-WTP-PCN-ENV-05-014 Class 1 Modification: Updates the *WTP Engineering Specification for Pressure Vessel Design and Fabrication* (24590-WTP-3PS-MV00-T0001, Rev 3) in Appendix 7.7.

- 24590-WTP-PCN-ENV-05-015 Class [1]1 Modification: Updates the *Engineering Specification for Process Bulge Design and Fabrication* (24590-WTP-3PS-MX00-T0001, Rev 6) in Appendix 7.7.

- 24590-WTP-PCN-ENV-06-001 Class 1 Modification: Updates the *Piping and Instrumentation Diagram Symbols and Legend* (24590-WTP-M6-50-P0001 through P0006, Rev 2) and adds two new drawings (24590-WTP-M6-50-P0007 and P0008, Rev 0) in Appendix 7.2.

- 24590-WTP-PCN-ENV-06-002 Class 1 Modification: *Engineering Specification for Sealless Centrifugal Pumps To Meet Requirements Of API Standard 685, First Edition, For Quality Level Q* (24590-WTP-3PS-MPC0-T0003, Rev 2). This specification is found in Appendix 7.7.

- 24590-WTP-PCN-ENV-06-008 Class 1 Modification: Updates the *Engineering Specification for the Vessel-Mounted Vertical Transfer Pumps – Low Activity Waste Facility* (24590-WTP-3PS-MPC0-T0008, Rev 1) in Appendix 7.7.

- 24590-WTP-PCN-ENV-06-009 Class 1 Modification: Updates the *Engineering Specification General Centrifugal Pump Specification Requirements of ASME B73.1M-2001 and ASME B73.2M-2003 for Commercial Components* (24590-WTP-3PS-MPC0-T0002, Rev 3) in Appendix 7.7.

- 24590-WTP-PCN-ENV-06-011 Class 1 Modification: Updates the *Engineering Specification for Field-Erected Tanks Design and Fabrication* (24590-WTP-3PS-MTF5-T0001, Rev 0) in Appendix 7.7.

- 24590-WTP-PCN-ENV-06-015 Class 1 Modification: Updates the *Engineering Specification for Maintenance Decontamination Equipment* (24590-WTP-3PS-HD00-T0001, Rev 3) in Appendix 7.7.

- 24590-WTP-PCN-ENV-07-004 Class 1 Modification: Updates *Engineering Specification for Nuclear Grade High Efficiency Particulate Air (HEPA) Filters (ASME AG-1 Section FK Filters)* (24590-WTP-3PS-MKH0-T0002, Rev 2) in Appendix 7.7.

- 24590-WTP-PCN-ENV-08-002 Class [1]1 Modification: Replaces *Engineering Specification for Centrifugal Pumps to Meet Requirements of American Petroleum Institute Standard 610, Eighth Edition, and for Quality Level QL-1 and QL-2* with four new pump specifications: 24590-WTP-3PS-MPPD-T0001, Rev 3, in Appendix 7.7; 24590-LAW-3PS-RLD-T0001, Rev 1, in Appendix 9.7; 24590-QL-HC4-W000-00011-04-00266, Rev 00B, in Appendix 10.7; and 24590-QL-HC4-W000-00011-03-00590, Rev 00A, in Appendix 9.7.

- 24590-WTP-PCN-ENV-08-008 Class [1]1 Modification: Updates the Part A Permit Application to Rev 2, found in Addendum A.

4.2 Supplemental Design Information

Table 1 lists the design information included in this proposed permit modification and the proposed location in the Permit. At issuance of the final permit decision, Ecology will specify where each drawing or report resides in the Permit. Paper copies of the page changes to the Permit as a result of this modification will be stored in the Administrative Record. Duplicate sets of drawings will not be issued to the Permittees at issuance of the final permit decision in order to minimize the amount of duplicate paperwork, unless drawing changes are made as a result of public comment. The letter issuing the final permit decision to the Permittees will include the current Permit with the modifications on a DVD or CD-ROM.

4.3 Identifying Changes in this Modification

As the WTP Unit is constructed, Ecology will modify the Permit, for many reasons including: to clarify text, add new conditions, delete existing conditions, to correct errors or add additional information. To communicate the changes in the review package, the proposed permit modification will include page changes showing all significant proposed changes to the Permit. The text to be deleted will be struck-out with a single line and the new text will be double-underlined. Only the text being changed in the current modification will be indicated by double-underlines and strikeouts.

Newly added documents and drawings are provided for review in this proposed permit modification. New document and drawing numbers and titles are shown in bold text in the affected appendix drawing lists.

At issuance of the permit modification, 'clean' pages incorporating permit modifications will be issued to the Permittees and Administrative Record. All double-underlines and strikeouts will be removed. Documents and drawings listed in the appendices will not be bolded and will be incorporated by reference only.

In Ecology publication number 07-05-006, *Responsiveness Summary* (September 27, 2007), Ecology explained the reason for replacing permit version documents with source documents that the WTP is constructed to. Since 2007, source documents began replacing permit version documents. Source documents are in a state of constant revision as design details are finalized and additional information is added to provide clarity and to correct typographical errors. Changes not yet incorporated into source documents are tracked by the Permittees using Document Change Notices (DCNs). In some cases, DCNs are issued at the time of Ecology's review. These are not provided for public comment, but will appear in the next revision of the document for review.

Design Package LAW-018 contains seven documents that are classified as confidential business information. These documents were submitted for consideration according to the criteria of the Revised Code of Washington 43.21A.160 and were found to meet the corresponding regulations in Washington Administrative Code Chapter 173-303-810(15). The documents are listed in Table 1, but are not included for public distribution or comment.

This page intentionally left blank.

Table 1 - Design Information Submitted by Permittees

PACKAGE LAW-018, Rev 0, Miscellaneous Unit Subsystem Equipment for LAW Facility LMP System			
For incorporation into the Permit.			
DOCUMENT/DRAWING NUMBER	**TITLE**	**REPLACES**	**PERMIT LOCATION**
CCN 190557 / IA-3001246-001	IQRPE Structural Integrity Assessment Report of LAW LMP Ancillary Equipment	N/A	9.11
24590-LAW-M5-V17T-00004, Rev 4	Process Flow Diagram LAW Vitrification Melter 1 (System LMP & LOP)	N/A	9.1
24590-LAW-M5-V17T-00005, Rev 4	Process Flow Diagram LAW Vitrification Melter 2 (System LMP & LOP)	N/A	9.1
24590-LAW-M6-LMP-00001, Rev 2	P&ID – LAW Melter Process System Melter 1 Agitation – Zone 1 & Zone 2 ***Confidential Business Information***	N/A	9.2
24590-LAW-M6-LMP-00002, Rev 2	P&ID –LAW Melter Process System Melter 1 Agitation Zone 3 & Level Detection System ***Confidential Business Information***	N/A	9.2
24590-LAW-M6-LMP-00003, Rev 4	P&ID –LAW Melter Process System Melter 1Walls and Floor Panels Cooling System	N/A	9.2
24590-LAW-M6-LMP-00005, Rev 2	P&ID –LAW Melter Process System Melter 1Electrode Extension Cooling & Glass/Plenum Temperatures ***Confidential Business Information***	N/A	9.2
24590-LAW-M6-LMP-00007, Rev 3	P&ID –LAW Melter Process System Melter 1Glass Pouring and Monitoring Instrumentation	N/A	9.2
24590-LAW-M6-LMP-00008, Rev 3	P&ID –LAW Melter Process System Melter 1Discharge Heaters, Power Controls (1-4) & Air Left - Eastside	N/A	9.2
24590-LAW-M6-LMP-00010, Rev 3	P&ID –LAW Melter Process System Melter 1Discharge Heaters, Power Controls (1-4) & Air Lift - Westside	N/A	9.2

24590-LAW-M6-LMP-00012, Rev 5	P&ID –LAW Melter Process System Melter 1Feed Nozzles Cooling System and Feed Nozzles	N/A	9.2
24590-LAW-M6-LMP-00013, Rev 5	P&ID –LAW Melter Process System Melter 1Lid, Plenum and Offgas Ports Cooling System	N/A	9.2
24590-LAW-M6-LMP-00031, Rev 2	P&ID –LAW Melter Process System Melter 2 Agitations – Zone 1 & Zone 2 ***Confidential Business Information***	N/A	9.2
24590-LAW-M6-LMP-00032, Rev 2	P&ID –LAW Melter Process System Melter 2 Agitations Zone 3 & Level Detection System ***Confidential Business Information***	N/A	9.2
24590-LAW-M6-LMP-00033, Rev 4	P&ID –LAW Melter Process System Melter 2 Walls and Floor Panels Cooling System	N/A	9.2
24590-LAW-M6-LMP-00035, Rev 2	P&ID –LAW Melter Process System Melter 2 Electrode Extension Cooling & Glass/Plenum Temperatures ***Confidential Business Information***	N/A	9.2
24590-LAW-M6-LMP-00037, Rev 3	P&ID –LAW Melter Process System Melter 2 Glass Pouring and Monitoring Instrumentation	N/A	9.2
24590-LAW-M6-LMP-00038, Rev 3	P&ID –LAW Melter Process System Melter 2 Discharge Heaters, Power Controls (1-4) & Air Lift - Eastside	N/A	9.2
24590-LAW-M6-LMP-00040, Rev 3	P&ID –LAW Melter Process System Melter 2 Discharge Heaters, Power Controls (1-4) & Air Lift - Westside	N/A	9.2
24590-LAW-M6-LMP-00042, Rev 5	P&ID –LAW Melter Process System Melter 2 Feed Nozzles Cooling System and Feed Nozzles	N/A	9.2
24590-LAW-M6-LMP-00043, Rev 5	P&ID –LAW Melter Process System Melter 2 Lid, Plenum Cooling System Ports Cooling System	N/A	9.2
24590-LAW-M6-LOP-00004, Rev 4	P&ID –LAW Primary Offgas Process System Melter 1 Offgas Film Coolers	N/A	9.2
24590-LAW-M6-LOP-00005, Rev 4	P&ID –LAW Primary Offgas Process System Melter 2 Offgas Film Coolers	N/A	9.2

24590-LAW-PER-J-07-0001, Rev 0	System Logic Description for the Low-Activity Waste LAW Melter Process System (LMP)	N/A	9.13
24590-WTP-PER-CSA-02-001, Rev 8	Secondary Containment Design	24590-WTP-PER-CSA-02-001, Rev 7	7.5

For incorporation into the Administrative Record.

DOCUMENT/DRAWING NUMBER	TITLE	REPLACES	LOCATION
24590-LAW-3YD-LMP-00001, Rev 2	System Description for the Low Activity Waste Melter ***Confidential Business Information***	N/A	Administrative Record
24590-LAW-3YN-LMP-00003	System Description Change Notice – System LMP, System Description for the Low Activity Waste Melter	N/A	Administrative Record
24590-3YD-LOP-00001, Rev 2	System Description for LAW Primary Offgas Process (LOP) and LAW Secondary Offgas/Vessel Vent Process (LVP) Systems	N/A	Administrative Record

PACKAGE PTF-095, Revision 0, PIH Tank System

For incorporation into the Permit.

DOCUMENT/DRAWING NUMBER	TITLE	REPLACES	PERMIT LOCATION
24590-PTF-M6-PIH-P0001, Rev 0	P&ID – PTF Mechanical Handling, Hot Cell Maintenance Cave P-0123A Utilities, System PIH	N/A	8.2
24590-PTF-M0D-PIH-P0015, Rev 1	Mechanical Data Sheet – Pretreatment Decontamination Tank	N/A	8.6
24590-PTF-M0-PIH-P0019001, Rev 0	PTF Vitrification System PIH Design Proposal Drawing Decon Tank Assembly	N/A	8.6
24590-PTF-M0-PIH-P0019002, Rev 0	PTF Vitrification System PIH Design Proposal Drawing Decon Tank Details	N/A	8.6
24590-PTF-PER-M-04-0007, Rev 0	Flooding Volume for Room P-0123A in the PT Facility	N/A	8.8

24590-PTF-N1D-PIH-P0001, Rev 0	Material Selection Data Sheet – PIH-TK-00001 (PTF) Pretreatment Decontamination Tank Decon Soak Tank	N/A	8.9
CCN 139506 / AREVA-IA-085, Rev 0	IQRPE Integrity Assessment Report for PIH-TK-00001	N/A	8.11

For incorporation into the Administrative Record.

DOCUMENT/DRAWING NUMBER	TITLE	REPLACES	LOCATION
24590-PTF-3YD-PIH-00001, Rev 0	System Description for PIH System	N/A	Administrative Record

Additional Items

For incorporation into the Permit.

DOCUMENT/DRAWING NUMBER	TITLE	REPLACES	PERMIT LOCATION
24590-LAW-PER-M-05-002, Rev 2	Leak Detection Capability in the LAW Facility	N/A	9.18
24590-LAW-PER-M-05-001, Rev 0	Waste Removal Capability for the LAW Vitrification Facility	N/A	9.18
24590-WTP-DC-PS-01-001, Rev 6	Pipe Stress Design Criteria Including "Pipe Stress Criteria" and "Span Method Criteria"	N/A	7.5
24590-HLW-M0D-HDH-00021, Rev 3	24590-HLW-MJ-HDH-CRN-00005 - Decontamination Swabbing and Monitoring Crane	N/A	10.6
24590-HLW-M0D-HEH-00021, Rev 5	24590-HLW-MJ-HEH-CRN-00001 - Cask Handling Crane	N/A	10.6
24590-HLW-M0D-HEH-00025, Rev 4	24590-HLW-MJ-HEH-CRN-00003 - Canister Storage Crane	N/A	10.6
24590-HLW-M0D-HPH-00063, Rev 3	24590-HLW-MJ-HPH-CRN-00002 - Canister Handling Crane (Upper)	N/A	10.6
24590-HLW-M0D-HPH-00064, Rev 3	24590-HLW-MJ-HPH-CRN-00001 - Canister Handling Crane (Lower)	N/A	10.6
24590-HLW-M0D-HSH-00013, Rev 4	24590-HLW-MJ-HSH-CRN-00001 - Melter 1 Cave Crane	N/A	10.6

24590-HLW-M0D-HSH-00181, Rev 4	24590-HLW-MJ-HSH-CRN-00014 - Melter 2 Cave Main Crane	N/A	10.6
24590-HLW-M7-HDH-00001005, Rev 2	HLW Vitrification System HDH Mechanical Handling Diagram Canister Decontamination Handling System	N/A	10.6
24590-HLW-M7-HEH-00001004, Rev 2	HLW Vitrification System HEH Mechanical Handling Diagram Canister Export Handling System	N/A	10.6
24590-HLW-M7-HEH-00001005, Rev 2	HLW Vitrification System HEH Mechanical Handling Diagram Canister Export Handling System	N/A	10.6
24590-HLW-M7-HPH-00001001, Rev 1	HLW Vitrification System HPH Mechanical Handling Diagram Canister Pour Handling Canister Handling Cave	N/A	10.6
24590-HLW-M7-HPH-00001002, Rev 1	HLW Vitrification System HPH Mechanical Handling Diagram Canister Pour Handling Canister Handling Cave	N/A	10.6
24590-HLW-M7-HSH-00001002, Rev 1	HLW Vitrification System HSH Mechanical Handling Diagram Melter Cave Support Handling Melter Cave 1	N/A	10.6
24590-HLW-M7-HSH-00002002, Rev 0	HLW Vitrification System HSH Mechanical Handling Diagram Melter Cave Support Handling Melter Cave 2	N/A	10.6
24590-LAW-M0D-LEH-00014, Rev 7	24590-LAW-MJ-LEH-CRN-00003 - LEH Crane Export High Bay With Recovery, 10 Ton	N/A	9.6
24590-LAW-M0D-LPH-00003, Rev 5	24590-LAW-MJ-LPH-CRN-00002 - Top Running, Double Girder	N/A	9.6
24590-LAW-M7-LEH-00002002, Rev 1	LAW Vitrification System LEH Mechanical Handling Diagram Container Export Handling System	N/A	9.6
24590-LAW-M7-LPH-00001004, Rev 2	LAW Vitrification System LPH Mechanical Handling Diagram Container Pour Handling System	N/A	9.6
24590-HLW-M6-HMP-00012, Rev 4	HLW Melter 1 System Film Cooler Utilities	N /A	10.2
24590-HLW-M6-HMP-20012, Rev 5	HLW Melter 2 System Film Cooler Utilities	N /A	10.2
24590-HLW-MF-HMP-00001, Rev 0	HLW Melter Assembly HLW-MLTR-00001/00002 Isometric View	N /A	10.2

24590-HLW-MF-HMP-00002, Rev 0	HLW Melter Assembly HLW-MLTR-00001/00002 Plan View, West and North Elevation Drawing	N /A	10.2
24590-HLW-MF-HMP-00003, Rev 0	HLW Melter Assembly HLW-MLTR-00001/00002 Section A-A	N /A	10.2
For incorporation into the Administrative Record.			
DOCUMENT/DRAWING NUMBER	**TITLE**	**REPLACES**	**LOCATION**
24590-WTP-PER-PR-03-002, Rev 3	Toxic Vapors and Emissions from Waste Treatment and Immobilization Plant Tank Systems and Miscellaneous Unit Systems	N/A	Administrative Record
24590-PTF-3YD-PFH-00001, Rev 1	System Description for the Pretreatment Filter Cave Handling System (PFH)	N/A	Administrative Record
24590-PTF-3YD-PIH-00001, Rev 0	System Description for the Pretreatment In-Cell Handling System	N/A	Administrative Record
24590-LAW-3YD-LSH-00001, Rev 0	System Description for System LSH Melter Equipment Support Handling System	N/A	Administrative Record
24590-LAW-3YD-LPH-00001, Rev 0	System Description for LAW System LPH Container Pour Handling	N/A	Administrative Record
24590-LAW-3YD-LFH-00001, Rev 0	System Description for LFH - LAW Container Finishing Handling System	N/A	Administrative Record
24590-LAW-3YD-LMH-00001, Rev 0	System Description for LAW System LMH Melter Handling	N/A	Administrative Record
24590-LAW-3YD-LEH-00001, Rev 0	System Description for the LEH LAW Container Export Handling System	N/A	Administrative Record
24590-HLW-3YD-HSH-00001, Rev 0	System Description for the System HSH - HLW Melter Cave Support Handling	N/A	Administrative Record
24590-HLW-3YD-HEH-00001, Rev 1	System Description for the HLW System HEH Canister Export Handling	N/A	Administrative Record
24590-HLW-3YD-HFH-00001, Rev 2	System Description for HLW System HFH, Filter Cave Handling	N/A	Administrative Record
24590-HLW-3YD-HPH-00001, Rev 1	System Description for the HLW System HPH Canister Pour Handling	N/A	Administrative Record

24590-HLW-3YD-HDH-00002, Rev 2	System Description for the HLW System HDH Canister Decontamination Handling	N/A	Administrative Record
24590-HLW-3YD-HMH-00001, Rev 1	System Description for System HMH HLW Melter Transport	N/A	Administrative Record
24590-WTP-3YD-RWH-00001, Rev 1	System Description for the WTP System RWH Radioactive Solid Waste Handling	N/A	Administrative Record

NOTES:

CNP = Cesium Nitric Acid Recovery Process System
CXP = Cesium Ion Exchange Process System
FEP = Feed Evaporation Process System
FRP = Waste Feed Receipt Process System
HCP = HLW Condensate Receipt Process System
HDH = HLW Canister Decontamination Handling System
HEH = HLW Canister Export Handling System
HFH = HLW Filter Cave Handling System
HLP = HLW Lag Storage and Feed Blending Process System
HLW = High Level Waste
HMH = HLW Melter Handling System
HOP = HLW Vit Primary Offgas Treatment System
HPH = HLW Canister Pour Handling System
HSH = HLW Melter Cave Support Handling System
IQRPE = Independent, Qualified, Registered Professional Engineer
LAB = WTP Laboratory Building
LAW = Low Activity Waste
LCP = LAW Concentrate Receipt Process System
LEH = LAW Container Export Handling System
LFP = LAW Melter Feed Process System
LMH = LAW Melter Handling System
LOP = LAW Melter Offgas System
LPH = LAW Container Pour Handling System
LSH = LAW Melter Equipment Support Handling System
LSM = Locally Shielded Melter
LVP = LAW Secondary Offgas/Vessel Vent Process System
MTU = Miscellaneous Treatment Units
PFH = Pretreatment Filter Cave Handling System
PIH = Pretreatment In-Cell Handling System
PJV = Pulse Jet Mixer Ventilation System
PTF = Pretreatment Building
PVP = Pretreatment Vessel Vent Process System
PVV = Process Vessel Vent System
PWD = Plant Wash and Disposal System
RDP = PTF Spent Resin and Dewatering Process System
RLD = Radioactive Liquid Waste Disposal System
RWH = Radioactive Solid Waste Handling System
SBS = Submerged Bed Scrubber
TCP = Treated LAW Concentrate Storage Process System
TLP = Treated LAW Evaporation Process System
UFP = Ultrafiltration Process System
WESP = Wet Electrostatic Precipitator

This page intentionally left blank.

Part III, Operating Units

Operating Unit 10

Waste Treatment and Immobilization Plant

The Waste Treatment and Immobilization Plant (WTP) is the unit designed to treat the mixed (radioactive and dangerous) waste stored in underground tanks at the Hanford Site. The waste will be separated into High-level and Low-level waste streams in a Pretreatment Building. The waste streams are mixed with glass forming additives, heated to 950-1250° C in melters, and poured into containers. The waste is immobilized in the glass matrix. The immobilized waste is transported from the WTP Unit for disposal.

III.10.A. COMPLIANCE WITH APPROVED PERMIT

The Permittees will comply with all requirements set forth in Operating Unit 10, including the conditions specified in Permit Conditions III.10.B through III.10.K. Enforceable portions of the application have been incorporated in Operating Unit 10 and are identified as follows. All sections, figures, and tables included in these portions are also enforceable, unless stated otherwise.

Where information regarding treatment, management, and disposal of the radioactive source, byproduct material, special nuclear material (as defined by the Atomic Energy Act of 1954, as amended) and/or the radionuclide component of mixed waste has been incorporated into this permit, it is not incorporated for the purpose of regulating the radiation hazards of such components under the authority of this permit chapter 70.105 RCW. In the event of any conflict between Permit Condition III.10.A and any statement relating to the regulation of source, special nuclear, and byproduct material contained in portions of the permit application that are incorporated into this permit, Permit Condition III.10.A will prevail.

OPERATING UNIT 10:

Chapter 1.0	Part A, Form 3 Permit Application, Revision 1 (December 6, 2001)	
Chapter 2.0	Facility Description (Topographic Map)	
Chapter 3.0	Waste Analysis Plan	
	Appendix 3A	Waste Treatment Plant Waste Analysis Plan
	Appendix 3B	Qaultiy Assurance Project Plan for Waste Analysis Plan
Chapter 4.0	Process Information	
	Appendix 4A	Engineering Figures
	Supplement 1	RPP-WTP Compliance with Uniform Building Code Seismic Design
Chapter 6.0	Procedures to Prevent Hazards	
	Appendix 6A	Inspection Schedule
Chapter 7.0	Contingency Plan	
	Appendix 7A	Emergency Response Plan
Chapter 8.0	Personnel Training	
Chapter 11.0	Closure	
Chapter 12.0	Reporting and Recordkeeping	

Appendix 1.0 Compliance Schedule
Appendix 2.0 Critical Systems
Appendix 3.0 Drawing Category Table
Appendix 4.0 Piping Material Index Table
Appendix 5.0 Legends for Process Flow Diagrams and Piping and Instrumentation Diagrams
Appendix 6.0 Risk Assessment
6.1 Environmental Risk Assesment Work Plan
6.1.1 Previously Submitted Preliminary Risk Assessment Work Plan
6.1.2 Documentation of Revisions to Preliminary Risk Assessment Work Plan
6.2 Risk Assessment Work Plan (RESERVED)
6.3 Pre-Demonstration Test Risk Assessment Report (RESERVED)
6.3.1 Basis and Assumptions (RESERVED)
6.4 Final Risk Assessment Report (RESERVED)
6.4.1 Basis and Assumptions (RESERVED)
Appendix 7.0 WTP Documents Applicable to All Regulated Areas
7.1 Process Flow Diagrams
7.2 Piping and Instrumentation Diagrams
7.3 System Description Documentation (RESERVED)
7.4 General Arrangement Drawings (RESERVED)
7.5 Civil, Structural, and Architectural Criteria and Typical Design Details
7.6 Mechanical Drawings (RESERVED)
7.7 Specifications
7.8 Engineering Calculations (RESERVED)
7.9 Material Selection Documentation
7.10 Critical Systems Equipment/Instrument List (RESERVED)
7.11 IQRPE Reports
7.12 Installation Plans
7.13 Instrument Control Logic and Narrative Description (RESERVED)
7.14 Descriptions of Instrument Installation and Testing Procedures (RESERVED)
7.15 Operating Documents
Appendix 8.0 Pretreatment Building
8.1 Process Flow Diagrams
8.2 Piping and Instrumentation Diagrams
8.3 System Description Documentation (RESERVED)

8.4 General Arrangement Drawings
8.5 Civil, Structural, and Architectural Criteria and Typical Design Details
8.6 Mechanical Drawings
8.7 Specifications
8.8 Engineering Calculations
8.9 Material Selection Documentation
8.10 Critical Systems Equipment/Instrument List
8.11 IQRPE Reports
8.12 Installation Plans (RESERVED)
8.13 Instrument Control Logic and Narrative Description
8.14 Descriptions of Instrument Installation and Testing Procedures (RESERVED)
8.15 Operating Documents (RESERVED)
Appendix 9.0 LAW Building
9.1 Process Flow Diagrams
9.2 Piping and Instrumentation Diagrams
9.3 System Description Documentation (RESERVED)
9.4 General Arrangement Drawings
9.5 Civil, Structural, and Architectural Criteria and Typical Design Details
9.6 Mechanical Drawings
9.7 Specifications
9.8 Engineering Calculations
9.9 Material Selection Documentation
9.10 Critical Systems Equipment /Instrument List
9.11 IQRPE Reports
9.12 Installation Plans (RESERVED)
9.13 Instrument Control Logic, and Narrative Description
9.14 Descriptions of Instrument Installation and Testing Procedures (RESERVED)
9.15 Demonstration Test Plan (RESERVED)
9.16 Demonstration Test Report (RESERVED)
9.17 Treatment Effectiveness Report (RESERVED)
9.18 Operating Documents
Appendix 10.0 HLW Building
10.1 Process Flow Diagrams
10.2 Piping and Instrumentation Diagrams

10.3 System Description Documentation (RESERVED)
10.4 General Arrangement Drawings
10.5 Civil, Structural, and Architectural Criteria and Typical Design Details
10.6 Mechanical Drawings
10.7 Specifications
10.8 Engineering Calculations
10.9 Material Selection Documentation
10.10 Critical Systems Equipment/Instrument List
10.11 IQRPE Reports
10.12 Installation Plans (RESERVED)
10.13 Instrument Control Logic and Narrative Description
10.14 Descriptions of Instrument Installation and Testing Procedures (RESERVED)
10.15 Demonstration Test Plan (RESERVED)
10.16 Demonstration Test Report (RESERVED)
10.17 Treatment Effectiveness Report (RESERVED)
10.18 Operating Documents
Appendix 11.0 Laboratory Building
11.1 Process Flow Diagrams
11.2 Piping and Instrumentation Diagrams
11.3 System Description Documentation (RESERVED)
11.4 General Arrangement Drawings
11.5 Civil, Structural, and Architectural Criteria and Typical Design Details
11.6 Mechanical Drawings
11.7 Specifications (RESERVED)
11.8 Engineering Calculations
11.9 Material Selection Documentation
11.10 Critical Systems Equipment/Instrument List
11.11 IQRPE Reports
11.12 Installation Plans (RESERVED)
11.13 Instrument Control Logic and Narrative Description
11.14 Descriptions of Instrument Installation and Testing Procedures (RESERVED)
11.15 Operating Documents (RESERVED)
Appendix 12.0 Balance of Facilities
12.1 Process Flow Diagrams (RESERVED)

12.2 Piping and Instrumentation Diagrams (RESERVED)

12.3 System Description Documentation (RESERVED)

12.4 General Arrangement Drawings (RESERVED)

12.5 Civil, Structural, and Architectural Criteria and Typical Design Details (RESERVED)

12.6 Mechanical Drawings (RESERVED)

12.7 Specifications (RESERVED)

12.8 Engineering Calculations (RESERVED)

12.9 Material Selection Documentation (RESERVED)

12.10 Critical Systems Equipment/Instrument List (RESERVED)

12.11 IQRPE Reports (RESERVED)

12.12 Installation Plans (RESERVED)

12.13 Instrument Control Logic and Narrative Description (RESERVED)

12.14 Descriptions of Instrument Installation and Testing Procedures (RESERVED)

12.15 Operating Documents (RESERVED)

III.10.B STANDARD CONDITIONS AND GENERAL FACILITY CONDITIONS

In addition to the conditions in this chapter, the Permittees must comply with all the applicable portions of the Dangerous Waste Portion and EPA portion of the Resource Conservation and Recovery Act (RCRA) Permit for the Hanford Facility. In the event that a Unit-Specific Condition for the WTP Unit in Permit Conditions III.10.C. through III.10.K. conflicts with a general condition in Permit Conditions I and II of this permit, the Unit-Specific Condition will apply to the WTP Unit.

III.10.C. UNIT-SPECIFIC CONDITIONS FOR THE WTP UNIT

III.10.C.1 Facility-Specific Definitions and Acronyms

The following definitions are specific to the WTP Unit:

Ash: means a measure of the contribution of particulate matter from the melter feeds to the melter off-gas, as determined by representative sampling and analysis of the melter feed using ASTM Method D-482, or an equivalent method.

Batch: refers to waste staged in one DST designated as mixed waste for transfer to the WTP Unit for treatment.

Continuous monitoring system: means using a device which continuously samples the regulated parameter specified on Permit Tables III.10.H.F, III.10.I.F, III.10.J.F, and III.10.K.F, with the exception of pressure, without interruption, evaluates the detector response at least once every fifteen (15) seconds and computes and records the average value at least every sixty (60) seconds, except during allowable periods of calibration and except as defined otherwise by the CEMS Performance Specifications in 4B and 8A in Appendix B, 40 CFR Part 60. For the parameter pressure, the term "continuous monitoring system" means using a device that continuously samples the pressure without interruption and evaluates the detector response without averaging at least once each second and records the value at least every sixty (60) seconds. In addition, if the AWFCO is engaged due to a pressure exceedence, the pressure value must be recorded.

Cascade event: means when additional waste feed cut-off parameter set points deviate outside the limits specified in Permit Tables III.10.H.F, III.10.I.F, III.10.J.F, and III.10.K.F after waste feed is cut-off, but while waste or waste residues are being managed in HLW and LAW.

Dangerous and/or mixed waste management unit: means dangerous and/or mixed waste management units, areas, systems, and sub-systems as defined in Permit Tables III.10.D.A, III.10.E.A through D, III.10.F.A, III.10.G.A, III.10.H.A, III.10.I.A, III.10.J.A, and III.10.K.A.

Dioxin/furan" and "dioxins and furans: means tetra-, penta-, hexa-, hepta-, and octa-chlorinated dibenzo dioxins and furans.

HLW Vitrification System: is defined as specified on Permit Tables III.10.J.A and B, and III.10.K.A and B.

Hourly rolling average or HRA: will mean the arithmetic mean of the sixty (60) most recent one-minute readings recorded by the continuous monitoring system.

LAW Vitrification System: is defined as specified on Permit Tables III.10.H.A and B, and III.10.I.A and B.

Mode of operation: means operation of the LAW Vitrification System or the HLW Vitrification System within set limits for each operating parameter specified in Permit Tables III.10.H.D and F (for LAW) and Permit Tables III.10.I.D and F (for HLW).

One-minute average: means the average of detector responses calculated at least every sixty (60) seconds from responses obtained at least every fifteen (15) seconds.

Permittees: means the United States Department of Energy (owner/operator) and Bechtel National, Inc. (Co-operator).

Pretreatment Plant Miscellaneous Unit Systems: is defined as specified on Permit Tables III.10.G.A and B.

Primary sump: means any pit or reservoir that meets the WAC 173-303-040 definition of "tank," and those troughs/trenches connected to it, that serve to collect dangerous/hazardous waste, deliberately introduced (e.g., from decontamination or treatment activities), for transport to TSD facilities.

Rolling average: means the average of all one-minute averages over the averaging period.

Secondary sump: means any pit or reservoir that meets the WAC 173-303-040 definition of "tank," and those troughs/trenches connected to it, that serve to collect dangerous/hazardous waste, not deliberately introduced (e.g., from spills, leaks, or overflows), for transport to TSD facilities.

Standard operating procedure or SOP: will mean a written description of the procedures by which a process, equipment, etc. will be operated. An SOP may be written by the manufacturer and/or the Permittees.

Successful completion of the demonstration test: will mean operations including a minimum of three test runs without significant interruptions (i.e., each test run was completed on the same day initiated and the samples have been preserved and maintained intact, and one in which sampling of exhaust gas was representative of the LAW Vitrification System or HLW Vitrification System Operations, whichever is applicable, and adequate to achieve evaluation of PODCs destruction and removal efficiency (DRE) to 99.99%).

TEQ: means toxicity equivalence, the international method of relating the toxicity of various dioxin/furan congeners to the toxicity of 2,3,7,8- tetrachlorodibenzo-p-dioxin.

Pre-process: means prior to introduction into a dangerous or mixed waste management unit at the WTP Unit.

In-process: means duration of a waste in a dangerous or mixed waste management unit at the WTP Unit.

Post-process: means prior to the introduction into a subsequent dangerous or mixed waste management unit at the WTP Unit or prior to shipment from the WTP Unit.

Vendor information: means documentation prepared by a vendor (e.g., catalog cut sheets) for plant items that are routinely manufactured and stocked by vendors (i.e., items that are considered "off the shelf") and are not being procured in accordance with Permittee's engineering drawings and specifications. Documentation such as catalog cut sheets will be annotated to specify selected items which meet Permittee's procurement requirements equipment specification. Documentation associated with "one of a kind", custom items, and commercial grade items (e.g., bulk pipe, valves) that will be procured in accordance with the Permittees engineering drawings and specifications is not considered vendor information. Changes to the drawings and specifications may require a permit modification.

The following acronyms are specific to the WTP Unit:

AWFCO	Automatic Waste Feed Cut-off
CDR	Construction Deficiency Report
CEMS	Continuous Emissions Monitoring System
CMS	Continuous Monitoring System
CNP	Cesium Nitric Acid Recovery Process System
CRP	Cesium Resin Addition Process System
CPE	Cathodic Protection Electrical System
CXP	Cesium Ion Exchange Process System
DFETP	Dioxin and Furan Emission Test Plan
DRE	Destruction and Removal Efficiency
Dscf	Dry standard cubic feet
ERP	Emergency Response Plan
FEP	Waste Feed Evaporation Process System
FRP	Waste Feed Receipt Process System
HCP	HLW Concentrate Receipt Process System
HDH	HLW Canister Decontamination Handling System
HEH	HLW Canister Export Handling System
HEME	High Efficiency Mist Eliminator
HEPA	High Efficiency Particulate Air Filter
HFH	HLW Filter Cave Handling System
HFP	HLW Melter Feed Process System
HLP	HLW Lag Storage and Feed Blending Process System
HLW	High-level Waste
HMH	HLW Melter Handling System
HMP	HLW Melter Process System
HOP	HLW Vit Primary Offgas Treatment System
HPH	HLW Canister Pour Handling System
HSH	HLW Melter Cave Support Handling System
IHLW	Immobilized High-Level Waste (Glass)
ILAW	Immobilized Low-Activity Waste (Glass)
IQRPE	Independent, qualified, registered, professional engineer
LAB	WTP Laboratory Building
LAW	Low Activity Waste

LCP	LAW Concentrate Receipt Process System
LEH	LAW Container Export Handling System
LFH	LAW Canister Finishing Handling System
LFP	LAW Melter Feed Process System
LMH	LAW Melter Handling System
LMP	LAW Melter Process System
LOP	LAW Primary Offgas Process System
LPH	LAW Container Pour Handling System
LSH	LAW Melter Equipment Support Handling System
LSM	Locally Shielded Melter
LVP	LAW Secondary Offgas/Vessel Vent Process System
NCR	Nonconformance Report
PFH	Pretreatment Filter Cave Handling System
PIH	Pretreatment In-Cell Handling System
PJV	Pulse Jet Ventilation System
PODC	Principal Organic Dangerous Constituents
PTF	Pretreatment Building
PVP	Pretreatment Vessel Vent Process System
PVV	Process Vessel Vent System
PWD	Plant Wash and Disposal System
RDP	Spent Resin and Dewatering Process System
RDTP	Revised Demonstration Test Plan
RLD	Radioactive Liquid Waste Disposal System
RPP-WTP	River Protection Project-Waste Treatment Plant
RWH	Radioactive Solid Waste Handling System
SBS	Submerged Bed Scrubber
TCP	Treated LAW Evaporation Process System
TLP	Treated LAW Evaporation System
TOC	Total Organic Carbon
TXP	Technetium Ion Exchange Process System
TEP	Technetium Eluant Recovery Process System
UFP	Ultrafiltration Process System
WESP	Wet Electrostatic Precipitator
WTP	River Protection Project – Waste Treatment and Immobilization Project (also known as the Waste Treatment Plant and Vitrification Plant)
6Mo	Six Percent Molybdenum Alloy
304L	ASTM A240 Grade 304L Stainless Steel
316L	ASTM A240 Grade 316L Stainless Steel

III.10.C.2. General Waste Management

III.10.C.2.a. The Permittees may not commence treatment or storage of dangerous waste or mixed waste in any new or modified portion of the facility until the Permittees have received a Permit modification approval pursuant to Permit Conditions III.10.C.2.e. and III.10.C.2.f., or III.10.C.2.g., and submitted to Ecology, by certified mail, express mail, or hand delivery, a letter signed by the Permittees and a Registered Professional Engineer stating that the facility has been constructed or modified in compliance with the Permit in accordance with WAC 173-303-810(14)(a); and

III.10.C.2.a.i. Ecology has inspected the modified or newly constructed facility and finds it is in compliance with the conditions of the Permit, or

III.10.C.2.a.ii. Ecology has either waived the inspection or has not, within fifteen business days, after receipt of the Permittees' letter, notified the Permittees of an intent to inspect.

III.10.C.2.b. The Permittees are authorized to accept the dangerous and/or mixed waste specified in Operating Unit 10, Chapter 1.0 (Part A Form 3) except for those wastes outside the waste acceptance criteria specified in the WAP, Operating Unit 10, Chapter 3.0 of this Permit as long as the generator has a valid State/EPA identification number.

III.10.C.2.c. All dangerous and/or mixed waste must be managed only in areas authorized for dangerous and/or mixed waste management under the conditions of this Permit, except as allowed under WAC 173-303-200. The authorized dangerous and/or mixed waste management areas of the WTP Unit are specified in Conditions III.10.D through III.10.K. of this Permit.

III.10.C.2.d. Dangerous and/or mixed waste may be transferred from the WTP TSD unit to a permitted TSD only, in accordance with the receiving TSD unit's waste acceptance criteria.

III.10.C.2.e. Permit modifications pursuant to this Permit for dangerous and/or mixed waste at the request of the Permittees must be done according to the three tiered modification system specified in WAC 173-303-830(4) and Condition I.C.3. The Permit modification request must include page changes to the Permit, attachments, and permit application supporting documentation necessary to incorporate the proposed permit modification.

III.10.C.2.f. In addition to other requirements in WAC 173-303-830, within forty-five (45) days of a permit change (i.e., permit modification) being put into effect or approved, the Permittees will retype the relevant portions of the Permit and attachments, to incorporate the change (if not already reflected in the change pages submitted in the original permit modification request), reprint the documents, and submit them to Ecology. This submittal does not require certification described in WAC 173-303-810(13).

III.10.C.2.g. For permit modifications pursuant to Operating Unit 10, Appendix 1.0 of this Permit, a draft permit will be prepared and issued by Ecology pursuant to WAC 173-303-830(3)(a)(ii) and WAC 173-303-840. A final permit decision will be issued by Ecology pursuant to WAC 173-303-840.

III.10.C.2.h. The Permittees must complete at least one Compliance Schedule interim requirement every 12 months, as specified in Operating Unit 10, Appendix 1.0 of this Permit. If no interim requirement will be completed within a 12 month period, the Permittees will submit progress reports to Ecology for incorporation into the Administrative Record. Progress report Compliance Schedule dates will be submitted to Ecology as a Class [1] permit modification, for incorporation into Operating Unit 10, Appendix 1.0 of this Permit. Progress reports will contain at a minimum, the following information:

III.10.C.2.h.i. A description of the portion of the interim requirement completed;

III.10.C.2.h.ii. Summaries of any problems affecting timely completion of the interim requirement;

III.10.C.2.h.iii. A description of the plans for completing the remaining portion of the interim requirement, including any alternatives;

III.10.C.2.h.iv. Projected interim requirement completion date.

III.10.C.2.i. The Permittees will submit a Part A, Form 3 Permit Application revision for Ecology approval as a permit modification pursuant to Permit Conditions III.10.C.2.e. and III.10.C.2.f., or III.10.C.2.g., in accordance with the schedule in Operating Unit 10, Appendix 1.0 of this Permit to incorporate changes to Tables III.10.D.A, III.10.E.A through D, III.10.F.A, III.10.G.A, III.10.H.A, III.10.I.A, III.10.J.A, and III.10.K.A, as modified pursuant to the compliance schedule in Operating Unit 10, Appendix 1.0 of this Permit.

III.10.C.2.j. The Permittees will submit to Ecology the potential disposal path(s), including the potential authorized TSD facilities, for each waste stream generated at the WTP Unit in accordance with the schedule in Operating Unit 10, Appendix 1.0 of this Permit for incorporation into the Administrative Record.

III.10.C.2.k. The Permittees will submit to Ecology, traffic information at the WTP Unit pursuant to WAC 173-303-806(4)(a)(x), in accordance with the schedule in Operating Unit 10, Appendix 1.0 of this Permit for incorporation into the Administrative Record.

III.10.C.2.l. During operations of the LAW Vitrification System and HLW Vitrification System, pursuant to Permit Sections III.10.H. and J., processing of materials in the LAW and HLW Vitrification Systems that would designate as dangerous waste are fully subject to the requirements of this Permit, excluding the melter feed system as identified in Tables III.10.H.A. and III.10.J.A., respectively. This exclusion does not apply to mixed waste.

III.10.C.2.m. The Facility Owner shall ensure WTP input is provided to the risk budget tool developed in accordance with permit conditions III.11.I.5.

III.10.C.2.n. The Permittees will submit the following reports, based on the August 2006 mass balance submitted to Ecology (DOE Letter 06-ESQ-081), for Ecology's review and comment/resolution. Updated information to the August 2006 Mass Balance may be used if available and mutually agreed upon by the Permittees and Ecology. The reports will describe all of the treatment approaches identified by items (i) through (v) immediately below, and will be included in the administrative record.

III.10.C.2.n.i. By June 30, 2010, the Permittees will perform an assessment that projects mixed waste constituents and the concentrations that are expected to be contained in each secondary mixed waste stream anticipated to be generated;

III.10.C.2.n.ii. By June 30, 2010, the Permittees will identify appropriate LDR treatment standards for each mixed waste stream identified in item (i) immediately above;

III.10.C.2.n.iii. By June 30, 2010, the Permittees will identify which mixed waste streams that, from a qualitative risk perspective, reasonably may cause or may significantly contribute to an exceedance of applicable environmental standards at a disposal facility; and

III.10.C.2.n.iv. By June 30, 2010, the Permittees will, for the mixed waste streams identified in item (iii) immediately above, identify potential treatment approaches that mitigate their environmental impacts;

III.10.C.2.n.v. By December 31, 2015 or 12 months prior to cold commissioning of the facility producing the waste, whichever is earlier, the Permittees will, for the mixed waste streams identified in item (iii) immediately above, select appropriate treatment approaches that mitigate their environmental impacts.

III.10.C.2.o. The Facility owner shall evaluate all waste streams generated at the WTP for potential exceedances of applicable environmental standards and shall ensure all mixed and

dangerous waste streams generated at the WTP will not cause an exceedance of applicable environmental standards at an appropriate disposal facility on-site and is subject to the following requirements:

III.10.C.2.o.i. ILAW glass will be engineered to be compliant with the disposal facility WAC. The waste feed and ILAW glass recipes will be verified to be compliant with the permitted glass formulations (including planning for pertinent operating parameters) prior to vitrification;

III.10.C.2.o.ii. Treatment methods for secondary waste streams projected to be generated by the WTP that are slated for disposal at the Hanford Site will be engineered to ensure that treated secondary wastes will comply with the on-site disposal facility WAC and applicable LDRs prior to generation. Prior to treatment, secondary wastes must be evaluated to ensure the selected treatment methods are still appropriate and continue to comply with the on-site disposal facility WAC and applicable LDRs; and

III.10.C.2.o.iii. On a case-by-case basis, for any WTP mixed waste that does not meet the WAC for the disposal facility, Ecology will approve or deny acceptance of that waste to the disposal facility. This decision will be based on the disposal facility's WAC and compliance with WAC 173-303-140.

III.10.C.3. Waste Analysis

III.10.C.3.a. The Permittees will maintain adequate knowledge of any waste to be managed properly by the WTP Unit before acceptance, after receipt, and during treatment and storage of these waste. The Permittees will ensure this knowledge through compliance with the requirements of WAC-173-303-300 and with the provisions of the WAP, Operating Unit 10, Chapter 3.0 of this Permit [WAC 173-303-806(4)(a)(ii), WAC 173-303-300(1)].

III.10.C.3.b. When laboratory analytical methods are required to confirm the Permittees knowledge of the waste, the Permittees must ensure that the sampling and test procedures listed as acceptable by WAC 173-303-110, Appendices II and III to 40 CFR Part 261, the current revision of SW-846, or equivalent methods approved in writing by Ecology are used.

III.10.C.3.c. The Permittees are responsible for obtaining accurate information for each waste stream. Inaccurate waste analysis information provided by the generating site (or unit) is not a defense for noncompliance by the Permittees with the waste management requirements and conditions of this Permit, WAC 173-303, and the LDR in 40 CFR Part 268, as incorporated by reference in Chapter 173-303.

III.10.C.3.d. Records and results of waste analyses described in Conditions II.D.3 or III.10.C.3.e. will be maintained as described in Condition II.I.1 of this Permit. The WTP Unit operating record will include, but not be limited to, information requirements for waste analysis in Conditions I.E.10 and II.I of this Permit.

III.10.C.3.e. Prior to the initial receipt of dangerous and/or mixed waste in the WTP Unit, the Permittees will submit to Ecology for review and approval a revised WAP and QAPP in Operating Unit 10, Chapter 3.0 of this Permit as a permit modification pursuant to Conditions III.10.C.2.e and III.10.C.2.f, and Compliance Schedule in Operating Unit 10, Appendix 1.0. The revised WAP and QAPP will include:

III.10.C.3.e.i. All the elements listed in WAC 173-303-300(5), Condition II.D.3 of this Permit (Waste Analysis), and in compliance with Condition II.E of this Permit (Quality Assurance/Quality Control).

III.10.C.3.e.ii. Requirements that characterization will be performed on the waste feed prior to transfer to the WTP Unit in conformance with the regulatory data quality objectives identified in the Regulatory DQO Optimization Report (24590-WTP-RPT-MGT-04-001, Rev 0). Requirements that the following analyses, at a minimum, will be conducted on each new batch prior to waste transfer to the WTP Unit, in accordance with the methods under WAC 173-303-110: Ammonia, pH, metals, organic acids, mercury, cyanide, volatiles, semi-volatiles, PCBs/pesticides, anions, TOC, and compatibility (ASTM Method D5058-90). For the purposes of this Permit Condition, a "new batch" is one that has been sampled and analyzed in accordance with the Regulatory DQO Optimization Report (24590-WTP-RPT-MGT-04-001, Rev 0), and has received no further additions. Further additions require the Permittees to resample and reanalyze, unless an exception is approved by Ecology on a case-by-case basis. Only mixed waste meeting the definition of "new batch", or granted an exception as discussed above, are authorized for transfer to the WTP Unit. Water additions for the purposes of waste transfer are not considered additions for the purposes of this Permit Condition.

III.10.C.3.e.iii. Identify and include operating parameters to be monitored/controlled and limitations for these parameters for pre-process, in-process, and post-process operations addressing on a unit specific basis treatment effectiveness, as specified in Tables III.10.E.E through H, III.10.G.C, III.10.H.C, III.10.I.C, III.10.J.C, and III.10.K.C, waste compatibility, safe operation, and compatibility with unit materials of construction. Amend the sampling, analysis, and QA/QC procedures to include these parameters and the monitoring frequency.

III.10.C.3.e.iv. Requirements that the Permittees will, for Type I sumps if liquids are detected, and for Type II sumps, as defined in Operating Unit 10, Chapter 4.0 of this Permit, if liquid levels are outside normal operating parameters, either collect the liquid and return to the treatment process, or designate the sump contents for proper management and disposal prior to removal.

III.10.C.3.e.v. For ILAW and IHLW containers, a description of procedures used to verify exterior container surfaces are visually free of mixed waste.

III.10.C.3.e.vi. Requirement that wastes generated at the WTP Unit meet the receiving authorized TSD facility waste acceptance criteria prior to a waste stream transfer.

III.10.C.3.e.vii. Requirements and criteria for reevaluation of sampling and analysis frequency for all waste streams.

III.10.C.3.e.viii. Documentation demonstrating methods for obtaining samples of wastes are representative as discussed in WAC 173-303-110(2).

III.10.C.4. Recordkeeping

III.10.C.4.a. The unit specific portion of the Hanford Facility Operating Record will include the documentation specified in Operating Unit 10, Chapter 12.0, Permit Condition II.I, applicable to the WTP Unit and other documentation specified in Operating Unit 10. The facility and unit specific record keeping requirements are distinguished in Table 12-1 of the General Information portion, Attachment 33 to the Sitewide Permit, and tied to the associated Sitewide Permit Conditions.

III.10.C.5 Procedure to Prevent Hazards

III.10.C.5.a. The Permittees will design, construct, and operate the WTP Unit in compliance with Operating Unit 10, Chapter 6.0, Section 6.1.

III.10.C.5.b. Prior to the initial receipt of dangerous and/or mixed waste in the WTP Unit, the Permittees will update and resubmit for approval Operating Unit 10, Chapter 6.0, Sections 6.3, 6.4, and 6.5 as a permit modification pursuant to Permit Conditions III.10.C.2.e and III.10.C.2.f, to be consistent with design details and schedule described in Operating Unit 10, Appendix 1.0. The WTP Unit fire protection systems will be constructed to the applicable codes listed in Operating Unit 10, Chapter 6.0, Section 6.3.1.4. Updated Section 6.4.4. will include descriptions of the essential loads and critical systems supplied with back-up, un-interruptible, and standby power.

III.10.C.5.c. The Permittees will inspect the WTP Unit to prevent malfunctions and deterioration, operator errors, and discharges that may cause or lead to the release of dangerous waste constituents to the environment, or a threat to human health. Inspections must be conducted in accordance with the WTP Unit Inspection Schedule, Operating Unit 10, Chapter 6.0, Section 6.2. Prior to the receipt of dangerous and/or mixed waste in the WTP Unit, the Permittees will update and resubmit to Ecology for review and approval the Inspection Schedule in Operating Unit 10, Chapter 6.0 of this Permit as a permit modification pursuant to Permit Conditions III.10.C.2.e and III.10.C.2.f, and Compliance Schedule in Operating Unit 10, Appendix 1.0. The revised schedule will include, but not be limited to, III.10.C.5.i. through v. below. In addition, the Permittees will submit to Ecology for incorporation into the Administrative Record, the basis for developing Inspection Schedule frequencies:

III.10.C.5.c.i. Detailed dangerous and/or mixed waste management unit specific and general inspection schedules and description of procedures (not examples) pursuant to WAC 173-303-395(1)(d), 173-303-630(6), 173-303-640(4)(a)(i) and (6), 173-303-670(7)(b) in accordance with 173-303-680(3), 40 CFR, 264.1101(c)(4). The inspection schedule will be presented in the form of a table that includes a description of the inspection requirement, inspection frequency, and types of problems to look for during the inspections.

III.10.C.5.c.ii. The proposed locations (scaled drawing with layout) and capabilities of camera(s) (i.e., zoom angles, field of view, etc.) to be used for remote inspections.

III.10.C.5.c.iii. Schedule and program description for performing integrity assessments as specified in Permit Conditions III.10.E.9.e.i., III.10.G.10.e.i., III.10.H.5.e.i., III.10.I.1.a.v., III.10.J.5.e.i., and III.10.K.1.a.v.

III.10.C.5.c.iv. Inspection schedules for leak detection system and control instrumentation to include, but not limited to, valves pressure devices, flow devices, measuring devices, as specified in Permit Conditions III.10.E.9.e.xi, III.10.F.3.c, and III.10.G.10.e.xii, and Permit Conditions III.10.H.5.f.xvi, and III.10.J.5.f.xvi.

III.10.C.5.c.v. Inspection schedule will include inspections for all dangerous and/or mixed waste management units specified in Permit Sections III.10.D, E, F, G, H, I, J, and K.

III.10.C.5.d. The Permittees will equip the WTP Unit with the equipment specified in Operating Unit 10, Chapter 6.0, as required by WAC 173-303-340(1), and Condition II.B.1 of this Permit.

III.10.C.5.e. The Permittees will test and maintain the equipment specified in Operating Unit 10, Chapter 6.0, as necessary, to assure proper operation in the event of emergency as required by Condition II.B.2 of this Permit.

III.10.C.5.f. The Permittees will maintain access to communications or alarms pursuant to WAC 173-303-340(2), as provided in the *RPP-WTP Emergency Response Plan*, Operating Unit 10, Chapter 7.0 and Condition II.B.3 of this Permit.

III.10.C.6. Contingency Plan

III.10.C.6.a. The Permittees will immediately carry out applicable provisions of the *RPP-WTP Emergency Response Plan*, Operating Unit 10, Chapter 7.0 of this Permit, pursuant to WAC 173-303-360(2), whenever there is a release of dangerous and/or mixed waste or dangerous waste constituents, or other emergency circumstance, any of which threatens human health or the environment.

III.10.C.6.b. Prior to the initial receipt of dangerous and/or mixed waste in the WTP Unit, the Permittees will update and resubmit the Contingency Plan in compliance with Operating Unit 10, Chapter 7.0, and pursuant to WAC 173-303-350(5), as a permit modification pursuant to Permit Conditions III.10.C.2.e and III.10.C.2.f, to be consistent with design details and schedule described in Operating Unit 10, Appendix 1.0.

III.10.C.6.c. After initial receipt of dangerous and/or mixed waste, the Permittees will review and amend, if necessary, the applicable portions of the Contingency Plan, Operating Unit 10, Chapter 7.0 of this Permit, and in accordance with the provisions of WAC 173-303-350(5) and WAC 173-303-830(4). The Contingency Plan will be amended as a permit modification pursuant to Permit Conditions III.10.C.2.e and III.10.C.2.f.

III.10.C.6.d. RESERVED.

III.10.C.6.e. Prior to the initial receipt of dangerous and/or mixed waste in the WTP Unit, the Permittees will comply with the requirements of WAC 173-303-350(3) and –360(1) concerning the emergency coordinator specific to the WTP Unit in compliance with Permit Condition II.A.4.

III.10.C.7. Personnel Training

III.10.C.7.a. Prior to the initial receipt of dangerous and/or mixed waste in the WTP Unit, the Permittees will update and resubmit, to Ecology for review and approval, the Training Program description in Operating Unit 10, Chapter 8.0 of this Permit as a permit modification pursuant to Permit Conditions III.10.C.2.e and III.10.C.2.f, and Compliance Schedule in Operating Unit 10, Appendix 1.0. The revised Training Program description will include but not be limited to:

III.10.C.7.a.i. Detailed unit specific and general Training Program descriptions (not typical) consistent with WAC 173-303-806(4)(a)(xii).

III.10.C.7.a.ii. Sufficient detail to document that the training and qualification program for all categories of personnel whose activities may reasonably be expected to directly affect emissions from the LAW and HLW Systems, except control room operators, is appropriately consistent with 40 CFR 63.1206(c)(6)(ii), and for control room operators, is appropriately consistent with 40 CFR 63.1206(c)(6)(i) and 63.1206(c)(6)(iii) through 63.1206(c)(6)(vi) [WAC 173-303-680(2)].

III.10.C.7.b. The Permittees will ensure that the LAW and HLW Systems are operated and maintained, at all times, by persons who are trained and qualified to perform these and any other duties that may reasonably be expected to directly affect emissions from the LAW and HLW Systems [WAC 173-303-680(2)].

III.10.C.7.c. The Permittees will conduct personnel training in accordance with the approved description of the WTP Unit Training Plan, Operating Unit 10, Chapter 8.0 of this Permit, pursuant to WAC 173-303-330. The Permittees will maintain documents in accordance with Condition II.C.1 of this Permit and WAC 173-303-330(2) and (3).

III.10.C.7.d. RESERVED.

III.10.C.7.e. The Permittees will submit, under separate cover, the actual detailed WTP Unit Dangerous Waste Training Plan in accordance with the Compliance Schedule in Operating Unit 10, Appendix 1.0. The WTP Unit Dangerous Waste Training Plan will be reviewed for compliance with the outline of the training program in Operating Unit 10, Chapter 8.0 and requirements of WAC 173-303-330. The Training Plan will be incorporated into the Administrative Record.

III.10.C.8. Closure

III.10.C.8.a. The Permittees must conduct closure of the WTP Unit according to the Closure Plan in Operating Unit 10, Chapter 11.0, and Conditions II.J (Facility Closure), II.K (Soil/Ground Water Closure Performance Standards), and III.10.C.8. of this Permit. The closure plan will be modified according to provisions of WAC 173-303-610(3)(b)(ii).

III.10.C.8.b. Prior to initial receipt of dangerous and/or mixed waste in the WTP Unit, the Permittees will update and resubmit the Closure Plan, Operating Unit 10, Chapter 11.0 of this Permit, for approval as a permit modification pursuant to Permit Condition III.10.C.2.g., to be consistent with design details and schedule described in Operating Unit 10, Appendix 1.0. The updated Closure Plan must be consistent with the closure performance standards specified in Condition II.K, WAC 173-340 and, in addition for Containment Buildings, consistent with 40 CFR 264.1102(b) as referenced by WAC 173-303-695.

III.10.C.8.c. The Permittees will submit, for Ecology review and approval, an update to the Closure Plan, Operating Unit 10, Chapter 11.0 within one hundred eighty (180) days prior to commencing partial closure, as a permit modification pursuant to Permit Conditions III.10.C.2.e and III.10.C.2.f.

III.10.C.8.d. One hundred eighty (180) days prior to commencing closure, the Permittees must submit to Ecology, for review and approval, a Sampling and Analysis Plan and a revised Closure Plan as a permit modification pursuant to Permit Conditions III.10.C.2.e and III.10.C.2.f.

III.10.C.8.e. At least forty-five (45) days before initiating closure, the Permittees must provide Notification of Closure pursuant to WAC 173-303-610(3)(c).

III.10.C.8.f. Ecology may require additional sampling and/or investigation after the Permittees implement the approved Sampling and Analysis Plan if Ecology determines that the sampling and analyses have not adequately demonstrated whether clean closure has been achieved. Such a requirement will be implemented pursuant to WAC 173-303-830(3). Additional sampling and analysis may be required for the following reasons:

III.10.C.8.f.i. Specialized sample collection or analytical techniques are required to ensure adequate quantitation limits for chemical constituents; or

III.10.C.8.f.ii. Results indicate the need to analyze for additional constituents at certain locations; or

III.10.C.8.f.iii. Results indicate additional soil or groundwater sampling is required in certain locations; or

III.10.C.8.f.iv. Other reasons indicate the Sampling and Analysis Plan has not adequately demonstrated whether clean closure has been achieved.

III.10.C.8.g. RESERVED.

III.10.C.8.h. Documentation supporting the independent registered professional engineer's certification of closure must be submitted to Ecology with the closure certification required by WAC 173-303-610(6). In addition to the items in Operating Unit 10, Chapter 11.0, the documentation must include the following and other information Ecology may request. The Permittees are required to furnish documentation supporting the independent registered professional engineer's certification to Ecology upon request, until Ecology has notified the Permittees in writing that Ecology agrees with and has accepted the Permittees' closure certification:

III.10.C.8.h.i. Sampling procedures that were followed;

III.10.C.8.h.ii. soil and concrete locations that were sampled;

III.10.C.8.h.iii. Sample labeling and handling procedures that were followed, including chain of custody procedures;

III.10.C.8.h.iv. Description of procedures that were followed to decontaminate concrete or metal to meet the clean closure standards as set by Ecology, on a case by case basis, in accordance with the closure performance standards of WAC 173-303-610(2)(a)(ii) and in a manner that minimizes or eliminates post-closure escape of dangerous waste constituents, or to achieve a "clean debris surface" as specified in 40 CFR 268.45, Table 1, concrete surfaces, as incorporated by reference in WAC 173-303-140. [WAC 173-303-610(2)(b)(ii)].

III.10.C.8.h.v. Laboratory and field data, including supporting QA/QC summary;

III.10.C.8.h.vi. Report that summarizes closure activities;

III.10.C.8.h.vii. Copy of all field notes taken by the independent registered professional engineer; and

III.10.C.8.h.viii. Copy of all contamination survey results.

III.10.C.9. Critical Systems

III.10.C.9.a. The WTP Unit critical systems, as defined in the Hanford Site-wide Permit definition section, are identified in Operating Unit 10, Appendix 2.0.

III.10.C.9.b. As the design proceeds, Ecology reserves the right to modify this Permit for reasons described in the WAC 173-303-830(3) to add additional systems to the Critical Systems in Operating Unit 10, Appendix 2.0.

III.10.C.9.c. The Permittees will conduct all construction subject to this Permit in accordance with the approved designs, plans, and specifications that are required by this Permit, except as specified in Conditions III.10.C.9.d. or III.10.C.9.e. For purposes of Conditions III.10.C.9.d. and III.10.C.9.e., the Ecology representative will be an Ecology construction inspector, project manager, or other designated representative of Ecology.

III.10.C.9.d. The Permittees will submit a nonconformance report (NCR) or construction deficiency report (CDR) to the Ecology representative (s), as applicable, within five (5) calendar days of the Permittees becoming aware of incorporation of minor nonconformance or construction deficiency from the approved designs, plans, and specifications into the construction of critical systems, as defined in the Hanford Site-wide Permit definition

section. Such minor nonconformance or construction deficiency will be defined, for the purposes of this Permit Condition, as nonconformance or construction deficiency that is necessary to accommodate proper construction and the substitution or the use of equivalent or superior materials or equipment that do not substantially alter the Permit conditions or reduce the capacity of the facility to protect human health or the environment. Such minor nonconformance or construction deficiency will not be considered a modification of this Permit. If Ecology determines that the nonconformance or construction deficiency is not minor, it will notify the Permittees in writing that a permit modification is required for the deviation and whether prior approval is required from Ecology before work proceeds which affect the nonconforming or construction deficiency item.

III.10.C.9.e. The Permittees will formally document, with a nonconformance report (NCR) or construction deficiency report (CDR), as applicable, incorporation of minor nonconformance or construction deficiency from the approved designs, plans, and specifications into the construction of non-critical systems subject to this Permit. Such minor nonconformance or construction deficiency will not be considered a modification of this Permit. All NCR's and CDR's will be maintained in the WTP Unit Operating Record and will be made available to Ecology upon request or during the course of an inspection. If Ecology determines that the nonconformance or construction deficiency is not minor, it will notify the Permittees in writing that a permit modification is required for the deviation and whether prior approval is required from Ecology before work proceeds which affect the nonconforming or construction deficiency item.

III.10.C.9.f. For each Critical System identified in Operating Unit 10, Appendix 2.0 or meets the definition of Critical System as defined in this Permit, the Permittees will submit to Ecology for review and approval, following the schedule in Operating Unit 10, Appendix 1.0 of this Permit, the information identified in Permit Conditions III.10.C.16., III.10.D.10., III.10.E.9., III.10.F.7., III.10.G.10., III.10.H.5., and III.10.J.5. Information Ecology determines to incorporate into the Permit will follow the Permit Condition III.10.C.2.g. process, unless stated otherwise within the specific permit condition. Information Ecology determines necessary to support design basis will be incorporated into the Administrative Record.

III.10.C.9.g. Upon completion of the WTP Unit construction subject to this Permit, the Permittees will produce as-built drawings of the project which incorporate the design and construction modifications resulting from all change documentation as well as modifications made pursuant to Permit Conditions III.10.C.2.e., III.10.C.2.f., and III.10.C.2.g. The Permittees will place the as-built drawings into the operating record within twelve (12) months of completing construction.

III.10.C.9.h. The Permittees will formally document changes to approved designs, plans, and specifications with design change documentation [e.g., Design Change Notice (DCN), Field Change Request (FCR), Field Change Notice (FCN), Specification Change Notice (SCN), and Supplier Deviation Disposition Request (SDDR)]. All design change documentation will be maintained in the WTP Unit-specific Operating Record and will be made available to Ecology upon request or during the course of an inspection. For any design change documentation affecting any critical systems, the Permittees will provide copies to Ecology within five (5) working days. Identification of critical systems will be included by the Permittees in each WTP Unit-specific dangerous waste permit application, closure plan, or permit modification, as appropriate. If Ecology determines that the design change is not minor, it will notify the Permittees in writing that a permit

modification is required for the design change and whether prior approval is required from Ecology before work affected by the design change may proceed.

III.10.C.9.i. Ventilation system duct work is not required to be doubly contained within the WTP Unit. However, upon discovery of accumulation of liquids, a compliance plan will be submitted within sixty (60) days of discovery to correct the problem.

III.10.C.10 Equivalent Materials

III.10.C.10.a. If certain equipment, materials, and administrative information (such as names, phone numbers, addresses) are specified in this Permit, the Permittees may use equivalent or superior substitutes. Use of such equivalent or superior items within the limits (e.g., ranges, tolerances, and alternatives) already clearly specified in sufficient detail in Operating Unit 10 of this Permit, are not considered a modification of this Permit. However, the Permittees must place documentation of the substitution, accompanied by a narrative explanation and the date the substitution became effective in the operating record within seven (7) days of putting the substitution into effect, and submit documentation of the substitution to Ecology. Upon review of the documentation of the substitution, if deemed necessary, Ecology may require the Permittees to submit a permit modification in accordance with Permit Conditions III.10.C.2.e. and III.10.C.2.f.

Note: The format of tables and forms contained in Operating Unit 10 of this Permit are not subject to the requirements of this Permit, and may be revised at the Permittees' discretion.

III.10.C.10.b. If Ecology determines that a substitution was not equivalent to the original, they will notify the Permittees that the Permittees' claim of equivalency has been denied, of the reasons for the denial, and that the original material or equipment must be used. If the product substitution is denied, the Permittees will comply with the original approved product specification, find an acceptable substitution, or apply for a permit modification in accordance with Permit Conditions III.10.C.2.e. and III.10.C.2.f.

III.10.C.11. Risk Assessment

III.10.C.11.a. The Permittees will submit, in accordance with Operating Unit 10, Appendix 1.0 of this Permit to Ecology for approval, the "Previously Submitted Risk Assessment Workplan," Operating Unit 10, Appendix 6.1.1. of this Permit, revised in consultation with Ecology to address the revisions (NOD/responses) documented in Operating Unit 10, Appendix 6.1.2 and updated to address the following, as a permit modification pursuant to Permit Conditions III.10.C.2.e. and III.10.C.2.f. The updated previously submitted Risk Assessment Work Plan will be added to Operating Unit 10 as Appendix 6.2 (Risk Assessment Work Plan).

III.10.C.11.a.i. EPA guidance for performance of Human Health and Ecological Risk Assessments for Hazardous Waste Combustion Facilities current at the time of the submittal;

III.10.C.11.a.ii. Toxicity data current at the time of the submittal;

III.10.C.11.a.iii. Compounds newly identified or updated emissions data from current waste characterization and emission testing;

III.10.C.11.a.iv. Air modeling updated to include stack gas parameters based on most current emissions testing and WTP Unit design;

III.10.C.11.a.v. Physical/transport properties of constituents current at the time of the submittal;

III.10.C.11.a.vi. Process Description based on most current WTP Unit design;

III.10.C.11.a.vii. Emissions data and all supporting calculations based on most current WTP Unit; and

III.10.C.11.a.viii. Update of receptor locations based on land use or land use zoning changes, if any.

III.10.C.11.b. The Permittees will submit for Ecology approval, prior to initial receipt of dangerous and/or mixed waste in the WTP Unit, a Pre-Demonstration Test Risk Assessment Report as Operating Unit 10, Appendix 6.3 addressing direct and indirect human health and ecological risks performed pursuant to Ecology approved work plan under Permit Condition III.10.C.11.a. This report will also include submittal of projected stack emissions data in Tables III.10.G.D., III.10.H.E., and III.10.J.E. of this Permit and Operating Unit 10, Appendix 6.3.1 (Basis and Assumptions), completed and updated which details the basis and assumptions for these emissions, including but not limited to, projected operating conditions, feed-rates, and treatment effectiveness, consistent with information provided and approved pursuant to Permit Conditions III.10.G.6., III.10.G.10., III.10.H.5., and III.10.J.5. as a permit modification pursuant to Permit Conditions III.10.C.2.e. and III.10.C.2.f.

III.10.C.11.c. Within ninety (90) days of Ecology approval of the Demonstration Report(s) submitted pursuant to Permit Condition III.10.H.3.d.i, the Permittees will submit a Final Risk Assessment Report as Operating Unit 10, Appendix 6.4, incorporating the emission test results from the Demonstration Report(s). The Final Risk Assessment Report will be prepared in accordance with the Risk Assessment Work Plan, as approved by Ecology pursuant to Permit Condition III.10.C.11.a, except the following updates are hereby incorporated. The Permittees will also submit with this Final Risk Assessment Report, Tables III.10.G.D. and III.10.I.E. of this Permit and Operating Unit 10, Appendix 6.4.1 (Basis and Assumptions) updated to incorporate the emissions data from this Final Risk Assessment Report(s), as a permit modification pursuant to Permit Conditions III.10.C.2.e. and III.10.C.2.f.

III.10.C.11.c.i. Toxicity data current at the time of the submittal;

III.10.C.11.c.ii. Compounds newly identified or updated emissions data from current waste characterization and emission testing;

III.10.C.11.c.iii. Air modeling updated to include stack gas parameters based on most current emissions testing;

III.10.C.11.c.iv. Physical/transport properties of constituents current at the time of the submittal;

III.10.C.11.c.v. Update of receptor locations based on land use or land use zoning changes, if any;

III.10.C.11.c.vi. Process description based on current WTP Unit design;

III.10.C.11.c.vii. Emissions data and all supporting calculations based on current WTP Unit; and

III.10.C.11.c.viii. Data from final risk assessment report pursuant to Permit Condition III.10.C.11.d, if available first, or simultaneously.

III.10.C.11.d. Within ninety (90) days of Ecology approval of the Demonstration Report(s) submitted pursuant to Permit Condition III.10.J.3.d.i, the Permittees will submit a Final Risk Assessment Report as Operating Unit 10, Appendix 6.4, incorporating the emission test results from the Demonstration Report(s). The Final Risk Assessment Report will be prepared in accordance with the Risk Assessment Work Plan, as approved by Ecology pursuant to Permit Condition III.10.C.11.a, except the following updates are hereby

incorporated. The Permittees will also submit with this Final Risk Assessment Report, Tables III.10.G.D. and III.10.K.E. of this Permit and Operating Unit 10, Appendix 6.4.1 (Basis and Assumptions) updated to incorporate the emissions data from this Final Risk Assessment Report, as a permit modification pursuant to Permit Conditions III.10.C.2.e. and III.10.C.2.f.

III.10.C.11.d.i. Toxicity data current at the time of the submittal;

III.10.C.11.d.ii. Compounds newly identified or updated emissions data from current waste characterization and emission testing;

III.10.C.11.d.iii. Air modeling updated to include stack gas parameters based on most current emissions testing;

III.10.C.11.d.iv. Physical/transport properties of constituents current at the time of the submittal;

III.10.C.11.d.v. Update of receptor locations based on land use or land use zoning changes, if any;

III.10.C.11.d.vi. Process description based on current WTP Unit design;

III.10.C.11.d.vii. Emissions data and all supporting calculations based on current WTP Unit; and

III.10.C.11.d.viii. Data from final risk assessment report pursuant to Permit Condition III.10.C.11.c, if available first, or simultaneously.

III.10.C.11.e. The Final Risk Assessment Report(s) required by Permit Conditions III.10.C.11.c. and III.10.C.11.d. may be combined, or provided separately, as appropriate.

III.10.C.12 Air Emissions

III.10.C.12.a Prior to installing or using any equipment subject to the requirements of WAC 173-303-690, the Permittees will obtain a Permit Modification following the Permit Condition III.10.C.2.g. process to incorporate WAC 173-303-690 standards into the permit application and this Permit prior to generation/receipt of dangerous and/or mixed waste in the WTP Unit.

III.10.C.12.b Prior to installing or using any equipment subject to the requirements of WAC 173-303-691, the Permittees will obtain a Permit Modification following the Permit Condition III.10.C.2.g. process to incorporate WAC 173-303-691 standards into the permit application and this Permit prior to generation/receipt of dangerous and/or mixed waste in the WTP Unit.

III.10.C.12.c The Permittees will comply with the organic air emission standards as set forth in WAC 173-303-692. The Permittees will obtain a permit modification following the Permit Condition III.10.C.2.g. process to incorporate WAC 173-303-692 standards into the permit application and this Permit prior to generation/receipt of dangerous waste in the WTP Unit.

III.10.C.13 Remote Data Access

Onsite, unrestricted, twenty-four (24) hour access to key WTP Unit operating data and emissions monitoring data will be provided to Ecology. This onsite, unrestricted access will include providing and maintaining for Ecology only use a computer terminal and printer linked to key WTP Unit operating data and emissions monitoring data. This terminal will be equipped with all necessary software and hardware to monitor, retrieve, and trend this data. Additional remote access will be provided on Ecology request if security concerns can be addressed.

III.10.C.14 Interim Period of Operation during Post Demonstration Test Period prior to receiving Ecology approval of the complete Demonstration Test Reports and the Final Risk Assessment Report.

III.10.C.14.a. During this Interim Period of Operation, the Permittees will be able to treat dangerous waste and mixed waste feed subject to the following conditions:

III.10.C.14.a.i. Obtain receipt of Ecology's approval for the LAW Vitrification System, Permit condition III.10.H.3.d.iii., prior to receiving dangerous or mixed waste feed into the LAW Vitrification System

III.10.C.14.a.ii. Obtain receipt of Ecology's approval for the HLW Vitrification System, Permit condition III.10.J.3.d.iii., prior to receiving dangerous or mixed waste feed into the HLW Vitrification System

III.10.C.14.a.iii. Accept and treat up to 3 million gallons of Hanford tank waste feed in WTP.

III.10.C.14.a.iv. Accepting and treating more than 3 million gallons of Hanford tank waste feed in WTP during this Interim Period will require a permit modification in accordance with WAC 173-303-830, Appendix 1, 5a.

III.10.C.15 Support Systems

III.10.C.15.a. Mechanical Handling Systems

III.10.C.15.a.i. The Permittees will submit to Ecology, pursuant to Permit Condition III.10.C.9.f., in accordance with the Compliance Schedule, as specified in Operating Unit 10, Appendix 1.0 of this Permit, engineering information as specified below, for incorporation into Attachment 51, Appendices 9.6, 9.10, 10.6, and 10.10 of this Permit, or into the Administrative Record where noted.

A. System Descriptions for each Mechanical Handling system identified in Permit Table III.10.C.A, for incorporation into the Administrative Record (Compliance Schedule Item 36).

B. Mechanical Handling Diagrams and Mechanical Handling Data Sheets for the following pieces of equipment (Compliance Schedule Item 37):

a. HDH-CRN-00005

b. HEH-CRN-00003

c. HPH-CRN-00001

d. HPH-CRN-00002

e. HSH-CRN-00001

f. HSH-CRN-00014

g. LEH-CRN-00003

h. LPH-CRN-00002

i. HEH-CRN-00001

C. Permit condition III.10.C.15.a. does not require:

a. Additional submittals beyond those described in permit condition III.10.C.15.a.;

b. IQRPE reports for equipment identified in III.10.C.15.a.i (B);

c. Installation inspections for equipment identified in III.10.C.15.a.i(B); and

d. Other inspection, verification, operability, maintenance, or records management beyond that which is specified elsewhere in this permit, for equipment identified in III.10.C.15.a.i (B), or by conditions III.10.C.15.a.ii and III.10.C.15.a.iii.

III.10.C.15.a.ii. The Permittees will submit to Ecology, pursuant to Permit Condition III.10.C.9.f., prior to initial receipt of dangerous waste and/or mixed waste in the WTP Unit, engineering information as identified below for incorporation into Attachment 51, Appendices 9.13, 9.18, 10.13, and 10.18 of this Permit.

A. Equipment instrument logic narrative description related to safe operation of equipment covered by III.10.C.15.a.i.B, including but not limited to allowed travel path for bridge and trolley, upper and lower hook travel limits, two-blocking prevention, hook load limits, wire rope misreeling, and overspeed protection (Compliance Schedule Item 38).

B. Descriptions of operational procedures demonstrating appropriate controls and practices are in place to ensure equipment covered by III.10.C.15.a.i.B will be operated in a safe and reliable manner that will not result in damage to regulated tank systems, miscellaneous unit systems, or canisters of vitrified waste (Compliance Schedule Item 39).

III.10.C.15.a.iii Prior to initial receipt of dangerous and/or mixed waste in the WTP Unit, the Permittees will submit to Ecology, pursuant to Permit Condition III.10.C.9.f., the following for incorporation into Attachment 51, Chapter 4.0: Updated Narrative Description and figures for all Mechanical Handling Systems identified in Permit Table III.10.C.A., to include but not limited to travel path, fail safe conditions, fail safe logic control, safety features and controls that minimize the potential for release of dangerous/mixed waste during normal operations, and lifting and/or load capabilities of each crane specified in III.10.C.15.a.i.B.

Tables III.10.C.A – Mechanical Handling Systems		
Pretreatment Building		
	Pretreatment Filter Cave Handling System	PFH
	Pretreatment In-Cell Handling System	PIH
	Radioactive Solid Waste Handling System	RWH
Low-Activity Waste Building		
	Radioactive Solid Waste Handling System	RWH

	LAW Melter Equipment Support Handling System	LSH
	LAW Container Pour Handling System	LPH
	LAW Container Finishing Handling System	LFH
	LAW Melter Handling System	LMH
	LAW Canister Export Handling System	LEH
High-Level Waste Building		
	HLW Melter Cave Support Handling System	HSH
	HLW Canister Export Handling System	HEH
	HLW Filter Cave Handling System	HFH
	HLW Canister Pour Handling System	HPH
	HLW Canister Decontamination Handling System	HDH
	HLW Melter Handling System	HMH
	Radioactive Solid Waste Handling System	RWH

1
2
3

III.10.D. CONTAINERS

III.10.D.1. Container Storage Areas and Storage Limits

III.10.D.1.a. The Permittees may store, in containers, all dangerous and/or mixed waste listed in the Part A, Forms Operating Unit 10, Chapter 1.0 of this Permit, in accordance with the WAP, Operating Unit 10, Chapter 3.0 of this Permit, as approved pursuant to Permit Conditions III.10.C.3. and III.10.C.2. Total containerized dangerous and/or mixed waste storage at the Facility will not exceed 2,780,000 gallons (372,520 cubic feet) pursuant to requirements in Permit Condition III.10.D.1.b.

III.10.D.1.b. The Permittees may place and store dangerous and mixed waste only in approved container storage areas and containment systems listed in Permit Tables III.10.D.A, III.10.D.B, and III.10.D.C (as approved/modified pursuant to Permit Condition III.10.D.10.), in accordance with Permit Section III.10.D, and in accordance with Operating Unit 10, Chapters 1.0 and 4.0, and Operating Unit 10, Appendices 9.4, 9.5, 9.7, 9.8, 9.9, 9.18, 10.4, 10.5, 10.7, 10.8, 10.9, 10.18, 12.4, 12.5, 12.7, 12.8, 12.9, and 12.15 of this Permit, as approved pursuant to Permit Conditions III.10.D.10.b. through d. The Permittees will limit the total volume of waste to quantities specified for the individual container storage areas listed in Permit Table III.10.D.A.

III.10.D.1.c. The Permittees must maintain a free volume (i.e., free volume = total capacity of containment system minus volume occupied by equipment and containers within containment systems) within containment systems identified in Permit Tables III.10.D.B and III.10.D.C (as approved/modified pursuant to Permit Condition III.10.D.10.), equal to ten percent (10%) of the total volume of dangerous and mixed waste stored within the containment system, or the volume of the largest container stored within the containment system, whichever is greater.

III.10.D.1.d. The Permittees will maintain documentation in the operating record for each container storage area and containment system listed in Permit Tables III.10.D.A, III.10.D.B, and III.10.D.C (as approved/modified pursuant to Permit Condition III.10.D.10.), in accordance with WAC 173-303-380.

III.10.D.1.e. For the purpose of determining compliance with container storage area capacity limits and containment system requirements, every waste container will be considered to be full.

III.10.D.1.f. If the containers of ILAW and/or IHLW are determined to no longer be dangerous and/or mixed waste as described in WAC 173-303-070, the ILAW and/or IHLW containers will no longer be subject to the conditions of this Permit.

III.10.D.2 Container Storage Areas Design and Construction

III.10.D.2.a. The Permittees will construct container storage areas identified in Permit Table III.10.D.A (as approved/modified pursuant to Permit Condition III.10.D.10.), as specified in all applicable drawings and specifications in Operating Unit 10, Appendices 9.4, 9.5, 9.7, 9.8, 9.9, 10.4, 10.5, 10.7, 10.8, 10.9, 12.4, 12.5, 12.7, 12.8, and 12.9 of this Permit, as approved pursuant to Permit Condition III.10.D.10.b.

III.10.D.2.b. The Permittees will construct all permanent containment systems identified in Permit Table III.10.D.B (as approved/modified pursuant to Permit Condition III.10.D.10.), as specified in all applicable drawings and specifications in Operating Unit 10, Appendices 9.4, 9.5, 9.7, 9.8, 9.9, 10.4, 10.5, 10.7, 10.8, 10.9, 12.4, 12.5, 12.7, 12.8, and 12.9 of this Permit, as approved pursuant to Permit Condition III.10.D.10.b.

III.10.D.2.c. All container storage areas and containment systems identified in Permit Tables III.10.D.A, III.10.D.B, and III.10.D.C (as approved/modified pursuant to Permit Condition III.10.D.10.), must be constructed, or operated to protect containers from contact with accumulated liquids (e.g., leaks, spills, precipitation, fire water, liquids from damaged or broken pipes) [WAC 173-303-630(7)(a)(i) and WAC 173-303-630(7)(c)(ii)].

III.10.D.2.d. Modifications to approved design, plans, and specifications in Operating Unit 10 of this Permit for the Container Storage Areas and containment systems will be allowed only in accordance with Permit Conditions III.10.C.2.e. and f., or III.10.C.2.g, III.10.C.9.d, e., and h.

III.10.D.3. Container Storage Area and Permanent Containment System Installation

III.10.D.3.a. RESERVED.

III.10.D.3.b. The Permittees will obtain and place in the WTP Unit operating record, within thirty (30) days of completion of each container storage area and containment system identified in Permit Tables III.10.D.A, and III.10.D.B (as approved/modified pursuant to Permit Condition III.10.D.10.), written statements by a qualified, installation inspector or a qualified registered, professional engineer, attesting that these areas were installed in compliance with WAC 173-303-630(7)(a), (b), and (c) [WAC 173-303-630(7), WAC 173-303-340].

III.10.D.4 Container Management Practices

III.10.D.4.a. No dangerous and/or mixed waste will be managed in the container storage areas unless the operating conditions specified under Permit Condition III.10.D.4. are complied with.

III.10.D.4.b. The Permittees will manage all containerized dangerous and mixed waste for container storage areas and containment systems identified in Permit Tables III.10.D.A, III.10.D.B, and III.10.D.C (as approved/modified pursuant to Permit Condition III.10.D.10.), in accordance with procedures described in Operating Unit 10, Chapter 4.0, Appendices 9.18, 10.18, and 12.15 of this Permit, as approved pursuant to Permit Condition III.10.D.10.c, and the following conditions:

III.10.D.4.b.i. The operating records and waste tracking procedures will indicate all times at which containerized dangerous and mixed waste were removed from and returned to designated staging, storage, segregation, and treatment areas as approved pursuant to Permit Condition III.10.D.10.c.vi. (WAC 173-303-380).

III.10.D.4.b.ii. The physical arrangement (i.e., spacing) of dangerous and mixed waste containers will be as specified in WAC 173-303-630(5)(c), except for the immobilized LAW and HLW waste containers, which must be as described in Operating Unit 10, Chapter 4.0, Section 4.2.1.2.1. of this Permit, as updated pursuant to Permit Condition III.10.D.10.c.i.

III.10.D.4.b.iii. All container storage areas and containment systems must be operated to protect containers from contact with accumulated liquids resulting from leaks, spills, or precipitation [WAC 173-303-630(7)(a)(i) and (c)(ii)].

III.10.D.4.b.iv. At all times, the Permittees will place and store ignitable and/or reactive dangerous and/or mixed waste in accordance with the procedures described in Operating Unit 10, Appendix 9.18, 10.18, and 12.15, as approved pursuant to Permit Condition III.10.D.10.c.xi.

III.10.D.4.b.v. At all times, the Permittees will place and store incompatible dangerous and/or mixed waste in accordance with the procedures described in Operating Unit 10, Appendix 9.18, 10.18, and 12.15, as approved pursuant to Permit Condition III.10.D.10.c.xii.

III.10.D.4.b.vi. At all times, storage containers holding dangerous and/or mixed waste that contain free liquids and/or exhibit either the characteristic of ignitability or reactivity as described in WAC 173-303-090(5) or (7), must be provided with a containment system in accordance with WAC 173-303-630(7)(a)(i) through (iii) [WAC 173-303-630(7)(c)].

III.10.D.4.b.vii. At all times, containers holding dangerous and/or mixed waste in container storage areas must be closed, except when it is necessary to add or remove waste [WAC 173-303-630(5)(a)].

III.10.D.4.b.viii. At all times, containers holding dangerous and/or mixed waste must not be opened, handled, or stored in a manner which may rupture the container or cause it to leak [WAC 173-303-630(5)(b)].

III.10.D.4.b.ix. A storage container holding a dangerous and/or mixed waste that is incompatible with any waste or other materials stored nearby in other containers, piles, open tanks, or surface impoundments must be separated from the other waste or materials or protected from them by means of a dike, berm, wall, or other device (as approved by Ecology) [WAC 173-303-630(9)(c)].

III.10.D.4.b.x. If a container holding dangerous and/or mixed waste is not in good condition (e.g., exhibits severe rusting, apparent structural defects, or any other condition that could lead to container rupture or leakage) or is leaking, the Permittees will manage the container in accordance with procedures described in Operating Unit 10, Appendices 9.18, 10.18, and 12.15 of this Permit, as approved pursuant to Permit Condition III.10.D.10.c.viii. [WAC 173-303-630(2)].

III.10.D.4.b.xi. The Permittees will maintain an adequate inventory of containers and/or over-pack containers at the WTP Unit for use pursuant to Permit Condition III.10.D.4.b.x.

III.10.D.4.b.xii. The Permittees will ensure that all containers used for dangerous and/or mixed waste management, are made of or lined with materials which will not react with and are otherwise compatible with the waste to be stored [WAC 173-303-630(4)].

III.10.D.4.b.xiii. Except for lab packs assembled in compliance with WAC 173-303-161 requirements, the Permittees will not place incompatible wastes, or incompatible wastes and materials, in the same container, unless WAC 173-303-395(1)(b) is complied with [WAC 173-303-630(9)(a)].

III.10.D.4.b.xiv. The Permittees will not place dangerous and/or mixed waste in an unwashed container that previously held an incompatible waste or material [WAC 173-303-630(9)(b)].

III.10.D.5. Identification of Containers and Container Storage Areas

III.10.D.5.a. Pursuant to WAC 173-303-630(3), the Permittees will ensure that all dangerous and/or mixed waste containers (except as otherwise specified in Operating Unit 10, Chapter 4.0, Section 4.2.1.3., as updated pursuant to Permit Condition III.10.D.10.c.i., for containers of ILAW and IHLW) are labeled in a manner that adequately identifies the major risk(s) associated with the contents. For purposes of container labeling, major risk(s) could include but are not limited to the following:

III.10.D.5.a.i. PERSISTENT (if a WP01 or WP02 waste code);

III.10.D.5.a.ii. TOXIC (if a WT01, WT02, or D waste code other than D001, D002, or D003);

III.10.D.5.a.iii. FLAMMABLE (if a D001 and other waste codes);

III.10.D.5.a.iv. CORROSIVE (if a D002 and other waste codes);

III.10.D.5.a.v. REACTIVE (if a D003 and other waste codes).

III.10.D.5.b. For all dangerous and mixed waste containers (except as otherwise specified in Operating Unit 10, Chapter 4.0, Section 4.2.1.3., as updated pursuant to Permit Condition III.10.D.10.c.i., for containers of ILAW and IHLW), the Permittees will ensure that:

III.10.D.5.b.i. Labels are not obscured or otherwise unreadable;

III.10.D.5.b.ii. Waste containers are oriented so as to allow inspection of the labels identified in Permit Conditions III.10.D.5.a and III.10.D.5.b, the container tracking number, and, to the extent possible, any labels which the generator placed upon the container; and

III.10.D.5.b.iii. Empty dangerous and mixed waste containers, as defined by WAC 173-303-160(2), must have their dangerous and/or mixed waste labels destroyed or otherwise removed immediately upon being rendered empty.

III.10.D.5.c. The Permittees will post entrances and access points to all ILAW and IHLW container storage areas, and any other areas where containers of ILAW and IHLW are handled, with signs that, in addition to meeting the requirements of WAC 173-303-310(2)(a), clearly identify the major risk(s) associated with the containers of ILAW and IHLW.

III.10.D.6. Containment Systems

III.10.D.6.a. Containerized dangerous and mixed waste, and other materials that are incompatible, will not be staged, segregated, or stored within the same containment system as identified in Permit Tables III.10.D.B. and III.10.D.C., as approved/modified pursuant to Permit Condition III.10.D.10. (e.g., metal pan, concrete berm, portable containment system) [WAC 173-303-630(9)(c)].

III.10.D.6.b. The integrity of containment systems identified in Permit Tables III.10.D.B. and III.10.D.C. (as approved/modified pursuant to Permit Condition III.10.D.10.) must be maintained in accordance with WAC 173-303-630(7)(a)(i). Cracks, gaps, loss of integrity, deterioration, corrosion, or erosion of containment pads, joints in containment pads, berms, curbs, trenches, sumps, and coatings must be repaired in accordance with Operating Unit 10, Chapter 6.0 of this Permit, as approved/modified pursuant to Permit Conditions III.10.D.10.c.vii., III.10.C.5.b., and III.10.C.5.c. [WAC 173-303-320, WAC 173-303-630(7)(a)(i)].

III.10.D.6.c. An impermeable coating, as specified in Operating Unit 10, Appendices 9.4, 9.5, 9.7, 9.8, 9.9, 10.4, 10.5, 10.7, 10.8, 10.9, 12.4, 12.5, 12.7, 12.8, and 12.9 will be maintained for all concrete containment systems identified in Permit Table III.10.D.B (as approved/modified pursuant to Permit Condition III.10.D.10.) and will meet the following performance standards [WAC 173-303-630(7)(a)]:

III.10.D.6.c.i. The coating must seal the containment system surface such that no cracks, seams, or other pathways through which liquid could migrate are present;

III.10.D.6.c.ii. The coating must be of adequate thickness and strength to withstand the normal operation of equipment and personnel within the given area such that degradation or physical damage to the coating or lining can be identified and remedied before waste could migrate from the containment system; and

III.10.D.6.c.iii. The coating must be compatible with the waste managed in the containment system.

III.10.D.6.d. The Permittees must inspect all containment systems specified in Permit Tables III.10.D.B and III.10.D.C in accordance with the inspection schedules and requirements in Operating Unit 10, Chapter 6.0, as approved/modified pursuant to Permit Conditions III.10.D.10.c.vii. and III.10.C.5.c, and take the following actions if liquid is detected in these containment systems:

III.10.D.6.d.i. Remove the liquid from the containment system in accordance with procedures described in Attachments 51, Chapter 6.0, (as modified pursuant to Permit Conditions III.10.C.5.b. and III.10.C.5.c.), Permit Condition III.10.C.6.a., and Operating Unit 10, Chapter 7.0 (as modified pursuant to Permit Condition III.10.C.6.b.). The liquid removed from containment systems will be managed as dangerous and/or mixed waste, except for liquids from the Non-Radioactive Dangerous Waste Container Storage Area which will be managed as dangerous waste, unless the Permittees demonstrate, to Ecology's satisfaction, that the liquid is not a dangerous waste.

III.10.D.6.d.ii. Determine the source of the liquid.

III.10.D.6.d.iii. If the source of the liquid is determined to be a leak in a container, the Permittees must follow the procedures specified in Permit Condition III.10.D.4.b.x.

III.10.D.6.d.iv. The Permittees must take action to ensure the incident that caused liquid to enter the containment system will not reoccur.

III.10.D.6.d.v. The Permittees will document in the WTP Unit operating record actions/procedures taken to comply with i. through iv. above in accordance with WAC 173-303-630(6).

III.10.D.6.d.vi. The Permittees will notify and report releases to the environment to Ecology in accordance with Permit Condition III.10.C.6.a.

III.10.D.7 Inspections

III.10.D.7.a. The Permittees will inspect the container storage areas and containment systems in accordance with the Inspection Schedules in Operating Unit 10, Chapter 6.0 of this Permit, as modified pursuant to Permit Condition III.10.C.5.c.

III.10.D.7.b. The inspection data for the container storage areas and containment systems will be recorded, and the records will be placed in the WTP Unit operating record in accordance with Permit Condition III.10.C.4.

III.10.D.8. Recordkeeping (WAC 173-303-380)

For the container storage areas and containment systems, the Permittees will record and maintain in the WTP Unit operating record, all monitoring, recording, maintenance, calibration, test data, and inspection data compiled under the conditions of this Permit, in accordance with Permit Condition III.10.C.4. and III.10.C.5.

III.10.D.9. Closure

The Permittees will close the container storage areas and containment systems in accordance with Operating Unit 10, Chapter 11.0 of this Permit, as approved pursuant to Permit Condition III.10.C.8.

III.10.D.10. Compliance Schedules

III.10.D.10.a. All information identified for submittal to Ecology in III.10.D.10.b. through III.10.D.10.d. of this compliance schedule must be signed in accordance with requirements in WAC 173-303-810(12).

III.10.D.10.b. The Permittees will submit to Ecology, consistent with the schedule described in Operating Unit 10, Appendix 1.0, for review and approval, prior to construction of container storage area and permanent containment systems as identified in Permit Tables III.10.D.A and III.10.D.B respectively, engineering information as specified below, for incorporation into Operating Unit 10, Appendices 9.4, 9.5, 9.7, 9.8, 9.9, 10.4, 10.5, 10.7, 10.8, 10.9, 12.4, 12.5, 12.7, 12.8, and 12.9 of this Permit. In order to incorporate engineering information specified below into Operating Unit 10, Appendices 9.4, 9.5, 9.7, 9.8, 9.9, 10.4, 10.5, 10.7, 10.8, 10.9, 12.4, 12.5, 12.7, 12.8, and 12.9, Permit Condition III.10.C.2.g. process will be followed. At a minimum, container storage area and permanent containment system drawings and specifications will show the following pursuant to WAC 173-303-806(4)(b) and WAC 173-303-630:

III.10.D.10.b.i. Design drawings (General Arrangement Drawings - in plan and cross sections) and specifications including references to specific building codes (e.g., UBC, ASCE) for each container storage areas' foundation and permanent containment systems. These items should show basic design parameters and dimensions, and location of the container storage areas and permanent containment systems; how permanent containment system design promotes positive drainage control (such as a locked drainage valve) to prevent release of contaminated liquids and so that uncontaminated liquids can be drained promptly for convenience of operation; capacity of the permanent containment system relative to the volume of the largest container to be stored; for permanent containment systems, how the base underlying the containers is sloped (i.e., floor slopes to sumps) or the containment system is otherwise designed and operated to drain and remove liquids resulting from leaks, spills, or other liquids, or how containers are kept from contact with standing liquids in the permanent containment system (i.e., elevated or are otherwise protected); for container storage areas without permanent containment systems, a description of how the storage area is designed or operated to drain and remove liquids or how containers are kept from contact with standing liquids;

III.10.D.10.b.ii. Permanent containment systems materials selection documentation (including, but not limited to, materials of construction, coatings and liner materials for concrete portions of containment systems);

III.10.D.10.b.iii. Sketches, drawings, or data demonstrating compliance with WAC 173-303-630(8) (location of buffer zone and containers holding ignitable or reactive waste) and WAC 173-303-630(9)(c) (location of incompatible waste), where applicable;

III.10.D.10.b.iv. Submit Permit Table III.10.D.B. completed to provide for all permanent containment systems, the information as specified in each column heading, consistent with information to be provided in III.10.D.10.b.i. through iii. above.

III.10.D.10.c. Prior to initial receipt of dangerous and/or mixed waste in the WTP Unit, the Permittees will update and submit to Ecology, consistent with the schedule described in Operating Unit 10, Appendix 1.0, for review and approval, the following, as specified below, for incorporation into Operating Unit 10, Chapter 4.0, and Appendices 9.18, 10.18, and 12.15 of this Permit, except Permit Condition III.10.D.10.c.vii., which will be incorporated into Operating Unit 10, Chapter 6.0 of this Permit. In order to incorporate the following information (specified below) into Operating Unit 10, Appendix 9.18, 10.18, and 12.15, Permit Condition III.10.C.2.g. will be followed. All information provided under this

permit condition must be consistent with information provided pursuant to Permit Conditions III.10.D.10.b., III.10.D.10.c., and III.10.D.10.d. as approved by Ecology, and will include at a minimum, the following information as required pursuant to WAC 173-303-630 and WAC 173-303-340:

III.10.D.10.c.i. Operating Unit 10, Chapter 4.0, Narrative Descriptions, updated;

III.10.D.10.c.ii. Descriptions of procedures for addition and removal of waste from containers;

III.10.D.10.c.iii. Descriptions of procedures for opening and closing of containers, including any inspections performed prior to opening;

III.10.D.10.c.iv. Descriptions of procedures for handling and transport of containers within the WTP Unit;

III.10.D.10.c.v. Description of the tracking system used to track containers throughout the WTP Unit pursuant to WAC 173-303-380. The tracking system, at a minimum, will do the following:

A. Track the location of containers within the WTP Unit;

B. Track which containers have been shipped off-facility and/or off-site, and to where they have been shipped;

C. For containers intended for transport off-site, include information in accordance with the requirements specified in WAC 173-303-190(3)(b);

D. Record the date container is placed in the container storage area;

E. Record the nature of the waste in any given container, including dangerous waste designation codes, any associated land disposal restriction treatment requirements, and the major risk(s) associated with the waste (as described in Permit Conditions III.10.D.5.a. and III.10.D.5.c.).

III.10.D.10.c.vi. Descriptions of procedures for container spacing, stacking, and labeling pursuant to WAC 173-303-630(3), WAC 173-303-630(5)(c), WAC 173-303-340(3), WAC 173-303-630(6);

III.10.D.10.c.vii. Descriptions of procedures for investigating container storage areas and investigating and repairing containment systems [WAC 173-303-320, WAC 173-303-630(6)];

III.10.D.10.c.viii. Descriptions of procedures for responding to damaged (e.g., severe rusting, apparent structural defects) or leaking containers [WAC 173-303-630(2)];

III.10.D.10.c.ix. Descriptions of operational procedures demonstrating how accumulated liquids can be analyzed and removed from permanent and portable containment systems to prevent overflow [WAC 173-303-806(4)(b)(i)(E)];

III.10.D.10.c.x. For portable containment systems, vendor information, design drawings, or sketches showing the following information. These items will include as a minimum basic design parameters, dimensions, and materials of construction; how the design promotes positive drainage control (such as a locked drainage valve) to prevent release of contaminated liquids and so that uncontaminated liquids can be drained promptly for convenience of operation; how the base underlying the containers is sloped (i.e., floor slopes to sumps) or the containment system is otherwise designed and operated to drain and remove liquids resulting from leaks, spills, or other liquids, or how containers are kept from contact with standing liquids in the containment system (i.e., elevated or are otherwise protected); and

capacity of the containment system relative to the volume of the largest container to be stored;

III.10.D.10.c.xi. Where ignitable and reactive waste are stored or otherwise managed in containers, a description of the procedures used to ensure compliance with WAC 173-303-630(8)(a) and (b);

III.10.D.10.c.xii. Where incompatible waste are stored or otherwise managed in containers, a description of the procedures used to ensure compliance with WAC 173-303-630(9)(a) and (b), and 173-303-395(1)(b) and (c);

III.10.D.10.c.xiii. Submit Permit Table III.10.D.C completed to provide for all portable containment systems, the information as specified in each column heading, consistent with information to be provided in III.10.D.10.c.i. through xii. above;

III.10.D.10.c.xiv. Test procedures and results or other documentation or information to show that the waste do not contain free liquids, as applicable.

III.10.D.10.d. Prior to initial receipt of dangerous and/or mixed waste in the WTP Unit, the Permittees will submit to Ecology, consistent with the schedule described in Operating Unit 10, Appendix 1.0, for review and approval, completed Permit Tables III.10.D.A, III.10.D.B, and III.10.D.C, for incorporation into Operating Unit 10, Chapter 4.0, and Appendices 9.18, 10.18, and 12.15 of this Permit. In order to incorporate the information into Operating Unit 10, Chapter 4.0, and Appendices 9.18, 10.18, and 12.15 of this Permit, Permit Condition III.10.C.2.g. process will be followed.

1
2 **Table III.10.D.A –Container Storage/Containment Building Areas Description**
3

Dangerous and Mixed Waste Container Storage Areas	Maximum Capacity Gallons (Solids) (ft^3)[d]	Maximum Operating Volume (Liquid[c])
HLW Vitrification Plant		
IHLW Canister Storage Cave[a] (Room H-0132)	162,589 gal. (21,735 ft^3)	N/A
HLW East Corridor El. 0' (Rooms HC-0108/09/10)	310,291 gal. (41,480 ft^3)	NA
HLW Loading Area (Room H-0130)	159,185 gal. (21,280 ft^3)	NA
Other Areas		
Non-Radioactive Dangerous Waste Container Storage Area[b]	56,104 gal. (6,461 ft^3)	RESERVED
Failed Melter Storage Facility	403,947	RESERVED
Lab Waste Management Area (Rooms 0-139, 0-139A/B/C/D)	119,613 gal. (16,029 ft^3)	RESERVED
Containment Buildings/Container Storage	Maximum Capacity Gallons (Solids) (ft^3)[d]	**Maximum Operating Volume** (Liquid[c])
Pretreatment Plant	RESERVED	RESERVED
P-0123 Pretreatment Hot Cell Containment Building	RESERVED	RESERVED
Pretreatment Maintenance Containment Building	RESERVED	RESERVED
PM0124 Hot Cell Crane Maintenance Area	RESERVED	RESERVED
P-0121A Spent Resin Dewatering	RESERVED	RESERVED
P-0421A General Filter Room	RESERVED	RESERVED
P-0122A Waste Packaging Area	RESERVED	RESERVED
P-0123A Remote Decontamination Maintenance Cave	RESERVED	RESERVED
P-0124 C3 Workshop	RESERVED	RESERVED
P-0124A C3 Workshop	RESERVED	RESERVED
P-0125 Filter Cask Airlock	RESERVED	RESERVED
P-0125A Filter Cask Area	RESERVED	RESERVED
P-0128A MSM Repair Area	RESERVED	RESERVED
P-0128 Temporary Storage Room	RESERVED	RESERVED
P-0223 Pretreatment Filter Package Maintenance Containment Building		

P-0335 Pretreatment Filter Cave Room	RESERVED	RESERVED
P-0335A Decon Chamber	RESERVED	RESERVED
LAW Vitrification Plant		
L-0112 LAW LSM Gallery Containment Building	RESERVED	RESERVED
ILAW Container Finishing Containment Building	RESERVED	RESERVED
L-0109B Swabbing Area Line 2	RESERVED	RESERVED
L-0109C Decontamination Area Line 2	RESERVED	RESERVED
L-0109D Inert Fill Area Line 2	RESERVED	RESERVED
L-0115B Swabbing Area Line 1	RESERVED	RESERVED
L-0115C Decontamination Area Line 1	RESERVED	RESERVED
L-0115D Inert Fill Area Line 1	RESERVED	RESERVED
L-0109E Container Monitoring/Export Area	RESERVED	RESERVED
L-0115E Container Monitoring/Export Area	RESERVED	RESERVED
L-0119B LAW Consumable Import/Export Containment Building	RESERVED	RESERVED
L-226A LAW C3 Workshop Containment Building	RESERVED	RESERVED
LAW Pour Cave Containment Building	RESERVED	RESERVED
L-B015A Melter 1 Pour Cave	RESERVED	RESERVED
L-B013C Melter 1 Pour Cave	RESERVED	RESERVED
L-B013B Melter 2 Pour Cave	RESERVED	RESERVED
L-B011C Melter 2 Pour Cave	RESERVED	RESERVED
L-B011B Future Melter 3 Pour Cave	RESERVED	RESERVED
L-B009B Future Melter 3 Pour Cave	RESERVED	RESERVED
ILAW Buffer Container Containment Building	RESERVED	RESERVED
L-B025C Container Buffer Store	RESERVED	RESERVED
L-B025D Container Rework	RESERVED	RESERVED
HLW Vitrification Plant		
H-0117, H-0116B, H-0310A HLW Melter No. 1	RESERVED	RESERVED
H-0106, H-0105B, H-0304A HLW Melter No. 2	RESERVED	RESERVED
H-0136 IHLW Canister Handling Cave Containment Building	RESERVED	RESERVED
H-0133 IHLW Canister Swab and Monitoring Cave Containment Building	RESERVED	RESERVED
H-0311A/B HLW Vitrification Plant C3 Workshop Containment Building	RESERVED	RESERVED
H-0104 HLW Filter Cave	RESERVED	RESERVED
H-B032 HLW Pour Tunnel No. 1 Containment Building	RESERVED	RESERVED
H-B005A HLW Pour Tunnel No. 2 Containment Building	RESERVED	RESERVED
H-0410B, H0411 HLW Waste Handling Area Containment Building	RESERVED	RESERVED
HLW Drum Swabbing and Monitoring Area	RESERVED	RESERVED
H-0126A/B Swabbing and Monitoring Area	RESERVED	RESERVED
H-B028 Cask Transfer Tunnel	RESERVED	RESERVED

Footnotes:
[a]Capacity is for immobilized glass waste storage.
[b]Capacity is for dangerous and/or mixed waste storage.
[c]All material within the containment systems will be considered waste for the purposes of calculating free volume, where free volume is the amount of space available in containment systems (i.e., free volume = total capacity of containment systems [which includes total capacity of portable containment systems] minus volume occupied by equipment and containers within containment systems).
[d]Gallons converted to cubic feet using a conversion factor of 1 gallon (liquid) x 0.134 = 1 ft^3 (rounded to the nearest whole number).
[e]Location and capacities of containers stored within portable containment systems specified on Table III.10.D.C are limited to the dangerous and mixed waste container storage areas and capacities specified above.

1
2 **Table III.10.D.B – Container Storage Area Permanent Containment Systems**
3

Container Storage Areas	Permanent Containment System Description – Drawing #s	Permanent Containment System Sump/Floor Drain ID#	Permanent Containment System Dimensions[a] (ft) & Materials of Construction	Permanent Containment System Capacity (gal) (relative to 10% of the volume of all containers within the container storage area, or 100% of the volume of the largest container, whichever is greater).
RESERVED	RESERVED	RESERVED	RESERVED	RESERVED

[a]Dimensions listed are based on permitted design. Actual dimensions may vary within plus or minus (TBD).

4
5 **Table III.10.D.C – Container Storage Area Portable Containment Systems[a]**
6

Portable Containment System Description – Specifications and Vendor Information	Portable Containment System Container Storage Area(s) Location(s)	Portable Containment System Dimensions[b] (ft) & Materials of Construction	Portable Containment System Capacity (gal) (relative to 10% of the volume of all containers managed within the portable containment system, or 100% of the volume of the largest container, whichever is greater).
RESERVED	RESERVED	RESERVED	RESERVED

Footnotes:
[a] Location and capacities of containers stored within portable containment systems specified on this Permit Table are limited to the dangerous and mixed waste container storage areas and capacities specified in Permit Table III.10.D.A.
[b]Dimensions listed are based on permitted design. Actual dimensions may vary within plus or minus (TBD).

III.10.E TANK SYSTEMS

III.10.E.1 Approved Waste and Storage Limits

III.10.E.1.a. The Permittees may store in tank systems all dangerous and/or mixed waste listed in the Part A Forms, Operating Unit 10, Chapter 1.0 of this Permit and in accordance with the Waste Analysis Plan, Operating Unit 10, Chapter 3.0 as approved pursuant to Permit Condition III.10.C.3. of this Permit. Total tank system dangerous and/or mixed waste storage at the Facility will not exceed 4,735,000 gallons pursuant to requirements in Permit Condition III.10.E.1.

III.10.E.1.b. The Permittees may store and manage dangerous and/or mixed waste only in approved tank systems listed in Permit Tables III.10.E.A through D, I, K, M, and O, as approved/modified pursuant to Permit Condition III.10.E.9., in accordance with Permit Section III.10.E of this Permit, and in accordance with Operating Unit 10, Chapters 1.0 and 4.0, and Operating Unit 10, Appendices 8.1 through 8.15, 9.1 through 9.14, 9.18, 10.1 through 10.14, 10.18, and 11.1 through 11.15 of this Permit, as approved pursuant to Permit Conditions III.10.E.9.b through e. The Permittees will limit the total volume of waste to quantities specified for the individual units listed in Permit Tables III.10.E.A through D, I, K, M, and O.

III.10.E.1.c. The Permittees will manage ignitable and reactive, and incompatible waste in accordance with WAC 173-303-395(1). Any tank system specified in Permit Tables III.10.E.A through D and III.10.E, I, K, M, and O as approved/modified pursuant to Permit Condition III.10.E.9., in which ignitable, reactive, or incompatible waste are managed will meet the requirements specified in WAC 173-303-640(9) and (10).

III.10.E.1.d. The Permittees will ensure all certifications required by specialists (e.g., independent, qualified, registered professional engineer; independent corrosion expert; independent, qualified installation inspector; etc.) use the following statement or equivalent pursuant to Permit Condition III.10.C.10 of this Permit:

"I, (Insert Name) have (choose one or more of the following: overseen, supervised, reviewed, and/or certified) a portion of the design or installation of a new tank system or component located at (address), and owned/operated by (name(s)). My duties were: (e.g., installation inspector, testing for tightness, etc.), for the following tank system components (e.g., the tank, venting piping, etc.), as required by the Dangerous Waste Regulations, namely, WAC 173-303-640(3) (applicable paragraphs (i.e., (a) through (g)).

"I certify under penalty of law that I have personally examined and am familiar with the information submitted in this document and all attachments and that, based on my inquiry of those individuals immediately responsible for obtaining the information, I believe that the information is true, accurate, and complete. I am aware that there are significant penalties for submitting false information, including the possibility of fine and imprisonment."

III.10.E.1.e. In all future permit submittals, the Permittees will include tank names with the tank designation (e.g., Process Condensate Vessels located in the RLD System are designated V45028A and V45028B, respectively).

III.10.E.2 Tank System Design and Construction

III.10.E.2.a. The Permittees will construct the tank systems identified in Permit Tables III.10.E.A through D, I, K, M, and O, as approved/modified pursuant to Permit Condition III.10.E.9., as specified in Operating Unit 10, Appendices 8.1 through 8.14, 9.1 through

9.14, 10.1 through 10.14, and 11.1 through 11.14 of this Permit, as approved pursuant to Permit Conditions III.10.E.9.b., III.10.E.9.c., and III.10.E.9.d.

III.10.E.2.b. The Permittees will construct all secondary containment systems identified in Permit Tables III.10.E.A through D, and I through P, as approved/modified pursuant to Permit Condition III.10.E.9., as specified in Operating Unit 10, Appendices 8.2, 8.4 through 8.15, 9.2, 9.4 through 9.14, 9.18, 10.2, 10.4 through 10.14, 10.18 and 11.2, 11.4 through 11.15, 11.15 of this Permit, as approved pursuant to Permit Conditions III.10.E.9.b., III.10.E.9.c., and III.10.E.9.d.

III.10.E.2.c. Modifications to approved design, plans, and specifications in Operating Unit 10 of this Permit for the WTP Unit Tank Systems will be allowed only in accordance with Permit Conditions III.10.C.2.e. and f., or III.10.C.2.g., III.10.C.9.d, e., and h.

III.10.E.2.d. The Permittees will maintain construction access to the internal portions of installed tanks with pulse jet mixers until Ecology has provided written approval of the tank system designs for wear allowance pursuant to WAC 173-303-640(3)(a).

III.10.E.2.d.i. The Permittees will not install the following tanks in the WTP Unit until Ecology has provided written approval of the tank system designs for wear allowance pursuant to WAC 173-303-640(3)(a):

- Plant Wash Vessel, PWD-VSL-00044.
- Acidic Waste Vessel, RLD-VSL-00007.
- Plant Wash and Drains Vessel, RLD-VSL-00008.
- HLW Feed Receipt Vessel, HLP-VSL-00022.
- HLW Lag Storage Vessels, HLP-VSL-00027A and HLP-VSL-00027B.
- HLW Feed Blend Vessel, HLP-VSL-00028.
- Ultrafiltration Feed Preparation Vessels, UFP-VSL-00001A and UFP-VSL-00001B.
- Ultrafiltration Feed Vessels, UFP-VSL-00002A and UFP-VSL-00002B.

III.10.E.2.d.ii. Except where exempted in writing by Ecology on the basis that wear allowance provisions will not be affected, fabrication and assembly of the following tanks and their internal components will be suspended until Ecology has provided written approval of the tank system designs for wear allowance pursuant to WAC 173-303-640(3)(a).

- HLW Feed Receipt Vessel, HLP-VSL-00022.
- HLW Lag Storage Vessels, HLP-VSL-00027A and HLP-VSL-00027B.
- HLW Feed Blend Vessel, HLP-VSL-00028.
- Ultrafiltration Feed Vessels, UFP-VSL-00002A and UFP-VSL-00002B.

III.10.E.3 Tank System Installation and Certification

III.10.E.3.a. The Permittees must ensure that proper handling procedures are adhered to in order to prevent damage to the system during installation. Prior to covering, enclosing, or placing a new tank system or component in use, an independent, qualified, installation inspector or an independent, qualified, registered professional engineer, either of whom is trained and experienced in the proper installation of tank systems or components, must inspect the system for the presence of any of the following items:

III.10.E.3.a.i. Weld breaks;

III.10.E.3.a.ii. Punctures;

III.10.E.3.a.iii. Scrapes of protective coatings;

III.10.E.3.a.iv. Cracks;

III.10.E.3.a.v. Corrosion;

III.10.E.3.a.vi. Other structural damage or inadequate construction/installation.

All discrepancies must be remedied before the tank system is covered, enclosed, or placed in use [WAC 173-303-640(3)(c)].

III.10.E.3.b. For tank systems or components that are placed underground and that are back-filled, the Permittees must provide a backfill material that is a non-corrosive, porous, homogeneous substance. The backfill must be installed so that it is placed completely around the tank and compacted to ensure that the tank and piping are fully and uniformly supported [WAC 173-303-640(3)(d)].

III.10.E.3.c. The Permittees must test for tightness all new tanks and ancillary equipment prior to these components being covered, enclosed, or placed into use. If a tank system is found not to be tight, all repairs necessary to remedy the leak(s) in the system must be performed prior to the tank system being covered, enclosed, or placed in use [WAC 173-303-640(3)(e)].

III.10.E.3.d. The Permittees must ensure ancillary equipment is supported and protected against physical damage and excessive stress due to settlement, vibration, expansion, or contraction [WAC 173-303-640(3)(f)].

III.10.E.3.e. The Permittees must provide the type and degree of corrosion protection recommended by an independent corrosion expert, based on the information provided in Operating Unit 10, Appendices 8.9, 8.11, 9.9, 9.11, 10.9, 10.11, 11.9, and 11.11 of this Permit, as approved pursuant to Permit Conditions III.10.E.9.b.i., III.10.E.9.b.iv., III.10.E.9.b.v., III.10.E.9.c.i., III.10.E.9.c.iv., III.10.E.9.c.v., III.10.E.9.d.i., III.10.E.9.d.iv., and III.10.E.9.d.v. or other corrosion protection if the Ecology believes other corrosion protection is necessary to ensure the integrity of the tank system during use of the tank system. The installation of a corrosion protection system that is field fabricated must be supervised by an independent corrosion expert to ensure proper installation [WAC 173-303-640(3)(g)].

III.10.E.3.f. Prior to initial receipt of dangerous and/or mixed waste in the WTP Unit, the Permittees will obtain, and keep on file in the WTP Unit operating record, written statements by those persons required to certify the design of the tank system and supervise the installation of the tank system in accordance with the requirements of WAC 173-303-640(3)(b), (c), (d), (e), (f), and (g), attesting that each tank system and corresponding containment system listed in Permit Tables III.10.E.A through D and III.10.E.I through P, as approved/modified pursuant to Permit Condition III.10.E.9., were properly designed and installed, and that repairs, pursuant to WAC 173-303-640(3)(c) and (e) were performed [WAC 173-303-640(3)(a) WAC 173-303-640(3)(h)].

III.10.E.3.g. The independent tank system installation inspection and subsequent written statements will be certified pursuant to Permit Condition III.10.E.1.d., comply with all requirements of WAC 173-303-640(3)(h) and will consider, but not be limited to, the following tank system installation documentation:

III.10.E.3.g.i. Field installation report with date of installation;

III.10.E.3.g.ii. Approved welding procedures;

III.10.E.3.g.iii. Welder qualifications and certification;

III.10.E.3.g.iv. Hydro-test reports, as applicable, in accordance with the American Society of Mechanical Engineers Boiler and Pressure Vessel Code, Section VIII, Division 1, American Petroleum Institute (API) Standard 620, or Standard 650 as applicable;

III.10.E.3.g.v. Tester credentials;

III.10.E.3.g.vi. Field inspector credentials;

III.10.E.3.g.vii. Field inspector reports;

III.10.E.3.g.viii. Field waiver reports; and

III.10.E.3.g.ix. Non-compliance reports and corrective action (including field waiver reports) and repair reports.

III.10.E.4 Integrity Assessments

III.10.E.4.a. The Permittees will ensure periodic integrity assessments are conducted on the WTP Unit Tank Systems listed in Permit Tables III.10.E.A through D, I, K, M, and O, as approved/modified pursuant to Permit Condition III.10.E.9., over the term of this Permit as specified in WAC 173-303-640(3)(b), following the description of the integrity assessment program and schedule in Operating Unit 10, Chapter 6.0 of this Permit, as approved pursuant to Permit Conditions III.10.E.9.e.i. and III.10.C.5.c. Results of the integrity assessments will be included in the WTP Unit operating record until ten (10) years after post-closure, or corrective action is complete and certified, whichever is later.

III.10.E.4.b. The Permittees will address problems detected during the tank integrity assessments specified in Permit Condition III.10.E.4.a. following the integrity assessment program in Operating Unit 10, Chapter 6.0 of this Permit, as approved pursuant to Permit Conditions III.10.E.9.e.i. and III.10.C.5.c.

III.10.E.4.c. The Permittees must immediately and safely remove from service any Tank System or secondary containment system which through an integrity assessment is found to be "unfit for use" as defined in WAC 173-303-040, following Permit Conditions III.10.E.5.i.i through iv., vi., and vii. The affected tank system or secondary containment system must be either repaired or closed in accordance with Permit Condition III.10.E.5.i.v. [WAC 173-303-640(7)(e) and (f), WAC 173-303-640(8)].

III.10.E.5 Tank Management Practices

III.10.E.5.a. No dangerous and/or mixed waste will be managed in the WTP Unit Tank System unless the operating conditions, specified under Permit Condition III.10.E.5 are complied with.

III.10.E.5.b. The Permittees will install and test all process and leak detection system monitoring/instrumentation, as specified in Permit Tables III.10.E.E through H, as approved/modified pursuant to Permit Condition III.10.E.9., in accordance with Operating Unit 10, Appendices 8.1, 8.2, 8.14, 9.1, 9.2, 9.14, 10.1, 10.2, 10.14, 11.1, 11.2, and 11.14 of this Permit, as approved pursuant to Permit Conditions III.10.E.9.e.ix. and III.10.E.9.d.x.

III.10.E.5.c. The Permittees will not place dangerous and/or mixed waste, treatment reagents, or other materials in the WTP Unit Tank System if these substances could cause the tank system to rupture, leak, corrode, or otherwise fail [WAC 173-303-640(5)(a)].

III.10.E.5.d. The Permittees will operate the WTP Unit Tank System to prevent spills and overflows using the description of controls and practices as required under WAC 173-303-640(5)(b) described in Permit Condition III.10.C.5., and Operating Unit 10, Appendices 8.15, 9.18, 10.18, and 11.15 of this Permit, as approved pursuant to Permit Condition III.10.E.9.e.iv. [WAC 173-303-640(5)(b), WAC 173-303-806(4)(c)(ix)].

III.10.E.5.e. For routinely non-accessible WTP Unit Tank Systems, as specified in Operating Unit 10, Chapter 4.0 of this Permit, as updated pursuant to Permit Condition III.10.E.9.e.vi., the Permittees will mark all routinely non-accessible tank system access points with labels or signs to identify the waste contained in the tanks. The label, or sign, must be legible at a distance of at least fifty (50) feet and must bear a legend that identifies the waste in a manner which adequately warns employees, emergency response personnel, and the public of the major risk(s) associated with the waste being stored or treated in the tank system(s). For the purposes of this Permit condition, "routinely non-accessible" means personnel are unable to enter these areas while waste is being managed in them [WAC 173-303-640(5)(d)].

III.10.E.5.f. For all tank systems not addressed in Permit Condition III.10.E.5.e., the Permittees will mark all these tank systems holding dangerous and/or mixed waste with labels or signs to identify the waste contained in the tank. The labels, or sign, must be legible at a distance of at least fifty (50) feet, and must bear a legend that identifies the waste in a manner which adequately warns employees, emergency response personnel, and the public of the major risk(s) associated with the waste being stored or treated in the tank system(s) [WAC 173-303-640(5)(d)].

III.10.E.5.g. The Permittees will ensure that the secondary containment systems for the WTP Unit Tank Systems listed in Permit Tables III.10.E.A through D, I, K, M, and O, as approved/modified pursuant to Permit Condition III.10.E.9., are free of cracks or gaps to prevent any migration of dangerous and/or mixed waste or accumulated liquid out of the system to the soil, ground water, or surface water at any time that waste is in the tank system. Any indication that a crack or gap may exist in the containment systems will be investigated and repaired in accordance with Operating Unit 10, Appendices 8.15, 9.18, 10.18, and 11.15 of this Permit, as approved pursuant to Permit Condition III.10.E.9.e.v [WAC 173-303-320, WAC 173-303-640(4)(b)(i), WAC 173-303-640(4)(e)(i)(C), WAC 173-303-640(6), and WAC 173-303-806(4)(c)(vii)].

III.10.E.5.h. An impermeable coating, as specified in Operating Unit 10, Appendices 8.4, 8.5, 8.7, 8.9, 8.11, 8.12, 9.4, 9.5, 9.7, 9.9, 9.11, 9.12, 10.4, 10.5, 10.7, 10.9, 10.11, 10.12, 11.4, 11.5, 11.7, 11.9, 11.11, and 11.12 of this Permit, as approved pursuant to Permit Condition III.10.E.9.b.v., will be maintained for all concrete containment systems and concrete portions of containment systems for each WTP Unit Tank System listed in Permit Tables III.10.E.A through D and I through P, as approved/modified pursuant to Permit Condition III.10.E.9. Concrete containment systems that do not have a liner and have construction joints, must meet the requirements of WAC 173-303-640(4)(e)(ii)(C) and -806(4)(c)(vii). The coating will prevent migration of any dangerous and/or mixed waste into the concrete. All coatings will meet the following performance standards:

III.10.E.5.h.i. The coating must seal the containment surface such that no cracks, seams, or other avenues through which liquid could migrate are present;

III.10.E.5.h.ii. The coating must be of adequate thickness and strength to withstand the normal operation of equipment and personnel within the given area such that degradation or physical damage to the coating or lining can be identified and remedied before dangerous and/or mixed waste could migrate from the system; and

III.10.E.5.h.iii. The coating must be compatible with the dangerous and/or mixed waste, treatment reagents, or other materials managed in the containment system [WAC 173-303-640(4)(e)(ii)(D), WAC 173-303-806(4)(c)(vii)].

III.10.E.5.i. The Permittees will inspect all secondary containment systems for WTP Unit Tank Systems listed in Permit Tables III.10.E.A through D and I through P, as approved/modified pursuant to Permit Condition III.10.E.9., in accordance with the Inspection Schedule specified in Operating Unit 10, Chapter 6.0 of this Permit, as approved pursuant to Permit Conditions III.10.E.9.e.v. and III.10.C.5., and take the following actions if a leak or spill of dangerous and/or mixed waste is detected in these containment systems [WAC 173-303-320, WAC 173-303-640(5)(c), WAC 173-303-640(6), WAC 173-303-640(7), WAC 173-303-806(4)(a)(v)]:

III.10.E.5.i.i. Immediately and safely stop the flow of dangerous and/or mixed waste into the tank system or secondary containment system, in accordance with procedures based on all applicable safety analysis documentation;

III.10.E.5.i.ii. Determine the source of the dangerous and/or mixed waste;

III.10.E.5.i.iii. Remove the waste from the secondary containment area pursuant to WAC 173-303-640(7)(b). The waste removed from containment areas of WTP Unit Tank Systems will be managed as dangerous and/or mixed waste;

III.10.E.5.i.iv. If the cause of the release was a spill that has not damaged the integrity of the tank system, the Permittees may return the tank system to service pursuant to WAC 173-303-640(7)(e)(ii). In such a case, the Permittees will take action to ensure the incident that caused liquid to enter the containment systems of these tank systems will not reoccur [WAC 173-303-320(3);

III.10.E.5.i.v. If the source of the dangerous waste and/or mixed waste is determined to be a leak from a primary WTP Unit Tank System, or the system is unfit for use as determined through an integrity assessment or other inspection, the Permittees must comply with the requirements of WAC 173-303-640(7) and take the following actions [WAC 173-303-640(5)(c)]:

A. Close the tank system according to procedures in WAC 173-303-640(7)(e)(i), and Operating Unit 10, Chapter 11.0 of this Permit, as approved pursuant to Permit Condition III.10.C.8.; or

B. Repair and re-certify (in accordance with WAC 173-303-810(13)(a) as modified pursuant to Permit Condition III.10.E.1.d.) the tank system in accordance with Operating Unit 10, Appendices 8.15, 9.18, 10.18, and 11.15 of this Permit, as approved pursuant to Permit Condition III.10.E.9.e.v. before the tank system is placed back into service [WAC 173-303-640(7)(e) and (f), and WAC 173-303-806(4)(c)(vii)];

III.10.E.5.i.vi. The Permittees will document in the operating record actions/procedures taken to comply with III.10.E.5.i.i. through v. above in accordance with WAC 173-303-640(6)(d);

III.10.E.5.i.vii. The Permittees will notify and report releases to the environment to Ecology in accordance with WAC 173-303-640(7)(d).

III.10.E.5.j. If liquids (e.g., dangerous and/or mixed waste leaks and spills, precipitation, fire water liquids from damaged or broken pipes) can not be removed from the secondary containment system within twenty-four (24) hours, Ecology will be verbally notified within twenty-four (24) hours of discovery. The notification will provide the information in A, B, and C listed below. The Permittees will provide Ecology with a written demonstration within seven (7) business days, identifying at a minimum [WAC 173-303-640(4)(c)(iv), WAC 173-303-640(7)(b)(ii), WAC 173-303-806(4)(c)(vii)]:

A. Reasons for delayed removal;

B. Measures implemented to ensure continued protection of human health and the environment;

C. Current actions being taken to remove liquids from secondary containment.

III.10.E.5.k. The Permittees will operate the WTP Unit Tank System in accordance with Operating Unit 10, Chapter 4.0 as updated pursuant to Permit Condition III.10.E.9.e.vi. and Appendices 8.15, 9.18, 10.18, and 11.15 of this Permit, as approved pursuant to Permit Condition III.10.E.9.e., and the following:

III.10.E.5.k.i. The Permittees will operate the WTP Unit Tank System in order to maintain the systems and process parameters listed in Permit Tables III.10.E.E through H, as approved/modified pursuant to Permit Condition III.10.E.9., within the operating trips and operating ranges specified in Permit Tables III.10.E.E through H, and consistent with assumptions and basis which are reflected in Operating Unit 10, Appendix, 6.3.1. as approved pursuant to Permit Condition III.10.C.11.b. [WAC 173-303-815(2)(b)(ii) and WAC 173-303-640(5)(b)]. For the purposes of this permit condition, Operating Unit 10, Appendix 6.3.1 will be superceded by Appendix 6.4.1 upon its approval pursuant to either Permit Conditions III.10.C.11.c. or III.10.C.11.d.;

III.10.E.5.k.ii. The Permittees will calibrate/function test the instruments listed on Permit Tables III.10.E.E through H in accordance with Operating Unit 10, Appendices 8.15, 9.18, 10.18, and 11.15 of this Permit, as approved pursuant to Permit Condition III.10.E.9.e.xi.

III.10.E.5.l. Tank systems that have the potential for formation and accumulation of hydrogen gases must be operated to maintain hydrogen levels below the lower explosive limit [WAC 173-303-815(2)(b)(ii)].

III.10.E.5.m. For each tank system holding dangerous waste which are acutely or chronically toxic by inhalation, operate the system to prevent escape of vapors, fumes or other emissions into the air [WAC 173-303-640(5)(e), WAC 173-303-806(4)(c)(xii)].

III.10.E.6 Inspections [WAC 173-303-640(6)]

III.10.E.6.a. The Permittees will inspect the WTP Unit Tank Systems in accordance with the Inspection Schedules in Operating Unit 10, Chapter 6.0 of this Permit, as modified pursuant to Permit Condition III.10.C.5.c.

III.10.E.6.b. The inspection data for the WTP Unit Tank Systems will be recorded, and the records will be placed in the WTP Unit operating record, in accordance with Permit Condition III.10.C.4.

III.10.E.7 Recordkeeping (WAC 173-303-380)

For the WTP Unit Tank Systems, the Permittees will record and maintain in the WTP Unit operating record, all monitoring, calibration, recording, maintenance, test data, and inspection data compiled under the conditions of this Permit, in accordance with Permit Conditions III.10.C.4. and III.10.C.5.

III.10.E.8 Closure

The Permittees will close the WTP Unit Tank Systems in accordance with Operating Unit 10, Chapter 11.0 of this Permit, as approved pursuant to Permit Condition III.10.C.8.

III.10.E.9 Compliance Schedule

III.10.E.9.a. All information identified for submittal to Ecology in b. through e. of this compliance schedule must be signed and certified in accordance with requirements in WAC 173-303-810(12), as modified in accordance with Permit Condition III.10.E.1.d. [WAC 173-303-806(4)].

III.10.E.9.b. The Permittees will submit to Ecology, pursuant to Permit Condition III.10.C.9.f., prior to construction of each secondary containment and leak detection system for the WTP Unit Tank System (per level, per WTP Unit building and outside the WTP Unit buildings) as identified in Permit Tables III.10.E.A through D, J, L, N, and P, engineering information as specified below, for incorporation into Operating Unit 10, Appendices 8.4, 8.5, 8.7, 8.8, 8.9, 8.11, 8.12, 9.4, 9.5, 9.7, 9.8, 9.9, 9.11, 9.12, 10.4, 10.5, 10.7, 10.8, 10.9, 10.11, 11.4, 11.5, 11.7, 11.8, 11.9, and 11.11 of this Permit. At a minimum, engineering information specified below will show the following as required pursuant to WAC 173-303-640 (the information specified below will include dimensioned engineering drawings and information on sumps and floor drains):

III.10.E.9.b.i. IQRPE Reports (specific to foundation, secondary containment, and leak detection system) will include review of design drawings, calculations, and other information on which the certification report is based and will include as applicable, but not limited to, review of such information described below. Information (drawings, specifications, etc.) already included in Operating Unit 10, Appendices 8.0 through 11.0 of this Permit, may be included in the report by reference and should include drawing and document numbers. IQRPE Reports will be consistent with the information separately provided in Permit Conditions III.10.E.9.b.ii. through ix. below. The IQRPE Report(s) (specific to foundation, secondary containment and leak detection system) for the LAW and HLW buildings (-21 foot elevation only) will be submitted with the first IQRPE Report for tanks, identified in Permit Condition III.10.E.9.c.i. [WAC 173-303-640(3)(a), WAC 173-303-806(4)(c)(i)];

III.10.E.9.b.ii. Design drawings (General Arrangement Drawings in plan and cross sections) and specifications for the foundation, secondary containment, including, liner installation details, and leak detection methodology [Note: leak detection systems for areas where daily, direct, or remote visual inspection is not feasible, will be continuous in accordance with WAC 173-303-640(4)(e)(iii)(C)]. These items should show the dimensions, volume calculations, and location of the secondary containment system, and should include items such as floor/pipe slopes to sumps, tanks, floor drains [WAC 173-303-640(4)(b) through (f), WAC 173-303-640(3)(a), WAC 173-303-806(4)(c)(i)];

III.10.E.9.b.iii. The Permittees will provide the design criteria (references to codes and standards, load definitions, and load combinations, materials of construction, and analysis/design methodology) and typical design details for the support of the secondary containment system. This information will demonstrate the foundation will be capable of providing

support to the secondary containment system, resistance to pressure gradients above and below the system, and capable of preventing failure due to settlement, compression, or uplift [WAC 173-303-640(4)(c)(ii), WAC 173-303-806(4)(c)(vii)];

III.10.E.9.b.iv. A description of materials and equipment used to provide corrosion protection for external metal components in contact with soil, including factors affecting the potential for corrosion as required under WAC 173-303-640(3)(a)(iii)(B) [WAC 173-303-806(4)(c)(v)];

III.10.E.9.b.v. Secondary containment/foundation and leak detection system materials selection documentation (including, but not limited to, concrete coatings and water stops, and liner materials as applicable) [WAC 173-303-806(4)(c)(i)];

III.10.E.9.b.vi. Detailed description of how the secondary containment for each tank system will be installed in compliance with WAC 173-303-640(3)(c) [WAC 173-303-806(4)(c)(vi)];

III.10.E.9.b.vii. Submit Permit Tables III.10.E.J, L, N, and P, completed to provide for all secondary containment sumps and floor drains, the information as specified in each column heading, consistent with information to be provided in Permit Conditions III.10.E.9.b.i. through vi. above;

III.10.E.9.b.viii. Documentation that secondary containment and leak detection systems will not accumulate hydrogen gas levels above the lower explosive limit for incorporation into the Administrative Record [WAC 173-303-340].

III.10.E.9.b.ix. A detailed description of how tank system design provides access for conducting future tank integrity assessments [WAC 173-303-640(3)(b), WAC 173-303-806(4)(c)(vi)];

III.10.E.9.c. The Permittees will submit to Ecology, pursuant to Permit Condition III.10.C.9.f., prior to installation of each tank as identified in Permit Tables III.10.E.A through D, and I, K, M, and O engineering information as specified below, for incorporation into Operating Unit 10, Appendices 8.1 through 8.9, 8.11 through 8.14, 9.1 through 9.9, 9.11 through 9.14, 10.1 through 10.9, 10.11 through 10.14, 11.1 through 11.9, and 11.11 through 11.14 of this Permit. Tanks will include primary sumps. At a minimum, engineering information specified below will show the following as required pursuant to WAC 173-303-640 (the information specified below will include dimensioned engineering drawings):

III.10.E.9.c.i. IQRPE Reports (specific to tanks) will include review of design drawings, calculations, and other information on which the certification report is based and will include as applicable, but not limited to, review of such information described below. Information (drawings, specifications, etc.) already included in Operating Unit 10, Appendices 8.0 through 11.0 of this Permit, may be included in the report by reference and should include drawing and document numbers. The IQRPE Reports will be consistent with the information separately provided in Permit Conditions III.10.E.9.c.ii. through xii. below and the IQRPE Report specified in Permit Condition III.10.E.9.b.i. [WAC 173-303-640(3)(a), WAC 173-303-806(4)(c)(i)];

III.10.E.9.c.ii. Design drawings (General Arrangement Drawings in plan and cross sections, Process Flow Diagrams, Piping and Instrumentation Diagrams [including pressure control systems], Mechanical Drawings) and specifications, and other information, specific to tanks (to show location and physical attributes of each tank) [WAC 173-303-640(3)(a), WAC 173-303-806(4)(c)(i) through (iv)];

III.10.E.9.c.iii. The Permittees will provide the design criteria (references to codes and standards, load definitions, and load combinations, materials of construction, and analysis/design methodology) and typical design details for the support of the tank(s). Structural support calculations specific to off-specification, non-standard, and field fabricated tanks will be submitted for incorporation into the Administrative Record [WAC 173-303-640(3)(a), WAC 173-303-806(4)(c)(i)];

III.10.E.9.c.iv. A description of materials and equipment used to provide corrosion protection for external metal components in contact with water, including factors affecting the potential for corrosion as required under WAC 173-303-640(3)(a)(iii)(B) [WAC 173-303-806(4)(c)(v)];

III.10.E.9.c.v. Tank materials selection documentation (e.g., physical and chemical tolerances) [WAC 173-303-640(3)(a), WAC 173-303-806(4)(c)(i)];

III.10.E.9.c.vi. Tank vendor information (including, but not limited to required performance warranties, as available), consistent with information submitted under ii. above, will be submitted for incorporation into the Administrative Record [WAC 173-303-640, and WAC 173-303-806(4)(c)];

III.10.E.9.c.vii. System Descriptions related to tanks will be submitted for incorporation into the Administrative Record;

III.10.E.9.c.viii. Mass balance for each projected operating condition, including assumptions and formulas used to complete the mass balance, so that they can be independently verified, and will be submitted for incorporation into the Administrative Record;

III.10.E.9.c.ix. A detailed description of how the tanks will be installed in compliance with WAC 173-303-640(3)(c), (d), and (e) [WAC 173-303-806(4)(c)(vi)];

III.10.E.9.c.x. Submit Permit Tables III.10.E.I, K, M, and O, completed to provide for all primary containment sumps and floor drains, the information as specified in each column heading, consistent with information to be provided in Permit Conditions III.10.E.9.c.i. through ix.;

III.10.E.9.c.xi. Documentation that tanks are designed to prevent the accumulation of hydrogen gas levels above the lower explosive limit for incorporation into the Administrative Record [WAC 173-303-340];

III.10.E.9.c.xii. Documentation that tanks are designed to prevent escape of vapors and emissions of acutely or chronically toxic (upon inhalation) EHW limit for incorporation into the Administrative Record [WAC 173-303-640(5)(e), WAC 173-303-806(4)(c)(xii)];

III.10.E.9.d. The Permittees will submit to Ecology, pursuant to Permit Condition III.10.C.9.f., prior to installation of ancillary equipment for each tank system, as identified in Permit Tables III.10.E.A, through D, and I through P, not addressed in Permit Condition III.10.E.9.c., engineering information as specified below, for incorporation into Operating Unit 10, Appendices 8.1 through 8.9, 8.11 through 8.14, 9.1 through 9.9, 9.11 through 9.14, 10.1 through 10.9, 10.11 through 10.14, 11.1 through 11.9, and 11.11 through 11.14 of this Permit. At a minimum, engineering information specified below will show the following as required pursuant to WAC 173-303-640 (the information specified below will include dimensioned engineering drawings):

III.10.E.9.d.i. IQRPE Reports (specific to ancillary equipment) will include a review of design drawings, calculations, and other information as applicable, on which the certification

report is based. The reports will include, but not be limited to, review of such information described below. Information (drawings, specifications, etc.) already included in Operating Unit 10, Appendix 8.0 through 11.0 of this Permit, may be included in the report by reference and should include drawing and document numbers. The IQRPE Reports will be consistent with the information provided separately in Permit Conditions III.10.E.9.d.ii. through xiii. below and the IQRPE Reports specified in Permit Conditions III.10.E.9.b and III.10.E.9.c. [WAC 173-303-640(3)(a), WAC 173-303-806(4)(c)(i)];

III.10.E.9.d.ii. Design drawings (Process Flow Diagrams, Piping and Instrumentation Diagrams [including pressure control systems], etc.) specifications (including required performance warranties), and other information specific to ancillary equipment (these drawings should include all equipment such as pipe, valves, fittings, pumps, instruments, etc.) [WAC 173-303-640(3)(a), WAC 173-303-806(4)(c)(i), (iii), (iv)];

III.10.E.9.d.iii. The Permittees will provide the design criteria (references to codes and standards, load definitions, and load combinations, materials of construction, and analysis/design methodology) and typical design details for the support of the ancillary equipment [WAC 173-303-640(3)(a), WAC 173-303-640(3)(f), WAC 173-303-806(4)(c)(i)];

III.10.E.9.d.iv. A description of materials and equipment used to provide corrosion protection for external metal components in contact with soil and water, including factors affecting the potential for corrosion as required under WAC 173-303-640(3)(a)(iii)(B) [WAC 173-303-806(4)(c)(v)];

III.10.E.9.d.v. Materials selection documentation for ancillary equipment (e.g., physical and chemical tolerances) [WAC 173-303-640(3)(a), WAC 173-303-806(4)(c)(i)];

III.10.E.9.d.vi. Vendor information, consistent with information submitted under ii. above, will be submitted for incorporation into the Administrative Record [WAC 173-303-640, and WAC 173-303-806(4)(c)];

III.10.E.9.d.vii. Tank, ancillary equipment, and leak detection system instrument control logic narrative description (e.g., software functional specifications, descriptions of fail-safe conditions, etc.);

III.10.E.9.d.viii. System Descriptions related to ancillary equipment and system descriptions related to leak detection systems, (including instrument control logic and narrative descriptions), for incorporation into the Administrative Record;

III.10.E.9.d.ix. A detailed description of how the ancillary equipment will be installed and tested [WAC 173-303-640(3)(c) through (e), WAC 173-303-640(4)(b) and (c), and WAC 173-303-806(4)(c)(vi)];

III.10.E.9.d.x. For process monitoring, control, and leak detection system instrumentation for the WTP Unit Tank System as identified in Permit Tables III.10.E.E through H, a detailed description of how the process monitoring, control, and leak detection system instrumentation will be installed and tested [WAC 173-303-640(3)(c) through (e), WAC 173-303-640(4)(b) and (c), WAC 173-303-806(4)(c)(vi)];

III.10.E.9.d.xi. Mass balance for projected normal operating condition used in developing the process and instrumentation diagrams, including assumptions and formulas used to complete the mass balance, so that they can be independently verified, for incorporation into the Administrative Record;

III.10.E.9.d.xii. Documentation that ancillary equipment is designed to prevent the accumulation of hydrogen gas levels above the lower explosive limit for incorporation into the Administrative Record [WAC 173-303-340].

III.10.E.9.d.xiii. Leak detection system documentation (e.g. vendor information, etc.) consistent with information submitted under Permit Condition III.10.E.9.c.ii. and Permit Conditions III.10.E.9.d.ii., vii., viii. and x. above, will be submitted for incorporation into the Administrative Record.

III.10.E.9.e. Prior to initial receipt of dangerous and/or mixed waste in the WTP Unit, the Permittees will submit to Ecology, pursuant to Permit Condition III.10.C.9.f., the following as specified below for incorporation into Operating Unit 10, Appendices 8.15, 9.18, 10.18, 11.15 of this Permit, except Permit Condition III.10.E.9.e.v., which will be incorporated into Operating Unit 10, Chapter 6.0 of this Permit. All information provided under this permit condition must be consistent with information provided pursuant to Permit Conditions III.10.E.9.b., c., d., and e., III.10.C.3.e., and III.10.C.11.b., as approved by Ecology.

III.10.E.9.e.i. Integrity assessment program and schedule for all WTP Unit tanks will address the conducting of periodic integrity assessments on all WTP Unit tanks over the life of the tank, in accordance with III.10.E.9.b.ix. and WAC 173-303-640(3)(b), and descriptions of procedures for addressing problems detected during integrity assessments. The schedule must be based on past integrity assessments, age of the tank system, materials of construction, characteristics of the waste, and any other relevant factors [WAC 173-303-640(3)(b), WAC 173-303-806(4)(c)(vi)];

III.10.E.9.e.ii. Detailed plans and descriptions, demonstrating the leak detection system is operated so that it will detect the failure of either the primary or secondary containment structure or the presence of any release of dangerous and/or mixed waste, or accumulated liquid in the secondary containment system within twenty-four (24) hours. Detection of a leak of at least 0.1 gallons per hour within twenty-four (24) hours is defined as being able to detect a leak within twenty-four (24) hours. Any exceptions to this criteria must be approved by Ecology [WAC 173-303-640(4)(c)(iii), WAC 173-303-806(4)(c)(vii)];

III.10.E.9.e.iii. Detailed operational plans and descriptions, demonstrating that spilled or leaked waste and accumulated liquids can be removed from the secondary containment system within twenty-four (24) hours [WAC 173-303-806(4)(c)(vii)];

III.10.E.9.e.iv. Descriptions of operational procedures demonstrating appropriate controls and practices are in place to prevent spills and overflows from tanks or containment systems in compliance with WAC 173-303-640(5)(b)(i) through (iii) [WAC 173-303-640(5)(b), WAC 173-303-806(4)(c)(ix)];

III.10.E.9.e.v. Description of procedures for investigation and repair of tank systems [WAC 173-303-320, WAC 173-303-640(6), WAC 173-303-640(7)(e) and (f), WAC 173-303-806(4)(a)(v), WAC 173-303-806(4)(c)(vii)];

III.10.E.9.e.vi. Updated Chapter 4.0, Narrative Descriptions, Tables and Figures as identified in Permit Tables III.10.E.A through D (as modified pursuant to Permit Condition III.10.E.9.e.xii.) and updated to identify routinely non-accessible tank systems;

III.10.E.9.e.vii. Description of procedures for management of ignitable and reactive, and incompatible dangerous and/or mixed waste in accordance with WAC 173-303-640(9) and (10) [WAC 173-303-806(4)(c)(x)].

III.10.E.9.e.viii. A description of the tracking system used to track dangerous and/or mixed waste throughout the WTP Unit Tank System, pursuant to WAC 173-303-380.

III.10.E.9.e.ix. Permit Tables III.10.E.E through H will be completed for WTP Unit Tank System process and leak detection system monitors and instruments (to include but not limited to: instruments and monitors measuring and/or controlling flow, pressure, temperature, density, pH, level, humidity, and emission) to provide the information as specified in each column heading. Process and leak detection system monitors and instruments for critical systems as specified in Operating Unit 10, Appendix 2.0 and as updated pursuant to Permit Condition III.10.C.9.b. and for operating parameters as required to comply with Permit Condition III.10.C.3.e.iii. will be addressed. Process monitors and instruments for non-waste management operations (e.g., utilities, raw chemical storage, non-contact cooling waters, etc.) are excluded from this permit condition.

III.10.E.9.e.x. Supporting documentation for operating trips and expected operating range as specified in Permit Tables III.10.E.E through H as approved pursuant to Permit Condition III.10.E.9.e.ix.

III.10.E.9.e.xi. Documentation of process and leak detection instruments and monitors (as listed in Permit Tables III.10.E.E through H) for the WTP Unit Tank Systems to include but not be limited to the following:

A. Procurement specifications;

B. Location used;

C. Range, precision, and accuracy;

D. Detailed descriptions of Calibration/functionality test procedures (e.g., method number [ASTM]) or provide a copy of manufacturer's recommended calibration procedures;

E. Calibration/functionality test, inspection, and routine maintenance schedules and checklists, including justification for calibration, inspection and maintenance frequencies, criteria for identifying instruments found to be significantly out of calibration, and corrective action to be taken for instruments found to be significantly out of calibration (e.g., increasing frequency of calibration, instrument replacement, etc.);

F. Equipment instrument control logic narrative description (e.g., software functional specifications, descriptions of fail safe conditions, etc.), as identified in Permit Tables III.10.E.E through H not addressed in Permit Condition III.10.E.9.d.

III.10.E.9.e.xii. Permit Tables III.10.E.A through D amended as follows:

A. Under column 1, update and complete list of dangerous and/or mixed waste tank systems, including plant items that comprise each system (listed by item number);

B. Under column 2, update and complete system designations;

C. Under column 3, replace the 'reserved' with the Operating Unit 10, Appendices 8.0, 9.0, 10.0, and 11.0, subsections specific to tank systems as listed in column 1;

D. Under column 4, update and complete list of narrative description tables and figures;

E. Under column 5, update and complete maximum capacity, for each tank.

III.10.E.9.e.xiii. Permit Tables III.10.E.I, K, M, and O amended as follows:

A. Under column 1, replace the 'reserved' with the updated and complete list of sump numbers and room location;

B. Under column 2, replace the 'reserved' with the updated and complete maximum sump capacities in gallons;

C. Under column 3, replace the 'reserved' with the updated and complete sump dimensions and materials of construction;

D. Under column 4, replace the 'reserved' with the updated and complete list of engineering descriptions (drawing numbers, specifications, etc.);

1

Table III.10.E.A – Pretreatment Plant Tank Systems Description

Dangerous and/or Mixed Waste Tank Systems Name	System Designation	Engineering Description (Drawing Nos., Specifications Nos., etc.)	Narrative Description, Tables & Figures	Maximum Capacity (gallons)
Waste Feed Receipt Process System FRP-VSL-00002A (Waste Feed Receipt Vessel) FRP-VSL-00002B (Waste Feed Receipt Vessel) FRP-VSL-00002C (Waste Feed Receipt Vessel) FRP-VSL-00002D (Waste Feed Receipt Vessel)	FRP	**24590-PTF** -M2-FRP-P0001 -M2-FRP-P0002 -M2-FRP-P0003 -M2-FRP-P0004 -M5-V17T-P0003 -M6-FRP-P0001 -M6-FRP-P0002 -M6-FRP-P0003 -M6-FRP-P0005 -M6-FRP-P0006 -M6-FRP-P0007 -M6-FRP-P0008 -M6-FRP-P0009 -M6-FRP-P0010 -MVD-FRP-P0005 -MVD-FRP-P0006 -MVD-FRP-P0007 -MVD-FRP-P0008 -N1D-FRP-P0001 -P1-P01T-P0001 -P1-P01T-P0002 **24590-WTP** -3PS-G000-TP002 -3PS-MV00-TP001 -3PS-MV00-TP002 -3PS-MV00-TP003	Section 4.1.2.1; Tables 4-2 and 4-6; and Figures 4A-1, 4A-2, and 4A-02A of Operating Unit 10, Chapter 4.0 of this Permit.	FRP-VSL-00002A = 474,000 FRP-VSL-00002B = 474,000 FRP-VSL-00002C = 474,000 FRP-VSL-00002D = 474,000
Waste Feed Evaporation Process	FEP	**24590-PTF**	Section 4.1.2.2; Tables 4-2 and 4-6; and	FEP-VSL-00005 = 5,022

Table III.10.E.A – Pretreatment Plant Tank Systems Description

Dangerous and/or Mixed Waste Tank Systems Name	System Designation	Engineering Description (Drawing Nos., Specifications Nos., etc.)	Narrative Description, Tables & Figures	Maximum Capacity (gallons)
System FEP-VSL-00005 (Waste Feed Evaporator Condensate Vessel) FEP-VSL-00017A (Waste Feed Evaporator Feed Vessel) FEP-VSL-00017B (Waste Feed Evaporator Feed Vessel)		-3PS-MEVV-TP001 -M5-V17T-P0004001 -M6-FEP-P0001 -M6-FEP-P0003 -M6-FEP-P0006 -M6-FEP-P0007 -M6-FEP-P0008 -MVD-FEP-P0001 -MVD-FEP-P0002 -MVD-FEP-P0003 -MV-FEP-P0001 -MV-FEP-P0002 -N1D-FEP-P0002 -N1D-FEP-P0003 -P1-P01T-P0001 -P1-P01T-P0002 -P1-P01T-P0007 **24590-WTP** -3PS-G000-TP002 -3PS-MV00-TP001 -3PS-MV00-TP002 -3PS-MV00-TP003	Figures 4A-1, 4A-2, and 4A-02A of Operating Unit 10, Chapter 4.0 of this Permit.	FEP-VSL-00017A = 85,496 FEP-VSL-00017B = 85,496
Ultrafiltration Process System UFP-VSL-00001A (Ultrafiltration Feed Preparation Vessel) UFP-VSL-00001B (Ultrafiltration Feed Preparation Vessel)	UFP	**24590-PTF** -M5-V17T-P0009 -M5-V17T-P0010 -M5-V17T-P0011 -M6-UFP-P0001 -M6-UFP-P0002 -M6-UFP-P0003	Section 4.1.2.3; Tables 4-2 and 4-6; and Figures 4A-1, 4A-2, and 4A-02A of Operating Unit 10, Chapter 4.0 of this Permit.	UFP-VSL-00001A = 75,593 UFP-VSL-00001B = 75,593 UFP-VSL-00002A = 40,783 UFP-VSL-00002B = 40,783

Table III.10.E.A – Pretreatment Plant Tank Systems Description

Dangerous and/or Mixed Waste Tank Systems Name	System Designation	Engineering Description (Drawing Nos., Specifications Nos., etc.)	Narrative Description, Tables & Figures	Maximum Capacity (gallons)
UFP-VSL-00002A (Ultrafiltration Feed Vessel) UFP-VSL-00002B (Ultrafiltration Feed Vessel) UFP-VSL-00062A (Ultrafilter Permeate Collection Vessel) UFP-VSL-00062B (Ultrafilter Permeate Collection Vessel) UFP-VSL-00062C (Ultrafilter Permeate Collection Vessel) UFP-FILT-00001A (Ultrafilter) UFP-FILT-00001B (Ultrafilter) UFP-FILT-00002A (Ultrafilter) UFP-FILT-00002B (Ultrafilter) UFP-FILT-00003A (Ultrafilter) UFP-FILT-00003B (Ultrafilter)		-M6-UFP-P0004 -M6-UFP-P0005 -M6-UFP-P0006 -M6-UFP-P0007 -M6-UFP-P0008 -M6-UFP-P0009 -M6-UFP-P0010 -M6-UFP-P0011 -M6-UFP-P0013 -M6-UFP-P0015 -M6-UFP-P0016 -M6-UFP-P0017 -M6-UFP-P0021 -M6-UFP-P0022 -MLD-UFP-P0007 -MVD-UFP-P0001 -MVD-UFP-P00014 -MVD-UFP-P00015 -MVD-UFP-P0002 -MVD-UFP-P0005 -MVD-UFP-P0006 -MVD-UFP-P0007 -MV-UFP-P0001 -MV-UFP-P0002 -MV-UFP-P0003 -MV-UFP-P0004 -MV-UFP-P0005 -MV-UFP-P0006 -MV-UFP-P0007 -N1D-UFP-P0001 -N1D-UFP-P0002		UFP-VSL-00062A = 34,700 UFP-VSL-00062B = 34,700 UFP-VSL-00062C = 34,700 UFP-FILT-00001A= 140 UFP- FILT-00001B= 140 UPF-FILT-00002A= 140 UPF-FILT-00002B= 140 UPF-FILT-00003A= 140 UPF-FILT-00003B= 140

Table III.10.E.A – Pretreatment Plant Tank Systems Description

Dangerous and/or Mixed Waste Tank Systems Name	System Designation	Engineering Description (Drawing Nos., Specifications Nos., etc.)	Narrative Description, Tables & Figures	Maximum Capacity (gallons)
		-N1D-UFP-P0003 -N1D-UFP-P0004 -N1D-UFP-P0005 -N1D-UFP-P0008 -N1D-UFP-P0009 -P1-P01T-P0001 **24590-WTP** -3PS-G000-TP002 -3PS-MV00-TP002 -3PS-MV00-TP003 -3PS-MV00-TP001		
HLW Lag Storage and Feed Blending Process System HLP-VSL-00022 (HLW Feed Receipt Vessel) HLP-VSL-00027A (HLW Lag Storage Vessel) HLP-VSL-00027B (HLW Lag Storage Vessel) HLP-VSL-00028 (HLW Feed Blending Vessel)	HLP	**24590-PTF-** -M5-V17T-P0007 -M5-V17T-P0008 -M6-HLP-P0001 -M6-HLP-P0002 -M6-HLP-P0003 -M6-HLP-P0005 -M6-HLP-P0006 -M6-HLP-P0007 -M6-HLP-P0009 -M6-HLP-P0010 -MVD-HLP-P0006 -MVD-HLP-P0007 -MVD-HLP-P0008 -MVD-HLP-P0009 -MV-HLP-P0003 -MV-HLP-P0004 -MV-HLP-P0005	Section 4.1.2.4; Tables 4-2 and 4-6; and Figures 4A-1, 4A-2, and 4A-02A of Operating Unit 10, Chapter 4.0 of this Permit.	HLP-VSL-00022 = 270,600 HLP-VSL-00027A = 127,260 HLP-VSL-00027B = 127,260 HLP-VSL-00028 = 142,200

Table III.10.E.A – Pretreatment Plant Tank Systems Description

Dangerous and/or Mixed Waste Tank Systems Name	System Designation	Engineering Description (Drawing Nos., Specifications Nos., etc.)	Narrative Description, Tables & Figures	Maximum Capacity (gallons)
		-MV-HLP-P0006 -N1D-HLP-P0001 -N1D-HLP-P0003 -N1D-HLP-P0007 -N1D-HLP-P0010 -P1-P01T-P0001 **24590-WTP** -3PS-G000-TP002 -3PS-MV00-TP001 -3PS-MV00-TP003 -3PS-MV00-TP003		
Cesium Ion Exchange Process System CXP-VSL-00001 (Cesium Ion Exchange Feed Vessel) CXP-VSL-00004 (Cesium Ion Exchange Caustic Rinse Collection Vessel) CXP-VSL-00005 (Cesium Reagent Vessel) CXP-VSL-00026A (Cesium Ion Exchange Treated LAW Collection Vessel) CXP-VSL-00026B (Cesium Ion Exchange Treated LAW Collection Vessel)	CXP	**24590-PTF** -M5-V17T-P0012 -M5-V17T-P0013 -M5-V17T-P0025 -M6-CXP-P0001 -M6-CXP-P0002 -M6-CXP-P0003 -M6-CXP-P0005 -M6-CXP-P0007 -M6-CXP-P0010 -M6-CXP-P0011 -M6-CXP-P0012 -M6-CXP-P0013 -MV-CXP-P0001 -MV-CXP-P0002 -MV-CXP-P0003 -MV-CXP-P0008 -MV-CXP-P0009	Section 4.1.2.5; Tables 4-2 and 4-6; and Figures 4A-1, 4A-2, and 4A-02A of Operating Unit 10, Chapter 4.0 of this Permit.	CXP-VSL-00001 = 103,350 CXP-VSL-00004 = 11,085 CXP-VSL-00005 = 1141 CXP-VSL-00026A = 39,000 CXP-VSL-00026B = 39,000 CXP-VSL-00026C = 39,000 CXP-IXC-00001 = 680 CXP-IXC-00002= 680 CXP-IXC-00003 = 680

Table III.10.E.A – Pretreatment Plant Tank Systems Description

Dangerous and/or Mixed Waste Tank Systems Name	System Designation	Engineering Description (Drawing Nos., Specifications Nos., etc.)	Narrative Description, Tables & Figures	Maximum Capacity (gallons)
CXP-VSL-00026C (Cesium Ion Exchange Treated LAW Collection Vessel) CXP-IXC-00001 (Cesium Ion Exchange Column) CXP-IXC-00002 (Cesium Ion Exchange Column) CXP-IXC-00003 (Cesium Ion Exchange Column) CXP-IXC-00004 (Cesium Ion Exchange Column)		-MV-CXP-P0010 -MVD-CXP-P0007 -MVD-CXP-P0015 -MVD-CXP-P0016 -MVD-CXP-P0021 -MVD-CXP-P0022 -MVD-CXP-P0023 -N1D-CXP-P0001 -N1D-CXP-P0003 -N1D-CXP-P0007 -N1D-CXP-P0008 -P1-P01T-P0001 -P1-P01T-P0002 **24590-WTP** -3PS-G000-TP002 -3PS-MV00-TP001 -3PS-MV00-TP002 -3PS-MV00-TP003		CXP-IXC-00004 = 680
Cesium Nitric Acid Recovery Process System CNP-VSL-00001 (Cesium Evaporator Eluate Lute Pot) CNP-VSL-00003 (Eluate Contingency Storage Vessel) CNP-VSL-00004 (Cesium Evaporator Recovered Nitric Acid Vessel)	CNP	**24590-PTF** -M5-V17T-P0014 -M6-CNP-P0001 -M6-CNP-P0002 -M6-CNP-P0003 -M6-CNP-P0004 -M6-CNP-P0005 -MV-CNP-P0001 -MV-CNP-P0002 -MV-CNP-P0005 -MVD-CNP-P0003	Section 4.1.2.6; Tables 4-2 and 4-6; and Figures 4A-1, 4A-2, and 4A-02A of Operating Unit 10, Chapter 4.0 of this Permit.	CNP-VSL-00001 = 109 CNP-VSL-00003 = 21,570 CNP-VSL-00004= 11,115

Table III.10.E.A – Pretreatment Plant Tank Systems Description

Dangerous and/or Mixed Waste Tank Systems Name	System Designation	Engineering Description (Drawing Nos., Specifications Nos., etc.)	Narrative Description, Tables & Figures	Maximum Capacity (gallons)
		-MVD-CNP-P0007 -MVD-CNP-P0010 -N1D-CNP-P0006 -N1D-CNP-P0009 -N1D-CNP-P0011 -P1-P01T-P0001		
Treated LAW Concentrate Storage Process System TCP-VSL-00001 (Treated LAW Concentrate Storage Vessel)	TCP	**24590-PTF** -M5-V17T-P0006 -M6-TCP-P0001 -M6-TCP-P0002 -MV-TCP-P0002 -MVD-TCP-P0002 -N1D-TCP-P0001 -P1-P01T-P0001 **24590-WTP** -3PS-G000-TP002 -3PS-MV00-TP001 -3PS-MV00-TP002 -3PS-MV00-TP003	Section 4.2.2.12; Tables 4-2 and 4-6; and Figures 4A-1, 4A-2, and 4A-02A of Operating Unit 10, Chapter 4.0 of this Permit.	TCP-VSL-00001 = 146,740
Treated LAW Evaporation Process System TLP-VSL-00002 (Treated LAW Evaporator Condensate Vessel) TLP-VSL-00009A (LAW SBS Condensate Receipt Vessel)	TLP	**24590-PTF** -3PS-MEVV-TP001 -M5-V17T-P0005 -M6-TLP-P0001 -M6-TLP-P0002 -M6-TLP-P0003 -MVD-TLP-P0001 -MVD-TLP-P0002	Section 4.1.2.11; Tables 4-2 and 4-6; and Figures 4A-1, 4A-2, and 4A-02A of Operating Unit 10, Chapter 4.0 of this Permit.	TLP-VSL-00002 = 2300 TLP-VSL-00009A = 130,010 TLP-VSL-00009B = 130,010

Table III.10.E.A – Pretreatment Plant Tank Systems Description

Dangerous and/or Mixed Waste Tank Systems Name	System Designation	Engineering Description (Drawing Nos., Specifications Nos., etc.)	Narrative Description, Tables & Figures	Maximum Capacity (gallons)
TLP-VSL-00009B (LAW SBS Condensate Receipt Vessel)		-MVD-TLP-P0004 -MV-TLP-P0001 -MV-TLP-P0002 -N1D-TLP-P0001 -N1D-TLP-P0006 -P1-P01T-P0001 -P1-P01T-P0002 **24590-WTP** -3PS-G000-TP002 -3PS-MV00-TP001 -3PS-MV00-TP002 -3PS-MV00-TP003		
Spent Resin and Dewatering Process System RDP-VSL-00002A (Spent Resin Slurry Vessels) RDP-VSL-00002B (Spent Resin Slurry Vessels) RDP-VSL-00002C (Spent Resin Slurry Vessels) RDP-VSL-00004 (Spent Resin Dewatering Moisture Separation Vessel)	RDP	**24590-PTF** -3PS-MWD0-TP003 -M5-V17T-P0020 -M6-RDP-P0001 -M6-RDP-P0002 -M6-RDP-P0006 -MVD-RDP-P0005 -MVD-RDP-P0006 -MVD-RDP-P0007 -MVD-RDP-P0008 -MV-RDP-P0001 -MV-RDP-P0002 -MV-RDP-P0003 -P1-P01T-P0001 **24590-WTP** -3PS-G000-TP002	Section 4.1.2.13; Tables 4-2 and 4-6; and Figures 4A-1, 4A-2, and 4A-02A of Operating Unit 10, Chapter 4.0 of this Permit.	RDP-VSL-00002A = 15,230 RDP-VSL-00002B = 15,230 RDP-VSL-00002C = 15,230 RDP-VSL-00004 = 101

Table III.10.E.A – Pretreatment Plant Tank Systems Description

Dangerous and/or Mixed Waste Tank Systems Name	System Designation	Engineering Description (Drawing Nos., Specifications Nos., etc.)	Narrative Description, Tables & Figures	Maximum Capacity (gallons)
		-3PS-MV00-TP001 -3PS-MV00-TP002 -3PS-MV00-TP003		
Pretreatment Plant Radioactive Liquid Waste Disposal System RLD-TK-00006A (Process Condensate Tank) RLD-TK-00006B (Process Condensate Tank) RLD-VSL-00017A (Alkaline Effluent Vessel) RLD-VSL-00017B (Alkaline Effluent Vessel)	RLD	**24590-PTF** -M5-V17T-P0022003 -M5-V17T-P0022004 -M6-RLD-P0001 -M6-RLD-P0002 -M6-RLD-P0003 -M6-RLD-P0004 -M6-RLD-P0006 -MVD-RLD-P0005 -MVD-RLD-P0006 -MV-RLD-P0001 -MV-RLD-P0002 -N1D-RLD-P0002 -P1-P01T-P0001 **24590-WTP** -3PS-G000-TP002 -3PS-MV00-TP001 -3PS-MV00-TP002 -3PS-MV00-TP003	Section 4.1.2.16; Tables 4-2 and 4-6; and Figures 4A-1, 4A-2, and 4A-02A of Operating Unit 10, Chapter 4.0 of this Permit.	RLD-TK-00006A = 394,000 RLD-TK-00006B = 394,000 RLD-VSL-00017A = 34,340 RLD-VSL-00017B = 34,340
Pretreatment Plant Wash and Disposal System PWD-VSL-00015 (Acidic/Alkaline Effluent Vessel)	PWD	**24590-PTF** -M5-V17T-P0022001 -M5-V17T-P0022002 -M6-PWD-P0001 -M6-PWD-P0002 -M6-PWD-P0003	Section 4.1.2.15; Tables 4-2 and 4-6; and Figures 4A-1, 4A-2, and 4A-02A of Operating Unit 10, Chapter 4.0 of this Permit.	PWD-VSL-00015 = 119,150 PWD-VSL-00016 = 119,150 PWD-VSL-00033 = 41,650

Table III.10.E.A – Pretreatment Plant Tank Systems Description

Dangerous and/or Mixed Waste Tank Systems Name	System Designation	Engineering Description (Drawing Nos., Specifications Nos., etc.)	Narrative Description, Tables & Figures	Maximum Capacity (gallons)
PWD-VSL-00016 (Acidic/Alkaline Effluent Vessel) PWD-VSL-00033 (Ultimate Overflow Vessel) PWD-VSL-00043 (HLW Effluent Transfer Vessel) PWD-VSL-00044 (Plant Wash Vessel) PWD-VSL-00046 (C3 Floor Drain Collection Vessel)		-M6-PWD-P0005 -M6-PWD-P0006 -M6-PWD-P0007 -M6-PWD-P0008 -M6-PWD-P0009 -M6-PWD-P0010 -M6-PWD-P0011 -M6-PWD-P0012 -M6-PWD-P0014 -M6-PWD-P0018 -M6-PWD-P0019 -M6-PWD-P0020 -M6-PWD-P0021 -M6-PWD-P0023 -M6-PWD-P0024 -M6-PWD-P0025 -M6-PWD-P0026 -M6-PWD-P0029 -M6-PWD-P0033 -M6-PWD-P0041 -M6-PWD-P0043 -M6-PWD-P0044 -M6-PWD-P0046 -M6-PWD-P0050 -M6-PWD-P0051 -M6-PWD-P0057 -M6-PWD-P0058 -MVD-PWD-P0001 -MVD-PWD-P0002 -MVD-PWD-P0003 -MVD-PWD-P0010		PWD-VSL-00043 = 41,650 PWD-VSL-00044 = 103,024 PWD-VSL-00046 = 4982

Table III.10.E.A – Pretreatment Plant Tank Systems Description

Dangerous and/or Mixed Waste Tank Systems Name	System Designation	Engineering Description (Drawing Nos., Specifications Nos., etc.)	Narrative Description, Tables & Figures	Maximum Capacity (gallons)
		-MVD-PWD-P0011 -MVD-PWD-P0012 -MV-PWD-P0001001 -MV-PWD-P0001002 -MV-PWD-P0003001 -MV-PWD-P0003002 -MV-PWD-P0005 -MV-PWD-P0006 -MV-PWD-P0007 -MV-PWD-P0010 -N1D-PWD-P0001 -N1D-PWD-P0002 -N1D-PWD-P0003 -N1D-PWD-P0005 -N1D-PWD-P0006 -P1-P01T-P0001 -P1-P01T-P0006		
Pretreatment Vessel Vent Process System PVP-VSL-00001 (Vessel Ventilation HEME Drain Collection Vessel)	PVP	**24590-PTF** -M5-V17T-P0021001 -M5-V17T-P0021004 -M6-PVP-P0002 -M6-PVP-P0004 -M6-PVP-P0009 -M6-PVP-P0017 -M6-PVP-P0018 -MVD-PVP-P0001 -MV-PVP-P0002 -N1D-PVP-P0002 -P1-P01T-P0001	Section 4.1.2.16; Tables 4-2 and 4-6; and Figures 4A-1, 4A-2, and 4A-02A of Operating Unit 10, Chapter 4.0 of this Permit.	PVP-VSL-00001 = 1,969

Table III.10.E.A – Pretreatment Plant Tank Systems Description

Dangerous and/or Mixed Waste Tank Systems Name	System Designation	Engineering Description (Drawing Nos., Specifications Nos., etc.)	Narrative Description, Tables & Figures	Maximum Capacity (gallons)
		24590-WTP -3PS-G000-TP002 -3PS-MV00-TP001 -3PS-MV00-TP002 -3PS-MV00-TP003		
Pulse-Jet Ventilation System PJV-VSL-00002 (PJV Drain Collection Vessel)	PJV	**24590-PTF** -M5-V17T-P0021002 -M6-PJV-P0002 -M6-PJV-P0001 -M6-PJV-P0004 -MVD-PJV-P0003 -MV-PJV-P0001 -N1D-PJV-P0001 -P1-P01T-P0001 **24590-WTP** -3PS-G000-TP002 -3PS-MV00-TP001 -3PS-MV00-TP002 -3PS-MV00-TP003	Section 4.1.2.17; Tables 4-2 and 4-6; and Figures 4A-1, 4A-2, and 4A-02A of Operating Unit 10, Chapter 4.0 of this Permit.	PJV-VSL-00002 = 8,975
Pretreatment In-Cell Handling System PIH-TK-00001 (Decontamination Soak Tank)	PIH	**24590-PTF** -M6-PIH-P0001 -P1-P01T-P0001	Section 4.1.2.14; Tables 4-2 and 4-6; and Figures 4A-1, 4A-2, and 4A-02A of Operating Unit 10, Chapter 4.0 of this Permit.	PIH-TK-00001 = RESERVED

1

1
2

Table III.10.E.B – LAW Vitrification Plant Tank Systems Description

Dangerous and/or Mixed Waste Tank Systems Name	Unit Designation	Engineering Description (Drawing Nos, Specification Nos, etc.)	Narrative Description, Tables & Figures	Maximum Capacity (gallons)
LAW Concentrate Receipt Process System LCP-VSL-00001 (LAW Melter 1 Concentrate Receipt Vessel) LCP-VSL-00002 (LAW Melter 2 Concentrate Receipt Vessel)	LCP	**24590-LAW** -M5-V17T-P0001 -M5-V17T-P0002 -M6-LCP-P0001 -M6-LCP-P0002 -MV-LCP-P0001 -MV-LCP-P0002 -MVD-LCP-P0004 -MVD-LCP-P0005 -N1D-LCP-P0001 -P1-P01T-P0002 -P1-P01T-P0011	Section 4.1.3.1; Tables 4-3 and 4-6; and Figures 4A-1 and 4A-3 of Operating Unit 10, Chapter 4.0 of this Permit.	LCP-VSL-00001 = 18,130 LCP-VSL-00002 = 18,130
LAW Melter Feed Process System LFP-VSL-00001 (Melter 1 Feed Preparation Vessel) LFP-VSL-00002 (Melter 1 Feed Vessel) LFP-VSL-00003 (Melter 2 Feed Preparation Vessel) LFP-VSL-00004 (Melter 2 Feed Vessel)	LFP	**24590-LAW** -M5-V17T-P0001 -M5-V17T-P0002 -M6-LFP-P0001 -M6-LFP-P0003 -MV-LFP-P0001 -MV-LFP-P0002 -MV-LFP-P0004 -MV-LFP-P0005 -MVD-LFP-P0007 -MVD-LFP-P0008 -MVD-LFP-P0010 -MVD-LFP-P0011 -P1-P01T-P0002 -P1-P01T-P0010	Section 4.1.3.1; Tables 4-3 and 4-6; and Figures 4A-1 and 4A-3 of Operating Unit 10, Chapter 4.0 of this Permit.	LFP-VSL-00001 = 9,123 LFP-VSL-00002 = 9,123 LFP-VSL-00003 = 9,123 LFP-VSL-00004 = 9,123

Table III.10.E.B – LAW Vitrification Plant Tank Systems Description

Dangerous and/or Mixed Waste Tank Systems Name	Unit Designation	Engineering Description (Drawing Nos, Specification Nos, etc.)	Narrative Description, Tables & Figures	Maximum Capacity (gallons)
		-P1-P01T-P0011 -N1D-LFP-P0004 -N1D-LFP-P0006		
LAW Secondary Off-gas/Vessel Vent Process System LVP-TK-00001 (LAW Caustic Collection Tank)	LVP	**24590-LAW** -M5-V17T-P0011 -P1-P01T-P0004 -P1-P01T-P0009 -MT-LVP-P0004 -MTD-LVP-P0001 -N1D-LVP-P0002	Section 4.1.3.3; Tables 4-3 and 4-6; and Figures 4A-1 and 4A-3 of Operating Unit 10, Chapter 4.0 of this Permit.	LVP-TK-00001= 14,232
LAW Primary Off-gas Process System LOP-VSL-00001 (LAW Melter 1 SBS Condensate Vessel) LOP-VSL-00002 (LAW Melter 2 SBS Condensate Vessel)	LOP	**24590-LAW** -M5-V17T-P0007 -M5-V17T-P0008 -M6-LOP-P0001 -M6-LOP-P0002 -MV-LOP-P0001 -MV-LOP-P0002 -MVD-LOP-P0004 -MVD-LOP-P0005 -N1D-LOP-P0002 -P1-P01T-P0002 -P1-P01T-P0010	Section 4.1.3.3; Tables 4-3 and 4-6; and Figures 4A-1 and 4A-3 of Operating Unit 10, Chapter 4.0 of this Permit.	LOP-VSL-00001 = 9,056 LOP-VSL-00002 = 9,056
LAW Vitrification Plant Radioactive Liquid Waste Disposal System	RLD	**24590-LAW** -M5-V17T-P0014 -M6-RLD-P0001	Section 4.1.3.4; Tables 4-3 and 4-6; and Figures 4A-1 and 4A-3 of Operating Unit 10, Chapter 4.0 of this Permit.	RLD-VSL-00003 = 25,780 RLD-VSL-00004 = 7696

Table III.10.E.B – LAW Vitrification Plant Tank Systems Description

Dangerous and/or Mixed Waste Tank Systems Name	Unit Designation	Engineering Description (Drawing Nos, Specification Nos, etc.)	Narrative Description, Tables & Figures	Maximum Capacity (gallons)
RLD-VSL-00003 (Plant Wash Vessel) RLD-VSL-00004 (C3/C5 Drains/Sump Collection Vessel) RLD-VSL-00005 (SBS Condensate Collection Vessel)		-M6-RLD-P0002 -M6-RLD-P0003 -MVD-RLD-P0001 -MVD-RLD-P0006 -MVD-RLD-P0007 -MV-RLD-P0001 -MV-RLD-P0002 -MV-RLD-P0003 -P1-P01T-P0001 -P1-P01T-P0002 -P1-P01T-P0007 -P1-P01T-P0010 -P1-P01T-P0011 -N1D-RLD-P0001 -N1D-RLD-P0002 -N1D-RLD-P0005		RLD-VSL-00005 = 25,780

1
2

Table III.10.E.C – HLW Vitrification Plant Tank Systems Description

Mixed Waste Tank Systems Name	Unit Designation	Engineering Description (Drawing Nos, Specification Nos, etc.)	Narrative Description, Tables & Figures	Maximum Capacity (gallons)
HLW Concentrate Receipt Process System The HCP Tank System has ancillary equipment only.	HCP	**24590-HLW** -M5-V17T-P0001 -M6-HCP-P0001 -M6-HCP-P0002	Section 4.1.4.1; Tables 4-4 and 4-6; Figures 4A-1 and 4A-4 of Operating Unit 10, Chapter 4.0 of this Permit.	
HLW Melter Feed Process System HFP-VSL-00001 (HLW Melter 1 Feed Preparation Vessel) HFP-VSL-00002 (HLW Melter 1 Feed Vessel) HFP-VSL-00005 (HLW Melter 2 Feed Preparation Vessel) HFP-VSL-00006 (HLW Melter 2 Feed Vessel)	HFP	**24590-HLW** -3YD-HFP-00001[a] -M5-V17T-P0001 -M6-HFP-P0001 -M6-HFP-P0002 -M6-HFP-P0007 -M6-HFP-P0008 -M6-HFP-P20001 -M6-HFP-P20002 -M6-HFP-P20007 -M6-HFP-P20008 -MVD-HFP-P0010 -MVD-HFP-P0011 -MVD-HFP-P0014 -MVD-HFP-P0015 -MV-HFP-P0001 -MV-HFP-P0002 -MV-HFP-P0003 -MV-HFP-P0004 -MV-HFP-P0006 -MV-HFP-P0007 -MV-HFP-P0008 -MV-HFP-P0009	Section 4.1.4.1; Tables 4-4 and 4-6; Figures 4A-1 and 4A-4 of Operating Unit 10, Chapter 4.0 of this Permit.	HFP-VSL-00001 = 8,370 HFP-VSL-00002 = 8,370 HFP-VSL-00005 = 8370 HFP-VSL-00006 = 8,370

Table III.10.E.C – HLW Vitrification Plant Tank Systems Description

Mixed Waste Tank Systems Name	Unit Designation	Engineering Description (Drawing Nos, Specification Nos, etc.)	Narrative Description, Tables & Figures	Maximum Capacity (gallons)
		-MV-HFP-P0010 -MV-HFP-P0011 -MV-HFP-P0012 -MV-HFP-P0013 -MV-HFP-P0014 -MV-HFP-P0015 -MV-HFP-P0016 -MV-HFP-P0017 -N1D-HFP-P0003 -N1D-HFP-P0004 -P1-P01T-P0002 -P1-P01T-P0009 **24590-WTP** -3PS-G000-TP002 -3PS-MV00-TP001 -3PS-MV00-TP002 -3PS-MV00-TP003		
Melter Off-gas Treatment Process System HOP-VSL-00903 (Melter 1 SBS Condensate Receiver Vessel) HOP-VSL-00904 (Melter 2 SBS Condensate Receiver Vessel)	HOP	**24590-HLW** -3YD-HOP-00001[a] -M5-V17T-P0003 -M5-V17T-P20003 -M6-HOP-P0004 -M6-HOP-P0006 -M6-HOP-P20004 -M6-HOP-P20006 -MVD-HOP-P0001 -MVD-HOP-P0012 -MV-HOP-P0001 -MV-HOP-P0003	Section 4.1.4.3; Tables 4-4 and 4-6; Figures 4A-1 and 4A-4 of Operating Unit 10, Chapter 4.0 of this Permit.	HOP-VSL-00903 = 9891 HOP-VSL-00904 = 9891

Table III.10.E.C – HLW Vitrification Plant Tank Systems Description

Mixed Waste Tank Systems Name	Unit Designation	Engineering Description (Drawing Nos, Specification Nos, etc.)	Narrative Description, Tables & Figures	Maximum Capacity (gallons)
		-N1D-HOP-P0009 -P1-P01T-P0001 **24590-WTP** -3PS-G000-TP002 -3PS-MV00-TP001 -3PS-MV00-TP002 -3PS-MV00-TP003		
HLW Canister Decontamination Handling System HDH-VSL-00001 (Rinse Tunnel Canister Rinse Vessel) HDH-VSL-00002 (Canister Decon Vessel 1) HDH-VSL-00003 (Waste Neutralization Vessel) HDH-VSL-00004 (Canister Decon Vessel 2)	HDH	**24590-HLW** -M5-V17T-P0006 -M6-HDH-P0001 -M6-HDH-P0002 -M6-HDH-P20001 -M0-HDH-P0012001 -M0-HDH-P0012002 -MV-HDH-P0003 -MV-HDH-P0004 -MV-HDH-P0005 -MV-HDH-P0006 -MV-HDH-P0007 -MVD-HDH-P0003 -MVD-HDH-P0006 -MVD-HDH-P0009 -MVD-HDH-P0012 -N1D-HDH-P0003 -N1D-HDH-P0005 -N1D-HDH-P0007 -P1-P01T-P0001 -P1-P01T-P0002 -3YD-HDH-00002[a]	Section 4.1.4.7; Tables 4-4 and 4-6; Figures 4A-1 and 4A-4 of Operating Unit 10, Chapter 4.0 of this Permit.	HDH-VSL-00001= 3314 HDH-VSL-00002 =630 HDH-VSL-00003 = 5315 HDH-VSL-00004 = 630

Table III.10.E.C – HLW Vitrification Plant Tank Systems Description

Mixed Waste Tank Systems Name	Unit Designation	Engineering Description (Drawing Nos, Specification Nos, etc.)	Narrative Description, Tables & Figures	Maximum Capacity (gallons)
		24590-WTP -3PS-G000-TP002 -3PS-MV00-TP001 -3PS-MV00-TP002 -3PS-MV00-TP003		
HLW Melter Cave Support Handling System HSH-TK-00001 (Decontamination Tank Melter Cave 1) HSH-TK-00002 (Decontamination Tank Melter Cave 2)	HSH	**24590-HLW** -M0-HSH-P0072 -M0-HSH-P0075 -M6-RLD-P0003 -N1D-HSH-P0001 -P1-P01T-P0002	Section 4.1.4.7; Tables 4-4 and 4-6; Figures 4A-1 and 4A-4 of Operating Unit 10, Chapter 4.0 of this Permit.	HSH-TK-00001 = 3,718 HSH-TK-00002 = 3,718
HLW Vitrification Plant Radioactive Liquid Waste Disposal System RLD-VSL-00002 (Off-gas Drains Collection Vessel) RLD-VSL-00007 (Acidic Waste Vessel) RLD-VSL-00008 (Plant Wash & Drain Vessel)	RLD	**24590-HLW** -3YD-RLD-00001[a] -M5-V17T-P0007001 -M5-V17T-P0007002 -M6-RLD-P0001 -M6-RLD-P0002 -M6-RLD-P0006 -M6-RLD-P0007 -M6-RLD-P0014 -MV-RLD-P0002 -MV-RLD-P0003 -MVD-RLD-P0005	Section 4.1.5.5; Tables 4-4 and 4-6; Figures 4A-1 and 4A-4 of Operating Unit 10, Chapter 4.0 of this Permit.	RLD-VSL-00002 = 366 RLD-VSL-00007 = 18,145 RLD-VSL-00008 = 13,774

Table III.10.E.C – HLW Vitrification Plant Tank Systems Description

Mixed Waste Tank Systems Name	Unit Designation	Engineering Description (Drawing Nos, Specification Nos, etc.)	Narrative Description, Tables & Figures	Maximum Capacity (gallons)
		-MVD-RLD-P0007 -MVD-RLD-P0008 -N1D-RLD-P0001 -N1D-RLD-P0006 -N1D-RLD-P0013 -P1-P01T-P0001 -P1-P01T-P0002 **24590-WTP** -3PS-G000-TP002 -3PS-MV00-TP001 -3PS-MV00-TP002 -3PS-MV00-TP003		

Footnotes:
[a]System Descriptions are maintained in the Adinistrative Record, and are listed here for information only.

1
2
3

1

Table III.10.E.D – Analytical Laboratory Tank Systems Description

Mixed Waste Tank Systems Name	Unit Designation	Engineering Description (Drawing Nos, Specification Nos, etc.)	Narrative Description, Tables & Figures	Maximum Capacity (gallons)
Radioactive Liquid Waste Disposal System RLD-VSL-00164 (Lab Area Sink Drain Collection Vessel) RLD-VSL-00165 (Hot Cell Drain Collection Vessel)	RLD	**24590-LAB** -3YD-RLD-00001[a] -M5-V17T-P0029 -M6-RLD-P0001 -M6-RLD-P0002 -M6-RLD-P0006 -M6-RLD-P0007 -M6-RLD-P0008 -MVD-RLD-P0164 -MVD-RLD-P0165 -MV-RLD-P0001 -MV-RLD-P0003 -N1D-RLD-P0002 -N1D-RLD-P0003 -P1-60-P0007 -P1-60-P0008 -P1-60-P0010 **24590-WTP** -3PS-G000-TP002 -3PS-MV00-TP001 -3PS-MV00-TP002 -3PS-MV00-TP003	Section 4.1.5.5; Table 4-5 and 4-6 of Operating Unit 10, Chapter 4.0 of this Permit.	RLD-VSl-00164 = 3180 RLD-VSL-00165 = 9100
Footnotes: [a]System Descriptions are maintained in the Adinistrative Record, and are listed here for information only.				

2

1

Table III.10.E.E – Pretreatment Plant Tank System Process and Leak Detection System Instruments and Parameters

Tank System Name and Locator (including P&ID)	Control Parameter	Type of Instrument or Control Device	Location of Instrument or Control Device (Tag No.)	Instrument Range	Expected Operating Range or Setpoint	Fail States	Instrument Accuracy	Operating Trips (Description & Numerical Limits)	Instrument Calibration Method No. and Frequency
PWD-SUMP-00071[a]	Not Applicable	Radar Leak Detector	RESERVED	RESERVED	RESERVED	RESERVED	RESERVED	Not Applicable	RESERVED
PWD-SUMP-00040[a]	Not Applicable	Bubbler Leak Detector	RESERVED	RESERVED	RESERVED	RESERVED	RESERVED	Not Applicable	RESERVED
PWD-SUMP-00001[a]	Not Applicable	Radar Leak Detector	RESERVED	RESERVED	RESERVED	RESERVED	RESERVED	Not Applicable	RESERVED
PWD-SUMP-00001A[a]	Not Applicable	Radar Leak Detector	RESERVED	RESERVED	RESERVED	RESERVED	RESERVED	Not Applicable	RESERVED
PWD-SUMP-00002[a]	Not Applicable	Radar Leak Detector	RESERVED	RESERVED	RESERVED	RESERVED	RESERVED	Not Applicable	RESERVED
PWD-SUMP-00002A[a]	Not Applicable	Radar Leak Detector	RESERVED	RESERVED	RESERVED	RESERVED	RESERVED	Not Applicable	RESERVED
PWD-SUMP-00003[a]	Not Applicable	Radar Leak Detector	RESERVED	RESERVED	RESERVED	RESERVED	RESERVED	Not Applicable	RESERVED
PWD-SUMP-00004[a]	Not Applicable	Radar Leak Detector	RESERVED	RESERVED	RESERVED	RESERVED	RESERVED	Not Applicable	RESERVED
PWD-SUMP-00005[a]	Not Applicable	Radar Leak Detector	RESERVED	RESERVED	RESERVED	RESERVED	RESERVED	Not Applicable	RESERVED

Table III.10.E.E – Pretreatment Plant Tank System Process and Leak Detection System Instruments and Parameters

Tank System Name and Locator (including P&ID)	Control Parameter	Type of Instrument or Control Device	Location of Instrument or Control Device (Tag No.)	Instrument Range	Expected Operating Range or Setpoint	Fail States	Instrument Accuracy	Operating Trips (Description & Numerical Limits)	Instrument Calibration Method No. and Frequency
PWD-SUMP-00006[a]	Not Applicable	Radar Leak Detector	RESERVED	RESERVED	RESERVED	RESERVED	RESERVED	Not Applicable	RESERVED
PWD-SUMP-00007[a]	Not Applicable	Radar Leak Detector	RESERVED	RESERVED	RESERVED	RESERVED	RESERVED	Not Applicable	RESERVED
PWD-SUMP-00008[a]	Not Applicable	Radar Leak Detector	RESERVED	RESERVED	RESERVED	RESERVED	RESERVED	Not Applicable	RESERVED
PWD-SUMP-00009[a]	Not Applicable	Radar Leak Detector	RESERVED	RESERVED	RESERVED	RESERVED	RESERVED	Not Applicable	RESERVED
PWD-SUMP-00010[a]	Not Applicable	Radar Leak Detector	RESERVED	RESERVED	RESERVED	RESERVED	RESERVED	Not Applicable	RESERVED
PWD-SUMP-00011[a]	Not Applicable	Radar Leak Detector	RESERVED	RESERVED	RESERVED	RESERVED	RESERVED	Not Applicable	RESERVED
PWD-SUMP-00012[a]	Not Applicable	Radar Leak Detector	RESERVED	RESERVED	RESERVED	RESERVED	RESERVED	Not Applicable	RESERVED
PWD-SUMP-00013[a]	Not Applicable	Radar Leak Detector	RESERVED	RESERVED	RESERVED	RESERVED	RESERVED	Not Applicable	RESERVED
PWD-SUMP-00026[a]	Not Applicable	Radar Leak Detector	RESERVED	RESERVED	RESERVED	RESERVED	RESERVED	Not Applicable	RESERVED
PWD-SUMP-	Not	Radar Leak	RESERVED	RESERVED	RESERVED	RESERVED	RESERVED	Not Applicable	RESERVED

Table III.10.E.E – Pretreatment Plant Tank System Process and Leak Detection System Instruments and Parameters

Tank System Name and Locator (including P&ID)	Control Parameter	Type of Instrument or Control Device	Location of Instrument or Control Device (Tag No.)	Instrument Range	Expected Operating Range or Setpoint	Fail States	Instrument Accuracy	Operating Trips (Description & Numerical Limits)	Instrument Calibration Method No. and Frequency
00028[a]	Applicable	Detector							
PWD-SUMP-00029[a]	Not Applicable	Radar Leak Detector	RESERVED	RESERVED	RESERVED	RESERVED	RESERVED	Not Applicable	RESERVED
PWD-SUMP-00031[a]	Not Applicable	Radar Leak Detector	RESERVED	RESERVED	RESERVED	RESERVED	RESERVED	Not Applicable	RESERVED
PWD-SUMP-00032[a]	Not Applicable	Radar Leak Detector	RESERVED	RESERVED	RESERVED	RESERVED	RESERVED	Not Applicable	RESERVED
PWD-SUMP-00033[a]	Not Applicable	Radar Leak Detector	RESERVED	RESERVED	RESERVED	RESERVED	RESERVED	Not Applicable	RESERVED
PWD-SUMP-00036[a]	Not Applicable	Radar Leak Detector	RESERVED	RESERVED	RESERVED	RESERVED	RESERVED	Not Applicable	RESERVED
RLD-SUMP-00003[a]	Not Applicable	Radar Leak Detector	RESERVED	RESERVED	RESERVED	RESERVED	RESERVED	Not Applicable	RESERVED
RESERVED	RESERVED	RESERVED	RESERVED	RESERVED	RESERVED	RESERVED	RESERVED	RESERVED	RESERVED

Footnotes:

[a]Locator (including P&ID designator) is located on Permit Table III.10.E J – Pretreatment Plant Tank Systems Secondary Containment Systems Including Sumps and Floor Drains.

1
2

1

Table III.10.E.F – LAW Vitrification Plant Tank System Process and Leak Detection System Instruments and Parameters

Tank System Name and Locator (including P&ID)	Control Parameter	Type of Instrument or Control Device	Location of Instrument or Control Device (Tag No.)	Instrument Range	Expected Operating Range or Setpoint	Fail States	Instrument Accuracy	Operating Trips (Description & Numerical Limits)	Instrument Calibration Method No. and Frequency
RLD-SUMP-00028[a]	Not Applicable	Radar Leak Detector	RESERVED	RESERVED	RESERVED	RESERVED	RESERVED	Not Applicable	RESERVED
RLD-SUMP-00029[a]	Not Applicable	Radar Leak Detector	RESERVED	RESERVED	RESERVED	RESERVED	RESERVED	Not Applicable	RESERVED
RLD-SUMP-00030[a]	Not Applicable	Radar Leak Detector	RESERVED	RESERVED	RESERVED	RESERVED	RESERVED	Not Applicable	RESERVED
RLD-SUMP-00031[a]	Not Applicable	Radar Leak Detector	RESERVED	RESERVED	RESERVED	RESERVED	RESERVED	Not Applicable	RESERVED
RLD-SUMP-00032[a]	Not Applicable	Radar Leak Detector	RESERVED	RESERVED	RESERVED	RESERVED	RESERVED	Not Applicable	RESERVED
RLD-SUMP-00035[a]	Not Applicable	Radar Leak Detector	RESERVED	RESERVED	RESERVED	RESERVED	RESERVED	Not Applicable	RESERVED
RLD-SUMP-00036[a]	Not Applicable	Radar Leak Detector	RESERVED	RESERVED	RESERVED	RESERVED	RESERVED	Not Applicable	RESERVED
LVP-FD-00001[a]	Not Applicable	Radar Leak Detector	RESERVED	RESERVED	RESERVED	RESERVED	RESERVED	Not Applicable	RESERVED
RESERVED	RESERVED	RESERVED	RESERVED	RESERVED	RESERVED	RESERVED	RESERVED	RESERVED	RESERVED

Table III.10.E.F – LAW Vitrification Plant Tank System Process and Leak Detection System Instruments and Parameters

Tank System Name and Locator (including P&ID)	Control Parameter	Type of Instrument or Control Device	Location of Instrument or Control Device (Tag No.)	Instrument Range	Expected Operating Range or Setpoint	Fail States	Instrument Accuracy	Operating Trips (Description & Numerical Limits)	Instrument Calibration Method No. and Frequency
Footnotes: [a]Locator (including P&ID designator) is located on Permit Table III.10.E L - LAW Vitrification Plant Tank Systems Secondary Containment Systems Including Sumps and Floor Drains.									

1

1

Table III.10.E.G - HLW Vitrification Plant Tank System Process and Leak Detection System Instruments and Parameters

Tank System Name and Locator (including P&ID)	Control Parameter	Type of Instrument or Control Device	Location of Instrument or Control Device (Tag No.)	Instrument Range	Expected Operating Range or Setpoint	Fail States	Instrument Accuracy	Operating Trips (Description & Numerical Limits)	Instrument Calibration Method No. and Frequency
HCP-SUMP-00001[a]	Not Applicable	Radar Leak Detector	RESERVED	RESERVED	RESERVED	RESERVED	RESERVED	Not Applicable	RESERVED
RLD-SUMP-00001[a]	Not Applicable	Radar Leak Detector	RESERVED	RESERVED	RESERVED	RESERVED	RESERVED	Not Applicable	RESERVED
HOP-SUMP-00003[a]	Not Applicable	Radar Leak Detector	RESERVED	RESERVED	RESERVED	RESERVED	RESERVED	Not Applicable	RESERVED
HOP-SUMP-00008[a]	Not Applicable	Radar Leak Detector	RESERVED	RESERVED	RESERVED	RESERVED	RESERVED	Not Applicable	RESERVED
HDH-SUMP-00001[a]	Not Applicable	Radar Leak Detector	RESERVED	RESERVED	RESERVED	RESERVED	RESERVED	Not Applicable	RESERVED
HDH-SUMP-00002[a]	Not Applicable	Radar Leak Detector	RESERVED	RESERVED	RESERVED	RESERVED	RESERVED	Not Applicable	RESERVED
HDH-SUMP-00003[a]	Not Applicable	Radar Leak Detector	RESERVED	RESERVED	RESERVED	RESERVED	RESERVED	Not Applicable	RESERVED
HFP-SUMP-00001[a]	Not Applicable	None	RESERVED	RESERVED	RESERVED	RESERVED	RESERVED	Not Applicable	RESERVED
HFP-SUMP-00002[a]	Not Applicable	Radar Leak Detector	RESERVED	RESERVED	RESERVED	RESERVED	RESERVED	Not Applicable	RESERVED

Table III.10.E.G - HLW Vitrification Plant Tank System Process and Leak Detection System Instruments and Parameters

Tank System Name and Locator (including P&ID)	Control Parameter	Type of Instrument or Control Device	Location of Instrument or Control Device (Tag No.)	Instrument Range	Expected Operating Range or Setpoint	Fail States	Instrument Accuracy	Operating Trips (Description & Numerical Limits)	Instrument Calibration Method No. and Frequency
HFP-SUMP-00005[a]	Not Applicable	Radar Leak Detector	RESERVED	RESERVED	RESERVED	RESERVED	RESERVED	Not Applicable	RESERVED
HFP-SUMP-00004[a]	Not Applicable	None	RESERVED	RESERVED	RESERVED	RESERVED	RESERVED	Not Applicable	RESERVED
HSH-SUMP-00003[a]	Not Applicable	Bubbler	RESERVED	RESERVED	RESERVED	RESERVED	RESERVED	Not Applicable	RESERVED
HSH-SUMP-00007[a]	Not Applicable	Bubbler	RESERVED	RESERVED	RESERVED	RESERVED	RESERVED	Not Applicable	RESERVED
HSH-SUMP-00008[a]	Not Applicable	Radar Leak Detector	RESERVED	RESERVED	RESERVED	RESERVED	RESERVED	Not Applicable	RESERVED
HSH-SUMP-00009[a]	Not Applicable	Radar Leak Detector	RESERVED	RESERVED	RESERVED	RESERVED	RESERVED	Not Applicable	RESERVED
RESERVED	RESERVED	RESERVED	RESERVED	RESERVED	RESERVED	RESERVED	RESERVED	RESERVED	RESERVED

Footnotes:
[a]Locator (including P&ID designator) is located on Permit Table III.10.E N - HLW Vitrification Plant Tank Systems Secondary Containment Systems Including Sumps and Floor Drains.

1

Table III.10.E.H – Laboratory Tank System Process and Leak Detection System Instruments and Parameters

Tank System Name and Locator (including P&ID)	Control Parameter	Type of Instrument or Control Device	Location of Instrument or Control Device (Tag No.)	Instrument Range	Expected Operating Range or Setpoint	Fail States	Instrument Accuracy	Operating Trips (Description & Numerical Limits)	Instrument Calibration Method No. and Frequency
RLD-SUMP-00041[a]	Not Applicable	Radar Leak Detector	RESERVED	RESERVED	RESERVED	RESERVED	RESERVED	Not Applicable	RESERVED
RLD-SUMP-00042[a]	Not Applicable	Radar Leak Detector	RESERVED	RESERVED	RESERVED	RESERVED	RESERVED	Not Applicable	RESERVED
RLD-SUMP-00043A[a]	Not Applicable	Radar Leak Detector	RESERVED	RESERVED	RESERVED	RESERVED	RESERVED	Not Applicable	RESERVED
RLD-SUMP-00043B[a]	Not Applicable	Radar Leak Detector	RESERVED	RESERVED	RESERVED	RESERVED	RESERVED	Not Applicable	RESERVED
RLD-SUMP-00044[a]	Not Applicable	Radar Leak Detector	RESERVED	RESERVED	RESERVED	RESERVED	RESERVED	Not Applicable	RESERVED
RLD-SUMP-00045[a]	Not Applicable	Radar Leak Detector	RESERVED	RESERVED	RESERVED	RESERVED	RESERVED	Not Applicable	RESERVED
RLD-LDB-00002[a]	Not Applicable	RESERVED	RESERVED	RESERVED	RESERVED	RESERVED	RESERVED	Not Applicable	RESERVED
RLD-LDB-00004[a]	Not Applicable	RESERVED	RESERVED	RESERVED	RESERVED	RESERVED	RESERVED	Not Applicable	RESERVED
RLD-LDB-00005[a]	Not Applicable	RESERVED	RESERVED	RESERVED	RESERVED	RESERVED	RESERVED	Not Applicable	RESERVED
RLD-LDB-00006[a]	Not Applicable	RESERVED	RESERVED	RESERVED	RESERVED	RESERVED	RESERVED	Not Applicable	RESERVED
RLD-LDB-00007[a]	Not Applicable	RESERVED	RESERVED	RESERVED	RESERVED	RESERVED	RESERVED	Not Applicable	RESERVED
RLD-LDB-00008[a]	Not Applicable	RESERVED	RESERVED	RESERVED	RESERVED	RESERVED	RESERVED	Not Applicable	RESERVED
RLD-LDB-00009[a]	Not Applicable	RESERVED	RESERVED	RESERVED	RESERVED	RESERVED	RESERVED	Not Applicable	RESERVED

Table III.10.E.H – Laboratory Tank System Process and Leak Detection System Instruments and Parameters

Tank System Name and Locator (including P&ID)	Control Parameter	Type of Instrument or Control Device	Location of Instrument or Control Device (Tag No.)	Instrument Range	Expected Operating Range or Setpoint	Fail States	Instrument Accuracy	Operating Trips (Description & Numerical Limits)	Instrument Calibration Method No. and Frequency
RLD-LDB-00011[a]	Not Applicable	RESERVED	RESERVED	RESERVED	RESERVED	RESERVED	RESERVED	Not Applicable	RESERVED
RESERVED	RESERVED	RESERVED	RESERVED	RESERVED	RESERVED	RESERVED	RESERVED	RESERVED	RESERVED

Footnotes:
[a]Locator (including P&ID designator) is located on Permit Table III.10.E P - Laboratory Tank Systems Secondary Containment Systems Including Sumps and Floor Drains.

1

Table III.10.E.I – Pretreatment Plant Tank Systems Primary[a] Containment Sump Systems

Sump I.D.# & Room Location	Maximum Sump Capacity (gallons)	Sump Dimensions[b] (feet) & Materials of Construction	Engineering Description (Drawing Nos., Specifications Nos., etc.)
RESERVED	RESERVED	RESERVED	RESERVED

Footnotes:
[a] Primary sumps are defined in Permit Section III.10.C, and must comply with dangerous waste tank system requirements for tanks as described in WAC-173-303-640.
[b] Dimensions listed are based on permitted design. Actual dimensions may vary within plus or minus (TBD).

2
3
4

Table III.10.E.J – Pretreatment Plant Tank Systems Secondary Containment Systems Including Sumps, Bulges, and Floor Drains

Sump, Bulge or Drain Line I.D.# & Room Location	Maximum Sump/Bulge (gallons) or Drain Line (gallons per minute) Capacity	Sump Type/Nominal Operating Volume (gallons)	Sump, Bulge or Drain Line Dimensions[a] (inches) & Materials of Construction	Engineering Description (Drawing No.'s, Specifications No.'s, etc.)
PWD-SUMP-00071 P-B005 (Pit-19, El. –19')	55.1	Dry Sump	30"Dia x 18"Deep Epoxy	**24590-PTF** -M6-PWD-P0041 -P1-P01T-P0006
PWD-SUMP-00040 P-B002 (Pit-45, El. –45')	233.7	Dry Sump	60"x30"x30" 6Mo	**24590-PTF** -M6-PWD-P0012 -P1-P01T-P0006
PWD-SUMP-00001 P-0108B (El. 0')	73.5	Dry Sump	30" Dia. By ~28" deep 304L	**24590-PTF** -M6-PWD-P0008 -P1-P01T-P0001

Table III.10.E.J – Pretreatment Plant Tank Systems Secondary Containment Systems Including Sumps, Bulges, and Floor Drains

Sump, Bulge or Drain Line I.D.# & Room Location	Maximum Sump/Bulge (gallons) or Drain Line (gallons per minute) Capacity	Sump Type/Nominal Operating Volume (gallons)	Sump, Bulge or Drain Line Dimensions[a] (inches) & Materials of Construction	Engineering Description (Drawing No.'s, Specifications No.'s, etc.)
PWD-SUMP-00001A P-0108C (El. 0')	73.5	Dry Sump	30" Dia. By ~28" deep 304L	**24590-PTF** -M6-PWD-P0010 -P1-P01T-P0001
PWD-SUMP-00002 P-0108A (El. 0')	73.5	Dry Sump	30" Dia. By ~28" deep 304L	**24590-PTF** -M6-PWD-P0008 -P1-P01T-P0001
PWD-SUMP-00002A P-0108 (El. 0')	73.5	Dry Sump	30" Dia. By ~28" deep 304L	**24590-PTF** -M6-PWD-P0010 -P1-P01T-P0001
PWD-SUMP-00003 P-0106 (El. 0')	73.5	Dry Sump	30" Dia. By ~28" deep 304L	**24590-PTF** -M6-PWD-P0008 -P1-P01T-P0001
PWD-SUMP-00004 P-0104 (El. 0')	73.5	Dry Sump	30" Dia. By ~28" deep 304L	**24590-PTF** -M6-PWD-P0008 -P1-P01T-P0001
PWD-SUMP-00005 P-0102A (El. 0')	73.5	Dry Sump	30" Dia. By ~28" deep 304L	**24590-PTF** -M6-PWD-P0008 -P1-P01T-P0001
PWD-SUMP-00006 P-0102 (El. 0')	73.5	Dry Sump	30" Dia. By ~28" deep 304L	**24590-PTF** -M6-PWD-P0008

Table III.10.E.J – Pretreatment Plant Tank Systems Secondary Containment Systems Including Sumps, Bulges, and Floor Drains

Sump, Bulge or Drain Line I.D.# & Room Location	Maximum Sump/Bulge (gallons) or Drain Line (gallons per minute) Capacity	Sump Type/Nominal Operating Volume (gallons)	Sump, Bulge or Drain Line Dimensions[a] (inches) & Materials of Construction	Engineering Description (Drawing No.'s, Specifications No.'s, etc.)
				-P1-P01T-P0001
PWD-SUMP-00007 P-0109 (El. 0')	73.5	Dry Sump	30" Dia. By ~28" deep 304L	**24590-PTF** -M6-PWD-P0009 -P1-P01T-P0001
PWD-SUMP-00008 P-0111 (El. 0')	73.5	Dry Sump	30" Dia. By ~28" deep 304L	**24590-PTF** -M6-PWD-P0009 -P1-P01T-P0001
PWD-SUMP-00009 P-0112 (El. 0')	73.5	Dry Sump	30" Dia. By ~28" deep 304L	**24590-PTF** -M6-PWD-P0009 -P1-P01T-P0001
PWD-SUMP-00010 P-0113 (El. 0')	73.5	Dry Sump	30" Dia. By ~28" deep 304L	**24590-PTF** -M6-PWD-P0009 -P1-P01T-P0001
PWD-SUMP-00011 P-0114 (El. 0')	73.5	Dry Sump	30" Dia. By ~28" deep 304L	**24590-PTF** -M6-PWD-P0009 -P1-P01T-P0001
PWD-SUMP-00012 P-0117 (El. 0')	73.5	Dry Sump	30" Dia. By ~28" deep 304L	**24590-PTF** -M6-PWD-P0009 -P1-P01T-P0001
PWD-SUMP-00013 P-0117A (El. 0')	73.5	Dry Sump	30" Dia. By ~28" deep 304L	**24590-PTF** -M6-PWD-P0014 -P1-P01T-P0001

Table III.10.E.J – Pretreatment Plant Tank Systems Secondary Containment Systems Including Sumps, Bulges, and Floor Drains

Sump, Bulge or Drain Line I.D.# & Room Location	Maximum Sump/Bulge (gallons) or Drain Line (gallons per minute) Capacity	Sump Type/Nominal Operating Volume (gallons)	Sump, Bulge or Drain Line Dimensions[a] (inches) & Materials of Construction	Engineering Description (Drawing No.'s, Specifications No.'s, etc.)
PWD-SUMP-00026 P-0123 (Hot Cell, El. 0')	73.5	Dry Sump	30" Dia. By ~28" deep 316L	**24590-PTF** -M6-PWD-P0014 -P1-P01T-P0001
PWD-SUMP-00028 P-0123 (Hot Cell, El. 0')	73.5	Dry Sump	30" Dia. By ~28" deep 316L	**24590-PTF** -M6-PWD-P0014 -P1-P01T-P0001
PWD-SUMP-00029 P-0123 (Hot Cell, El. 0')	73.5	Dry Sump	30" Dia. By ~28" deep 316L	**24590-PTF** -M6-PWD-P0014 -P1-P01T-P0001
PWD-SUMP-00031 P-0119 (El. 0')	73.5	Dry Sump	30" Dia. By ~28" deep 304L	**24590-PTF** -M6-PWD-P0010 -P1-P01T-P0001
PWD-SUMP-00032 P-0123A (Maintenance Cave, El. 0')	73.5	Dry Sump	30" Dia. By ~28" deep 316L	**24590-PTF** -M6-PWD-P0010 -P1-P01T-P0001
PWD-SUMP-00033 P-0123A (Maintenance Cave, El. 0')	73.5	Dry Sump	30" Dia. By ~28" deep 316L	**24590-PTF** -M6-PWD-P0010 -P1-P01T-P0001
PWD-SUMP-00036 P-0118 (El. 0')	73.5	Dry Sump	30" Dia. By ~28" deep 304L	**24590-PTF** -M6-PWD-P0012 -P1-P01T-P0001

Table III.10.E.J – Pretreatment Plant Tank Systems Secondary Containment Systems Including Sumps, Bulges, and Floor Drains

Sump, Bulge or Drain Line I.D.# & Room Location	Maximum Sump/Bulge (gallons) or Drain Line (gallons per minute) Capacity	Sump Type/Nominal Operating Volume (gallons)	Sump, Bulge or Drain Line Dimensions[a] (inches) & Materials of Construction	Engineering Description (Drawing No.'s, Specifications No.'s, etc.)
PJV-ZF-00027-S11B-02 P-0101 (PJV-BULGE-00001 Drain, El. 0')	60	N/A	2" Dia. 316L	**24590-PTF** -M6-PJV-P0002
PWD-ZF-00004-S11B-02 P-0105 (PVP-BULGE-00001 Drain, El. 0')	60	N/A	2" Dia. 316L	**24590-PTF** -M6-PVP-P0003
PWD-ZF-00005-S11B-02 P-0101A (PVP-BULGE-00002 Drain, El. 0')	60	N/A	2" Dia. 316L	**24590-PTF** -M6-PVP-P0003
RDP-ZF-00016-S11B-02 P-0110A (RDP-BULGE-00010 Drain, El. 0')	60	N/A	2" Dia. 316L	**24590-PTF** -M6-RDP-P0001
TCP-PH-00032-S11B-02 P-0116 (TCP-BULGE-00004 Drain, El. 0')	60	N/A	2" Dia. 316L	**24590-PTF** -M6-TCP-P0001
TEP-ZF-02066-S11B-011/2 P-0110A (TEP-BULGE-00006 Drain, El. 0')	40	N/A	1-1/2" Dia. 316L	**24590-PTF** -M6-TEP-P0001
CNP-ZF-00043-S11B-03 P-0207 (CNP-BULGE-00008 Drain, El. 28')	160	N/A	3" Dia. 316L	**24590-PTF** -M6-CNP-P0002
PWD-ZF-03000-S11B-06 P-0123 (Hot Cell, El.0')	939	N/A	6" Dia. 316L	**24590-PTF** -M6-PWD-P0011
PWD-ZF-03001-S11B-06 P-0123 (Hot Cell, El.0')	939	N/A	6" Dia. 316L	**24590-PTF** -M6-PWD-P0011
PWD-FD-00432 P-0201 Drain, El. 28'	155	N/A	6" Dia. 316L	**24590-PTF** -M6-PWD-P0044

Table III.10.E.J – Pretreatment Plant Tank Systems Secondary Containment Systems Including Sumps, Bulges, and Floor Drains

Sump, Bulge or Drain Line I.D.# & Room Location	Maximum Sump/Bulge (gallons) or Drain Line (gallons per minute) Capacity	Sump Type/Nominal Operating Volume (gallons)	Sump, Bulge or Drain Line Dimensions[a] (inches) & Materials of Construction	Engineering Description (Drawing No.'s, Specifications No.'s, etc.)
PWD-FD-00452 P-0201 Drain, El. 28'	706	N/A	8" Dia. 316L	24590-PTF -M6-PWD-P0044
PWD-FD-00456 P-0201A Drain, El. 28'	155	N/A	6" Dia. 316L	24590-PTF -M6-PWD-P0044
PWD-FD-00341 P-0201A Drain, El. 28'	155	N/A	6" Dia. 316L	24590-PTF -M6-PWD-P0044
PWD-FD-00351A P-0201A Drain, El. 28'	52	N/A	3" Dia. 316L	24590-PTF -M6-PWD-P0044
PWD-FD-00451 P-0203 Drain, El. 28'	706	N/A	8" Dia. 316L	24590-PTF -M6-PWD-P0044
PWD-FD-00339 P-0203 Drain, El. 28'	155	N/A	6" Dia. 316L	24590-PTF -M6-PWD-P0044
PWD-FD-00450 P-0203 Drain, El. 28'	706	N/A	8" Dia. 316L	24590-PTF -M6-PWD-P0044
PWD-FD-00450A P-0203 Drain, El. 28'	155	N/A	6" Dia. 316L	24590-PTF -M6-PWD-P0044
PWD-FD-00449A P-0203 Drain, El. 28'	52	N/A	3" Dia. 316L	24590-PTF -M6-PWD-P0044

Table III.10.E.J – Pretreatment Plant Tank Systems Secondary Containment Systems Including Sumps, Bulges, and Floor Drains

Sump, Bulge or Drain Line I.D.# & Room Location	Maximum Sump/Bulge (gallons) or Drain Line (gallons per minute) Capacity	Sump Type/Nominal Operating Volume (gallons)	Sump, Bulge or Drain Line Dimensions[a] (inches) & Materials of Construction	Engineering Description (Drawing No.'s, Specifications No.'s, etc.)
PWD-FD-00449 P-0203A Drain, El. 28'	706	N/A	8" Dia. 316L	**24590-PTF** -M6-PWD-P0044
PWD-FD-00338 P-0203A Drain, El. 28'	155	N/A	6" Dia. 316L	**24590-PTF** -M6-PWD-P0044
PWD-FD-00337 P-0203B Drain, El. 28'	155	N/A	6" Dia. 316L	**24590-PTF** -M6-PWD-P0044
PWD-FD-00448 P-0203B Drain, El. 28'	706	N/A	8" Dia. 316L	**24590-PTF** -M6-PWD-P0044
PWD-FD-00447A P-0203B Drain, El. 28'	52	N/A	3" Dia. 316L	**24590-PTF** -M6-PWD-P0044
PWD-FD-00447 P-0204 Drain, El. 28'	706	N/A	8" Dia. 316L	**24590-PTF** -M6-PWD-P0044
PWD-FD-00336 P-0204 Drain, El. 28'	155	N/A	6" Dia. 316L	**24590-PTF** -M6-PWD-P0044
PWD-FD-00397 P-0206 Drain, El. 28'	155	N/A	6" Dia. 316L	**24590-PTF** -M6-PWD-P0043
PWD-FD-00443 P-0206 Drain, El. 28'	706	N/A	8" Dia. 316L	**24590-PTF** -M6-PWD-P0043
PWD-FD-00398A P-0207 Drain, El. 28'	52	N/A	3" Dia. 316L	**24590-PTF** -M6-PWD-P0043

Table III.10.E.J – Pretreatment Plant Tank Systems Secondary Containment Systems Including Sumps, Bulges, and Floor Drains

Sump, Bulge or Drain Line I.D.# & Room Location	Maximum Sump/Bulge (gallons) or Drain Line (gallons per minute) Capacity	Sump Type/Nominal Operating Volume (gallons)	Sump, Bulge or Drain Line Dimensions[a] (inches) & Materials of Construction	Engineering Description (Drawing No.'s, Specifications No.'s, etc.)
PWD-FD-00398 P-0207 Drain, El. 28'	155	N/A	6" Dia. 316L	**24590-PTF** -M6-PWD-P0043
PWD-FD-00399 P-0208 Drain, El. 28'	155	N/A	6" Dia. 316L	**24590-PTF** -M6-PWD-P0043
PWD-FD-00400 P-0209 Drain, El. 28'	52	N/A	3" Dia. 316L	**24590-PTF** -M6-PWD-P0043
PWD-FD-00444 P-0209 Drain, El. 28'	706	N/A	8" Dia. 316L	**24590-PTF** -M6-PWD-P0043
PWD-FD-00401 P-0209 Drain, El. 28'	155	N/A	6" Dia. 316L	**24590-PTF** -M6-PWD-P0043
PWD-FD-00402 P-0210 Drain, El. 28'	155	N/A	6" Dia. 316L	**24590-PTF** -M6-PWD-P0043
PWD-FD-00445 P-0210 Drain, El. 28'	706	N/A	8" Dia. 316L	**24590-PTF** -M6-PWD-P0043
PWD-FD-00445A P-0212 Drain, El. 28'	706	N/A	8" Dia. 316L	**24590-PTF** -M6-PWD-P0043
PWD-FD-00442 P-0212 Drain, El. 28'	52	N/A	3" Dia. 316L	**24590-PTF** -M6-PWD-P0043
PWD-FD-00404 P-0212 Drain, El. 28'	155	N/A	6" Dia. 316L	**24590-PTF** -M6-PWD-P0043

Table III.10.E.J – Pretreatment Plant Tank Systems Secondary Containment Systems Including Sumps, Bulges, and Floor Drains

Sump, Bulge or Drain Line I.D.# & Room Location	Maximum Sump/Bulge (gallons) or Drain Line (gallons per minute) Capacity	Sump Type/Nominal Operating Volume (gallons)	Sump, Bulge or Drain Line Dimensions[a] (inches) & Materials of Construction	Engineering Description (Drawing No.'s, Specifications No.'s, etc.)
PWD-FD-00404A P-0212 Drain, El. 28'	155	N/A	6" Dia. 316L	**24590-PTF** -M6-PWD-P0043
PWD-FD-00446 P-0212 Drain, El. 28'	706	N/A	8" Dia. 316L	**24590-PTF** -M6-PWD-P0043
PVP-ZY-00036-S11B-03 from PVP-BULGE-00002 (Vessel Vent HEME Drain Vessel Pump Bulge)	RESERVED	N/A	RESERVED	**24590-PTF** -M6-PVP-P00018
PWD-FD-00002 P-0335 Drain, El. 56'	255 (Note 1)	N/A	4" Dia 316L	**24590-PTF** -M6-PWD-P0011
PWD-FD-00003 P-0335 Drain, El. 56'	255 (Note 1)	N/A	4" Dia 316L	**24590-PTF** -M6-PWD-P0011
PWD-FD-00313 P-0303B Drain, El. 56'	140	N/A	6" Dia 316L	**24590-PTF** -M6-PWD-P0044
PWD-FD-00314 P-0303B Drain, El. 56'	655	N/A	8" Dia 316L	**24590-PTF** -M6-PWD-P0044
PWD-FD-00315 P-0303B Drain, El. 56'	655	N/A	8" Dia 316L	**24590-PTF** -M6-PWD-P0044
PWD-FD-00316 P-0303B Drain, El. 56'	140	N/A	6" Dia 316L	**24590-PTF** -M6-PWD-P0044
PWD-FD-003117 P-0303B Drain, El. 56'	140	N/A	6" Dia 316L	**24590-PTF** -M6-PWD-P0044
PWD-FD-00318 P-0303B Drain, El. 56'	655	N/A	8" Dia 316L	**24590-PTF** -M6-PWD-P0044
PWD-FD-00319 P-0303B Drain, El. 56'	140	N/A	6" Dia 316L	**24590-PTF** -M6-PWD-P0044

Table III.10.E.J – Pretreatment Plant Tank Systems Secondary Containment Systems Including Sumps, Bulges, and Floor Drains

Sump, Bulge or Drain Line I.D.# & Room Location	Maximum Sump/Bulge (gallons) or Drain Line (gallons per minute) Capacity	Sump Type/Nominal Operating Volume (gallons)	Sump, Bulge or Drain Line Dimensions[a] (inches) & Materials of Construction	Engineering Description (Drawing No.'s, Specifications No.'s, etc.)
PWD-FD-00322 P-0303B Drain, El. 56'	140	N/A	6" Dia 316L	**24590-PTF** -M6-PWD-P0044
PWD-FD-00323 P-0304 Drain, El. 56'	140	N/A	6" Dia 316L	**24590-PTF** -M6-PWD-P0044
PWD-FD-00324 P-0304 Drain, El. 56'	140	N/A	6" Dia 316L	**24590-PTF** -M6-PWD-P0044
PWD-FD-00325 P-0304 Drain, El. 56'	140	N/A	6" Dia 316L	**24590-PTF** -M6-PWD-P0044
PWD-FD-00326 P-0304 Drain, El. 56'	140	N/A	6" Dia 316L	**24590-PTF** -M6-PWD-P0044
PWD-FD-00327 P-0304 Drain, El. 56'	140	N/A	6" Dia 316L	**24590-PTF** -M6-PWD-P0044
PWD-FD-00328 P-0303 Drain, El. 56'	655	N/A	8" Dia 316L	**24590-PTF** -M6-PWD-P0044
PWD-FD-00329 P-0303 Drain, El. 56'	140	N/A	6" Dia 316L	**24590-PTF** -M6-PWD-P0044
PWD-FD-00333 P-0324 Drain, El. 56'	140	N/A	6" Dia 316L	**24590-PTF** -M6-PWD-P0044
PWD-FD-00334 P-0302 Drain, El. 56'	140	N/A	6" Dia 316L	**24590-PTF** -M6-PWD-P0044
PWD-FD-00335 P-0302 Drain, El. 56'	655	N/A	8" Dia 316L	**24590-PTF** -M6-PWD-P0044
PWD-FD-00384 P-0311 Drain, El. 56'	655	N/A	8" Dia 316L	**24590-PTF** -M6-PWD-P0043
PWD-FD-00385 P-0311 Drain, El. 56'	140	N/A	6" Dia 316L	**24590-PTF** -M6-PWD-P0043
PWD-FD-00386	655	N/A	8" Dia	**24590-PTF**

Table III.10.E.J – Pretreatment Plant Tank Systems Secondary Containment Systems Including Sumps, Bulges, and Floor Drains

Sump, Bulge or Drain Line I.D.# & Room Location	Maximum Sump/Bulge (gallons) or Drain Line (gallons per minute) Capacity	Sump Type/Nominal Operating Volume (gallons)	Sump, Bulge or Drain Line Dimensions[a] (inches) & Materials of Construction	Engineering Description (Drawing No.'s, Specifications No.'s, etc.)
P-0307 Drain, El. 56'			316L	-M6-PWD-P0043
PWD-FD-00387 P-0307 Drain, El. 56'	140	N/A	6" Dia 316L	**24590-PTF** -M6-PWD-P0043
PWD-FD-00388 P-0307 Drain, El. 56'	140	N/A	6" Dia 316L	**24590-PTF** -M6-PWD-P0043
PWD-FD-00389 P-0317 Drain, El. 56'	140	N/A	6" Dia 316L	**24590-PTF** -M6-PWD-P0043
PWD-FD-00390 P-0317 Drain, El. 56'	655	N/A	8" Dia 316L	**24590-PTF** -M6-PWD-P0043
PWD-FD-00391 P-0317 Drain, El. 56'	140	N/A	6" Dia 316L	**24590-PTF** -M6-PWD-P0043
PWD-FD-00392 P-0317 Drain, El. 56'	140	N/A	6" Dia 316L	**24590-PTF** -M6-PWD-P0043
PWD-FD-00393 P-0317 Drain, El. 56'	140	N/A	6" Dia 316L	**24590-PTF** -M6-PWD-P0043
PWD-FD-00394 P-0317 Drain, El. 56'	140	N/A	6" Dia 316L	**24590-PTF** -M6-PWD-P0044
PWD-FD-00458 P-0324 Drain, El. 56'	140	N/A	6" Dia 316L	**24590-PTF** -M6-PWD-P0044
PWD-FD-00459 P-0324 Drain, El. 56'	140	N/A	6" Dia 316L	**24590-PTF** -M6-PWD-P0044
PWD-FD-00460 P-0324 Drain, El. 56'	655	N/A	8" Dia 316L	**24590-PTF** -M6-PWD-P0044
PWD-FD-00461 P-0302 Drain, El. 56'	140	N/A	6" Dia 316L	**24590-PTF** -M6-PWD-P0044
PWD-FD-00462 P-0302 Drain, El. 56'	140	N/A	6" Dia 316L	**24590-PTF** -M6-PWD-P0044

Table III.10.E.J – Pretreatment Plant Tank Systems Secondary Containment Systems Including Sumps, Bulges, and Floor Drains

Sump, Bulge or Drain Line I.D.# & Room Location	Maximum Sump/Bulge (gallons) or Drain Line (gallons per minute) Capacity	Sump Type/Nominal Operating Volume (gallons)	Sump, Bulge or Drain Line Dimensions[a] (inches) & Materials of Construction	Engineering Description (Drawing No.'s, Specifications No.'s, etc.)
PWD-FD-00463 P-0302 Drain, El. 56'	655	N/A	8" Dia 316L	**24590-PTF** -M6-PWD-P0044
PWD-FD-00464 P-0301 Drain, El. 56'	655	N/A	8" Dia 316L	**24590-PTF** -M6-PWD-P0044
PWD-FD-00465 P-0301 Drain, El. 56'	140	N/A	6" Dia 316L	**24590-PTF** -M6-PWD-P0044
PWD-FD-00466 P-0301 Drain, El. 56'	140	N/A	6" Dia 316L	**24590-PTF** -M6-PWD-P0044
PWD-FD-00469 P-0336 Drain, El. 56'	140	N/A	6" Dia 316L	**24590-PTF** -M6-PWD-P0044
PWD-FD-00470 P-0336 Drain, El. 56'	655	N/A	8" Dia 316L	**24590-PTF** -M6-PWD-P0044
PWD-FD-00471 P-0336 Drain, El. 56'	140	N/A	6" Dia 316L	**24590-PTF** -M6-PWD-P0044
PWD-FD-00472 P-0336 Drain, El. 56'	140	N/A	6" Dia 316L	**24590-PTF** -M6-PWD-P0044
PWD-FD-00503 P-0332B Drain, El. 56'	104	N/A	4" Dia 316L	**24590-PTF** -M6-PWD-P0011
PWD-FD-00508 P-0311 Drain, El. 56'	140	N/A	6" Dia 316L	**24590-PTF** -M6-PWD-P0043
PWD-FD-00509 P-0311 Drain, El. 56'	655	N/A	8" Dia 316L	**24590-PTF** -M6-PWD-P0043
PWD-FD-00510 P-0311 Drain, El. 56'	140	N/A	6" Dia 316L	**24590-PTF** -M6-PWD-P0043
PWD-FD-00511 P-0332B Drain, El. 56'	140	N/A	6" Dia 316L	**24590-PTF** -M6-PWD-P0043
PWD-FD-00512	140	N/A	6" Dia	**24590-PTF**

Table III.10.E.J – Pretreatment Plant Tank Systems Secondary Containment Systems Including Sumps, Bulges, and Floor Drains

Sump, Bulge or Drain Line I.D.# & Room Location	Maximum Sump/Bulge (gallons) or Drain Line (gallons per minute) Capacity	Sump Type/Nominal Operating Volume (gallons)	Sump, Bulge or Drain Line Dimensions[a] (inches) & Materials of Construction	Engineering Description (Drawing No.'s, Specifications No.'s, etc.)
P-0320 Drain, El. 56'			316L	-M6-PWD-P0043
PWD-FD-00513 P-0320 Drain, El. 56'	140	N/A	6" Dia 316L	**24590-PTF** -M6-PWD-P0043
PWD-FD-00514 P-0320 Drain, El. 56'	140	N/A	6" Dia 316L	**24590-PTF** -M6-PWD-P0043
PWD-FD-00515 P-0325 Drain, El. 56'	140	N/A	6" Dia 316L	**24590-PTF** -M6-PWD-P0043
PWD-FD-00516 P-0325 Drain, El. 56'	140	N/A	6" Dia 316L	**24590-PTF** -M6-PWD-P0043
PWD-FD-00517 P-0325 Drain, El. 56'	655	N/A	8" Dia 316L	**24590-PTF** -M6-PWD-P0043
PWD-FD-00518 P-0311 Drain, El. 56'	140	N/A	6" Dia 316L	**24590-PTF** -M6-PWD-P0043
PWD-FD-00519 P-0311 Drain, El. 56'	655	N/A	8" Dia 316L	**24590-PTF** -M6-PWD-P0043
PWD-FD-00520 P-0311 Drain, El. 56'	140	N/A	6" Dia 316L	**24590-PTF** -M6-PWD-P0043
PWD-FD-00521 P-0311 Drain, El. 56'	655	N/A	8" Dia 316L	**24590-PTF** -M6-PWD-P0043
PWD-FD-00522 P-0311 Drain, El. 56'	140	N/A	6" Dia 316L	**24590-PTF** -M6-PWD-P0043
PWD-FD-00523 P-0311 Drain, El. 56'	655	N/A	8" Dia 316L	**24590-PTF** -M6-PWD-P0043
PWD-FD-00524 P-0311 Drain, El. 56'	140	N/A	6" Dia 316L	**24590-PTF** -M6-PWD-P0043
PWD-FD-00527 P-0311 Drain, El. 56'	140	N/A	6" Dia 316L	**24590-PTF** -M6-PWD-P0043

Table III.10.E.J – Pretreatment Plant Tank Systems Secondary Containment Systems Including Sumps, Bulges, and Floor Drains

Sump, Bulge or Drain Line I.D.# & Room Location	Maximum Sump/Bulge (gallons) or Drain Line (gallons per minute) Capacity	Sump Type/Nominal Operating Volume (gallons)	Sump, Bulge or Drain Line Dimensions[a] (inches) & Materials of Construction	Engineering Description (Drawing No.'s, Specifications No.'s, etc.)
PWD-FD-00528 P-0311 Drain, El. 56'	140	N/A	6" Dia 304L	**24590-PTF** -M6-PWD-P0043
PWD-FD-00286 P-0407 Drain, El. 77'	655	N/A	8" Dia 304L	**24590-PTF** -M6-PWD-P0044
PWD-FD-00287 P-0407 Drain, El. 77'	140	N/A	6" Dia 304L	**24590-PTF** -M6-PWD-P0044
PWD-FD-00288 P-0407 Drain, El. 77'	140	N/A	6" Dia 304L	**24590-PTF** -M6-PWD-P0044
PWD-FD-00289 P-0407 Drain, El. 77'	655	N/A	8" Dia 304L	**24590-PTF** -M6-PWD-P0044
PWD-FD-00290 P-0407 Drain, El. 77'	140	N/A	6" Dia 304L	**24590-PTF** -M6-PWD-P0044
PWD-FD-00291 P-0426 Drain, El. 77'	140	N/A	6" Dia 304L	**24590-PTF** -M6-PWD-P0044
PWD-FD-00292 P-0426 Drain, El. 77'	140	N/A	6" Dia 304L	**24590-PTF** -M6-PWD-P0044
PWD-FD-00293 P-0426 Drain, El. 77'	140	N/A	6" Dia 304L	**24590-PTF** -M6-PWD-P0044
PWD-FD-00298 P-0425 Drain, El. 77'	140	N/A	6" Dia 304L	**24590-PTF** -M6-PWD-P0044
PWD-FD-00309 P-0402 Drain, El. 77'	655	N/A	8" Dia 304L	**24590-PTF** -M6-PWD-P0044
PWD-FD-00310 P-0402 Drain, El. 77'	140	N/A	6" Dia 304L	**24590-PTF** -M6-PWD-P0044
PWD-FD-00311 P-0402 Drain, El. 77'	140	N/A	6" Dia 304L	**24590-PTF** -M6-PWD-P0044
PWD-FD-00312	655	N/A	8" Dia	**24590-PTF**

Table III.10.E.J – Pretreatment Plant Tank Systems Secondary Containment Systems Including Sumps, Bulges, and Floor Drains

Sump, Bulge or Drain Line I.D.# & Room Location	Maximum Sump/Bulge (gallons) or Drain Line (gallons per minute) Capacity	Sump Type/Nominal Operating Volume (gallons)	Sump, Bulge or Drain Line Dimensions[a] (inches) & Materials of Construction	Engineering Description (Drawing No.'s, Specifications No.'s, etc.)
P-0402 Drain, El. 77'			304L	-M6-PWD-P0044
PWD-FD-00376 P-0415 Drain, El. 77'	655	N/A	8" Dia 304L	**24590-PTF** -M6-PWD-P0043
PWD-FD-00377 P-0415 Drain, El. 77'	140	N/A	6" Dia 304L	**24590-PTF** -M6-PWD-P0043
PWD-FD-00378 P-0415 Drain, El. 77'	140	N/A	6" Dia 304L	**24590-PTF** -M6-PWD-P0043
PWD-FD-00379 P-0415 Drain, El. 77'	140	N/A	6" Dia 304L	**24590-PTF** -M6-PWD-P0043
PWD-FD-00380 P-0415A Drain, El. 77'	140	N/A	6" Dia 304L	**24590-PTF** -M6-PWD-P0043
PWD-FD-00381 P-0415A Drain, El. 77'	140	N/A	6" Dia 304L	**24590-PTF** -M6-PWD-P0043
PWD-FD-00382 P-0415A Drain, El. 77'	655	N/A	8" Dia 304L	**24590-PTF** -M6-PWD-P0043
PWD-FD-00383 P-0415A Drain, El. 77'	140	N/A	6" Dia 304L	**24590-PTF** -M6-PWD-P0043
PWD-FD-00557 P-0430 Drain, El. 77'	140	N/A	6" Dia 304L	**24590-PTF** -M6-PWD-P0043
PWD-FD-00559 P-0430 Drain, El. 77'	665	N/A	8" Dia 304L	**24590-PTF** -M6-PWD-P0043
PWD-FD-00561 P-0430 Drain, El. 77'	140	N/A	6" Dia 304L	**24590-PTF** -M6-PWD-P0043
PWD-FD-00563 P-0411 Drain, El. 77'	665	N/A	8" Dia 304L	**24590-PTF** -M6-PWD-P0043
PWD-FD-00564 P-0411 Drain, El. 77'	140	N/A	6" Dia 304L	**24590-PTF** -M6-PWD-P0043

Table III.10.E.J – Pretreatment Plant Tank Systems Secondary Containment Systems Including Sumps, Bulges, and Floor Drains

Sump, Bulge or Drain Line I.D.# & Room Location	Maximum Sump/Bulge (gallons) or Drain Line (gallons per minute) Capacity	Sump Type/Nominal Operating Volume (gallons)	Sump, Bulge or Drain Line Dimensions[a] (inches) & Materials of Construction	Engineering Description (Drawing No.'s, Specifications No.'s, etc.)
PWD-FD-00565 P-0410 Drain, El. 77'	665	N/A	8" Dia 304L	**24590-PTF** -M6-PWD-P0043
PWD-FD-00566 P-0410 Drain, El. 77'	665	N/A	8" Dia 304L	**24590-PTF** -M6-PWD-P0043
PWD-FD-00571 P-0410 Drain, El. 77'	140	N/A	6" Dia 304L	**24590-PTF** -M6-PWD-P0044
PWD-FD-00572 P-0410 Drain, El. 77'	140	N/A	6" Dia 304L	**24590-PTF** -M6-PWD-P0044
PWD-FD-00573 P-0410 Drain, El. 77'	140	N/A	6" Dia 304L	**24590-PTF** -M6-PWD-P0044
PWD-FD-00574 P-0410 Drain, El. 77'	140	N/A	6" Dia 304L	**24590-PTF** -M6-PWD-P0044
PWD-FD-00575 P-0410 Drain, El. 77'	140	N/A	6" Dia 304L	**24590-PTF** -M6-PWD-P0044
PWD-FD-00576 P-0410 Drain, El. 77'	140	N/A	6" Dia 304L	**24590-PTF** -M6-PWD-P0044
PWD-FD-00583 P-0422A Drain, El. 77'	655	N/A	8" Dia 304L	**24590-PTF** -M6-PWD-P0044
PWD-FD-00584 P-0422A Drain, El. 77'	140	N/A	6" Dia 304L	**24590-PTF** -M6-PWD-P0044
PWD-FD-00585 P-0422A Drain, El. 77'	140	N/A	6" Dia 304L	**24590-PTF** -M6-PWD-P0044
PWD-FD-00586 P-0422A Drain, El. 77'	655	N/A	8" Dia 304L	**24590-PTF** -M6-PWD-P0044
PWD-FD-00588 P-0423 Drain, El. 77'	655	N/A	8" Dia 304L	**24590-PTF** -M6-PWD-P0044
PWD-FD-00589	140	N/A	6" Dia	**24590-PTF**

Table III.10.E.J – Pretreatment Plant Tank Systems Secondary Containment Systems Including Sumps, Bulges, and Floor Drains

Sump, Bulge or Drain Line I.D.# & Room Location	Maximum Sump/Bulge (gallons) or Drain Line (gallons per minute) Capacity	Sump Type/Nominal Operating Volume (gallons)	Sump, Bulge or Drain Line Dimensions[a] (inches) & Materials of Construction	Engineering Description (Drawing No.'s, Specifications No.'s, etc.)
P-0402 Drain, El. 77'			304L	-M6-PWD-P0044
PWD-FD-00590 P-0423 Drain, El. 77'	655	N/A	8" Dia 304L	**24590-PTF** -M6-PWD-P0044
PWD-FD-00591 P-0423 Drain, El. 77'	655	N/A	8" Dia 304L	**24590-PTF** -M6-PWD-P0044
PWD-FD-00592 P-0423 Drain, El. 77'	655	N/A	8" Dia 304L	**24590-PTF** -M6-PWD-P0044
PWD-FD-00593 P-0423 Drain, El. 77'	140	N/A	6" Dia 304L	**24590-PTF** -M6-PWD-P0044
PWD-FD-00594 P-0423 Drain, El. 77'	655	N/A	8" Dia 304L	**24590-PTF** -M6-PWD-P0044
PWD-FD-00595 P-0431A Drain, El. 77'	140	N/A	6" Dia 304L	**24590-PTF** -M6-PWD-P0044
PWD-FD-00596 P-0431A Drain, El. 77'	140	N/A	6" Dia 304L	**24590-PTF** -M6-PWD-P0044
PWD-FD-00597 P-0431A Drain, El. 77'	140	N/A	6" Dia 304L	**24590-PTF** -M6-PWD-P0044
PWD-FD-00598 P-0431A Drain, El. 77'	655	N/A	8" Dia 304L	**24590-PTF** -M6-PWD-P0044
PWD-FD-00599 P-0431A Drain, El. 77'	655	N/A	8" Dia 304L	**24590-PTF** -M6-PWD-P0044
PWD-FD-00600 P-0431A Drain, El. 77'	655	N/A	8" Dia 304L	**24590-PTF** -M6-PWD-P0044
PWD-FD-00604 P-0431A Drain, El. 77'	140	N/A	6" Dia 304L	**24590-PTF** -M6-PWD-P0044
PWD-FD-00605 P-0431A Drain, El. 77'	140	N/A	6" Dia 304L	**24590-PTF** -M6-PWD-P0044

Table III.10.E.J – Pretreatment Plant Tank Systems Secondary Containment Systems Including Sumps, Bulges, and Floor Drains

Sump, Bulge or Drain Line I.D.# & Room Location	Maximum Sump/Bulge (gallons) or Drain Line (gallons per minute) Capacity	Sump Type/Nominal Operating Volume (gallons)	Sump, Bulge or Drain Line Dimensions[a] (inches) & Materials of Construction	Engineering Description (Drawing No.'s, Specifications No.'s, etc.)
PWD-FD-00606 P-0431A Drain, El. 77'	140	N/A	6" Dia 304L	**24590-PTF** -M6-PWD-P0044
PWD-FD-00607 P-0431A Drain, El. 77'	140	N/A	6" Dia 304L	**24590-PTF** -M6-PWD-P0044
PWD-FD-00629 P-0425 Drain, El. 77'	655	N/A	8" Dia 304L	**24590-PTF** -M6-PWD-P0044
PWD-FD-00630 P-0425 Drain, El. 77'	140	N/A	8" Dia 304L	**24590-PTF** -M6-PWD-P0044
CRP-BULGE-00001 P-0317, El. 56'	RESERVED	RESERVED	RESERVED	**24590-PTF** -P1-P01T-P0003
CXP-BULGE-00004 P-0317, El. 56'	RESERVED	RESERVED	RESERVED	**24590-PTF** -P1-P01T-P0003
UFP-BULGE-00001 P-0301 (Ultra Filter Bulge, El. 56')	RESERVED	N/A	RESERVED	**24590-PTF** -P1-P01T-P0003
UFP-BULGE-00002 P-0301 (Ultra Filter Bulge, El. 56')	RESERVED	N/A	RESERVED	**24590-PTF** -P1-P01T-P0003
RESERVED	RESERVED	RESERVED	RESERVED	RESERVED

Footnotes:
[a]Dimensions listed are based on permitted design. Actual dimensions may vary within plus or minus (TBD).
Note #1: These are special cases due to their location in equipment berms. The capacity for these drain lines is based on a unique bounding case for liquid spillage.

1
2

Table III.10.E.K - LAW Vitrification Plant Tank Systems Primary[a] Containment Sump Systems

Sump I.D.# & Room Location	Maximum Sump Capacity (gallons)	Sump Dimensions[b] (feet) & Materials of Construction	Engineering Description (Drawing Nos., Specifications Nos., etc.)
RESERVED	RESERVED	RESERVED	RESERVED
Footnotes: [a] Primary sumps are defined in Permit Section III.10.C, and must comply with dangerous waste tank system requirements for tanks as described in WAC-173-303-640. [b]Dimensions listed are based on permitted design. Actual dimensions may vary within plus or minus (TBD).			

3
4
5
6
7

Table III.10.E.L - LAW Vitrification Plant Tank Systems Secondary Containment Systems Including Sumps, Bulges and Floor Drains

Sump or Drain Line I.D.# & Room Location	Maximum Sump (gallons) or Drain Line (gallons per minute) Capacity	Sump Type/Nominal Operating Volume (gallons)	Sump or Drain Line Dimensions[a] (inches) & Materials of Construction	Engineering Description (Drawing Nos., Specifications Nos., etc.)
RLD-SUMP-00028 L-B001B (C3/C5 Drains/Sump Collection Vessel Cell, El. –21')	59	Dry Sump	24" Dia. By 30" deep 304L or higher grade	**24590-LAW** -M6-RLD-P0002
RLD-SUMP-00029 L-0123 (Process Cell, El. +3'	46	Dry Sump	30" Dia. By 15" deep 304L or higher grade	**24590-LAW** -M6-RLD-P0003 -P1-P01T-P0002 -P1-P01T-P0010

Table III.10.E.L - LAW Vitrification Plant Tank Systems Secondary Containment Systems Including Sumps, Bulges and Floor Drains

Sump or Drain Line I.D.# & Room Location	Maximum Sump (gallons) or Drain Line (gallons per minute) Capacity	Sump Type/Nominal Operating Volume (gallons)	Sump or Drain Line Dimensions[a] (inches) & Materials of Construction	Engineering Description (Drawing Nos., Specifications Nos., etc.)
RLD-SUMP-00030 L-0123 (Process Cell, El. +3')	46	Dry Sump	30" Dia. By 15" deep 304L or higher grade	**24590-LAW** -M6-RLD-P0003 -LAW-P1-P01T-P0002 -P1-P01T-P0010
RLD-SUMP-00031 L-0124 Process Cell Sump, El. +3')	46	Dry Sump	30" Dia. By 15" deep 304L or higher grade	**24590-LAW** -M6-RLD-P0003 -P1-P01T-P0002 -P1-P01T-P0010
RLD-SUMP-00032 L-0124 (Process Cell, El. +3')	46	Dry Sump	30" Dia. By 15" deep 304L or higher grade	**24590-LAW** -M6-RLD-P0003 -LAW -P1-P01T-P0010
RLD-SUMP-00033 L-0125 (Process Cell, El. +3')	46	Dry Sump	30" Dia. By 15" deep 304L or higher grade	**24590-LAW** -M6-RLD-P0003
RLD-SUMP-00034 L-0125 (Process Cell, El. +3')	46	Dry Sump	30" Dia. By 15" deep 304L or higher grade	**24590-LAW** -M6-RLD-P0003
RLD-SUMP-00035 L-0126 (Effluent Cell, El. +3')	46	Dry Sump	30" Dia. By 15" deep 304L or higher grade	**24590-LAW** -M6-RLD-P0003 -P1-P01T-P0002 -P1-P01T-P0010
RLD-SUMP-00036 L-0126 (Effluent Cell, El. +3')	46	Dry Sump	30" Dia. By 15" deep 304L or higher grade	**24590-LAW** -M6-RLD-P0003 -P1-P01T-P0002 -LAW -P1-P01T-P0010

Table III.10.E.L - LAW Vitrification Plant Tank Systems Secondary Containment Systems Including Sumps, Bulges and Floor Drains

Sump or Drain Line I.D.# & Room Location	Maximum Sump (gallons) or Drain Line (gallons per minute) Capacity	Sump Type/Nominal Operating Volume (gallons)	Sump or Drain Line Dimensions[a] (inches) & Materials of Construction	Engineering Description (Drawing Nos., Specifications Nos., etc.)
Drain Line ID# = RESERVED L-B001B (RLD-BULGE-00001 Drain, El. -21')	60	N/A	2" Dia. 316L	24590-LAW -M6-RLD-P0002
Drain Line ID# = RESERVED L-B001B (Pump Bulge [RLD-BULGE-00001] Drain/Double-Walled Piping Outer Containment Drain, El. -21')	30	N/A	1" Dia. 316L	24590-LAW -M6-RLD-P0002
Drain Line ID# = RESERVED L-0123 [Primary Offgas (LOP) Melter 1 Valve Bulge Drain, El. +3']	60	N/A	2" Dia. 6 Mo	24590-LAW -M6-LOP-P0001
Drain Line ID# = RESERVED L-0123 (LCP-BULGE-00001/2 Drain, El. +3')	60	N/A	2" Dia. 316L	24590-LAW -M6-LCP-P0001
RLD-WS-20037-S11B-01 L-0123 (Melter 1 Encasement Assembly Drain, El. +3')	RESERVED	RESERVED	RESERVED	24590-LAW -M6-RLD-P0003
Drain Line ID# = RESERVED L-0123 (Melter 1 Feed Prep/Feed Vessel Valve Bulge Drain, El. +3')	60	N/A	2" Dia. 316L	24590-LAW -M6-LFP-P0001

Table III.10.E.L - LAW Vitrification Plant Tank Systems Secondary Containment Systems Including Sumps, Bulges and Floor Drains

Sump or Drain Line I.D.# & Room Location	Maximum Sump (gallons) or Drain Line (gallons per minute) Capacity	Sump Type/Nominal Operating Volume (gallons)	Sump or Drain Line Dimensions[a] (inches) & Materials of Construction	Engineering Description (Drawing Nos., Specifications Nos., etc.)
Drain Line ID# = RESERVED L-0124 [Primary Offgas (LOP) Melter 2 Valve Bulge Drain, El. +3']	60	N/A	2" Dia. 6 Mo	**24590-LAW** -M6-LOP-P0002
Drain Line ID# = RESERVED L-0124 (LCP-BULGE-00003 Drain, El. +3')	60	N/A	2" Dia. 316L	**24590-LAW** -M6-LCP-P0002
Drain Line ID# = RESERVED L-0124 (Melter 2 Feed Prep/Feed Vessel Valve Bulge Drain, El. +3')	60	N/A	2" Dia. 316L	**24590-LAW** -M6-LFP-P0003
RLD-WS-20033-S11B-01 L-0124 (Melter 2 Encasement Assembly Drain, El. +3')	RESERVED	RESERVED	RESERVED	**24590-LAW** -M6-RLD-P0003
Drain Line ID# = RESERVED L-0126 (Plant Wash Vessel/SBS Condensate Collection Vessel Valve Bulge Drain, El. +3')	60	N/A	2" Dia. 6 Mo	**24590-LAW** -M6-RLD-P0001
LVP-FD-00001 L-0218 (Berm floor drain for LVP-TK-00001, El. 28')	RESERVED	N/A	RESERVED	**24590-LAW** -M6-LVP-P0002

Table III.10.E.L - LAW Vitrification Plant Tank Systems Secondary Containment Systems Including Sumps, Bulges and Floor Drains

Sump or Drain Line I.D.# & Room Location	Maximum Sump (gallons) or Drain Line (gallons per minute) Capacity	Sump Type/Nominal Operating Volume (gallons)	Sump or Drain Line Dimensions[a] (inches) & Materials of Construction	Engineering Description (Drawing Nos., Specifications Nos., etc.)
RESERVED	RESERVED	RESERVED	RESERVED	RESERVED

Footnotes:
[a]Dimensions listed are based on permitted design. Actual dimensions may vary within plus or minus (TBD).
[b a]This sump is routinely accessible for inspections and maintenance.

1
2

Table III.10.E.M - HLW Vitrification Plant Tank Systems Primary[a] Containment Sump Systems

Sump I.D.# & Room Location	Maximum Sump Capacity (gallons)	Sump Dimensions[b] (feet) & Materials of Construction	Engineering Description (Drawing Nos., Specifications Nos., etc.)
RESERVED	RESERVED	RESERVED	RESERVED

Footnotes:
[a] Primary sumps are defined in Permit Section III.10.C, and must comply with dangerous waste tank system requirements for tanks as described in WAC-173-303-640.
[b] Dimensions listed are based on permitted design. Actual dimensions may vary within plus or minus (TBD).

3
4
5
6

Table III.10.E.N - HLW Vitrification Plant Tank Systems Secondary Containment Systems Including Sumps, Bulges and Floor Drains

Sump or Drain Line I.D.# & Room Location	Maximum Sump (gallons) or Drain Line (gallons per minute) Capacity	Sump Type	Sump or Drain Line Dimensions[a] (inches) & Materials of Construction	Engineering Description (Drawing Nos., Specifications Nos., etc.)
HCP-SUMP-00001 H-B014 (Wet Process Cell, El. –21')	70	Dry Sump	30" Dia. x 18" Deep 6Mo	**24590-HLW** -M6-RLD-P0015 -P1-P01T-P0001 -P1-P01T-P0008
RLD-SUMP-00001 H-B014 (Wet Process Cell, El. –21')	70	Dry Sump	30" Dia. X 18" Deep 6Mo	**24590-HLW** -M6-RLD-P0015 -P1-P01T-P0001
HOP-SUMP-00003 H-B021 (SBS Drain Collection Cell No. 1, El. –21')	70	Dry Sump	30" Dia. X 18" Deep 6Mo	**24590-HLW** -M6-RLD-P0015 -P1-P01T-P0001
HOP-SUMP-00008 H-B005 (SBS Drain	70	Dry Sump	30" Dia. X 18" Deep 6Mo	**24590-HLW** -M6-RLD-P20004

Table III.10.E.N - HLW Vitrification Plant Tank Systems Secondary Containment Systems Including Sumps, Bulges and Floor Drains

Sump or Drain Line I.D.# & Room Location	Maximum Sump (gallons) or Drain Line (gallons per minute) Capacity	Sump Type	Sump or Drain Line Dimensions[a] (inches) & Materials of Construction	Engineering Description (Drawing Nos., Specifications Nos., etc.)
Collection Cell No. 2, El. -21_				-P1-P01T-P0001
HDH-SUMP-00001 H-B039B (Canister Rinse Tunnel, El. –16.5')	70	Dry Sump	30" Dia. X 18" Deep 6Mo	**24590-HLW** -M6-RLD-P0016 -P1-P01T-P0001 -P1-P01T-P0009
HDH-SUMP-00002 H-B039A (Bogie Decon/Maint. Tunnel-Canister Rinse, El. –16')	70	Dry Sump	30" Dia. X 18" Deep 6Mo	**24590-HLW** -M6-RLD-P0016 -P1-P01T-P0001
HDH-SUMP-00003 H-B035 (Canister Decon Cave, El. –16')	70	Dry Sump	30" Dia. X 18" Deep 6Mo	**24590-HLW** -M6-RLD-P0004 -P1-P01T-P0001
HFP-SUMP-00001 H-0308 (Active Service Cell Melter No.1 El. 37')	70	Gravity Drain	30" Dia. X 18" Deep 6Mo	**24590-HLW** -M6-RLD-P0015 -P1-P01T-P0004
HFP-SUMP-00002 H-0117 (Melter Cave No. 1, El. 5')	55.6	Dry Sump	31.5" X 25.5" X 16" 6Mo	**24590-HLW** -M6-RLD-P0008 -P1-P01T-P0002 -P1-P01T-P0009
HFP-SUMP-00004 H-0302 (Active Service Cell Melter No.2 El. 37')	70	Gravity Drain	30" Dia. X 18" Deep 6Mo	**24590-HLW** -M6-RLD-P20004 -P1-P01T-P0004
HFP-SUMP-00005 H-0106 (Melter Cave No. 2 El. 5')	55.6	Dry Sump	31.5" X 25.5" X 16" 6Mo	**24590-HLW** -M6-RLD- P20005 -P1-P01T-P0002
HSH-SUMP-00003 H-0117 (Melter Cave No. 1, El. 3')	55.6	Dry Sump	31.5" X 25.5" X 16" 6Mo	**24590-HLW** -M6-RLD-P0008 -P1-P01T-P0002 -P1-P01T-P0009

Table III.10.E.N - HLW Vitrification Plant Tank Systems Secondary Containment Systems Including Sumps, Bulges and Floor Drains

Sump or Drain Line I.D.# & Room Location	Maximum Sump (gallons) or Drain Line (gallons per minute) Capacity	Sump Type	Sump or Drain Line Dimensions[a] (inches) & Materials of Construction	Engineering Description (Drawing Nos., Specifications Nos., etc.)
HSH-SUMP-00007 H-0106 (Melter Cave No. 2, El. 3')	55.6	Dry Sump	31.5" X 25.5" X 16" 6Mo	**24590-HLW** -M6-RLD-P20005 -P1-P01T-P0002
HSH-SUMP-00008 H-310A (Melter No. 1 Equip. Decon. Pit Area, El. 0')	55.6	Dry Sump	31.5" X 25.5" X 16" 6Mo	**24590-HLW** -M6-RLD-P0003 -P1-P01T-P0002
HSH-SUMP-00009 H-0304A (Melter No. 2 Equip. Decon. Pit Area, El. 0')	55.6	Dry Sump	31.5" 25.5" x 16" 6Mo	**24590-HLW** -M6-RLD-P20003 -P1-P01T-P0002
RLD-ZF-00330-S11B-03 H-B021 (SBS Drain Collection Cell No. 1)	20	Floor Drain	Overflow Line Size Pipe Dia 3" 316L Stainless Steel	**24590-HLW** -M6-RLD-P0015
RLD-ZF-03447-S11B-03 H-B005 (SBS Drain Collection Cell No. 2)	20	Floor Drain	Overflow Line Size Pipe Dia 3" 316L Stainless Steel	**24590-HLW** -M6-RLD-P20004
RESERVED	RESERVED	RESERVED	RESERVED	RESERVED

Footnotes:
[a]Dimensions listed are based on permitted design. Actual dimensions may vary within plus or minus (TBD).

1
2

Table III.10.E.O – Laboratory Tank Systems Primary[a] Containment Sump Systems

Sump I.D.# & Room Location	Maximum Sump Capacity (gallons)	Sump Dimensions[b] (feet) & Materials of Construction	Engineering Description (Drawing Nos., Specifications Nos., etc.)
RESERVED	RESERVED	RESERVED	RESERVED

Footnotes:
[a] Primary sumps are defined in Permit Section III.10.C, and must comply with dangerous waste tank system requirements for tanks as described in WAC-173-303-640.
[b] Dimensions listed are based on permitted design. Actual dimensions may vary within plus or minus (TBD).

3
4
5
6
7

Table III.10.E.P – Laboratory Tank Systems Secondary Containment Systems Including Sumps, Bulges and Floor Drains

Sump I.D.# & Room Location	Maximum Sump Capacity (gallons)	Sump Type/Nominal Operating Volume (gallons)	Sump Dimensions[a] (inches) & Materials of Construction	Engineering Description (Drawing Nos., Specifications Nos., etc.)
RLD-SUMP-00041 A-B003 (C3 Effluent Vessel Cell, El. -18'7')	30	Dry	30" Dia. X ~13" Deep 304L or higher grade	**24590-LAB** -M6-RLD-P0002 -P1-60-P0007 -PER-M-02-002
RLD-SUMP-00042 A-B004 (C5 Effluent Vessel Cell, El. -19'2')	30	Dry	30" Dia. X ~13" Deep 304L or higher grade	**24590-LAB** -M6-RLD-P0001 -P1-60-P0007 -PER-M-02-002
RLD-SUMP-00045 A-B002 (C3 Pump Pit Sump, EL -6'-81/2" (LP)	1.56	Dry	2'-0" X 2'-6" X 1/2" 304L or higher grade	**24590-LAB** -M6-RLD-P0002 -P1-60-P0007 -PER-M-02-002

Table III.10.E.P – Laboratory Tank Systems Secondary Containment Systems Including Sumps, Bulges and Floor Drains

Sump I.D.# & Room Location	Maximum Sump Capacity (gallons)	Sump Type/Nominal Operating Volume (gallons)	Sump Dimensions[a] (inches) & Materials of Construction	Engineering Description (Drawing Nos., Specifications Nos., etc.)
RLD-SUMP-00043A A-B007 (C5 Pump Pit Sump, EL -6'-7" (LP)	1.40	Dry	1'-6" X 3'-0" X 1/2" 304L or higher grade	**24590-LAB** -M6-RLD-P0001 -P1-60-P0007 -PER-M-02-002
RLD-SUMP-00043B A-B005 (C5 Pump Pit Sump, EL -6'-7" (LP)	1.40	Dry	1'-6" X 3'-0" X 1/2" 304L or higher grade	**24590-LAB** -M6-RLD-P0001 -P1-60-P0007 -PER-M-02-002
RLD-SUMP-00044 A-B006 (C5 Piping Pit Sump, EL -6'-7" (LP)	1.56	Dry	2'-0" X 2'-6" X 1/2" 304L or higher grade	**24590-LAB** -M6-RLD-P0001 -P1-60-P0007 -PER-M-02-002
RLD-WU-02207-S11E-04 A-B003, (C3 Effluent Vessel Cell)	86	N/A	4" Dia 316L	**24590-LAB** -M6-RLD-P0002
RLD-ZN-02203-S11E-04 A-B004, (C5 Effluent Vessel Cell)	86	N/A	4" Dia 316L	**24590-LAB** -M6-RLD-P0001
RLD-ZN-03393-S11E-04 A-B004, (C5 Effluent Vessel Cell)	86	N/A	4" Dia 316L	**24590-LAB** -M6-RLD-P0001
RLD-ZN-03394-S11E-04 A-B004, (C5 Effluent Vessel Cell)	86	N/A	4" Dia 316L	**24590-LAB** -M6-RLD-P0001
RESERVED	RESERVED	RESERVED	RESERVED	RESERVED

Footnotes:
[a]Dimensions listed are based on permitted design. Actual dimensions may vary within plus or minus (TBD).

III.10.F. CONTAINMENT BUILDING UNITS

III.10.F.1. Containment Building Units and Storage Limits

III.10.F.1.a. Approved Waste and Storage Limits

III.10.F.1.a.i. The Permittees may store and treat, in containment building units listed in Permit Table III.10.F.A., as modified by Permit Condition III.10.F.7.d.iv., all dangerous and mixed waste listed in the Part A Forms, Operating Unit 10, Chapter 1.0 of this Permit, except for those wastes outside the waste acceptance criteria specified in the WAP, Operating Unit 10, Chapter 3.0, as approved pursuant to Permit Condition III.10.C.3. Total dangerous and mixed waste storage at the containment building units will not exceed the sum of the capacities in column 7 of Permit Table III.10.F.A., as modified pursuant to Permit Condition III.10.F.7.d.iv.

III.10.F.1.a.ii. The Permittees may place and store dangerous and mixed waste only in the containment building units listed in Permit Table III.10.F.A., as modified pursuant to Permit Condition III.10.F.7.d.iv., in accordance with Permit Condition III.10.F., and in accordance with Operating Unit 10, Chapters 1.0 and 4.0, and Operating Unit 10, Appendices 8.1, 8.2, 8.4 through 8.10, 8.13, 8.15, 9.1, 9.2, 9.4 through 9.10, 9.13, 9.18, 10.1, 10.2, 10.4 through 10.10, 10.13, and 10.18 of this Permit, as approved pursuant to Permit Conditions III.10.F.7.c. and III.10.F.7.d. The Permittees will limit the volume of dangerous and mixed waste to quantities specified for the individual areas listed in column 7 of Permit Table III.10.F.A., as modified pursuant to Permit Condition III.10.F.7.d.iv.

III.10.F.1.b. The Permittees will manage any ignitable, reactive, or incompatible waste in these units in accordance with WAC 173-303-395(1). Any containment building units specified in Permit Table III.10.F.A. in which ignitable, reactive, or incompatible waste are managed will meet the requirements specified in WAC 173-303-640(9) and (10), in accordance with WAC 173-303-680(2).

III.10.F.1.c. The Permittees must maintain documentation in the operating record of the description and quantity of dangerous waste in each containment building unit listed in Permit Table III.10.F.A., as modified pursuant to Permit Condition III.10.F.7.d.iv., in accordance with WAC 173-303-380.

III.10.F.1.d. The Permittees will ensure all certifications required by specialists (e.g., qualified, registered, professional engineer, etc.) use the following statement or equivalent pursuant to Permit Condition III.10.C.10.:

"I, (Insert Name) have (choose one or more of the following: overseen, supervised, reviewed, and/or certified) a portion of the design or installation of a new containment building unit or component located at (address), and owned/operated by (name(s)). My duties were: (e.g., design engineer, etc.), for the following containment building unit components (e.g., the venting piping, etc.), as required by the Resource Conservation and Recovery Act (RCRA) regulation(s), namely, 40 CFR 264.1101©(2) in accordance with WAC 173-303-695).

"I certify under penalty of law that I have personally examined and am familiar with the information submitted in this document and all attachments and that, based on my inquiry of those individuals immediately responsible for obtaining the information, I believe that the information is true, accurate, and complete. I am aware that there are significant

penalties for submitting false information, including the possibility of fine and imprisonment."

III.10.F.2. Containment Building Unit Design and Construction

III.10.F.2.a. The Permittees will design and construct the containment building units identified in Permit Table III.10.F.A., as modified pursuant to Permit Condition III.10.F.7.d.iv., as specified in Operating Unit 10, Appendices 8.1, 8.2, 8.4 through 8.10, 8.13, 8.15, 9.1, 9.2, 9.4 through 9.10, 9.13, 9.18, 10.1, 10.2, 10.4 through 10.10, 10.13, and 10.18 of this Permit, as approved in accordance with Permit Condition III.10.F.7.a. and WAC 173-303-695.

III.10.F.2.b. The Permittees will design and construct all applicable containment building units' secondary containment systems for each unit listed in Permit Table III.10.F.A., as specified in Operating Unit 10, Appendices 8.4 through 8.9, 8.15, 9.4 through 9.9, 9.18, 10.4 through 10.9, and 10.18 of this Permit, as approved in accordance with Permit Condition III.10.F.7.a. and WAC 173-303-695.

III.10.F.2.c. Modifications to approved design plans and specifications, in Operating Unit 10, Appendices 8.1, 8.2, 8.4 through 8.10, 8.13, 8.15, 9.1, 9.2, 9.4 through 9.10, 9.13, 9.18, 10.1, 10.2, 10.4 through 10.10, 10.13, and 10.18 of this permit, for the containment building units will be allowed only in accordance with Permit Conditions III.10.C.2.e. and III.10.C.2.f., or III.10.C.2.g., III.10.C.9.d, and III.10.C.9.e.

III.10.F.3. Containment Building Unit Management Practices

III.10.F.3.a. The Permittees will manage all dangerous and mixed waste in containment building units in accordance with procedures described in Operating Unit 10, Appendices 8.15, 9.18, 10.18 and Chapter 4.0 of this Permit, as approved pursuant to Permit Condition III.10.F.7.d.iv. .

III.10.F.3.b. The Permittees will follow the description of operating procedures described in Operating Unit 10, Appendices 8.15, 9.18, 10.18 and Chapter 4, of this permit, as approved pursuant to Permit Condition III.10.F.7.d.iv. and Permit Condition III.10.F.3., and as specified below:

III.10.F.3.b.i. Maintain the primary barrier to be free of significant cracks, gaps, corrosion, or other deterioration that could cause dangerous and mixed waste to be released from the primary barrier;

III.10.F.3.b.ii. Maintain the level of stored/treated dangerous and mixed waste within the containment building unit walls so that the height of the wall is not exceeded;

III.10.F.3.b.iii. Take measures to prevent the tracking of dangerous and mixed waste out of the unit by personnel or by equipment used in handling the waste. An area must be designated to decontaminate equipment and any rinsate must be collected and properly managed;

III.10.F.3.b.iv. Maintain the containment building unit at all times to prevent the spread of airborne dangerous and/or mixed waste contamination into less contaminated or uncontaminated areas. All air pollution control devices for exhaust from containment building unit must be properly maintained and operational when storing or treating dangerous and mixed waste in the containment building units;

III.10.F.3.b.v. Collect and remove liquids and waste to minimize hydraulic head on the containment system at the earliest practicable time.

III.10.F.3.c. The Permittees will inspect the containment building units per requirements in the Operating Unit 10, Chapter 6.0 of this permit, as approved pursuant to Permit Condition III.10.C.5., 40 CFR 264.1101©(4),in accordance with WAC 173-303-695 and WAC 173-303-320 and record in the Facility's operating record, at least once every seven (7) days, data gathered from monitoring equipment and leak detection equipment as well as the containment building unit and area immediately surrounding the containment building unit to detect signs of releases of dangerous and mixed waste.

III.10.F.3.d. Throughout the active life of the containment building unit, if the Permittees detects a condition that could lead to or has caused a release of dangerous and/or mixed waste, the Permittees must repair the condition promptly, in accordance with the following procedures:

III.10.F.3.d.i. Upon detection of a condition that has lead to the release of dangerous and/or mixed waste (e.g., upon detection of leakage from the primary barrier) the Permittees must:

A. Enter a record of the discovery in the facility operating record;

B. Immediately remove the portion of the containment building unit affected by the condition from service;

C. Determine what steps must be taken to repair the containment building unit, remove any leakage from the secondary collection system, and establish a schedule for accomplishing the cleanup and repairs; and

D. Within seven (7) days after the discovery of the condition, notify Ecology of the condition, and within fourteen (14) working days, provide a written notice to Ecology with a description of the steps taken to repair the containment building unit, and the schedule for accomplishing the work.

III.10.F.3.d.i.ii. Ecology will review the information submitted, make a determination regarding whether the containment building unit must be removed from service completely or partially until repairs and cleanup are complete, and notify the Permittees of the determination and underlying rationale in writing.

III.10.F.3.d.i.iii. Upon completing all repairs and cleanup the Permittees must notify Ecology in writing and provide verification, signed by a qualified, registered, professional engineer, that repairs have been completed according to the written notice submitted in accordance with Permit Condition III.10.F.3.d.i.D.

III.10.F.4 Inspections [WAC 173-303-640(6)]

III.10.F.4.a. The Permittees will inspect the containment building units in accordance with the Inspection Schedules in Operating Unit 10, Chapter 6.0 of this Permit, as modified pursuant to Permit Condition III.10.C.5.c.

III.10.E.4.b. The inspection data for the containment building units will be recorded, and the records will be placed in the WTP Unit operating record, in accordance with Permit Condition III.10.C.4.

III.10.F.5 Recordkeeping (WAC 173-303-380)

For the containment building units, the Permittees will record and maintain in the WTP Unit operating record, all monitoring, calibration, recording, maintenance, test data, and inspection data compiled under the conditions of this Permit, in accordance with Permit Conditions III.10.C.4. and III.10.C.5.

III.10.F.6. Closure

The Permittees will close the containment building units in accordance with Operating Unit 10, Chapter 11.0 of this Permit, as approved pursuant to Permit Condition III.10.C.8.

III.10.F.7. Compliance Schedule

III.10.F.7.a. All information identified for submittal to Ecology in Permit Conditions III.10.F.7.b. through e. of this compliance schedule must be signed in accordance with requirements in WAC 173-303-810(12), as modified in accordance with Permit Condition III.10.F.1.d. [WAC 173-303-806(4)].

III.10.F.7.b. Prior to initial receipt of dangerous and/or mixed waste, the Permittees will submit to Ecology a certification by a qualified, registered, professional engineer that the containment building units design meets the requirements of Permit Conditions III.10.F.1.and III.10.F.2. in accordance with Permit Condition III.10.F.7.a. The certification will also be stored in the WTP Unit operating record. For containment buildings units in Permit Table III.10.F.A., as modified pursuant to Permit Condition III.10.F.7.d.iv., identified as allowed to manage free liquids, the certification will include an additional demonstration that the containment building meets the requirements specified in 40 CFR 264.1101(b), in accordance with WAC 173-303-695.

III.10.F.7.c. The Permittees submit to Ecology pursuant to Permit Condition III.10.C.9.f., prior to construction of the containment building unit containment system, and as appropriate, leak detection system for each containment building unit (per level, per WTP Unit building) as identified in Permit Condition III.10.F.1., Permit Tables III.10.F.A., engineering information as specified below, for incorporation, as appropriate, into Operating Unit 10, Appendices 8.1, 8.2, 8.3, 8.4 through 8.10, 8.13, 8.15, 9.1, 9.2, 9.4 through 9.10, 9.13, 9.18, 10.1, 10.2, 10.4 through 10.10, 10.13, and 10.18 of this Permit. At a minimum, engineering information specified below will show the following as required in accordance with WAC 173-303-695 (the information specified below will include dimensioned engineering drawings showing floors, walls, and ceilings/roof of the containment building units and other information on floor drains and sumps):

III.10.F.7.c.i. Design drawings (General Arrangement Drawings in plan and cross sections) and specifications for the foundation, containment, including liner/coating installation details and leak detection methodology, as appropriate [40 CFR 264.1101(a)(1) and (b), in accordance with WAC 173-303-695].

III.10.F.7.c.ii. The Permittees provide the design criteria (references to codes and standards, load definitions and load combinations, materials of construction, and analysis/design methodology) and typical design details for the support of the containment system. This information demonstrate the foundation will be capable of providing support to the secondary containment system, resistance to pressure gradients above and below the system, and capable of preventing failure due to settlement, compression, or uplift [40 CFR 264.1101(a)(2) in accordance with WAC 173-303-695, in accordance with WAC 173-303-695].

III.10.F.7.c.iii. The Permittees provide documentation addressing how coatings will withstand the movement of personnel, waste, and equipment during the operating life of the containment building per 40 CFR 264.1101(a)(2), (a)(4), and (b) in accordance with WAC 173-303-695.

III.10.F.7.c.iv. Containment/foundation and, as appropriate, for leak detection systems, materials selection documentation (including, but not limited to, concrete coatings and water stops, and liner materials as applicable [e.g. physical and chemical tolerances]) [40 CFR 264.1101(a)(4) and (b) in accordance with WAC 173-303-695].

III.10.F.7.c.v. A detailed description of how the containment/foundation and, as appropriate, leak detection systems, will be installed.

III.10.F.7.c.vi. Submit Permit Tables III.10.F.B and III.10.F.C, completed to provide for all secondary containment sumps and floor drains, the information as specified in each column heading, consistent with the information to be provided in i. through viii.

III.10.F.7.c.vii. A detailed description of how fugitive emissions will be controlled such that any openings (e.g., doors, windows, vents, cracks, etc.) exhibit no visible emissions [40 CFR 264.1101©(1)(iv) in accordance with WAC 173-303-695].

III.10.F.7.c.viii. Prior to installation, the Permittees will submit coating vendor information specific to containment buildings for incorporation into the Administrative Record [40 CFR 264.1101(a)(4) and (b) in accordance with WAC 173-303-695].

III.10.F.7.c.ix. Prior to installation, leak detection system documentation (e.g. vendor information, etc.) consistent with information submitted under i. above, will be submitted for incorporation into the Administrative Record; III.10.F.7.c.x. Prior to installation, the Permittees will submit leak detection system instrumentation control logic narrative description (e.g., software functional specifications, descriptions of fail-safe conditions, etc.); [a;]

III.10.F.7.c.xi. Prior to installation, system descriptions related to leak detection systems (including instrument control logic and narrative descriptions) will be submitted for incorporation into the Administrative Record; [a;]

III.10.F.7.c.xii. For leak detection system instrumentation for containment buildings as identified in Permit Tables III.10.F.D., a detailed description of how the leak detection system instrumentation will be installed and tested [40 CFR 264.1101(b)(3) in accordance with WAC 173-303-695] will be submitted prior to installation. [a;]

Information pertaining to leak detection systems in Permit Conditions III.10.F.7.c.ix. through xii. Will be submitted pursuant to Permit Conditions III.10.E.9.d.vii., viii., x., and xiii.

III.10.F.7.d. Prior to initial receipt of dangerous and mixed waste, in the WTP Unit, the Permittees will submit the following, as specified below, for incorporation into Operating Unit 10. The information specified below into Operating Unit 10, and incorporated pursuant to Permit Condition III.10.C.2.g. will be followed:

III.10.F.7.d.i. Registered Professional Engineer certification documentation consistent with the information provided in III.10.F.7.b. and III.10.F.7.c. for incorporation in the Administrative Record. The certification must be maintained in the WTP Unit Operating Record [40 CFR 264.1101©(2)];

III.10.F.7.d.ii. Updated Chapter 4.0, Section 4.2.1., and the figures for containment building units identified in Permit Table III.10.F.A. (as modified pursuant to Permit Condition III.10.F.7.d.iv., consistent with Operating Unit 10, Appendices 8.1, 8.2, 8.4 through 8.10, 8.13, 8.15, 9.1, 9.2, 9.4 through 9.10, 9.13, 9.18, 10.1, 10.2, 10.4 through 10.10, 10.13, and 10.18, as approved pursuant Permit Conditions III.10.F.7.a. through d.);

III.10.F.7.d.iii. Description of operating procedures demonstrating compliance with 40 CFR 264.1101© and (d) in accordance with WAC 173-303-695;

III.10.F.7.d.iv. Permit Table III.10.F.A., amended as follows:

A. Under column 1, update and complete list of dangerous and mixed waste containment building units including room location and number.

B. Under column 2, update unit dimensions.

C. Under column 3, replace the 'Reserved' with the Operating Unit 10, Appendices 8.0, 9.0, and 10.0, subsections specific to containment building units as listed in column 1.

D. Under column 4, update and complete list of narrative description, tables, and figures.

E. Under column 5, replace the 'Reserved' to indicate if container storage is used in each containment building units (Yes or No) consistent with Permit Table III.10.D.A. updated pursuant to Permit Condition III.10.D.10.d.

F. Under column 6, replace the 'Reserved' to indicate if tank storage is used in each containment building units (Yes or No) consistent with Permit Tables III. 10.E.A-D., updated pursuant to Permit Condition III.10.E.9.e.vi.

G. Under column 7, replace the 'Reserved' with the maximum operating volume for each containment building unit, to include the container storage capacity specified in Permit Table III.10.D.A., tank capacity specified in Permit Tables III. 10.E.A-D. and update the total capacity for the containment building units.

H. Under column 8, update the status of each containment building unit.

III.10.F.7.d.v. Permit Table III.10.F.D. will be completed for Containment Building leak detection system instrumentation and parameters to provide the information as specified in each column heading. Leak detection system monitors and instruments for critical systems as specified in Operating Unit 10, Appendix 2.0 and as updated pursuant to Permit Condition III.10.C.9.b. will be addressed.

III.10.F.7.e. All information provided under Permit Condition III.10.F.7.d. must be consistent with information provided pursuant to Permit Conditions III.10.F.7.a. through d., as approved by Ecology.

1
2

Table III.10.F.A – Containment Building Unit Description

Mixed Waste Containment Building Units[a] & Systems	Dimensions (LxWxH) (in feet)	Unit Description	Narrative Description and Figures	Container Storage Areas[b]	Tank Systems[c]	Containment Building Capacity (cu ft)	Manage Free Liquids
Pretreatment Plant							
P-0123 Pretreatment Hot Cell Containment Building	350x51x52	RESERVED	Section 4.2.4; Table 4-7; and Fig. 4A-59 (Sheets 1-2) of Operating Unit 10, Chapter 4.0 of this Permit.	RESERVED	RESERVED	RESERVED	Yes
Pretreatment Maintenance Containment Building							
PM0124 Hot Cell Crane Maintenance Area	(54 × 51× 52	RESERVED	Section 4.2.4; Table 4-7; and Fig. 4A-59 (Sheets 1-2) of Operating Unit 10, Chapter 4.0 of this Permit.	RESERVED	RESERVED	RESERVED	RESERVED
P-0121A Spent Resin Dewatering	28 × 18 × 28	RESERVED	Section 4.2.4; Table 4-7; and Fig. 4A-59 (Sheets 1-2) of Operating Unit 10, Chapter 4.0 of this Permit.	RESERVED	RESERVED	RESERVED	RESERVED
P-0122A Waste Packaging Area	26 × 51 × 28	RESERVED	Section 4.2.4; Table 4-7; and Fig. 4A-59 (Sheets 1-2) of Operating Unit 10, Chapter 4.0 of this Permit.	RESERVED	RESERVED	RESERVED	RESERVED
P-0123A Remote Decontamination Maintenance Cave	55 × 51 × 28	RESERVED	Section 4.2.4; Table 4-7; and Fig. 4A-59 (Sheets 1-2) of Operating Unit 10, Chapter 4.0 of this Permit.	RESERVED	RESERVED	RESERVED	RESERVED
P-0124 C3 Workshop	24 × 24 × 16	RESERVED	Section 4.2.4; Table 4-7; and Fig. 4A-59 (Sheets 1-2) of Operating Unit 10, Chapter 4.0 of this Permit.	RESERVED	RESERVED	RESERVED	RESERVED
P-0124A C3 Workshop	(73 + 15 × 15) + (16 × 15 + 13)	RESERVED	Section 4.2.4; Table 4-7; and Fig. 4A-59 (Sheets 1-2) of	RESERVED	RESERVED	RESERVED	RESERVED

Table III.10.F.A – Containment Building Unit Description

Mixed Waste Containment Building Units[a] & Systems	Dimensions (LxWxH) (in feet)	Unit Description	Narrative Description and Figures	Container Storage Areas[b]	Tank Systems[c]	Containment Building Capacity (cu ft)	Manage Free Liquids
			Operating Unit 10, Chapter 4.0 of this Permit.				
P-0125 Filter Cask Airlock	24 × 20 × 28	RESERVED	Section 4.2.4; Table 4-7; and Fig. 4A-59 (Sheets 1-2) of Operating Unit 10, Chapter 4.0 of this Permit.	RESERVED	RESERVED	RESERVED	RESERVED
P-0125A Filter Cask Area	28 × 18 × 28	RESERVED	Section 4.2.4; Table 4-7; and Fig. 4A-59 (Sheets 1-2) of Operating Unit 10, Chapter 4.0 of this Permit.	RESERVED	RESERVED	RESERVED	RESERVED
P-0128A MSM Repair Area	24 × 18 × 28	RESERVED	Section 4.2.4; Table 4-7; and Fig. 4A-59 (Sheets 1-2) of Operating Unit 10, Chapter 4.0 of this Permit.	RESERVED	RESERVED	RESERVED	RESERVED
P-0128 Temporary Storage Room	24 × 17 × 28	RESERVED	Section 4.2.4; Table 4-7; and Fig. 4A-59 (Sheets 1-2) of Operating Unit 10, Chapter 4.0 of this Permit.	RESERVED	RESERVED	RESERVED	RESERVED
P-0223 Pretreatment Filter Package Maintenance Containment Building	40x20x28	RESERVED	Section 4.2.4; Table 4-7; and Fig. 4A-59 (Sheets 1-2) of Operating Unit 10, Chapter 4.0 of this Permit.	RESERVED	RESERVED	RESERVED	No
P-0335 Pretreatment Air Filter Package Containment Building	118x54x42	RESERVED	Section 4.2.4; Table 4-7; and Fig. 4A-59 (Sheets 1-2) of Operating Unit 10, Chapter 4.0 of this Permit.	RESERVED	RESERVED	RESERVED	RESERVED
P-0431A General Filter Rm	RESERVED	RESERVED	Section 4.2.4; Table 4-7; and Fig. 4A-59 (Sheets 1-2) of Operating Unit 10, Chapter 4.0 of this Permit.	RESERVED	RESERVED	RESERVED	RESERVED
LAW Vitrification Plant							

Table III.10.F.A – Containment Building Unit Description

Mixed Waste Containment Building Units[a] & Systems	Dimensions (LxWxH) (in feet)	Unit Description	Narrative Description and Figures	Container Storage Areas[b]	Tank Systems[c]	Containment Building Capacity (cu ft)	Manage Free Liquids
L-0112 LAW LSM Gallery Containment Building	151x60x24	RESERVED	Section 4.2.4; Table 4-7; and Fig. 4A-59 (Sheets 1-2) of Operating Unit 10, Chapter 4.0 of this Permit.	RESERVED	RESERVED	RESERVED	Yes
ILAW Container Finishing Containment Building		RESERVED	Section 4.2.4; Table 4-7; and Fig. 4A-59 (Sheets 1-2) of Operating Unit 10, Chapter 4.0 of this Permit.	RESERVED	RESERVED	RESERVED	No
L-0109B Swabbing Area Line 2	21×15×24	RESERVED	Section 4.2.4; Table 4-7; and Fig. 4A-59 (Sheets 1-2) of Operating Unit 10, Chapter 4.0 of this Permit.	RESERVED	RESERVED	RESERVED	RESERVED
L-0109C Decontamination Area Line 2	18×15×24	RESERVED	Section 4.2.4; Table 4-7; and Fig. 4A-59 (Sheets 1-2) of Operating Unit 10, Chapter 4.0 of this Permit.	RESERVED	RESERVED	RESERVED	RESERVED
L-0109D Inert Fill Area Line 2	55×15×24	RESERVED	Section 4.2.4; Table 4-7; and Fig. 4A-59 (Sheets 1-2) of Operating Unit 10, Chapter 4.0 of this Permit.	RESERVED	RESERVED	RESERVED	RESERVED
L-0115B Swabbing Area Line 1	21×15×24	RESERVED	Section 4.2.4; Table 4-7; and Fig. 4A-59 (Sheets 1-2) of Operating Unit 10, Chapter 4.0 of this Permit.	RESERVED	RESERVED	RESERVED	RESERVED
L-0115C Decontamination Area Line 1	18×15×24	RESERVED	Section 4.2.4; Table 4-7; and Fig. 4A-59 (Sheets 1-2) of Operating Unit 10, Chapter 4.0 of this Permit.	RESERVED	RESERVED	RESERVED	RESERVED
L-0115D Inert Fill Area Line 1	55×15×24	RESERVED	Section 4.2.4; Table 4-7; and Fig. 4A-59 (Sheets 1-2) of Operating Unit 10, Chapter	RESERVED	RESERVED	RESERVED	RESERVED

Table III.10.F.A – Containment Building Unit Description

Mixed Waste Containment Building Units[a] & Systems	Dimensions (LxWxH) (in feet)	Unit Description	Narrative Description and Figures	Container Storage Areas[b]	Tank Systems[c]	Containment Building Capacity (cu ft)	Manage Free Liquids
			4.0 of this Permit.				
L-109E Container/Monitoring/Export Area	19×18×14	RESERVED	Section 4.2.4; Table 4-7; and Fig. 4A-59 (Sheets 1-2) of Operating Unit 10, Chapter 4.0 of this Permit.	RESERVED	RESERVED	RESERVED	RESERVED
L-115E Container/Monitoring/Export Area	19×18×14	RESERVED	Section 4.2.4; Table 4-7; and Fig. 4A-59 (Sheets 1-2) of Operating Unit 10, Chapter 4.0 of this Permit.	RESERVED	RESERVED	RESERVED	RESERVED
L-0119B LAW Consumable Import/Export Containment Building	35x40x20	RESERVED	Section 4.2.4; Table 4-7; and Fig. 4A-59 (Sheets 1-2) of Operating Unit 10, Chapter 4.0 of this Permit.	RESERVED	RESERVED	RESERVED	Yes
L-226A LAW C3 Workshop Containment Building	40x 35×19	RESERVED	Section 4.2.4; Table 4-7; and Fig. 4A-59 (Sheets 1-2) of Operating Unit 10, Chapter 4.0 of this Permit.	RESERVED	RESERVED	RESERVED	RESERVED
LAW Pour Cave Containment Building		RESERVED	Section 4.2.4; Table 4-7; and Fig. 4A-59 (Sheets 1-2) of Operating Unit 10, Chapter 4.0 of this Permit.	RESERVED	RESERVED	RESERVED	RESERVED
L-B015A Melter 1 Pour Cave	16.5×20	RESERVED	Section 4.2.4; Table 4-7; and Fig. 4A-59 (Sheets 1-2) of Operating Unit 10, Chapter 4.0 of this Permit.	RESERVED	RESERVED	RESERVED	RESERVED
L-B013C Melter 1 Pour Cave	16.5×20	RESERVED	Section 4.2.4; Table 4-7; and Fig. 4A-59 (Sheets 1-2) of Operating Unit 10, Chapter 4.0 of this Permit.	RESERVED	RESERVED	RESERVED	RESERVED
L-B013B Melter 2 Pour Cave	16.5×20	RESERVED	Section 4.2.4; Table 4-7; and Fig. 4A-59 (Sheets 1-2) of	RESERVED	RESERVED	RESERVED	RESERVED

Table III.10.F.A – Containment Building Unit Description

Mixed Waste Containment Building Units[a] & Systems	Dimensions (LxWxH) (in feet)	Unit Description	Narrative Description and Figures	Container Storage Areas[b]	Tank Systems[c]	Containment Building Capacity (cu ft)	Manage Free Liquids
			Operating Unit 10, Chapter 4.0 of this Permit.				
L-B011C Melter 2 Pour Cave	16.5×20	RESERVED	Section 4.2.4; Table 4-7; and Fig. 4A-59 (Sheets 1-2) of Operating Unit 10, Chapter 4.0 of this Permit.	RESERVED	RESERVED	RESERVED	RESERVED
L-B011B Future Melter 3 Pour Cave	16.5×20	RESERVED	Section 4.2.4; Table 4-7; and Fig. 4A-59 (Sheets 1-2) of Operating Unit 10, Chapter 4.0 of this Permit.	RESERVED	RESERVED	RESERVED	RESERVED
L-B009B Future Melter 3 Pour Cave	16.5×20	RESERVED	Section 4.2.4; Table 4-7; and Fig. 4A-59 (Sheets 1-2) of Operating Unit 10, Chapter 4.0 of this Permit.	RESERVED	RESERVED	RESERVED	RESERVED
ILAW Buffer Container Containment Building		RESERVED	Section 4.2.4; Table 4-7; and Fig. 4A-59 (Sheets 1-2) of Operating Unit 10, Chapter 4.0 of this Permit.	RESERVED	RESERVED	RESERVED	RESERVED
L-B025C Container Buffer Store	22x22x7.5	RESERVED	Section 4.2.4; Table 4-7; and Fig. 4A-59 (Sheets 1-2) of Operating Unit 10, Chapter 4.0 of this Permit.	RESERVED	RESERVED	RESERVED	RESERVED
L-B025D Container Rework	22x14x7.5	RESERVED	Section 4.2.4; Table 4-7; and Fig. 4A-59 (Sheets 1-2) of Operating Unit 10, Chapter 4.0 of this Permit.	RESERVED	RESERVED	RESERVED	RESERVED
HLW Vitrification Plant							
H-0117, H-0116B, H-0310A HLW Melter 1	145×35×55	RESERVED	Section 4.2.4; Table 4-7; and Fig. 4A-59 (Sheets 1-2) of Operating Unit 10, Chapter 4.0 of this Permit.	RESERVED	RESERVED	RESERVED	RESERVED

Table III.10.F.A – Containment Building Unit Description

Mixed Waste Containment Building Units[a] & Systems	Dimensions (LxWxH) (in feet)	Unit Description	Narrative Description and Figures	Container Storage Areas[b]	Tank Systems[c]	Containment Building Capacity (cu ft)	Manage Free Liquids
H-0106, H-0105B, H-0304A HLW Melter 2	145×35×55	RESERVED	Section 4.2.4; Table 4-7; and Fig. 4A-59 (Sheets 1-2) of Operating Unit 10, Chapter 4.0 of this Permit.	RESERVED	RESERVED	RESERVED	RESERVED
H-0136 IHLW Canister Handling Cave Containment Building	140x18x48	RESERVED	Section 4.2.4; Table 4-7; and Fig. 4A-59 (Sheets 1-2) of Operating Unit 10, Chapter 4.0 of this Permit.	RESERVED	RESERVED	RESERVED	No
H-0133 IHLW Canister Swab and Monitoring Cave Containment Building	10x80x58	RESERVED	Section 4.2.4; Table 4-7; and Fig. 4A-59 (Sheets 1-2) of Operating Unit 10, Chapter 4.0 of this Permit.	RESERVED	RESERVED	RESERVED	No
H-0311A/B HLW Vitrification Plant C3 Workshop Containment Building	30x27x19 + 33x15x19	RESERVED	Section 4.2.4; Table 4-7; and Fig. 4A-59 (Sheets 1-2) of Operating Unit 10, Chapter 4.0 of this Permit.	RESERVED	RESERVED	RESERVED	No
H-0104 HLW Filter Cave	104x38x19	RESERVED	Section 4.2.4; Table 4-7; and Fig. 4A-59 (Sheets 1-2) of Operating Unit 10, Chapter 4.0 of this Permit.	RESERVED	RESERVED	RESERVED	No
H-B032 HLW Pour Tunnel No. 1 Containment Building	140x11x21	RESERVED	Section 4.2.4; Table 4-7; and Fig. 4A-59 (Sheets 1-2) of Operating Unit 10, Chapter 4.0 of this Permit.	RESERVED	RESERVED	RESERVED	No
H-B005A HLW Pour Tunnel No. 2 Containment Building	140x11x21	RESERVED	Section 4.2.4; Table 4-7; and Fig. 4A-59 (Sheets 1-2) of Operating Unit 10, Chapter 4.0 of this Permit.	RESERVED	RESERVED	RESERVED	No
H-0410B, H0411 HLW Waste Handling Area Containment Building	TBD	RESERVED	Section 4.2.4; Table 4-7; and Fig. 4A-59 (Sheets 1-2) of Operating Unit 10, Chapter	RESERVED	RESERVED	RESERVED	RESERVED

Table III.10.F.A – Containment Building Unit Description

Mixed Waste Containment Building Units[a] & Systems	Dimensions (LxWxH) (in feet)	Unit Description	Narrative Description and Figures	Container Storage Areas[b]	Tank Systems[c]	Containment Building Capacity (cu ft)	Manage Free Liquids
			4.0 of this Permit.				
HLW Drum Swabbing and Monitoring Area		RESERVED	Section 4.2.4; Table 4-7; and Fig. 4A-59 (Sheets 1-2) of Operating Unit 10, Chapter 4.0 of this Permit.	RESERVED	RESERVED	RESERVED	RESERVED
H-0126A/B Swabbing and Monitoring Area	52×16×10	RESERVED	Section 4.2.4; Table 4-7; and Fig. 4A-59 (Sheets 1-2) of Operating Unit 10, Chapter 4.0 of this Permit.	RESERVED	RESERVED	RESERVED	RESERVED
H-B028 Cask Transfer Tunnel	15×52×10	RESERVED	Section 4.2.4; Table 4-7; and Fig. 4A-59 (Sheets 1-2) of Operating Unit 10, Chapter 4.0 of this Permit.	RESERVED	RESERVED	RESERVED	RESERVED

Footnotes:
[a]Containment Building Units include associated process systems and equipment
[b]Requirements pertaining to the containers in the Containment Building Units are specified in Section III.10.D. of this Permit.
[c]Requirements pertaining to the tanks in the Containment Building Units are specified in Section III.10.E. of this Permit.

1

1
2

Table III.10.F.B – Containment Building Primary[a] Containment Sump Systems

Sump I.D.# & Room Location	Maximum Capacity (gallons)	Dimensions[a] (feet) & Materials of Construction	Maximum Allowable Liquid Height (inches)	Secondary Containment Volume (gallons)	Unit Description Drawings[#]
PWD-SUMP-00034 P-0121A (El. 0')	73.5	30" Dia. By ~28" deep 304L	N/A – This sump does not have secondary containment.	N/A – This sump does not have secondary containment.	**24590-PTF** -M6-PWD-P0012 -P1-P01T-P0001
PWD-SUMP-00035 P-0122A (El. 0')	73.5	30" Dia. By ~28" deep 304L	N/A – This sump does not have secondary containment.	N/A – This sump does not have secondary containment.	**24590-PTF** -M6-PWD-P0012 -P1-P01T-P0001
HMH-SUMP-0002 H-0116B (Air Lock Melter Room, El. 0')	RESERVED	RESERVED	N/A – This sump does not have secondary containment.	N/A – This sump does not have secondary containment.	**24590-HLW** -M6-RLD-P0003 -P1-P01T-P0002
HMH-SUMP-0003 H-0105B (Melter 2 Cave Overpack Room, El. 0')	50	30" X 24" X 16" RESERVED	N/A – This sump does not have secondary containment.	N/A – This sump does not have secondary containment.	**24590-HLW** -M6-RLD-P20003 -P1-P01T-P0002
HPH-SUMP-00001 H-0136 (Canister Handling Cave, El. –3')	70	30" Dia. X 18" Deep 6Mo	N/A – This sump does not have secondary containment.	N/A – This sump does not have secondary containment.	**24590-HLW** -M6-RLD-P0016 -P1-P01T-P0002
HPH-SUMP-00003 H-B032 (Melter 1 Canister Pour Tunnel, El. –21')	RESERVED	RESERVED	N/A – This sump does not have secondary containment.	N/A – This sump does not have secondary containment.	**24590-HLW** -M6-RLD-P0016 -P1-P01T-P0001
HPH-SUMP-00004 H-B005A (Melter 2 Canister Pour Tunnel, El. –21')	RESERVED	30" Dia. X 18" Deep RESERVED	N/A – This sump does not have secondary containment.	N/A – This sump does not have secondary containment.	**24590-HLW** -M6-RLD-P20004 -P1-P01T-P0001
HPH-SUMP-00005 H-0136 (Canister Handling Cave, El. –3')	70	30" Dia. X 18" Deep 6Mo	N/A – This sump does not have secondary containment.	N/A – This sump does not have secondary containment.	**24590-HLW** -M6-RLD-P0004 -P1-P01T-P0002

Table III.10.F.B – Containment Building Primary[a] Containment Sump Systems

Sump I.D.# & Room Location	Maximum Capacity (gallons)	Dimensions[a] (feet) & Materials of Construction	Maximum Allowable Liquid Height (inches)	Secondary Containment Volume (gallons)	Unit Description Drawings[#]
RESERVED	RESERVED	RESERVED	RESERVED	RESERVED	RESERVED

Footnotes:
[a] Primary sumps are defined in Permit Section III.10.C, and must comply with dangerous waste tank system requirements for tanks as described in WAC-173-303-640.
[b]Dimensions listed are based on permitted design. Actual dimensions may vary within plus or minus (TBD).

Table III.10.F.C – Containment Building Secondary Containment Systems Including Sumps and Floor Drains

Sump or Drain Line I.D.# & Room Location	Maximum Sump (gallons) or Drain Line (gallons per minute) Capacity	Sump Type/Nominal Operating Volume (gallons)	Sump or Drain Line Dimensions[a] (inches) & Materials of Construction	Engineering Description (Drawing Nos., Specifications No.'s, etc.)
RESERVED	RESERVED	RESERVED	RESERVED	RESERVED

Footnotes:
[a]Dimensions listed are based on permitted design. Actual dimensions may vary within plus or minus (TBD).

Table III.10.F.D – Containment Building Leak Detection System Instrumentation and Parameters

Tank System Name and Locator (including P&ID)	Control Parameter	Type of Instrument or Control Device	Location of Instrument or Control Device (Tag No.)	Instrument Range	Expected Operating Range or Setpoint	Fail States	Instrument Accuracy	Instrument Calibration Method No. and Frequency
RESERVED	RESERVED	RESERVED	RESERVED	RESERVED	RESERVE	RESERVED	RESERVED	RESERVED

Table III.10.F.D – Containment Building Leak Detection System Instrumentation and Parameters

Tank System Name and Locator (including P&ID)	Control Parameter	Type of Instrument or Control Device	Location of Instrument or Control Device (Tag No.)	Instrument Range	Expected Operating Range or Setpoint	Fail States	Instrument Accuracy	Instrument Calibration Method No. and Frequency
					D			
	Footnotes: [a]Locator (including P&ID designator) is located on Permit Table III.10.F.C – Containment Building Secondary Containment Systems Including Sumps and Floor Drains.							

1

III.10.G PRETREATMENT PLANT MISCELLANEOUS UNIT SYSTEMS

For purposes of Permit Section III.10.G., where reference is made to WAC 173-303-640, the following substitutions apply: substitute the terms "Pretreatment Plant Miscellaneous Unit System(s)" for "tank system(s)," "miscellaneous unit(s)" for "tank(s)," "equipment" for "ancillary equipment," and "miscellaneous unit(s) or equipment of a Pretreatment Plant Miscellaneous Unit System" for "component(s)" in accordance with WAC 173-303-680.

III.10.G.1 Approved Waste and Storage Limits

III.10.G.1.a. The Permittees may process, in the Pretreatment Plant Miscellaneous Unit Systems listed in Permit Table III.10.G.A, as approved/modified pursuant to Permit Condition III.10.G.10, all dangerous and mixed waste listed in the Part A Forms, Operating Unit 10, Chapter 1.0 of this Permit, and in accordance with in the WAP, Operating Unit 10, Chapter 3.0 of this Permit, as approved pursuant to Permit Condition III.10.C.3. Total Pretreatment Plant Miscellaneous Unit dangerous and mixed waste storage at the Facility will not exceed the limits specified in Permit Table III.10.G.A.

III.10.G.1.b. The Permittees may process dangerous and mixed waste only in approved Pretreatment Plant Miscellaneous Unit Systems listed in Permit Table III.10.G.A in accordance with Permit Section III.10.G and in accordance with Operating Unit 10, Chapters 1.0 and 4.0 of this Permit, and Operating Unit 10, Appendices 8.1 through 8.15 of this Permit, as approved pursuant to Permit Conditions III.10.G.10.b. through e. The Permittees will limit the total volume of wastes to quantities specified for the individual miscellaneous units listed in Permit Table III.10.G.A.

III.10.G.1.c. The Permittees will manage ignitable and reactive, and incompatible waste in accordance with WAC 173-303-395(1). Any Pretreatment Plant Miscellaneous Unit System specified in Permit Tables III.10.G.A and III.10.G.B in which ignitable, reactive or incompatible waste are managed will meet the requirements specified in WAC 173-303-640(9) and (10), in accordance to WAC 173-303-680.

III.10.G.1.d. The Permittees will ensure all certifications required by specialists (e.g., independent, qualified, registered professional engineer; independent corrosion expert; independent, qualified installation inspector; etc.) use the following statement or equivalent pursuant to Permit Condition III.10.C.10:

"I, (Insert Name) have (choose one or more of the following: overseen, supervised, reviewed, and/or certified) a portion of the design or installation of a new miscellaneous unit system or component located at (address), and owned/operated by (name(s)). My duties were: (e.g., installation inspector, testing for tightness, etc.), for the following miscellaneous unit system components (e.g., the venting piping, etc.), as required by the Dangerous Waste Regulations, namely, WAC 173-303-640(3) (applicable paragraphs (i.e., (a) through (g)) in accordance with WAC 173-303-680).

"I certify under penalty of law that I have personally examined and am familiar with the information submitted in this document and all attachments and that, based on my inquiry of those individuals immediately responsible for obtaining the information, I believe that the information is true, accurate, and complete. I am aware that there are significant penalties for submitting false information, including the possibility of fine and imprisonment."

III.10.G.1.e. In all future narrative permit submittals, the Permittees will include miscellaneous unit system names with the unit designation (e.g., Waste Feed Evaporator Separator Vessels are designated V11002A and V11002B, respectively).

III.10.G.2 Miscellaneous Unit Systems Design and Construction [WAC 173-303-640, in accordance with WAC 173-303-680(2) and WAC 173-303-340].

III.10.G.2.a. The Permittees will construct the Pretreatment Plant Miscellaneous Unit Systems identified in Permit Table III.10.G.A, as specified in Operating Unit 10, Appendices 8.1 through 8.14 of this Permit, as approved pursuant to Permit Conditions III.10.G.10.b., III.10.G.10.c., and III.10.G.10.d.

III.10.G.2.b. The Permittees will construct secondary containment systems for the Pretreatment Plant Miscellaneous Unit Systems identified in Permit Tables III.10.G.A and III.10.G.B, as specified in Operating Unit 10, Appendices 8.2, 8.4 through 8.14 of this Permit, as approved pursuant to Permit Conditions III.10.G.10.b., III.10.G.10.c., and III.10.G.10.d.

III.10.G.2.c. Modifications to approved design, plans, and specifications in Operating Unit 10 of this Permit for the Pretreatment Plant Miscellaneous Unit Systems will be allowed only in accordance with Permit Conditions III.10.C.2.e. and f., or III.10.C.2.g., III.10.C.9.d., e., and h.

III.10.G.3 Miscellaneous Unit System Installation and Certification [WAC 173-303-640, in accordance with WAC 173-303-680(2) and (3), and WAC 173-303-340].

III.10.G.3.a. The Permittees must ensure that proper handling procedures are adhered to in order to prevent damage to Pretreatment Plant Miscellaneous Unit Systems during installation. Prior to covering, enclosing, or placing a new Pretreatment Plant Miscellaneous Unit System(s) or component(s) in use, an independent, qualified, installation inspector or an independent, qualified, registered professional engineer, either of whom is trained and experienced in the proper installation of similar systems or components, must inspect the system for the presence of any of the following items:

III.10.G.3.a.i. Weld breaks;

III.10.G.3.a.ii Punctures;

III.10.G.3.a.iii. Scrapes of protective coatings;

III.10.G.3.a.iv. Cracks;

III.10.G.3.a.v. Corrosion;

III.10.G.3.a.vi. Other structural damage or inadequate construction/installation;

III.10.G.3.a.vii. All discrepancies must be remedied before the Pretreatment Plant Miscellaneous Unit Systems are covered, enclosed, or placed in use [WAC 173-303-640(3)(c) in accordance with WAC 173-303-680(2) and (3)].

III.10.G.3.b. For Pretreatment Plant Miscellaneous Unit Systems or components that are placed underground and that are back-filled, the Permittees must provide a backfill material that is a non-corrosive, porous, homogeneous substance. The backfill must be installed so that it is placed completely around the miscellaneous unit and compacted to ensure that the miscellaneous unit and piping are fully and uniformly supported [WAC 173-303-640(3)(d), in accordance with WAC 173-303-680(2) and (3)].

III.10.G.3.c. The Permittees must test for tightness all new Pretreatment Plant miscellaneous units and equipment, prior to being covered, enclosed, or placed into use. If the Pretreatment Plant Miscellaneous Unit Systems are found not to be tight, all repairs necessary to remedy the leak(s) in the system must be performed prior to the Pretreatment Plant Miscellaneous Units Systems being covered, enclosed, or placed in use [WAC 173-303-640(3)(e), in accordance with WAC 173-303-680(2) and (3)].

III.10.G.3.d. The Permittees must ensure Pretreatment Plant Miscellaneous Unit Systems equipment is supported and protected against physical damage and excessive stress due to settlement, vibration, expansion, or contraction [WAC 173-303-640(3)(f), in accordance with WAC 173-303-680(2) and (3)].

III.10.G.3.e. The Permittees must provide the type and degree of corrosion protection recommended by an independent corrosion expert, based on the information provided in Operating Unit 10, Appendices 8.9 and 8.11 as approved pursuant to Permit Conditions III.10.G.10.b.i., III.10.G.10.b.i.v., III.10.G.10.b.v., III.10.G.10.c.i., III.10.G.10.c.i.v., III.10.G.10.c.v., and III.10.G.10.d.i., III.10.G.10.d.iv. III.10.G.10.d.v., or other corrosion protection if Ecology believes other corrosion protection is necessary to ensure the integrity of the Pretreatment Plant Miscellaneous Unit Systems during use of the Pretreatment Plant Miscellaneous Unit Systems. The installation of a corrosion protection system that is field fabricated must be supervised by an independent corrosion expert to ensure proper installation [WAC 173-303-640(3)(g), in accordance with WAC 173-303-680(2) and (3)].

III.10.G.3.f. Prior to initial receipt of dangerous and/or mixed waste in the WTP Unit, the Permittees will obtain, and keep on file in the WTP Unit operating record, written statements by those persons required to certify the design of the Pretreatment Plant Miscellaneous Unit Systems and supervise the installation of the Pretreatment Plant Miscellaneous Unit Systems, as specified in WAC 173-303-640(3)(b), (c), (d), (e), (f), and (g), in accordance with WAC 173-303-680, attesting that each Pretreatment Plant Miscellaneous Unit System and corresponding containment system listed in Permit Tables III.10.G.A and III.10.G.B, as approved/modified pursuant to Permit Condition III.10.G.10., were properly designed and installed, and that repairs, in accordance with WAC 173-303-640(3)(c) and (e), were performed [WAC 173-303-640(3)(a), WAC 173-303-640(3)(h), in accordance with WAC 173-303-680(3)].

III.10.G.3.g. The independent Pretreatment Plant Miscellaneous Unit System installation inspection and subsequent written statements will be certified in accordance with WAC 173-303-810(13)(a) as modified pursuant to Permit Condition III.10.G.1.d., comply with all requirements of WAC 173-303-640(3)(h), in accordance with WAC 173-303-680, and will consider, but not be limited to, the following miscellaneous unit system installation documentation:

III.10.G.3.g.i. Field installation report with date of installation;

III.10.G.3.g.ii. Approved welding procedures;

III.10.G.3.g.iii. Welder qualifications and certification;

III.10.G.3.g.iv. Hydro-test reports, as applicable, in accordance with the American Society of Mechanical Engineers Boiler and Pressure Vessel Code, Section VIII, Division 1, American Petroleum Institute (API) Standard 620, or Standard 650 as applicable;

III.10.G.3.g.v. Tester credentials;

III.10.G.3.g.vi. Field inspector credentials;

III.10.G.3.g.vii. Field inspector reports;

III.10.G.3.g.viii. Field waiver reports; and

III.10.G.3.g.ix. Non-compliance reports and corrective action (including field waiver reports) and repair reports.

III.10.G.4 Integrity Assessments [WAC 173-303-340 and WAC 173-303-640, in accordance with WAC 173-303-680(2) and (3)].

III.10.G.4.a. The Permittees will ensure periodic integrity assessments are conducted on the Pretreatment Plant Miscellaneous Unit Systems listed in Permit Table III.10.G.A, as approved/modified pursuant to Permit Condition III.10.G.10., over the term of this Permit in accordance with WAC173-303-680(2) and (3) as specified in WAC 173-303-640(3)(b), following the description of the integrity assessment program and schedule in Operating Unit 10, Chapter 6.0 of this Permit, as approved pursuant to Permit Conditions III.10.G.10.e.i. and III.10.C.5.c. Results of the integrity assessments will be included in the WTP Unit operating record until ten (10) years after post-closure, or corrective action is complete and certified, whichever is later.

III.10.G.4.b. The Permittees will address problems detected during Pretreatment Plant Miscellaneous Unit Systems integrity assessments specified in Permit Condition III.10.G.4.a. following the integrity assessment program in Operating Unit 10, Chapter 6.0 of this Permit, as approved pursuant to Permit Conditions III.10.G.10.e.i. and III.10.C.5.c.

III.10.G.4.c. The Permittees must immediately and safely remove from service any Pretreatment Plant Miscellaneous Unit System or secondary containment system which through an integrity assessment is found to be "unfit for use" as defined in WAC 173-303-040, following Permit Condition III.10.G.5.j.i. through iv., and vi. The affected Pretreatment Plant Miscellaneous Unit or secondary containment system must be either repaired or closed in accordance with Permit Condition III.10.G.5.j.v. [WAC 173-303-640(7)(e) and (f) and WAC 173-303-640(8), in accordance with WAC 173-303-680(3)].

III.10.G.5 Miscellaneous Unit Management Practices

III.10.G.5.a. No dangerous and/or mixed waste will be managed in the Pretreatment Plant Miscellaneous Unit Systems unless the operating conditions, specified under Permit Condition III.10.G.5, are complied with.

III.10.G.5.b. The Permittees will install and test all process and leak detection system monitoring/instrumentation, as specified in Permit Table III.10.G.C, as approved/modified pursuant to Permit Condition III.10.G.10, in accordance with Operating Unit 10, Appendices 8.1, 8.2, and 8.14 of this Permit, as approved pursuant to Permit Condition III.10.G.10.d.x.

III.10.G.5.c. The Permittees will not place dangerous and/or mixed waste, treatment reagents, or other materials in the Pretreatment Plant Miscellaneous Unit Systems if these substances could cause the systems to rupture, leak, corrode, or otherwise fail [WAC 173-303-640(5)(a), in accordance with WAC 173-303-680(2)].

III.10.G.5.d. The Permittees will operate the Pretreatment Plant Miscellaneous Unit Systems to prevent spills and overflows using the description of controls and practices, as required under WAC 173-303-640(5)(b), described in Permit Condition III.10.C.5, and Operating Unit 10, Appendix 8.15 of this Permit, as approved pursuant to Permit Condition

III.10.G.10.e.iv. [WAC 173-303-640(5)(b), in accordance with WAC 173-303-680(2) and (3) and WAC 173-303-806(4)(c)(ix)].

III.10.G.5.e. For routinely non-accessible Pretreatment Plant Miscellaneous Unit Systems, as specified in Operating Unit 10, Chapter 4.0 of this Permit, as updated pursuant to Permit Condition III.10.G.10.e.vi., the Permittees will mark all routinely non-accessible Pretreatment Plant Miscellaneous Unit System access points with labels or signs to identify the waste contained in the units. The label, or sign, must be legible at a distance of at least fifty (50) feet and must bear a legend which identifies the waste in a manner which adequately warns employees, emergency response personnel, and the public of the major risk(s) associated with the waste being stored or treated in the miscellaneous unit system(s). For the purposes of this Permit condition, "routinely non-accessible" means personnel are unable to enter these areas while waste is being managed in them [WAC 173-303-640(5)(d), in accordance with WAC 173-303-680(2)].

III.10.G.5.f. For all Pretreatment Plant Miscellaneous Unit Systems not addressed in Permit Condition III.10.G.5.e, the Permittees will mark all these miscellaneous unit systems holding dangerous and/or mixed waste with labels or signs to identify the waste contained in the unit. The labels, or sign, must be legible at a distance of at least fifty (50) feet, and must bear a legend which identifies the waste in a manner which adequately warns employees, emergency response personnel, and the public of the major risk(s) associated with the waste being stored or treated in the miscellaneous unit system(s) [WAC 173-303-640(5)(d), in accordance with WAC 173-303-680(2)].

III.10.G.5.g. The Permittees will ensure that the secondary containment systems for Pretreatment Plant Miscellaneous Unit Systems listed in Permit Tables III.10.G.A and III.10.G.B, as approved/modified pursuant to Permit Condition III.10.G.10, are free of cracks or gaps to prevent any migration of dangerous and/or mixed waste or accumulated liquid out of the system to the soil, ground water, or surface water at any time waste is in the Pretreatment Plant Miscellaneous Units System. Any indication that a crack or gap may exist in the containment systems will be investigated and repaired in accordance with Operating Unit 10, Appendix 8.15 of this Permit, as approved pursuant to Permit Condition III.10.G.10.e.v. [WAC 173-303–640(4)(b)(i), WAC 173-303–640(4)(e)(i)(C), and WAC 173-303-640(6) in accordance with WAC 173-303-680(2) and (3), WAC 173-303-806(4)(i)(i)(B), and WAC 173-303-320].

III.10.G.5.i. An impermeable coating, as specified in Operating Unit 10, Appendices 8.4, 8.5,8.7, 8.9, 8.11, and 8.12 of this Permit, as approved pursuant to Permit Condition III.10.G.10.b.v. of this Permit, will be maintained for all concrete containment systems and concrete portions of containment systems for each Pretreatment Plant Miscellaneous Unit System listed in Permit Tables III.10.G.A and III.10.G.B, as approved/modified pursuant to Permit Condition III.10.G.10 [concrete containment systems that do not have a liner pursuant to WAC-173-303-640(4)(e)(i), in accordance with WAC 173-303-680(2), and have construction joints, will meet the requirements of WAC 173-303-640(4)(e)(ii)(C), in accordance with WAC 173-303-680(2)]. The coating will prevent migration of any dangerous and mixed waste into the concrete. All coatings will meet the following performance standards:

III.10.G.5.i.i. The coating must seal the containment surface such that no cracks, seams, or other avenues through which liquid could migrate are present;

III.10.G.5.i.ii. The coating must be of adequate thickness and strength to withstand the normal operation of equipment and personnel within the given area such that degradation or physical

damage to the coating or lining can be identified and remedied before dangerous and mixed waste III.10.G.5.i.could migrate from the system; and

III.10.G.5.i.iii. The coating must be compatible with the dangerous and mixed waste, treatment reagents, or other materials managed in the containment system [WAC 173-303-640(4)(e)(ii)(D), in accordance with WAC 173-303-680(2) and (3) and WAC 173-303-806(4)(i)(i)(A)].

III.10.G.5.j. The Permittees will inspect all secondary containment systems for the Pretreatment Plant Miscellaneous Unit Systems listed in Permit Tables III.10.G.A and III.10.G.B., as approved/modified pursuant to Permit Condition III.10.G.10., in accordance with the Inspection Schedule specified in Operating Unit 10, Chapter 6.0 of this Permit, as approved pursuant to Permit Conditions III.10.G.10.e.i. and III.10.C.5.c., and take the following actions if a leak or spill of dangerous and/or mixed waste is detected in these containment systems [WAC 173-303-640(5)(c) and WAC 173-303-640(6), in accordance with WAC 173-303-680(2) and (3), WAC 173-303-320, and WAC 173-303-806(4)(i)(i)(B)]:

III.10.G.5.j.i. Immediately and safely stop the flow of dangerous and/or mixed waste into the miscellaneous unit system or secondary containment system;

III.10.G.5.j.ii. Determine the source of the dangerous and/or mixed waste;

III.10.G.5.j.iii. Remove the waste from the containment area in accordance with WAC 173-303-680(2) and (3), as specified in WAC 173-303-640(7)(b). The dangerous and/or mixed waste removed from containment areas of miscellaneous unit systems will be, as a minimum, managed as dangerous and/or mixed waste;

III.10.G.5.j.iv. If the cause of the release was a spill that has not damaged the integrity of the miscellaneous unit system, the Permittees may return the miscellaneous unit system to service in accordance with WAC 173-303-680(2) and (3), as specified in WAC 173-303-640(7)(e)(ii). In such a case, the Permittees will take action to ensure the incident that caused liquid to enter the containment system will not reoccur [WAC 173-303-320(3)];

III.10.G.5.j.v. If the source of the dangerous and/or mixed waste is determined to be a leak from the primary Pretreatment Plant Miscellaneous Unit System into the secondary containment system, or the system is unfit for use as determined through an integrity assessment or other inspection, the Permittees must comply with the requirements of WAC 173-303-640(7), and take the following actions:

A Close the miscellaneous unit following procedures in WAC 173-303-640(7)(e)(i) and in accordance with WAC 173-303-680, and Operating Unit 10, Chapter 11.0 of this Permit, as approved pursuant to Permit Condition III.10.C.8; or

B. Repair and re-certify (in accordance with WAC 173-303-810(13)(a), as modified pursuant to Permit Condition III.10.G.1.d.) the Pretreatment Plant Miscellaneous Unit System in accordance with Operating Unit 10, Appendix 8.15 of this Permit, as approved pursuant to Permit Condition III.10.G.10.e.v. before the Pretreatment Plant Miscellaneous Unit System is placed back into service [WAC 173-303-640(7)(e)(iii) and WAC 173-303-640(7)(f), in accordance with WAC 173-303-680].

III.10.G.5.j.vi. The Permittees will document, in the operating record, actions/procedures taken to comply with i. through v. above, as specified in WAC 173-303-640(6)(d) and in accordance with WAC 173-303-680(2) and (3).

III.10.G.5.j.vii. In accordance with WAC 173-303-680(2) and (3), the Permittees will notify and report releases to the environment to Ecology as specified in WAC 173-303-640(7)(d).

III.10.G.5.k. If liquids (e.g., Dangerous and/or mixed waste leaks and spills, precipitation, fire water, liquids from damaged or broken pipes) cannot be removed from the secondary containment system within twenty-four (24) hours, Ecology will be verbally notified within twenty-four (24) hours of discovery. The notification will provide the information in A., B., and C. listed below. The Permittees will provide Ecology with a written demonstration, within seven (7) business days, identifying at a minimum [WAC 173-303-640(4)(c)(iv) and WAC 173-303-640(7)(b)(ii), in accordance with WAC 173-303-680(3) and WAC 173-303-806(4)(i)(i)(B)]:

A. Reasons for delayed removal;

B. Measures implemented to ensure continued protection of human health and the environment; and

C. Current actions being taken to remove liquids from secondary containment.

III.10.G.5.l. The Permittees will operate the Pretreatment Plant Miscellaneous Unit Systems in accordance with Operating Unit 10, Chapter 4.0 as updated pursuant to Permit Condition III.10.G.10.e.vi. and Appendix 8.15 of this Permit, as approved pursuant to Permit Condition III.10.G.10.e., and the following:

III.10.G.5.l.i. The Permittees will operate the Pretreatment Plant Miscellaneous Unit Systems in order to maintain the systems and process parameters listed in Permit Table III.10.G.C. as approved/modified pursuant to Permit Condition III. 10.G.10., within the operating trips and operating ranges specified in Permit Table III.10.G.C., and consistent with assumptions and basis which are reflected in Operating Unit 10, Appendix 6.3.1, as approved pursuant to Permit Condition III.10.C.11.b. [WAC 173-303-815(2)(b)(ii) and WAC 173-303-680(2) and (3)]. For the purposes of this Permit Condition, Operating Unit 10, Appendix 6.3.1. will be superceded by Appendix 6.4.1. upon its approval pursuant to either Permit Conditions III.10.C.11.c. or III.10.C.11.d.

III.10.G.5.l.ii. The Permittees will calibrate/function test the instruments listed in Permit Table III.10.G.C., in accordance with Operating Unit 10, Appendix 8.15, as approved pursuant to Permit Condition III.10.G.10.e.xii.

III.10.G.5.m. For any portion of the Pretreatment Plant Miscellaneous Unit Systems which have the potential for formation and accumulation of hydrogen gases, the Permittees will operate the portion to maintain hydrogen levels below the lower explosive limit [WAC 173-303-815(2)(b)(ii)].

III.10.G.5.n. For each miscellaneous unit holding dangerous waste which are acutely or chronically toxic by inhalation, the Permittees will operate the system to prevent escape of vapors, fumes, or other emissions into the air [WAC 173-303-806(4)(i)(i)(B) and WAC 173-303-640(5)(e), in accordance with WAC 173-303-680].

III.10.G.6 Air Emissions

III.10.G.6.a. Treatment effectiveness, feed-rates, and operating rates for dangerous and mixed waste systems and sub-systems contained in the Pretreatment Plant (as specified in Permit Tables III.10.E.A, III.10.F.A, and III.10.G.A, as approved/modified pursuant to Permit Conditions III.10.E.9., III.10.F.5., III.10.G.10., respectively) will be as specified in Permit Sections III.10.E, III.10.F, and III.10.G, and consistent with the assumptions and

basis reflected in Operating Unit 10, Appendix 6.3.1 of this Permit, as approved pursuant to Permit Condition III.10.C.11.b. For the purposes of this permit condition, Operating Unit 10, Appendix 6.3.1 will be superceded by Appendix 6.4.1, upon its approval, pursuant to either Permit Condition III.10.C.11.c. or III.10.C.11.d. [WAC 173-303-680(2) and (3), and WAC 173-303-815(2)(b)(ii)].

III.10.G.6.b. Compliance with Permit Condition III.10.G.6.a. of this Permit will be regarded as operating within the emission limits specified in Permit Table III.10.G.D., as approved pursuant to Permit Conditions III.10.C.11.b., III.10.C.11.c., or III.10.C.11.d. of this Permit.

III.10.G.6.c. All air pollution control devices and capture systems in the Pretreatment Plant Miscellaneous Unit Systems will be maintained and operated at all times in a manner so as to minimize the emissions of air contaminants and to minimize process upsets. Procedures for ensuring that the above equipment is properly operated and maintained so as to minimize the emission of air contaminants and process upsets will be established.

III.10.G.6.d. The Permittees will ensure that for all dangerous and/or mixed waste areas, systems, and units contained in the Pretreatment Plant (as specified in Permit Tables III.10.E.A, III.10.F.A, and III.10.G.A, as approved pursuant to Permit Conditions III.10.E.9.e.xii., III.10.F.7.d.iv., and III.10.G.10.e.ix., respectively), the Pretreatment Vessel Vent Process System specified in Permit Table III.10.G.A.i will be in operation prior to waste being introduced into these dangerous and/or mixed waste areas, systems, and units contained in the Pretreatment Building. At any time the Pretreatment Vessel Vent Process System ceases to operate or produces insufficient vacuum to recover emissions from the areas, systems, or units, the Permittees will not commence new treatment activities within the dangerous and mixed waste areas, systems, or units contained in the Pretreatment Building, and take measures to minimize evolution of emissions from on-going treatment, and will not receive new dangerous and/or mixed waste shipments into the Pretreatment Building. The Permittees will not re-commence new treatment activities until the Pretreatment Vessel Vent Process System is operational and producing sufficient vacuum to recover emissions.

III.10.G.7 Inspections [WAC 173-303-680(3)]

III.10.G.7.a. The Permittees will inspect the Pretreatment Plant Miscellaneous Unit Systems in accordance with the Inspection Schedules in Operating Unit 10, Chapter 6.0 of this Permit, as modified in accordance with Permit Condition III.10.C.5.c.

III.10.G.7.b. The inspection data for Pretreatment Plant Miscellaneous Unit Systems will be recorded, and the records will be placed in the WTP Unit operating record for the Pretreatment Plant Miscellaneous Unit Systems, in accordance with Permit Condition III.10.C.4.

III.10.G.8 Recordkeeping

The Permittees will record and maintain in the WTP Unit operating record for the Pretreatment Plant Miscellaneous Unit Systems, all monitoring, calibration, maintenance, test data, and inspection data compiled under the conditions of this Permit, in accordance with Permit Conditions III.10.C.4 and III.10.C.5.

III.10.G.9 Closure

The Permittees will close the Pretreatment Plant Miscellaneous Unit Systems in accordance with Operating Unit 10, Chapter 11.0, as approved pursuant to Permit Condition III.10.C.8.

III.10.G.10 Compliance Schedule

III.10.G.10.a. All information identified for submittal to Ecology in a. through e. of this compliance schedule must be signed and certified in accordance with requirements in WAC 173-303-810(12), as modified in accordance with Permit Condition III.10.G.1.d. [WAC 173-303-806(4)].

III.10.G.10.b. The Permittees will submit to Ecology, pursuant to Permit Condition III.10.C.9.f., prior to construction of each secondary containment and leak detection system for the Pretreatment Plant Miscellaneous Unit Systems (per level) as identified in Permit Tables III.10.G.A and III.10.G.B, engineering information as specified below, for incorporation into Operating Unit 10, Appendices 8.2, 8.4, 8.5, 8.7, 8.8, 8.9, 8.11, and 8.12 of this Permit. At a minimum, engineering information specified below will show the following as described in WAC 173-303-640, in accordance with WAC 173-303-680 (the information specified below will include dimensioned engineering drawings and information on sumps and floor drains):

III.10.G.10.b.i. IQRPE Reports (specific to foundation, secondary containment, and leak detection system) will include review of design drawings, calculations, and other information on which the certification report is based and will include as applicable, but not limited to, review of such information described below. Information (drawings, specifications, etc.) already included in Operating Unit 10, Appendix 8.0 of this Permit may be included in the report by reference and should include drawing and document numbers. IQRPE Reports will be consistent with the information separately provided in ii. through ix. below [WAC 173-303-640(3)(a), in accordance with WAC 173-303-680 and WAC 173-303-806(4)(i)(i)];

III.10.G.10.b.ii. Design drawings (General Arrangement Drawings, in plan and cross sections) and specifications for the foundation, secondary containment, including, liner installation details, and leak detection methodology [Note: leak detection systems for areas where daily, direct, or remote visual inspection is not feasible, will be continuous in accordance with WAC 173-303-640(4)(e)(iii)(C)]. These items should show the dimensions, volume calculations, and location of the secondary containment system, and should include items such as floor/pipe slopes to sumps, tanks, floor drains [WAC 173-303-640(4)(b) through (f) and WAC 173-303-640(3)(a), in accordance with WAC 173-303-680 and WAC 173-303-806(4)(i)(i)];

III.10.G.10.b.iii. The Permittees will provide the design criteria (references to codes and standards, load definitions, and load combinations, materials of construction, and analysis/design methodology) and typical design details for the support of the secondary containment system. This information will demonstrate the foundation will be capable of providing support to the secondary containment system, resistance to pressure gradients above and below the system, and capable of preventing failure due to settlement, compression, or uplift [WAC 173-303-640(4)(c)(ii), in accordance with WAC 173-303-680(2) and WAC 173-303-806(4)(i)(i)(B)];

III.10.G.10.b.iv. A description of materials and equipment used to provide corrosion protection for external metal components in contact with soil, including factors affecting the potential for corrosion [WAC 173-303-640(3)(a)(iii)(B), in accordance with WAC 173-303-680 and WAC 173-303-806(4)(i)(i)(A) through (B)];

III.10.G.10.b.v. Secondary containment/foundation and leak detection systems materials selection documentation (including, but not limited to, concrete coatings and water stops, and liner materials), as applicable [WAC 173-303-806(4)(i)(i)(A) through (B)];

III.10.G.10.b.vi. Detailed description of how the secondary containment for each miscellaneous unit system will be installed in compliance with WAC 173-303-640(3)(c), in accordance with WAC 173-303-680 and WAC 173-303-806(4)(i)(i)(A) through (B);

III.10.G.10.b.vii. Submit Permit Table III.10.G.B. completed to provide for all secondary containment sumps and floor drains, the information as specified in each column heading, consistent with information to be provided in i. through vi. above;

III.10.G.10.b.viii. Documentation that secondary containment and leak detection systems will not accumulate hydrogen gas levels above the lower explosive limit for incorporation into the Administrative Record [WAC 173-303-680, WAC 173-303-806(4)(i)(i)(A), and WAC 173-303-806(4)(i)(v)];

III.10.G.10.b.ix. A detailed description of how miscellaneous unit design provides access for conducting future miscellaneous unit integrity assessments [WAC 173-303-640(3)(b) and WAC 173-303-806(4)(i)(i)(B)].

III.10.G.10.c. The Permittees will submit to Ecology, pursuant to Permit Condition III.10.C.9.f., prior to installation of each Pretreatment Plant Miscellaneous Unit System as identified in Permit Tables III.10.G.A and III.10.G.B, engineering information as specified below, for incorporation into Operating Unit 10, Appendix 8.1 through 8.14 of this Permit. At a minimum, engineering information specified below will show the following as required pursuant to WAC 173-303-640 and in accordance with WAC 173-303-680 (the information specified below will include dimensioned engineering drawings):

III.10.G.10.c.i. IQRPE Reports (specific to miscellaneous unit) will include review of design drawings, calculations, and other information on which the certification report is based and will include as applicable, but not limited to, review of such information described below. Information (drawings, specifications, etc.) already included in Operating Unit 10, Appendix 8.0 of this Permit may be included in the report by reference and should include drawing and document numbers. The IQRPE Reports will be consistent with the information separately provided in ii. through xi. below and the IQRPE Report specified in Permit Condition III.10.G.10.b.i. [WAC 173-303-640(3)(a), in accordance with WAC 173-303-680(2) and WAC 173-303-806(4)(i)(i)];

III.10.G.10.c.ii. Design drawings (General Arrangement Drawings in plan and cross sections, Process Flow Diagrams, Piping and Instrumentation Diagrams [including pressure control systems], and Mechanical Drawings) and specifications, and other information specific to miscellaneous units (to show location and physical attributes of each miscellaneous unit), [WAC 173-303-640(3)(a), in accordance with WAC 173-303-680(2) and WAC 173-303-806(4)(i)(i)];

III.10.G.10.c.iii. Miscellaneous unit design criteria (references to codes and standards, load definitions, and load combinations, materials of construction, and analysis/design methodology) and typical design details for the support of the miscellaneous unit(s). Structural support calculations specific to off-specification, non-standard, and field fabricated miscellaneous units will be submitted for incorporation into the Administrative Record [WAC 173-303-640(3)(a), in accordance with WAC 173-303-680(2) and WAC 173-303-806(4)(i)(i)(B)];

III.10.G.10.c.iv. A description of materials and equipment used to provide corrosion protection for external metal components in contact with water, including factors affecting the potential for corrosion [WAC 173-303-640(3)(a)(iii)(B), in accordance with WAC 173-303-680(2) and WAC 173-303-806(4)(i)(i)(A) through (B)];

III.10.G.10.c.v. Miscellaneous unit materials selection documentation (e.g., physical and chemical tolerances) [WAC 173-303-640(3)(a), in accordance with WAC 173-303-680(2) and WAC 173-303-806(4)(i)(i)(A)];

III.10.G.10.c.vi. Miscellaneous unit vendor information (including, but not limited to, required performance warranties, as available), consistent with information submitted under ii. above, will be submitted for incorporation into the Administrative Record [WAC 173-303-640(3)(a), in accordance with WAC 173-303-680(2), WAC 173-303-806(4)(i)(i)(A) through (B), and WAC 173-303-806(4)(i)(v)];

III.10.G.10.c.vii. System Description related to miscellaneous units will be submitted for incorporation into the Administrative Record [WAC 173-303-680, WAC 173-303-806(4)(i)(i)(A) through (B), and WAC 173-303-806(4)(i)(v)].

III.10.G.10.c.viii. Mass and energy balance for normal projected operating conditions used in developing the Piping and Instrumentation Diagrams and the Process Flow Diagrams, including assumptions and formulas used to complete the mass and energy balance, so that they can be independently verified for incorporation into the Administrative Record [WAC 173-303-680(2), WAC 173-303-806(4)(i)(i)(B), and WAC 173-303-806(4)(i)(v)];

III.10.G.10.c.ix. A detailed description of how the miscellaneous unit will be installed in compliance with WAC 173-303-640(3)(c), (d), and (e), in accordance with WAC 173-303-680 and WAC 173-303-806(4)(i)(i)(B);

III.10.G.10.c.x. Documentation that miscellaneous units are designed to prevent the accumulation of hydrogen gas levels above the lower explosive limit for incorporation into the Administrative Record [WAC 173-303-680, WAC 173-303-806(4)(i)(i)(A), and WAC 173-303-806(4)(i)(v)];

III.10.G.10.c.xi. Documentation that miscellaneous units are designed to prevent escape of vapors and emissions of acutely or chronically toxic (upon inhalation) EHW, for incorporation into the Administrative Record [WAC 173-303-640(5)(e), in accordance with WAC 173-303-680(2) and WAC 173-303-806(4)(i)(i)(B)];

III.10.G.10.d. The Permittees will submit to Ecology, pursuant to Permit Condition III.10.C.9.f., prior to installation of equipment as identified in Permit Tables III.10.G.A and III.10.G.B, not addressed in Permit Condition III.10.G.10.c., engineering information as specified below for incorporation into Operating Unit 10, Appendices 8.1through 8.14 of this Permit. At a minimum, engineering information specified below will show the following as required pursuant to WAC 173-303-640, in accordance with WAC 173-303-680 (the information specified below will include dimensioned engineering drawings):

III.10.G.10.d.i. IQRPE Reports (specific to equipment) will include a review of design drawings, calculations, and other information as applicable, on which the certification report is based. The reports will include, but not be limited to, review of such information described below. Information (drawings, specifications, etc.) already included in Operating Unit 10, Appendix 8.0 of this Permit may be included in the report by reference and should include drawing and document numbers. The IQRPE Reports will be consistent with the information provided separately in ii. through xiii. below and the

IQRPE Reports specified in Permit Conditions III.10.G.10.b. and III.10.G.10.c. [WAC 173-303-640(3)(a), in accordance with WAC 173-303-680(2) and WAC 173-303-806(4)(i)(i)(A) through (B)];

III.10.G.10.d.ii. Design drawings (Process Flow Diagrams, Piping and Instrumentation Diagrams [including pressure control systems]) specifications and other information specific to equipment (these drawings should include all equipment such as pipe, valves, fittings, pumps, instruments, etc) [WAC 173-303-640(3)(a), in accordance with WAC 173-303-680(2) and WAC 173-303-806(4)(i)(i)(A) through (B)];

III.10.G.10.d.iii. The Permittees will provide the design criteria (references to codes and standards, load definitions, and load combinations, materials of construction, and analysis/design methodology) and typical design details for the support of the equipment [WAC 173-303-640(3)(a) and WAC 173-303-640(3)(f), in accordance with WAC 173-303-680 and WAC 173-303-806(4)(i)(i)(B)];

III.10.G.10.d.iv. A description of materials and equipment used to provide corrosion protection for external metal components in contact with soil and water, including factors affecting the potential for corrosion [WAC 173-303-640(3)(a)(iii)(B), in accordance with WAC 173-303-680(2) and WAC 173-303-806(4)(i)(i)(A)];

III.10.G.10.d.v. Materials selection documentation for equipment (e.g., physical and chemical tolerances) [WAC 173-303-640(3)(a), in accordance with WAC 173-303-680(2) and WAC 173-303-806(4)(i)(i)(A)];

III.10.G.10.d.vi. Vendor information (including, but not limited to, required performance warranties, as available), consistent with information submitted under ii. above, for equipment will be submitted for incorporation into the Administrative Record [WAC 173-303-640(3)(a), in accordance with WAC 173-303-680(2), WAC 173-303-806(4)(i)(i)(A) through (B), and WAC 173-303-806(4)(i)(iv)];

III.10.G.10.d.vii. Miscellaneous unit, equipment, and leak detection system instrument control logic narrative description (e.g., software functional specifications, descriptions of fail-safe conditions, etc.) [WAC 173-303-680(2), WAC 173-303-806(4)(i)(i)(B), and WAC 173-303-806(4)(i)(v)].

III.10.G.10.d.viii. System Descriptions related to equipment and system descriptions related to leak detection systems, (including instrument control logic and narrative descriptions), for incorporation into the Administrative Record [WAC 173-303-680, WAC 173-303-806(4)(i)(i)(A) through (B), and WAC 173-303-806(4)(i)(v)];

III.10.G.10.d.ix. A detailed description of how the equipment will be installed and tested [WAC 173-303-640(3)(c) through (e) and WAC 173-303-640(4)(b) and (c), in accordance with WAC 173-303-680 and WAC 173-303-806(4)(i)(i)(B)];

III.10.G.10.d.x. For process monitoring, control, and leak detection system instrumentation for the WTP Unit Miscellaneous Unit Systems as identified in Permit Table III.10.G.C, a detailed description of how the process monitoring, control, and leak detection system instrumentation will be installed and tested [WAC 173-303-640(3)(c) through (e), WAC 173-303-640(4)(b) and (c), WAC 173-303-806(4)(c)(vi), and WAC 173-303-806(4)(i)(i)(B)];

III.10.G.10.d.xi. Mass and energy balance for projected normal operating conditions, used in developing the Piping and Instrumentation Diagrams and Process Flow Diagrams, including assumptions and formulas used to complete the mass and energy balance, so that they can

be independently verified, for incorporation into the Administrative Record [WAC 173-303-680(2), WAC 173-303-806(4)(i)(i)(B), and WAC 173-303-806(4)(i)(v)];

III.10.G.10.d.xii. Documentation that miscellaneous units are designed to prevent the accumulation of hydrogen gas levels above the lower explosive limit for incorporation into the Administrative Record [WAC 173-303-680, WAC 173-303-806(4)(i)(i)(A), and WAC 173-303-806(4)(i)(v)].

III.10.G.10.d.xiii. Leak detection system documentation (e.g. vendor information, etc.) consistent with information submitted under Permit Condition III.10.G.10.c.ii. and Permit Conditions III.10.G.10.d.ii., vii., viii., and x. above, will be submitted for incorporation into the Administrative Record.

III.10.G.10.e. Prior to initial receipt of dangerous and/or mixed waste in the WTP Unit, the Permittees will submit to Ecology, pursuant to Permit Condition III.10.C.9.f., the following as specified below for incorporation into Operating Unit 10, Appendix 8.15, except Permit Condition III.10.G.10.e.i., which will be incorporated into Operating Unit 10, Chapter 6.0, of this Permit. All information provided under this permit condition must be consistent with information provided pursuant to Permit Conditions III.10.G.10.b., c., d., and e., III.10.C.3.e., and III.10.C.11.b., as approved by Ecology.

III.10.G.10.e.i. Integrity assessment program and schedule for the Pretreatment Plant Miscellaneous Unit Systems will address the conducting of periodic integrity assessments on the Pretreatment Plant Miscellaneous Unit Systems over the life of the systems, as specified in Permit Condition III.10.G.10.b.ix. and WAC 173-303-640(3)(b), in accordance with WAC 173-303-680, and descriptions of procedures for addressing problems detected during integrity assessments. The schedule must be based on past integrity assessments, age of the system, materials of construction, characteristics of the waste, and any other relevant factors [WAC 173-303-640(3)(b), in accordance with WAC 173-303-680 and WAC 173-303-806(4)(i)(i)(B)];

III.10.G.10.e.ii. Detailed plans and descriptions, demonstrating the leak detection system is operated so that it will detect the failure of either the primary or secondary containment structure or the presence of any release of dangerous and/or mixed waste or accumulated liquid in the secondary containment system within twenty-four (24) hours WAC 173-303-640(4)(c)(iii). Detection of a leak of at least 0.1 gallons per hour within twenty-four (24) hours is defined as being able to detect a leak within twenty-four (24) hours. Any exceptions to this criteria must be approved by Ecology in accordance with WAC 173-303-680, WAC 173-303-640(4)(c)(iii), and WAC 173-303-806(4)(i)(i)(B)];

III.10.G.10.e.iii. Detailed operational plans and descriptions, demonstrating that spilled or leaked waste and accumulated liquids can be removed from the secondary containment system within twenty-four (24) hours [WAC 173-303-806(4)(i)(i)(B)];

III.10.G.10.e.iv. Descriptions of operational procedures demonstrating appropriate controls and practices are in place to prevent spills and overflows from the Pretreatment Plant Miscellaneous Unit Systems, or containment systems, in compliance with WAC 173-303-640(5)(b)(i) through (iii), in accordance with WAC 173-303-680 [WAC 173-303-806(4)(i)(i)(B)];

III.10.G.10.e.v. Description of procedures for investigation and repair of the Pretreatment Plant Miscellaneous Unit Systems [WAC 173-303–640(6) and WAC 173-303-640(7)(e) and (f), in accordance with WAC 173-303-680, WAC 173-303-320, WAC 173-303-806(4)(a)(v), and WAC 173-303-806(4)(i)(i)(B)];

III.10.G.10.e.vi. Updated Chapter 4.0, Narrative Descriptions, Tables and Figures as identified in Permit Tables III.10.G.A and III.10.G.B., as modified pursuant to Permit Condition III.10.G.10.e.ix., and updated to identify routinely non-accessible Pretreatment Plant Miscellaneous Unit Systems [WAC 173-303-680 and WAC 173-303-806(4)(i)(i)(A) through (B)];

III.10.G.10.e.vii. Descriptions of procedures for management of ignitable and reactive, and incompatible dangerous and/or mixed waste, in accordance with WAC 173-303-640(9) and (10), in accordance with WAC 173-303-680 and WAC 173-303-806(4)(i)(i)(B).

III.10.G.10.e.viii. A description of the tracking system used to track dangerous and/or mixed waste generated throughout the Pretreatment Plant Miscellaneous Unit Systems, pursuant to WAC 173-303-380.

III.10.G.10.e.ix. Permit Table III.10.G.A, amended as follows [WAC 173-303-680 and WAC 173-303-806(4)(i)(i)(A) through (B)]:

A. Under column 1, update and complete list of dangerous and mixed waste Pretreatment Plant Miscellaneous Unit Systems, including plant items which comprise each system (listed by item number).

B. Under column 2, update and complete system designations.

C. Under column 3, replace the 'Reserved' with the Operating Unit 10, Appendix 8.0 subsections specific to miscellaneous unit systems as listed in column 1.

D. Under column 4, update and complete list of narrative description tables and figures.

E. Under column 5, update and complete maximum operating volume for each miscellaneous unit, as applicable.

F. Permit Table III.10.G.A.i., amended as follows:

1. Under column 1, update and complete list of plant items that comprise the Pretreatment Plant Vessel Vent System (listed by item number).

2. Under column 2, update and complete designations.

3. Under column 3, replace the 'Reserved' with the Operating Unit 10, Appendix 8.0, subsections (e.g., 9.1, 9.2, etc.) specific to systems as listed in column 1.

4. Under column 4, update and complete list of narrative description tables and figures.

III.10.G.10.e.x. Permit Table III.10.G.C. will be completed for Pretreatment Plant Miscellaneous Unit System process and leak detection system monitors and instruments (to include, but not be limited to: instruments and monitors measuring and/or controlling flow, pressure, temperature, density, pH, level, humidity, and emissions) to provide the information as specified in each column heading. Process and leak detection system monitors and instruments for critical systems as specified in Operating Unit 10, Appendix 2.0 and as updated pursuant to Permit Condition III.10.C.9.b.and for operating parameters as required to comply with Permit Condition III.10.C.3.e.iii. will be addressed. Process monitors and instruments for non-waste management operations (e.g., utilities, raw chemical storage, non-contact cooling waters, etc.) are excluded from this permit condition [WAC 173-303-680, WAC 173-303-806(4)(i)(i)(A) through (B), and WAC 173-303-806(4)(i)(v)];

III.10.G.10.e.xi. Supporting documentation for operating trips and expected operating range as specified in Permit Table III.10.G.C., as approved pursuant to Permit Condition III.10.G.10.e.x. [WAC 173-303-680, WAC 173-303-806(4)(i)(i)(B), WAC 173-303-806(4)(i)(iv), and WAC 173-303-806(4)(i)(v)];

III.10.G.10.e.xii. Documentation of process and leak detection instruments and monitors (as listed in Permit Table III.10.G.C.) for the Pretreatment Plant Miscellaneous Unit Systems to include, but not be limited to, the following [WAC 173-303-680, WAC 173-303-806(4)(i)(i)(B), and WAC 173-303-806(4)(i)(v)]:

A. Procurement Specifications

B. Location used

C. Range, precision, and accuracy

D. Detailed descriptions of calibration/functionality test procedures (e.g., method number [ASTM]) or provide a copy of manufacturer's recommended calibration procedures.

E. Calibration/functionality test, inspection, and routine maintenance schedules and checklists, including justification for calibration, inspection and maintenance frequencies, criteria for identifying instruments found to be significantly out of calibration, and corrective action to be taken for instruments found to be significantly out of calibration (e.g., increasing frequency of calibration, instrument replacement, etc.)

F. Equipment instrument control logic narrative description (e.g., software functional specifications, descriptions of fail-safe conditions, etc.) [WAC 173-303-680(2), WAC 173-303-806(4)(i)(i)(B), and WAC 173-303-806(4)(i)(v)].

1

Table III.10.G.A – Pretreatment Plant Miscellaneous Unit Systems

Miscellaneous Unit System Description[a]	Miscellaneous Unit System Designation	Description Drawings	Narrative Description, Tables, & Figures	Maximum Capacity (gallons)
Waste Feed Evaporation Process System FEP-SEP-00001A (Waste Feed Evaporator Separator Vessel) FEP-SEP-00001B (Waste Feed Evaporator Separator Vessel)	FEP	**24590-PTF** -3PS-MEVV-TP001 -M5-V17T-P0004001 -M5-V17T-P0004002 -M6-FEP-P0001 -M6-FEP-P0002 -M6-FEP-P0003 -M6-FEP-P0004 -M6-FEP-P0005 -MVD-FEP-P0001 -MVD-FEP-P0002 -MVD-FEP-P0003 -MVD-FEP-P0006 -MVD-FEP-P0007 -MV-FEP-P0001 -MV-FEP-P0002 -N1D-FEP-P0002 -N1D-FEP-P0003 -N1D-FEP-P0004 -N1D-FEP-P0005 -P1-P01T-P0001 -P1-P01T-P0002 -P1-P01T-P0007	Section 4.1.2.2.; Table 4-8; and Figures 4A-1, 4A-2 and 4A-02A of Operating Unit 10, Chapter 4 of this Permit.	FEP-SEP-00001A = 13,359 FEP-SEP-00001B = 13,359

Table III.10.G.A – Pretreatment Plant Miscellaneous Unit Systems

Miscellaneous Unit System Description[a]	Miscellaneous Unit System Designation	Description Drawings	Narrative Description, Tables, & Figures	Maximum Capacity (gallons)
Waste Feed Evaporation Process System (Cont.) FEP-COND-00001A (Waste Evaporator Primary Condenser) FEP-COND-00001B (Waste Evaporator Primary Condenser) FEP-COND-00002A (Waste Evaporator Inter-Condenser) FEP-COND-00002B (Waste Evaporator Inter-Condenser) FEP-COND-00003A (Waste Evaporator After-Condenser) FEP-COND-00003B (Waste Evaporator After -ondenser)	FEP	**24590-PTF** -3PS-MEVV-TP001 -M5-V17T-P0004001 -M5-V17T-P0004002 -MED-FEP-P0003 -MED-FEP-P0004 -MED-FEP-P0005 -MED-FEP-P0006 -MED-FEP-P0007 -MED-FEP-P0008 -ME-FEP-COND-00001A/B -ME-FEP-COND-00002A/B -N1D-FEP-P0008 -N1D-FEP-P0009 -N1D-FEP-P0010 -P1-P01T-P0001 -P1-P01T-P0002 -P1-P01T-P0007	Section 4.1.2.2.; Table 4-8; and Figures 4A-1, 4A-2 and 4A-02A of Operating Unit 10, Chapter 4 of this Permit.	N/A
Waste Feed Evaporation Process System (Cont.) FEP-RBLR-00001A (Reboiler) FEP-RBLR-00001B (Reboiler)	FEP	**24590-PTF** -3PS-MEVV-TP001 -M5-V17T-P0004001 -M5-V17T-P0004002 -MED-FEP-P0010	Section 4.1.2.2.; Table 4-8; and Figures 4A-1, 4A-2 and 4A-02A of Operating Unit 10, Chapter 4 of this	N/A

Table III.10.G.A – Pretreatment Plant Miscellaneous Unit Systems

Miscellaneous Unit System Description[a]	Miscellaneous Unit System Designation	Description Drawings	Narrative Description, Tables, & Figures	Maximum Capacity (gallons)
		-N1D-FEP-P0007 -P1-P01T-P0001 -P1-P01T-P0002 -P1-P01T-P0007	Permit.	
Cesium Nitric Acid Recovery Process System CNP-EVAP-00001 (Cs Evaporator Separator Vessel)	CNP	**24590-PTF** -3PS-MEVV-TP002 -M5D-CNP-00001 -M5-V17T-P0014 -M6-CNP-P0001 -M6-CNP-P0002 -M6-CNP-P0008 -ME-CNP-EVAP-00001 -MV-CNP-P0001 -MV-CNP-P0002 -MV-CNP-P0003 -MV-CNP-P0005 -MV-CNP-P0007 -MV-CNP-P0010 -MVD-CNP-P0003 -MVD-CNP-P0010 -MWD-CNP-P0001 -N1D-CNP-P0005 -N1D-CNP-P0006 -N1D-CNP-P0009 -N1D-CNP-P0011	Section 4.1.2.6.; Table 4-8; and Figures 4A-1, 4A-2 and 4A-02A of Operating Unit 10, Chapter 4 of this Permit.	CNP-EVAP-00001 = RESERVED

Table III.10.G.A – Pretreatment Plant Miscellaneous Unit Systems

Miscellaneous Unit System Description[a]	Miscellaneous Unit System Designation	Description Drawings	Narrative Description, Tables, & Figures	Maximum Capacity (gallons)
		-P1-P01T-P0001 -P1-P01T-P0002 -P1-P01T-P0003 -P1-P01T-P0004		
Cesium Nitric Acid Recovery Process System (Cont.) Cs Evaporator Concentrate Reboiler (CNP-HX-00001)	CNP	**24590-PTF** -3PS-MEVV-TP002 -M5D-CNP-00001 -M5-V17T-P0014 -M6-CNP-P0001 -M6-CNP-P0002 -M6-CNP-P0008 -MB-CNP-HX-00001 -ME-CNP-HX-00002 -ME-CNP-HX-00003 -ME-CNP-HX-00004 -MED-CNP-P0003 -MED-CNP-P0004 -MED-CNP-P0005 -MED-CNP-P0010 -P1-P01T-P0001 -P1-P01T-P0002 -P1-P01T-P0003 -P1-P01T-P0004	Section 4.1.2.6.; Table 4-8; and Figures 4A-1, 4A-2 and 4A-02A of Operating Unit 10, Chapter 4 of this Permit.	N/A

Table III.10.G.A – Pretreatment Plant Miscellaneous Unit Systems

Miscellaneous Unit System Description[a]	Miscellaneous Unit System Designation	Description Drawings	Narrative Description, Tables, & Figures	Maximum Capacity (gallons)
Cesium Nitric Acid Recovery Process System (Cont.) CNP-DISTC-00001 (Cs Evaporator Nitric Acid Rectifier Column)	CNP	**24590-PTF** -M5-V17T-P0014 -M6-CNP-P0010 -N1D-CNP-P0001 -P1-P01T-P0003 -3PS-MEVV-TP002	Section 4.1.2.6.; Table 4-8; and Figures 4A-1, 4A-2 and 4A-02A of Operating Unit 10, Chapter 4 of this Permit.	RESERVED
Cesium Nitric Acid Recovery Process System (Cont.) CNP-HX-00002 (Cs Evaporator Primary Condenser) CNP-HX-00003 (Cs Evaporator Inter-Condenser) CNP-HX-00004 (Cs Evaporator After-Condenser)	CNP	**24590-PTF** -M5-V17T-P0014 -M5D-CNP-00001 -M6-CNP-P0001 -M6-CNP-P0002 -M6-CNP-P0010 -MB-CNP-HX-00001 -ME-CNP-EVAP-00001 -ME-CNP-HX-00002 -ME-CNP-HX-00003 -ME-CNP-HX-00004 -N1D-CNP-P0002 -N1D-CNP-P0003 -N1D-CNP-P0012 -P1-P01T-P0001 -P1-P01T-P0002 -P1-P01T-P0003 -P1-P01T-P0004 -3PS-MEVV-TP002	Section 4.1.2.6.; Table 4-8; and Figures 4A-1, 4A-2 and 4A-02A of Operating Unit 10, Chapter 4 of this Permit.	RESERVED

Table III.10.G.A – Pretreatment Plant Miscellaneous Unit Systems

Miscellaneous Unit System Description[a]	Miscellaneous Unit System Designation	Description Drawings	Narrative Description, Tables, & Figures	Maximum Capacity (gallons)
Treated LAW Evaporation Process System TLP-SEP-00001 (Treated LAW Evaporator Separator Vessel)	TLP	**24590-PTF** -3PS-MEVV-TP001 -M5-V17T-P0005 -M6-TLP-P0001 -M6-TLP-P0002 -M6-TLP-P0003 -MVD-TLP-P0001 -MVD-TLP-P0002 -MVD-TLP-P0004 -MVD-TLP-P0005 -MV-TLP-P0001 -MV-TLP-P0002 -N1D-TLP-P0001 -N1D-TLP-P0005 -N1D-TLP-P0006 -P1-P01T-P0001 -P1-P01T-P0002 -P1-P01T-P0003	Section 4.1.2.11; Table 4-8; and Figures 4A-1, 4A-2 and 4A-02A of Operating Unit 10, Chapter 4 of this Permit.	TLP-SEP-00001= 13,359

Table III.10.G.A – Pretreatment Plant Miscellaneous Unit Systems

Miscellaneous Unit System Description[a]	Miscellaneous Unit System Designation	Description Drawings	Narrative Description, Tables, & Figures	Maximum Capacity (gallons)
Treated LAW Evaporation Process System (Cont.) TLP-COND-00001 (Primary Condenser) TLP-COND-00002 (Inter-condenser) TLP-COND-00003 (After-condenser)	TLP	**24590-PTF** -3PS-MEVV-TP001 -M5-V17T-P0005 -M6-TLP-P0001 -M6-TLP-P0002 -M6-TLP-P0003 -MED-TLP-P0001 -MED-TLP-P0002 -MED-TLP-P0003 -MV-TLP-P0001 -MV-TLP-P0002 -N1D-TLP-P0002 -N1D-TLP-P0003 -P1-P01T-P0001 -P1-P01T-P0002 -P1-P01T-P0003	Section 4.1.2.11; Table 4-8; and Figures 4A-1, 4A-2 and 4A-02A of Operating Unit 10, Chapter 4 of this Permit.	N/A
Treated LAW Evaporation Process System (Cont.) TLP-RBLR-00001 (Reboiler)	TLP	**24590-PTF** -3PS-MEVV-TP001 -M5-V17T-P0005 -MV-TLP-P0001 -MV-TLP-P0002 -N1D-TLP-P0011 -P1-P01T-P0001 -P1-P01T-P0002 -P1-P01T-P0003	Section 4.1.2.11; Table 4-8; and Figures 4A-1, 4A-2 and 4A-02A of Operating Unit 10, Chapter 4 of this Permit.	N/A

Table III.10.G.A – Pretreatment Plant Miscellaneous Unit Systems

Miscellaneous Unit System Description[a]	Miscellaneous Unit System Designation	Description Drawings	Narrative Description, Tables, & Figures	Maximum Capacity (gallons)

Footnotes:

[a] The Pretreatment Vessel Vent Process (PVP), Process Vessel Vent Systems (PVV), Pulse Jet Mixer Exhaust System (PJV), and Pretreatment Treated LAW Evaporator Separator Vessel System (TLP) specified in Permit Table III.10.G.A.i is shared between the Pretreatment Plant Miscellaneous Unit Systems. Any references in this Permit to the individual Pretreatment Plant Miscellaneous Unit Systems are also a reference to the Pretreatment Vessel Vent Process (PVP), Process Vessel Vent Systems (PVV), Pulse Jet Mixer Exhaust System (PJV), and Pretreatment Treated LAW Evaporator Separator Vessel System (TLP) Systems. Any reference in this Permit to Permit Table III.10.G.A is also a reference to Permit Table III.10.G.A.i.

1
2

1
2

Table III.10.G.A.i – Pretreatment Plant Vessel Vent Systems Associated with Pretreatment Plant Miscellaneous Unit Systems

Description	Designation	Description Drawings	Narrative Description, Tables & Figures
Pretreatment Vessel Vent Process System PVP-SCB-00002 (Caustic Scrubber)	PVP	**24590-PTF** -M5-V17T-P0021001 -M5-V17T-P0021004 -M6-PVP-P0002 -M6-PVP-P0017 -M6-PWD-P0044 -MKD-PVP-P0002 -MVD-PVP-P0001 -MV-PVP-P0002 -MV-PVP-P0004 -N1D-PVP-P0001 -N1D-PVP-P0003 -N1D-PVP-P0008 -N1D-PVP-P0009 -P1-P01T-P0003 -P1-P01T-P0004	Section 4.1.2.16; Table 4-8; and Figures 4A-1, 4A-2 and 4A-02A of Operating Unit 10, Chapter 4 of this Permit.
Pretreatment Vessel Vent Process System (Cont.) PVP-HEME-00001A (HEME Filter) PVP-HEME-00001B (HEME Filter) PVP-HEME-00001C (HEME Filter)	PVP	**24590-PTF** -M5-V17T-P0021001 -M5-V17T-P0021004 -P1-P01T-P0001 -P1-P01T-P0002 -P1-P01T-P0003	Section 4.1.2.16; Table 4-8; and Figures 4A-1, 4A-2 and 4A-02A of Operating Unit 10, Chapter 4 of this Permit.

Table III.10.G.A.i – Pretreatment Plant Vessel Vent Systems Associated with Pretreatment Plant Miscellaneous Unit Systems

Description	Designation	Description Drawings	Narrative Description, Tables & Figures
		-P1-P01T-P0004	
Pretreatment Vessel Vent Process System (Cont.) PVP-HX-00002 (Vessel Vent Scrubbing Liquid Cooler)	PVP	**24590-PTF** -M5-V17T-P0021001 -M6-PVP-P0017 -P1-P01T-P0002 -P1-P01T-P0003 -P1-P01T-P0004	Section 4.1.2.16; Table 4-8; and Figures 4A-1, 4A-2 and 4A-02A of Operating Unit 10, Chapter 4 of this Permit.
Pretreatment Vessel Vent Process System (Cont.) PVP-OXID-00001 (VOC Oxidizer)	PVP	**24590-PTF** -M5-V17T-P0021001 -M5-V17T-P0021004 -M6-PVP-P00017 -M6-PVP-P00018 -MKD-PVP-00001 -N1D-PVP-P0002 -P1-P01T-P0001 -P1-P01T-P0002 -P1-P01T-P0003 -P1-P01T-P0004	Section 4.1.2.16; Table 4-8; and Figures 4A-1, 4A-2 and 4A-02A of Operating Unit 10, Chapter 4 of this Permit.
Pretreatment Vessel Vent Process System (Cont.) PVP-CLR-00001 (Vessel Vent Scrubbing Liquid Cooler, Aftercooler)	PVP	**24590-PTF** -M5-V17T-P0021001 -M5-V17T-P0021004 -P1-P01T-P0001	Section 4.1.2.16; Table 4-8; and Figures 4A-1, 4A-2 and 4A-02A of Operating Unit 10, Chapter 4 of this Permit.

Table III.10.G.A.i – Pretreatment Plant Vessel Vent Systems Associated with Pretreatment Plant Miscellaneous Unit Systems

Description	Designation	Description Drawings	Narrative Description, Tables & Figures
		-P1-P01T-P0002 -P1-P01T-P0003 -P1-P01T-P0004	
Pretreatment Vessel Vent Process System (Cont.) PVP-ADBR-00001A (Vessel Vent Carbon Bed Absorber) PVP-ADBR-00001B (Vessel Vent Carbon Bed Absorber)	PVP	**24590-PTF** -M5-V17T-P0021001 -M5-V17T-P0021004 -P1-P01T-P0001 -P1-P01T-P0002 -P1-P01T-P0003 -P1-P01T-P0004	Section 4.1.2.16; Table 4-8; and Figures 4A-1, 4A-2 and 4A-02A of Operating Unit 10, Chapter 4 of this Permit.
Pretreatment Vessel Vent Process System (Cont.) PVP-FILT-00001 (Vessel Vent Adsorber Outlet Filter)	PVP	**24590-PTF** -M5-V17T-P0021001 -M5-V17T-P0021004 -P1-P01T-P0002 -P1-P01T-P0003 -P1-P01T-P0004	Section 4.1.2.16; Table 4-8; and Figures 4A-1, 4A-2 and 4A-02A of Operating Unit 10, Chapter 4 of this Permit.
Process Vessel Vent System PVV-HEPA-00001A (Primary HEPA Filter) PVV-HEPA-00001B (Primary HEPA Filter)	PVV	**24590-PTF** -M5-V17T-P0021001 -P1-P01T-P00002	Section 4.1.2.16; Table 4-8; and Figures 4A-1, 4A-2 and 4A-02A of Operating Unit 10, Chapter 4 of this Permit.

Table III.10.G.A.i – Pretreatment Plant Vessel Vent Systems Associated with Pretreatment Plant Miscellaneous Unit Systems

Description	Designation	Description Drawings	Narrative Description, Tables & Figures
PVV-HEPA-00002A (Secondary HEPA Filter) PVV-HEPA-00002B (Secondary HEPA Filter)			
Process Vessel Vent System (Cont.) PVV-FAN-00001A (Vessel Vent Exhaust Fan) PVV-FAN-00001B (Vessel Vent Exhaust Fan)	PVV	**24590-PTF** M5-V17T-P0021001 -M5-V17T-P0021004 -P1-P01T-P0002 -P1-P01T-P0003 -P1-P01T-P0004	Section 4.1.2.16; Table 4-8; and Figures 4A-1, 4A-2 and 4A-02A of Operating Unit 10, Chapter 4 of this Permit.
Process Vessel Vent System (Cont.) PVV Stack and associated equipment	PVV	**24590-PTF** -M5-V17T-P0021001 -M5-V17T-P0021004 -P1-P01T-P0001 -P1-P01T-P0002 -P1-P01T-P0003 -P1-P01T-P0004	Section 4.1.2.16; Table 4-8; and Figures 4A-1, 4A-2 and 4A-02A of Operating Unit 10, Chapter 4 of this Permit.
Pretreatment Pulse Jet Mixer Exhaust Vent System PJV-HEPA-00001A (Primary HEPA Filter) PJV-HEPA-00001B (Primary HEPA Filter)	PJV	**24590-PTF** -M5-V17T-P0021002 -M6-PJV-P0001 -M6-PJV-P0002 -M6-PJV-P0004	Section 4.1.2.17; Table 4-8; and Figures 4A-1, 4A-2 and 4A-02A of Operating Unit 10, Chapter 4 of this Permit.

Table III.10.G.A.i – Pretreatment Plant Vessel Vent Systems Associated with Pretreatment Plant Miscellaneous Unit Systems

Description	Designation	Description Drawings	Narrative Description, Tables & Figures
PJV-HEPA-00001C (Primary HEPA Filter) PJV-HEPA-00001D (Primary HEPA Filter) PJV-HEPA-00001E (Primary HEPA Filter) PJV-HEPA-00001F (Primary HEPA Filter) PJV-HEPA-00001G (Primary HEPA Filter) PJV-HEPA-00002A (Secondary HEPA Filter) PJV-HEPA-00002B (Secondary HEPA Filter) PJV-HEPA-00002C (Secondary HEPA Filter) PJV-HEPA-00002D (Secondary HEPA Filter) PJV-HEPA-00002E (Secondary HEPA Filter) PJV-HEPA-00002F (Secondary HEPA Filter)		-MVD-PJV-P0003 -N1D-PJV-P0001 -P1-P01T-P0001	
Pretreatment Pulse Jet Mixer Exhaust Vent System (Cont.) PJV-FAN-00001A (Exhaust Fan) PJV-FAN-00001B (Exhaust Fan)	PJV	**24590-PTF** -M5-V17T-P0021002 -M6-PJV-P0001 -M6-PJV-P0002 -M6-PJV-P0004	Section 4.1.2.17; Table 4-8; and Figures 4A-1, 4A-2 and 4A-02A of Operating Unit 10, Chapter 4 of this Permit.

Table III.10.G.A.i – Pretreatment Plant Vessel Vent Systems Associated with Pretreatment Plant Miscellaneous Unit Systems

Description	Designation	Description Drawings	Narrative Description, Tables & Figures
PJV-FAN-00001C (Exhaust Fan)		-MVD-PJV-P0003 -N1D-PJV-P0001 -P1-P01T-P0001	
Pretreatment Pulse Jet Mixer Exhaust Vent System (Cont.) PJV-DMST-00002A (Demister) PJV-DMST-00002B (Demister) PJV-DMST-00002C (Demisters)	PJV	**24590-PTF** -M5-V17T-P0021002 -M6-PJV-P0001 -M6-PJV-P0002 -M6-PJV-P0004 -MVD-PJV-P0003 -N1D-PJV-P0001 -P1-P01T-P0001	Section 4.1.2.17; Table 4-8; and Figures 4A-1, 4A-2 and 4A-02A of Operating Unit 10, Chapter 4 of this Permit.
Pretreatment Pulse Jet Mixer Exhaust Vent System (Cont.) PJV Stack and associated equipment	PJV	**24590-PTF** -M5-V17T-P0021002 -M6-PJV-P0001 -M6-PJV-P0002 -M6-PJV-P0004 -MVD-PJV-P0003 -N1D-PJV-P0001 -P1-P01T-P0001	Section 4.1.2.17; Table 4-8; and Figures 4A-1, 4A-2 and 4A-02A of Operating Unit 10, Chapter 4 of this Permit.

Footnotes:
[a] The Pretreatment Vessel Vent Process (PVP), Process Vessel Vent Systems (PVV), and Pulse Jet Mixer Exhaust System (PJV) specified in Permit Table III.10.G.A.i are shared between the Pretreatment Plant Miscellaneous Unit Systems. Any references in this Permit to the individual Pretreatment Plant Miscellaneous Unit Systems are also a reference to the Pretreatment Vessel Vent Process (PVP), Process Vessel Vent Systems (PVV), and Pulse Jet Mixer Exhaust System (PJV) Systems. Any reference in this Permit to Permit Table III.10.G.A is also a reference to Permit Table III.10.G.A.i.

1

1

Table III.10.G.B – Pretreatment Plant Miscellaneous Unit Secondary Containment Systems Including Sumps, Bulges, and Floor Drains

Sump, Bulge or Floor Drain I.D.# & Room Location	Maximum Sump/Bulge (gallons), or Drain Line (gallons per minute) Capacity	Sump Type/Nominal Operating Volume (gallons)	Sump, Bulge or Drain Line Dimensions[a] (inches) & Materials of Construction	Engineering Description (Drawings No.'s, Specification No.'s etc.)
PVP-BULGE-00001 P-0105 (Vessel Vent Caustic Scrubber Transfer Pump Bulge, El. 0')	RESERVED	Dry Sump	RESERVED	**24590-PTF** -M6-PVP-P0017 -P1-P01T-P0001
PVP-BULGE-00014 P-0302(Vessel Vent Heat Exchanger Bulge, El. 56')	RESERVED	RESERVED	RESERVED	**24590-PTF** -M6-PVP-P0017
RESERVED	RESERVED	RESERVED	RESERVED	RESERVED
Footnotes: [a]Dimensions listed are based on permitted design. Actual dimensions may vary within plus or minus (TBD).				

2
3

Table III.10.G.C. – Pretreatment Plant Miscellaneous Unit System Process and Leak Detection Instruments and Parameters

Tank System Name and Locator (including P&ID)	Control Parameter	Type of Instrument or Control Device	Location of Instrument or Control Device (Tag No.)	Instrument Range	Expected Operating Range or Setpoint	Fail States	Instrument Accuracy	Operating Trips (Description & Numerical Limits)	Instrument Calibration Method No. and Frequency

Table III.10.G.C. – Pretreatment Plant Miscellaneous Unit System Process and Leak Detection Instruments and Parameters

Tank System Name and Locator (including P&ID)	Control Parameter	Type of Instrument or Control Device	Location of Instrument or Control Device (Tag No.)	Instrument Range	Expected Operating Range or Setpoint	Fail States	Instrument Accuracy	Operating Trips (Description & Numerical Limits)	Instrument Calibration Method No. and Frequency
PVP-BULGE-00001[a]	RESERVED	RESERVED	RESERVED	RESERVED	RESERVED	RESERVED	RESERVED	RESERVED	RESERVED
PVP-BULGE-00014[a]	RESERVED	RESERVED	RESERVED	RESERVED	RESERVED	RESERVED	RESERVED	RESERVED	RESERVED
RESERVED	RESERVED	RESERVED	RESERVED	RESERVED	RESERVED	RESERVED	RESERVED	RESERVED	RESERVED

Footnotes:
[a]Sump locator (including P&ID designator) is located on Permit Table III.10.G.B – Pretreatreatment Plant Miscellaneous Unit Secondary Containment Systems Including Sumps, Bulges, and Floor Drains.

Table III.10.G.D. – Pretreatment Plant Miscellaneous Unit Systems
Estimated Emission Rates

Chemicals	CAS Number	Emission Rates (grams /second)
RESERVED	RESERVED	RESERVED

III.10.H **LAW Vitrification System – Short Term Miscellaneous Thermal Treatment Unit-Shakedown, Demonstration Test, and Post Demonstration Test**

For purposes of Permit Section III.10.H, where reference is made to WAC 173-303-640, the following substitutions apply: substituting the terms "LAW Vitrification System" for "tank system(s)," "sub-system(s)" for "tank(s)," "sub-system equipment" for "ancillary equipment," and "sub-system(s) or sub-system equipment of a LAW Vitrification System" for "component(s)" in accordance with WAC 173-303-680.

III.10.H.1. General Conditions During Shakedown, Demonstration Test, and Post-Demonstration Test for LAW Vitrification System

III.10.H.1.a. Construction and Maintenance [WAC 173-303-640, in accordance with WAC 173-303-680(2) and (3), and WAC 173-303-340].

III.10.H.1.a.i. The Permittees will construct the LAW Vitrification System (listed in Permit Tables III.10.H.A and B., as approved/modified pursuant to Permit Condition III.10.H.5.) as specified in Permit Condition III.10.H.1. and Operating Unit 10, Chapter 4.0 of this Permit, and Operating Unit 10, Appendices 9.1 through 9.15 and 9.17 of this Permit, as approved pursuant to Permit Conditions III.10.H.5.a. through d., and III.10.H.5.f.

III.10.H.1.a.ii. The Permittees will construct all containment systems for the LAW Vitrification System as specified in Operating Unit 10, Chapter 4.0 of this Permit, and Operating Unit 10, Appendices 9.2 and 9.4 through 9.14 of this Permit, as approved pursuant to Permit Conditions III.10.H.5.a. through d.

III.10.H.1.a.iii. The Permittees will ensure all certifications required by specialists (e.g., independent, qualified registered professional engineer, independent corrosion expert, independent, qualified installation inspector, etc.) use the following statement or equivalent pursuant to Permit Condition III.10.C.10.:

"I, (Insert Name) have (choose one or more of the following: overseen, supervised, reviewed, and/or certified) a portion of the design or installation of a new LAW Vitrification System or component located at (address), and owned/operated by (name(s)). My duties were: (e.g., installation inspector, testing for tightness, etc.), for the following LAW Vitrification System components (e.g., the venting piping, etc.), as required by the Dangerous Waste Regulations, namely, WAC 173-303-640(3) (applicable paragraphs (i.e., (a) through (g)) in accordance with WAC 173-303-680).

"I certify under penalty of law that I have personally examined and am familiar with the information submitted in this document and all attachments and that, based on my inquiry of those individuals immediately responsible for obtaining the information, I believe that the information is true, accurate, and complete. I am aware that there are significant penalties for submitting false information, including the possibility of fine and imprisonment."

III.10.H.1.a.iv. The Permittees must ensure that proper handling procedures are adhered to in order to prevent damage to the LAW Vitrification System during installation. Prior to covering, enclosing, or placing the new LAW Vitrification System or component in use, an

independent, qualified, installation inspector or an independent, qualified, registered professional engineer, either of whom is trained and experienced in the proper installation of similar systems or components, must inspect the system for the presence of any of the following items:

A. Weld breaks;

B. Punctures;

C. Scrapes of protective coatings;

D. Cracks;

E. Corrosion;

F. Other structural damage or inadequate construction/installation.

All discrepancies must be remedied before the LAW Vitrification System is covered, enclosed, or placed in use [WAC 173-303-640(3)(c), in accordance with WAC 173-303-680(2) and (3)].

III.10.H.1.a.v. For the LAW Vitrification System or components that are placed underground and that are back-filled, the Permittees must provide a backfill material that is a non-corrosive, porous, homogeneous substance. The backfill must be installed so that it is placed completely around the LAW Vitrification System and compacted to ensure that the LAW Vitrification System is fully and uniformly supported [WAC 173-303-640(3)(d), in accordance with WAC 173-303-680(2) and (3)].

III.10.H.1.a.vi. The Permittees must test for tightness the LAW Vitrification System or components, prior to being covered, enclosed, or placed into use. If the LAW Vitrification System or components are found not to be tight, all repairs necessary to remedy the leak(s) in the system must be performed prior to the LAW Vitrification System being covered, enclosed, or placed in use [WAC 173-303-640(3)(e), in accordance with WAC 173-303-680(2) and (3)].

III.10.H.1.a.vii. The Permittees must ensure the LAW Vitrification System equipment is supported and protected against physical damage and excessive stress due to settlement, vibration, expansion, or contraction [WAC 173-303-640(3)(f), in accordance with WAC 173-303-680(2) and (3)].

III.10.H.1.a.viii. The Permittees must provide the type and degree of corrosion protection recommended by an independent corrosion expert, based on the information provided in Operating Unit 10, Appendices 9.9 and 9.11 of this Permit, as approved pursuant to Permit Conditions III.10.H.5.b.i., III.10.H.5.b.iv., III.10.H.5.b.v., III.10.H.5.c.i., III.10.H.5.c.iv., III.10.H.5.c.v., III.10.H.5.d.i., III.10.H.5.d.iv., and III.10.H.5.d.v., or other corrosion protection if Ecology believes other corrosion protection is necessary to ensure the integrity of the LAW Vitrification System during use of the LAW Vitrification System. The installation of a corrosion protection system that is field fabricated must be supervised by an independent corrosion expert to ensure proper installation [WAC 173-303-640(3)(g), in accordance with WAC 173-303-680(2) and (3)].

III.10.H.1.a.ix. Prior to initial receipt of dangerous and/or mixed waste in the WTP Unit, the Permittees will obtain and keep on file in the WTP Unit operating record, written statements by those persons required to certify the design of the LAW Vitrification System and supervise the installation of the LAW Vitrification System, as specified in WAC 173-303-640(3)(b), (c), (d), (e), (f), and (g), in accordance with WAC 173-303-680, attesting that the LAW Vitrification System and corresponding containment system listed in Permit Tables III.10.H.A and III.10.H.B, as approved/modified pursuant to Permit Condition III.10.H.5., were properly designed and installed, and that repairs, in accordance with WAC 173-303-640(3)(c) and (e) were performed [WAC 173-303-640(3)(a) and WAC 173-303-640(3)(h), in accordance with WAC 173-303-680(3)].

III.10.H.1.a.x. The independent LAW Vitrification System installation inspection and subsequent written statements will be certified in accordance with WAC 173-303-810(13)(a), as modified pursuant to Permit Condition III.10.H.1.a.iii., comply with all requirements of WAC 173-303-640(3)(h) in accordance with WAC 173-303-680, and will consider, but not be limited to, the following LAW Vitrification System installation documentation:

A. Field installation report with date of installation;

B. Approved welding procedures;

C. Welder qualification and certifications;

D. Hydro-test reports, as applicable, in accordance with the American Society of Mechanical Engineers Boiler and Pressure Vessel Code, Section VIII, Division 1; American Petroleum Institute (API) Standard 620, or Standard 650, as applicable;

E. Tester credentials;

F. Field inspector credentials;

G. Field inspector reports;

H. Field waiver reports; and

I. Non-compliance reports and corrective action (including field waiver reports) and repair reports.

III.10.H.1.a.xi. The Permittees will ensure periodic integrity assessments are conducted on the LAW Vitrification System, listed in Permit Table III.10.H.A, as approved/modified pursuant to Permit Condition III.10.H.5., over the term of this Permit in accordance with WAC 173-303-680(2) and (3) as specified in WAC 173-303-640(3)(b), following the description of the integrity assessment program and schedule in Operating Unit 10, Chapter 6.0 of this Permit, as approved pursuant to Permit Conditions III.10.H.5.e.i. and III.10.C.5.c. Results of the integrity assessments will be included in the WTP Unit operating record until ten (10) years after post-closure, or corrective action is complete and certified, whichever is later.

III.10.H.1.a.xii. The Permittees will address problems detected during the LAW Vitrification System integrity assessments specified in Permit Condition III.10.H.1.a.xi. following the integrity

assessment program in Operating Unit 10, Chapter 6.0 of this Permit, as approved pursuant to Permit Conditions III.10.H.5.e.i. and III.10.C.5.c.

III.10.H.1.a.xiii. All process monitors/instruments, as specified in Permit Table III.10.H.F, as approved/modified pursuant to Permit Condition III.10.H.5., will be equipped with operational alarms to warn of deviation, or imminent deviation from the limits specified in Permit Table III.10.H.F.

III.10.H.1.a.xiv. The Permittees will install and test all process and leak detection system monitors/instrumentation as specified in Permit Tables III.10.H.C and III.10.H.F, as approved/modified pursuant to Permit Condition III.10.H.5, in accordance with Operating Unit 10, Appendices 9.1, 9.2, and 9.14 of this Permit, as approved pursuant to Permit Conditions III.10.H.5.d.x. and III.10.H.5.f.xvi.

III.10.H.1.a.xv. No dangerous and/or mixed waste will be treated in the LAW Vitrification System unless the operating conditions, specified under Permit Condition III.10.H.1.c. are complied with.

III.10.H.1.a.xvi. The Permittees will not place dangerous and/or mixed waste, treatment reagents, or other materials in the LAW Vitrification System if these substances could cause the subsystem, subsystem equipment, or the containment system to rupture, leak, corrode, or otherwise fail [WAC 173-303-640(5)(a), in accordance with WAC 173-303-680(2)]. This condition is not applicable to corrosion of LAW Vitrification System sub-system or sub-system equipment that are expected to be replaced as part of normal operations (e.g., melters).

III.10.H.1.a.xvii. The Permittees will operate the LAW Vitrification System to prevent spills and overflows using controls and practices as required under WAC 173-303-640(5)(b) described in Permit Condition III.10.C.5 and Operating Unit 10, Appendix 9.18 of this Permit, as approved pursuant to Permit Condition III.10.H.5.e. [WAC 173-303-640(5)(b), in accordance with WAC 173-303-680(2) and (3), and WAC 173-303-806(4)(c)(ix)].

III.10.H.1.a.xviii. For routinely non-accessible LAW Vitrification System sub-systems, as specified in Operating Unit 10, Chapter 4.0 of this Permit, as updated pursuant to Permit Condition III.10.H.5.e.vi., the Permittees will mark all routinely non-accessible LAW Vitrification System sub-systems access points with labels, or signs, to identify the waste contained in each LAW Vitrification System sub-system. The label, or sign, must be legible at a distance of at least fifty (50) feet, and must bear a legend which identifies the waste in a manner which adequately warns employees, emergency response personnel, and the public of the major risk(s) associated with the waste being stored or treated in the LAW Vitrification System sub-systems. For the purposes of this permit condition, "routinely non-accessible" means personnel are unable to enter these areas while waste is being managed in them [WAC 173-303-640(5)(d), in accordance with WAC 173-303-680(2)].

III.10.H.1.a.xix. For all LAW Vitrification System sub-systems not addressed in Permit Condition III.10.H.1.a.xviii., the Permittees will mark all these LAW Vitrification System sub-systems holding dangerous and/or mixed waste with labels, or signs, to identify the waste contained in the LAW Vitrification System sub-systems. The labels, or signs, must be

legible at a distance of at least fifty (50) feet, and must bear a legend which identifies the waste in a manner which adequately warns employees, emergency response personnel, and the public of the major risk(s) associated with the waste being stored or treated in the LAW Vitrification System sub-systems [WAC 173-303-640(5)(d), in accordance with WAC 173-303-680(2)].

III.10.H.1.a.xx. The Permittees will ensure that the secondary containment systems for the LAW Vitrification System sub-systems listed in Permit Tables III.10.H.A. and III.10.H.B, as approved/modified pursuant to Permit Condition III.10.H.5, are free of cracks or gaps to prevent any migration of dangerous and/or mixed waste or accumulated liquid out of the system to the soil, groundwater, or surface water at any time during use of the LAW Vitrification System sub-systems. Any indication that a crack or gap may exist in the containment systems will be investigated and repaired in accordance with Operating Unit 10, Appendix 9.18 of this Permit, as approved pursuant to Permit Condition III.10.H.5.e.v. [WAC 173-303–640(4)(b)(i), WAC 173-303–640(4)(e)(i)(C), and WAC 173-303-640(6), in accordance with WAC 173-303-680(2) and (3), WAC 173-303-806(4)(i)(i)(B), and WAC 173-303-320].

III.10.H.1.a.xxi. The Permittees must immediately, and safely, remove from service any LAW Vitrification System or secondary containment system which through an integrity assessment is found to be "unfit for use" as defined in WAC 173-303-040, following Permit Conditions III.10.H.1.a.xxiii.,A. through D., and F. The affected LAW Vitrification System or secondary containment system must be either repaired or closed in accordance with Permit Condition III.10.H.1.a.xxiii.E. [WAC 173-303-640(7)(e) and (f), WAC 173-303-640(8), in accordance with WAC 173-303-680(3)].

III.10.H.1.a.xxii. An impermeable coating, as specified in Operating Unit 10, Appendices 9.4, 9.5, 9.7, 9.9, 9.11, and 9.12 of this Permit, as approved pursuant to Permit Condition III.10.H.5.b.v. will be maintained for all concrete containment systems and concrete portions of containment systems for each LAW Vitrification System sub-systems listed in Permit Tables III.10.H.A and III.10.H.B, as approved/modified pursuant to Permit Condition III.10.H.5 (concrete containment systems that do not have a liner, pursuant to WAC 173-303-640(4)(e)(i), in accordance with WAC 173-303-680(2), and have construction joints, will meet the requirements of WAC 173-303-640(4)(e)(ii)(C), in accordance with WAC 173-303-680(2). The coating will prevent migration of any dangerous and mixed waste into the concrete. All coatings will meet the following performance standards:

A. The coating must seal the containment surface such that no cracks, seams, or other avenues through which liquid could migrate are present;

B. The coating must be of adequate thickness and strength to withstand the normal operation of equipment and personnel within the given area such that degradation or physical damage to the coating or lining can be identified and remedied before dangerous and mixed waste could migrate from the system; and

C. The coating must be compatible with the dangerous and mixed waste, treatment reagents, or other materials managed in the containment system [WAC 173-303-640(4)(e)(ii)(D), in accordance with WAC 173-303-680(2) and (3), and WAC 173-303-806(4)(i)(i)(A)].

III.10.H.1.a.xxiii. The Permittees will inspect all secondary containment systems for the LAW Vitrification System sub-systems listed in Permit Tables III.10.H.A and III.10.H.B, as approved/modified pursuant to Permit Condition III.10.H.5., in accordance with the Inspection Schedule specified in Operating Unit 10, Chapter 6.0 of this Permit, as approved pursuant to Permit Conditions III.10.H.5.e.i. and III.10.C.5.c., and take the following actions if a leak or spill of dangerous and/or mixed waste is detected in these containment systems [WAC 173-303-640(5)(c) and WAC 173-303-640(6), in accordance with WAC 173-303-680(2) and (3), WAC 173-303-320, and WAC 173-303-806(4)(i)(i)(B)]:

A. Immediately, and safely, stop the flow of dangerous and/or mixed waste into the LAW Vitrification System sub-systems or secondary containment system.

B. Determine the source of the dangerous and/or mixed waste.

C. Remove the dangerous and/or mixed waste from the containment area in accordance with WAC 173-303-680(2) and (3) as specified in WAC 173-303-640(7)(b). The dangerous and/or mixed waste removed from containment areas of the LAW Vitrification System sub-systems will be, as a minimum, managed as mixed waste.

D. If the cause of the release was a spill that has not damaged the integrity of the LAW Vitrification System sub-system, the Permittees may return the LAW Vitrification System sub-system to service in accordance with WAC 173-303-680(2) and (3) as specified in WAC 173-303-640(7)(e)(ii). In such case, the Permittees will take action to insure the incident that caused the dangerous and/or mixed waste to enter the containment system will not reoccur [WAC 173-303-320(3)].

E. If the source of the dangerous and/or mixed waste is determined to be a leak from the primary LAW Vitrification System into the secondary containment system, or the system is unfit for use as determined through an integrity assessment or other inspection, the Permittees will comply with the requirements of WAC 173-303-640(7) and take the following actions:

1. Close the LAW Vitrification System sub-system following procedures in WAC 173-303-640(7)(e)(i), in accordance with WAC 173-303-680 and Operating Unit 10, Chapter 11.0 of this Permit, as approved pursuant to Permit Condition III.10.C.8., or

2. Repair and re-certify (in accordance with WAC 173-303-810(13)(a), as modified pursuant to Permit Condition III.10.H.1.a.iii.) the LAW Vitrification System, in accordance with Operating Unit 10, Appendix 9.18 of this Permit, as approved pursuant to Permit Condition III.10.H.5.e.v., before the LAW Vitrification System is placed back into service [WAC

173-303-640(7)(e)(iii) and WAC 173-303-640(7)(f), in accordance with WAC 173-303-680].

F. The Permittees will document in the operating record actions/procedures taken to comply with A. through E. above as specified in WAC 173-303-640(6)(d), in accordance with WAC 173-303-680(2) and (3).

G. In accordance with WAC 173-303-680(2) and WAC 173-303-680 (3), the Permittees will notify and report releases to the environment to Ecology as specified in WAC 173-303-640(7)(d).

III.10.H.1.a.xxiv. If liquids (e.g., dangerous and/or mixed waste leaks and spills, precipitation, fire water, liquids from damaged or broken pipes) cannot be removed from the secondary containment system within twenty-four (24) hours, Ecology will be verbally notified within twenty-four (24) hours of discovery. The notification will provide the information in A, B, and C, listed below. The Permittees will provide Ecology with a written demonstration within seven (7) business days, identifying at a minimum [WAC 173-303-640(4)(c)(iv) and WAC 173-303-640(7)(b)(ii), in accordance with WAC 173-303-680(3) and WAC 173-303-806(4)(i)(i)(B)]:

A. Reasons for delayed removal;

B. Measures implemented to ensure continued protection of human health and the environment;

C Current actions being taken to remove liquids from secondary containment.

III.10.H.1.a.xxv. All air pollution control devices and capture systems in the LAW Vitrification System will be maintained and operated at all times in a manner so as to minimize the emissions of air contaminants and to minimize process upsets. Procedures for ensuring that the air pollution control devices and capture systems in the LAW Vitrification System are properly operated and maintained so as to minimize the emission of air contaminants and process upsets will be established.

III.10.H.1.a.xxvi. In all future narrative permit submittals, the Permittees will include LAW Vitrification sub-system names with the sub-system designation.

III.10.H.1.a.xxvii. Modifications to approved design, plans, and specifications in Operating Unit 10 of this Permit for the LAW Vitrification System will be allowed only in accordance with Permit Conditions III.10.C.2.e. and f., or III.10.C.2.g., III.10.C.9.d., III.10.C.9.e., and III.10.C.9.h.

III.10.H.1.a.xxviii. For any portion of the LAW Vitrification System which has the potential for formation and accumulation of hydrogen gases, the Permittees will operate the portion to maintain hydrogen levels below the lower explosive limit [WAC 173-303-815(2)(b)(ii)].

III.10.H.1.a.xxix. For each LAW Vitrification System sub-system holding dangerous waste which are acutely or chronically toxic by inhalation, the Permittees will operate the system to prevent escape of vapors, fumes or other emissions into the air [WAC 173-303-806(4)(i)(i)(B) and WAC 173-303-640(5)(e), in accordance with WAC 173-303-680].

III.10.H.1.b. Performance Standards

III.10.H.1.b.i. The LAW Vitrification System must achieve a destruction and removal efficiency (DRE) of 99.99% for the principal organic dangerous constituents (PODCs) listed below [40 CFR §63.1203(c)(1), 40CFR 63.1203(c)(2), in accordance with WAC 173-303-680(2)]:

RESERVED

DRE in this permit condition will be calculated in accordance with the formula given below:

$DRE=[1-(W_{out}/W_{in})] \times 100\%$

Where:

W_{in}=mass feed-rate of one principal organic dangerous constituent (PODC) in a waste feedstream; and

W_{out}=mass emission rate of the same PODC present in exhaust emissions prior to release to the atmosphere.

III.10.H.1.b.ii. Particulate matter emissions from the LAW Vitrification System will not exceed 34 mg/dscm (0.015 grains/dscf) [40 CFR §63.1203(b)(7), in accordance with WAC 173-303-680(2)].

III.10.H.1.b.iii. Hydrochloric acid and chlorine gas emissions from the LAW Vitrification System will not exceed 21 ppmv, combined [40 CFR §63.1203(b)(6), in accordance with WAC 173-303-680(2)].

III.10.H.1.b.iv. Dioxin and Furan TEQ emissions from the LAW Vitrification System will not exceed 0.2 nanograms (ng)/dscm [40 CFR §63.1203(b)(1), in accordance with WAC 173-303-680(2)].

III.10.H.1.b.v. Mercury emissions from the LAW Vitrification System will not exceed 45 µg/dscm [40 CFR §63.1203(b)(2), in accordance with WAC 173-303-680(2)].

III.10.H.1.b.vi. Lead and cadmium emissions from the LAW Vitrification System will not exceed 120 µg/dscm, combined [40 CFR §63.1203(b)(3), in accordance with WAC 173-303-680(2)].

III.10.H.1.b.vii. Arsenic, beryllium, and chromium emissions from the LAW Vitrification System will not exceed 97 µg/dscm, combined [40 CFR §63.1203(b)(4), in accordance with WAC 173-303-680(2)].

III.10.H.1.b.viii. Carbon monoxide (CO) emission from the LAW Vitrification System will not exceed 100 parts per million (ppm) by volume, over an hourly rolling average (as measured and recorded by the continuous monitoring system), dry basis [40 CFR §63.1203(b)(5)(i), in accordance with WAC 173-303-680(2)].

III.10.H.1.b.ix. Hydrocarbon emission from the LAW Vitrification System will not exceed 10 parts per million (ppm) by volume, over an hourly rolling average (as measured and recorded by the continuous monitoring system during demonstration testing required by this Permit),

dry basis, and reported as propane [40 CFR §63.1203(b)(5)(ii), in accordance with WAC 173-303-680(2)].

III.10.H.1.b.x. If the emissions from the LAW Vitrification System exceed the emission rates listed in Permit Table III.10.H.E, as approved pursuant to Permit Condition III.10.C.11.b., the Permittees will notify Ecology in accordance with Permit Condition III.10.H.3.d.vii. [WAC 173-303-680(2) and (3), and WAC 173-303-815(2)(b)(ii)].

The emission limits specified in Permit Conditions III.10.H.1.b.i. through III.10.H.1.b.x. above, will be met for the LAW Vitrification System by limiting feed-rates as specified in Permit Tables III.10.H.D. and III.10.H.F., as approved/modified pursuant to Permit Condition III.10.H.5., compliance with operating conditions specified in Permit Condition III.10.H.1.c. (except as specified in Permit Condition III.10.H.1.b.xii.), and compliance with Permit Condition III.10.H.1.b.xi.

III.10.H.1.b.xi. Treatment effectiveness, feed-rates and operating rates for dangerous and mixed waste management units contained in the LAW Building, but not included in Permit Table III.10.H.A, as approved/modified pursuant to Permit Condition III.10.H.5., will be as specified in Permit Sections III.10.D, III.10.E, III.10.F and consistent with assumptions and basis which are reflected in Operating Unit 10, Appendix 6.3.1 of this Permit, as approved pursuant to Permit Condition III.10.C.11.b. For the purposes of this permit condition, Operating Unit 10, Appendix 6.3.1 will be superceded by Appendix 6.4.1 upon its approval pursuant to either Permit Conditions III.10.C.11.c. or III.10.C.11.d. [WAC 173-303-680(2) and (3), and WAC 173-303-815(2)(b)(ii)].

III.10.H.1.b.xii. Compliance with the operating conditions specified in Permit Condition III.10.H.1.c.,will be regarded as compliance with the required performance standards identified in Permit Conditions III.10.H.1.b.i. through x. However, if it is determined that during the effective period of this Permit that compliance with the operating conditions in Permit Condition III.10.H.1.c. is not sufficient to ensure compliance with the performance standards specified in Permit Conditions III.10.H.1.b.i. through x., the Permit may be modified, revoked, or reissued pursuant to Permit Conditions III.10.C.2.e. and III.10.C.2.f., or III.10.C.2.g.

III.10.H.1.c. Operating Conditions [WAC-303-670(6), in accordance with WAC 173-303-680(2) and (3)].

The Permittees will operate the LAW Vitrification System in accordance with Operating Unit 10, Chapter 4.0 of this Permit, as updated pursuant to Permit Condition III.10.H.5.e.vi., Operating Unit 10, Appendix 9.18 of this Permit, as approved pursuant to Permit Condition III.10.H.5.e., and Operating Unit 10, Appendix 9.15 of this Permit, as approved pursuant to Permit Condition III.10.H.5.f., except as modified pursuant to Permit Conditions III.10.H.1.b.xii., III.10.H.2., III.10.H.3., III.10.H.4., and in accordance with the following:

III.10.H.1.c.i. The Permittees will operate the LAW Vitrification System in order to maintain the systems and process parameters listed in Permit Tables III.10.H.C and III.10.H.F, as

approved/modified pursuant to Permit Condition III.10.H.5., within the set-points specified in Permit Table III.10.H.F.

III.10.H.1.c.ii. The Permittees will operate the AWFCO systems, specified in Permit Table III.10.H.F, as approved/modified pursuant to Permit Condition III.10.H.5., to automatically cut-off and/or lock-out the dangerous and mixed waste feed to the LAW Vitrification System when the monitored operating conditions deviate from the set-points specified in Permit Table III.10.H.F.

III.10.H.1.c.iii. The Permittees will operate the AWFCO systems, specified in Permit Table III.10.H.F, as approved/modified pursuant to Permit Condition III.10.H.5., to automatically cut-off and/or lock-out the dangerous and mixed waste feed to the LAW Vitrification System when all instruments specified on Permit Table III.10.H.F for measuring the monitored parameter fail or exceed its span value.

III.10.H.1.c.iv. The Permittees will operate the AWFCO systems, specified in Permit Table III.10.H.F, as approved/modified pursuant to Permit Condition III.10.H.5., to automatically cut-off and/or lock out the dangerous and/or mixed waste feed to the LAW Vitrification System when any portion of the LAW Vitrification System is bypassed. The terms "bypassed" and "bypass event" as used in Permit Sections III.10.H and III.10.I will mean if any portion of the LAW Vitrification System is bypassed so that gases are not treated as during the Demonstration Test.

III.10.H.1.c.v. In the event of a malfunction of the AWFCO systems listed in Permit Table III.10.H.F, as approved/modified pursuant to Permit Condition III.10.H.5., the Permittees will immediately, manually cut-off the dangerous and mixed waste feed to the LAW Vitrification System. The Permittees will not restart the dangerous and/or mixed waste feed until the problem causing the malfunction has been identified and corrected.

III.10.H.1.c.vi. The Permittees will manually cut-off the dangerous and mixed waste feed to the LAW Vitrification System when the operating conditions deviate from the limits specified in Permit Condition III.10.H.1.c.i., unless the deviation automatically activates the waste feed cut-off sequence specified in Permit Conditions III.10.H.1.c.ii., III.10.H.1.c.iii., and/or III.10.H.1.c.iv.

III.10.H.1.c.vii. If greater than thirty (30) dangerous and mixed waste feed cut-off, combined, to the LAW Vitrification System occur due to deviations from Permit Table III.10.H.F, as approved/modified pursuant to Permit Condition III.10.H.5., within a sixty (60) day period, the Permittees will submit a written report to Ecology within five (5) calendar days of the thirty-first exceedence including the information specified below. These dangerous and mixed waste feed cut-offs to the LAW Vitrification System, whether automatically or manually activated, are counted if the specified set points are deviated from while dangerous waste, mixed waste, and waste residues continue to be processed in the LAW Vitrification System. A cascade event is counted at a frequency of one (1) towards the first waste feed cut-off parameter, specified on Permit Table III.10.H.F, from which the set-point is deviated:

A. The parameter(s) that deviated from the set-point(s) in Permit Table III.10.H.F;

B. The magnitude, dates, and duration of the deviations;

C. Results of the investigation of the cause of the deviations; and

D. Corrective measures taken to minimize future occurrences of the deviations.

III.10.H.1.c.viii. If any portion of the LAW Vitrification System is bypassed while treating dangerous and/or mixed waste it will be regarded as non-compliance with the operating conditions specified in Permit Condition III.10.H.1.c. and the performance standards specified in Permit Condition III.10.H.1.b. After such a bypass event, the Permittees will perform the following actions:

A. Investigate the cause of the bypass event;

B. Take appropriate corrective measures to minimize future bypasses;

C. Record the investigation findings and corrective measures in the operating record; and

D. Submit a written report to Ecology within five (5) days of the bypass event documenting the result of the investigation and corrective measures.

III.10.H.1.c.ix. The Permittees will control fugitive emissions from the LAW Vitrification System by maintaining the melters under negative pressure.

III.10.H.1.c.x. Compliance with the operating conditions specified in Permit Condition III.10.H.1.c. will be regarded as compliance with the required performance standards identified in Permit Condition III.10.H.1.b. However, evidence that compliance with these operating conditions is insufficient to ensure compliance with the performance standards, will justify modification, revocation, or re-issuance of this Permit, in accordance with Permit Conditions III.10.C.2.e. and III.10.C.2.f., or III.10.C.2.g.

III.10.H.1.d. Inspection Requirements [WAC 173-303-680(3)]

III.10.H.1.d.i. The Permittees will inspect the LAW Vitrification System in accordance with the Inspection Schedules in Operating Unit 10, Chapter 6.0 of this Permit, as modified in accordance with Permit Condition III.10.C.5.c.

III.10.H.1.d.ii. The inspection data for LAW Vitrification System will be recorded, and the records will be placed in the WTP Unit operating record for the LAW Vitrification System, in accordance with Permit Condition III.10.C.4.

III.10.H.1.d.iii. The Permittees will comply with the inspection requirements specified in Operating Unit 10, Appendix 9.15 of this Permit, as approved pursuant to Permit Condition III.10.H.5.f., and as modified by Permit Conditions III.10.H.1.b.xii., III.10.H.2., III.10.H.3., and III.10.H.4.

III.10.H.1.e. Monitoring Requirements [WAC 173-303-670(5), WAC 173-303-670(6), WAC -173-303-670(7) and WAC 173-303-807(2), in accordance with WAC 173-303-680(3)]

III.10.H.1.e.i. Upon receipt of a written request from Ecology, the Permittees will perform sampling and analysis of the dangerous and mixed waste and exhaust emissions to verify that the

operating requirements established in the Permit achieve the performance standards delineated in this Permit.

III.10.H.1.e.ii. The Permittees will comply with the monitoring requirements specified in Operating Unit 10, Appendices 9.2, 9.3, 9.7, 9.13, 9.15 and 9.18 of this Permit, as approved pursuant to Permit Conditions III.10.H.5.c., III.10.H.5.d., III.10.H.5.e., and III.10.H.5.f., as modified by Permit Conditions III.10.H.1.b.xii., III.10.H.2., III.10.H.3., and III.10.H.4.

III.10.H.1.e.iii. The Permittees will operate, calibrate, and maintain the carbon monoxide and hydrocarbon continuous emission monitors (CEM) specified in this Permit in accordance with Performance Specification 4B and 8A of 40 CFR Part 60, Appendix B, in accordance with Appendix to Subpart EEE of 40 CFR Part 63, and Operating Unit 10 Appendix 9.15 of this Permit, as approved pursuant to Permit Condition III.10.H.5.f., and as modified by Permit Conditions III.10.H.1.b.xii., III.10.H.2., III.10.H.3., and III.10.H.4.

III.10.H.1.e.iv. The Permittees will operate, calibrate, and maintain the instruments specified on Permit Tables III.10.H.C, and F, as approved/modified pursuant to Permit Condition III.10.H.5., in accordance with Operating Unit 10, Appendix 9.15 of this Permit, as approved pursuant to Permit Condition III.10.H.5.f., and as modified by Permit Conditions III.10.H.1.b.xii., III.10.H.2., III.10.H.3., and III.10.H.4.

III.10.H.1.f. Recordkeeping Requirements [WAC 173-303-380 and WAC 173-303-680(3)]

III.10.H.1.f.i. The Permittees will record and maintain in the WTP Unit operating record for the LAW Vitrification System, all monitoring, calibration, maintenance, test data, and inspection data compiled under the conditions of this Permit, in accordance with Permit Conditions III.10.C.4. and III.10.C.5., as modified by Permit Conditions III.10.H.1.b.xii., III.10.H.2., III.10.H.3., and III.10.H.4.

III.10.H.1.f.ii. The Permittees will record in the WTP Unit operating record the date, time, and duration of all automatic waste feed cutoffs and/or lockouts, including the triggering parameters, reason for the deviation, and recurrence of the incident. The Permittees will also record all incidents of AWFCO system function failures, including the corrective measures taken to correct the condition that caused the failure.

III.10.H.1.f.iii. The Permittees will submit to Ecology a report semi-annually the first calendar year, and annually thereafter each calendar year within ninety (90) days following the end of the year. The report will include the following information:

A. Total dangerous and mixed waste feed processing time for the LAW Vitrification System;

B. Date/Time of all LAW Vitrification System startups and shutdowns;

C. Date/Time/Duration/Cause/Corrective Action taken for all LAW Vitrification System shutdowns caused by malfunction of either process or control equipment; and

D. Date/Time/Duration/Cause/Corrective Action taken for all instances of dangerous and/or mixed waste feed cut-off due to deviations from Permit Table III.10.H.F, as approved/modified pursuant to Permit Condition III.10.H.5.

III.10.H.1.f.iv. The Permittees will submit an annual report to Ecology each calendar year within ninety (90) days following the end of the year of all quarterly CEM Calibration Error and Annual CEM Performance Specification Tests conducted in accordance with Permit Condition III.10.H.1.e.iii.

III.10.H.1.g. Closure

The Permittees will close the LAW Vitrification System in accordance with Operating Unit 10, Chapter 11.0 of this Permit, as approved pursuant to Permit Condition III.10.C.8.

III.10.H.2. Shakedown Period [WAC 173-303-670(5), WAC 173-303-670(6), WAC -173-303-670(7), and WAC 173-303-807(2), in accordance with WAC 173-303-680(2) and (3)].

III.10.H.2.a. The shakedown period for the LAW Vitrification System will be conducted in accordance with Permit Condition III.10.H.1., Operating Unit 10, Appendix 9.15 of this Permit, as approved pursuant to Permit Condition III.10.H.5.f., and as modified in accordance with Permit Conditions III.10.H.1.b.xii., III.10.H.2., and III.10.H.3.

III.10.H.2.b. Duration of the Shakedown Period

III.10.H.2.b.i. The shakedown period for the LAW Vitrification System will begin with the initial introduction of dangerous waste in the LAW Vitrification System following construction and will end with the start of the demonstration test.

III.10.H.2.b.ii. The shakedown period will not exceed the following limits, as defined by hours of operation of the LAW Vitrification System with dangerous waste. The Permittees may petition Ecology for one extension of each shakedown phase for seven hundred and twenty (720) additional operating hours in accordance with Permit modification procedures specified in Permit Conditions III.10.C.2.e. and III.10.C.2.f.

Shakedown Phase 1: 720 hours

Shakedown Phase 2: 720 hours

III.10.H.2.b.iii. Shakedown Phase 2 will not be commenced until documentation has been submitted to Ecology verifying that the LAW Vitrification System has operated at a minimum of 75% of the shakedown Phase 1 feed-rate limit for two (2) separate eight (8) consecutive hour periods with no AWFCOs.

III.10.H.2.c. Allowable Waste Feed During the Shakedown Period

III.10.H.2.c.i. The Permittees may feed the dangerous waste specified for the LAW Vitrification System on the Part A Forms (Operating Unit 10, Chapter 1.0 of this Permit), except for those wastes outside the waste acceptance criteria specified in the WAP, Attachment 1, Chapter 3.0 of this Permit, as approved pursuant to Permit Condition III.10.C.3., except Permit Conditions III.10.H.2.c.ii. through v. also apply.

III.10.H.2.c.ii. The Permittees will not feed the following wastes to the LAW Vitrification System during Shakedown Phase 1:

A. Acutely toxic dangerous waste listed in WAC 173-303-081(a)(2)(a)(i).

B. Mixed waste

III.10.H.2.c.iii. The Permittees will not feed the following waste to the LAW Vitrification System during Shakedown Phase 2:

A. Mixed waste

III.10.H.2.c.iv. The feed-rates to the LAW Vitrification System will not exceed the limits in Permit Tables III.10.H.D and III.10.H.F, as approved/modified pursuant to Permit Condition III.10.H.5.

III.10.H.2.c.v. The Permittees will conduct sufficient analysis of the dangerous waste treated in the LAW Vitrification System to verify that the waste feed is within the physical and chemical composition limits specified in this Permit.

III.10.H.3. Demonstration Test Period [WAC 173-303-670(5), WAC 173-303-670(6), WAC 173-303-670(7), and WAC 173-303-807(2), in accordance with WAC 173-303-680(2) and (3)].

III.10.H.3.a. Demonstration Test Period

III.10.H.3.a.i. The Permittees will operate, monitor, and maintain the LAW Vitrification System as specified in Permit Condition III.10.H.1., and Operating Unit 10, Appendix 9.15 of this Permit, as approved pursuant to Permit Condition III.10.H.5.f., except as modified in accordance with Permit Conditions III.10.H.1.b.xii., and III.10.H.3.

III.10.H.3.a.ii. Operating Unit 10, Appendix 9.15 of this Permit, as approved pursuant to Permit Condition III.10.H.5.f., will be resubmitted to Ecology for approval by the Permittees as a permit modification pursuant to Permit Conditions III.10.C.2.e. and III.10.C.2.f. at least one hundred and eighty (180) days prior to the start date of the demonstration test. The revised Demonstration Test Plan will include applicable EPA promulgated test methods and procedures in effect at the time of the re-submittal and projected commencement and completion dates for the Demonstration Test.

III.10.H.3.a.iii. The Permittees will not commence the demonstration test period until documentation has been submitted to Ecology verifying that the LAW Vitrification System has operated at a minimum of 90% of the demonstration test period feed-rate limit for a minimum of an eight (8) consecutive hours period on two (2) consecutive days.

III.10.H.3.b. Performance Standards

The Permittees will demonstrate compliance with the performance standards specified in Permit Condition III.10.H.1.b. during the Demonstration Test Period.

III.10.H.3.c. Allowable Waste Feed During the Demonstration Test Period

III.10.H.3.c.i. The Permittees may feed the dangerous waste specified for the LAW Vitrification System in Part A Forms (Operating Unit 10, Chapter 1.0 of this Permit), except for those waste outside the waste acceptance criteria specified in the WAP, Operating Unit 10, Chapter 3.0 of this Permit, as approved pursuant to Permit Condition III.10.C.3., except Permit Conditions III.10.H.3.c.ii. through iv. also apply.

III.10.H.3.c.ii. The Permittees will not feed mixed waste to the LAW Vitrification System.

III.10.H.3.c.iii. The dangerous waste feed-rates to the LAW Vitrification System will not exceed the limits in Permit Tables III.10.H.D and F, as approved/modified pursuant to Permit Condition III.10.H.5.

III.10.H.3.c.iv. The Permittees will conduct sufficient analysis of the dangerous waste treated in the LAW Vitrification System to verify that the dangerous waste is within the physical and chemical composition limits specified in this Permit.

III.10.H.3.d. Demonstration Data Submissions and Certifications

III.10.H.3.d.i. The Permittees will submit to Ecology a complete demonstration test report within one-hundred twenty (120) calendar days of completion of the Demonstration Test including all data collected during the Demonstration Test and updated Permit Tables III.10.I.D, III.10.I.E and III.10.I.F.

III.10.H.3.d.ii. The Permittees must submit the following information to Ecology prior to receiving Ecology's approval to commence feed of dangerous waste and mixed waste to the LAW Vitrification System:

A. The Permittees will submit a summary of data collected as required by the Demonstration Test Plan to Ecology upon completion of the Demonstration Test.

B. A certification that the Demonstration Test has been carried out in accordance with the approved Demonstration Test Plan and approved modifications within thirty (30) days of the completion of the Demonstration Test [WAC 173-303-807(8)].

C. Calculations and analytical data showing compliance with the performance standards specified in Permit Conditions III.10.H.1.b.i, III.10.H.1.b.iv, III.10.H.1.b.v, III.10.H.1.b.vi, and III.10.H.1.b.vii

D. Laboratory data QA/QC summary for the information provided in III.10.H.3.d.ii.C.

III.10.H.3.d.iii. After successful completion of the Demonstration Test and receipt of Ecology's approval, the Permittees will be authorized to commence feed of dangerous waste and mixed waste to the LAW Vitrification System for the post-demonstration test period indicated in Permit Tables III.10.H.D and F, as approved/modified pursuant to Permit Condition III.10.H.5., in compliance with the operating requirements specified in Permit Condition III.10.H.1.c. and within the limitations specified in Permit Condition.III.10.C.14.

III.10.H.3.d.iv. RESERVED

III.10.H.3.d.v. After successful completion of the Demonstration Test, Permittees submittal of the following to Ecology and the Permittees receipt of approval of the following in writing, the Permittees will be authorized to feed dangerous waste and mixed waste to the LAW Vitrification System pursuant to Permit Section III.10.I.

A. A complete Demonstration Test Report for the LAW Vitrification System and updated Permit Tables III.10.I.D, III.10.I.E, and III.10.I.F, as approved/modified

pursuant to Permit Conditions III.10.H.5 and III.10.C.11.c or III.10.C.11.d. The test report will be certified in accordance with WAC 173-303-807(8), in accordance with WAC 173-303-680(2) and (3).

B. A Final Risk Assessment Report completed pursuant to Permit Conditions III.10.C.11.c. or III.10.C.11.d.

III.10.H.3.d.vi. If any calculations or testing results show that one or more of the performance standards listed in Permit Condition III.10.H.1.b., with the exception of Permit Condition III.10.H.1.b.x., for the LAW Vitrification System were not met during the Demonstration Test, the Permittees will perform the following actions:

A. Immediately stop dangerous and mixed waste feed to the LAW Vitrification System under the mode of operation that resulted in not meeting the performance standard(s).

B. Verbally notify Ecology within twenty-four (24) hours of discovery of not meeting the performance standard(s) as specified in Permit Condition I.E.21.

C. Investigate the cause of the failure and submit a report of the investigation findings to Ecology within fifteen (15) days of discovery of not meeting the performance standard(s).

D. Submit to Ecology within fifteen (15) days of discovery of not meeting the performance standard(s), documentation supporting a mode of operation where all performance standards listed in Permit Condition III.10.H.1.b., with the exception of Permit Condition III.10.H.1.b.x., for the LAW Vitrification System were met during the demonstration test, if any such mode was demonstrated.

E. Based on the information provided to Ecology by the Permittees pursuant to Permit Conditions III.10.H.3.d.vi.A through D above, and any additional information, Ecology may provide in writing, direction to the Permittees to stop dangerous and/or mixed waste feed to the LAW Vitrification System and/or amend the mode of operation the Permittees are allowed to continue operations prior to Ecology approval of a compliance schedule and/or revised Demonstration Test Plan pursuant to Permit Conditions III.10.H.3.d.vi.F and G.

F. If the performance standard listed in Permit Condition III.10.H.1.b.i. was not met during the Demonstration Test, the Permittees will submit within one hundred and twenty (120) days of discovery of not meeting the performance standard, a revised Demonstration Test Plan (if appropriate), and a compliance schedule for Ecology approval to address this deficiency. If a revised Demonstration Test Plan is submitted, it will be accompanied by a request for approval to retest as a permit modification pursuant to Permit Conditions III.10.C.2.e. and III.10.C.2.f. The revised Demonstration Test Plan (if submitted) must include substantive changes to prevent failure from reoccurring.

G. If any of the performance standards listed in Permit Condition III.10.H.1.b., with the exception of Permit Conditions III.10.H.1.b.i. or III.10.H.1.b.x., were not met during the Demonstration Test the Permittees will submit to Ecology within one hundred

twenty (120) days of discovery of not meeting the performance standard(s), a revised Demonstration Test Plan requesting approval to retest as a permit modification pursuant to Permit Conditions III.10.C.2.e. and III.10.C.2.f. The revised Demonstration Test Plan must include substantive changes to prevent failure from reoccurring.

III.10.H.3.d.vii. If any calculations or testing results show that any emission rate for any constituent listed in Permit Table III.10.H.E, as approved pursuant to Permit Condition III.10.C.11.b., is exceeded for LAW Vitrification System during the Demonstration Test, the Permittees will perform the following actions:

A. Verbally notify Ecology within twenty-four (24) hours of the discovery of exceeding the emission rate(s) as specified in Permit Condition I.E.21.

B. Submit to Ecology additional risk information to indicate that the increased emissions impact is offset by decreased emission impact from one or more constituents expected to be emitted at the same time, and/or investigate the cause and impact of the exceedence of the emission rate(s) and submit a report of the investigation findings to Ecology within fifteen (15) days of the discovery of exceeding the emission rate(s); and

C. Based on the notification and any additional information, Ecology may provide, in writing, direction to the Permittees to stop dangerous and/or mixed waste feed to the LAW Vitrification System and/or to submit a revised Demonstration Test Plan as a permit modification pursuant to Permit Conditions III.10.C.2.e. and III.10.C.2.f., or III.10.C.2.g. The revised Demonstration Test Plan must include substantive changes to prevent failure from reoccurring.

III.10.H.4. Post Demonstration Test Period [WAC 173-303-670(5), WAC 173-303-670(6), and WAC 173-303-807(2), in accordance with WAC 173-303-680(2) and (3)]

III.10.H.4.a. The Permittees will operate, monitor, and maintain the LAW Vitrification System as specified in Permit Condition III.10.H.1. and Operating Unit 10, Appendix 9.15 of this Permit, as approved pursuant to Permit Condition III.10.H.5., except as modified in accordance with Permit Conditions III.10.H.1.b.xii., III.10.H.3., and III.10.H.4.

III.10.H.4.b. Allowable Waste Feed During the Post-Demonstration Test Period

III.10.H.4.b.i. The Permittees may feed the dangerous and/or mixed waste specified for the LAW Vitrification System on the Part A Forms (Operating Unit 10, Chapter 1.0 of this Permit), except for those wastes outside the waste acceptance criteria specified in the WAP, Operating Unit 10, Chapter 3.0 of this Permit, as approved pursuant to Permit Condition III.10.C.3., and except Permit Conditions III.10.H.4.b.ii. and III.10.H.4.b.iii. also apply.

III.10.H.4.b.ii. The dangerous waste and mixed waste feed-rates to the LAW Vitrification System will not exceed the limits in Permit Tables III.10.H.D and F, as approved/modified pursuant to Permit Condition III.10.H.5., or in Permit Condition III.10.H.3

III.10.H.4.b.iii. The Permittees will conduct sufficient analysis of the dangerous waste and mixed waste treated in LAW Vitrification System to verify that the waste feed is within the physical and chemical composition limits specified in this Permit.

III.10.H.5. Compliance Schedules

III.10.H.5.a. All information identified for submittal to Ecology in a. through f. of this compliance schedule must be signed and certified in accordance with requirements in WAC 173-303-810(12), as modified in accordance with Permit Condition III.10.H.1.a.iii. [WAC 173-303-806(4)].

III.10.H.5.b. The Permittees will submit to Ecology, pursuant to Permit Condition III. 10.C.9.f., prior to construction of each secondary containment and leak detection system for the LAW Vitrification System (per level) as identified in Permit Tables III.10.H.A and III.10.H.B, engineering information as specified below, for incorporation into Operating Unit 10, Appendices 9.2 , 9.4, 9.5, 9.7, 9.8, 9.9, 9.11, and 9.12 of this Permit. At a minimum, engineering information specified below will show the following as described in WAC 173-303-640, in accordance with WAC 173-303-680 (the information specified below will include dimensioned engineering drawings and information on sumps and floor drains):

III.10.H.5.b.i. IQRPE Reports (specific to foundation, secondary containment, and leak detection system) will include review of design drawings, calculations, and other information on which the certification report is based and will include as applicable, but not limited to, review of such information described below. Information (drawings, specifications, etc.) already included in Operating Unit 10, Appendix 9.0 of this Permit, may be included in the report by reference and should include drawing and document numbers. IQRPE Reports will be consistent with the information separately provided in ii. through ix. below [WAC 173-303-640(3)(a), in accordance with WAC 173-303-680 and WAC 173-303-806(4)(i)(i)];

III.10.H.5.b.ii. Design drawings (General Arrangement Drawings, in plan and cross sections) and specifications for the foundation, secondary containment including liner installation details, and leak detection methodology. These items should show the dimensions, volume calculations, and location of the secondary containment system, and should include items such as floor/pipe slopes to sumps, tanks, floor drains [WAC 173-303-640(4)(b) through (f) and WAC 173-303-640(3)(a), in accordance with WAC 173-303-680 and WAC 173-303-806(4)(i)(i)];

III.10.H.5.b.iii. The Permittees will provide the design criteria (references to codes and standards, load definitions, and load combinations, materials of construction, and analysis/design methodology) and typical design details for the support of the secondary containment system. This information will demonstrate the foundation will be capable of providing support to the secondary containment system, resistance to pressure gradients above and below the system, and capable of preventing failure due to settlement, compression, or uplift [WAC 173-303-640(4)(c)(ii), in accordance with WAC 173-303-680(2) and WAC 173-303-806(4)(i)(i)(B)];

III.10.H.5.b.iv. A description of materials and equipment used to provide corrosion protection for external metal components in contact with soil, including factors affecting the potential for corrosion [WAC 173-303-640(3)(a)(iii)(B), in accordance with WAC 173-303-680 and WAC 173-303-806(4)(i)(i)(A) through (B)];

III.10.H.5.b.v. Secondary containment/foundation, and leak detection system, materials selection documentation (including, but not limited to, concrete coatings and water stops, and liner materials) as applicable [WAC 173-303-806(4)(i)(i)(A) through (B)];

III.10.H.5.b.vi. Detailed description of how the secondary containment for the LAW Vitrification System will be installed in compliance with WAC 173-303-640(3)(c), in accordance with WAC 173-303-680 and WAC 173-303-806(4)(i)(i)(A) through (B);

III.10.H.5.b.vii. Submit Permit Tables III.10.H.B and III.10.I.B completed to provide for all secondary containment sumps and floor drains the information as specified in each column heading consistent with information to be provided in i. through vi., above;

III.10.H.5.b.viii. Documentation that secondary containment and leak detection systems will not accumulate hydrogen gas levels above the lower explosive limit for incorporation into the Administrative Record [WAC 173-303-680, WAC 173-303-806(4)(i)(i)(A), and WAC 173-303-806(4)(i)(v)];

III.10.H.5.b.ix. A detailed description of how LAW Vitrification System design provides access for conducting future LAW Vitrification System integrity assessments [WAC 173-303-640(3)(b) and WAC 173-303-806(4)(i)(i)(B)].

III.10.H.5.c. The Permittees will submit to Ecology, pursuant to Permit Condition III.10.C.9.f, prior to installation of each sub-system as identified in Permit Table III.10.H.A, engineering information as specified below, for incorporation into Operating Unit 10, Appendices 9.1 through 9.14, and 9.17 of this Permit. At a minimum, engineering information specified below will show the following, as required pursuant to WAC 173-303-640, in accordance with WAC 173-303-680 (the information specified below will include dimensioned engineering drawings):

III.10.H.5.c.i. IQRPE Reports (specific to sub-system) will include review of design drawings, calculations, and other information on which the certification report is based and will include as applicable, but not limited to, review of such information described below. Information (drawings, specifications, etc.) already included in Operating Unit 10, Appendix 9.0 of this Permit, may be included in the report by reference and should include drawing and document numbers. The IQRPE Reports will be consistent with the information separately provided in ii. through xii. below, and the IQRPE Report specified in Permit Condition III.10.H.5.b. [WAC 173-303-640(3)(a), in accordance with WAC 173-303-680(2) and WAC 173-303-806(4)(i)(i)];

III.10.H.5.c.ii. Design drawings [General Arrangement Drawings in plan and cross section, Process Flow Diagrams, Piping and Instrumentation Diagrams (including pressure control systems), Mechanical Drawings, and specifications, and other information specific to subsystems (to show location and physical attributes of each subsystem)] [WAC 173-

303-640(3)(a), in accordance with WAC 173-303-680(2) and WAC 173-303-806(4)(i)(i)];

III.10.H.5.c.iii. Sub-system design criteria (references to codes and standards, load definitions, and load combinations, materials of construction, and analysis/design methodology) and typical design details to support the subsystems. Structural support calculations specific to off-specification, non-standard and field fabricated subsystems will be submitted for incorporation into the Administrative Record. Documentation will include but not limited to, supporting specifications, test data, treatment effectiveness report, etc. supporting projected operational capability (e.g., WESP projected removal efficiency for individual metals, halogens, particulates, etc.) and compliance with performance standards specified in Permit Condition III.10.H.1.b [WAC 173-303-640(3)(a), in accordance with WAC 173-303-680(2) and WAC 173-303-806(4)(i)(i)(B)];

III.10.H.5.c.iv. A description of materials and equipment used to provide corrosion protection for external metal components in contact with water, including factors affecting the potential for corrosion [WAC 173-303-640(3)(a)(iii)(B), in accordance with WAC 173-303-680(2) and WAC 173-303-806(4)(i)(i)(A) through (B)];

III.10.H.5.c.v. Sub-system materials selection documentation (e.g., physical and chemical tolerances) [WAC 173-303-640(3)(a), in accordance with WAC 173-303-680(2) and WAC 173-303-806(4)(i)(i)(A)];

III.10.H.5.c.vi. Sub-system vendor information (including, but not limited to, required performance warranties, as available), consistent with information submitted under ii. above, will be submitted for incorporation into the Administrative Record [WAC 173-303-640(3)(a), in accordance with WAC 173-303-680(2), WAC 173-303-806(4)(i)(i)(A) through (B), and WAC 173-303-806(4)(i)(v)];

III.10.H.5.c.vii. System descriptions related to sub-system units will be submitted for incorporation into the Administrative Record [WAC 173-303-680, WAC 173-303-806(4)(i)(i)(A) through (B), and WAC 173-303-806(4)(i)(v)];

III.10.H.5.c.viii. Mass and energy balance for normal projected operating conditions used in developing the Piping and Instrumentation Diagrams and Process Flow Diagrams, including assumptions and formulas used to complete the mass and energy balance, so that they can be independently verified for incorporation into the Administrative Record [WAC 173-303-680(2), WAC 173-303-806(4)(i)(i)(B), and WAC 173-303-806(4)(i)(v)];

III.10.H.5.c.ix. Detailed description of all potential LAW Vitrification System bypass events including:

A. A report which includes an analysis of credible potential bypass events and recommendations for prevention/minimization of the potential, impact, and frequency of the bypass event to include at a minimum:

1. Operating procedures
2. Maintenance procedures
3. Redundant equipment

4. Redundant instrumentation
5. Alternate equipment
6. Alternate materials of construction

III.10.H.5.c.x. A detailed description of how the sub-systems will be installed in compliance with WAC 173-303-640(3)(c), (d), and (e), in accordance with WAC 173-303-680 and WAC 173-303-806(4)(i)(i)(B);

III.10.H.5.c.xi. Sub-system design to prevent escape of vapors and emissions of acutely or chronically toxic (upon inhalation) EHW, for incorporation into the Administrative Record [WAC 173-303-640(5)(e), in accordance with WAC 173-303-680(2) and WAC 173-303-806(4)(i)(i)(B)];

III.10.H.5.c.xii. Documentation that sub-systems are designed to prevent the accumulation of hydrogen gases levels above the lower explosive limit for incorporation into the Administrative Record [WAC 173-303-680, WAC 173-303-806(4)(i)(i)(A), and WAC 173-303-806(4)(i)(v)].

III.10.H.5.d. The Permittees will submit to Ecology, pursuant to Permit Condition III.10.C.9.f, prior to installation of equipment for each sub-system as identified in Permit Tables III.10.H.A and III.10.H.B, not addressed in Permit Conditions III.10.H.5.b. or III.10.H.5.c., engineering information as specified below, for incorporation into Operating Unit 10, Appendices 9.1 through 9.14 of this Permit. At a minimum, engineering information specified below will show the following as required pursuant to WAC 173-303-640, in accordance with WAC 173-303-680 (the information specified below will include dimensioned engineering drawings):

III.10.H.5.d.i. IQRPE Reports (specific to sub-system equipment) will include a review of design drawings, calculations, and other information as applicable on which the certification report is based. The reports will include, but not be limited to, review of such information described below. Information (drawings, specifications, etc.) already included in Operating Unit 10, Appendix 9.0 of this Permit, may be included in the report by reference and should include drawing and document numbers. The IQRPE Reports will be consistent with the information provided separately in ii. through xiii. below and the IQRPE Reports specified in Permit Conditions III.10.H.5.b. and III.10.H.5.c. [WAC 173-303-640(3)(a), in accordance with WAC 173-303-680(2) and WAC 173-303-806(4)(i)(i)(A) through (B)];

III.10.H.5.d.ii. Design drawings [Process Flow Diagrams, Piping and Instrumentation Diagrams (including pressure control systems), specifications and other information specific to equipment (these drawings should include all equipment such as pipes, valves, fittings, pumps, instruments, etc.)] [WAC 173-303-640(3)(a), in accordance with WAC 173-303-680(2) and WAC 173-303-806(4)(i)(i)(A) through (B)];

III.10.H.5.d.iii. Sub-system equipment design criteria (references to codes and standards, load definitions, and load combinations, materials of construction, and analysis/design methodology) and typical design details for the support of the sub-system equipment

[WAC 173-303-640(3)(a) and WAC 173-303-640(3)(f), in accordance with WAC 173-303-680 and WAC 173-303-806(4)(i)(i)(B)];

III.10.H.5.d.iv. A description of materials and equipment used to provide corrosion protection for external metal components in contact with soil and water, including factors affecting the potential for corrosion [WAC 173-303-640(3)(a)(iii)(B), in accordance with WAC 173-303-680(2) and WAC 173-303-806(4)(i)(i)(A)];

III.10.H.5.d.v. Materials selection documentation for equipment for each sub-system (e.g., physical and chemical tolerances) [WAC 173-303-640(3)(a), in accordance with WAC 173-303-680(2) and WAC 173-303-806(4)(i)(i)(A)];

III.10.H.5.d.vi. Vendor information (including, but not limited to, required performance warranties, as available), consistent with information submitted under ii. above, for sub-system equipment will be submitted for incorporation into the Administrative Record. [WAC 173-303-640(3)(a), in accordance with WAC 173-303-680(2), WAC 173-303-806(4)(i)(i)(A) through (B), and WAC 173-303-806(4)(i)(iv)];

III.10.H.5.d.vii. Sub-system, sub-system equipment, and leak detection system instrument control logic narrative description (e.g., software functional specifications, descriptions of fail-safe conditions, etc.) [WAC 173-303-680(2), WAC 173-303-806(4)(i)(i)(B), and WAC 173-303-806(4)(i)(v)].

III.10.H.5.d.viii. System description related to sub-system equipment, and system descriptions related to leak detection systems, (including instrument control logic and narrative descriptions), for incorporation into the Administrative Record [WAC 173-303-680, WAC 173-303-806(4)(i)(i)(A) through (B), and WAC 173-303-806(4)(i)(v)];

III.10.H.5.d.ix. A detailed description of how the sub-system equipment will be installed and tested [WAC 173-303-640(3)(c) through (e), WAC 173-303-640(4)(b) and (c), in accordance with WAC 173-303-680 and WAC 173-303-806(4)(i)(i)(B)];

III.10.H.5.d.x. For process monitoring, control, and leak detection system instrumentation for the LAW Vitrification System as identified in Permit Tables III.10.H.C. and III.10.H. F., a detailed description of how the process monitoring, control, and leak detection system instrumentation, will be installed and tested [WAC 173-303-640(3)(c) through (e), WAC 173-303-640(4)(b) and (c), WAC 173-303-806(4)(c)(vi), and WAC 173-303-806(4)(i)(i)(B)];

III.10.H.5.d.xi. Mass and energy balance for projected normal operating conditions used in developing the Piping and Instrumentation Diagrams and Process Flow Diagrams, including assumptions and formulas used to complete the mass and energy balance, so that they can be independently verified, for incorporation into the Administrative Record [WAC 173-303-680(2), WAC 173-303-806(4)(i)(i)(B), and WAC 173-303-806(4)(i)(v)];

III.10.H.5.d.xii. Documentation that sub-systems equipment are designed to prevent the accumulation of hydrogen gas levels above the lower explosive limit for incorporation into the Administrative Record [WAC 173-303-680, WAC 173-303-806(4)(i)(i)(A), and WAC 173-303-806(4)(i)(v)];

III.10.H.5.d.xiii. Leak detection system documentation (e.g. vendor information, etc.) consistent with information submitted under Permit Condition III.10.H.5.c.ii. and Permit Conditions III.10.H.5.d.ii., vii., viii., and x. above, will be submitted for incorporation into the Administrative Record.

III.10.H.5.e. Prior to initial receipt of dangerous and/or mixed waste in the WTP Unit, the Permittees will submit to Ecology, pursuant to Permit Condition III.10.C.9.f., the following as specified below for incorporation into Operating Unit 10, Appendix 9.18 of this Permit, except Permit Condition III.10.H.5.e.i., which will be incorporated into Operating Unit 10, Chapter 6.0 of this Permit. All information provided under this permit condition must be consistent with information provided pursuant to Permit Conditions III.10.H.5.b., c., d., e., and f., III.10.C.3.e. and III.10.C.11.b., as approved by Ecology:

III.10.H.5.e.i. Integrity assessment program and schedule for the LAW Vitrification System will address the conducting of periodic integrity assessments on the LAW Vitrification System over the life of the system, as specified in Permit Condition III.10.H.5.b.ix. and WAC 173-303-640(3)(b), in accordance with WAC 173-303-680, and descriptions of procedures for addressing problems detected during integrity assessments. The schedule must be based on past integrity assessments, age of the system, materials of construction, characteristics of the waste, and any other relevant factors [WAC 173-303-640(3)(b), in accordance with WAC 173-303-680 and WAC 173-303-806(4)(i)(i)(B)].

III.10.H.5.e.ii. Detailed plans and descriptions, demonstrating the leak detection system is operated so that it will detect the failure of either the primary or secondary containment structure or the presence of any release of dangerous and/or mixed waste or accumulated liquid in the secondary containment system within twenty-four (24) hours [WAC 173-303-640(4)(c)(iii)]. Detection of a leak of at least 0.1 gallons per hour within twenty-four (24) hours is defined as being able to detect a leak within twenty-four (24) hours. Any exceptions to this criteria must be approved by Ecology in accordance with WAC 173-303-680, WAC 173-303-640(4)(c)(iii), and WAC 173-303-806(4)(i)(i)(b).

III.10.H.5.e.iii. Detailed operational plans and descriptions, demonstrating that spilled or leaked waste and accumulated liquids can be removed from the secondary containment system within twenty-four (24) hours [WAC 173-303-806(4)(i)(i)(B)].

III.10.H.5.e.iv. Descriptions of operational procedures demonstrating appropriate controls and practices are in place to prevent spills and overflows from the LAW Vitrification System or containment systems in compliance with WAC 173-303-640(5)(b)(i) through (iii), in accordance with WAC 173-303-680 and WAC 173-303-806(4)(i)(i)(B);

III.10.H.5.e.v. Description of procedures for investigation and repair of the LAW Vitrification System [WAC 173-303–640(6) and WAC 173-303-640(7)(e) and (f), in accordance with WAC 173-303-680, WAC 173-303-320, WAC 173-303-806(4)(a)(v), and WAC 173-303-806(4)(a)(ii)(B)].

III.10.H.5.e.vi. Updated Chapter 4.0, Narrative Description, Tables and Figures as identified in Permit Tables III.10.H.A and III.10.H.B, as modified pursuant to Permit Condition

III.10.H.5.e.x. and updated to identify routinely non-accessible LAW Vitrification sub-systems.

III.10.H.5.e.vii. Description of procedures for management of ignitable and reactive, and incompatible dangerous and/or mixed waste as specified in WAC 173-303-640(9) and (10), in accordance with WAC 173-303-680 and WAC 173-303-806(4)(i)(i)(B).

III.10.H.5.e.viii. A description of the tracking system used to track dangerous and/or mixed waste generated throughout the LAW Vitrification system, pursuant to WAC 173-303-380.

III.10.H.5.e.ix. Permit Tables III.10.H.C and III.10.I.C will be completed for LAW Vitrification System process and leak detection system monitors and instruments (to include, but not be limited to: instruments and monitors measuring and/or controlling flow, pressure, temperature, density, pH, level, humidity, and emissions) to provide the information as specified in each column heading. Process and leak detection system monitors and instruments for critical systems as specified in Operating Unit 10, Appendix 2.0 and as updated pursuant to Permit Condition III.10.C.9.b., and for operating parameters as required to comply with Permit Condition III.10.C.3.e.iii. will be addressed. Process monitors and instruments for non-waste management operations (e.g., utilities, raw chemical storage, non-contact cooling waters, etc.) are excluded from this permit condition [WAC 173-303-680, WAC 173-303-806(4)(i)(i)(A) through (B), and WAC 173-303-806(4)(i)(v)];

III.10.H.5.e.x. Permit Tables III.10.H.A and III.10.I.A amended as follows [WAC 173-303-680 and WAC 173-303-806(4)(i)(i)(A) through (B)]:

A. Under column 1, update and complete list of dangerous and mixed waste LAW Vitrification System sub-systems, including plant items that comprise each system (listed by item number).

B. Under column 2, update and complete system designations.

C. Under column 3, replace the 'Reserved' with Operating Unit 10, Appendix 9.0 subsections (e.g., 9.1, 9.2, etc.) designated in Permit Conditions III.10.H.5.b., c., and d. specific to LAW Vitrification System sub-system as listed in column 1.

D. Under column 4, update and complete list of narrative description, tables, and figures.

III.10.H.5.f. One hundred and eighty (180) days prior to initial receipt of dangerous and/or mixed waste in the WTP Unit, the Permittees will submit for review and receive approval for incorporation into Operating Unit 10, Appendix 9.15 of this Permit, a Demonstration Test Plan for the LAW Vitrification System to demonstrate that the LAW Vitrification Systems meets the performance standards specified in Permit Condition III.10.H.1.b. In order to incorporate the Demonstration Test Plan for the LAW Vitrification System into Operating Unit 10, Appendix 9.15, Permit Condition III.10.C.2.g. process will be followed. The Demonstration Test Plan will include, but not be limited to, the following information. The Demonstration Test Plan will also be consistent with the information provided pursuant to Permit Conditions III.10.H.5.b., c., d., and e., III.10.C.3.e., and

III.10.C.11.b., as approved by Ecology and consistent with the schedule described in Operating Unit 10, Appendix 1.0 of this Permit. The documentation required pursuant to Permit Condition III.10.H.5.f.x., in addition to being incorporated into Operating Unit 10, Appendix 9.15, will be incorporated by reference in Operating Unit 10, Chapter 6.0 of this Permit.

Notes: (1) The following should be consulted to prepare this Demonstration Test Plan: "Guidance on Setting Permit Conditions and Reporting Trial Burn Results Volume II of the Hazardous Waste Incineration Guidance Series," (EPA/625/6-89/019) and Risk Burn Guidance For Hazardous Waste Combustion Facilities," (EPA-R-01-001, July 2001), WAC 173-303-807(2), WAC 173-303-670(5), WAC-173-303-670(6), 40 CFR §63.1207(f)(2), 40 CFR §63.1209, and Appendix to 40 CFR Part 63 EEE.

(2) Cross-referencing to the information provided pursuant to permit Conditions III.H.5.b., c., d., e., and III.10.C.3.e.v., as approved by Ecology, that are redundant to elements of the Demonstration Test Plan for the LAW Vitrification System is acceptable.

III.10.H.5.f.i. Analysis of each feed-stream to be fed during the demonstration test, including dangerous waste, glass formers and reductants, process streams (e.g., volumes of air leakage including control air, process air, steam, sparge bubbler air, air in-leakage from melter cave, and gases from LAW Vitrification Vessel Ventilation System, process water, etc.) that includes:

A. Levels of ash, metals, total chlorine (organic and inorganic), other halogens and radionuclide surrogates;

B. Description of the physical form of the feed-streams;

C. An identification and quantification of organics that are present in the feed-stream, including constituents proposed for DRE demonstration;

A comparison of the proposed demonstration test feed streams to the mixed waste feed envelopes to be processed in the melters must be provided that documents that the proposed demonstration test feed streams will serve as worst case surrogates for organic destruction, formation of products of incomplete oxidation, and metals, total chlorine (organic and inorganic), other halogens, particulate formation, and radionuclides.

III.10.H.5.f.ii. Specification of trial principal organic dangerous constituents (PODCs) for which destruction and removal efficiencies are proposed to be calculated during the demonstration test and for inclusion in Permit Conditions III.10.H.1.b.i. and III.10.I.1.b.i. These trial PODCs will be specified based on destructibility, concentration or mass in the waste and the dangerous waste constituents or constituents in WAC 173-303-9905;

III.10.H.5.f.iii. A description of the blending procedures, prior to introducing the feed-streams into the melter, including analysis of the materials prior to blending, and blending ratios;

III.10.H.5.f.iv. A description of how the surrogate feeds are to be introduced for the demonstration. This description should clearly identify the differences and justify how any of differences

would impact the surrogate feed introduction as representative of how mixed waste feeds will be introduced;

III.10.H.5.f.v. A detailed engineering description of the LAW Vitrification System, including:

A. Manufacturer's name and model number for each sub-system;

B. Design capacity of each sub-system including documentation (engineering calculations, manufacturer/vendor specifications, operating data, etc.) supporting projected operational efficiencies (e.g., WESP projected removal efficiency for individual metals, halogens, particulates, etc.) and compliance with performance standards specified in Permit Condition III.10.H.1.b.;

C. Detailed scaled engineering drawings, including Process Flow Diagrams, Piping and Instrumentation Diagrams, Vessel Drawings (plan, and elevation with cross sections) and General Arrangement Drawings;

D. Process Engineering Descriptions;

E. Mass and energy balance for each projected operating condition and each demonstration test condition, including assumptions and formulas used to complete the mass and energy balance, so that they can be independently verified for incorporation into the Administrative Record;

F. Engineering Specifications/data sheets (materials of construction, physical and chemical tolerances of equipment, and fan curves);

G. Detailed Description of Automatic Waste Feed Cutoff System addressing critical operating parameters for all performance standards specified in Permit Condition III.10.H.1.b.;

H. Documentation to support compliance with performance standards specified in Permit Condition III.10.H.1.b., including engineering calculations, test data, and manufacturer/vendor's warranties, etc.;

I. Detailed description of the design, operation, and maintenance practices for air pollution control system;

J. Detailed description of the design, operation, and maintenance practices of any stack gas monitoring and pollution control monitoring system;

K. Documentation based on current WTP Unit design either confirming the Permittees' demonstration that it is not technically appropriate to correct standards listed in Permit Conditions III.10.H.1.b.ii. through III.10.H.1.b.ix. to seven (7) percent oxygen,. or a request, pursuant to Permit Conditions III.10.C.9.e. and III.10.C.9.f., to update Permit Conditions III.10.H.1.b.ii. through III.10.H.1.b.ix., III.10.I.b.ii. through III.10.I.b.ix., III.10.I.1.e.iii., and III.10.H.1.e.iii., Permit Tables III.10.H.C, III.10.H.F, III.10.I.C., III.10.I.F.and Operating Unit 10, Appendix 9.0 to reflect the addition of an oxygen monitor and the correction of the standards to seven percent (7%) oxygen.

III.10.H.5.f.vi. Detailed description of sampling and monitoring procedures including sampling and monitoring locations in the system, the equipment to be used, sampling and monitoring frequency, and planned analytical procedures for sample analysis including, but not limited to:

A. A short summary narrative description of each stack sample method should be included within the main body of the demonstration test plan, which references an appendix to the plan that would include for each sampling train: (1) detailed sample method procedures, (2) sampling train configuration schematic, (3) sampling recovery flow sheet, (4) detailed analytical method procedures, and (5) sampling preparation and analysis flow sheet. The detailed procedures should clearly flag where the method has provided decision points (e.g., choices of equipment materials of construction, choices of clean-up procedures or whether additional clean-up procedures will be incorporated, whether pretest surveys or laboratory validation work will be performed, enhancements to train to accommodate high moisture content in stack gas, etc.) and what is being proposed along with the basis for the decision.

B. A short summary narrative description of the feed and residue sampling methods should be included within the main body of the demonstration test plan, which references an appendix that would include for each sample type: (1) detailed sample method procedures, (2) sampling recovery/compositing procedures, and (3) detailed analytical method procedures. The detailed procedures should clearly flag where the method has provided decision points (e.g., choices of equipment materials of construction, choices of clean-up procedures or whether additional clean-up procedures will be incorporated, whether pretest surveys or laboratory validation work will be performed, etc.) and what is being proposed along with the basis for the decision

III.10.H.5.f.vii. A detailed test schedule for each condition for which the demonstration test is planned, including projected date(s), duration, quantity of dangerous waste to be fed, and other relevant factors;

III.10.H.5.f.viii. A detailed test protocol including, for each test condition, the ranges of feed-rate for each feed system, and all other relevant parameters that may affect the ability of the LAW Vitrification System to meet performance standards specified in Permit Condition III.10.H.1.b.;

III.10.H.5.f.ix. A detailed description of planned operating conditions for each demonstration test condition, including operating conditions for shakedown, demonstration test, post-demonstration test and normal operations. This information will also include submittal of Permit Tables III.10.H.D, III.10.H.F, III.10.I.D, and III.10.I.F completed with the information as specified in each column heading for each LAW Vitrification System waste feed cutoff parameter and submittal of supporting documentation for Permit Tables III.10.H.D, III.10.H.F, III.10.I.D, and III.10.I.F set-point values;

III.10.H.5.f.x. The test conditions proposed must demonstrate meeting the performance standards specified in Permit Condition III.10.H.1.b. with the simultaneous operation of both melters at capacity and input from the LAW Vitrification Vessel Ventilation System at capacity to simulate maximum loading to the LAW Vitrification System off-gas treatment system and to establish the corresponding operating parameter ranges. To the extent that operation of one (1) melter or two (2) melters can not be sustained within the operating parameter range established at this maximum load, additional demonstration test conditions must be included in the plan and performed to establish operating parameter ranges for each proposed operating mode while demonstrating meeting the performance standards specified in Permit Condition III.10.H.1.b.;

III.10.H.5.f.xi. Detailed description of procedures for start-up and shutdown of waste feed and controlling emissions in the event of an equipment malfunction, including off-normal and emergency shutdown procedures;

III.10.H.5.f.xii. A calculation of waste residence time;

III.10.H.5.f.xiii. Any request to extrapolate metal feed-rate limits from Demonstration Test levels must include:

A. A description of the extrapolation methodology and rationale for how the approach ensures compliance with the performance standards as specified in Permit Condition III.10.H.1.b.

B. Documentation of the historical range of normal metal feed-rates for each feedstream.

C. Documentation that the level of spiking recommended during the demonstration test will mask sampling and analysis imprecision and inaccuracy to the extent that extrapolation of feed-rates and emission rates from the Demonstration Test data will be as accurate and precise as if full spiking were used.

III.10.H.5.f.xiv. Documentation of the expected levels of constituents in LAW Vitrification System input streams including, but not limited to, waste feed, glass former and reactants, control air, process air, steam, sparge bubbler air, air in-Leakage from melter cave, gases from LAW Vitrification Vessel Ventilation System, and process water.

III.10.H.5.f.xv. Documentation justifying the duration of the conditioning required to ensure the LAW Vitrification System had achieved steady-state operations under Demonstration Test operating conditions.

III.10.H.5.f.xvi. Documentation of LAW Vitrification System process and leak detection system instruments and monitors as listed on Permit Tables III.10.H.C, III.10.H.F, III.10.I.C, and III.10.I.F to include:

A. Procurement specifications;

B. Location used;

C. Range, precision, and accuracy;

D. Detailed descriptions of calibration/functionality test procedures (either method number ASTM) or provide a copy of manufacturer's recommended calibration procedures;

E. Calibration/functionality test, inspection, and routine maintenance schedules and checklists, including justification for calibration, inspection and maintenance frequencies, criteria for identifying instruments found to be significantly out of calibration, and corrective action to be taken for instruments found to be significantly out of calibration (e.g., increasing frequency of calibration, instrument replacement, etc.);

F. Equipment instrument control logic narrative description (e.g., software functional specifications, descriptions of fail safe conditions, etc.) [WAC 173-303-680(2), WAC 173-303-806(4)(i)(i)(B), and WAC 173-303-806(4)(i)(v)].

III.10.H.5.f.xvii. Outline of demonstration test report.

Table III.10.H.A - LAW Vitrification System Description

Sub-system Description	Sub-system Designation	Engineering Description (Drawing Nos., Specification Nos., etc.)	Narrative Description, Tables and Figures
LAW Melter Process System LMP-MLTR-00001 (LAW Melter 1) LMP-MLTR-00002 (LAW Melter 2)	LMP	**24590-LAW** -P1-P01T-P0007 -P1-P01T-P0002 -P1-P01T-P0009	Section 4.1.3.2, Table 4-8, and Figures 4A-1, 4A-3 and 4A-21 in Operating Unit 10, Chapter 4.0 of this Permit.
LAW Primary Offgas Process System LOP-FCLR-00001 (Melter 1 Primary Film Cooler) LOP-FCLR-00002 (Melter 1Standby Film Cooler No. 2) LOP-FCLR-00003 (Melter 2 Primary Film Cooler) LOP-FCLR-00004 (Melter 2 Standby Film Cooler)	LOP	**24590-LAW** -P1-P01T-P0002 -P1-P01T-P0007 -P1-P01T-P0009 -M6-LOP-P0001 -M6-LOP-P0002	Section 4.1.3.3, Table 4-8, and Figures 4A-1, 4A-3 and 4A-21 in Operating Unit 10, Chapter 4.0 of this Permit.
LAW Primary Offgas Process System (Cont.) LOP-SCB-00001 (Melter 1 SBS) LOP-SCB-00002 (Melter 2 SBS)	LOP	**24590-LAW** -M5-V17T-P0007 -M5-V17T-P0008 -M6-LOP-P0001 -M6-LOP-P0002 -MK-LOP-P0001001	Section 4.1.3.3, Table 4-8, and Figures 4A-1 and 4A-3 in Operating Unit 10, Chapter 4.0 of this Permit.

Table III.10.H.A - LAW Vitrification System Description

Sub-system Description	Sub-system Designation	Engineering Description (Drawing Nos., Specification Nos., etc.)	Narrative Description, Tables and Figures
		-MK-LOP-P0001002 -MK-LOP-P0001003 -MKD-LOP-P0008 -NID-LOP-P0001 -P1-P01T-P0002 -P1-P01T-P0007 -P1-P01T-P0010	
LAW Primary Offgas Process System (Cont.) LOP-WESP-00001 (Melter 1 WESP) LOP-WESP-00002 (Melter 2 WESP)	LOP	**24590-LAW** -M5-V17T-P0007 -M5-V17T-P0008 -M6-LOP-P0001 -M6-LOP-P0002 -NID-LOP-P0003 -P1-P01T-P0002 -P1-P01T-P0007 -P1-P01T-P0011 24590-WTP-3PS-MKE0-TP001	Section 4.1.3.3, Table 4-8, and Figures 4A-1 and 4A-3 in Operating Unit 10, Chapter 4.0 of this Permit.
LAW Secondary Offgas/Vessel Vent Process System LVP-HEPA-00001A (HEPA Filter) LVP-HEPA-00001B (HEPA Filter)	LVP	**24590-LAW** -M5-V17T-P0010 -M6-LVP-P0003	Section 4.1.3.3, Table 4-8, Figures 4A-1 and 4A-3 in Operating Unit 10, Chapter 4.0 of this Permit.

Table III.10.H.A - LAW Vitrification System Description

Sub-system Description	Sub-system Designation	Engineering Description (Drawing Nos., Specification Nos., etc.)	Narrative Description, Tables and Figures
LVP-HEPA-00002A (HEPA Filter) LVP-HEPA-00002B (HEPA Filter) LVP-HEPA-00003A (HEPA Filter)			
LAW Secondary Offgas/Vessel Vent Process System (Cont.) LVP-SCO-00001 (Selective Catalytic Oxidizer – located on LVP-SKID-00002)	LVP	RESERVED	Section 4.1.3.3, Table 4-8, Figures 4A-1 and 4A-3 in Operating Unit 10, Chapter 4.0 of this Permit.
LAW Secondary Offgas/Vessel Vent Process System (Cont.) LVP-SCR-00001 (Selective Catalytic Reduction Unit – located on LVP-SKID-00002)	LVP	RESERVED	Section 4.1.3.3, Table 4-8, and Figures 4A-1 and 4A-3 in Operating Unit 10, Chapter 4.0 of this Permit.
LAW Secondary Offgas/Vessel Vent Process System (Cont.) LVP-ADBR-00001A (Offgas Mercury Adsorber – located on LVP-SKID-00001)	LVP	RESERVED	Section 4.1.3.3, Table 4-8, and Figures 4A-1 and 4A-3 in Operating Unit 10, Chapter 4.0 of this Permit.

Table III.10.H.A - LAW Vitrification System Description

Sub-system Description	Sub-system Designation	Engineering Description (Drawing Nos., Specification Nos., etc.)	Narrative Description, Tables and Figures
LVP-ADBR-00001B (Offgas Mercury Adsorber – located on LVP-SKID-00001)			
LAW Secondary Offgas/Vessel Vent Process System (Cont.) LVP-SCB-00001 (LAW Melter Offgas Caustic Scrubber)	LVP	**24590-LAW** -P1-P01T-P0004 -P1-P01T-P0009 -M6-LVP-P0002	Section 4.1.3.3, Table 4-8, and Figures 4A-1 and 4A-3 in Operating Unit 10, Chapter 4.0 of this Permit.
LAW Secondary Offgas/Vessel Vent Process System (Cont.) LVP-HTR-00001A (Electric Heater) LVP-HTR-00001B (Electric Heater) LVP-HTR-00002 (Electric Heater – located on LVP-SKID-00002)	LVP	**24590-LAW** -M5-V17T-P0010 -M6-LVP-P0001 -M6-LVP-P0005	Section 4.1.3.3, Table 4-8, and Figures 4A-1 and 4A-3 in Operating Unit 10, Chapter 4.0 of this Permit.
LAW Secondary Offgas/Vessel Vent Process System (Cont.) LVP-HX-00001 (Heat Exchanger – located on	LVP	RESERVED	Section 4.1.3.3, Table 4-8, and Figures 4A-1 and 4A-3 in Operating Unit 10, Chapter 4.0 of this Permit.

Table III.10.H.A - LAW Vitrification System Description

Sub-system Description	Sub-system Designation	Engineering Description (Drawing Nos., Specification Nos., etc.)	Narrative Description, Tables and Figures
LVP-SKID-00002)			
LAW Secondary Offgas/Vessel Vent Process System (Cont.) LVP-EXHR-00001A (Offgas Exhauster) LVP-EXHR-00001B (Offgas Exhauster) LVP-EXHR-00001C (Offgas Exhauster)	LVP	**24590-LAW** -M5-V17T-P0010 -M6-LVP-P0001	Section 4.1.3.3, Table 4-8, and Figures 4A-1 and 4A-3 in Operating Unit 10, Chapter 4.0 of this Permit.
LAW Secondary Offgas/Vessel Vent Process System (Cont.) LAW Stack	LVP	**24590-LAW** -M5-V17T-P0011 -M6-LVP-P0002	Section 4.1.3.3, and Figures 4A-1 and 4A-3 in Operating Unit 10, Chapter 4.0 of this Permit.

Table III.10.H.B - LAW Vitrification System Secondary Containment Systems Including Sumps and Floor Drains

Sump/Floor Drain I.D.# & Room Location	Maximum Sump Capacity (gallons)	Sump Dimensions[a] (feet) & Materials of Construction	Engineering Description (Drawing Nos., Specification Nos., etc.)
RESERVED	RESERVED	RESERVED	RESERVED

Footnotes:
[a]Dimensions listed are based on permitted design. Actual dimensions may vary within plus or minus (TBD).

Table III.10.H.C - LAW Vitrification System Process and Leak Detection System Instruments and Parameters

Tank System Name and Locator (including P&ID)	Control Parameter	Type of Instrument or Control Device	Location of Instrument or Control Device (Tag No.)	Instrument Range	Expected Operating Range or Setpoint	Fail States	Instrument Accuracy	Instrument Calibration Method No. and Frequency
24590-LAW-M6-LMP-00002	Melter 1 Glass Pool Density	Density Transmitter	DT-1404	TBD	TBD	TBD	TBD	TBD
		Density Indicator	DI-1404	TBD	TBD	TBD	TBD	TBD

Table III.10.H.C - LAW Vitrification System Process and Leak Detection System Instruments and Parameters

Tank System Name and Locator (including P&ID)	Control Parameter	Type of Instrument or Control Device	Location of Instrument or Control Device (Tag No.)	Instrument Range	Expected Operating Range or Setpoint	Fail States	Instrument Accuracy	Instrument Calibration Method No. and Frequency
	Melter 1 Glass Pool Level	Level Transmitter	LT-1405	TBD	TBD	TBD	TBD	TBD
		Level Indicator	LI-1405	TBD	TBD	TBD	TBD	TBD
	Melter 1 Plenum Pressure	Pressure Differential Transmitters	PDT-1410* PDT-1411*	TBD	TBD	TBD	TBD	TBD
		Pressure Differential Indicators	PDI-1410* PDI-1411*	TBD	TBD	TBD	TBD	TBD
24590-LAW-M6-LMP-00005	Melter 1 Plenum Temperature Average	Temperature Elements	TE-1267C, TE-1272C, TE-1280C	TBD	TBD	TBD	TBD	TBD

Table III.10.H.C - LAW Vitrification System Process and Leak Detection System Instruments and Parameters

Tank System Name and Locator (including P&ID)	Control Parameter	Type of Instrument or Control Device	Location of Instrument or Control Device (Tag No.)	Instrument Range	Expected Operating Range or Setpoint	Fail States	Instrument Accuracy	Instrument Calibration Method No. and Frequency
		Temperature Transmitter	TT-1267B	TBD	TBD	TBD	TBD	TBD
		Temperature Indicators	TI-1267C TI-1272C TI-1280C	TBD	TBD	TBD	TBD	TBD
	Melter 1 Lid Cooling	Temperature Transmitter	TT-1293	TBD	TBD	TBD	TBD	TBD
		Temperature Indicator	TI-1640	TBD	TBD	TBD	TBD	TBD
24590-LAW-M6-LMP-00007	Melter 1 West Canister Level	Level Element (IR Camera)	LE-1466	TBD	TBD	TBD	TBD	TBD
		Level Transmitter	LT-1466	TBD	TBD	TBD	TBD	TBD
		Level Indicator	LI-1466B	TBD	TBD	TBD	TBD	TBD
	Melter 1 East Canister Level	Level Element (IR Camera)	LE-1511	TBD	TBD	TBD	TBD	TBD
		Level Transmitter	LT-1511	TBD	TBD	TBD	TBD	TBD

Table III.10.H.C - LAW Vitrification System Process and Leak Detection System Instruments and Parameters

Tank System Name and Locator (including P&ID)	Control Parameter	Type of Instrument or Control Device	Location of Instrument or Control Device (Tag No.)	Instrument Range	Expected Operating Range or Setpoint	Fail States	Instrument Accuracy	Instrument Calibration Method No. and Frequency
		Level Indicator	LI-1511B	TBD	TBD	TBD	TBD	TBD
24590-LAW-M6-LMP-00008	Melter 1 East Discharge Air Lift	On/Off Plug Valve	YV-1047	TBD	TBD	TBD	TBD	TBD
		Valve Control	YC-1047	TBD	TBD	TBD	TBD	TBD
24590-LAW-M6-LMP-00010	Melter 1 West Discharge Air Lift	On/Off Plug Valve	YV-1125	TBD	TBD	TBD	TBD	TBD
		Valve Control	YC-1125	TBD	TBD	TBD	TBD	TBD
24590-LAW-M6-LMP-00012	Melter 1 Feed Encasement Assembly Leak Detection	Cable Type Conductivity Element	LE-1632	TBD	TBD	TBD	TBD	TBD
		Level Alarm High	LAH-1632	TBD	TBD	TBD	TBD	TBD
24590-LAW-M6-LMP-00013	Melter 1 Lid Cooling	Temperature Element	TE-1640	TBD	TBD	TBD	TBD	TBD
24590-LAW-M6-LMP-00032	Melter 2 Plenum Pressure	Pressure Differential Transmitters	PDT-2410* PDT-2411*	TBD	TBD	TBD	TBD	TBD
		Pressure Differential	PDI-2410*	TBD	TBD	TBD	TBD	TBD

Table III.10.H.C - LAW Vitrification System Process and Leak Detection System Instruments and Parameters

Tank System Name and Locator (including P&ID)	Control Parameter	Type of Instrument or Control Device	Location of Instrument or Control Device (Tag No.)	Instrument Range	Expected Operating Range or Setpoint	Fail States	Instrument Accuracy	Instrument Calibration Method No. and Frequency
		Indicators	PDI-2411*					
	Melter 2 Glass Pool Density	Density Transmitter	DT-2404	TBD	TBD	TBD	TBD	TBD
		Density Indicator	DI-2404	TBD	TBD	TBD	TBD	TBD
	Melter 2 Glass Pool Level	Level Transmitter	LT-2405	TBD	TBD	TBD	TBD	TBD
		Level Indicator	LI-2405	TBD	TBD	TBD	TBD	TBD
24590-LAW-M6-LMP-00035	Melter 2 Plenum Temperature Average	Temperature Elements	TE-2267C TE-2272C TE-2280C	TBD	TBD	TBD	TBD	TBD
		Temperature Transmitter	TT-2267B	TBD	TBD	TBD	TBD	TBD
		Temperature Indicators	TI-2267C TI-2272C TI-2280C	TBD	TBD	TBD	TBD	TBD
	Melter 2 Lid Cooling	Temperature Transmitter	TT-2293	TBD	TBD	TBD	TBD	TBD

Table III.10.H.C - LAW Vitrification System Process and Leak Detection System Instruments and Parameters

Tank System Name and Locator (including P&ID)	Control Parameter	Type of Instrument or Control Device	Location of Instrument or Control Device (Tag No.)	Instrument Range	Expected Operating Range or Setpoint	Fail States	Instrument Accuracy	Instrument Calibration Method No. and Frequency
		Temperature Indicator	TI-2640	TBD	TBD	TBD	TBD	TBD
24590-LAW-M6-LMP-00037	Melter 2 West Canister Level	Level Element (IR Camera)	LE-2466	TBD	TBD	TBD	TBD	TBD
		Level Transmitter	LT-2466	TBD	TBD	TBD	TBD	TBD
		Level Indication	LI-2466B	TBD	TBD	TBD	TBD	TBD
	Melter 2 East Canister Level	Level Element (IR Camera)	LE-2511	TBD	TBD	TBD	TBD	TBD
		Level Transmitter	LT-2511	TBD	TBD	TBD	TBD	TBD
		Level Indication	LI-2511B	TBD	TBD	TBD	TBD	TBD
24590-LAW-M6-LMP-00038	Melter 2 East Discharge Air Lift	On/Off Plug Valve	YV-2047	TBD	TBD	TBD	TBD	TBD
		Valve Control	YC-2047	TBD	TBD	TBD	TBD	TBD
24590-LAW-M6-LMP-00040	Melter 2 West Discharge Air Lift	On/Off Plug Valve	YV-2125	TBD	TBD	TBD	TBD	TBD
		Valve Control	YC-2125	TBD	TBD	TBD	TBD	TBD

Table III.10.H.C - LAW Vitrification System Process and Leak Detection System Instruments and Parameters

Tank System Name and Locator (including P&ID)	Control Parameter	Type of Instrument or Control Device	Location of Instrument or Control Device (Tag No.)	Instrument Range	Expected Operating Range or Setpoint	Fail States	Instrument Accuracy	Instrument Calibration Method No. and Frequency
24590-LAW-M6-LMP-00042	Melter 2 Feed Encasement Assembly Leak Detection	Cable Type Conductivity Element	LE-2632	TBD	TBD	TBD	TBD	TBD
		Level Alarm High	LAH-2632	TBD	TBD	TBD	TBD	TBD
24590-LAW-M6-LMP-00043	Melter 2 Lid Cooling	Temperature Element	TE-2640	TBD	TBD	TBD	TBD	TBD

*These instrument sets are duplicates. Only one instrument set is required to remain functioning during waste feed operations.

Table III.10.H.D - Maximum Feed-rates to LAW Vitrification System (RESERVED)

Description of Waste	Shakedown 1 and Post Demonstration Test	Shakedown 2 and Demonstration Test
Dangerous and Mixed Waste Feed-rate	RESERVED	RESERVED

Table III.10.H.D - Maximum Feed-rates to LAW Vitrification System (RESERVED)

Description of Waste	Shakedown 1 and Post Demonstration Test	Shakedown 2 and Demonstration Test
Total Chlorine/Chloride Feed-rate	RESERVED	RESERVED
Total Metal Feed-rates	RESERVED	RESERVED
Total Ash Feed-rate	RESERVED	RESERVED

1

Table III.10.H.E - LAW Vitrification System Estimated Emission Rates (RESERVED)

Chemicals	CAS Number	Emission Rates (grams /second)
RESERVED	RESERVED	RESERVED

1

TABLE III.10.H.F - LAW Vitrification System Waste Feed Cutoff Parameters* [1] (RESERVED)

Sub-system Designation	Instrument Tag Number	Parameter Description	Setpoints During Shakedown 1 and Post Demonstration Test	Setpoints During Shakedown 2 and Demonstration Test
RESERVED	RESERVED	RESERVED	RESERVED	RESERVED

Footnotes:
* A continuous monitoring system will be used as defined in Permit Section III.10.C.1.
[1] Maximum Feed-rate will be set based on not exceeding any of the constituent (e.g., ash, metals, and chlorine/chloride) feed limits specified on Table III.10.H.D. of this Permit.

III.10.I LAW Vitrification System – Long Term Miscellaneous Thermal Treatment Unit

For purposes of Permit Section III.10.I, where reference is made to WAC 173-303-640, the following substitutions apply: substitute the terms "LAW Vitrification System" for "tank system(s)," "sub-system(s)" for "tank(s)," "sub-system equipment" for "ancillary equipment," and "sub-system(s) or sub-system equipment of a LAW Vitrification System" for "component(s)," in accordance with WAC 173-303-680.

III.10.I.1 Requirements For LAW Vitrification System Beginning Normal Operation

Prior to commencing normal operations provided in Permit Section III.10.I, all requirements in Permit Section III.10.H will have been met by the Permittees and approved by Ecology, including the following: The LAW Vitrification System Demonstration Test results and the revised Final Risk Assessment provided for in Permit Condition III.10.C.11.c. or III.10.C.11.d. and Permit Section III.10.H, will have been evaluated and approved by Ecology, Permit Tables III.10.I.D and F, as approved/modified pursuant to Permit Condition III.10.H.5., will have been completed, submitted and approved pursuant to Permit Condition III.10.H.3.d.v. and Permit Table III.10.I.E, as approved/modified pursuant to Permit Condition III.10.H.5, will have been completed, submitted and approved pursuant to Permit Condition III.10.C.11.c. or d.

III.10.I.1.a. Construction and Maintenance [WAC 173-303-640, in accordance with WAC 173-303-680(2) and (3) and WAC 173-303-340].

III.10.I.1.a.i. The Permittees will maintain the design and construction of the LAW Vitrification System as specified in Permit Condition III.10.I.1., Operating Unit 10, Chapter 4.0 of this Permit, and Operating Unit 10, Appendices 9.1 through 9.17 of this Permit, as approved pursuant to Permit Conditions III.10.H.5.a. through d. and III.10.H.5.f.

III.10.I.1.a.ii. The Permittees will maintain the design and construction of all containment systems for the LAW Vitrification System, as specified in Operating Unit 10, Chapter 4.0 of this Permit, and Operating Unit 10, Appendices 9.2 and 9.4 through 9.14 of this Permit, as approved pursuant to Permit Conditions III.10.H.5.a. through d.

III.10.I.1.a.iii. Modifications to approved design, plans, and specifications in Operating Unit 10 of this Permit for the LAW Vitrification System will be allowed only in accordance with Permit Conditions III.10.C.2.e. and f., or III.10.C.2.g., III.10.C.9.d., e., and h.

III.10.I.1.a.iv. The Permittees will ensure all certifications required by specialists (e.g., independent, qualified, registered professional engineer; registered professional engineer; independent corrosion expert; independent, qualified installation inspector; installation inspector; etc.) use the following statement or equivalent pursuant to Permit Condition III.10.C.10:

"I, (Insert Name) have (choose one or more of the following: overseen, supervised, reviewed, and/or certified) a portion of the design or installation of a new LAW Vitrification system or component located at (address), and owned/operated by (name(s)). My duties were: (e.g., installation inspector, testing for tightness, etc.), for the following LAW Vitrification System components (e.g., the venting piping, etc.), as required by the

Dangerous Waste Regulations, namely, WAC 173-303-640(3) (applicable paragraphs [i.e., (a) through (g)], in accordance with WAC 173-303-680.

"I certify under penalty of law that I have personally examined and am familiar with the information submitted in this document and all attachments and that, based on my inquiry of those individuals immediately responsible for obtaining the information, I believe that the information is true, accurate, and complete. I am aware that there are significant penalties for submitting false information, including the possibility of fine and imprisonment."

III.10.I.1.a.v. The Permittees will ensure periodic integrity assessments are conducted on the LAW Vitrification System listed in Permit Table III.10.I.A, as approved/modified pursuant to Permit Condition III.10.H.5, over the term of this Permit in accordance with WAC 173-303-680(2) and (3) as specified in WAC 173-303-640(3)(b), following the description of the integrity assessment program and schedule in Operating Unit 10, Chapter 6.0 of this Permit, as approved pursuant to Permit Conditions III.10.H.5.e.i. and III.10.C.5.c. Results of the integrity assessments will be included in the WTP Unit operating record until ten (10) years after post closure, or corrective action is complete and certified, whichever is later.

III.10.I.1.a.vi. The Permittees will address problems detected during the LAW Vitrification System integrity assessments specified in Permit Condition III.10.I.1.a.v. following the description of the integrity assessment program in Operating Unit 10, Chapter 6.0 of this Permit, as approved pursuant to Permit Conditions III.10.H.5.e.i. and III.10.C.5.c.

III.10.I.1.a.vii. All process monitors/instruments as specified in Permit Table III.10.I.F, as approved/modified pursuant to Permit Conditions III.10.H.5 and III.10.H.3.d.v., will be equipped with operational alarms to warn of deviation, or imminent deviation from the limits specified in Permit Table III.10.I.F.

III.10.I.1.a.viii. The Permittees will install and test all process and leak detection system monitors/instruments, as specified in Permit Tables III.10.I.C and III.10.I.F, as approved/modified pursuant to Permit Condition III.10.H.5 and III.10.H.3.d.v., in accordance with Operating Unit 10, Appendices 9.1, 9.2, and 9.14 of this Permit, as approved pursuant to Permit Conditions III.10.H.5.d.x. and III.10.H.5.f..xvi.

III.10.I.1.a.ix. No dangerous and/or mixed waste will be treated in the LAW Vitrification System unless the operating conditions, specified under Permit Condition III.10.I.1.c. are complied with.

III.10.I.1.a.x. The Permittees will not place dangerous and/or mixed waste, treatment reagents, or other materials in the LAW Vitrification System if these substances could cause the sub-system, sub-system equipment, or the containment system to rupture, leak, corrode, or otherwise fail [WAC 173-303-640(5)(a), in accordance with WAC 173-303-680(2)]. This condition is not applicable to corrosion of LAW Vitrification System sub-system or sub-system equipment that are expected to be replaced as part of normal operations (e.g., melters).

III.10.I.1.a.xi. The Permittees will operate the LAW Vitrification System to prevent spills and overflows using description of controls and practices as required under WAC 173-303-640(5)(b), described in Permit Condition III.10.C.5 and Operating Unit 10, Appendix 9.18 of this Permit, as approved pursuant to Permit Condition III.10.H.5.e. [WAC 173-303-640(5)(b), in accordance with WAC 173-303-680(2) and (3), and WAC 173-303-806(4)(c)(ix)].

III.10.I.1.a.xii. For routinely non-accessible LAW Vitrification System sub-systems, as specified in Operating Unit 10, Chapter 4.0 of this Permit, as updated pursuant to Permit Condition III.10.H.5.e.vi., the Permittees will mark all routinely non-accessible LAW Vitrification System sub-systems access points with labels or signs to identify the waste contained in each LAW Vitrification System sub-system. The label, or sign, must be legible at a distance of at least fifty (50) feet and must bear a legend which identifies the waste in a manner which adequately warns employees, emergency response personnel, and the public of the major risk(s) associated with the waste being stored or treated in the LAW Vitrification System sub-systems. For the purposes of this permit condition, "routinely non-accessible" means personnel are unable to enter these areas while waste is being managed in them [WAC 173-303-640(5)(d), in accordance with WAC 173-303-680(2)].

III.10.I.1.a.xiii. For the LAW Vitrification System sub-systems not addressed in Permit Condition III.10.I.1.a.xii., the Permittees will mark these LAW Vitrification System sub-systems holding dangerous and/or mixed waste with labels or signs to identify the waste contained in the LAW Vitrification System sub-systems. The labels, or signs, must be legible at a distance of at least fifty (50) feet and must bear a legend which identifies the waste in a manner which adequately warns employees, emergency response personnel, and the public of the major risk(s) associated with the waste being stored or treated in the LAW Vitrification System sub-systems [WAC 173-303-640(5)(d), in accordance with WAC 173-303-680(2)].

III.10.I.1.a.xiv. The Permittees will ensure that the secondary containment systems for the LAW Vitrification System sub-systems listed in Permit Tables III.10.I.A and III.10.I.B, as approved/modified pursuant to Permit Condition III.10.H.5, are free of cracks or gaps to prevent any migration of dangerous and/or mixed waste or accumulated liquid out of the system to the soil, groundwater, or surface water at any time during use of the LAW Vitrification System sub-systems. Any indication that a crack or gap may exist in the containment systems will be investigated and repaired in accordance with Operating Unit 10, Appendix 9.18 of this Permit, as approved pursuant to Permit Condition III.10.H.5.e.v. [WAC 173-303–640(4)(b)(i), WAC 173-303-640(4)(e)(i)(C), and WAC 173-303-640(6), in accordance with WAC 173-303-680(2) and (3), WAC 173-303-806(4)(i)(i)(B), and WAC 173-303-320].

III.10.I.1.a.xv. The Permittees must immediately, and safely, remove from service any LAW Vitrification System or secondary containment system which through an integrity assessment is found to be "unfit for use" as defined in WAC 173-303-040, following Permit Condition III.10.I.1.a.xvii. A through D, and F. The affected LAW Vitrification System or secondary containment system must be either repaired or closed in accordance

with Permit Condition III.10.I.1.a.xvii.E [WAC 173-303-640(7)(e) and (f) and WAC 173-303-640(8), in accordance with WAC 173-303-680(3)].

III.10.I.1.a.xvi. An impermeable coating, as specified in Operating Unit 10, Appendices 9.4, 9.5, 9.7, 9.9, 9.11, and 9.12 of this Permit, as approved pursuant to Permit Condition III.10.H.5.b.v., will be maintained for all concrete containment systems and concrete portions of containment systems for the LAW Vitrification System sub-systems listed in Permit Tables III.10.I.A and III.10.I.B, as approved/modified pursuant to Permit Condition III.10.H.5 (concrete containment systems that do not have a liner, pursuant to WAC 173-303-640(4)(e)(i), in accordance with WAC 173-303-680(2), and have construction joints, will meet the requirements of WAC 173-303-640(4)(e)(ii)(C), in accordance with WAC 173-303-680(2). The coating will prevent migration of any dangerous and/or mixed waste into the concrete. All coatings will meet the following performance standards:

A. The coating must seal the containment surface such that no cracks, seams, or other avenues through which liquid could migrate are present;

B. The coating must be of adequate thickness and strength to withstand the normal operation of equipment and personnel within the given area such that degradation or physical damage to the coating or lining can be identified and remedied before dangerous and mixed waste could migrate from the system; and

C. The coating must be compatible with the dangerous and/or mixed waste, treatment reagents, or other materials managed in the containment system [WAC 173-303-640(4)(e)(ii)(D), in accordance with WAC 173-303-680(2) and (3) and WAC 173-303-806(4)(i)(i)(A)].

III.10.I.1.a.xvii. The Permittees inspect all secondary containment systems for the LAW Vitrification System sub-systems listed in Permit Tables III.10.I.A and III.10.I.B, as approved/modified pursuant to Permit Condition III.10.H.5, in accordance with the Inspection Schedule specified in Operating Unit 10, Chapter 6.0 of this Permit, as approved pursuant to Permit Conditions III.10.H.5.e.i. and III.10.C.5.c., and take the following actions if a leak or spill of dangerous and/or mixed waste is detected in these containment systems [WAC 173-303-640(5)(c) and WAC 173-303-640(6), in accordance with WAC 173-303-680(2) and (3), WAC 173-303-320, and WAC 173-303-806(4)(i)(i)(B)].

A. Immediately, and safely, stop the flow of dangerous and/or mixed waste into the LAW Vitrification System sub-systems or secondary containment system.

B. Determine the source of the dangerous and/or mixed waste.

C. Remove the waste from the containment area in accordance with WAC 173-303-680(2) and (3) as specified in WAC 173-303-640(7)(b). The waste removed from containment areas of the LAW Vitrification System sub-systems will be, as a minimum, managed as dangerous and/or mixed waste.

D. If the cause of the release was a spill that has not damaged the integrity of the LAW Vitrification System sub-system, the Permittees may return the LAW Vitrification

System sub-system to service in accordance with WAC 173-303-680(2) and (3) as specified in WAC 173-303-640(7)(e)(ii). In such case, the Permittees will take action to ensure the incident that caused the dangerous and/or mixed waste to enter the containment system will not reoccur.

E. If the source of the dangerous and/or mixed waste is determined to be a leak from the primary LAW Vitrification System into the secondary containment system, or the system is unfit for use as determined through an integrity assessment or other inspection, the Permittees will comply with the requirements of WAC 173-303-640(7) and take the following actions:

1. Close the LAW Vitrification System sub-system following procedures in WAC 173-303-640(7)(e)(i), in accordance with WAC 173-303-680 and Operating Unit 10, Chapter 11.0 of this Permit, as approved pursuant to Permit Condition III.10.C.8; or

2. Repair and re-certify (in accordance with WAC 173-303-810(13)(a), as modified pursuant to Permit Condition III.10.I.1.a.iii.) the LAW Vitrification System in accordance with Operating Unit 10, Appendix 9.18 of this Permit, as approved pursuant to Permit Condition III.10.H.5.e.v., before the LAW Vitrification System is placed back into service [WAC 173-303-640(7)(e)(iii) and WAC 173-303-640(7)(f), in accordance with WAC 173-303-680].

F. The Permittees will document in the WTP Unit operating record actions/procedures taken to comply with A through E above, as specified in WAC 173-303-640(6)(d), in accordance with WAC 173-303-680(2) and (3).

G. In accordance with WAC 173-303-680(2) and (3), the Permittees will notify and report releases to the environment to Ecology, as specified in WAC 173-303-640(7)(d).

III.10.I.1.a.xviii. If liquids (e.g., dangerous and/or mixed waste, leaks and spills, precipitation, fire water, liquids from damaged or broken pipes) cannot be removed from the secondary containment system within twenty-four (24) hours, Ecology will be verbally notified within twenty-four (24) hours of discovery. The notification will provide the information in A, B, and C, listed below. The Permittees will provide Ecology with a written demonstration within seven (7) business days, identifying at a minimum [WAC 173-303-640(4)(c)(iv) and WAC 173-303-640(7)(b)(ii), in accordance with WAC 173-303-680(3) and WAC 173-303-806(4)(i)(i)(B)]:

A. Reasons for delayed removal;

B. Measures implemented to ensure continued protection of human health and the environment;

C. Current actions being taken to remove liquids from secondary containment.

III.10.I.1.a.xix. All air pollution control devices and capture systems in the LAW Vitrification System will be maintained and operated at all times in a manner so as to minimize the emissions

of air contaminants and to minimize process upsets. Procedures for ensuring that the air pollution control devices and capture systems in the LAW Vitrification System are properly operated and maintained so as to minimize the emission of air contaminants and process upsets will be established.

III.10.I.1.a.xx. In all future narrative permit submittals, the Permittees will include LAW Vitrification sub-system names with the sub-system designation.

III.10.I.1.a.xxi. For any portion of the LAW Vitrification System that has the potential for formation and accumulation of hydrogen gases, the Permittees will operate the portion to maintain hydrogen levels below the lower explosive limit [WAC 173-303-815(2)(b)(ii)].

III.10.I.1.a.xxii. For each LAW Vitrification System sub-system holding dangerous and/or mixed waste that are acutely or chronically toxic by inhalation, the Permittees will operate the system to prevent escape of vapors, fumes, or other emissions into the air [WAC 173-303-806(4)(i)(i)(B) and WAC 173-303-640(5)(e), in accordance with WAC 173-303-680].

III.10.I.1.a.xxiii. The existing LAW building will retain capability to install the third melter before or after hot start-up. No permanent systems, structures, or components shall be installed in the melter cell, pour cave or wet process cell for the third melter that would preclude future installation of the third melter.

III.10.I.1.b. Performance Standards

III.10.I.1.b.i. The LAW Vitrification System must achieve a destruction and removal efficiency (DRE) of 99.99% for the principal organic dangerous constituents (PODCs) listed below [40 CFR §63.1203(c)(1) and 40CFR §63.1203(c)(2), in accordance with WAC 173-303-680(2)]:

RESERVED

DRE in this permit condition will be calculated in accordance with the formula given below:

DRE=[1-(Wout/Win)] x 100%

Where:

Win=mass feedrate of one principal organic dangerous constituent (PODC) in a waste feedstream; and

Wout=mass emission rate of the same PODC present in exhaust emissions prior to release to the atmosphere.

III.10.I.1.b.ii. Particulate matter emissions from the LAW Vitrification System will not exceed 34 mg/dscm (0.015 grains/dscf) [40 CFR §63.1203(b)(7), in accordance with WAC 173-303-680(2)];

III.10.I.1.b.iii. Hydrochloric acid and chlorine gas emissions from the LAW Vitrification System will not exceed 21 ppmv, combined [40 CFR §63.1203(b)(6), in accordance with WAC 173-303-680(2)];

III.10.I.1.b.iv. Dioxin and Furan TEQ emissions from the LAW Vitrification System will not exceed 0.2 nanograms (ng)/dscm, [40 CFR §63.1203(b)(1), in accordance with WAC 173-303-680(2)];

III.10.I.1.b.v. Mercury emissions from the LAW Vitrification System will not exceed 45 µg/dscm [40 CFR §63.1203(b)(2), in accordance with WAC 173-303-680(2)];

III.10.I.1.b.vi. Lead and cadmium emissions from the LAW Vitrification System will not exceed 120 µg/dscm, combined [40 CFR §63.1203(b)(3), in accordance with WAC 173-303-680(2)];

III.10.I.1.b.vii. Arsenic, beryllium, and chromium emissions from the LAW Vitrification System will not exceed 97 µg/dscm, combined [40 CFR §63.1203(b)(4), in accordance with WAC 173-303-680(2)];

III.10.I.1.b.viii. Carbon monoxide (CO) emission from the LAW Vitrification System will not exceed 100 parts per million (ppm) by volume, over an hourly rolling average (as measured and recorded by the continuous monitoring system), dry basis [40 CFR §63.1203(b)(5)(i), in accordance with WAC 173-303-680(2) and (3)];

III.10.I.1.b.ix. Hydrocarbon emission from the LAW Vitrification System will not exceed 10 parts per million (ppm) by volume, over an hourly rolling average (as measured and recorded by the continuous monitoring system during demonstration testing required by this Permit), dry basis and reported as propane [40 CFR §63.1203(b)(5)(ii), in accordance with WAC 173-303-680(2) and (3)];

III.10.I.1.b.x. If the emissions from the LAW Vitrification System exceed the emission rates listed in Permit Table III.10.I.E, as approved pursuant to Permit Condition III.10.C.11.c. or d., the Permittees will perform the following actions [WAC 173-303-680(2) and (3), and WAC 173-303-815(2)(b)(ii)]:

A. Verbally notify Ecology within twenty-four (24) hours of the discovery of exceeding the emission rate(s) as specified in Permit Condition I.E.21.

B. Submit to Ecology additional risk information to indicate that the increased emissions impact is offset by decreased emission impact from one or more constituents expected to be emitted at the same time, and/or investigate the cause and impact of the exceedence of the emission rate(s) and submit a report of the investigation findings to Ecology within fifteen (15) days of the discovery of exceeding the emission rate(s); and

C. Based on the notification and any additional information, Ecology may provide, in writing, direction to the Permittees to stop dangerous and/or mixed waste feed to the LAW Vitrification System and/or to submit a revised Demonstration Test Plan as a permit modification pursuant to Permit Conditions III.10.C.2.e. through g. The revised Demonstration Test Plan must include substantive changes to prevent failure from reoccurring.

The emission limits specified in Permit Conditions III.10.I.1.b.i. through x. above, will be met for the LAW Vitrification System by limiting feed rates as specified in Permit Tables

III.10.I.D and III.10.I.F, as approved/modified pursuant to Permit Conditions III.10.H.5. and III.10.H.3.d.v., compliance with operating conditions specified in Permit Condition III.10.I.1.c. (except as specified in Permit Condition III.10.I.1.b.xii.), and compliance with Permit Condition III.10.I.1.b.xi.;

III.10.I.1.b.xi. Treatment effectiveness, feed-rates and operating rates for dangerous and/or mixed waste management units contained in the LAW Building, but not included in Permit Table III.10.I.A, as approved/modified pursuant to Permit Condition III.10.H.5, will be as specified in Permit Sections III.10.D through F and consistent with assumptions and basis which are reflected in Operating Unit 10, Appendix 6.3.1 of this Permit, as approved pursuant to Permit Condition III.10.C.11.b. For the purposes of this permit condition, Operating Unit 10, Appendix 6.3.1 will be superceded by Appendix 6.4.1 upon its approval pursuant to either Permit Condition III.10.C.11.c or III.10.C.11.d. [WAC 173-303-680(2) and (3), and WAC 173-303-815(2)(b)(ii)];

III.10.I.1.b.xii. Compliance with the operating conditions specified in Permit Condition III.10.I.1.c., will be regarded as compliance with the required performance standards identified in Permit Conditions III.10.I.1.b.i. through x. However, if it is determined that during the effective period of this Permit that compliance with the operating conditions in Permit Condition III.10.I.1.c. is not sufficient to ensure compliance with the performance standards specified in Permit Conditions III.10.I.1.b.i. through x., the Permit may be modified, revoked, or reissued pursuant to Permit Conditions III.10.C.2.e. and f., or III.10.C.2.g.

III.10.I.1.c. Operating Conditions [WAC-303-670(6), in accordance with WAC 173-303-680(2) and (3)]

The Permittees will operate the LAW Vitrification System in accordance with Operating Unit 10, Chapter 4.0 of this Permit, as updated pursuant to Permit Condition III.10.H.5.e.vi. and Operating Unit 10, Appendix 9.18 of this Permit, as approved pursuant to Permit Condition III.10.H.5.e., and Operating Unit 10, Appendix 9.15 of this Permit, as approved pursuant to Permit Condition III.10.H.5.f., except as modified pursuant to Permit Conditions III.10.H.3, III.10.I.1.b.x., III.10.I.1.b.xii., III.10.I.1.h., and in accordance with and the following:

III.10.I.1.c.i. The Permittees will operate the LAW Vitrification System in order to maintain the systems and process parameters listed in Permit Tables III.10.I.C and III.10.I.F, as approved/modified pursuant to Permit Conditions III.10.H.5 and III.10.H.3.d.v., within the set-points specified in Permit Table III.10.I.F.

III.10.I.1.c.ii. The Permittees will operate the AWFCO systems, specified in Permit Table III.10.I.F, as approved/modified pursuant to Permit Conditions III.10.H.5 and III.10.H.3.d.v., to automatically cut-off and/or lock-out the dangerous and/or mixed waste feed to LAW Vitrification System when the monitored operating conditions deviate from the set-points specified in Permit Table III.10.I.F.

III.10.I.1.c.iii. The Permittees will operate the AWFCO systems, specified in Permit Table III.10.I.F, as approved/modified pursuant to Permit Conditions III.10.H.5 and III.10.H.3.d.v., to automatically cut-off and/or lock-out the dangerous and/or mixed waste feed to LAW

Vitrification System when all instruments specified in Permit Table III.10.H.F for measuring the monitored parameters fails or exceeds its span value.

III.10.I.1.c.iv. The Permittees will operate the AWFCO systems, specified in Permit Table III.10.I.F, as approved/modified pursuant to Permit Conditions III.10.H.5 and III.10.H.3.d.v., to automatically cut-off and/or lock out the dangerous waste and/or mixed waste feed to the LAW Vitrification System when any portion of the LAW Vitrification System is bypassed. The terms "bypassed" and "bypass event," as used in Permit Sections III.10.H and III.10.I, will mean if any portion of the LAW Vitrification System is bypassed so that gases are not treated as during the Demonstration Test.

III.10.I.1.c.v. In the event of a malfunction of the AWFCO systems listed in Permit Table III.10.I.F, as approved/modified pursuant to Permit Conditions III.10.H.5 and III.10.H.3.d.v., the Permittees will immediately, manually cut-off the dangerous and/or mixed waste feed to the LAW Vitrification System. The Permittees will not restart the dangerous and/or mixed waste feed until the problem causing the malfunction has been identified and corrected.

III.10.I.1.c.vi. The Permittees will manually cut-off the dangerous and/or mixed waste feed to the LAW Vitrification System when the operating conditions deviate from the limits specified in Permit Condition III.10.I.1.c.i., unless the deviation automatically activates the waste feed cut-off sequence specified in Permit Conditions III.10.I.1.c.ii., iii., and/or iv.

III.10.I.1.c.vii. If greater than thirty (30) dangerous and/or mixed waste feed cut-off, combined, to the LAW Vitrification System occur due to deviations from Permit Table III.10.I.F, as approved/modified pursuant to Permit Conditions III.10.H.5 and III.10.H.3.d.v., within a sixty (60) day period, the Permittees will submit a written report to Ecology within five (5) calendar days of the thirty-first exceedence, including the information specified below. These dangerous and/or mixed waste feed cut-offs to the LAW Vitrification System, whether automatically or manually activated, are counted if the specified set-points are deviated from while dangerous and/or mixed waste and waste residues continue to be processed in the LAW Vitrification System. A cascade event is counted at a frequency of one (1) towards the first waste feed cut-off parameter, specified in Permit Table III.10.I.F, from which the set-point is deviated:

A. The parameter(s) that deviated from the set-point(s) in Permit Table III.10.I.F;

B. The magnitude, dates, and duration of the deviations;

C. Results of the investigation of the cause of the deviations; and

D. Corrective measures taken to minimize future occurrences of the deviations.

III.10.I.1.c.viii. If greater than thirty (30) dangerous and/or mixed waste feed cut-off, combined, to the LAW Vitrification System occur due to deviations from Permit Table III.10.I.F, as approved/modified pursuant to Permit Conditions III.10.H.5 and III.10.H.3.d.v., within a thirty (30) day period, the Permittees will submit the written report required to be submitted pursuant to Permit Condition III.10.I.1.c.vii. to Ecology on the first business day following the thirty-first exceedence. These dangerous and/or mixed waste feed cut-

offs to the LAW Vitrification System, whether automatically or manually activated, are counted if the specified set-points are deviated from while dangerous and/or mixed waste and waste residues continue to be processed in the LAW Vitrification System. A cascade event is counted at a frequency of one (1) towards the first waste feed cut-off parameter, specified on Permit Table III.10.I.F, from which the set-point is deviated:

In accordance with WAC 173-303-680(2) and (3), the Permittees may not resume dangerous and/or mixed waste feed to the LAW Vitrification System until this written report has been submitted, and

A. Ecology has authorized the Permittees, in writing, to resume dangerous and/or mixed waste feed, or

B. Ecology has not, within seven (7) days, notified the Permittees in writing of the following:

1. The Permittees written report does not document that the corrective measures taken will minimize future exceedances; and

2. The Permittees must take further corrective measures and document that these further corrective measures will minimize future exceedances.

III.10.I.1.c.ix. If any portion of the LAW Vitrification System is bypassed while treating dangerous and/or mixed waste, it will be regarded as non-compliance with the operating conditions specified in Permit Condition III.10.I.1.c. and the performance standards specified in Permit Condition III.10.I.1.b. After such a bypass event, the Permittees will perform the following actions:

A. Investigate the cause of the bypass event;

B. Take appropriate corrective measures to minimize future bypasses;

C. Record the investigation findings and corrective measures in the WTP Unit operating record; and

D. Submit a written report to Ecology within five (5) days of the bypass event documenting the result of the investigation and corrective measures.

III.10.I.1.c.x. The Permittees will control fugitive emissions from the LAW Vitrification System by maintaining the melters under negative pressure.

III.10.I.1.c.xi. Compliance with the operating conditions specified in Permit Condition III.10.I.1.c. will be regarded as compliance with the required performance standards identified in Permit Condition III.10.I.1.b. However, evidence that compliance with these operating conditions is insufficient to ensure compliance with the performance standards, will justify modification, revocation, or re-issuance of this Permit, in accordance with Permit Conditions III.10.C.2.e. and f., or III.10.C.2.g.

III.10.I.1.d. Inspection Requirements [WAC 173-303-680(3)]

III.10.I.1.d.i. The Permittees will inspect the LAW Vitrification System in accordance with the Inspection Schedules in Operating Unit 10, Chapter 6.0 of this Permit, as modified in accordance with Permit Condition III.10.C.5.c.

III.10.I.1.d.ii. The inspection data for LAW Vitrification System will be recorded, and the records will be placed in the WTP Unit operating record for LAW Vitrification System, in accordance with Permit Condition III.10.C.4.

III.10.I.1.d.iii. The Permittees will comply with the inspection requirements specified in Operating Unit 10, Appendix 9.15 of this Permit, as approved pursuant to Permit Condition III.10.H.5.f. and as modified by Permit Conditions III.10.H.3, III.10.I.1.b.x., III.10.I.1.b.xii., and III.10.I.1.h.

III.10.I.1.e. Monitoring Requirements [WAC 173-303-670(5), WAC 173-303-670(6), WAC 173-303-670(7), and WAC 173-303-807(2), in accordance with WAC 173-303-680(3)]

III.10.I.1.e.i. Upon receipt of a written request from Ecology, the Permittees will perform sampling and analysis of the dangerous and/or mixed waste and exhaust emissions to verify that the operating requirements established in the Permit achieve the performance standards delineated in this Permit.

III.10.I.1.e.ii. The Permittees will comply with the monitoring requirements specified in the Operating Unit 10, Appendices 9.2, 9.3, 9.7, 9.13, 9.15 and 9.18 of this Permit, as approved pursuant to Permit Condition III.10.H.5, and as modified by Permit Conditions III.10.H.3, III.10.I.1.h., III.10.I.1.b.x., and III.10.I.1.b.xii.

III.10.I.1.e.iii. The Permittees will operate, calibrate, and maintain the carbon monoxide and hydrocarbon continuous emission monitors (CEM) specified in this Permit in accordance with Performance Specifications 4B and 8A of 40 CFR Part 60, Appendix B, in accordance with Appendix to Subpart EEE of 40 CFR Part 63, and Operating Unit 10 Appendix 9.15 of this Permit, as approved pursuant to Permit Condition III.10.H.5.f., and as modified by Permit Conditions III.10. H.3, III.10.I.1.h., III.10.I.1.b.x., and III.10.I.1.b.xii.

III.10.I.1.e.iv. The Permittees will operate, calibrate, and maintain the instruments specified in Permit Tables III.10.I.C and F, as approved/modified pursuant to Permit Conditions III.10.H.5 and III.10.H.3.d.v., in accordance with Operating Unit 10, Appendix 9.15 of this Permit, as approved pursuant to Permit Condition III.10.H.5.f., and as modified by Permit Conditions III.10.H.3, III.10.I.1.h., III.10.I.1.b.x., and III.10.I.1.b.xii.

III.10.I.1.f. Recordkeeping Requirements [WAC 173-303-380 and WAC 173-303-680(3)]

III.10.I.1.f.i. The Permittees will record and maintain in the WTP Unit operating record for the LAW Vitrification System, all monitoring, calibration, maintenance, test data, and inspection data compiled under the conditions of this Permit, in accordance with Permit Conditions III.10.C.4 and 5, as modified by Permit Conditions III.10.H.3, III.10.I.1.h., III.10.I.1.b.x., and III.10.I.1.b.xii.

III.10.I.1.f.ii. The Permittees will record in the WTP Unit operating record the date, time, and duration of all automatic waste feed cutoffs and/or lockouts, including the triggering parameters, reason for the deviation, and recurrence of the incident. The Permittees will also record all incidents of AWFCO system function failures, including the corrective measures taken to correct the condition that caused the failure.

III.10.I.1.f.iii. The Permittees will submit to Ecology an annual report each calendar year within ninety (90) days following the end of the year. The report will include the following information:

A. Total dangerous and/or mixed waste feed processing time for the LAW Vitrification System;

B. Date/Time of all LAW Vitrification System startups and shutdowns;

C. Date/Time/Duration/Cause/Corrective Action taken for all LAW Vitrification System shutdowns caused by malfunction of either process or control equipment; and

D. Date/Time/Duration/Cause/Corrective Action taken for all instances of dangerous and/or mixed waste feed cut-off due to deviations from Permit Table III.10.I.F, as approved/modified pursuant to Permit Conditions III.10.H.5 and III.10.H.3.d.v.

III.10.I.1.f.iv. The Permittees will submit an annual report to Ecology each calendar year within ninety (90) days following the end of the year of all quarterly CEM Calibration Error and Annual CEM Performance Specification Tests conducted, in accordance with Permit Condition III.10.I.1.e.iii.

III.10.I.1.g. Closure

The Permittees will close the LAW Vitrification System in accordance with Operating Unit 10, Chapter 11.0 of this Permit, as approved pursuant to Permit Condition III.10.C.8.

III.10.I.1.h. Periodic Emission Re-testing Requirements [WAC 173-303-670(5), WAC 173-303-670(7), and WAC 173-303-807(2), in accordance with WAC 173-303-680(2) and (3)]

III.10.I.1.h.i. Dioxin and Furan Emission Testing

A. Within eighteen (18) months of commencing operation pursuant to Permit Section III.10.I, the Permittees will submit to Ecology for approval, a Dioxin and Furan Emission Test Plan (DFETP) for the performance of emission testing of the LAW Vitrification System gases for dioxin and furans during "Normal Operating Conditions" as a permit modification in accordance with Permit Conditions III.10.C.2.e. and III.10.C.2.f. The DFETP will include all elements applicable to dioxin and furan emission testing included in the "Previously Approved Demonstration Test Plan," applicable EPA promulgated test methods and procedures in effect at the time of the submittal, and projected commencement and completion dates for dioxin and furan emission test. "Normal Operating Conditions" will be defined for the purposes of this permit condition as follows:

1. Carbon monoxide emissions, dangerous and/or mixed waste feed-rate, and automatic waste feed cut-off parameters specified in Permit Table III.10.I.F (as approved/modified pursuant to Permit Conditions III.10.H.5 and III.10.H.3.d.v.), that were established to maintain compliance with Permit Condition III.10.I.1.b.iv. as specified in Operating Unit 10, Appendix 9.15 of this Permit (as approved pursuant to Permit Condition III.10.H.3.d., and in accordance with III.10.I.1.b.xii. and III.10.I.1.c.xi.), are held within the range of the average value over the previous twelve (12) months and the set-point value specified in Permit Table III.10.I.F. The average value is defined as the sum of the rolling average values recorded over the previous twelve (12) months divided by the number of rolling averages recorded during that time. The average value will not include calibration data, malfunction data, and data obtained when not processing dangerous and/or mixed waste; and

2. Feed-rate of metals, ash, and chlorine/chloride are held within the range of the average value over the previous twelve (12) months and the set-point value specified on Permit Table III.10.I.D (as approved/modified pursuant to Permit Conditions III.10.H.5 and III.10.H.3.d.v.). Feed-rate of organics as measured by TOC are held within the range of the average value over the previous twelve (12) months. The average value is defined as the sum of the rolling average values recorded over the previous twelve (12) months divided by the number of rolling averages recorded during that time. The average value will not include data obtained when not processing dangerous and/or mixed waste.

For purposes of this permit condition, the "Previously Approved Demonstration Test Plan" is defined to include the Demonstration Test Plan approved pursuant to Permit Condition III.10.H.5.f.

B. Within sixty (60) days of Ecology's approval of the DFETP, or within thirty-one (31) months of commencing operation pursuant to Permit Section III.10.I, whichever is later, the Permittees will implement the DFETP approved pursuant to Permit Condition III.10.I.1.h.i.A.

C. The Permittees will resubmit the DFETP, approved pursuant to Permit Condition III.10.I.1.h.i.A, revised to include applicable EPA promulgated test methods and procedures in effect at the time of the submittal, and projected commencement and completion dates for dioxin and furan emission test as a permit modification in accordance with Permit Conditions III.10.C.2.e. and III.10.C.2.f. at twenty-four (24) months from the implementation date of the testing required pursuant to Permit Condition III.10.I.1.h.i.A and at reoccurring eighteen (18) month intervals from the implementation date of the previously approved DFETP. The Permittees will implement these newly approved revised DFETPs, every thirty-one (31) months from the previous approved DFETP implementation date or within sixty (60) days of the newly Ecology approved revised DFETP, whichever is later, for the duration of this Permit.

D. The Permittees will submit a summary of operating data collected pursuant to the DFETPs in accordance with Permit Conditions III.10.I.1.h.i.A and C to Ecology upon completion of the tests. The Permittees will submit to Ecology the complete test report within ninety (90) calendar days of completion of the testing. The test reports will be certified as specified in WAC 173-303-807(8), in accordance with WAC 173-303-680(2) and (3).

E. If any calculations or testing results collected pursuant to the DFETPs in accordance with Permit Conditions III.10.I.1.h.i.A and C. show that one or more of the performance standards listed in Permit Condition III.10.I.1.b., with the exception of Permit Condition III.10.I.1.b.x., for the LAW Vitrification System were not met during the emission test, the Permittees will perform the following actions:

1. Immediately stop dangerous and/or mixed waste feed to the LAW Vitrification System under the mode of operation that resulted in not meeting the performance standard(s);

2. Verbally notify Ecology within twenty-four (24) hours of discovery of not meeting the performance standard(s), as specified in Permit Condition I.E.21;

3. Investigate the cause of the failure and submit a report of the investigation findings to Ecology within fifteen (15) days of discovery of not meeting the performance standard(s);

4. Submit to Ecology within fifteen (15) days of discovery of not meeting the performance standard(s) documentation supporting a mode of operation where all performance standards listed in Permit Condition III.I.1.b., with the exception of Permit Condition III.10.I.1.b.x., for the LAW Vitrification System were met during the demonstration test, if any such mode was demonstrated;

5. Based on the information provided to Ecology by the Permittees pursuant to Permit Conditions III.10.I.1.h.i.E.1 through 4 above, and any additional information, Ecology may provide in writing, direction to the Permittees to stop dangerous waste and mixed waste feed to the LAW Vitrification System and/or amend the mode of operation the Permittees are allowed to continue operations prior to Ecology approval of the revised Demonstration Test Plan pursuant to Permit Condition III.10. I.1.h.i.E.6; and

6. Submit to Ecology within one hundred and twenty (120) days of discovery of not meeting the performance standard(s) a revised Demonstration Test Plan requesting approval to retest as a permit modification pursuant to Permit Conditions III.10.C.2.e.and III.10.C.2.f. The revised Demonstration Test Plan must include substantive changes to prevent failure from reoccurring reflecting performance under operating conditions representative of the extreme range of normal conditions, and include revisions to Permit Tables III.10.I.D and F.

F. If any calculations or testing results collected pursuant to the DFETPs in accordance with Permit Conditions III.10.I.1.h.i.A and C show that any emission rate for any constituent listed in Permit Table III.10.I.E, as approved/modified pursuant to Permit Conditions III.10.C.11.c. or d. is exceeded for LAW Vitrification System during the emission test, the Permittees will perform the following actions:

1. Verbally notify Ecology within twenty-four (24) hours of the discovery of exceeding the emission rate(s), as specified in Permit Condition I.E.21;

2. Submit to Ecology additional risk information to indicate that the increased emissions impact is off-set by decreased emission impact from one or more constituents expected to be emitted at the same time, and/or investigate the cause and impact of the exceedence and submit a report of the investigation findings to Ecology within fifteen (15) days of this discovery of exceeding the emission rate(s); and

3. Based on the notification and any additional information, Ecology may provide, in writing, direction to the Permittees to stop dangerous and/or mixed waste feed to the LAW Vitrification System and/or to submit a revised Demonstration Test Plan as a permit modification pursuant to Permit Conditions III.10.C.2.e. and f., or III.10.C.2.g. The revised Demonstration Test Plan must include substantive changes to prevent failure from reoccurring reflecting performance under operating conditions representative of the extreme range of normal conditions, and include revisions to Permit Tables III.10.I.D and III.10.I.F.

III.10.I.1.h.ii. Non-organic Emission Testing

A. Within forty-eight (48) months of commencing operation pursuant to Permit Section III.10.I, the Permittees will resubmit to Ecology for approval the "Previously Approved Demonstration Test Plan" revised as a permit modification in accordance with Permit Conditions III.10.C.2.e. and III.10.C.2f. The revised Demonstration Test Plan (RDTP) will include applicable EPA promulgated test methods and procedures in effect at the time of the submittal, projected commencement and completion dates for emission testing to demonstrate performance standards specified in Permit Conditions III.10.I.1.b.ii., iii., v., vi., and vii., and non-organic emissions as specified in Permit Table III.10.I.E, as approved/modified pursuant to Permit Conditions III.10.H.3.d. and III.10.C.11.c. or d., under "Normal Operating Conditions." "Normal Operating Conditions"will be defined for the purposes of this permit condition as follows:

1. Carbon monoxide emissions, dangerous and/or mixed waste feed-rate, and automatic waste feed cut-off parameters specified in Permit Table III.10.I.F, as approved/modified pursuant to Permit Conditions III.10.H.3.d. and III.10.C.11.c. or d., that were established to maintain compliance with Permit Conditions III.10.I.1.b.ii., iii., v., vi., and vii., and non-organic emissions, as specified in Permit Table III.10.I.E, as specified in Operating Unit 10,

Appendix 9.15 of this Permit (as approved pursuant to Permit Conditions III.10.H.3.d. and III.10.C.11.c. or d.), are held within the range of the average value over the previous twelve (12) months and the set-point value specified in Permit Table III.10.I.F. The average value is defined as the sum of the rolling average values recorded over the previous twelve (12) months divided by the number of rolling averages recorded during that time. The average value will not include calibration data, malfunction data, and data obtained when not processing dangerous or mixed waste; and

2. Feed-rate of metals, ash, and chlorine/chloride are held within the range of the average value over the previous twelve (12) months and the set-point value specified in Permit Table III.10.I.D, as approved/modified pursuant to Permit Conditions III.10.H.3.d. and III.10.C.11.c. or d. The average value is defined as the sum of all rolling average values recorded over the previous twelve (12) months divided by the number of rolling averages recorded during that time. The average value will not include data obtained when not processing dangerous or mixed waste.

For purposes of this permit condition, the "Previously Approved Demonstration Test Plan" is defined to include the Demonstration Test Plan approved pursuant to Permit Condition III.10.H.5.f.

B. Within sixty (60) days of Ecology's approval of the RDTP, or within sixty (60) months of commencing operation pursuant to Permit Section III.10.I, whichever is later, the Permittees will implement the RDTP approved pursuant to Permit Condition III.10.I.1.h.ii.A.

C. The Permittees will resubmit the RDTP, approved pursuant to Permit Condition III.10.I.1.h.ii.A, revised to include applicable EPA promulgated test methods and procedures in effect at the time of the submittal, and projected commencement and completion dates for emission test as a permit modification in accordance with Permit Conditions III.10.C.2.e. and f. at forty-eight (48) months from the implementation date of the testing required pursuant to Permit Condition III.10.I.1.h.ii.A and at reoccurring forty-eight (48) month intervals from the implementation date of the previously approved RDTP. The Permittees will implement these newly approved revised RDTP, every sixty (60) months from the previous approved RDTP implementation date or within sixty (60) days of the newly Ecology approved revised RDTP, whichever is later, for the duration of this Permit.

D. The Permittees will submit a summary of operating data collected pursuant to the RDTPs in accordance with Permit Conditions III.10.I.1.h.ii.A and C to Ecology upon completion of the tests. The Permittees will submit to Ecology the complete test report within ninety (90) calendar days of completion of the testing. The test reports will be certified pursuant to WAC 173-303-807(8), in accordance with WAC 173-303-680(2) and (3).

E. If any calculations or testing results collected pursuant to the RDTPs in accordance with Permit Conditions III.10.I.1.h.ii.A and C show that any emission rate for any constituent listed in Permit Table III.10.I.E, as approved/modified pursuant to Permit Conditions III.10.H.3.d. and III.10.C.11.c. or d., is exceeded for LAW Vitrification System during the emission test, the Permittees will perform the following actions:

1. Verbally notify Ecology within twenty-four (24) hours of the discovery of exceeding the emission rate(s), as specified in Permit condition I.E.21;

2. Submit to Ecology additional risk information to indicate that the increased emissions impact is off-set by decreased emission impact from one or more constituents expected to be emitted at the same time, and/or investigate the cause and impact of the exceedence and submit a report of the investigation findings to Ecology within fifteen (15) days of this discovery of exceeding the emission rate(s); and

3. Based on the notification and any additional information, Ecology may provide, in writing, direction to the Permittees to stop dangerous and/or mixed waste feed to the LAW Vitrification System and/or to submit a revised Demonstration Test Plan as a permit modification pursuant to Permit Conditions III.10.C.2.e. and f., or III.10.C.2.g. The revised Demonstration Test Plan must include substantive changes to prevent failure from reoccurring reflecting performance under operating conditions representative of the extreme range of normal conditions, and include revisions to Permit Tables III.10.I.D and III.10.I.F.

F. If any calculations or testing results collected pursuant to the RDTPs in accordance with Permit Conditions III.10.I.1.h.ii.A and C show that one or more of the performance standards listed in Permit Condition III.10.I.1.b., with the exception of Permit Condition III.10.I.1.b.x., for the LAW Vitrification System were not met during the emission test, the Permittees will perform the following actions:

1. Immediately stop dangerous and/or mixed waste feed to the LAW Vitrification System under the mode of operation that resulted in not meeting the performance standard(s);

2. Verbally notify Ecology within twenty-four (24) hours of discovery of not meeting the performance standard(s), as specified in Permit condition I.E.21;

3. Investigate the cause of the failure and submit a report of the investigation findings to Ecology within fifteen (15) days of discovery of not meeting the performance standard(s);

4. Submit to Ecology within fifteen (15) days of discovery of not meeting the performance standard(s) documentation supporting a mode of operation where all performance standards listed in Permit Condition III.I.1.b., with the exception of Permit Condition III.10.I.1.b.x., for the LAW Vitrification

System were met during the demonstration test, if any such mode was demonstrated;

5. Based on the information provided to Ecology by the Permittees pursuant to Permit Conditions III.10.I.1.h.ii.F.1 through 4 above, and any additional information, Ecology may provide in writing, direction to the Permittees to stop dangerous and/or mixed waste feed to the LAW Vitrification System and/or amend the mode of operation the Permittees are allowed to continue operations prior to Ecology approval of the revised Demonstration Test Plan pursuant to Permit Condition III.10.I.1.h.ii.F.6; and

6. Submit to Ecology within one hundred and twenty (120) days of discovery of not meeting the performance standard(s) a revised Demonstration Test Plan requesting approval to retest as a permit modification pursuant to Permit Conditions III.10.C.2.e. and f. The revised Demonstration Test Plan must include substantive changes to prevent failure from reoccurring reflecting performance under operating conditions representative of the extreme range of normal conditions, and include revisions to Permit Tables III.10.I.D and F.

III.10.I.1.h.iii. Other Emission Testing

A. Within seventy-eight (78) months of commencing operation pursuant to Permit Section III.10.I, the Permittees will resubmit to Ecology for approval the "Previously Approved Demonstration Test Plan" revised as a permit modification in accordance with Permit Conditions III.10.C.2.e. and f. The Revised Demonstration Test Plan (RDTP) will include applicable EPA promulgated test methods and procedures in effect at the time of the submittal, projected commencement and completion dates for emission testing to demonstrate performance standards as specified in Permit Conditions III.10.I.1.b.viii. and ix., and emissions as specified in Permit Table III.10.I.E, as approved/modified pursuant to Permit Conditions III.10.H.3.d. and III.10.C.11.c. or d., not addressed under Permit Conditions III.10.I.1.h.i. or ii. under "Normal Operating Conditions." "Normal Operating Conditions" will be defined for the purposes of this permit condition as follows:

1. Carbon monoxide emissions, dangerous and/or mixed waste feed-rate, and automatic waste feed cut-off parameters specified in Permit Table III.10.I.F, as approved/modified pursuant to Permit Condition III.10.H.3.d. and III.10.C.11.c. or d., that were established to maintain compliance with Permit Conditions III.10.I.1.b.viii. and ix., and emissions as specified in Permit Table III.10.I.E, not addressed under Permit Conditions III.10.I.1.h.i. or ii. as specified in Operating Unit 10, Appendix 9.15 of this Permit, as approved pursuant to Permit Condition III.10.H.3.d., and in accordance with Permit Conditions III.10.I.1.b.xii. and III.10.I.1.c.xi. are held within the range of the average value over the previous twelve (12) months and the set-point value specified on Permit Table III.10.I.F. The average value is defined as the sum of all rolling average values recorded over the previous twelve (12) months divided by the number of rolling averages recorded during that time. The

average value will not include calibration data, malfunction data, and data obtained when not processing dangerous and/or mixed waste; and

2. Feed-rate of metals, ash, and chlorine/chloride are held within the range of the average value over the previous twelve (12) months and the set-point value specified in Permit Table III.10.I.D, as approved/modified pursuant to Permit Conditions III.10.H.3.d. and III.10.C.11.c. or d. Feed-rate of organics as measured by TOC are held within the range of the average value over the previous twelve (12) months. The average value is defined as the sum of the rolling average values recorded over the previous twelve (12) months divided by the number of rolling averages recorded during that time. The average value will not include data obtained when not processing dangerous and/or mixed waste.

For purposes of this permit condition, the "Previously Approved Demonstration Test Plan" is defined to include the Demonstration Test Plan approved pursuant to Permit Condition III.10.H.5.f.

B. Within sixty (60) days of Ecology's approval of the RDTP, or within ninety-one (91) months of commencing operation pursuant to Permit Section III.10.I, whichever is later, the Permittees will implement the RDTP approved pursuant to Permit Condition III.10.I.1.h.iii.A.

C. The Permittees will submit a summary of operating data collected pursuant to the RDTPs in accordance with Permit Condition III.10.I.1.h.iii.A to Ecology upon completion of the tests. The Permittees will submit to Ecology the complete test report within ninety (90) calendar days of completion of the testing. The test reports will be certified as specified in WAC 173-303-807(8), in accordance with Permit Condition WAC 173-303-680(2) and (3).

D. If any calculations or testing results show that one or more of the performance standards listed in Permit Condition III.10.I.1.b., with the exception of Permit Condition III.10.I.1.b.x., for the LAW Vitrification System were not met during the emission test, the Permittees will perform the following actions:

1. Immediately stop dangerous and/or mixed waste feed to the LAW Vitrification System under the mode of operation that resulted in not meeting the performance standard(s);

2. Verbally notify Ecology within twenty-four (24) hours of discovery of not meeting the performance standard(s), as specified in Permit Condition I.E.21;

3. Investigate the cause of the failure and submit a report of the investigation findings to Ecology within fifteen (15) days of discovery of not meeting the performance standard(s);

4. Submit to Ecology within fifteen (15) days of discovery of not meeting the performance standard(s) documentation supporting a mode of operation where all performance standards listed in Permit Condition III.I.1.b., with the

exception of Permit Condition III.10.I.1.b.x., for the LAW Vitrification System were met during the demonstration test, if any such mode was demonstrated;

5. Based on the information provided to Ecology by the Permittees pursuant to Permit Conditions III.10.I.1.h.iii.D.1 through 4 above, and any additional information, Ecology may provide in writing, direction to the Permittees to stop dangerous and/or mixed waste feed to the LAW Vitrification System and/or amend the mode of operation the Permittees are allowed to continue operations prior to Ecology approval of the revised Demonstration Test Plan, pursuant to Permit Condition III.10. I.h.1.iii.D.6.; and

6. Submit to Ecology within one hundred and twenty (120) days of discovery of not meeting the performance standard(s) a revised Demonstration Test Plan requesting approval to retest as a permit modification pursuant to Permit Conditions III.10.C.2.e. and f. The revised Demonstration Test Plan must include substantive changes to prevent failure from reoccurring reflecting performance under operating conditions representative of the extreme range of normal conditions, and include revisions to Permit Tables III.10.I.D and III.10.I.F.

E. If any calculations or testing results show that any emission rate for any constituent listed in Permit Table III.10.I.E, as approved/modified pursuant to Permit Conditions III.10.C.11.c. or d., is exceeded for LAW Vitrification System during the emission test, the Permittees will perform the following actions:

1. Verbally notify Ecology within twenty-four (24) hours of the discovery of exceeding the emission rate(s), as specified in Permit Condition I.E.21;

2. Submit to Ecology additional risk information to indicate that the increased emissions impact is off-set by decreased emission impact from one or more constituents expected to be emitted at the same time, and/or investigate the cause and impact of the exceedence of the emission rate(s) and submit a report of the investigation findings to Ecology within fifteen (15) days of the discovery of the exceedence of the emission rate(s); and

3. Based on the notification and any additional information, Ecology may provide, in writing, direction to the Permittees to stop dangerous and/or mixed waste feed to the LAW Vitrification System and/or to submit a revised Demonstration Test Plan as a permit modification pursuant to Permit Conditions III.10.C.2.e. and f., or III.10.C.2.g. The revised Demonstration Test Plan must include substantive changes to prevent failure from reoccurring reflecting performance under operating conditions representative of the extreme range of normal conditions, and include revisions to Permit Tables III.10.I.D and F.

1

Table III.10.I.A - LAW Vitrification System Description[a]

Sub-system Description	Sub-system Designation	Engineering Description (Drawing Nos, Specification Nos, etc.)	Narrative Description, Tables and Figure
RESERVED	RESERVED	RESERVED	RESERVED

Footnotes:
[a]Permit Table III.10.I.A will be completed in accordance with Permit Condition III.10.H.5.e.x., prior to initiating Permit Condition III.10.I.1. See Permit Table III.10.H.A for the current LAW Vitrification System Description.

2

3

4

Table III.10.I.B - LAW Vitrification System Secondary Containment Systems Including Sumps and Floor Drains

Sump/Floor Drain I.D.# & Room Location	Maximum Sump Capacity (gallons)	Sump Dimensions[b] (feet) & Materials of Construction	Engineering Description (Drawing Nos, Specification Nos, etc.)
RESERVED	RESERVED	RESERVED	RESERVED

Footnotes:
[a]Permit Table III.10.I.B will be completed in accordance with Permit Condition III.10.H.5.b.vii., prior to initiating Permit Condition III.10.I.1. See Permit Table III.10.H.B for the current LAW Vitrification System Secondary Containment Systems Including Sumps and Floor Drains.
[b]Dimensions listed are based on permitted design. Actual dimensions may vary within plus or minus (TBD).

5

6

1

Table III.10.I.C - LAW Vitrification Systems Process and Leak Detection System Instruments and Parameters

Tank System Name and Locator (including P&ID)	Control Parameter	Type of Instrument or Control Device	Location of Instrument or Control Device (Tag No.)	Instrument Range	Expected Operating Range or Setpoint	Fail States	Instrument Accuracy	Instrument Calibration Method No. and Frequency
RESERVED	RESERVED	RESERVED	RESERVED	RESERVED	RESERVED	RESERVED	RESERVED	RESERVED

Footnotes:
[a]Permit Table III.10.I.C will be completed in accordance with Permit Condition III.10.H.5.e.ix., prior to initiating Permit Condition III.10.I.1 See Permit Table III.10.H.C for the current LAW Vitrification Systems Process and Leak Detection System Instruments and Parameters.

2

3

1

2

Table III.10.I.D - Maximum Feed-rates to LAW Vitrification System (RESERVED)

Description of Waste	Normal Operation
Dangerous and/or Mixed Waste Feed Rate	RESERVED
Ash Feed Rate	RESERVED
Total Chlorine/Chloride Feed Rate	RESERVED
Total Metal Feedrates	RESERVED

3

4

Table III.10.I.E - LAW Vitrification System Estimated Emission Rates (RESERVED)

Chemicals	CAS Number	Emission Rates (grams /second)
RESERVED	RESERVED	RESERVED

5

6

TABLE III.10.I.F - LAW Vitrification System Waste Feed Cut-off Parameters* [1](RESERVED)

Sub-system Designation	Instrument Tag Number	Parameter Description	Set-points During Normal Operation
RESERVED	RESERVED	RESERVED	RESERVED
Footnotes: *A continuous monitoring system will be used as defined in Permit Section III.10.C.1. [1]Maximum Feed-rate will be set based on not exceeding any of the constituent (e.g., metals, ash, and chlorine/chloride) feed limits specified on Table III.10.I.D. of this Permit			

7

III.10.J HLW Vitrification System – Short Term Miscellaneous Thermal Treatment Unit-Shakedown, Demonstration Test, and Post Demonstration Test

For purposes of Permit Section III.10.J, where reference is made to WAC 173-303-640, the following substitutions apply: substituting the terms "HLW Vitrification System" for "tank system(s)," "sub-system(s)" for "tank(s)," "sub-system equipment" for "ancillary equipment," and "sub-system(s) or sub-system equipment of a HLW Vitrification System" for "component(s)," in accordance with WAC 173-303-680.

III.10.J.1. III.10.I.1.h.General Conditions During Shakedown, Demonstration Test, and Post-Demonstration Test for HLW Vitrification System

III.10.J.1.a. Construction and Maintenance [WAC 173-303-640, in accordance with WAC 173-303-680(2) and (3), and WAC 173-303-340].

III.10.J.1.a.i. The Permittees will construct the HLW Vitrification System (listed in Permit Tables III.10.J.A and III.10.J.B, as approved/modified pursuant to Permit Condition III.10.J.5.) as specified in Permit Condition III.10.J.1. and Operating Unit 10, Chapter 4.0 of this Permit, and Operating Unit 10, Appendices 10.1 through 10.15 and 10.17 of this Permit, as approved pursuant to Permit Conditions III.10.J.5.a. through d., and III.10.J.5.f.

III.10.J.1.a.ii. The Permittees will construct all containment systems for the HLW Vitrification System as specified in Operating Unit 10, Chapter 4.0 of this Permit, and Operating Unit 10, Appendices 10.2, 10.4, through 10.14 of this Permit, as approved pursuant to Permit Conditions III.10.J.5.a. through d.

III.10.J.1.a.iii. The Permittees will ensure all certifications required by specialists (e.g., independent, qualified, registered professional engineer, independent corrosion expert, independent qualified installation inspector, etc.) use the following statement or equivalent pursuant to Permit Condition III.10.C.10.:

"I, (Insert Name) have (choose one or more of the following: overseen, supervised, reviewed, and/or certified) a portion of the design or installation of a new HLW Vitrification system or component located at (address), and owned/operated by (name(s)). My duties were: (e.g., installation inspector, testing for tightness, etc.), for the following HLW Vitrification system components (e.g., the venting piping, etc.), as required by the Dangerous Waste Regulations, namely, WAC 173-303-640(3) (applicable paragraphs (i.e., (a) through (g)) in accordance with WAC 173-303-680).

"I certify under penalty of law that I have personally examined and am familiar with the information submitted in this document and all attachments and that, based on my inquiry of those individuals immediately responsible for obtaining the information, I believe that the information is true, accurate, and complete. I am aware that there are significant penalties for submitting false information, including the possibility of fine and imprisonment."

III.10.J.1.a.iv. The Permittees must ensure that proper handling procedures are adhered to in order to prevent damage to the HLW Vitrification System during installation. Prior to covering,

enclosing, or placing the new HLW Vitrification System or component in use, an independent, qualified, installation inspector or an independent, qualified, registered professional engineer, either of whom is trained and experienced in the proper installation of similar systems or components, must inspect the system for the presence of any of the following items:

A. Weld breaks;

B. Punctures;

C. Scrapes of protective coatings;

D. Cracks;

E. Corrosion;

F. Other structural damage or inadequate construction/installation.

All discrepancies must be remedied before the HLW Vitrification system is covered, enclosed, or placed in use [WAC 173-303-640(3)(c), in accordance with WAC 173-303-680(2) and (3)].

III.10.J.1.a.v. For the HLW Vitrification System or components that are placed underground and that are back-filled, the Permittees must provide a backfill material that is a non-corrosive, porous, homogeneous substance. The backfill must be installed so that it is placed completely around the HLW Vitrification System and compacted to ensure that the HLW Vitrification System is fully and uniformly supported [WAC 173-303-640(3)(d), in accordance with WAC 173-303-680(2) and (3)].

III.10.J.1.a.vi. The Permittees must test for tightness the HLW Vitrification System or components, prior to being covered, enclosed, or placed into use. If the HLW Vitrification System or components are found not to be tight, all repairs necessary to remedy the leak(s) in the system must be performed prior to the HLW Vitrification System being covered, enclosed, or placed in use [WAC 173-303-640(3)(e), in accordance with WAC 173-303-680(2) and (3)].

III.10.J.1.a.vii. The Permittees must ensure the HLW Vitrification System equipment is supported and protected against physical damage and excessive stress due to settlement, vibration, expansion, or contraction [WAC 173-303-640(3)(f), in accordance with WAC 173-303-680(2) and (3)].

III.10.J.1.a.viii. The Permittees must provide the type and degree of corrosion protection recommended by an independent corrosion expert, based on the information provided in Operating Unit 10, Appendices 10.9 and 10.11 of this Permit, as approved pursuant to Permit Conditions III.10.J.5.b.i., III.10.J.5.b.iv., III.10.J.5.b.v., III.10.J.5.c.i., III.10.J.5.c.iv., III.10.J.5.c.v., III.10.J.5.d.i., III.10.J.5.d.iv., and III.10.J.5.d.v., or other corrosion protection if Ecology believes other corrosion protection is necessary to ensure the integrity of the HLW Vitrification System during use of the HLW Vitrification System. The installation of a corrosion protection system that is field fabricated must be supervised by an independent

corrosion expert to ensure proper installation [WAC 173-303-640(3)(g), in accordance with WAC 173-303-680(2) and (3)].

III.10.J.1.a.ix. Prior to initial receipt of dangerous and/or mixed waste in the WTP Unit, the Permittees will obtain and keep on file in the WTP Unit operating record, written statements by those persons required to certify the design of the HLW Vitrification System and supervise the installation of the HLW Vitrification System, as specified in WAC 173-303-640(3)(b), (c), (d), (e), (f), and (g), in accordance with WAC 173-303-680, attesting that the HLW Vitrification system and corresponding containment system listed in Permit Tables III.10.J.A and III.10.J.B, as approved/modified pursuant to Permit Condition III.10.J.5., were properly designed and installed, and that repairs, in accordance with WAC 173-303-640(3)(c) and (e), were performed [WAC 173-303-640(3)(a) and WAC 173-303-640(3)(h), in accordance with WAC 173-303-680(3)].

III.10.J.1.a.x. The independent HLW Vitrification System installation inspection and subsequent written statements will be certified in accordance with WAC 173-303-810(13)(a), as modified pursuant to Permit Condition III.10.J.1.a.iii., comply with all requirements of WAC 173-303-640(3)(h) in accordance with WAC 173-303-680, and will consider, but not be limited to, the following LAW Vitrification System installation documentation:

A. Field installation report with date of installation;

B. Approved welding procedures;

C. Welder qualification and certifications;

D. Hydro-test reports, as applicable, in accordance with the American Society of Mechanical Engineers Boiler and Pressure Vessel Code, Section VIII, Division 1; American Petroleum Institute (API) Standard 620, or Standard 650, as applicable;

E. Tester credentials;

F. Field inspector credentials;

G. Field inspector reports;

H. Field waiver reports; and

I. Non-compliance reports and corrective action (including field waiver reports) and repair reports.

III.10.J.1.a.xi. The Permittees will ensure periodic integrity assessments are conducted on the HLW Vitrification System, listed in Permit Table III.10.J.A, as approved/modified pursuant to Permit Condition III.10.J.5., over the term of this Permit, in accordance with WAC 173-303-680(2) and (3) as specified in WAC 173-303-640(3)(b), following the description of the integrity assessment program and schedule in Operating Unit 10, Chapter 6.0 of this Permit, as approved pursuant to Permit Conditions III.10.J.5.e.i. and III.10.C.5.c. Results of the integrity assessments will be included in the WTP Unit operating record until ten (10) years after post-closure, or corrective action is complete and certified, whichever is later.

III.10.J.1.a.xii. The Permittees will address problems detected during the HLW Vitrification System integrity assessments specified in Permit Condition III.10.J.1.a.xi. following the integrity assessment program in Operating Unit 10, Chapter 6.0 of this Permit, as approved pursuant to Permit Conditions III.10.J.5.e.i. and III.10.C.5.c.

III.10.J.1.a.xiii. All process monitors/instruments as specified in Permit Table III.10.J.F, as approved/modified pursuant to Permit Condition III.10.J.5., will be equipped with operational alarms to warn of deviation, or imminent deviation from the limits specified in Permit Table III.10.J.F.

III.10.J.1.a.xiv. The Permittees will install and test all process and leak detection system monitors/instrumentation as specified in Permit Tables III.10.J.C and III.10.J.F, as approved/modified pursuant to Permit Condition III.10.J.5, in accordance with Operating Unit 10, Appendices 10.1, 10.2, and 10.14 of this Permit, as approved pursuant to Permit Conditions III.10.J.5.d.x. and III.10.J.5.f.xvi.

III.10.J.1.a.xv. No dangerous and/or mixed waste will be treated in the HLW Vitrification System unless the operating conditions, specified under Permit Condition III.10.J.1.c. are complied with.

III.10.J.1.a.xvi. The Permittees will not place dangerous and/or mixed waste, treatment reagents, or other materials in the HLW Vitrification System if these substances could cause the subsystem, subsystem equipment, or the containment system to rupture, leak, corrode, or otherwise fail [WAC 173-303-640(5)(a), in accordance with WAC 173-303-680(2)]. This condition is not applicable to corrosion of HLW Vitrification System sub-system and sub-system equipment that are expected to be replaced as part of normal operations (e.g., melters).

III.10.J.1.a.xvii. The Permittees will operate the HLW Vitrification System to prevent spills and overflows using description of controls and practices as required under WAC 173-303-640(5)(b) described in Permit Condition III.10.C.5, and Operating Unit 10, Appendix 10.18 of this Permit, as approved pursuant to Permit Condition III.10.J.5.e. [WAC 173-303-640(5)(b), in accordance with WAC 173-303-680(2) and (3), and WAC 173-303-806(4)(c)(ix)].

III.10.J.1.a.xviii. For routinely non-accessible HLW Vitrification System sub-systems, as specified in Operating Unit 10, Chapter 4.0 of this Permit, as updated pursuant to Permit Condition III.10.J.5.e.vi., the Permittees will mark all routinely non-accessible HLW Vitrification System sub-systems access points with labels or signs to identify the waste contained in each HLW Vitrification System sub-system. The label, or sign, must be legible at a distance of at least fifty (50) feet, and must bear a legend which identifies the waste in a manner which adequately warns employees, emergency response personnel, and the public of the major risk(s) associated with the waste being stored or treated in the HLW Vitrification System sub-systems. For the purposes of this permit condition, "routinely non-accessible" means personnel are unable to enter these areas while waste is being managed in them [WAC 173-303-640(5)(d), in accordance with WAC 173-303-680(2)].

III.10.J.1.a.xix. For all HLW Vitrification System sub-systems not addressed in Permit Condition III.10.J.1.a.xviii., the Permittees will mark all these HLW Vitrification System sub-

systems holding dangerous and/or mixed waste with labels or signs to identify the waste contained in the HLW Vitrification System sub-systems. The labels, or signs, must be legible at a distance of at least fifty (50) feet, and must bear a legend which identifies the waste in a manner which adequately warns employees, emergency response personnel, and the public of the major risk(s) associated with the waste being stored or treated in the HLW Vitrification System sub-systems [WAC 173-303-640(5)(d), in accordance with WAC 173-303-680(2)].

III.10.J.1.a.xx. The Permittees will ensure that the containment systems for the HLW Vitrification System sub-systems listed in Permit Tables III.10.J.A. and III.10.J.B, as approved/modified pursuant to Permit Condition III.10.J.5, are free of cracks or gaps to prevent any migration of dangerous and/or mixed waste or accumulated liquid out of the system to the soil, groundwater, or surface water at any time during use of the HLW Vitrification System sub-systems. Any indication that a crack or gap may exist in the containment systems will be investigated and repaired in accordance with Operating Unit 10, Appendix 10.18 of this Permit, as approved pursuant to Permit Condition III.10.J.5.e.v. [WAC 173-303–640(4)(b)(i), WAC 173-303–640(4)(e)(i)(C), and WAC 173-303-640(6), in accordance with WAC 173-303-680(2) and (3), WAC 173-303-806(4)(i)(i)(B), and WAC 173-303-320].

III.10.J.1.a.xxi. The Permittees must immediately, and safely, remove from service any HLW Vitrification System or secondary containment system which, through an integrity assessment, is found to be "unfit for use" as defined in WAC 173-303-040, following Permit Conditions III.10.J.1.a.xxiii.A. through D., and F. The affected HLW Vitrification System, or secondary containment system, must be either repaired or closed in accordance with Permit Condition III.10.J.1.a.xxiii.E. [WAC 173-303-640(7)(e) and (f), and WAC 173-303-640(8), in accordance with WAC 173-303-680(3)].

III.10.J.1.a.xxii. An impermeable coating, as specified in Operating Unit 10, Appendices 10.4, 10.5, 10.7, 10.9, 10.11, and 10.12 of this Permit, as approved pursuant to Permit Condition III.10.J.5.b.v., will be maintained for all concrete containment systems and concrete portions of containment systems for each HLW Vitrification System sub-systems listed in Permit Tables III.10.J.A and III.10.J.B as approved/modified pursuant to Permit Condition III.10.J.5 (concrete containment systems that do not have a liner, pursuant to WAC 173-303-640(4)(e)(i), in accordance with WAC 173-303-680(2), and have construction joints, will meet the requirements of WAC 173-303-640(4)(e)(ii)(C), in accordance with WAC 173-303-680(2). The coating will prevent migration of any dangerous and mixed waste into the concrete. All coatings will meet the following performance standards:

A. The coating must seal the containment surface such that no cracks, seams, or other avenues through which liquid could migrate, are present;

B. The coating must be of adequate thickness and strength to withstand the normal operation of equipment and personnel within the given area such that degradation or physical damage to the coating or lining can be identified and remedied before dangerous and mixed waste could migrate from the system; and

C. The coating must be compatible with the dangerous and mixed waste, treatment reagents, or other materials managed in the containment system [WAC 173-303-640(4)(e)(ii)(D), in accordance with WAC 173-303-680(2) and (3), and WAC 173-303-806(4)(i)(i)(A)].

III.10.J.1.a.xxiii. The Permittees will inspect all containment systems for the HLW Vitrification System sub-systems listed in Permit Tables III.10.J.A and III.10.J.B, as approved/modified pursuant to Permit Condition III.10.J.5., in accordance with the Inspection Schedule specified in Operating Unit 10, Chapter 6.0 of this Permit, as approved pursuant to Permit Conditions III.10.J.5.e.i. and III.10.C.5.c., and take the following actions if a leak or spill of dangerous and/or mixed waste is detected in these containment systems [WAC 173-303-640(5)(c) and WAC 173-303-640(6), in accordance with WAC 173-303-680(2) and (3), WAC 173-303-320, and WAC 173-303-806(4)(i)(i)(B)]:

A. Immediately, and safely, stop the flow of dangerous and/or mixed waste into the HLW Vitrification System sub-systems or secondary containment system.

B. Determine the source of the dangerous and/or mixed waste.

C. Remove the dangerous and/or mixed waste from the containment area in accordance with WAC 173-303-680(2) and (3), as specified in WAC 173-303-640(7)(b). The dangerous and/or mixed waste removed from containment areas of the HLW Vitrification System sub-systems will be, as a minimum, managed as mixed waste.

D. If the cause of the release was a spill has not damaged the integrity of the HLW Vitrification System sub-system, the Permittees may return the HLW Vitrification System sub-system to service in accordance with WAC 173-303-680(2) and (3), as specified in WAC 173-303-640(7)(e)(ii). In such case, the Permittees will take action to ensure the incident that caused the dangerous and/or mixed waste to enter the containment system will not re-occur [WAC 173-303-320(3)].

E. If the source of the dangerous and/or mixed waste is determined to be a leak from the primary HLW Vitrification System into the secondary containment system, or the system is unfit for use as determined through an integrity assessment or other inspection, the Permittees will comply with the requirements of WAC 173-303-640(7) and take the following actions:

1. Close the HLW Vitrification System Sub-system following procedures in WAC 173-303-640(7)(e)(i), in accordance with WAC 173-303-680 and Operating Unit 10, Chapter 11.0 of this Permit, as approved pursuant to Permit Condition III.10.C.8., or

2. Repair and re-certify (in accordance with WAC 173-303-810(13)(a), as modified pursuant to Permit Condition III.10.J.1.a.iii.) the HLW Vitrification System in accordance with Operating Unit 10, Appendix 10.18 of this Permit, as approved pursuant to Permit Condition III.10.J.5.e.v., before the HLW Vitrification System is placed back into

service [WAC 173-303-640(7)(e)(iii) and WAC 173-303-640(7)(f), in accordance with WAC 173-303-680].

F. The Permittees will document, in the WTP Unit operating record, actions/procedures taken to comply with A. through E. above, as specified in WAC 173-303-640(6)(d), in accordance with WAC 173-303-680(2) and (3).

G. In accordance with WAC 173-303-680(2) and WAC 173-303-680 (3), the Permittees will notify and report releases to the environment to Ecology, as specified in WAC 173-303-640(7)(d).

III.10.J.1.a.xxiv. If liquids (e.g., dangerous and/or mixed waste leaks and spills, precipitation, fire water, liquids from damaged or broken pipes) cannot be removed from the secondary containment system within twenty-four (24) hours, Ecology will be verbally notified within twenty-four (24) hours of discovery. The notification will provide the information in A, B, and C, listed below. The Permittees will provide Ecology with a written demonstration within seven (7) business days, identifying at a minimum [WAC 173-303-640(4)(c)(iv) and WAC 173-303-640(7)(b)(ii), in accordance with WAC 173-303-680(3) and WAC 173-303-806(4)(i)(i)(B)]:

A. Reasons for delayed removal;

B. Measures implemented to ensure continued protection of human health and the environment;

C. Current actions being taken to remove liquids from secondary containment.

III.10.J.1.a.xxv. All air pollution control devices and capture systems in the HLW Vitrification System will be maintained and operated at all times in a manner so as to minimize the emissions of air contaminants and to minimize process upsets. Procedures for ensuring that the air pollution control devices and capture systems in the HLW Vitrification System are properly operated and maintained so as to minimize the emission of air contaminants and process upsets will be established.

III.10.J.1.a.xxvi. In all future narrative permit submittals, the Permittees will include HLW Vitrification sub-system names with the sub-system designation.

III.10.J.1.a.xxvii. Modifications to approved design, plans, and specifications in Operating Unit 10 of this Permit for the HLW Vitrification System will be allowed only in accordance with Permit Conditions III.10.C.2.e. and f., or III.10.C.2.g., III.10.C.9.d., e., and h.

III.10.J.1.a.xxviii. For any portion of the HLW Vitrification System that has the potential for formation and accumulation of hydrogen gases, the Permittees will operate the portion to maintain hydrogen levels below the lower explosive limit [WAC 173-303-815(2)(b)(ii)].

III.10.J.1.a.xxix. For each HLW Vitrification System sub-system holding dangerous waste which are acutely or chronically toxic by inhalation, the Permittees will operate the system to prevent escape of vapors, fumes or other emissions into the air [WAC 173-303-806(4)(i)(i)(B) and WAC 173-303-640(5)(e) in accordance with WAC 173-303-680].

III.10.J.1.b. Performance Standards

III.10.J.1.b.i. The HLW Vitrification System must achieve a destruction and removal efficiency (DRE) of 99.99% for the principal organic dangerous constituents (PODCs) listed below [40 CFR §63.1203(c)(1) and 40CFR 63.1203(c)(2), in accordance with WAC 173-303-680(2)].

RESERVED

DRE in this Permit condition will be calculated in accordance with the formula given below:

DRE=[1-(Wout/Win)] x 100%

Where:

Win=mass feedrate of one principal organic dangerous constituent (PODC) in a waste feedstream; and

Wout=mass emission rate of the same PODC present in exhaust emissions prior to release to the atmosphere.

III.10.J.1.b.ii. Particulate matter emissions from the HLW Vitrification System will not exceed 34 mg/dscm (0.015 grains/dscf) [40 CFR §63.1203(b)(7), in accordance with WAC 173-303-680(2)]:

III.10.J.1.b.iii. Hydrochloric acid and chlorine gas emissions from the HLW Vitrification System will not exceed 21 ppmv, combined [40 CFR §63.1203(b)(6), in accordance with WAC 173-303-680(2)]:

III.10.J.1.b.iv. Dioxin and Furan TEQ emissions from the HLW Vitrification System will not exceed 0.2 nanograms (ng)/dscm [40 CFR §63.1203(b)(1), in accordance with WAC 173-303-680(2)]:

III.10.J.1.b.v. Mercury emissions from the HLW Vitrification System will not exceed 45 µg/dscm, [40 CFR §63.1203(b)(2), in accordance with WAC 173-303-680(2)].

III.10.J.1.b.vi. Lead and cadmium emissions from the HLW Vitrification System will not exceed 120 µg/dscm, combined [40 CFR §63.1203(b)(3), in accordance with WAC 173-303-680(2)].

III.10.J.1.b.vii. Arsenic, beryllium, and chromium emissions from the HLW Vitrification System will not exceed 97 µg/dscm, combined [40 CFR §63.1203(b)(4), in accordance with WAC 173-303-680(2)].

III.10.J.1.b.viii. Carbon monoxide (CO) emission from the HLW Vitrification System will not exceed 100 parts per million (ppm) by volume, over an hourly rolling average (as measured and recorded by the continuous monitoring system), dry [40 CFR §63.1203(b)(5)(i), in accordance with WAC 173-303-680(2)].

III.10.J.1.b.ix. Hydrocarbon emission from the HLW Vitrification System will not exceed 10 parts per million (ppm) by volume, over an hourly rolling average (as measured and recorded by the continuous monitoring system during demonstration testing required by this Permit),

dry basis, and reported as propane [40 CFR §63.1203(b)(5)(ii), in accordance with WAC 173-303-680(2)]:

III.10.J.1.b.x. If the emissions from the HLW Vitrification System exceed the emission rates listed in Permit Table III.10.J.E, as approved pursuant to Permit Condition III.10.C.11.b., the Permittees will notify Ecology, in accordance with Permit Condition III.10.J.3.d.vii. [WAC 173-303-680(2) and (3), and WAC 173-303-815(2)(b)(ii)].

The emission limits specified in Permit Conditions III.10.J.1.b.i. through III.10.J.1.b.x. above, will be met for the HLW Vitrification System by limiting feed rates as specified in Permit Tables III.10.J.D and III.10.J.F, as approved/modified pursuant to Permit Condition III.10.J.5., compliance with operating conditions specified in Permit Condition III.10.J.1.c. (except as specified in Permit Condition III.10.J.1.b.xii.), and compliance with Permit Condition III.10.J.1.b.xi.

III.10.J.1.b.xi. Treatment effectiveness, feed-rates and operating rates for dangerous and mixed waste management units contained in the HLW Building, but not included in Permit Table III.10.J.A, as approved/modified pursuant to Permit Condition III.10.J.5., will be as specified in Permit Sections III.10.D, III.10.E, III.10.F and consistent with assumptions and basis which are reflected in Operating Unit 10, Appendix 6.3.1 of this Permit, as approved pursuant to Permit Condition III.10.C.11.b. For the purposes of this permit condition, Operating Unit 10, Appendix 6.3.1 will be superceded by Appendix 6.4.1 upon its approval pursuant to either Permit Conditions III.10.C.11.c. or III.10.C.11.d. [WAC 173-303-680(2) and (3), and WAC 173-303-815(2)(b)(ii)].

III.10.J.1.b.xii. Compliance with the operating conditions specified in Permit Condition III.10.J.1.c., will be regarded as compliance with the required performance standards identified in Permit Conditions III.10.J.1.b.i. through x. However, if it is determined that during the effective period of this Permit that compliance with the operating conditions in Permit Condition III.10.J.1.c. is not sufficient to ensure compliance with the performance standards specified in Permit Conditions III.10.J.1.b.i. through x., the Permit may be modified, revoked, or reissued pursuant to Permit Conditions III.10.C.2.e. and III.10.C.2.f., or III.10.C.2.g.

III.10.J.1.c. Operating Conditions [WAC-303-670(6), in accordance with WAC 173-303-680(2)and (3)].

The Permittees will operate the HLW Vitrification System in accordance with Operating Unit 10, Chapter 4.0 of this Permit, as updated pursuant to Permit Condition III.10.J.5.e.vi., and Operating Unit 10, Appendix 10.18 of this Permit, as approved pursuant to Permit Condition III.10.J.5.e., and Operating Unit 10, Appendix 10.15 of this Permit, as approved pursuant to Permit Condition III.10.J.5.f., except as modified pursuant to Permit Conditions III.10.J.1.b.xii., III.10.J.2., III.10.J.3., III.10.J.4., and in accordance with the following:

III.10.J.1.c.i. The Permittees will operate the HLW Vitrification System in order to maintain the systems and process parameters listed in Permit Tables III.10.J.C and III.10.J.F, as

approved/modified pursuant to Permit Condition III.10.J.5., within the set-points specified in Permit Table III.10.J.F.

III.10.J.1.c.ii. The Permittees will operate the AWFCO systems, specified in Permit Table III.10.J.F, as approved/modified pursuant to Permit Condition III.10.J.5., to automatically cut-off and/or lock-out the dangerous and mixed waste feed to the HLW Vitrification System when the monitored operating conditions deviate from the set-points specified in Permit Table III.10.J.F.

III.10.J.1.c.iii. The Permittees will operate the AWFCO systems, specified in Permit Table III.10.J.F, as approved/modified pursuant to Permit Condition III.10.J.5., to automatically cut-off and/or lock-out the dangerous and mixed waste feed to the HLW Vitrification System when all instruments specified on Permit Table III.10.H.F for measuring the monitored parameters fails or exceeds its span value

III.10.J.1.c.iv. The Permittees will operate the AWFCO systems, specified in Permit Table III.10.J.F, as approved/modified pursuant to Permit Condition III.10.J.5., to automatically cut-off and/or lock out the dangerous and/or mixed waste feed to the HLW Vitrification System when any portion of the HLW Vitrification System is bypassed. The terms "bypassed" and "bypass event" as used in Permit Sections III.10.J and III.10.K will mean if any portion of the HLW Vitrification System is bypassed so that gases are not treated as during the Demonstration Test.

III.10.J.1.c.v. In the event of a malfunction of the AWFCO systems listed in Permit Table III.10.J.F, as approved/modified pursuant to Permit Condition III.10.J.5., the Permittees will immediately, manually cut-off the dangerous and mixed waste feed to the HLW Vitrification System. The Permittees will not restart the dangerous and/or mixed waste feed until the problem causing the malfunction has been identified and corrected.

III.10.J.1.c.vi. The Permittees will manually cut-off the dangerous and mixed waste feed to the HLW Vitrification System when the operating conditions deviate from the limits specified in Permit Condition III.10.J.1.c.i., unless the deviation automatically activates the waste feed cut-off sequence specified in Permit Conditions III.10.J.1.c.ii., III.10.J.1.c.iii., and/or III.10.J.1.c.iv.

III.10.J.1.c.vii. If greater than thirty (30) dangerous and mixed waste feed cut-off, combined, to the HLW Vitrification System occur due to deviations from Permit Table III.10.J.F, as approved/modified pursuant to Permit Condition III.10.J.5., within a sixty (60) day period, the Permittees will submit a written report to Ecology within five (5) calendar days of the thirty-first exceedence including the information specified below. These dangerous and mixed waste feed cut-offs to the HLW Vitrification System, whether automatically or manually activated, are counted if the specified set-points are deviated from while dangerous waste, mixed waste, and waste residues continue to be processed in the HLW Vitrification System. A cascade event is counted at a frequency of one (1) towards the first waste feed cut-off parameter, specified on Permit Table III.10.J.F, from which the set-point is deviated:

A. The parameter(s) that deviated from the set-point(s) in Permit Table III.10.J.F;

B. The magnitude, dates, and duration of the deviations;

C. Results of the investigation of the cause of the deviations; and,

D. Corrective measures taken to minimize future occurrences of the deviations.

III.10.J.1.c.viii. If any portion of the HLW Vitrification System is bypassed while treating dangerous and/or mixed waste, it will be regarded as non-compliance with the operating conditions specified in Permit Condition III.10.J.1.c. and the performance standards specified in Permit Condition III.10.J.1.b. After such a bypass event, the Permittees will perform the following actions:

A. Investigate the cause of the bypass event;

B. Take appropriate corrective measures to minimize future bypasses;

C. Record the investigation findings and corrective measures in the operating record; and

D. Submit a written report to Ecology within five (5) days of the bypass event documenting the result of the investigation and corrective measures.

III.10.J.1.c.ix. The Permittees will control fugitive emissions from the HLW Vitrification System by maintaining the melter under negative pressure.

III.10.J.1.c.x. Compliance with the operating conditions specified in Permit Condition III.10.J.1.c. will be regarded as compliance with the required performance standards identified in Permit Condition III.10.J.1.b. However, evidence that compliance with these operating conditions is insufficient to ensure compliance with the performance standards, will justify modification, revocation, or re-issuance of this Permit, in accordance with Permit Conditions III.10.C.2.e. and III.10.C.2.f., or III.10.C.2.g.

III.10.J.1.d. Inspection Requirements [WAC 173-303-680(3)].

III.10.J.1.d.i. The Permittees will inspect the HLW Vitrification System in accordance with the Inspection Schedules in Operating Unit 10, Chapter 6.0 of this Permit, as modified in accordance with Permit Condition III.10.C.5.c.

III.10.J.1.d.ii. The inspection data for HLW Vitrification System will be recorded, and the records will be placed in the WTP Unit operating record for the HLW Vitrification System, in accordance with Permit Condition III.10.C.4.

III.10.J.1.d.iii. The Permittees will comply with the inspection requirements specified in Operating Unit 10, Appendix 10.15 of this Permit, as approved pursuant to Permit Condition III.10.J.5.f., and as modified by Permit Conditions III.10.J.1.b.xii., III.10.J.2., III.10.J.3., and III.10.J.4.

III.10.J.1.e. Monitoring Requirements [WAC 173-303-670(5), WAC 173-303-670(6), WAC -173-303-670(7), and WAC 173-303-807(2), in accordance with WAC 173-303-680(3)]

III.10.J.1.e.i. Upon receipt of a written request from Ecology, the Permittees will perform sampling and analysis of the dangerous and mixed waste and exhaust emissions to verify that the

operating requirements established in the Permit achieve the performance standards delineated in this Permit.

III.10.J.1.e.ii. The Permittees will comply with the monitoring requirements specified in Operating Unit 10, Appendices 10.2, 10.3, 10.7, 10.13, 10.15, and 10.18 of this Permit, as approved pursuant to Permit Conditions III.10.J.5.c., III.10.J.5.d., III.10.J.5.e., and III.10.J.5.f., as modified by Permit Conditions III.10.J.1.b.xii., III.10.J.2., III.10.J.3., and III.10.J.4.

III.10.J.1.e.iii. The Permittees will operate, calibrate, and maintain the carbon monoxide and hydrocarbon continuous emission monitors (CEM) specified in this Permit in accordance with Performance Specification 4B and 8A of 40 CFR Part 60, Appendix B, in accordance with Appendix to Subpart EEE of 40 CFR Part 63, and Operating Unit 10 Appendix 10.15 of this Permit, as approved pursuant to Permit Condition III.10.J.5.f., and as modified by Permit Conditions III.10.J.1.b.xii., III.10.J.2., III.10.J.3., and III.10.J.4.

III.10.J.1.e.iv. The Permittees will operate, calibrate, and maintain the instruments specified on Permit Tables III.10.J.C and F, as approved/modified pursuant to Permit Condition III.10.J.5., in accordance with Operating Unit 10, Appendix 10.15 of this Permit, as approved pursuant to Permit Condition III.10.J.5.f., and as modified by Permit Conditions III.10.J.1.b.xii., III.10.J.2., III.10.J.3., and III.10.J.4.

III.10.J.1.f. Recordkeeping Requirements [WAC 173-303-380 and WAC 173-303-680(3)]

III.10.J.1.f.i. The Permittees will record and maintain in the WTP Unit operating record for the HLW Vitrification System, all monitoring, calibration, maintenance, test data, and inspection data compiled under the conditions of this Permit, in accordance with Permit Conditions III.10.C.4. and III.10.C.5., as modified by Permit Conditions III.10.J.1.b.xii., III.10.J.2., III.10.J.3., and III.10.J.4.

III.10.J.1.f.ii. The Permittees will record in the WTP Unit operating record the date, time, and duration of all automatic waste feed cut-offs and/or lockouts, including the triggering parameters, reason for the deviation, and recurrence of the incident. The Permittees will also record all incidents of AWFCO system function failures, including the corrective measures taken to correct the condition that caused the failure.

III.10.J.1.f.iii. The Permittees will submit to Ecology a report semi-annually the first calendar year, and annually thereafter each calendar year within ninety (90) days following the end of the year. The report will include the following information:

A. Total dangerous and mixed waste feed processing time for the HLW Vitrification System;

B. Date/Time of all HLW Vitrification System startups and shutdowns;

C. Date/Time/Duration/Cause/Corrective Action taken for all HLW Vitrification System shutdowns caused by malfunction of either process or control equipment; and

D. Date/Time/Duration/Cause/Corrective Action taken for all instances of dangerous and/or mixed waste feed cut-off due to deviations from Permit Table III.10.J.F, as approved/modified pursuant to Permit Condition III.10.J.5.

III.10.J.1.f.iv. The Permittees will submit an annual report to Ecology each calendar year within ninety (90) days following the end of the year of all quarterly CEM Calibration Error and Annual CEM Performance Specification Tests conducted in accordance with Permit Condition III.10.J.1.e.iii.

III.10.J.1.g. Closure

The Permittees will close the HLW Vitrification System in accordance with Operating Unit 10, Chapter 11.0 of this Permit, as approved pursuant to Permit Condition III.10.C.8.

III.10.J.2. Shakedown Period [WAC 173-303-670(5), WAC 173-303-670(6), WAC -173-303-670(7), and WAC 173-303-807(2), in accordance with WAC 173-303-680(2) and (3)].

III.10.J.2.a. The shakedown period for the HLW Vitrification System will be conducted in accordance with Permit Condition III.10.J.1., Operating Unit 10, Appendix 10.15 of this Permit, as approved pursuant to Permit Condition III.10.J.5.f., and as modified in accordance with Permit Conditions III.10.J.1.b.xii., III.10.J.2., and III.10.J.3.

III.10.J.2.b. Duration of the Shakedown Period

III.10.J.2.b.i. The shakedown period for the HLW Vitrification System will begin with the initial introduction of dangerous waste in the HLW Vitrification System following construction and will end with the start of the demonstration test.

III.10.J.2.b.ii. The shakedown period will not exceed the following limits, as defined by hours of operation of the HLW Vitrification System with dangerous waste. The Permittees may petition Ecology for one (1) extension of each shakedown phase for seven hundred and twenty (720) additional operating hours in accordance with permit modification procedures specified in Permit Conditions III.10.C.2.e. and III.10.C.2.f.

Shakedown Phase 1: 720 hours

Shakedown Phase 2: 720 hours

III.10.J.2.b.iii. Shakedown Phase 2 will not be commenced until documentation has been submitted to Ecology verifying that the HLW Vitrification System has operated at a minimum of 75% of the shakedown Phase 1 feed-rate limit for two (2) separate eight (8) consecutive hour periods with no AWFCOs.

III.10.J.2.c. Allowable Waste Feed During the Shakedown Period

III.10.J.2.c.i. The Permittees may feed the dangerous waste specified for the HLW Vitrification System on the Part A Forms (Operating Unit 10, Chapter 1.0 of this Permit), except for those waste outside the waste acceptance criteria specified in the WAP, Operating Unit 10, Chapter 3.0 of this Permit, as approved pursuant to Permit Condition III.10.C.3., except Permit Conditions III.10.J.2.c.ii. through v. also apply.

III.10.J.2.c.ii. The Permittees will not feed the following waste to the HLW Vitrification System during Shakedown Phase 1:

A. Acutely toxic dangerous waste listed in WAC 173-303-081(a)(2)(a)(i).

B. Mixed waste

III.10.J.2.c.iii. The Permittees will not feed the following waste to the HLW Vitrification System during Shakedown Phase 2:

A. Mixed waste

III.10.J.2.c.iv. The feed-rates to the HLW Vitrification System will not exceed the limits in Permit Tables III.10.J.D and III.10.J.F, as approved/modified pursuant to Permit Condition III.10.J.5.

III.10.J.2.c.v. The Permittees will conduct sufficient analysis of the dangerous waste treated in the HLW Vitrification System to verify that the waste feed is within the physical and chemical composition limits specified in this Permit.

III.10.J.3. Demonstration Test Period [WAC 173-303-670(5), WAC 173-303-670(6), WAC 173-303-670(7), and WAC 173-303-807(2), in accordance with WAC 173-303-680(2) and (3)]

III.10.J.3.a. Demonstration Test Period

III.10.J.3.a.i. The Permittees will operate, monitor, and maintain the HLW Vitrification System as specified in Permit Condition III.10.J.1., and Operating Unit 10, Appendix 10.15 of this Permit, as approved pursuant to Permit Condition III.10.J.5.f., except as modified in accordance with Permit Conditions III.10.J.1.b.xii. and III.10.J.3.

III.10.J.3.a.ii. Operating Unit 10, Appendix 10.15 of this Permit, as approved pursuant to Permit Condition III.10.J.5.f., will be re-submitted to Ecology for approval by the Permittees as a permit modification pursuant to Permit Conditions III.10.C.2.e. and III.10.C.2.f. at least one hundred and eighty (180) days prior to the start date of the demonstration test. The revised Demonstration Test Plan will include applicable EPA promulgated test methods and procedures in effect at the time of the re-submittal and projected commencement and completion dates for the Demonstration Test.

III.10.J.3.a.iii. The Permittees will not commence the demonstration test period until documentation has been submitted to Ecology verifying that the HLW Vitrification System has operated at a minimum of 90% of the demonstration test period feed-rate limit for a minimum of an eight (8) consecutive hours period on two (2) consecutive days.

III.10.J.3.b. Performance Standards

The Permittees will demonstrate compliance with the performance standards specified in Permit Condition III.10.J.1.b. during the Demonstration Test Period.

III.10.J.3.c. Allowable Waste Feed During the Demonstration Test Period

III.10.J.3.c.i. The Permittees may feed the dangerous waste specified for the HLW Vitrification System in Part A Forms (Operating Unit 10, Chapter 1.0 of this Permit), except for those waste outside the waste acceptance criteria specified in the WAP, Operating Unit 10, Chapter 3.0 of this Permit, as approved pursuant to Permit Condition III.10.C.3., except Permit Conditions III.10.J.3.c.ii. through iv. also apply.

III.10.J.3.c.ii. The Permittees will not feed mixed waste to the HLW Vitrification System.

III.10.J.3.c.iv. The dangerous waste feed-rates to the HLW Vitrification System will not exceed the limits in Permit Tables III.10.J.D and F, as approved/modified pursuant to Permit Condition III.10.J.5.

III.10.J.3.c.v. The Permittees will conduct sufficient analysis of the dangerous waste treated in the HLW Vitrification System to verify that the dangerous waste is within the physical and chemical composition limits specified in this Permit.

III.10.J.3.d. Demonstration Data Submissions and Certifications

III.10.J.3.d.i. The Permittees will submit to Ecology a complete demonstration test report within one hundred and twenty (120) calendar days of completion of the Demonstration Test including all data collected during the Demonstration Test and updated Permit Tables III.10.K.D, III.10.K.E, and III.10.K.F.

III.10.J.3.d.ii. The Permittees must submit the following information to Ecology prior to receiving Ecology's approval to commence feed of dangerous waste and mixed waste to the HLW Vitrification System:

A. The Permittees will submit a summary of data collected as required during the Demonstration Test to Ecology upon completion of the Demonstration Test.

B. A certification that the Demonstration Test has been carried out in accordance with the approved Demonstration Test Plan and approved modifications within thirty (30) days of the completion of the Demonstration Test [WAC 173-303-807(8)].

C. Calculations and analytical data showing compliance with the performance standards specified in Permit Conditions III.10.J.1.b.i, III.10.J.1.b.iv, III.10.J.1.b.v, III.10.J.1.b.vi, and III.10.J.1.b.vii

D. Laboratory data QA/QC summary for the information provided in III.10.J.3.d.ii.C.

III.10.J.3.d.iii. After successful completion of the Demonstration Test and receipt of Ecology's approval, the Permittees will be authorized to commence feed of dangerous waste and mixed waste to the HLW Vitrification System for the post-demonstration test period indicated in Permit Tables III.10.J.D and F, as approved/modified pursuant to Permit Condition III.10.J.5., in compliance with the operating requirements specified in Permit Condition III.10.J.1.c. and within the limitations specified in Permit Condition.III.10.C.14.

III.10.J.3.d.iv. RESERVED

III.10.J.3.d.v. After successful completion of the Demonstration Test, Permittees submittal of the following to Ecology, and Permittees receipt of Ecology approval of the following in writing, the Permittees will be authorized to feed dangerous waste and mixed waste to the HLW Vitrification System pursuant to Permit Section III.10.K.

A. A complete Demonstration Test Report for the HLW Vitrification System and updated Permit Tables III.10.K.D, III.10.K.E, and III.10.K.F, as approved/modified

pursuant to Permit Conditions III.10.J.5 and III.10.C.11.c. or III.10.C.11.d., the test report will be certified in accordance with WAC 173-303-807(8), in accordance with WAC 173-303-680(2) and (3).

B. A Final Risk Assessment Report completed pursuant to Permit Conditions III.10.C.11.c. or III.10.C.11.d.

III.10.J.3.d.vi. If any calculations or testing results show that one or more of the performance standards listed in Permit Condition III.10.J.1.b., with the exception of Permit Condition III.10.J.1.b.x., for the HLW Vitrification System were not met during the Demonstration Test, the Permittees will perform the following actions:

A. Immediately stop dangerous and mixed waste feed to the HLW Vitrification System under the mode of operation that resulted in not meeting the performance standard(s).

B. Verbally notify Ecology within twenty-four (24) hours of discovery of not meeting the performance standard(s) as specified in Permit Condition I.E.21.

C. Investigate the cause of the failure and submit a report of the investigation findings to Ecology within fifteen (15) days of discovery of not meeting the performance standard(s).

D. Submit to Ecology within fifteen (15) days of discovery of not meeting the performance standard(s), documentation supporting a mode of operation where all performance standards listed in Permit Condition III.10.J.1.b., with the exception of Permit Condition III.10.J.1.b.x., for the HLW Vitrification System were met during the demonstration test, if any such mode was demonstrated.

E. Based on the information provided to Ecology by the Permittees, pursuant to Permit Conditions III.10.J.3.d.vi.A through D above, and any additional information, Ecology may provide, in writing, direction to the Permittees to stop dangerous and/or mixed waste feed to the LAW Vitrification System and/or amend the mode of operation the Permittees are allowed to continue operations prior to Ecology approval of a compliance schedule and/or revised Demonstration Test Plan, pursuant to Permit Conditions III.10.J.3.d.vi.F and G.

F. If the performance standard listed in Permit Condition III.10.J.1.b.i. was not met during the Demonstration Test, the Permittees will submit within one hundred and twenty (120) days of discovery of not meeting the performance standard, a revised Demonstration Test Plan (if appropriate) and a compliance schedule for Ecology approval to address this deficiency. If a revised Demonstration Test Plan is submitted, it will be accompanied by a request for approval to retest as a permit modification pursuant to Permit Conditions III.10.C.2.e. and III.10.C.2.f. The revised Demonstration Test Plan (if submitted) must include substantive changes to prevent failure from reoccurring.

G. If any of the performance standards listed in Permit Condition III.10.J.1.b., with the exception of Permit Conditions III.10.J.1.b.i. or III.10.J.1.b.x., were not met during the Demonstration Test, the Permittees will submit to Ecology within one hundred

and twenty (120) days of discovery of not meeting the performance standard(s), a revised Demonstration Test Plan requesting approval to retest as a permit modification pursuant to Permit Conditions III.10.C.2.e. and III.10.C.2.f. The revised Demonstration Test Plan must include substantive changes to prevent failure from reoccurring.

III.10.J.3.d.vii. If any calculations or testing results show that any emission rate for any constituent listed in Permit Table III.10.J.E, as approved pursuant to Permit Condition III.10.C.11.b., is exceeded for HLW Vitrification System during the Demonstration Test, the Permittees will perform the following actions:

A. Verbally notify Ecology within twenty-four (24) hours of the discovery of exceeding the emission rate(s) as specified in Permit Condition I.E.21.

B. Submit to Ecology additional risk information to indicate that the increased emissions impact is offset by decreased emission impact from one or more constituents expected to be emitted at the same time, and/or investigate the cause and impact of the exceedence of the emission rate(s) and submit a report of the investigation findings to Ecology within fifteen (15) days of the discovery of exceeding the emission rate(s); and,

C. Based on the notification and any additional information, Ecology may provide, in writing, direction to the Permittees to stop dangerous and/or mixed waste feed to the HLW Vitrification System and/or to submit a revised Demonstration Test Plan as a permit modification pursuant to Permit Conditions III.10.C.2.e. and III.10.C.2.f., or III.10.C.2.g. The revised Demonstration Test Plan must include substantive changes to prevent failure from reoccurring.

III.10.J.4. Post-Demonstration Test Period [WAC 173-303-670(5), WAC 173-303-670(6), and WAC 173-303-807(2), in accordance with WAC 173-303-680(2) and (3)].

III.10.J.4.a. The Permittees will operate, monitor, and maintain the HLW Vitrification System as specified in Permit Condition III.10.J.1. and Operating Unit 10, Appendix 10.15 of this Permit, as approved pursuant to Permit Condition III.10.J.5., except as modified in accordance with Permit Conditions III.10.J.1.b.xii., III.10.J.3., and III.10.J.4.

III.10.J.4.b. Allowable Waste Feed During the Post-Demonstration Test Period

III.10.J.4.b.i. The Permittees may feed the dangerous and/or mixed waste specified for the HLW Vitrification System on the Part A Forms (Operating Unit 10, Chapter 1.0 of this Permit), except for those waste outside the waste acceptance criteria specified in the WAP, Operating Unit 10, Chapter 3.0 of this Permit, as approved pursuant to Permit Condition III.10.C.3., and except Permit Conditions III.10.J.4.b.ii. and III.10.J.4.b.iii. also apply.

III.10.J.4.b.ii. The dangerous waste and mixed waste feed rates to the HLW Vitrification System will not exceed the limits in Permit Tables III.10.J.D and F, as approved/modified pursuant to Permit Condition III.10.J.5., or in Permit Condition III.10.J.3.

III.10.J.4.b.iii. The Permittees will conduct sufficient analysis of the dangerous waste and mixed waste treated in HLW Vitrification System to verify that the waste feed is within the physical and chemical composition limits specified in this Permit.

III.10.J.5. Compliance Schedules

III.10.J.5.a. All information identified for submittal to Ecology in a. through f. of this compliance schedule must be signed and certified in accordance with requirements in WAC 173-303-810(12), as modified in accordance with Permit Condition III.10.J.1.a.iii. [WAC 173-303-806(4)].

III.10.J.5.b. The Permittees will submit to Ecology, pursuant to Permit Condition III.10.C.9.f., prior to construction of each secondary containment and leak detection system for the HLW Vitrification System (per level) as identified in Permit Tables III.10.J.A and III.10.J.B, engineering information as specified below, for incorporation into Operating Unit 10, Appendices 10.2, 10.4, 10.5, 10.7, 10.8, 10.9, 10.11, and 10.12 of this Permit. At a minimum, engineering information specified below will show the following as described in WAC 173-303-640, in accordance with WAC 173-303-680 (the information specified below will include dimensioned engineering drawings and information on sumps and floor drains):

III.10.J.5.b.i. IQRPE Reports (specific to foundation, secondary containment, and leak detection system) will include review of design drawings, calculations, and other information on which the certification report is based and will include, but not limited to, review of such information described below. Information (drawings, specifications, etc.) already included in Operating Unit 10, Appendix 10.0 of this Permit, may be included in the report by reference and should include drawing and document numbers. IQRPE Reports will be consistent with the information separately provided in ii. through ix. below [WAC 173-303-640(3)(a), in accordance with WAC 173-303-680 and WAC 173-303-806(4)(i)(i)];

III.10.J.5.b.ii. Design drawings (General Arrangement Drawings, plan and cross sections) and specifications for the foundation, secondary containment including liner installation details, and leak detection methodology. These items should show the dimensions, volume calculations, and location of the secondary containment system, and should include items such as floor/pipe slopes to sumps, tanks, floor drains [WAC 173-303-640(4)(b) through (f) and WAC 173-303-640(3)(a), in accordance with WAC 173-303-680 and WAC 173-303-806(4)(i)(i)];

III.10.J.5.b.iii. The Permittees will provide the design criteria (references to codes and standards, load definitions, and load combinations, materials of construction, and analysis/design methodology) and typical design details for the support of the secondary containment system. This information will demonstrate the foundation will be capable of providing support to the secondary containment system, resistance to pressure gradients above and below the system, and capable of preventing failure due to settlement, compression, or uplift [WAC 173-303-640(4)(c)(ii), in accordance with WAC 173-303-680(2) and WAC 173-303-806(4)(i)(i)(B)];

III.10.J.5.b.iv. A description of materials and equipment used to provide corrosion protection for external metal components in contact with soil, including factors affecting the potential for corrosion [WAC 173-303-640(3)(a)(iii)(B), in accordance with WAC 173-303-680 and WAC 173-303-806(4)(i)(i)(A) through (B)];

III.10.J.5.b.v. Secondary containment/foundation, and leak detection system, materials selection documentation (including, but not limited to, concrete coatings and water stops, and liner materials), as applicable [WAC 173-303-806(4)(i)(i)(A) through (B)];

III.10.J.5.b.vi Detailed description of how the secondary containment for the HLW Vitrification System will be installed in compliance with WAC 173-303-640(3)(c), in accordance with WAC 173-303-680 and WAC 173-303-806(4)(i)(i)(A) through (B);

III.10.J.5.b.vii. Submit Permit Tables III.10.J.B and III.10.K.B completed to provide for all secondary containment sumps and floor drains the information, as specified in each column heading consistent with information to be provided in i. through vi., above;

III.10.J.5.b.viii. Documentation that secondary containment and leak detection systems will not accumulate hydrogen gas levels above the lower explosive limit for incorporation into the Administrative Record [WAC 173-303-680, WAC 173-303-806(4)(i)(i)(A), and WAC 173-303-806(4)(i)(v)];

III.10.J.5.b.ix. A detailed description of how HLW Vitrification System design provides access for conducting future HLW Vitrification System integrity assessments [WAC 173-303-640(3)(b) and WAC 173-303-806(4)(i)(i)(B)].

III.10.J.5.c. The Permittees will submit to Ecology pursuant to Permit Condition III.10.C.9.f., prior to installation of each sub-system as identified in Permit Table III.10.J.A, engineering information as specified below, for incorporation into Operating Unit 10, Appendices 10.1 through 10.14 and 10.17 of this Permit. At a minimum, engineering information specified below will show the following, as required pursuant to WAC 173-303-640, in accordance with WAC 173-303-680 (the information specified below will include dimensioned engineering drawings):

III.10.J.5.c.i. IQRPE Reports (specific to sub-system) will include review of design drawings, calculations, and other information on which the certification report is based and will include as applicable, but not limited to, review of such information described below. Information (drawings, specifications, etc.) already included in Operating Unit 10, Appendix 10.0 of this Permit, may be included in the report by reference and should include drawing and document numbers. The IQRPE Reports will be consistent with the information separately provided in ii. through xii. below and the IQRPE Report specified in Permit Condition III.10.J.5.b. [WAC 173-303-640(3)(a), in accordance with WAC 173-303-680(2) and WAC 173-303-806(4)(i)(i)];

III.10.J.5.c.ii. Design drawings [General Arrangement Drawings in plan and cross section, Process Flow Diagrams, Piping and Instrumentation Diagrams, (including pressure control systems), Mechanical Drawings, and specifications, and other information specific to subsystems (to show location and physical attributes of each subsystem specific to

miscellaneous units)] [WAC 173-303-640(3)(a), in accordance with WAC 173-303-680(2) and WAC 173-303-806(4)(i)(i)];

III.10.J.5.c.iii. Sub-system design criteria (references to codes and, standards, load definitions, and load combinations, materials of construction, and analysis/design methodology) and typical design details to support the sub-systems. Structural support calculations specific to off-specification, non-standard, and field-fabricated subsystems will be submitted for incorporation into the Administrative Record. Documentation will include, but not be limited to, supporting specifications (test data, treatment effectiveness report, etc.), supporting projected operational capability (e.g., WESP projected removal efficiency for individual metals, halogens, particulates, etc.), and compliance with performance standards specified in Permit Condition III.10.J.1.b [WAC 173-303-640(3)(a), in accordance with WAC 173-303-680(2) and WAC 173-303-806(4)(i)(i)(B)];

III.10.J.5.c.iv. A description of materials and equipment used to provide corrosion protection for external metal components in contact with water, including factors affecting the potential for corrosion [WAC 173-303-640(3)(a)(iii)(B), in accordance with WAC 173-303-680(2) and WAC 173-303-806(4)(i)(i)(A) through (B)];

III.10.J.5.c.v. Sub-system materials selection documentation (e.g., physical and chemical tolerances) [WAC 173-303-640(3)(a), in accordance with WAC 173-303-680(2) and WAC 173-303-806(4)(i)(i)(A)];

III.10.J.5.c.vi. Sub-system vendor information (including, but not limited to, required performance warranties, as available), consistent with information submitted under ii. above, will be submitted for incorporation into the Administrative Record [WAC 173-303-640(3)(a), in accordance with WAC 173-303-680(2), WAC 173-303-806(4)(i)(i)(A) through (B), and WAC 173-303-806(4)(i)(v)];

III.10.J.5.c.vii. System descriptions related to sub-system units will be submitted for incorporation into the Administrative Record [WAC 173-303-680, WAC 173-303-806(4)(i)(i)(A) through (B), and WAC 173-303-806(4)(i)(v)];

III.10.J.5.c.viii. Mass and energy balance for normal projected operating conditions used in developing the Piping and Instrumentation Diagrams and Process Flow Diagrams, including assumptions and formulas used to complete the mass and energy balance, so that they can be independently verified for incorporation into the Administrative Record [WAC 173-303-680(2), WAC 173-303-806(4)(i)(i)(B), and WAC 173-303-806(4)(i)(v)];

III.10.J.5.c.ix. Detailed description of all potential HLW Vitrification System bypass events including:

A. A report which includes an analysis of credible potential bypass events and recommendations for prevention/minimization of the potential, impact, and frequency of the bypass event to include at a minimum:

1. Operating procedures
2. Maintenance procedures
3. Redundant equipment

4. Redundant instrumentation
5. Alternate equipment
6. Alternate materials of construction

III.10.J.5.c.x. A detailed description of how the sub-systems will be installed in compliance with WAC 173-303-640(3)(b), (c), (d), and (e), in accordance with WAC 173-303-680 and WAC 173-303-806(4)(i)(i)(B);

III.10.J.5.c.xi. Sub-system design to prevent escape of vapors and emissions of acutely or chronically toxic (upon inhalation) EHW, for incorporation into the Administrative Record [WAC 173-303-640(5)(e), in accordance with WAC 173-303-680, (2), and WAC 173-303-806(4)(i)(i)(B)];

III.10.J.5.c.xii. Documentation that sub-systems are designed to prevent the accumulation of hydrogen gases levels above the lower explosive limit for incorporation into the Administrative Record [WAC 173-303-680, WAC 173-303-806(4)(i)(i)(A), and WAC 173-303-806(4)(i)(v)];

III.10.J.5.d. The Permittees will submit to Ecology, pursuant to Permit Condition III.10.C.9.f., prior to installation of equipment for each sub-system as identified in Permit Tables III.10.J.A and III.10.J.B, not addressed in Permit Conditions III.10.J.5.b. or III.10.J.5.c., engineering information as specified below, for incorporation into Operating Unit 10, Appendices 10.1 through 10.14 of this Permit. At a minimum, engineering information specified below will show the following as required pursuant to in WAC 173-303-640, in accordance with WAC 173-303-680 (the information specified below will include dimensioned engineering drawings):

III.10.J.5.d.i. IQRPE Reports (specific to sub-system equipment) will include a review of design drawings, calculations, and other information as applicable on which the certification report is based. The reports will include, but not be limited to, review of such information described below. Information (drawings, specifications, etc.) already included in Operating Unit 10, Appendix 10.0 of this Permit, may be included in the report by reference and should include drawing and document numbers. The IQRPE Reports will be consistent with the information provided separately in ii. through xiii. below and the IQRPE Reports specified in Permit Conditions III.10.J.5.b. and III.10.J.5.c. [WAC 173-303-640(3)(a), in accordance with WAC 173-303-680(2) and WAC 173-303-806(4)(I)(I)(A) through (B)];

III.10.J.5.d.ii. Design drawings [Process Flow Diagrams, Piping and Instrumentation Diagrams (including pressure control systems), and specifications, and other information specific to equipment (these drawings should include all equipment such as pipes, valves, fittings, pumps, instruments, etc.)] [WAC 173-303-640(3)(a), in accordance with WAC 173-303-680(2) and WAC 173-303-806(4)(i)(i)(A) through (B)];

III.10.J.5.d.iii. Sub-system equipment design criteria (references to codes and standards, load definitions and load combinations, materials of construction, and analysis/design methodology) and typical design details for the support of the sub-system equipment. [WAC 173-303-

640(3)(a) and WAC 173-303-640(3)(f), in accordance with WAC 173-303-680 and WAC 173-303-806(4)(i)(i)(B)];

III.10.J.5.d.iv. A description of materials and equipment used to provide corrosion protection for external metal components in contact with soil and water, including factors affecting the potential for corrosion [WAC 173-303-640(3)(a)(iii)(B), in accordance with WAC 173-303-680(2) and WAC 173-303-806(4)(i)(i)(A)];

III.10.J.5.d.v. Materials selection documentation for equipment for each sub-system (e.g., physical and chemical tolerances) [WAC 173-303-640(3)(a), in accordance with WAC 173-303-680(2) and WAC 173-303-806(4)(i)(i)(A)];

III.10.J.5.d.vi. Vendor information (including, but not limited to, required performance warranties, as available), consistent with information submitted under ii. above, for sub-system equipment will be submitted for incorporation into the Administrative Record [WAC 173-303-640(3)(a), in accordance with WAC 173-303-680(2), WAC 173-303-806(4)(i)(i)(A) through (B), and WAC 173-303-806(4)(i)(iv)];

III.10.J.5.d.vii. Sub-system, sub-system equipment, and leak detection system instrument control logic narrative description (e.g., software functional specifications, descriptions of fail-safe conditions, etc.) [WAC 173-303-680(2), WAC 173-303-806(4)(i)(i)(B), and WAC 173-303-806(4)(i)(v)];

III.10.J.5.d.viii. System description related to sub-system equipment, and system descriptions related to leak detection systems, (including instrument control logic and narrative descriptions), for incorporation into the Administrative Record [WAC 173-303-680, WAC 173-303-806(4)(i)(i)(A) through (B), and WAC 173-303-806(4)(i)(v)];

III.10.J.5.d.ix. A detailed description of how the sub-system equipment will be installed and tested [WAC 173-303-640(3)(c) through (e) and WAC 173-303-640(4)(b) and (c), in accordance with WAC 173-303-680 and WAC 173-303-806(4)(i)(i)(B)];

III.10.J.5.d.x. For process monitoring, control, and leak detection system instrumentation for the HLW Vitrification System as identified in Permit Tables III.10.J.C. and III.10.J. F., a detailed description of how the process monitoring, control, and leak detection system instrumentation will be installed and tested [WAC 173-303-640(3)(c) through (e), WAC 173-303-640(4)(b) and (c), WAC 173-303-806(4)(c)(vi), and WAC 173-303-806(4)(i)(i)(B)];

III.10.J.5.d.xi. Mass and energy balance for projected normal operating conditions used in developing the Piping and Instrumentation Diagrams and Process Flow Diagrams, including assumptions and formulas used to complete the mass and energy balance, so that they can be independently verified, for incorporation into the Administrative Record [WAC 173-303-680(2), WAC 173-303-806(4)(i)(i)(B), and WAC 173-303-806(4)(i)(v)];

III.10.J.5.d.xii. Documentation that sub-systems equipment are designed to prevent the accumulation of hydrogen gas levels above the lower explosive limit into the Administrative Record [WAC 173-303-680, WAC 173-303-806(4)(i)(i)(A), and WAC 173-303-806(4)(i)(v)] [WAC 173-303-815(2)(b)(ii)];

III.10.J.5.d.xiii. Leak Detection system documentation (e.g. vendor information etc.) consistent with information submitted under Permit Condition III.10.J.5.c.ii. and Permit Conditions III.10.J.5.d.ii., vii., viii., and x. above, will be submitted for incorporation into the Administrative Record.

III.10.J.5.e. Prior to initial receipt of dangerous and/or mixed waste in the WTP Unit, the Permittees will submit to Ecology, pursuant to Permit Condition III.10.C.9.f., the following as specified below for incorporation into Operating Unit 10, Appendix 10.18 of this Permit, except Permit Condition III.10.J.5.e.i., which will be incorporated into Operating Unit 10, Chapter 6.0 of this Permit. All information provided under this permit condition must be consistent with information provided pursuant to Permit Conditions III.10.J.5.b., c., d., e., and f., III.10.C.3.e.v., and III.10.C.11.b., as approved by Ecology:

III.10.J.5.e.i. Integrity assessment program and schedule for the HLW Vitrification System will address the conducting of periodic integrity assessments on the HLW Vitrification System over the life of the system, as specified in Permit Condition III.10.J.5.b.ix. and as specified in WAC 173-303-640(3)(b), in accordance with WAC 173-303-680, and descriptions of procedures for addressing problems detected during integrity assessments. The schedule must be based on past integrity assessments, age of the system, materials of construction, characteristics of the waste, and any other relevant factors [WAC 173-303-640(3)(b), in accordance with WAC 173-303-680 and WAC 173-303-806(4)(i)(i)(B)];

III.10.J.5.e.ii. Detailed plans and descriptions, demonstrating the leak detection system is operated so that it will detect the failure of either the primary or secondary containment structure or the presence of any release of dangerous and/or mixed waste or accumulated liquid in the secondary containment system within twenty-four (24) hours [WAC 173-303-640(4)(c)(iii)]. Detection of a leak of at least 0.1 gallons per hour within twenty-four (24) hours is defined as being able to detect a leak within twenty-four (24) hours. Any exceptions to this criteria must be approved by Ecology in accordance with WAC 173-303-680, WAC 173-303-640(4)(c)(iii), and WAC 173-303-806(4)(i)(i)(b);

III.10.J.5.e.iii. Detailed operational plans and descriptions, demonstrating that spilled or leaked waste and accumulated precipitation liquids can be removed from the secondary containment system within twenty-four (24) hours [WAC 173-303-806(4)(i)(i)(B)];

III.10.J.5.e.iv. Descriptions of operational procedures demonstrating appropriate controls and practices are in place to prevent spills and overflows from the HLW Vitrification System or containment systems in compliance with WAC 173-303-640(5)(b)(i) through (iii), in accordance with WAC 173-303-680 and WAC 173-303-806(4)(i)(i)(B);

III.10.J.5.e.v. Description of procedures for investigation and repair of the HLW Vitrification System [WAC 173-303–640(6) and WAC 173-303-640(7)(e) and (f), in accordance with WAC 173-303-680, WAC 173-303-320, WAC 173-303-806(4)(ia)(iv), and WAC 173-303-806(4)(a)(ii)(B)];

III.10.J.5.e.vi. Updated Chapter 4.0, Narrative Description, Tables and Figures as identified in Permit Tables III.10.J.A and III.10.J.B, as modified pursuant to Permit Condition III.10.H.5.e.x. and updated to identify routinely non-accessible LAW Vitrification sub-systems.

III.10.J.5.e.vii. Description of procedures for management of ignitable and reactive, and incompatible dangerous and/or mixed waste as specified in accordance with WAC 173-303-640(9) and (10), in accordance with WAC 173-303-680 and WAC 173-303-806(4)(i)(i)(B).

III.10.J.5.e.viii. A description of the tracking system used to track dangerous and/or mixed waste generated throughout the HLW Vitrification System, pursuant to WAC 173-303-380.

III.10.J.5.e.ix. Permit Table III.10.J.C and III.10.K.C will be revised and/or completed for HLW Vitrification System process and leak detection system monitors and instruments (to include, but not be limited to: instruments and monitors measuring and/or controlling flow, pressure, temperature, density, pH, level, humidity, and emissions) to provide the information as specified in each column heading. Process and leak detection system monitors and instruments for critical systems, as specified in Operating Unit 10, Appendix 2.0 and as updated pursuant to Permit Condition III.10.C.9.b.and for operating parameters as required to comply with Permit Condition III.10.C.3.e.iii., will be addressed. Process monitors and instruments for non-waste management operations (e.g., utilities, raw chemical storage, non-contact cooling waters, etc.) are excluded from this permit condition [WAC 173-303-680, WAC 173-303-806(4)(i)(i)(A) through (B), and WAC 173-303-806(4)(i)(v)];

III.10.J.5.e.x. Permit Tables III.10.J.A and III.10.K.A amended as follows [WAC 173-303-680 and WAC 173-303-806(4)(i)(i)(A) through (B)]:

A. Under column 1, update and complete list of dangerous and mixed waste HLW Vitrification System sub-systems, including plant items that comprise each system (listed by item number).

B. Under column 2, update and complete system designations.

C. Under column 3, replace the 'Reserved' with Operating Unit 10, Appendix 10.0 sub-sections (e.g., 10.1, 10.2, etc.) designated in Permit Conditions III.10.J.5.b., c., and d. specific to HLW Vitrification System sub-system, as listed in column 1.

D. Under column 4, update and complete list of narrative description, tables, and figures.

III.10.J.5.f. One hundred and eighty (180) days prior to initial receipt of dangerous and/or mixed waste in the WTP Unit, the Permittees will submit for review and receive approval for incorporation into Operating Unit 10, Appendix 10.15 of this Permit, a Demonstration Test Plan for the HLW Vitrification System to demonstrate that the HLW Vitrification Systems meets the performance standards specified in Permit Condition III.10.J.1.b. In order to incorporate the Demonstration Test Plan for the HLW Vitrification System into Operating Unit 10, Appendix 10.15, Permit Condition III.10.C.2.g. process will be followed. The Demonstration Test Plan will include, but not be limited to, the following information. The Demonstration Test Plan will also be consistent with the information provided pursuant to Permit Conditions III.10.J.5.b., c., d. and e., III.10.C.3.e.v. and III.10.C.11.b., as approved by Ecology and consistent with the schedule described in Operating Unit 10, Appendix 1.0 of this Permit. The documentation required pursuant to

Permit Condition III.10.J.5.f.xvi., in addition to being incorporated into Operating Unit 10, Appendix 10.15, will be incorporated by reference in Operating Unit 10, Chapter 6.0 of this Permit.

Notes: (1) The following should be consulted to prepare this Demonstration Test Plan: "Guidance on Setting Permit Conditions and Reporting Trial Burn Results Volume II of the Hazardous Waste Incineration Guidance Series", and EPA/625/6-89/019 and Risk Burn Guidance For Hazardous Waste Combustion Facilities", EPA-R-01-001, July 2001, WAC 173-303-807(2), WAC 173-303-670(5), WAC-173-303-670(6), 40 CFR §63.1207(f)(2), 40 CFR §63.1209 and Appendix to 40 CFR Part 63 EEE.

(2) Cross-referencing to the information provided pursuant to permit Conditions III.H.5.b., c., d., e. and III.10.C.3.e.v., as approved by Ecology, that are redundant to elements of the Demonstration Test Plan for the HLW Vitrification System is acceptable.

III.10.J.5.f.i. Analysis of each feed-stream to be fed during the demonstration test, including dangerous waste, glass formers and reductants, process streams (e.g., control air, process air, steam, sparge bubbler air, air in-leakage from melter cave, and gases from HLW Vitrification Vessel Ventilation System, process water, etc.) that includes:

A. Levels of ash, levels of metals, total chlorine (organic and inorganic), other halogens and radionuclide surrogates.

B. Description of the physical form of the feed-streams;

C. An identification and quantification of organics that are present in the feed-stream, including constituents proposed for DRE demonstration;

A comparison of the proposed demonstration test feed streams to the mixed waste feed envelopes to be processed in the melter must be provided that documents that the proposed demonstration test feed streams will serve as worst case surrogates for organic destruction, formation of products of incomplete oxidation, and metals, total chlorine (organic and inorganic), other halogens, particulate formation, and radionuclides;

III.10.J.5.f.ii. Specification of trial principal organic dangerous constituents (PODCs) for which destruction and removal efficiencies are proposed to be calculated during the demonstration test and for inclusion in Permit Conditions III.10.J.1.b.i. and III.10.K.1.b.i. These trial PODCs will be specified based on destructibility, concentration or mass in the waste and the dangerous waste constituents or constituents in WAC 173-303-9905;

III.10.J.5.f.iii. A description of the blending procedures, prior to introducing the feed-streams into the melter, including analysis of the materials prior to blending, and blending ratios;

III.10.J.5.f.iv. A description of how the surrogate feeds are to be introduced for the demonstration. This description should clearly identify the differences and justify how any of differences would impact the surrogate feed introduction as representative of how mixed waste feeds will be introduced;

III.10.J.5.f.v. A detailed engineering description of the HLW Vitrification System, including:

A. Manufacturer's name and model number for each sub-system;

B. Design capacity of each sub-system including documentation (engineering calculations, manufacturer/vendor specifications, operating data, etc.) supporting projected operational efficiencies (e.g., WESP projected removal efficiency for individual metals, halogens, particulates, etc.) and compliance with performance standards specified in Permit Condition III.10.J.1.b.;

C. Detailed scaled engineering drawings, including Process Flow Diagrams, Piping and Instrumentation Diagrams, Vessel Drawings (plan, and elevation with cross sections) and General Arrangement Drawings;

D. Process Engineering Descriptions;

E. Mass and energy balances for each projected operating condition and each demonstration test condition, including assumptions and formulas used to complete mass and energy balances so that they can be independently verified for incorporation into the Administrative Record;

F. Engineering Specifications/data sheets (materials of construction, physical and chemical tolerances of equipment, equipment performance warranties, and fan curves);

G. Detailed Description of Automatic Waste Feed Cut-off System addressing critical operating parameters for all performance standards specified in Permit Condition III.10.J.1.b.

H. Documentation to support compliance with performance standards specified in Permit Condition III.10.J.1.b., including engineering calculations, test data, and manufacturer/vendor's warranties, etc.

I. Detailed description of the design, operation and maintenance practices for air pollution control system.

J. Detailed description of the design, operation, and maintenance practices of any stack gas monitoring and pollution control monitoring system.

K. Documentation based on current WTP Unit design either confirming the Permittees' demonstration that it is not technically appropriate to correct standards listed in Permit Conditions III.J.1.b.ii. through III.J.1.b.ix. to seven percent (7%) oxygen,. or a request, pursuant to Permit Conditions III.10.C.9.e. and III.10.C.9.f., to update Permit Conditions III.J.1.b.ii. through III.J.1.b.ix., III.K.b.ii. through III.K.b.ix., III.K.e.iii., and III.J.1.e.iii., Permit Tables III.10.J.C, III.10.J.F, III.10.K.C., III.10.K.F.and Operating Unit 10, Appendix 10.0 to reflect the addition of an oxygen monitor and the correction of the standards to seven percent (7%) oxygen.

III.10.J.5.f.vi. Detailed description of sampling and monitoring procedures including sampling and monitoring locations in the system, the equipment to be used, sampling and monitoring frequency, and planned analytical procedures for sample analysis including, but not limited to:

A. A short summary narrative description of each stack sample method should be included within the main body of the demonstration test plan, which references an appendix to the plan that would include for each sampling train: (1) detailed sample method procedures, (2) sampling train configuration schematic, (3) sampling recovery flow sheet, (4) detailed analytical method procedures, and (5) sampling preparation and analysis flow sheet. The detailed procedures should clearly flag where the method has provided decision points (e.g., choices of equipment materials of construction, choices of clean-up procedures or whether additional clean-up procedures will be incorporated, whether pretest surveys or laboratory validation work will be performed, enhancements to train to accommodate high moisture content in stack gas, etc.) and what is being proposed along with the basis for the decision.

B. A short summary narrative description of the feed and residue sampling methods should be included within the main body of the demonstration test plan, which references an appendix that would include for each sample type: (1) detailed sample method procedures, (2) sampling recovery/compositing procedures, and (3) detailed analytical method procedures. The detailed procedures should clearly flag where the method has provided decision points (e.g., choices of equipment materials of construction, choices of clean-up procedures or whether additional clean-up procedures will be incorporated, whether pretest surveys or laboratory validation work will be performed, etc.) and what is being proposed along with the basis for the decision.

III.10.J.5.f.vii. A detailed test schedule for each condition for which the demonstration test is planned, including projected date(s), duration, quantity of dangerous waste to be fed, and other relevant factors;

III.10.J.5.f.viii. A detailed test protocol including, for each test condition, the ranges of feed-rate for each feed system, and all other relevant parameters that may affect the ability of the HLW Vitrification System to meet performance standards specified in Permit Condition III.10.J.1.b.;

III.10.J.5.f.ix. A detailed description of planned operating conditions for each demonstration test condition, including operating conditions for shakedown, demonstration test, post-demonstration test and normal operations. This information will also include submittal of Permit Tables III.10.J.D, III.10.J.F, III.10.K.D, and III.10.K.F completed with the information as specified in each column heading for each HLW Vitrification System waste feed cut-off parameter and submittal of supporting documentation for Permit Tables III.10.J.D, III.10.J.F, III.10.K.D, and III.10.K.F set-point values.

III.10.J.5.f.x. The test conditions proposed must demonstrate meeting the performance standards specified in Permit Condition III.10.J.1.b. with the simultaneous operation of the melter at capacity and input from the HLW Vitrification Vessel Ventilation System at capacity to simulate maximum loading to the HLW Vitrification System off-gas treatment system and to establish the corresponding operating parameter ranges.

III.10.J.5.f.xi. A detailed description of procedures for start-up and shutdown of waste feed and controlling emissions in the event of an equipment malfunction, including off-normal and emergency shutdown procedures;

III.10.J.5.f.xii. A calculation of waste residence time;

III.10.J.5.f.xiii. Any request to extrapolate metal feed-rate limits from Demonstration Test levels must include:

A. A description of the extrapolation methodology and rationale for how the approach ensures compliance with the performance standards, as specified in Permit Condition III.10.J.1.b.

B. Documentation of the historical range of normal metal feed-rates for each feedstream.

C. Documentation that the level of spiking recommended during the demonstration test will mask sampling and analysis imprecision and inaccuracy to the extent that extrapolation of feed-rates and emission rates from the Demonstration Test data will be as accurate and precise as if full spiking were used.

III.10.J.5.f.xiv. Documentation of the expected levels of constituents in HLW Vitrification System input streams, including, but not limited to, waste feed, glass former and reactants, control air, process air, steam, sparge bubbler air, air in-leakage from melter cave, gases from HLW Vitrification Vessel Ventilation System, and process water.

III.10.J.5.f.xv. Documentation justifying the duration of the conditioning required to ensure the HLW Vitrification System had achieved steady-state operations under Demonstration Test operating conditions.

III.10.J.5.f.xvi. Documentation of HLW Vitrification System process and leak detection system instruments and monitors as listed on Permit Tables III.10.J.C, III.10.J.F, III.10.K.C, and III.10.K.F to include:

A. Procurement specifications

B. Location used

C. Range, precision, and accuracy

D. Calibration/functionality test procedures (either method number ASTM) or provide a copy of manufacturer's recommended calibration procedures

E. Calibration/functionality test, inspection, and routine maintenance schedules and checklists, including justification for calibration, inspection and maintenance frequencies, criteria for identifying instruments found to be significantly out of calibration, and corrective action to be taken for instruments found to be significantly out of calibration (e.g., increasing frequency of calibration, instrument replacement, etc.).

F. Equipment instrument control logic narrative description (e.g., software functional specifications, descriptions of fail safe conditions, etc.) [WAC 173-303-680(2), WAC 173-303-806(4)(i)(i)(B), and WAC 173-303-806(4)(i)(v)]

III.10.J.5.f.xvii. Outline of demonstration test report.

1

2

Table III.10.J.A – HLW Vitrification System Description

Sub-system Description	Sub-system Designation	Engineering Description (Drawing Nos., Specification Nos., etc.)	Narrative Description, Tables, and Figures
HLW Melter Process System HMP-MLTR-00001 (HLW Melter 1) HMP-MLTR-00002 (HLW Melter 2)	HMP	RESERVED	Section 4.1.4.2; Table 4-8; and Figures 4A-1, 4A-4, 4A-27 and 4A-54 in Operating Unit 10, Chapter 4.0 of this Permit.
Melter Offgas Treatment Process System HOP-FCLR-00001 (Film Cooler) HOP-FCLR-00002 (Film Cooler) HOP-FCLR-00003 (Film Cooler) HOP-FCLR-00004 (Film Cooler)	HOP	**24590-HLW** -M5-V17T-P0002 -M5-V17T-P20002 -M6-HMP-P0002 -M6-HMP-P20002 -3YD-HOP-00001[a]	Section 4.1.4.3; Table 4-8; and Figures 4A-1, 4A-4 and 4A-27 in Operating Unit 10, Chapter 4.0 of this Permit.
Melter Offgas Treatment Process System (Cont.) HOP-SCB-00001 (HLW Melter 1 SBS) HOP-SCB-00002 (HLW Melter 2 SBS)	HOP	**24590-HLW** -M5-V17T-P0003 -M5-V17T-P20003 -M6-HOP-P0001 -M6-HOP-P20001 -MKD-HOP-P0016 -MK-HOP-P0001001 -MK-HOP-P0001002 -MK-HOP-P0001003 -MK-HOP-P0001004 -N1D-HOP-P0010 -P1-P01T-P0002 -3YD-HOP-00001[a] **24590-WTP** -3PS-MV00-TP001 -3PS-MV00-TP002 -3PS-MV00-TP003	Section 4.1.4.3; Table 4-8; and Figures 4A-1 and 4A-4 in Operating Unit 10, Chapter 4.0 of this Permit.
Melter Offgas Treatment Process System (Cont.)	HOP	**24590-HLW** -M5-V17T-P0003 -M5-V17T-P20003	Section 4.1.4.3; Table 4-8; and Figures 4A-1 and 4A-4 in Operating Unit 10, Chapter

Table III.10.J.A – HLW Vitrification System Description

Sub-system Description	Sub-system Designation	Engineering Description (Drawing Nos., Specification Nos., etc.)	Narrative Description, Tables, and Figures
HOP-WESP-00001 (Melter 1 WESP) HOP-WESP-00002 (Melter 2 WESP)		-M6-HOP-P0002 -M6-HOP-P20002 -N1D-HOP-P0002 -P1-P01T-P0004 -P1-P01T-P0005 -3YD-HOP-00001[a] **24590-WTP** -3PS-MKE0-TP001	4.0 of this Permit.
Melter Offgas Treatment Process System (Cont.) HOP-HEPA-00001A (Melter 1 HEPA Filter) HOP-HEPA-00001B (Melter 1 HEPA Filter) HOP-HEPA-00002A (Melter 1 HEPA Filter) HOP-HEPA-00002B (Melter 1 HEPA Filter) HOP-HEPA-00007A (Melter 2 HEPA Filter) HOP-HEPA-00007B (Melter 2 HEPA Filter) HOP-HEPA-00008A (Melter 2 HEPA Filter) HOP-HEPA-00008B (Melter 2 HEPA Filter)	HOP	**24590-HLW** -M5-V17T-P0003 -M5-V17T-P20003 -M6-HOP-P0010 -M6-HOP-P20010 -MAD-HOP-P0010 -MAD-HOP-P0011 -MAD-HOP-P0012 -MAD-HOP-P0013 -MAD-HOP-P0014 -MAD-HOP-P0015 -MAD-HOP-P0016 -MAD-HOP-P0017 -P1-P01T-P0002 -3YD-HOP-00001[a] **24590-WTP** -3PS-MKH0-TP002	Section 4.1.4.3; Table 4-8; and Figures 4A-1 and 4A-4 in Operating Unit 10, Chapter 4.0 of this Permit.
Melter Offgas Treatment Process System (Cont.) HOP-ADBR-00001A (Melter 1Activated Carbon Adsorber – located on Activated	HOP	**24590-HLW** -M5-V17T-P0004 -M5-V17T-P20004 -M6-HOP-P0003 -M6-HOP-P20003	Section 4.1.4.3; Table 4-8; and Figures 4A-1 and 4A-4 in Operating Unit 10, Chapter 4.0 of this Permit.

Table III.10.J.A – HLW Vitrification System Description

Sub-system Description	Sub-system Designation	Engineering Description (Drawing Nos., Specification Nos., etc.)	Narrative Description, Tables, and Figures
Carbon Adsorber Skid HOP-ADBR-00001) HOP-ADBR-00001B (Melter 1 Activated Carbon Adsorber – located on Activated Carbon Adsorber Skid HOP-ADBR-00001) HOP-ADBR-00002A (Melter 2 Activated Carbon Adsorber – located on Activated Carbon Adsorber Skid HOP-ADBR-00002) HOP-ADBR-00002B (Melter 2 Activated Carbon Adsorber – located on Activated Carbon Adsorber Skid HOP-ADBR-00002)		-MVD-HOP-P0015 -MVD-HOP-P0016 -N1D-HOP-P0003 -P1-P01T-P0002 **24590-WTP** -3PS-MWK0-TP001	
Melter Offgas Treatment Process System (Cont.) HOP-HEME-00001A (Melter 1 HEME) HOP-HEME-00001B (Melter 1 HEME) HOP-HEME-00002A (Melter 2 HEME) HOP-HEME-00002B (Melter 2 HEME)	HOP	**24590-HLW** -M5-V17T-P0003 -M5-V17T-P20003 -M6-HOP-P0009 -M6-HOP-P20009 -MVD-HOP-P0007 -MV-HOP-P0002001 -MV-HOP-P0002002 -MV-HOP-P0002003 -N1D-HOP-P0001 -P1-P01T-P0002 -3YD-HOP-00001[a]	Section 4.1.4.3; Table 4-8; and Figures 4A-1 and 4A-4 in Operating Unit 10, Chapter 4.0 of this Permit.
Melter Offgas Treatment Process System (Cont.) HOP-SCO-00001 (Thermal Catalytic Oxidizer – located on Catalyst Skid HOP-SCO-00002) HOP-SCO-00004 (Thermal Catalytic Oxidizer – located on Catalyst Skid HOP-SCO-00003)	HOP	**24590-HLW** -M5-V17T-P0004 -M5-V17T-P20004 -M6-HOP-P0008 -M6-HOP-P20008 -MKD-HOP-P0019 -MKD-HOP-P0020 -N1D-HOP-P0004 -NID-HOP-P0005 -P1-PO1T-P0002	Section 4.1.4.3; Table 4-8; and Figures 4A-1 and 4A-4 in Operating Unit 10, Chapter 4.0 of this Permit.

Table III.10.J.A – HLW Vitrification System Description

Sub-system Description	Sub-system Designation	Engineering Description (Drawing Nos., Specification Nos., etc.)	Narrative Description, Tables, and Figures
		24590-WTP -3PS-MBTV-TP001	
Melter Offgas Treatment Process System (Cont.) HOP-SCR-00001 (NOx Selective Catalytic Reducer – located on Catalyst Skid HOP-SCO-00002) HOP-SCR-00002 (NOx Selective Catalytic Reducer – located on Catalyst Skid HOP-SCO-00003)	HOP	**24590-HLW** -M5-V17T-P0004 -M5-V17T-P20004 -M6-HOP-P0008 -M6-HOP-P20008 -MKD-HOP-P0019 -MKD-HOP-P0020 -N1D-HOP-P0004 -N1D-HOP-P0005 -P1-PO1T-P0002 **24590-WTP** -3PS-MBTV-TP001	Section 4.1.4.3; Table 4-8; and Figures 4A-1 and 4A-4 in Operating Unit 10, Chapter 4.0 of this Permit.
Melter Offgas Treatment Process System (Cont.) HOP-HX-00001(Catalyst Skid Preheater – located on Catalyst Skid HOP-SCO-00002) HOP-HX-00003 (Catalyst Skid Preheater – located on Catalyst Skid HOP-SCO-00003)	HOP	**24590-HLW** -M5-V17T-P0004 -M5-V17T-P20004 -M6-HOP-P0008 -M6-HOP-P20008 -MKD-HOP-P0019 -MKD-HOP-P0020 -P1-PO1T-P0002 **24590-WTP** -3PS-MBTV-TP001	Section 4.1.4.3; Table 4-8; and Figures 4A-1 and 4A-4 in Operating Unit 10, Chapter 4.0 of this Permit.
Melter Offgas Treatment Process System (Cont.) HOP-HTR-00001 (Catalyst Skid Electric Heater – located on Catalyst Skid HOP-SCO-00002) HOP-HTR-00007 (Catalyst Skid Electric Heaters – located on Catalyst Skid HOP-SCO-00003)	HOP	**24590-HLW** -M5-V17T-P0004 -M5-V17T-P20004 -M6-HOP-P0008 -M6-HOP-P20008 -MKD-HOP-P0019 -MKD-HOP-P0020 -P1-PO1T-P0002 **24590-WTP** -3PS-MBTV-TP001	Section 4.1.4.3; Table 4-8; and Figures 4A-1 and 4A-4 in Operating Unit 10, Chapter 4.0 of this Permit.
Melter Offgas Treatment Process System (Cont.)	HOP	**24590-HLW** -M5-V17T-P0004 -M5-V17T-P20004	Section 4.1.4.3; Table 4-8; and Figures 4A-1 and 4A-4 in Operating Unit 10, Chapter

Table III.10.J.A – HLW Vitrification System Description

Sub-system Description	Sub-system Designation	Engineering Description (Drawing Nos., Specification Nos., etc.)	Narrative Description, Tables, and Figures
HOP-ABS-00002 (Silver Mordenite Column) HOP-ABS-00003 (Silver Mordenite Column)		-M6-HOP-P0008 -M6-HOP-P20008 -MKD-HOP-P0014 -MKD-HOP-P0017 -NID-HOP-P0006 -P1-P01T-P0001 -3PS-MBT0-TP001	4.0 of this Permit.
Melter Offgas Treatment Process System (Cont.) HOP-HTR-00001B (HEPA Preheater) HOP-HTR-00002A (HEPA Preheater) HOP-HTR-00005A (HEPA Preheater) HOP-HTR-00005B (HEPA Preheater)	HOP	**24590-HLW** -M5-V17T-P0003 -M5-V17T-P20003 -M6-HOP-P0010 -M6-HOP-P20010 -MED-HOP-P0013 -3PS-MEE0-TP001	Section 4.1.4.3; Table 4-8; and Figures 4A-1 and 4A-4 in Operating Unit 10, Chapter 4.0 of this Permit.
Melter Offgas Treatment Process System (Cont.) HOP-HX-00002 (Silver Mordenite Preheater) HOP-HX-00004 (Silver Mordenite Preheater)	HOP	**24590-HLW** -M5-V17T-P0004 -M5-V17T-P20004 -M6-HOP-P0003 -M6-HOP-P20003 -MED-HOP-P0012 -MED-HOP-P0017 -N1D-HOP-P0007 -P1-P01T-P0002	Section 4.1.4.3; Table 4-8; and Figures 4A-1 and 4A-4 in Operating Unit 10, Chapter 4.0 of this Permit.
Melter Offgas Treatment Process System (Cont.) HOP-FAN-00001A (Booster Extraction Fan) HOP-FAN-00001B (Booster Extraction Fan) HOP-FAN-00001C (Booster Extraction Fan) HOP-FAN-00009A (Booster Extraction	HOP	**24590-HLW** -M5-V17T-P0004 -M5-V17T-P20004 -M6-HOP-P0003 -M6-HOP-P20003 -MAD-HOP-P0018 -P1-P01T-P0001 **24590-WTP** -3PS-MACS-TP004	Section 4.1.4.3; Table 4-8; and Figures 4A-1 and 4A-4 in Operating Unit 10, Chapter 4.0 of this Permit.

Table III.10.J.A – HLW Vitrification System Description

Sub-system Description	Sub-system Designation	Engineering Description (Drawing Nos., Specification Nos., etc.)	Narrative Description, Tables, and Figures
Fan) HOP-FAN-00009B (Booster Extraction Fan) HOP-FAN-00009C (Booster Extraction Fan)			
Melter Offgas Treatment Process System (Cont.) HOP-FAN-00008A (Stack Extraction Fan) HOP-FAN-00008B (Stack Extraction Fan) HOP-FAN-00008C (Stack Extraction Fan) HOP-FAN-000010A (Stack Extraction Fan) HOP-FAN-000010B (Stack Extraction Fan) HOP-FAN-000010C (Stack Extraction Fan)	HOP	**24590-HLW** -M5-V17T-P0004 -M5-V17T-P20004 -M6-HOP-P0008 -M6-HOP-P20008 -MAD-HOP-P0038 -P1-P01T-P0005 **24590-WTP** -3PS-MACS-TP004	Section 4.1.4.3; Table 4-8; and Figures 4A-1 and 4A-4 in Operating Unit 10, Chapter 4.0 of this Permit.
Melter Offgas Treatment Process System (Cont.) HLW Stack	HOP	**24590-HLW** -M5-V17T-P0004 -M5-V17T-P20004 -M6-HOP-P0008 -M6-HOP-P20008	Section 4.1.4.3; and Figures 4A-1 and 4A-4 in Operating Unit 10, Chapter 4.0 of this Permit.
Footnotes: [a]System Descriptions are maintained in the Adinistrative Record, and are listed here for information only.			

1

Table III.10.J.B – HLW Vitrification Systems Secondary Containment Systems Including Sumps and Floor Drains

Sump/Floor Drain I.D.# & Room Location	Maximum Sump Capacity (gallons)	Sump Dimensions[a] (feet) & Materials of Construction	Maximum Allowable Liquid Height (inches)	Secondary Containment Volume (gallons)	Engineering Description (Drawing Nos., Specification Nos., etc.)
RESERVED	RESERVED	RESERVED	RESERVED	RESERVED	RESERVED
Footnotes: [a]Dimensions listed are based on permitted design. Actual dimensions may vary within plus or minus (TBD).					

Table III.10.J.C – HLW Vitrification System Process and Leak Detection System Instruments and Parameters

Tank System Name and Locator (including P&ID)	Control Parameter	Type of Instrument or Control Device	Location of Instrument or Control Device (Tag No.)	Instrument Range	Expected Operating Range or Setpoint	Fail States	Instrument Accuracy	Instrument Calibration Method No. and Frequency
24590-HLW-M6-HMP-P0004	Melter 1 plenum temperature, 62"	TBD	(TE-0920A + TT-0920A + TI-0920A)* Or (TE-0920C + TT-0921A + TI-0921F)*	TBD	TBD	TBD	TBD	TBD

Table III.10.J.C – HLW Vitrification System Process and Leak Detection System Instruments and Parameters

Tank System Name and Locator (including P&ID)	Control Parameter	Type of Instrument or Control Device	Location of Instrument or Control Device (Tag No.)	Instrument Range	Expected Operating Range or Setpoint	Fail States	Instrument Accuracy	Instrument Calibration Method No. and Frequency
24590-HLW-M6-HMP-P0004	Melter 1 plenum temperature, 59"	TBD	(TE-0920B + TT-920A + TI-0920B)* Or (TE-920D + TT-0921A+ TI-0921E)*	TBD	TBD	TBD	TBD	TBD
24590-HLW-M6-HMP-P2004	Melter 2 plenum temperature, 62"	TBD	(TE-2920A + TT-2920A + TI-2920A)* Or (TE-2920C + TT-2921A + TI-2920C)*	TBD	TBD	TBD	TBD	TBD
24590-HLW-M6-HMP-P2004	Melter 2 plenum temperature,	TBD	(TE-2920B + TT-2920A + TI-2920B)*	TBD	TBD	TBD	TBD	TBD

Table III.10.J.C – HLW Vitrification System Process and Leak Detection System Instruments and Parameters

Tank System Name and Locator (including P&ID)	Control Parameter	Type of Instrument or Control Device	Location of Instrument or Control Device (Tag No.)	Instrument Range	Expected Operating Range or Setpoint	Fail States	Instrument Accuracy	Instrument Calibration Method No. and Frequency
	59"		Or (TE-2920D + TT-2921A + TI-2920D)*					
24590-HLW-M6-HMP-P0013	Melter 1 glass pool density	TBD	DT-0132 DI-0132	TBD	TBD	TBD	TBD	TBD
24590-HLW-M6-HMP-P0013	Melter 1 glass pool level	TBD	LT-0131 LI-0131	TBD	TBD	TBD	TBD	TBD
24590-HLW-M6-HMP-P2013	Melter 2 glass pool density	TBD	DT-2132 DI-2132	TBD	TBD	TBD	TBD	TBD
24590-HLW-M6-HMP-P2013	Melter 2 glass pool level	TBD	LT-2131 LI-2131	TBD	TBD	TBD	TBD	TBD
24590-HLW-M6-HMP-P0013	Melter 1 plenum pressure	TBD	(PDT-0139A + PDI-0139A)* Or (PDT-0139B + PDI-0139B)*	TBD	TBD	TBD	TBD	TBD

Table III.10.J.C – HLW Vitrification System Process and Leak Detection System Instruments and Parameters

Tank System Name and Locator (including P&ID)	Control Parameter	Type of Instrument or Control Device	Location of Instrument or Control Device (Tag No.)	Instrument Range	Expected Operating Range or Setpoint	Fail States	Instrument Accuracy	Instrument Calibration Method No. and Frequency
24590-HLW-M6-HMP-P2013	Melter 2 plenum pressure	TBD	(PDT-2139A + PDI-2139A)* Or (PDT-2139B + PDI-2139B)*	TBD	TBD	TBD	TBD	TBD
24590-HLW-M6-HMP-P0008	Melter 1 West canister level	TBD	LT-0816 (LI-0816A Or LI-0816B)**	TBD	TBD	TBD	TBD	TBD
24590-HLW-M6-HMP-P0007	Melter 1 West Discharge Air Lift	TBD	YC-0761 YV-0761	TBD	TBD	TBD	TBD	TBD
24590-HLW-M6-HMP-P0008	Melter 1 East canister level	TBD	LT-0820 (LI-0820A Or LI-0820B)**	TBD	TBD	TBD	TBD	TBD
24590-HLW-M6-HMP-P0006	Melter 1 East Discharge Air Lift	TBD	YC-0644 YV-0644	TBD	TBD	TBD	TBD	TBD

Table III.10.J.C – HLW Vitrification System Process and Leak Detection System Instruments and Parameters

Tank System Name and Locator (including P&ID)	Control Parameter	Type of Instrument or Control Device	Location of Instrument or Control Device (Tag No.)	Instrument Range	Expected Operating Range or Setpoint	Fail States	Instrument Accuracy	Instrument Calibration Method No. and Frequency
24590-HLW-M6-HMP-P2008	Melter 2 West canister level	TBD	LT-2816 (LI-2816A Or LI-2816B)**	TBD	TBD	TBD	TBD	TBD
24590-HLW-M6-HMP-P20007	Melter 2 West Discharge Air Lift	TBD	YC-2761 YV-2761	TBD	TBD	TBD	TBD	TBD
24590-HLW-M6-HMP-P2008	Melter 2 East canister level	TBD	LT-2820 (LI-2820A Or LI-2820B)**	TBD	TBD	TBD	TBD	TBD
24590-HLW-M6-HMP-P20006	Melter 2East Discharge Air Lift	TBD	YC-2664 YV-2664	TBD	TBD	TBD	TBD	TBD
RESERVED	RESERVED	RESERVED	RESERVED	RESERVED	RESERVED	RESERVED	RESERVED	RESERVED

Footnotes:
*These instrument sets are duplicates. Only one instrument set is required to remain functioning during waste feed operations.
**These instruments are duplicates. Only one instrument is required to remain functioning during waste feed operations.

1

2

Table III.10.J.D – Maximum Feed-rates to HLW Vitrification System (RESERVED)

Description of Waste	Shakedown 1 and Post Demonstration Test	Shakedown 2 and Demonstration Test
Dangerous and Mixed Waste Feed Rate	RESERVED	RESERVED
Ash Feed Rate	RESERVED	RESERVED
Total Chlorine/Chloride Feed Rate	RESERVED	RESERVED
Total Metal Feedrates	RESERVED	RESERVED

3

4

Table III.10.J.E – HLW Vitrification System Estimated Emission Rates (RESERVED)

Chemicals	CAS Number	Emission Rates (grams /second)
RESERVED	RESERVED	RESERVED

5

6

Table III.10.J.F. - HLW Vitrification System Waste Feed Cut-off Parameters* (RESERVED)

Subsystem Designation	Instrument Tag Number	Parameter Description	Setpoints During Shakedown 1 and Post Demonstration Test	Setpoints During Shakedown 2 and Demonstration Test
RESERVED	RESERVED	RESERVED	RESERVED	RESERVED

Table III.10.J.F. - HLW Vitrification System Waste Feed Cut-off Parameters* (RESERVED)

Subsystem Designation	Instrument Tag Number	Parameter Description	Setpoints During Shakedown 1 and Post Demonstration Test	Setpoints During Shakedown 2 and Demonstration Test
Footnotes: *A continuous monitoring system will be used as defined in Permit Section III.10.C.1. [1]Maximum Feed-rate will be set based on not exceeding any of the constituent (e.g., metals, ash, and chlorine/chloride) feed limits specified on Table III.10.J.D. of this Permit				

III.10.K HLW Vitrification System – Long Term Miscellaneous Thermal Treatment Unit

For purposes of Permit Section III.10.K, where reference is made to WAC 173-303-640, the following substitutions apply: substitute the terms "HLW Vitrification System" for "tank system(s)," "sub-system(s)" for "tank(s)," "sub-system equipment" for "ancillary equipment," and "sub-system(s) or sub-system equipment of a HLW Vitrification System" for "component(s)," in accordance with WAC 173-303-680.

III.10.K.1 Requirements For HLW Vitrification System Beginning Normal Operation

Prior to commencing normal operations provided in Permit Section III.10.K, all requirements in Permit Section III.10.J will have been met by the Permittees and approved by Ecology, including the following: The HLW Vitrification System Demonstration Test results and the revised Final Risk Assessment provided for in Permit Conditions III.10.C.11.c. or d. and Permit Section III.10.J, will have been evaluated and approved by Ecology, Permit Tables III.10.K.D and F, as approved/modified pursuant to Permit Condition III.10.J.5, will have been completed, submitted and approved pursuant to Permit Condition III.10.J.3.d.v. and Permit Table III.10.K.E, as approved/modified pursuant to Permit Condition III.10.J.5, will have been completed, submitted and approved pursuant to Permit Conditions III.10.C.11.c. or d.

III.10.K.1.a. Construction and Maintenance [WAC 173-303-640, in accordance with WAC 173-303-680(2) and (3), and WAC 173-303-340]

III.10.K.1.a.i. The Permittees will maintain the design and construction of the HLW Vitrification System as specified in Permit Condition III.10.K.1, Operating Unit 10, Chapter 4.0 of this Permit, and Operating Unit 10, Appendices 10.1 through 10.17 of this Permit, as approved pursuant to Permit Conditions III.10.J.5.a. through d. and III.10.J.5.f.

III.10.K.1.a.ii. The Permittees will maintain the design and construction of all containment systems for the HLW Vitrification System as specified in Operating Unit 10, Chapter 4.0 of this Permit, and Operating Unit 10, Appendices 10.2 and 10.4 through 10.14 of this Permit, as approved pursuant to Permit Conditions III.10.J.5.a. through d.

III.10.K.1.a.iii. Modifications to approved design, plans, and specifications in Operating Unit 10, of this Permit, for the HLW Vitrification System will be allowed only in accordance with Permit Conditions III.10.C.2.e. and f., or III.10.C.2.g., III.10.C.9.d., e., and h.

III.10.K.1.a.iv. The Permittees will ensure all certifications required by specialists (e.g., independent, qualified, registered professional engineer; registered, professional engineer; independent corrosion expert; independent, qualified installation inspector; installation inspector; etc.) use the following statement or equivalent pursuant to Permit Condition III.10.C.10:

"I, (Insert Name) have (choose one or more of the following: overseen, supervised, reviewed, and/or certified) a portion of the design or installation of a new HLW Vitrification system or component located at (address), and owned/operated by (name(s)). My duties were: (e.g., installation inspector, testing for tightness, etc.), for the following HLW Vitrification system components (e.g., the venting piping, etc.), as required by the Dangerous Waste Regulations, namely, WAC 173-303-640(3) (applicable paragraphs [i.e., (a) through (g)]), in accordance with WAC 173-303-680.

"I certify under penalty of law that I have personally examined and am familiar with the information submitted in this document and all attachments and that, based on my inquiry of those individuals immediately responsible for obtaining the information, I believe that the information is true, accurate, and complete. I am aware that there are significant penalties for submitting false information, including the possibility of fine and imprisonment."

III.10.K.1.a.v. The Permittees will ensure periodic integrity assessments are conducted on the HLW Vitrification System listed in Permit Table III.10.I.A, as approved/modified pursuant to Permit Condition III.10.J.5, over the term of this Permit, in accordance with WAC 173-303-680(2) and (3), as specified in WAC 173-303-640(3)(b) following the description of the integrity assessment program and schedule in Operating Unit 10, Chapter 6.0 of this Permit, as approved pursuant to Permit Conditions III.10.J.5.e.i. and III.10.C.5.c. Results of the integrity assessments will be included in the WTP Unit operating record until ten (10) years after post-closure, or corrective action is complete and certified, whichever is later.

III.10.K.1.a.vi. The Permittees will address problems detected during the HLW Vitrification System integrity assessments specified in Permit Condition III.10.K.1.a.v. following the description of the integrity assessment program in Operating Unit 10, Chapter 6.0 of this Permit, as approved pursuant to Permit Conditions III.10.J.5.e.i. and III.10.C.5.c.

III.10.K.1.a.vii. All process monitors/instruments as specified in Permit Table III.10.K.F, as approved/modified pursuant to Permit Condition III.10.J.5 and III.10.J.3.d.v., will be equipped with operational alarms to warn of deviation, or imminent deviation from the limits specified in Permit Table III.10.K.F.

III.10.K.1.a.viii. The Permittees will install and test all process and leak detection system monitors/instruments, as specified in Permit Tables III.10.K.C and III.10.K.F, as approved/modified pursuant to Permit Conditions III.10.J.5 and III.10.J.3.d.v., in accordance with Operating Unit 10, Appendices 10.1, 10.2, and 10.14 of this Permit, as approved pursuant to Permit Conditions III.10.J.5.d.x. and III.10.J.5.f.xvi.

III.10.K.1.a.ix. No dangerous and/or mixed waste will be treated in the HLW Vitrification System unless the operating conditions, specified under Permit Condition III.10.K.1.c. are complied with.

III.10.K.1.a.x. The Permittees will not place dangerous and/or mixed waste, treatment reagents, or other materials in the HLW Vitrification System if these substances could cause the sub-system, sub-system equipment, or the containment system to rupture, leak, corrode, or otherwise fail [WAC 173-303-640(5)(a), in accordance with WAC 173-303-680(2)]. This condition is not applicable to corrosion of HLW Vitrification System sub-system or sub-system equipment that are expected to be replaced as part of normal operations (e.g., melter).

III.10.K.1.a.xi. The Permittees will operate the HLW Vitrification System to prevent spills and overflows using the description of controls and practices as required under WAC 173-303-640(5)(b), described in Permit Condition III.10.C.5, and Operating Unit 10, Appendix 10.18 of this Permit, as approved pursuant to Permit Condition III.10.J.5.e. [WAC 173-303-640(5)(b), in accordance with WAC 173-303-680(2) and (3), WAC-173-303-806(4)(c)(ix)].

III.10.K.1.a.xii. For routinely non-accessible HLW Vitrification System sub-systems, as specified in Operating Unit 10, Chapter 4.0 of this Permit, as updated pursuant to Permit Condition III.10.J.5.e.vi., the Permittees will mark all routinely non-accessible HLW Vitrification System sub-systems access points with labels or signs to identify the waste contained in each HLW Vitrification System sub-system. The label, or sign, must be legible at a distance of at least fifty (50) feet, and must bear a legend which identifies the waste in a manner which adequately warns employees, emergency response personnel, and the public of the major risk(s) associated with the waste being stored or treated in the HLW Vitrification System sub-systems. For the purposes of this permit condition, "routinely non-accessible" means personnel are unable to enter these areas while waste is being managed in them [WAC 173-303-640(5)(d), in accordance with WAC 173-303-680(2)].

III.10.K.1.a.xiii. For all the HLW Vitrification System sub-systems not addressed in Permit Condition III.10.K.1.a.xii., the Permittees will mark all these HLW Vitrification System sub-systems holding dangerous and/or mixed waste with labels or signs to identify the waste contained in the HLW Vitrification System sub-systems. The labels, or signs, must be legible at a distance of at least fifty (50) feet, and must bear a legend which identifies the waste in a manner which adequately warns employees, emergency response personnel, and the public of the major risk(s) associated with the waste being stored or treated in the HLW Vitrification System sub-systems [WAC 173-303-640(5)(d), in accordance with WAC 173-303-680(2)].

III.10.K.1.a.xiv. The Permittees will ensure that the secondary containment systems for the HLW Vitrification System sub-systems listed in Permit Tables III.10.K.A and III.10.K.B, as approved/modified pursuant to Permit Condition III.10.J.5, are free of cracks or gaps to prevent any migration of dangerous and/or mixed waste or accumulated liquid out of the system to the soil, groundwater, or surface water at any time during the use of the HLW Vitrification System sub-systems. Any indication that a crack or gap may exist in the containment systems will be investigated and repaired in accordance with Operating Unit 10, Appendix 10.18 of this Permit, as approved pursuant to Permit Condition III.10.J.5.e.v. [WAC 173-303–640(4)(b)(i), WAC 173-303-640(4)(e)(i)(C), and WAC 173-303-640(6), in accordance with WAC 173-303-680(2) and (3), WAC 173-303-806(4)(i)(i)(B), and WAC 173-303-320].

III.10.K.1.a.xv. The Permittees must immediately and safely remove from service any HLW Vitrification System or secondary containment system which through an integrity assessment is found to be "unfit for use" as defined in WAC 173-303-040, following Permit Condition III.10.K.1.a.xvii.A through D, and F. The affected HLW Vitrification System or secondary containment system must be either repaired or closed in accordance with Permit Condition III.10.K.1.a.xvii.E [WAC 173-303-640(7)(e) and (f) and WAC 173-303-640(8), in accordance with WAC 173-303-680(3)].

III.10.K.1.a.xvi. An impermeable coating, as specified in Operating Unit 10, Appendices 10.4, 10.5, 10.7, 10.9, 10.11, and 10.12 of this Permit, as approved pursuant to Permit Condition III.10.J.5.b.v., will be maintained for all concrete containment systems and concrete portions of containment systems for the HLW Vitrification System sub-systems listed in Permit Tables III.10. K.A and III.10.K.B, as approved/modified pursuant to Permit Condition III.10.J.5 (concrete containment systems that do not have a liner, pursuant to WAC 173-303-640(4)(e)(i), in accordance with WAC 173-303-680(2), and have

construction joints, will meet the requirements of WAC 173-303-640(4)(e)(ii)(C), in accordance with WAC 173-303-680(2). The coating will prevent migration of any dangerous and/or mixed waste into the concrete. All coatings will meet the following performance standards:

A. The coating must seal the containment surface such that no cracks, seams, or other avenues through which liquid could migrate are present;

B. The coating must be of adequate thickness and strength to withstand the normal operation of equipment and personnel within the given area such that degradation or physical damage to the coating or lining can be identified and remedied before dangerous and/or mixed waste could migrate from the system; and

C. The coating must be compatible with the dangerous and/or mixed waste, treatment reagents, or other materials managed in the containment system [WAC 173-303-640(4)(e)(ii)(D), in accordance with WAC 173-303-680(2) and (3), and WAC 173-303-806(4)(i)(i)(A)].

III.10.K.1.a.xvii. The Permittees will inspect all secondary containment systems for the HLW Vitrification System sub-systems listed in Permit Tables III.10.K.A and III.10.K.B, as approved/modified pursuant to Permit Condition III.10.J.5., in accordance with the Inspection Schedule specified in Operating Unit 10, Chapter 6.0 of this Permit, as approved pursuant to Permit Conditions III.10.J.5.e.i. and III.10.C.5.c., and take the following actions if a leak or spill of dangerous and/or mixed waste is detected in these containment systems [WAC 173-303-640(5)(c), WAC 173-303-640(6) in accordance with WAC 173-303-680(2) and (3), WAC 173-303-320, and WAC 173-303-806(4)(i)(i)(B)]:

A. Immediately, and safely, stop the flow of dangerous and/or mixed waste into the HLW Vitrification System sub-systems or secondary containment system.

B. Determine the source of the dangerous and/or mixed waste.

C. Remove the dangerous and/or mixed waste from the containment area in accordance with WAC 173-303-680(2) and (3), as specified in WAC 173-303-640(7)(b). The dangerous and/or mixed waste removed from containment areas of the HLW Vitrification System will be, at a minimum, managed as mixed waste.

D. If the cause of the release was a spill that has not damaged the integrity of the HLW Vitrification System sub-system, the Permittees may return the HLW Vitrification System sub-system to service in accordance with WAC 173-303-680(2) and (3), as specified in WAC 173-303-640(7)(e)(ii). In such case, the Permittees will take action to ensure the incident that caused the dangerous and/or mixed waste to enter the containment system will not reoccur.

E. If the source of the dangerous and/or mixed waste is determined to be a leak in from the primary HLW Vitrification System into the secondary containment system, or the system is unfit for use as determined through an integrity assessment or other inspection, the Permittees will comply with the requirements of WAC 173-303-640(7) and take the following actions:

1. Close the HLW Vitrification System sub-system following procedures in WAC 173-303-640(7)(e)(i), in accordance with WAC 173-303-680, and

Operating Unit 10, Chapter 11.0 of this Permit, as approved pursuant to Permit Condition III.10.C.8; or

2. Repair and re-certify (in accordance with WAC 173-303-810(13)(a), as modified pursuant to Permit Condition III.10.K.1.a.iii.) the HLW Vitrification System, in accordance with Operating Unit 10, Appendix 10.18 of this Permit, as approved pursuant to Permit Condition III.10.J.5.e.v., before the HLW Vitrification System is placed back into service [WAC 173-303-640(7)(e)(iii) and WAC 173-303-640(7)(f), in accordance with WAC 173-303-680].

F. The Permittees will document in the operating record actions/procedures taken to comply with A through E above, as specified in WAC 173-303-640(6)(d), in accordance with WAC 173-303-680(2) and (3).

G. In accordance with WAC 173-303-680(2) and (3), the Permittees will notify and report releases to the environment to Ecology as specified in WAC 173-303-640(7)(d).

III.10.K.1.a.xviii. If liquids (e.g., dangerous and/or mixed waste, leaks and spills, precipitation, fire water, liquids from damaged or broken pipes) cannot be removed from the secondary containment system within twenty-four (24) hours; Ecology will be verbally notified within twenty-four (24) hours of discovery. The notification will provide the information in A, B, and C, listed below. The Permittees will provide Ecology with a written demonstration within seven (7) business days, identifying at a minimum [WAC 173-303-640(4)(c)(iv) and WAC 173-303-640(7)(b)(ii), in accordance with WAC 173-303-680(3) and WAC 173-303-806(4)(i)(i)(B)]:

A. Reasons for delayed removal;

B. Measures implemented to ensure continued protection of human health and the environment;

C. Current actions being taken to remove liquids from secondary containment.

III.10.K.1.a.xix. All air pollution control devices and capture systems in the HLW Vitrification System will be maintained and operated at all times in a manner so as to minimize the emissions of air contaminants and to minimize process upsets. Procedures for ensuring that the air pollution control devices and capture systems in the HLW Vitrification System are properly operated and maintained so as to minimize the emission of air contaminants and process upsets will be established.

III.10.K.1.a.xx. In all future narrative permit submittals, the Permittees will include HLW Vitrification sub-system names with the sub-system designation.

III.10.K.1.a.xxi. For any portion of the HLW Vitrification System which has the potential for formation and accumulation of hydrogen gases, the Permittees will operate the portion to maintain hydrogen levels below the lower explosive limit [WAC 173-303-815(2)(b)(ii)].

III.10.K.1.a.xxii. For each HLW Vitrification System sub-system holding dangerous waste which are acutely or chronically toxic by inhalation, the Permittees will operate the system to prevent escape of vapors, fumes, or other emissions into the air [WAC 173-303-806(4)(i)(i)(B) and WAC 173-303-640(5)(e), in accordance with WAC 173-303-680].

III.10.K.1.b. Performance Standards

III.10.K.1.b.i. The HLW Vitrification System must achieve a destruction and removal efficiency (DRE) of 99.99% for the principal organic dangerous constituents (PODCs) listed below [40 CFR §63.1203(c)(1) and 40CFR §63.1203(c)(2), in accordance with WAC 173-303-680(2)]:

RESERVED

DRE in this Permit Condition will be calculated in accordance with the formula given below:

$DRE=[1-(W_{out}/W_{in})] \times 100\%$

Where:

W_{in}=mass feed-rate of one principal organic dangerous constituent (PODC) in a waste feedstream; and

W_{out}=mass emission rate of the same PODC present in exhaust emissions prior to release to the atmosphere.

III.10.K.1.b.ii. Particulate matter emissions from the HLW Vitrification System will not exceed 34 mg/dscm (0.015 grains/dscf) [40 CFR §63.1203(b)(7), in accordance with WAC 173-303-680(2)];

III.10.K.1.b.iii. Hydrochloric acid and chlorine gas emissions from the HLW Vitrification System will not exceed 21 ppmv, combined [40 CFR §63.1203(b)(6), in accordance with WAC 173-303-680(2)];

III.10.K.1.b.iv. Dioxin and Furan TEQ emissions from the HLW Vitrification System will not exceed 0.2 nanograms (ng)/dscm [40 CFR §63.1203(b)(1), in accordance with WAC 173-303-680(2)];

III.10.K.1.b.v. Mercury emissions from the HLW Vitrification System will not exceed 45 µg/dscm [40 CFR §63.1203(b)(2), in accordance with WAC 173-303-680(2)];

III.10.K.1.b.vi. Lead and cadmium emissions from the HLW Vitrification System will not exceed 120 µg/dscm, combined [40 CFR §63.1203(b)(3), in accordance with WAC 173-303-680(2)];

III.10.K.1.b.vii. Arsenic, beryllium, and chromium emissions from the HLW Vitrification System will not exceed 97 µg/dscm, combined [40 CFR §63.1203(b)(4), in accordance with WAC 173-303-680(2)];

III.10.K.1.b.viii. Carbon monoxide (CO) emission from the HLW Vitrification System will not exceed 100 parts per million (ppm) by volume, over an hourly rolling average (as measured and recorded by the continuous monitoring system), dry basis [40 CFR §63.1203(b)(5)(i), in accordance with WAC 173-303-680(2) and (3)];

III.10.K.1.b.ix. Hydrocarbon emission from the HLW Vitrification System will not exceed 10 parts per million (ppm) by volume, over an hourly rolling average (as measured and recorded by the continuous monitoring system during demonstration testing required by this Permit), dry basis and reported as propane [40 CFR §63.1203(b)(5)(ii), in accordance with WAC 173-303-680(2) and (3)];

III.10.K.1.b.x. If the emissions from the HLW Vitrification System exceed the emission rates listed in Permit Table III.10.K.E, as approved pursuant to Permit Condition III.10.C.11.c. or d., the Permittees will perform the following actions [WAC 173-303-680(2) and (3), and WAC 173-303-815(2)(b)(ii)]:

A. Verbally notify Ecology within twenty-four (24) hours of the discovery of exceeding the emission rate(s) as specified in Permit Condition I.E.21;

B. Submit to Ecology additional risk information to indicate that the increased emissions impact is off-set by decreased emission impact from one or more constituents expected to be emitted at the same time, and/or investigate the cause and impact of the exceedence of the emission rate(s) and submit a report of the investigation findings to Ecology within fifteen (15) days of the discovery of exceeding the emission rate(s); and

C. Based on the notification and any additional information, Ecology may provide, in writing, direction to the Permittees to stop dangerous and/or mixed waste feed to the HLW Vitrification System and/or to submit a revised Demonstration Test Plan as a permit modification pursuant to Permit Conditions III.10.C.2.e. and f., or III.10.C.2.g. The revised Demonstration Test Plan must include substantive changes to prevent failure from reoccurring.

The emission limits specified in Permit Conditions III.10.K.1.b.i. through x. above, will be met for the HLW Vitrification System by limiting feed rates as specified in Permit Tables III.10.K.D and III.10.K.F, as approved/modified pursuant to Permit Condition III.10.J.5 and III.10.J.3.d.v., compliance with operating conditions specified in Permit Condition III.10.K.1.c. (except as specified in Permit Condition III.10.K.1.b.xii.), and compliance with Permit Condition III.10.K.1.b.xi.

III.10.K.1.b.xi. Treatment effectiveness, feed-rates, and operating rates for dangerous and/or mixed waste management units contained in the HLW Building, but not included in Permit Table III.10.K.A, as approved/modified pursuant to Permit Condition III.10.J.5, will be as specified in Permit Sections III.10.D, III.10.E, III.10.F and consistent with the assumptions and basis which are reflected in Operating Unit 10, Appendix 6.3.1 of this Permit, as approved pursuant to Permit Condition III.10.C.11.b. For the purposes of this permit condition, Operating Unit 10, Appendix 6.3.1 will be superceded by Appendix 6.4.1 upon its approval pursuant to either Permit Conditions III.10.C.11.c. or d. [WAC 173-303-680(2) and (3), and WAC 173-303-815(2)(b)(ii)].

III.10.K.1.b.xii. Compliance with the operating conditions specified in Permit Condition III.10.K.1.c., will be regarded as compliance with the required performance standards identified in Permit Conditions III.10.K.1.b.i. through x. However, if it is determined that during the effective period of this Permit that compliance with the operating conditions in Permit Condition III.10.K.1.c. is not sufficient to ensure compliance with the performance standards specified in Permit Conditions III.10.K.1.b.i. through x., the Permit may be modified, revoked, or reissued pursuant to Permit Conditions III.10.C.2.e. and f., or III.10.C.2.g.

III.10.K.1.c. Operating Conditions [WAC-303-670(6), in accordance with WAC 173-303-680(2)and (3)]

The Permittees will operate the HLW Vitrification System in accordance with Operating Unit 10, Chapter 4.0 of this Permit, as updated pursuant to Permit Condition III.10.J.5.e.vi., Operating Unit 10, Appendix 10.18 of this Permit, as approved pursuant to Permit Conditions III.10.J.5.e. and f., and Operating Unit 10, Appendix 10.15 of this Permit, as approved pursuant to Permit Condition III.10.J.5.f., except as modified pursuant to Permit Conditions III.10.J.3, III.10.K.1.b.x., III.10.K.1.b.xii., III.10.K.1.h., and in accordance with and the following:

III.10.K.1.c.i. The Permittees will operate the HLW Vitrification System in order to maintain the systems and process parameters listed in Permit Tables III.10.K.C and III.10.K.F, as approved/modified pursuant to Permit Conditions III.10.J.5 and III.J.3.d.v., within the set-points specified in Permit Table III.10.K.F.

III.10.K.1.c.ii. The Permittees will operate the AWFCO systems, specified in Permit Table III.10.K.F, as approved/modified pursuant to Permit Conditions III.10.J.5 and III.J.3.d.v., to automatically cut-off and/or lock-out the dangerous and/or mixed waste feed to HLW Vitrification System when the monitored operating conditions deviate from the set-points specified in Permit Table III.10.K.F.

III.10.K.1.c.iii. The Permittees will operate the AWFCO systems, specified in Permit Table III.10.K.F, as approved/modified pursuant to Permit Conditions III.10.J.5 and III.J.3.d.v., to automatically cut-off and/or lock-out the dangerous and/or mixed waste feed to HLW Vitrification System when all instruments specified on Permit Table III.10.I.F for measuring the monitored parameters fails or exceeds its span value.

III.10.K.1.c.iv. The Permittees will operate the AWFCO systems, specified in Permit Table III.10.K.F, as approved/modified pursuant to Permit Conditions III.10.J.5 and III.J.3.d.v., to automatically cut-off and/or lock out the dangerous and/or mixed waste feed to the HLW Vitrification System when any portion of the HLW Vitrification System is bypassed. The terms "bypassed" and "bypass event" as used in Permit Sections III.10.J and K will mean if any portion of the HLW Vitrification System is bypassed so that gases are not treated as during the Demonstration Test.

III.10.K.1.c.v. In the event of a malfunction of the AWFCO systems listed in Permit Table III.10.K.F, as approved/modified pursuant to Permit Conditions III.10.J.5 and III.J.3.d.v., the Permittees will immediately, manually, cut-off the dangerous and/or mixed waste feed to the HLW Vitrification System. The Permittees will not restart the dangerous and/or mixed waste feed until the problem causing the malfunction has been identified and corrected.

III.10.K.1.c.vi. The Permittees will manually cut-off the dangerous and/or mixed waste feed to the HLW Vitrification System when the operating conditions deviate from the limits specified in Permit Condition III.10.K.1.c.i., unless the deviation automatically activates the waste feed cut-off sequence specified in Permit Conditions III.10.K.1.c.ii., iii., and/or iv.

III.10.K.1.c.vii. If greater than thirty (30) dangerous and/or mixed waste feed cut-off, combined, to the HLW Vitrification System occur due to deviations from Permit Table III.10.K.F, as approved/modified pursuant to Permit Conditions III.10.J.5 and III.J.3.d.v., within a sixty (60) day period, the Permittees will submit a written report to Ecology within five (5) calendar days of the thirty-first (31) exceedence including the information specified below. These dangerous and/or mixed waste feed cut-offs to the HLW Vitrification

System, whether automatically or manually activated, are counted if the specified set-points are deviated from while dangerous and/or mixed waste and waste residues continue to be processed in the HLW Vitrification System. A cascade event is counted at a frequency of one (1) towards the first waste feed cut-off parameter, specified on Permit Table III.10.K.F, from which the set-point is deviated:

A. The parameter(s) that deviated from the set-point(s) in Permit Table III.10.K.F;

B. The magnitude, dates, and duration of the deviations;

C. Results of the investigation of the cause of the deviations; and

D. Corrective measures taken to minimize future occurrences of the deviations.

III.10.K.1.c.viii. If greater than thirty (30) dangerous and/or mixed waste feed cut-off, combined, to the HLW Vitrification System occur due to deviations from Permit Table III.10.K.F, as approved/modified pursuant to Permit Conditions III.10.J.5 and III.J.3.d.v., within a thirty (30) day period, the Permittees will submit the written report required to be submitted pursuant to Permit Condition III.10.K.1.c.vii. to Ecology, on the first business day following the thirty-first exceedence. These dangerous and/or mixed waste feed cut-offs to the HLW Vitrification System, whether automatically or manually activated, are counted if the specified set-points are deviated from while dangerous and/or mixed waste and waste residues continue to be processed in the HLW Vitrification System. A cascade event is counted at a frequency of one (1) towards the first waste feed cut-off parameter, specified on Permit Table III.10.K.F, from which the set-point is deviated:

In accordance with WAC 173-303-680(2) and (3), the Permittees may not resume dangerous and/or mixed waste feed to the HLW Vitrification System until this written report has been submitted; and

A. Ecology has authorized the Permittees, in writing, to resume dangerous and/or mixed waste feed, or

B. Ecology has not, within seven (7) days, notified the Permittees in writing of the following:

1. The Permittees written report does not document that the corrective measures taken will minimize future exceedances; and

2. The Permittees must take further corrective measures and document that these further corrective measures will minimize future exceedances.

III.10.K.1.c.ix. If any portion of the HLW Vitrification System is bypassed while treating dangerous and/or mixed waste, it will be regarded as non-compliance with the operating conditions specified in Permit Condition III.10.K.1.c. and the performance standards specified in Permit Condition III.10.K.1.b. After such a bypass event, the Permittees will perform the following actions:

A. Investigate the cause of the bypass event;

B. Take appropriate corrective measures to minimize future bypasses;

C. Record the investigation findings and corrective measures in the operating record; and

D. Submit a written report to Ecology within five (5) days of the bypass event documenting the result of the investigation and corrective measures.

III.10.K.1.c.x. The Permittees will control fugitive emissions from the HLW Vitrification System by maintaining the melter under negative pressure.

III.10.K.1.c.xi. Compliance with the operating conditions specified in Permit Condition III.10.K.1.c. will be regarded as compliance with the required performance standards identified in Permit Condition III.10.K.1.b. However, evidence that compliance with these operating conditions is insufficient to ensure compliance with the performance standards, will justify modification, revocation, or re-issuance of this Permit, in accordance with Permit Conditions III.10.C.2.e. and f., or III.10.C.2.g.

III.10.K.1.d. Inspection Requirements [WAC 173-303-680(3)]

III.10.K.1.d.i. The Permittees will inspect the HLW Vitrification System in accordance with the Inspection Schedules in Operating Unit 10, Chapter 6.0 of this Permit, as modified in accordance with Permit Condition III.10.C.5.c.

III.10.K.1.d.ii. The inspection data for HLW Vitrification System will be recorded, and the records will be placed in the WTP Unit operating record for HLW Vitrification System, in accordance with Permit Condition III.10.C.4.

III.10.K.1.d.iii. The Permittees will comply with the inspection requirements specified in Operating Unit 10, Appendix 10.15 of this Permit, as approved pursuant to Permit Condition III.10.J.5.f., and as modified by Permit Conditions III.10.J.3, III.10.K.1.b.x., III.10.K.1.b.xii., and III.10.K.1.h.

III.10.K.1.d.iv. The Permittees shall calibrate, inspect, and maintain or replace the following cooling water flow and temperature instruments: (Melter 1: FT/FI-0306, FT/FI-0316, FT/FI-0321, FT/FI-0326, FT/FI-0336, TE/TT/TI-0352; Melter 2: FT/FI-2306, FT/FI-2316, FT/FI-2321, FT/FI-2326, FT/FI-2336) in accordance with manufacturer's recommendations.

III.10.K.1.d.v. The Permittees shall maintain operating and calibration/maintenance records for Ecology's inspection for the following cooling water flow and temperature instruments (Melter 1: FT/FI-0306, FT/FI-0316, FT/FI-0321, FT/FI-0326, FT/FI-0336, TE/TT/TI-0352; Melter 2: FT/FI-2306, FT/FI-2316, FT/FI-2321, FT/FI-2326, FT/FI-2336).

III.10.K.1.d.vi. The Permittees shall maintain refractory thermocouple temperature data for Ecology inspection.

III.10.K.1.e. Monitoring Requirements [WAC 173-303-670(5), WAC 173-303-670(6), WAC 173-303-670(7), and WAC 173-303-807(2), in accordance with WAC 173-303-680(3)]

III.10.K.1.e.i. Upon receipt of a written request from Ecology, the Permittees will perform sampling and analysis of the dangerous and/or mixed waste and exhaust emissions to verify that the operating requirements established in the permit achieve the performance standards delineated in this Permit.

III.10.K.1.e.ii. The Permittees will comply with the monitoring requirements specified in the Operating Unit 10, Appendices 10.2, 10.3, 10.7, 10.13, 10.15, and 10.18 of this Permit, as approved

pursuant to Permit Condition III.10.J.5, and as modified by Permit Conditions III.10.J.3, III.10.K.1.h., and III.10.K.1.b.x. and xii.

III.10.K.1.e.iii. The Permittees will operate, calibrate, and maintain the carbon monoxide and hydrocarbon continuous emission monitors (CEM) specified in this Permit in accordance with Performance Specifications 4B and 8A of 40 CFR Part 60, Appendix B, in accordance with Appendix to Subpart EEE of 40 CFR Part 63, and Operating Unit 10 Appendix 10.15 of this Permit, as approved pursuant to Permit Condition III.10.J.5.f., and as modified by Permit Conditions III.10.H.3, III.10.K.1.h., and III.10.K.1.b.x. and xii.

III.10.K.1.e.iv. The Permittees will operate, calibrate, and maintain the instruments specified on Permit Tables III.10.K.C and F, as approved/modified pursuant to Permit Conditions III.10.J.5 and III.J.3.d.v., in accordance with Operating Unit 10, Appendix 10.15 of this Permit, as approved pursuant to Permit Condition III.10.J.5.f., and as modified by Permit Conditions III.10.J.3, III.10.K.1.h., and III.10.K.1.b.x. and xii.

III.10.K.1.f. Recordkeeping Requirements [WAC 173-303-380 and WAC 173-303-680(3)]

III.10.K.1.f.i. The Permittees will record and maintain in the WTP Unit operating record for the HLW Vitrification System, all monitoring, calibration, maintenance, test data, and inspection data compiled under the conditions of this Permit, in accordance with Permit Conditions III.10.C.4 and 5 as modified by Permit Conditions III.10.J.3, III.10.K.1.h., and III.10.K.1.b.x. and xii.

III.10.K.1.f.ii. The Permittees will record in the WTP Unit operating record the date, time, and duration of all automatic waste feed cut-offs and/or lockouts, including the triggering parameters, reason for the deviation, and recurrence of the incident. The Permittees will also record all incidents of AWFCO system function failures, including the corrective measures taken to correct the condition that caused the failure.

III.10.K.1.f.iii. The Permittees will submit to Ecology an annual report each calendar year within ninety (90) days following the end of the year. The report will include the following information:

A. Total dangerous and/or mixed waste feed processing time for the HLW Vitrification System;

B. Date/Time of all HLW Vitrification System startups and shutdowns;

C. Date/Time/Duration/Cause/Corrective Action taken for all HLW Vitrification System shutdowns caused by malfunction of either process or control equipment; and

D. Date/Time/Duration/Cause/Corrective Action taken for all instances of dangerous and/or mixed waste feed cut-off due to deviations from Permit Table III.10.K.F, as approved/modified pursuant to Permit Conditions III.10.J.5 and III.10J.3.d.v.

III.10.K.1.f.iv. The Permittees will submit an annual report to Ecology each calendar year within ninety (90) days following the end of the year of all quarterly CEM Calibration Error and Annual CEM Performance Specification Tests conducted in accordance with Permit Condition III.10.K.1.e.iii.

III.10.K.1.g. Closure

The Permittees will close the HLW Vitrification System in accordance with Operating Unit 10, Chapter 11.0 of this Permit, as approved pursuant to Permit Condition III.10.C.8.

III.10.K.1.h. Periodic Emission Re-testing Requirements [WAC 173-303-670(5), WAC 173-303-670(7), and WAC 173-303-807(2), in accordance with WAC 173-303-680(2) and (3)]

III.10.K.1.h.i. Dioxin and Furan Emission Testing

A. Within eighteen (18) months of commencing operation pursuant to Permit Section III.10.K, the Permittees will submit to Ecology for approval, a Dioxin and Furan Emission Test Plan (DFETP) for the performance of emission testing of the HLW Vitrification System gases for dioxin and furans during "Normal Operating Conditions" as a permit modification in accordance with Permit Conditions III.10.C.2.e. and f. The DFETP will include all elements applicable to dioxin and furan emission testing included in the "Previously Approved Demonstration Test Plan," applicable EPA promulgated test methods and procedures in effect at the time of the submittal, and projected commencement and completion dates for dioxin and furan emission test. "Normal Operating Conditions" will be defined for the purposes of this permit condition as follows:

1. Carbon monoxide emissions, dangerous and/or mixed waste feed-rate, and automatic waste feed cut-off parameters specified on Permit Table III.10.K.F (as approved/modified pursuant to Permit Conditions III.10.J.5 and III.10.J.3.d.v), that were established to maintain compliance with Permit Condition III.10.K.1.b.iv., as specified in Operating Unit 10, Appendix 10.15 of this Permit (as approved pursuant to Permit Condition III.10.J.3.d. and in accordance with III.10.K.1.b.xii. and III.10.K.1.c.xi.), are held within the range of the average value over the previous twelve (12) months and the set-point value specified on Permit Table III.10.K.F. The average value is defined as the sum of the rolling average values recorded over the previous twelve (12) months divided by the number of rolling averages recorded during that time. The average value will not include calibration data, malfunction data, and data obtained when not processing dangerous and/or mixed waste; and

2. Feed-rate of metals, ash, and chlorine/chloride are held within the range of the average value over the previous twelve (12) months and the set-point value specified on Permit Table III.10.K.D (as approved/modified pursuant to Permit Conditions III.10.J.5 and III.10.J.3.d.v). Feed-rate of organics as measured by TOC are held within the range of the average value over the previous twelve (12) months. The average value is defined as the sum of the rolling average values recorded over the previous twelve (12) months divided by the number of rolling averages recorded during that time. The average value will not include data obtained when not processing dangerous and/or mixed waste.

For purposes of this permit Condition, the "Previously Approved Demonstration Test Plan" is defined to include the Demonstration Test Plan approved pursuant to Permit Condition III.10.J.5.f.

B. Within sixty (60) days of Ecology's approval of the DFETP, or within thirty-one (31) months of commencing operation pursuant to Permit Section III.10.K, whichever is later, the Permittees will implement the DFETP approved, pursuant to Permit Condition III.10.K.1.h.i.A.

C. The Permittees will resubmit the DFETP, approved pursuant to Permit Condition III.10.K.1.h.i.A, revised to include applicable EPA promulgated test methods and procedures in effect at the time of the submittal, and projected commencement and completion dates for dioxin and furan emission test as a permit modification in accordance with Permit Conditions III.10.C.2.e. and f. at twenty-four (24) months from the implementation date of the testing required pursuant to Permit Condition III.10.K.1.h.i.A and at reoccurring eighteen (18) month intervals from the implementation date of the previously approved DFETP. The Permittees will implement these newly approved revised DFETPs every thirty-one (31) months from the previous approved DFETP implementation date or within sixty (60) days of the newly Ecology approved revised DFETP, whichever is later, for the duration of this Permit.

D. The Permittees will submit a summary of operating data collected pursuant to the DFETPs in accordance with Permit Conditions III.10.K.1.h.i.A and C to Ecology upon completion of the tests. The Permittees will submit to Ecology the complete test report within ninety (90) calendar days of completion of the testing. The test reports will be certified as specified in WAC 173-303-807(8), in accordance with WAC 173-303-680(2) and (3).

E. If any calculations or testing results collected pursuant to the DFETPs in accordance with Permit Conditions III.10.K.1.h.i.A and C show that one or more of the performance standards listed in Permit Condition III.10.K.1.b., with the exception of Permit Condition III.10.K.1.b.x., for the HLW Vitrification System were not met during the emission test, the Permittees will perform the following actions:

1. Immediately stop dangerous and/or mixed waste feed to the HLW Vitrification System under the mode of operation that resulted in not meeting the performance standard(s).

2. Verbally notify Ecology within twenty-four (24) hours of discovery of not meeting the performance standard(s) as specified in Permit Condition I.E.21.

3. Investigate the cause of the failure and submit a report of the investigation findings to Ecology within fifteen (15) days of discovery of not meeting the performance standard(s).

4. Submit to Ecology within fifteen (15) days of discovery of not meeting the performance standard(s) documentation supporting a mode of operation where all performance standards listed in Permit Condition III.K.1.b., with the exception of Permit Condition III.10.K.1.b.x., for the HLW Vitrification System were met during the demonstration test, if any such mode was demonstrated.

5. Based on the information provided to Ecology by the Permittees, pursuant to Permit Conditions III.10.K.1.h.i.E.1 through 4 above, and any additional information, Ecology may provide, in writing, direction to the Permittees to

stop dangerous and/or mixed waste feed to the HLW Vitrification System and/or amend the mode of operation the Permittees are allowed to continue operations prior to Ecology approval of the revised Demonstration Test Plan pursuant to Permit Condition III.10. K.1.h.i.E.6.

6. Submit to Ecology within one hundred and twenty (120) days of discovery of not meeting the performance standard(s) a revised Demonstration Test Plan requesting approval to retest as a permit modification pursuant to Permit Conditions III.10.C.2.e. and f. The revised Demonstration Test Plan must include substantive changes to prevent failure from reoccurring reflecting performance under operating conditions representative of the extreme range of normal conditions, and include revisions to Permit Tables III.10.K.D and F.

F. If any calculations or testing results collected pursuant to the DFETPs in accordance with Permit Conditions III.10.K.1.h.i.A and C show that any emission rate for any constituent listed in Permit Table III.10.K.E, as approved/modified pursuant to Permit Conditions III.10.C.11.c. or d., is exceeded for HLW Vitrification System during the emission test, the Permittees will perform the following actions:

1. Verbally notify Ecology within twenty-four (24) hours of the discovery of exceeding the emission rate(s) as specified in Permit Condition I.E.21;

2. Submit to Ecology additional risk information to indicate that the increased emissions impact is off-set by decreased emission impact from one or more constituents expected to be emitted at the same time, and/or investigate the cause and impact of the exceedence and submit a report of the investigation findings to Ecology within fifteen (15) days of this discovery of exceeding the emission rate(s); and

3. Based on the notification and any additional information, Ecology may provide, in writing, direction to the Permittees to stop dangerous and/or mixed waste feed to the HLW Vitrification System and/or to submit a revised Demonstration Test Plan as a permit modification pursuant to Permit Conditions III.10.C.2.e. and f., or III.10.C.2.g. The revised Demonstration Test Plan must include substantive changes to prevent failure from reoccurring reflecting performance under operating conditions representative of the extreme range of normal conditions, and include revisions to Permit Tables III.10.K.D and F.

III.10.K.1.h.ii. Non-organic Emission Testing

A. Within forty-eight (48) months of commencing operation pursuant to Permit Section III.10.K, the Permittees will resubmit to Ecology for approval the "Previously Approved Demonstration Test Plan" revised as a permit modification in accordance with Permit Conditions III.10.C.2.e. and f. The revised Demonstration Test Plan (RDTP) will include applicable EPA promulgated test methods and procedures in effect at the time of the submittal, projected commencement and completion dates for emission testing to demonstrate performance standards specified in Permit Conditions III.10.K.1.b.ii., iii., v., vi., and vii., and non-organic emissions as specified in Permit Table III.10.K.E, as approved/modified pursuant to Permit

Conditions III.10.J.3.d. and III.10.C.11.c. or d., under "Normal Operating Conditions." "Normal Operating Conditions" will be defined for the purposes of this permit condition as follows:

1. Carbon monoxide emissions, dangerous and/or mixed waste feed-rate, and automatic waste feed cut-off parameters specified in Permit Table III.10.K.F, as approved/modified pursuant to Permit Conditions III.10.J.3.d. and III.10.C.11.c. or d., that were established to maintain compliance with Permit Conditions III.10.K.1.b.ii., iii., v., vi., and vii., and non-organic emissions, as specified in Permit Table III.10.K.E, as specified in Operating Unit 10, Appendix 10.15 of this Permit (as approved pursuant to Permit Conditions III.10.J.3.d. and III.10.C.11.c. or d.), are held within the range of the average value over the previous twelve (12) months and the set-point value specified on Permit Table III.10.K.F. The average value is defined as the sum of the rolling average values recorded over the previous twelve (12) months divided by the number of rolling averages recorded during that time. The average value will not include calibration data, malfunction data, and data obtained when not processing dangerous and/or mixed waste; and

2. Feed-rate of metals, ash, and chlorine/chloride are held within the range of the average value over the previous twelve (12) months and the set-point value specified on Permit Table III.10.K.D, as approved/modified pursuant to Permit Conditions III.10.J.3.d. and III.10.C.11.c. or d. The average value is defined as the sum of all rolling average values recorded over the previous twelve (12) months divided by the number of rolling averages recorded during that time. The average value will not include data obtained when not processing dangerous and/or mixed waste.

For purposes of this permit Condition, the "Previously Approved Demonstration Test Plan" is defined to include the Demonstration Test Plan approved pursuant to Permit Condition III.10.J.5.f.

B. Within sixty (60) days of Ecology's approval of the RDTP, or within sixty (60) months of commencing operation pursuant to Permit Section III.10.K, whichever is later, the Permittees will implement the RDTP approved pursuant to Permit Condition III.10.K.1.h.ii.A.

C. The Permittees will resubmit the RDTP, approved pursuant to Permit Condition III.10.K.1.h.ii.A, revised to include applicable EPA promulgated test methods and procedures in effect at the time of the submittal, and projected commencement and completion dates for emission test as a permit modification in accordance with Permit Conditions III.10.C.2.e. and f. at forty-eight (48) months from the implementation date of the testing required pursuant to Permit Condition III.10.K.1.h.ii.A and at reoccurring forty-eight (48) month intervals from the implementation date of the previously approved RDTP. The Permittees will implement these newly approved revised RDTP, every sixty (60) months from the previous approved RDTP implementation date or within sixty (60) days of the newly Ecology approved revised RDTP, whichever is later, for the duration of this Permit.

D. The Permittees will submit a summary of operating data collected pursuant to the RDTPs in accordance with Permit Conditions III.10.K.1.h.ii.A and C to Ecology upon completion of the tests. The Permittees will submit to Ecology the complete test report within ninety (90) calendar days of completion of the testing. The test reports will be certified pursuant to WAC 173-303-807(8), in accordance with WAC 173-303-680(2) and (3).

E. If any calculations or testing results collected pursuant to the DFETPs in accordance with Permit Conditions III.10.K.1.h.ii.A and C show that any emission rate for any constituent listed in Permit Table III.10.K.E, as approved/modified pursuant to Permit Conditions III.10.J.3.d. and III.10.C.11.c. or d., is exceeded for HLW Vitrification System during the emission test, the Permittees will perform the following actions:

1. Verbally notify Ecology within twenty-four (24) hours of the discovery of exceeding the emission rate(s) as specified in Permit Condition I.E.21;

2. Submit to Ecology additional risk information to indicate that the increased emissions impact is off-set by decreased emission impact from one or more constituents expected to be emitted at the same time, and/or investigate the cause and impact of the exceedence and submit a report of the investigation findings to Ecology within fifteen (15) days of this discovery of exceeding the emission rate(s); and

3. Based on the notification and any additional information, Ecology may provide, in writing, direction to the Permittees to stop dangerous and/or mixed waste feed to the HLW Vitrification System and/or to submit a revised Demonstration Test Plan as a permit modification pursuant to Permit Conditions III.10.C.2.e. and f., or III.10.C.2.g. The revised Demonstration Test Plan must include substantive changes to prevent failure from reoccurring reflecting performance under operating conditions representative of the extreme range of normal conditions, and include revisions to Permit Tables III.10.K.D and III.10.K.F.

F. If any calculations or testing results collected pursuant to the DFETPs in accordance with Permit Conditions III.10.K.1.h.ii.A and C show that one or more of the performance standards listed in Permit Condition III.10.K.1.b., with the exception of Permit Condition III.10.K.1.b.x., for the HLW Vitrification System were not met during the emission test, the Permittees will perform the following actions:

1. Immediately stop dangerous and/or mixed waste feed to the HLW Vitrification System under the mode of operation that resulted in not meeting the performance standard(s).

2. Verbally notify Ecology within twenty-four (24) hours of discovery of not meeting the performance standard(s), as specified in Permit Condition I.E.21.

3. Investigate the cause of the failure and submit a report of the investigation findings to Ecology within fifteen (15) days of discovery of not meeting the performance standard(s).

4. Submit to Ecology within fifteen (15) days of discovery of not meeting the performance standard(s) documentation supporting a mode of operation where all performance standards listed in Permit Condition III.K.1.b., with the exception of Permit Condition III.10.K.1.b.x., for the HLW Vitrification System were met during the demonstration test, if any such mode was demonstrated.

5. Based on the information provided to Ecology by the Permittees pursuant to Permit Conditions III.10.K.1.h.ii.F.1 through 4 above, and any additional information, Ecology may provide, in writing, direction to the Permittees to stop dangerous and/or mixed waste feed to the HLW Vitrification System and/or amend the mode of operation the Permittees are allowed to continue operations prior to Ecology approval of the revised Demonstration Test Plan pursuant to Permit Condition III.10.K.1.h.ii.F.6.

6. Submit to Ecology within one hundred and twenty (120) days of discovery of not meeting the performance standard(s) a revised Demonstration Test Plan requesting approval to retest as a permit modification pursuant to Permit Conditions III.10.C.2.e. and f. The revised Demonstration Test Plan must include substantive changes to prevent failure from reoccurring reflecting performance under operating conditions representative of the extreme range of normal conditions, and include revisions to Permit Tables III.10.K.D and F.

III.10.K.1.h.iii. Other Emission Testing

A. Within seventy-eight (78) months of commencing operation pursuant to Permit Section III.10.K, the Permittees will resubmit to Ecology for approval the "Previously Approved Demonstration Test Plan" revised as a permit modification in accordance with Permit Conditions III.10.C.2.e. and f. The revised Demonstration Test Plan (RDTP) will include applicable EPA promulgated test methods and procedures in effect at the time of the submittal, projected commencement and completion dates for emission testing to demonstrate performance standards as specified in Permit Conditions III.10.K.1.b.viii. and ix., and emissions as specified on Permit Table III.10.K.E, as approved/modified pursuant to Permit Conditions III.10.J.3.d. and III.10.C.11.c. or d., not addressed under Permit Conditions III.10.K.1.h.i. or ii. under "Normal Operating Conditions." "Normal Operating Conditions" will be defined for the purposes of this permit Condition as follows:

1. Carbon monoxide emissions, dangerous and/or mixed waste feed-rate, and automatic waste feed cut-off parameters specified on Permit Table III.10.K.F, as approved/modified pursuant to Permit Condition III.10.J.3.d. and III.10.C.11.c. or d., that were established to maintain compliance with Permit Conditions III.10.K.1.b.viii. and ix., and emissions as specified on Permit Table III.10.K.E, not addressed under Permit Conditions III.10.K.1.h.i. or ii. as specified in Operating Unit 10, Appendix 10.15 of this Permit, as approved pursuant to Permit Condition III.10.J.3.d., and in accordance with Permit Conditions III.10.K.1.b.xii. and III.10.K.1.c.xi. are held within the range of the average value over the previous twelve (12) months and the set-point value specified on Permit Table III.10.K.F. The

average value is defined as the sum of all rolling average values recorded over the previous twelve (12) months divided by the number of rolling averages recorded during that time. The average value will not include calibration data, malfunction data, and data obtained when not processing dangerous and/or mixed waste; and

2. Feed-rate of metals, ash, and chlorine/chloride are held within the range of the average value over the previous twelve (12) months and the set-point value specified on Permit Table III.10.K.D, as approved/modified pursuant to Permit Conditions III.10.J.3.d. and III.10.C.11.c. or d. Feed-rate of organics as measured by TOC are held within the range of the average value over the previous twelve (12) months. The average value is defined as the sum of the rolling average values recorded over the previous twelve (12) months divided by the number of rolling averages recorded during that time. The average value will not include data obtained when not processing dangerous and/or mixed waste.

   For purposes of this permit Condition, the "Previously Approved Demonstration Test Plan" is defined to include the Demonstration Test Plan approved pursuant to Permit Condition III.10.J.5.f.

B. Within sixty (60) days of Ecology's approval of the RDTP, or within ninety-one (91) months of commencing operation pursuant to Permit Section III.10.K, whichever is later, the Permittees will implement the RDTP approved pursuant to Permit Condition III.10.K.1.h.iii.A.

C. The Permittees will submit a summary of operating data collected pursuant to the RDTPs in accordance with Permit Condition III.10.K.1.h.iii.A to Ecology upon completion of the tests. The Permittees will submit to Ecology the complete test report within ninety (90) calendar days of completion of the testing. The test reports will be certified as specified in WAC 173-303-807(8), in accordance with Permit Condition WAC 173-303-680(2) and (3).

D. If any calculations or testing results show that one or more of the performance standards listed in Permit Condition III.10.K.1.b., with the exception of Permit Condition III.10.K.1.b.x., for the HLW Vitrification System were not met during the emission test, the Permittees will perform the following actions:

   1. Immediately stop dangerous and/or mixed waste feed to the HLW Vitrification System under the mode of operation that resulted in not meeting the performance standard(s).

   2. Verbally notify Ecology within twenty-four (24) hours of discovery of not meeting the performance standard(s), as specified Permit Condition I.E.21.

   3. Investigate the cause of the failure and submit a report of the investigation findings to Ecology within fifteen (15) days of discovery of not meeting the performance standard(s).

   4. Submit to Ecology within fifteen (15) days of discovery of not meeting the performance standard(s) documentation supporting a mode of operation where all performance standards listed in Permit Condition III.10.K.1.b.,

with the exception of Permit Condition III.10.K.1.b.x., for the HLW Vitrification System were met during the demonstration test, if any such mode was demonstrated.

5. Based on the information provided to Ecology by the Permittees pursuant to Permit Conditions III.10.K.1.h.iii.D.1 through 4 above, and any additional information, Ecology may provide, in writing, direction to the Permittees to stop dangerous and/or mixed waste feed to the HLW Vitrification System and/or amend the mode of operation the Permittees are allowed to continue operations prior to Ecology approval of the revised Demonstration Test Plan, pursuant to Permit Condition III.10.K.1.h.iii.D.6.

6. Submit to Ecology within one hundred and twenty (120) days of discovery of not meeting the performance standard(s) a revised Demonstration Test Plan requesting approval to retest as a permit modification pursuant to Permit Conditions II.10.C.2.e. and f. The revised Demonstration Test Plan must include substantive changes to prevent failure from reoccurring reflecting performance under operating conditions representative of the extreme range of normal conditions, and include revisions to Permit Tables III.10.K.D and F.

E. If any calculations or testing results show that any emission rate for any constituent listed in Permit Table III.10.K.E, as approved/modified pursuant to Permit Condition III.10.C.11.c. or d., is exceeded for HLW Vitrification System during the emission test, the Permittees will perform the following actions:

1. Verbally notify Ecology within twenty-four (24) hours of the discovery of exceeding the emission rate(s) as specified in Permit Condition I.E.21;

2. Submit to Ecology additional risk information to indicate that the increased emissions impact is off-set by decreased emission impact from one or more constituents expected to be emitted at the same time, and/or investigate the cause and impact of the exceedence of the emission rate(s) and submit a report of the investigation findings to Ecology within fifteen (15) days of the discovery of the exceedence of the emission rate(s); and

3. Based on the notification and any additional information, Ecology may provide, in writing, direction to the Permittees to stop dangerous and/or mixed waste feed to the HLW Vitrification System and/or to submit a revised Demonstration Test Plan as a permit modification pursuant to Permit Conditions III.10.C.2.e. and f., or III.10.C.2.g. The revised Demonstration Test Plan must include substantive changes to prevent failure from reoccurring reflecting performance under operating conditions representative of the extreme range of normal conditions, and include revisions to Permit Tables III.10.K.D and F.

Table III.10.K.A - HLW Vitrification System Description

Sub-system Description	Sub-System Designation	Engineering Description (Drawing Nos., etc.)	Narrative Description, Tables, and Figures
RESERVED	RESERVED	RESERVED	RESERVED

Footnotes:
[a]Permit Table III.10.K.A will be completed in accordance with Permit Condition III.10.J.5.e.x., prior to initiating Permit Condition III.10.K.1. See Permit Table III.10.J.A for the current HLW Vitrification System Description.

Table III.10.K.B - HLW Vitrification System Secondary Containment Systems Including Sumps and Floor Drains

Sump/Floor Drain I.D.# & Room Location	Maximum Sump Capacity (gallons)	Sump Dimensions[b] (feet) & Materials of Construction	Engineering Description (Drawing Nos., Specification Nos., etc.)
RESERVED	RESERVED	RESERVED	RESERVED

Footnotes:
[a]Permit Table III.10.K.B will be completed in accordance with Permit Condition III.10.J.5.b.vii., prior to initiating Permit Condition III.10.K.1. See Permit Table III.10.J.B for the current HLW Vitrification System Secondary Containment Systems Including Sumps and Floor Drains.
[b]Dimensions listed are based on permitted design. Actual dimensions may vary within plus or minus (TBD).

Table III.10.K.C - HLW Vitrification System Process and Leak Detection System Instruments and Parameters

Tank System Name and Locator (including P&ID)	Control Parameter	Type of Instrument or Control Device	Location of Instrument or Control Device (Tag No.)	Instrument Range	Expected Operating Range or Setpoint	Fail States	Instrument Accuracy	Instrument Calibration Method No. and Frequency

Table III.10.K.C - HLW Vitrification System Process and Leak Detection System Instruments and Parameters

Tank System Name and Locator (including P&ID)	Control Parameter	Type of Instrument or Control Device	Location of Instrument or Control Device (Tag No.)	Instrument Range	Expected Operating Range or Setpoint	Fail States	Instrument Accuracy	Instrument Calibration Method No. and Frequency
RESERVED	RESERVED	RESERVED	RESERVED	RESERVED	RESERVED	RESERVED	RESERVED	RESERVED

Footnotes:
[a]Permit Table III.10.K.C will be completed in accordance with Permit Condition III.10.J.5.e.ix., prior to initiating Permit Condition III.10.K.1. See Permit Table III.10.J.C for the current HLW Vitrification System Process and Leak Detection System Instruments and Parameters.

1

1

Table III.10.K.D – Maximum Feed-rates to HLW Vitrification System (RESERVED)

Description of Waste	Normal Operation
Dangerous and/or mixed waste Feed Rate	RESERVED
Ash Feed Rate	RESERVED
Total Chlorine/Chloride Feed Rate	RESERVED
Total Metal Feed-rates	RESERVED

2

3

Table III.10.K.E – HLW Vitrification System Estimated Emission Rates (RESERVED)

Chemicals	CAS Number	Emission Rates (grams /second)
RESERVED	RESERVED	RESERVED

4

5

TABLE III.10.K.F - HLW Vitrification System Waste Feed Cut-off Parameters* [1](RESERVED)

Sub-system Designation	Instrument Tag Number	Parameter Description	Set-points During Normal Operation
RESERVED	RESERVED	RESERVED	RESERVED

Footnotes:
*A continuous monitoring system will be used as defined in Permit Section III.10.C.1.
[1]Maximum Feed-rate will be set based on not exceeding any of the constituent (e.g., metals, ash, and chlorine/chloride) feed limits specified on Table III.10.K.D. of this Permit

6

7

WASHINGTON STATE DEPARTMENT OF ECOLOGY

Dangerous Waste Permit Application Part A Form

Date Received	Reviewed by:	Date:
Month Day Year	Approved by:	Date:
09 12 2008		

I. This form is submitted to: (place an "X" in the appropriate box)

☐	Request modification to a final status permit (commonly called a "Part B" permit)
☐	Request a change under interim status
☒	Apply for a final status permit. This includes the application for the initial final status permit for a site or for a permit renewal (i.e., a new permit to replace an expiring permit).
☐	Establish interim status because of the wastes newly regulated on: (Date)
	List waste codes:

II. EPA/State ID Number

W A 7 8 9 0 0 0 8 9 6 7

III. Name of Facility

US Department of Energy - Hanford Facility

IV. Facility Location (Physical address not P.O. Box or Route Number)

A. Street

825 Jadwin

City or Town	State	ZIP Code
Richland	WA	99352

County Code (if known)	County Name
005	Benton

B. Land Type	C. Geographic Location Latitude (degrees, mins, secs)	Longitude (degrees, mins, secs)	D. Facility Existence Date Month Day Year
F	Refer to TOPO Map (Section XV.)		03 22 1943

V. Facility Mailing Address

Street or P.O. Box

P.O. Box 550

City or Town	State	ZIP Code
Richland	WA	99352

VI. Facility contact (Person to be contacted regarding waste activities at facility)		
Name (last)	**(first)**	
Olinger	Shirley	
Job Title	**Phone Number (area code and number)**	
Manager	(509) 372-3062	
Contact Address		
Street or P.O. Box		
P.O. Box 450		
City or Town	**State**	**ZIP Code**
Richland	WA	99352

VII. Facility Operator Information		
A. Name	**Phone Number (area code and number)**	
Department of Energy Owner/Operator Bechtel National, Inc. Co-Operator for WTP*	(509) 372-3062 (509) 371-2335*	
Street or P.O. Box		
P.O. Box 450 2435 Stevens Center Place *		
City or Town	**State**	**ZIP Code**
Richland	WA	99352 99354*
B. Operator Type F		
C. Does the name in VII.A reflect a proposed change in operator? ☐ Yes ☒ No **If yes, provide the scheduled date for the change:**	**Month**	**Day** **Year**
D. Is the name listed in VII.A. also the owner? If yes, skip to Section VIII.C.	☐ Yes ☒ No	

VIII. Facility Owner Information		
A. Name	**Phone Number (area code and number)**	
Shirley J. Olinger, Operator/Facility-Property Owner	(509) 372-3062	
Street or P.O. Box		
P.O. Box 450		
City or Town	**State**	**ZIP Code**
Richland	WA	99352
B. Owner Type F		
C. Does the name in VIII.A reflect a proposed change in owner? ☐ Yes ☒ No **If yes, provide the scheduled date for the change:**	**Month**	**Day** **Year**

IX. NAICS Codes (5/6 digit codes)

A. First							B. Second						
5	6	2	2	1		Waste Treatment & Disposal	9	2	4	1	1	0	Administration of Air & Water Resource & Solid Waste Management Programs
C. Third							**D. Fourth**						
5	4	1	7	1		Research & Development in the Physical, Engineering, & Life Sciences							

X. Other Environmental Permits (see instructions)

A. Permit Type	B. Permit Number	C. Description
E	AIR-07-601	WAC 246-247, NOC Approval Radioactive Air
E	AIR-06-401	WAC 246-247, NOC Approval Radioactive Air
E	AIR-06-402	WAC 246-247, NOC Approval Radioactive Air
E	AIR-06-404	WAC 246-247, NOC Approval Radioactive Air
E	AIR-06-1032	WAC 246-247, NOC Approval Radioactive Air
E	EPA Appr 1	40 CFR 61, NOC Approval Radioactive Air
E	DE01NWP-003	WAC 173-400/-460, Non-Radioactive Air Approval
E	DE02NWP-002	WAC 173-400/-460, Non-Radioactive Air Approval
E	DE07NWP-004	WAC 173-400-/460, Non-Radioactive Air Approval
P	PSD-02-01	WAC 173-400 Prevention of Significant Deterioration
E	WAG-50-5180	WAC 173-220/-216, Sand and Gravel General Permit
E	WAG-50-5181	WAC 173-220/-216, Sand and Gravel General Permit
E	HAN 099	WAC 246-272, Large On-Site Sewage Systems

XI. Nature of Business (provide a brief description that includes both dangerous waste and non-dangerous waste areas and activities)

Treatment by vitrification of radioactive dangerous waste.

Process Codes

S01 = Storage in containers
S02 = Tank storage
S06 = Containment building storage
T01 = Tank treatment
T04 = Other treatment (vitrification)
T94 = Containment Building Treatment

Footnotes From Section XIV

*Waste codes for ignitability (D001) and reactivity (D003) apply only to the waste while it is in the pretreatment facility LAW feed receipt FRP vessels and the HLW feed receipt vessel. Downstream of these vessels, the D001 and D003 waste codes are administratively removed from the project's waste streams.

** F039 is a multisource leachate included as a waste derived from non-specific source wastes F001 through F005

EXAMPLE FOR COMPLETING ITEMS XII and XIII (shown in lines numbered X-1, X-2, and X-3 below): A facility has two storage tanks that hold 1200 gallons and 400 gallons respectively. There is also treatment in tanks at 20 gallons/hr. Finally, a one-quarter acre area that is two meters deep will undergo *in situ vitrification.*

Section XII. Process Codes and Design Capacities								Section XIII. Other Process Codes							
Line Number		A. Process Codes (enter code)			B. Process Design Capacity		C. Process Total Number of Units	Line Number		A. Process Codes (enter code)			B Process Design Capacity		C. Process Total Number of Units	D. Process Description
					1. Amount	2. Unit of Measure (enter code)							1. Amount	2. Unit of Measure (enter code)		
X	1	S	0	2	1,600	G	002	X	1	T	0	4	700	C	001	In situ vitrification
X	2	T	0	3	20	E	001									
X	3	T	0	4	700	C	001									
	1	S	0	1	1,089,000	G			1							
	2	S	0	2	5,276,000	G			2							
	3	T	0	1	9,000	U			3							
	4	T	0	4	21,000	U			4							
	5	T	9	4	1,000	U			5							
	6	S	0	6	712	C			6							
	7								7							
	8								8							
	9								9							
1	0							1	0							
1	1							1	1							
1	2							1	2							
1	3							1	3							
1	4							1	4							
1	5							1	5							
1	6							1	6							
1	7							1	7							
1	8							1	8							
1	9							1	9							
2	0							2	0							
2	1							2	1							
2	2							2	2							
2	3							2	3							
2	4							2	4							
2	5							2	5							
2	6							2	6							

XIV. Description of Dangerous Wastes

Example for completing this section: A facility will receive three non-listed wastes, then store and treat them on-site. Two wastes are corrosive only, with the facility receiving and storing the wastes in containers. There will be about 200 pounds per year of each of these two wastes, which will be neutralized in a tank. The other waste is corrosive and ignitable and will be neutralized then blended into hazardous waste fuel. There will be about 100 pounds per year of that waste, which will be received in bulk and put into tanks.

Line Number	A. Dangerous Waste No. (enter code)	B. Estimated Annual Quantity of Waste	C. Unit of Measure (enter code)	D. Processes	
				(1) Process Codes (enter)	(2) Process Description [If a code is not entered in D (1)]
X 1	D 0 0 2	400	P	S 0 1 T 0 1	
X 2	D 0 0 1	100	P	S 0 2 T 0 1	
X 3	D 0 0 2				Included with above
1	D 0 0 1*	16,300	T	S 0 2	
2	D 0 0 2		T	S 0 2 T 0 1	
3	D 0 0 3*		T	S 0 2	
4	D 0 0 4		T	S 0 2 T 0 1	
5	D 0 0 5		T		Included with above
6	D 0 0 6		T		Included with above
7	D 0 0 7		T		Included with above
8	D 0 0 8		T		Included with above
9	D 0 0 9		T		Included with above
10	D 0 1 0		T		Included with above
11	D 0 1 1		T		Included with above
12	D 0 1 8		T		Included with above
13	D 0 1 9		T		Included with above
14	D 0 2 2		T		Included with above
15	D 0 2 8		T		Included with above
16	D 0 2 9		T		Included with above
17	D 0 3 0		T		Included with above
18	D 0 3 3		T		Included with above
19	D 0 3 4		T		Included with above
20	D 0 3 5		T		Included with above
21	D 0 3 6		T		Included with above
22	D 0 3 8		T		Included with above
23	D 0 3 9		T		Included with above
24	D 0 4 0		T		Included with above
25	D 0 4 1		T		Included with above

EPA/State ID Number	W	A	7	8	9	0	0	0	8	9	6	7

Continuation of Section XIV. Description of Dangerous Waste

Line Number	A. Dangerous Waste No. (enter code)	B. Estimated Annual Quantity of Waste	C. Unit of Measure (enter code)	D. Process (1) Process Codes (enter)	D. Process (2) Process Description [If a code is not entered in D (1)]
26	D043		T		Included with above
27	WT01		T		Included with above
28	WT02		T		Included with above
29	WP01		T		Included with above
30	WP02		T		Included with above
31	F001		T		Included with above
32	F002		T		Included with above
33	F003		T		Included with above
34	F004		T		Included with above
35	F005		T		Included with above
36	F039		T		Included with above
37	D002	50,700	T	S01 T04 S06	Vitrification treatment process & storage of ILAW & IHLW
38	D004		T		Included with above
39	D005		T		Included with above
40	D006		T		Included with above
41	D007		T		Included with above
42	D008		T		Included with above
43	D009		T		Included with above
44	D010		T		Included with above
45	D011		T		Included with above
46	D018		T		Included with above
47	D019		T		Included with above
48	D022		T		Included with above
49	D028		T		Included with above
50	D029		T		Included with above
51	D030		T		Included with above
52	D033		T		Included with above
53	D034		T		Included with above
54	D035		T		Included with above
55	D036		T		Included with above
56	D038		T		Included with above
57	D039		T		Included with above
58	D040		T		Included with above
59	D041		T		Included with above

EPA/State ID Number	W	A	7	8	9	0	0	0	8	9	6	7

Continuation of Section XIV. Description of Dangerous Waste

Line Number	A. Dangerous Waste No. (enter code)	B. Estimated Annual Quantity of Waste	C. Unit of Measure (enter code)	D. Process	
				(1) Process Codes (enter)	(2) Process Description [If a code is not entered in D (1)]
60	D043		T		Included with above
61	WT01		T		Included with above
62	WT02		T		Included with above
63	WP01		T		Included with above
64	WP02		T		Included with above
65	F001		T		Included with above
66	F002		T		Included with above
67	F003		T		Included with above
68	F004		T		Included with above
69	F005		T		Included with above
70	F039		T		Included with above
71	D002	5,100	T	S01 T94 S06	Treatment & storage of secondary waste other than ILAW containers and IHLW canisters
72	D004		T		Included with above
73	D005		T		Included with above
74	D006		T		Included with above
75	D007		T		Included with above
76	D008		T		Included with above
77	D009		T		Included with above
78	D010		T		Included with above
79	D011		T		Included with above
80	D018		T		Included with above
81	D019		T		Included with above
82	D022		T		Included with above
83	D028		T		Included with above
84	D029		T		Included with above
85	D030		T		Included with above
86	D033		T		Included with above
87	D034		T		Included with above
88	D035		T		Included with above
89	D036		T		Included with above
90	D038		T		Included with above
91	D039		T		Included with above
92	D040		T		Included with above
93	D041		T		Included with above

EPA/State ID Number	W	A	7	8	9	0	0	0	8	9	6	7

Continuation of Section XIV. Description of Dangerous Waste

Line Number	A. Dangerous Waste No. (enter code)	B. Estimated Annual Quantity of Waste	C. Unit of Measure (enter code)	D. Process	
				(1) Process Codes (enter)	(2) Process Description [If a code is not entered in D (1)]
94	D043		T		Included with above
95	WT01		T		Included with above
96	WT02		T		Included with above
97	WP01		T		Included with above
98	WP02		T		Included with above
99	F001		T		Included with above
100	F002		T		Included with above
101	F003		T		Included with above
102	F004		T		Included with above
103	F005		T		Included with above
104	F039**		T		Included with above
105					
106					
107					
108					
109					
110					
111					
112					
113					
114					
115					
116					
117					
118					
119					
120					
121					
122					
123					
124					
125					
126					
127					

XV. Map

Attach to this application a topographic map of the area extending to at least one (1) mile beyond property boundaries. The map must show the outline of the facility; the location of each of its existing and proposed intake and discharge structures; each of its dangerous waste treatment, storage, recycling, or disposal units; and each well where fluids are injected underground. Include all springs, rivers, and other surface water bodies in this map area, plus drinking water wells listed in public records or otherwise known to the applicant within ¼ mile of the facility property boundary. The instructions provide additional information on meeting these requirements.

Topographic map is located in the Ecology Library.

XVI. Facility Drawing

All existing facilities must include a scale drawing of the facility (refer to Instructions for more detail).

XVII. Photographs

All existing facilities must include photographs (aerial or ground-level) that clearly delineate all existing structures; existing storage, treatment, recycling, and disposal areas; and sites of future storage, treatment, recycling, or disposal areas (refer to Instructions for more detail).

XVIII. Certifications

I certify under penalty of law that this document and all attachments were prepared under my direction or supervision in accordance with a system designed to assure that qualified personnel properly gather and evaluate the information submitted. Based on my inquiry of the person or persons who manage the system, or those persons directly responsible for gathering the information, the information submitted is, to the best of my knowledge and belief, true, accurate, and complete. I am aware that there are significant penalties for submitting false information, including the possibility of fine and imprisonment for knowing violations.

Operator Name and Official Title (type or print) Shirley J. Olinger, Manager U.S. Department of Energy Office of River Protection	**Signature**	**Date Signed** 9/30/08
Co-Operator* Name and Official Title (type or print) W.S. Elkins Project Director Bechtel National, Inc.	**Signature**	**Date Signed** 9/23/08
Co-Operator* – Address and Telephone Number 2435 Stevens Center Place Richland, WA 99352 (509) 371-2335		
Facility-Property Owner Name and Official Title (type or print) Shirley J. Olinger, Manager U.S. Department of Energy Office of River Protection	**Signature**	**Date Signed** 9/30/08

Comments

Waste Treatment and Immobilization Plant

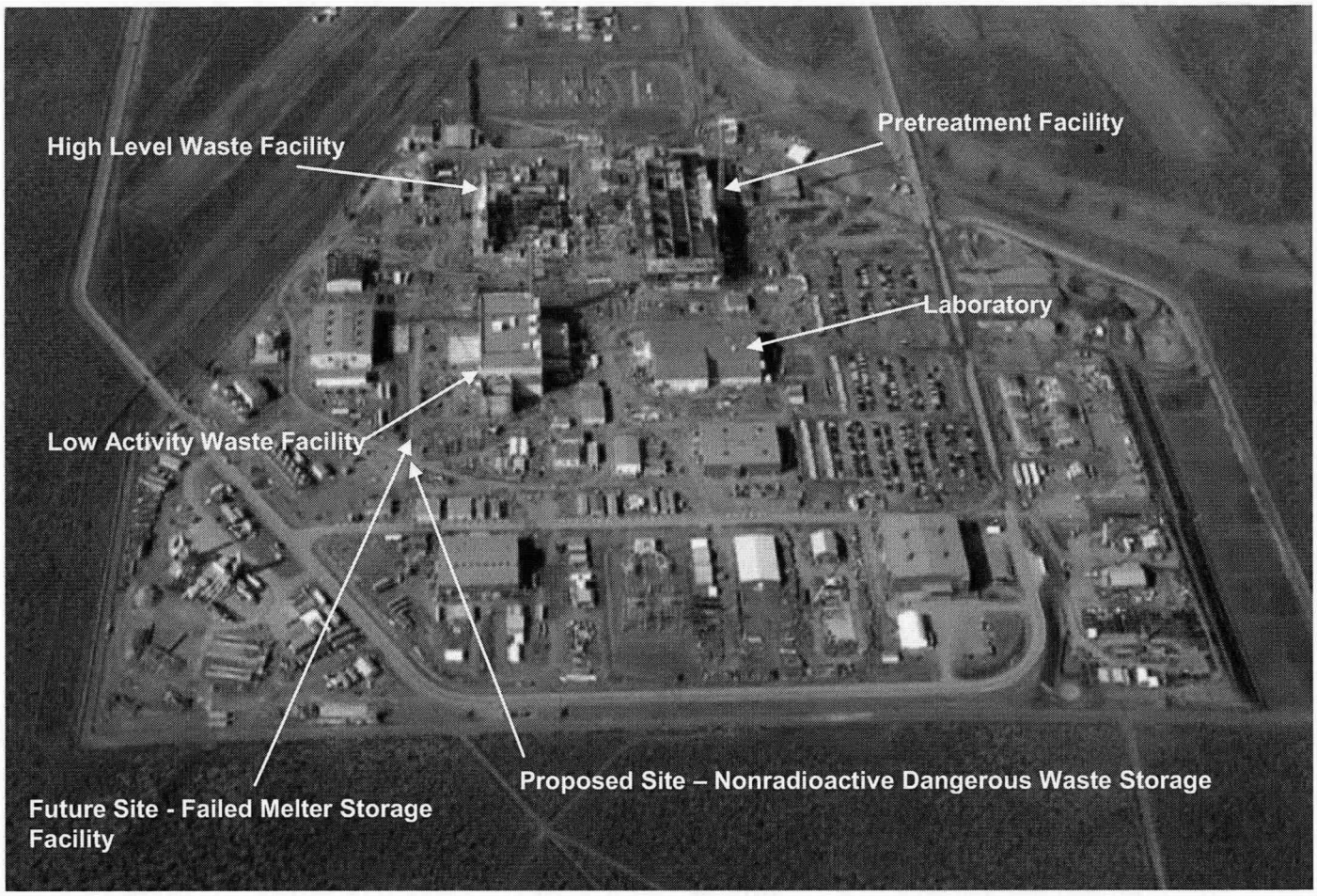

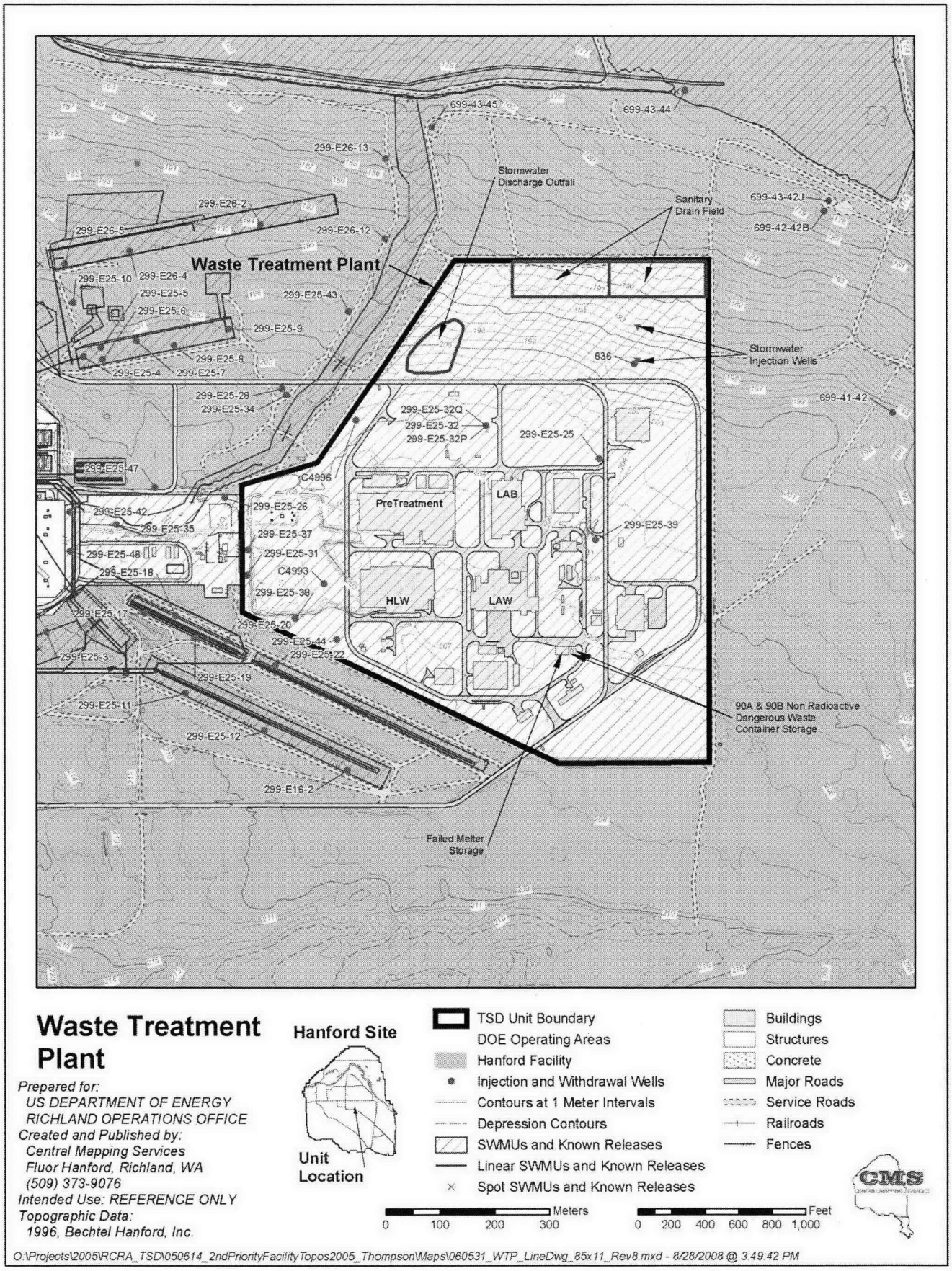

Waste Treatment Plant

Prepared for:
US DEPARTMENT OF ENERGY
RICHLAND OPERATIONS OFFICE
Created and Published by:
Central Mapping Services
Fluor Hanford, Richland, WA
(509) 373-9076
Intended Use: REFERENCE ONLY
Topographic Data:
1996, Bechtel Hanford, Inc.

Hanford Site

Unit Location

- TSD Unit Boundary
- DOE Operating Areas
- Hanford Facility
- Injection and Withdrawal Wells
- Contours at 1 Meter Intervals
- Depression Contours
- SWMUs and Known Releases
- Linear SWMUs and Known Releases
- Spot SWMUs and Known Releases
- Buildings
- Structures
- Concrete
- Major Roads
- Service Roads
- Railroads
- Fences

Meters: 0 100 200 300

Feet: 0 200 400 600 800 1,000

CMS

O:\Projects\2005\RCRA_TSD\050614_2ndPriorityFacilityTopos2005_Thompson\Maps\060531_WTP_LineDwg_85x11_Rev8.mxd - 8/28/2008 @ 3:49:42 PM

ISSUED BY
RPP-WTP PDC

Document title: **RPP-WTP Compliance with Uniform Building Code Seismic Design Requirements**

Contract number: DE-AC27-01RV14136

Department: Civil, Structural and Architectural

Author(s): Alisa A. Sheridan

Principal author signature:

Document number: 24590-WTP-RPT-ST-01-001, Rev 2

Checked by: Eugene F. Scott, Jr.

Checker signature:

Date of issue: 11/17/08

Issue status: Approved

Approved by: Mark Braccia

Approver's position: Civil, Structural and Architectural Design Production Engineering Manager

Approver signature:

NOTE: Contents of this document are Dangerous Waste Permit affecting.

River Protection Project
Waste Treatment Plant
2435 Stevens Center Place
Richland, WA 99354
United States of America
Tel: 509 371 2000

History Sheet

Rev	Date	Reason for revision	Revised by
A	03/06/00	Issue in Support of DWPA	
0	07/09/01	Supercedes RPT-W373-ST00001	S. Horn
1	10/31/01	Revised to Incorporate Comments	S. Horn
2	11/17/2008	Report rewritten in its entirety to reflect current RPP-WTP seismic design criteria, seismic category definitions, add reference to the 24590-WTP-SRD-ESH-01-001-02, 24590-WTP-PSAR-ESH-01-002-01, and 24590-WTP-DC-ST-04-001.	A. Sheridan

Contents

History Sheet ii
1 Introduction 1
2 Compliance with the Uniform Building Code 1
3 Seismic Categorization 1
4 Seismic Design Criteria 2
5 Design Requirements 3
6 Conclusion 4

1 Introduction

This report outlines how the seismic design requirements specified for the RPP-WTP facilities will meet, as a minimum, all the requirements of the 1997 Uniform Building Code (UBC).

2 Compliance with the Uniform Building Code

Design of structures, systems and components (SSCs) for the RPP-WTP facility will meet, as a minimum, the design requirements of the Uniform Building Code and thus satisfy the requirements of WAC 173-303-806(4)(a)(xi).
Two approaches are allowed per UBC, the design procedures prescribed in Chapter 16 and alternate procedures per Section 1629.10. The procedures to be utilized for each SSC is set after the SSC is categorized.
Each facility is evaluated to determine both the hazards associated with internal events caused by the process systems and hazards associated with the events external to the facility, including seismic events. The hazard assessment process will identify SSCs which have important to safety functions. Once these SSCs are identified, they are categorized based on the necessity for them to function during or following a seismic event.

3 Seismic Categorization

RPP-WTP Facility SSCs designated as important to safety are designed to withstand the effects of Natural Phenomena Hazards (NPH) without loss of capability to perform their safety function per 24590-WTP-SRD-ESH-01-001-02, *Safety Requirements Document Volume II*, Safety Criterion 4.1-3. The most significant NPH being seismic events. The seismic categories used for designing RPP-WTP facilities are defined by the requirements of the SSC to perform its safety function during a seismic event. The seismic categories are:

Table 3-1 RPP-WTP Seismic Categorization[a]

RPP-WTP Seismic Category (SC)[b]	Description	Population
I	Important to safety (safety class) SSCs with seismic safety function.	Includes both front line systems and supports systems (for example, power, controls, foundations, supports)
II	Important to safety SSCs with seismic safety function.	Includes only SSCs whose failure from an earthquake could prevent an SC-I SSC with seismic safety function from performing its specified safety function.

Table 3-1 RPP-WTP Seismic Categorization[a] (Continued)		
RPP-WTP Seismic Category (SC)[b]	**Description**	**Population**
III	Important to safety SSCs with and without seismic safety function.	Includes the following: • A Safety Significant SSC that has a seismic safety function • an SSC (Safety Class, Safety significant, or Additional Protection class[APC]) whose seismic safety function is that its failure could adversely affect the seismic safety function of a SC-III Safety Significant SSC • A Safety Class or Safety Significant SSC that has no seismic safety function
IV	Important to safety SSCs without seismic safety function and non-important to safety SSCs.	Includes the following: • an APC SSC that has no seismic safety function (i.e., not required for prevention of an SSC intervention) • SSCs that are not important to safety and require seismic protection per the UBC

[a] Seismic Category information from Table 1-8 of 24590-WTP-PSAR-ESH-01-002-01, Rev. 4.

[b] See Table 1-9 of 24590-WTP-PSAR-ESH-01-002-01, Rev. 4, for corresponding WTP Performance Categorization per DOE-STD-1024-94.

4 Seismic Design Criteria

The RPP-WTP Project has evaluated standards for seismic design, which meet the minimum requirements of UBC and selected Department of Energy standard DOE-STD-1020, for evaluation of natural phenomena hazards, including specifically for seismic design. Table 4-1 below provides the seismic design criteria developed for design of RPP-WTP Facilities as found in 24590-WTP-SRD-ESH-01-001-02, *Safety Requirements Document Volume II*, Safety Criterion 4.1-3.

Table 4-1 Seismic Design Loads Applicable to RPP-WTP SSCs

Hazard	Load	Source Document for Load
Seismic Category I	DBE with 0.30 g horizontal PGA and 0.21 g vertical PGA	DOE Letter 05-WTP-036[a, e] DOE-STD-1020-94[b]
Seismic Category II	DBE with 0.30 g horizontal PGA and 0.21 g vertical PGA[c]	DOE Letter 05-WTP-036[a, e] DOE-STD-1020-94[b]
Seismic Category III	DOE-STD-1020-94(Capacity from Uniform Building Code,[d] Static Force procedure)	DOE-STD-1020-94[b]
Seismic Category IV	DOE-STD-1020-94(Capacity from Uniform Building Code,[d] Static Force procedure)	DOE-STD-1020-94[b]

[a] DOE Letter 05-WTP-036, "Delivery of Revised Seismic Ground Motion Spectra to be Used as the Design Basis for the Design of the Waste Treatment and Immobilization Plant (WTP)," dated February 11, 2005. The revised seismic ground motion (RGM) with 2000-uear return period as provided by DOE Letter 05-WTO-036 shall be used on the WTP project as the approved DBE when discussing and analyzing the bounding earthquake.

[b] DOE-STD-1020-94 (Change 1, 1996), "Natural Phenomena Hazards Design and Evaluation Criteria for Department of Energy Facilities," as tailored in Appendix C of the Safety Requirements Document, 24590-WTP-SRD-ESH-01-001-02.

[c] DOE-STD-1020-94, Section 2.3.2, allows reduction in the elastically computed seismic responses by the use of the inelastic energy absorption factor in the design of Performance Category 3 structures. Credit for inelastic energy absorption is considered only in the design of Seismic Category II structures, and evaluation of constructed SC-I structures designed for the original DBE loads as discussed in "Seismic Analysis and Design Criteria," 24590-WTP-DC-ST-04-001 Commentary, Section 10.5.b.

[d] 1997, Uniform Building code, International Conference of Building Officials, Whittier, California. DOE Developed site-specific spectra (CCN 139357, dated May 3, 2006). The site-specific spectra were compared to the UBC-97 earthquake spectra, which are based on a 500-year earthquake. The UBC-97 was found to envelope (be equal to or more conservative than) the site specific spectra 1000-year spectra. therefore, use of the site-spectra 1000-year spectra has been accomplished by the use of UBC-97.

[e] The WTP site specific ground motion with 2000-year return period as provided in DOE Letter 07-WTP-195 may be used on the WTP project on specific SSCs as approved by DOE.

5 Design Requirements

Seismic Categories I and II

The seismic design requirements for Seismic Categories I and II follow the alternate method permitted by UBC. The RPP-WTP project has selected alternative methods for evaluation of seismic loads and design of SSCs within the provisions of the UBC. These alternative evaluation procedures applied to SC-I and

ZASC-II SSCs are established in the "Seismic Analysis and Design Criteria," 24590-WTP-DC-ST-04-001. This document governs the performance of seismic analysis and design of the RPP-WTP Facility. The UBC permits the use of alternative lateral-force procedures, using rational analyses based on well-established principals used for design of facilities with more significant hazardous consequences.

Seismic Categories III and IV

The seismic design requirements for Seismic Category III and Seismic Category IV SSCs follow the requirements of the UBC. In accordance with UBC, Figure 16-2, the USGS seismic hazards survey map, the RPP-WTP site is designated as seismic zone 2B. SC-III SSCs contain radioactive and hazardous materials and will be designed with an Importance Factor of 1.25. Since SC-IV SSCs do not contain significant radioactive or hazardous materials, the Importance Factor (I) used in design is 1.0.

6 Conclusion

In conclusion, the seismic design requirements for the RPP-WTP facilities meet the provisions of methods permitted by the UBC. The requirements for seismic design of Seismic Category I and II structures, systems and components are achieved through well-established alternative methods. The requirements for seismic design of Seismic Category III and IV structures, systems and components are achieved by direct application of the UBC. Structures, systems and components designed in accordance with the requirements established for the RPP-WTP project will adequately resist the maximum horizontal and vertical acceleration ground motions associated with the seismic zone 2B or site-specific seismic response spectra, as permitted by the UBC.

Operating Group 10 - Appendix 1.0
WTP Interim Compliance Schedule

Interim Compliance Schedule- WTP Facility		
	Compliance Schedule Submittal	**Interim Compliance Date**
	III.10.C.2	
1.	Submit documentation stating the WTP has been constructed in compliance with the Permit.	03/01/08
2.	Submit updated Site Transportation Report for incorporation into the Administrative Record.	Complete
33.	Update and resubmit the Part A, Form 3 Permit Application.	Complete
34.	DELETED	DELETED
	III.10.C.3	
3.	Revise and Submit Waste Analysis Plan and associated Quality Assurance Project Plan to Ecology for review and approval	04/01/07
	III.10.C.5.	
4.	Update and submit for approval "Procedures to Prevent Hazards", Chapter 6.0 Sections 6.3, 6.4, 6.5 and the Inspection Schedule.	04/01/07
	III.10.C.6	
5.	Update and submit the Contingency Plan	04/01/07
	III.10.C.7	
6.	Update and resubmit for review and approval Training Program description in Chapter 8 of the Permit.	04/01/07
7.	Submit under separate cover the actual WTP Dangerous Waste Training Plan for incorporation into Administrative Record.	04/01/07
	III.10.C.8	
8.	Update and resubmit the Closure Plan for approval	04/01/07
	III.10.C.11	
9.	Submit Risk Assessment Workplan, revised in consultation with Ecology.	Complete
	III.10.C.15	
36.	Submit System Descriptions for Mechanical Handling Systems identified in Permit Table III.10.C.A, for incorporation into the Administrative Record.	Complete

Interim Compliance Schedule- WTP Facility		
	Compliance Schedule Submittal	**Interim Compliance Date**
37.	Submit Mechanical Handling Diagrams and Mechanical Handling Data Sheets for the following pieces of equipment: a. HDH-CRN-00005 b. HEH-CRN-00003 c. HPH-CRN-00001 d. HPH-CRN-00002 e. HSH-CRN-00001 f. HSH-CRN-00014 g. LEH-CRN-00003 h. LPH-CRN-00002 i. HEH-CRN-00001	Complete
38.	Submit equipment instrument logic narrative description for mechanical handling equipment, as specified in Permit Condition III.10.C.15.a.ii.A.	Prior to initial receipt of dangerous waste.
39.	Submit descriptions of operational procedures for mechanical handling systems, as specified in Permit Condition III.10.C.15.a.ii.B.	Prior to initial receipt of dangerous waste.
	CONTAINERS III.10.D.10	
10.	Submit detailed information associated with containers and container management areas	03/22/06
11.	Submit descriptions of container management practices	04/01/07
	TANK SYSTEMS III.10.D.9	
12.	Submit engineering information for each secondary containment and leak detection system for the WTP Tank System to be included in the permit	10/30/2005
13.	Submit engineering information for each dangerous waste tank and primary sump to be included in the permit	04/29/06
14.	Submit engineering information for each tank system ancillary equipment to be included in the permit	04/29/06
15.	Submit descriptions of tank management practices	04/01/07
40.	Submit WTP document *Pipe Stress Design Criteria including "Pipe Stress Criteria" and "Span Method Criteria,"* 24590-WTP-DC-PS-01-001.	Complete
	CONTAINMENT BUILDINGS III.10.F.7	

Interim Compliance Schedule- WTP Facility		
	Compliance Schedule Submittal	**Interim Compliance Date**
16.	Submit engineering information for each containment building to be included in the permit	Complete
17.	Submit descriptions of containment building management practices	04/01/07
	PRETREATMENT PLANT MISC. UNITS SYSTEMS III.10.G.9	
18.	Submit engineering information for secondary containment and leak detection system for the Pretreatment Plant Miscellaneous Unit Systems	10/30/06
19.	Submit engineering information for Pretreatment Plant Miscellaneous Unit Systems	02/11/06
20.	Submit engineering information for Pretreatment Plant Miscellaneous Unit Systems equipment	04/12/06
21.	Submit descriptions of management practices for the Pretreatment Miscellaneous Treatment System	04/01/07
	LAW SHORT TERM MELTER UNIT III.10.H.5	
22.	Submit engineering information for LAW Vitrification Miscellaneous Treatment Unit secondary containment	Complete
23.	Submit engineering information for LAW Vitrification Miscellaneous Treatment Unit sub-system	08/18/06
24.	Submit engineering information for equipment for each LAW Vitrification Miscellaneous Treatment Unit sub-system	Complete
25.	Submit descriptions of management practices for the LAW Vitrification Miscellaneous Treatment System	04/01/07
26.	Submit LAW Vitrification Environmental Performance Demonstration Test Plan for Ecology review and approval	10/02/06
	HLW SHORT TERM MELTER UNIT III.10.J.5	
27.	Submit engineering information for HLW Vitrification Miscellaneous Treatment Unit secondary containment	Complete
28.	Submit engineering information for HLW Vitrification Miscellaneous Treatment Unit sub-system	Complete

Interim Compliance Schedule- WTP Facility		
	Compliance Schedule Submittal	**Interim Compliance Date**
29.	Submit engineering information for equipment for each HLW Vitrification Miscellaneous Treatment Unit sub-system	Complete
41.	Submit the following source drawings to complete HLW melter permit packages HLW-018 and HLW-019: ▪ P&ID *HLW Melter 1 System Film Cooler Utilities*, 24590-HLW-M6-HMP-00012, ▪ P&ID *HLW Melter 2 System Film Cooler Utilities*, 24590-HLW-M6-HMP-20012, ▪ HLW Melter Mechanical Drawings showing the melter physical attributes and overall dimensions.	Complete
30.	Submit descriptions of management practices for the HLW Vitrification Miscellaneous Treatment System	04/01/07
31.	Submit HLW Vitrification Environmental Performance Demonstration Test Plan for Ecology review and approval	10/02/06
	REPORT OF PROGRESS	
35.	Submit 2005 Report of Progress	Complete
42.	Submit 2007 Report of Progress	Complete
	FINAL COMPLIANCE DATE	
32.	Final Compliance Date	02/28/09

Operating Unit Group 10 – Appendix 6.0

Where information regarding treatment, management, and disposal of the radioactive source, byproduct material, and/or special nuclear components of mixed waste (as defined by the Atomic Energy Act of 1954, as amended) has been incorporated into this permit, it is not incorporated for the purpose of regulating the radiation hazards of such components under the authority of this permit and chapter 70.105 RCW. In the event of any conflict between Permit Condition III.10.A and any statement relating to the regulation of source, special nuclear, and byproduct material contained in portions of the permit application that are incorporated into this permit, Permit Condition III.10.A will prevail.

Drawings and Documents

Operating Unit Group 10 – Appendix 6.0
Index

Appendix 6.1	Environmental Risk Assessment Work Plan
Appendix 6.2	Risk Assessment Work Plan (RESERVED)
Appendix 6.3	Pre-Demonstration Test Risk Assessment Report (RESERVED)
Appendix 6.4	Final Risk Assessment (RESERVED)

This page intentionally left blank.

Drawings and Documents

Operating Unit Group 10 – Appendix 6.1
Environmental Risk Assessment Work Plan

The documents listed in the following table are incorporated by reference into this permit and are subject to the requirements set forth in Part I Standard Conditions, Part II General Facility Conditions, and Part III Operating Unit Group 10 Conditions. Upon request, copies of the documents can be viewed at the Nuclear Waste Program Resource Center located at 3100 Port of Benton Blvd. Richland, WA. Appointments for viewing can be scheduled by calling (509) 372-7950.

Appendix	***Drawing/Document Number***	***Description***
Appendix 6.1	24590-WTP-RPT-ENS-03-006, Rev 0	Environmental Risk Assessment Work Plan for the Hanford Tank Waste Treatment and Immobilization Plant 07/30/2003
Appendix 6.1.1	24590-RPT-W375-EN00001, Rev. 1	Final Work Plan for Screening Level Risk Assessment for the RPP-WTP 04/28/2000
Appendix 6.1.2	DOE-01-EQD-021	Ecology/EPA Technical Comments on Hanford River Protection Privatization Project Review of BNFL Final Work Plan for Screening Level Risk Assessment for the RPP-WTP 04/28/2000

Source documents (which do not include a "P" in the last set of numbers, e.g. "-P0001," or "-TP001") should be used in conjunction with any document change notices issued against them.

We are currently transitioning from permit documents (which do include a "P" in the last set of numbers) to source documents. At the end of the transition period, permit submittals will contain source documents and will be incorporated into the permit as described in Ecology Publication # 07-05-006 (www.ecy.wa.gov/biblio/nwp.html).

1
2
3
4
5

This page intentionally left blank.

Operating Unit Group 10 – Appendix 7.0

Where information regarding treatment, management, and disposal of the radioactive source, byproduct material, and/or special nuclear components of mixed waste (as defined by the Atomic Energy Act of 1954, as amended) has been incorporated into this permit, it is not incorporated for the purpose of regulating the radiation hazards of such components under the authority of this permit and chapter 70.105 RCW. In the event of any conflict between Permit Condition III.10.A and any statement relating to the regulation of source, special nuclear, and byproduct material contained in portions of the permit application that are incorporated into this permit, Permit Condition III.10.A will prevail.

Operating Unit Group 10 – Appendix 7.0

Index

WTP Documents Applicable to All Areas

Appendix 7.1	Process Flow Diagrams
Appendix 7.2	Piping and Instrumentation Diagrams & Related Documents
Appendix 7.3	System Description Documentation (RESERVED)
Appendix 7.4	General Arrangement Drawings (RESERVED)
Appendix 7.5	Civil, Structural, and Architectural Criteria and Typical Design Details
Appendix 7.6	Mechanical Drawings (RESERVED)
Appendix 7.7	Specifications
Appendix 7.8	Engineering Calculations (RESERVED)
Appendix 7.9	Material Selection Documentation
Appendix 7.10	Critical Systems Equipment/Instrument List (RESERVED)
Appendix 7.11	IQRPE Reports
Appendix 7.12	Installation Plans
Appendix 7.13	Instrument Control Logic and Narrative Description (RESERVED)
Appendix 7.14	Description of Instrument Installation and Testing Procedures (RESERVED)
Appendix 7.15	WTP Common Operating Documents

1
2
3
4
5 This page intentionally left blank.

Drawings and Documents

Operating Unit Group 10 – Appendix 7.1
WTP Documents Applicable to All Areas
Process Flow Diagrams

The documents listed in the following table are incorporated by reference into this permit and are subject to the requirements set forth in Part I Standard Conditions, Part II General Facility Conditions, and Part III Operating Unit Group 10 Conditions. Upon request, copies of the documents can be viewed at the Nuclear Waste Program Resource Center located at 3100 Port of Benton Blvd. Richland, WA. Appointments for viewing can be scheduled by calling (509) 372-7950.

Drawing/Document Number	***Description***
24590-WTP-M5-V17T-P0001, Rev 0	Process Flow Diagrams Legends & Symbols
RESERVED	RESERVED

Source documents (which do not include a "P" in the last set of numbers, e.g. "-P0001," or "-TP001") should be used in conjunction with any document change notices issued against them.

We are currently transitioning from permit documents (which do include a "P" in the last set of numbers) to source documents. At the end of the transition period, permit submittals will contain source documents and will be incorporated into the permit as described in Ecology Publication # 07-05-006 (www.ecy.wa.gov/biblio/nwp.html).

This page intentionally left blank.

Drawings and Documents

Operating Unit Group 10 – Appendix 7.2
WTP Documents Applicable to All Areas
Piping and Instrumentation Diagrams & Related Documents

The documents listed in the following table are incorporated by reference into this permit and are subject to the requirements set forth in Part I Standard Conditions, Part II General Facility Conditions, and Part III Operating Unit Group 10 Conditions. Upon request, copies of the documents can be viewed at the Nuclear Waste Program Resource Center located at 3100 Port of Benton Blvd. Richland, WA. Appointments for viewing can be scheduled by calling (509) 372-7950.

Drawing/Document Number	***Description***
24590-WTP-PER-PL-02-001 Rev 6	Piping Material Class Description
24590-WTP-M6-50-P0001, Rev 2	P&ID Symbols and Legend Sheet 1 of 8
24590-WTP-M6-50-P0002, Rev 2	P&ID Symbols and Legend Sheet 2 of 8
24590-WTP-M6-50-P0003, Rev 2	P&ID Symbols and Legend Sheet 3 of 8
24590-WTP-M6-50-P0004, Rev 2	P&ID Symbols and Legend Sheet 4 of 8
24590-WTP-M6-50-P0005, Rev 2	P&ID Symbols and Legend Sheet 5 of 8
24590-WTP-M6-50-P0006, Rev 2	P&ID Symbols and Legend Sheet 6 of 8
24590-WTP-M6-50-P0007, Rev 0	P&ID Symbols and Legend Sheet 7 of 8
24590-WTP-M6-50-P0008, Rev 0	P&ID Symbols and Legend Sheet 8 of 8
RESERVED	RESERVED

Source documents (which do not include a "P" in the last set of numbers, e.g. "-P0001," or "-TP001") should be used in conjunction with any document change notices issued against them.

We are currently transitioning from permit documents (which do include a "P" in the last set of numbers) to source documents. At the end of the transition period, permit submittals will contain source documents and will be incorporated into the permit as described in Ecology Publication # 07-05-006 (www.ecy.wa.gov/biblio/nwp.html).

1
2
3
4
5 This page intentionally left blank.

PUMPS

- AIR DRIVEN PUMP
- CENTRIFUGAL PUMP
- HAND PUMP
- MOTOR DRIVEN DIAPHRAGM PUMP
- VACUUM PUMP
- POSITIVE DISPLACEMENT PUMP
- ROTARY PUMP
- VERTICAL PUMP
- PERISTALTIC PUMP
- VERTICAL CAN PUMP
- SUMP PUMP
- JET PUMP PAIR (JPP)
- REVERSE FLOW DIVERTER (RFD) PUMP
- EJECTOR/EDUCTOR
- AXIAL FLOW PUMP
- AXIAL FLOW PUMP W/ FAN
- SUBMERSIBLE SUMP PUMP
- INLINE/ CONDENSATE PUMP
- GEAR PUMP
- ADS PUMP
- AIR OR STEAM DRIVEN CONDENSATE RETURN PUMPING TRAP
- ELECTRIC CONDENSATE RETURN PUMP SET (DUPLEX PUMPS SHOWN)

TANKS AND VESSELS

- LINED SUMP NOTE 9
- UNLINED SUMP NOTE 9
- FLAT TOP TANK
- TANK CONICAL BOTTOM
- TANK CONE ROOF
- VESSEL
- DIAPHRAGM TYPE EXPANSION VESSEL
- VESSEL
- JACKETED VESSEL
- DUAL JACKETED VESSEL
- EVAPORATOR VESSEL (SEPARATOR)
- SAMPLE POT
- LUTE POT
- PULSE POT
- BREAK POT
- SURGE VESSEL
- CLOSED LIQUID SEAL POT
- OPEN LIQUID SEAL POT
- SEPARATOR (AIR OR STEAM)

COMPRESSORS

- CENTRIFUGAL COMPRESSOR
- POSITIVE DISPLACEMENT COMPRESSOR
- ROTARY SCREW COMPRESSOR
- AIR AMPLIFIER COMPRESSOR

MISCELLANEOUS EQUIPMENT

- PULSE JET MIXER (PJM)
- JET MIXER
- MIXER / AGITATOR
- VORTEX BREAKER
- ULTRAFILTER OR REVERSE OSMOSIS UNIT
- AIR COOLED CONDENSER
- AIR BLOWN COOLER/CONDENSER
- CARTRIDGE FILTER
- GAS BOTTLE
- SILENCER

EQUIPMENT NOZZLES

BLIND FLANGED | FLANGED | WELDED

- MAINTENANCE ACCESS (WELDED SHUT) (FLANGED)
- ELECTROSTATIC PRECIPITATOR
- WALL BOX / FLOOR BOX / BULKHEAD / MODULE PENETRATION (ONE OR MANY PIPELINES) NOTES 6, 7, 8
- ROTATING SPRAY NOZZLE
- ELECTRIC MOTOR
- ADJUSTABLE SPEED DRIVE (ASD)
- PACKED FILTER
- SPECIALITY ITEM (SP)
- 3-WAY JUMPER SPARE SHOWN SHADED (B A C)
- RIGID JUMPER (DUAL OR MULTIPLE ENDS)
- FLEXIBLE JUMPER (DUAL OR MULTIPLE ENDS)
- BLIND/SPARE JUMPER
- ELECTRICAL JUMPER
- P-JOGGLE

WBOX, FBOX NUMBER OR P-JOGGLE NUMBER (N01, N02) (JOGGLE PENETRATION) NOTE 10

MISCELLANEOUS EQUIPMENT (CONT.)

- LEAK DETECTION BOX
- DEMISTER
- PTF HIGH EFFICIENCY MIST ELIMINATOR (HEME)
- HLW HIGH EFFICIENCY MIST ELIMINATOR (HEME)
- MOISTURE SEPARATOR
- MIST ELIMINATOR
- RESIN SHIPPING CONTAINER
- LAW CAUSTIC SCRUBBER
- PTF CAUSTIC SCRUBBER
- TRANSFORMER
- ELECTRIC HEAT COIL
- LAW HEATER
- LAW OFFGAS PREHEATER
- DEWATERING SCREEN — PTF SPENT RESIN DEWATERING DISPOSAL TRANSPORT CASK

MISCELLANEOUS EQUIPMENT (CONT.)

- COOLING PANEL
- CYCLONE SEPARATOR
- SCREEN/ CATALYTIC BED
- LAW WET ELECTRO-STATIC PRECIPITATOR (WESP)
- HLW WET ELECTRO-STATIC PRECIPITATOR (WESP)
- HLW CARBON ABSORBER

COLUMNS

- SILVER MORDENITE COLUMN
- DISTILLATION COLUMN
- TRAY COLUMN
- PACKED COLUMN
- IX COLUMN

HEAT EXCHANGERS

- SHELL AND TUBE/ SPIRAL HEAT EXCHANGER NOTE 5
- U-TUBE HEAT EXCHANGER
- PLATE & FRAME EXCHANGER/ MODERNITE PREHEATER (FLOW PATHS MAY BE SHOWN FOR CLARITY AS DASHED LINES)
- CONCENTRIC PIPE HEAT EXCHANGERS
- REBOILER
- AFTERCOOLER
- SAMPLE COOLER (CONDENSER)
- COOLER/VAPORIZER COIL
- HEATING/COOLING COIL
- WATER COOLED CENTRIFUGAL CHILLER
- STEAM DESUPERHEATER
- THERMAL OXIDIZER

MELTER AND RELATED EQUIPMENT

- HLW CANISTER
- LAW CANISTER
- FILM COOLER
- LAW CONTAINER TURNTABLE

NOTES:

1-3. DELETED

4. CONTENTS OF THIS DOCUMENT ARE DANGEROUS WASTE PERMIT AFFECTING.
5. MULTI-PASS HEAT EXCHANGERS MAY BE SHOWN WITH SPLIT CHANNEL(S).
6. PIPING WITHIN WALL MODULES HAS THE SAME SEISMIC CATEGORY AND QUALITY LEVEL AS THE ATTACHED PIPE.
7. BULKHEAD STRUCTURES ARE SEISMIC CATEGORY SC-II AND QUALITY LEVEL Q.
8. THESE ITEMS ARE NOT LISTED IN THE COMPONENT INFORMATION SYSTEM (CIS) AND ARE SHOWN FOR CONSTRUCTION REFERENCE ONLY.
9. SHOWN AS COVERED (GRATE OR OTHER) SUMP.
10. THE GEOMETRY OF JOGGLED (OFFSET) PENETRATION IS QUALITY LEVEL Q FOR RADIATION PROTECTION. THE QUALITY LEVEL AND SEISMIC CATEGORY DESIGNATIONS OF PIPING WITHIN JOGGLES ARE THE SAME AS CONNECTING PIPING. PIPING WITHIN SPARE JOGGLES IS QUALITY LEVEL Q AND SEISMIC CATEGORY SC-I.
11. THE COMPONENTS SHOWN ON THIS DRAWING IN PHANTOM DO NOT REQUIRE INDEPENDENT QUALIFIED REGISTERED PROFESSIONAL ENGINEER (IQRPE) ASSESSMENTS OF DESIGN OR INSTALLATION INSPECTIONS BY A QUALIFIED INSTALLATION INSPECTOR IN ACCORDANCE WITH THE DWP AND/OR WASHINGTON ADMINISTRATIVE CODE (WAC) REQUIREMENTS.
12. REVISED TO INCORPORATE 24590-WTP-M6N-50-00001, 00015, 00030, 00036, 00037, 00039 AND ADDITION OF VARIOUS SYMBOLS AND EDITORIAL COMMENTS.

PLEASE NOTE THAT SOURCE, SPECIAL NUCLEAR AND BYPRODUCT MATERIALS, AS DEFINED IN THE ATOMIC ENERGY ACT OF 1954 (AEA), ARE REGULATED AT THE U.S. DEPARTMENT OF ENERGY (DOE) FACILITIES EXCLUSIVELY BY DOE ACTING PURSUANT TO ITS ACA AUTHORITY. DOE ASSERTS, THAT PURSUANT TO THE AEA, IT HAS SOLE AND EXCLUSIVE RESPONSIBILITY AND AUTHORITY TO REGULATE SOURCE, SPECIAL NUCLEAR, AND BYPRODUCT MATERIAL AT DOE-OWNED NUCLEAR FACILITIES. INFORMATION CONTAINED HEREIN ON RADIONUCLIDES IS PROVIDED FOR PROCESS DESCRIPTION PURPOSES ONLY.

REV	DESCRIPTION	ORG	CHKD	RVWD	APVD	DATE
2	ISSUED FOR PERMITTING USE	LCS	WH	ERK	RKG	10/10/07
1	ISSUED FOR PERMITTING USE	TB	BL	DCP	MH	12/13/03
0	ISSUED FOR PERMITTING USE	KC	US	N/A	GD	7/24/02

REVISION HISTORY

ISSUED BY RPP-WRP PDC — ISSUE STAMP

PROJECT No.	24590	
SITE	HANFORD	
AREA	200E	
BUILDING No.		

	BY	DATE
ORIGINATOR	K. CHANDRASEKARN	7/17/02
CHECKER	UTPAL SEN	7/17/02
APPROVER	GARTH DUNCAN	7/24/02
REVIEWER	N/A	

CONTENT APPLICABLE TO ALARA? ☐ YES ☒ NO
ADR NO. N/A REV: N/A
SAFETY SCREEN REQUIRED? ☐ YES ☒ NO E&NS INITIAL IF YES
SAFETY SCREEN IS REQUIRED FOR DRAWING TYPES IDENTIFIED IN 24590-WTP-GPP-SREG-002

BECHTEL NATIONAL, INC.

RIVER PROTECTION PROJECT
WASTE TREATMENT PLANT
2435 STEVENS CENTER PLACE
RICHLAND, WA 99354

CONTRACT No: DE-AC27-01RV14136

P&ID SYMBOLS AND LEGEND SHEET 1 OF 8

SCALE:	24590-WTP-M6-50-P0001	REV
NONE		2

E-SIZE - 44 x 34
COMPUTER GENERATED - MANUAL CHANGES NOT PERMITTED

R1083426B

09/27/2007 05:11:07 PM

PLOTTED BY: tsosmic
C:\Work\Lessons\Lsdms05067\WTPM65P0001.dgn

FORM E_SDN.DGN 02/2003

VALVES

NORMALLY OPEN	NOTE 13	NORMALLY CLOSED
	GATE VALVE	
	GLOBE VALVE	
	BALL VALVE	
	PLUG VALVE	
	STOP CHECK VALVE	
	DIAPHRAGM VALVE	
	ANGLE PLUG VALVE	
	ANGLE VALVE	
	NEEDLE VALVE	
	CIRCUIT SETTER/BALANCING VALVE	
	HYDRONIC BALANCING VALVE	
	CHECK VALVE	
	CHECK VALVE, SPRING LOADED	
	EXCESS FLOW CHECK VALVE	
	FOOT CHECK VALVE	
	FLOAT VALVE	
	PINCH VALVE	
	BUTTERFLY VALVE NOTE 14	
	ANGLE CHECK VALVE	
	3-WAY MIXING GATE VALVE	
	3-WAY PLUG VALVE NOTE 11	
	3-WAY BALL VALVE NOTE 11	
	3-WAY GATE SPLITTER VALVE	
	4-WAY PLUG VALVE NOTE 12	
	4-WAY BALL VALVE NOTE 12	
	PRESSURE RELIEF VALVE (SEE 24590-WTP-M6-50-00003)	
AIR FLOW	VACUUM RELIEF VALVE (SEE 24590-WTP-M6-50-00003)	
FC	FC = VALVE FAILS CLOSED (SHOWN) FI = VALVE FAILS INDETERMINATE FL = VALVE FAILS LAST POSITION FO = VALVE FAILS OPEN	
	CONTROL VALVE W/HANDWHEEL	
	MULTIWAY DIVERTER VALVE WITH PISTON ACTUATOR	
	STANDARD DIVERTER VALVE WITH PISTON ACTUATOR	
	ROTARY VALVE	
	2-WAY DIVERTER VALVE W/PISTON ACTUATOR	

VALVES (CONT.)

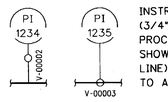

INSTRUMENT ROOT VALVE (3/4" WHEN SHOWN ON THE PROCESS LINE AND 1/2" WHEN SHOWN ON THE INSTRUMENT LINE) PIPING RESPONSIBLE, UP TO AND INCLUDING, ROOT VALVE

SLIDE VALVE

SLIDE VALVE WITH SEAL

IN LINE ITEMS

- WYE / LATERAL
- Y-STRAINER
- BASKET STRAINER
- DUPLEX STRAINER
- START-UP STRAINER
- SCREEN STRAINER
- T-TYPE STRAINER
- REMOVABLE SPOOL PIECE
- REMOVABLE FLEXIBLE CONNECTION
- SCREWED CAP
- WELDED CAP
- BREATHABLE CAP
- VICTAULIC CAP
- VICTAULIC FITTING
- CONCENTRIC REDUCER
- ECCENTRIC REDUCER
- EXPANSION JOINT / BELLOWS
- FLANGE
- FLANGE - BLINDED
- UNION
- RESTRICTION ORIFICE
- HOSE CONNECTION
- HOSE COUPLER
- FLEX HOSE/ HOSE ASSEMBLY
- QUICK DISCONNECT
- IN-LINE FILTER (F)
- IN-LINE TRAP (T)
- IN-LINE MIXER
- MIXING TEE
- SPARK/FLAME ARRESTOR
- UV STERILIZER (UV)
- PUMP SUCTION DIFFUSER (PSD)
- DEMISTER
- SPECTACLE BLIND (CLOSED) (OPEN)

VENT/DRAIN COMPONENTS

- VENT
- VENT WITH FLAME TRAP AND HOLDER
- VENT WITH MESH GUARD
- AUTOMATIC VENT (V)
- VACUUM BREAKER OR PRESSURE/VACUUM BREAKER
- FLOOR DRAIN (WITH STRAINER)
- FLOOR DRAIN (OPEN)
- FLOOR DRAIN (PLUGGED)
- BULGE/SAMPLER FLOOR DRAIN
- LOOP SEAL/P-TRAP (LUTE)
- WATER HAMMER ARRESTOR
- CUPSINK
- FILL FUNNEL

FLOW LINES

- PRIMARY FLOW
- SECONDARY FLOW
- DRAIN LINE
- INSULATED LINE
- INSULATED AND HEAT TRACED LINE
- COAXIAL LINE FOR SECONDARY CONTAINMENT
- HEAT TRACED PRIMARY FLOW WITHOUT INSULATION
- BURIED

BOUNDARIES

S11B / S11C — PIPELINE BREAK

USE PIPELINE BREAKS TO DENOTE TRANSITIONS IN:
- PIPING MATERIAL CLASS SPECIFICATION
- ABOVE GROUND / UNDERGROUND PIPING
- HOT CELL / BLACK CELL PIPING
- VENDOR / BECHTEL SCOPE CHANGE INTERFACE
- OTHER PIPELINE ATTRIBUTES (SEE ABBREVIATIONS FOR APPROPRIATE NOTATION)

Q / T — QUALITY LEVEL (Q, CM)
SEISMIC CATEGORY (I,II,III,IV,V)

REFERENCE TO EQUIPMENT SHOWN ON ANOTHER DRAWING

EQUIPMENT SKID OR VENDOR PACKAGE NOTE 9

FIRE AREA BOUNDARY

FUTURE — MELTER 2 — RTP-M6-PSW-00001 A4

GRAYSCALE

NAMING CONVENTIONS

DRAWING NUMBERS

24590-HLW-M6-DIW-00001
- RPP-WTP JOB NUMBER
- FACILITY
- DOCUMENT TYPE
- SYSTEM LOCATOR
- DRAWING SEQUENTIAL NUMBER

EQUIPMENT NUMBERS

URR-HX-00001
- SYSTEM LOCATOR
- COMPONENT IDENTIFIER
- SEQUENCE NUMBER

PIPELINE/BRANCH NUMBERS

1 CXP-JS-00001-S11B-01-B01
- SECTION NUMBER (NORMALLY NOT SHOWN)
- SYSTEM LOCATOR
- FLUID SERVICE
- SEQUENCE NUMBER
- PIPE SPEC
- PIPE SIZE
- BRANCH NUMBER IF NEEDED

1 01-B01
- SECTION NUMBER (NORMALLY NOT SHOWN)
- PIPE SIZE
- BRANCH NUMBER

PIPING SPECIALTY NUMBERS

HPS-SP-00001
- SYSTEM LOCATOR
- COMPONENT IDENTIFIER
- SEQUENCE NUMBER

VALVE NUMBERS

HPS-V-00001
- SYSTEM LOCATOR
- COMPONENT IDENTIFIER
- SEQUENCE NUMBER

ROOT VALVE NUMBERS

NOTE 8

V-00001
- COMPONENT IDENTIFIER
- SEQUENCE NUMBER

IN LINE COMPONENT NUMBERS

HPS-STR-00001
- SYSTEM LOCATOR
- COMPONENT IDENTIFIER
- SEQUENCE NUMBER

OFF SHEET CONNECTOR

SERVICE DESCRIPTION
ORIGIN/DESTINATION

HLW-M6-DIW-00001 F4
- DRAWING COORDINATES
- DRAWING SEQUENTIAL NUMBER
- SYSTEM LOCATOR
- DOCUMENT TYPE
- FACILITY

SAFETY

- EYE WASH
- SHOWER/EYE WASH

FANS AND BLOWERS

- CENTRIFUGAL FAN
- BLOWER

HUMIDIFIERS

G

- G - LOW PRESSURE STEAM GRID (SHOWN)
- S - STEAM PAN
- H - HOT WATER PAN
- E - ELECTRIC PAN
- W - WATER

COILS

- H - HEATING COIL (SHOWN)

H / HW
- PH - PRE-HEATING COIL
- HW - HOT WATER (SHOWN)
- S - STEAM
- E - ELECTRIC
- G - GAS
- HR - HEAT RECOVERY

- C - COOLING COIL (SHOWN)

C / CH
- CH - REFRIG. COOLED CHILLED WATER (SHOWN)
- CW - COOLING WATER
- DX - REFRIGERANT DIRECT EXPANSION

IN-BLEED

IN-BLEED UNIT

AIR CLEANING DEVICES

LOW — LOW EFFICIENCY ROUGHING FILTER 10% TO 35% EFFICIENCY BY ASHRAE WEIGHT TEST (SHOWN)

MOD — MODERATE EFFICIENCY FILTER 20% TO 80% EFFICIENCY BY ASHRAE STAIN TEST

HIGH — HIGH EFFICIENCY FILTER 85% EFFICIENCY BY ASHRAE STAIN TEST TO 95% EFFICIENCY FOR 0.30 MICROMETER DOP

HEPA — HIGH EFFICIENCY PARTICULATE AIR FILTER 99.97% EFFICIENCY FOR 0.30 MICROMETER DOP

OR

HEPA 6 — (NUMBER OF FILTER ELEMENTS IN HOUSING)

ULPA — ULTRALOW PENETRATION AIR FILTER 99.999% EFFICIENCY FOR 0.12 MICROMETER DOP

DAMPERS

LOUVER DAMPER

NOTES:

1. DELETED
2. CONTENTS OF THIS DOCUMENT ARE DANGEROUS WASTE PERMIT AFFECTING.
3-7. DELETED
8. ROOT VALVE SYSTEM IDENTIFIER IS NOT SHOWN, BUT SHALL MATCH THE SAME SYSTEM IDENTIFIER AS THE LINE NUMBER IT IS ATTACHED TO.
9. EQUIPMENT SKID OR VENDOR PACKAGE TO BE DESIGNED BY VENDOR WILL INDICATE THIS LINE STYLE (BY "VENDOR PACKAGE" OR "VENDOR" AND "BECHTEL" WITH ARROWS, FOR EXAMPLE). SKID OR PACKAGE TO BE DESIGNED BY BECHTEL WILL NOT INDICATE VENDOR, WILL SHOW BOUNDARY LINE ONLY.
10. DELETED
11. 3-WAY VALVES ARE SHOWN WITH ONE PATH NORMALLY CLOSED.
12. 4-WAY VALVES ARE SHOWN WITH TWO PATHS NORMALLY CLOSED.
13. DRAIN VALVES ARE SHOWN ON P&IDs AS HALF SIZE.
14. BUTTERFLY VALVE SHALL BE DESIGNATED NO (NORMALLY OPENED) OR NC (NORMALLY CLOSED).
15. THE COMPONENTS SHOWN ON THIS DRAWING IN PHANTOM DO NOT REQUIRE INDEPENDENT QUALIFIED REGISTERED PROFESSIONAL ENGINEER (IQRPE) ASSESSMENTS OF DESIGN OR INSTALLATION INSPECTIONS BY A QUALIFIED INSTALLATION INSPECTOR IN ACCORDANCE WITH THE DWP AND/OR WASHINGTON ADMINISTRATIVE CODE (WAC) REQUIREMENTS.
16. REVISED TO INCORPORATE 24590-WTP-M6N-50-00001, 00002, 00011, 00015, 00016, 00029, 00030, 00031, 00036, 00037, 00039, 00041, ADDED FIRE AREA BOUNDARY LINE TYPE AND INCORPORATED VARIOUS EDITORIAL COMMENTS.

ERIC B. ISERN — STATE OF WASHINGTON — 33449 — REGISTERED PROFESSIONAL ENGINEER — 10/12/07
EXPIRES: 07/28/08

PLEASE NOTE THAT SOURCE, SPECIAL NUCLEAR AND BYPRODUCT MATERIALS, AS DEFINED IN THE ATOMIC ENERGY ACT OF 1954 (AEA), ARE REGULATED AT THE U.S. DEPARTMENT OF ENERGY (DOE) FACILITIES EXCLUSIVELY BY DOE ACTING PURSUANT TO ITS AEA AUTHORITY. DOE ASSERTS, THAT PURSUANT TO THE AEA, IT HAS SOLE AND EXCLUSIVE RESPONSIBILITY AND AUTHORITY TO REGULATE SOURCE, SPECIAL NUCLEAR, AND BYPRODUCT MATERIAL AT DOE-OWNED NUCLEAR FACILITIES. INFORMATION CONTAINED HEREIN ON RADIONUCLIDES IS PROVIDED FOR PROCESS DESCRIPTION PURPOSES ONLY.

REV	DESCRIPTION	ORG	CHKD	RVWD	APVD	DATE
2	ISSUED FOR PERMITTING USE	LS	LW	DCP	MH	10/12/07
1	ISSUED FOR PERMITTING USE	TB	BL	DCP	MH	12/12/03
0	ISSUED FOR PERMITTING USE	KC	US	N/A	GD	7/24/02

REVISION HISTORY

ISSUED BY RPP-WTP PDC — ISSUE STAMP

	BY	DATE
PROJECT No.	24590	
SITE	HANFORD	
AREA	200E	
BUILDING No.		
ORIGINATOR	K. CHANDRASEKARN	7/17/02
CHECKER	UTPAL SEN	7/17/02
APPROVER	CARTH DUNCAN	7/24/02
REVIEWER	N/A	

CONTENT APPLICABLE TO ALARA? ☐ YES ☒ NO
ADR NO. N/A — REV: N/A
SAFETY SCREEN REQUIRED? ☐ YES ☒ NO — EMS INITIAL IF YES

BECHTEL
RIVER PROTECTION PROJECT
WASTE TREATMENT PLANT
2435 STEVENS CENTER PLACE
RICHLAND, WA 99354

CONTRACT No: DE-AC27-01RV14136

P&ID SYMBOLS AND LEGEND SHEET 2 OF 8

SCALE:

DRAWING NO.	REV
24590-WTP-M6-50-P0002	2

SAFETY SCREEN IS REQUIRED FOR DRAWING TYPES IDENTIFIED IN 24590-WTP-GPP-SREG-002

E SIZE - 44x34
COMPUTER GENERATED - MANUAL CHANGES NOT PERMITTED

M10834270

09/27/2007 05:11:40 PM

PLOTTED BY: tcservic
C:\Work Notice\Cpmd\SDE\WTP\M6\P0002.dgn

FORM E_SDN.DGN 02/2003

INSTRUMENT DISCRETE DEVICE AND / OR FUNCTION SYMBOLS

INSTRUMENT OR DEVICE LOCATION (NOTE A, B & C)

INSTRUMENT OR DEVICE TYPE	FIELD MOUNTED (NO PANEL)	FIELD MOUNTED (ON PANEL)	ANY CONTROL ROOM (MAIN, FACILITY, STAND-BY)
ACCESSIBLE TO OPERATOR / NOT ACCESSIBLE TO OPERATOR			
HARDWARE			
CONTINUOUS SOFTWARE			
DISCRETE SOFTWARE			

NOTES

A. "ACCESSIBLE" IS NOT APPLICABLE TO FIELD MOUNTED INSTRUMENTS OR DEVICES THAT ARE NOT MOUNTED ON A PANEL.

B. A PANEL MOUNTED INSTRUMENT OR DEVICE IS ACCESSIBLE TO THE OPERATOR WHEN THE PARAMETER IS VISUALLY DISPLAYED.

C. A CONTROL ROOM INSTRUMENT OR DEVICE IS ACCESSIBLE TO THE OPERATOR WHEN THE PARAMETER IS DISPLAYED ON A CRT (SOFTWARE) OR VISUALLY DISPLAYED (HARDWARE).

INSTRUMENT LINE SYMBOLS

- INSTRUMENT SUPPLY OR CONNECTION TO PROCESS
- PNEUMATIC SIGNAL
- ELECTRIC SIGNAL
- HYDRAULIC SIGNAL
- CAPILLARY TUBE
- RADAR, SONIC SIGNAL, OR CONDUCTIVITY PROBE
- RADAR OR SONIC SIGNAL (NOT GUIDED)
- INTERNAL SYSTEM LINK (SOFTWARE OR DATA LINK)
- MECHANICAL LINK

FUNCTION SYMBOLS

- ∫ INTEGRATE
- √ SQUARE ROOT EXTRACTOR
- 1:3 GAIN OR ATTENUATE (INPUT:OUTPUT)
- Σ ADD OR SUMMATION
- AVG AVERAGE
- Δ DIFFERENCE
- ÷ DIVIDE
- × MULTIPLY
- f(x) CHARACTERIZE
- < LOW SELECTOR
- > HIGH SELECTOR
- • + - BIAS
- REV REVERSE
- DIR DIRECT
- C MATHEMATIC CALCULATION FUNCTION
- SEL SELECT
- ASD ADJUSTABLE SPEED DRIVE

TYP. INSTRUMENT TO PROCESS CONNECTIONS (ANY VARIABLES)

- DIRECT CONNECTION
- CAPILLARY FILLED SYSTEM WITH DIAPHRAGM SEAL
- IN-LINE DEVICE
- ELECTROMAGNETIC OR SONIC
- DIRECT CONNECTION WITH PURGE (AIR) NOTE 10 (P, ISA)
- ATTACHED TO PROCESS PIPE BUT DOES NOT PENETRATE

MISCELLANEOUS SYMBOLS AND EXAMPLES

- PILOT LIGHT
- SIGNALCONTINUATION ON THE SAME DRAWING. THE POINTER ON THE CIRCLE INDICATES THE DIRECTION THE PAIR POINTS ON THE DRAWING.
- DAMPENER
- XT CCTV CAMERA
- RAH HORN (NOTE 16)
- RLH LIGHT

FLOW

- FT, FE: FLOW ORIFICE WITH DIFFERENTIAL TYPE FLOW TRANSMITTER (CORNER TAPS, FLANGE TAPS OR PIPE TAPS) (SEE 24590-WTP-M6-50-00004)
- FT, FE: VENTURI TUBE OR FLOW NOZZLE WITH DIFFERENTIAL TYPE FLOW TRANSMITTER
- FT, FE: SINGLE PORT PITOT OR PITOT - VENTURI TUBE WITH DIFFERENTIAL TYPE FLOW TRANSMITTER
- FT, FE: AVERAGING PITOT TUBE WITH DIFFERENTIAL TYPE FLOW TRANSMITTER
- FQI: - LOCAL ONLY - POSITIVE DISPLACEMENT FLOW TOTALIZER
- FT: TURBINE OR PROPELLER TYPE FLOW TRANSMITTER (TRANSMITTER INTEGRAL TO FLOW ELEMENT)
- NOTE 18, FT: VORTEX OR SWIRL METER MULTI-VARIABLE TYPE FLOW TRANSMITTER (TRANSMITTER INTEGRAL TO FLOW ELEMENT)
- FT, FE: VORTEX OR SWIRL METER TYPE FLOW ELEMENT (TRANSMITTER REMOTE MOUNTED)
- FI: VARIABLE AREA FLOW INDICATOR WITH INTEGRAL VALVE
- FT: VARIABLE AREA FLOW TRANSMITTER WITH INTEGRAL VALVE
- FI: VARIABLE AREA FLOW INDICATOR WITHOUT INTEGRAL VALVE
- FT: VARIABLE AREA FLOW TRANSMITTER WITHOUT INTEGRAL VALVE
- FT, M: MAGNETIC TYPE FLOW TRANSMITTER (TRANSMITTER INTEGRAL TO FLOW ELEMENT)
- FT, FE, M: MAGNETIC TYPE FLOW ELEMENT (TRANSMITTER REMOTE MOUNTED)
- NOTE 18, FT: CORIOLIS MULTI-VARIABLE TYPE FLOW TRANSMITTER (TRANSMITTER INTEGRAL TO FLOW ELEMENT)
- FT, FE: CORIOLIS TYPE FLOW ELEMENT (TRANSMITTER REMOTE MOUNTED)
- FT, FE, T: NOTE 17 THERMAL TYPE FLOW ELEMENT (TRANSMITTER REMOTE MOUNTED) REPLACE FT WITH FS FOR SWITCH
- FG: FLOW SIGHT GLASS

FLOW (CONT.)

- FX: FLOW STRAIGHTENER
- FT, INTEGRAL: INTEGRAL FLOW ORIFICE ASSEMBLY WITH DIFFERENTIAL TRANSMITTER (WITH ONE SINGLE UNIT)

LEVEL

- L( ): GAUGE GLASS, EXTERNAL FLOAT OR DISPLACEMENT TYPE LEVEL INSTRUMENT
- L( ): DIFFERENTIAL PRESSURE PRESSURIZED TANK
- L( ): DIFFERENTIAL PRESSURE ATMOSPHERE TANK (NOTE 4)
- L( ): DIFFERENTIAL PRESSURE LEVEL MEASUREMENT BUBBLER TYPE
- L( ): TYPE MOUNTED ON SIDE OF TANK. INTERNAL FLOAT DISPLACER
- L( ): TYPE MOUNTED ABOVE TANK (NUMBER OF DISPLACERS OPTIONAL). INTERNAL FLOAT OR DISPLACER
- L( ): PROBE TYPE (DIP TUBE, CONDUCTIVE, CAPACITANCE, ETC) MOUNTED ABOVE TANK (NUMBER OF PROBES IS OPTIONAL)

PRESSURE

- P( ), V-0234: DIRECT - CONNECTED
- PD( ), V-0234, V-0235: DIRECT - CONNECTED
- P( ): WITH REMOTE DIAPHRAGM SEAL PIPE MOUNTED
- P( ): WITH REMOTE MOUNTED FLUSH DIAPHRAM SEAL

TEST POINTS

- AP: ANALYTICAL POINT NOTE 13
- FP: FLOW POINT NOTE 13
- AW: SAMPLE PROBE NOTE 13
- PP: PRESSURE POINT NOTE 14
- TP: TEMPERATURE POINT NOTES 13, 14
- TP, PP: TEMPERATURE & PRESSURE POINT NOTES 13, 14

SELF - ACTUATED DEVICES - PRESSURE

- SET 0 XXX PSIG, PCV, NOTE 20: PRESSURE REDUCING REGULATOR, SELF-CONTAINED
- SET 0 XXX PSIG, PCV, NOTE 20: PRESSURE REDUCING REGULATOR, WITH EXTERNAL PRESSURE TAP
- SET 0 XXX PSIG, PDCV, NOTE 20: DIFFERENTIAL PRESSURE REDUCING REGULATOR, WITH INTERNAL AND EXTERNAL PRESSURE TAPS
- SET 0 XXX PSIG, PCV, NOTE 20: BACKPRESSURE REGULATOR SELF-CONTAINED
- SET 0 XXX PSIG, PCV, NOTE 20: BACKPRESSURE REGULATOR WITH EXTERNAL PRESSURE TAP
- SET 0 XXX PSIG, PSV: PRESSURE RELIEF OR SAFETY VALVE, ANGLE PATTERN, SPRING OR WEIGHT-LOADED, OR WITH INTEGRAL PILOT
- SET 0 XXX PSIG, PSV: VACUUM RELIEF VALVE, ANGLE PATTERN, SPRING OR WEIGHT-LOADED, OR WITH INTEGRAL PILOT
- SET 0 XXX PSIG, PSE: RUPTURE DISK FOR VACUUM RELIEF
- SET 0 XXX PSIG, PSE: RUPTURE DISK FOR PRESSURE RELIEF

SELF-ACTUATED DEVICES-FLOW

- FCV, NOTE 20: FLOW REGULATOR SELF-CONTAINED

SELF-ACTUATED DEVICES-LEVEL

- LCV, NOTE 20: LEVEL REGULATOR WITH MECHANICAL LINKAGE

SELF-ACTUATED DEVICES-TEMPERATURE

- TCV, NOTE 20: TEMPERATURE REGULATOR, FILLED-SYSTEM TYPE

SOLENOID OPERATED PILOT VALVE - TYPICAL SYMBOLS

- -Y, S, VENT, ISA, PSA

MOTOR OPERATED ROTARY VALVE

- YC, YV

ANALYSIS AND RADIATION

- AT, AE, O_2: FLOW - THROUGH TYPE (EXAMPLE FOR OXYGEN ANALYZER)
- AT, AE: GREAT SAMPLER TYPE RETURN TO PROCESS
- RT, RE: RADIATION ALPHA, BETA OR GAMMA MONITOR LIQUID PROCESS INDICATION (INLINE)
- RT, RX, RE, NOTE 12: RADIATION GAMMA MONITOR LIQUID PROCESS INDICATION

VALVES - ACTUATORS

- DIAPHRAGM SPRING OPPOSED
- DIAPHRAGM PRESSURE BALANCED
- M: ROTARY MOTOR (SHOWN TYPICALLY WITH ELECTRIC SIGNAL)
- PNEUMATIC CYLINDER SINGLE-ACTING, SPRING OPPOSED
- HYDRAULIC CYLINDER DOUBLE-ACTING
- PNEUMATIC CYLINDER DOUBLE-ACTING
- S: SINGLE SOLENOID
- S, R: SINGLE SOLENOID (SHOWN WITH MANUAL RESET)
- E/H: ELECTRO-HYDRAULIC
- E/P: ELECTRO-PNEUMATIC
- HAND ACTUATOR (MOUNTED AT TOP, SIDE OR BOTTOM OF ACTUATED DEVICE AS APPLICABLE)
- X: UNASSIGNED (TYPE OF ACTUATOR TO BE WRITTEN ADJACENT TO THE SYMBOL)
- VALVE WITH INTEGRAL ELECTRO-PNEUMATIC (E/P) POSITIONER
- PNEUMATIC CYLINDER SINGLE-ACTING, SPRING OPPOSED (DUAL VALVE)

TEMPERATURE

- TT, TE, NOTE 8: IN LINE TEMPERATURE ELEMENT WITH REMOTE TRANSMITTER
- TT, TE, NOTE 8: IN LINE TEMPERATURE ELEMENT WITH INTEGRAL TRANSMITTER
- TT, TE, NOTE 8, VESSEL: VESSEL TEMPERATURE ELEMENT WITH TRANSMITTER
- TI, NOTE 8: LOCAL TEMPERATURE INDICATOR
- TE, NOTE 8: RESISTANCE TEMPERATURE DETECTOR (RTD) OR THERMOCOUPLE (T/C)
- TE: SURFACE MOUNTED TEMPERATURE ELEMENT
- TW: THERMOWELL

ERIC B. ISERN, STATE OF WASHINGTON, REGISTERED PROFESSIONAL ENGINEER, 33449, 10/12/07, EXPIRES 07/28/09

NOTES:

1. THE SYMBOLS AND LEGENDS SHOWN ARE BASED ON ISA STANDARD, ANSI/ISA-S5.1-1984 R1992 "INSTRUMENTATION SYMBOLS AND IDENTIFICATION" AND STANDARD ISA-S5. 3-1983 "GRAPHIC SYMBOLS FOR DISTRIBUTED CONTROL/SHARED DISPLAY INSTRUMENTATION, LOGIC AND COMPUTER SYSTEMS".
2. DELETED.
3. TEXT LOCATION AROUND INSTRUMENTATION SYMBOLS ARE:

   J1: INSTRUMENT FUNCTION CODE, E.G., PDSH

   J2: UNIQUE LOOP NUMBER

   J3: FUNCTION (E.G. √) OR DEVICE DESIGNATION (I/P, P/I, I/I, P/H, ETC.)

   Z: DESIGNATES SAFETY ITEM WHERE THE SAFETY CLASS SHALL BE DEFINED AS SC OR SS AND QUALITY LEVEL Q.

   J4: PIL CIN - ASSOCIATES CIS DATABASE ENTRY WITH GRAPHIC (NORMALLY TRANSPARENT ON P&IDs).

   J5: ALPHA SYSTEM NUMBER, NORMALLY TRANSPARENT ON P&ID. EXCEPTION IS DIFFERENT SYSTEM NUMBER ON A GIVEN SYSTEM P&ID.

   NOTE _: A NOTE SHOULD BE ADDED IF THE INSTRUMENT PERFORMS AN AIR PERMIT FUNCTION.
4. THE UPPER IMPULSE LINE IS OMITTED IF LEVEL IS MEASURED USING ATMOSPHERIC PRESSURE AS REFERENCE.
5. NORMAL OPERATION MEANS PLANT EQUIPMENT IS IN OPERATING MODE FOR A CONTINUOUS OR BATCH PROCESS.
6. EXAMPLES OF USE OF TANGENTIAL INSTRUMENT CIRCLES TO DENOTE A SINGLE INSTRUMENT WITH TWO VARIABLES AND/OR TWO FUNCTIONS:

   TWO VARIABLES - "TT" FOR TOP BALLOON AND "FT" IN THE BOTTOM - MULTI-VARIABLE VORTEX FLOW METER.

   TWO FUNCTIONS - "LT" FOR TOP BALLOON AND "LC" IN THE BOTTOM - A DUAL FUNCTION LEVEL INSTRUMENT, ONE A TRANSMITTER, ONE A CONTROLLER.
7. INSTRUMENT NUMBERS ON P&IDs LIST THE INSTRUMENT FUNCTION CODE AND THE UNIQUE LOOP IDENTIFIER.
8. THERMOWELL INFERRED (NOT TO BE SHOWN).
9. MAIN CONTROL ROOM SYMBOLOGY SAME AS FOR INDIVIDUAL FACILITY CONTROL ROOM AND STAND-BY CONTROL ROOM.
10. THE FOLLOWING ABBREVIATIONS ARE SUGGESTED TO DENOTE THE TYPES OF POWER SUPPLY AND PURGE FLUID:
    - ISA/PSA - AIR SUPPLY
    - ES - ELECTRIC SUPPLY
    - WS - WATER SUPPLY
    - NS - NITROGEN SUPPLY
    - GS - GAS SUPPLY
11. DELETED
12. RX = SHIELDING (IN THIS USAGE ONLY).
13. A TEST POINT IS A PROCESS CONNECTION TO WHICH NO INSTRUMENT IS PERMANENTLY CONNECTED, BUT WHICH IS INTENDED FOR TEMPORARY, INTERMITTENT OR FUTURE CONNECTION OF AN INSTRUMENT.
    - AP — ANALYTICAL POINT
    - AW — SAMPLE PROBE
    - PP — PRESSURE POINT
    - TP — TEMPERATURE POINT

    NOTE: TP/PP MAY BE USED IN THE CASE OF A HOT TAP TESTING DEVICE WHERE NO THERMOWELL EXISTS (UTILITY SYSTEM ONLY). WHERE THERMOWELL USED FOR TEST POINT, IT MUST HAVE AN INSTRUMENT TAG.
14. TEST POINTS NOT ASSOCIATED WITH AN INSTRUMENT TAG.
15. CONTENTS OF THIS DOCUMENT ARE DANGEROUS WASTE PERMIT AFFECTING.
16. FOR OTHER AUDIBLE ALARM DEVICE REPLACE "HORN" WITH APPROPRIATE NAME OF DEVICE.
17. FOR INTEGRAL INSTRUMENTS, THE "FE" BUBBLE IS REMOVED AND THE LINE STYLE FROM SYMBOL TO "FT" BUBBLE IS SOLID.
18. THE SOFTWARE TAGS WILL INDICATE THE ADDITIONAL PROCESS VARIABLES MONITORED BY THE MULTI-VARIABLE TRANSMITTER.
19. DELETED
20. PCV, PDCV, FCV, LCV AND TCV VALVE BODY SYMBOL MAYBE SHOWN USING A GENERAL VALVE SYMBOL (GATE) IN ACCORDANCE WITH ISA S5.1, SECTION 6.4 AND 6.6; OR THE VALVE BODY SYMBOL MAYBE SHOWN AS THE SPECIFIC PURCHASED TYPE (I.E. GLOBE, ETC.)
21. THE COMPONENTS SHOWN ON THIS DRAWING IN PHANTOM DO NOT REQUIRE INDEPENDENT QUALIFIED REGISTERED PROFESSIONAL ENGINEER (IQRPE) ASSESSMENTS OF DESIGN OR INSTALLATION INSPECTIONS BY A QUALIFIED INSTALLATION INSPECTOR IN ACCORDANCE WITH THE DWP AND/OR WASHINGTON ADMINISTRATIVE CODE (WAC) REQUIREMENTS.
22. REVISED PER 24590-WTP-M6N-50-00012, 00017, 00023, 00028, 00039 AND INCORPORATED VARIOUS EDITORIAL COMMENTS.

PLEASE NOTE THAT SOURCE, SPECIAL NUCLEAR AND BYPRODUCT MATERIALS, AS DEFINED IN THE ATOMIC ENERGY ACT OF 1954 (AEA), ARE REGULATED AT THE U.S. DEPARTMENT OF ENERGY (DOE) FACILITIES EXCLUSIVELY BY DOE ACTING PURSUANT TO ITS AEA AUTHORITY. DOE ASSERTS, THAT PURSUANT TO THE AEA, IT HAS SOLE AND EXCLUSIVE RESPONSIBILITY AND AUTHORITY TO REGULATE SOURCE, SPECIAL NUCLEAR, AND BYPRODUCT MATERIAL AT DOE-OWNED NUCLEAR FACILITIES. INFORMATION CONTAINED HEREIN ON RADIONUCLIDES IS PROVIDED FOR PROCESS DESCRIPTION PURPOSES ONLY.

REVISION HISTORY

REV	DESCRIPTION	ORG	CHKD	RVWD	APVD	DATE
2	ISSUED FOR PERMITTING USE	LCS	[illegible]	CEK / ED	[illegible]	10/14/07
1	ISSUED FOR PERMITTING USE	TB	BL	DCP	MH	12/13/03
0	ISSUED FOR PERMITTING USE	KC	US	N/A	GD	7-24-02

ISSUED BY RPP-WTP PDC — ISSUE STAMP

PROJECT No.	24590	
SITE	HANFORD	
AREA	200E	
BUILDING No.		
	BY	DATE
ORIGINATOR	K. CHANDRASEKARN	JUL 17, 02
CHECKER	UTPAL SEN	JUL 17, 02
APPROVER	GARTH DUNCAN	7-24-02
REVIEWER	N/A	

CONTENT APPLICABLE TO ALARA? [ ] YES [X] NO
ADR NO. N/A REV: N/A
SAFETY SCREEN REQUIRED? [ ] YES [X] NO E&NS INITIAL IF YES

BECHTEL — RIVER PROTECTION PROJECT, WASTE TREATMENT PLANT, 2435 STEVENS CENTER PLACE, RICHLAND, WA 99354

CONTRACT No: DE-AC27-01RV14136

P&ID SYMBOLS AND LEGEND SHEET 3 OF 8

SCALE: | 24590-WTP-M6-50-P0003 | REV 2

INSTRUMENT CODE LETTER IDENTIFICATION

FIRST LETTER		SUCCEEDING LETTERS (* FUNCTION IDENTIFIER COMBINATION IS NOT USED - NOTE 13)																					
		SENSING DEVICE		DISPLAY DEVICE (NOTE 2)								CONTROL DEVICE						SWITCH					MISCELLANEOUS DEVICE		
MEASURED OR INITIATING VARIABLE (NOTE 1)	SYMBOL	PRIMARY ELEMENT	BLIND TRANSMITTER (NOTE 9)	INDICATOR	RECORDER	INTEGRATING INDICATOR	ALARM HIGH	ALARM HIGH HIGH	ALARM LOW	ALARM LOW LOW	ALARM HIGH LOW (COMB)	CONTROL STATION	CONTROLLER (NOTE 15)	CONTROL DAMPER (NOTE 12)	SELF-ACTUATED VALVE	CONTROL VALVE	FINAL CONTROL ELEMENT (NOTE 5)	HIGH	HIGH HIGH	LOW	LOW LOW	HIGH LOW (COMB)	LOCAL OBSERVATION GLASS	TEST POINT (NOTE 8)	RELAY/ COMPUTE
TYPICAL SYMBOLS	( )	( )E	( )T	( )I	( )R	( )QI	( )AH	( )AHH	( )AL	( )ALL	( )AHL	( )K	( )C	( )D	( )CV	( )V	( )Z	( )SH	( )SHH	( )SL	( )SLL	( )SHL	( )G	( )P	( )Y
ANALYSIS (NOTE 3)	A	AE	AT	AI	AR	*	AAH	AAHH	AAL	AALL	AAHL	AK	AC	*	*	AV	AZ	ASH	ASHH	ASL	ASLL	ASHL	*	AP	AY
BURNER COMBUSTION (NOTE 7)	B	BE	BT	BI	BR	*	*	BAHH	BAL	BALL	*	*	BC	BD	*	*	*	BSH	BSHH	BSL	BSLL	BSHL	BG	BP	BY
CONDUCTIVITY	C	CE	CT	CI	CR	*	CAH	CAHH	CAL	CALL	CAHL	CK	*	*	*	CV	CZ	CSH	CSHH	CSL	CSLL	CSHL	*	CP	CY
DENSITY	D	DE	DT	DI	DR	*	DAH	DAHH	DAL	DALL	DAHL	DK	DC	*	*	DV	DZ	DSH	DSHH	DSL	DSLL	DSHL	*	DP	DY
VOLTAGE (EMF)	E	EE	ET	EI	ER	*	EAH	EAHH	EAL	EALL	EAHL	EK	EC	*	*	*	EZ	ESH	ESHH	ESL	ESLL	ESHL	*	*	EY
FLOW RATE (NOTE 6)	F	FE	FT	FI	FR	FQI	FAH	FAHH	FAL	FALL	FAHL	FK	FC	FD	*	FV	FZ	FSH	FSHH	FSL	FSLL	FSHL	FG	FP	FY
FLOW RATIO	FF	FE	FT	FFI	FFR		FFSH		FFSL			FFK	FFC		*			FFSH	FFSHH	FFSL	FFSLL	FFSHL			
HAND (MANUAL)	H	*	*	*	*	*	*	*	*	*	*	HK	HC	HD	HCV	HV	HZ	*	*	*	*	HS	*	*	HY
CURRENT	I	IE	IT	II	IR	*	IAH	IAHH	IAL	IALL	IAHL	IK	IC	*	*	*	IZ	ISH	ISHH	ISL	ISLL	ISHL	*	*	IY
POWER	J	JE	JT	JI	JR	JQI	JAH	JAHH	JAL	JALL	JAHL	JK	JC	*	*	*	JZ	JSH	JSHH	JSL	JSLL	JSHL	*	*	JY
TIME	K	*	KT	KI	*	KQI	KAH	KAHH	KAL	KALL	KAHL	*	KC	*	*	*	KZ	KSH	KSHH	KSL	KSLL	KSHL	*	*	KY
LEVEL	L	LE	LT	LI	LR	*	LAH	LAHH	LAL	LALL	LAHL	LK	LC	*	LCV	LV	LZ	LSH	LSHH	LSL	LSLL	LSHL	LG	LP	LY
MOISTURE	M	ME	MT	MI	MR	*	MAH	MAHH	MAL	MALL	MAHL	MK	MC	MD	*	MV	MZ	MSH	MSHH	MSL	MSLL	MSHL	*	MP	MY
PRESSURE OR VACUUM	P	PE	PT	PI	PR	*	PAH	PAHH	PAL	PALL	PAHL	PK	PC	*	PCV	PV	PZ	PSH	PSHH	PSL	PSLL	PSHL	*	PP	PY
PRESSURE DIFFERENTIAL	PD	*	PDT	PDI	PDR	*	PDAH	PDAHH	PDAL	PDALL	*	PDK	PDC	*	PDCV	PDV	PDZ	PDSH	PDSHH	PDSL	PDSLL	PDSHL	*	PP	*
QUANTITY OR EVENT	Q	QE	QT	QI	QR	QQI	QAH	QAHH	QAL	QALL	QAHL	QK	QC	*	*	*	QZ	QSH	QSHH	QSL	QSLL	QSHL	*	*	QY
RADIOACTIVITY	R	RE	RT	RI	RR	RQI	RAH	RAHH	RAL	RALL	RAHL	RK	RC	*	*	RV	RZ	RSH	RSHH	RSL	RSLL	RSHL	*	*	RY
SPEED OR FREQUENCY	S	SE	ST	SI	SR	*	SAH	SAHH	SAL	SALL	SAHL	SK	SC	*	*	*	SZ	SSH	SSHH	SSL	SSLL	SSHL	*	*	SY
TEMPERATURE	T	TE	TT	TI	TR	*	TAH	TAHH	TAL	TALL	TAHL	TK	TC	TD	TCV	TV	TZ	TSH	TSHH	TSL	TSLL	TSHL	*	TP	TY
TEMPERATURE DIFFERENTIAL	TD	*	*	TDI	TDR	*	TDAH	TDAHH	TDAL	TDALL	*	*	TDC	*	TDCV	TDV	TDZ	TDSH	TDSHH	TDSL	TDSLL	TDSHL	*	*	*
MULTI-VARIABLE	U	*	*	UI	UR	*	UAH	UAHH	UAL	UALL	UAHL	*	UC	*	*	UV	UZ	USH	USHH	USL	USLL	USHL	*	*	UY
VIBRATION/MACH ANALYSIS	V	VE	VT	VI	VR	*	VAH	VAHH	VAL	VALL	VAHL	VK	VC	*	*	*	VZ	VSH	VSHH	VSL	VSLL	VSHL	*	VP	VY
WEIGHT, FORCE, TORQUE	W	WE	WT	WI	WR	WQI	WAH	WAHH	WAL	WALL	WAHL	WK	WC	*	*	*	WZ	WSH	WSHH	WSL	WSLL	WSHL	*	*	WY
USER DEFINED (NOTE 10)	X	XE	XT	XI	XR	XQI	XAH	XAHH	XAL	XALL	XAHL	XK	XC	XD	*	XV	XZ	XSH	XSHH	XSL	XSLL	XSHL	XG	XP	XY
EVENT/STATE OR PRESENCE (NOTE 15)	Y	YE	YT	YI	YR	*	*	*	*	*	*	*	YC	*	*	YV	YZ	YSH	YSHH	YSL	YSLL	YSHL	*	YP	YY
POSITION (NOTE 4)	Z	ZE	ZT	ZI (L)	ZR	*	ZAH	ZAHH	ZAL	ZALL	ZAHL	*	ZC	*	*	*	ZZ	ZSH	ZSHH	ZSL	ZSLL	ZSHL	*	*	ZY

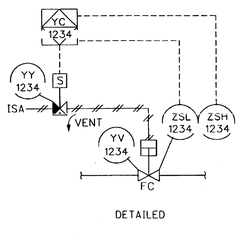

TYPICAL OPEN/CLOSE VALVE CONTROL

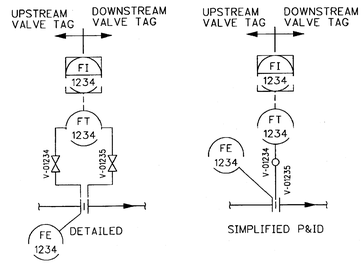

PARALLEL ROOT VALVE DETAIL

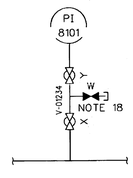

HIGH PRESSURE/TEMPERATURE THREE WAY ROOT VALVES

LEGEND	
Y	OUTLET
X	PROCESS
W	DRAIN/VENT

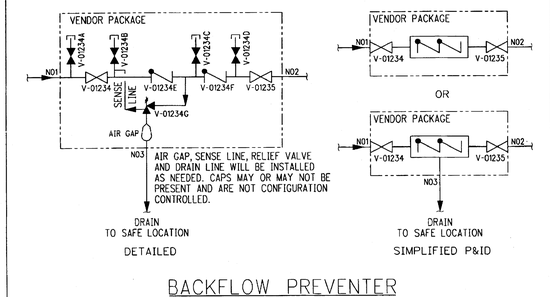

BACKFLOW PREVENTER
NOTE 18

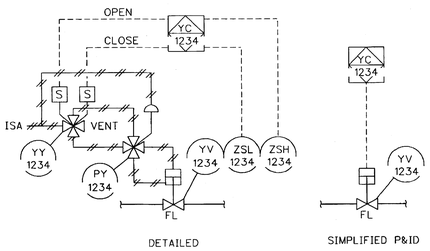

TYPICAL FAIL LAST ON-OFF VALVE

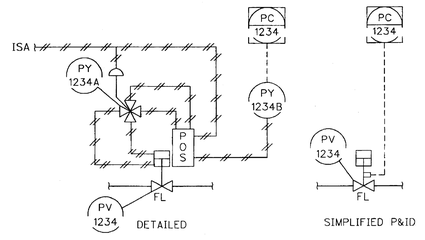

TYPICAL FAIL LAST CONTROL VALVE

NOTES:

1. THE INSTRUMENT LEGEND IS BASED ON ISA-S5.1-1984, INSTRUMENTATION SYMBOLS AND IDENTIFICATION STANDARD (ISA). EXCEPTIONS SPECIFIC TO RPP-WTP ARE NOTED IN THIS LEGEND: REFER TO THE ISA STANDARD FOR FURTHER DETAILS AND CLARIFICATION. THE COMPONENT FUNCTIONAL IDENTIFIER FOR AN INSTRUMENT CONSISTS OF LETTERS DERIVED FROM THE INSTRUMENT LEGEND SHEET AND THESE NOTES. THE FIRST LETTER IS SELECTED ACCORDING TO MEASURED OR INITIATION VARIABLE. SUCCEEDING LETTERS IDENTIFY FUNCTIONS PERFORMED. MODIFYING LETTER MAY BE USED TO MODIFY EITHER A FIRST LETTER OR SUCCEEDING LETTERS AS APPLICABLE.
2. PILOT OR INDICATOR LIGHTS ARE NORMALLY NOT SHOWN ON P&IDs. ESPECIALLY THOSE LIGHTS ASSOCIATED WITH HAND SWITCHES. HOWEVER, THE FOLLOWING EXCEPTIONS APPLY:
   - WHEN A PILOT LIGHT IS PART OF AN INSTALLED LOOP, IT SHOULD BE DESIGNATED BY A FIRST LETTER, FOLLOWED BY THE SUCCEEDING LETTER "L".
   - STATUS INDICATOR LIGHTS ASSOCIATED WITH VALVE STATUS SWITCHES USED IN FIRE SYSTEM, MAY USE THE DESIGNATION "ZL".
   - SPECIFIC CASES WHERE THE PILOT LIGHT IS ESSENTIAL FOR EXPLAINING SPECIAL FUNCTION OR LOCATION OF THE LIGHT, ALSO USED AS VALVE LIMIT SWITCH INDICATION IN PROGRAMMABLE ELECTRONIC SYSTEM (PES).
3. WHEN "A" IS USED FOR ANALYSIS VARIABLES NOT ASSIGNED FIRST LETTER DESIGNATORS, THE FOLLOWING TERMS MAY BE PLACED OUTSIDE THE INSTRUMENT CIRCLE TO DENOTE THE SPECIFIC MEASURED VARIABLES, FOR EXAMPLE:
   - H – DISSOLVED HYDROGEN
   - NO_X – NITROGEN OXIDE
   - H_2 – GASEOUS HYDROGEN
   - pH – pH
   - Na – SODIUM
   - TRB – TURBIDITY
4. MODIFYING LETTERS "H" HIGH AND "L" LOW SHALL HAVE THE FOLLOWING MEANING: (EXAMPLES GIVEN WITH POSITION SWITCH, ZS).
   - ZSH - HIGH, UP, RAISED, OPEN, EXTENDED ON, ENERGIZED, VERTICAL, INFLATED.
   - ZSL - LOW, DOWN, LOWERED, CLOSED, RETRACTED, OFF, HORIZONTAL, DEFLATED.
5. THE LETTER "Z" WHICH FOLLOWS A MEASURED VARIABLE REPRESENTS FINAL CONTROL ELEMENT, OTHER THAN CONTROL VALVES, SUCH AS HYDRAULIC COUPLING, ADJUSTABLE SPEED MOTOR/DEVICE, ETC.
6. "FO" DESIGNATES FLOW RESTRICTION ORIFICE.
7. BURNER/COMBUSTION "B" SHALL BE USED FOR ALL FIRE PROTECTION AND BURNER/COMBUSTION APPLICATIONS.
8. A TEST POINT IS A PROCESS CONNECTION TO WHICH NO INSTRUMENT IS PERMANENTLY CONNECTED, BUT WHICH IS INTENDED FOR TEMPORARY, INTERMITTENT OR FUTURE CONNECTION OF AN INSTRUMENT.
   - AP – ANALYTICAL POINT
   - PP – PRESSURE POINT
   - AW – SAMPLE PROBE
   - TP – TEMPERATURE POINT
9. INTEGRAL INDICATORS WILL BE PROVIDED WITH TRANSMITTERS ONLY WHEN SPECIFIED ON THE APPLICABLE INSTRUMENT DATA SHEET.
10. EXAMPLES OF EQUIPMENT USING "X" INCLUDE BARCODE OR OPTICAL CHARACTER RECOGNITION (OCR) SYSTEMS, TELEVISION SYSTEMS, PHOTOCELL, ETC.
11. DELETED
12. THE DESIGNATION "D" REPRESENTS HVAC CONTROL DAMPERS.
13. ANY FIRST LETTER, WHEN COMBINED WITH MODIFYING LETTER "F" (RATIO), "M" (MOMENTARY), "Q" (TOTALIZER) OR "K" (TIME RATE OF CHANGE), REPRESENTS A SINGLE MEASURED VARIABLE AND IS CONSIDERED THE SAME AS A FIRST LETTER ONLY VARIABLE.
14. USING "X" AS A MODIFIER DESIGNATES AN ACCESSORY PURCHASED WITH AN INSTRUMENT SYSTEM, SUCH AS A SAMPLE CONDITIONING SYSTEM.
15. USE OF "C" (FOR A SUCCEEDING LETTER) IS PERMITTED FOR DIGITAL ON/OFF CONTROL FOR A "YC" TAG. IN ALL OTHER CASES "C" SHOULD BE RESERVED FOR PROPORTIONAL, DERIVATIVE, INTEGRAL (P&ID) TYPE FUNCTION.
16. CONTENTS OF THIS DOCUMENT ARE DANGEROUS WASTE PERMIT AFFECTING.
17. DELETED
18. VALVE BODY SYMBOL MAY BE SHOWN USING A GENERAL VALVE SYMBOL (GATE) IN ACCORDANCE WITH ISA S5.1, SECTION 6.4; OR THE VALVE BODY SYMBOL MAY BE SHOWN AS THE SPECIFIC PURCHASED TYPE (i.e. BALL, NEEDLE, ETC.). VALVES MAY BE SHOWN NORMALLY CLOSED IF THE INSTRUMENT IS NOT CONTINUALLY IN USE.
19. THE COMPONENTS SHOWN ON THIS DRAWING IN PHANTOM DO NOT REQUIRE INDEPENDENT QUALIFIED REGISTERED PROFESSIONAL ENGINEER (IQRPE) ASSESSMENTS OF DESIGN OR INSTALLATION INSPECTIONS BY A QUALIFIED INSTALLATION INSPECTOR IN ACCORDANCE WITH THE DWP AND/OR WASHINGTON ADMINISTRATIVE CODE (WAC) REQUIREMENTS.
20. REVISED PER 24590-WTP-M6N-50-00033, 00039, 00040, 00041 AND INCORPORATED VARIOUS EDITORIAL COMMENTS.

PLEASE NOTE THAT SOURCE, SPECIAL NUCLEAR AND BYPRODUCT MATERIALS, AS DEFINED IN THE ATOMIC ENERGY ACT OF 1954 (AEA), ARE REGULATED AT THE U.S. DEPARTMENT OF ENERGY (DOE) FACILITIES EXCLUSIVELY BY DOE ACTING PURSUANT TO ITS AEA AUTHORITY. DOE ASSERTS, THAT PURSUANT TO THE AEA, IT HAS SOLE AND EXCLUSIVE RESPONSIBILITY AND AUTHORITY TO REGULATE SOURCE, SPECIAL NUCLEAR, AND BYPRODUCT MATERIAL AT DOE-OWNED NUCLEAR FACILITIES. INFORMATION CONTAINED HEREIN ON RADIONUCLIDES IS PROVIDED FOR PROCESS DESCRIPTION PURPOSES ONLY.

GREG B. ISSEN — STATE OF WASHINGTON — 25449 — REGISTERED PROFESSIONAL ENGINEER — 10/10/07
EXPIRES: 07/28/07

REV	DESCRIPTION	ORG	CHKD	RVWD	APVD	DATE
2	ISSUED FOR PERMITTING USE	LCS	WK	CER GS	MCE	10/10/07
1	ISSUED FOR PERMITTING USE	TB	BL	DCP	MH	12/12/03
0	ISSUED FOR PERMITTING USE	FR	JG	N/A	GD	7/24/02

REVISION HISTORY

ISSUED BY RPP-WTP PDC — ISSUE STAMP

PROJECT No.	24590	
SITE	HANFORD	
AREA	200E	
BUILDING No.		
	BY	DATE
ORIGINATOR	K. CHANDRASEKARN	7/17/02
CHECKER	UTPAL SEN	7/17/02
APPROVER	GARTH DUNCAN	7/24/02
REVIEWER	N/A	

CONTENT APPLICABLE TO ALARA? ☐ YES ☒ NO
ADR NO. N/A REV: N/A
SAFETY SCREEN REQUIRED? ☐ YES ☒ NO EDMS INITIAL IF YES

BECHTEL

RIVER PROTECTION PROJECT
WASTE TREATMENT PLANT
2435 STEVENS CENTER PLACE
RICHLAND, WA 99354

CONTRACT No: DE-AC27-01RV14136

P&ID SYMBOLS AND LEGEND SHEET 4 OF 8

SCALE: | 24590-WTP-M6-50-P0004 | REV 2

SAFETY SCREEN IS REQUIRED FOR DRAWING TYPES IDENTIFIED IN 24590-WTP-GPP-SREG-002

"E" SIZE - 44x34
COMPUTER GENERATED - MANUAL CHANGES NOT PERMITTED

R10834272

09/27/2007 05:12:47 PM

PLOTTED BY: lcservic
C:\Work\lcservic\dms05067\WTPM650P0004.dgn

FORM E_SDN.DGN 02/2003

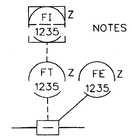

NOTE:
DETAILED AND SIMPLIFIED P&ID ARE IDENTICAL

DETAILED VIEW OF SAFETY APPLICATION FOR ANALOG INPUTS

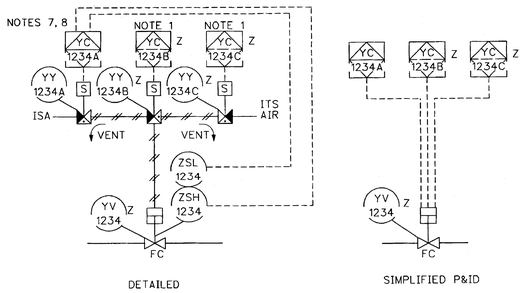

REDUNDANT SAFETY APPLICATION FOR OPEN/CLOSE VALVE CONTROL WITH ITS AIR WHERE ABILITY TO OPERATE THROUGH ICN IS REQUIRED AND PERMISSIBLE

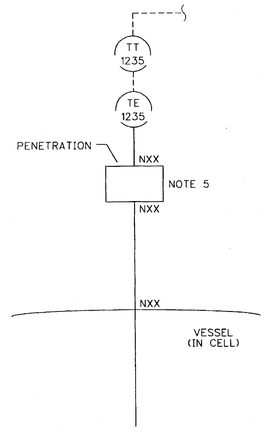

NOTE:
DETAILED AND SIMPLIFIED P&ID ARE IDENTICAL

EXTENDED THERMOWELL VESSEL TEMPERATURE ELEMENT WITH TRANSMITTER

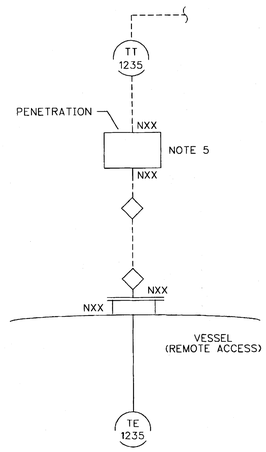

NOTE:
DETAILED AND SIMPLIFIED P&ID ARE IDENTICAL

REMOTE VESSEL TEMPERATURE ELEMENT WITH INSTRUMENT SIGNAL JUMPER AND TRANSMITTER

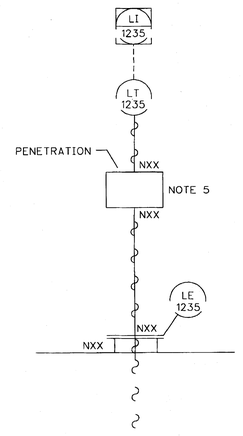

NOTE:
DETAILED AND SIMPLIFIED P&ID ARE IDENTICAL

DETAILED LEVEL INDICATION REMOTE NON-GUIDED RADAR LEVEL FOR VESSELS

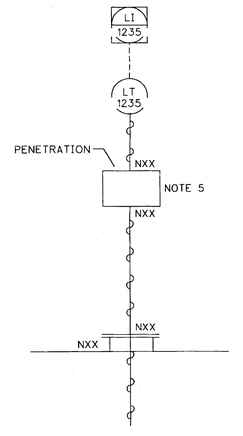

NOTE:
DETAILED AND SIMPLIFIED P&ID ARE IDENTICAL

DETAILED LEVEL INDICATION REMOTE GUIDED RADAR LEVEL FOR VESSELS

NOTES:

1. ALL SHARED DISPLAY DEVICES IDENTIFIED AS SAFETY ITEMS WILL INCLUDE SHARED CRT INDICATION ON THE ICN. THE LETTER "Z" REPRESENTS AN INSTRUMENT WIRED TO ITS SHUTDOWN SYSTEM (PPJ) WHERE SHUTDOWN LOGIC EXISTS.

2-3. DELETED

4. DELETED (MOVED TO SHEET 24590-WTP-M6-50-00004)
5. PENETRATION WILL BE DEFINED AND THE BOX WILL ONLY BE USED WHEN APPLICABLE.
6. CONTENTS OF THIS DOCUMENT ARE DANGEROUS WASTE PERMIT AFFECTING.
7. LIMIT SWITCHES THAT ARE WIRED TO PPJ SYSTEM MUST BE NOTED ON P&ID.
8. LIMIT SWITCHES WILL BE WIRED TO PCJ SYSTEM.
9. VALVE EITHER DIAPHRAGM OR PISTON ACTUATED. VALVE SIZE SHOWN IF DIFFERENT THAN LINE SIZE.
10. REMOTE TRANSMITTER APPLICATION SHOWN. FOR INTEGRAL INSTRUMENTS, REMOVE "FE" BUBBLE AND MAKE LINE STYLE FROM SYMBOL TO "FT" BUBBLE SOLID.
11. DELETED
12. THE COMPONENTS SHOWN ON THIS DRAWING IN PHANTOM DO NOT REQUIRE INDEPENDENT QUALIFIED REGISTERED PROFESSIONAL ENGINEER (IQRPE) ASSESSMENTS OF DESIGN OR INSTALLATION INSPECTIONS BY A QUALIFIED INSTALLATION INSPECTOR IN ACCORDANCE WITH THE DWP AND/OR WASHINGTON ADMINISTRATIVE CODE (WAC) REQUIREMENTS.
13. REVISED PER 24590-M6N-50-00014, 00019, 00025, 00034, 00040 AND 00041. ADDED SIZE INDICATION TO CONTROL VALVES AND CLARIFICATION THAT REDUCERS ARE NOT SHOWN. ADDED CLARIFICATION TO ASD'S TO INDICATE PUMP IS SHOWN FOR EXAMPLE ONLY AND INCORPORATED VARIOUS EDITORIAL COMMENTS.

HOLD/OPEN ITEMS:

1-2. DELETED

PLEASE NOTE THAT SOURCE, SPECIAL NUCLEAR AND BYPRODUCT MATERIALS, AS DEFINED IN THE ATOMIC ENERGY ACT OF 1954 (AEA), ARE REGULATED AT THE U.S. DEPARTMENT OF ENERGY (DOE) FACILITIES EXCLUSIVELY BY DOE ACTING PURSUANT TO ITS AEA AUTHORITY. DOE ASSERTS, THAT PURSUANT TO THE AEA, IT HAS SOLE AND EXCLUSIVE RESPONSIBILITY AND AUTHORITY TO REGULATE SOURCE, SPECIAL NUCLEAR, AND BYPRODUCT MATERIAL AT DOE-OWNED NUCLEAR FACILITIES. INFORMATION CONTAINED HEREIN ON RADIONUCLIDES IS PROVIDED FOR PROCESS DESCRIPTION PURPOSES ONLY.

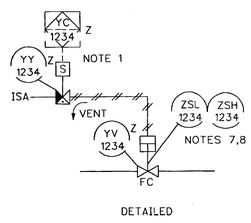

SAFETY APPLICATION FOR OPEN/CLOSE VALVE CONTROL

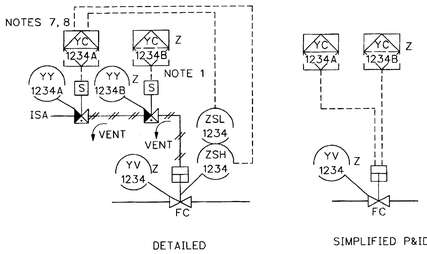

SAFETY APPLICATION FOR OPEN/CLOSE VALVE CONTROL WHERE ABILITY TO OPERATE THROUGH ICN IS REQUIRED AND PERMISSIBLE

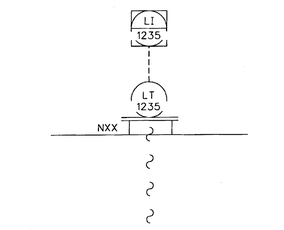

NOTE:
DETAILED AND SIMPLIFIED P&ID ARE IDENTICAL

DETAILED LEVEL INDICATION LOCAL NON-GUIDED RADAR LEVEL FOR VESSEL

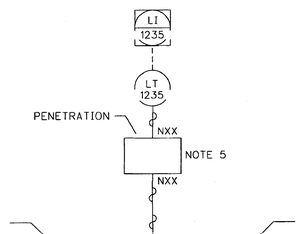

NOTE:
DETAILED AND SIMPLIFIED P&ID ARE IDENTICAL

DETAILED LEVEL INDICATION REMOTE GUIDED RADAR LEVEL FOR SUMPS

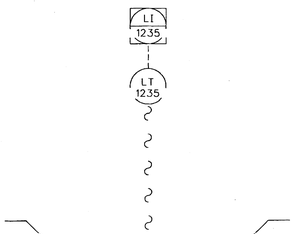

NOTE:
DETAILED AND SIMPLIFIED P&ID ARE IDENTICAL

DETAILED LEVEL INDICATION NON-GUIDED RADAR LEVEL FOR SUMPS

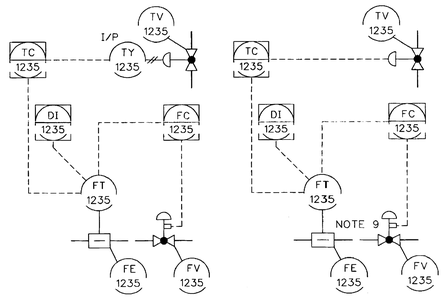

TEMP/DENSITY/FLOW CORIOLIS TEMP- FLOW CONTROL

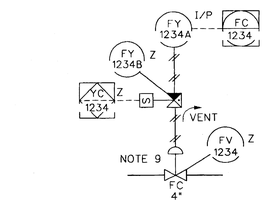

NOTE:
DETAILED AND SIMPLIFIED P&ID ARE IDENTICAL

SAFETY APPLICATION FOR THROTTLING VALVE CONTROL WITH SAFETY SOLENOID S/D

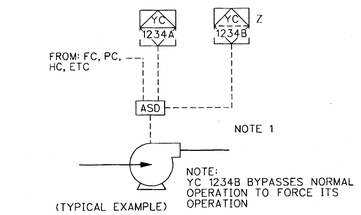

NOTE:
DETAILED AND SIMPLIFIED P&ID ARE IDENTICAL

SAFETY APPLICATION FOR MOTOR WITH ADJUSTABLE SPEED DRIVE

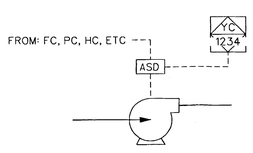

NOTE:
DETAILED AND SIMPLIFIED P&ID ARE IDENTICAL

MOTOR WITH ADJUSTABLE SPEED DRIVE

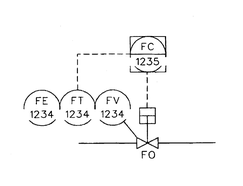

NOTE:
DETAILED AND SIMPLIFIED P&ID ARE IDENTICAL

THERMO TYPE MASS FLOW METER WITH INTEGRAL FLOW CONTROLLER

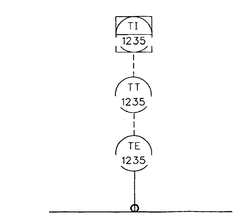

NOTE:
DETAILED AND SIMPLIFIED P&ID ARE IDENTICAL

SURFACE TEMPERATURE REMOTE SENSING INDICATOR

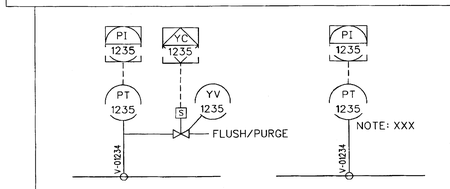

NOTE:
XXX - INSTRUMENT PROVIDED WITH FLUSHING
H_2O - WATER, AIR

PRESSURE WITH AIR/WATER FLUSH

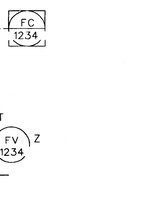

REMOTE I/P THROTTLING VALVE CONTROL

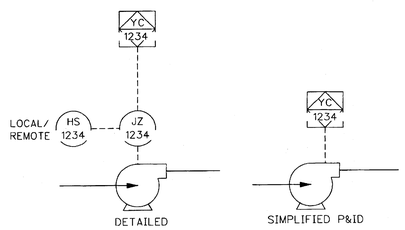

TYPICAL MOTOR RUN CIRCUIT WITH DCS STARTING/STOPPING

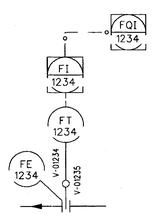

NOTE:
DETAILED AND SIMPLIFIED P&ID ARE IDENTICAL

DETAILED FLOW INDICATION WITH TOTALIZATION

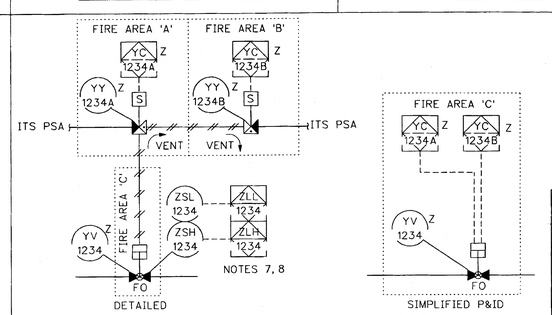

SAFETY APPLICATION FOR OPEN/CLOSE VALVE CONTROL WITH REDUNDANT ITS SOLENOID VALVES

ERIC B. ISERN
STATE OF WASHINGTON
33449
REGISTERED
PROFESSIONAL ENGINEER
EXPIRES: 07/28/07

REV	DESCRIPTION	ORG	CHKD	RVWD	APVD	DATE
2	ISSUED FOR PERMITTING USE	LCS	[illegible]	[illegible]	[illegible]	10/19/07
1	ISSUED FOR PERMITTING USE	TB	BL	DCP	MH	12/12/03
0	ISSUED FOR PERMITTING USE	KC	US	N/A	GD	7/24/02

REVISION HISTORY

ISSUED BY RPP-WTP PDC		
ISSUE STAMP	PROJECT No.	24590
	SITE	HANFORD
	AREA	200E
	BUILDING No.	

	BY	DATE
ORIGINATOR	KRIS CHANDRASKAREN	7/17/02
CHECKER	UTPAL SEN	7/17/02
APPROVER	GARTH DUNCAN	7/24/02
REVIEWER	N/A	

CONTENT APPLICABLE TO ALARA? ☐ YES ☒ NO
ADR NO. N/A REV: N/A
SAFETY SCREEN REQUIRED? ☐ YES ☒ NO EWNS INITIAL IF YES

BECHTEL
RIVER PROTECTION PROJECT
WASTE TREATMENT PLANT
2435 STEVENS CENTER PLACE
RICHLAND, WA 99354

CONTRACT No: DE-AC27-01RV14136

P&ID SYMBOLS AND LEGEND SHEET 5 OF 8

SCALE:

24590-WTP-M6-50-P0005	REV 2

SAFETY SCREEN IS REQUIRED FOR DRAWING TYPES IDENTIFIED IN 24590-WTP-GPP-SREG-002

2

"E" SIZE - 44 x 34
COMPUTER GENERATED - MANUAL CHANGES NOT PERMITTED

R10034373

09/27/2007 05:13:15 PM

PLOTTED BY: icsarvic
C:\Work\icsarvic\dms05067\WTPM650P0005.dgn

FORM E_SDN.DGN 02/2003

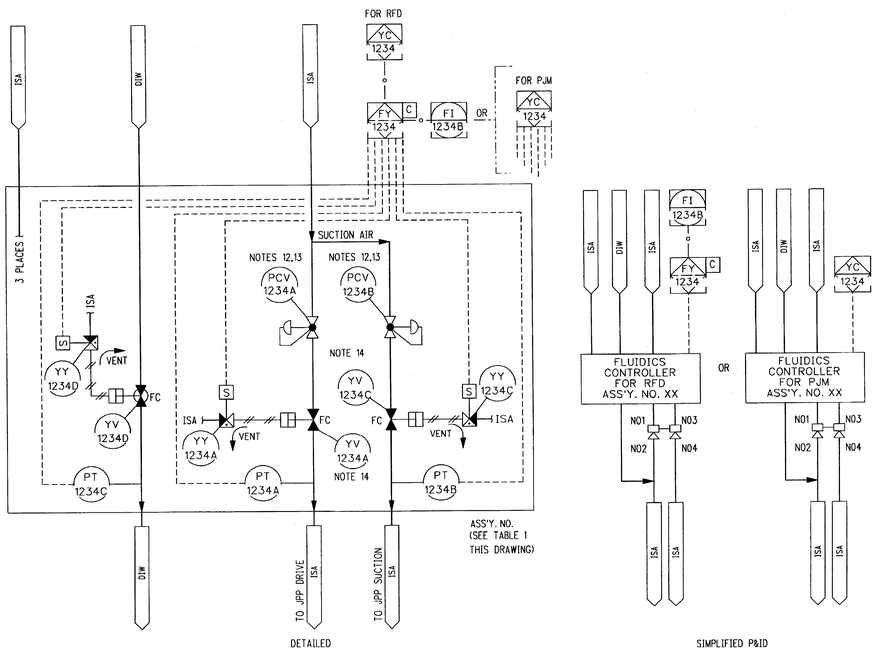

DETAIL 1

TYPICAL HLW ARRANGEMENT
FLUIDICS (RFD/PJM) CONTROLLER
NOTES 1, 2

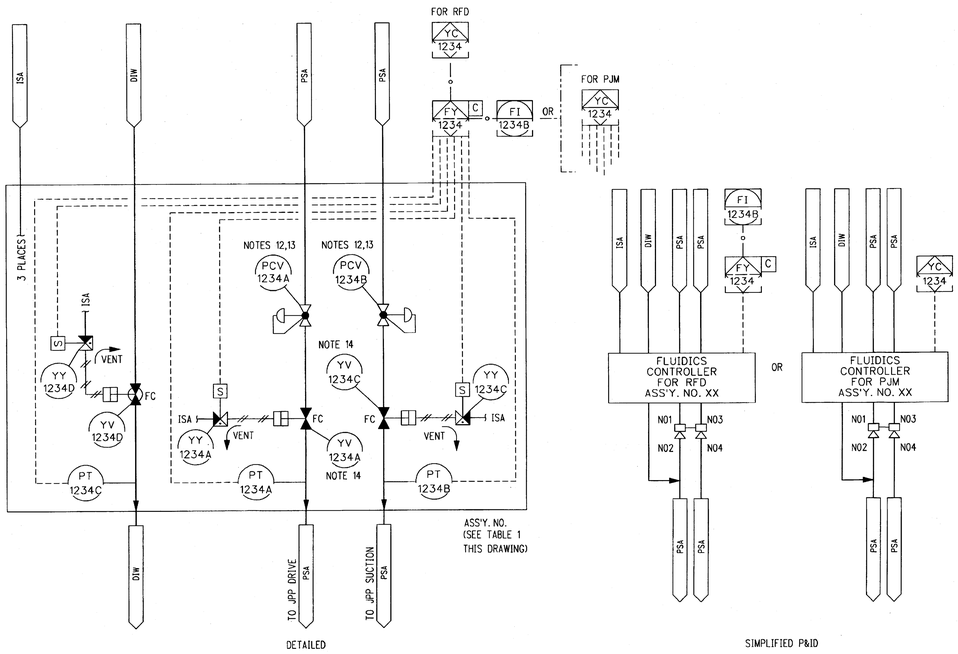

DETAIL 2

TYPICAL PTF ARRANGEMENT
FLUIDICS (RFD/PJM) CONTROLLER
NOTES 1, 2

NOTES:

1. JUMPERS WILL BE SHOWN ON P&ID IF REQUIRED.
2. ACTUAL SEQUENCE NUMBERS WILL BE SHOWN ON THE P&IDs.
3. FOR USE WITH PJM, THEN NO "A" SUFFIX IS REQUIRED.
4. SHORTEST LEG IS DEFINED AS THE "BALANCE" LEG, (NOZZLE A).
5. CONTENTS OF THIS DOCUMENT ARE DANGEROUS WASTE PERMIT AFFECTING.
6. DELETED
7. NOTE BUBBLER TYPES 1, 2, OR 3 ON THE P&ID IS TO IDENTIFY THE FLUSH AND MECHANICAL REQUIREMENTS OF THE INSTRUMENT.
8. DELETED
9. INSTRUMENTATION AND VALVES ARE TAGGED WITH PROCESS SYSTEM IDENTIFIERS.
10. FOR MAIN CONTROLLER, SEE DETAIL 6 ON 24590-WTP-M6-50-00007.
11. DETAIL 3 (REDUNDANT) AND DETAIL 6 (PRIMARY) CONTROLLERS ARE IN SEPARATE FIRE AREAS.
12. SEE SYSTEM DESCRIPTIONS FOR PCV SETPOINT.
13. PCV PROVIDED WITH INTEGRAL OUTLET PRESSURE GAUGE.
14. VALVE TYPE SHOWN IS A GENERAL SYMBOL. ANGLE SEAT VALVES ARE USED FOR RFD/PJM CONTROL APPLICATIONS.
15. THE COMPONENTS SHOWN ON THIS DRAWING IN PHANTOM DO NOT REQUIRE INDEPENDENT QUALIFIED REGISTERED PROFESSIONAL ENGINEER (IQRPE) ASSESSMENTS OF DESIGN OR INSTALLATION INSPECTIONS BY A QUALIFIED INSTALLATION INSPECTOR IN ACCORDANCE WITH THE DWP AND/OR WASHINGTON ADMINISTRATIVE CODE (WAC) REQUIREMENTS.
16. REVISED PER 24590-WTP-M6N-50-00035, 00038, 00039 AND INCORPORATED VARIOUS EDITORIAL COMMENTS.

HOLD/OPEN ITEMS:

1. DELETED
2. DELETED
3. DELETED
4. DELETED

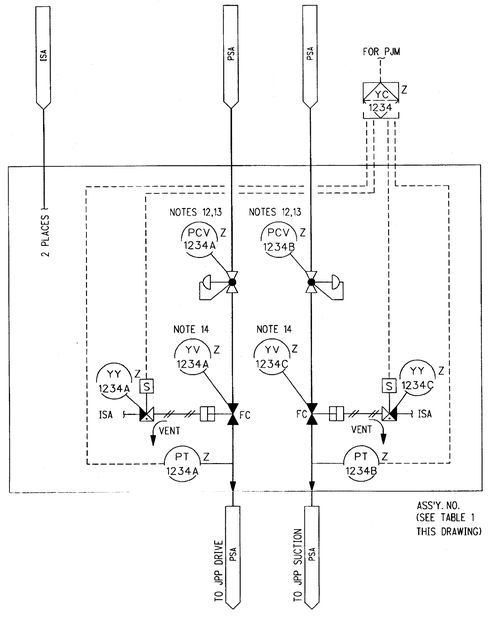

DETAIL 3

TYPICAL PTF ARRANGEMENT - ITS FLUIDICS
PJM - REDUNDANT CONTROLLER -
100% REDUNDANT VESSELS
NOTES 1, 2, 9, 11

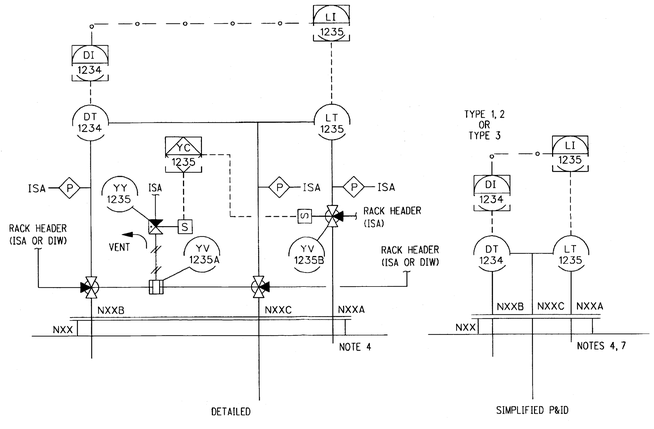

DETAILED LEVEL INDICATION
WITH DENSITY COMPENSATION/INDICATION
(BUBBLER WITH FLUSH)

TABLE 1

ASS'Y NO.	JPP MODEL	FITTING/EQUIP. SIZE DRIVE NO1	SUCTION NO3	DRIVE NO2	SUCTION NO4
1	H15M	1/2"	1/2"	1/2"	1/2"
2	H25L	1"	1/2"	1"	1 1/2"
3	H40M	1 1/2"	1/2"	1 1/2"	1 1/2"
4	H50L	2"	3/4"	2"	2"
5	NOT USED				
7	L50M	1 1/2"	1 1/2"	2"	2"
8	H20L	3/4"	1/2"	3/4"	1"
9	NOT USED				
10	NOT USED				
11	NOT USED				
12	NOT USED				
13	NOT USED				
14	NOT USED				
15	H80S	2"	1"	3"	3"
16	H80L	2"	1"	3"	3"
17	H80SX2	1 1/2"	1 1/2"	2"	2"

PLEASE NOTE THAT SOURCE, SPECIAL NUCLEAR AND BYPRODUCT MATERIALS, AS DEFINED IN THE ATOMIC ENERGY ACT OF 1954 (AEA), ARE REGULATED AT THE U.S. DEPARTMENT OF ENERGY (DOE) FACILITIES EXCLUSIVELY BY DOE ACTING PURSUANT TO ITS AEA AUTHORITY. DOE ASSERTS, THAT PURSUANT TO THE AEA, IT HAS SOLE AND EXCLUSIVE RESPONSIBILITY AND AUTHORITY TO REGULATE SOURCE, SPECIAL NUCLEAR, AND BYPRODUCT MATERIAL AT DOE-OWNED NUCLEAR FACILITIES. INFORMATION CONTAINED HEREIN ON RADIONUCLIDES IS PROVIDED FOR PROCESS DESCRIPTION PURPOSES ONLY.

REVISION HISTORY

REV	DESCRIPTION	ORG	CHKD	RVWD	APVD	DATE
2	ISSUED FOR PERMITTING USE	LCS	WK	CDK	RVK	10/14/03
1	ISSUED FOR PERMITTING USE	TB	BL	DCP	MH	12/13/03
0	ISSUED FOR PERMITTING USE	KC	US	N/A	GD	7/24/02

ISSUED BY RPP-WTP PDC
ISSUE STAMP

	BY	DATE
ORIGINATOR	K. CHANDRASEKARN	7/17/02
CHECKER	UTPAL SEN	7/17/02
APPROVER	GARTH DUNCAN	7/24/02
REVIEWER	N/A	

PROJECT No. 24590
SITE HANFORD
AREA 200E
BUILDING No.

CONTENT APPLICABLE TO ALARA? ☐ YES [X] NO
ADR NO. N/A REV: N/A
SAFETY SCREEN REQUIRED? ☐ YES [X] NO EWMS INITIAL IF YES

BECHTEL
RIVER PROTECTION PROJECT
WASTE TREATMENT PLANT
2435 STEVENS CENTER PLACE
RICHLAND, WA 99354

CONTRACT No: DE-AC27-01RV14136

P&ID
SYMBOLS AND LEGEND
SHEET 6 OF 8

SCALE:
24590-WTP-M6-50-P0006
REV 2

R10834274 09/27/2007 05:13:43 PM

PLOTTED By: lassenic
C:\Work\lassenic\dms05067\WTPM650P0006.dgn

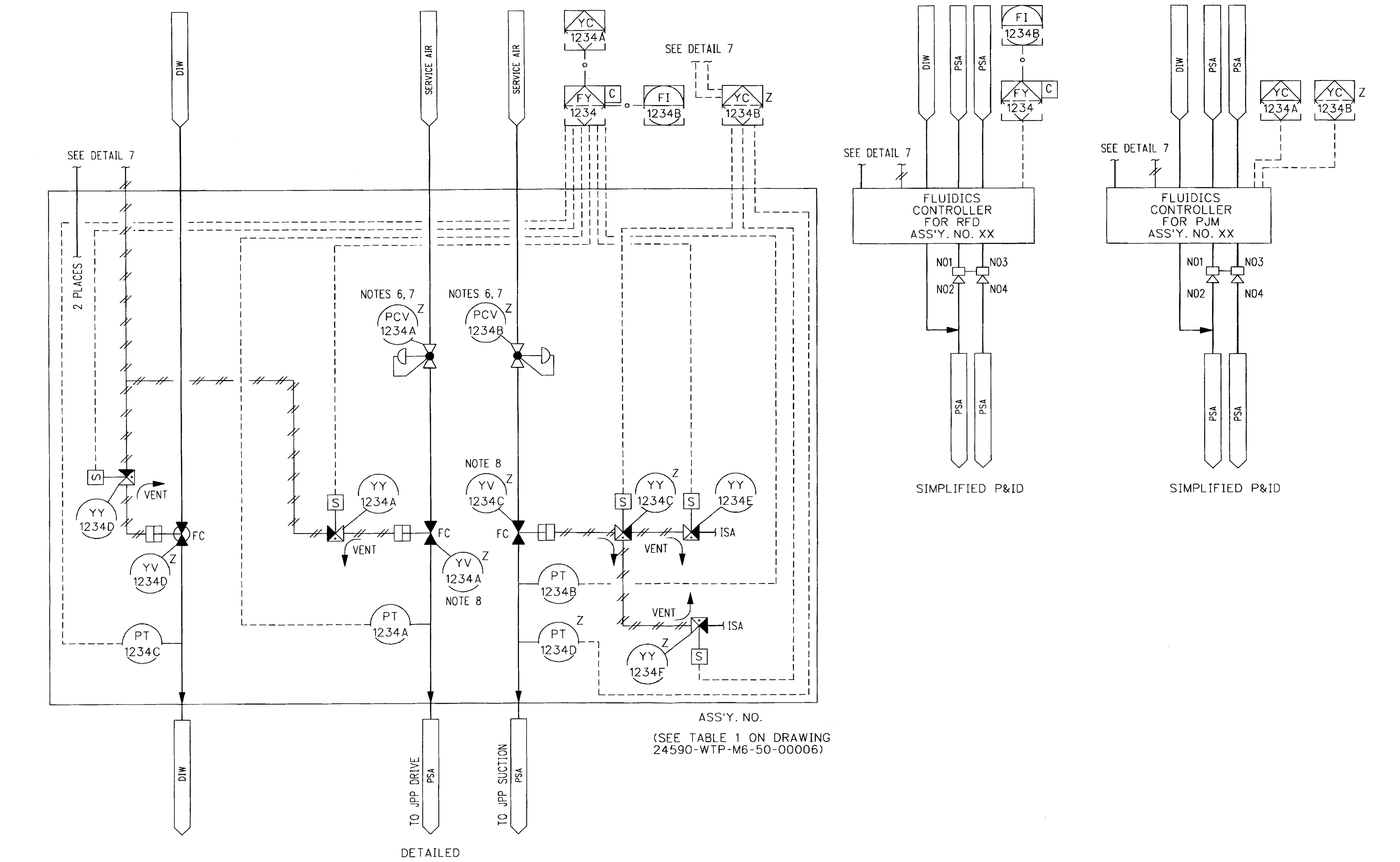

DETAIL 4

TYPICAL PTF ARRANGEMENT - FLUIDICS (RFD/PJM)
ITS - CONTROLLER - SUCTION MODE VENTING

NOTE 1

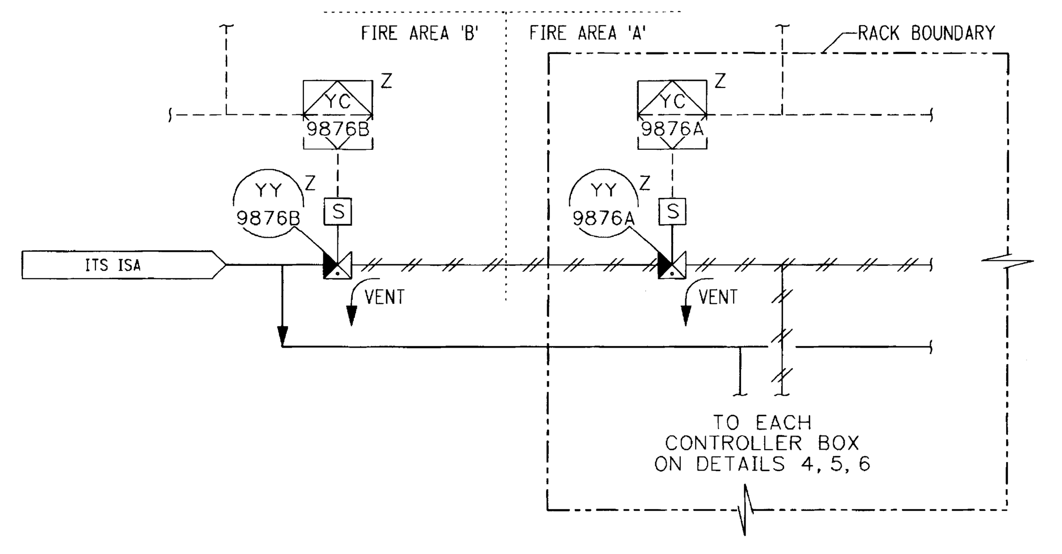

DETAIL 7

ITS ISA CONTROL TO DIW FLUSH VALVES

NOTE 1

NOTES:

1. ACTUAL SEQUENCE NUMBERS WILL BE SHOWN ON THE P&IDs.
2. CONTENTS OF THIS DOCUMENT ARE DANGEROUS WASTE PERMIT AFFECTING.
3. INSTALLATION AND VALVES ARE TAGGED WITH PROCESS SYSTEM IDENTIFIERS.
4. DETAIL 3 (REDUNDANT) AND DETAIL 6 (PRIMARY) CONTROLLERS ARE IN SEPARATE FIRE AREAS.
5. SEPARATE FIRE AREAS REQUIRED FOR COMPANION 50% REDUNDANT RACKS.
6. SEE SYSTEM DESCRIPTIONS FOR PCV SETPOINTS.
7. PCV PROVIDED WITH INTEGRAL OUTLET PRESSURE GAUGE.
8. VALVE TYPE SHOWN IS A GENERAL SYMBOL. ANGLE SEAT VALVES ARE USED FOR RFD/PJM CONTROL APPLICATIONS.
9. THE COMPONENTS SHOWN ON THIS DRAWING IN PHANTOM DO NOT REQUIRE INDEPENDENT QUALIFIED REGISTERED PROFESSIONAL ENGINEER (IQRPE) ASSESSMENTS OF DESIGN OR INSTALLATION INSPECTIONS BY A QUALIFIED INSTALLATION INSPECTOR IN ACCORDANCE WITH THE DWP AND/OR WASHINGTON ADMINISTRATIVE CODE (WAC) REQUIREMENTS.

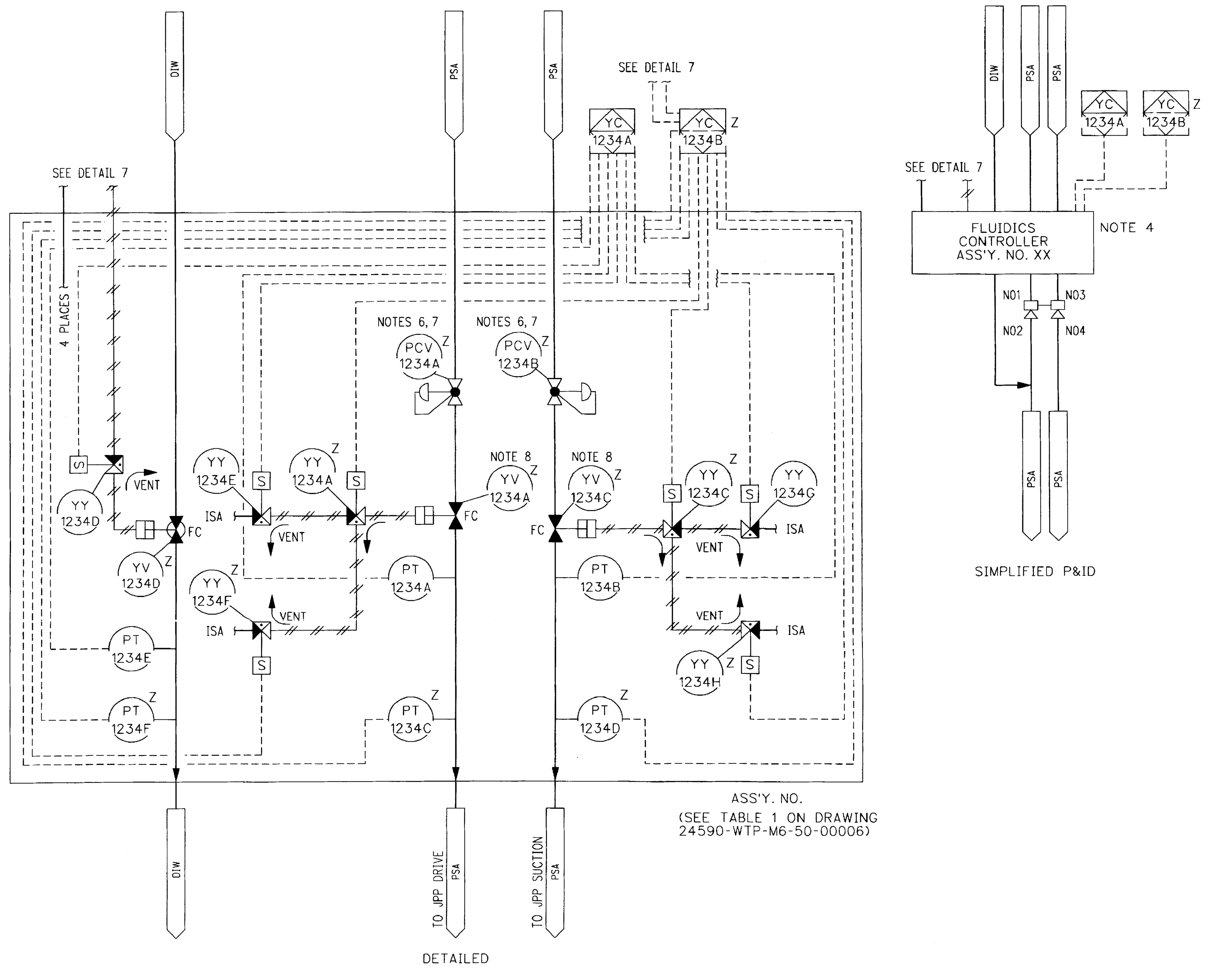

DETAIL 5

TYPICAL PTF ARRANGEMENT - ITS FLUIDICS
PJM - CONTROLLER - 50% REDUNDANT AND SINGLE TRAIN

NOTES 1, 5

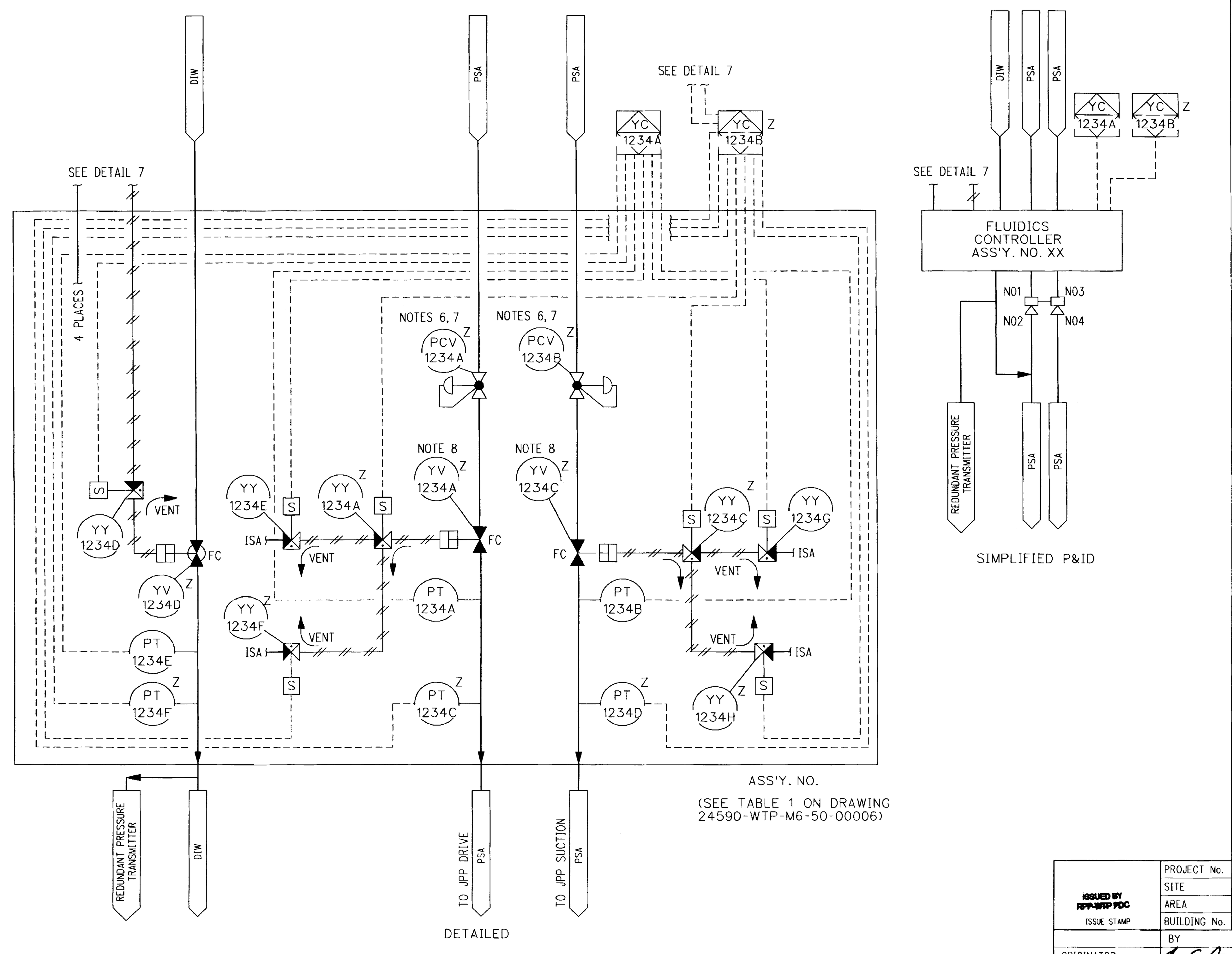

DETAIL 6

TYPICAL PTF ARRANGEMENT - ITS FLUIDICS
PJM - PRIMARY CONTROLLER - 100% REDUNDANCY VESSELS

NOTES 1, 4

ERIC B. ISERN — STATE OF WASHINGTON — 33449 — REGISTERED PROFESSIONAL ENGINEER — 10/2/07 — EXPIRES: 07/28/09

PLEASE NOTE THAT SOURCE, SPECIAL NUCLEAR AND BYPRODUCT MATERIALS, AS DEFINED IN THE ATOMIC ENERGY ACT OF 1954 (AEA), ARE REGULATED AT THE U.S. DEPARTMENT OF ENERGY (DOE) FACILITIES EXCLUSIVELY BY DOE ACTING PURSUANT TO ITS AEA AUTHORITY. DOE ASSERTS, THAT PURSUANT TO THE AEA, IT HAS SOLE AND EXCLUSIVE RESPONSIBILITY AND AUTHORITY TO REGULATE SOURCE, SPECIAL NUCLEAR, AND BYPRODUCT MATERIAL AT DOE-OWNED NUCLEAR FACILITIES. INFORMATION CONTAINED HEREIN ON RADIONUCLIDES IS PROVIDED FOR PROCESS DESCRIPTION PURPOSES ONLY.

REV	DESCRIPTION	ORG	CHKD	RVWD	APVD	DATE
0	ISSUED FOR PERMITTING USE	LCS	WW	EA	RCA	10/4/07

REVISION HISTORY

PROJECT No.	24590
SITE	HANFORD
AREA	200E
BUILDING No.	

ISSUED BY RPP-WTP PDC — ISSUE STAMP

BY		DATE
ORIGINATOR	(signature)	9/28/07
CHECKER	(signature)	10/1/07
APPROVER	(signature)	10/4/07
REVIEWER	(signature)	10/4/07

BECHTEL — RIVER PROTECTION PROJECT, WASTE TREATMENT PLANT, 2435 STEVENS CENTER PLACE, RICHLAND, WA 99354

CONTRACT No: DE-AC27-01RV14136

P&ID SYMBOLS AND LEGEND SHEET 7 OF 8

CONTENT APPLICABLE TO ALARA? YES [X] NO
ADR NO. N/A — REV: N/A
SAFETY SCREEN REQUIRED? YES [X] NO — EAMS INITIAL IF YES
SAFETY SCREEN IS REQUIRED FOR DRAWING TYPES IDENTIFIED IN 24590-WTP-GPP-SREG-002

'E' SIZE - 44x34 — COMPUTER GENERATED - MANUAL CHANGES NOT PERMITTED

SCALE: NONE — 24590-WTP-M6-50-P0007 — REV 0

FORM E_SDN.DGN 02/2003

09/27/2007 05:05:19 PM

HYDRAULIC SYMBOLS
(NOT TAGGED, NON-INTELLIGENT)

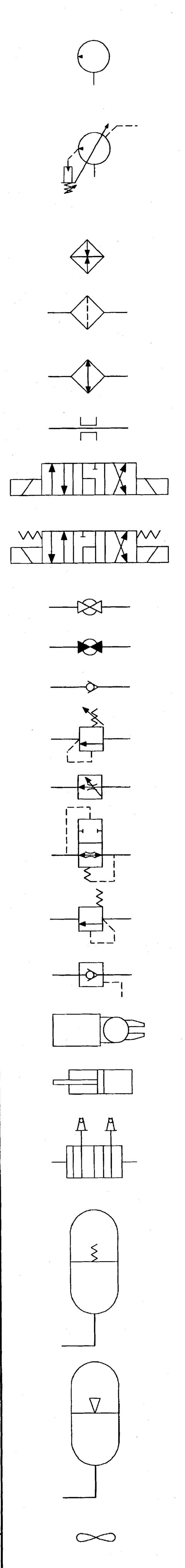

- HYDRAULIC FIXED DISPLACEMENT PUMP
- HYDRAULIC VARIABLE DISPLACEMENT PRESSURE COMPENSATING PUMP
- HYDRAULIC HEATER
- HYDRAULIC FILTER
- HYDRAULIC COOLER
- HYDRAULIC FLOW SILENCER
- FOUR-WAY, THREE-POSITION, SOLENOID-OPERATED VALVE
- FOUR-WAY, THREE-POSITION, SOLENOID-OPERATED, SPRING-CENTERED VALVE
- HYDRAULIC BALL VALVE - NORMALLY OPEN
- HYDRAULIC BALL VALVE - NORMALLY CLOSED
- HYDRAULIC CHECK VALVE
- HYDRAULIC PRESSURE REDUCING VALVE
- HYDRAULIC FLOW CONTROL VALVE
- HYDRAULIC VELOCITY FUSE
- HYDRAULIC PRESSURE RELIEF VALVE
- HYDRAULIC PILOT-OPERATED CHECK VALVE
- HYDRAULIC POWER MANIPULATOR
- HYDRAULIC CYLINDER / HYDRAULIC SHEAR CYLINDER
- HYDRAULIC HOSE REEL
- HYDRAULIC SYSTEM SPRING-LOADED ACCUMULATOR
- HYDRAULIC SYSTEM GAS-CHARGED ACCUMULATOR
- HYDRAULIC SYSTEM COOLING FAN

SYSTEM LOCATOR/SYSTEM NAME
NOTE 1

AFR	ANTI-FOAM REAGENT SYSTEM
AMR	REAGENT AMMONIA SYSTEM
ARV	ATMOSPHERIC REFERENCE VENTILATION SYSTEM
ASJ	AUTOSAMPLING CONTROL SYSTEM
ASX	AUTOSAMPLING SYSTEM
BAG	BOTTLED ARGON GAS SYSTEM
BNG	BOTTLED NITROGEN GAS SYSTEM
BHG	BOTTLED HELIUM GAS SYSTEM
BSA	BREATHING SERVICE AIR SYSTEM
CDG	CARBON DIOXIDE GAS SYSTEM
CHW	CHILLED WATER SYSTEM
CME	COMMUNICATIONS ELECTRICAL SYSTEM
CNP	CESIUM NITRIC ACID RECOVERY PROCESS SYSTEM
CPE	CATHODIC PROTECTION ELECTRICAL SYSTEM
CRP	CESIUM RESIN ADDITION PROCESS SYSTEM
CXP	CESIUM ION EXCHANGE PROCESS SYSTEM
C1V	C1 VENTILATION SYSTEM
C2V	C2 VENTILATION SYSTEM
C3V	C3 VENTILATION SYSTEM
C5V	C5 VENTILATION SYSTEM
DCE	DC ELECTRICAL (125 V) SYSTEM
DFO	DIESEL FUEL OIL SYSTEM
DIW	DEMINERALIZED WATER SYSTEM
DOW	DOMESTIC (POTABLE) WATER SYSTEM
DWJ	PLANT DATA WAREHOUSING AND REPORTING SYSTEM
EDX	EMERGENCY DIESEL GENERATOR SYSTEM
EMJ	ENVIRONMENTAL MONITORING SYSTEM
FDE	FIRE DETECTION AND ALARM SYSTEM
FEP	WASTE FEED EVAPORATION PROCESS SYSTEM
FNJ	FACILITY NETWORK INFRASTRUCTURE SYSTEM
FPW	FIRE PROTECTION WATER SYSTEM
FRP	WASTE FEED RECEIPT PROCESS SYSTEM
FSW	FIRE SERVICE WATER STORAGE AND DISTRIBUTION SYSTEM
GFR	GLASS FORMERS REAGENT SYSTEM
GRE	GROUNDING AND LIGHTING PROTECTION ELECTRICAL SYSTEM
HCP	HLW CONCENTRATE RECEIPT PROCESS SYSTEM
HDH	HLW CANISTER DECONTAMINATION HANDLING SYSTEM
HEH	HLW CANISTER EXPORT HANDLING SYSTEM
HFH	HLW FILTER CAVE HANDLING SYSTEM
HFP	HLW MELTER FEED PROCESS SYSTEM
HLP	HLW LAG STORAGE AND BLENDING PROCESS SYSTEM
HMH	HLW MELTER HANDLING SYSTEM
HMP	HLW MELTER PROCESS SYSTEM
HOP	MELTER OFFGAS TREATMENT PROCESS SYSTEM
HPH	HLW CANISTER POUR HANDLING SYSTEM
HPS	HIGH PRESSURE STEAM SYSTEM
HRH	HLW CANISTER RECEIPT HANDLING SYSTEM
HSH	HLW MELTER CAVE SUPPORT HANDLING SYSTEM
HTE	HEAT TRACE ELECTRICAL SYSTEM
ISA	INSTRUMENT SERVICE AIR SYSTEM
LCP	LAW CONCENTRATE RECEIPT PROCESS SYSTEM
LEH	LAW CONTAINER EXPORT HANDLING SYSTEM
LFH	LAW CONTAINER FINISHING HANDLING SYSTEM
LFP	LAW MELTER FEED PROCESS SYSTEM
LIJ	LABORATORY INFORMATION MANAGEMENT SYSTEM
LMH	LAW MELTER HANDLING SYSTEM
LMP	LAW MELTER PROCESS SYSTEM
LOP	LAW PRIMARY OFFGAS PROCESS SYSTEM
LPH	LAW CONTAINER POUR HANDLING SYSTEM
LPS	LOW PRESSURE STEAM SYSTEM
LRH	LAW CONTAINER RECEIPT HANDLING SYSTEM
LSH	LAW MELTER EQUIPMENT SUPPORT HANDLING SYSTEM
LTE	LIGHTING ELECTRICAL SYSTEM
LVE	LOW VOLTAGE ELECTRICAL (480/208/120 V) SYSTEM
LVP	LAW SECONDARY OFFGAS/VESSEL VENT PROCESS SYSTEM
MHJ	MECHANICAL HANDLING CONTROL SYSTEM
MVE	MEDIUM VOLTAGE ELECTRICAL (13.8/4.16 kV) SYSTEM
MXG	MISCELLANEOUS GASES SYSTEM
MXR	MISCELLANEOUS REAGENTS SYSTEM
NAR	NITRIC ACID REAGENT SYSTEM
NLD	NON-RADIOACTIVE LIQUID WASTE DISPOSAL SYSTEM
PCJ	PROCESS CONTROL SYSTEM
PCW	PLANT COOLING WATER SYSTEM
PFH	PRETREATMENT FILTER CAVE HANDLING SYSTEM
PIH	PRETREATMENT IN-CELL HANDLING SYSTEM
PJV	PULSE JET VENTILATION SYSTEM
PPJ	PROGRAMMABLE PROTECTION SYSTEM
PSA	PLANT SERVICE AIR SYSTEM
PSW	PROCESS SERVICE WATER SYSTEM
PTJ	PROCESS AND MECHANICAL HANDLING CCTV SYSTEM
PVA	PLANT VACUUM AIR SYSTEM
PVP	PRETREATMENT VESSEL VENT PROCESS SYSTEM
PVV	PROCESS VESSEL VENT EXHAUST SYSTEM
PWD	PLANT WASH AND DISPOSAL SYSTEM
RDP	SPENT RESIN COLLECTION AND DEWATERING PROCESS SYSTEM
RLD	RADIOACTIVE LIQUID WASTE DISPOSAL SYSTEM
RPJ	RADIOLOGICAL PERSONNEL MONITORING SYSTEM
RWH	RADIOACTIVE SOLID WASTE HANDLING SYSTEM
RWW	RAW WATER SYSTEM
SCE	SECURITY ELECTRICAL SYSTEM
SCW	STEAM CONDENSATE WATER SYSTEM
SDJ	STACK DISCHARGE MONITORING (RAD AND NON-RAD) SYSTEM
SDX	STANDBY DIESEL GENERATOR SYSTEM
SHR	SODIUM HYDROXIDE REAGENT SYSTEM
SND	SANITARY DISPOSAL SYSTEM
SNR	SODIUM NITRITE REAGENT SYSTEM
SPR	SODIUM PERMANGANATE REAGENT SYSTEM
STR	STRONTIUM NITRITE REAGENT SYSTEM
SWD	STORM WATER DISPOSAL SYSTEM
TCP	TREATED LAW CONCENTRATE STORAGE PROCESS SYSTEM
TLP	TREATED LAW EVAPORATION PROCESS SYSTEM
TSJ	TRAINING SIMULATOR SYSTEM
UFP	ULTRAFILTRATION PROCESS SYSTEM
UPE	120 VAC UNINTERRUPTIBLE POWER ELECTRICAL SYSTEM
URR	UREA REAGENT SYSTEM
VHW	VENTILATION HOT WATER SYSTEM
WTJ	WASTE TRACKING AND INVENTORY SYSTEM

ABBREVIATIONS

PROJECT SUBDIVISION

WTP - WASTE TREATMENT PLANT
PTF - PRETREATMENT FACILITY
LAW - LOW-ACTIVITY WASTE VITRIFICATION FACILITY
HLW - HIGH-LEVEL WASTE VITRIFICATION FACILITY
BOF - BALANCE OF FACILITIES
LAB - ANALYTICAL LABORATORY FACILITIES

ATM - ATMOSPHERE
FBOX - FLOORBOX
WBOX - WALLBOX
ITS - IMPORTANT TO SAFETY
S/D - SHUT DOWN
ICN - INTEGRATED CONTROL NETWORK
PPJ - PROGRAMMABLE PROTECTION SYSTEM
PCJ - PROGRAMMABLE CONTROL SYSTEM

LC - LOCKED CLOSED
LO - LOCKED OPEN
LT - LOCKED THROTTLED

FC - FAIL CLOSED
FI - FAIL INDETERMINATE
FL - FAIL LAST POSITION
FO - FAIL OPEN

NC - NORMALLY CLOSED
NO - NORMALLY OPEN

MAWP - MAXIMUM ALLOWABLE WORKING PRESSURE

FOB - FLAT ON BOTTOM
FOT - FLAT ON TOP
(D) - DRAIN
(V) - VENT
CO - CLEAN OUT

BC - BLACK CELL
HC - HOT CELL

AG - ABOVE GROUND
UG - UNDER GROUND

ET - ELECTRIC TRACING

RADIOLOGICAL AREA CLASSIFICATION (BASED ON DOSE RATE)

R1 - RADIOLOGICAL CONTROLLED AREA
R2 - RADIOLOGICAL BUFFER AREA
R3 - AVERAGE RADIATION AREA
R4 - MAXIMUM RADIATION AREA
R5 - HIGH AND VERY HIGH RADIATION AREA

RADIOLOGICAL AREA CLASSIFICATION (BASED ON CONTAMINATION)

C1 - RADIOLOGICAL CONTROLLED AREA
C2 - RADIOLOGICAL BUFFER AREA
C3 - CONTAMINATION AREA
C4 - HIGH CONTAMINATION AREA
C5 - AIRBORNE RADIOACTIVITY AREA

GENERAL NOTES

1. QUALITY LEVELS AND SEISMIC CATEGORIES SHOWN ARE THE MINIMUM REQUIREMENTS. DESIGN, FABRICATION, AND INSTALLATION MAY BE TO A HIGHER CLASSIFICATION.

SLOPE REQUIREMENTS

GENERAL PIPE SLOPE REQUIREMENTS AND DEFINITIONS

1. PIPE SLOPES ARE TO CONFORM TO THE FOLLOWING REQUIREMENTS UNLESS OTHERWISE NOTED ON THE P&IDs.
2. THE SLOPE SHOWN ON A P&ID IS THE MINIMUM REQUIRED SLOPE.
3. THE PIPE SLOPE TO HAVE A CONTINUOUS SLOPE BETWEEN VERTICAL SEGMENTS.
4. PROCESS LINES BETWEEN FACILITIES TO HAVE THE MINIMUM SLOPE SPECIFIED TO MEET LEAK DETECTION REQUIREMENTS; DEVIATIONS DO NOT APPLY.
5. POCKETING IS NOT ALLOWED.
6. "POCKETING" IS DEFINED AS ANY CHANGE TO A HORIZONTAL PIPE RUN THAT CREATES A LOW POINT WITHOUT PROVISIONS FOR ADEQUATE DRAINING.
7. "FREE DRAINING" IS DEFINED AS HAVING LOW POINT DRAINS WHERE NECESSARY TO DRAIN THE LINE.
8. "SELF-DRAINING" IS DEFINED AS HAVING A CONTINUOUS SLOPE OR HAVING HORIZONTAL LINES WITHOUT INTERMEDIATE LOW POINTS OR POCKETS.

ADDITIONAL REQUIREMENTS

9. FOR THE STEAM LINES: DRIP LEGS AND STEAM TRAPS SHALL BE PROVIDED AT ANY NATURAL COLLECTION POINT, LOW POINT, AT THE BOTTOM OF RISERS AND EXPANSION LOOPS. IF ANY OF THESE ARE LOCATED GREATER THAN 150 FEET APART, ADDITIONAL DRIP LEGS AND STEAM TRAPS SHALL BE PROVIDED SUCH THAT DISTANCE BETWEEN THEM DOES NOT EXCEED 150 FEET, OR UNLESS OTHERWISE NOTED ON THE P&ID.
10. BLACK CELL PIPING TO BE ROUTED AS "SELF DRAINING" AND "DO NOT POCKET" WHERE NO SLOPE IS INDICATED, EXCEPT AS NOTED BELOW IN DEVIATIONS FROM PIPE SLOPE.
11. ALL NON-BLACK CELL PIPING TO BE FREE DRAINING, UNLESS OTHERWISE NOTED.
12. JUMPERS CONVEYING SOLIDS MAY BE HORIZONTAL, BUT PROVISIONS MUST BE MADE FOR FLUSHING UPON SHUTDOWN AND PRIOR TO REMOVAL. JUMPERS FOR CONVEYING CLEAR LIQUIDS MAY BE HORIZONTAL AND DO NOT REQUIRE A FLUSH CONNECTION.

DEVIATIONS FROM PIPE SLOPE

13. SHORT SECTIONS OF A SELF-DRAINING LINE THAT REQUIRES A SLOPE BETWEEN VERTICAL SEGMENTS (10% OR LESS OF THE PIPE RUN), MAY BE LESS THAN THE SPECIFIED SLOPE. THIS DOES NOT APPLY TO UNDERGROUND WASTE TRANSFER LINES BETWEEN FACILITIES.
14. WALL PENETRATIONS AND IMMEDIATELY ADJACENT AREAS MAY BE HORIZONTAL WITH THE FOLLOWING LIMITS.
    I. WITH FLUSHING PROVISIONS FOR PUMPED OR PRESSURIZED SYSTEMS, HORIZONTAL RUNS ARE TO BE NO MORE THAN THE WIDTH OF THE WALL PLUS 8 FEET (BOTH SIDES COMBINED).
    II. WITHOUT FLUSHING PROVISIONS FOR PUMPED OR PRESSURIZED SYSTEMS, HORIZONTAL RUNS ARE TO BE NO MORE THAN THE WIDTH OF THE WALL PLUS 2 FEET (BOTH SIDES COMBINED).
    III. HORIZONTAL RUNS FOR GRAVITY DRAINS WITH NEWTONIAN FLUIDS ARE TO BE NO MORE THAN THE WIDTH OF THE WALL PLUS 2 FEET (BOTH SIDES COMBINED).
15. PIPING CONNECTIONS TO TANKS, VESSELS, EQUIPMENT, CABINETS, BULGES, AND JUMPERS MAY BE HORIZONTAL, PRIOR TO THE CONNECTION AS REQUIRED, TO FACILITATE CONNECTING THE PIPING TO THE COMPONENT NOZZLE. THE REQUIRED PIPING SLOPE SHOULD BE ACHIEVED AS SOON AS PRACTICAL AT THE CONNECTION AND WITHIN FIVE PIPE DIAMETERS OR 2 FEET, WHICH EVER IS GREATER.
16. FOR TOP PENETRATIONS, PIPE ROUTING INTO TANKS, VESSELS, OR EQUIPMENT MAY HAVE A HIGH POINT AND SLOPE IN THE OPPOSITE DIRECTION FROM THE SLOPE SHOWN ON THE P&ID, PRIOR TO THE TANK, VESSEL, OR EQUIPMENT.
17. FOR FIELD RUN INSTRUMENT SENSING TUBING, REFER TO REFERENCE 3. WALL PENETRATIONS TO BE THE SAME AS 14(I) THROUGH 14(III) ABOVE.

MISCELLANEOUS SYMBOLS

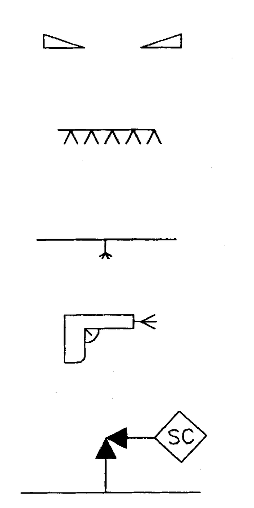

- SLOPE INDICATOR
- OPEN HEAD SPRINKLERS
- SPRAY NOZZLE
- DECON SPRAY GUN
- SAMPLE CONNECTION (SHOWN WITH ANGLE VALVE)

NOTES:

1. SYSTEM DESIGNATOR SHALL BE IN ACCORDANCE WITH SYSTEM AND AREA LOCATORS LIST AND DIVISION OF RESPONSIBILITY 24590-WTP-RPT-ENG-02-009.
2. CONTENTS OF THIS DOCUMENT ARE DANGEROUS WASTE PERMIT AFFECTING.
3. THE COMPONENTS SHOWN ON THIS DRAWING IN PHANTOM DO NOT REQUIRE INDEPENDENT QUALIFIED REGISTERED PROFESSIONAL ENGINEER (IQRPE) ASSESSMENTS OF DESIGN OR INSTALLATION INSPECTIONS BY A QUALIFIED INSTALLATION INSPECTOR IN ACCORDANCE WITH THE DWP AND/OR WASHINGTON ADMINISTRATIVE CODE (WAC) REQUIREMENTS.

REFERENCES:

1. DESIGN GUIDE - RECOMMENDED SLOPES FOR PIPING SYSTEMS 24590-WTP-GPG-M-027.
2. DELETED
3. DRAWING - INSTRUMENT SENSING LINE SLOPE DESIGN REQUIREMENTS 24590-WTP-J8-50-06012.
4. PIPING ASSEMBLY DETAILS 24590-WTP-3PB-P000-T0001.
5. ISA STANDARD, ANSI/ISA-S5.1-1984 R1992 "INSTRUMENTATION SYMBOLS AND IDENTIFICATION" AND STANDARD ISA-S5. 3-1983 "GRAPHIC SYMBOLS FOR DISTRIBUTED CONTROL/SHARED DISPLAY INSTRUMENTATION, LOGIC AND COMPUTER SYSTEMS".
6. DELETED
7. ISO 1219-1, FLUID POWER SYSTEMS AND COMPONENTS, GRAPHIC SYMBOLS AND CIRCUIT DIAGRAMS-PART 1: GRAPHIC SYMBOLS.
8. ISO 1219-2, FLUID POWER SYSTEMS AND COMPONENTS, GRAPHIC SYMBOLS AND CIRCUIT DIAGRAMS-PART 2: CIRCUIT DIAGRAMS.
9. 24590-WTP-3PS-JXF0-T0002, ENGINEERING SPECIFICATION FOR INSTRUMENT PIPING MATERIAL CLASS QUALITY LEVEL Q.

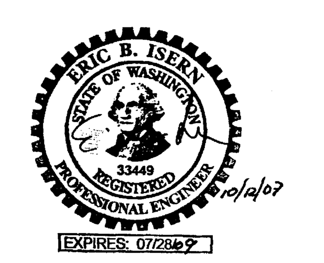

PLEASE NOTE THAT SOURCE, SPECIAL NUCLEAR AND BYPRODUCT MATERIALS, AS DEFINED IN THE ATOMIC ENERGY ACT OF 1954 (AEA), ARE REGULATED AT THE U.S. DEPARTMENT OF ENERGY (DOE) FACILITIES EXCLUSIVELY BY DOE ACTING PURSUANT TO ITS AEA AUTHORITY. DOE ASSERTS, THAT PURSUANT TO THE AEA, IT HAS SOLE AND EXCLUSIVE RESPONSIBILITY AND AUTHORITY TO REGULATE SOURCE, SPECIAL NUCLEAR, AND BYPRODUCT MATERIAL AT DOE-OWNED NUCLEAR FACILITIES. INFORMATION CONTAINED HEREIN ON RADIONUCLIDES IS PROVIDED FOR PROCESS DESCRIPTION PURPOSES ONLY.

REV	DESCRIPTION	ORG	CHKD	RVWD	APVD	DATE
0	ISSUED FOR PERMITTING USE	LCS	[signature]	CEL / [signature]	RCL	10/14/07

REVISION HISTORY

ISSUED BY RPP-WTP PDC / ISSUE STAMP	PROJECT No.	24590
	SITE	HANFORD
	AREA	200E
	BUILDING No.	

	BY	DATE
ORIGINATOR	[signature]	9/28/07
CHECKER	[signature]	10/1/07
APPROVER	Robert E Stevens	10/14/07
REVIEWER	[signature]	10/4/07

CONTENT APPLICABLE TO ALARA? [ ] YES [X] NO
ADR NO. N/A REV: N/A
SAFETY SCREEN REQUIRED? [ ] YES [X] NO E&NS INITIAL IF YES ____

BECHTEL
RIVER PROTECTION PROJECT
WASTE TREATMENT PLANT
2435 STEVENS CENTER PLACE
RICHLAND, WA 99354

CONTRACT No: DE-AC27-01RV14136

P&ID SYMBOLS AND LEGEND SHEET 8 OF 8

SCALE: NONE

24590-WTP-M6-50-P0008 REV 0

Drawings and Documents

Operating Unit Group 10 – Appendix 7.5
WTP Documents Applicable to All Areas
Civil, Structural, and Architectural Criteria and Typical Design Details

The documents listed in the following table are incorporated by reference into this permit and are subject to the requirements set forth in Part I Standard Conditions, Part II General Facility Conditions, and Part III Operating Unit Group 10 Conditions. Upon request, copies of the documents can be viewed at the Nuclear Waste Program Resource Center located at 3100 Port of Benton Blvd. Richland, WA. Appointments for viewing can be scheduled by calling (509) 372-7950.

Drawing/Document Number	***Description***
24590-WTP-DC-PS-01-001, Rev 6	Pipe Stress Design Criteria Including "Pipe Stress Criteria" and "Span Method Criteria"
24590-WTP-PER-CSA-02-001, Rev 8	Secondary Containment Design
24590-WTP-PER-J-02-001, Rev 4	Leak Detection – Sump Level Measurement in Secondary Containment Systems
24590-WTP-PER-J-02-002, Rev 3	Low-Point Leak Detection in Secondary Containment Systems including Buried Co-Axial Transfer Lines
24590-WTP-PER-PS-02-001, Rev 4	Ancillary Equipment Pipe Support Design
RESERVED	RESERVED

Source documents (which do not include a "P" in the last set of numbers, e.g. "-P0001," or "-TP001") should be used in conjunction with any document change notices issued against them.

We are currently transitioning from permit documents (which do include a "P" in the last set of numbers) to source documents. At the end of the transition period, permit submittals will contain source documents and will be incorporated into the permit as described in Ecology Publication # 07-05-006 (www.ecy.wa.gov/biblio/nwp.html).

This page intentionally left blank.

ISSUED BY
RPP-WTP PDC

R10863539

Document title: **Pipe Stress Design Criteria including "Pipe Stress Criteria" and "Span Method Criteria"**

Department: Engineering

Author(s): Joseph Sasson

Principal author signature:

Document number: 24590-WTP-DC-PS-01-001, Rev 6

Checked by: Susan Karnesky

Checker signature:

Date of issue: January 15, 2008

Issue status: Approved

Approved by: Cliff Winkler

Approver's position: Plant Design Discipline Production Engineering

Approver signature:

E&NS Safety Screening

K.D GIBSON	K.D. Gibson	1/15/08
Print/Type Name	Signature	Date

River Protection Project
Waste Treatment Plant
2435 Stevens Center Place
Richland, WA 99354
United States of America
Tel: 509 371 2000

History Sheet

Rev	Date	Reason for revision	Revised by
0	07/23/01	Issued for Project Use	Jack Shen
1	01/16/02	Revised per New Procedure and Incorporated DRN Comments	Dick Huang/Jack Shen
2	09/10/03	Revised per Safety Evaluation Number 24590-WTP-SE-ENS-03-704 Rev.0, Extended Span and Support Loads, and Nozzle Tables from 16"ϕ Pipe to 24"ϕ Pipe	Jack Shen
3	05/13/04	Revised per Safety Evaluation Number 24590-WTP-SE-ENS-03-962 Rev.0, pressure vessel nozzle load combination per Reference 8-22, and piping with D_o/t_c greater than 50	Dick Huang
4	10/18/04	Consideration of ASME B31.3 Mechanical / Corrosion / Erosion Allowances per PIR GPI-6BEB-00401-000, CCN069183 and 24590-WTP-CAR-QA-04-120, add SAM Criteria, Removed Rotary Equipment Nozzle Load Tables	Jack Shen
5	08/23/06	Extensive revision; changes not tracked, except on the cover sheet. Revised to Incorporate the Considerations from CCN 115252, Safety Evaluation 24590-WTP-SE-ENS-05-0128 Rev. 1, and the Discipline Directions Specified in CCNs 085280, 109336, 114910, 130111, 130571 and 134128; SC-III(Non-Chem) & SC-IV Span Tables for Every DW and Every Other DW Span, and Criteria of Critical Piping; Delete Tables 3-1, 3-2,2.1, 2.3, 3.1.1, 3.3.1, Appendices 4, 5 and 6; delete Section 4.3.2., Seismic mode combination per Ref. 8.56, Revised section 3.1 valve qualification, Revised Section 4.6 Wind load. Changed titles of Appendix 3, Tables 3.2.1 and 3.4.1.	Joseph Sasson
6	01/15/08	Revised to Incorporate the Considerations from CCN 143512, Safety Evaluation 24590-WTP-SE-ENS-06-0153 Rev. 0, "Evaluation of WTP Piping and Supports Qualified to SC I, SC II, SC III, and SC IV Requirements," which was approved in US DOE ORP letter 06-WTP-198 and incorporated into Revision 2b of the PSAR (Ref, 8.38); added Section 5 and Table 1-1 & 1-2 to Appendix 1; added Appendix 10 to address Washington Dept. of Ecology Issue 35, "Stress Limits for SC-III(Non-Chem) and SC-IV Piping and Supports"	Joseph Sasson

Contents

Acronyms iv
1 Purpose 6
2 Scope 6
3 Design Requirements and Criteria 6
3.1 Design Codes and Requirements 6
3.2 Pipe Classifications 8
3.3 Load Combinations and Acceptance Criteria 8
4 Pipe Stress Analysis 10
4.1 Analysis Methods 10
4.2 Pressure Design 12
4.3 Flexibility Analysis 12
4.4 Weight Analysis 14
4.5 Seismic Analysis 15
4.6 Analysis for Wind Loads – For Exposed Piping Only 19
4.7 Simplified Methods (Using Span Tables) 20
4.8 Deleted 21
4.9 Computer Analysis Using ME101 21
4.10 Consideration of Mechanical, Corrosion, and Erosion Allowance 25
5 Computer Analysis Procedures 29
5.1 General Procedure 29
5.2 Pipe Mathematical Model 29
5.3 De-coupled Analysis 29
5.4 Considerations of Support Design in Pipe Stress Analysis 30
5.5 Modeling of Piping Components in ME101 32
5.6 Summary of Analysis Results 32
5.7 Documentation of Calculation Packages 33
6 Interface with Other Disciplines 34
6.1 Interface with the Layout Group 34
6.2 Interface with the Pipe Support Designer 34
6.3 Interface with Mechanical Systems Group 34
6.4 Interface with CS&A Discipline 34
6.5 Interface with Piping and Valve Engineering 34
7 Special Stress Analysis 35
7.1 Pipe Local Stress Analysis at Welded Attachments 35

7.2 Nozzle and Anchor Qualifications 38
7.3 Dynamic Transient Forces on Closed Discharge Piping Systems 41
7.4 Welding Tee 42
7.5 Piping with $D_o/t_c > 50$ 42
7.6 Black Cell Piping Systems 42
7.7 Piping Two over One Protection 44
7.8 Jumper Supports 44
7.9 Pipe Break (To be determined) 44
7.10 Wind Missile (To be determined) 44
7.11 Hydrogen In Pipes And Ancillary Vessels (HPAV) - (To be determined) 44
7.12 Buried Pipe 44

8 References 45

9 Appendices 48

9.1 APPENDIX 1, Span Method Criteria 48
9.2 APPENDIX 2, Span and Support Load Tables 55
9.3 APPENDIX 3, SC-III and SC-IV Anchor Load Tables 64
9.4 APPENDIX 4, Deleted 69
9.5 APPENDIX 5, Deleted 69
9.6 APPENDIX 6, Deleted 69
9.7 APPENDIX 7, ME101 Stress Check Based on Nominal Weight and Eroded/Corroded Pipe Wall Thickness 69
9.8 APPENDIX 8, Criteria for Critical Piping 72
9.9 APPENDIX 9, ME101 Gap Options: 73
9.10 APPENDIX 10, Use of UBC and Alternate Stress Criteria for SC-III(Non-Chem) and SC-IV 75

Tables

Table 4.1 Piping with Erosion/Corrosion Allowance 50% or Greater 27

Acronyms

AISC ASD	American Institute of Steel Construction, Allowable Stress Design
ASCE	American Society of Civil Engineers
ASME	American Society of Mechanical Engineers
APC	Additional Protection Class
C.S.	Carbon Steel
CQC	Complete Quadratic Combination
CS&A	Civil, Structural & Architectural
DOE	Department Of Energy
DW	Deadweight
EGS	Engineering Group Supervisor
HPAV	Hydrogen in Pipes And Ancillary Vessels
ISO	Isometric
ITS	Importance To Safety
ME101	Bechtel computer program for the linear elastic analysis of piping systems (LEAP)
MSS-SP-58	Manufacturers Standardization Society, Standard Practice 58
NPH	Natural Phenomena Hazards
QA	Quality Assurance
RPP-WTP	River Protection Project – Waste Treatment and Immobilization Plant
SAM	Seismic Anchor Movement
SC	Safety Class or Seismic Category
SC-I	Seismic Category I
SC-II	Seismic Category II
SC-III	Seismic Category III
SC-III(Chem)	SC-III piping containing a significant Chemical release hazard
SC-III(Non-Chem)	SC-III piping not containing a significant Chemical release hazard, other than SC-III(Chem)
SC-IV	Seismic Category IV
SRSS	Square Root of the Sum of the Square
SS	Safety Significant
SSC	Systems, Structures & Components
S.S.	Stainless Steel

SRD	Safety Requirements Document
UBC	Uniform Building Code

1 Purpose

The "Pipe Stress Design Criteria" is developed to establish the design basis for the pipe stress analysis of RPP-WTP piping systems and to demonstrate that the piping systems meet both ASME B31.3 Code and DOE seismic design requirements in DOE-STD-1020-94.

The purpose of the design criteria is also to provide uniform guidance and acceptance criteria for performing pipe stress analysis for different pipe categories of this project.

2 Scope

The Pipe Stress Design Criteria is applicable to the pipe categories identified in Section 3.2. All pipe stress analysis shall be performed based on the analysis procedures provided in this Design Criteria and project engineering calculation procedure 24590-WTP-3DP-G04B-00037 [Ref 8.3]. Generic calculations are also performed to generate the "Span and Support Load Tables" using the simplified pipe design methods, based on the analysis procedures provided in this Design Criteria. This Design Criteria is the analysis basis and the analysis procedure for the pipe stress analysis of RPP-WTP in accordance with the ASME B31.3 Code and the DOE seismic design requirements in DOE-STD-1020-94.

3 Design Requirements and Criteria

3.1 Design Codes and Requirements

The design Code of RPP-WTP is ASME B31.3, Process Piping [Ref 8.1]. This project is also required to meet the DOE seismic requirements as specified in DOE-STD-1020-94 [Ref 8.2]. Due to the stringent seismic requirements for different levels of seismic safety protections, a more realistic seismic analysis methodology provided in ASME Section III Code [Ref 8.4] may serve as a model for the details missing from ASME B31.3.

In compliance with seismic requirements as specified in Reference 8.2, either the response spectrum method or the UBC static method is used for the seismic analysis of the piping systems. A 5% continuous damping, as specified in Table 2-3 of the Preliminary Safety Analysis Report [Ref 8.38], shall be used when performing piping analysis using a response spectrum method.

- ASME B31.3 Code – Process Piping

This Code provides the basic design principles and formulas for the design of Chemical plants and petroleum refinery piping. The Code defines the pressure, temperature, and forces applicable to the design of piping, and states the considerations that shall be given to various effects and their consequent loadings. Those loadings are due to weight effects, dynamic effects (such as earthquake or wind effects), thermal expansion and contraction effects, etc. The Code also specifies stress criteria such as limits of calculated stresses due to sustained loads and displacement stress range, and limits of calculated stresses due to occasional loads, etc.

- Uniform Building Code (UBC)

The UBC [Ref 8.5] provides the design earthquake loads, and the design rules for the design of buildings and other structural systems that are regulated by this Uniform Building Code. The UBC has treated piping systems similar to other mechanical equipment. The UBC is commonly used and is accepted in the design of fossil power plants, petro-chemical and other industrial facilities and is the required standard by DOE-1020-94 [Ref 8.2] for PC-1 and PC-2 SSCs. Therefore, those RPP-WTP piping systems that are SC-III including SC-III(Chem) and SC-III(Non-Chem) or SC-IV will be designed using the UBC to calculate the static loads.

- ASCE 7-98 - Minimum Design Loads for Buildings and Other Structures (ASCE)

The ASCE [Ref 8.9] provides the design rules and method required for evaluation of wind loads. The ASCE is commonly used and is accepted in the design of fossil power plants, petro-chemical and other industrial facilities and is the required standard by Safety Requirements Document 24590-WTP-SRD-ESH-01-001-02 [Ref 8.19]. Therefore, those RPP-WTP piping systems that are exposed to wind loads will be designed using the ASCE to calculate the wind loads.

- ASME B16.5 Pipe Flanges and Flanged Fittings

Flanges may be designed per ASME B16.5 [Ref 8.6], or the flange joint may be evaluated in accordance with the design rules of ASME B31.3 Code for this project.

- Valve/In-Line Component/Instrumentation Qualifications

The design and analysis of piping systems shall be performed so that non-hand-wheel valves and in-line components that are important to safety are subjected to seismic/dynamic acceleration less than:

- 4.54g for SC-I & II valves and in-line components. This value is a resultant acceleration of X, Y & Z (SRSS) directions and is equivalent to a test or analysis done to 4.5g biaxial in accordance with IEEE-382 [Ref 8.60] with a 1.4 margin as required by DOE-1020-94 [Ref 8.2].
- 5.78g for SC-III & IV valves and in-line components. This value is a resultant acceleration of X, Y & Z (SRSS) directions and is equivalent to a test or analysis

done to 4.5g biaxial in accordance with IEEE-382 [Ref 8.60] with a 1.1 margin as required by DOE-1020-94 [Ref 8.2]. Note that the above value applies for dynamically analyzed systems. SC-III and SC-IV systems utilizing the UBC static analysis method will automatically meet the 5.78g limit (see Section 4.5.2(a)).

Notes:

1. When operator weight and location is provided, model the valve with operator weight and location in ME101 computer model.
2. When valve CG location is not available, use 2/3 of valve assembly overall height as CG location.
3. For the valves w/o automatic operator, valve qualification is governed by the stress check at the valve ends in the ME101 detailed analysis.

3.2 Pipe Classifications

The design Code for the piping systems of RPP-WTP is ASME B31.3 Code. Piping systems shall be designed for pressure effects, weight effects, thermal expansion or contraction effects, and dynamic effects, etc., in accordance with the design rules of ASME B31.3 Code.

The piping classified by seismic categories along with their seismic analysis methods and acceptance criteria are provided in Table 2-6 of the Preliminary Safety Analysis Report [Ref 8.38].

3.3 Load Combinations and Acceptance Criteria

According to ASME B31.3 Code, in addition to internal pressure and external pressure loads, the applicable loadings considered in the pipe design shall be classified as sustained loads, displacement strains, and occasional loads. This is required because the design criteria for sustained loads, displacement strains, and occasional loads are different. They are defined as follows:

Sustained Loads - These loads include the weight of piping components, insulation, and other superimposed permanent loads supported by the pipe. The weight of the medium transported or the medium used for the test is also considered as a sustained load.

Displacement strains - These loads include thrusts and moments that arise when the free thermal expansion and contraction of the piping system is prevented by the restraints or anchors. The effects of movements of piping supports, anchors, and connected equipment shall be considered as this category as well.

Occasional loads - Earthquake loads, wind loads and the dynamic fluid transient loads due to the excitation of the contained fluid.

The following are the load combinations considered in the design of ASME B31.3 Piping:

1. Internal Pressure Stress

Hoop stresses due to internal pressure are considered safe when the wall thickness of the piping component including any reinforcement, meets the requirement of the Code [Ref 8.1]. The compliance to meet these requirements has been established by the piping group. Longitudinal stress due to internal pressure is included in the Code stress calculation.

2. Longitudinal Stresses S_L

The sum of longitudinal stresses in any piping component due to pressure, weight, and other applicable sustained loads shall not exceed S_h. Longitudinal stresses shall be based on the nominal outside diameter and the end-of-life (corroded) thickness, as required by ASME B31.3 [Ref 8.1, Para. 302.3.5].

For SC-III(Non-Chem) and SC-IV piping, the weight plus pressure stress is limited to $0.8S_h$, based on Appendix 10. This limitation may be exceeded (but not to exceed $1.0S_h$) if it can be shown that the sum of seismic, weight, and pressure stresses meet $1.33S_h$ when the seismic stresses are determined using the strict UBC limitations, as explained in Appendix 10. When the SC-III(Non-Chem) and SC-IV piping weight plus pressure stresses exceed $0.8S_h$, the approval of the Stress EGS is required.

3. Allowable Displacement Stress Range S_A

The computed displacement stress range S_E in a piping system shall not exceed the following displacement stress range S_A. In compliance with ASME B31.3 [Ref 8.1, Paragraph 319.3.5], the analysis and stresses shall be based on nominal outside diameter and thickness.

$S_A = f(1.25\ S_c + 0.25\ S_h)$, as defined in Equation (1a) of Reference 8.1.

$S_A = f[1.25\ (S_c + S_h) - S_L]$, as defined in Equation (1b) of Reference 8.1, where

f = stress range reduction factor, as defined in Equation (1c) of Reference 8.1
S_h = basic allowable stress at maximum metal temperature expected during the displacement cycle under analysis, from Table A-1 of ASME B31.3 Code.
S_c = basic allowable stress at minimum metal temperature expected during the displacement cycle under analysis, from Table A-1 of ASME B31.3 Code.

4. Limits of Calculated Stresses due to Occasional Loads

a) SC-I, SC-II and SC-III Piping containing a significant Chemical release hazard (SC-III(Chem)), or any Black Cell piping

The sum of the longitudinal stresses due to pressure, weight, other sustained loads (S_L) and the stresses produced by occasional loads (S_{oc}), such as wind, earthquake, or fluid transient, shall not exceed $1.33S_h$ per ASME B31.3 Code. Longitudinal stresses shall be

based on the nominal outside diameter and the end-of-life (corroded) thickness, as required by ASME B31.3 [Ref 8.1]. Earthquake loads for SC-I, SC-II and any piping located in the Black cells are calculated using Simple Excitation Response Spectrum methods with 5% continuous damping and the Complete Quadratic Combination (CQC) for modal combination [Section 3.2.7 of Ref 8.56] using nominal dimensions. The converted response spectra are documented in References 8.31 and 8.32 for the HLW and PTF facilities, respectively. The occasional loads should be combined by the square root of sum of squares (SRSS) method. Earthquake loads need not be considered as acting concurrently with wind.

b) SC-III piping without containing a significant Chemical release hazard (SC-III(Non-Chem)) and SC-IV piping

The sum of the longitudinal stresses due to pressure, weight, other sustained loads (S_L) and the stresses produced by occasional seismic loads (S_{oc}) shall be less than or equal to $3.0S_h$, but not greater than $2.0S_y$ as specified in Reference 8.38, where

S_h is as defined above, and
S_y = yield strength at design temperature. ASME B31.3 Code par. 302.3.2(e) refers the user to ASME Section II part D Table Y-1 [Ref 8.4] for the yield strength at temperature.

For SC-III, including SC-III(Chem) and SC-III(Non-Chem), and SC-IV piping, earthquake loads are established based on Uniform Building Code (UBC) Formula 32-2 and the pipe stresses are calculated using the UBC static method, using nominal dimensions for load calculation and the end-of-life (corroded) thickness for stress calculation.

The sum of the longitudinal stresses due to pressure, weight, other sustained loads S_L and the occasional stresses S_{oc} produced by occasional loads such as wind or fluid transient shall not exceed 1.33 S_h (per ASME B31.3 [Ref 8.1]). Longitudinal stresses shall be based on the nominal outside diameter and the end-of-life (corroded) thickness, as required by ASME B31.3. The occasional loads are combined by the square root of the sum of the squares method. However, earthquakes need not be considered as acting concurrently with wind.

4 Pipe Stress Analysis

4.1 Analysis Methods

For the purposes of this criteria document, the following definitions apply:
Critical Piping is that which requires a formal ME101 computer analysis, see Appendix 8.
Non Critical Piping is that which does not require a formal ME101 computer analysis.

Piping systems shall be designed to prevent the effects of temperatures, pressures, weight, and dynamic loads from causing the following failures:

a) Failure of piping or supports from overstress or fatigue due to pressure cycling and thermal cycling;
b) Leakage at joints; or
c) Detrimental stresses or distortion in piping and valves or in connected equipment resulting from excessive thrusts and moments in the piping

To demonstrate a piping system meets Code stress criteria, the following analysis approaches may be used:

1. No Formal Analysis

   a) Duplicates, or replaces without significant change, a piping system operating with a successful service record

   b) A piping system can readily be judged adequate by comparison with previous analyzed systems.

   c) A piping system determined to be non-critical and judged to be free from design concerns such as deflection, clearance, thermal expansion/contraction, critical nozzle allowable, etc. Critical piping may be identified using the list in Appendix 8.

2. Formal Analysis

   a) **Simplified or approximate method** may be applied only if used within the range of configurations, similar boundary conditions and load patterns for which their design adequacies have been demonstrated. This is normally shown by a generic calculation. Using "Span and Support Load Tables" may be considered as this approach.

   b) **Acceptable comprehensive methods** of analysis include analytical and chart methods that provide an evaluation of the forces, moments, and stresses due to various load effects. This is usually performed by a manual calculation using existing analytical equations or charts on an individual case. This is not cost effective for mass production.

   c) **Comprehensive analysis** for all piping components in the piping system. This is performed based on the most realistic design condition by taking into account stress intensification factors for any piping component. It is performed for all the stress evaluations to meet the stress criteria as specified in Section 4.9, Computer Analysis Using ME101, under various load considerations.

In summary, comprehensive analysis using ME101 shall be performed for SC-I, SC-II, SC-III(Chem) piping and critical piping as identified in Appendix 8, and simplified analysis

using "Span and Support Load Tables" should be performed for SC-III(Non-Chem) and SC-IV piping. A comprehensive analysis for a pipeline should also be performed to qualify:

- A group of pipelines with similar pipe layout, if it is judged to be technically justifiable.
- The pipe design of a SC-III(Non-Chem) or SC-IV pipeline that deviates significantly from the design permitted by Span Tables.

In case of a piping system interaction with two different seismic category (SC) pipe classes, the piping shall be designed to the seismic design with the lowest SC number, if it is not feasible or practical to isolate them. The technical approach shall comply with the criteria for the piping of the lowest SC number. For instance, SC-III piping with respect to SC-I piping shall be designed using the more stringent analysis approach and design criteria required for SC-I piping. The model of pipe stress analysis shall be extended up to the first anchor or overlap supports on the SC-III piping. Two rigid supports in each global direction and one change in direction of the pipe are considered sufficient to isolate the piping for overlap.

4.2 Pressure Design

The compliance of pressure design required per Section 304 of ASME B31.3 is demonstrated in the pipe design for determining required pipe thickness [Ref 8.53 & 8.54].

4.3 Flexibility Analysis

Piping systems shall have sufficient flexibility to allow for thermal expansion or contraction or movements of piping supports and terminals. To accept the piping flexibility, a pipe flexibility analysis (formal analysis as provided in 4.1.2) or an engineering judgment (no formal analysis as provided in 4.1.1) is required to demonstrate that the stress criterion specified in Section 4.9.2 has been met. For specific guidance regarding when a formal flexibility analysis is required, see Section 4.3.4.

1. Design input for flexibility analysis

   a) Properties of piping materials such expansion coefficient, modulus of elasticity, allowable stress.

   b) Pipe ISO to show pipe configuration, pipe sizes and pipe schedule, support and anchor locations, types of supports, etc.

   c) Temperatures of various operating modes and corresponding imposed movements from support/anchors to determine the displacement stress ranges.

2. Deleted

3. Comprehensive analysis - using computer program ME101

Input 3-D pipe mathematical model including all pipe dimensions, pipe material properties, piping component types and design temperatures into computer program ME101 to determine the dimensional change of the piping system due to the change in temperature. As the piping system is constrained from free expansion or contraction by the connected equipment and restraints, it will be displaced from its unrestrained position. The stress ranges proportional to the total displacement strains are then determined at any piping component, with stress intensification factors per Appendix D of the ASME B31.3 Code. If an SIF is not available in ASME B31.3, use of a suitable SIF shall be justified.

The stress range S_E is calculated between the design temperature and the minimum operating temperature. If no minimum operating temperature is below the ambient temperature 70°F, the temperature range shall be determined between the design temperature and the ambient temperature 70°F. For most piping systems, analyzing for the design temperature may be the most critical case for the design of the piping system. However, some piping systems may have more than one operating temperature including temperature below ambient. It is imperative that the pipe stress engineer determines the worst thermal condition for which the flexibility analysis should be performed. In cases where it is not possible to determine the worst case by engineering judgment, it is necessary to perform flexibility analysis for each of the significant thermal modes.

4. Analysis Approaches

Per the ASME B31.3 Code requirements, all piping, regardless of classification, is required to meet the flexibility requirements whether by using formal analysis or by engineering judgment. Based on the previous experience of piping systems with successful service, the analysis approaches are provided as follows [Ref 8.38]:

a) For piping systems with the maximum operating temperature not greater than 150°F, no formal flexibility analysis is required. However, pipe stress engineer reviews and ensures that there are no significant externally imposed displacements such as movements due to anchor or nozzle displacements, connected piping, or building settlements.

b) For piping systems with the maximum operating temperature not greater than 250°F and properly routed with adequate flexibility, formal flexibility analysis is also not required. However, where the piping systems are SC-I/SC-II, connected to major/sensitive equipment, or will have significant externally imposed displacements, a formal flexibility analysis is required.

c) For piping systems with the maximum operating temperature above 250°F, formal flexibility analysis is required.

d) Per Reference 8.19, for piping systems that contain welds that are to be vacuum box leak tested and have design temperatures greater than or equal to 150°F, a

comprehensive flexibility analysis shall be performed in accordance with ASME B31.3.

4.4 Weight Analysis

1. General Requirements of Weight Analysis

Sustained loads include weight loads, such as the weight of the piping, piping components, insulation, contents, and other superimposed permanent loads, and live loads such as snow load of 15 lb/ft^2, volcanic ash loads of 12.5 lb/ft^2 for SC-I & SC-II piping, and snow load of 15 lb/ft^2, volcanic ash loads of 5 lb/ft^2 for SC-III (Chem and Non-Chem) & SC-IV piping [Tables 4-1 & 4-2 of Ref 8.19]. Note that snow and volcanic ash loads apply only to exposed piping outside the buildings. These additional loads apply only to weight analysis and are not required to be combined with seismic per section 1612.3.1 of UBC [Ref 8.5]. In addition, it is reasonable to assume that the snow and volcanic ash will not remain on the pipe during seismic or wind events.

One of the characteristics of snow or volcanic ash is that it is like powder. Buildup of a powder-like substance on a round surface such as a pipe will result in accumulation in the shape of a triangle and not a rectangle, which is common for a flat surface. Hence, any excess of snow or volcanic ash will fall off. In addition, since snow loads envelope volcanic ash live loads, qualifying the pipe for live loads of 15 lb/ft^2 addresses the requirements for both snow and volcanic ash.

The main purpose of weight analysis is to support the piping system to meet the criterion specified in Section 4.9.1, and to limit the piping sag to 1/4" or less. This is to avoid creating low points (pockets) in the piping between supports if no slope is taken into consideration, and to avoid system drainage problems.

For development of Span and Support Load Tables for RPP-WTP piping, sag is limited to 0.25 inch, or the pipe stress due to weight load is limited as specified in Appendix 1, whichever provides the shortest span length.

Rigid vertical supports should be provided to the piping system based on the weight analysis where possible. If the piping system is operating at higher temperature, spring hangers may be required at locations near equipment or a connected header due to large differential movements.

2. Analysis Approaches

In general, a formal analysis is required to determine the piping sag and the pipe stresses.

a) "Span and Support Load Tables", provided in Appendix 2, may be used for SC-III(Non-Chem) and SC-IV piping. Using spans less than or equal to the weight span specified in the Span Tables for SC-III(Non-Chem) and SC-IV piping indicates

that the sustained load requirement of ASME B31.3 is met and will also ensure that the lower $0.8S_h$ limit is met, due to the limitations on pressure stresses.

b) Comprehensive analysis using ME101 is required for SC-I, SC-II, and SC-III(Chem) piping, and for critical piping as identified in Appendix 8 in order to perform the Code check for sustained load.

4.5 Seismic Analysis

1. Code Requirements of Seismic Analysis

ASME B31.3 Code requires piping systems be designed for occasional loads such as earthquake to meet the design criteria specified in Section 4.9.3, to ensure that the piping systems will be able to perform their seismic safety function.

2. Seismic Analysis Techniques

Seismic analysis is performed using static methods or dynamic methods. Each method consists of several steps such as seismic load determination, methods of applied loads, pipe model selections, and methods of determining the pipe responses, etc. For RPP-WTP, the static method based on the Uniform Building Code is used for SC-III(Chem), SC-III(Non-Chem) and SC-IV piping except for black cell piping. The response spectrum method is used for dynamic seismic analysis of SC-I and SC-II piping and all black cell piping. These methods are described as follows:

a) Static Method Using the Uniform Building Code

This method establishes the lateral seismic force, F_p, on piping systems using the nominal pipe wall thickness for defining loads as detailed in Section 4.9 and is based on Equations 32-2 and 32-3 and Zone 2B of UBC [Ref 8.5] as follows:

$$0.7C_aI_pW_p \le F_p = \frac{a_pC_aI_p}{R_p}\left(1+3\frac{h_x}{h_r}\right)W_p \le 4C_aI_pW_p$$

where

C_a = Seismic Coefficient, as set forth in UBC Table 16-Q, taken as 0.24 for WTP (see below)
I_P = Importance Factor specified in UBC Table 16-K, taken as 1.50 for SC-III piping and 1.0 for SC-IV piping for WTP
W_P = The weight of an element or component
F_p = Total design lateral seismic force (as defined in UBC 1632.2)
a_p = In-structure Component Amplification Factor from UBC Table 16-O
R_p = Component Response Modification Factor from UBC Table 16-O
h_x = Element or Component elevation with respect to grade, not less than 0.0
h_r = Structure roof elevation with respect to grade

The following list indicates the requirements that are used to develop loads for SC III/IV piping and supports:

- Lateral and vertical seismic loading, with the vertical force, F_v, equal to 2/3 the lateral force, which is consistent with typical Nuclear Power Plant (NPP) requirements
- Lateral force applied in both horizontal directions consistent with typical NPP requirements
- The three directions of force (both horizontals and the vertical) combined SRSS
- No reduction factor applied to the earthquake load
- $a_p = 2.5$ for piping (UBC Table 16-O, maximum possible value)
- $R_p = 3.0$ (UBC Table 16-O, Item 3B) for piping and for supports that don't use Concrete Expansion Anchors (CEAs) or have a buckling issue
- $R_p = 1.5$ for non-ductile failure modes based on Table 16-O, Item 4B (buckling, CEA pullout)

Determination of the seismic coefficient, C_a, is described in section 8.1.6, 1997 Uniform Building Code Soil Profile Type, of the WTP geotechnical investigation report (Shannon & Wilson 2000) [Ref 8.61]. The coefficient is based upon the soil profile type and the UBC Seismic Zone 2B classification.

F_p and F_v shall be distributed in proportion to the mass distribution of the piping system. To determine the pipe stresses and support loads using static methods, either of the following two approaches may be used:

- Simplified or approximate method

  This method uses the single span beam with the assumed end conditions as the pipe mathematical model, and applying the lateral and vertical seismic forces (F_p and F_v) to the model to determine the pipe stresses and support loads. This method is used to develop the "Span and Support Load Tables" for earthquake load as provided in Appendix 1, Span Method Criteria.

- Comprehensive Static Analysis using ME101

  This method applies UBC static lateral and vertical seismic loads to the mass distribution of the piping system model to determine the pipe stresses and support loads. The piping system model is the same as that for comprehensive ME101 flexibility analysis and comprehensive ME101 weight analysis. This analysis will provide more realistic results than those from the "Span and Support load Tables" using a single span beam model. When using ME101, F_p is applied in both horizontal directions with F_v in the vertical, and the results are combined by SRSS.

- In-line Component Accelerations Based on UBC Static Methods

With $C_a = 0.24$, and I_p conservatively = 1.5, and considering both horizontal directions of load and 2/3 the horizontal for the vertical, the resultant maximum acceleration for a valve or any in-line component is:

$$A_{res} = \sqrt{(4 \cdot 0.24 \cdot 1.5)^2 + (4 \cdot 0.24 \cdot 1.5)^2 + \left(\frac{2}{3} \cdot 4 \cdot 0.24 \cdot 1.5\right)^2} = 2.25g$$

Applying the 1.1 factor required in DOE-1020-94, page 2-20 (assuming the equipment is tested):

A_{res} (test) = 2.48g peak

Since this is lower than the value cited in Section 3.1 for SC-III in-line components, in-line devices tested as described in Section 3.1 will automatically meet UBC maximum static accelerations.

b) Dynamic Seismic Analysis – Response Spectrum Method with 5% Damping

Response Spectrum Method is the most common dynamic seismic analysis method for piping systems used by the nuclear industry.

Facility Structures are approximated by mathematical models to permit analysis of responses due to earthquake motions. For piping systems or equipment that are not analyzed as part of the building structural model, the Stress EGS should consult with CS&A for the use of floor response spectra curves. Both horizontal and vertical floor response spectra are computed from time history motions of the structure at various floor elevations or other support locations of interest.

A comprehensive dynamic seismic analysis using in-structure response spectra required per Reference 8.2 is performed using ME101 for SC-I, SC-II piping and all black cell piping to ensure meeting the occasional load requirement. In the response spectrum analysis, the piping system shall be modeled in accordance with Section 7.2.2.2.2 (b) of the Seismic Analysis and Design Criteria [Ref 8.7]. The peak values of particular responses of interest are determined for each mode. The total response may be obtained by combining the peak modal responses by the CQC modal combination method. Reference 8.56 approves CQC as a method for considering closely spaced modal effects. The residual rigid response is then combined with the modal response, again in compliance with Reference 8.56. In combining the effects due to tri-axial excitations, the natural frequencies, mode shapes, and the loads for each mode of the piping system are first determined. The load for each mode for unit-generalized response is the product of the stiffness matrix, the mode shapes, and the mode participation factors. When this product is multiplied by the generalized response determined from spectrum curves, the load for each natural mode results. The combined earthquake-induced response is then computed by the SRSS method of the three earthquake components [Ref 8.56].

Motions in a piping system dissipate energy from the system. The phenomenon of this kind of energy loss is called damping. For the WTP project, the damping value of 5% is used for piping [Ref 8.2].

The following Inelastic Energy Absorption Coefficients (F_μ) shall be used in piping stress analysis for SC-I and SC-II piping [Table 2-6a, Ref 8.38]:

Component	F_μ Value
Butt Joined Groove Welded Pipe	1.50
Socket Welded Pipe	1.25
Threaded Pipe	1.15
Equipment and Pipe Supports	1.50

However, Inelastic Energy Absorption Coefficients (F_μ) shall remain equal to 1.0 for the following:

- Calculating piping displacements
- Calculating loads and/or accelerations on active equipment that must function during and after the seismic event
- Calculating loads on components that exhibit non-ductile failure modes (buckling, concrete expansion anchor pull out, cast-iron standard components)
- Calculating pipe support attachment interface loads to be used in evaluation of CS&A components

3. Analysis Approaches

The earthquake loads are different from facility to facility, and the response spectra curves are different from elevation to elevation. Therefore, seismic analysis shall be performed by Formal Analysis approach using either the simplified approximate method or comprehensive computer analysis.

"Span and Support Load Tables" are developed based on simplified or approximate methods and UBC requirements for SC-III(Non-Chem) and SC-IV piping. The detailed design basis is provided in Appendix 1. Using spans less than or equal to the seismic span specified in "Span and Support Load Tables" in Appendix 2 indicates that the occasional load requirement of ASME B31.3 is met for piping design of SC-III(Non-Chem) and SC-IV piping.

"Formal Analysis – response spectrum analysis" always provides more realistic results and the results are less conservative than those using simplified or approximate methods. Therefore, if the support span of a SC-III(Non-Chem) or SC-IV piping system deviates from that specified in the span and support tables and can not be justified, the piping system will be qualified using "Formal Analysis" by ME101 for weight, flexibility and/or seismic analysis to reduce the conservatism.

In case the actual support span is less than that specified in "Span and Support Load Tables", the support load may be adjusted to the actual support span by interpolation. Appendix 2 provides span load tables at maximum span with lateral support at every DW support, every other DW support and every third DW support for this purpose.

4.6 Analysis for Wind Loads – For Exposed Piping Only

ASME B31.3 Code requires that the effect of wind loading be considered in the design of exposed piping. ASME Code B31.3 Paragraph 301.5.2 states that the method of analysis may be as described in ASCE 7 [Ref 8.9], Minimum Design Loads for Buildings and Other Structures, or the Uniform Building Code [Ref 8.5]. The ASCE 7-98 [Ref 8.9] is used as the basis for wind load analysis for the RPP-WTP project [Ref 8.19].

For wind load analysis, the design wind pressures are determined per ASCE and applied to the pipe in any horizontal direction using static analysis. The design wind pressures per Equation 6-20 of ASCE 7-98 are determined for any height in accordance with the following formula:

$$F = q_z G C_f A_f$$

where

- F = design wind force (lb)
- q_z = wind velocity pressure evaluated at height z above ground (lb/ft^2) {I_w = wind importance factor as set forth in Table 4-1 and 4-2 of Ref 8.19 (Note 1)}
- G = gust effect factor (Note 2)
- C_f = force coefficient (Note 3)
- A_f = pipe projected area normal to the wind direction (ft^2)

Per Tables 4-1 and 4-2 of Reference 8.19, the straight wind speed is 91 miles per hour, 3-second gust, at 33 ft above ground for SSCs without NPH Safety Functions SC-III & SC-IV, and 111 miles per hour, 3-second gust, at 33 ft above ground for SSCs with NPH Safety Functions SC-I & SC-II.

Notes:

1) Use $I_w = 1.00$ (part of q_z)
2) G should be 0.85 for piping, per ASCE 7-98 Section 6.5.8 [Ref 8.9]
3) C_f is force coefficient taken as 0.7, per ASCE 7-98 Table 6-10.
4) It is recommended to use exposure category "C" [Ref 8.9, Section 6.5.6].

The wind analysis is to be performed using static method assuming the wind to come from any horizontal direction. For piping with segments mostly in global directions, enveloping the results of global x-wind and global z-wind is acceptable. For piping with global as well as skewed segments, SRSS of the results of global x-wind and global z-wind is acceptable.

Wind loads and seismic loads do not have to be taken concurrently. Wind loads are also considered as occasional loads and are considered as S_{oc} in Section 4.9.3 as required by seismic category of the piping. However, wind loads are kept to 1.33 S_h in all seismic category piping.

Since only a few piping systems may require analysis for wind loads, no simplified or approximate methods such as Span Tables are provided here. If required, ME101 has the capability to perform the above analysis as required by the B31.3 Code and ASCE 7-98.

4.7 Simplified Methods (Using Span Tables)

In order to simplify the analysis process, a simple pipe mathematical model has to be established. The simple pipe model usually consists of a single span of one or two dimension pipe layout with conservative end conditions and simple loading conditions.

a) Simplified Methods for Flexibility Analysis

Simplified Methods for flexibility analysis are effective for piping with simple layout and end conditions. The main purpose of simplified method is to determine the offset length or expansion loop to absorb the expansion/contraction movements imposed by its connected pipe or equipment. If necessary, a comprehensive analysis using a computer program such as ME101 may be used to obtain realistic results from thermal expansion/contraction and imposed thermal anchor movements.

b) Simplified Methods for Weight and Seismic Analyses – Span Tables

As weight analysis is a simple static analysis with gravity load only, a simplified weight analysis in general provides a reasonably accurate result in comparison to the result of a comprehensive computer analysis. Therefore, the "Span and Support Load Tables" for weight loads, generated based on the simplified method provided in Appendix 1, Span Method Criteria, should be used for SC-III(Non-Chem) and SC-IV piping.

The "Span and Support Load Tables" were developed for straight insulated pipe with and without water content. Piping with different insulation materials and specific gravities than those used in developing the span tables should be accounted for when applying the Span and Support Load Tables into the design of SC-III(Non-Chem) and SC-IV piping.

The span tables were originally developed based on nominal wall thickness. In addition, a calculation [Ref 8.27] was prepared to justify the span tables to account for mechanical, corrosion, and erosion allowance in accordance with ASME B31.3 Code. The guidelines for using the span tables are specified in Section 4.10.2.

The static seismic analysis based on UBC is used to develop the span and support load tables for SC-III(Non-Chem) and SC-IV piping. Design of SC-III(Non-Chem) and SC-IV piping by fully applying the "Span and Support Load Tables" is

considered as meeting the Code requirements for occasional load, and no further analysis is required.

Pipe support loads for a straight pipe per the Span Tables have proven to be approximately the same as those from ME101 analysis per Reference 8.15. For a complicated three-dimensional piping routing with concentrated weight, in-line equipment, and more turns, the support loads from an ME101 study run may be more realistic than those from the Span Tables; loads from the study run may be used for pipe support design provided that ME101 input and the requested results are documented as an attachment to the support calculation.

Separate analysis to document the design of non-critical SC-III(Non-Chem) and SC-IV piping systems is not required when Span Tables are used, provided that the design is consistent with the limitations for using the Span Tables as described in Engineering Design Guide for Pipe Stress [Ref 8.57], and the supports are designed with the loads specified in Span Tables, as allowed per project procedures [Ref 8.3 & 8.41]. The signature of the stress engineer on the piping isometric signifies that the design meets the span and flexibility requirements.

4.8 Deleted

4.9 Computer Analysis Using ME101

ME101, Linear Elastic Analysis of Piping Program, is a family of computer programs that performs design analysis of piping systems, does various Code compliance checks, and produces complete calculation packages excluding project required manually attached information. The program is based on the finite pipe element method to calculate the response of piping systems subjected to a variety of loading conditions. Static analysis is performed for weight loading, thermal expansion loading, wind loading, seismic anchor-movement loading, building settlement, and static seismic loading such as UBC earthquake loading, etc. Dynamic analysis is performed for earthquake events using response spectrum methods or time history methods. Transient events, such as water hammer loads, can also be analyzed with modal time history or direct integration methods.

ME101 input keyword "CODE=B31399" meets all Code requirements of B31.3, 1996 and is acceptable for use on the WTP project per Reference 8.43.

Note that paragraphs 1 through 5 below describe how ME101 calculates applicable stresses. Since WTP uses a mixture of nominal thickness (loads, displacement stresses) and end-of-life thickness (sustained and occasional stresses), the ME101 analysis is run using nominal dimensions. The resulting stresses are then corrected as explained in Section 4.10 to account for the end-of-life thickness.

1. Longitudinal Stresses S_L

$$S_L = \frac{PD}{4t_n} + S_s \le S_h \quad \text{[Ref 8.1, Paragraph 302.3.5(c)]}$$

The longitudinal pressure stress of $\frac{PD}{4t_n}$ may be determined by the equation of

$$S_{lp} = \frac{Pd^2}{D^2 - d^2}$$

where

S_s = the longitudinal stress due to weight and other sustained loads.
S_{lp} = the longitudinal pressure stress.
P = design pressure
D = pipe outside diameter
t_n = nominal thickness of pipe; for corrosion/erosion and mechanical allowance consideration see Section 4.10
d = pipe inside diameter; for corrosion/erosion and mechanical allowance consideration see Section 4.10

2. Displacement Stress Range S_E – used as the criteria in the design of piping for flexibility

$$S_E \le S_A$$

where

S_E is the displacement stress range due to thermal displacements (constrained from free expansion or contraction), reaction displacements and externally imposed displacements such as seismic anchor movements, see paragraph 319.4.4 of Reference 8.1.

$$S_A = f\left(1.25S_c + 0.25S_h\right)$$

where

f = stress range reduction factor defined in equation (1c) ASME B31.3.
= 1 if the equivalent number of full displacement cycles during the expected service life of the piping system is less than 7,000.

f may be taken as unity for the initial design of RPP-WTP piping systems. However, the Pipe Stress EGS should consult with Mechanical Systems for service life system operation thermal cycles. If the expected number of thermal cycles in the service life of any piping system exceeds 7,000 cycles, Equations (1c) and (1d), or the Stress-Range Reduction Factors f in Table 302.3.5 in ASME B31.3 shall be applied.

3. Longitudinal Stresses due to Pressure, Sustained loads, and Occasional loads

3.1. For SC-I, SC-II, and SC-III piping containing a significant Chemical release hazard (SC-III(Chem)) or any piping in black cells

$$S_L = \frac{PD}{4t_n} + S_s + S_{oc} \le 1.33 S_h \quad \text{[Ref 8.1, Paragraph 302.3.6(a)]}$$

3.2. For SC-III without containing a significant Chemical release hazard (SC-III(Non-Chem)) and SC-IV Piping

$$S_L = \frac{PD}{4t_n} + S_s + S_{oc} \le 3.0 S_h \text{, but not greater than 2.0 } S_y \quad \text{[Ref 8.38, Table 2-6]}$$

where

S_{oc} is the longitudinal stress produced by occasional seismic loads.

For S_{oc} based on wind or fluid transient loads for SC-III(Non-Chem) & SC-IV piping:

$$S_L = \frac{PD}{4t_n} + S_s + S_{oc} \le 1.33 S_h \quad \text{[Ref 8.1, Paragraph 302.3.6(a)]}$$

4. The pipe stresses S_s, S_{oc}, and S_E shall be calculated from the bending moments and torsional moment at the piping component in the piping system as follows:

$$S_s, S_{oc}, S_E = \sqrt{S_b^2 + 4S_t^2}$$

where

$S_b = \dfrac{\sqrt{(i_i M_i)^2 + (i_o M_o)^2}}{Z}$ = resultant bending stress

S_t = torsional stress, $\dfrac{M_t}{2Z}$

M_t = torsional moment

M_i = in-plane bending moment

M_o = out-of-plane bending moment

i_i = in-plane stress intensification factor

i_o = out-of-plane stress intensification factor

Z = section modulus of pipe

The three moment components (M_t, M_i, M_o) are calculated at the same location of a piping component in the piping system due to sustained load, occasional load and displacement strains, respectively.

In performing pipe stress analysis for sustained and occasional loads using ME101, the longitudinal and occasional stress checks shall be performed per Section 4.10.1 below to meet Para. 302.3.5 (c) and 302.3.6 (a) of ASME B31.3 Code [Ref 8.1].

5. Seismic Anchor Movement (SAM)

Pipe stress analysis for the effects of SAM should be evaluated as Displacement Stress Range S_E. The application of SAM to pipe supports (same building/facility) in the pipe stress analysis is simplified in the following:

(1) SLAB-WALL Joints: In-Phase in all directions and at all elevations
(2) Vertical SAM:
- If on the same slab: In-Phase
- If on different slabs:
  - (A) If on the same elevation
    - (a) If there is a vertical support on wall (i.e., penetration, etc.):
      - Supports on slabs: In-phase
      - Supports on wall: Out-of-Phase
    - (b) If no vertical support on wall:
      - Supports on slabs: Out-of-Phase
  - (B) If on different elevations: Out-of-Phase

Refer to Reference 8.29 and Reference 8.30 for the seismic displacements in HLW and PTF facilities, respectively.

The impact from seismic anchor movement may be insignificant and the analysis of SAM may not be necessary if either of the following conditions is met [Ref 8.15]

Condition 1 **(All limitations of this condition must be satisfied)**

a). Relative SAM between structural elements such as wall penetration, floor box, etc. and first adjacent support is less than 1/8" in any direction, or 1/16" for first support from a nozzle

b) Pipe nominal size is 6" and smaller

c). Displacement stress range is less than 70% of thermal piping Code stress allowable S_A for piping schedules 40 & 80 and less than 65% for piping with schedule 10S

d) The distance of adjacent support from the effected SAM is not less than 80% of the weight span specified in Span Tables (Note: This is an offset span that absorbs the SAM by bending)

e) Maximum SIF for the piping subjected to SAM is 2.1

Condition 2 **(All limitations of this condition must be satisfied)**

a) The piping system is analyzed utilizing ME101 (comprehensive stress analysis)

b) Relative SAM between structural elements such as wall penetration, floor box etc. and first adjacent support is less than 1/16" in any direction

c) Displacement stress range combined with pressure and longitudinal stresses (sustained) are less than 90% of the piping Code stress allowable S_A+S_h

4.10 Consideration of Mechanical, Corrosion, and Erosion Allowance

The ASME B31.3 Code requirements for mechanical, corrosion and erosion allowance shall be incorporated in pipe stress calculations as follows:

4.10.1 ME-101 Analyzed Piping

Two confirmatory longitudinal stress checks for the eroded/corroded condition, sustained and occasional, shall be performed for each pipe stress calculation. These stress checks shall be completed prior to assigning a confirmed/committed status to any of future stress calculations.

A. Sustained Stress Check, S_L = longitudinal stress due to pressure and weight,

$$S_L = \frac{PD}{4t_c} + S_s \text{, psi} \leq 1.0\ S_h \text{ (SC-I, SC-II, SC-III(Chem));}$$

$$\leq 0.8\ S_h \text{ (SC-III(Non-Chem), SC-IV; see Section 3.3.2 for discussion)}$$

using

1. Nominal weight for load calculations and
2. Corroded (reduced) wall properties for stress calculations

The longitudinal pressure stress $S_s = \frac{PD}{4t_c}$ may be determined by the equation of

$$S_{lp} = \frac{P(d+2c)^2}{D^2-(d+2c)^2} \text{ or } \frac{P(D-2t_c)^2}{D^2-(D-2t_c)^2}$$

Where

S_s = the longitudinal stress due to weight and other sustained loads, see Section 4.10.1.C below
S_{lp} = the longitudinal pressure stress
P = design pressure
D = pipe outside diameter
d = pipe inside diameter
t_c = eroded/corroded thickness of pipe, = t_n - c
t_n = nominal thickness of pipe
c = mechanical, erosion, and corrosion allowance

Longitudinal stresses [Ref 8.1, Para. 302.3.5(c)] are re-calculated based on weight moments from ME101 output with corroded section modulus plus pressure stress from design pressure with corroded wall thickness. Nominal pipe weight and pipe content are considered in the longitudinal stress calculations. The sustained load stress ratio is calculated by dividing the calculated longitudinal stresses by the Code stress allowable. The sustained load stress ratio shall be ≤ 1.0 for SC-I, SC-II, and SC-III(Chem) and ≤ 0.8 for SC-III(Non-Chem) and SC-IV (see 3.3.2 for discussion and permitted changes).

Sustained Longitudinal Stress Check due to pressure and weight under corrosion/erosion consideration shall be performed directly using the ME101 Report Writer. The standard Excel sheet/instructions in Appendix 7A may be used at the discretion of the Pipe Stress EGS.

B. Occasional Stress Check, S_L = longitudinal stress due to pressure, weight and occasional load,

$$S_L = \frac{PD}{4t_c} + S_s + S_{oc}, \text{ psi}, \quad \leq 1.33\, S_h \text{ (for SC-I, SC-II, and SC-III(Chem) piping) or}$$

$\leq 3.0\, S_h$, but not greater than $2.0\, S_y$ [for SC-III(Non-Chem) and SC-IV piping] (See Note 3 for additional restrictions)

where

S_{oc} = the longitudinal stress due to occasional load, see Section 4.10.1.C
S_h = basic allowable stress at maximum metal temperature, (psi)
S_y = yield strength at temperature, (psi) using

1. Nominal weight for load calculations
2. Corroded (reduced) wall properties for stress calculations
3. For wind and fluid transient loads the stress limit is 1.33 S_h, regardless of seismic category

Stresses due to occasional loads are re-calculated based on occasional moments from the ME101 output with corroded section modulus. Occasional stresses [Ref 8.1, Para. 302.3.6 (a)] are calculated by combining stresses due to sustained loads with stresses due to occasional loads, such as wind or earthquake loads. The occasional load stress ratio is calculated by dividing the calculated occasional stress by the allowable stress. The occasional load stress ratio shall be less than or equal to 1.0.

Longitudinal Stress Check due to pressure, weight and occasional loads under corrosion/erosion consideration shall be performed directly using the ME101 Report Writer. The standard Excel sheets/instructions in Appendix 7B may be used at the discretion of the Pipe Stress EGS.

C. The pipe stresses S_s and S_{oc} shall be calculated from the bending moments and torsional moment at the piping component in the piping system as follows:

$$S_s, S_{oc} = \sqrt{S_b^2 + 4S_t^2}$$

where

$$S_b = \frac{\sqrt{(0.75 i_i M_i)^2 + (0.75 i_o M_o)^2}}{Z_c}$$

S_t = torsional stress, $\frac{M_t}{2Z_c}$

M_t = torsional moment

M_i = in-plane bending moment

M_o = out-of-plane bending moment

i_i = in-plane stress intensification factor from Appendix D of the ASME B31.3 Code

i_o = out-of-plane stress intensification factor from Appendix D of the ASME B31.3 Code

Z_c = reduced section modulus of pipe for S_s and S_{oc} in consideration of erosion/corrosion

Per the Code interpretation 1-34 [Ref 8.44] of ASME B31.3, $0.75i_i$ or $0.75i_o$ is used in the calculation but shall not be less than 1.0. Note that Code Case 178 [Ref 8.59] issued at a later date reaffirmed Code interpretation 1-34. Axial loads, which are included in the Code Case equation, are typically small for piping and are, therefore, ignored. This treatment is in compliance with Table 2-6 of the PSAR [Ref 8.38].

4.10.2 Piping Qualified by the Span Tables [Ref. 8.27]

The current RPP-WTP Span Tables shall be used for the pipe sizes (with mechanical, corrosion, erosion allowance of up to 50% of the nominal wall thickness) listed in Tables 2.2 and 2.4, which address the majority of piping at the WTP project. The following pipe sizes with wall thinning of 50% or more shall require further review:

Table 4.1 Piping with Erosion/Corrosion Allowance 50% or Greater

Pipe Size	Schedule	E/C, c, (in)	% of E/C	Pipe Classes Requiring Further Review
1/2	80 or 80s	0.125	85%	**C.S.**: C14A, C14B; **Alloy**: N14A; **S.S.**: S14A
3/4	80 or 80s	0.125	81%	**C.S.**: C14A, C14B; **Alloy**: N14A; **S.S.**: S14A
1	80 or 80s	0.125	70%	**C.S.**: C14A, C14B; **Alloy**: N14A; **S.S.**: S14A; W32A*
1-1/2	40S	0.0937	65%	**C.S.**: None; **Alloy**: N14A; **S.S.**: W32A*

1-1/2	80 or 80s	0.125	63%	**C.S.**: C14A, C14B; **Alloy**: N14A; **S.S.**: S14A, S14E, S14F
2	40S	0.0937	61%	**C.S.**: None; **Alloy**: None; **S.S.**: W32A*
2	80 or 80S	.125	57%	**C.S.**: C14A; **Alloy**: N14A; **S.S.**: S14A, S14E
3	80 or 80s	0.125	58%	**C.S.**: C14A; **Alloy**: N14A; **S.S.**: S14A, S14E, S14F
4	80 or 80s	0.125	53%	**C.S.**: C14A; **Alloy**: N14A; **S.S.**: S14A, S14E, S14F
6	80S	0.25	58%	**C.S.**: None; **Alloy**: None; **S.S.**: S14D
8	80S	0.25	50%	**C.S.**: None; **Alloy**: None; **S.S.**: S14D

* Inner (core) pipe of jacketed pipe system (outer pipe (jacket) has corrosion = 0.0")

Additional requirements may include a review of the existing pipe elevations and/or performance of a detailed ME101 stress analysis as follows:

A. Piping located at elevations (or below):
+23 ft in HLW,
+28 ft in PTF,
+3 ft in LAW,
+2 ft in LAB
is acceptable per the existing Span Tables; no further analysis is required.

B. For piping located at elevations:
+40 ft in HLW,
+56 ft in PTF,
+28 ft in LAW,
+27 ft in LAB

ME-101 analysis is required for:

Pipe Size	Schedule	E/C, c, (in)	% of E/C	Pipe Classes Requiring ME-101 Analyses
1/2	80 or 80s	0.125	85%	**C.S.**: C14A, C14B; **Alloy**: N14A; **S.S.**: S14A
3/4	80 or 80s	0.125	81%	**C.S.**: C14A, C14B; **Alloy**: N14A; **S.S.**: S14A

C. For piping located at the following elevations (and above), ME-101 analysis is required for all pipe sizes and pipe classes listed in Table 4.1:
+71 ft in HLW,
+98 ft in PTF,
+48 ft in LAW,
+36 ft in LAB

5 Computer Analysis Procedures

5.1 General Procedure

A pipe mathematical model needs to be established in order to perform the pipe stress analysis using a computer program. The mathematical model shall include the pipe dimensions and geometry, pipe material, piping component types, support types and support locations, and the loading conditions.

5.2 Pipe Mathematical Model

A pipe mathematical model is used to represent the piping system and its boundaries in sufficient detail based on its pipe classification such as SC-I and SC-II, SC-III(Chem) or SC-III(Non-Chem) and SC-IV in order to obtain realistic analysis results per Project design requirements.

The boundaries of a piping system are located at anchors such as equipment nozzles, penetrations, or intermediate structural support anchors, or at free ends. In some cases, the boundaries also can be at locations where the "De-couple Criteria" per Section 5.3 apply and a fictitious fixed point of the piping system may be assumed.

The model includes piping coordinates and properties such as pipe diameters, pipe wall thickness, pipe materials, support locations and support types. Pipe fittings/piping components and welded joints if necessary should be modeled as well. At each fitting/piping component or welded joint in the piping system, the stress intensification factor (SIF) per Appendix D of ASME B31.3 Code shall be specified. For anchors, a SIF of 2.1 should be specified to account for welded attachments, anchor plates, etc. For response spectrum analysis, for valves with operators offset from the valve body, the operator weight should be modeled at its center of gravity. It is preferable to model small cantilever vents and drains with the large process pipe. If the design of vents and drains are not available at the time the larger process pipe is analyzed, it is acceptable not to include them in the pipe mathematical model. However, the effects of vents and drains should be addressed later in either a revision of the stress calculation, or in a separate calculation.

5.3 De-coupled Analysis

The following de-coupled criteria may be used for de-coupling of branch pipe analysis if either of the following conditions is met:

- If the pipe moment of inertia ratio is greater than 25
- If the nominal pipe diameter ratio is greater than 3

De-coupling piping systems generally is not a significant issue for static analysis such as UBC seismic analysis, thermal expansion or weight calculations. The following are guidelines for de-coupling of the branch pipe analysis:

1) The analysis of the branch piping must include the thermal and seismic movements of the run pipe at the intersection point. If SC-III or SC-IV piping is de-coupled from SC-I and SC-II piping, the seismic displacements from SC-I and SC-II piping in terms of SAM at the decoupled point should be considered in the design of SC-III and SC-IV piping. The support loads due to the SAM case shall be considered as occasional loads (note that SAM stress is considered as secondary stress similar to thermal stress). For SC-III and SC-IV branch piping de-coupled from either SC-III or SC-IV piping, the requirement for SAM analysis is determined by the stress engineer. The analytical approach of SAM is specified in Section 4.9.5.

2) If an anchor or rigid constraint on the branch pipe significantly restrains the movement of the run pipe, this branch pipe should not be decoupled. Instead, the branch pipe up to its anchor or the nearest three-way restraint or sufficient overlap restraints should be included in the model of the run pipe.

3) The branch pipe including the mass effects such as a valve or in-line equipment close to main run should be included in the mathematical model of the run pipe if more precise magnitude of reaction is required at terminal points (i.e., equipment, penetration, etc.)

4) The connecting component such as sockolet, weldolet, latrolet, un-reinforced branch, etc., shall be appropriately specified at the branch/run intersection location to get proper stress intensification factors in both the run pipe and branch pipe during analysis.

5.4 Considerations of Support Design in Pipe Stress Analysis

1. Rigid Supports in Thermal Expansion Analysis

   A free thermal expansion analysis is initially helpful to locate rigid supports at points of zero thermal movement (inflection points).

   Rigid supports for weight and seismic shall permit expansion and contraction of the piping. To accomplish this, rigid supports used as guides such as U-bolts or seismic bumpers with small gaps of 1/16" are practical. Using a support gap in analysis to reduce either the weight or thermal load should be avoided whenever possible. However, when it is necessary to use gapped supports, the analysis should follow the guidelines specified in Appendix 9. For high temperature piping, snubbers may be practical based on a design point of view. However, they are prone to premature lock-up and are costly to maintain. Therefore, snubbers are not recommended unless there is absolutely no practical alternative. Snubbers are not permitted for the piping systems in black cells.

2. Spring hangers are considered to take deadweight only and no seismic load. Snubbers are not considered as effective in weight and thermal expansion analysis. If the analysis

is based on design cold loads, then it should be stated clearly in the hanger guidance in order to design the travel range of the spring hanger. Spring hangers shall not be used in the black cells.

3. Pipe Supports are to be designed for normal operating loads and occasional loads. Therefore, pipe stress analysis shall provide the following loads for each support:

   Normal Operating loads – Weight*, or
   Weight* + Thermal
   * If there are no temporary supports to resist hydro test load, the pipe support shall be qualified with hydro load specified in hanger guidance.
   * Weight also includes live loads

   Occasional Loads – Normal Operating* + Earthquake, or
   Normal Operating* + Wind, or
   Normal Operating* + Other Fluid Transient Load if exist.**
   * Weight also includes live loads
   ** In some cases, a fluid transient load may occur at the same time as earthquake or wind load. In this case, SRSS may be used to combine two occasional loads. Wind and earthquake loads do not need to be considered as acting concurrently.

   The upward thermal and seismic load can be offset by weight for any piping. For the vertical supports on SC-III and SC-IV piping, if the maximum positive thermal load plus positive seismic load is less than the deadweight, the vertical support does not need to be double-acting. However, for the vertical supports on SC-I and SC-II piping, the vertical supports should be double-acting unless the piping is also qualified with specific vertical supports inactive in the seismic run, as defined in the hanger guidance (note that the seismic average downward loads of the adjacent supports should be added manually to this support (only downward)).

   Where vertical deadweight supports in the 3D Model are designed to contact or are in close proximity (<1/8") to other support steel or CS&A steel, these vertical deadweight support points shall be analyzed per the requirements specified in the previous paragraph, identified with support numbers on the appropriate isometric, and reflected on the parent support, as applicable.

   Under the following circumstances, the points in the 3D Model may not be considered as support points and no support tag number is required even though there is the possibility of lateral or upward contact with pipe support or CS&A steel:
   - The point is not modeled as a support point in the piping stress analysis.
   - Clearance is greater than the thermal displacement at the point.
   - Piping with design temperature less than 150°F and the total thermal growth at the point is judged to be less than 1/8".

5.5 Modeling of Piping Components in ME101

To perform a pipe stress analysis, the pipe mathematical model of the pipe system, design conditions and the loading input and their combinations are required as input in ME101. ME101 data separates the data field of 80 characters into four regions. They are functional tag, node map, nodal increment, and engineering data.

Functional tag is to identify the key functions such as RUN (Load case definition), HED (General heading information), ANC (Anchor description), CMB (Load combination definition), OLA (Code compliance stress check), etc. CMB and OLA are all preset for each seismic category piping, and need not be reset for each calculation

Node map is the simple way to layout the mathematical model of a piping system. The node map is defined by a **FROM** field and a **TO** field between column 4 to 6, and 7 to 9, respectively. The finite element model is automatically created as each node is defined. A **From** field does not need to be input if the **TO** node is connected from the previous node.

Node increment is to describe the node geometry. They are divided into four individual columns, i.e., the increment of D_X (Column 10-20), D_Y (Column 21-31), D_Z (Column 32-42), and elbow radius. The format of each of these column employs engineering notation, such as feet-inch-fraction input.

Engineering data field is from column 51 to 80. It is reserved for inputting the engineering design data of this unique node point using Class-B keywords, or to the pipe segment beginning from this node point using Class-A keywords. Class-A keywords include OD (outside diameter), THICK (pipe wall thickness), TEMP (pipe temperature), LBS/FT (weight density distribution), etc. The Class-A keyword implies the properties are passed to the next node or next element until the value of same keyword is redefined. Class-B keywords include ADDWT (additional weight), TEE (tee type identification), SIF (stress intensification factor), etc. The Class-B keyword is applied to that unique node and that unique element only.

The major task of a pipe stress engineer is to follow the Stress ISO's to establish the pipe mathematical model by defining the node map and node increments, and to identify the engineering data of each node or element.

For more details, pipe stress engineers should refer to "ME101 User Manual" [Ref 8.55].

5.6 Summary of Analysis Results

The purpose of pipe stress analysis is to demonstrate that all piping components in the piping system have met the Code requirements and seismic requirements as specified in Section 4.9.

ME101 provides the stress summary for each piping component specified as a nodal point. The calculated stresses at each nodal point per criteria specified in Section 4.9 are compared with the Code allowable, respectively. The stress intensification factor for each

nodal point (piping component) is also identified. In addition, the maximum calculated stress for each equation for the entire piping system is identified by the nodal point and listed in the stress summary sheet. The pipe stress engineer shall review and ensure that all piping components meet the Code requirements.

The displacements in local and global coordinates of each nodal point for each loading condition are also shown in the computer output. The pipe stress engineers should review these data to avoid pipe interference problems, ensure proper slope requirements are maintained, and to relocate the seismic supports at the zero or minimum thermal movement locations when possible.

The forces and the displacements at each support in local and global coordinates are shown in the computer output. The three forces and three moments at the nozzles are also shown in the output. The support loads and the displacements shall be given to the pipe support designer to design the support details. The forces and the moments of the nozzles shall be evaluated with the nozzle allowable specified in Reference 8.22 or per project approved data for vessel nozzles, or per Code criteria or vendor data as applicable (e.g., pumps, etc.).

5.7 Documentation of Calculation Packages

Pipe stress calculations are required to meet the applicable Quality Assurance (QA) procedures specified in Engineering Department Project Instructions. The documentation of each calculation package in engineering calculation preparation, checking, and approval shall follow the procedures specified in References 8.3, 8.20 and 8.41. The use of computer software shall be per the requirements of Reference 8.17.

ME101 Report Writer has been designed to create the calculation package in the format of a report to meet the unique requirements of the above project procedures. The Report Writer is constructed directly from the input design data and the output data stored in the ME101 master file.

6 Interface with Other Disciplines

6.1 Interface with the Layout Group

The layout group routes the pipe and transmits the stress ISO's to the Stress Group for analysis. The pipe stress engineer performs the stress analysis per Code requirements and coordinates any required routing changes with the layout group. The fabrication isometrics shall be reviewed and signed by the Pipe Stress EGS or designee.

6.2 Interface with the Pipe Support Designer

The pipe support designer is responsible for designing the pipe supports and determining the support locations based on the availability of structural steel, pipe racks, etc. The stress engineer coordinates with the pipe support designer for any changes to the original support configuration, support location, or support types.

If pipe stress analysis is done based on ME101, then the Pipe Stress Group issues the pipe support design loads table to the Pipe Support Group for the design of support details. If the pipe stress is completed based on the span method (tables), transmittal of support loads is not required.

6.3 Interface with Mechanical Systems Group

The system operating modes, pressures, temperatures, thermal cycles, specific gravity, nozzle loads and the fluid transient and thrust loads from relief valves are generated by the Mechanical Systems Group. The Stress Group needs to coordinate with Mechanical Systems for the timely issuance of that information, and to ensure the analysis meets those requirements.

6.4 Interface with CS&A Discipline

CS&A is responsible for generating the floor response spectrum curves for piping stress analysis. CS&A is also responsible for designing and qualifying building structural members. Coordination with CS&A regarding supporting piping from building structural members is primarily the responsibility of the Pipe Support Group.

6.5 Interface with Piping and Valve Engineering

Piping & Valve Engineering is responsible for developing the piping material classes such as piping schedules, corrosion/erosion rates and flange ratings that provide important design input data for pipe stress analysis.

7 Special Stress Analysis

7.1 Pipe Local Stress Analysis at Welded Attachments

1. General Design Consideration

According to Subsection 321.3 of ASME B31.3 Code, structural attachments shall be designed so that they will not cause undue flattening of the pipe, excessive localized bending stresses, or harmful thermal gradients in the pipe wall. It is important that attachments be designed to minimize stress concentration, particularly in cyclic services.

Welded attachments are those shear lugs, shoes, saddles, stanchions, and structural anchors, etc., welded to piping systems. The use of welded attachments requires additional engineering hours and increases construction and fabrication cost. Therefore, welded attachments should be minimized on large bore pipe and not used on small-bore pipe (pipe sizes 2" and smaller) or any thinner than Sch40 pipes unless justified by stress engineer.

Welded attachments should be standardized. The design should be simple such as rectangular or circular cross section made of tube steel or pipe to facilitate analysis. Irregular cross sections (such as channel, wide flange, cross configuration, etc.), are not recommended. To perform local stress analysis, similar welded attachments should be grouped together and the number of analyses should be kept to a minimum using engineering judgment.

2. Analysis Approach

The industry practice to ensure the attachment designs meet the ASME B31.3 Code requirements is to perform the pipe local stress analysis based on Welding Research Council Bulletin No. 107 [Ref 8.21] or by using stress intensification factor methods (SIF methods).

a) ME101/LS is written based on WRC Bulletin No.107 [Ref 8.21], and is used to determine local stresses at welded attachments. Local stresses should be added to the pipe stresses calculated per equations provided in Section 4.10.1 and compared with the appropriate allowable stresses as specified in Sections 7.1.1 and 7.1.2. In the local stress analysis, the additional loading due to friction (normal case and live loads conditions only) needs to be considered.

b) SIF Methods

This method is to apply an appropriate SIF value at the welded attachment to intensify the general pipe stress to determine the total pipe stress that is equivalent to the general pipe plus local stress. The following are recommended SIF values:

- When a stanchion is directly welded to the pipe, SIF of reinforced tee (RTEE) may be used to calculate the pipe stress including local stress. In this case, the stanchion should be included in the pipe model to represent the branch side of the pipe.

- When a welded attachment consists of a stanchion and a partial wrapper plate ($\leq 180^{\circ}$ around the pipe circumference), SIF of RTEE may be used except that the wrapper plate thickness can also be considered as reinforcement thickness in the RTEE SIF calculation. Local stresses at the pipe/wrapper plate can be calculated using ME101/LS.

- Welded attachment with 360° wrapper plate, the stresses due to attachment are no longer local in nature as the plate is not a pressure boundary any more. The interface weld between wrapper plate and the pipe should be analyzed using a fillet weld SIF = 1.3 or that per note 14 in Appendix D of B31.3 in the pipe stress analysis.

- Standard welded attachments AP (anchor plate), AW (axial stop), and ZL (riser clamps - lugs) may be analyzed using SIF = 2.1, provided that the following conditions are met:
  - The support is modeled and evaluated in strict compliance with the loading and eccentricity limitations of the Engineering Design Guide for Pipe Support [Ref 8.46].
  - Pipe schedule is limited to schedule STD and higher
  - Allowed loads and associated local stresses are listed for lugs AW or ZL in Reference 8.58, including the limitations.

- Welded attachments on fittings such as elbows, tees, etc., should be avoided.

- Welded attachments should be avoided on thin-wall pipe. Local stress analysis utilizing ME101 local stress module (LS or FE), shall be performed for welded attachments on 5S, 10S, or other thin-wall pipe.

- For standard supports on insulated lines, it is recommended to use SIF = 2.1 to account for saddles, shoes, etc. This will conservatively cover the support whether a welded attachment is used or not. This does not apply for stanchions, which should be addressed as noted previously.

3. Acceptance Criteria

ASME B31.3 Code does not provide the stress criteria for local stress analysis. The following Criteria are established based on the Code Cases N318 (rectangular) or N392 (hollow circular) of ASME Section III [Ref 8.49 and 8.50], ASME Section VIII Code (Fig 4-130.1) [Ref 8.4] and industry practice.

7.1.1 For SC-I, SC-II, and SC-III(Chem) Piping

a) Primary membrane stress check

$$S_{SL} = \frac{PD}{4t_c} + S_s + S_{oc} + S_{ml} \leq 1.8S_h$$

Note: S_{oc} is a stress due to DBE seismic load, or to wind or fluid transient load.

Where

S_{ml} = local primary membrane stress due to weight and occasional loads such as earthquake or wind or fluid transient load

P, D, t_c, S_s, S_{oc} and S_h are defined in Section 4.10.

b) Primary plus secondary stress check

$$\frac{PD}{4t_c} + S_s + S_{oc} + S_E + S_{nl} \leq 3.0S_h$$

Where

S_{nl} = the local primary plus secondary stress due to weight, occasional loads, plus secondary loads such as thermal expansion load

P, D, t_c, S_s, S_{oc}, and S_h are defined in Section 4.10, and S_E is defined in Section 4.9.

7.1.2 For SC-III(Non-Chem) and SC-IV Piping

Only primary membrane stress check with occasional loads is required for piping.

$$\frac{PD}{4t_c} + S_s + S_{oc} + S_{ml} \leq 3.0S_h \text{, but not} > 2.0\ S_y \text{ (seismic)}$$
$$\leq 1.8S_h \text{ (wind, fluid transient)}$$

Note: Stress limits of the above equation are the same limits that apply to piping without local stress (see section 4.9.3.2).

Where

S_{ml} = local primary membrane stress due to weight and occasional loads such as earthquake, wind, fluid transient

P, D, t_c, S_s, S_{oc} and S_h are defined in Section 4.10.

b) Primary plus secondary stress check

Primary plus Secondary stress check (without seismic) is not required, since gross pressure boundary integrity is all that is required for SC-III & SC-IV piping. Hence, local stress evaluation check for secondary stress (through - wall bending) is not required.

All piping stresses evaluated per Sections 7.1.1 and 7.1.2 are combined by absolute sum method.

7.2 Nozzle and Anchor Qualifications

An anchor is a rigid restraint to provide essentially complete fixation (i.e., ideally provide full constraint against three deflections and three rotations of the pipe on any of three reference axes). An equipment nozzle is not primarily designed as an anchor for the pipe and may not be designed as rigid as a structural anchor. However, it provides significant constraint in three deflections and three rotations on the pipe. Since in general the flexibility of the nozzle is not provided by the vendor, a nozzle may be considered as an anchor in the pipe stress analysis.

A structural anchor is primarily designed to provide six way restraint. Therefore, it meets the definition of a pipe anchor in pipe stress analysis. Structural anchors are very often designed to analytically separate the pipeline from each side of the anchor. This type of anchor is called an intermediate structural anchor. The loading from both sides of the anchor shall be combined per paragraphs a) thru c) in Section 7.2.2 and applied to the design of the anchor.

7.2.1 Nozzle Qualification

a) Nozzle Load Consideration

Nozzle loads on equipment are one of the controlling parameters in the design of a piping system. Nozzle reactions are a function of the piping routing, support configuration, and operating conditions.

For vessel nozzle qualification, pipe stress engineers shall perform pipe stress analysis to demonstrate that the pipe reactions at the vessel nozzle are below the nozzle allowable loads specified in Reference 8.22 or project approved data. Nozzle load qualification for rotary equipment, such as API610/API685 pumps, shall follow their governing Codes or project approved vendor nozzle data.

b) Nozzle Load Evaluation

Pipe reaction loads are generally tabulated in the Hanger Guidance as individual weight, thermal and seismic loads and as combined design loads.

For SC-I, SC-II, and SC-III(Chem) piping, the calculated pipe reaction loads shown in the Hanger Guidance should be compared with the nozzle loads provided in Reference

8.22 or project approved data, or sent to the Vessel Group for approval via Correspondence Control Number (CCN).

The nozzle loads on pressure vessels should be qualified based on the following two cases:

1. Weight + Seismic
2. Weight + Seismic + Thermal

This load combination is consistent with the WRC 107 [Ref. 8.21] method of qualifying local stresses in the vicinity of the nozzle to shell interface for primary and primary plus secondary stress. Per Engineering Specification for Pressure Vessel Design and Fabrication, 24590-WTP-3PS-MV00-T0001 [Ref. 8.22], "Seller shall design nozzles according to the methods of WRC-107, WRC-297, or finite element analysis as applicable."

Individual weight evaluation on pressure vessels may be performed if needed.

Seismic should include seismic inertia, seismic anchor movement and dynamic transient loads, as applicable, and they may be combined by the square root of sum of squares (SRSS) per Paragraph (4) below. Per Section 3.7.4 of Reference 8.22, if the maximum operating temperature is less than 350F, the thermal loads on Table A1 thru Table A4 of Reference 8.22 must be reduced by a scale factor of (X-70)/(350-70), in which X is the maximum operating temperature of the vessel. The vessel maximum operating temperature is specified on the vessel data sheet, and should be used to calculate the reduction, unless noted otherwise. In addition, each individual nozzle load (e.g. F_x, F_y, F_z, M_x, M_y, and M_z) from the analysis shall satisfy its corresponding nozzle allowable load instead of qualification by SRSS of nozzle loads, unless approved by the Pipe Stress EGS on case-by-case basis.

For non-critical SC-III(Non-Chem) and SC-IV piping with no thermal expansion/contraction and external thermal anchor movement concerns, connecting to any non-ITS vessels or sumps, routed and supported per the "Span and Support Load Tables", and accepted by a pipe stress engineer, the nozzles may be considered as acceptable.

If the pipe reactions do not meet the nozzle allowable, the following are some approaches to reduce the nozzle loads:

(1) Using pipe maximum operating temperature to qualify the nozzle load instead of the design temperature.

(2) Consider nozzle flexibility in ME101. This is to include the vessel shell stiffness to reduce the rigidity of the anchor and, therefore, reduce the nozzle loads. Nozzle stiffness values may be obtained from WTP Mechanical Vessel Group or utilizing ME101 capability to extract the vessel shell stiffness.

(3) Using expansion joints to reduce nozzle loads. However, expansion joints are not suitable for all service conditions. In some cases, it is more desirable to add an expansion loop or modify the support types and/or support locations. Expansion joints may be used only in accessible areas (not in Black Cells, for example).

(4) The pipe reaction loads with signs such as due to weight and thermal expansion should be combined algebraically. The loads due to seismic inertia, seismic anchor movement and dynamic transient loads should be combined by the square root of sum of squares (SRSS) first, then combined absolutely with the loads with signs.

(5) The nozzle thermal loads can be reduced by the use of hot modulus of elasticity (E_h) as ME101 loads are calculated based on the cold modulus of elasticity (E_c).

(6) Reduce thermal load by modeling the first dead weight support inactive in hot condition if the net movement (thermal plus weight) is upward. It may be necessary to run two weight cases: one for cold condition in which all gravity supports are active, and another case for hot condition in which any gravity supports with net upward movement are considered inactive. The enveloped results of these two weight cases will be used for Code compliance.

(7) If the calculated nozzle loads are still above the nozzle allowable, the loads should be submitted to the Mechanical Vessel Group via CCN for review and approval.

7.2.2 Anchor Qualifications

The main purpose of an anchor is to provide a complete fixation for the pipe system. Therefore, it shall be designed to meet the specified pipe reaction loads as required.

An intermediate anchor has the pipe reaction loads from both sides of the anchor; therefore, the loading combination for the intermediate anchor is determined as follows:

a) The pipe reaction loads with signs such as due to weight and thermal effects from both sides of the anchor may be combined algebraically for the design of anchor structure.

b) The pipe reaction loads without signs due to seismic inertia, seismic anchor movement and dynamic transient loads may be combined by the square root of sum of the squares (SRSS) from both sides. These loads are then combined by absolute sum with the other pipe reaction loads with signs for the design of anchor structure.

c) All the above combinations should be performed on the force component and moment component levels.

d). Intermediate anchors for SC-III(Non-Chem) and SC-IV piping may be designed based on the nozzle load tables specified in Appendix 3, multiplying the loads by two.

e). For an intermediate anchor that has analyzed loads from one side and the other side is non-analyzed pipe, the loading combination is determined in one of the following three ways:

- To obtain non-analyzed pipe reaction load, use nozzle load table specified in Appendix 3 and follow the provisions of a) thru c) of Section 7.2.2 to combine the loads with analyzed side loads.
- Include portion of the non-analyzed pipe as overlap in the analysis and qualify overlapped supports for greater of analyzed/Span table loads. The overlap portion should include at least two supports in each direction of restraint, i.e., X, Y and Z direction restraints.
- For non-analyzed pipe use the same reaction loads as the analyzed side pipe and follow the provisions of a) thru c) of Section 7.2.2 to combine the loads if judged acceptable by Pipe Stress and Support EGS.

7.3 Dynamic Transient Forces on Closed Discharge Piping Systems

Pipe loads may be caused by the events due to transient fluid flow in closed discharge piping systems. A fluid flow transient is often initiated by intentional actuation of some flow control device (pump, valve, or rupture disc). The pipe stress engineer should pay attention to the following three types of fluid transient forces if applicable:

(1) Transient unbalanced thrust load along the pipe run axis, tending to forcibly displace the pipe and to set up pipe vibrations.

(2) Continually oscillating periodic force along any surface of the pipe tending to set up steady state resonance vibrations.

(3) Transient pressure change tending to either burst or collapse the pipe.

Of these three forces, the first type is by far the most common dynamic problem for design, and the attention of this Subsection will be directed toward that problem. The piping systems that have this type of transient unbalanced thrust load are required to be identified by Mechanical Systems engineers. Design calculations of dynamic transient forcing functions normally are required to be generated by qualified fluid transient analysts using specialized computer programs. The time history fluid dynamic transient forcing functions are then provided to the pipe stress analysts for piping structural analysis using ME101. The pipe

stresses due to fluid dynamic transient forcing functions shall be combined with earthquake load or wind load using SRSS method and considered as S_{oc} per Section 4.9.3.

7.4 Welding Tee

Either ASME B16.9-1986 welding tees that meet the requirements of ASME B31.3-1996 or ASME B16.9-1993 welding tees that meet the requirements of ASME B31.3-2002 are permitted in the RPP-WTP project per Appendix C, Section 26.0 of the SRD [Ref 8.19]. The SRD also provides the requirements to meet the stress limits in accordance with the ASME B16.9 welding tees specified in ASME B31.3-2002 [Ref 8.42]. Per the SRD, the flexibility characteristic and stress intensification factors for ASME B16.9 welding tees shall be per Table D300 of the ASME B31.3-2002 Code [Ref 8.42]. A pipe stress engineer may either manually input the SIF based on the flexibility characteristic, or use TEE=EXTEE, and specify RX=2.1r_2, where r_2 is the mean radius of the run pipe.

If $r_x \geq 1.8D_b$ and $T_c \geq 1.5T$, a flexibility characteristic of $4.4T/r_2$ may be used in accordance with ASME B31.3-2002, where T is the nominal wall thickness of the matching pipe; r_2 is mean radius of matching pipe; r_x is radius of curvature of external contoured portion of outlet, measured in the plane containing the axes of the header and branch; T_c is the crotch thickness of tees; D_b is outside diameter of branch.

7.5 Piping with $D_o/t_c > 50$

For B31.3 piping with outside diameter to thickness ratio (D_o/t_c) greater than 50, the eroded/corroded section modulus Z_c used to calculate bending stresses, M/Z_c shall be replaced by $(1.3\text{-}0.006\ D_o/t_c)Z_c$, where D_o is outside diameter and t_c is the pipe eroded/corroded thickness. In order to fulfill this requirement for the pipe with D_o/t_c greater than 50, the pipe stress engineer should either calculate the bending stresses with $(1.3\text{-}0.006\ D_o/t_c)Z_c$ or conservatively adjust the stress ratio from ME101 output by a factor of $1/(1.3\text{-}0.006\ D_o/t_c)$.

7.6 Black Cell Piping Systems

Piping within the black cells shall be analyzed to Seismic category I (SC-I) requirements, per the Basis of Design [Ref 8.48, Section 16.4.2.7]. Black cell piping includes in-cell piping up to and including the in-cell interface weld between a vendor's supply piece of through wall equipment (such as a double wall pipe, joggle pipe (offset penetration), shadow box, floor box, wall box, rack, or jumper nozzle platform) and black cell piping. For all piping that extends from inside a black cell and is not welded directly to vendor supplied piece of through wall equipment, the requirement for black cell piping shall be applicable up to the interface weld in the pipeline immediately outside the black cell. Sections of piping that are part of components and penetrate the black cell wall or ceiling shall meet the same requirements as the black cell piping to which it attaches up to the interface weld in the component piping immediately outside the black cell. See Figure 1 below for illustration.

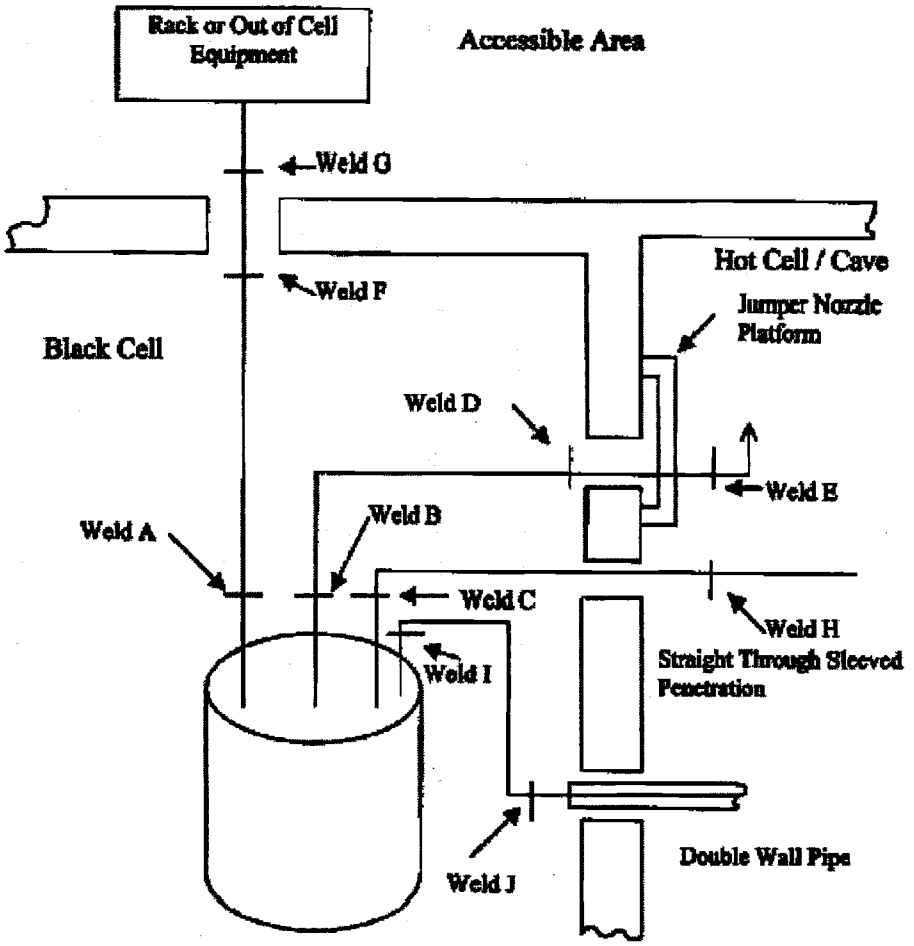

Figure 1: Example of Black Cell and Component Piping

Black cell piping extends between termination welds. Examples include the piping and welds extending from Weld A to Weld F, from Weld B to Weld D, from Weld C to Weld H, and Weld I to Weld J.

The piping procured as part of equipment and penetrating the black cell walls shall meet the same design, fabrication, construction, testing, and inspection requirements as the black cell piping to which it attaches to the first weld outside of the black cell. An example is the component piping between Weld F and Weld G.

The piping procured as part of a jumper platform and penetrating the black cell wall shall meet the same design, fabrication, construction, testing, and inspection requirements as the black cell piping to which it attaches out to the first weld outside of the black cell. An example of this is the piping between Weld D and Weld E.

7.7 Piping Two over One Protection

The requirements for seismic interaction analysis/classification are provided in Reference 8.19, safety criterion 4.1-3. Briefly, these classification requirements are defined below:

a) SSCs whose failure under seismic loads could prevent an SC SSC with a seismic safety function from performing that function shall be categorized as SC-II.
b) SSCs whose failure under seismic loads could prevent an SS SSC with a seismic safety function from performing that function shall be categorized as SC-III.
c) SSCs whose failure under seismic loads could prevent an APC SSC with a seismic function from performing that function shall be categorized as SC-IV.

Piping shall be analyzed to the minimum seismic requirement above when a two over one protection issue is identified via hazards reviews.

7.8 Jumper Supports

The jumper piping system design shall comply with this Design Criteria except for the special design jumper components such as connectors qualified by vendors. Seismic uplift for jumper supports shall be avoided.

Note that a "Jumper" is a remotely removable assembly consisting of piping, dunnage, remote end connectors and in some cases, in-line components such as valves or instruments.

7.9 Pipe Break (To be determined)

7.10 Wind Missile (To be determined)

7.11 Hydrogen In Pipes And Ancillary Vessels (HPAV) - (To be determined)

7.12 Buried Pipe

For the analysis of buried pipe, the recommendations of ASCE 4-98 Section 3.5.2 [Ref 8.56] will be followed

8 References

8.1. ASME B31.3 Code, Process Piping, 1996 Edition, ASME Code For Pressure Piping, B31 An American National Standard, The American Society of Mechanical Engineers, New York, NY
8.2. DOE-STD-1020-94 including Change Notice #1 dated January 1996, Natural Phenomena Hazards and Evaluation Criteria for Department of Energy Facilities, U.S. Department of Energy, Washington, DC
8.3. Engineering Calculations, 24590-WTP-3DP-G04B-00037, Rev. 11D
8.4. ASME Boiler and Pressure Vessel Code: Section II Part D, 1995 Edition; Section III Division 1, 1995 Edition, Rules for Construction of Nuclear Facility Components, Subsection NC; Section VIII Division 2, 1995 Edition, The American Society of Mechanical Engineers, New York, NY
8.5. Uniform Building Code (UBC), 1997 Edition, International Conference of Building Officials, Whittier, CA
8.6. ASME B16.5 1988 Edition, Pipe Flanges and Flanged Fittings, The American Society of Mechanical Engineers, New York, NY
8.7. Seismic Analysis and Design Criteria, 24590-WTP-DC-ST-04-001, Rev. 3
8.8. Not used
8.9. ASCE 7-98, Minimum Design Loads for Buildings and Other Structures
8.10. Not used
8.11. Not used
8.12. Not Used
8.13. Not Used
8.14. Not Used
8.15. Pipe Stress Backup Calculation, 24590-WTP-P6C-P40T-00001, Rev. 0
8.16. Manual of Steel Construction, Allowable Stress Design, AISC ASD, Ninth Edition, American Institute of Steel Construction, Inc., Chicago, IL
8.17. Use of Quality Affecting Software Applications, 24590-WTP-GPP-IT-001, Rev. 6A
8.18. Not used
8.19. Safety Requirements Document Volume II, 24590-WTP-SRD-ESH-01-001-02, Rev. 4K
8.20. Automation Work Process for Pipe Stress Analysis and Support Design, 24590-WTP-GPG-ENG-034, Rev. 5
8.21. WRC-107, Local Stresses in Spherical and Cylindrical Shells due to External Loadings, Welding Research Council Bulletin 107, March 1979 Revision, New York, NY; WRC-297, Local Stresses in Cylindrical Shells Due to External Loadings on Nozzles Supplement to WRC Bulletin No. 107, August 1984 revised September 1987, New York, NY
8.22. Engineering Specification for Pressure Vessel Design and Fabrication, 24590-WTP-3PS-MV00-T0001, Rev 3
8.23. Not used
8.24. Not used

8.25. Not used
8.26. Not used
8.27. Sustained and Occasional Stress Checks of Span Tables for (1) Reduced Weight and Reduced Wall Thickness and (2) Nominal Weight and Reduced Wall Thickness, 24590-WTP-P6C-P40T-00008, Rev. A
8.28. Not used
8.29. HLW Vitrification Building Seismic Analysis: Seismic Displacements, 24590-HLW-S0C-S15T-00029, Rev. C
8.30. Pretreatment Facility Seismic Analysis: Seismic Displacements, 24590-PTF-S0C-S15T-00040, Rev. C
8.31. HLW In-Structure Response Spectra (ISRS) Conversion, 24590-HLW-P6C-P40T-00003, Rev. C
8.32. PTF In-Structure Response Spectra (ISRS) Conversion, 24590-PTF-P6C-P40-00001, Rev. B
8.33. Not Used
8.34. Not Used
8.35. Not Used
8.36. Not Used
8.37. Not Used
8.38. Preliminary Safety Analysis Report to Support Construction Authorization; General Information, 24590-WTP-PSAR-ESH-01-002-01, Rev 2b
8.39. Not Used
8.40. Not Used
8.41. Isometric Drawings and Associated Calculations, 24590-WTP-3DP-G04T-00906, Rev. 6
8.42. ASME B31.3 Code, Process Piping, 2002 Edition, American Society of Mechanical Engineers, New York, NY
8.43. CCN 085280, ME101 Input CODE
8.44. Interpretations No. 1 to ANSI/ASME B31.3, Interpretation 1-34, "Appendix D on Stress Intensification Factors", Interpretations Issued January 1, 1980 through December 31, 1982, The American Society of Mechanical Engineers, New York, NY
8.45. Not Used
8.46. Design Guide: Pipe Support, 24590-WTP-GPG-ENG-005, Rev 3D
8.47. Not Used
8.48. Basis of Design, 24590-WTP-DB-ENG-01-001, Rev 1J
8.49. N-392-3, Procedure for Evaluation of the Design of Hollow Circular Cross Section Welded Attachments on Classes 2 and 3 Piping, Section III, Division 1, The American Society of Mechanical Engineers, New York, NY
8.50. N-318-5, Procedure for Evaluation of the Design of Rectangular Cross Section Welded Attachments on Class 2 or 3 Piping, Section III, Division 1, The American Society of Mechanical Engineers, New York, NY
8.51. Not Used
8.52. Not Used
8.53. Piping Wall Thickness Calculation, 24590-WTP-P0C-50-00001, Rev C
8.54. Calculation To Verify Adequacy Of Pipe Wall Under External Pressure, 24590-WTP-P0C-50-00002, Rev C,
8.55. ME101 Linear Elastic Analysis of Piping, Version N8

8.56. ASCE 4-98, Seismic Analysis of Safety - Related Nuclear Structures and Commentary.
8.57. Design Guide: Pipe Stress, Pipe Layout and Support Spacing, 24590-WTP-GPG-ENG-004, Rev 2A
8.58. Pipe Stress- Lug Local Stress Evaluation - Backup Calculation, 24590-WTP-P6C-P40T-00013, Rev 0
8.59. B31 Case 178, Providing an Equation for Longitudinal Stress for Sustained Loads in ASME B31.3 Construction, approved May 6th, 2005, American Society of Mechanical Engineers, New York, NY
8.60. IEEE 382-1996, IEEE Standard for Qualification of Actuators for Power-Operated Valve Assemblies With Safety-Related Functions for Nuclear Power Plants
8.61. Final Report Geotechnical Investigation River Protection Project – Waste Treatment Plant, Shannon & Wilson, Inc., May, 2000, WTSC99-1036-42-17, Rev C

9 Appendices

9.1 APPENDIX 1, Span Method Criteria

Design Basis of Span and Support Load Tables

DESIGN BASIS OF SPAN AND SUPPORT LOAD TABLES FOR WEIGHT AND SEISMIC LOADS

1.0 Introduction

A piping system is normally supported by a series of supports, dividing the system into a series of continuous spans. The spans of the piping system are limited by

1) Vertical supports for pipe weight; and

2) Two mutually perpendicular restraints to the pipe
- At each change of direction,
- At all concentrated masses,
- At each tee, or
- At the maximum spacing on straight runs of piping

This document is to establish the piping design criteria to meet the ASME B31.3 Code requirements and to provide the methodology to determine the maximum support spans and their support loads under such design conditions.

2.0 Weight Spans

a. General

The end condition of a pipe span for a pipe system under a series of supports is approximately between the fixed end and the simply supported end. The maximum deflection, bending moment and support load of pipe span with these end conditions under uniformly distributed load are the average of the values from equations of Case 1 [Ref 8.16, Page 2-296] and Case 15 [Ref 8.16, Page 2-301] and expressed below:

$$\text{Deflection } (\Delta) = \tfrac{1}{2}\left[(5wL^4/384EI) + (wL^4/384EI)\right] = 3wL^4/384EI$$

$$\text{Moment load } (M) = \tfrac{1}{2}\left[(wL^2/8) + (wL^2/12)\right] = 5wL^2/48$$

$$\text{Support load } (R) = wL$$

Where
w = pipe weight per unit length
L = maximum pipe span between two supports
I = moment of inertia of the pipe
E = modulus of elasticity

b. Criteria

The following is the basic criteria to develop the weight spans for SC-III(Non-Chem), and SC-IV piping components:

1. Limit the maximum deflection of a pipe span ≤ ¼ inch, or limit the pipe stress due to weight load to σ_w whichever provides the shortest span length.

   $\Delta = 3wL^4/384EI \leq$ ¼ inch, or

   $M = 5wL^2/48 \leq \sigma_w Z/i$ (or $iM/Z \leq \sigma_w$, psi)

   Where

   σ_w = Pipe stress due to weight load
   Z = Section Modulus

   in which, σ_w ranges from 2,600 psi to 3,550 psi for carbon steel pipe, and 2,000 psi to 2,950 psi for stainless pipe. A lateral seismic restraint is required at every, every second, or every third dead weight support.

   Refer to Section 4.10.2 of this criteria for considering the mechanical / erosion / corrosion allowances.

2. Limit the internal pressure to 400 psi for pipe schedules 40 and 80, and 200 psi for schedules 10 and 20.

3. Stress intensification factor (SIF or *i*) per ASME B31.3 Code as follows:

   SIF (or *i*) = 1.3 for fillet welds for pipe sizes 2" and below. (*)

   SIF (or *i*) = 1.0 for butt welds for pipe sizes above 2 inch.

   (*) Per Appendix D of B31.3 Code[Ref 8.1], for fillet weld joint, or socket weld flange or fitting, *i*=2.1 (SIF) or $i = 2.1 \cdot T / C_x$ but not less than 1.3. C_x is the fillet weld length identified in paragraph 328.5.2C of [Ref 8.1], and is $1.25 \cdot T$ minimum but not less than 1/8". For longitudinal stress by sustained loads and occasional loads, the use of $0.75 \cdot i$ is acceptable [Ref 8.44]. Therefore, $i = 0.75 \cdot 2.1 \cdot (T/1.25 \cdot T) = 1.26$, use 1.3.

4. The weight spans and support loads in the Span and Support Load Tables are determined as follows:

   Weight Span, L is equal to the lesser of $L_1 = ({}^1/_4 \cdot 384EI/3w)^{1/4}$ or $L_2 = (\sigma_w \cdot 48Z/5iw)^{1/2}$
   Support Load due to weight, R = *w*L

3.0 Deleted

4.0 Seismic Spans based on the Uniform Building Code (SC-III(Non-Chem) and SC-IV Piping components)

For SC-III without containing a significant Chemical release hazard (SC-III(Non- Chem)) and SC-IV piping components, the seismic spans are developed based on Section 7.3.4 of Seismic Analysis and Design Criteria [Ref 8.7]. The lateral seismic force on systems and piping components, F_p, is calculated per Formula (32-1) of the UBC Code, i.e.,

$$F_p = 4.0\ C_a\ I_p\ W_p = 1.44\ W_p$$

For vertical seismic force, $F_v = {}^2/_3 F_p = 0.96\ W_p$

where

W_p = the weight per unit length of piping component
C_a = 0.24
I_p = the importance factor, shall be taken as 1.5 for SC-III piping and 1.0 for SC-IV piping [see Section 7.3.4 of Reference 8.7].
M_h = $5F_pL_h^2/48$ where L_h is the distance between lateral restraints
M_v = $5F_vL_v^2/48$ where L_v is the distance between vertical restraints
R_h = F_pL_h
R_v = F_vL_v
M = $(M_h^2 + M_v^2)^{1/2}$

The stress for SC-III and SC-IV piping components is calculated as follows:

$$\frac{PD}{4t_n} + \text{weight stress} + i\frac{M}{Z} \le 3.0S_h\text{, but not greater than } 2.0S_y.$$

where

t_n = pipe nominal wall thickness
Z = pipe section modulus based on nominal wall thickness

The dead weight supports for SC-III(Non-Chem) or SC-IV piping are not always designed as double-acting supports. To account for that, the seismic span (L) is developed conservatively based on the same span for calculation of horizontal and vertical moments. Therefore, the seismic spans and seismic support loads for SC-III without containing a significant Chemical release hazard SC-III(Non-Chem) and SC-IV piping in Span Tables are determined as follows:

$$L \le \sqrt{\left(3.0S_h - \frac{PD}{4t_n} - weight\_stress\right)\frac{Z}{i\sqrt{(1.44w)^2 + (0.96w)^2}}\frac{48}{5}}$$

where

weight stress, $\sigma_w = 5iwL^2/48Z$

S_h = 20,000 psi for carbon steel, and S_h =16,700 psi for stainless steel
$R_h = 1.44 W_p L$ for lateral UBC seismic loads

$R_v = 0.96 \cdot W_p L$ for vertical UBC seismic loads

1" thickness of insulation with an assumed density of 8 lb/ft^3 for pipe 1-1/2 inch and under and 2" thickness of insulation for pipe 2 inch and above has been included into pipe weight to develop the "Span and Support Load Tables". For the backup calculation for the "Span and Support Load Tables" see Reference 8.15. For pipe insulation density other than 8 lb/ft^3, the span and support load should be adjusted based on the formula specified in "limitations 5" under Tables 2.2 and 2.4. Refer to Reference 8.15 for more detailed development of "Span and Support Load Table" if needed.

Refer to Section 4.10.2 of this criteria for considering the mechanical / erosion / corrosion allowances. The span tables listed in Appendix 2 comply with project requirements for mechanical / erosion / corrosion allowances as documented in calculation 24590-WTP-P6C-P40T-00008 [Ref 8.27].

5.0 Span Tables Seismic Load Reduction Factor based on the Uniform Building Code (SC-III(Non-Chem) and SC-IV Piping components)

Section 3.3.4.b permits the use of UBC formula 32-2 for calculating the seismic loads and stresses for SC-III & SC-IV piping, which results in reduction of applied seismic acceleration on the piping and seismic support load.

Tables 2-2 and 2-4 are based on maximum horizontal acceleration of 1.44g and vertical acceleration of 0.96g based on maximum seismic acceleration [g] in Formula 32-2 of the UBC code as follow → $4C_aI_p$

Table 1-1 Seismic Load Reduction Factor for SC-III(Non-Chem) support loads, Ductile failure

Build.	Roof Elev	Floor Elev	Minimum Horizontal Accl.	Horizontal Accl.	Vertical Accl.	Reduction Factor Horizontal	Reduction Factor Vertical
	[ft]	[ft]	(1)	(2)	(3)	(4)	(5)
PTF	98	98	0.252	1.200	0.8	0.84	0.92
		77	0.252	1.007	0.68	0.7	0.86
		56	0.252	0.814	0.55	0.57	0.8
		28	0.252	0.557	0.38	0.39	0.7
		0	0.252	0.300	0.2	0.21	0.62
HLW	89	89	0.252	1.200	0.8	0.84	0.92
		72	0.252	1.028	0.69	0.72	0.87
		58	0.252	0.887	0.6	0.62	0.82
		37	0.252	0.674	0.45	0.47	0.74
		14	0.252	0.442	0.3	0.31	0.67
		0	0.252	0.300	0.2	0.21	0.62
LAW	68	68	0.252	1.200	0.8	0.84	0.92
		48	0.252	0.935	0.63	0.65	0.83
		28	0.252	0.671	0.45	0.47	0.74
		3	0.252	0.340	0.23	0.24	0.63
LAB	35	35	0.252	1.200	0.8	0.84	0.92
		17	0.252	0.737	0.5	0.52	0.77
		0	0.252	0.300	0.2	0.21	0.62

Notes:

(1) UBC Formula 32-2 minimum seismic acceleration [g] as follows: $0.7C_aI_p$

(2) UBC Formula 32-2 for seismic acceleration [g] as follows: $\frac{a_pC_aI_p}{R_p}\left(1+3\frac{h_x}{h_r}\right) \le 4C_aI_p$

Note that I_p for SC-III is 1.5 and R_p for ductile failure is 3; all other coefficients are defined in section 4.5.2

(3) Vertical seismic acceleration is 2/3 the lateral acceleration (see section 4.5.2)

(4) Horizontal seismic load reduction factor: this factor should be applied for supports design loads per Span Tables 2-2 and 2-4 of this criteria, horizontal direction only

(5) Vertical seismic load reduction factor: based on gravity + vertical seismic acceleration over 1.96g. This factor should be applied for supports design loads per Span Tables 2-2 and 2-4 of this criteria.

Table 1-2 Seismic Load Reduction Factor for SC-IV support loads, Ductile failure

Build.	Roof Elev	Floor Elev	Minimum Horizontal. Accl.	Horizontal Accl.	Vertical Accl.	Reduction Factor Horizontal	Reduction Factor Vertical
	[ft]	[ft]	(1)	(2)	(3)	(4)	(5)
PTF	98	98	0.168	0.800	0.54	0.56	0.79
		77	0.168	0.671	0.45	0.47	0.74
		56	0.168	0.543	0.37	0.38	0.7
		28	0.168	0.371	0.25	0.26	0.64
		0	0.168	0.200	0.14	0.14	0.58
HLW	89	89	0.168	0.800	0.54	0.56	0.79
		72	0.168	0.685	0.46	0.48	0.75
		58	0.168	0.591	0.4	0.41	0.72
		37	0.168	0.449	0.3	0.32	0.67
		14	0.168	0.294	0.2	0.21	0.61
		0	0.168	0.200	0.14	0.14	0.58
LAW	68	68	0.168	0.800	0.54	0.56	0.79
		48	0.168	0.624	0.42	0.44	0.73
		28	0.168	0.447	0.3	0.32	0.67
		3	0.168	0.226	0.16	0.16	0.59
LAB	35	35	0.168	0.800	0.54	0.56	0.79
		17	0.168	0.491	0.33	0.35	0.68
		0	0.168	0.200	0.14	0.14	0.58

Notes:

(1) UBC Formula 32-2 minimum seismic acceleration [g] as follows: $F_p \geq 0.7 C_a I_p W_p$

(2) UBC Formula 32-2 for seismic acceleration [g] as follows: $\frac{a_p C_a I_p}{R_p}\left(1+3\frac{h_x}{h_r}\right) \leq 4 C_a I_p$

Note that I_p for SC-IV is 1.0 and R_p for ductile failure is 3, all other coefficients are defined in section 4.5.2

(3) Vertical seismic acceleration is 2/3 the lateral acceleration, see section 4.5.2

(4) Horizontal seismic load reduction factor: this factor should be applied for supports design loads per Span Tables 2-2 and 2-4 of this criteria, horizontal direction only

(5) Vertical seismic load reduction factor: based on gravity + vertical seismic acceleration over 1.96g. This factor should be applied for vertical supports design loads per Span Tables 2-2 and 2-4 of this criteria.

9.2 APPENDIX 2, Span and Support Load Tables

1) **Table 2.1 - Deleted**
2) **Table 2.2 - Span and Support Loads for SC-III(Non-Chem) and SC-IV C. S. Piping (For Mechanical / Erosion / Corrosion Allowances ≥ 50% of The Nominal Wall Thickness, See Section 4.10.2)**
3) **Table 2.3 -Deleted**
4) **Table 2.4 - Span and Support Loads for SC-III(Non-Chem) and SC-IV S. S. Piping (For Mechanical / Erosion / Corrosion Allowances ≥ 50% of The Nominal Wall Thickness, See Section 4.10.2)**

TABLE 2. 1 – Span and Support Loads for SC-I, SC-II, and SC-III(Chem) C. S. Piping (For Reference Use)

Deleted

TABLE 2. 2 – Span and Support Loads for SC-III(Non-Chem) and SC-IV C. S. Piping
(For Mechanical / Erosion / Corrosion Allowances ≥ 50% 0f The Nominal Wall Thickness, See Section 4.10.2)
A). Lateral Seismic Support at Every Third Weight Span

pipe size	sch	Weight Span		Seismic Span		Support Loads (lbs)			
		ft	ft	ft	ft	Weight		Seismic	
		Empty	w/ water	Empty	w/ water	empty	w/ water	empty	w/ water
3/8 in	40	7.7	7.3	23.0	22.1	7	7	30	32
	80	7.8	7.6	23.4	22.8	8	9	36	37
1/2 in	40	9.2	8.7	27.7	26.3	11	11	47	50
	80	9.2	8.9	27.9	26.9	13	14	57	59
3/4 in	40	10.7	10.1	32.7	30.3	15	17	68	73
	80	10.7	10.4	32.9	31.2	19	20	85	89
1 in	40	12.1	11.3	36.7	33.9	26	28	113	122
	80	12.0	11.6	37.0	35.0	32	34	140	148
1-1/2 in	40	14.9	13.5	46.1	40.8	48	56	216	243
	80	14.8	14.1	46.5	42.6	62	69	279	303
2 in	40	15.6	13.8	46.8	41.5	83	93	358	404
	80	16.0	14.7	48.5	44.4	107	117	466	509
2-1/2 in	40	17.8	16.8	60.8	53.9	141	168	696	779
	80	17.8	17.1	62.3	57.0	175	199	881	958
3 in	40	20.1	18.7	70.2	60.5	192	239	967	1113
	80	20.1	19.1	71.6	64.3	246	289	1262	1398
4 in	40	23.1	21.2	81.3	67.9	303	395	1538	1824
	80	23.1	21.7	82.9	72.8	401	485	2068	2339
6 in	40	28.5	25.5	101.1	80.3	628	880	3211	3997
	80	28.5	26.4	103.2	88.2	903	1135	4702	5457
8 in	20	32.7	28.0	116.5	84.7	855	1360	4387	5933
	40	32.8	28.9	116.9	89.8	1061	1559	5443	6989
	80	32.8	30.1	119.1	99.5	1548	2013	8090	9599
10 in	20	36.6	29.5	130.0	89.1	1198	2024	6130	8796
	40	36.8	32.0	131.4	98.5	1664	2536	8548	11240
	80	36.8	33.5	133.9	110.7	2540	3357	13314	15963
12 in	20	40.0	30.7	141.7	92.3	1551	2759	7917	11949
	40	40.3	34.7	144.0	105.8	2375	3725	12222	16369
	80	40.2	36.5	146.7	120.5	3777	5038	19849	23941
14 in	10	42.1	31.3	149.1	94.0	1774	3269	9060	14123
	20	42.2	33.6	151.4	101.4	2160	3768	11155	16365
	40	42.4	36.3	151.8	110.6	2916	4630	15048	20315
	80	42.2	38.3	154.5	126.5	4714	6315	24829	30032
16 in	10	45.0	31.9	159.2	96.2	2171	4150	11054	18003
	20	45.2	34.4	161.8	104.1	2646	4775	13635	20839
	40	45.4	38.9	163.3	118.7	4039	6433	20910	28287
	80	45.2	41.0	165.7	135.2	6452	8696	34033	41327
18 in	10	47.8	32.6	168.6	97.8	2594	5165	13164	22321
	20	48.0	35.2	171.5	106.2	3164	5931	16263	25803
	40	48.3	41.3	173.9	126.1	5386	8610	27940	37887
	80	48.1	43.4	176.2	143.3	8535	11559	45066	54898
20 in	10	50.5	32.6	177.3	99.2	3041	6194	15382	27095
	20	50.8	38.1	182.8	115.5	4379	8090	22669	35269
	40	51.0	43.3	183.6	131.2	6648	10857	34480	47402
	80	50.7	45.8	186.1	151.0	10976	14918	58004	70824
22 in	10	53.0	33.1	185.6	100.2	3508	7405	17691	32268
	20	53.3	38.8	191.1	117.2	5077	9656	26199	41994
	30	53.5	41.9	190.3	126.7	6591	11447	33762	49880
	80	53.2	48.0	195.5	158.2	13801	18821	72969	89292
24 in	10	55.4	33.5	193.2	101.0	4003	8724	20111	37870
	20	55.8	39.4	199.7	118.8	5776	11334	29772	49168
	40	56.0	47.3	201.8	142.6	10079	16748	52328	72749
	80	55.7	50.1	204.5	165.2	16992	23245	89911	110246

Limitations:
1. For pipe content with specific gravity other than 1.0, span reduction factors specified in Attachment 4 of Reference 8.15 shall be used.
2. Any concentrated weight such as valve, riser, piping component, etc., shall be located as close to support as possible, and 100% of the concentrated weight shall be added to the adjacent support.
3. For pipe with horizontal elbow, reduce by 25% the listed span for design span. A reduction factor of 0.75 is applied.
4. The every vertical support load for support design shall be the weight support load plus the vertical seismic load that is 0.96 of weight support load (i.e., 1.96*Weight Support Load).
5. Insulation density of 8 lb/ft^3 has been used to develop this Table. For insulation density other than 8 lb/ft^3, the maximum weight or seismic spans may be adjusted by the formulas below:
   For pipe without water content: $L_s' = L_s[(w_p + w_i)/(w_p + w_i')]^{1/2}$
   For pipe with water content: $L_s' = L_s[(w_p + w_i + w_w)/(w_p + w_i' + w_w)]^{1/2}$
   where, w_p, w_i, w_w see Attachment 1 of Reference 8.15; w_i' = new insulation weight, lb/ft; L_s is the span from Table, L_s' is the adjusted span due to specific insulation.
6. This Table only applies to SC-III without containing a significant Chemical release hazard (SC-III(Non-Chem)) and SC-IV piping.
7. For SC-IV piping, use the listed seismic support loads multiplied by a factor of 0.667.

TABLE 2. 2 (cont'd) –
B). Lateral Seismic Support at Every Weight Span

pipe size	sch	Weight Span		Seismic Span		Support Loads (lbs)			
		ft	ft	ft	ft	Weight		Seismic	
		Empty	w/ water	Empty	w/ water	empty	w/ water	empty	w/ water
3/8 in	40	7.7	7.3	7.7	7.3	7	7	10	10
	80	7.8	7.6	7.8	7.6	8	9	12	12
1/2 in	40	9.2	8.7	9.2	8.7	11	11	16	16
	80	9.2	8.9	9.2	8.9	13	14	19	20
3/4 in	40	10.7	10.1	10.7	10.1	15	17	22	24
	80	10.7	10.4	10.7	10.4	19	20	27	29
1 in	40	12.1	11.3	12.1	11.3	26	28	37	41
	80	12.0	11.6	12.0	11.6	32	34	45	49
1-1/2 in	40	14.9	13.5	14.9	13.5	48	56	70	81
	80	14.8	14.1	14.8	14.1	62	69	89	100
2 in	40	15.6	13.8	15.6	13.8	83	93	119	134
	80	16.0	14.7	16.0	14.7	107	117	154	168
2-1/2 in	40	17.8	16.8	17.8	16.8	141	168	203	242
	80	17.8	17.1	17.8	17.1	175	199	252	287
3 in	40	20.1	18.7	20.1	18.7	192	239	277	344
	80	20.1	19.1	20.1	19.1	246	289	355	416
4 in	40	23.1	21.2	23.1	21.2	303	395	437	568
	80	23.1	21.7	23.1	21.7	401	485	577	698
6 in	40	28.5	25.5	28.5	25.5	628	880	905	1268
	80	28.5	26.4	28.5	26.4	903	1135	1300	1634
8 in	20	32.7	28.0	32.7	28.0	855	1360	1231	1958
	40	32.8	28.9	32.8	28.9	1061	1559	1528	2245
	80	32.8	30.1	32.8	30.1	1548	2013	2229	2899
10 in	20	36.6	29.5	36.6	29.5	1198	2024	1726	2914
	40	36.8	32.0	36.8	32.0	1664	2536	2396	3653
	80	36.8	33.5	36.8	33.5	2540	3357	3658	4834
12 in	20	40.0	30.7	40.0	30.7	1551	2759	2234	3973
	40	40.3	34.7	40.3	34.7	2375	3725	3419	5364
	80	40.2	36.5	40.2	36.5	3777	5038	5439	7255
14 in	10	42.1	31.3	42.1	31.3	1774	3269	2555	4707
	20	42.2	33.6	42.2	33.6	2160	3768	3110	5426
	40	42.4	36.3	42.4	36.3	2916	4630	4199	6667
	80	42.2	38.3	42.2	38.3	4714	6315	6788	9093
16 in	10	45.0	31.9	45.0	31.9	2171	4150	3126	5976
	20	45.2	34.4	45.2	34.4	2646	4775	3810	6877
	40	45.4	38.9	45.4	38.9	4039	6433	5816	9263
	80	45.2	41.0	45.2	41.0	6452	8696	9292	12523
18 in	10	47.8	32.6	47.8	32.6	2594	5165	3735	7437
	20	48.0	35.2	48.0	35.2	3164	5931	4556	8540
	40	48.3	41.3	48.3	41.3	5386	8610	7755	12398
	80	48.1	43.4	48.1	43.4	8535	11559	12291	16645
20 in	10	50.5	32.6	50.5	32.6	3041	6194	4379	8919
	20	50.8	38.1	50.8	38.1	4379	8090	6305	11650
	40	51.0	43.3	51.0	43.3	6648	10857	9574	15634
	80	50.7	45.8	50.7	45.8	10976	14918	15805	21482
22 in	10	53.0	33.1	53.0	33.1	3508	7405	5052	10663
	20	53.3	38.8	53.3	38.8	5077	9656	7311	13905
	30	53.5	41.9	53.5	41.9	6591	11447	9491	16483
	80	53.2	48.0	53.2	48.0	13801	18821	19873	27102
24 in	10	55.4	33.5	55.4	33.5	4003	8724	5765	12563
	20	55.8	39.4	55.8	39.4	5776	11334	8318	16321
	40	56.0	47.3	56.0	47.3	10079	16748	14514	24117
	80	55.7	50.1	55.7	50.1	16992	23245	24469	33473

Limitations:
1. For pipe content with specific gravity other than 1.0, span reduction factors specified in Attachment 4 of Reference 8.15 shall be used.
2. Any concentrated weight such as valve, riser, piping component, etc., shall be located as close to support as possible, and 100% of the concentrated weight shall be added to the adjacent support.
3. For pipe with horizontal elbow, reduce 25% the listed span as design span. A reduction factor of 0.75 is applied.
4. The every vertical support load for support design shall be the weight support load plus the vertical seismic load that is 0.96 of weight support load (i.e., 1.96*Weight Support Load).
5. Insulation density of 8 lb/ft^3 has been used to develop this Table. For insulation density other than 8 lb/ft^3, the maximum weight or seismic spans may be adjusted by the formulas below:
   For pipe without water content: $L_s' = L_s[(w_p + w_i)/(w_p + w_i')]^{1/2}$
   For pipe with water content: $L_s' = L_s[(w_p + w_i + w_w)/(w_p + w_i' + w_w)]^{1/2}$
   where,
   w_p, w_i, w_w see Attachment 1 of Reference 8.15; w_i'= new insulation weight, lb/ft; L_s is the span from Table, L_s' is the adjusted span due to specific insulation.
6. This Table only applies to SC-III without containing a significant Chemical release hazard (SC-III(Non-Chem)) and SC-IV piping.
7. For SC-IV piping, use the listed seismic support loads multiplied by a factor of 0.667.

TABLE 2. 2 (cont'd) –
C). Lateral Seismic Support at Every Other Weight Span

pipe size	sch	Weight Span		Seismic Span		Support Loads (lbs)			
		ft	ft	ft	ft	Weight		Seismic	
		Empty	w/ water	Empty	w/ water	empty	w/ water	empty	w/ water
3/8 in	40	7.7	7.3	15.3	14.7	7	7	20	21
	80	7.8	7.6	15.5	15.1	8	9	24	25
1/2 in	40	9.2	8.7	18.4	17.5	11	11	31	33
	80	9.2	8.9	18.5	17.9	13	14	38	39
3/4 in	40	10.7	10.1	21.5	20.2	15	17	45	49
	80	10.7	10.4	21.3	20.7	19	20	55	59
1 in	40	12.1	11.3	24.1	22.5	26	28	74	81
	80	12.0	11.6	24.0	23.2	32	34	91	98
1-1/2 in	40	14.9	13.5	29.8	27.0	48	56	140	161
	80	14.8	14.1	29.7	28.2	62	69	178	200
2 in	40	15.6	13.8	31.1	27.6	83	93	238	269
	80	16.0	14.7	32.1	29.4	107	117	308	337
2-1/2 in	40	17.8	16.8	35.5	33.5	141	168	407	484
	80	17.8	17.1	35.7	34.2	175	199	505	574
3 in	40	20.1	18.7	40.2	37.4	192	239	554	687
	80	20.1	19.1	40.3	38.2	246	289	710	831
4 in	40	23.1	21.2	46.2	42.3	303	395	874	1136
	80	23.1	21.7	46.3	43.4	401	485	1155	1396
6 in	40	28.5	25.5	57.0	50.9	628	880	1810	2535
	80	28.5	26.4	57.0	52.8	903	1135	2599	3268
8 in	20	32.7	28.0	65.4	55.9	855	1360	2461	3916
	40	32.8	28.9	65.6	57.7	1061	1559	3056	4490
	80	32.8	30.1	65.6	60.1	1548	2013	4457	5797
10 in	20	36.6	29.5	73.2	59.0	1198	2024	3451	5828
	40	36.8	32.0	73.6	64.0	1664	2536	4791	7305
	80	36.8	33.5	73.6	67.1	2540	3357	7315	9669
12 in	20	40.0	30.7	80.0	61.4	1551	2759	4468	7946
	40	40.3	34.7	80.6	69.3	2375	3725	6839	10728
	80	40.2	36.5	80.4	73.1	3777	5038	10878	14511
14 in	10	42.1	31.3	84.1	62.7	1774	3269	5109	9414
	20	42.2	33.6	84.4	67.3	2160	3768	6219	10852
	40	42.4	36.3	84.7	72.6	2916	4630	8397	13335
	80	42.2	38.3	84.5	76.6	4714	6315	13576	18186
16 in	10	45.0	31.9	90.1	63.8	2171	4150	6252	11952
	20	45.2	34.4	90.4	68.7	2646	4775	7620	13753
	40	45.4	38.9	90.8	77.8	4039	6433	11631	18527
	80	45.2	41.0	90.5	81.9	6452	8696	18583	25045
18 in	10	47.8	32.6	95.7	65.2	2594	5165	7470	14875
	20	48.0	35.2	96.1	70.3	3164	5931	9111	17080
	40	48.3	41.3	96.5	82.6	5386	8610	15511	24796
	80	48.1	43.4	96.1	86.9	8535	11559	24581	33290
20 in	10	50.5	32.6	100.9	65.3	3041	6194	8758	17839
	20	50.8	38.1	101.7	76.3	4379	8090	12610	23299
	40	51.0	43.3	101.9	86.6	6648	10857	19147	31269
	80	50.7	45.8	101.4	91.6	10976	14918	31611	42965
22 in	10	53.0	33.1	106.0	66.2	3508	7405	10104	21326
	20	53.3	38.8	106.7	77.6	5077	9656	14621	27811
	30	53.5	41.9	107.0	83.7	6591	11447	18982	32966
	80	53.2	48.0	106.5	96.0	13801	18821	39746	54204
24 in	10	55.4	33.5	110.7	67.0	4003	8724	11530	25125
	20	55.8	39.4	111.6	78.9	5776	11334	16635	32642
	40	56.0	47.3	112.0	94.5	10079	16748	29029	48234
	80	55.7	50.1	111.3	100.3	16992	23245	48938	66946

Limitations:
1. For pipe content with specific gravity other than 1.0, span reduction factors specified in Attachment 4 of Reference 8.15 shall be used.
2. Any concentrated weight such as valve, riser, piping component, etc., shall be located as close to support as possible, and 100% of the concentrated weight shall be added to the adjacent support.
3. For pipe with horizontal elbow, reduce by 25% the listed span as design span. A reduction factor of 0.75 is applied.
4. The every vertical support load for support design shall be the weight support load plus the vertical seismic load that is 0.96 of weight support load (i.e., 1.96*Weight Support Load).
5. Insulation density of 8 lb/ft^3 has been used to develop this Table. For insulation density other than 8 lb/ft^3, the maximum weight or seismic spans may be adjusted by the formulas below:
   For pipe without water content: $L_s' = L_s[(w_p + w_i)/(w_p + w_i')]^{1/2}$
   For pipe with water content: $L_s' = L_s[(w_p + w_i + w_w)/(w_p + w_i' + w_w)]^{1/2}$
   where,
   w_p, w_i, w_w see Attachment 1 of Reference 8.15; w_i'= new insulation weight, lb/ft; L_s is the span from Table, L_s' is the adjusted span due to specific insulation.
6. This Table only applies to SC-III without containing a significant Chemical release hazard (SC-III(Non-Chem)) and SC-IV piping.
7. For SC-IV piping, use the listed seismic support loads multiplied by a factor of 0.667.

TABLE 2. 3 – Span and Support Loads for SC-I, SC-II, and SC-III(Chem) S. S. Piping (For Reference Use)

Deleted

TABLE 2. 4 – Span and Support Loads for SC-III(Non-Chem) and SC-IV S. S. Piping
(For Mechanical / Erosion / Corrosion Allowances ≥ 50% 0f The Nominal Wall Thickness, See Section 4.10.2)

A) Seismic Support at Every Third Weight Span

pipe size	sch	Weight Span		Seismic Span		Support Loads (lbs)			
		ft	ft	ft	ft	Weight		Seismic	
		Empty	w/ water	empty	w/ water	empty	w/ water	empty	w/ water
3/8 in	10s	6.7	6.3	20.3	19.1	5	5	22	24
	40s	7.0	6.7	21.0	20.1	6	7	28	29
	80s	7.1	6.9	21.4	20.8	8	8	33	34
1/2 in	10s	8.2	7.7	24.9	23.1	8	9	36	38
	40s	8.4	8.0	25.2	23.9	10	10	43	45
	80s	8.4	8.1	25.4	24.6	12	12	52	54
3/4 in	10s	9.7	8.8	29.3	26.5	11	13	49	55
	40s	9.9	9.2	29.8	27.2	14	15	62	67
	80s	9.9	9.5	29.2	27.5	18	19	77	81
1 in	10s	11.0	10.0	33.2	29.9	21	23	89	98
	40s	11.1	10.3	33.4	30.2	24	26	103	112
	80s	11.2	10.6	32.9	30.8	29	31	128	135
1-1/2 in	10s	13.7	11.7	41.2	34.1	36	42	157	183
	40s	13.9	12.3	40.6	35.3	45	51	196	221
	80s	13.9	12.8	40.1	36.5	58	63	254	276
2 in	10s	13.5	11.6	40.9	35.0	58	68	253	296
	40s	14.2	12.5	42.7	37.8	75	85	326	368
	80s	14.6	13.4	44.2	40.3	97	106	425	464
2-1/2 in	10s	17.1	14.4	51.6	43.4	97	116	423	504
	40s	17.8	16.2	55.0	48.9	142	163	631	707
	80s	17.9	17.1	56.5	50.9	176	199	799	868
3 in	10s	19.7	15.9	60.0	47.3	125	157	546	684
	40s	20.2	18.2	63.5	52.9	193	233	876	1009
	80s	20.2	19.2	63.1	55.5	247	290	1144	1267
4 in	10s	22.6	17.2	69.0	50.1	180	243	791	1052
	40s	23.2	20.5	72.1	58.2	304	383	1392	1653
	80s	23.2	21.8	71.8	61.9	402	486	1874	2119
6 in	10s	27.9	19.7	86.1	55.6	346	514	1535	2227
	40s	28.6	24.2	87.4	67.3	631	835	2905	3624
	80s	28.6	26.3	87.3	73.5	906	1129	4261	4943
8 in	10s	32.2	21.4	99.9	59.9	554	874	2472	3803
	40s	32.9	26.9	99.5	74.5	1065	1453	4921	6340
	80s	32.9	29.4	99.7	82.1	1553	1972	7329	8700
10 in	10s	36.2	23.2	111.2	64.1	848	1400	3790	6073
	40s	37.0	29.6	110.8	81.1	1670	2343	7724	10197
	80s	37.0	31.7	111.3	87.8	2198	2912	10329	12784
12 in	10s	39.7	24.7	120.8	67.5	1176	2023	5274	8746
	40s	40.4	31.2	120.2	84.7	2221	3241	10241	14033
	80s	40.4	33.5	121.0	91.8	2865	3944	13418	17240
14 in	10s	41.9	25.4	131.0	75.4	1389	2443	6256	10637
	std	42.5	31.7	135.8	93.6	2550	3795	11739	16526
	xs	42.5	34.1	137.1	101.7	3298	4612	15431	20294
16 in	10s	44.7	25.9	138.9	76.2	1708	3137	7634	13577
	std	45.5	32.7	144.6	95.8	3128	4836	14316	20928
	xs	45.6	35.4	146.2	104.9	4053	5860	18886	25671
18 in	10s	47.5	26.1	146.8	76.8	2037	3877	9056	16840
	std	48.3	33.3	152.7	97.4	3743	5942	17034	25803
	xs	48.4	36.2	154.5	107.3	4858	7184	22543	31638
20 in	10s	50.5	28.1	157.5	82.5	2702	5156	12139	22449
	std	51.0	33.7	160.1	98.7	4394	7142	19878	31130
	xs	51.1	37.4	162.3	109.4	5710	8776	26383	38097
22 in	10s	52.9	28.4	164.0	82.9	3132	6176	13981	26745
	std	53.5	34.3	166.5	99.6	5095	8525	22882	36921
	xs	53.7	38.2	169.4	111.0	6614	10449	30416	45149
24 in	5s	55.4	28.5	171.5	83.3	3542	7204	15774	31335
	std	56.0	34.5	173.2	100.4	5797	9911	25900	43082
	xs	56.2	38.6	175.4	112.5	7546	12137	34560	52710

Limitations:
1. For pipe content with specific gravity other than 1.0, span reduction factors specified in Attachment 4 of Reference 8.15 shall be used.
2. Any concentrated weight such as valve, riser, piping component, etc., shall be located as close to support as possible, and 100% of the concentrated weight shall be added to the adjacent support.
3. For pipe with horizontal elbow, reduce by 25% the listed span as design span. A reduction factor of 0.75 is applied.
4. The every vertical support load for support design shall be the weight support load plus the vertical seismic load that is 0.96 of weight support load (i.e., 1.96*Weight Support Load).
5. Pipe insulation is not considered in this Table. For insulation density, the maximum weight or seismic spans may be adjusted by the formulas below:
   For pipe without water content: $L_s' = L_s[(w_p)/(w_p + w_i')]^{1/2}$
   For pipe with water content: $L_s' = L_s[(w_p + w_w)/(w_p + w_i' + w_w)]^{1/2}$
   where, w_p, w_w see Attachment 1 of Reference 8.15; w_i'= new insulation weight, lb/ft; L_s is the span from Table, L_s' is the adjusted span due to specific insulation.
6. This Table only applies to SC-III without containing a significant Chemical release hazard (SC-III(Non-Chem)) and SC-IV piping.
7. For SC-IV piping, use the listed seismic support loads multiplied by a factor of 0.667.

TABLE 2. 4 (cont'd) –

B) Seismic Support at Every Weight Span

pipe size	sch	Weight Span		Seismic Span		Support Loads (lbs)			
		ft	ft	ft	ft	Weight		Seismic	
		Empty	w/ water	empty	w/ water	empty	w/ water	empty	w/ water
3/8 in	10s	6.7	6.3	6.7	6.3	5	5	7	8
	40s	7.0	6.7	7.0	6.7	6	7	9	10
	80s	7.1	6.9	7.1	6.9	8	8	11	11
1/2 in	10s	8.2	7.7	8.2	7.7	8	9	12	13
	40s	8.4	8.0	8.4	8.0	10	10	14	15
	80s	8.4	8.1	8.4	8.1	12	12	17	18
3/4 in	10s	9.7	8.8	9.7	8.8	11	13	16	18
	40s	9.9	9.2	9.9	9.2	14	15	21	22
	80s	9.9	9.5	9.9	9.5	18	19	26	27
1 in	10s	11.0	10.0	11.0	10.0	21	23	30	33
	40s	11.1	10.3	11.1	10.3	24	26	34	37
	80s	11.2	10.6	11.2	10.6	29	31	42	45
1-1/2 in	10s	13.7	11.7	13.7	11.7	36	42	52	60
	40s	13.9	12.3	13.9	12.3	45	51	65	73
	80s	13.9	12.8	13.9	12.8	58	63	84	91
2 in	10s	13.5	11.6	13.5	11.6	58	68	84	98
	40s	14.2	12.5	14.2	12.5	75	85	108	122
	80s	14.6	13.4	14.6	13.4	97	106	140	153
2-1/2 in	10s	17.1	14.4	17.1	14.4	97	116	140	167
	40s	17.8	16.2	17.8	16.2	142	163	204	234
	80s	17.9	17.1	17.9	17.1	176	199	253	287
3 in	10s	19.7	15.9	19.7	15.9	125	157	179	227
	40s	20.2	18.2	20.2	18.2	193	233	278	335
	80s	20.2	19.2	20.2	19.2	247	290	356	417
4 in	10s	22.6	17.2	22.6	17.2	180	243	259	351
	40s	23.2	20.5	23.2	20.5	304	383	438	551
	80s	23.2	21.8	23.2	21.8	402	486	579	700
6 in	10s	27.9	19.7	27.9	19.7	346	514	498	740
	40s	28.6	24.2	28.6	24.2	631	835	908	1203
	80s	28.6	26.3	28.6	26.3	906	1129	1304	1625
8 in	10s	32.2	21.4	32.2	21.4	554	874	798	1258
	40s	32.9	26.9	32.9	26.9	1065	1453	1533	2092
	80s	32.9	29.4	32.9	29.4	1553	1972	2237	2840
10 in	10s	36.2	23.2	36.2	23.2	848	1400	1221	2017
	40s	37.0	29.6	37.0	29.6	1670	2343	2404	3374
	80s	37.0	31.7	37.0	31.7	2198	2912	3165	4193
12 in	10s	39.7	24.7	39.7	24.7	1176	2023	1694	2914
	40s	40.4	31.2	40.4	31.2	2221	3241	3199	4667
	80s	40.4	33.5	40.4	33.5	2865	3944	4126	5680
14 in	10s	41.9	25.4	41.9	25.4	1389	2443	2000	3517
	std	42.5	31.7	42.5	31.7	2550	3795	3672	5465
	xs	42.5	34.1	42.5	34.1	3298	4612	4749	6641
16 in	10s	44.7	25.9	44.7	25.9	1708	3137	2459	4517
	std	45.5	32.7	45.5	32.7	3128	4836	4504	6964
	xs	45.6	35.4	45.6	35.4	4053	5860	5836	8438
18 in	10s	47.5	26.1	47.5	26.1	2037	3877	2933	5583
	std	48.3	33.3	48.3	33.3	3743	5942	5390	8556
	xs	48.4	36.2	48.4	36.2	4858	7184	6996	10346
20 in	10s	50.5	28.1	50.5	28.1	2702	5156	3890	7425
	std	51.0	33.7	51.0	33.7	4394	7142	6328	10285
	xs	51.1	37.4	51.1	37.4	5710	8776	8222	12638
22 in	10s	52.9	28.4	52.9	28.4	3132	6176	4510	8894
	std	53.5	34.3	53.5	34.3	5095	8525	7337	12276
	xs	53.7	38.2	53.7	38.2	6614	10449	9525	15047
24 in	5s	55.4	28.5	55.4	28.5	3542	7204	5101	10374
	std	56.0	34.5	56.0	34.5	5797	9911	8347	14272
	xs	56.2	38.6	56.2	38.6	7546	12137	10867	17478

Limitations:
1. For pipe content with specific gravity other than 1.0, span reduction factors specified in Attachment 4 of Reference 8.15 shall be used.
2. Any concentrated weight such as valve, riser, piping component, etc., shall be located as close to support as possible, and 100% of the concentrated weight shall be added to the adjacent support.
3. For pipe with horizontal elbow, reduce by 25% the listed span as design span. A reduction factor of 0.75 is applied.
4. The every vertical support load for support design shall be the weight support load plus the vertical seismic load that is 0.96 of weight support load (i.e., 1.96*Weight Support Load).
5. Pipe insulation is not considered in this Table. For insulation density, the maximum weight or seismic spans may be adjusted by the formulas below:
   For pipe without water content: $L_s' = L_s[(w_p)/(w_p + w_i')]^{1/2}$
   For pipe with water content: $L_s' = L_s[(w_p + w_w)/(w_p + w_i' + w_w)]^{1/2}$
   where,
   w_p, w_w see Attachment 1 of Reference 8.15; w_i'= new insulation weight, lb/ft; L_s is the span from Table, L_s' is the adjusted span due to specific insulation.
6. This Table only applies to SC-III without containing a significant Chemical release hazard (SC-III(Non-Chem)) and SC-IV piping.
7. For SC-IV piping, use the listed seismic support loads multiplied by a factor of 0.667.

TABLE 2. 4 (cont'd) –

C) Seismic Support at Every Other Weight Span

pipe size	sch	Weight Span		Seismic Span		Support Loads (lbs)			
		ft	ft	ft	ft	Weight		Seismic	
		Empty	w/ water	empty	w/ water	empty	w/ water	empty	w/ water
3/8 in	10s	6.7	6.3	13.4	12.6	5	5	15	16
	40s	7.0	6.7	14.0	13.4	6	7	18	19
	80s	7.1	6.9	14.2	13.8	8	8	22	23
1/2 in	10s	8.2	7.7	16.5	15.3	8	9	24	25
	40s	8.4	8.0	16.8	15.9	10	10	29	30
	80s	8.4	8.1	16.9	16.3	12	12	34	36
3/4 in	10s	9.7	8.8	19.5	17.6	11	13	33	36
	40s	9.9	9.2	19.8	18.4	14	15	41	44
	80s	9.9	9.5	19.9	18.9	18	19	51	54
1 in	10s	11.0	10.0	22.0	20.0	21	23	59	65
	40s	11.1	10.3	22.3	20.5	24	26	69	74
	80s	11.2	10.6	22.4	21.2	29	31	85	90
1-1/2 in	10s	13.7	11.7	27.3	23.4	36	42	103	121
	40s	13.9	12.3	27.7	24.6	45	51	130	147
	80s	13.9	12.8	27.9	25.6	58	63	167	182
2 in	10s	13.5	11.6	27.0	23.1	58	68	167	196
	40s	14.2	12.5	28.3	25.1	75	85	217	244
	80s	14.6	13.4	29.2	26.7	97	106	281	306
2-1/2 in	10s	17.1	14.4	34.1	28.7	97	116	280	333
	40s	17.8	16.2	35.6	32.4	142	163	408	469
	80s	17.9	17.1	35.8	34.1	176	199	507	573
3 in	10s	19.7	15.9	39.4	31.7	125	157	359	454
	40s	20.2	18.2	40.3	36.5	193	233	556	671
	80s	20.2	19.2	40.4	38.3	247	290	712	834
4 in	10s	22.6	17.2	45.2	34.5	180	243	518	701
	40s	23.2	20.5	46.4	41.0	304	383	877	1102
	80s	23.2	21.8	46.4	43.6	402	486	1159	1401
6 in	10s	27.9	19.7	55.9	39.4	346	514	996	1480
	40s	28.6	24.2	57.2	48.3	631	835	1816	2406
	80s	28.6	26.3	57.2	52.6	906	1129	2609	3251
8 in	10s	32.2	21.4	64.5	42.8	554	874	1596	2516
	40s	32.9	26.9	65.8	53.8	1065	1453	3067	4184
	80s	32.9	29.4	65.8	58.9	1553	1972	4473	5680
10 in	10s	36.2	23.2	72.4	46.4	848	1400	2441	4033
	40s	37.0	29.6	73.9	59.1	1670	2343	4808	6748
	80s	37.0	31.7	74.0	63.5	2198	2912	6330	8386
12 in	10s	39.7	24.7	79.4	49.5	1176	2023	3388	5828
	40s	40.4	31.2	80.8	62.3	2221	3241	6397	9335
	80s	40.4	33.5	80.9	66.9	2865	3944	8252	11359
14 in	10s	41.9	25.4	83.7	50.7	1389	2443	4001	7035
	xs	42.5	31.7	84.9	63.4	2550	3795	7345	10930
	std	42.5	34.1	85.0	68.3	3298	4612	9499	13281
16 in	10s	44.7	25.9	89.5	51.8	1708	3137	4918	9034
	xs	45.5	32.7	91.0	65.4	3128	4836	9008	13928
	std	45.6	35.4	91.2	70.8	4053	5860	11672	16876
18 in	10s	47.5	26.1	95.1	52.2	2037	3877	5866	11166
	std	48.3	33.3	96.7	66.5	3743	5942	10781	17112
	xs	48.4	36.2	96.9	72.3	4858	7184	13991	20691
20 in	10s	50.5	28.1	101.0	56.1	2702	5156	7781	14851
	std	51.0	33.7	102.0	67.3	4394	7142	12655	20569
	xs	51.1	37.4	102.3	74.9	5710	8776	16445	25275
22 in	10s	52.9	28.4	105.8	56.8	3132	6176	9021	17788
	std	53.5	34.3	107.0	68.5	5095	8525	14673	24552
	xs	53.7	38.2	107.4	76.4	6614	10449	19049	30094
24 in	5s	55.4	28.5	110.9	57.0	3542	7204	10201	20747
	std	56.0	34.5	112.0	69.0	5797	9911	16695	28545
	xs	56.2	38.6	112.3	77.2	7546	12137	21733	34955

Limitations:
1. For pipe content with specific gravity other than 1.0, span reduction factors specified in Attachment 4 of Reference 8.15 shall be used.
2. Any concentrated weight such as valve, riser, piping component, etc., shall be located as close to support as possible, and 100% of the concentrated weight shall be added to the adjacent support.
3. For pipe with horizontal elbow, reduce by 25% the listed span as design span. A reduction factor of 0.75 is applied.
4. The every vertical support load for support design shall be the weight support load plus the vertical seismic load that is 0.96 of weight support load (i.e., 1.96*Weight Support Load).
5. Pipe insulation is not considered in this Table. For insulation density, the maximum weight or seismic spans may be adjusted by the formulas below:
   For pipe without water content: $L_s' = L_s[(w_p)/(w_p + w_i')]^{1/2}$
   For pipe with water content: $L_s' = L_s[(w_p + w_w)/(w_p + w_i' + w_w)]^{1/2}$
   where,
   w_p, w_w see Attachment 1 of Reference 8.15; w_i' = new insulation weight, lb/ft; L_s is the span from Table, L_s' is the adjusted span due to specific insulation.
6. This Table only applies to SC-III without containing a significant Chemical release hazard (SC-III(Non-Chem)) and SC-IV piping.
7. For SC-IV piping, use the listed seismic support loads multiplied by a factor of 0.667.

9.3 APPENDIX 3, SC-III and SC-IV Anchor Load Tables

1) **Deleted**
2) **Table 3.2.1 –SC-III(Non-Chem) and SC-IV C.S. ANCHOR LOADS**
3) **Deleted**
4) **Table 3.4.1 – SC-III(Non-Chem) and SC-IV S.S. ANCHOR LOADS**

TABLE 3.1. 1 – SC-I, SC-II, and SC-III(Chem) C.S. VESSEL NOZZLE LOADS

Deleted

TABLE 3.2.1 – SC-III(Non-Chem) and SC-IV C.S. ANCHOR LOADS[1][2]

Pipe Size	Load Type	FORCES			MOMENTS			RESULTANT	
		Fx (lbs)	Fy (lbs)	Fz (lbs)	Mx (ft-lb)	My (ft-lb)	Mz (ft-lb)	Fr (lbs)	Mr (ft-lb)
3/8 in	Weight	5	4	2	2	1	1	7	3
	Seismic	17	12	17	18	27	27	27	43
	Thermal	8	7	11	9	17	17	16	26
1/2 in	Weight	4	6	4	4	2	2	8	5
	Seismic	27	18	27	34	51	51	42	79
	Thermal	13	12	17	16	32	32	25	49
3/4 in	Weight	6	9	6	7	4	4	13	9
	Seismic	41	27	41	59	89	89	64	139
	Thermal	20	17	26	28	57	57	37	85
1 in	Weight	10	16	10	13	8	8	21	17
	Seismic	68	45	68	110	166	166	107	259
	Thermal	33	29	44	53	106	106	62	159
1-1/2 in	Weight	20	32	20	31	20	20	43	42
	Seismic	139	93	139	275	412	412	218	645
	Thermal	67	60	89	132	265	265	127	397
2 in	Weight	34	54	34	55	34	34	72	73
	Seismic	234	156	234	480	721	721	365	1,127
	Thermal	113	101	151	232	465	465	214	697
2-1/2 in	Weight	57	92	57	109	68	68	122	145
	Seismic	440	294	440	1,162	1,743	1,743	688	2,726
	Thermal	210	187	280	555	1,110	1,110	397	1,666
3 in	Weight	83	132	83	176	110	110	177	234
	Seismic	642	428	642	1,910	2,865	2,865	1,003	4,479
	Thermal	307	273	410	915	1,830	1,830	581	2,744
4 in	Weight	139	222	139	335	209	209	296	447
	Seismic	1,071	715	1,071	3,612	5,418	5,418	1,675	8,472
	Thermal	516	459	688	1,739	3,479	3,479	974	5,218
6 in	Weight	323	517	323	949	593	593	690	1,267
	Seismic	2,487	1,659	2,487	10,162	15,242	15,242	3,889	23,831
	Thermal	1,208	1,074	1,610	4,934	9,868	9,868	2,282	14,802
8 in	Weight	469	751	469	1,445	903	903	1,002	1,929
	Seismic	3,582	2,389	3,582	13,445	20,168	20,168	5,601	31,532
	Thermal	1,761	1,566	2,348	6,611	13,221	13,221	3,327	19,832
10 in	Weight	384	615	384	2,607	1,629	1,629	821	3,480
	Seismic	2,924	1,950	2,924	23,702	35,553	35,553	4,571	55,586
	Thermal	1,446	1,286	1,928	11,723	23,445	23,445	2,732	35,168
12 in	Weight	567	908	567	4,148	2,593	2,593	1,212	5,537
	Seismic	4,314	2,878	4,314	37,088	55,631	55,631	6,746	86,978
	Thermal	2,143	1,906	2,857	18,423	36,846	36,846	4,048	55,269
14 in	Weight	707	1,130	707	5,400	3,375	3,375	1,509	7,207
	Seismic	5,376	3,586	5,376	48,131	72,197	72,197	8,406	112,877
	Thermal	2,674	2,378	3,565	23,939	47,879	47,879	5,052	71,818
16 in	Weight	980	1,567	980	8,037	5,023	5,023	2,092	10,726
	Seismic	7,448	4,968	7,448	71,945	107,917	107,917	11,646	168,726
	Thermal	3,704	3,294	4,938	35,773	71,546	71,546	6,996	107,319
18 in	Weight	1,301	2,081	1,301	11,337	7,086	7,086	2,778	15,131
	Seismic	9,885	6,593	9,885	101,639	152,459	152,459	15,456	238,365
	Thermal	4,950	4,402	6,599	50,892	101,784	101,784	9,350	152,676
20 in	Weight	1,642	2,628	1,642	14,932	9,332	9,332	3,507	19,929
	Seismic	12,474	8,320	12,474	131,774	197,661	197,661	19,505	309,037
	Thermal	6,296	5,599	8,395	66,511	133,021	133,021	11,894	199,532
22 in	Weight	1,898	3,037	1,898	15,397	9,623	9,623	4,053	20,550
	Seismic	14,406	9,609	14,406	135,362	203,043	203,043	22,526	317,453
	Thermal	7,325	6,515	9,767	68,828	137,657	137,657	13,838	206,485
24 in	Weight	2,510	4,016	2,510	24,845	15,528	15,528	5,359	33,158
	Seismic	19,045	12,703	19,045	217,025	325,538	325,538	29,779	508,970
	Thermal	9,758	8,678	13,010	111,192	222,384	222,384	18,433	333,576

Notes:

1. For qualification of vessel nozzles, use Project-approved vendor nozzle allowable loads, or the nozzle load tables specified in Reference 8.22.
2. Use as Reference for structural anchor design but subject to CS&A acceptance.

TABLE 3.3. 1 – SC-I, SC-II, and SC-III(Chem) S.S. VESSEL NOZZLE LOADS

Deleted

TABLE 3.4. 1 – SC-III(Non-Chem) and SC-IV S.S. ANCHOR LOADS[(1)(2)]

Pipe Size	Load Type	FORCES			MOMENTS			RESULTANT	
		Fx (lbs)	Fy (lbs)	Fz (lbs)	Mx (ft-lb)	My (ft-lb)	Mz (ft-lb)	Fr (lbs)	Mr (ft-lb)
3/8 in	Weight	2	4	2	2	1	1	5	2
	Seismic	17	11	17	15	23	23	26	36
	Thermal	7	6	9	6	13	13	13	19
1/2 in	Weight	4	6	4	3	2	2	8	4
	Seismic	26	17	26	28	42	42	41	66
	Thermal	11	10	14	12	23	23	20	35
3/4 in	Weight	6	9	6	6	4	4	12	8
	Seismic	40	26	40	49	74	74	62	115
	Thermal	17	15	22	21	41	41	31	62
1 in	Weight	10	15	10	11	7	7	20	14
	Seismic	66	44	66	92	137	137	104	215
	Thermal	28	25	37	38	77	77	52	115
1-1/2 in	Weight	20	32	20	26	16	16	42	35
	Seismic	139	92	139	228	342	342	217	535
	Thermal	58	52	78	96	192	192	110	288
2 in	Weight	35	56	35	46	29	29	75	61
	Seismic	244	162	244	398	597	597	381	934
	Thermal	103	92	137	169	337	337	195	506
2-1/2 in	Weight	64	102	64	109	68	68	136	146
	Seismic	445	297	445	954	1,431	1,431	695	2,237
	Thermal	188	167	250	403	805	805	355	1,208
3 in	Weight	93	149	93	180	112	112	199	240
	Seismic	654	436	654	1,565	2,347	2,347	1,022	3,669
	Thermal	277	247	370	664	1,327	1,327	524	1,991
4 in	Weight	159	255	159	342	214	214	340	456
	Seismic	1,111	741	1,111	2,956	4,435	4,435	1,738	6,933
	Thermal	474	422	632	1,261	2,523	2,523	896	3,784
6 in	Weight	385	616	385	951	595	595	823	1,270
	Seismic	2,700	1,801	2,700	8,291	12,436	12,436	4,221	19,444
	Thermal	1,165	1,036	1,554	3,579	7,157	7,157	2,201	10,736
8 in	Weight	445	711	445	1,156	723	723	949	1,543
	Seismic	3,138	2,093	3,138	10,197	15,295	15,295	4,907	23,914
	Thermal	1,407	1,251	1,876	4,795	9,589	9,589	2,657	14,384
10 in	Weight	361	578	361	2,210	1,382	1,382	772	2,950
	Seismic	2,539	1,693	2,539	19,379	29,068	29,068	3,970	45,447
	Thermal	1,114	991	1,485	8,502	17,004	17,004	2,104	25,506
12 in	Weight	502	803	502	3,236	2,023	2,023	1,071	4,320
	Seismic	3,509	2,340	3,509	28,083	42,124	42,124	5,486	65,860
	Thermal	1,550	1,378	2,066	12,404	24,807	24,807	2,927	37,211
14 in	Weight	591	946	591	3,865	2,416	2,416	1,262	5,158
	Seismic	4,162	2,776	4,162	33,924	50,886	50,886	6,508	79,559
	Thermal	1,845	1,641	2,460	15,036	30,072	30,072	3,485	45,107
16 in	Weight	757	1,211	757	5,083	3,177	3,177	1,617	6,784
	Seismic	5,307	3,540	5,307	44,069	66,104	66,104	8,299	103,352
	Thermal	2,381	2,118	3,175	19,774	39,548	39,548	4,499	59,322
18 in	Weight	1,204	1,927	1,204	8,189	5,118	5,118	2,572	10,929
	Seismic	8,486	5,660	8,486	71,497	107,246	107,246	13,268	167,676
	Thermal	2,986	2,656	3,982	25,160	50,320	50,320	5,641	75,480
20 in	Weight	1,283	2,052	1,283	8,632	5,395	5,395	2,739	11,520
	Seismic	8,908	5,941	8,908	75,915	113,872	113,872	13,928	178,036
	Thermal	3,660	3,255	4,880	31,194	62,388	62,388	6,915	93,582
22 in	Weight	1,375	2,201	1,375	9,382	5,864	5,864	2,937	12,522
	Seismic	9,509	6,342	9,509	81,467	122,200	122,200	14,868	191,056
	Thermal	4,421	3,932	5,895	37,876	75,752	75,752	8,352	113,629
24 in	Weight	1,603	2,565	1,603	10,986	6,866	6,866	3,424	14,663
	Seismic	11,140	7,430	11,140	96,098	144,147	144,147	17,419	225,369
	Thermal	5,241	4,661	6,987	45,206	90,412	90,412	9,900	135,618

Notes:

1. For qualification of vessel nozzles, use Project-approved vendor nozzle allowable loads, or the nozzle load tables specified in Reference 8.22.
2. Use as Reference for structural anchor design but subject to CS&A acceptance.

9.4 APPENDIX 4, Deleted

9.5 APPENDIX 5, Deleted

9.6 APPENDIX 6, Deleted

9.7 APPENDIX 7, ME101 Stress Check Based on Nominal Weight and Eroded/Corroded Pipe Wall Thickness

The following is a sample calculation sheet used for performing

(1) Appendix 7A: Longitudinal and
(2) Appendix 7B: Longitudinal and Occasional

pipe stress check using ME101 output based on nominal pipe weight and eroded/corroded pipe wall thickness.

Appendix 7A

CALCULATION SHEET

ORIGINATOR: DATE:

CHECKER: DATE:

Longitudinal Pipe Stress Check Using ME101 Output Based on Nominal Weight and Eroded/Corroded Pipe Wall Thickness																		
		ME101 Input/Output For Sustained Loads									ASME B31.3 - S_L Stress Calculation							
No	Stress Calculation Number	Data Point	Pipe D_o (inch)	Nominal Pipe, t_n (inch)	SIF Value i_i	SIF Value i_o	Pressure (psig)	Torsion M_A (ft-lbs)	Bending M_B (ft-lbs)	Bending M_C (ft-lbs)	Erosion and Corrosion c (inch)	Eroded & Corroded Pipe Thickness t_C (inch)	Pipe Section Modulus Z_C (in^3)	Longitudinal Stress, S_L (Weight + Pressure) (Notes 1) (psi)	ASME B31.3 Code Stress Allowable (psi)	Pipe Stress Ratio	ASME B31.3 Code Stress Check
0	1	2	3	4	5a	5b	6	7	8	9	10	11	12	13	14	15	16
1	SAMPLE STRESS CALC. NO.	5	2.375	0.218	2.1	2.1	105	24	153	14	0.0937	0.1243	0.4945	6,325	16,700	0.379	PASS
2																	
3																	
4																	
5																	
6																	
7																	
8																	
9																	
10																	

1. The stress intensity formula of S_L is

$$\frac{p(D_o-2t_c)^2}{D_o^{\,2}-(D_o-2t_c)^2}+\sqrt{S_b^{\,2}+4S_t^{\,2}}$$

in which

$$S_b=\frac{\sqrt{(0.75i_iM_i)^2+(0.75i_oM_o)^2}}{Z_c}$$

$$S_t=\frac{M_t}{2Z_c}$$

where $0.75i_i$ or $0.75i_o$ is not less than 1.0 and
S_b = Bending Stress due to weight
S_t = Torsional Stress due to weight
M_i = In-plane moment due to weight
M_o = Out-of-plane moment due to weight
M_t = Torsional moment due to weight

2. Sustained and longitudinal stresses can be calculated based on a single stress intensification which is the maximum SIF of i_i and i_o per note (3) of Appendix D of ASME B31.3

SPREADSHEET NOTES:
1. COLUMNS 2-9 & 14 ARE TAKEN FROM THE APPLICABLE ME101 STRESS CALCULATION.
2. COLUMN 10 IS TAKEN FROM THE APPLICABLE PIPING CLASS SHEET.
3. COLUMNS 11, 12, 13 & 15 ARE CALCULATED BASED ON PRE-SET EXCEL FORMULAS.

Appendix 7B

CALCULATION SHEET

ORIGINATOR: DATE:

CHECKER: DATE:

Occasional Pipe Stress Check Using ME101 Output Based on Nominal Weight and Eroded/Corroded Pipe Wall Thickness																	
		ME101 Input/Output For Sustained Loads									ASME B31.3 - S_L Stress Calculation						
No	Stress Calculation Number	Data Point	Pipe D_o (inch)	Nominal Pipe, t_n (inch)	SIF Value i_i	SIF Value i_o	Pressure (psig)	Torsion M_A (ft-lbs)	Bending M_B (ft-lbs)	Bending M_C (ft-lbs)	Erosion and Corrosion c (inch)	Eroded & Corroded Pipe Thickness t_c (inch)	Pipe Section Modulus Z_C (in^3)	Occasional Stress (S_L plus Seismic) (Notes 1 & 2) (psi)	ASME B31.3 Code Stress Allowable (psi)	Pipe Stress Ratio	ASME B31.3 Code Stress Check
0	1	2	3	4	5a	5b	6	7	8	9	10	11	12	13	14	15	16
1	SAMPLE STRESS CALC. NO.	45	2.375	0.218	2.1	2.1	105	57	195	13	0.0937	0.1243	0.4945	7,596	22,211	0.342	PASS
2																	
3																	
4																	
5																	
6																	
7																	
8																	
9																	
10																	

1. Occasional stress $S_{OCC} = S_P + S_W + S_{SEIS} = S_L + S_{SEIS}$

$$\frac{p(D_o - 2t_c)^2}{D_o^{\,2} - (D_o - 2t_c)^2} + \sqrt{S_b^{\,2} + 4S_t^{\,2}}$$

The stress intensity formula is

$$S_b = \frac{\sqrt{(0.75 i_i M_i)^2 + (0.75 i_o M_o)^2}}{Z_c} \qquad S_t = \frac{M_t}{2Z_c}$$

where $0.75i_i$ or $0.75i_o$ is not less than 1.0 and
S_b = Bending Stress due to weight
S_t = Torsional Stress due to weight
M_i = In-plane moment due to weight
M_o = Out-of-plane moment due to weight
M_t = Torsional moment due to weight

2. Sustained and longitudinal stresses can be calculated based on a single stress intensification which is the maximum SIF of i_i and i_o per note (3) of Appendix D of ASME B31.3

SPREADSHEET NOTES:
1. COLUMNS 2-9 & 14 ARE TAKEN FROM THE APPLICABLE ME101 STRESS CALCULATION.
2. COLUMN 10 IS TAKEN FROM THE APPLICABLE PIPING CLASS SHEET.
3. COLUMNS 11, 12, 13 & 15 ARE CALCULATED BASED ON PRE-SET EXCEL FORMULAS.

9.8 APPENDIX 8, Criteria for Critical Piping

- Piping in black cells.
- Piping with a seismic category of SC-I, SC-II and SC-III(Chem).
- Piping of any diameter with a design temperature above 250°F.
- Piping of any diameter with a design temperature of -100°F or lower.
- Piping greater than 3" in diameter with a design temperature of -50°F or lower.
- Piping with a design pressure of 400 psi or greater.
- Piping greater than 6" in diameter with a design temperature of -20°F or lower.
- Piping greater than 12" in diameter with a design temperature of 20°F or lower.
- Piping greater than 12" in diameter with a design temperature of 150°F or greater.
- Piping greater than 24" in diameter.
- Piping that is jacketed.
- Piping greater than 3" in diameter that is connected to pump and has a design temperature of 0°F or lower.
- Piping greater than 6" in diameter that is connected to pump and has a design temperature of 150°F or higher.
- Piping greater than 6" in diameter that is connected to pump and has a design temperature of 20°F or lower.
- Piping fabricated from material other than metals, i.e. fiberglass, thermoplastic, etc.
- Piping for which the stress supervisor deems a formal analysis is required.
- Piping connected to ITS pumps, vessels, heat exchangers, major/sensitive equipment, or with significant externally imposed displacements.
- Piping required to be evaluated for pipe break requirements.
- Piping with II over I issue

9.9 APPENDIX 9, ME101 Gap Options:

9.9.1 ME101 Gap Option - Generic Approach.

Whenever the first vertical rigid support adjacent to nozzles at vessels with significant upward movements generates large upward thermal loads, the GAP option may be used to reduce the thermal uplift load when the following are taken into consideration:

1. The GAP beneath the pipe is set to be equal to the calculated thermal movement of the pipe at the pipe support location. The GAP above the pipe is set equal to an arbitrary large number (greater than the thermal movement). This will require a manual iteration to first determine the vertical (upward) thermal movement of the pipe at the support point. This way, the pipe is allowed to move up during thermal condition. In weight analysis, the pipe is allowed to sag (downward displacement), and the gap will close only when the downward displacement equals or is greater than the gap.
2. Once the thermal displacement is moving upward, the support load may be shifted from the support to the adjacent nozzle and/or other vertical supports. For conservatism, two weight analyses are required:
   - Hot Condition - with the support active but with GAP equal to the upward THRM movement
   - Cold condition - with the support active and no GAP

The following are design practices when ME101 Gap option is used at the first vertical support adjacent to the nozzle to take the dead weight and also permit the upward thermal movement using:

1. Set GAP1 in THRM and WT02 (hot) load cases equal to the actual calculated thermal displacement
2. Set GAP2 in THRM and WT03 (cold) load cases to an arbitrary number larger than the actual calculated thermal displacement.
3. Envelope two weight cases for stress check as well as support/nozzle load summary:
   WT01 = SMAX(WT02,WT03), where:
   WT02: The hot condition with the support active but with GAP1 equal to the upward thermal movement.
   WT03:The cold condition with the support active and no GAP
4. Run one single SEIS case with the support inactive (i.e. no seismic load is considered for the unidirectional support) for stress check.

The above definition of GAP1 and GAP2 are based on direction cosines of -1.00 (negative 1.00) and the ME101 input example for gap option is attached below:

Appendix 9.9.1 (Cont'd)

ME101 Example for Gap Option

```
RUN                                                  LDCASE=WT02(H+A),
RUN                                                  LDCASE=WT03(C+A),
RUN                                                  LDCASE=WTHY(C+W)
RUN                                                  LDCASE=THRM01(H),
RUN                                                  LDCASE=SEISDB(A),
                                                     WT01=SMAX(WT02,WT03),

ANC    10  -0.01      0.196        0.074            OD=4"40S,
                                                     TEMP=212,
                                                     SPG=1.47,              *A
                                                     SPG=1.00,              *W


       15             8-11-15/16                3D
       20  10-0-5/8   1.4321:      0:               DTI=PWD-H90066,
RAD    20             -1                           ETI=PWD-H90066,        *C
                                                    GAP1=0.000,GAP2=1.0    *C

RAD    20             -1                           ETI=PWD-H90066,        *H
                                                    GAP1=0.202, GAP2=1.0,*H

       3010-10        1.4321:      0:               DTI=PWD-H00257,

END
```

9.9.2 ME101 Gap Option - Special Approach

Whenever the piping has significant thermal load in the opposite direction of existing steel members which is not a real restraint at that direction, for example:

1). Piping is sitting on steel member such as an undersupport which is not required to be a pipe support but has significant thermal load in upward direction, or

2). Piping interfaces with a steel structure which is not considered as a pipe support. However, CS&A needs the design loads from Plant Design for their steel design.

A special practice described below to aim at the above situations is acceptable although it may become redundant in pipe stress analysis.

Make Two ME101 Runs. One run is to include the supports with gaps, and one is to have no supports at the locations where gapped supports were modeled. The loads from the two runs should then be enveloped to design the supports. The stress summaries from both runs shall demonstrate that the Code requirements are satisfied. The stress summaries from both runs shall be included in the documented stress calculation.

It should be noted to the support designer that the support is to be designed to allow the movement in the gapped direction. The seismic load in the restraint load summary and/or the pipe support design load table is to be applied only in the restraint direction.

9.10 APPENDIX 10, Use of UBC and Alternate Stress Criteria for SC-III(Non-Chem) and SC-IV

I. Scope and Purpose

The main purpose of this Appendix is to show that the methods and criteria that are used to calculate piping stresses result in a system in verbatim compliance with B31.3 for SC-III(Non-Chem) and SC-IV piping systems. The focus of the paper is all future evaluations, using the revised methods and criteria DOE has approved in Reference 3 (References refer to those listed for this Appendix, see Section V of this Appendix). BNI will develop a calculation to determine the impact of the methods and criteria defined herein on piping and supports already designed. The scope of this paper is only SC-III(Non-Chem) and SC-IV systems.

II SC-III and SC-IV Demand

The demand on the piping system is defined by pressure, weight, thermal expansion, and seismic loading. Pressure, weight, and thermal expansion "demand" are well understood, and will not be discussed further, with the following clarification:

- B31.3 requires that the "end-of-life" thickness (nominal less corrosion or erosion allowance) be used for calculating sustained (S_L) stresses (B31.3, 302.3.5) and, by analogy, for occasional stresses, which was confirmed in Interpretation 2-15
- B31.3 provides no guidance on what thickness (nominal, end-of-life) to use to develop the forces and moments for the sustained or occasional loadings. Interpretation 4-10 implies that the simplified design methods in B31.3 would normally employ nominal thickness when calculating forces and moments and corroded thickness when calculating stresses. That approach will conservatively be used for the SC-III/IV piping, i.e., base forces and moments for weight (and seismic) on nominal dimensions and stresses on corroded dimensions.
- For thermal expansion and any displacement controlled loads (building settlement, for example), B31.3 clearly requires use of nominal dimensions for both determining loads and stresses (319.3.5, "Nominal dimensions...shall be used in flexibility calculations"). This is reiterated in Interpretation 4-10.

Seismic demand for SC-III and SC-IV piping systems is defined by the Uniform Building Code 1997 (UBC), as indicated in the SRD (Reference 1, Table 4-2) and ABAR 24590-WTP-SE-ENS-06-0022 (incorporated at Rev 4f of the SRD). UBC seismic demand is defined in Equation 32-1 (conservative maximum) and Equation 32-2 from Section 1632. BNI will use Equation 32-2 for all future evaluations:

$$0.7C_aI_pW_p \le F_p = \frac{a_pC_aI_p}{R_p}\left(1+3\frac{h_x}{h_r}\right)W_p \le 4C_aI_pW_p$$

C_a = Seismic Coefficient, as set forth in UBC Table 16-Q, taken as 0.24 for WTP
I_p = Importance Factor specified in UBC Table 16-K, taken as 1.5 for SC-III and 1.0 for SC-IV for WTP

W_p = The weight of an element or component
F_p = Total design lateral seismic force (as defined in UBC 1632.2)
a_p = In-structure component amplification factor from UBC Table 16-O
R_p = Component Response Modification Factor from UBC Table 16-O
h_x = Element or Component elevation with respect to grade, not less than 0.0
h_r = Structure roof elevation with respect to grade

The strict verbatim requirements from UBC are as follows (with appropriate paragraphs or tables referenced):

- Lateral force only (UBC 1632)
- Only one horizontal direction of load (UBC 1632)
- 1.4 reduction factor applied to the earthquake load when using allowable stress design (UBC 1612.3.2)
- $a_p = 1.0$ for piping (UBC Table 16-O, Item 3B)
- $R_p = 3.0$ (UBC Table 16-O, Item 3B) for piping and for supports that don't use Concrete Expansion Anchors (CEAs) or have a buckling issue (no change from above).
- $R_p = 1.5$ for non-ductile failure modes based on Table 16-O, Item 4B (buckling, CEA pullout) (no change from above).

DOE has requested that BNI use methods for SC-III(Non-Chem) and SC-IV that are more consistent with the methods chosen for SC I and SC II piping. These changes result in a much more conservative seismic loading (demand) than required by UBC. In doing so, DOE has permitted BNI relief in the allowable stresses for piping and component standard supports (capacity). The following list indicates the requirements that BNI will follow for SC-III/IV piping and supports designed to the DOE accepted criteria:

- Lateral and vertical seismic loading, with the vertical force equal to 2/3 the lateral force, which is consistent with typical Nuclear Power Plant (NPP) requirements (vertical loading not required by UBC)
- Lateral force applied in both horizontal directions (only one direction required by UBC)
- The three directions of force (both horizontals and the vertical) combined SRSS
- No reduction factor applied to the earthquake load (loss of 1.4 factor)
- $a_p = 2.5$ for piping (UBC Table 16-O, maximum possible value)
- $R_p = 3.0$ (UBC Table 16-O, Item 3B) for piping and for supports that don't use Concrete Expansion Anchors (CEAs) or have a buckling issue (same as standard UBC)
- $R_p = 1.5$ for non-ductile failure modes based on Table 16-O, Item 4B (buckling, CEA pullout) (same as standard UBC)

Thus, the amount of conservatism in the proposed demand can be compared easily to that from strict verbatim requirements from UBC:

Increase in earthquake load due to ignoring 1.4 factor = 1.4
Increase in earthquake load due to a_p difference = 2.5
Increase in earthquake load due to considering a vertical Earthquake equal to 2/3 horizontal = 1.2 (see below)

$$\textit{Minimum increase} = \sqrt{1.0^2 + 0.667^2} = 1.2$$

Note that the 1.2 factor is a minimum; a vertical run would be higher since the result would be the SRSS of two equal earthquakes, or a factor of 1.4. Also note that since support loads tend to be dominated by one direction of seismic load, whereas pipe stresses are an SRSS of all directions of moments, the 1.2 factor will not be applied to supports.

Total demand increase factor for stress = 2.5*1.4*1.2 = 4.2
Total demand increase factor for supports = 2.5*1.4 = 3.5

The result of the DOE/BNI/WTP requirements is that the earthquake load used to evaluate piping and supports is higher than strict verbatim compliance with UBC would require. This higher demand has been offset by a higher permitted allowable stress. As will be shown below, if the correct UBC demand were used, the B31.3 allowable stress criteria (capacity) would easily be met. That is, designing piping and supports using the conservative BNI demand and higher BNI capacity is more conservative than using the correct UBC demand and lower B31.3 capacity.

III Capacity

Prior to discussing seismic loading, the following is presented to clarify exactly how normal longitudinal stresses in piping (weight, thermal expansion/displacement) will be determined, since there has been some discussion on that issue in the past.

Pipe Stresses (Sustained and Displacement Loads)

Longitudinal Pipe Stresses for Sustained Loads will meet the Requirements of B31.3, 302.3.5. Since the 1996 B31.3 does not provide guidance concerning how the longitudinal stress is to be determined, the following equation is used based on the guidance in B31.3 Code Case 178 (Reference 2):

$$\frac{PD_O}{4t_c} + \frac{\sqrt{(0.75i_oM_{oA})^2 + (0.75i_iM_{iA})^2 + M_{TA}{}^2}}{Z'} \le 1.0S_h$$

Where:

M_{oA}, M_{iA}, M_{TA} = out-of-plane bending, in-plane bending, and torsional moments due to Sustained Loads (typically weight), respectively.

i_o, i_i = out-of-plane and in-plane bending stress intensification factors, respectively

D_o = Pipe nominal outside diameter

t_c = Nominal pipe wall thickness less corrosion/erosion allowance

Z' = pipe section modulus based on nominal OD and corroded thickness.

S_h = Basic Allowable Stress at maximum metal temperature from B31.3

As indicated earlier in Section II of this paper, the bending and torsional moments will be derived from an analysis based on the nominal dimensions of the pipe.

The above equation is slightly different from the Code Case, in that the Code Cases recommends including the stress due to the axial force. As this stress is typically small in well supported piping systems, and it is not used in the displacement stress equation, BNI has chosen not to consider that component of stress.

Displacement Stresses for Thermal Expansion and Displacement Controlled loads will meet the requirements of B31.3, 319.4.4:

$$\frac{\sqrt{(i_o M_{oC})^2 + (i_i M_{iC})^2 + M^2{}_{TC}}}{Z} \leq S_A$$

Where:

M_{oC}, M_{iC}, M_{TC} = out-of-plane bending, in-plane bending, and torsional moments due to Displacement Controlled Loads (typically thermal expansion), respectively.

Z = pipe section modulus based on nominal OD and thickness.

S_A = Allowable Displacement Stress Range, as defined in 302.3.5(d) of B31.3

As indicated earlier in Section II of this paper, the bending and torsional moments will be derived from an analysis based on the nominal dimensions of the pipe.

Pipe Stresses (Occasional Loads)

The normal limit for occasional stress in B31.3 is $1.33S_h$ (302.3.6). However, as indicated in 300(c)(3), B31.3 is based on a simplified approach to design. It permits a designer capable of a more rigorous analysis to use that approach, provided the validity is demonstrated. Based on the fact that BNI is using a higher seismic demand that the simplified approach of UBC would require, BNI will use a higher stress limit for piping than the simple approach in B31.3 allows. The proposed stress equation is provided below.

Using the same guidance as for Sustained stresses, the following equation is used:

$$\frac{PD_O}{4t_c} + \frac{\sqrt{(0.75 i_o M_{oB})^2 + (0.75 i_i M_{iB})^2 + M_{TB}{}^2}}{Z'} < \text{lesser of } k_1 S_h \text{ or } k_2 S_y$$

M_{oB}, M_{iB}, M_{TB} = out-of-plane bending, in-plane bending, and torsional moments due to Sustained plus occasional Loads (typically weight plus seismic), respectively.

i_o, i_i = out-of-plane and in-plane bending stress intensification factors, respectively

D_o = Pipe nominal outside diameter

t_c = Nominal pipe wall thickness less corrosion/erosion allowance

Z' = pipe section modulus based on nominal OD and corroded thickness.

S_h = Basic Allowable Stress at maximum metal temperature from B31.3

S_y = Yield stress at maximum metal temperature (from ASME Section II, Part D, since B31.3 does not define yield at temperature)
k_1 = 3.0
k_2 = 2.0

The basis for the left hand side of the equation is the same as for sustained loads. The basis for the right hand side (allowable stresses) has been discussed with and accepted by DOE (Reference 3).

In order to simplify the equations to determine demand to capacity ratios, let us look at stresses as a combination of pressure stress (PS), weight stress (WS), and seismic stress (SS) separately, using $3S_h$ as the upper BNI seismic limit and $1.33S_h$ as the upper UBC/B31.3 limit. Note that for materials limited by $2S_y$, the discussion below is conservative.

$PS + WS < S_h$
$PS + WS + SS\ (BNI) < 3S_h$
$PS + WS + SS\ (UBC) < 1.33S_h$

PS + WS can be anything between 0 and S_h. For the moment, assume PS + WS is 0. Then, in the limit

$SS\ (BNI) = 3S_h$; $SS(UBC) = 1.33S_h$
Demand (BNI) = 4.2*Demand (UBC) (from Section II)

Demand (BNI)/Capacity (BNI) = $(4.2*Demand(UBC))/3S_h$ = $1.4*Demand(UBC)/S_h$
Demand (UBC)/Capacity (UBC) = $(Demand\ (UBC))/1.33S_h$ = $0.75*Demand\ (UBC)/S_h$

That is, the demand to capacity ratio for the BNI method and criteria is higher (more conservative) than the standard UBC-B31.3 for PS + WS = 0, by almost a factor of 2 (1.4/0.75 = 1.87).

Clearly, as PS + WS increases, there will eventually be a point at which the demand to capacity (DC) ratio for BNI is not higher than UBC-B31.3, as shown in the following table, using the following equations:

- B31.3 SS Cap = $1.33S_h - S_h*(PS + WS)/S_h$
- BNI SS Cap = $3S_h - S_h*(PS + WS)/S_h$
- UBC Demand = 1.0
- BNI Demand = 4.2*UBC Demand = 4.2
- DC Ratio = [Demand (BNI)/Cap(BNI)]/[Demand (UBC)/Cap (B31.3)] = 4.2*Cap (UBC)/Cap (BNI)

For example, for $(PS + WS) = 0.4S_h$

$(PS + WS)/S_h$	= 0.4	
B31.3 SS Cap	$= 1.33S_h - S_h*0.4$	$= 0.93S_h$
BNI SS Cap	$= 3S_h - S_h*0.4$	$= 2.6S_h$

DC Ratio = (4.2/2.6)/(1.0/0.93) = 1.50, as shown in the table below

(PS + WS)/Sh	B31.3 SS Cap/Sh	BNI SS Cap/Sh	DC Ratio
0	1.33	3	1.86
0.1	1.23	2.9	1.78
0.2	1.13	2.8	1.70
0.3	1.03	2.7	1.60
0.4	0.93	2.6	1.50
0.5	0.83	2.5	1.39
0.6	0.73	2.4	1.28
0.7	0.63	2.3	1.15
0.8	0.53	2.2	1.01
0.9	0.43	2.1	0.86
1	0.33	2	0.69

The cross-over point occurs at $(PS + WS)/S_h = 0.8$. A review of 172 of the SC-III(Non-Chem) and SC-IV piping analyses done to date shows that the maximum ratio of any line is 0.81, with well over 98% of the lines below 0.72, and many much lower. Thus, one would not expect any future lines to have $PS + WS > 0.8S_h$, but BNI will commit to placing this limitation on all future analyses when using the BNI seismic stress criteria.

IV. Conclusion

Based on the above work, the use of the BNI SC-III(Non-Chem)/SC-IV acceptance criteria coupled with a conservative application of UBC loading is conservative compared to strict compliance with B31.3 and UBC, subject to limiting the sustained stresses to $0.8S_h$.

References for Appendix 9.10

1. BNI WTP Document 24590-WTP-SRD-ESH-01-001-02, Revision 4K, "Safety Requirements Document - Volume II"
2. B31 Case 178, "Providing an Equation for Longitudinal Stress for Sustained Loads in ASME B31.3 Construction"
3. DOE Letter 06-WTP-198 to BNI (RJ Schepens to WS Elkins) dated January 9, 2007, "Evaluation of Waste Treatment and Immobilization Plant (WTP) Piping and Supports Qualified to SC I, SC II, SC-III, and SC-IV Requirements"

Summary of BNI SC-III(Non-Chem) and SC-IV Pipe Stress Criteria

Normal Load (Weight, Pressure, Thermal Expansion) Demand:

- Forces and moments determined using nominal outside diameter and thickness
- Sustained conditions stresses determined using a thickness and section modulus based on "end-of-life" (nominal less corrosion or erosion allowance)
- Thermal expansion and any displacement controlled stresses (building settlement, for example) determined using nominal dimensions.

The resulting moments (piping) or moments and forces (supports) are then used in conjunction with pressure, weight, and thermal expansion/thermal anchor motion/seismic anchor motion results to qualify the piping and supports. The attached table shows the criteria used for pipe stress.

Table 1

SC – III(Non-Chem)/SC-IV Piping

NOTE: SC-III Importance Factor (I_p) = 1.5; SC-IV I_p = 1.0

Case	Loading	Loads	Demand	Capacity	Pipe Properties
Design	Primary - Sustained	Pressure (P)	Pressure	$\frac{PD_O}{4t_c} + \frac{\sqrt{(0.75i_oM_{oA})^2 + (0.75i_iM_{iA})^2 + M_{TA}^2}}{Z'} \le 1.0S_h$	Mass is based on the uncorroded pipe plus water plus insulation.
		Deadweight (D)	Vertical: 1g * W_P		
	Primary – Occasional	Pressure (P)	Pressure	$\frac{PD_O}{4t_c} + \frac{\sqrt{(0.75i_oM_{oB})^2 + (0.75i_iM_{iB})^2 + M_{TB}^2}}{Z'} \le$ lesser of k_1S_h or k_2S_y $k_1 = 3.0$ $k_2 = 2.0$	Pipe structural properties (D_O, t_c, Z') are based on corroded pipe properties.
		Deadweight (D)	Vertical 1 g * W_P		
		Seismic-Inertial (SI)	Horizontal (E-W, N-S): F_p from equ 32-2 as defined above Vertical: 2/3 (Horizontal) Total: $(H^2_{N-S} + H^2_{E-W} + V^2)^{1/2}$		
	Secondary – Normal	Thermal (T)	αLΔT	$\frac{\sqrt{(i_oM_{oC})^2 + (i_iM_{iC})^2 + M_{TC}^2}}{Z} \le S_A$	Pipe structural properties (D_O, t, Z) values are based on nominal pipe properties.
	Secondary – Occasional	Thermal (T)	αLΔT	$\sqrt{\frac{(i_oM'_{oC})^2 + (i_iM'_{iC})^2 + M'^2_{TC}}{Z}} \le S_A$	Pipe structural properties (D_O, t, Z) values are based on nominal pipe properties.
		Seismic – Anchor Motion (SAM)	Displacement		

W_P = Weight of (Pipe + fluid + insulation) nominal properties.
g = acceleration of gravity (386 in//sec^2; 32.2 ft/sec^2)
M_{oA}, M_{iA}, M_{TA} = out- and in-plane bending and torsional moment due to D, respectively.
M_{oB}, M_{iB}, M_{TB} = out- and in-plane bending and torsion moment due to |D| + |SI|, respectively.
M_{oC}, M_{iC}, M_{TC} = out- and in-plane bending and torsion moment due to T, respectively.
M'_{oC}, M'_{iC}, M'_{TC} = out- and in-plane bending and torsion moment due to |T| + |SAM|, respectively.
Z = pipe section modulus based on nominal dimensions.
Z' = pipe section modulus based on corroded dimensions.

R10959994

ISSUED BY
RPP-WTP PDC

Document title: **Secondary Containment Design**

Contract number: DE-AC27-01RV14136

Department: Department title

Author(s): Bryson Bogart Dan Robertson Mike Mudry

Principal author signature:

Document number: 24590-WTP-PER-CSA-02-001, Rev 8

Checked by: Ryan Fast

Checker signature:

Date of issue: 9/29/08 DCN

Issue status: Approved

Approved by: James Booth

Approver's position: CSA/LBL, Engineering Group Supervisor

Approver signature:

River Protection Project
Waste Treatment Plant
2435 Stevens Center Place
Richland, WA 99354
United States of America
Tel: 509 371 2000

Notice

Please note that source, special nuclear, and byproduct materials, as defined in the Atomic Energy Act of 1954 (AEA), are regulated at the US Department of Energy (DOE) facilities exclusively by DOE acting pursuant to its AEA authority. DOE asserts, that pursuant to the AEA, it has sole and exclusive responsibility and authority to regulate source, special nuclear, and byproduct materials at DOE-owned nuclear facilities. Information contained herein on radionuclides is provided for process description purposes only.

History Sheet

Rev	Date	Reason for revision	Revised by
0	6/24/02	Initial issue	Indra Ghosh
1	9/26/02	Issued for Permitting Use	Indra Ghosh / N. T. Desai
2	10/09/02	• Revised text in Section 1 • Added Yard Transfer Lines structural support description. • Changed material type from 304L to 316L on Fig. 4. • Added Reference to "LAB" building in all sections	Indra Ghosh / N. T. Desai
3	3/27/03	• Revised Figures 1,2,3 and 4, and deleted Figure 5 • Replaced Ref. 2.1.5 with Washington Administrative Code • Editorial changes in Section 3.1 as marked. Issued for Permitting Use	Indra Ghosh / N. T. Desai
4	2/12/04	• Addition of AEA Statement • Editorial changes in Section 3.2 as marked. • Revise Figure 1 to reflect changes to LAW vessel skirt • Deleted reference to the Lab in Figure 3 • Addition of Figure 5 describing the typical Laboratory vessel support details • Addition of Figures 6 and 7 providing typical Laboratory under sink and fume hood drain secondary containment drip pan details • Addition of Figure 8 describing typical Laboratory piping and pump pit sump weir details	Harsh Raval
5	8/4/04	Issued for Permitting Use	H. Raval, D. Robertson
6	8/25/04	Issued for Permitting Use	H. Raval, D. Robertson

Rev	Date	Reason for revision	Revised by
7	5/19/05	• Revised Section 3.1, Seismic Peak Ground Acceleration. Nathan Kyle • Corrected specification callout on Figure 1 • Revised typical PT sump and typical wall/mat penetration details on Figure 4 • Revised Note 3 and revised details on Figure 7 • General revision to Figure 8 (Added Details 1 and 2) • Revised Notes 3 and 4 for cupsink detail, and revised hot cell transfer port drain details on Figure 9. Added Note 5 for cupsink cover. • Revised Note 3, added Note 4 to embed plate detail on Figure 10. Added adjacent embed plate optional detail. • Added Figures 11 and 12. Issued for Permitting Use	Nathan Kyle
8	8/25/08	• Revised Figures 8 and 11 to provide additional sketch notes for Laboratory weir plans and sections • Addition of Figure 13 LAW Melter Encasement Assembly sketch Issued for Permitting Use	Bryson Bogart

Contents

Notice ii
History Sheet ii
1 Introduction 1
2 Applicable Documents 1
2.1 Codes and Standards 1
3 Description 2
3.1 Design Methodology, Material, Loads, and Load Combinations 2
3.2 Typical Details 3

Figures

Figure 1 Typical Vessel Embed, Support, and Flat Bottom Tank Details for LAW 3 Building 4
Figure 2 Liner Plate and Grillage Support Details for PT, HLW, L'AW and LAB Buildings 5
Figure 3 Typical Process Vessel Support Details for PT and HLW Buildings 6
Figure 4 Misc. Typical Details Sumps, Trenches, Wall Penetrations, Embedded Plates and Special Protective Coating PT, HLW, LAW and LAB Buildings 7
Figure 5 Typical Process Vessel Support Details for LAB Building 8
Figure 6 Plan View of Typical Under Sink and Fume Hood Drain for LAB Bldg Secondary Containment Leak Collection Pan 9
Figure 7 Section View of Typical Laboratory Under Sink and Fume Hood Drain for LAB Bldg Secondary Containment Leak Collection Pan, Including Leak Test Plug 10
Figure 8 Typical Laboratory Piping and Pump Pit Sump and Weir Details for LAB Building 11
Figure 9 Typical Hot Cell Floor Drain Detail and Transfer Port Drain Detail for LAB Building 12
Figure 10 Typical HLW Building Sump Details & Typical PT Building SS Liner/CS Embed Detail 13
Figure 11 Typical Laboratory C3 Piping and Pump Pit Sump and Weir Details for LAB Building 14
Figure 12 Typical RLD Condensate Tank Support Details for PT Building (Exterior) 15
Figure 13 LAW Melter Encasement Assembly Secondary Containment Details 16

1 Introduction

In accordance with Chapter 173-303 Washington Administrative Code (Ref. 2.1.5), facilities that manage liquid dangerous waste must provide secondary containment[1]. At the Waste Treatment and Immobilization Plant, secondary containment systems have been designed to prevent a release of dangerous waste to the environment as required by the Code.

This report describes and provides references to the design criteria, load definitions, load combinations, material of construction, and methodology for the analysis/design of Pretreatment (PT), High-Level Waste (HLW), Low-Activity Waste (LAW) facilities, and Analytical Laboratory (LAB) building with emphasis on secondary containment components. It also includes several representative typical details.

2 Applicable Documents

2.1 Codes and Standards

2.1.1 ACI 349, Code Requirements for Nuclear Safety-Related Concrete Structures.

2.1.2 ACI 318, Code Requirements for Structural Concrete.

2.1.3 Uniform Building Code (UBC), 1997.

2.1.4 ANSI/AISC N690, Specification for the Design, Fabrication, and Erection of Steel Safety-Related Structures for Nuclear Facilities.

2.1.5 Washington Administrative Code, Chapter 173-303.

2.1.6 AISC M016-89, Manual of Steel Construction -Allowable Stress Design, Ninth Edition.

2.1.7 ASCE 7, Minimum Design Loads for Buildings and Other Structures.

2.1.8 ASCE 4, Seismic Analysis of Safety-Related Nuclear Structures and Commentary.

2.1.9 Safety Requirements Document, Volume 11, 24590-WTP-SRD-ESH-01-001-02.

[1] With the exception of ancillary equipment as provided by 173-303-640(4)(f) and approved by DWP.

3 Description

3.1 Design Methodology, Material, Loads, and Load Combinations

Methodology	Codes and specifications: • PT and HLW: General: ASCE 4 (Ref. 2.1.8). Concrete: ACI 349 (Ref. 2.1.1). Steel: ANSI/AISC N690 (Ref. 2.1.4) and AISC (Ref. 2.1.5). • LAW and LAB: General: UBC (Ref. 2.1.3). Concrete: ACI 318 (Ref. 2.1.2). Steel: AISC M016 (Ref. 2.1.6).
Dead Loads and Live loads:	ASCE 7 (Ref. 2.1.7), UBC (Ref. 2.1.3), and Tables 4-1 and 4-2 of SRD (Ref. 2.1.9).
Seismic Loads	Site-specific response spectra as specified in SRD (Ref. 2.1.9). • PT and HLW: Peak Ground Horizontal Acceleration = 0.30g. Peak Ground Vertical Acceleration = 0.21g. • LAW and LAB: Seismic Zone 2B (UBC, Ref. 2.1.3). Peak Ground Horizontal Acceleration = 0.24g. Peak Ground Vertical Acceleration = 0.16g.
Material	
Concrete	28-day compressive strength, f'_c = 4,000 psi and 5,000 psi.
Reinforcing Bar	ASTM A706, deformed.
Steel	W Shape – ASTM A992 or A572 Grade 50; Angles and Channels - ASTM A36 or A529 Grade 50; Plates - ASTM A36; Pipe - ASTM A53; Anchor Rods - ASTM F1554; Welded studs A108; Steel deck-ASTM A653.
Load Combinations	
Concrete	• HLW and PT: Based on ACI 349 (Ref 2.1.1). • LAW and LAB: ACI 318 (Ref. 2.1.2) and UBC (Ref 2.1.3).
Steel	• HLW and PT: Based on ANSI/AISC N690 (Ref 2.1.4). • LAW and LAB: AISC M016-89 (Ref. 2.1.6) and UBC (Ref 2.1.3).
Stainless Steel Liners (SS)	Most commonly used in the process cells. Refer to Figures 2-5 for typical details.
Special Protective Coating	Material for coatings will be compatible with the dangerous waste.
Yard Transfer Lines Structural Support	Structural support for yard transfer lines (intra and inter facility waste transfer lines) is described in Ancillary Equipment Pipe Support Design, 24590-WTP-PER-PS-02-001.

3.2 Typical Details

Figures 1 through 13 show several typical details related to secondary containment for PT, HLW, LAW, and LAB buildings.

Figure 1 **Typical Vessel Embed, Support, and Flat Bottom Tank Details for LAW 3 Building**

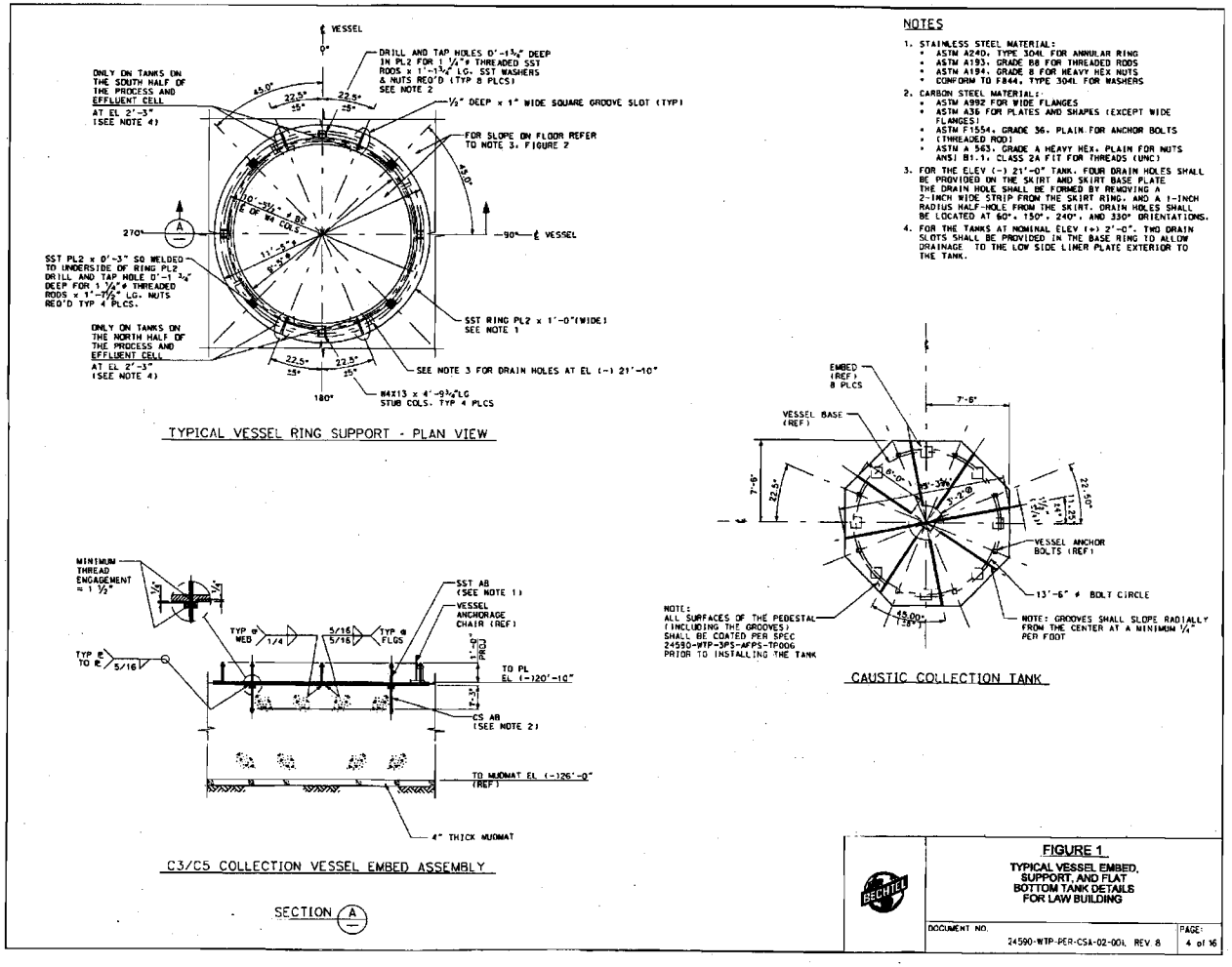

Figure 2 **Liner Plate and Grillage Support Details for PT, HLW, LAW and LAB Buildings**

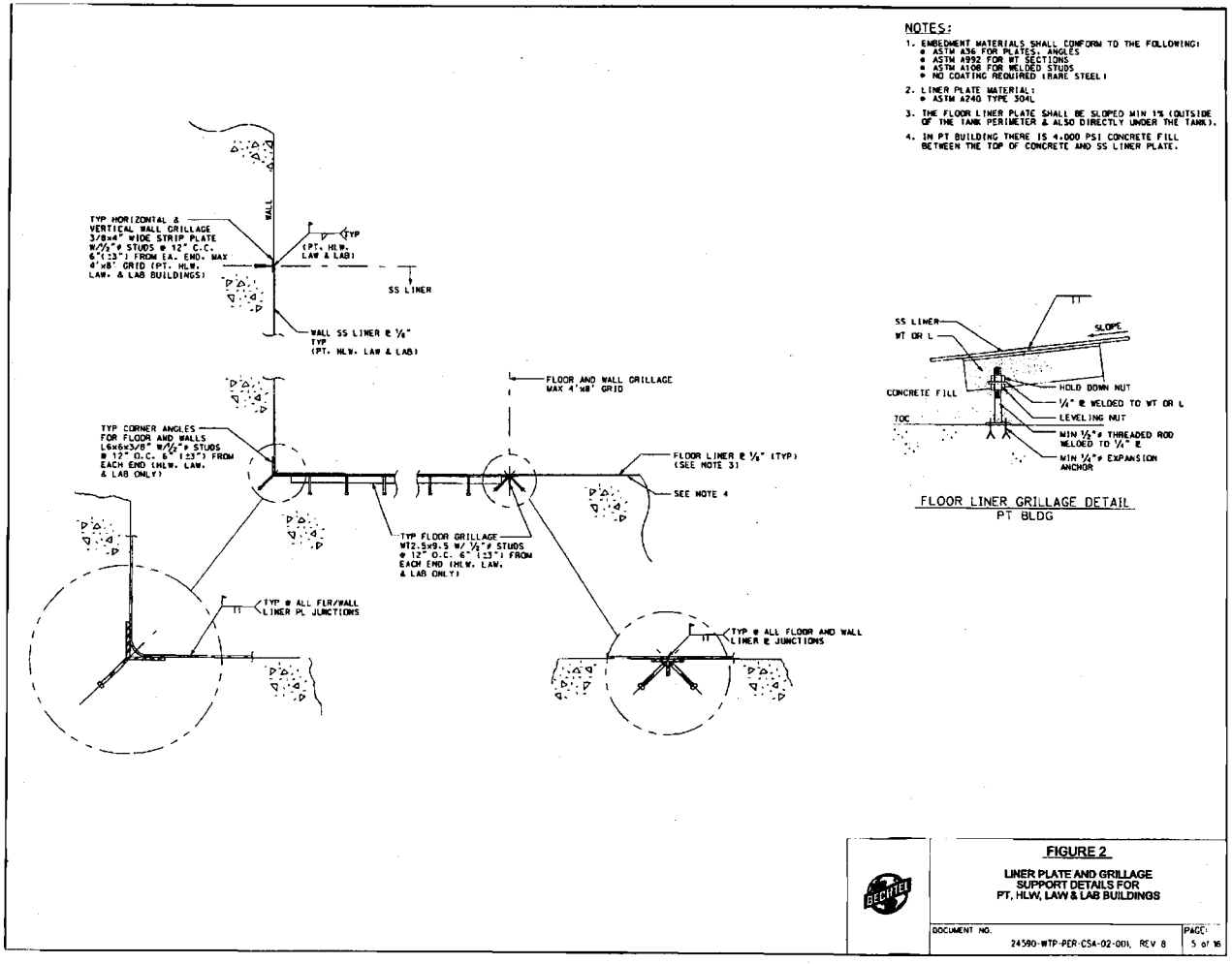

Figure 3 **Typical Process Vessel Support Details for PT and HLW Buildings**

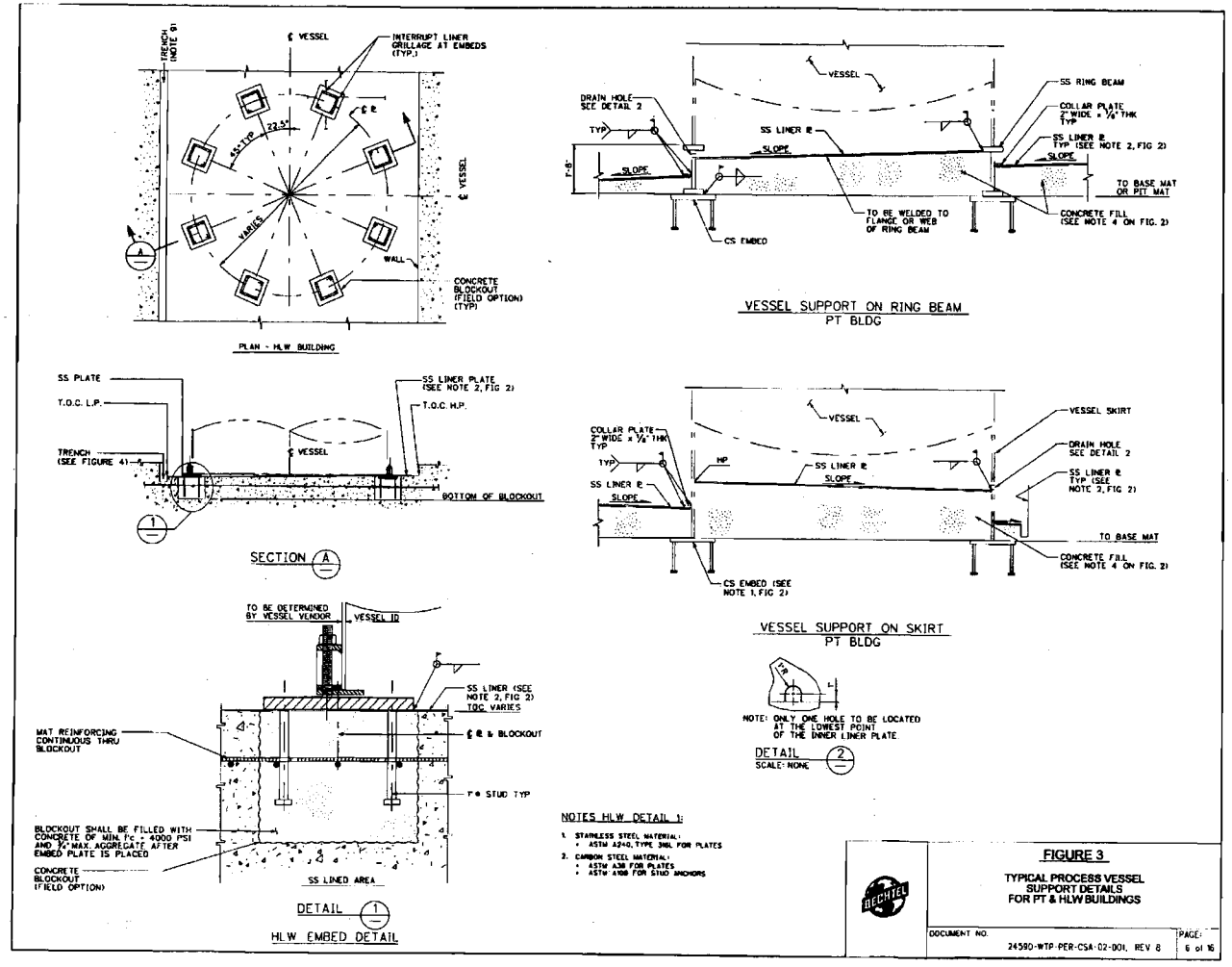

Figure 4 **Misc. Typical Details Sumps, Trenches, Wall Penetrations, Embedded Plates and Special Protective Coating PT, HLW, LAW and LAB Buildings**

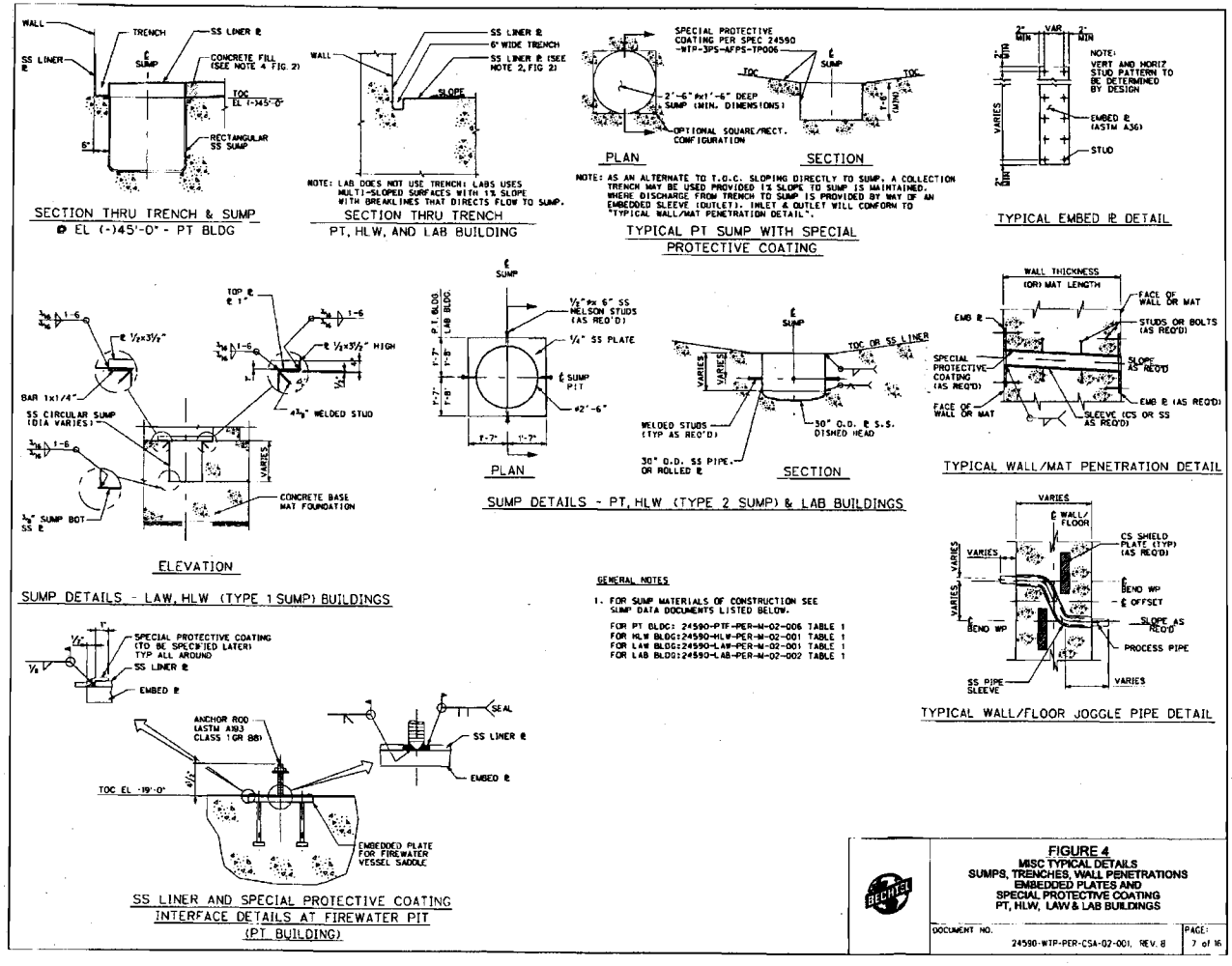

Figure 5 **Typical Process Vessel Support Details for LAB Building**

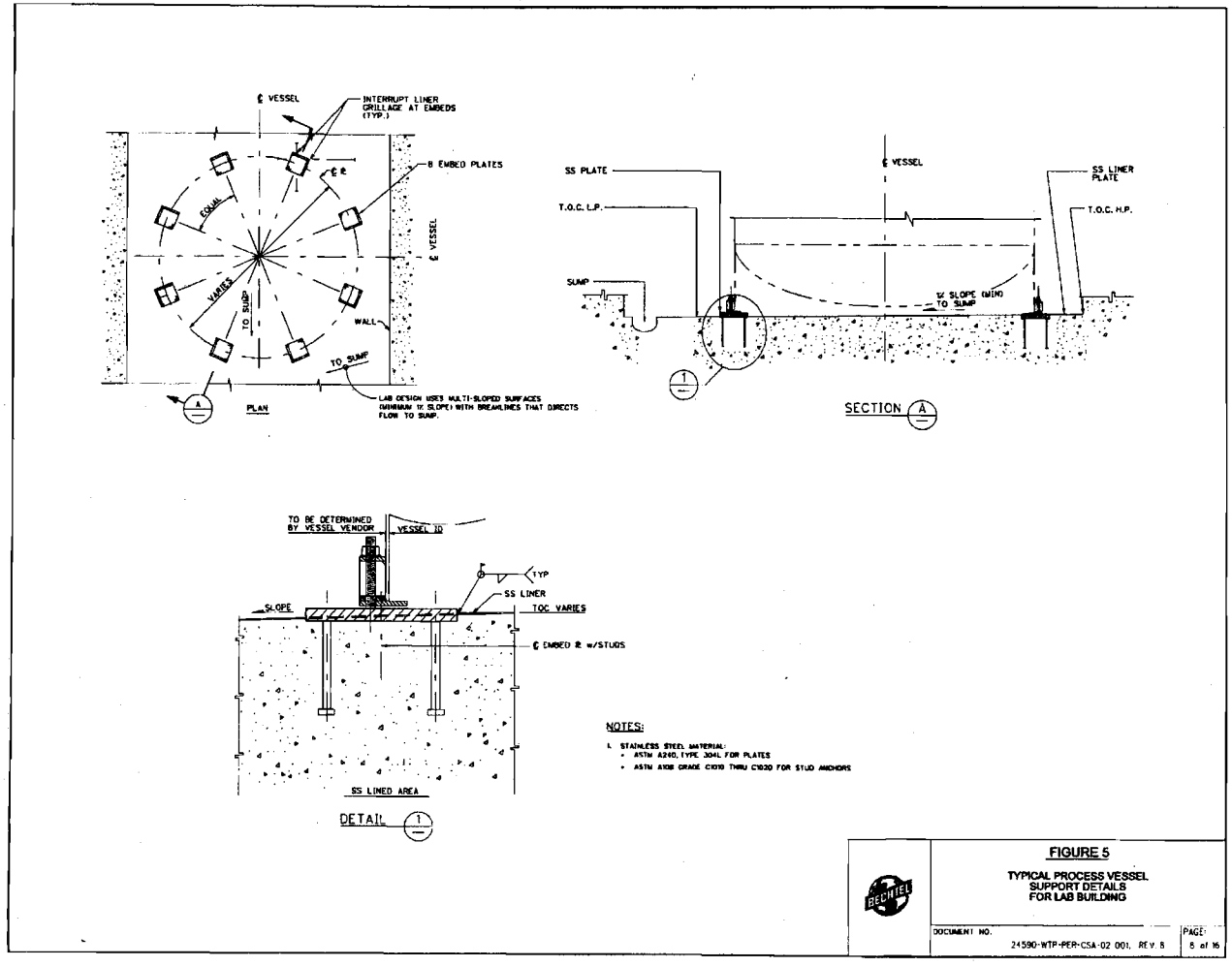

Figure 6 **Plan View of Typical Under Sink and Fume Hood Drain for LAB Bldg Secondary Containment Leak Collection Pan**

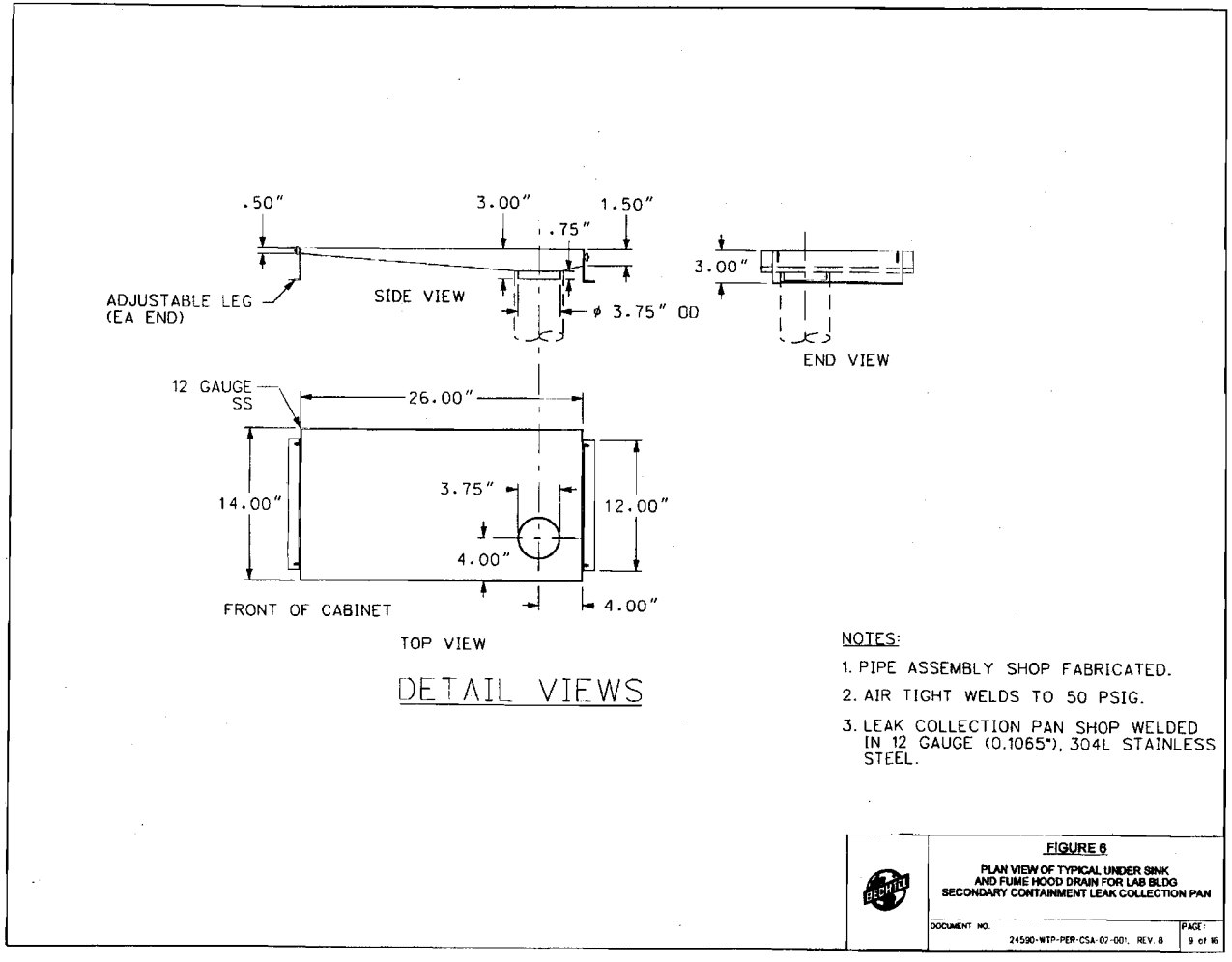

Figure 7 Section View of Typical Laboratory Under Sink and Fume Hood Drain for LAB Bldg Secondary Containment Leak Collection Pan, Including Leak Test Plug

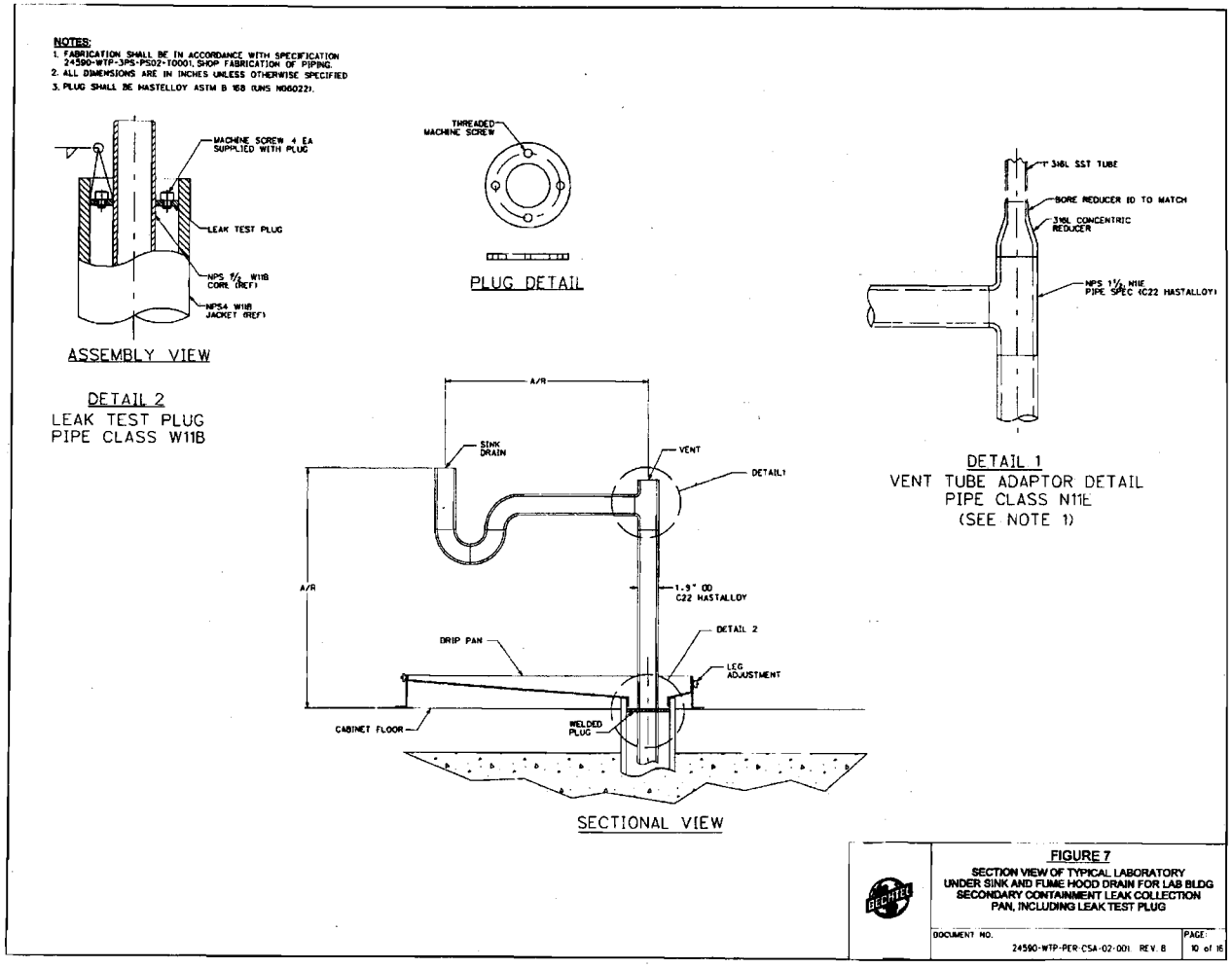

Figure 8 **Typical Laboratory Piping and Pump Pit Sump and Weir Details for LAB Building**

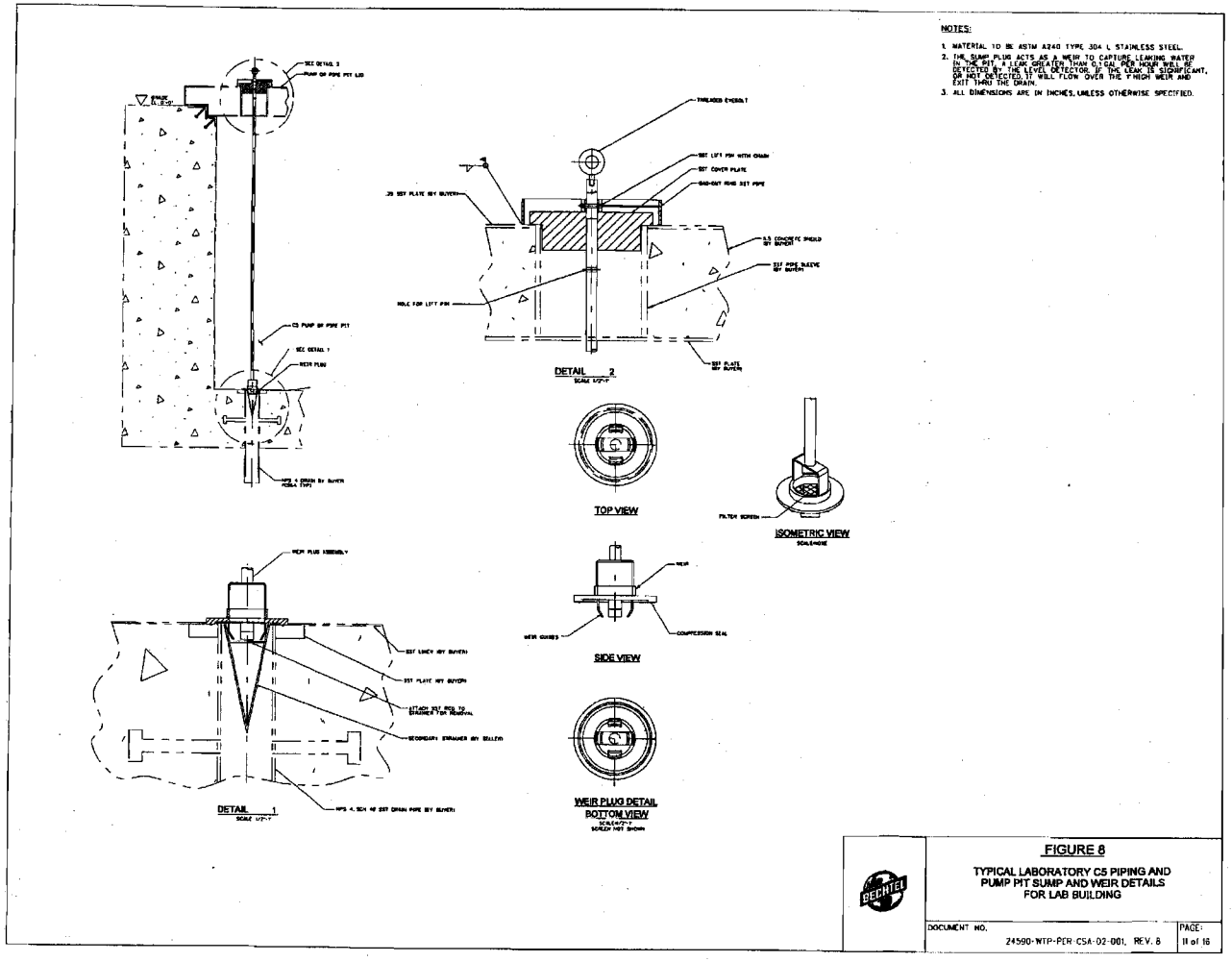

Figure 9 Typical Hot Cell Floor Drain Detail and Transfer Port Drain Detail for LAB Building

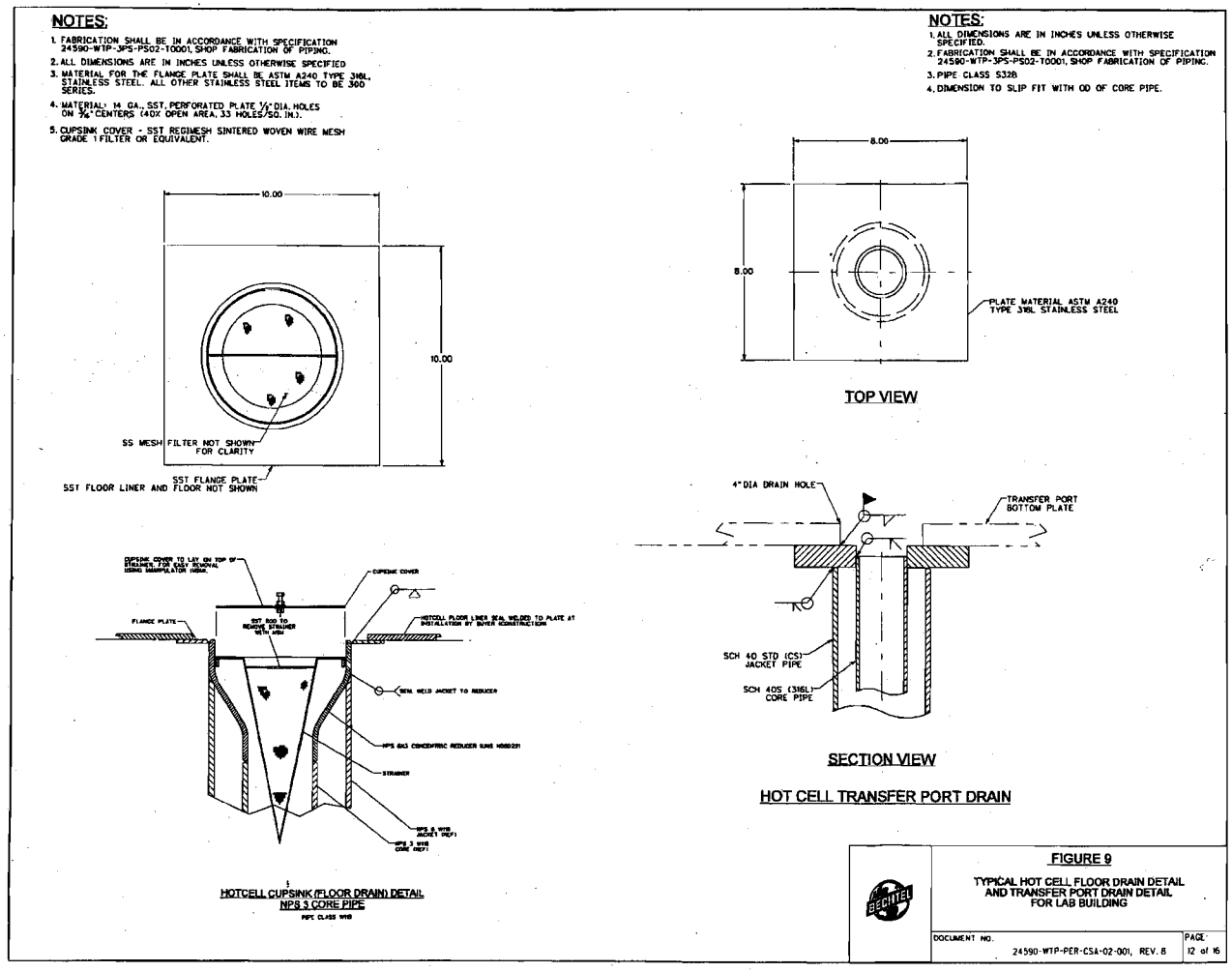

Figure 10 **Typical HLW Building Sump Details & Typical PT Building SS Liner/CS Embed Detail**

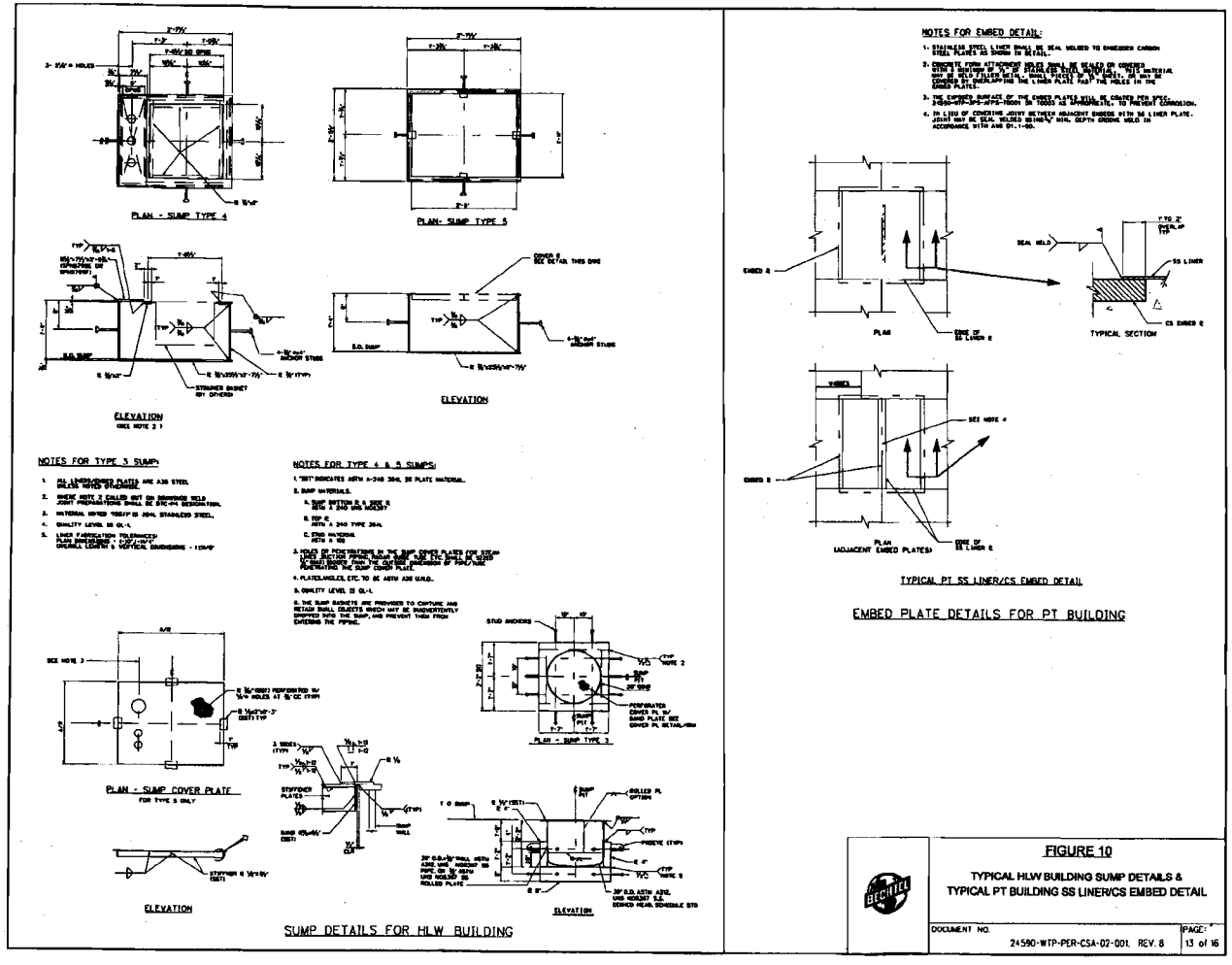

Figure 11 **Typical Laboratory C3 Piping and Pump Pit Sump and Weir Details for LAB Building**

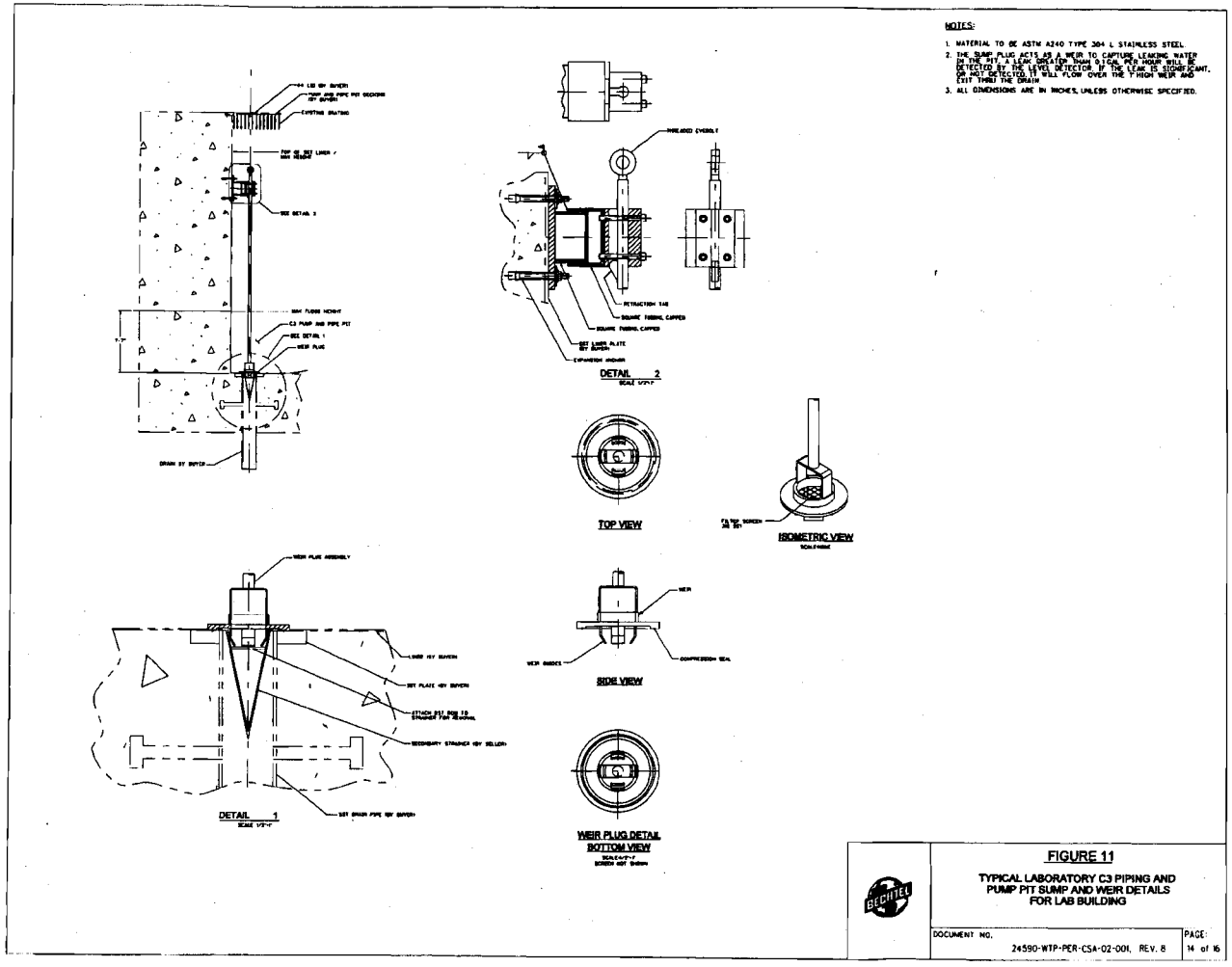

Figure 12 Typical RLD Condensate Tank Support Details for PT Building (Exterior)

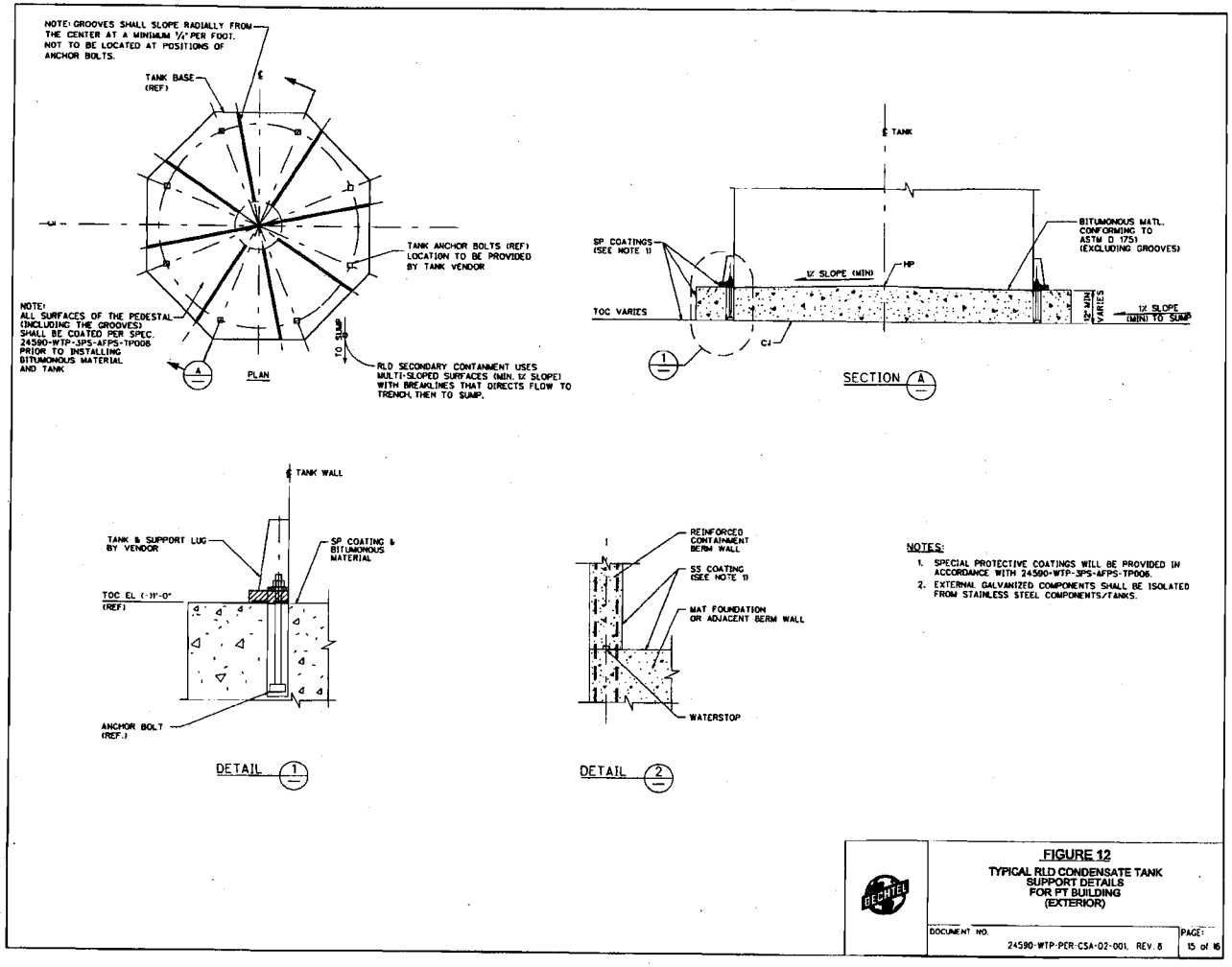

Figure 13 LAW Melter Encasement Assembly Secondary Containment Details

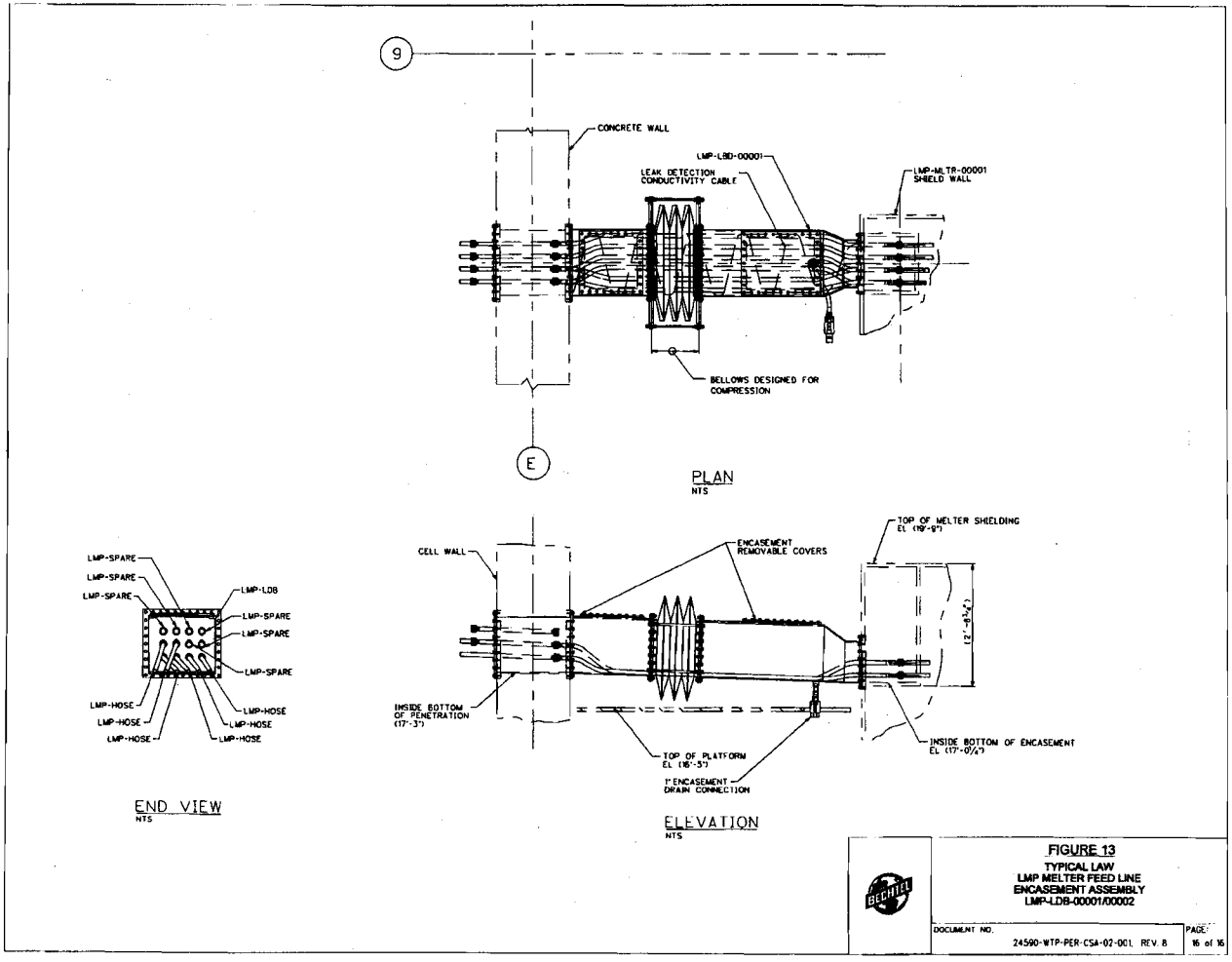

Drawings and Documents

Operating Unit Group 10 – Appendix 7.7
WTP Documents Applicable to All Areas
Specifications

The documents listed in the following table are incorporated by reference into this permit and are subject to the requirements set forth in Part I Standard Conditions, Part II General Facility Conditions, and Part III Operating Unit Group 10 Conditions. Upon request, copies of the documents can be viewed at the Nuclear Waste Program Resource Center located at 3100 Port of Benton Blvd. Richland, WA. Appointments for viewing can be scheduled by calling (509) 372-7950.

Drawing/Document Number	***Description***
24590-WTP-3PS-AFPS-TP006, Rev 1	Engineering Specification for Field Applied Special Protective Coatings for Secondary Containment Areas
24590-WTP-3PS-G000-TP002, Rev 4	Engineering Specification for Positive Material Identification (PMI)
24590-WTP-3PS-HD00-T0001, Rev 3	Engineering Specification for Maintenance Decontamination Equipment
24590-WTP-3PS-M000-TP001, Rev 0	Engineering Specification for Air Displacement Slurry Pumps
24590-WTP-3PS-MACS-TP004, Rev 0	Engineering Specification for High Pressure Centrifugal Blowers
24590-WTP-3PS-MBTV-TP001, Rev 0	Engineering Specifications for Thermal Catalytic Oxidizers/Reducers
24590-WTP-3PS-MCE0-TP002, Rev. 2	Engineering Specification for Process Ejector /Eductor
24590-WTP-3PS-MES0-TP001, Rev 1	Engineering Specification for Shell and Tube Heat Exchanger
24590-WTP-3PS-MKE0-T0001, Rev 5	Engineering Specification for Wet Electrostatic Precipitators
24590-WTP-3PS-MKH0-T0002, Rev 2	Engineering Specification for Nuclear Grade High Efficiency Particulate Air (HEPA) Filters
24590-WTP-3PS-MPC0-TP001, Rev 0	Engineering Specification for Centrifugal Pumps to Meet Requirements of API Standard 610, Eighth Edition, and for Quality Levels QL-1 and QL-2
24590-WTP-3PS-MPC0-T0002, Rev 3	Engineering Specification for General Centrifugal Pumps to Meet Requirements of ASME B73.1M-2001 and ASME B73.2M-2003 for Commercial (CM) Components

24590-WTP-3PS-MPC0-T0003, Rev 2	Engineering Specification for Sealless Centrifugal Pumps to Meet Requirements of API Standard 685,1st Ed, Quality Level Q
24590-WTP-3PS-MPPD-T0001, Rev 3	Engineering Specification for Air-Operated Diaphragm Pumps
24590-WTP-3PS-MPVS-TP001, Rev 1	Engineering Specification for Submersible Centrifugal Sump Pumps
24590-WTP-3PS-MTF5-T0001, Rev 0	Engineering Specification for Field-Erected Tanks Design and Fabrication
24590-WTP-3PS-MV00-T0001, Rev 3	Engineering Specification for Pressure Vessel Design and Fabrication
24590-WTP-3PS-MV00-TP002, Rev 2	Engineering Specification for Seismic Qualification Criteria for Pressure Vessels
24590-WTP-3PS-MV00-TP003, Rev 2	Engineering Specification for Pressure Vessel Fatigue Analysis
24590-WTP-3PS-MWK0-T0001, Rev 3	Engineering Specification for Carbon Bed Adsorber
24590-WTP-3PS-MX00-T0001, Rev 6	Engineering Specification for Process Bulge Design and Fabrication
24590-WTP-3PS-PX04-TP001, Rev 1	Engineering Specification for Shop Applied Fusion Bonded Epoxy Coating for Underground Carbon Steel Pipe
RESERVED	RESERVED

Source documents (which do not include a "P" in the last set of numbers, e.g. "-P0001," or "-TP001") should be used in conjunction with any document change notices issued against them.

We are currently transitioning from permit documents (which do include a "P" in the last set of numbers) to source documents. At the end of the transition period, permit submittals will contain source documents and will be incorporated into the permit as described in Ecology Publication # 07-05-006 (www.ecy.wa.gov/biblio/nwp.html).

R10437458

ISSUED BY
RPP-WTP PDC

RIVER PROTECTION PROJECT – WASTE TREATMENT PLANT

ENGINEERING SPECIFICATION

FOR

FIELD APPLIED SPECIAL PROTECTIVE COATINGS FOR SECONDARY CONTAINMENT AREAS

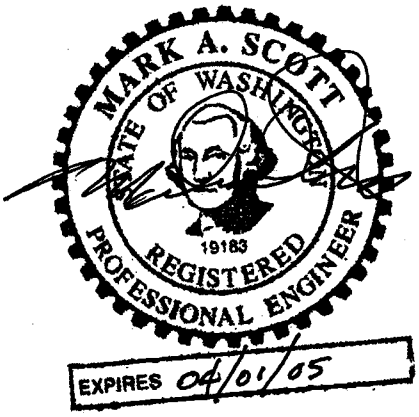

11/18/04

Content applicable to ALARA? ☒ **Yes** ☐ **No**

ADR No.
N/A

Rev

Quality Designator
CM
DOE Contract No. DE-AC27-01RV14136

NOTE: Contents of this document are Dangerous Waste Permit affecting.

REV	DATE	REASON FOR REVISION	BY	CHECK	REVIEW	QA	APEM/DEM
1	11/18/04	Issue for Permitting Use			N/A	N/A	
0	2/15/03	Issue for Permitting Use	TRC	LRL	NA	NA	DTS

SPECIFICATION No. 24590-WTP-3PS-AFPS-TP006 **Rev** 1

Notice

Please note that source, special nuclear, and byproduct materials, as defined in the Atomic Energy Act of 1954 (AEA), are regulated at the US Department of Energy (DOE) facilities exclusively by DOE acting pursuant to its AEA authority. DOE asserts, that pursuant to the AEA, it has sole and exclusive responsibility and authority to regulate source, special nuclear, and byproduct materials at DOE-owned nuclear facilities. Information contained herein on radionuclides is provided for process description purposes only.

Contents

1 Scope 1
2 General 1
2.1 Responsibility 1
2.2 Surfaces Not To Be Coated 2
2.3 Definitions 3
2.4 Safety 5
3 Applicable Documents 5
3.1 Codes and Standards 5
4 Submittals 7
5 Quality Assurance 8
5.1 General 8
6 Materials 11
6.1 Coating Materials 11
6.2 Patching/Filler Materials 12
6.3 Batch Information 13
6.4 Abrasives 14
6.6 Coating Over Stainless Steel (SS) 14
7 Application 14
7.1 General 14
7.2 Pre-Surface Preparation 15
7.3 Surface Preparation 16
7.4 Coating Application 18
7.5 Remedial Work 19
8 Inspection 20
8.1 General 20
8.2 Surface Preparation Inspection 22
8.3 Coating Application 22
9 Storage, Handling and Shipping 23
9.1 Coating Materials 23
10 Documentation 24
11 Design Changes Incorporated by Reference 24

Appendices

Appendix A Supplier Quality Assurance Program Requirements Data Sheet..... A-1

Appendix B WTP Project Special Protective Coating (SPC) Material Prequalification Requirements for Secondary Containment.....B-1

Appendix C Table 1 Secondary Containment Coating Systems C-1

Appendix C Table 2 Secondary Containment Prequalified Coating Materials..... C-2

Appendix D Room Finish Schedule Drawing References D-1

Appendix E Color Scheme E-1

Appendix F Coating Manufacturer's Product Identity Certification Record F-1

Appendix G Surface Preparation and Coating Inspection Form..... G-1

Appendix H Manufacturer's Standard Coating Data Sheet H-1

Appendix I - Secondary Containment Installation Details I-1

1 Scope

1.1 This specification defines the minimum requirements for the field application of Special Protective Coating's (SPC's) applied onto concrete and steel surfaces that have been identified as a Secondary Containment area. The coating systems for concrete and steel surfaces are identified in Appendix C Table 2 and Appendix D of this specification. The CONTRACTOR shall identify the areas requiring secondary containment coatings in the appropriate room finish schedule for each facility (i.e., LAW, HLW, PTF, LAB & BOF). Unless indicated elsewhere in the subcontract documents, the field coating Work shall include-

- Touch up of shop or field coated carbon steel embeds prior to application of identified secondary containment coating system.
- Surface preparation and application of the applicable coating system for concrete and steel surfaces. Corner coving on floor/wall, wall/wall corners, around concrete, steel embed attachments, grouted anchor bolts and other items that create a corner or sharp transition in coating system direction.
- Saw cutting and chipping concrete as required by applicable installation detail.
- Surface preparation and application of a primer/sealer/barrier coat on shop coated steel embeds that have been determined unsuitable for the installation location exposure conditions in the secondary containment enclosure area or incompatible with the specified secondary containment coating system.

1.2 Finish color shall be as noted in Appendix E.

1.3 All SPC's are designated as Commercial Grade and not important to safety (ITS). SPC quality program requirements must comply with DOE Order 414.1A as identified in Appendix A. The full order is not applicable (also refer to Section 5). **NQA-1 Quality Assurance requirements do not apply to the manufacture or application of SPC's.** However, SPC's used in high radiation areas (>2E8 rads over 40 years) shall be prequalified in accordance with Appendix B.

1.4 The Field application of all concrete and steel coatings will be performed at the WTP project located in the 200 East Area of the Hanford Site in Washington.

2 General

2.1 Responsibility

2.1.1 The SUBCONTRACTOR shall supply all personnel, coating materials and all necessary surface preparation, application, inspection and equipment including all Personal Protection Equipment (PPE), safety, rigging/access (as required), masking protection, containment, environmental control/dehumidification/ventilation equipment, area covering to protect from direct sunlight and inclement weather and all consumables. The SUBCONTRACTOR shall perform all pre-surface preparation, surface preparation, coating application, inspection and documentation for all SPC work.

2.1.2 The SUBCONTRACTOR shall provide surface preparation of overlap or tie-in areas on stainless steel, concrete and carbon steel surfaces as required.

2.1.3 The SUBCONTRACTOR shall install flexible joint sealant, flexible epoxy filler material, foam backer rod, bond breaker tape and material where specifically identified for use by the CONTRACTOR.

2.1.4 The SUBCONTRACTOR shall store all coating materials in accordance with this Specification and CONTRACTOR accepted procedures. The coating system and associated coating materials shall be in accordance with Appendix C Table 1 Secondary Containment Coating Systems, Table 2 Secondary Containment Coating Materials and Appendix D Room Finish Schedule Drawing references or as otherwise identified by the CONTRACTOR. All coating materials shall be used on a first in first out basis where the oldest batch of any given material or component is used before batches with a later expiration date.

2.1.5 The SUBCONTRACTOR shall perform all inspections and tests contained in this Specification prior to acceptance by the CONTRACTOR.

2.1.6 The SUBCONTRACTOR shall provide application and inspection documentation for all coating Work accepted by the CONTRACTOR.

2.1.7 The SUBCONTRACTOR shall provide marking materials that are fully compatible with the coating system(s) specified. Marking materials shall be suitable for use on stainless steel.

2.1.8 The SUBCONTRACTOR shall provide environmental control equipment as necessary for surface preparation, coating application and curing.

2.1.9 The SUBCONTRACTOR shall only use inspection equipment that is currently calibrated and controlled by a calibration program accepted by the CONTRACTOR.

2.1.10 The SUBCONTRACTOR shall give CONTRACTOR a minimum of ten (10) working days written notice prior to the start of coating Work and coordinate all field coating Work with the CONTRACTOR on a daily basis prior to the start of daily coating Work.

2.1.11 The SUBCONTRACTOR shall give the CONTRACTOR at least twenty four (24) hours verbal notice for all agreed upon inspection witness and hold points.

2.2 Surfaces Not To Be Coated

2.2.1 The SUBCONTRACTOR shall verify weld hold-back areas on piping, hangers/supports, steel attachments, etc., in areas designated Secondary Containment prior to coating as follows.

- Four(4) inches for **field** welds

2.2.2 Rubber or similar nonmetallic parts.

2.2.3 Non-Ferrous metals unless otherwise specified.

2.2.4 Stainless Steel surfaces unless specifically required by the CONTRACTOR (areas where stainless steel is welded to carbon steel the coating overlap onto the stainless steel shall be at least 1" or as otherwise specified).

2.3 Definitions

2.3.1 Batch- A quantity of coating made in one production run. A unique batch number is assigned for each production run of the epoxy coating material, the curing agent, fillers and the thinner.

2.3.2 Bug Holes- Small regular or irregular cavities resulting from entrapment of air bubbles in the surface of formed concrete during placement and consolidation.

2.3.3 Curing Membrane - Materials applied to prevent the moisture in uncured concrete from evaporating too rapidly. Where Special Protective Coatings are being applied, the curing membranes or compounds shall not contain paraffin, oil, silicone or other contamination that could compromise proper coating adhesion.

2.3.4 CONTRACTOR- Means BECHTEL NATIONAL, INC. (BNI) and all of its authorized representatives acting in their professional capacities.

2.3.5 Dry Film Thickness (DFT)- The thickness of an applied coating, once dry or cured. Usually expressed in mils (each mil is 1/1000 of an inch). Measured using a wet film thickness gage and calculating dry film thickness based on coating material volume solids. Alternatively measured using an ultra sonic dry film thickness device or using a destructive test that cuts the dry film and optically measures the dry film thickness.

2.3.6 Fish Eyes (cratering)- Formation of holes or visible depression in the coating film. Usually from a contaminated particle on the surface prior to applying the coating.

2.3.7 Efflorescence- A white crystalline or powdery deposit on the surface of concrete. Efflorescence results from leaching of lime or calcium hydroxide out of the permeable concrete mass over time by water , followed by reaction with carbon dioxide and acidic pollutants.

2.3.8 Form Release Agents- Compounds such as glossy paint or other film forming release material applied to forms to allow easy removal of forms. Where Special Protective Coatings are being applied the form release agent shall not impart a residue of paraffin, oil, silicone or other contaminant onto the surface that could compromise proper coating adhesion.

2.3.9 Hydration- The reaction of water with the calcium silicate, aluminate or aluminoferrite components of fine cement grains, necessary for the setting and densifying of concrete. Hydration results in the formation of calcium hydroxide and colloidal gels which occupy a larger volume than the original cement.

2.3.10 Hydrostatic Pressure- The pressure exerted by water at rest.

2.3.11 Holiday- A Pinhole, skip, discontinuity, or void in the applied coating film.

2.3.12 Laitance- A thin, weak, brittle layer of cement and aggregate fines in a concrete surface. The amount of laitance is influenced by the degree of working or amount of water in the concrete. For the application of Special Protective Coatings all laitance must be removed to sound, dense concrete.

2.3.13 Item- An all inclusive term used in place of any of the following: appurtenance, assembly, component, equipment, material, module, part, structure, sub-assembly, sub-system, system, unit or support systems.

2.3.14 Mfg. Std. Coating- A manufacturer's standard coatings system applied to off the shelf items or standard line items of routine manufacture that are not specifically manufactured for the WTP project.

2.3.15 NIST- National Institute of Standards and Technology.

2.3.16 "Non-Radiation" areas- For the purpose of Special Protective Coating (SPC), this is the quality designation for items **"NOT"** located in an area where radioactive material or items are transported, processed or stored or where they are located in an area where radioactive material or items are transported, processed or stored that are designated C2 and less, or R2 and less (24590-WTP-GPP-SRAD-0007 Classification of Areas provides the maximum dose for each "R" designation and mean airborne contamination level for each "C" designation).

2.3.17 Outgassing- The upward and outward emission of air or moisture vapor from concrete or coatings.

2.3.18 Pinhole- Minute hole visible in the applied coating without magnification, that appear to penetrate one or more layers of the coating film.

2.3.19 Profile- The surface roughness resulting from surface preparation by abrasive blasting or other CONTRACTOR accepted methods (Refer to Section 7.3.4.3)

2.3.20 "Radiation" areas- For the purpose of Special Protective Coating (SPC), this is the quality designation for items that are located in an area where radioactive material or items are transported, processed or stored that are designated C3 and greater, or R3 and greater. (24590-WTP-GPP-SRAD-0007 Classification of Areas provides the maximum dose value for each "R" designation and mean airborne contamination level for each "C" designation).

2.3.21 Sag- The running of freshly applied coating on a vertical surface due to being applied too thick.(Same definition for runs and drips).

2.3.22 Supplier Deviation Disposition Report (SDDR)- A standard WTP project document that can be used by a vendor or SUBCONTRACTOR to identify an actual or potential deviation or discrepancy that requires engineering evaluation and disposition prior to acceptance.

2.3.23 Surface Hardeners- Compounds applied to a concrete surface to improve hardness, and to decrease permeability.

2.3.24 Surface Porosity- Permeability of the surface that allows absorption of vapors, moisture, chemicals, and coating liquids. Small interconnected voids that allow fluids to penetrate an otherwise impervious material.

2.3.25 SUBCONTRACTOR- Means the company, corporation, partnership, individual, or other entity to which this subcontract (purchase order/material requisition) is issued, its authorized representatives, successors, and permitted assigns.

2.3.26 Training and Certification- Training to include an understanding of the specification, CONTRACTOR accepted Work procedures and manufacturer's published instructions. Certification to include a documented performance test demonstrating quality Work acceptable to the CONTRACTOR. (Refer to Sections 4.6, 5.1.3.2, 5.1.7, 7.1.2, 8.1.1.1 and Appendix A)

2.3.27 RPP-WTP- River Protection Project-Waste Treatment Plant

2.4 Safety

2.4.1 All surface preparation and coatings Work shall comply with all applicable environmental and safety provisions, laws, regulations in local jurisdiction (e.g., the County, and State). Work being performed in the United Sates shall be in strict accordance with OSHA 29 CFR 1910, State and local safety and environmental requirements.

2.4.2 The SUBCONTRACTOR shall comply fully with OSHA Hazard Communication Standard 29CFR 1910. Material Safety Data Sheets (MSDS) for all materials, including thinners and cleaning solvents, shall be obtained from the materials manufacturer and made available at the place of application for review.

2.4.3 The Volatile Organic Compound (VOC) content of all materials shall comply with Federal, State and Local or other Regulatory requirements.

2.4.4 The SUBCONTRACTOR shall control safe working and environmental conditions employing items such as but not limited to barricades, masking/tarping, ventilation, dehumidification and safety watches to provide safe quality work from surface preparation through application, curing and inspection activities.

2.4.5 The SUBCONTRACTOR shall be responsible for proper disposal of liquid or solid waste generated during the work described herein (residual coating material, thinners, solvent, wipes, rags, etc.)

3 Applicable Documents

3.1 Codes and Standards

The latest applicable edition of the following codes, standards, specifications or WTP procedures form a part of this Specification.

3.1.1 American Society for Testing and Materials (ASTM)

ASTM E337	Test for Relative Humidity by Wet-and-Dry Bulb Psychrometer
ASTM D 412	Standard Test Methods for Vulcanized Rubber and Thermoplastic Elastomers- Tension
ASTM D1653	Standard Test Methods for Water Vapor Transmission of Organic Coating Films
ASTM D3276	Standard Guide for Painting Inspectors (Concrete and Masonry Substrates)

ASTM D3912	Standard Test Method for Chemical Resistance of Coatings Used in Light-Water Nuclear Power Plants
ASTM D4060	Standard Test Method for Abrasion Resistance of Organic Coatings by the Taber Abraser
ASTM D4082	Standard Test Method for Effects of Gamma Radiation on Coatings for Use in Light-Water Nuclear Power Plants
ASTM D4138	Test Method for Measurement of Dry Film Thickness of Protective Coating Systems by Destructive Means
ASTM D4228	Practice for Qualification of Journeyman Painters for Application of Coatings to Steel Surfaces of Safety Related Areas in Nuclear Facilities
ASTM D4227	Practice for Qualification of Journeyman Painters for Application of Coatings to Concrete Surfaces of Safety Related Areas in Nuclear Facilities
ASTM D4258	Practice for Surface Cleaning of Concrete for Coating
ASTM D4259	Practice for Abrading Concrete
ASTM D4262	Standard Test Method for pH for Chemically Cleaned or Etched Concrete Surfaces
ASTM D4263	Test Method for Indicating Moisture in Concrete by the Plastic Sheet Method
ASTM D4414	Practice for Measurement of Wet Film Thickness of Organic Coatings by Notch Gages
ASTM D4285	Test Method for Indicating Oil or Water in Compressed Air
ASTM D4417	Field Measurement of Surface Profile of Blast Cleaned Steel
ASTM D4537	Standard Guide for Establishing Procedures to Qualify and Certify Inspection Personnel for Coating Work Inspectors in Nuclear Facilities.
ASTM D4541	Standard Test Method for Pull-Off Strength of Coatings Using Portable Adhesion Testers
ASTM D4940	Test for Conductimetric Analysis of Water Soluble Ionic Contaminants of Blasting Abrasives
ASTM D5139	Standard Specification for Sample Preparation for Qualification Testing of Coatings Used in Nuclear Power Plants
ASTM D5144	Standard Guide for Use of Protective Coating Standards in Nuclear Power Plants
ASTM D5498	Standard Guide for Developing a Training Program for Coating Work Inspectors in Nuclear Facilities.
ASTM D6132	Standard Test Method for Nondestructive Measurement of Dry Film Thickness of Applied Organic Coatings Over Concrete Using an Ultrasonic Gage
ASTM D6237	Standard Guide for Painting Inspectors (Concrete and Masonry Substrates)

3.1.2 The Society for Protective Coatings (SSPC)

SSPC-AB1	Mineral and Slag Abrasive
SSPC-PA2	Measurement of Dry Paint Thickness with Magnetic Gages
SSPC-SP1	Solvent Cleaning
SSPC-SP6	Commercial Blast Cleaning
SSPC-SP7	Brush -Off Blast Cleaning
SSPC-SP10	Near-White Metal Blast Cleaning
SSPC-SP11	Power Tool Cleaning to Bare Metal

SSPC-SP12	Surface Preparation and Cleaning of Metals by Waterjetting Prior to Recoating
SSPC-SP13	Surface Preparation of Concrete
SSPC-Vis 1	Visual Standard for Abrasive Blast Clean Steel
SSPC-Vis 3	Visual Standard for Power and Hand Tool Cleaning

3.1.3 Occupational Safety and Health Administration (OSHA)

OSHA 29 CFR 1910	Occupational Safety and Health Standards

3.1.4 WTP Project Documents

24590-WTP-GPP-SRAD-007	Classification of Areas
24590-WTP-3PS-AFPS-T0004	Field Applied Special Protective Coatings for Concrete Surfaces
24590-WTP-3PS-AFPS-T0003	Field Applied Special Protective Coating for Steel items and Equipment.
24590-WTP-3PS-AFPS-T0002	Special Protective Coating Limited-Combustible Testing Protocol
24590-WTP-3PS-AFPP-T0001	Painting (Professional Line Products) 09912

3.1.5 Department of Energy (DOE)

DOE Std. 1066-97	DOE STANDARD Fire Protection Design Criteria
DOE Order 414.1A Change 1 Issued 7/12/01	Quality Assurance

3.1.6 National Fire Protection Association (NFPA)

NFPA 801 2003 Edition	Standard For Fire Protection For Facilities Handling Radioactive Materials

4 Submittals

4.1 SUBCONTRACTOR shall submit detailed written procedures for the following-

- Material receiving, marking, storage, handling
- Surface preparation
- Environmental control
- Application
- Curing
- Inspection and testing
- Touch-up/repair
- Application personnel qualification and Inspector qualification (G321-E, category 28.0)
- Proposed documentation forms. The final procedure and documentation forms shall be submitted for the CONTRACTOR's approval (G321-E category 15.0).

(The above items can be grouped into a common procedure where appropriate)

4.2 Only materials that comply with the prequalification testing requirements in Appendix B and have been accepted in advance by the CONTRACTOR shall be used. Appendix C provides the list of prequalified materials/systems. Materials that have not been successfully tested in accordance with the test requirements shall not be used. **Coating material prequalification testing is only required of the coating manufacturer and not the Special Protective Coating Application SUBCONTRACTOR.**

4.3 The SUBCONTRACTOR shall identify the specific products by manufacturer and catalog number and shall submit the coating manufacturer's latest published product data sheet application instructions and Material Safety Data (MSDS). Conflicts, if any, between the SUBCONTRACTOR's normal procedures, the coating manufacturer's recommendations, and this Specification shall be brought to the attention of the CONTRACTOR for resolution and written permission to proceed (G321- E category 11.0). The SUBCONTRACTOR shall submit original Coating Manufacturer's Product Identity Certification Records for each and every batch of coating material purchased for use on the WTP project. (Refer to Appendix F) (Refer to G321 V category 13.0)

4.4 The SUBCONTRACTOR shall complete and submit a daily inspection record as a part of the Work procedures that includes all elements provided in Appendix G as a minimum. An entry for wet bulb is not require when the accepted device used to measure humidity and dew point does not required a wet bulb. (Refer to Section 8.1.9 and 10.2) (G321-V category 13.1)

4.5 The SUBCONTRACTOR shall submit with coating procedures a Supplier Quality Assurance Program Data Sheet (Appendix A) appropriate for the activity being performed (e.g. manufacture of SPC's or application of specified SPC's). The SUBCONTRACTOR shall identify their Quality Assurance Program (QA) Plan documents and paragraph references on the QA Program Data Sheet. All required QA Plan elements and corresponding SUBCONTRACTOR's identified documents are subject to CONTRACTOR's evaluation and verification.

4.6 The SUBCONTRACTOR shall provide a personnel training and certification plan for applicators and inspectors. (Refer to Sections, 5.1.3.2, 5.1.7, 7.1.2, 8.1.1.1 and Appendix A).

4.7 The SUBCONTRACTOR shall supply with his coating procedures a list of previous project case histories, where they applied coating materials similar to the materials specified herein. This list shall include the type of item coated, the project name, a project client contact name and phone number, if possible, for verification.

4.8 Color samples shall be submitted prior to the start of Work. Colors shall be as defined in Appendix E or as otherwise defined by the CONTRACTOR. Color samples shall be 1' x 1' in size. At least five sets of all colors shall be submitted. The type of panel used and the coating material used for the color samples shall be as agreed upon with the CONTRACTOR.

5 Quality Assurance

5.1 General

5.1.1 The SUBCONTRACTOR shall control the quality of items and services to meet the requirements of this Specification, applicable codes and standards referenced herein, and associated subcontract documents. The SUBCONTRACTOR shall prepare and maintain documentation to provide evidence of compliance with CONTRACTOR accepted procedures and this Specification. A copy of the coating inspection documentation shall be included in the shipping documentation.

5.1.2 The SUBCONTRACTOR, including any lower-tier organizations engaged by him, shall be subject to surveillance inspection by the CONTRACTOR's representative until completion or termination of the subcontract. This surveillance inspection does not relieve the SUBCONTRACTOR from the responsibility for conformance to the requirements of procurement documents, this specification and CONTRACTOR accepted procedures.

5.1.3 The SUBCONTRACTOR shall maintain a quality assurance plan for items located in "Non-Radiation and Radiation" areas, as defined in Section 2.3 that addresses as a minimum, the elements and implementing procedures called for in the Supplier Quality Assurance Program Data Sheet, Appendix A.

5.1.3.1 Quality Assurance Plan (QAP)

5.1.3.1.1 A written QAP must be developed, implemented, and maintained.

5.1.3.1.2 The QAP must describe the organizational structure, functional responsibilities, levels of authority, and interfaces for those managing, performing, and assessing the Work.

5.1.3.1.3 The QAP must describe management processes, including planning, scheduling, and resource considerations.

5.1.3.2 Personnel Training and Qualification.

5.1.3.2.1 Personnel must be trained and qualified to ensure they are capable of performing their assigned Work.

5.1.3.2.2 Personnel must be provided continuing training to ensure that job proficiency is maintained.

5.1.3.3 Quality Improvement.

5.1.3.3.1 Processes to detect and prevent quality problems must be established and implemented.

5.1.3.3.2 Items, services, and processes that do not meet established requirements must be identified, controlled, and corrected according to the importance of the problem and the Work affected.

5.1.3.3.3 Correction must include identifying the causes of problems and working to prevent recurrence.

5.1.3.3.4 Item characteristics, process implementation, and other quality-related information must be reviewed and the data analyzed to identify items, services, and processes needing improvement.

5.1.3.4 Documents and Records.

5.1.3.4.1 Documents must be prepared, reviewed, approved, issued, used, and revised to prescribe processes, specify requirements, or establish design.

5.1.3.4.2 Records must be specified, prepared, reviewed, approved, and maintained.

5.1.3.5 Work Processes.

5.1.3.5.1 Work must be performed to established technical standards and administrative controls using approved instructions, procedures, or other appropriate means.

5.1.3.5.2 Items must be identified and controlled to ensure their proper use.

5.1.3.5.3 Items must be maintained to prevent their damage, loss, or deterioration.

5.1.3.5.4 Equipment used for process monitoring or data collection must be calibrated and maintained.

5.1.3.6 Design.

5.1.3.6.1 NA

5.1.3.7 Procurement.

5.1.3.7.1 Procured items and services must meet established requirements and perform as specified.

5.1.3.7.2 Prospective suppliers must be evaluated and selected on the basis of specified criteria.

5.1.3.7.3 Processes to ensure that approved suppliers continue to provide acceptable items and services must be established and implemented.

5.1.3.8 Inspection and Acceptance Testing.

5.1.3.8.1 Inspection and testing of specified items, services, and processes must be conducted using established acceptance and performance criteria.

5.1.3.8.2 Equipment used for inspections and tests must be calibrated and maintained.

5.1.3.9 Management Assessment.

5.1.3.9.1 NA

5.1.3.10 Independent Assessment.

5.1.3.10.1 NA

5.1.4 The SUBCONTRACTOR shall provide the CONTRACTOR's representative with a Work activity schedule and shall notify the CONTRACTOR of all required inspection points prior to the scheduled date for coating activities (Refer to Section 2.1.10 and 2.1.11 herein).

5.1.5 If the SUBCONTRACTOR's proposed Work plan or procedures differ from the requirements of this Specification, the SUBCONTRACTOR shall specifically identify and explain all differences in writing, using an SDDR or other appropriate WTP project document, and submitted to the CONTRACTOR for review and approval prior to proceeding with a known deviation after the fact.

5.1.6 All pre-established witness and hold points shall be witnessed by the CONTRACTOR unless a written waiver has been issued.

5.1.7 All personnel shall receive training in the specific project coating requirements and the associated CONTRACTOR accepted work procedures that are relevant to their individual work assignments.

5.1.7.1 Painter/coating application personnel used to prepare the surface and apply coatings shall be trained, qualified and certified in accordance with the SUBCONTRACTOR's procedures accepted by the CONTRACTOR.

5.1.7.2 The SUBCONTRACTOR's coating Work inspectors shall have previous experience in coating inspection and shall receive documented training in the specific project coating requirements, ASTM standards and other relevant standards including the CONTRACTOR accepted Work procedures. All coating inspectors shall be trained, qualified and certified Level I inspectors meeting the requirements of Section 8.1.1.1. Inspector training, qualification and certification shall also comply with the SUBCONTRACTOR's document(s) identified on the submitted Supplier QA Program Data Sheet (Appendix A).

6 Materials

6.1 Coating Materials

6.1.1 All Special Protective Coating (SPC) secondary containment materials applied to concrete or steel items located in "Radiation" areas shall be prequalified in accordance with Appendix B. All SPC's applied to the building structure in "Radiation" areas or in any of the process buildings shall employ Approved coating materials as defined in Appendix B.

6.1.2 The Volatile Organic Compound (VOC) content of all materials shall comply with Federal, State and Local or other Regulatory requirements that have jurisdiction. The maximum allowable VOC for this project is 3.8 lbs./gal (450 gms/liter)

6.1.3 Coating materials including the primer intermediate and finish coat on a given item, shall all be from the same manufacturer as identified in Appendix C.

6.1.4 Secondary Containment repair materials shall be the same as those originally used or shall be those recommended by the manufacturer or shown to be compatible with the original coating and acceptable to the CONTRACTOR. Repair materials shall be in pre-measured units, and only complete kits shall be mixed. Splitting or breaking down pre-measured units of multi-component coating materials may be considered if the SUBCONTRACTOR prepares a procedure that requires accurate measurement of all materials and the SUBCONTRACTOR's QC inspector monitors/verifies each and every mix. This procedure must be submitted to the CONTRACTOR for review and permission to proceed.

6.1.5 Appendix D Room Finish Schedule Drawing References and Appendix C Tables contain the specified Special Protective Coatings for the WTP project. Appendix C contains the generic coating systems and approved coating materials. The generic coating system (primarily Epoxy or Epoxy Novolac materials) used on concrete and steel in secondary containment areas shall be coordinated with the generic coating materials indicated in the Architectural Room Finish Schedules (Appendix D Drawing Reference) for LAW, HLW, PTF, LAB and selected areas of BOF and their physical location. The Architectural Room Finish Schedules will identify coating materials for Secondary containment based on evaluation of chemical exposure , temperature and mechanical abuse based on a case by case criteria and specifically tailored for the conditions / exposure that is to be expected.

6.1.6 Appendix F is the Coating Manufacturer's Product Identity Certification Record. This document is required from the coating manufacturer for each component of each batch of coating material (manufactured coating material not individual ingredients).

6.1.7 Appendix G is an example for a Surface Preparation and Coating Inspection Form. This form or a form that contains the same information is required for daily inspection documentation.

6.1.8 Appendix H is the Manufacturer's Standard Coating Data Sheet. This is a sheet that must be completed when submitting an alternate material or coating system. A coating material technical data sheet and MSDS is required for each coating material included. All alternate materials must be reviewed and accepted by the CONTRACTOR prior to use.

6.2 Patching/Filler Materials

6.2.1 Materials used to patch or fill holes, shrinkage cracks, and defects in the concrete shall meet the following requirements:

6.2.1.1 For holes larger than 1/2" in its largest dimension, the filler may be a non-shrink structural concrete grout with a slump sufficient to fill holes on a vertical or overhead surface while staying flush with the surface plane. The concrete structural grout shall be compatible with the SPC system specified for use on the concrete surface. Compatibility shall be verified by applying the SPC over a cast sample of the structural concrete grout followed by a pull off adhesion of at least 200 psi per ASTM D4541 using test procedures applicable for type II and type IV instruments listed in Annex A.2 and A.4.

6.2.1.2 For holes up to 2" in its largest dimension, the filler may be a 100% solids proprietary polymeric filler material as recommended by the SPC manufacturer with a slump sufficient to fill holes on a vertical or overhead surface while staying flush with the surface plane. Polymeric fillers using a curing compound, catalyst or accelerator that develop heat during the cure process shall not cause blowholes in the applied filler that requires subsequent repair. The polymeric filler may be applied in more than one application to fill large voids flush with the concrete surface plane of concrete to steel embed surface plane. The proprietary polymeric filler material shall be compatible with the SPC system specified for use on the concrete surface. Compatibility shall be verified by applying the SPC over a cast sample of the proprietary filler material followed by a pull off adhesion of at least 200 psi per ASTM D4541 using test procedures applicable for type II and type IV instruments listed in Annex A.2 and A.4.

6.2.1.2.1 Polymeric filler materials used in R5 areas where the 40 year accumulated radiation level will be greater than 2E8 rads that are not made with the same generic resin type shall be radiation tolerance tested in combination with the SPC system specified for use in that particular area. The specimens shall be prepared for testing as follows:

- Using the standard concrete test blocks identified in Appendix B, drill a hole 1/2" x 1/2" in each face of each block. Fill the hole with the proposed filler material flush with the surface plane of the block. Apply the SPC systems identified for use in the R5 areas. Perform radiation tolerance testing per Appendix B.

6.2.1.3 For stable non moving cracks fill flush with the surface plane using a 100% solids proprietary polymeric filler material recommended by the SPC manufacturer as defined in section 6.2.1.2. Large cracks shall be routed out as shown on Appendix I installation details.

6.2.1.4 Construction Joints

6.2.1.4.1 For construction joints (other than those at inside wall to wall or wall to floor corners) in walls or floors, within areas required for secondary containment, a formed or created (e.g., saw-cut) rectangular slot shall be provided, centered on the construction joint after the concrete is placed and cured, apply specified coating system primer in the joint then install a bond breaking tape in the base of the joint. Install the flexible epoxy filler flush with the concrete surface and overcoat the joint with the specified coating system. Refer to Appendix I installation detail 3B.

6.2.1.5 For coving in corners (filler material with 2" radius), use a flexible epoxy filler material. Where coving materials will serve as a water stop, the prequalification requirements in Appendix B Section 1.2.10 apply. Refer to Appendix I for installation details 2A and 2B.

6.2.1.5.1 Secondary containment areas that do not have free flowing drains must use the glass reinforced coving installation detail.

6.2.1.5.2 Secondary containment areas that do not have regulated tanks and have free flowing floor drains, do not require the glass reinforced coving detail (Refer to Appendix I for installation details 1A and 1B).

6.2.1.5.3 If the proximity of drains prohibits the full 2" radius coving, the coving radius may be reduced to accommodate the coating installation.

6.3 Batch Information

6.3.1 Each container of coating material received and used by the SUBCONTRACTOR shall be marked with the following:

- The manufacturer's name
- The product designation
- Batch/lot number
- Location and date of manufacture
- The shelf life expiration date

6.4 Abrasives

6.4.1 Abrasives for blast cleaning shall be clean, free of oil or contaminants, and dry. The particle size shall be capable of producing the specified surface texture or surface profile. Mineral and slag abrasives shall meet the requirements of SSPC AB-1. The First batch/lot of non packaged abrasives shall be tested for water soluble contaminants and the conductivity shall not exceed 1,000 microsiemens/cm when tested in accordance with ASTM D4940 Section 1.0-2.0. Abrasives used at the RPP-WTP project site shall be < 1% silica.

6.4.2 When using reclaimed steel grit/shot abrasive, the particle size shall be capable of producing the specified surface texture . All reclaimed abrasives shall be tested for water-soluble contaminants and conductivity. Conductivity shall not exceed 1000 microsiemens when tested in accordance with ASTM D 4940 Section 1.0-2.0. All reclaimed abrasives shall be tested for oil and grease contamination using the water floatation test at the beginning of each shift.

6.4.3 Reclaimed grit used for abrasive cleaning shall be tested for the presence of oil by immersing a sample in clean tap water and checking for oil flotation. Tests shall be made at the start of blasting and every four (4) hours thereafter. If oil is evident, the contaminated abrasive shall be cleaned or replaced. All surfaces blasted since the last successful test shall be completely re-blasted using clean abrasive.

6.4.4 Expendable abrasive (Green Diamond / Black Beauty) shall be used on a once only basis and then discarded.

6.5 Water Quality

6.5.1 Water used for wet abrasive blasting or high pressure water jetting shall be clean tap or potable water and shall not exhibit any evidence of an oily sheen.

6.6 Coating Over Stainless Steel (SS)

6.6.1 All coating materials, thinners, solvents and cleaning materials used on SS shall be shown to have low leachable chlorides (<200ppm) and only trace amounts of low melting point metals and 400ppm sulfur maximum. One of the approved coating materials listed in Appendix C/Table 1 shall be used or an equivalent submitted to the CONTRACTOR for review and approval. The submittal shall include an independent laboratory test report that verifies the above parameters, a copy of the Manufacturer's latest published data sheet and Material Safety Data Sheet (MSDS). All proposed materials shall be evaluated for possible use by the CONTRACTOR.

7 Application

7.1 General

7.1.1 It shall be the SUBCONTRACTOR's responsibility to stop the surface preparation and coating at any time when conditions exist that might adversely affect the quality. The CONTRACTOR's representative may reject any prepared or coated surfaces not in compliance with this Specification.

7.1.2 All painters and other personnel used to apply coatings on to concrete and steel items shall be individually qualified and certified in accordance with the SUBCONTRACTOR's accepted written procedures that includes classroom training on the WTP Project Specification. Guidance for qualifying painters/application personnel are contained in ASTM D4228 and ASTM 4227 Section 1-10 and Figure #2 or other as accepted by the CONTRACTOR.

7.1.3 The secondary containment coating Mock ups shall have been satisfactorily completed and accepted by the CONTRACTOR prior to starting production work on a given area. That does not mean that all mock ups for all coating systems must be completed prior to the start of work, but at least the mock ups for the coating systems that are scheduled for facility production shall be completed prior to start of work with those coating systems.

7.2 Pre-Surface Preparation

7.2.1 Prior to mechanical cleaning, the surfaces to be coated shall be cleaned in accordance with SSPC SP1 to remove oil, grease, dirt, silicone, marks made with waxy or greasy makers, graffiti, curing compounds or form release residue or other foreign matter that could interfere with the proper bonding of the coating contamination of this type shall be removed by steam cleaning or solvent washing in accordance with ASTM D4258 Section 1.0 - 9.0. The SUBCONTRACTOR shall inspect floor for surface hardeners. Surface hardeners shall be removed prior to applying Special Protective Coatings.

7.2.2 Inspection of surfaces exhibiting fins, ridges, and sharp projections or surfaces that require repair of honeycomb areas, tie rod holes, and cavities that are greater than 1/2" in its largest dimension (i.e., length, width or depth) or cracks wider than 1/8" shall be performed by the SUBCONTRACTOR and includes a written report to the CONTRACTOR. These defects must be removed or corrected prior to applying any coating.

7.2.3 All sharp corners that are scheduled to receive Special Protective Coatings shall be rounded to a radius of no less than 1/8"

7.2.4 The SUBCONTRACTOR shall inspect all joint details and the configuration of the finished concrete sections in relation to the application of materials as shown in installation details shown in Appendix I Secondary Containment Installation Details and the requirements of this specification.

7.2.5 Any remaining sharp edges, weld spatter, or burrs, fins, ridges, tie rods, projections found after the start of coating Work shall be completely removed by grinding or other means. Pneumatic tools shall not be used unless they are fitted with effective oil and water traps on the exhaust air. If the steel embeds develop salt deposits or were shipped or stored so that the surface could have been contaminated with soluble salts (e.g., above deck ship transport, truck transport on dirt roads close to ocean, storage), the area shall be pressure water washed (e.g., 2,000-5,000 psi) with demineralized water to remove the soluble salt contamination as possible prior to abrasive blasting/water jetting.

7.2.6 Floor/Wall and Wall/Wall coving shall be installed using the same flexible epoxy filler material defined in section 6.2.1.5 or a filler material as recommended by the coating manufacturer and accepted by the CONTRACTOR. Coving shall be installed after concrete surface preparation and shall comply with the installation details in Appendix I.

7.2.7 To insure a seal and a smooth transition from concrete surfaces onto steel embed plates, the concrete shall be chipped away from the edge of the embed plate at least ½" and at least ¼" below the surface plane of the embed plate. The chipped away area shall be filled flush between the concrete and steel embed plate using the same rigid filler material defined in section 6.2.1.2 or a filler material as recommended by the coating manufacturer and accepted by the CONTRACTOR. (refer to Appendix I).

7.2.8 To provide a structurally sound termination of a floor coating, a perimeter key shall be placed in the floor (refer to Appendix I).

7.3 Surface Preparation

7.3.1 Prior to the start of Work, the SUBCONTRACTOR shall examine all surfaces to be coated to determine their acceptability for the specified coating application Work. If the surfaces are found to be unacceptable, the SUBCONTRACTOR shall either return the surface to an acceptable condition or immediately notify the CONTRACTOR in writing if the repairs are outside the scope of work. Coating Work shall not commence until corrective action has been taken. Starting Work prior to completion of corrective action shall preclude any subsequent claim by the SUBCONTRACTOR. The CONTRACTOR may require corrective action at the SUBCONTRACTOR's expense.

7.3.2 The abrasive mixture and the compressed air shall be clean, dry and oil free. Moisture traps, in addition to oil and water separators mounted on the compressor, shall be used in compressed air lines to remove oil and moisture from air close to the point of use. (refer to Section 7.3.4.4 and 8.1.6)

7.3.3 Concrete Surfaces

7.3.3.1 Floors, walls shall be free of curing compounds, laitance, dirt or other residue that could interfere with proper adhesion of the coating system. Shop or field primers applied to steel embeds that are not compatible with the intended secondary containment coating system shall be removed and primed with a compatible primer.

7.3.3.2 To achieve a clean roughened surface suitable for the specified coating systems, surfaces may be dry abrasive blasted, wet abrasive blasted (Refer to ASTM D4259 Sections 1.0-10.0) or cleaned and roughened by high pressure (10,000 psi to 25,000 psi) water jetting using a rotating head hand lance or self propelled robot (Refer to SSPC SP12 Appendix C and D for a description and operation and SSPC SP13 Sections 3.0-6.0). Small areas may be prepared using grinders or sanders as accepted for use during mock-ups. Needle guns may only be used if followed by full abrasive blasting or water jetting to remove weakened/crushed concrete surface layer to sound dense concrete and only when the procedure has been shown to result in a coating adhesion of 200 psi minimum.

7.3.3.3 In addition, floors may be acid etched using 20 % citric acid solution when accepted by the CONTRACTOR. Acid etched surfaces shall be pH tested in accordance with ASTM D4262 Sections 1.0-8.0. The pH shall be no more than 1.0 pH lower or 2.0 pH higher than the pH of the potable rinse water. A suitable texture shall be achieved that will be agreed upon during the mock up coating application. A detailed procedure on the use, clean up and disposal of acid etching materials/rinse must be provided for review and acceptance by the CONTRACTOR.

7.3.4 Carbon Steel Surfaces

7.3.4.1 Prior to blast cleaning, items to be coated shall be visibly dry with the surface temperature of at least 5°F above the dew point. Concrete surfaces shall be determined suitably cured as defined by the CONTRACTOR.

7.3.4.2 Carbon steel surfaces to be coated shall be blast cleaned in accordance with the surface preparation requirements specified in Appendix D. Where abrasive blasting will damage the items or is impractical, SSPC-SP11 Power Tool Cleaning to Bare Metal may be substituted only in limited areas and only with CONTRACTOR's written permission to proceed.

7.3.4.3 Abrasive blasting of carbon steel shall result in an angular surface profile 1.5 to 3.0 mils as measured using a Testex Press-O-Film replication tape in accordance with ASTM D4417 method C. Concrete shall be suitably roughened and textured using one of the specified methods of surface preparation during the coating system mock-ups performed and accepted by the CONTRACTOR.

7.3.4.4 The recycled abrasive mix shall be maintained clean of contaminants by continuous effective operations of cleaning machine scalping and air wash separators. Reclaimed grit used for abrasive cleaning shall be tested for the presence of oil/grease by immersing a sample of spent abrasive in clean tap water and checking for oil flotation. Tests shall be made at the start of blasting, and at a minimum of every four (4) hours thereafter. If oil is evident, the contaminated abrasive shall be cleaned or replaced. All surfaces blasted since the last successful test shall be completely cleaned of contamination then re-blasted using clean abrasive. Blast cleaning shall not be performed in the immediate area where coating or curing of coated surfaces is in progress unless a vacuum system is employed that contains dust. All surfaces and equipment which are not to be coated shall be suitably protected from blast cleaning.

7.3.4.5 Burrs, slivers, scabs, lamination, and weld spatter fins, ridges, sharp protrusions which become visible after blasting shall be removed. The tools and manner employed to remove defects and sharp edges, shall not burnish or destroy the profile the surface. If the profile or roughness is reduced, it shall be re-blasted to produce the profile and roughness as required. The exhaust of pneumatic grinders shall not impinge on the cleaned surface. If the surface becomes contaminated, it shall be cleaned of contamination then re-blasted as required. Carbon steel tools or implements shall not be used on stainless steel surfaces.

7.3.4.6 If visible rust occurs or if the cleaned surface becomes wet or otherwise contaminated, these surfaces shall be re-cleaned to the specified standard. Cleaned surfaces remaining un-coated overnight shall be re-cleaned to the specified cleanliness prior to applying the coating. Where Concrete and Carbon Steel interface and are proposed to be coated in one operation every effort will be made to apply coating to the steel before surface deterioration.

7.3.4.7 After surface preparation is complete and before coating, pressurized air or a vacuum cleaning shall be used to remove all dust and abrasive residue. The air shall be clean and dry as verified in accordance with Section 8.1.6 so as not to contaminate the prepared surface. The operator shall ensure that all dust and abrasive residues are removed from the surface of blast profiles when vacuum cleaning is carried out.

7.3.4.8 Machined surfaces shall be protected from damage due to blasting and coating operations.

7.3.4.9 Equipment shall have all openings plugged, masked, and/or blinded sufficiently to protect internals before abrasive blasting. After the coating operation is complete all internals shall be blown clean and/or vacuumed to remove any dust or abrasive blast media that may have entered the coated equipment.

7.3.5 The abrasive mixture and the compressed air shall be clean, dry and oil free. Moisture Traps, in addition to oil and water extractor mounted on the compressor, shall be used in compressed air lines to remove oil and moisture from air close to the point of use. (refer to Section 7.3.4.4 and 8.1.6)

7.3.6 Where galvanized steel falls into secondary containment areas and requires a coating, the surface shall be cleaned per SSPC SP1 and allowed to dry. The galvanizing shall then be pretreated using a phosphoric acid solution (e.g., Amchem Galva-Prep) or brush blasted per SP7 as recommended by the manufacturer of the coating material intended for use. After flushing the acid off using potable water, the surface area contacted by the acid and the rinse water shall be tested for pH. The pH shall be as indicated in specification section 7.3.3.3.

7.3.7 Damaged galvanized steel shall be cleaned per SSPC SP11 using a 3M Clean-N-Strip disc and wheel, a flapper wheel with a 60-80 grit size or a slow variable speed sander using 60-80 grit sanding disc. All galvanizing to be coated shall be pretreated as indicated in specification section 7.3.6.

7.4 Coating Application

7.4.1 Prior to applying Special Protective Coatings (SPC's) the concrete surface shall be dry as determined by the plastic sheet method in accordance with ASTM D4263 sections 1.0-8.0.

7.4.2 Coatings shall be applied in accordance with CONTRACTOR accepted procedures (refer to Section 4.1). The coating manufacturer's recommendations for the application temperature and curing temperatures versus times (between coats and after last coat) of the specified material shall be considered when determining minimum and maximum cure to recoat time intervals. Application and curing temperatures above or below the limits allowed by this specification (Refer to Section 7.4.5) shall be submitted to the CONTRACTOR for review and permission to proceed.

7.4.3 Coatings shall be applied using properly sized and type of equipment for the size and complexity of the item being coated. The equipment shall be clean with all components in good working order.

7.4.4 Bug holes, cracks and construction joints shall be filled flush with the concrete surface plane or as identified in Appendix I Secondary Containment Installation Details using a structural concrete grout, Five Star V/O or Five Star Vertical patch or CONTRACTOR accepted alternate structural concrete grout or polymeric filler. Structural Concrete grout shall be applied prior to applying the first coat or by applying the proprietary polymeric filler listed in Appendix C Table 2 for the selected coating system or CONTRACTOR accepted equal. Proprietary filler materials may be applied before or after the primer sealer coat where acceptable to the specific coating manufacturer. The filler technique shall be developed during the mock up to minimize the occurrence of pinholes in the finish coats.

7.4.5 Coatings shall be applied only when the surfaces to be coated are free of curing compound, free of concrete laitance, clean, properly textured and dry. The substrate temperature shall be

a minimum of 5°F above the dew point during coating applications and until the applied coating is no longer moisture sensitive per the coating manufacturer's published data or written recommendations. The substrate and air temperature during coating application and curing shall be a minimum of 50°F (Inorganic zinc primers 40°F) and a maximum of 110°F. The relative humidity during coating application shall not exceed 85 percent. Measure humidity in accordance with ASTM E337 (Sections 1.0-19.0). Deviations from the above listed minimum and maximum substrate/air temperature and humidly limits may be allowed when in accordance with the coating manufacturer's published or written recommendations and are accepted by the CONTRACTOR. The one firm limit is that the minimum substrate or air temperature shall not be less than 35°F regardless of the coating manufacturer's published or written recommendations.

7.4.6 The SUBCONTRACTOR shall record all batch numbers for each coating component used along with other information necessary for the CONTRACTOR to relate the batch to the area or item for which it was applied. (Refer to Appendix G)

7.4.7 All coatings shall be thoroughly mixed until they are smooth and free from lumps, then strained through a screen of at least 30 mesh. Heavy bodied materials that will not flow through a 30-mesh screen are exempt from straining. All coatings that could settle in the container during application must be kept under continuous mechanical agitation to ensure coatings expend their solid contents and do not settle during application.

7.4.8 Alternating coats shall have a visible color difference to insure full coverage over previous coats.

7.4.9 Dry film thickness of each coating shall be in accordance with Appendix C Table 2 Secondary Containment Prequalified Coating Materials or as specified in the subcontract document (Refer to Section 8.3.6). The film thickness of concrete primer sealer may be measured using a wet film thickness gage. The primer sealer must be tinted to a color that allows visual verification that it has been applied. At floors, walls and ceilings that only require a clear sealer, the sealer does not require tinting.

7.4.10 The minimum and maximum drying times between coats shall be in strict accordance with the coating manufacturer's latest published technical data sheets or written recommendations.

7.4.11 Runs, sags, voids, drips, overspray, loss of adhesion, bubbling, peeling, pinholes or inadequate cure are not permitted and shall be corrected using CONTRACTOR accepted repair procedures.

7.4.12 Application equipment that will be reused such as spray equipment, brushes and rollers shall be cleaned using the coating manufacturer's recommended solvents/cleaners.

7.5 Remedial Work

7.5.1 The completed coating on each item shall have the correct dry film thickness and shall be free of damage and visible defects.

7.5.2 Repair of Dry Film Thickness (DFT) deficiencies

7.5.2.1 Defects such as runs, sags, overspray and embedded particles shall be corrected by sanding to remove the defect. When the defects are in the finish coat, all areas sanded must be

overcoated with the finish coat. If the DFT of primer or intermediate coat is reduced to less than the specified minimum, the area shall be abraded with 60-80 grit sand paper or flapper wheel and an additional layer of coating shall be applied until sufficient thickness is achieved. If noticed during application, the sags or runs may be brushed out.

7.5.3 Repair of Damage

7.5.3.1 All damaged and loosely adhering coating shall be removed and the surface thoroughly cleaned using a vacu-blaster or high pressure water jetting, 60-80 grit sanding disc, 60 - 80 grit sandpaper, 60-80 grit flapper wheel or 3M Clean-N-Strip. Edges of the breaks shall be feathered to insure a smooth transition and the designated number of prime and finish coats shall be applied. Care shall be taken to insure adjacent coatings are not heat damaged, polished or burnished.

7.5.4 Loss of adhesion, delamination, blisters, bubbling and fish eyes in the applied coating requires the coating to be removed and reapplied in accordance with this Specification.

7.5.5 Pinholes shall be filled or otherwise repaired prior to the application of the final coat. Pinhole repairs in the final coat shall blend in and not be visually obvious.

8 Inspection

8.1 General

8.1.1 The SUBCONTRACTOR shall have the full responsibility for the coating application quality in accordance with this Specification and shall be responsible for stopping Work activities when conditions develop that could adversely affect the quality. All Work is subject to the CONTRACTOR's inspection surveillance.

8.1.1.1 All coating Work inspection personnel shall be trained, qualified and certified in accordance with the SUBCONTRACTOR's accepted procedures. The inspectors shall meet or exceed the minimum requirements for a Level I coatings inspector as described in ASTM D4537 Section 6.0. At least one inspector shall meet the minimum requirements for a Level II inspector as described in ASTM D4537 Section 1.0-8.0. The SUBCONTRACTOR shall conduct an examination, a performance evaluation and issue a certification for each inspector in accordance with ASTM D4537 Section 9.0. The Level II inspector shall supervise the Work of all Level I's. The SUBCONTRACTOR's inspector must demonstrate his/her capability of using the inspection equipment and performing all the required inspections. The SUBCONTRACTOR's inspector training, qualification and certification plan and associated procedures shall satisfy the requirements of ASTM D4537, Sections 1.0-8.0 using the guidelines provided in ASTM D5498 including classroom training on the WTP specifications applicable to coating inspection. Additional coating work inspection guidance is found in ASTM D6237 and ASTM D3276 which shall be used in developing procedures for training and certifying coating work inspectors.

8.1.2 The CONTRACTOR's representative shall be the final authority on the specification compliance for surface preparation and material application. Any coating which, in the judgment of the CONTRACTOR's representative has not been applied in conformance with this Specification, shall be rejected.

8.1.3 The CONTRACTOR representative shall have access to each part of the process and shall have the right and opportunity to witness any of the Quality Control Tests.

8.1.4 The SUBCONTRACTOR shall furnish the necessary testing and inspection instruments, properly calibrated and certificates maintained. If equipment is suspected of being out of calibration, it shall be re-calibrated and certificates made available for verification by the CONTRACTOR. Such equipment shall be available for use by the CONTRACTOR in conducting surveillance of the Work. Calibration of testing and inspection instruments shall be traceable to NIST or CONTRACTOR authorized alternative standards.

8.1.5 The SUBCONTRACTOR shall halt the coating Work and make corrections to the procedures, as necessary to correct repetitive faults found in the Work.

8.1.6 Prior to using compressed air, the quality of the air downstream of the separator shall be tested in accordance with the requirements of ASTM D4285 by blowing the air onto a clean white blotter or cloth for two (2) minutes at a distance of no more than twelve (12) inches to check for any contamination, oil, or moisture. This test shall be performed at the start of work and at not more than four (4) hour intervals. The test shall also be made after any interruption of the air compressor operation or as required by the CONTRACTOR. The air shall be used only if the test indicates no visible contamination, oil, or moisture. If contaminants are evident, the equipment deficiencies shall be corrected and the air stream shall be re-tested. Moisture separators shall be bled continuously. All lines shall be tested individually prior to use. Surfaces determined to have been blown down or blasted with contaminated air shall be cleaned of all contamination then re-blasted with clean air and abrasive. Coatings determined to have been applied using contaminated air shall be removed and reapplied using clean air.

8.1.7 Inspection points shall be established as follows:

- Prior to the start of Work
- Immediately following the surface preparation
- Immediately prior to the coating application
- Following the application of each coat
- Following the curing of the coating
- Final inspection and sign-off, in accordance with the project requirements

8.1.8 Any defects disclosed by inspection shall be re-inspected after correction.

8.1.9 The SUBCONTRACTOR shall keep the records indicated below, and submit these records to the CONTRACTOR (refer to Section 4.4 and Appendix G). The following lists the frequencies:

Coating/Inspection Step		Required Frequency
1.	Pre-Surface Prep and Surface Preparation/Profile/Texture	100% visual on Pre-Surface/100% on Surface Prep Cleanliness/Steel profile first item of each type per shift and every 20 items thereafter/Concrete 100% visual for cleanliness and texture.
2.	Environmental/Air Quality	At the start of work and every 4 hours thereafter or more often during changing conditions.
3.	Recirculated Abrasive	At the start of work and as required with a minimum of every 4 hours thereafter
4.	Thickness	SSPC-PA2: 5 spot readings per 100 sq.ft. on large surfaces or steel items, surfaces or steel items < 100 sq.ft. 4 spot readings

		on each surface or steel item, and 2 spot reading on steel items less than 4 inches. (e.g., valves, fittings, components, etc.)
5.	Visual on Applied Coating	100% of all items

8.2 Surface Preparation Inspection

8.2.1 Verify bug holes , voids ,cracks and construction joints are properly filled. This is not necessary if filler is applied after surface preparation and sealer coat application.

8.2.2 Verify environmental conditions and compressed air quality (refer to Section 7.3.5, 7.3.4.1, 8.3.1)

8.2.3 Verify recycled abrasive is grease and oil free (refer to Section 7.3.5).

8.2.4 Verify surface cleanliness and texture.(refer to Sections 7.3.3.2, 7.3.4.2. 7.3.4.3 and 8.1.9).

8.2.5 Grease free chalk shall be used to mark local areas which do not meet the specified requirements (e.g., soapstone and crayons are not acceptable).

8.3 Coating Application

8.3.1 Environmental conditions and compressed air quality shall be verified per Sections 7.4.5 and 8.1.9.

8.3.2 Dry coating thickness (DFT) on steel items shall be measured with a magnetic film thickness gage such as an Elektro-Physik "Mikrotest" or Positector 2000, 6000 or CONTRACTOR accepted equal in accordance with SSPC PA2. Steel items and individual items on equipment less than one hundred (100) sq.ft. in surface area shall have at least four (4) evenly spaced spot readings per item. Equipment or equipment components less than four (4) inches in its largest dimension only require two (2) evenly spaced spot reading per item.

8.3.3 Dry coating thickness (DFT) on concrete shall be measured using a Wet Film Thickness (WFT) gage (Refer to ASTM D4414 Sections 1.0-10.0 applicable to procedure A) and calculating thickness based on coating material volume solids (added thinners required recalculation of volume solids) or by using a nondestructive ultrasonic tester such as the Positector 100 or accepted equivalent (Refer to ASTM D6132 Sections 1.0-11.0). Each 100 sq.ft. shall receive 5 evenly spaced gage readings. Areas less than 100 sq.ft. in surface area shall have at least 2 evenly spaced spot readings per area.

8.3.4 Wet film thickness gages shall be of high quality steel or stainless steel, with a maximum blade width of 1.5", that can be purchased with calibration certifications. Wet film thickness gages shall be visually inspected for paint residue and physical damage at the start of work and every 4 hours thereafter during use.

8.3.5 The Dry Film Thickness gage shall have a minimum of a zero to 40 mil or zero to 60 mil working range and shall be checked for calibration accuracy in accordance with SSPC-PA2 at the start of each shift against certified coating thickness calibration standards for non-magnetic coating of steel traceable to NIST or CONTRACTOR's accepted alternative standards. The calibration standards shall be in the 1.5 mil to 40.0 mil range, unless otherwise specified. Any surface with a measured thickness outside of the limits described in section 7.4.9 shall be

rejected. These areas shall be reworked or re-cleaned and re-coated at the SUBCONTRACTOR's expense prior to acceptance by the CONTRACTOR.

8.3.6 When dry film thickness becomes debatable or indeterminate, the CONTRACTOR reserves the right to require the use of destructive testing using a Tooke gage in accordance with ASTM D4138 Sections 1.0-9.0 or by nondestructive ultrasonic testing in accordance with ASTM D6132 Sections 1.0-11.0 to verify dry film thickness. All areas damaged by destructive testing shall be repaired by the SUBCONTRACTOR.

8.3.7 Runs, sags, voids, drips, overspray, loss of adhesion, bubbling, pinholes, peeling, or inadequate cure are not permitted and shall be repaired or reworked.

9 Storage, Handling and Shipping

9.1 Coating Materials

9.1.1 Coating materials shall not be stored in direct sunlight or exposed to inclement weather (e.g., rain, snow, sleet, freezing rain, dew point condensation, see also section 9.1.5). Materials shall remain under cover until ready to use.

9.1.2 Coatings, thinners, cleaning solvents and other flammable materials stored at any location, shall be kept away from combustion sources and shall be stored in metal flammable material storage cabinets meeting NFPA and OSHA standards. Thinners and solvents shall be transported to the point of use in approved safety containers meeting OSHA standards.

9.1.3 Coating material shall be delivered in manufacturer's original unopened containers. Each container shall be clearly identified with the manufacturer's name, product designation, batch number, date of manufacture and shelf life expiration date.

9.1.4 Coating materials must have a minimum of 80% of its shelf life remaining at the time of shipment to the project site or SUBCONTRACTOR's warehouse. Items with a normal shelf life less than 12 months shall have a minimum of 85% of its shelf life remaining at the time of shipment to the project site or SUBCONTRACTOR's warehouse.

9.1.5 Coating materials that are older than twenty four (24) months from the date of manufacture or that exceed the manufacturer's shelf life, if less than twenty four (24) months, shall not be used and shall be placed on HOLD and segregated from other coating materials. Where the coating material has exceeded its shelf life and can be shown to have been stored as specified herein, a one-time extension for no less than three (3) months and no more than six (6) months may be issued by the coating manufacturer. The shelf life extension shall be based on laboratory testing of retain samples taken at the time of manufacture or by testing a sample of the actual coating material in question. Where testing verified an outdated coating material still complies with its original design criteria, it is acceptable for shelf life extension. Expiration date stickers, provided by the coating manufacturer, shall be affixed to each container prior to release from HOLD. The stickers shall include the product number, batch/lot number, the new expiration date and suitably marked to indicate that they came from the coating manufacturer. A new Appendix F shall be provided by the coating manufacturer that includes the test results and specifically indicate that the new Appendix F was provided to document shelf life extension including new expiration date. Coating materials that have not

been stored or handled in accordance with sections 9.1.5, 9.1.6, 9.1.7 and 9.1.8, may not have their shelf life extended.

9.1.6 Coating material shall be protected from moisture, direct sunlight and temperatures below 40°F or above 100°F unless otherwise allowed by the coating manufacturer's latest published instructions and accepted by the CONTRACTOR.

9.1.7 Coating material containers where the airtight seal has been broken or any of the contents are lost, shall not be used.

9.1.8 Coating material containers shall not be opened except for immediate use.

9.1.9 Unused material shall be returned to storage as soon as possible at the end of each Workday. Materials left out for more than ten (10) hours in an uncontrolled storage area (areas without environmental controls or environmental monitoring that are exposed to ambient weather) shall not be used and shall be placed in a segregated hold area until final disposition then removed from the job site if rejected. No water borne coatings shall be stored in areas where the temperatures are below 40°F.

9.1.10 All required coating material certifications for each batch of material delivered to the job site shall be available at the time of material receipt. Materials delivered to the shop or field without the required documentation shall not be used and the SUBCONTRACTOR shall tag and place discrepant materials into a hold area clearly separated from acceptable material. Once the required documentation is received or otherwise corrected and found to be acceptable, the discrepant material may then be taken off hold status and used.

10 Documentation

10.1 The SUBCONTRACTOR shall provide a record of all materials used (Regarding individual batch numbers, refer to Appendix F).

10.2 The SUBCONTRACTOR shall provide a record of all required daily inspections (Example-Appendix G) that includes pre-surface preparation, compressed air cleanliness, environmental conditions, surface preparation and roughness, location of field repairs coated, application, visual inspection, dry film thickness, and all touch up/repair. This record shall include the coating and thinner materials used and the ID of the items coated to provide traceability.

10.3 All quality documentation shall be available for review by the CONTRACTOR representative within twenty four (24) hours from the time it is generated.

10.4 SUBCONTRACTOR documentation forms or the way that the actual Work will be documented shall be provided by the SUBCONTRACTOR as part of the procedures submittal for review by the CONTRACTOR.

11 Design Changes Incorporated by Reference

11.1 The following is a listing of design changes that are identified by reference and do not require modification to the specification.

Design Change Document
(none at this time)

* Denotes a new entry for this revision of the specification.

Appendix A
Supplier Quality Assurance Program Requirements Data Sheet

DOE ORDER 414.1A REQUIREMENTS

The following marked QA Program Elements of DOE ORDER 414.1A apply and are subject to CONTRACTOR evaluation and verification (see also exhibit J in subcontract documents)

DOE O 414.1A	N/A	PROGRAM ELEMENTS	SUPPLIER DOCUMENT AND PARAGRAPH REFERENCES TO BE COMPLETED BY THE SUPPLIER
X	☐	PROGRAM	
X	☐	PERSONNEL TRAINING & QUALIFICATION	
X	☐	QUALITY IMPROVEMENT	
X	☐	DOCUMENTS & RECORDS	
X	☐	WORK PROCESSES	
☐	X	DESIGN	Coating manufacturers and coating applicators "Design" for Special Protective Coatings provided by 24590-WTP-3PS-AFPS-T0006
X	☐	PROCUREMENT	
X	☐	INSPECTION & ACCEPTANCE TESTING	
☐	X	MANAGEMENT ASSESSMENT	
☐	X	INDEPENDENT ASSESSMENT	

SIGNATURE OF SUPPLIER REPRESENTATIVE _____

0		Issue for Use				
REV.	DATE	REASON FOR REVISION	BY	CHECKED	APPROVED	QA
Special Protective Coatings For Secondary Containment Areas.			JOB NO. 24590-101			
			DATA SHEET NO.			
			REV. 0			

Appendix B
WTP Project Special Protective Coating (SPC) Material Prequalification Requirements for Secondary Containment.

1.0 Prequalification Testing for Radiation Areas

1.1 All the coating material prequalification testing shall be performed by the coating manufacturers listed in Appendix C. Coating systems listed as "Prequalified" have been fully tested and all data has been reviewed and accepted. Only those systems listed as Prequalified may be used.

1.2 Coating systems that will be applied on items that will be located inside "Radiation" areas shall satisfy the following test requirements:

1.2.1 Radiation Tolerance Testing: Coating systems shall be tested for tolerance to radiation exposure as a complete system in accordance with the requirements of ASTM D4082 and as follows:

1.2.1.1 For coating systems to be used in areas where the total anticipated accumulate dose will not exceed 2E8 rads, no radiation tolerance testing is required.

1.2.1.2 For coating systems to be used in areas where the total anticipated accumulated dose is >2E8 rads up to 1E9 rads, test the coatings at 1E9 rads.

1.2.1.3 For coating systems to be used in areas where the total anticipated accumulated dose is >1E9 rads, the test radiation level shall equal or exceed the highest anticipated accumulated dose.

1.2.1.4 The acceptance criteria for the irradiation test shall be "no defects" as described in ASTM D4082. In addition to the defects stated in ASTM D4082, also check the coating on the test specimens for softening. The coating shall not soften because of the irradiation exposure.

1.2.2 Decontamination Testing: Generic Special Protective Coating materials such as two component or three component Epoxy, and Epoxy Novolac's, type have historically shown very good decontamination and chemical resistance properties and are suitable for use on the WTP project. Other generic coating materials located in areas that will require operational decontamination must be able to withstand the decontamination chemicals and temperatures that will be used as part of the decontamination process.

1.2.3 Abrasion Resistance Testing: In addition to radiation tolerance testing of coating systems that will be applied to surfaces inside "Radiation" areas or on items that will be located inside "Radiation" areas, those coating systems and selected "Non-Radiation" area coating systems shall satisfy the following test requirements:

1.2.3.1 Coating systems for use -in secondary containment areas, where abrasion will be a factor in the in-service performance of the coating system, shall be tested in accordance with ASTM D4060. The weight loss shall not exceed 175 mg per 1000 cycles when a CS-17 wheel is used with a 1000-g load.

1.2.4 Adhesion Testing: Coating systems shall be tested for adhesion in accordance with the requirements of ASTM D4541 and ASTM D5144 Section 5.5.1. The minimum adhesion value shall be 200 psi for coatings applied to concrete or steel substrates.

1.2.5 Chemical Resistance Testing: Perform chemical resistance testing on coating systems in chemical exposure areas in accordance with the requirements of ASTM D3912 Section 6.3. The test reagents and test duration of the tests shall be governed by the anticipated service conditions. The test shall last for 5 days for secondary containment coating systems and for coating systems where cleanup of spills will not be immediate, for 24 hours.

If the test duration exceeds 24 hours, examine the test specimens after each 24-hour period and report the condition of the specimens after each 24-hour interval. Examine and report the condition of the specimens in accordance with the requirements of ASTM D3912, Sections 7 and 8. The test reagents and concentrations shall be as follows:

1.2.5.1 Chemical Reagents and Concentrations that may require testing

- 2.0, 5.0 & 12.2 Molar HNO3
- 0.25, 2.0, 5 & 19 Molar NaOH
- 3.27 Molar Sr(NO3)2
- 7.4 Molar NaNO2
- 4.4 Molar NaMnO4

1.2.6 Test Specimen Preparation: Test specimens shall be prepared in accordance with the requirements of ASTM D5139. The surface preparation methods utilized for radiation tolerance, adhesion and chemical resistance testing shall be representative of those proposed for use. If more than one surface preparation method is proposed for use, each proposed surface preparation method shall be tested independently. The size of the test specimens shall be appropriate for the test being carried out. The minimum size of test specimens shall be 2" X 4" X ¼" for steel substrates and 2" X 2" X 4" for concrete substrates.

1.2.7 Infra Red (IR) Scan: The coating manufacturer shall run an IR scan of the prequalification batch of the liquid component of each coating system to maintain as a record of that formulation. The IR scans shall be maintained indefinitely for all coating systems that are accepted for use by RPP/WTP and shall be identified and submitted with the test documentation for each coating system. Thereafter, the manufacturer shall certify that each subsequent batch of an accepted coating system was manufactured with the same formulation, raw materials, production methods, and quality control standards as the coating materials originally tested and accepted for use by the RPP/WTP (refer to the

statement included on the Coating Manufacturer's Product Identity Certification Record in Appendix F).

1.2.8 Flame Spread and Smoke Developed: All Special Protective Coatings that will be applied on the building structures for secondary containment located in the LAW, HLW, PTF, LAB and areas of BOF that transport, process or store radioactive materials or items shall comply with the requirements of NFPA 801 and DOE Standard 1066 as defined in specification 24590-WTP-3PS-AFPS-T0002 Special Protective Coatings Limited-Combustible Testing Protocol. The Maximum allowable flame spread is 25 and the maximum allowable smoke developed is 50. Equipment, piping, steel items installed in the building is exempt from this flame spread requirement.

1.2.9 Volatile Organic Compounds (VOC): The VOC content of all Special Protective Coatings shall not exceed 3.8 lbs./gal (450 grams/liter). If the VOC requirement in the location where the coating is being applied is less than the 3.8 lbs./gal, the local (e.g., a facility offsite in Tri-Cities area) requirements take precedence and must be met.

1.2.10 Prequalification Testing for Flexible Epoxy Filler Material Acting as a Water Stop

1.2.10.1 Permeability testing of flexible epoxy filler material shall be performed in accordance with ASTM D1653 method B. Permeability shall be similar to epoxy coating materials.

1.2.10.2 Radiation tolerance testing of flexible epoxy filler material shall be performed per ASTM D4082 when installed in areas where the 40 year integrated dose exposure is expected to be greater than 2E8 rads. The flexible epoxy filler shall exhibit residual flexibility and remain bonded to the substrate. Secondary containment coatings will not be located in C5/R5 areas , therefore the radiation exposure will be significantly less than 2E8 rads.

1.2.10.3 Elongation of the flexible epoxy filler material shall be at least 50% when tested in accordance with ASTM D412.

1.2.10.4 Abrasion resistance testing of flexible epoxy filler per ASTM D4060 is not required.

1.2.10.5 Adhesion testing of the flexible epoxy filler material to concrete shall be performed in accordance with ASTM D4541 and ASTM D5144. The adhesion shall be 200 psi minimum.

1.2.10.6 Chemical resistance testing of the flexible epoxy filler material shall be performed per section 1.2.5 above. The testing results shall be reported.

1.2.10.7 Aging shall be demonstrated by at least 10 years of successful field service in secondary containment applications or other similar application. Accelerated aging testing may also be used such as radiation tolerance testing at 2E8 rads minimum (see Section 1.2.1 above).

1.2.10.8 Crack filling- Due to the thick viscous nature of the flexible epoxy filler material, it is only required to be mechanically forced into cracks, primarily bridging over the cracks creating a thick well bonded protective barrier.

2.0 Prequalification Testing for Non-Radiation Areas

Special Protective Coating materials or systems that will be applied on items that will be located in "Non-Radiation" areas have the same prequalification requirements as listed in Appendix "B" Section 1.0 except no radiation tolerance testing is required.

Appendix C
Table 1- Secondary Containment Coating Systems

Usage Type	Thickness Groups Concrete/ Steel	Resin Type/ Surface Type	Coating System Description	Prequalified Coating Systems						
				Ameron	Carboline	ICI-Devoe	Dudick	Inter-National	Sherwin Williams	Remarks
FLOOR COATING SYSTEMS										
SC	T4	ECF	Heavy Spray or Self Leveling Epoxy Floor Coatings (Epoxy primer and one coat of epoxy finish)	AM07	CA07	DE07	DD07	IN07	SW07	When the room finish schedule specifies system designation SC-E it includes this concrete floor coating system.
SC	T4	NCF	Heavy Spray or Self Leveling Epoxy Novolac Floor Coatings (Epoxy Novolac primer and one coat of epoxy Novolac finish)	AM08	CA08	DE08	DD08	(none)	SW08	When the room finish schedule specifies system designation SC-N it includes this concrete floor coating system.
WALL and SUMP COATING SYSTEMS										
SC	T2	ECW	Epoxy Wall & Sump Coatings (Fill bug holes flush, apply 1 coat of epoxy primer and two coats of epoxy finish)	AM15	CA15	(none)	(none)	IN15	SW15	When the room finish schedule specifies system designation SC-E it includes this concrete wall coating system.
SC	T2	NCW	Epoxy Novolac Wall & Sump Coatings (Fill bug holes flush, apply 1 coat of epoxy Novolac primer and two coats of epoxy Novolac finish)	AM16	CA16	(none)	(none)	IN16	SW16	When the room finish schedule specifies system designation SC-N it includes this concrete wall coating system.
STEEL EMBED COATING SYSTEMS										
SC	T4	ESE	Epoxy Coatings for Embed Plates and Support Steel, (Touch up existing shop coating or abrasive blast and apply two coats of Epoxy Finish)	AM19	CA19	(none)	(none)	IN19	SW19	When the room finish schedule specifies system designation SC-E it includes this steel coating system.
SC	T5	NSE	Epoxy Novolac Coatings for, Embed Plates and Support Steel (Touch up existing shop coating or abrasive blast and then apply two coats of Epoxy Novolac Finish)	AM20	CA20	(none)	(none)	IN20	SW20	When the room finish schedule specifies system designation SC-N it includes this steel coating system.

SC = Secondary Containment

ECF = Epoxy Concrete Floors; NCF = Epoxy Novolac Concrete Floors; ECW = Epoxy Concrete Walls; NCW = Epoxy Novolac Concrete Walls

ESE = Epoxy Steel Embeds; NSE = Epoxy Novolac Steel Embeds

Appendix C
Table 2 Secondary Containment Prequalified Coating Materials

WTP Concrete System Code	Surface Type	Appendix C Table 1 Mfg. System Code	Coating Mfg.	Concrete Filler (flush)	Mfg. Products	Required Dry Film Thickness (Mils) **
SC-T4-ECF	Concrete Floors	AM07	Ameron	None	X00701 / Nu Klad 120A	1-2 / 40-60 = 41-62 mils
SC-T4-ECF	Concrete Floors	CA07	Carboline	None	Semstone 5401 / Semstone 140SL+SAND / 140SL	4-6 / 10-15 / 30-50 =44-71 mils
SC-T4-ECF	Concrete Floors	DE07	Devoe	Futura- Bond 320 Gel	Pre Prime 167/ Devmat 111	1-2 / 40-60 = 41-62 mils
SC-T4-ECF	Concrete Floors	DU07	Dudick	None	Primer 67 / Polymer Alloy 2500 FR	4-6 / 40-60 = 44-66 mils
SC-T4-ECF	Concrete Floors	IN07	International	Intercryl 320	Interseal 670HS / Interzone 954	2-4 / 45-55 = 47-59 mils
SC-T4-ECF	Concrete Floors	SW07	Sherwin Williams	Kem Cati-Cote HS or Steel-Seam FT910	Macropoxy 920 / Cor-Cote HP SL Mortar	1.5-2 / 38.5-58 = 40-60 mils
SC-T4-NCF	Concrete Floors	AM08	Ameron	None	X00701 / Nu Klad 120A / Amercoat 91	1-2 / 34-50 / 6-10 = 41-62 mils
SC-T4-NCF	Concrete Floors	CA08	Carboline	None	Semstone 5401 / 145SL+SAND / 145SL.	4-6 / 40-60 = 44-66 mils
SC-T4-NCF	Concrete Floors	DE08	Devoe	Futura- Bond 320 Gel	Pre Prime 167/ Devmat 111	1-1.5 / 40-60 = 41-61.5 mils
SC-T4-NCF	Concrete Floors	DU08	Dudick	None	Primer 67 / Polymer Alloy 2100 FR	4-6 / 40-60 = 44-66 mils
SC-T4-NCF	Concrete Floors	SW08	Sherwin Williams	Kem Cati-Cote HS or Steel-Seam FT910	Cor Cote HCR / Cor Cote HCR SL Mortar.	4-6 / 36-54 = 40-60 mils
SC-T2-ECW	Concrete Walls	AM15	Ameron	Nuclad 114A	Amerlock 400 / Amerlock 400	4-8 / 4-8=8-16 mils
SC-T2-ECW	Concrete Walls	CA15	Carboline	Semstone 195	Carbogard 1340 / Carbog890C705 / C890S800	1-2 / 4-5 / 4-5=10-14 mils
SC-T2-ECW	Concrete Walls	IN15	International	Intercyrl 320	Intergard 345 / 345 / 345	4-6 / 4-6 / 4-6=12-18 mils

WTP Concrete System Code	Surface Type	Appendix C Table 1 Mfg. System Code	Coating Mfg.	Concrete Filler (flush)	Mfg. Products	Required Dry Film Thickness (Mils) **
SC-T2-ECW	Concrete Walls	SW15	Sherwin Williams	Kem Cati-Cote HS or Steel-Seam FT910	Macropoxy 920 / Macropoxy 646 / Macropoxy 646	1-2 / 3-7 / 4 -7=8-16 mils
SC-T2-NCW	Concrete Walls	AM16	Ameron	Nu Klad 114A	Amercoat 91 / Amercoat 91	4-8 / 4-8=8-16 mils
SC-T2-NCW	Concrete Walls	CA16	Carboline	Semstone 195	Carbogard 1340 / Phenoline1205FR0700 / 1205FRS800	1-2 / 5-6 / 5-6=12-16 mils
SC-T2-NCW	Concrete Walls	IN16	International	Intercyrl 320	Intertherm 228 / 228 / 228	2-4 / 4-6 / 4-6=10-16 mils
SC-T2-NCW	Concrete Walls	SW16	Sherwin Williams	Kem Cati-Cote HS or Steel-Seam FT910	Macropoxy 920 / Phenicon HS / Phenicon HS /	1.5-2.0 / 3-7 / 4-7=8.5-16 mils

WTP Steel System Code	Surface Type	Appendix C Mfg. System Code	Coating Mfg.	Steel Primer	Mfg. Products	Required Dry Film Thickness (Mils) **
SC-T4-ESE	Steel Embeds	CA19	Carboline	*Carbozinc 859	Carbogard 890 / 890	3-5 / 4-6 / 4-6 = 11-17 mils
SC-T4-ESE	Steel Embeds	IN19	International	*Interzinc 52	Intergard 475HS / 475HS	3-5 / 4-6 / 4-6 = 11-17 mils
SC-T4-ESE	Steel Embeds	SW19	Sherwin Williams	*Zinc Clad IV	Macropoxy 646 / 646	3-5 / 4-6 / 4-6 = 11-17 mils
SC-T4-ESE*	Steel Embeds	AM19	Ameron	*Amercoat 68HS	Amerlock 385 / 385	3-5 / 4-6 / 4-6 = 11-17 mils
SC-T5-NSE	Steel Embeds	AM20	Ameron	* Amercoat 68 HS	Amercoat 91 / 91	3-5 / 6-12 / 6-12 = 15-29 mils
SC-T5-NSE	Steel Embeds	CA20	Carboline	*Carbozinc 859	Phenoline1205 / 1205	3-5 / 5-6 / 5-6 =13-17 mils
SC-T5-NSE	Steel Embeds	IN20	International	*Interzinc 52	Intertherm 228 / 228	3-5 / 4-6 / 4-6 = 13-17 mils
SC-T5-NSE	Steel Embeds	SW20	Sherwin Williams	*Zinc Clad IV	Phenicon HS / Phenicon HS	3-5 / 6-8 / 6-8 = 16-21 mils***

NOTES TO APPENDIX C Table 2

* Note 1- This is a steel coating system shown on the room finish schedule for steel embedded in concrete and structural steel that requires the listed touch up primer and finish coating for chemical resistance. The steel coating system shall be from the same coating manufacturer as the concrete coating system.

** Note 2- The dry film thickness limitations listed in this column are based on testing to the NFPA 801-2003 and DOE STD 1066 flame spread and smoke developed requirements. The listed dry film thicknesses are the maximum allowed for wall coatings. The maximum total film thickness listed in this column includes the residual filler. Differences in dry film thickness from one coating manufacturer's system to another is due to NFPA 801 and DOE STD 1066 flame and smoke independent laboratory testing results.

*** Note 3- Using system SC-T5-NSE (SW20) from Sherwin Williams as an example, the required dry film thickness is determined by reading from left to right, the first coat is Zinc Clad IV applied at 3-5 mils, the slash separates the second coat which is Phenicon HS applied at 6-8 mils, the slash separates the third coat which Phenicon HS applied at 6-8 mils. An additional slash would define a fourth coat and so on. The total dry film thickness is listed after the equal sign.

Appendix D
Room Finish Schedule Drawing References

The tables below list the drawing numbers for the Architectural index and the Architectural Room Finish Schedules for each process facility. The latest issued revision of these drawings shall be used.

LAW DRAWING NO.	EL.	LAW DRAWING TITLE
24590-LAW-A0-A10T-00100001	--	LAW Vitrification Building Architectural Drawing Index
24590-LAW-A5-A19T-05200001	(-)21'	LAW Vitrification Building Architectural Room Finish Schedule EL (-)21'-0"
24590-LAW-A5-A19T-05200002	(-)21'	LAW Vitrification Building Architectural Room Finish Schedule EL (-)21'0"
24590-LAW-A5-A19T-05201001	0' & 3'	LAW Vitrification Building Architectural Room Finish Schedule EL 0'-0" & 3'-0"
24590-LAW-A5-A19T-05201002	3'	LAW Vitrification Building Architectural Room Finish Schedule EL 0'-0" & 3'-0"
24590-LAW-A5-A19T-05202001	15' & 22'	LAW Vitrification Building Architectural Room Finish Schedule EL 15'-0" & 22'-0"
24590-LAW-A5-A19T-05203001	28'	LAW Vitrification Building Architectural Room Finish Schedule EL 28'-0"
24590-LAW-A5-A19T-05204001	48'	LAW Vitrification Building Architectural Room Finish Schedule EL 48'-0"
24590-LAW-A5-A19T-05205001	68'	LAW Vitrification Building Architectural Room Finish Schedule EL 68'-0"

HLW DRAWING NO.	EL.	HLW DRAWING TITLE
24590-HLW-A0-A10T-00100001	--	HLW Vitrification Building Architectural Drawing Index
24590-HLW-A5-A19T-05200001	(-)21'	HLW Vitrification Building Architectural Room Finish Schedule EL (-)21'-0"
24590-HLW-A5-A19T-05200002	(-)21'	HLW Vitrification Building Architectural Room Finish Schedule EL (-)21'0"
24590-HLW-A5-A19T-05201001	0'	HLW Vitrification Building Architectural Room Finish Schedule EL 0'-0"
24590-HLW-A5-A19T-05201002	0'	HLW Vitrification Building Architectural Room Finish Schedule EL 0'-0"
24590-HLW-A5-A19T-05201003	0'	HLW Vitrification Building Architectural Room Finish Schedule EL 0'-0"
24590-HLW-A5-A19T-05202001	11'	HLW Vitrification Building Architectural Room Finish Schedule EL 11'-0
24590-HLW-A5-A19T-05202002	11'	HLW Vitrification Building Architectural Room Finish Schedule EL 11'-0"
24590-HLW-A5-A19T-05203001	30'	HLW Vitrification Building Architectural Room Finish Schedule EL 30'-0"
24590-HLW-A5-A19T-05204001	49', 62", 76'	HLW Vitrification Building Architectural Room Finish Schedule EL 49'-0" & 62'-0" & 76/-0"

PTF DRAWING NO.	EL.	PTF DRAWING TITLE
24590-PTF-A0-A10T-00100001	--	PTF Vitrification Building Architectural Drawing Index

24590-PTF-A5-A19T-05200001	(-)45'	PTF Vitrification Building Architectural Room Finish Schedule EL (-)45'-0"
24590-PTF-A5-A19T-05201001	0'	PTF Vitrification Building Architectural Room Finish Schedule EL 0'-0"
24590-PTF-A5-A19T-05201002	0'	PTF Vitrification Building Architectural Room Finish Schedule EL 0'-0"
24590-PTF-A5-A19T-05201003	0'	PTF Vitrification Building Architectural Room Finish Schedule EL 0'-0"
24590-PTF-A5-A19T-05202001	28'	PTF Vitrification Building Architectural Room Finish Schedule EL 28'-0"
24590-PTF-A5-A19T-05202002	28'	PTF Vitrification Building Architectural Room Finish Schedule EL 28'-0
24590-PTF-A5-A19T-05202003	28'	PTF Vitrification Building Architectural Room Finish Schedule EL 28'-0"
24590-PTF-A5-A19T-05203001	56'	PTF Vitrification Building Architectural Room Finish Schedule EL 56'-0"
24590-PTF-A5-A19T-05204001	77'	PTF Vitrification Building Architectural Room Finish Schedule EL 77'-0"
24590-PTF-A5-A19T-05205001	98'	PTF Vitrification Building Architectural Room Finish Schedule EL 98'-0"

Appendix E
Color Scheme

1.0 **The finish coat on all steel items and equipment other than electrical shall be ANSI* 70 Gray or approved substitute to ANSI color standard. (*American National Standards Institute)**

2.0 **The finish coat on standard electrical components and cabinets shall be ANSI 61 Gray or approved substitute to ANSI color standard.**

3.0 **Floor coatings and sumps shall match Benjamin Moore color 2143-50 Old Prairie or approved substitute.**

4.0 **Wall coatings shall match Benjamin Moore color 2143-60 Moonlight White or approved substitute.**

5.0 **Floor coatings color shall transition over the standard coving and up the wall 6". The thickness on the floor/wall coving and wall above the floor coating shall match the wall coating thickness. For gypsum board walls refer to drawing 24590-WTP-A3-A10T-04200002, WTP process Building Architectural Common Interior Wall Details, using detail #4, Detail for typical rated wall base at concrete floor.**

Appendix F
Coating Manufacturer's Product Identity Certification Record

Project Name: _____ Coating Manufacturer: _____

Project Number: _____ Purchase Order Number: _____

Project Location: _____ Contract Number: _____

Coating Applicator: _____ Generic Coating Type: _____

Product Name: _____ Product Number: _____

(For multi-component products, provide data for all components. Provide the standard range and actual batch values for each test)

TEST RESULTS		**Component A Batch No.**		**Component B Batch No.**	
Test	**Test Method Used**	**Standard Range**	**Batch Actual**	**Standard Range**	**Batch Actual**
Weight per Gallon					
Viscosity					
Flash Point (Typical)					
% Solids by Volume (Typical)					
Cure to recoat time @ 50F, 70F & 90F (Typical)					
Batch Size					
Date of Mfg.					
Shelf Life					
Expiration Date					

COMMENTS:

I hereby certify that the coating materials described above were manufactured with the same formulation, raw materials, production methods, and quality control standards as the coating materials originally tested and/or accepted for use at the River Protection-Waste Treatment Plant (WTP) Project site, located in the 200 East Area of the Hanford Site in Washington State in accordance with the requirements of Specifications 24590-WTP-3PS-AFPS-T0001, 24590-WTP-3PS-AFPS-T0003, 24590-WTP-3PS-AFPS-T0004 & 24590-WTP-3PS-AFPS-T0006.

Signed: _____ Date: _____

Title: _____ Company: _____

Appendix G
Surface Preparation and Coating Inspection Form

Page __ of ___

REPORT NO:_____ DATE: _____
PROJECT:_____ DAY: M T W T F S S
SUBCONTRACTOR:_____ SHIFT: _____
EQUIPMENT/AREA:_____ INSPECTOR: _____
SUBSTRATE: STEEL/CONCRETE/OTHER-_____ COATING SPEC NO/REV:_____
ENVIRONMENTAL CONDITIONS:

WORK ACTIVITY						
TIME						
DRY BULB TEMP. °F						
WET BULB TEMP. °F						
RH %						
DEW POINT °F						
SURFACE TEMP. °F						
BLOTTER TEST						

PRE-SURFACE PREPARATION:
SP-1:_____ MASKING/PROTECTION:_____ SURFACE DEFECTS:_____

SURFACE PREPARATION:
METHOD:_____ ABRASIVE TYPE/SIZE/STORAGE:_____
RECYCLED ABRASIVE OIL FLOATATION TEST:_____ABRASIVE CONDUCTIVITY TEST:_____
CLEANLINESS SPEC:_____ ACTUAL:_____PROFILE SPEC:_____ ACTUAL:_____
EQUIPMENT:_____

COATING MATERIALS & MIXING:
PRODUCT(S)_____
BATCH NO(S)/QUANTITIES/EXPIRATION DATE:_____/_____/_____
THINNERS/BATCH NO(S)/THINNING RATIO:_____/_____/_____
STORAGE:_____ MIXING: _____ INDUCTION TIME:_____
MATERIAL TEMPERATURE:_____ POT LIFE EXPIRATION TIME:_____
COATING/LINING APPLICATION START TIME:_____ FINISH TIME:_____
COAT: PRIMER/PRIMER T.U./SECOND/SECOND T.U./THIRD/THIRD T.U./OTHER
METHOD:_____ WFT:_____ RECOAT TIME/TEMP:_____ CURE TIME/TEMP:_____
EQUIPMENT:_____

APPLIED COATING:
VISUAL INSPECTION (FILM IMPERFECTIONS):_____
DRY FILM THICKNESS: SPEC:_____ ACTUAL:_____ METHOD:_____
HOLIDAY TEST:_____ METHOD:_____ OTHER TESTING:_____ METHOD:_____
TOUCH-UP AND REPAIR:_____ FINAL CURE:_____

COMMENTS: (*Use reverse side or attach extra pages*)

_____/_____
INSPECTOR'S SIGNATURE/DATE

Appendix H
Manufacturer's Standard Coating Data Sheet

The SUBCONTRACTOR proposes the following Manufacturer's Standard (Mfg. Std.) or alternate coating system that is suitable for the exposure conditions of steel items and equipment in radiation and non-radiation areas.

1. **Equipment Description:** _____
   - A. Tag Number _____
   - B. Part(s) i.e. skirt, shell, channels, lugs, etc.* _____
   - C. Design/Operating Temperatures, designate °F or °C ..... _____ °F _____ °C
   - D. Does Equipment Receive Steam out (Yes/No), Temperature _____ °F _____ °C
   - E. Insulated/Uninsulated _____
   - F. Fireproofing (Yes/No) _____
   - G. Carbon Steel (CS), Stainless Steel (SS), other (List) _____
2. **SUBCONTRACTOR:**
3. **Surface Preparation:** SSPC No./Profile _____ / _____
4. **Coating System Designation:** (Code)

	First Coat	Second Coat	Third Coat
A. Type of Coating			
B. Coating Mfg./No.**			
C. Dry Film Thickness (Min/Max in mils)/(µm)			
D. Wet/Film Thickness (Min/Max in mils)/(µm)			
E. Curing Method			
F. Color			
G. Dry to Recoat			
H. Pot Life			
L. Thinner / %			

5. **Total DFT of System:** (Mils/µm)(Min/Max) ..... _____ / Min. _____ /Max.
6. **Material Storage:** Temperature Requirements (Min/Max) _____ / _____
7. **Shelf Life:** ..... _____ Months
8. **Application Environmental Limits:**
   - A. Temperature Ambient and Surface (Min/Max) ..... _____ / _____ _____ / _____
   - B. Humidity (Min/Max) ..... _____ / _____
   - C. Dew Point ≥5°F above surface temp. (Yes/No) ..... _____
9. **Protection of surfaces that will be inaccessible after equipment installation (such as underside of base plates, interior of fans, vessels or equipment housings)** _____
10. **Rust Preventative for machined faces:** (**Mfg./No.) _____
11. **Quantity of touch-up coating supplied:** _____
12. **Additional information:** (attach extra page as necessary) _____

* Use additional copies of this form for each part described in 1 above that requires a different coating system. A completed copy of this data sheet shall be submitted to CONTRACTOR with the initial vendor data submittal.

** Include manufacturer's technical data sheets and MSDS' for each proposed coating, preservative & solvent

Appendix I- Secondary Containment Installation Typical Details

- **Installation Detail 1A-Floor /Wall Junction**
- **Installation Detail 1B-Wall/Wall Junction**
- **Installation Detail 2A-Reinforced Floor/Wall Junction**
- **Installation Detail 2B-Reinforced Wall/Wall Junction**
- **Installation Detail 3A- RESERVED**
- **Installation Detail 3B-Construction Joint**
- **Installation Detail 4-Crack Repair**
- **Installation Detail 5A-Embed Plates without Steel Attachment**
- **Installation Detail 5B-Embed Plates with Steel Attachment**
- **Installation Detail 6-Perimeter Key**
- **Installation Detail 7-Floor or Wall Steel Embed With Stainless Steel Plate Overlay**

Notes- **Details 1A and 1B are used for areas containing ancillary equipment with normally open floor drains, which do not contain regulated tanks.**

Details 2A and 2B are for areas that do not have normally open floor drains or contain regulated tanks.

Detail 3A is RESERVED.

Detail 3B is to be used for construction joints within the limits of the secondary containment lining. The 3B construction joint detail, formed or created (e.g., saw-cut) rectangular slot, shall be centered over the existing concrete construction joint (Refer to Section 6.2.1.4.1).

Detail 4 is only to be used for large cracks other than minor shrinkage cracks.

Details 5A, 5B and 7 are to be used for embedded steel plates, angles, penetrations etc. The perimeter of all embeds shall be chipped back and filled as shown on detail 5A.

Detail 6 is only used where the coating system terminates in the middle of a floor.

INSTALLATION DETAIL 1A - FLOOR/WALL JUNCTION

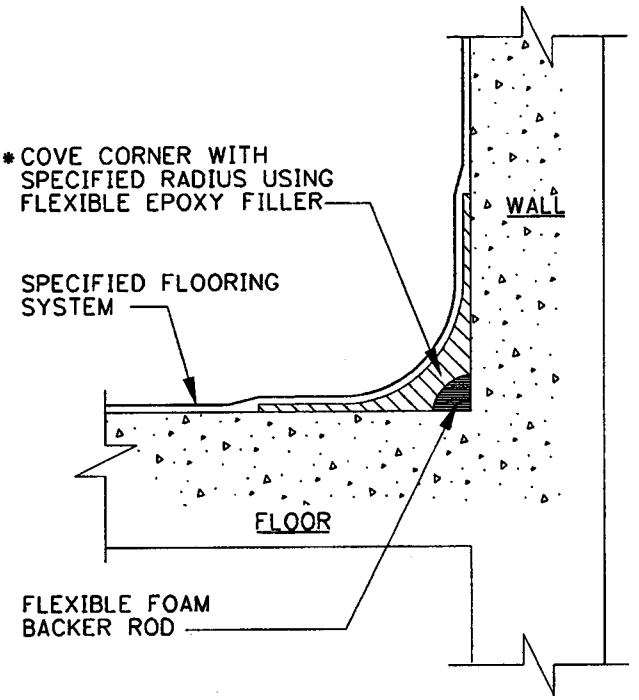

* REFER TO SPEC SECTION 6.2.1.5

INSTALLATION DETAIL 1B - WALL/WALL JUNCTION

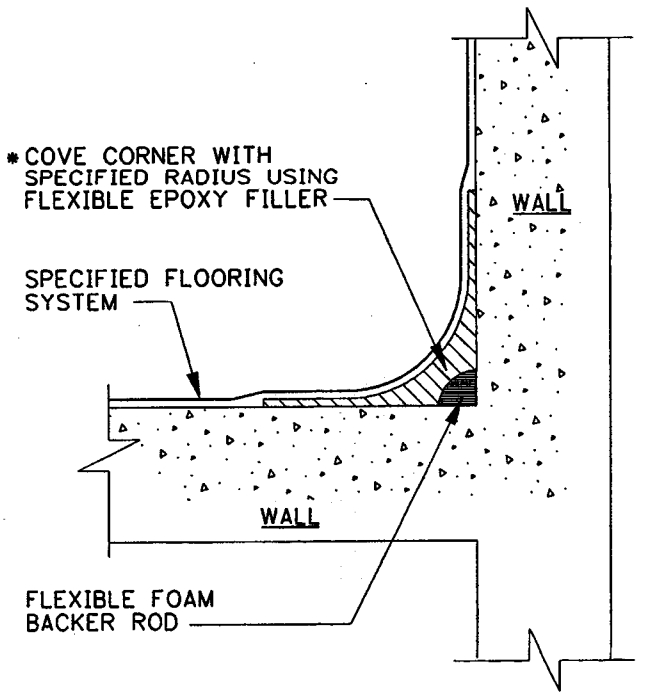

* REFER TO SPEC SECTION 6.2.1.5

INSTALLATION DETAIL 2A
REINFORCED FLOOR/WALL JUNCTION

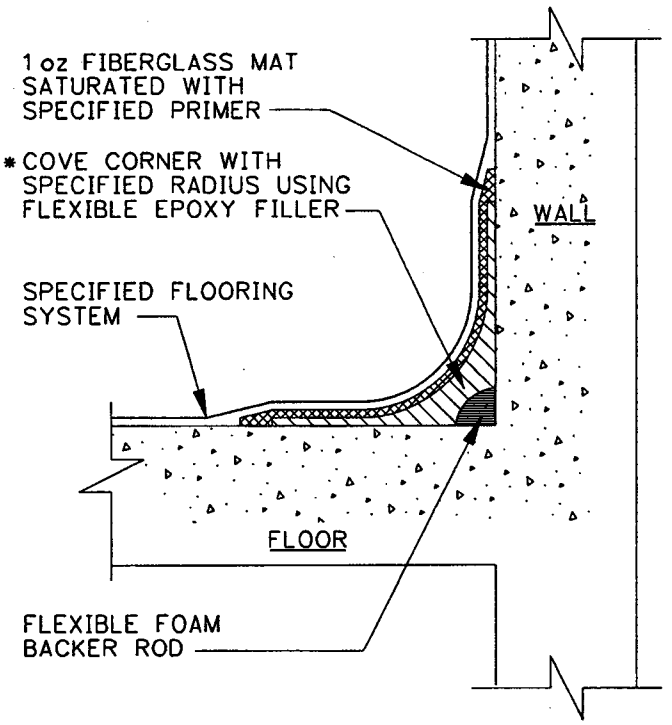

* REFER TO SPEC SECTION 6.2.1.5

INSTALLATION DETAIL 2B
REINFORCED WALL/WALL JUNCTION

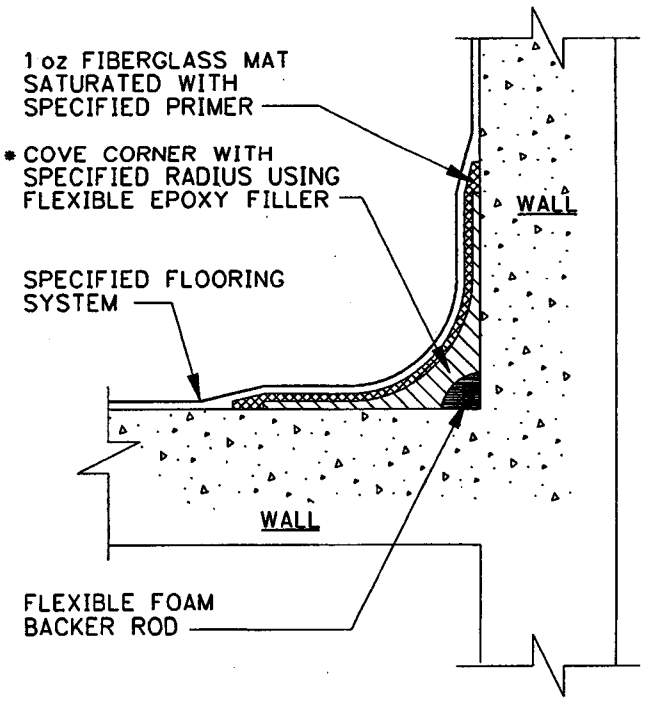

* REFER TO SPEC SECTION 6.2.1.5

INSTALLATION DETAIL 3A-

(RESERVED)

INSTALLATION DETAIL 3B - CONSTRUCTION JOINT

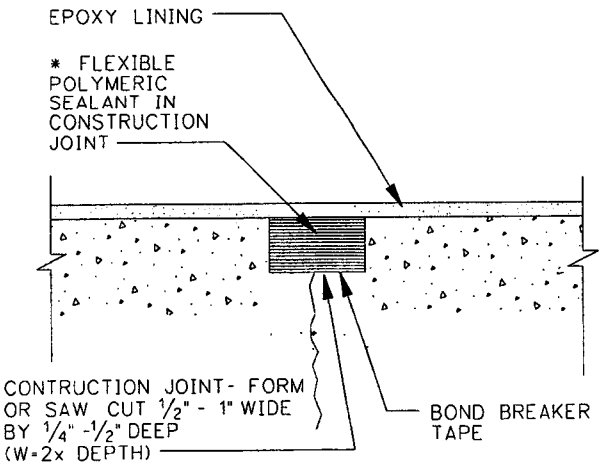

* REFER TO SPEC SECTION 6.2.1.5

CONCRETE FLOOR/WALL

INSTALLATION DETAIL 4 - CRACK REPAIR

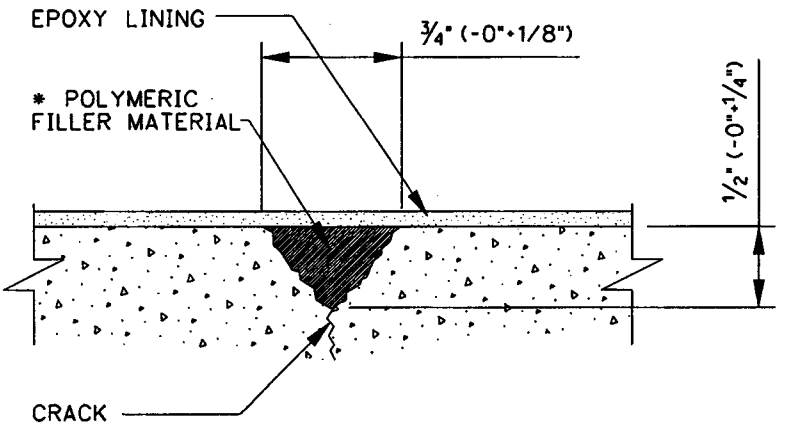

* REFER TO SPEC SECTION 6.2.1.2
CONCRETE FLOOR/WALL

INSTALLATION DETAIL 5A - EMBED PLATES
WITHOUT STEEL ATTACHMENT

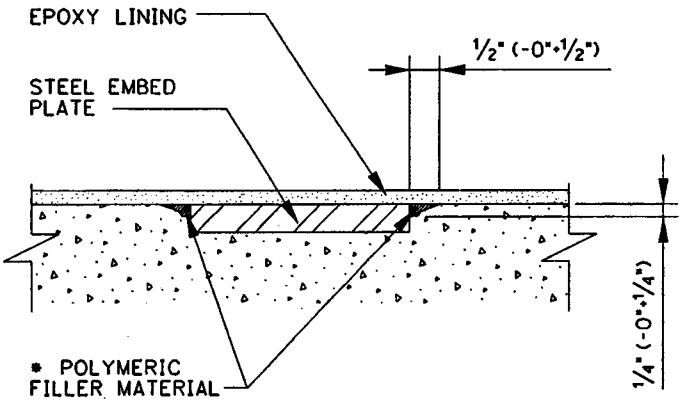

* REFER TO SPEC SECTION 6.2.1.2
CONCRETE FLOOR/WALL

INSTALLATION DETAIL 5B - EMBED PLATES
WITH STEEL ATTACHMENT

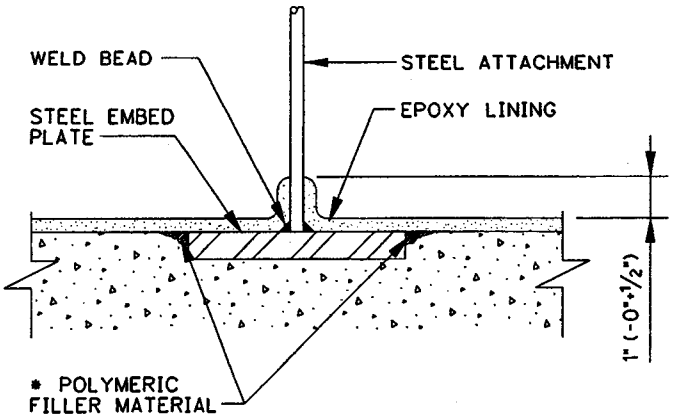

* REFER TO SPEC SECTION 6.2.1.2
CONCRETE FLOOR/WALL

INSTALLATION DETAIL 6 - PERIMETER KEY

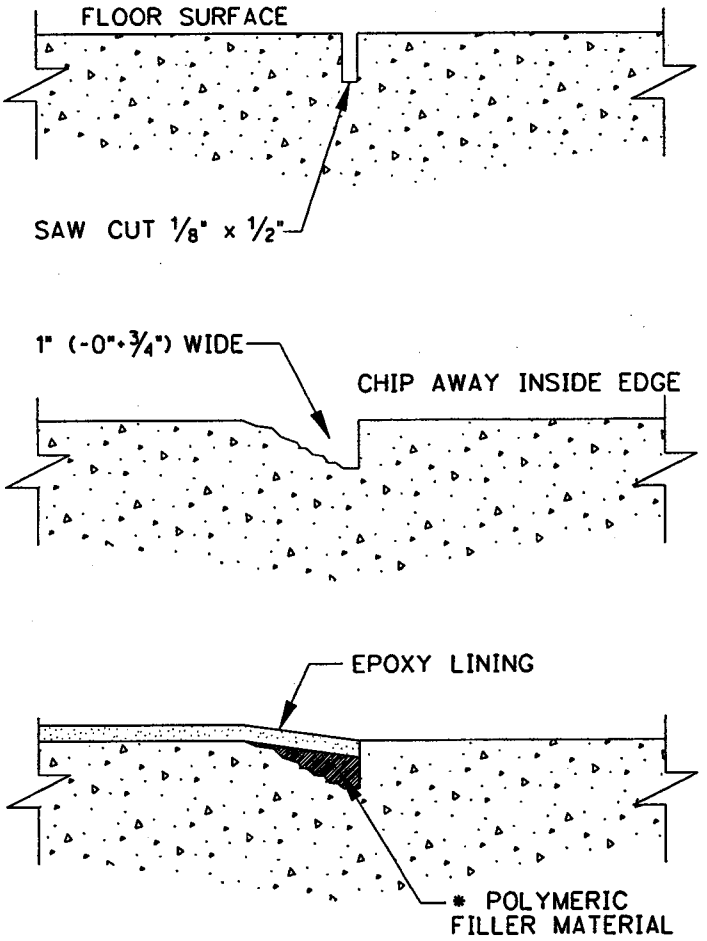

* REFER TO SPEC SECTION 6.2.1.2

INSTALLATION DETAIL 7 - FLOOR OR WALL STEEL
EMBED WITH STAINLESS STEEL PLATE OVERLAY

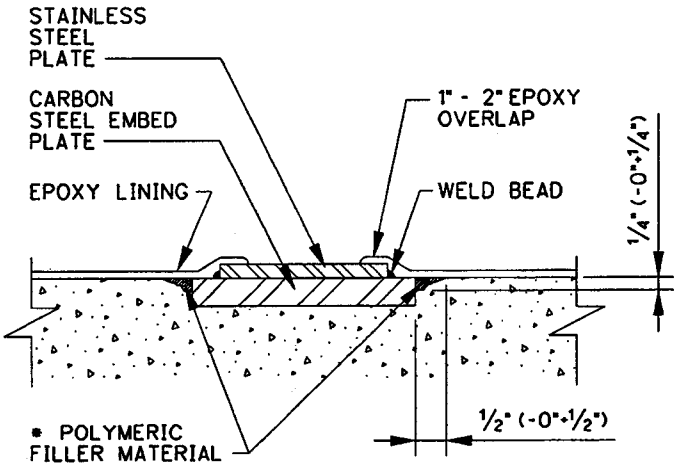

* REFER TO SPEC SECTION 6.2.1.2

CONCRETE FLOOR/WALL

R10610491

RIVER PROTECTION PROJECT – WASTE TREATMENT PLANT

ENGINEERING SPECIFICATION

FOR

Maintenance Decontamination Equipment

Content applicable to ALARA? ☒ Yes ☐ No

ADR No.
24590-WTP-ADR-M-02-006

Rev
0

ISSUED BY
RPP-WTP PDC

Quality Level
CM
DOE Contract No. DE-AC27-01RV14136

REV	DATE	BY	CHECK	REVIEW	E&NS	QA	DPEM
3	2/2/04			PHIL SNIDER		Sven Akerman	David J Wilsey
2	12/2/03	ARR	PM	DJ Wilsey		Greg T Warner	DJ Wilsey for
1	10/21/03	ARR	DL	DJ Wilsey		Greg T Warner	DJ Wilsey for
0	10/28/02	DAC	GR	DJ Wilsey		Greg T Warner	DJ WIlsey for

SPECIFICATION No.
24590-WTP-3PS-HD00-T0001

Rev
3

Revision History

Revision	Reason for Revision
0	Issued for Procurement
1	Issued for Purchase; complete revision
2	Issued for Purchase; added TOOL-00031, TOOL-00026 was Low Pressure, revised paragraphs 1.4, 4.1 and 9.7
3	Issued for Purchase; incorporated SCNs 24590-WTP-3PN-HD00-00001 thru -00005

Contents

1 Scope 1
1.1 Project Description and Location 1
1.2 Equipment, Material, and Services Required 1
1.3 Subcontract Work 4
1.4 Definitions, Acronyms and Abbreviations 4
1.5 Quality Classifications 6
2 Applicable Documents 6
2.1 General 6
2.2 Codes 6
2.3 Industry Standards 7
2.4 Project Documents 8
2.5 WTP Drawings 8
3 Design Requirements 9
3.1 General Criteria 9
3.2 Basic Requirements of Decontamination Booths and Gloveboxes 9
3.3 Basic Requirements of Decontamination Tanks 10
3.4 Basic Requirements of PTF Decon Tanks 11
3.5 Basic Requirements of Spray Lances 11
3.6 Basic Requirements of Decontamination Blast and Spray Equipment 12
3.7 Basic Requirements of Crane Decontamination Equipment 12
3.8 Basic Requirements of Parts Washer 13
3.9 Features of Decontamination Booths and Gloveboxes 13
3.10 Features of HLW Decontamination Tanks and Spray System 14
3.11 Major features of the PTF Decon Tank include, but are not limited to: 16
3.12 Design Life 16
3.13 Environmental Conditions 17
3.14 Mechanical Requirements For Decontamination Booths and Gloveboxes 17
3.15 Mechanical Requirements For Decontamination Tanks 17
3.16 Mechanical Requirements For Spray Lances 18
3.17 Mechanical Requirements For Decontamination Blast and Spray Equipment 18
3.18 Mechanical Requirements For Crane Decontamination Equipment 18
3.19 Seismic Loading 18
3.20 Electrical Requirements 18
3.21 Accessibility and Maintenance 19
4 Materials 19
4.1 Construction 19

4.2 Spray Lances 20
4.3 Equipment Subject to Radiation: 20
4.4 Prohibited Materials 20
5 Fabrication 20
5.1 General 20
5.2 Decontamination Tanks 21
5.3 Crane Decontamination Equipment 23
6 Tests and Inspections 24
6.1 General 24
6.2 Decontamination Booths and Gloveboxes 25
6.3 Decontamination Tanks and Spray System 25
6.4 Spray Lances 26
6.5 Decontamination Blast or Spray Equipment 26
6.6 Crane Decontamination Equipment 27
6.7 Parts Washer 27
7 Preparation for Shipment 27
7.1 General 27
7.2 Surface Preparation 27
7.3 Painting and Coatings 27
7.4 Tagging 27
7.5 Packaging 28
7.6 Documentation 29
8 Quality Assurance 29
8.1 QA Requirements Specific to Items or Services 29
8.2 Program QA Elements 29
9 Configuration Management 30
9.1 General 30
9.2 Meeting Minutes 30
9.3 Design Compliance Matrix 30
9.4 Submittals 30
9.5 Quality Assurance Plan 30
9.6 Drawings 30
9.7 Design Reviews and Meetings 31
9.8 Procedures 32
9.9 Manuals 32
9.10 SDDRs 33

Appendices

Appendix A HLW Decontamination Tank Instrumentation and Control System.....34
Appendix B Equipment Plant Item Numbers and Datasheet Numbers.....35

1 Scope

1.1 Project Description and Location

Decontamination equipment will be used in four facilities: High Level Waste (HLW), Low Activity Waste (LAW), the Pre-Treatment Facility (PTF), and the Analytical Laboratory (LAB). Decontamination entails the removal of unwanted radiological fixed and loose surface contaminants using various mechanical and chemical processes. Gloveboxes provide containment for manual methods of decontaminating smaller parts prior to repair. Decontamination booths provide containment allowing decontamination of larger pieces of equipment. Tanks and spray systems will accommodate in-cell decontamination of large equipment. Spray lances will be provided through-wall in strategic locations to decontaminate equipment using liquid spray or CO2 blasting methods. Spray lances will also be used inside gloveboxes and decontamination booths. Portable decontamination spray or blast supply equipment will deliver the decontamination media to lances for decontaminating plant equipment. Joggle plugs (by others) will be provided for through wall penetrations of spray and blast unit hoses, to maintain the radiological boundary and allow for future process changes and spraying equipment removal and replacement from out cell. Other miscellaneous decontamination equipment includes parts washers and a crane decontamination system

1.2 Equipment, Material, and Services Required

The Seller shall provide all materials, hardware and labor to design, fabricate, assemble, inspect, functionally test, document and package the listed equipment as provided in this specification, other applicable drawings or documentation referenced.

Mandatory technical requirements and design constraints are typically indicated on data sheets, drawings and specifications by use of terms such as "shall", "required", "mandatory", "maximum", "minimum", or "not to exceed", or by other use of notes. Examples of mandatory technical requirements are dimensions and their associated tolerances, bounding locations of center of gravity (CG) or estimated weight not to be exceeded.

Seller scope of work includes, but is not limited to:

- Seller shall be responsible for the technical adequacy of the design furnished, including constructability, reliability, operability, and maintainability.
- Equipment fabricated and assembled in compliance with this specification, and the referenced codes and standards
- Examination/inspection
- Packaging and preparation for shipping
- Submittals as identified in this specification and summarized on G321-E and G321-V forms.
- Providing the Buyer full access to the Seller's facility for performing inspections or surveillance of any work performed within the scope of the contract
- Installation, Operation, and Maintenance Manuals
- Supporting calculations and analyses, when defined
- Any special tools or handling equipment required for assembly, erecting, maintenance, or disassembly of the gloveboxes, decontamination booths, or other deliverable equipment

- Factory acceptance testing where required
- Loading of equipment on Buyer-arranged conveyances.
- Field support for installation and testing, when required.

The Seller shall submit parts lists and costs for equipment summarized in the G321-E form.

Referenced Design Proposal Drawing (DPD) listed in section 2.5, Mechanical Data Sheets (MDS) listed in Appendix B, and Technical Specification lists details and other requirements of deliverable equipment.

The following deliverable equipment is included within the Seller's scope of work:

Decontamination Tanks

DOCUMENT NUMBER	DESCRIPTION	PLANT ITEM NUMBER
24590-HLW-M0-HSH-00071	DPD, HSH Decontamination Tank Assembly, Melter 1	24590-HLW-MT-HSH-TK-00001
24590-HLW-M0-HSH-00074	DPD, Decontamination Tank Pump Support Package, Melter 1	24590-HLW-MT-HSH-TK-00003
24590-HLW-M0-HSH-00071	DPD, HSH Decontamination Tank Assembly, Melter 2	24590-HLW-MT-HSH-TK-00002
24590-HLW-M0-HSH-00074	DPD, Decontamination Tank Pump Support Package, Melter 2	24590-HLW-MT-HSH-TK-00004
24590-PTF-M0D-PIH-00015	MDS, PTF Decon Tank at PIH	24590-PTF-MT-PIH-TK-00001
24590-PTF-M0-PIH-00019	DPD, PTF Decon Tank at PIH	24590-PTF-MT-PIH-TK-00001

Booths and Gloveboxes

DOCUMENT NUMBER	DESCRIPTION	PLANT ITEM NUMBER
24590-PTF-M0-M17T-00001	PTF Maintenance Decontamination Booth	24590-WTP-MH-10-MHAN-00004
24590-PTF-M0-M10T-00051	PTF Maintenance Decontamination Glovebox	24590-WTP-MH-10-MHAN-00005
24590-LAW-M0-M17T-00001	LAW Maintenance Decontamination Booth	24590-WTP-MH-20-MHAN-00004
24590-LAW-M0-M10T-00003	LAW Maintenance Decontamination Glovebox	24590-WTP-MH-20-MHAN-00005
24590-HLW-M0-M17T-00009	HLW Maintenance Decontamination Booth	24590-WTP-MH-30-MHAN-00004
24590-HLW-M0-M10T-00077	HLW Maintenance Decontamination Glovebox	24590-WTP-MH-30-MHAN-00007
24590-LAB-M0-M10T-00002	LAB Decontamination Glovebox	24590-WTP-MH-60-MHAN-00003

Miscellaneous Equipment

DOCUMENT NUMBER	DESCRIPTION	PLANT ITEM NUMBER
24590-HLW-M0-HSH-00078	Crane Decontamination System, Melter 1	24590-HLW-MH-HSH-MHAN-00011
24590-HLW-M0D-HSH-00150	Parts Washer, Melter 1	24590-HLW-MH-HSH-MHAN-00041
24590-HLW-M0-HSH-00078	Crane Decontamination System, Melter 2	24590-HLW-MH-HSH-MHAN-00055
24590-HLW-M0D-HSH-00212	Parts Washer, Melter 2	24590-HLW-MH-HSH-MHAN-00057
24590-HLW-M0D-30-00266	Pressure Washing Supply System, Unit 1	24590-HLW-30-TOOL-00028
24590-HLW-M0D-30-00267	Pressure Washing Supply System, Unit 2	24590-HLW-30-TOOL-00029
24590-PTF-M0D-M17T-00002	PTF CO2 Decontamination Blast Unit	24590-WTP-MZ-10-MAINT-00001
24590-PTF-M0D-M10T-00007	Roaming CO2 Decontamination Blast Unit	24590-WTP-MZ-10-MAINT-00002
24590-LAW-M0D-M17T-00002	LAW CO2 Decontamination Blast Unit	24590-WTP-MZ-20-MAINT-00001
24590-HLW-M0D-M17T-00017	HLW CO2 Decontamination Blast Unit	24590-WTP-MZ-30-MAINT-00002
24590-HLW-M0D-M10T-00030	Roaming CO2 Decontamination Blast Unit	24590-WTP-MZ-30-MAINT-00004
24590-LAB-M0D-M10T-00003	C3 Workshop CO2 Decontamination Blast Unit	24590-WTP-MZ-60-MAINT-00001
24590-PTF-M0D-PIH-00031	Pressure Washing Supply System, PTF Portable Unit	24590-PTF-PIH-TOOL-00037

Spray Lances

DOCUMENT NUMBER	DESCRIPTION	PLANT ITEM NUMBER

DOCUMENT NUMBER	DESCRIPTION	PLANT ITEM NUMBER
24590-HLW-M0D-HSH-00123	MDS, Maintenance Area Manual Spray Lance, Melter 1	24590-HLW-FH-HSH-TOOL-00027
24590-HLW-M0D-HSH-00124	MDS, Maintenance Area Upper Manual Spray Lance, Melter 1	24590-HLW-FH-HSH-TOOL-00028
24590-HLW-M0D-HSH-00125	MDS, Decontamination Area Manual Spray Lance, Melter 1	24590-HLW-FH-HSH-TOOL-00018
24590-HLW-M0D-HSH-00134	MDS, Decontamination Area Manual CO2 Spray Lance, Melter 1	24590-HLW-FH-HSH-TOOL-00029
24590-HLW-M0D-HSH-00137	MDS, Melter Cave Decontamination Spray Lance, Melter 1	24590-HLW-FH-HSH-TOOL-00031
24590-HLW-M0D-HSH-00126	MDS, Decontamination Pit Lower Remote Spray Lance, Melter 1	24590-HLW-FH-HSH-TOOL-00020
24590-HLW-M0D-HSH-00127	MDS, Decontamination Pit Lower Remote CO2 Spray Lance, Melter 1	24590-HLW-FH-HSH-TOOL-00022
24590-HLW-M0D-HSH-00135	MDS, Decontamination Pit Upper Remote Spray Lance, Melter 1	24590-HLW-FH-HSH-TOOL-00023
24590-HLW-M0D-HSH-00136	MDS, Melter Cave Remote CO2 Spray Lance, Melter 1	24590-HLW-FH-HSH-TOOL-00030
24590-HLW-M0D-HPH-00094	MDS, Spray Lance, Decon Area, Pour Tunnel 1H-B019A	24590-HLW-FH-HPH-TOOL-00010
24590-HLW-M0D-HSH-00217	MDS, Maintenance Area Manual Spray Lance, Melter 2	24590-HLW-FH-HSH-TOOL-00042
24590-HLW-M0D-HSH-00218	MDS, Maintenance Area Upper Manual Spray Lance, Melter 2	24590-HLW-FH-HSH-TOOL-00043
24590-HLW-M0D-HSH-00213	MDS, Decontamination Area Manual Spray Lance, Melter 2	24590-HLW-FH-HSH-TOOL-00039
24590-HLW-M0D-HSH-00219	MDS, Decontamination Area Manual CO2 Spray Lance, Melter 2	24590-HLW-FH-HSH-TOOL-00044
24590-HLW-M0D-HSH-00221	MDS, Melter Cave Decontamination Spray Lance, Melter 2	24590-HLW-FH-HSH-TOOL-00046
24590-HLW-M0D-HSH-00214	MDS, Decontamination Pit Lower Remote Spray Lance, Melter 2	24590-HLW-FH-HSH-TOOL-00040
24590-HLW-M0D-HSH-00215	MDS, Decontamination Pit Lower Remote CO2 Spray Lance, Melter 2	24590-HLW-FH-HSH-TOOL-00048
24590-HLW-M0D-HSH-00216	MDS, Decontamination Pit Upper Remote Spray Lance, Melter 2	24590-HLW-FH-HSH-TOOL-00041
24590-HLW-M0D-HSH-00220	MDS, Melter Cave Remote CO2 Spray Lance, Melter 2	24590-HLW-FH-HSH-TOOL-00045
24590-HLW-M0D-HPH-00238	MDS, Spray Lance, Bogie Decon, Pour Tunnel 2	24590-HLW-FH-HPH-TOOL-00029
24590-HLW-M0D-HPH-00093	MDS, Spray Lance, Decontamination H343 (remote)	24590-HLW-FH-HPH-TOOL-00015
24590-HLW-M0D-HRH-00018	MDS, Spray Lance, Decontamination HB045	24590-HLW-FH-HRH-TOOL-00003
24590-HLW-M0D-HDH-00043	MDS, Canister Rinse Tunnel Spray Lance (CO2)	24590-HLW-FH-HDH-TOOL-00006
24590-HLW-M0D-HDH-00044	MDS, Canister Rinse Bogie Spray Lance	24590-HLW-FH-HDH-TOOL-00007
24590-HLW-M0D-HMH-00002	MDS, Decon Spray Lance (Air Lock Melter Sump 1)	24590-HLW-FH-HMH-TOOL-00001
24590-HLW-M0D-HMH-00003	MDS, Decon Spray Lance (Air Lock Melter Sump 2)	24590-HLW-FH-HMH-TOOL-00002
24590-HLW-M0D-HFH-00045	MDS, Power Manipulator Spray Lance (water)	24590-HLW-FH-HFH-TOOL-00010
24590-HLW-M0D-HFH-00046	MDS, Power Manipulator Spray Lance (CO2)	24590-HLW-FH-HFH-TOOL-00013
24590-HLW-M0D-RWH-00077	MDS, Spray Lance, Remote (CO2)	24590-HLW-FH-RWH-TOOL-00019
24590-HLW-M0D-RWH-00044	MDS, Spray Lance, Manual (CO2)	24590-HLW-FH-RWH-TOOL-00022
24590-HLW-M0D-RWH-00043	MDS, Spray Lance, Remote (liquid)	24590-HLW-FH-RWH-TOOL-00020
24590-PTF-M0D-PFH-00030	MDS, Crane Decon Manual CO2 Spray Lance	24590-PTF-FH-PFH-TOOL-00017
24590-PTF-M0D-PFH-00028	MDS, Decontamination Chamber Remote CO2 Spray Lance	24590-PTF-FH-PFH-TOOL-00015
24590-PTF-M0D-PIH-00014	MDS, Maintenance Area Remote CO2 Spray Lance	24590-PTF-FH-PIH-TOOL-00024
24590-PTF-M0D-RWH-00065	MDS, Spray Lance, P-0121A	24590-PTF-FH-RWH-TOOL-00016
24590-PTF-M0D-RWH-00066	MDS, Spray Lance, P-0122A	24590-PTF-FH-RWH-TOOL-00017
24590-PTF-M0D-RWH-00067	MDS, Spray Lance, P-0223	24590-PTF-FH-RWH-TOOL-00018
24590-PTF-M0D-PIH-00026	MDS, Low Pressure Spray Lance, Maintenance Cave Area	24590-PTF-FH-PIH-TOOL-00028
24590-PTF-M0D-PIH-00027	MDS High Pressure Spray Lance, Maintenance Cave Area	24590-PTF-FH-PIH-TOOL-00026
24590-PTF-M0D-PIH-00028	MDS, Low Pressure Spray Lance, Maintenance Cave Area	24590-PTF-FH-PIH-TOOL-00027
24590-PTF-M0D-PWD-00001	MDS, Low Pressure Spray Lance, Hot Cell Area	24590-PTF-FH-PWD-TOOL-00001
24590-PTF-M0D-PWD-00002	MDS, Low Pressure Spray Lance, Hot Cell Area	24590-PTF-FH-PWD-TOOL-00002
24590-PTF-M0D-PWD-00003	MDS, Low Pressure Spray Lance, Hot Cell Area	24590-PTF-FH-PWD-TOOL-00003
24590-PTF-M0D-PWD-00004	MDS, Low Pressure Spray Lance, Hot Cell Area	24590-PTF-FH-PWD-TOOL-00004
24590-PTF-M0D-PWD-00005	MDS, Low Pressure Spray Lance, Hot Cell Area	24590-PTF-FH-PWD-TOOL-00005
24590-PTF-M0D-PWD-00006	MDS, Low Pressure Spray Lance, Hot Cell Area	24590-PTF-FH-PWD-TOOL-00006
24590-PTF-M0D-PWD-00007	MDS, Low Pressure Spray Lance, Hot Cell Area	24590-PTF-FH-PWD-TOOL-00007
24590-PTF-M0D-PWD-00008	MDS, Low Pressure Spray Lance, Hot Cell Area	24590-PTF-FH-PWD-TOOL-00008
24590-PTF-M0D-PWD-00009	MDS, Low Pressure Spray Lance, Hot Cell Area	24590-PTF-FH-PWD-TOOL-00009
24590-PTF-M0D-PWD-00010	MDS, Low Pressure Spray Lance, Hot Cell Area	24590-PTF-FH-PWD-TOOL-00010

DOCUMENT NUMBER	DESCRIPTION	PLANT ITEM NUMBER
24590-PTF-M0D-PWD-00011	MDS, Low Pressure Spray Lance, P-0119	24590-PTF-FH-PWD-TOOL-00011
24590-PTF-M0D-PFH-00039	MDS, Spray Lance, Remote H2O	24590-PTF-FH-PFH-TOOL-00016

The following items and services, not included in the Seller's scope of work, will be supplied by the Buyer:

- Transportation of products to the jobsite; refer to Section 7 of the purchase order for the Seller's requirements pertaining to packaging and shipping.
- Unloading, storage, installation and field-testing at the jobsite, except where Seller's assistance is required.
- Field installation of fire protection in gloveboxes and decontamination booths
- Embed plates, joggle plugs, and through wall liners
- Exhaust Ventilation equipment for gloveboxes and decontamination booths, (including HEPA filters and ducting). Exhaust demisters are within Seller's scope and shall be supplied by the Seller.
- Two ton hoist for decontamination booths
- Jumper nozzles for decontamination tank piping when specified
- Electrical and instrumentation jumpers for wiring when specified

1.3 Subcontract Work

The Seller may subcontract any portion of the design, fabrication, or assembly provided it meets the quality assurance requirements of this specification. Unless specified otherwise, the Seller is responsible for performance of all inspections and testing, including receipt and control of raw material through fabrication, testing, and configuration control to assure conformance with the requirements stated within in this specification. The subcontractor and subcontracted work shall be reviewed by the Buyer prior to starting the work. The Seller will be ultimately responsible for the completeness and quality of all materials included in this specification.

1.4 Definitions, Acronyms and Abbreviations

Glovebox	The Glovebox is a mechanism used for the containment of contaminated equipment during decontamination and repair.
Shall	Indicates a mandatory requirement for all actions of the Seller
AFBMA	Anti-Friction Bearing Manufacturers Association
AGS	American Glovebox Society
ANSI	American National Standard Institute
ASME	American Society of Mechanical Engineers
ASNT	American Society for Non-Destructive Testing
ASTM	American Society for Testing and Materials
AWS	American Welding Society
CFR	Code of Federal Regulations

DPD	Design Proposal Drawing
HEPA	High Efficiency Particulate Air
HLW	High Level Waste
ILAW	Immobilized Low Active Waste
ITS	Important to Safety
LAW	Low Active Waste
LAB	Analytical Laboratory
MDS	Mechanical Data Sheet – Design document that describes equipment specific requirements and conditions.
MSDS	Material Safety Data Sheet
MSM	Master Slave Manipulator
MR	Material Requisition
NACE	National Association of Corrosion Engineers
NEC	National Electric Code
NDE	Non-destructive Examination
NEMA	National Electrical Manufacturers Association
NFPA	National Fire Protection Association
OSHA	Occupational Safety and Health Administration
P&ID	Piping and Instrumentation Diagram
PIL	Plant Item List
PQR	Procedure Qualification Record
PTF	Pre-Treatment Facility
QL	Quality Level
QAP	Quality Assurance Program
RPP-WTP	River Protection Project – Waste Treatment Plant
SSC	Structure, System or Component
SSPC	Steel Structures Painting Council
UBC	Uniform Building Code
USCS	U.S. Customary System "inch-pound system"
UNC	Unified National Coarse
WPS	Welding Procedure Specification
w.g.	Water gauge
CG	Center of Gravity
RRC	Risk Reduction Class
CM	Commercial

SC	Seismic Category
PV	Pressure Vessel
RTD	Resistance Temperature Detector
VT	Visual Inspection

1.5 Quality Classifications

1.5.1 General

All equipment shall be purchased as Commercial Quality equipment.

For Quality Assurance requirements refer to Section 8 of this specification.

2 Applicable Documents

2.1 General

Work shall be done in accordance with the referenced codes, standards, and documents listed below, which are an integral part of this specification. If the Seller determines other documents, than those listed, are applicable, the Seller shall refer those documents to the Buyer for evaluating the applicability to the specific component or equipment.

When specific chapters, sections, parts, or paragraphs are listed following a code, industry standard, or reference document, only those chapters, sections, parts, or paragraphs of the document are applicable and shall be applied. When more than one code, standard, or reference document covers the same topic, the requirements for all must be met.

For codes and standards listed below, the specific revision or effective date identified, as well as the specific revision or effective date of codes and standards that they incorporate by reference (daughter codes and standards), shall be followed. If a date or revision is not identified, the last issue, including addenda, at the time of quotation shall apply.

Any known conflicts between the specification or drawings, and the applicable codes and standards, shall be brought to the attention of the Buyer, via a Supplier Deviation Disposition Request (SDDR), for resolution prior to start of work. A blank SDDR form can be found in Section 2.5 of the MR.

The document revision in effect at the time of contract award shall govern, unless specified otherwise. The use of any other edition, revision, or issue of a reference document requires Buyer's approval.

2.2 Codes

NEC (NFPA 70)	National Electric Code
DOE-STD-1066-97, (Chapter 15)	Fire Protection Design Criteria, Glovebox Fire Protection
DOE Order 0 414.1A, 9/29/99	Quality Assurance
NFPA 801, Section 7.4	Standard for Fire Protection for Facilities Handling Radioactive Materials, 2003 Edition

2.3 Industry Standards

2.3.1 Occupational Health & Safety Administration (OHSA)

29 CFR 1910.23	Guarding Floor and Wall Opening and Holes

2.3.2 American Glovebox Society

AGS-G001	Guideline for Gloveboxes, 1998

2.3.3 American National Standard Institute (ANSI)/American Welding Society (AWS)

ANSI/AWS D1.1	Structural Welding Code – Steel
ANSI/AWS D1.6	Structural Welding Code - Stainless Steel
ANSI/AWS D9.1	Sheet Metal Welding Code

2.3.4 American Petroleum Institute (API)

API 620	Design and Construction of Large, Welded, Low Pressure Storage Tanks, 10th edition, Feb. 1, 2002

2.3.5 American Society of Mechanical Engineers (ASME)

ASME B31.3	Process Piping, 1996
ASME Y14.5M	Dimensioning and Tolerancing

2.3.6 American Society for Nondestructive Testing (ASNT)

SNT-TC-1A	Recommended Practice No. SNT-TC-1A Personnel Qualification and Certification in Nondestructive Testing, 1980

2.3.7 International Electrotechnical Commission (IEC)

IEC 60529	Degrees of Protection Provided by Enclosures

2.3.8 Underwriters Laboratory (UL)

UL 1776	High Pressure Cleaning Machine

2.3.9 Steel Structures Painting Council (SSPC)

SSPC-SP1	Solvent Cleaning

2.3.10 Pipe Fabrication Institute (PFI)

ES-24	Pipe Bending Methods, Tolerances, Processes and Material Requirements

2.4 Project Documents

The document revision in the associated MR (Material Requisition)/PO package documents shall govern.

The following is a list of other WTP specifications that have been invoked by WTP specifications referenced, or their subsequent daughter specifications that may not have been specifically listed:

- *Engineering Specification for Packaging, Handling, and Storage Requirement,* 24590-WTP-3PS-G000-T0003.
- *General Specification for Supplier Quality Assurance Program Requirements,* 24590-WTP-3PS-G000-T0001.
- *General Specification for Mechanical Handling Equipment Design and Manufacture,* 24590-WTP-3PS-M000-T0002.
- *Engineering Specification for Instrumentation for Package Systems,* 24590-WTP-3PS-JQ07-T0001
- *Engineering Specification for Electrical Requirements for Packaged Equipment,* 24590-WTP-3PS-EKP0-T0001.
- *Specification for Tank Welding,* 24590-WTP-3PS-MTSS-T0001.
- *Engineering Specification for Welding of Structural Stainless Steel and Welding of Structural Carbon Steel to Structural Stainless Steel,* 24590-WTP-3PS-SS00-T0002.
- *Engineering Specification for Structural Design Loads for Seismic Category III & IV Equipment and Tanks,* 24590-WTP-3PS-FB01-T0001.
- *Engineering Specification for Piping Material Classes,* 24590-WTP-3PS-P000-T0001.
- *Piping Material Classification, Pipe Class S11B,* 24590-WTP-3PB-P000-TS11B.
- *Engineering Specification for Pressure Vessel Design and Fabrication,* 24590-WTP-3PS-MV00-T0001.
- *Engineering Specification for Welding of Carbon Structural Steel,* 24590-WTP-3PS-SS00-T0001.
- *Engineering Specification for Positive Material Identification,* 24590-WTP-3PS-G000-T0002.
- Technical Supply Condition for Valves, 24590-WTP-3PS-PV00-T0001.
- *Engineering Specification for Shop Fabrication of Piping,* 24590-WTP-3PS-PS02-T0001.
- *Engineering Specification for Actuators for ON/OFF Valves,* 24590-WTP-3PS-JV15-T0001
- *Engineering Specification for Shop Applied Special Protective Coatings to Steel Items and Equipment,* 24590-WTP-3PS-AFPS-T0001

2.5 WTP Drawings

The document revision listed in the MR package for WTP documents shall govern.

2.5.1 Design Proposal Drawings

2.5.1.1 Decontamination Booths and Gloveboxes

Document Number	Document Description
24590-PTF-M0-M17T-00001	PTF Maintenance Decontamination Booth
24590-PTF-M0-M10T-00051	PTF Maintenance Decontamination Glovebox

24590-LAW-M0-M17T-00001	LAW Maintenance Decontamination Booth
24590-LAW-M0-M10T-00003	LAW Maintenance Decontamination Glovebox
24590-HLW-M0-M17T-00009	HLW Maintenance Decontamination Booth
24590-HLW-M0-M10T-00077	HLW Maintenance Decontamination Glovebox
24590-LAB-M0-M10T-00002	LAB Maintenance Decontamination Glovebox

2.5.1.2 Decontamination Tanks and Spray System

Document Number	Document Description
24590-HLW-M0-HSH- 00071	HSH Decontamination Tank Assembly
24590-HLW-M0-HSH- 00072	Decontamination Tank
24590-HLW-M0-HSH- 00073	Decontamination Tank Spray and Sparge System
24590-HLW-M0-HSH- 00074	Decontamination Tank Pump Support Package
24590-HLW-M0-HSH-00075	Decontamination Tank Process Flow Diagram
24590-HLW-M0-HSH- 00076	Decontamination Tank Discharge Filter Assembly
24590-HLW-M0-HSH- 00077	Decontamination Tank Drip Pan
24590-PTF-M0-PIH-00019001	PTF Decon Tank at PIH
24590-PTF-M0-PIH-00019002	PTF Decon Tank at PIH

2.5.1.3 Miscellaneous Decontamination Equipment

Document Number	Document Description
24590-HLW-M0-HSH- 00078	Crane Decontamination System

3 Design Requirements

3.1 General Criteria

It is not the intent to specify herein all details of design and construction. It shall be the responsibility of the Seller to supply equipment that has been designed and fabricated in accordance with specified codes and standards, and to apply a standard of workmanship suitable for the intended purpose. Buyer weight and CG calculations are preliminary and bounding for Buyer's civil/structural use only. Seller shall provide weight and CG calculations and mark deliverable equipment when specified, as noted on associated DPDs.

3.2 Basic Requirements of Decontamination Booths and Gloveboxes

The Seller shall furnish the gloveboxes and decontamination booths complete with required auxiliary systems, instruments, and safety devices to provide efficient and safe operations. This shall include, but is not limited to the following:

- Maximum bounding weight is 2,718 lb. for LAW, HLW and PTF gloveboxes and 20,375 lb. for decontamination booths The LAB Glovebox bounding weight is 6000 lb an the LAB Glovebox Platform bounding weight is 5264 lb.
- Provide required shielding when specified as material thickness on DPDs.
- Provide a means for passing manual swab samples outside the glovebox and decontamination booth.
- The glovebox and decontamination booth lighting shall be external and fluorescent.

Decontamination Booth and Glovebox Seismic Criteria is SCIII. The Safety Class is Not Important to Safety.

3.2.1 Shielding Requirements

For all material thickness requirements refer to the glovebox and decontamination booth DPD listed in Section 2.5.1. Material thickness specified shall be considered minimum.

Recessed areas or internal pockets shall not reduce the required minimum shielding thickness of the glovebox.

3.3 Basic Requirements of Decontamination Tanks

The tank shall be designed and fabricated in accordance with API 620 and 24590-WTP-3PS-MTSS-T0001. Vibro-etching may be used as an alternative to the low stress stamping required in 24590-WTP-3PS-MTSS-T0001 to record welder/weld joint traceability.The tank shall not be a stamped vessel. Tank piping nozzle loads, nozzle reinforcing and nozzle orientation for jumpers shall be in accordance with 24590-WTP-3PS-MV00-T0001, Section 3, *Pressure Vessel Design and Fabrication.*

Process piping shall be designed in accordance with the applicable requirements identified in ASME B31.3 and project specification 24590-WTP-3PS-P000-T0001, *Engineering Specification for Piping Material Classes.* The piping material class for interfacing to the Buyer provided jumper piping shall be in accordance with 24590-WTP-3PB-P000-TS11B, *Piping Material Classification, Pipe Class* S11B. Piping fabrication shall be in accordance with 24590-WTP-3PS-PS02-T0001, *Engineering Specification for Shop Fabrication of Piping.*

Seller shall consider design details and material thickness shown on Drawings as the minimum requirements. Seller shall not scale Drawings.

The decontamination tanks shall have a quality level of "CM", (commercial). The safety class is "RRC". The Seismic Criteria is "SC-III".

Local gamma dose rates in the general area of each decontamination tank shall be 10,000 mrad/hr maximum. Neutron dose rates are negligible.

The temperatures in the rooms housing the decontamination tanks shall be 59°F minimum and 95°F maximum; humidity varies between 5% and 100%. Operating temperatures controls for each tank shall be capable of being set and maintained at selected temperatures between 59°F and 240°F.

The chemical delivery and control system (HLW tanks only) shall be designed in accordance to the Pump Support Package DPD (24590-HLW-M0-HSH-00074) and process flow diagram (24590-HLW-M0-

HSH-00075). The pump support package shall have a structural frame and stainless steel sheet metal cover. The frame shall provide sufficient rigidity to achieve and maintain illustrated tolerances throughout the working lifetime of the tank. The sheet metal cover shall provide lance overspray, drip and splash protection of internal components and provide a means of pump heat rejection. The requirements of the pump support package include, but are not limited to:

- Tank heating and agitation using steam sparging
- Tank agitation using air sparging
- High volume, high pressure spray
- Injection of chemicals
- Recirculation of fluids
- Neutralization of chemicals
- Sample waste stream
- Transfer of fluids from the tank to radioactive waste disposal system
- Remote disassembly

The Decontamination Tank Spray and Sparge System (HLW tanks only) primary function is to:

- Provide a support structure to deliver and disperse sprays at predetermined levels
- Protect the tank shell from physical damage due to contact with items being cleaned
- Provide a stepped support structure for templates suspending items for cleaning. The maximum suspended load, including tooling (by Buyer) shall not exceed 8,000 lb.

The Decontamination Tank Spray System shall have tested and documented performance provided before shipment. All spray ring nozzles shall be of the flat fan type with low spray angles to maximize impact. The fan of each nozzle shall be oriented vertically with nozzles pointing up , down, and radially inward as required to provide full coverage on a 12" diameter cylinder, throughout the height of the tank. Cleaning configuration 1 is the top ring operating alone with nozzles pointing downward, arranged to preclude spray from exiting the tank. Configuration 2 is the middle pair operating together with nozzles pointing up, down, and radially inward. Configuration 3 is the bottom pair of rings operating together similar to the middle pair, however, the bottom ring shall have no downward pointing nozzles. The Seller shall submit the nozzle type, spray angle, orifice size, operating pressure and flow rates in the above configurations and the expected impact in pounds per square inch on the 12" diameter cylinder stated above.

3.4 Basic Requirements of PTF Decon Tanks

The Pre-treatment Decon Tank (24590-PTF-M0D-PIH-00015 and 24590-PTF-M0-PIH-00019) requirements include, but are not limited to:

- Remote disassembly
- Transfer of fluids from the tank to radioactive waste disposal system

3.5 Basic Requirements of Spray Lances

The Seller shall provide spray lances with all hosing and connections necessary for mechanical and chemical decontamination. This shall include, but is not limited to the following:

- Provide lances compatible with facility equipment such as master slave manipulators (MSMs), power manipulators, and decontamination booths or gloveboxes per listed DPD or datasheet
- Provide compatibility with mechanical spray or blast equipment as well as chemical decontamination
- Provide construction and materials suitable for decontamination of the spray lance
- Provide lances with manually operated controls per datasheet

3.6 Basic Requirements of Decontamination Blast and Spray Equipment

The Seller shall provide decontamination blast and spray equipment for decontamination of plant structures and equipment. This shall include, but is not limited to the following:

- Provide compatibility with spray lance
- Provide remote operation compatibility with a foot pedal per datasheet
- Provide remote operation with all safety features inherent in a handheld spray lance
- Provide portability to move around the plant
- Provide compatibility with the chemicals listed on the Mechanical Data Sheet
- Provide pressure washers that are UL listed

3.7 Basic Requirements of Crane Decontamination Equipment

The crane decontamination equipment (24590-HLW-M0-HSH-00078) is used to decontaminate the exterior of the overhead crane, the overhead mast mounted power manipulator or the interior telescopic mast of power manipulator. The decontamination equipment shall hang from the overhead crane with a bail and direct a nozzle at the manipulator, mast or the crane above. The equipment shall be compatible with liquid spray lances and CO_2 pellet lances and capable of being remotely assembled or disassembled, using MSM or the Power Manipulator hand. The nozzle shall be remotely adjustable with the number of desired angles shown on the design proposal drawing. The lances shall be compatible with the pressure washers or CO_2 blast units described in this technical specification. The Seller shall allow for additional weight to be added. The lance angle shall be remotely adjustable with a power manipulator or MSM. Two hose reel and skid combinations shall be included with the crane decontamination equipment. The skid shall provide additional weight necessary for long payout of hose and remote connection of hoses to a spray lance, the crane decontamination equipment, or when attached directly to the spray manifold on the power manipulator for internal mast decontamination. One hose reel shall be for CO2 and the other shall be for liquid. The hose reels shall be handled remotely. The flow shall be restricted when a hose fails to prevent whipping, and protected from excess flow using a 10 gpm orifice. For each set of the two HSH Crane Decontamination Equipment, provide a 20' length of air hose and 20' length of water hose of the same size and manufactured of the same materials as the existing. Provide Staubli GPL25.1205/IC/TL/JE/SP female with GPL25.6205/IC/TL male connectors on each air line and RBE11.1203/IC/TL/VD/RD/JE female with RBE11.6203/IC/TL male connectors on each liquid line.

The crane decontamination equipment shall have a quality level of "CM". The safety class is "Not Important to Safety". The Seismic Criteria is "SC-V".

3.8 Basic Requirements of Parts Washer

The parts washer (24590-HLW-M0D-HSH-00150 and 24590-HLW-M0D-HSH-00212) shall spray and soak equipment for cleaning and decontamination. The washer shall be operated manually or remotely using the power manipulator. The drain and fill valves shall be capable of being operated manually and remotely. Drain, fill, and recirculation functions shall be full automated for remote operation, but have the capabilities for local manual operation.

3.9 Features of Decontamination Booths and Gloveboxes

Refer to Design Proposal Drawings in Section 2.5.1.

The gloveboxes and decontamination booths are fastened to the floor embeds. Other than material thickness specified on DPD, the gloveboxes will not require any additional shielding for shielding purposes. (see Section 3.2.1). The glovebox components are operated manually. The decontamination booth and glovebox shall have a sloped floor in the bottom draining into a sump provided by the Seller. The sump shall be drained through a 2 in. nominal pipe stub-out. The stub-out shall be pre-filtered with a minimum screen open area of 3.5 in.2 with a maximum of ¼ in. square clear openings. The screen shall withstand a flow of 25 gallons/min. Fire protection hardware is the responsibility of the Buyer's fire protection contractor. The Seller is required to coordinate design interfaces for the fire protection system with the Buyer's fire protection contractor. Coordination shall occur as part of the detail design.

Other features are noted as follows:

- The ports require metal hatch covers.
- The gloveports shall be of the quick change style that allows for timely conversion to pass-through ports
- The glove material shall be specified by the Seller, see AGS-G001-1998.
- The decontamination booth shall have a two ton manually operated turntable.
- The turntable shall be manually operated with a shaft through the wall of the decontamination booth and a crank on the outside at the operating station.
- The decontamination booth shall have a W 10 × 19 monorail beam for a 2 ton chain hoist
- The decontamination booth shall have an Exhaust demister
- Provide grilles (or screens) on the exhaust plenum on each of the Gloveboxes and 3 Booths.
- Provide HEPA filters with counterbalance backdraft dampers on the inbleeds into the airlock portion of the 3 Decontamination Booths. Provide HEPA filters between the airlock portion and the workcenter portion. Provide counterbalance backdraft dampers with each of the 3 Glovebox inbleeds.
- Provide 8"-10" dia. emergency exhaust flanges and inbleed filter housings with each Decontamination Booth and Glovebox.
- Provide a leak-tight seal on the inner air lock doors on the 3 Decontamination Booths.
- Provide a flange and removable end plate on the inbleed portion of each of the 3 Gloveboxes.
- Provide a flanged horizontal exhaust tee on the LAB Glovebox exhaust centered at 117" above the floor. The south facing outlet shall be 8" dia. and the north facing 14" square.

3.10 Features of HLW Decontamination Tanks and Spray System

Tanks shall have lifting features to allow installation of the tank using an overhead crane. When tank and associated equipment are serviced by overhead power manipulator, the maximum jaw opening shall be 5". Equipment being decontaminated is suspended inside the tank on Buyer supplied tooling supported on steps inside the spray ring assembly. A strainer unit shall be located at the bottom of the tank. The strainer unit shall be remotely removable using the overhead power manipulator without prior removal of the spray and sparge system. When specified, temperature, density, and level sensors shall be provided by the Seller according to the design proposal drawings. When specified, Resistance Temperature Detectors (RTD) shall be dual sensor, fully sheathed in T316L stainless steel and spring loaded bayonet connector, see Section 3.4 of Engineering Specification for Instrumentation for Package Equipment, 24590-WTP-3PS-JQ07-T0001. Plant wash and drain shall be connected to the tank through jumpers specified on the design proposal drawing. The Buyer will confirm to the Seller details of the crane hook prior to final design.

The spray system inside the HLW tank shall be removable from the tank using a remotely operated lifting feature for nozzle adjustment and repair. Jumper connections shall be located at the top of the tank and readily accessible within the crane approach area to allow remote disconnection and removal of the spray system and pump support package. All valves shall be on/off Flowserve® Durco® Mach 1 valves, or Buyer approved equal. All valves shall comply with 24590-WTP-3PS-PV00-T0001, Engineering Specification for Technical Supply Condition for Valves. All valves involved with emptying the decontamination tank shall comply with 24590-WTP-3PS-JV15-T0001, Engineering Specification for Actuators for On/Off Valves. Actuators containing electronics shall be sealed to IP66 according to IEC 60529. Valves shall withstand solids that may pass through the finest screen on the outlet of the tank.

The tank piping and internal components shall be designed to minimize contamination traps and maximize contamination removal through rinsing.

Unless noted otherwise, specified HLW tank jumpers are 2" nominal pipe size. Pipe sizes for the various spray ring circuits, as well as for air and steam may be reduced as required to achieve specified design performance parameters provided size reduction is on the tank side of 2" jumper connectors. The tank discharge jumper to Radioactive Liquid Drain shall have a remotely actuated Drain Valve, check valve, and flow restricting device to maintain flow at or below 30 gpm.

The HLW tank chemical injection, air piping, and all other sizes less than ¾" shall incorporate Staubli (or approved equal) remotely operated connectors where engaged by MSMs.

Remote operated electrical power, control, and instrumentation connectors, where engaged by MSMs, shall be provided by the Buyer. Mounting and terminating is the responsibility of the Seller. If Buyer is incapable of providing electrical or instrument jumper connectors at the time required by the Seller, The Seller shall provide temporary cables as necessary to facilitate testing and provide terminal strips and bulkhead connectors to terminate and mount buyer provided jumpers at a later date.

Major features of the pump support package include, but are not limited to:

- Entire system remotely operable to facilitate liquid recirculation for decontamination of radioactive equipment
- Jumpered connections between the pump, tank, plant wash and drain
- Entire system capable of being flushed and rinsed
- Cover and panels, when specified, shall be remotely removable

- Control panel out-cell on cell wall accessible to operators
- Remotely removable electrical, plant air, and jumpered connections
- Chemical injection equipment shall be provided with spill pallet or other spill containment

3.10.1 Decontamination Tank Control and Instrumentation System

The HLW tank control and instrumentation shall be a turn-key system consisting of a Decon Tank Control Panel, Chemical Injection Control Panel, and all associated sensing, indicating, interlocks, and control elements required to provide a functional decontamination system. See Appendix A for a pictorial representation of the HLW Decontamination Tank Instrumentation and Control System.

The Decon Tank Control Panel shall house all controls and indication associated with Decon Tank operations, including lamp test and self diagnostics. The panel shall have on/off controls for the following:

- Recirculating Pump
- Temperature Controller

The tank control panel shall have open/close switches for the following:

- Plant Wash Supply Valve
- Plant Steam Supply Valve
- Top Spray Ring Supply Valve
- Middle Spray Ring Supply Valve
- Bottom Spray Ring Supply Valve
- Drain Valve (valve by Buyer)
- Recirculating/Drain 3-way Valve

The tank control panel shall have the following indication:

- Tank Level
- Tank Liquid Density
- Tank Temperature

The tank control panel shall have equipment status indication for the following:

- Plant Wash Supply Valve position
- Plant Steam Supply Valve position
- Top Spray Ring Supply Valve position
- Middle Spray Ring Supply Valve position
- Bottom Spray Ring Supply Valve position
- Drain Valve (valve by Buyer) position
- Recirculating/Drain 3-way Valve position
- Chemical Injection Pump

The control panel shall have indication for interlock enable/disable functions and remote panel enable/disable for the following:

- Drain Valve interlock with plant RLD Tank Level
- Break Pot feeder valve(s) status
- Break Pot temperature
- Chemical Injection Control Panel remote control for Recirculating Pump

3.10.2 Chemical Injection Control Panel

The Chemical Injection Control Panel shall house all controls and indication associated with Chemical Injection operations, including lamp test and self diagnostics. The panel shall have on/off controls for the following:

- Chemical Injection Pump
- Recirculating Pump

The control panel shall also have equipment status indication for the following:

- Chemical Injection Pump
- Recirculating Pump
- Drain/Recirculating 3-way Valve

The control panel shall have Decontamination Tank indication status for the following:

- Tank Level
- Tank Liquid Density
- Tank Temperature

3.11 Major features of the PTF Decon Tank include, but are not limited to:

- Jumpered connections between plant wash and the tank
- Entire system remotely operable
- A steam operated ejector is used to transfer the vessel contents to plant wash and drain
- A removable and reusable sediment screen is installed at the tank drain/ejector inlet
- A steam sparge system is fitted to provide agitation of contents

3.12 Design Life

All hardware, less consumables shall have a design life of 40 years.

3.13 Environmental Conditions

The equipment shall be designed and manufactured to be suitable for operation within the environment of the LAW, HLW, PTF, and LAB building operating areas as shown on the Mechanical Data Sheets or otherwise specified.

3.14 Mechanical Requirements For Decontamination Booths and Gloveboxes

Equipment subject to maintenance shall be broken down into convenient sub-assemblies to effect ease of replacement per section 5.2.2 of 24590-WTP-3PS-M000-T0002, General Specification for Mechanical Handling Equipment Design and Manufacture.

3.14.1 Bearings

See General Specification for Mechanical Handling Equipment Design and Manufacture 24590-WTP-3PS-M000-T0002, Section 4, Bearings and Bushings.

3.14.2 Fasteners

The use of hexagon headed bolts with sufficient clearance for socket wrenches is required. The range of bolt sizes shall be kept to a minimum in order to limit the number of tools required for maintenance. All bolt types shall be of USCS (inch) units.

Set screws used for locking purposes do not require mechanical locking, but require the use of a removable thread locking compound similar to Loctite Threadlock 242.

Washers, plain or spring, shall not be used except where specifically required and shown on Seller drawings.

Fasteners that might have to be removed for maintenance purposes will be accessible from the worker side of the glovebox.

See "*General Specification for Mechanical Handling Equipment Design and Manufacture*", 24590-WTP-3PS-M000-T0002, Section 4, Fasteners, for additional information.

3.14.3 Lift Points and Lifting Hardware

The glovebox and decontamination booth shall have designated lift points clearly identified in accordance with section 3.4 of 24590-WTP-3PS-M000-T0002, *General Specification for Mechanical Handling Equipment Design and Manufacture*. The gross weights of the equipment shall be noted on the external packaging.

3.15 Mechanical Requirements For Decontamination Tanks

3.15.1 Corrosion Allowance

Corrosion allowance for decontamination tanks is specified on the MDS or DPD and shall be applied to each surface exposed to process vapor or liquid. Internal piping and charge tanks (if used) shall have the specified corrosion allowance applied to both internal and external surfaces, in accordance with 24590-WTP-3PB-P000-TS11B, *Piping Material Classification, Pipe Class* S11B.

- Unless otherwise specified, corrosion allowance shall not be applied to external tank surfaces.

3.15.2 Supports and Anchors

- Seller shall provide tank supports as illustrated on the associated DPD.
- For vertical tanks, the minimum anchor bolt diameter shall be 1 inch UNC unless otherwise specified on the Buyer DPD.
- A minimum of four bolts is to be used. Larger numbers are to be multiples of four.
- Supports and anchors shall be designed to secure a buoyant tank in case the tank is empty and fully submerged.
- Supports for piping and jumper nozzles.

3.16 Mechanical Requirements For Spray Lances

Seller shall verify spray lance compatibility with Master Slave Manipulator (MSM) and power manipulator when compatibility is noted on the MDS. The MSM's jaws shall have the dimensions of ½ in. wide and 1 ¾ in. long. The Buyer will provide the Seller details of the power manipulator jaws prior to the final design. The maximum thrust of the spray lance shall not exceed 20 lbs, measured at the MSM grip point.

3.17 Mechanical Requirements For Decontamination Blast and Spray Equipment

Seller shall verify compatibility with Master Slave Manipulator (MSM) when using out cell controls during remote in-cell operated spray lances in accordance with 24590-WTP-3PS-M000-T0002, *General Specification for Mechanical Handling Equipment Design and Manufacture, Section 5.2.6.* The force produced by the blast and spray equipment shall not inhibit remote operation of the lance. Pressure Washing Supply System steam temperature shall not exceed 350°F and 1500 psig.

3.18 Mechanical Requirements For Crane Decontamination Equipment

The crane decontamination equipment shall be designed in accordance with 24590-WTP-3PS-M000-T0002, *General Specification for Mechanical Handling Equipment Design and Manufacture, Section 5.2,* and relevant proposal drawings 24590-HLW-M0-HSH-00078. Nozzle adjustment and hose reel connections shall be done remotely before use with either the power manipulator or MSM.

3.19 Seismic Loading

Seismic loads associated with decontamination tanks shall be determined from 24590-WTP-3PS-FB01-T0001, *Engineering Specification for Structural Design Loads for Seismic Category III & IV Equipment and Tanks* Refer to the Design Proposal Drawing and the Basic Requirements section of this specification for the appropriate seismic classification. Through a seismic event, the decontamination tanks shall remain upright, intact and structurally sound, preventing any liquid loss through rupture or failure, and retain all mechanical contents housed in them,

3.20 Electrical Requirements

Refer to 24590-WTP-3PS-JQ07-T0001, *Engineering Specification for Instrumentation for Package Systems* for requirements for instrumentation and control of deliverable equipment.

Refer to 24590-WTP-3PS-EKP0-T0001, *Engineering Specification for Electrical Requirements for Packaged Equipment* for electrical requirements for deliverable equipment.

Wiring diagrams for all electrical connections shall be submitted to the Buyer for all the decontamination booths and gloveboxes as well as the Decontamination Tank and Chemical Injection Control and Instrumentation Systems. These submittals are summarized in the G321-E form.

The decontamination booths, decontamination gloveboxes, HSH decontamination tanks and spray system, and parts washer shall be designed for permanent grounding per NFPA 70. Grounding shall comply with the Grounding Section 6.6 of the *Engineering Specification for Electrical Requirements for Packaged Equipment*, 24590-WTP-3PS-EKP0-T0001.

The layout of components and wiring shall be such as to afford easy access for operation and maintenance.

3.21 Accessibility and Maintenance

The unit shall be configured so that standard maintenance techniques and practices can be utilized during maintenance.
Seller shall provide special tooling if required. Tooling shall meet requirements of MSMs if used in a Hot Cell in accordance with 24590-WTP-3PS-M000-T0002, *General Specification for Mechanical Handling Equipment Design and Manufacture, Section 5.2.6.*

4 Materials

4.1 Construction

Materials of construction shall be as specified on the DPD and MDSs. If Seller desires to use alternative materials, a change request shall be processed via the Supplier Deviation Disposition Request (SDDR) form.

Selection of commercial components indicated on the DPD is for proposal purposes only. The Seller is responsible for full validation of the components selected for the contracted application whether identical to the proposed items or otherwise.

All materials installed or used shall be used in accordance with MSDS requirements in 29 CFR 1910. Gloveboxes/Decontamination Booths, their incorporated windows, and hoods shall be of noncombustible materials.

Do not use materials containing Teflon or zinc during manufacture or testing of any deliverable equipment that is subject to acids or high radioactive environments.

Marking or packing materials containing chlorides shall not be used on stainless steel components. Cleaning agents or solutions that can adversely affect the materials shall not be used. The Seller shall take suitable precautions during all stages of construction to prevent carbon steel contamination of stainless steels.

Material Test Reports (MTR) for all structural load bearing stainless steel and carbon steel shall be submitted to Buyer per this specification and as summarized in G321-V form.

Where special requirements or restrictions are applied to standard commercial items, these will be specified on the drawings or in accompanying documentation.

Materials shall meet the requirements listed in section 4.11 of *General Specification for Mechanical Handling Equipment Design and Manufacture,* (24590-WTP-3PS-M000-T0002) unless otherwise specified such as for radiation requirements.

Materials shall be new and free from defects. Classification of fabrication materials shall be in accordance with ASTM. For structural mechanical tubing, ASTM A554 may be substituted for ASTM A511.

Seller shall perform a positive identification of materials test in the fabrication of each tank per 24590-WTP-3PS-G000-T0002, *Engineering Specification for Positive Material Identification*. This is applicable to all alloys higher than Type 304L and wetted by process or acidic decontamination liquids or vapors.

4.1.1 Pipe Fittings

Pipe fittings shall conform to the appropriate ASME and ANSI standards for materials and dimensions unless otherwise stated in the purchase order, see 24590-WTP-3PS-P000-T0001 *Engineering Specification for Piping Material Classes.* The piping material class for interfacing to the Buyer provided jumper piping shall be S11B.

4.2 Spray Lances

All external surfaces shall be resistant to oxidation and compatible with chemicals listed on the MDSs. Anodizing and coating procedures proposed for normally readily oxidized materials shall be approved by the Buyer. Components transporting liquid decontamination liquids, that are to be welded, shall be made of 316L stainless steel. Un-welded components may be made using 316 stainless steel.

4.3 Equipment Subject to Radiation:

See Section 5, *General Specification for Mechanical Handling Equipment Design and Manufacture,* 24590-WTP-3PS-M000-T0002, for materials approved for radiation environments.

4.4 Prohibited Materials

See Section 4, under *Materials, Prohibited Materials, General Specification for Mechanical Handling Equipment Design and Manufacture,* 24590-WTP-3PS-M000-T0002 for those materials not to be used.

5 Fabrication

5.1 General

Fabrication shall be undertaken using USCS "inch-pound" units, unless otherwise approved by the Buyer. Manufacture shall conform to the requirements of drawings and specifications. The Seller shall inform the Buyer if any aspect of the drawing or specification content is incorrect, or if the application could have an adverse effect on the operation or reliability of equipment. Changes to Buyer requirements cannot be made except with the written consent of the Buyer via the Supplier Deviation Disposition Request (SDDR) form.

5.1.1 Welding

- All welding procedure processes and consumables for carbon steel or stainless steel shall be to AWS D1.1, AWS D1.6, AWS D9.1, subject to the limitations and requirements of 24590-WTP-3PS-SS00-T0001, *Engineering Specification for Welding Carbon Structural Steel and* 24590-WTP-3PS-SS00-T0002, *Engineering Specification for Welding of Structural Stainless Steel and Welding of Structural Carbon Steel to Structural Stainless Steel.*
- Reports of weld inspections shall be submitted to the Buyer for information as part of the data package.
- Buyer retains the right to require weld procedure tests to be conducted when deemed necessary.
- Welder qualifications shall be preformed in accordance with AWS D1.1, and AWS D1.6.

5.1.2 Assembly

Unless otherwise specified on the drawing, fabrications shall be free of pockets or traps where water may lodge, and totally enclosed box specifications shall be leak tight to prevent the ingress of fluid, for example water, during decontamination.

5.1.3 Heat Treatment

Seller shall determine if special heat treatment processes are required during fabrication. If required, procedures shall be submitted for review as summarized in the G321-E form. Vibratory stress relief is not acceptable.

5.1.4 Surface Finish

See 24590-WTP-3PS-M000-T0002, *General Specification for Mechanical Handling Equipment Design and Manufacture*, Section 5, Finish Aspects and Coatings for finishing requirements.

5.1.5 Miscellaneous Requirements

- Jigs and fixtures shall be retained by the Seller until written authority to scrap is received from the Buyer.
- See 24590-WTP-3PS-M000-T0002, *General Specification for Mechanical Handling Equipment Design and Manufacture*, Section 5 for additional fabrication requirements.
- Glovebox and Decontamination Booth shall be constructed in sections. For accessibility restrictions during installation, the maximum envelope dimensions of an individual section shall not exceed 5'~~-feet~~ × 6'-6"~~-feet~~ × 7'-6"~~-feet~~.

5.2 Decontamination Tanks

5.2.1 General

Seller shall, if necessary, provide temporary stiffening and jigging to prevent shell distortion during fabrication, welding processes, heat treatment, hydrostatic testing, or shipment.
Fabrication tolerances shall be in accordance with DPDs.

The sequence of fabrication shall be planned to permit maximum access to the internal surfaces to enable examination of all welds. Internal welds shall be inspected and signed off prior to continued fabrication.

Plates and pipes shall be cut to size and shape by machining, grinding, shearing, plasma, laser, or water jet cutting. All thickness of plate or pipe cut by air plasma cutting shall have the edges dressed to a smooth, bright finish. Material cut by the inert gas shielded plasma, laser or water jet process will not require further dressing other than deburring. All lubricants, burrs, and debris shall be removed after cutting.

If a butt-welded seam is required between materials of different thickness, the thicker material shall normally be machined on the side away from the process liquid. Machining shall ensure a smooth finished profile with no sharp corners.

When rolling any austenitic stainless plate, care shall be taken to prevent carbon pickup or contamination of rolled material. The work area shall be free of carbon steel grindings and general cleanliness shall be maintained to preclude carbon contamination.

Only stainless steel brushes, clean iron-free sand, ceramic or stainless steel grit shall be used for cleaning stainless steel or non-ferrous alloy surfaces. Cleaning tools or materials shall not have been previously used on carbon steel.

Internal piping bends shall have a center line radius of four times the pipe nominal diameter. In confined spaces, the center line radius may be reduced to three times the outside diameter of the pipe. The pipe shall not be terminated or butt-welded within the bend, a straight length of 4 inches prior to the weld is recommended, see 24590-WTP-3PS-P000-T0001 *Engineering Specification for Piping Material Classes*. The piping material class for interfacing to the Buyer provided jumper piping shall be S11B.

Pipe bending methods, tolerances, processes, and material requirements shall comply with PFI Standard ES-24 and require Buyer's review. These requirements shall apply equally to tube bending processes.

5.2.2 Layout

Plate size shall be chosen to minimize welding.
The longitudinal seams of adjacent shell courses shall be staggered by a minimum length (measured from the toe of the welds) of 5 times the plate thickness, or 4 inches whichever is greater. Where it is considered impractical to meet this requirement, Seller shall submit a proposed layout to the Buyer for review.

Saddles shall be continuously welded to the shell. Welded seams under the saddle or wear plate are not permitted. Longitudinal weld seams in the shell should not be located within 15° of the horn of the saddle.

Plate layouts shall be arranged so that longitudinal and circumferential weld seams clear all nozzles, and their reinforcing pads to the maximum extent possible. A minimum clearance of eight times the plate thickness from the toes of the welds is required.

Structural attachment welds such as internal support rings or clips, external stiffening rings, insulation support rings, and ladder, platform or pipe support clips shall clear weld seams by a minimum of 2

inches. If overlap of pad type structural attachments and weld seams is unavoidable, the portion of the seam to be covered shall be ground flush and radiographically examined before the attachment is welded. The seam shall be radiographed per API 620.. Radiographic examination of longitudinal weld seams is not required when single-plate edge type attachments such as tray support rings, stiffening rings, insulation support rings, ladder, platform, or pipe support clips cross such weld seams.

5.2.3 Nozzles, and Reinforcing Pads

When applicable, nozzles that require field welds during equipment installation shall be prepared for field welding by fitting with a protective cover of the same material, tack welding in place and sealed to prevent dirt and water from entering the tank.

All jumpers are 2" nominal pipe size unless noted otherwise, see 24590-WTP-3PS-P000-T0001 *Engineering Specification for Piping Material Classes.* The piping material class for interfacing to the Buyer provided jumper piping shall be S11B. Jumper nozzles will be provided by the Buyer. Nozzle materials of construction are different from the remainder of the mating piping yet are compatible. The Seller will be required to generate a specific weld procedure. Nozzle materials of construction will be available to the Seller after the purchase order is awarded.

5.2.4 Welding

All welding shall be continuous. Stitch welding is prohibited.

Joints shall be assembled and retained in position for welding. The use of manipulators or other devices to permit welding in the flat position should be employed where practical.

All attachments e.g. lugs, brackets, nozzles, pads and reinforcements around openings (when permitted) and other members shall follow the contour and shape of the surface to which they will be attached. The gap at all exposed edges to be welded shall not exceed 1/16 inch or one-twentieth of the thickness of the attachment at the point of attachment whichever is greater.

Where fillet welds only are used, the maximum fit-up gap between the components being joined shall be 1/8 inch. The components shall be clamped or otherwise maintained together during welding.

Attachment point of spiders, braces, or other temporary attachments shall match the material of the tank.

All welding involving decontamination tanks shall be completed according to API 620.

5.3 Crane Decontamination Equipment

5.3.1 Miscellaneous Requirements

See 24590-WTP-3PS-M000-T0002, *General Specification for Mechanical Handling Equipment Design and Manufacture*, Section 5.1 for any additional fabrication requirements. The lifting bail shall be constructed according to Appendix D, Remote Hook and Bail Configuration. The lifting bail shall be constructed for 3 ton rotating hook applications using the 3 ton lifting bail dimensions.

6 Tests and Inspections

6.1 General

6.1.1 Standard/Commercial Manufacture Items

Standard commercial items such as fasteners, gearboxes, actuators, and electric motors shall in general be inspected and tested against manufacturers specifications and industry standards.

6.1.2 Sub-Assemblies

Where sub-assemblies erected at the shop have to be dismantled for transport to the site, the fasteners holding them together shall be inspected. Fasteners exhibiting distortion, galling, permanent set, or other damage shall, at the discretion of the Buyer, be replaced.

6.1.3 Inspection and Test Plan

The Seller shall submit an inspection and test plan as summarized in the G321-E form. The inspection and test plan shall summarize the manufacturing sequences, including Seller and Buyer test points and hold or notification points for Buyer's inspection as indicated in the Buyer's surveillance plan.

This plan shall include provisions for increased hold and notification points as the project progresses. The Seller shall submit an inspection report to the Buyer as summarized in the G321-E form.

6.1.4 Hardness Testing

- Hardness testing is required when austenitic stainless steel plate is cold formed to make sections such as angles and channels.
- Hardness testing is required when austenitic stainless steel pipe is cold formed for bends with a centerline radius less than three times the nominal pipe diameter.
- Any cold forming process, which may significantly increase hardness, shall be in accordance with an approved procedure, which contains hardness testing. The procedure and report shall be submitted in the mechanical test procedure and report as summarized in the G321-E and G321-V form.
- Hardness testing shall be performed on areas subject to the greatest deformation after cold working or any re-work. The maximum permitted hardness is HRB 92.
- If the maximum permitted hardness is exceeded, the Seller shall heat treat and test the component to meet this requirement. Seller shall submit a written procedure and report for suitable heat treatment and testing as summarized in the G321-E and G321-V form.

6.1.5 Surface Finish Inspection

Included in the inspection and test plan summarized in the G321-E form shall be procedures for visually inspecting the surface finish of each manufactured item. The inspections shall be performed after completion of all fabrication, cleaning, finish coating (where applicable), and testing.

Inspection of mill finished, ground, or machined surface finishes shall confirm that design requirements have been met.

Inspection of weld surface finishes, shall confirm that design requirements have been met, and shall take place prior to finish coating (where applicable).

Following inspection, the Seller shall verify acceptance of surface finishes in an inspection report as summarized in the G321-V form.

6.1.6 Visual Weld Inspection

The Seller shall develop and implement a procedure to perform visual weld inspections (visual tests, VT) to inspect 100% of each weld. The inspection shall be developed in accordance with AWS D1.1 and AWS D1.6.

The Seller shall submit a visual weld inspection report and weld map for each fabricated item. The report shall record inspection results, the date and time of inspection, and signatures of certified inspection personnel performing the inspection.

The visual weld inspection report and weld map shall be submitted as summarized in the G321-V form.

6.2 Decontamination Booths and Gloveboxes

6.2.1 Leak Testing

The glovebox and decontamination booth shall be leak tested per Section 5.11.3 in the AGS-G001 standard. The decontamination booth leak rate shall be applied to the outer boundary of the decontamination booth/airlock assembly. The leak rate (volume per hour) shall not exceed .5% of the volume at 4 in. w.g. as specified in the AGS-G001 standard. The leak rate procedures and test results shall be submitted to the Buyer as summarized in the G321-E and G321-V forms.

6.3 Decontamination Tanks and Spray System

6.3.1 Shop Tests

Submit an atmospheric hydrostatic leak test procedure and report of the tank, pump, and associated piping as summarized on the G321-E and G321-V form by:

- Filling the tank with water to the overflow and holding for a minimum of one (1) hour.

6.3.2 Performance Testing

Upon completion of the hydrostatic testing, the Seller shall run performance testing on the spraying system by circulating the water used for hydrostatic testing in the three configurations described in paragraph 3.3. Actuate each configuration using the control panel and associated valves. Measure and record the following parameters in each of the three configurations:

- Circulating pump discharge pressure
- Total flow rate
- Spray pattern (video recording is preferred)

Upon completion of performance testing, run the circulating pump until all water is discharged from the tank by actuating the 3-way valve in the discharge configuration.

Demonstration of the removal and installation of the spray ring assembly can be accomplished as planned using the lifting device and shop crane. Demonstration of the removal and installation of the pump support package can be accomplished as intended using the lifting equipment and shop crane. Demonstration of the installation and removal of the discharge filter screen. Demonstrate the interchangeability of the Melter 1 Pump Support Package on Melter 2 Decontamination Tank and vise versa. Mechanical test procedures used to perform these tests shall be submitted to the Buyer as summarized in the G321-E form. The results of the test procedures shall be submitted to the Buyer as summarized in the G321-V form.

6.3.3 Non-Destructive Examinations (NDE)

Main shell seams on all tanks shall be in accordance with API 620. Seams shall have the root weld back-gouged and dressed and radiograph inspected per API 620. All welds joining the nozzle neck to the shell, bottom, or heads, shall be dye-penetrant tested. Dye-penetrant testing shall be performed in accordance with section 7.15.4 of API 620. Manufacturer's radiograph and dye penetrant test methods shall be submitted to the Buyer as summarized in the G321-E form. Records of the dye penetrant and radiograph tests shall be submitted to the Buyer as summarized in the G321-V form. Submit radiograph film as summarized on the 321-E form.

All mandatory NDE (visual) of the tank surface shall be carried out after the completion of fabrication, including any heat treatment. The NDE work must be performed by an inspector certified to the requirements of SNT-TC-1A. The interpretation of the results shall be done by either Level II or Level III inspectors certified to SNT-TC-1A.

6.3.4 Final Inspection of Completed Tank

All external and, where access permits, internal examinations will be carried out by the Seller according to test and inspection procedures submitted to the Buyer as summarized in the G321-E form. The finished dimensions and cleanliness of the tanks shall comply with the relevant Drawings and specifications after completion of all tests. The results of the test and inspection plan shall be submitted to the Buyer as summarized in the G321-V form.

6.4 Spray Lances

6.4.1 Shop Tests

The Seller shall submit a mechanical test procedure as summarized in the G321-E form. The mechanical test procedure shall verify the operability of the equipment in accordance to the requirements of the datasheet. Specifically, the equipment shall operate over the entire pressure range, and work correctly with the MSM or power manipulator being supplied to the Buyer. The results of the test procedures shall be submitted to the Buyer as summarized in the G321-E form.

6.5 Decontamination Blast or Spray Equipment

The Seller shall submit a mechanical test procedure as summarized in the G321-E form. The mechanical test procedure shall verify the operability of the equipment in accordance to the requirements of the datasheet. Specifically, the equipment shall operate over the entire pressure range, and work correctly

with the Seller supplied foot pedal. The results of the test procedure shall be submitted to the Buyer as summarized in the G321-E form.

6.6 Crane Decontamination Equipment

6.6.1 Shop Tests

The Seller shall submit a mechanical test procedure as summarized in the G321-E form. The mechanical test procedure shall include the angles of which the lance can be operated at, a functionality test using a pressure washer at 1500 psi and approximately 2.5 gallons/minute, and a functionality test using the maximum blast pressure and ice consumption of the CO_2 blast unit. The results of the mechanical test procedure test shall be submitted to the Buyer as summarized in the G321-V form.

6.7 Parts Washer

6.7.1 Shop Tests

The Seller shall submit a mechanical test procedure to the Buyer outlining the functionality test as summarized in the G321-E form. The results of the mechanical test report shall be submitted to the Buyer as summarized in the G321-V form.

7 Preparation for Shipment

7.1 General

Packaging, handling, and storage will be performed in accordance with project specification 24590-WTP-3PS-G000-T0003, *Engineering Specification for Packaging, Handling, and Storage Requirements*. The Seller shall submit all documents listed in Section 11 of *Engineering Specification for Packaging, Handling, and Storage Requirements* as summarized in G321-E form.

7.2 Surface Preparation

Remove all dirt, oil, grease, loose mill scale, rust, weld splatter, and other foreign matter on surfaces to be painted. Solvent clean surfaces to SSPC-SP1 as the minimum or to the manufacture's recommended criteria if equal or better for the following equipment: crane decontamination equipment, decontamination booths, and gloveboxes.

7.3 Painting and Coatings

Seller shall paint or coat items in accordance with 24590-WTP-3PS-M000-T0002, *General Specification for Mechanical Handling Equipment Design and Manufacture, Section 4.13*. This requirement applies to the following equipment: crane decontamination equipment, tanks, pump support package, decontamination booths, and gloveboxes.

7.4 Tagging

The deliverable equipment shall be tagged in accordance with Section 7 of the Purchase Order.

Each piece of equipment shall be tagged or labeled with its Plant Item Number in accordance with the *General Specification for Mechanical Handling Equipment Design and Manufacture* (24590-WTP-3PS-M000-T0002) Human Factors Table. Refer to MDS or DPD for further details on nameplates as specified.

Tagging requirements for the tanks and other deliverable equipment are shown on the DPD. A stainless steel nameplate in characters not less than ¼ inch high shall be attached to the decontamination booths and gloveboxes showing the plant item number in a normally visible location. A stainless steel tag plate shall be attached with a stainless steel wire to all other equipment listed in this specification. Separate or loose items shall be tagged with the plant item number for which they are intended. Instruments shall be tagged according to the *Engineering Specification for Instrumentation for Package Systems*, 24590-WTP-3PS-JQ07-T0001, Section 8.

7.5 Packaging

The equipment shall be packaged in accordance with Section 7 of the MR.

The Seller shall verify, by calculation if necessary, that the tank and internals will withstand loads occurring during shipping for the chosen mode of transportation.

Threaded connections shall be cleaned and protected with metal or plastic caps and plugs.

All equipment shall be adequately packed, braced, supported, and securely anchored such that the equipment is fully protected for shipment.

All separate or loose items shall be boxed, individually protected as required and packed in a plywood container for shipment. Each container shall include a complete copy of the Bill of Materials identifying each item in the container.

Equipment enclosed in boxes shall have the Buyer's purchase order number and equipment number affixed on the outside of the box per Section 7 of the Purchase Order.

The Seller shall be solely responsible for the adequacy of the preparation for shipment. In addition, the Seller will provide detailed instructions for storage and handling.

Loads shall be securely fastened to pallets, stillages, timber spacers, or skids as reviewed by the Buyer, to facilitate handling. If the equipment does not posses the inherent strength to be handled using fork lift or crane, then strong backs or other bracing devices shall be provided. Loads to be handled by cranes shall be furnished with lifting eyes.

Lifting instructions shall be plainly indicated on the equipment or cases containing the equipment. Each package shall be clearly marked with the contract number, job number, plant item number and site location, together with the gross weights. For packaged equipment or equipment skids, center of load markers shall be permanently attached to the equipment to assist in lifting, removing, handling and setting the equipment.

7.5.1 Decontamination Tanks and Spray System

All flanged openings, which are not provided with a cover, shall be protected by a carbon steel blind flange of the same rating as the flange, a full-faced rubber gasket with a minimum thickness of 1/8 inch and carbon steel bolts with stainless steel washers.

For spray rings and other internal parts, suitable supports shall be provided to avoid damage during shipment. Temporary internal bracing shall be painted yellow and a label, located near the nameplate, shall state that the tank contains temporary bracing that must be removed.

When tanks are shipped in the horizontal position, the Seller shall take all necessary precautions in loading by blocking and bracing the tank and furnishing all necessary material to prevent damage to the tank or any internal component.

The Seller shall verify, by calculation if necessary, that the tank and internals will withstand loads occurring during shipping for the chosen mode of transportation.

7.6 Documentation

The Seller shall submit Material Safety Data Sheet (MSDS) for information in accordance with Section 7 of the Purchase Order. The Seller shall submit paint identifying information for the following equipment: crane decontamination equipment, tanks, pump support package, decontamination booths, and gloveboxes. MSDS and paint identifying information shall be submitted as material descriptions as summarized in the G321-E form.

8 Quality Assurance

8.1 QA Requirements Specific to Items or Services

The Seller's Quality Assurance Program (QAP) Requirements are included in 24590-WTP-3PS-G000-T0001, *General Specification for Supplier Quality Assurance Program Requirements.*

Seller's QAP Manual shall be submitted to Buyer for review in accordance with 24590-WTP-3PS-G000-T0001.

For SSC's indicated in this specification as Non-ITS, or Commercial Quality, the Seller shall have and maintain a Buyer approved Quality Assurance Program meeting the applicable sections of DOE Order O 414.1A, as per 24590-WTP-3PS-G000-T0001, and the Supplier Quality Assurance Program Requirements Data Sheet, 24590-WTP-3PD-HDYR-00005.

Should any portion of the work defined within this specification be subcontracted, these requirements shall be passed on to the sub-contractor as applicable to the work being performed.

8.2 Program QA Elements

Seller's QAP, as a minimum, shall contain the requirements detailed in the Seller Quality Assurance Program Requirements Data Sheets listed in Section 2 of the Material Requisition.

9 Configuration Management

9.1 General

Section 3 Drawings and Data Requirements of the Material Requisition lists all documentation and submittals required. The G321-V form lists all the documents required for quality verification and the G321-E form lists those engineering documents required. SDDRs shall be approved by the project prior to shipping of the item.

9.2 Meeting Minutes

The Seller shall document all discussions held in meetings between the Seller and the Buyer, or Buyer's representative, unless otherwise directed by the Buyer. The Seller shall send meeting minutes to the Buyer within 5 working days following the meeting.

9.3 Design Compliance Matrix

The Seller shall develop a matrix that tabulates the design requirements of this specification and the method of compliance. The matrix shall describe how each requirement is met including narrative as well as references to drawings, calculations, and other specific documentation that demonstrates compliance.

The matrix shall be included as a preliminary document in the 50% design review package. The preliminary document shall form the template for the final document.

The matrix shall be included as a final document in the 90% design review package.

9.4 Submittals

General requirements and submittal procedures are also covered in Section 3 of the Material Requisition. Each document to be submitted must be listed on the 15EX form. This form tracks the scheduled and actual delivery of each submittal. It will be completed at the time of award.

9.5 Quality Assurance Plan

Seller's Quality Assurance Plan (QAP) shall be submitted to the Buyer with the sellers proposal if not presently on record per this specification and as summarized in the Section 3 G-321-E form. Afterward, the QAP shall be re-submitted for project records tracking.

9.6 Drawings

Any proposed changes to Buyer drawings or documents shall be submitted to the Buyer via a Supplier Deviation Disposition Request (SDDR) in accordance with Section 2 of the Purchase Order. All drawings shall be fully dimensioned with the dimensions in USCS (inch–pound) units, showing all critical interface dimensions and their tolerances as specified. Critical interface dimensions shall be identified, including a note explaining how to distinguish these dimensions.

The Seller shall prepare and submit drawings in accordance with the American National Standards Institute/American Society of Mechanical Engineers (ANSI/ASME) Standard Y-14 series, *Drafting Standards*. The Seller shall provide wiring diagrams consistent with Buyer's *Engineering Specification*

for Electrical Requirements for Packaged Systems, Section 10, 24590-WTP-3PS-EKP0-T0001. All drawings shall have an associated bill of materials that lists

- item number for each individual part
- quantity of each item listed
- description for each item listed
- reference code (ASTM, ANSI, etc.) when required for an item
- Material callout or Seller part number

As summarized in the G321-E form, Engineering Document Requirements, the Seller shall submit all shop detail drawings, assembly drawings, and foundation and mounting detail drawings for the decontamination booths and gloveboxes, the decontamination tank and spray system, and the pump support package.

The Seller shall submit all shop and detail drawings and assembly drawings for the crane decontamination equipment.

9.7 Design Reviews and Meetings

Design review shall be conducted in accordance with the method outlined in this section. The number of design reviews may be changed at the Buyer's discretion.

The Seller shall provide to the Buyer, a minimum of five (5) working days prior to the scheduled meeting, copies of documentation or information that is expected to be discussed and presented in the meeting. Documentation may be provided as either hard copies or as electronic files sent via the email (if not previously submitted in accordance with the submittal schedule).

The Seller shall participate in the design review, present the design including discussion of the provided submittals, and shall be prepared to discuss any comments.

Following the 90% design review meeting, the Buyer will formally transmit comments or other requests on the design submittals. The Seller is required to provide response/resolution to the Buyer's comments in accordance with the submittal schedule, or request deviation from the Buyer's requirements through use of the Buyer's SDDR form.

The resolved/corrected submittals shall be provided in the final design report in accordance with the submittal schedule.

9.7.1 Contract Award Design Kick-Off Meeting

The contract award kick-off meeting will be an informal discussion conducted at the Buyer's facility to ensure the newly awarded contract is clear and concise, and that the Seller has a clear understanding of the scope of the contract.

9.7.2 20% Design Review

The first interim review will be an informal review conducted at the Seller's facility after approximately 20% of the design is completed. Preliminary design media, including arrangement and

assembly drawings, drawings containing maintenance envelopes, calculations and analyses will be reviewed by the Buyer.

The Seller shall be prepared to discuss any Seller-recommended changes to the approaches indicated on the Buyer's DPD and identify any conflicts with the equipment envelope dimensions.

9.7.3 50% Design Review

The second interim review will be an informal review conducted at the Buyer's facility after approximately 50% of the design is completed. Preliminary design media, including arrangement and assembly drawings, electrical design and load list, calculations and analysis, and the Design Compliance Matrix shall be provided to the Buyer for review.
The preliminary design media shall be provided to the Buyer at a mutually agreed time prior to the scheduled meeting.

9.7.4 90% Design Review

At the conclusion of definitive design, a formal 90% design review will be conducted at the Buyer's facility in accordance with the RPP-WTP procedures. The (draft) final design report, including all design media, supporting calculations and analysis, Design Compliance Matrix and other required submittals which documents the design shall be provided to the Buyer.

9.7.5 Final Design Closeout Meeting

The Seller shall provide a corrected, completed final design report (and any other submittals requiring changes) that resolves any issues associated with the 90% review. An informal meeting shall be held to accept the revised design media and resolve any remaining open items.

9.8 Procedures

For fabrication processes requiring welding, welding procedures as summarized in the G321-E form shall be submitted to the Buyer if pre-qualified welds are not used.

9.9 Manuals

Seller shall provide a clearly written instruction manual, prepared on good quality paper and suitably bound; manual shall be submitted to Buyer per this specification and as summarized in the G321-E form.

The manual shall include:

1. Installation instructions.
2. Complete parts list, recommended spare parts list, names of manufacturers with OEM model or; part numbers, and special ordering instructions (if applicable) for replaceable parts.
3. Description of the equipment, special tools, and sub-assemblies. As applicable, significant technical characteristics, test and adjustment information, and safety/warning notices.
4. Operating instructions, referencing drawings/diagrams as appropriate.
5. Maintenance and operational instructions.
6. Recommended inspection points if any, with procedures and period for inspection (preventative maintenance).

7. Site storage instructions.
8. In-storage maintenance requirements.
9. Rigging and lifting instructions.
10. Special handling requirements.

9.10 SDDRs

The following SDDRs have been incorporated by reference:

- 24590-WTP-SDDR-PROC-04-00590
- 24590-WTP-SDDR-PROC-05-00092
- 24590-WTP-SDDR-PROC-05-00193
- 24590-WTP-SDDR-PROC-05-00482
- 24590-WTP-SDDR-M-05-00008
- 24590-WTP-SDDR-M-05-00092
- 24590-WTP-SDDR-M-05-00177
- 24590-WTP-SDDR-M-05-00242
- 24590-WTP-SDDR-M-05-00778

Appendix A
HLW Decontamination Tank Instrumentation and Control System

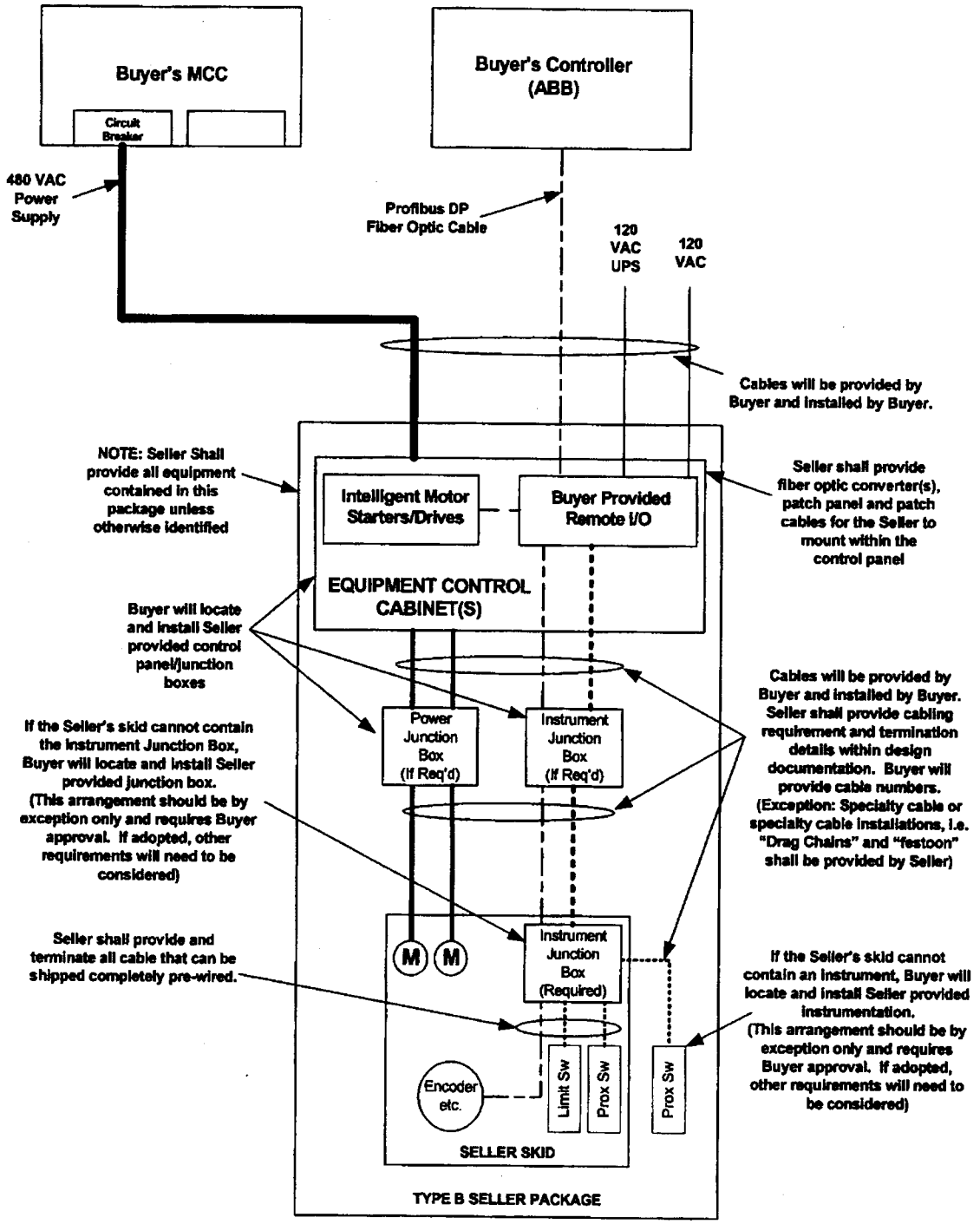

This "Type B" package is unique to equipment that contains Buyer provided Remote I/O.
The Controller and Software for controlling will be provided by the Buyer.

TYPE B - HSH DECON OPTION

DATE	REV.
01/31/05	A

Appendix B
Equipment Plant Item Numbers and Datasheet Numbers

PIL Number	Datasheet Number	Document Description
24590-PTF-MT-PIH-TK-00001	24590-PTF-M0D-PIH-00015	Pretreatment Facility Decontamination Tank
24590-HLW-HSH-MHAN-00041	24590-HLW-M0D-HSH-00150	Parts Washer (Melter 1)
24590-HLW-HSH-MHAN-00057	24590-HLW-M0D-HSH-00212	Parts Washer (Melter 2)
24590-HLW-FH-HSH-TOOL-00027	24590-HLW-M0D-HSH-00123	Maintenance Area Manual Spray Lance (Melter 1)
24590-HLW-FH-HSH-TOOL-00028	24590-HLW-M0D-HSH-00124	Maintenance Area Upper Manual Spray Lance (Melter 1)
24590-HLW-FH-HSH-TOOL-00018	24590-HLW-M0D-HSH-00125	Decontamination Area Manual Spray Lance (Melter 1)
24590-HLW-FH-HSH-TOOL-00029	24590-HLW-M0D-HSH-00134	Decontamination Area Manual CO2 Spray Lance (Melter 1)
24590-HLW-FH-HSH-TOOL-00031	24590-HLW-M0D-HSH-00137	Melter Cave Decontamination Spray Lance (Melter 1)
24590-HLW-FH-HSH-TOOL-00020	24590-HLW-M0D-HSH-00126	Decontamination Pit Lower Remote Spray Lance (Melter 1)
24590-HLW-FH-HSH-TOOL-00022	24590-HLW-M0D-HSH-00127	Decontamination Pit Lower Remote CO2 Spray Lance (Melter 1)
24590-HLW-FH-HSH-TOOL-00023	24590-HLW-M0D-HSH-00135	Decontamination Pit Upper Remote Spray Lance (Melter 1)
24590-HLW-FH-HSH-TOOL-00030	24590-HLW-M0D-HSH-00136	Melter Cave Remote CO2 Spray Lance (Melter 1)
24590-HLW-FH-HPH-TOOL-00010	24590-HLW-M0D-HPH-00094	Spray Lance, Decon Area, Pour Tunnel 1 H-B019A
24590-HLW-FH-HSH-TOOL-00042	24590-HLW-M0D-HSH-00217	Maintenance Area Manual Spray Lance (Melter 2)
24590-HLW-FH-HSH-TOOL-00043	24590-HLW-M0D-HSH-00218	Maintenance Area Upper Manual Spray Lance (Melter 2)
24590-HLW-FH-HSH-TOOL-00039	24590-HLW-M0D-HSH-00213	Decontamination Area Manual Spray Lance (Melter 2)
24590-HLW-FH-HSH-TOOL-00044	24590-HLW-M0D-HSH-00219	Decontamination Area Manual CO2 Spray Lance (Melter 2)
24590-HLW-FH-HSH-TOOL-00046	24590-HLW-M0D-HSH-00221	Melter Cave Decontamination Spray Lance (Melter 2)
24590-HLW-FH-HSH-TOOL-00040	24590-HLW-M0D-HSH-00214	Decontamination Pit Lower Remote Spray Lance (Melter 2)
24590-HLW-FH-HSH-TOOL-00048	24590-HLW-M0D-HSH-00215	Decontamination Pit Lower Remote CO2 Spray Lance (Melter 2)
24590-HLW-FH-HSH-TOOL-00041	24590-HLW-M0D-HSH-00216	Decontamination Pit Upper Remote Spray Lance (Melter 2)
24590-HLW-FH-HSH-TOOL-00045	24590-HLW-M0D-HSH-00220	Melter Cave Remote CO2 Spray Lance (Melter 2)
24590-HLW-FH-HPH-TOOL-00029	24590-HLW-M0D-HPH-00238	Spray Lance, Bogie Decon, Pour Tunnel 2
24590-HLW-FH-HPH-TOOL-00015	24590-HLW-M0D-HPH-00093	Spray Lance, Decontamination H343 (Remote)
24590-HLW-FH-HRH-TOOL-00003	24590-HLW-M0D-HRH-00018	Spray Lance, Decontamination HB045
24590-HLW-FH-HDH-TOOL-00006	24590-HLW-M0D-HDH-00043	Canister Rinse Tunnel Spray Lance (CO2)
24590-HLW-FH-HDH-TOOL-00007	24590-HLW-M0D-HDH-00044	Canister Rinse Bogie Spray Lance
24590-HLW-FH-HMH-TOOL-00001	24590-HLW-M0D-HMH-00002	Decon Spray Lance (Air Lock Melter Sump 1)
24590-HLW-FH-HMH-TOOL-00002	24590-HLW-M0D-HMH-00003	Decon Spray Lance (Air Lock Melter Sump 2)
24590-HLW-FH-HFH-TOOL-00010	24590-HLW-M0D-HFH-00045	Power Manipulator Spray Lance (Water)
24590-HLW-FH-HFH-TOOL-00013	24590-HLW-M0D-HFH-00046	Power Manipulator Spray Lance (CO2)
24590-HLW-FH-RWH-TOOL-00022	24590-HLW-M0D-RWH-00044	Spray Lance, Manual (CO2)
24590-HLW-FH-RWH-TOOL-00020	24590-HLW-M0D-RWH-00043	Spray Lance, Remote (Liquid)
24590-PTF-FH-PFH-TOOL-00017	24590-PTF-M0D-PFH-00030	Crane Decon Manual CO2 Spray Lance
24590-PTF-FH-PFH-TOOL-00015	24590-PTF-M0D-PFH-00028	Decontamination Chamber Remote CO2 Spray Lance
24590-PTF-FH-PIH-TOOL-00024	24590-PTF-M0D-PIH-00014	Maintenance Area Remote CO2 Spray Lance
24590-PTF-FH-RWH-TOOL-00016	24590-PTF-M0D-RWH-00065	Spray Lance P-0121A
24590-PTF-FH-RWH-TOOL-00017	24590-PTF-M0D-RWH-00066	Spray Lance P-0122A
24590-PTF-FH-RWH-TOOL-00018	24590-PTF-M0D-RWH-00067	Spray Lance P-0223
24590-PTF-FH-PIH-TOOL-00028	24590-PTF-M0D-PIH-00026	Low Pressure Wash Lance, Maintenance Cave Area

PIL Number	Datasheet Number	Document Description
24590-PTF-FH-PIH-TOOL-00026	24590-PTF-M0D-PIH-00027	High Pressure Wash Lance, Maintenance Cave Area
24590-PTF-FH-PIH-TOOL-00027	24590-PTF-M0D-PIH-00028	Low Pressure Wash Lance, Maintenance Cave Area
24590-PTF-FH-PWD-TOOL-00001	24590-PTF-M0D-PWD-00001	Low Pressure Wash Lance, Hot Cell Area
24590-PTF-FH-PWD-TOOL-00002	24590-PTF-M0D-PWD-00002	Low Pressure Wash Lance, Hot Cell Area
24590-PTF-FH-PWD-TOOL-00003	24590-PTF-M0D-PWD-00003	Low Pressure Wash Lance, Hot Cell Area
24590-PTF-FH-PWD-TOOL-00004	24590-PTF-M0D-PWD-00004	Low Pressure Wash Lance, Hot Cell Area
24590-PTF-FH-PWD-TOOL-00005	24590-PTF-M0D-PWD-00005	Low Pressure Wash Lance, Hot Cell Area
24590-PTF-FH-PWD-TOOL-00006	24590-PTF-M0D-PWD-00006	Low Pressure Wash Lance, Hot Cell Area
24590-PTF-FH-PWD-TOOL-00007	24590-PTF-M0D-PWD-00007	Low Pressure Wash Lance, Hot Cell Area
24590-PTF-FH-PWD-TOOL-00008	24590-PTF-M0D-PWD-00008	Low Pressure Wash Lance, Hot Cell Area
24590-PTF-FH-PWD-TOOL-00009	24590-PTF-M0D-PWD-00009	Low Pressure Wash Lance, Hot Cell Area
24590-PTF-FH-PWD-TOOL-00010	24590-PTF-M0D-PWD-00010	Low Pressure Wash Lance, Hot Cell Area
24590-PTF-FH-PWD-TOOL-00011	24590-PTF-M0D-PWD-00011	Low Pressure Wash Lance, P-0119
24590-WTP-MZ-30-MAINT-00002	24590-HLW-M0D-M17T-0017	HLW CO2 Decontamination Blast Unit
24590-WTP-MZ-30-MAINT-00004	24590-HLW-M0D-M10T-0030	Roaming HLW CO2 Decontamination Blast Unit
24590-HLW-FH-30-TOOL-00028	24590-HLW-M0D-30-00266	Pressure Washing Supply System, Unit 01
24590-HLW-FH-30-TOOL-00029	24590-HLW-M0D-30-00267	Pressure Washing Supply System, Unit 02
24590-WTP-MZ-10-MAINT-00001	24590-PTF-M0D-M17T-00002	PTF CO2 Decontamination Blast Unit
24590-WTP-MZ-10-MAINT-00002	24590-PTF-M0D-M10T-00007	Roaming PTF CO2 Decontamination Blast Unit
24590-WTP-MZ-20-MAINT-00001	24590-LAW-M0D-M17T-00002	LAW CO2 Decontamination Blast Unit
24590-WTP-MZ-60-MAINT-00001	24590-LAB-M0D-M10T-00003	LAB CO2 Decontamination Blast Unit
24590-HLW-FH-RWH-TOOL-00077	24590-HLW-M0D-RWH-00019	Spray Lance, Remote (CO2)
24590-PTF-FH-PIH-TOOL-00037	24590-PTF-M0D-PIH-00031	Liquid Pressure Washing Supply System, PTF Portable Unit
24590-PTF-FH-PEH-TOOL-00016	24590-PTF-M0D-PEH-00039	Spray Lance, Remote H2O

R10461947

ISSUED BY
APP-WTP PDC

RIVER PROTECTION PROJECT – WASTE TREATMENT PLANT

ENGINEERING SPECIFICATION

FOR

WET ELECTROSTATIC PRECIPITATORS

Content applicable to ALARA? ☒ **Yes** ☐ **No**

ADR No.	**Rev**
24590-LAW-ADR-M-02-022	0
24590-HLW-ADR-M-03-001	1

NOTE: Contents of this document are Dangerous Waste Permit affecting.

Quality Designator
QL
DOE Contract No. DE-AC27-01RV14136

REV	DATE	REASON FOR REVISION	BY	CHECK	REVIEW	QA	APEM/DEM
5	1/26/05	Incorporate SCN No. 24590-WTP-3PN-MKE0-00002, SCN No. 24590-WTP-3PN-MKE0-00003, SCN No. 24590-WTP-3PN-MKE0-00004, SDDR No. 24590-WTP-SDDR-PROC-04-00451, SDDR No. 24590-WTP-SDDR-PROC-04-00869, SDDR No. 24590-WTP-SDDR-PROC-04-01245, SDDR No. 24590-WTP-SDDR-PROC-00063, SDDR No. 24590-WTP-SDDR-PROC-05-00064. Changes to Appendix E	M.A. Seed	W. Drosjack	L.Donovan/J.Pullen	G. Warner	W. Eaton
4	8/21/03	Revised HLW vessel configuration, modified functional testing requirements	K. Clarke	W. Drosjack	L.Donovan/J.Pullen	G. Warner	W. Eaton
3	4/18/03	Addressed comments from external review, strengthened functional testing requirements, modified vessel design changes made in Rev 2	K. Clarke	W. Drosjack	L.Donovan/J. Pullen	G. Warner	W. Eaton
2	1/14/03	Addressed design evolution/clarification for both LAW and HLW WESP vessels	K. Clarke	W. Drosjack	N/A	G. Warner	W. Eaton
1	11/19/02	Revised Cover Sheet	K. Clarke	D. Larson	N/A	G. Warner	W. Eaton/G. Duncan
0	11/11/02	Issued for Purchase	K. Clarke	D. Larson	N/A	G. Warner	C.Winkler/ G.Duncan

SPECIFICATION No. 24590-WTP-3PS-MKE0-T0001 **Rev** 5

Contents

1 Scope 1
1.1 Project Description and Location 1
1.2 Process Description 1
1.3 Acronyms 1
1.4 Definitions 1
1.5 Work in Scope 2
1.6 Work by Others 3
2 Applicable Documents 3
2.1 Referenced Codes and Industry Standards 3
2.2 Related Documents 3
2.3 Referenced Project Documents 4
3 Design Requirements 4
3.1 Performance Requirements 4
3.2 General Design Requirements 5
3.3 Vessel Design Requirements 5
3.4 Vessel Internal SSC Design Requirements 6
3.5 Design Requirements for Ease of Maintenance 7
3.6 Electrical Requirements 9
3.7 Control and Instrumentation Requirements 9
4 Materials 9
5 Fabrication 9
5.1 General 9
5.2 Welding Requirements 10
5.3 Nameplates and Markings 10
6 Tests And Inspections 10
6.1 Shop Testing 10
6.2 Site Performance Testing 11
7 Packaging, Shipping, Handling, And Storage Requirements 12
7.1 General 12
7.2 Vessels and other Equipment 12
8 Field Support 12
8.1 Training 12
8.2 Installation and Startup Support 12
9 Quality Assurance 13
10 Documentation and Submittals 13

10.1 General 13
10.2 Additional Submittals 13

Appendices

Appendix A General Design Data ..... A-i
Appendix B LAW WESP Design Data ..... B-i
Appendix C HLW WESP Design Data ..... C-i
Appendix D Engineering Information Data Sheet ..... D-i
Appendix E Figures ..... E-i

1 Scope

This specification covers the design, fabrication, documentation, testing, and delivery of wet electrostatic precipitators (WESPs) for hazardous waste vitrification (melter) offgas systems. The scope includes four (4) precipitator systems consisting of pressure vessels with internal precipitator components, power supplies and cable, system controls and instrumentation, and utility/service design. There are two precipitator system designs.

1.1 Project Description and Location

The Buyer has entered into a contract with the US Department of Energy for pretreatment and vitrification of waste stored in underground tanks at the Hanford Site in southeast Washington State. The contract specifies that the Department of Energy will retrieve and transfer low-activity and high-level (radioactive) waste to the River Protection Project - Waste Treatment Plant facilities designed, built, and commissioned by the Buyer for pretreatment and vitrification. The Buyer will return the vitrified waste products, intermediate waste products, and secondary wastes to the Department of Energy for interim storage and disposal.

1.2 Process Description

Vitrification of low-activity and high-level waste will be performed using joule-heated melters. Melter offgas will be generated by converting a slurry of radioactive waste and glass formers into molten glass. The vitrification process offgas will consist primarily of air and steam with acid gases and entrained particles. Under normal conditions, offgas leaving the melter will be mixed with air and steam and routed to a submerged bed scrubbing column. Within the submerged bed scrubber, the gas will be quenched while bubbling through packing submerged in water. Condensation will occur, most particles greater than 1μm will be removed, and some acids gases will be absorbed. The offgas will then be directed to the wet electrostatic precipitator for further particulate removal. The offgas system will operate under negative pressure.

The low-activity waste melter offgas systems are depicted on Refs. 2.3.B.1 through 2.3.B.3. The high-level waste melter offgas system is depicted on Refs. 2.3.B.4 through 2.3.B.9.

1.3 Acronyms

HLW	High-Level Waste
ICN	Integrated Control Network
LAW	Low-Activity Waste
PCS	Process Control System
RTD	Resistance-Temperature Device
SSC	System, Structure, and Component
WESP	Wet Electrostatic Precipitator

1.4 Definitions

Buyer	Bechtel National, Inc
Collecting Surface (also known as a collecting electrode)	Surface(s) on which negatively charged particles deposit or collect.
Discharge Electrode	Part that is installed in a high-voltage system to perform the function of charging gas particulate and/or creating an electrostatic field.
Insulator	Device used to physically support and electrically isolate the high-voltage WESP internals.

Owner	Department of Energy
Shall	Indicates a mandatory requirement in order to comply.
Supplier	Primary Seller of the deliverable items (including subcontractors).
Power Supply	Unit used to convert normal service voltage to a high-voltage/high-frequency dc supply.
WESP	The wet electrostatic precipitator, or precipitator, is a complete assembly of mechanical, electrical, control, and structural components for vitrification offgas particulate abatement.

1.5 Work in Scope

A Provide design, fabrication, documentation, and delivery of the following:
1 LAW WESPs complete with appurtenances, quantity per the material requisition.
2 HLW WESPs complete with appurtenances, quantity per the material requisition.

B Major WESP SSCs include:
1 Precipitator vessels with required nozzles.
2 Vessel structural support skirts, mounting rings and anchor chairs.
3 Collecting surfaces and supports.
4 Discharge electrodes and supports.
5 Offgas distribution plates or screens (as required).
6 Vessel internal flush/mist water piping and distribution manifolding (as required).
7 Air purge supply systems internal to the precipitator equipment (as required).
8 High-voltage insulator systems including housings, leads and bushings.
9 Power supplies including ancillary equipment (See Ref. 2.3.A.2).
10 All system controls and control execution requirements for Buyer's design and implementation into the ICN and PCS (see Ref. 2.3.A.2).

C Other work included:
1 Design and supply of high-voltage cable and terminations between power supplies and vessels.
2 Process and instrumentation design support for all required services/utilities from Buyer's supply headers.
3 Furnishing Buyer installation and testing parts:
a Six (6) sets of reusable gaskets for all manways/inspection ports, vessel heads and blinded openings on LAW vessels only: three sets for testing and shipment; and three sets unused, tagged, and shipped separately with the vessel.
b Three (3) sets of reusable gaskets for all HLW manways/inspection ports and blinded openings on HLW vessels only.
c One (1) gasket for each HLW vessel head.
d Ten percent fasteners for manways/inspection ports, vessel heads, and other blinds, for all vessels.
e One set of insulators for LAW WESPs.
f One set of insulators for HLW WESPs.
4 Shop testing as outlined in section 6.
5 Special Tools: Two (2) complete sets of all special equipment, tools, and/or other components required for installation and/or maintenance of the system. One set will be for LAW and one set will be for HLW.
6 Shim packs for HLW vessels only. See section 3.3.C.4 and Appendix E, Figure 3.
7 Under a separate contract, technical support for WESP system installation, startup and testing at the site.
8 Under a separate contract, technical support for training Owner's operating personnel, including training, operating, and maintenance manuals, and other applicable training material.

1.6 Work by Others

Buyer will be responsible for the following:

A Services, Utilities, and Controls:

1 All raceway, cabling, and connections to the WESP equipment outside of the Seller's scope of work, including the supply, routing and installation of high-voltage cable and fiber-optic communication cable, from the WESP controls to the ICN.

2 Supply of raceway from high-voltage cable between the power supply and vessel.

3 Routing and installation of raceway, high-voltage cable, and terminations between the power supply and vessel.

4 Supply, routing and installation of services and utilities (including instrumentation) to, and between, WESP system components, including water and air services, and level detection instrumentation.

5 Misting spray systems installed in offgas lines upstream of vessels.

6 Supply and routing of vessel drain discharge lines.

7 Connections from Seller's equipment to Buyer's grounding grid.

8 Motor control centers.

9 ICN communication system, including control platform and architecture.

10 PCS operating system.

11 Programming and configuration of the control's graphic display(s) and process flow diagrams into the PCS.

B Mechanical and Structural:

1 Equipment locations and dimensional constraints.

2 Structural supports, foundations, embeds, leveling channels and enclosures (to be coordinated with Seller).

3 Structural access platforms (to be coordinated with Seller).

4 Piping design and routing.

5 Bolts, nuts, gaskets at interfaces to Buyer-supplied equipment and structures.

C Other Work Provided by Buyer:

1 Job site material receiving, storage, and field installation of Seller's equipment.

2 Overhead maintenance crane(s).

3 Standard maintenance tool sets.

4 Site testing.

2 Applicable Documents

2.1 Referenced Codes and Industry Standards

National Fire Protection Association (NFPA) – NFPA 70 (1999), National Electrical Code, Article 250, Grounding

2.2 Related Documents

Other project specifications, standards, and standard details as listed or referenced in section 2 of the material requisition shall be used as applicable for the design and fabrication of the WESPs.

2.3 Referenced Project Documents

A Specifications:

1 24590-WTP-3PS-MV00-T0001, Engineering Specification for Pressure Vessel Design and Fabrication.
2 24590-WTP-3PS-EVR2-T0001, Engineering Specification for Wet Electrostatic Precipitator (WESP) Power Supply.
3 24590-WTP-3PS-G000-T0003, General Specification for Packaging, Shipping, Handling, and Storage Requirements.
4 24590-WTP-3PS-JQ07-T0001, Engineering Specification for Instrumentation for Package Systems.
5 24590-WTP-3PS-G000-T0001, General Specification for Supplier Quality Assurance Program Requirements.
6 24590-WTP-3PS-MV00-T0002, Engineering Specification for Seismic Qualification Criteria for Pressure Vessels.
7 24590-WTP-3PS-FB01-T0001, Engineering Specification for Structural Design Loads for Seismic Category III & IV Equipment and Tanks.

B Drawings:

1 24590-LAW-M6-LOP-00001, P&ID – LAW Primary Offgas Process System, Melter 1.
2 24590-LAW-M6-LOP-00002, P&ID – LAW Primary Offgas Process System, Melter 2.
3 24590-LAW-M6-LVP-00001, P&ID – LAW Secondary Offgas/Vessel Vent Process System, Melters Secondary Offgas.
4 24590-HLW-M6-HOP-00001, P&ID – HLW Melter Offgas System – Melter 1 – Primary Offgas Scrubber.
5 24590-HLW-M6-HOP-20001, P&ID – HLW Melter Offgas System – Melter 2 – Primary Offgas Scubber.
6 24590-HLW-M6-HOP-00002, P&ID – HLW Melter Offgas System – Melter 1 – Primary Offgas WESP.
7 24590-HLW-M6-HOP-20002, P&ID – HLW Melter Offgas System – Melter 2 – Primary Offgas WESP.
8 24590-HLW-M6-HOP-00003, P&ID – HLW Melter Offgas System – Melter 1 – Secondary Offgas Treatment Sheet 1 of 2.
9 24590-HLW-M6-HOP-20003, P&ID – HLW Melter Offgas System – Melter 2 – Secondary Offgas Treatment Sheet 1 of 2.
10 24590-WTP-MV-M59T-00026, Anchor Bolt Chair Details for Vertical Vessels
11 24590-WTP-PW-P30T-00001, WTP End Prep Detail for Field Butt Welds

3 Design Requirements

3.1 Performance Requirements

A The LAW and HLW vitrification facilities are expected to operate for approximately 40 years. Furnish WESPs for both facilities that comply with the following:

1 The general design criteria in Appendix A.
2 The operating conditions for LAW and HLW in Appendices B and C, respectively.
3 The performance/design requirements for LAW and HLW in Appendices B and C, respectively.
4 The availability requirements for LAW and HLW in Appendices B and C, respectively.

3.2 General Design Requirements

A Each WESP shall be stand-alone and have the capability to handle the design offgas flow from the melter and submerged bed scrubber, as well as purge air (if used) introduced at the WESP.

B Design WESP vessel and insulator housings to confine offgases and to undergo no structural or functional damage during temperature or pressure excursions.

C Seller shall consider the following during WESP design: For both LAW and HLW WESPs, the power supply and the precipitator vessel will be located in different rooms. See Ref. 2.3.A.2 for approximate cable lengths between proposed power supply locations and vessels.

D Provide completed data sheet in Appendix D.

E Seller shall ensure that SSCs common to each LAW WESP are identical in design and from the same supplier/manufacturer. Seller shall also ensure the same for the HLW vessel/precipitator design.

F All WESP internals for both LAW and HLW systems shall be commercial grade except for the vessels, and any other component or nozzle connection affecting the offgas confinement function of the vessels within Seller's scope. See section 9 of this specification for specific quality assurance requirements pertaining to vessels and vessel internals. Reference 2.3.A.2 for power supply requirements.

3.3 Vessel Design Requirements

A General:

1 The pressure vessels for all WESPs shall be designed and fabricated in accordance with Ref. 2.3A.1 and any additional requirements defined in this specification. Notify Buyer for resolution of any requirement conflicts.

2 Seismic Analysis: All vessels and power supplies shall be designed per Seismic Category (SC) III requirements. See Ref. 2.3.A.7 for SC-III definitions and design requirements. See Ref. 2.3.A.6 for general seismic qualification criteria.

3 Fatigue Analysis: See Appendix A for fatigue analysis requirements.

4 Other Loadings: See Appendices B and C for additional LAW and HLW vessel loadings, respectively.

B LAW Precipitator Vessels:

1 Vessels shall be floor mounted.

2 Vessels shall be designed to fit within the physical envelope defined in Figures 1 and 2 of Appendix E.

3 Vessel structural support shall consist of a skirt and foot plate with weep holes and access for visual inspection. Provide eight (8) anchor bolt "chairs" around the base of the skirt, equally spaced and straddling the vessel centerline. Details of the chairs to be used, Type 2a, are shown in Ref. 2.3.B.10.

4 Orient known required nozzles as shown in Figure 1 of Appendix E. Coordinate with Buyer to determine final nozzle elevations.

5 Vessels shall have flanged removable top heads to access internal components for maintenance. Heads may be flat, dished, or elliptical.

6 Design vessel head to minimize impact to adjacent insulators and associated housings during handling.

7 Design head/vessel mating interface to retain seal integrity after the head has been removed and replaced.

8 Design vessel head to be lifted and moved by a bridge crane with a standard C-hook.

9 Service penetrations through the top vessel heads are not permitted.

10 Connections to components that are not consumables or not removable shall be welded or otherwise made permanent.

C HLW Precipitator Vessels:

1 Vessel shall be floor mounted.

2 Vessels shall be designed to fit within the physical envelope defined in Figures 3 and 4 of Appendix E.

3 Vessel structural support shall consist of a skirt and foot plate with weep holes and access for visual inspection. Provide eight (8) anchor bolt "chairs" around the base of the skirt, equally spaced and

straddling the vessel centerline. Details of the chairs to be used, Types 2a thru 2f, are shown in Ref. 2.3.B.10. Coordinate with Buyer to finalize chair orientation and tolerances.

4 For each anchor bolt chair, provide a shim pack consisting of the following 10" square stainless steel plates:
   a 2 each 1/4" thick plates.
   b 1 each 1/8" thick plate.
   c 2 each 1/16" thick plates.

5 Orient known required nozzles as shown in Figure 4 of Appendix E. Coordinate with Buyer to determine final nozzle elevations.

6 Vessels shall have flanged removable top heads. Heads may be flat, dished, or elliptical

7 Design vessel head to minimize impact to adjacent insulators and associated housings during installation handling.

8 Design head/vessel mating interface to retain seal integrity after the head has been placed at installation in accordance with Seller's written instructions.

9 Design vessel head to be lifted and moved by a crane with a standard C-hook.

10 Service penetrations through the top vessel heads are not permitted.

11 Connections to components that are not consumables or not removable shall be welded or otherwise made permanent.

12 If a manway/inspection port is required for final alignment of electrodes before hot startup, design nozzle flange and blind flange plate to be seal welded by Buyer after completion of non-radioactive testing.

3.4 Vessel Internal SSC Design Requirements

A General:

1 Vessel internal SSC design shall account for thermal expansion, and simplify fabrication and maintenance requirements to the extent possible.

2 Design vessel internal SSCs to minimize the occurrence of dead gas pockets or areas where particulate or liquid might tend to accumulate.

3 Vessel internal SSCs not affecting the offgas confinement function of the vessels do not need to be seismically qualified.

4 LAW vessel internal SSCs shall be designed to be removable/replaceable if the Seller cannot guarantee zero maintenance for the life of the facility.

5 HLW vessels and their internal SSCs, excluding the insulators, will not be accessible after hot (radioactive) startup of the offgas systems. The internal SSCs will be designed for zero maintenance for the life of the facility.

B Insulators:

1 Insulators shall be ceramic, with a minimum alumina concentration of 97 percent.

2 Insulator enclosures and internal buses shall be designed with suitable internal surfaces and electrical clearances to prevent arcing.

C Collecting Surfaces:

1 Given the vessel envelope constraints, furnish the required collection surface area to meet the performance requirements in Appendices B and C.

2 Buyer prefers round pipes for ease of cleaning. Plate-type collection surfaces are not acceptable.

3 The design shall provide the means of maintaining the parallel alignment of adjacent collection surfaces after installation. Seller shall ensure that internal assemblies cannot be bent, buckled, or distorted prior to startup by following prescribed handling procedures.

4 The design shall prevent offgas from bypassing collection zones.

D Discharge Electrodes:

1 Furnish mechanically stable discharge electrodes of rigid construction or supported in a rigid frame. Use of weighted, hung, non-rigid discharge electrodes is not acceptable.

2 Discharge electrodes and collecting surfaces shall be plumb. The design and fabrication of discharge electrodes and collecting surfaces shall be such that the required alignment can be preserved after installation while permitting the necessary thermal expansion without warping.

3 The high-voltage support system and rigid discharge electrode design shall prevent swaying or movement of the electrodes at the design flow rates shown in Appendices B and C.

E Offgas Distribution:

1 The inlet air distribution system shall be such that the offgas shall pass across each collecting surface uniformly.

2 If possible, it is preferred that the Seller use a design that does not use perforated plate(s) or screen(s).

F Cleaning/Flushing:

1 Seller shall provide water flushing systems to periodically wash solids from the collecting surfaces, discharge electrodes, and internal vessel surfaces to prevent solids buildup that would impair operation or collection efficiency. Provide top and bottom flushing systems in each HLW vessel as depicted in Ref. 2.3.B.6 and 7. Provide only a top flushing system in each LAW vessel. Recirculating systems are not acceptable.

2 Seller shall provide misting capabilities in the LAW vessels but not in the HLW vessels. Seller shall coordinate with Buyer to determine final misting requirements.

3 Periodic flushing, continuous misting spray nozzles, or other industry standard forms of washing are acceptable.

4 Water use for WESP operation/cleaning shall be minimized. Seller shall limit water consumption to 500 gallons per day for misting applications (if used) and 500 gallons per day for flushing.

5 Minimize WESP downtime during flushing. Misting applications shall not affect normal WESP operations.

6 Design consideration shall be given to minimizing blockages in nozzle discharge orifices and eliminating uncontrolled drips.

7 The spray headers shall not act as a ground for arcing.

8 The water quality and supply pressure will be as identified in Appendix A, unless otherwise recommended, and justified by the Seller.

9 Buyer may fill the vessel with decontamination solutions (HLW only) or hot or cold water for soaks/washes after hot startup, but only during offgas system shutdowns. Buyer intends to utilize the flush water systems to introduce the cleaning mediums. Seller shall consider and advise Buyer of design impacts to vessels and vessel internals.

G Purge Air:

1 Provide purge air around electrical components (such as the insulators) to reduce particulate buildup, salt scaling, and condensation, and to prevent arcing.

2 Specify temperature and flowrate requirements for the system. The air supply quality will be as identified in Appendix A, unless otherwise recommended, and justified by the Seller.

3 Minimize the amount of air used to the extent practical.

3.5 Design Requirements for Ease of Maintenance

A General:

1 The LAW and HLW vitrification facilities are expected to operate for 40 years. Seller shall consider this operational duration in the design of all components, including those to be removed/replaced and/or upgraded over the operational life of the facility.

2 Component design shall be modularized and/or designed to facilitate ease of component replacement, repair, or upgrade wherever practical. Submit a modularization plan for review and approval.

3 Seller shall ensure that component design accounts for the planned maintenance frequencies for LAW and HLW WESP SSCs defined in Appendices B and C, respectively.

4 WESP components designed to be removed/replaced, weighing more than 20 lb, shall be equipped with lifting attachments for use with a C-hook. Mount lifting attachments to minimize rotation/swinging during handling.

5 Seller shall ensure that WESP components designed to be removed/replaced will not damage adjacent SSCs when properly handled.

6 If required, provide two sets of specialty lifting devices (spreader bars, yokes, etc.) to interface with Buyer's crane and C-hook for WESP component handling: one set for LAW WESPs, and the other for HLW WESPs.

B Design WESP SSCs for the following access restrictions:

1 Electrical and Control Equipment: Access to electrical and system control equipment external to the vessel rooms, for both LAW and HLW WESPs, will be unrestricted.

2 HLW vessels:

a Vessels and internal components, excluding top insulator housing covers and the insulators themselves (via the top insulator housing covers), will not be accessible after hot startup. Access to the insulators will be possible only when the associated melter has been deactivated, or is not processing feed, and the offgas system flushed to bring radiation and contamination to safe levels.

b After vessel and vessel internals have been installed and the surrounding structure completed, intact removal and replacement of vessel internals will not be possible due to spatial constraints and radiation contamination.

c If additional alignment of vessel internals is required after installation and prior to hot startup, Seller must provide adequate access through suitably located manway/access ports in the vessel.

d Buyer will provide temporary access platforms around vessels during installation and cold (non-radioactive) startup, as required.

3 LAW vessels:

a After hot startup, vessel access (both internal and external) will be possible only when the associated melter has been deactivated, or is not processing feed, and the offgas system flushed to bring radiation and contamination to safe levels.

b Personnel accessing the vessels after hot startup will be in multilayered personal protective equipment and on supplied air systems.

c Buyer, in coordination with Seller, will provide structural platforms around the vessels to access insulator housings and head flange bolting.

d Buyer will provide access hatches through the floor, centered over each vessel, for removing/ replacing internal SSCs. The access hatches will be 11'-0" square.

e The corridor above the vessel rooms will be served by a bridge crane with a capacity of at least 20 tons. The crane, with C-hook, will be able to pick and place equipment in the vessel rooms through the access hatches. The corridor may be used to reassemble pressure vessel internals and other components if necessary.

C Other LAW Vessel Design Requirements:

1 LAW pressure vessel design shall consider personnel access requirements for replacing and aligning internal components after both cold and hot startup of the offgas systems. No personnel access via the manway/inspection ports will be permitted after hot startup. However, manual or remote operated tools may be inserted if required.

2 For LAW pressure vessel design, Seller shall consider ease of maintenance when determining vessel head bolting/fastener configuration. Coordinate with Buyer to finalize configurations.

3.6 Electrical Requirements

A Provide power supplies and associated high-voltage cable and terminations for each WESP accordance with Ref. 2.3.A.2. Depending on the final termination housing configuration, Buyer may provide load support via the building structure.

B Vessel Grounding: Furnish at least two (2) grounding connections on opposite sides of the vessel skirt, including pads with terminal lugs for #4/0 AWG ground wire, for interface with Buyer's grounding system in accordance with Ref. 2.1.A. All flanges shall be electrically bonded either by a welded or a bolted stainless steel jumper in a minimum of two locations.

3.7 Control and Instrumentation Requirements

A Controls:

1 Provide complete dedicated power and process controls (both hardware and software), for each WESP, in accordance with Ref. 2.3.A.2.

2 System controls shall include, but not be limited to, the following:

a Power supply with voltage control.
b Deleted
c Power supply cooling control (if required).
d Deleted
e Alarms and interlocks.

3 Control logic and application software for the WESP shall reside in Seller's control system.

4 Controls for the WESP shall be Seller-configured and programmed for Buyer's monitoring, auto-start, and stop, and any control signal interfaces from the Buyer's ICN PCS.

5 Buyer recognizes that Seller may have a standard control system with proprietary hardware and software. See Ref. 2.3.A.4 for integration of Seller's proprietary components with Buyer's ICN.

B Process and Instrumentation Design:

1 See Ref. 2.3.A.4 for packaged system instrumentation design requirements.

2 From Buyer's supply headers, coordinate with Buyer to provide complete designs of all process services and associated instrumentation for each WESP.

3 Process service and instrumentation design support shall include, but not be limited to:

a Purge air (as required).
b Water flushing/misting washing (as required).
c Cooling (as required).

4 Materials

See Appendix A for required/acceptable materials for WESP vessels, wetted internal components, nonwetted components, and structural steel. See Ref. 2.3.A.2 for power supply and control equipment requirements.

5 Fabrication

5.1 General

A Vessels: Fabrication of vessels and structural attachments shall conform with Ref. 2.3.A.1.

B Other WESP Components: Fabrication of WESP components other than vessels, nozzles, and welded structural components shall be per the Supplier's and/or industry standards for the intended service.

5.2 Welding Requirements

A Vessels: Welding requirements for vessels, nozzles, and structural attachments shall conform with Ref. 2.3.A.1.

B Other WESP components: Welding requirements for internal WESP components shall be per industry standards for the intended service.

C Nondestructive examination of vessels and structural attachments shall be in accordance with Ref. 2.3.A.1 with exceptions noted in Appendix A.

5.3 Nameplates and Markings

A Provide corrosion-resistant danger signs at all points of high voltage, reading: "DANGER - HIGH VOLTAGE".

B Provide additional nameplates and equipment tagging in accordance with the Purchase Order.

6 Tests And Inspections

6.1 Shop Testing

A Vessels, including nozzles, structural attachments, and any other component affecting the containment function of the WESP, shall be tested in accordance with the requirements of Ref. 2.3.A.1.

B Perform a hydrostatic test in accordance with Ref. 2.3.A.1.

C Power supplies and control equipment shall be tested in accordance with the requirements of Ref. 2.3.A.2.

D Load Tests: Lifting lugs on vessel internals shall be proof load tested at 125 percent (minimum) of the measured dry weight of the components. Also provide applicable test certification for lifting devices.

1 Deleted
2 Deleted
3 Deleted

E Prior to shipment, Seller shall assemble and operate each WESP to verify complete system functionality, including flush/mist water systems, purge air systems, insulators and electrodes, power supplies, electrical controls, and instrumentation. Seller shall be responsible for providing the following equipment and services:

1 High-voltage cable (with terminations) similar to the maximum designed length and configuration.
2 Source for flush/mist water purge. Water quality as referenced in Appendix A.
3 Source for purge air. Air quality as referenced in Appendix A.
4 Atomized spray mimicking the offgas. May be an air stream saturated with salt-laden water vapor. Flow rates as shown in Appendices B and C.
5 Test and control instrumentation as required.
6 Structural supports as required.

F Seller shall perform one (1) successful functional test on each WESP with no system malfunctions. The test shall include a four day run (96 hour test) using the saturated air stream (includes restart after flushing) and additional system checks conducted before or after the run. Each test shall be fully documented with photographs. During the test the Seller will perform the following:

1 Perform vessel flushing, utilizing no more than 500 gallons of water for each flush, once after 48 hours of operation and once after 96 hours of operation. Prior to and after the 48 hour flushing, an inspection shall be performed of the vessel internals (lower portions only after 48 hour flush), and documented with photographs. Successful operation will be determined by the Buyer, based on test data, visual

observation, and documented evidence of particulate build-up on the vessel internals. No water pooling deeper than 1/4" on internal surfaces is allowed. After the flushing cycle is complete document the time required to return to operation at normal voltage.

2 For LAW WESPs, the internal misting nozzles may be operated during the 96 hour test..

3 Measure pressure differential relative to gas flow across vessel (between gas inlet and gas outlet) roughly every hour for the duration of the continuous run, excluding flush cycle and system restart.

4 Monitor spark rate for the duration of the 96 hour test. Successful operation shall be defined by no electrical shorting beyond the expected normal spark rate. In addition, determine the voltage at which abnormal/excessive sparking begins to occur.

5 Monitor power supply voltage, current, and power consumption for the duration of the 96 hour test.

6 Provide the Seller-determined flowrate of purge air to each insulator housing during the 96 hour test. After the 96 hour test, confirm that the insulators are free of any visible signs of particulate and water buildup.

7 Either before or after each 96 hour test, Seller shall operate the misting system (LAW only) and the flushing system(s) long enough to verify by visual means that water distribution is even over the cross-section of the vessel. For the misting system, verify coverage using not more than 25 gallons per hour. For the flushing system(s), verify coverage using not more than 100 gallons per minute.

8 Either before or after the 96 hour test, Seller shall confirm even gas distribution through approximately 20 to 30 collecting tubes for one LAW WESP and one HLW WESP, using a method to be agreed upon with the Buyer. Gas distribution shall be confirmed using nominal offgas flow for LAW as shown in Appendix B and maximum design offgas flows for HLW shown in Appendix C. Acceptable distribution must be proved via use of the WESP flow data and relationship to efficiencies shown in Appendix B and Appendix C and verified by Buyer. Any physical modifications to the internals required to successfully pass the tests shall also be completed on the similar untested vessel(s).

Provide two weeks advance notice to Buyer prior to conducting tests. After conclusion of each test, Seller shall disassemble, dry, and clean equipment in preparation for shipment.

G Buyer shall have access to all testing records. Furnish a copy of all certified test data and test results, whether witnessed or not.

6.2 Site Performance Testing

A Under a separate contract and prior to site testing, Seller shall conduct a thorough inspection with Buyer to ensure that each WESP has been installed in accordance with Seller's drawings and instructions. Notify Buyer of any deficiencies.

B Under a separate contract and prior to conducting installation inspections, advise Buyer on the specific inspections to be carried out, and the advance notice required for performing the inspections.

C Buyer will conduct performance testing on each installed melter offgas system (WESP included) to demonstrate operational and performance guarantees. All testing will be conducted before placing the systems into radioactive service.

D Testing will demonstrate operability of the WESP under various melter offgas operational conditions. The WESP must operate in compliance with Seller's performance guarantees and expected performance capabilities.

E All Seller-supplied systems and components will be utilized during testing.

F Buyer will notify Seller a minimum of one month prior to start of testing. Buyer will also inform Seller of test scope.

G Seller shall coordinate with Buyer to develop recommended WESP system test procedures to be used in conjunction with the test procedures for the overall offgas system.

H Seller shall provide a list of specialty equipment for component testing, tuning, checkout, and maintenance, based on Buyer's test scope.

I As required, Seller shall provide appropriate hardware, software, and support services to perform integration testing of the control portion of the WESP with the ICN.

J Data accumulated during testing shall be measured and recorded by Buyer, with Seller assistance as required.

K During testing, Seller shall document problems uncovered; assess root causes; and present findings, recommendations, and courses of action, which shall be reviewed in consultation with Buyer, prior to implementing any and all repairs/modifications. A complete written report shall be provided to Buyer.

L Remedial actions required to correct deficiencies uncovered in Seller's equipment during performance testing shall be made by Seller at his expense. Modifications shall be performed only after receipt of written approval by Buyer. Depending on the extent of the modifications, the performance testing will be repeated, and applicable costs involved with the repeat testing of the WESP shall be borne by Seller.

7 Packaging, Shipping, Handling, And Storage Requirements

7.1 General

General Requirements: Seller shall adhere to Ref. 2.3.A.3 for general packaging, shipping, handling, and storage requirements for all WESP components.

7.2 Vessels and other Equipment

A Vessels: In addition to the general requirements in Ref. 2.3.A.1, prepare vessels for shipment in accordance with Ref. 2.3.A.3.

B Clearly mark lifting points.

C Install shipping stops, bolts, ties, etc., in all devices prior to shipment.

D Match mark and package components to provide for rapid and accurate site installation.

E Seller shall ensure that the alignment and shape of discharge electrodes and collecting surfaces can be maintained and/or properly realigned prior to installation per Seller's handling instructions.

8 Field Support

8.1 Training

Under a separate contract, Seller shall provide operations and maintenance training to Owner's representatives at the site (five working days total), including provision of operating and maintenance manuals and other applicable training materials.

8.2 Installation and Startup Support

A Under a separate contract, Seller shall provide technically competent personnel, including representatives of sub-sellers, to advise and consult during installation, startup, testing, and commissioning.

B Seller shall provide the following to facilitate field installation in a timely and efficient manner:

1 Installation procedure describing sequence of installation and tolerances backed up by installation drawings showing lifting provisions for all heavy and/or bulky components necessary to properly handle them, including design and shop installation of lifting and tailing lugs as required.

2 Adjustment procedures for alignment of WESP internals prior to and during installation.

3 Components are to be delivered in the largest, most complete assemblies practical. Components will be clearly marked with weight, center of gravity, and rigging points identified. Components that contain special coatings or linings that could be damaged by welding or improper handling shall also be marked.

9 Quality Assurance

A Seller shall perform all work in this specification in accordance with a Buyer-approved quality assurance plan (see Ref. 2.3.A.5), and the supplier quality assurance data sheets included as part of the material requisition. Seller shall ensure that all software used and programs developed for use in design conform to the supplier quality assurance data sheets. Seller shall be responsible for flowdown of applicable quality assurance requirements to all sub-sellers.

10 Documentation and Submittals

10.1 General

A Seller shall comply with the requirements of Forms G-321-E and G-321-V of the material requisition. Furnish drawings, calculations, reports, specifications, procedures, test results, and all other required documents.

B All drawings and documents submitted for review shall be:

1 Checked and signed off by the Seller's qualified representative.

2 Identified by their own unique name and identification number.

3 In US customary units.

10.2 Additional Submittals

A In addition to examination and verification reports identified on Form G-321-V of the material requisition, Seller shall submit original radiographic film.

B Seller shall submit photographs depicting progress of vessel/vessel internals fabrication. Each photo shall include a sequence number, description, tag number, and date

C Seller shall furnish pricing and availability for all spare parts.

Appendix A

General Design Data

Appendix A
General Design Data

The following information applies to both LAW and HLW WESPs.

General Location Information

Site Elevation:	662-684 ft	Location of Project:	S.E. Washington State

Available Services

	Instrument/Plant Service Air
Dew Point:	-40°F at 100 psig. Plant service air is instrument air supplied through carbon steel pipe.
Supply Pressure:	90 to 150 psig
Quality:	ANSI/ISA S7.0.01-1996

	Demineralized Water	Process Water
Supply Temp:	60-80°F	60-80°F
Supply Pressure:	60-90 psig	60-90 psig
Quality:	demineralized, filtered <2μm; 40 ppm chlorides, 10 ppm sulfates, 340 ppm tds, 300 ppm tss, 170 ppm total hardness max	raw river water filtered <2μm

Available Power Supplies

For Instrumentation:	120 Vac, 1ϕ, 60 Hz, 480 3ϕ, 60 Hz
For Power Supplies	See Ref. 2.3.A.2

Vessel Materials

Vessel:	6% Mo alloy (e.g. AL-6XN)	Non-Contact (offgas and fluids) Metal Components:	304 or 316 ss (note 1)
Wetted Metal Components:	6% Mo alloy (e.g. AL-6XN)	External Structural Steel:	304 or 316 ss (note 1)

Other Vessel Design Requirements

Surface Corrosion Allowance:	0.04" (minimum internal)	Code Stamp:	required for all vessels
Vessel Fatigue Analysis:	not required	National Board Registration:	required for all vessels
Other Vessel Loadings:	1. For HLW vessels only, full decontamination solution soak with max specific gravity of 1.07. Do not consider this loading in seismic analyses.		
	2. Live loads generated by water flushing. Include these loads in seismic analyses.		
Nondestructive Examinations:	UT and RT (and PT as applicable) per Ref. 2.3.A.1		

Notes:

1. Stainless steel material SS304 and SS316 shall have a maximum carbon content of 0.03%. Nonwelded specialty items are excluded from this requirement.
2. For Project use only – This document has considered/applied the requirements of section 14.10 of the project design basis, Document No. 24590-WTP-DB-ENG-01-001.
3. Active vessel utility and service connections shall be welded stub-end with the following exceptions which shall be gasketed with ANSI B16.5 150# flanges. Flush /mist water connections on LAW vessels. Purge air connections on all vessels (only if connections are integral to the housings that must be removed for servicing the insulators).
4. Manways shall be blinded with ANSI B16.5 150# flanges. Clad flange not permitted.
5. Gaskets may be EPDM or equivalent, except for the HLW vessel head flange, which shall be a spiral-wound graphite-filled 6% Mo alloy gasket with inner and outer support rings of the same material.
6. Bolts for noncontact (offgas and water) applications shall be ASTM A193 Grade B8 or equivalent. Bolting material for contact applications shall be SB 574, N 10276.
7. For all vessels, Buyer supplied drain and offgas piping is schedule 10S. All other Buyer supplied piping is schedule 40S. Seller shall taper welded stub-end utility and service nozzles as required to match Buyer supplied piping schedule class.

Appendix B

LAW WESP Design Data

Appendix B
LAW WESP Design Data

Conditions in Equipment Rooms:	For Pressure Vessels	For Power Supply and Control Equipment	Access Corridors (above Rooms for Pressure Vessels)
Temperature:	max: 113°F, min: 59°F (radiant heat sources may raise temp to 150°F)	max: 95°F, min: 50°F	max: 95°F, min: 50°F
Pressure:	-1 to -1.4 in w.c.	-0.1 to -1 in w.c.	-0.1 to -1 in w.c.
Relative Humiditv:	30% - 100%	30% - 60%	30% - 60%
Contamination Level:	(C5) surface contamination ≥100,000 dpm/100cm^2	(C2) surface contamination <1,000 dpm/100cm^2	(C3) surface contamination 100,000≥x≥1,000 dpm/ 100cm^2, may elevate to C5 when hatch is open
Radiation Level:	R5: high - 100 mrem/hr (decontaminated for personnel access)	R2: 0.25 mrem/hr	R3: 2.5 mrem/hr
Personnel Access:	access not normally permitted (plastic suits and supplied air)	unrestricted area – normal work clothes	contaminated area –(protective clothing, gloves, respirator)
Electrical Hazard Class:	non hazardous	non hazardous	non hazardous

WESP Vessel Configuration

Offgas Nozzle Orient (In): side mounted
Offgas Nozzle Orient (Out): side mounted
Vessel Orientation: vertical
Offgas Flow Path thru Vessel: bottom to top

Inlet Process Conditions

Offgas Flow Rate:	Nominal:	1400 acfm	Design Range:	1000-2000 acfm
Offgas Temp:	Nominal:	121 °F +/- 15 °F	Design Range:	45-170 °F (minimal cycling)
Offgas Pressure:	Nominal:	-45 inches w.c.	Design Range:	+1 atm to -1 atm
Offgas Humidity:	Nominal:	100 %	Design Range:	0 – 100% (with minor solution entrainment - see note 2)
Particulates:	Inlet Conc:	10 to 300 mg/m^3		
Size:	Range:	by mass - 50% smaller than 0.50 μm, 80% smaller than 1.0 μm, 90% smaller than 2.0 μm		

Performance Requirements

Solids Removal: 99.5 % overall, 99 % for ~0.3μm particles based on 1400 acfm

Equipment Service Life:
Pressure vessel and attached nozzles and structural components: 40 years
Pressure vessel and permanent internal precipitator components: 40 years
Pressure vessel consumable internal precipitator components (including insulators): minimum of 7 years. Consider ease of replacement in design.
Power supply and control equipment: minimum of 7 years. Consider ease of upgradeability.
Instrumentation systems: design for 40 years. Consider ease of upgradeability in design.
Power, control communications cabling: design for 40 years. Consider ease of upgradeability.

Availability: 97% rolling average over each 7 year period between melter changout.

Planned Maintenance Freq: Equipment in Pressure Vessel Rooms: Approximately every 5-7 years. Equipment outside Pressure Vessel Rooms: Regular scheduled maintenance will be performed

Notes:

1. Low end of offgas flow rate design range occurs after melter has stopped feeding. The offgas from two idled melters can be combined to permit one offgas system to be isolated, flushed, and accessible for maintenance.
2. It is anticipated that offgas humidity will not fall below 75 percent, based on upstream scrubber operation.

Predicted LAW Offgas Analysis at Inlet – Bounding Conditions for All Feed Types

	% by Volume	g/m3	mol/l
Cations			
Al^{3+}	0.0%	1.54E-04	5.71E-09
Ag^{+}	0.0%	3.88E-07	3.60E-12
B^{3+}	0.0%	7.18E-05	6.64E-09
Ba^{2+}	0.0%	3.28E-08	2.39E-13
Bi^{3+}	0.0%	5.46E-07	2.61E-12
Ca^{2+}	0.0%	4.98E-04	1.24E-08
Cd^{2+}	0.0%	6.59E-06	5.86E-11
Cr^{3+}	0.0%	7.88E-04	1.52E-08
Cs^{+}	0.0%	4.54E-10	3.42E-15
Fe^{3+}	0.0%	1.80E-05	3.22E-10
H^{+}	0.0%	3.37E-10	3.34E-13
Hg^{2+}	0.0%	8.27E-04	4.12E-09
K^{+}	0.0%	6.60E-03	1.69E-07
La^{3+}	0.0%	1.47E-08	1.06E-13
Li^{+}	0.0%	3.23E-08	4.65E-12
Mg^{2+}	0.0%	9.44E-05	3.89E-09
Mn^{4+}	0.0%	4.91E-07	8.94E-12
Mo^{6+}	0.0%	5.30E-06	5.52E-11
Na^{+}	0.0%	1.72E-03	7.50E-08
Ni^{2+}	0.0%	5.30E-06	9.02E-11
Pb^{2+}	0.0%	1.19E-05	5.76E-11
Se^{4+}	0.0%	1.88E-05	2.38E-10
Si^{4+}	0.0%	3.86E-03	1.37E-07
Sr^{2+}	0.0%	3.65E-09	4.17E-14
Ti^{4+}	0.0%	2.79E-03	5.84E-08
U^{4+}	0.0%	1.91E-08	8.02E-14
Zn^{2+}	0.0%	9.88E-05	1.51E-09
Zr^{4+}	0.0%	5.77E-07	6.33E-12
Anions			
Cl^{-}	0.0%	3.01E-04	8.50E-09
$H_2BO_3^{-}$	0.0%	1.54E-09	2.53E-14
HBO_3^{2-}	0.0%	1.46E-16	2.44E-21
BO_3^{3-}	0.0%	1.23E-24	2.09E-29
F^{-}	0.0%	5.21E-05	2.74E-09
I^{-}	0.0%	5.90E-11	4.65E-16
IO_3^{-}	0.0%	1.06E-220	6.07E-226
NH_4^{+}	0.0%	4.42E-05	2.45E-09
NO_3^{-}	0.0%	6.17E-08	9.95E-13
O^{2-}	0.0%	9.24E-03	5.78E-07
OH^{-}(aq)	0.0%	1.25E-13	7.37E-18
$H_2PO_4^{-}$	0.0%	3.53E-07	3.64E-12
HPO_4^{2-}	0.0%	7.14E-11	7.44E-16
PO_4^{3-}	0.0%	2.71E-15	2.85E-20
$HSiO_3^{-}$	0.0%	4.33E-10	5.62E-15
SiO_3^{2-}	0.0%	2.29E-16	3.01E-21
HSO_3^{-}	0.0%	1.73E-04	2.13E-09
SO_3^{2-}	0.0%	6.67E-08	8.33E-13
Organics			
Non-Volatile	0.0%	3.40E-03	1.16E-08
SVOC	0.0%	1.08E-02	8.43E-08
VOC	0.0%	3.16E-05	2.46E-10

Sucrose	0.0%	2.78E-02	8.12E-08
Water			
H_2O	13.8%	8.16E+01	4.53E-03
Aerosols	0.0%	7.32E-02	4.06E-06
Gases			
Ar	0.8%	1.00E+01	2.51E-04
CO	0.0%	2.78E-01	9.91E-06
CO_2	2.6%	3.73E+01	8.47E-04
HCl	0.0%	3.22E-03	8.82E-08
HF	0.0%	5.19E-03	2.59E-07
I_2	0.0%	4.31E-05	1.70E-10
N_2	64.4%	5.94E+02	2.12E-02
NH_3	0.0%	1.21E-02	7.10E-07
NO	0.7%	6.53E+00	2.18E-04
NO_2	0.5%	8.31E+00	1.81E-04
NaCl(s)	0.0%	4.04E-02	6.91E-07
NaF(s)	0.0%	2.98E-02	7.09E-07
NaI(s)	0.0%	1.78E-08	1.19E-13
O_2	17.3%	1.82E+02	5.69E-03
P_2O_5(s)	0.0%	2.64E-05	1.86E-10
SO_2	0.0%	2.86E-02	4.47E-07
Total	100.0%	9.21E+02	3.29E-02

LAW Radionuclides – Maximum Dosages	**Bq/m^3**	**mol/l**
^{3}H	1.12E+05	1.05E-13
^{14}C	1.24E+05	5.34E-11
^{60}Co	2.41E+00	9.62E-19
^{90}Sr	3.02E+02	6.65E-16
^{90}Y	3.02E+02	1.67E-19
^{99}Tc	2.37E+04	3.82E-10
^{126}Sn	4.89E-02	3.70E-16
^{129}I	2.51E+03	3.22E-09
^{129}I(s)	8.78E-01	1.13E-12
^{134}Cs	4.72E-02	7.37E-21
^{137}Cs	2.72E+03	6.23E-15
^{137m}Ba	2.57E+03	9.44E-22
^{152}Eu	2.71E-01	2.76E-19
^{154}Eu	6.11E+01	3.97E-17
^{155}Eu	6.23E+00	2.22E-18
^{233}U	2.57E-03	3.09E-17
^{235}U	1.05E-03	5.59E-14
^{237}Np	5.34E-02	8.65E-15
^{238}Pu	7.18E-02	4.76E-19
^{239}Pu	3.86E-01	7.03E-16
^{240}Pu	9.85E-02	4.87E-17
^{241}Pu	5.90E+00	6.42E-18
^{241}Am	1.63E+01	5.34E-16
^{243}Cm	1.91E-01	4.13E-19
^{244}Cm	2.49E+00	3.41E-18
Total	2.68E+05	3.66E-09

Appendix C

HLW WESP Design Data

Appendix C
HLW WESP Design Data

Conditions in Equipment Rooms:	For Pressure Vessels	For Insulator Enclosures	For Power Supply and Control Equipment
Temperature:	max: 113°F, min: 59°F (radiant heat sources may raise temp to 150°F)	max: 95°F, min: 50°F	max: 95°F, min: 50°F
Pressure:	-1 to –1.4 in w.c.	-0.1 to –1 in w.c.	-0.1 to –1 in w.c.
Relative Humidity:	30% - 100%	30% - 60%	30% - 60%
Contamination Level:	(C5) surface contamination ≥100,000 dpm/100cm^2	(C5) surface contamination ≥100,000 dpm/100cm^2 (surrounding room is C2)	(C2) surface contamination <1,000 dpm/100cm^2
Radiation Level:	R5: high - greater than 100 mrem/hr.	R5: high – up to 100 mrem/hr (surrounding room is R3)	R2: 0.25 mrem/hr
Personnel Access:	no access allowed	decontaminated for access (protective clothing, gloves, respirator)	unrestricted area – normal work clothes
Electrical Hazard Class:	non hazardous	non hazardous	non hazardous

WESP Vessel Configuration

Offgas Nozzle Orient (In):	side mounted	Offgas Nozzle Orient (Out):	side mounted
Vessel Orientation:	vertical	Offgas Flow Path thru Vessel:	bottom to top

Inlet Process Conditions

Offgas Flow Rate:	Nominal:	1200 acfm	Design Range:	1000-2000 acfm
Offgas Temp:	Nominal:	121 °F +/- 15 °F	Design Range:	45-170 °F (minimal cycling)
Offgas Pressure:	Nominal:	-45 inches w.c. (inlet)	Design Range:	+1 atm to –1 atm
Offgas Humidity:	Nominal:	100 %	Design Range:	0 – 100% (with minor solution entrainment – see note 1)
Particulates:	Inlet Conc:	10 to 300 mg/m^3		
Size:	Range:	by mass - 50% smaller than 0.50 μm, 80% smaller than 1.0 μm, 90% smaller than 2.0 μm		

Performance Requirements

Solids Removal:	99% overall, 97.5% for ~0.35μm particles based on 2000 acfm
Equipment Service Life:	Pressure vessels and attached nozzles and structural components: 40 years.
	Pressure vessel internal precipitator components: 40 years, or longest possible life up to 40 yrs.
	Power supply and control equipment: minimum of 7 years. Consider ease of upgradeability.
	Instrumentation systems: design for 40 years. Consider ease of upgradeability in design.
	Power, control, communications cabling: design for 40 years. Consider ease of upgradeability.
Availability:	97% rolling average over each 7 year period between melter changeouts.
Planned Maintenance Freq:	Equipment in pressure vessel rooms: none.
	Equipment in insulator enclosure: none
	Power supply and control equipment: regular scheduled maintenance will be performed.
	Instrumentation equipment: inside the pressure vessel room – none, other instrumentation outside C5 areas will have regular scheduled maintenance.

Notes:

1. It is anticipated that offgas humidity will not fall below 75 percent, based on upstream scrubber operation.

Predicted HLW Offgas Analysis at Inlet – Bounding Conditions for All Feed Types

	% by Volume	g/m3	mol/l
Cations			
Al^{3+}	0.0%	1.54E-06	5.72E-11
Ag^{+}	0.0%	3.37E-07	3.13E-12
B^{3+}	0.0%	3.73E-06	3.45E-10
Ba^{2+}	0.0%	6.55E-06	4.77E-11
Bi^{3+}	0.0%	5.54E-05	2.65E-10
Ca^{2+}	0.0%	7.63E-07	1.90E-11
Cd^{2+}	0.0%	1.76E-03	1.57E-08
Cr^{3+}	0.0%	2.68E-04	5.16E-09
Cs^{+}	0.0%	2.51E-04	1.89E-09
Fe^{3+}	0.0%	1.10E-05	1.98E-10
H^{+}	0.0%	1.41E-06	1.40E-09
Hg^{2+}	0.0%	3.27E-02	1.63E-07
K^{+}	0.0%	4.27E-03	1.09E-07
La^{3+}	0.0%	8.57E-06	6.17E-11
Li^{+}	0.0%	2.25E-04	3.24E-08
Mg^{2+}	0.0%	4.55E-07	1.87E-11
Mn^{4+}	0.0%	1.43E-06	2.61E-11
Mo^{6+}	0.0%	8.24E-05	8.58E-10
Na^{+}	0.0%	2.98E-03	1.30E-07
Ni^{2+}	0.0%	1.85E-06	3.15E-11
Pb^{2+}	0.0%	2.94E-05	1.42E-10
Se^{4+}	0.0%	2.07E-03	2.62E-08
Si^{4+}	0.0%	8.17E-06	2.91E-10
Sr^{2+}	0.0%	6.89E-08	7.86E-13
Ti^{4+}	0.0%	2.28E-05	4.76E-10
U^{4+}	0.0%	2.43E-06	1.02E-11
Zn^{2+}	0.0%	4.23E-06	6.47E-11
Zr^{4+}	0.0%	3.17E-06	3.47E-11
Anions			
Cl^{-}	0.0%	1.01E-05	2.85E-10
$H_2BO_3^{-}$	0.0%	9.28E-11	1.52E-15
HBO_3^{2-}	0.0%	2.25E-19	3.76E-24
BO_3^{3-}	0.0%	4.85E-29	8.24E-34
F^{-}	0.0%	4.28E-05	2.25E-09
I^{-}	0.0%	2.18E-11	1.72E-16
NO_3^{-}	0.0%	5.60E-07	9.04E-12
O^{2-}	0.0%	1.42E-03	8.88E-08
O_2^{2-}	0.0%	0.00E+00	0.00E+00
$OH^{-}(aq)$	0.0%	1.61E-15	9.49E-20
$HSiO_3^{-}$	0.0%	3.45E-11	4.48E-16
SiO_3^{2-}	0.0%	4.67E-19	6.14E-24
	% by Volume	**g/m3**	**mol/l**
Organics			
none			
Water			
H_2O	22.1%	1.28E+02	7.09E-03
Aerosols	0.1%	4.21E-01	2.34E-05
Gases			

Ar	0.7%	9.14E+00	2.29E-04
CO	0.0%	8.66E-02	3.09E-06
CO_2	0.8%	1.19E+01	2.70E-04
HCl	0.0%	7.39E-05	2.03E-09
HF	0.0%	1.19E-02	5.95E-07
I_2	0.0%	1.35E-05	5.32E-11
N_2	59.8%	5.37E+02	1.92E-02
NH_3	0.0%	1.45E-01	8.49E-06
NO	0.3%	3.35E+00	1.12E-04
NO_2	0.1%	7.71E-01	1.68E-05
NaCl(s)	0.0%	1.16E-03	1.99E-08
NaF(s)	0.0%	8.07E-03	1.92E-07
NaI(s)	0.0%	4.95E-09	3.30E-14
O_2	16.0%	1.64E+02	5.13E-03
P_2O_5(s)	0.0%	1.44E-05	1.01E-10
SO_2	0.0%	2.00E-02	3.12E-07
Total	100.0%	8.55E+02	3.21E-02

HLW Radionuclides – Maximum Dosages	**Bq/m^3**	**mol/l**
^{3}H	2.45E+05	2.28E-13
^{14}C	1.99E+04	8.58E-12
^{60}Co	4.21E+03	1.68E-15
^{90}Sr	3.12E+04	6.87E-14
^{90}Y	3.12E+04	1.73E-17
^{99}Tc	1.08E+07	1.74E-07
^{126}Sn	6.76E-01	5.11E-15
^{129}I	7.87E+02	1.01E-09
^{129}I(s)	2.44E-01	3.14E-13
^{134}Cs	1.11E+00	1.73E-19
^{137}Cs	2.72E+07	6.24E-11
^{137m}Ba	2.58E+07	9.45E-18
^{152}Eu	2.18E+00	2.22E-18
^{154}Eu	2.30E+02	1.50E-16
^{155}Eu	1.31E+02	4.68E-17
^{233}U	4.04E-03	4.86E-17
^{235}U	1.13E-03	6.00E-14
^{237}Np	3.36E-01	5.43E-14
^{238}Pu	1.59E+00	1.05E-17
^{239}Pu	1.40E+01	2.55E-14
^{240}Pu	7.51E-01	3.71E-16
^{241}Pu	9.97E+01	1.09E-16
^{241}Am	4.08E+02	1.33E-14
^{243}Cm	6.07E-01	1.31E-18
^{244}Cm	1.30E+01	1.78E-17
Total	6.42E+07	1.75E-07

Appendix D

Engineering Information Data Sheet

Appendix D
Vendor Data Sheet

Vendor to Complete and Submit

Item		LAW/HLW	Item	LAW/HLW
Performance Data:				
Velocity Thru Inlet (fps)	Nom Flow:	/	Design Flow:	/
Velocity Thru Outlet (fps)	Nom Flow:	/	Design Flow:	/
Migration Velocity (fps)	Nom Flow:	/	Design Flow:	/
Residence Time (sec)	Nom Flow:	/	Design Flow:	/
dP through WESP (psi)	Nom Flow:	/	Design Flow:	/
Vessel and Insulator Housings				
Vessel Height (TL to TL) (ft):		/	Total Height:	/
Vessel Inside Diameter (in):		/	Vessel O.D. w/Connections (in):	/
Vessel Shell Plate Thickness (in):		/	Head Plate Thickness (in):	/
Bottom Head Configuration:		/	Top Head Configuration:	/
Insulator Housing Height (ft):		/	Insulator Housing ID (in):	/
Insulator Shell Plate Thickness (in):		/	Head Plate Thickness (in):	/
Collecting Electrodes				
Quantity:		/	Shape:	/
Effective Length (ft):		/	Actual Length (ft):	/
Inside Diameter (in):		/	Thickness (in):	/
Specific Collection Area (SCA) ft^2/1000 acfm gas		/	Collecting Surface (ft^2):	/
Total Area (ft^2) – total flat projected area for "A" in Deutch-Anderson equation:				/
Discharge Electrodes				
Quantity:		/	Type/Configuration:	/
Effective Length (ft):		/	Actual Length (ft):	/
Diameter (in):		/	Output Current Density:	/
Space between Electrodes, CL to CL (in):		/	Connection to Frame:	/
Power Supplies				
Type:		/	Supplier:	/
Insulating Oil Type:		/	Oil Quantity:	/
Power Input (guaranteed), kW:		/	Power Output, kW:	/
Output Waveform		/	Power Factor:	/
Voltage Input, V:		/	Current Input, A:	/
Voltage Output, V:		/	Current Output, A:	/
% Voltage Harmonics		/	% Current Harmonics:	/
Secondary Current Form Factor:		/	Nom Current Rating (mA):	/
Transformer Turns Ratio:		/		
Support Insulators				
Material:		/	Quantity:	/
Operating Temperature (F):		/	Diameter:	/
Purge Airflow (scfm):		/	Purge Air Duty:	/
Voltage Class:		/	Creep Distance:	/
Flush Water/ Mist Systems				
Flush Water Nozzle Quantity:		/	Flush Water Nozzle Size:	/
Estimated Flushing Frequency (times/month):		/	Flush Water Flow (gpm):	/
Misting Water Nozzle Quantity:		/	Misting Water Nozzle Size:	/
Misting Frequency		/	Misting Flow (gpm):	/
Weights				
Empty Vessel (w/internals, supports):		/	Internals Only:	/
Total Vessel Operating Weight:		/	Total Vessel Test Wt:	/
Control Panel (if separate from power sup):		/	Power Supply:	/

Appendix E

Figures

Appendix E
Figures

NOZZLE	SIZE	SERVICE/REMARKS
N01	10"	OFFGAS INLET
N02	10"	OFFGAS OUTLET
N03	3"	DRAIN
A	3"	LEVEL TRANSMITTER
B	1"	LEVEL TRANSMITTER
C	3"	LEVEL TRANSMITTER
D	1"	LEVEL TRANSMITTER
E	BY SELLER	FLUSH WATER NOZZLES-QTY & LOCATION BY SELLER
F	BY SELLER	MISTING SPRAY NOZZLES-QTY & LOCATION BY SELLER
N20	BY SELLER	MANWAY INSPECTION PORT-NOTE 3
G	1"	PURGE AIR TO INSULATOR ENCLOSURES

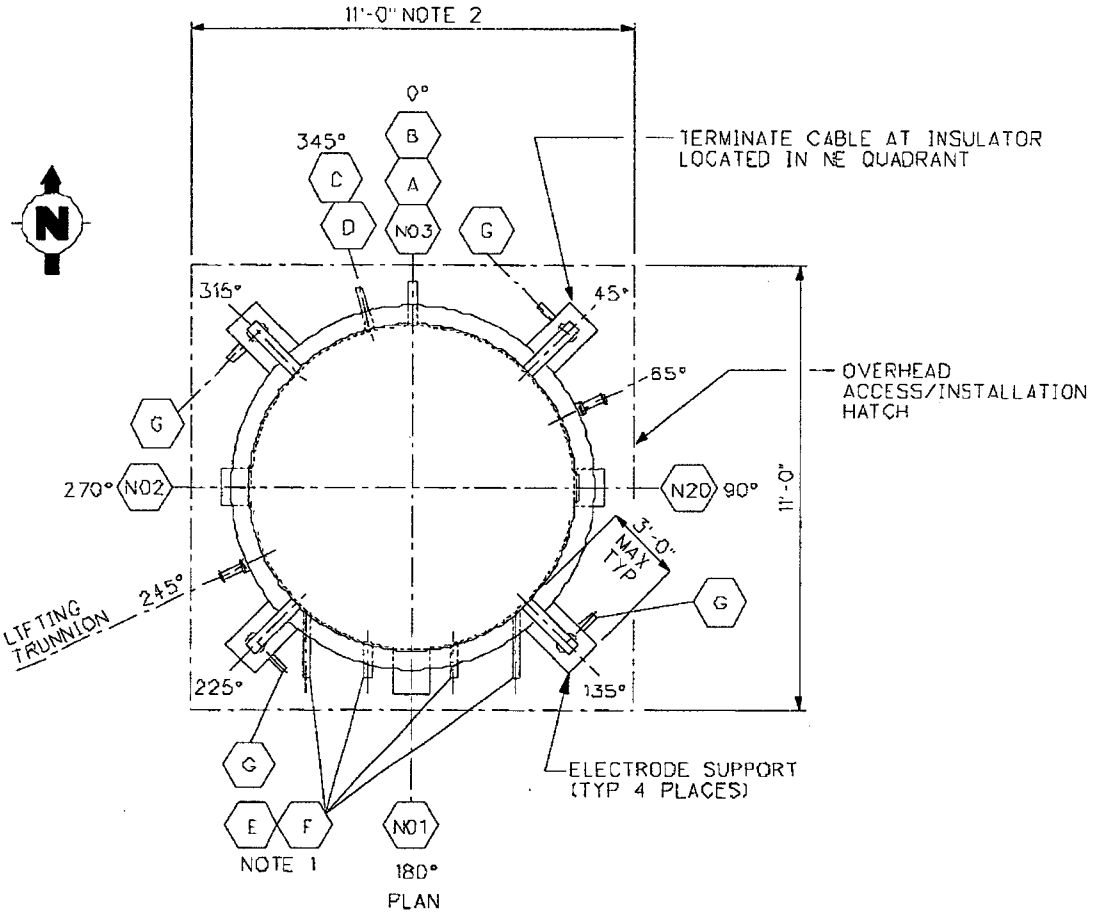

Notes:

1. Locate flush and misting nozzles as required between 135° and 225°. For same-service nozzles to be located on the same horizontal plane, configure to be easily connected to a common header.
2. Buyer will provide 11'-0" square opening centered over the vessel in the floor above for access/installation. Seller shall allow a minimum of 3" clearance on all sides. High voltage cable termination and termination housing is excluded from envelope limits.
3. Manway/inspection port, if required, shall be 24".
4. Coordinate final location and size of purge air nozzles with Buyer. Purge air connection may be located above or below insulator mounting flange depending on final insulator configuration and cable termination requirements. Additional purge air nozzle required for high voltage cable enclosure, coordinate with Buyer.

Figure 1- Conceptual Design for LAW WESP Vessel Plan and Nozzle Schedule
(Typical for all LAW WESPs, not to scale)

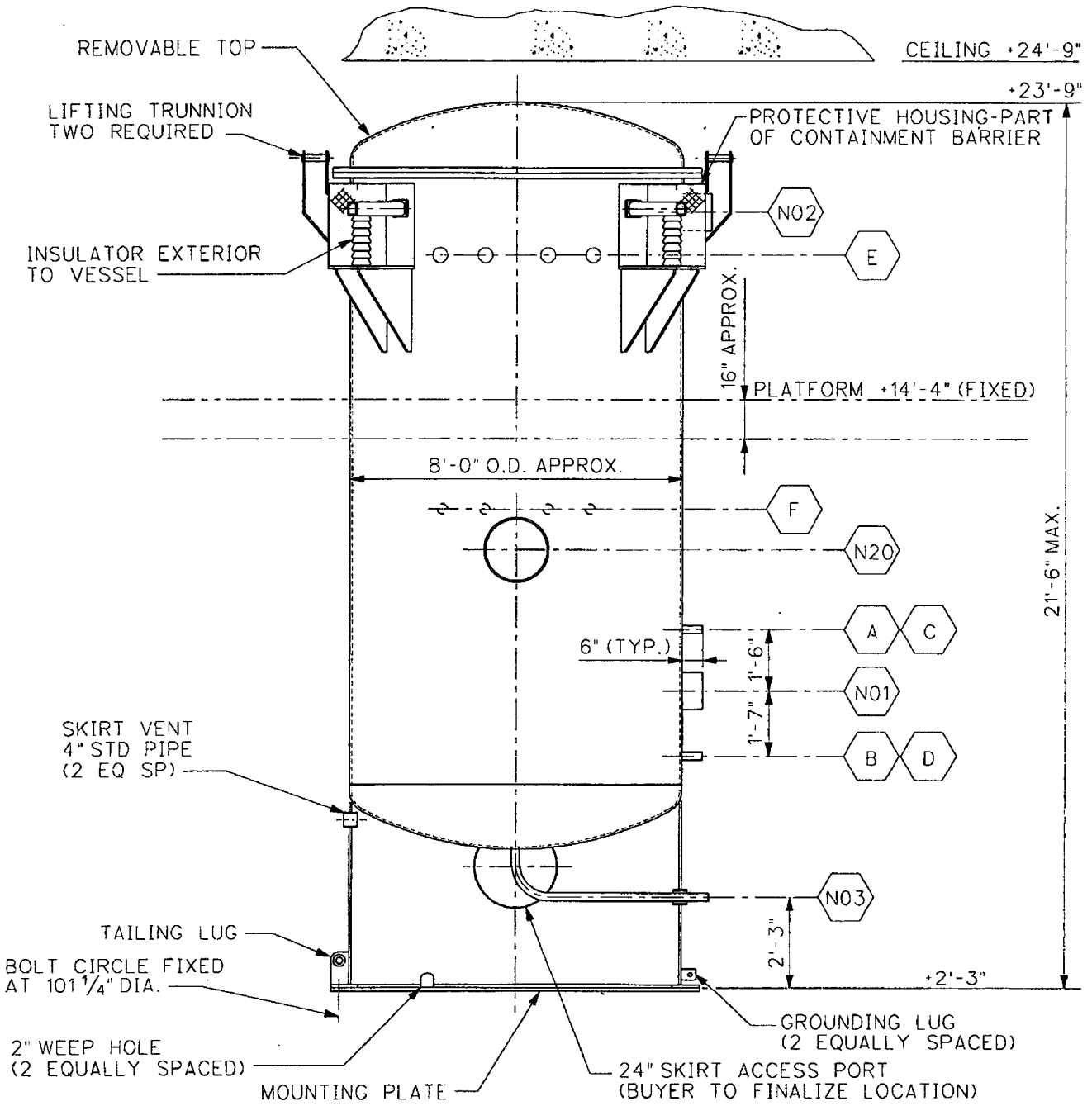

Notes:

1. Application and orientation of misting spray nozzles (nozzles marked "F") are on hold pending Seller confirmation of requirement. Buyer intends to introduce misting in the offgas line upstream of the vessel.
2. Anchor bolt chairs shall be at 0°, 45, 90, 135, 180, 225, 270, and 315. Seller shall locate tailing lugs, weep holes, grounding lugs, etc., to miss the chairs.
3. Maximum envelope height excludes high voltage cable termination and termination housing, as well as electrical bus extensions (if required). Top of termination housing will not exceed elevation 25'-6".

Figure 2 – Conceptual Design for LAW WESP Vessel, Elevation
(Typical for all LAW WESPs not to scale)

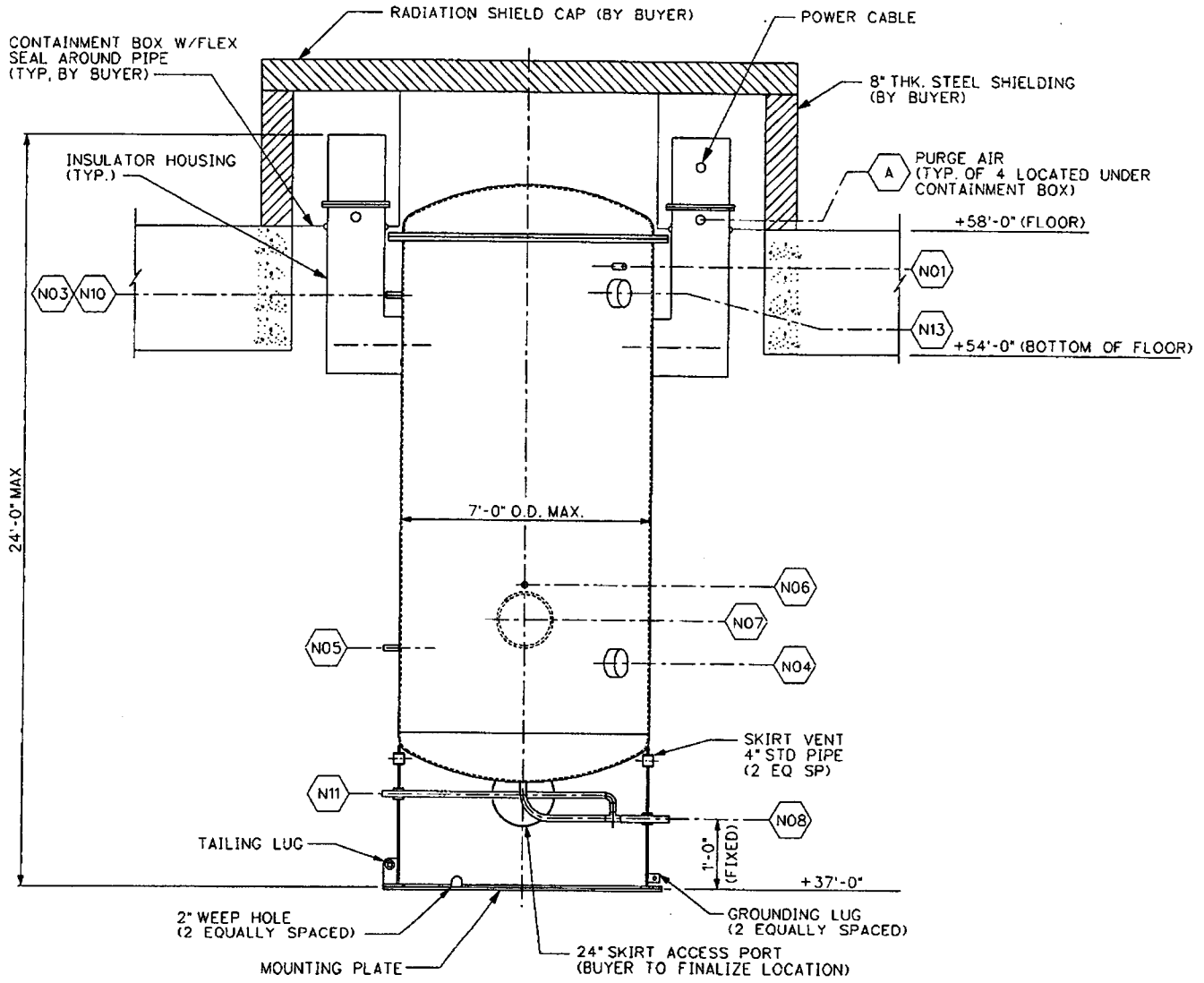

Notes:

1. Coordinate with Buyer to retain access for electrode alignment, as required, prior to hot startup.
2. The radiation shield cap shown is depicted as being steel plate but it may be concrete instead. The cap may be installed immediately after final electrode alignment is complete.
3. Provide stainless steel shim packs as required.
4. Purge air connections to be located within the containment boxes surrounding the insulator housing caps. Purge air connection may be located above or below insulator mounting flange depending on final insulator configuration and cable termination requirements. High voltage cable connection enclosure requires additional purge air connections for inlet and outlet (1" diameter). Coordinate final location and size of purge air nozzles with Buyer.

Figure 3 – Conceptual Design for HLW WESP Vessel, Elevation
(Typical for all HLW WESPs, not to scale)

NOZZLE	SIZE	SERVICE/REMARKS
N01	2"	FLUSH WATER NOZZLE
N02	N/A	NOT USED
N03	1"	PRESSURE DIFFERENTIAL TRANSMITTER
N04	8"	OFFGAS INLET
N05	1"	PRESSURE DIFFERENTIAL TRANSMITTER
N06	2"	FLUSH WATER NOZZLE
N07	BY SELLER (NOTE 1)	MANWAY/ INSPECTION PORT
N08	6"	DRAIN
N09	N/A	NOT USED
N10	1"	LEVEL TRANSMITTER
N11	1"	LEVEL TRANSMITER
N13	10"	OFFGAS OUTLET
A	1" (NOTE 2)	PURGE AIR TO INSULATOR ENCLOSURES

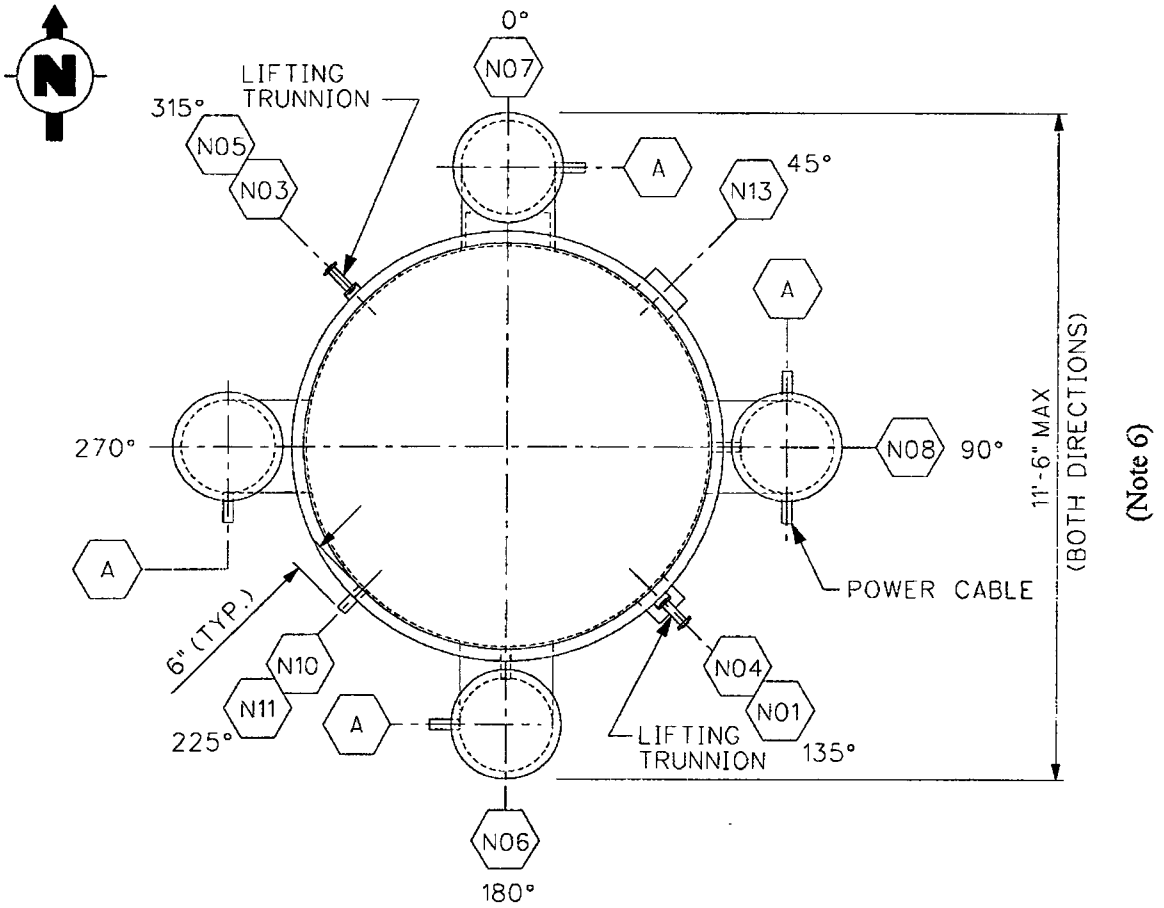

Notes:

1. Manway/inspection port, if required, shall be no larger than 24".
2. Final size and location of purge air nozzles to be coordinated with Buyer via drawing review cycle. One additional purge air inlet and outlet is necessary for the High Voltage Cable Enclosure along with the four required for the insulator enclosures.
3. Terminate cable at insulator in southeast quadrant. Cable will be routed south.
4. Final location of lifting trunnions by Seller.
5. High voltage cable termination and termination housing is excluded from envelope limits.
6. Envelope specified is for conceptual purposes. Coordinate with Buyer if exceeded.

Figure 4 – Conceptual Design for HLW WESP Vessel, Nozzle Plan and Schedule
(Typical for all HLW WESPs, not to scale)

RIVER PROTECTION PROJECT – WASTE TREATMENT PLANT

ENGINEERING SPECIFICATION

FOR

Nuclear Grade High Efficiency Particulate Air (HEPA) Filters (ASME AG-1 Section FK Filters)

Best Available Copy

Content applicable to ALARA? ☒ Yes ☐ No

ADR No.
24590-WTP-ADR-HV-04-0002

Rev
0

ISSUED BY
RPP-WTP PDC

Quality Designator
Q
DOE Contract No. DE-AC27-01RV14136

NOTE: Contents of this document are Dangerous Waste Permit affecting.

REV	DATE	BY	CHECK	REVIEW	E&NS	QA	DPEM
2	8-Mar-06	P. Sullivan	J. Dick	W. Lawrence		FOR SVEN ACKERMAN	G. Garcia
1	19-Aug-04	P. Sullivan	J. Dick	G. Garcia		W. Dey for G. Warner	G. Garcia for G. Duncan
0	5-Aug-02	G. Garcia	L. Solis	J. Sanders		G. Warner	F. Davis

SPECIFICATION No.
24590-WTP-3PS-MKH0-T0002

Rev
2

Revision History

Revision	Reason for Revision
0	Issued for Purchase
1	Issued to support design development. NOT TO BE USED FOR FABRICATION OF QL-1 OR QL-2 FILTERS. Complete Revision. Conforms Spec to Current Project Requirements. Incorporate Spec Change Notice (SCN): 24590-WTP-3PN-MKH0-00004. SCN 24590-WTP-3PN-MKH0-00008 not incorporated. Incorporate Supplier Deviation Disposition Requests (SDDRs): 24590-WTP-SDDR-PROC-04-00134, 24590-WTP-SDDR-PROC-03-0155, 24590-WTP-SDDR-PROC-03-0193.
2	Issued to support design qualification testing and production. Completely revised. This revision includes, but is not limited to, changes to incorporate: 1) Specification Change Notice 24590-WTP-3PN-MKH0-00018 incorporated as follows: • 1st change: 24590-WTP-SDDR-PROC-05-00116 superceded by 24590-WTP-SDDR-HV-06-00008. This later SDDR is incorporated by reference. • 2nd change: Second sentence "If a date or revision...." not incorporated. Justification: Proposed text would violate procedure 24590-WTP-3DP-G04B-00049 Engineering Specifications, Rev. 10, Article 3.6.2. • 3rd change: Not incorporated. SCN text is no longer consistent with text as presented in RPP-WTP Safety Requirements Document Volume II 24590-WTP-SRD-ESH-01-001-02 Appendix C 35.0 (see subarticle FK-4100). • 4th change: Not incorporated. SCN text is no longer consistent with text as presented in RPP-WTP Safety Requirements Document Volume II 24590-WTP-SRD-ESH-01-001-02 Appendix C 35.0 (see Table FK-4001). For the Safe Change HEPA filter, the specification requirement article 3.2.4 is stated for a more stringent pressure drop maximum (i.e., 1.3 in.wg.) than the allowed maximum (1.6 in. wg.) as stated in the SRD. • 5th change: Incorporated. • 6th change: Editorial- The correct article cross reference has been made. 2) New title to clarify intent of specification on RPP-WTP. 3) ASME AG-1 Section FK requirements, replacing Section FC requirements throughout document. Revised edition of ASME N509 from 1989 to 2002. These changes were made in accordance with CCN 128654, Approval of Authorization Basis Amendment Request 24590-WTP-SE-ENS-04-0212 Rev. 1. (Note: There are no SRD implementing code or standard deviations in the following changes.) 4) Requirements to test all HEPA filters in accordance with approved Trend TN-24590-03-01317, "QA Testing of HEPA Filters at DOE Filter Test Facility". Specification Sections 1.2, 1.5, 3.1, 3.2, 6.3, 7.2, 7.3, 7.6 and 8.2. 5) Specification requirements for Type 3 HEPA filters (used primarily for safe change HEPA housing vacuum relief during maintenance filter replacement). 6) Remote change HEPA filter design cross-reference and criteria related to remote handling process (Specification Section 3.1). 7) Expanded discussion regarding filter seismic qualification test plan and test report requirements (Specification Section 3.2). 8) Added HEPA Filter Data Sheet (Appendix A).

Revision	Reason for Revision
	9) Expanded Shipping and Handling Instructions (Specification Section 7.6). 10) Clarified code and project required supplier quality assurance (Specification Section 8.2) and submittal requirements (Specification Section 10).

Contents

1 Scope 1
1.1 Project Description and Location 1
1.2 Equipment, Material, and Services Required 1
1.3 Work by Others 1
1.4 Definition 2
1.5 Abbreviations 2
1.6 Safety and Quality Classifications 3
2 Applicable Documents 3
2.1 ANSI/ASME – American National Standards Institute/American Society of Mechanical Engineers 3
2.2 US Department of Energy Standards 4
2.3 Other Reference Documents and Drawings 4
2.4 Informational Reference Documents 4
2.5 Design Changes Incorporated By Reference 4
3 Design Requirements 5
3.1 General 5
3.2 Performance 7
3.3 Design Conditions 8
3.4 Temperature 9
3.5 Aging 9
4 Materials 9
4.1 Construction 9
4.2 Prohibited Materials 10
5 Fabrication 10
5.1 General 10
6 Tests and Inspections 11
6.1 General 11
6.2 Site Tests 11
6.3 DOE Filter Test Facility Quality Assurance Testing 11
7 Preparation for Shipment 12
7.1 General 12
7.2 Filter Marking and Identification 12
7.3 Package Marking and Identification 13

7.4 Packaging 13
7.5 Documentation 13
7.6 Shipping and Handling Instructions 13
7.7 Storage 14
8 Quality Assurance 15
8.1 Supplier Quality Assurance Program 15
8.2 Quality Assurance Requirements Specific to Item 15
8.3 Substitutions 16
9 Configuration Management 17
10 Documentation and Submittals 17
10.1 General 17
10.2 Submittals 17
10.3 Drawings 18
10.4 Procedures 18
10.5 Calculations 18
10.6 Manuals 19
10.7 Certificates of Conformance 19
10.8 Schedules 19
10.9 Materials Certificates/Statistics 19
10.10 Data 19

Tables

Table 1 Remote Change Radial Flow HEPA Filter Limiting Criteria A-21

Appendices

Appendix A : HEPA Filter Data Sheet A-22

1 Scope

1.1 Project Description and Location

The River Protection Project-Waste Treatment Plant (RPP-WTP) is a complex of waste treatment facilities where the Department of Energy's (DOE) Hanford site tank waste will be put into stable glass form. The WTP Contractor will design, build, and start up the WTP pretreatment and vitrification facilities for the Office of River Protection (ORP). The waste treatment facilities will pretreat and immobilize the low-activity waste (LAW) and high-level waste (HLW) currently stored in underground storage tanks at the Hanford Site.

The Hanford Site occupies an area of about 560 square miles and is located along the Columbia River, north of the city of Richland, Washington. The WTP Facility will be constructed at the East End of the 200 East Area of the Hanford Site. Benton, Franklin, and Grant counties surround the Hanford Site.

1.2 Equipment, Material, and Services Required

The Supplier shall design, qualify, fabricate and test HEPA Filters in accordance with the requirements of ASME AG-1, Section FK and this specification. Two types of HEPA filter described by ASME AG-1 Section FK may be procured for the RPP-WTP using this specification:

- Type 1 Radial Flow HEPA Filters with Gelatinous Seals (FK-4111 (b) and (d)) rated for 2,000 acfm
- Type 3 Axial Flow Circular Filters with Inlet and/or Outlet Connections (FK-4114)

AG-1 required qualification testing shall be performed and certified by an independent test facility. Production of the Radial Flow HEPA Filters shall not commence until the qualification tests are successfully completed and the results are accepted by the Buyer.

This specification also incorporates select supplemental requirements from Department of Energy (DOE) standard, DOE-STD-3020-2005, *Specification for HEPA Filters Used by DOE Contractors*. This specification includes requirements to conduct independent quality assurance testing at a DOE Filter Test Facility (FTF). With the exception of replacement of FTF failed filters (i.e., 6.3), the Supplier is not responsible for FTF-applicable specification requirements (i.e., section 6.3 and FTF label application per 7.2 and 7.3).

1.3 Work by Others

1.3.1 Material unloading and storage at job site

1.3.2 Installation labor

1.4 Definition

1.4.1 Challenge Aerosol. Poly-disperse droplets used as challenge aerosol for testing installed HEPA filters for leaks. The poly-disperse aerosol used for leak testing of systems differs in size from the 0.3 micrometer mono-disperse DOP aerosol used for efficiency testing of individual HEPA filters by manufacturers.

1.4.2 Certificate of Conformance (C of Ç). A written statement, signed by a qualified party, certifying that items or services comply with specific requirements.

1.4.3 Grab Ring. Ring provided at the inlet of a Remote Change HEPA Filter to facilitate insertion and removal operations by remote systems.

1.4.4 HEPA Filter. High Efficiency Particulate Air Filter. A throwaway, extended-media dry type filter with a rigid casing. The filter shall exhibit a particle removal efficiency of 99.97% when tested with essentially mono-dispersed 0.3 micrometer diameter test aerosol particles.

1.4.5 Production Test. A test made on an individual production item to verify its performance in accordance with specified requirements.

1.4.6 Qualification Tests. Test performed on HEPA filters, prior to production, by an independent test facility in accordance with the requirements of ASME AG-1, Section FK-5100.

1.4.7 Remote Change. Remote change implies that the Remote Change HEPA filter requires an integral grab ring that works in conjunction with a mechanical filter handling tool as required for remote installation and removal.

1.4.8 Safe Change. Safe change implies that the Safe Change HEPA filter can be manually installed and removed by an operator without remote equipment and without breaking confinement.

1.4.9 Type 1. Radial flow HEPA filters as defined by ASME AG-1 Section FK-4100 and FK-4111. Also referred to as "Safe Change" and "Remote Change" HEPA filters throughout this specification.

1.4.10 Type 3. Axial flow circular filters as defined by ASME AG-1 Section FK-4100 and FK-4114.

1.4.11 Water Column (WC). The units for air pressure typically expressed in inches of water column height (e.g., 2.5-inches WC).

1.5 Abbreviations

1.5.1 ACFM. Actual Cubic Feet per Minute

1.5.2 ANSI. American National Standards Institute

1.5.3 ASHRAE. American Society of Heating, Refrigerating and Air-Conditioning Engineers

1.5.4 ASME. American Society of Mechanical Engineers

1.5.5 ASTM. American Society for Testing and Materials

1.5.6 CAS. Chemical Abstract Service

1.5.7 C of C. Certificate of Conformance

1.5.8 DOE. Department of Energy

1.5.9 FTF. Department of Energy Filter Test Facility

1.5.10 HEPA. High Efficiency Particulate Air

1.5.11 PPOE. Parent Piece of Equipment

1.5.12 RPP-WTP. River Protection Project - Waste Treatment Plant

1.5.13 SDDR. Supplier Deviation Disposition Request

1.5.14 UL. Underwriters Laboratories, Inc.

1.5.15 WC. Water Column

1.6 Safety and Quality Classifications

Type 1 HEPA filters provided under this Specification are expected to meet RPP-WTP Project requirements for Important-to-Safety (ITS) Safety Class (SC), Quality Level Q, and Seismic Category I service.

Type 3 HEPA filters provided under this Specification are Non-Important-to-Safety (Non-ITS), Commercial Material (CM) components and are not credited for seismic purposes (SC-V) unless otherwise stated in the procurement documentation.

2 Applicable Documents

The following documents form a part of this specification to the extent specified herein. In the event of conflict between the document referenced herein and the contents of this specification, the Buyer shall be notified of the conflict.

The latest document edition and addenda shall apply unless otherwise noted.

For the codes and standards listed below, the specific revision or effective date identified, as well as the specific revision or effective date of codes and standards that they incorporate by reference (daughter codes and standards) shall be followed. The effective dates and revisions listed in section 2 shall apply to subsequent references to the codes and standards within this specification.

2.1 ANSI/ASME – American National Standards Institute/American Society of Mechanical Engineers

2.1.1 ASME AG-1-1997 with ASME AG-1a-2000 Addenda, Code on Nuclear Air and Gas Treatment (Hereinafter referred to as ASME AG-1 or AG-1).

2.1.2 ASME N509-2002, Nuclear Power Plant Air Cleaning Units and Components.

2.1.3 ASME N510-1989, Reaffirmed 1995, Testing of Nuclear Air Treatment Systems.

2.1.4 ASME NQA-1-89, Quality Assurance Program Requirements for Nuclear Facilities.

2.1.5 UL-586-1990, Underwriters Laboratories Inc., Test Performance of High Efficiency Particulate, Air Filter Units.

2.1.6 ASME NQA-1-2004 Quality Assurance Requirements for Nuclear Facility Applicatons. (Limited Application - Packaging and Storage Requirements Only)

2.1.7 ASME AG-1 Section FK, Special HEPA Filters. (Although Section FK was approved by the ASME Board on Nuclear Codes and Standards on July 21, 2005 and is now considered part of the AG-1 Code, it has not yet been formally issued in a code addenda. It is available for reference at: http://cstools.asme.org/csconnect/pdf/CommitteeFiles/16990.pdf.).

2.2 US Department of Energy Standards

2.2.1 DOE-STD-3020-2005, Specification for HEPA Filters Used by DOE Contractors

2.2.2 DOE-STD-3025-99, Quality Assurance Inspection and Testing of HEPA Filters

2.3 Other Reference Documents and Drawings

2.3.1 24590-WTP-3PS-MKH0-T0001, Engineering Specification for HVAC Safe Change HEPA Filter Housings.

2.3.2 24590-WTP-3PS-MKH0-T0003, Engineering Specification for HVAC Remote Change HEPA Filter Housings.

2.3.3 24590-WTP-3PS-G000-T0001, Supplier Quality Assurance Program Requirements.

2.3.4 24590-WTP-3PS-G000-T0003, Engineering Specification for Packaging, Handling and Storage Requirements.

2.4 Informational Reference Documents

The following codes and standards are not specifically invoked on the RPP-WTP Project, but were used to the extent referenced herein and/or by ASME AG-1 as a source of information in development of technical and performance requirements.

2.4.1 DOE-HDBK-1169-2003, DOE Nuclear Air Cleaning Handbook

2.5 Design Changes Incorporated By Reference

2.5.1 24590-WTP-SDDR-HV-06-00008 (Supercedes 24590-WTP-SDDR-PROC-05-00116)

3 Design Requirements

Note: References to ASME AG-1 Section FK requirements are made throughout this specification. The Section FK references and requirement excerpts provided herein are not intended to imply non-applicability of any Section FK requirement that is not specifically included. Unless explicitly stated otherwise, all ASME AG-1, Section FK requirements apply.

3.1 General

3.1.1 This specification relates to Type 1 and Type 3 circular HEPA filters as specified in ASME AG-1 Section FK. More specifically, the Type 1 HEPA filters are further described as Safe Change and Remote Change Radial Flow HEPA Filters with a maximum rating of 2,000 ACFM (950 liters per second) per filter and suitable for manual and remote change housing installations, respectively. The Type 3 HEPA filters are axial flow circular filters with a maximum rating of 120 ACFM (56 liters per second) and are typically intended for use as vacuum relief (e.g., bleed) filters for manual housing maintenance. Design of Radial Flow HEPA Filters shall conform to applicable sections of the documents listed in Section 2 of this specification.

3.1.2 Safe Change Radial Flow HEPA Filters shall include a gelatinous seal and be suitable for horizontal installation in multi-filter cabinet style housings specified in 24590-WTP-3PS-MKH0-T0001, Engineering Specification for HVAC Safe Change HEPA Filter Housings.

3.1.3 Type 1 HEPA filter performance requirement design criteria as identified in ASME AG-1 Table FK-4000-4 are specified on the HEPA Filter Data Sheets (Appendix A). Type 3 HEPA filters used for safe change housing maintenance (e.g., vacuum relief) are not subjected to deleterious environments.

3.1.4 Remote Change Radial Flow HEPA Filters shall include a gelatinous seal and be suitable for vertical installation in remotely operated multi-filter cabinet style housings specified in 24590-WTP-3PS-MKH0-T0003, Engineering Specification for HVAC Remote Change HEPA Filter Housings.

3.1.5 For design development purposes only, limiting criteria for Remote Change Radial Flow HEPA Filters are shown in Table 1. These criteria may be superseded by Supplier design drawings submitted for Buyer review and permission to proceed. The Supplier design drawings will be used to document the final design.

3.1.6 Design of the Type 1 (Safe Change and Remote Change Radial Flow) and Type 3 (Circular Axial Flow) HEPA Filters shall conform to applicable portions of ASME AG-1, Section FK and applicable portions of the documents listed in Section 2 of this specification. Where conflicts between the Supplier's design and ASME AG-1, Section FK, exist, the Supplier shall identify the respective code articles that do not apply and notify the Buyer (i.e., SDDR) prior to initiation of filter design qualification testing. For filter designs (e.g., Type 3) that have been previously qualification tested, the Supplier shall notify the Buyer of code conflicts during design submittal review (e.g., prior to fabrication). Deviations to ASME AG-1 Section FK requirements identified within this Specification do not require Buyer notification.

3.1.7 As required by ASME AG-1, Section FK-3130, filter media shall comply with ASME AG-1, Section FC, Mandatory Appendix FC-I.

3.1.8 Type 1 filter packs shall comply with ASME AG-1, FK-4111. Type 3 filter packs shall comply with ASME AG-1, FK-4114. Other ASME AG-1 Section FK articles pertaining to filter pack design also apply (e.g., FK-4116, -4120, -4130).

3.1.9 Installation and removal of the safe change filter shall be based on bag-in bag-out procedure. Installation and removal of the remote change filter shall be based upon use of a sequencing grapple that is remotely positioned onto the filter using a crane and hook. Reference 2.3.2 provides further information on this remote handling process.

3.1.10 The Safe Change Radial Flow HEPA Filters shall utilize a gel filled channel located on the inner diameter of the filter inlet. The channel shall be manufactured from ASME AG-1 compatible materials and either fully integrated into the filter inlet flange (preferred) or affixed in position using a continuous seal weld. The construction method shall ensure that the gel channel remains in place and does not contribute to filter bypass during operation or fail structurally during filter installation and removal.

3.1.11 The Remote Change Radial Flow HEPA Filters shall utilize a gel filled channel located on the outer diameter of the filter inlet. The channel shall be manufactured from ASME AG-1 compatible materials and either fully integrated into the filter inlet flange (preferred) or affixed in position using a continuous seal weld. The construction method shall ensure that the gel channel remains in place and does not contribute to filter bypass during operation or fail structurally during filter installation and removal. The Supplier shall demonstrate that the remote change filter design is capable of withstanding the loads applied during remote manipulation of the filter, without permanent deformation or deterioration of "like-new" filter performance.

3.1.12 Filter seals shall perform the following functions:

3.1.12.1 Provide a leak tight seal between the filter and the mating surface in the housing.

3.1.12.2 Accommodate maximum fabrication tolerances of the housings mating knife-edge without compromising seal integrity.

3.1.12.3 The gel seal material shall remain in the gel seal channel during installation and removal cycles that would be normally expected to occur during operation of the system, as well as during design basis seismic events.

3.1.13 Handles on Safe Change Radial Flow HEPA Filters used for installation and removal shall:

3.1.13.1 Facilitate manual handling without damage to the filter.

3.1.13.2 Be attached to withstand installation and removal loads.

3.1.14 Grab Rings on Remote Change Radial Flow HEPA Filters used for installation and removal shall:

3.1.14.1 Facilitate remote mechanical handling without damage to the filter.

3.1.14.2 Be attached to withstand installation and removal loads.

3.1.14.3 Be compatible with remotely operated mechanical systems (provided by others) to facilitate insertion and removal operations by remote systems.

3.1.15 Connection fittings selected for fabrication of Type 3 HEPA filters, intended for use as vacuum relief (e.g., bleed) filters, shall be compatible with the couplers specified for use on the Safe Change HEPA housings (Reference 2.3.1).

3.1.16 All filters shall be inspected and tested at a DOE FTF prior to Buyer acceptance.

3.2 Performance

The performance of Safe Change and Remote Change Radial Flow HEPA Filters shall conform to applicable portions of ASME AG-1, Section FK, and applicable portions of the documents listed in Section 2 of this specification, including, but not limited to the following requirements:

3.2.1 Filter Media Efficiency: ASME AG-1, FK-1130: 99.97% when tested with an aerosol of essentially 0.3 micron diameter test aerosol particles.

3.2.2 Seismic: ASME AG-1, FK-4300. Type 1 HEPA filters shall be seismically qualified as part of the filter housing by the proof testing method in accordance with ASME AG-1, Subarticle FK-4300 and AA-4350. The acceptance criteria shall be per FK-4300.

3.2.2.1 The specification for the parent piece of equipment (e.g., filter housing) shall be used to document Buyer seismic test and load criteria to be used for this qualification testing.

3.2.2.2 The Supplier may submit a prior report qualifying use of a filter in a given installation provided that the Supplier can prove the following:

- The equipment proposed to be used on the WTP Project is identical to that used in the prior qualification report. If they are not identical, the Seller shall demonstrate how the differences would not affect the seismic qualification.
- The WTP Project equipment functional requirements during and after the DBE are similar or less stringent than those in the prior qualification report.
- Potentially significant aging mechanisms related to equipment performance as identified for the prior qualification report bound the aging characteristics expected for the given RPP-WTP system installation.
- The equipment support used in the testing is identical to that proposed for use on the WTP Project, and, prior qualification report TRS envelopes the WTP RRS.

3.2.2.3 A seismic qualification test plan shall be provided to the Buyer for review and approval prior to testing. This test plan shall be a submittal requirement of the PPOE specification and is not a submittal requirement of this specification.

3.2.3 Qualification Testing: ASME AG-1, FK-5100: Testing prior to acceptance and production, and certified by an independent test facility.

3.2.4 Resistance to Airflow: The following alternate criteria are approved for use for Type 1 HEPA filter designs regarding ASME AG-1 Articles FK-4100 and FK-5110. These resistance criteria apply when tested in accordance with paragraph FK-5120.

ASME AG-1 SECTION	SECTION FK CODE REQUIREMENT TEXT	ACCEPTED RPP-WTP REPLACEMENT REQUIREMENT TEXT
FK-4100	"The total media area provided within the filter pack shall be such that the maximum media velocity is 5 ft/min (1.5 m/min) at the rated flow."	The total media area provided within the RPP-WTP radial filter pack shall be such that the maximum media velocity is 6.5 ft/min at the rated flow.
Table FK-4000-1	Type 1 Radial Flow HEPA Filter Nominal Rating: Maximum Resistance of 1.3 in.WC at 2000 acfm maximum rated air flow.	For Type 1 Remote Change HEPA Filter Only: Nominal Rating: Maximum Resistance of 1.55 in.WC at 2000 acfm maximum rated air flow. (Note: Table FK-4000-1 requirements continue to apply as-is to the Type 1 safe change HEPA filter.)

3.2.5 Test Aerosol Penetration: ASME AG-1, FK-5120, 0.03% at rated (i.e., maximum) flow rate and 20% of rated flow rate, where rated flow rate is 2,000 acfm.

3.2.6 Resistance to Rough Handling: ASME AG-1, FK-5130.

3.2.7 Resistance to Pressure: ASME AG-1, FK-5140.

3.2.8 Resistance to Heated Air: ASME AG-1, FK-5150.

3.2.9 Spot Flame Resistance: ASME AG-1, FK-5160.

3.2.10 Supplier performed production inspection and testing shall be in accordance with ASME AG-1, Subarticles FK-5500 and FK-5600.

Note: All production-testing results are subject to validation through FTF quality assurance testing.

3.3 Design Conditions

3.3.1 Anticipated filter service conditions are included on the associated HEPA Filter Data Sheet (Appendix A).

3.3.2 HEPA filters are not to be used for installations where there is a possibility of condensation forming on them.

3.4 Temperature

Per ASME AG-1, Sub-subarticle FK-1121, filters built to Section FK shall be acceptable for continuous use at a maximum operating temperature of 250°F (121°C). However, extended service under such conditions can cause accelerated aging of organic materials and may subsequently contribute to filter failure. Therefore, when specifying filters subject to operating conditions that may exceed 200°F (93°C) for extended durations, the system engineer shall consult with the responsible engineer for HEPA filter procurement to ensure optimum materials and/or system controls are selected.

3.5 Aging

Note: The maximum life for a HEPA filter specified below is based upon guidance in the DOE Nuclear Air Cleaning Handbook (Reference 2.4.1 section 3.3.8.1).

The maximum total life (storage and in-service) for a HEPA filter is considered to be 10 years from the date of manufacture for applications in dry systems and 5 years in applications where the filter has the potential to become wet (e.g., more than once for short periods). If a filter gets wet, it should be replaced expeditiously.

4 Materials

4.1 Construction

4.1.1 Materials of construction for the Safe Change and Remote Change Radial Flow HEPA Filters shall conform to ASME AG-1, Section FK, Article 3000, and applicable portions of the documents listed in Section 2 of this specification.

4.1.1.1 Type 1: ASME AG-1, FK-1121 Type C media pack with urethane adhesive. Reference the Material Requisition 24590-QL-MRA-MKH0-00003 for quantity required. This filter type shall be developed and qualification tested for each type of housing (remote and safe change).

4.1.1.2 Type 3: ASME AG-1, FK-1121 Type C media pack with urethane adhesive. Reference the Material Requisition 24590-QL-MRA-MKH0-00001 for quantity required.

4.1.1.3 Case Material Thickness and Material Type: ASME AG-1, FK-3110: ASTM A240 Type 304 or 304L (annealed) is preferred, however, alternate materials subject to Article FK-3220 requirements and Buyer review may be proposed for use.

4.1.1.4 Grilles: ASME AG-1, FK-3170: ASTM F 1267 Type II Class 3 Expanded Stainless Steel fabricated from Type 304L (annealed) stainless steel sheets as specified in ASTM A666.

4.1.1.5 Gasket Material: ASME AG-1, FK-3122.

4.1.1.6 Media: ASME AG-1, FK-3130 with hydrofluoric acid resistant media formulation (e.g., DN703)

4.1.1.7 Adhesive: ASME AG-1, FK-3150.

4.1.2 Limiting criteria for Remote Change Radial Flow HEPA Filters are shown in Table 1. These criteria may be superceded by Supplier design drawing submittals that have been submitted for Buyer review and permission to proceed. The Supplier design drawings will be used to document the final design.

4.2 Prohibited Materials

4.2.1 For materials in contact with stainless steel, the following shall apply: Low melting point metals (i.e., lead, zinc, tin, antimony, cadmium, mercury) shall not exceed 1% by weight, with mercury not exceeding 50 ppm. Halides shall not exceed 200 ppm. This prohibition applies to use of tools, fixtures, paints, coatings and sealing compounds, and any other equipment or materials used by the Supplier during handling, assembly and storage of stainless steel parts or components.

4.2.2 Asbestos shall not be included in any component of the Safe Change and Remote Change Radial Flow HEPA Filter.

5 Fabrication

5.1 General

5.1.1 Fabrication of the Type 1 Safe Change and Remote Change Radial Flow HEPA Filters shall be as specified in ASME AG-1, Article FK-6000 with the following exceptions.

ASME AG-1 SECTION	SECTION FK CODE REQUIREMENT TEXT	ACCEPTED RPP-WTP REPLACEMENT REQUIREMENT TEXT
FK-6211(a)	"Type 1 filter flange and end cap tolerances shall meet the following criteria: parallel within 1/16 in. (1.6 mm), square to the filter centerline axis to within 1/16 in (1.6 mm) over the total filter length, flat within 1/16 (1.6 mm)."	Type 1 filter flange and end cap tolerances shall meet the following criteria: parallel within 1/8 in., flat within 1/16 in." Circular runout of inlet flange with respect to outlet end cap shall not exceed 3/32 in.
FK-6212(a)	"Type 1 filter length shall be ± 1/16" (1.6 mm), filter sealing ring diameter ± 1/16" (1.6 mm), sealing face diameter +1/32 in./-0 in. (+0.8 mm/-0 mm), concentricity shall be 1/16 in. (1.6 mm), all other dimensions ± 1/16 (±1.6 mm)."	Type 1 filter length shall be (+0/-1/8 in.), circular runout of filter flange with respect to the filter end cap shall be within 3/32 in., all other dimensions +/- 1/16 in. with exception that design filter media to grille (i.e., faceguard) gap shall be +/- 1/8 in. (i.e., to maintain a minimum media to grille gap of 1/8in.

5.1.2 Fabrication of the Type 3 axial flow circular HEPA filters shall be as specified in ASME AG-1, Article FK-6000 unless otherwise accepted by the Buyer (e.g., Supplier Deviation Disposition Request).

6 Tests and Inspections

6.1 General

6.1.1 The test and inspection of Type 1 and Type 3 HEPA Filters shall conform to ASME AG-1, Article FK-5000.

6.1.2 The Suppliers test and inspection personnel shall be formally trained to perform assigned duties in accordance with the Suppliers training qualifications program. This program shall be documented and shall be in accordance with recognized standards.

6.1.3 Type 1 Safe Change and Remote Change Radial Flow HEPA Filters shall require qualification testing prior to acceptance and production. Filter testing shall be performed and certified by an independent test facility as specified by ASME AG-1, Article FK-5100. Type 3 HEPA filters may be qualified based on the prior qualification of a similar qualified Type 2 circular axial flow filter.

6.1.4 Each Type 1 and Type 3 HEPA Filter shall bear the UL-586 label indicating successful testing of these filter types in conformance with UL procedures as required by ASME AG-1.

6.1.5 Each Type 1 and Type 3 HEPA Filter manufactured for delivery shall be inspected and production tested in accordance with ASME AG-1, Sections FK-5500 and FK-5600.The results of the production test shall be marked on the label of each filter. Additional attributes to be inspected for Type 1 HEPA Filters are circular runout and parallelism.

6.1.6 The Supplier shall provide objective evidence acceptable to the Buyer that the requirements of ASME AG-1 Mandatory Appendix FC-I, Articles I-3000 and I-5000 have been satisfied. Reference AG-1 Mandatory Appendix FC-I-4120.

6.2 Site Tests

Buyer's startup personnel will perform in-place tests after initial installation. Supplier shall provide startup assistance at Buyer's request.

6.3 DOE Filter Test Facility Quality Assurance Testing

6.3.1 Uniform Commercial Code (UCC) requirements governing acceptance and disposition of nonconforming goods apply. If during FTF receipt inspection, a filter is identified as damaged and unacceptable for use, the FTF shall contact the buyer and seller (supplier) and inform them of the damage immediately.

6.3.2 FTF inspection and testing shall be performed in accordance with DOE-STD-3025-99, Quality Assurance Inspection and Testing of HEPA Filters. As a condition of acceptance, all production filters must successfully pass FTF inspection and testing requirements per sections 6 and 7 of DOE-STD-3025-99. Testing at the DOE FTF of filters fabricated to support design development or qualification is not required unless otherwise requested by the buyer.

6.3.3 FTF shall prepare a report to document the test results and apply permanent test labels on the filter case and the filter shipping carton.

6.3.4 Accepted and rejected filters shall be marked in accordance with section 8 of DOE-STD-3025-99.

6.3.5 If filter(s) fail inspection or testing, the FTF shall notify both the buyer and supplier. The supplier shall be responsible for either replacing failed filter(s), or crediting the buyer, unless other accommodations are agreed upon between the buyer and the supplier.

6.3.6 After completion of required inspections and tests, but immediately preceding repackaging of the filter, FTF personnel shall re-inspect the fluid seal (if so equipped) to verify the gelatinous seal was not inadvertently damaged during FTF handling.

6.3.7 FTF shall repack accepted filters in a manner comparable to the original packaging received.

6.3.8 FTF activities involving packaging, shipping and storage of HEPA filters shall conform to ASME AG-1 Article FK-7000 requirements (i.e., Level B per NQA-1-2004).

7 Preparation for Shipment

7.1 General

7.1.1 HEPA Filters shall be packaged, shipped, handled and stored in accordance with ASME AG-1, Article FK-7000, and in accordance with requirements of Reference 2.3.4.

7.2 Filter Marking and Identification

7.2.1 Each HEPA Filtershall be identified in accordance with requirements of ASME AG-1, Section FK-9100. The marking and labeling requirements of Reference 2.3.4 are also applicable.

7.2.2 Filter nameplates shall be affixed to the filter end cap in the most readily visible location.

7.2.3 In addition to the information required by ASME AG-1 FK-9100, filter labeling shall include the following information:

- Date of Penetration Test
- Purchase Order (PO) Number and PO Line Item Number
- Procurement Specification Number and Revision
- FTF Test Label (applied by FTF personnel)

7.2.4 Review purchase order to ensure additional filter identification and labeling requirements are not applicable.

7.3 Package Marking and Identification

7.3.1 Marking and labeling for each filter carton shall conform to the requirements of ASME AG-1 Subarticle FK-9200.

7.3.2 In addition to the information required by ASME AG-1 FK-9200, filter package marking shall include the following information:

- Project Number, Purchase Order (PO) Number and PO Line Item Number
- Filter Serial Number
- Procurement Specification Number and Revision
- FTF Test Label (applied by FTF personnel)
- Marking or label indicating the need for special storage environment (i.e. "Special Storage Requirements: NQA-1-2004 Level B Storage or equivalent is required.").

7.4 Packaging

7.4.1 Packaging shall be in accordance with ASME AG-1, Section FK-7000. The packaging requirements of Reference 2.3.4 are also applicable.

7.5 Documentation

7.5.1 Reference Section 10 of this Specification. Shipping documentation shall accurately reflect specific traceability to the items being shipped.

7.6 Shipping and Handling Instructions

7.6.1 Shipping and Handling of items shall be in accordance with ASME AG-1, Section FK-7000.

7.6.2 Filters shall not be shipped by rail unless prior approval is obtained from the Buyer (Reference 2.4.1 Appendix A.). For large shipments, it is recommended that the entire shipment be shipped in a sealed dedicated trailer. At all times, the filters must be handled with care and oriented properly. Handling requirements (unique to filters) shall be clearly visible on the shipping carton.

7.6.3 Unless otherwise approved by the buyer, filters shall be shipped palletized or crated to minimize unit handling, particularly at public carrier interchange points. Standard pallet sizes shall be used by the supplier.

7.6.4 No other materials shall be placed on top of the filters during shipment. A packing list shall be glued securely to the outside of one carton. The packing list shall clearly state if the shipment is a partial shipment. When requested and authorized by the buyer, airfreight shipments shall also be palletized in accordance with this specification.

7.6.5 Arrangements shall be made by the Supplier to ensure filters are shipped directly to the DOE-FTF. Note: Filters fabricated to support design development or qualification are not required to be shipped to the DOE-FTF.

7.6.6 The carrier shall be instructed that the buyer's personnel will be responsible for unloading filters at the buyer's receiving facility.

7.6.7 The following information, taken from the content of Appendix A of Reference 2.4.1, is provided for those arranging shipment of HEPA filters. It should be considered as guidance information only.

Handling at interchange stations should be controlled to prevent temporary storage in conditions that would subject the filters to dampness, excessive heat or cold or rapidly changing temperatures. Proper attention to orientation of the cartons should be maintained consistent with the filter package instruction. Another control is to require that the filters be packed properly in a scaled truck-trailer body or in a sealed containerized-freight unit, not to be opened until arrival at the specified delivery point. Unloading should be performed by personnel who have been thoroughly instructed in the proper care and handling of HEPA filters. Mixed-load shipments should be avoided.

7.6.8 The following information, taken from the content of Appendix A of Reference 2.4.1, is provided for those receiving and unloading HEPA filters. It should be considered as guidance information only.

As the shipment is being unloaded, each carton should be inspected for external damage and improper positioning in the cargo space (i.e., the carton placed with arrow direction horizontally). Damaged cartons, including those with corners dented and those improperly oriented in the truck, should be set aside for particularly careful inspection of their contents. Damage will be more prevalent when filter units are loaded with mixed cargoes or are shipped in a partially loaded carrier. The filter unit must be removed carefully from its carton. The acceptable method for removal is to open the top flaps of the container after removing the sealing tape. With flaps folded back, the carton should be inverted or upended gently to place the exposed end of the filter unit on a flat surface, preferably the floor. The surface must be clear of protrusions. Withdraw the carton from the filter unit. Attempts to remove the filter unit from the carton by grasping below the exposed filter case can result in irreparable damage if fingers puncture the delicate filter materials.

If conflicting handling instructions are provided by the filter manufacturer, the manufacturer's instructions shall prevail.

7.7 Storage

7.7.1 HEPA Filters shall be stored in a controlled environment consistent with Level B as identified in ASME AG-1 Article FK-7000 and described in References 2.1.6 and 2.4.1 Appendix A.4.

8 Quality Assurance

8.1 Supplier Quality Assurance Program

8.1.1 The supplier shall have in place a Quality Assurance program meeting the requirements of ASME NQA-1-1989 marked as applicable in the Supplier Quality Assurance Program Requirements Data Sheet attached to the Material Requisition. The Supplier shall submit his Quality Assurance Manual with the Supplier's bid documentation.

8.1.2 The successful bidder must pass a pre-award survey by the Buyer. Supplier shall demonstrate that their quality program is in compliance with the procurement quality requirements listed in the Supplier Quality Assurance Program Requirements Data Sheet. The Supplier's Quality Assurance Program, reviewed and accepted by the Buyer, shall apply to every sub-tier supplier to the Supplier. The Supplier shall allow Bechtel, its agent, and DOE access to their or any sub-tier supplier's, facility, and records pertaining to the purchase order for the purpose of Quality Assurance Audits and Surveillance at mutually agreed times.

8.1.3 All items shall be manufactured in accordance with the Supplier's Quality Assurance program that meets the requirements of ASME NQA-1-1989, and has been previously evaluated and accepted by the Buyer's Quality Assurance Organization.

8.1.4 Supplier shall submit their Quality Assurance program and work plan to Buyer for approval and permission to proceed prior to commencement of work. The work plan shall include documents and procedures to implement the work and include a matrix of essential Quality Assurance elements cross referenced with the documents/procedures.

8.2 Quality Assurance Requirements Specific to Item

8.2.1 Rejected Filters. The Buyer shall notify the Supplier of rejected filters, including the nature of the rejection. Unless otherwise negotiated between the Supplier and Buyer, the Supplier shall provide replacement filters until the stipulated quantity of filters is found acceptable. The Supplier shall provide, at the discretion of the Buyer, replacement filters and/or credit for any rejected filters.

8.2.2 The Buyer may elect to have qualification testing or verification of materials performed on any filters furnished to them. Failure of any filter submitted for qualification testing to meet specification requirements shall be cause for a reevaluation of the Supplier's quality assurance program.

8.2.3 Qualification Test Evidence. Upon request, the Supplier shall show documented evidence that qualification tests have been conducted in accordance with ASME AG-1 Subarticle FK-5100, FK-5300 and Mandatory Appendix FC-I.

8.2.4 Identification of Items with Part Number/Model Number. All filters and filter packages shall be identified with the serial number and model number. Identification shall be in conformance with sections 7.2 and 7.3 of this specification.

Note: The following items are necessary to satisfy Buyer G-321-V Form submittal requirements.

8.2.5 Quality Verification Documents shall be submitted in the form and quantities shown on Form G-321-V, Quality Verification Document Requirements of the procurement package.

8.2.6 Certificate of Conformance (C of C). Each shipment shall be accompanied by one copy of the Supplier's C of C, which meets or exceeds the requirements of ASME AG-1, Subarticle FK-8200. The C of C shall include copies of all filter case material certifications.

The Supplier/Manufacturer shall provide documentation that is legible/reproducible. Supplier's/Manufacturer's authorized representative responsible for quality shall sign the C of C. The C of C shall indicate the appropriate Purchase Order/Contract Order number under which the material, equipment, item or service is being supplied.

8.2.7 Identification of Items with Product Data Sheet. The supplier shall submit a legible copy of the product data sheet (e.g., drawing, catalog page, brochure) that provides adequate information to enable the Buyer to verify the form and function of the article procured. One copy of the documentation, unless otherwise specified, shall accompany the applicable item(s) shipped.

8.2.8 Production Inspection and Test Report. The Supplier shall submit legible, reproducible copies of the production test results and section 6.1 of this specification. The report(s) shall include the following:

- Identification of the applicable inspection and/or test procedure utilized.
- Resulting data for all characteristics evaluated, as required by the governing inspection/test procedure.
- Traceability to the item inspected/tested, (i.e., serial number, part number, etc.).
- Signature of the Supplier's authorized representative or agency that performed the inspections/tests.
- One copy of the documentation, unless otherwise specified, shall accompany the applicable item(s) shipped.

8.2.9 Filter Test Facility (FTF) Inspection and Test Report. A report or data sheet prepared by FTF personnel for each order. Minimum content requirements for this report are contained in Reference 2.2.2. Also, reference section 6.3.3 of this specification.

8.3 Substitutions

8.3.1 Supplier shall be required to identify and promptly document all deviations from the requirements of the procuring documents. In addition, the Supplier shall be required to describe the recommended disposition based on appropriate analysis. Submittals of request for deviations from lower-tier suppliers shall be through the prime supplier to the Buyer.

8.3.2 Supplier-proposed deviations from procurement documents shall be initiated by use of the Supplier Deviation Disposition Request (SDDR) form attached to the Material Requisition.

8.3.3 As required in ASME AG-1 Article FK-5100, new or revised filter designs shall require qualification testing prior to acceptance and production. Furthermore, FK-3220 states that other materials found acceptable by the qualification tests of FK-5000, and the design requirements of FK-4000 and Section AA will be acceptable for fabrication of HEPA filters. It is the responsibility of the Supplier to inform the Buyer when Buyer selected designs and/or materials deviate from these two requirements of ASME AG-1.

9 Configuration Management

Each HEPA Filter shall be tagged in accordance with Section 7.2 of this specification.

10 Documentation and Submittals

10.1 General

Supplier shall submit to Buyer Engineering and Quality Verification documents in the forms and quantities shown in Form G-321-E, Engineering Document Requirements, and Form G-321-V, Quality Verification Document Requirements, attached to the Material Requisition.

10.2 Submittals

Submittals for HEPA Filters shall include:

10.2.1 Product catalog data sheets with product description, service application, and limitations for all components.

10.2.2 Materials of construction for all components.

10.2.3 Pressure drop performance curves indicating PRESSURE DROP (Inches WC) versus FLOWRATE (ACFM).

10.2.4 HEPA filter maximum allowable pressure drop.

10.2.5 Recommended HEPA filter maximum shelf life and basis for this information.

10.2.6 Gasket material radiation tolerance.

10.2.7 Weight.

10.2.8 Filter dimensions.

10.2.9 Material Safety Data Sheets.

10.2.10 Provide manufacturers Certificate of Conformance covering the ASME, ASTM, or other material specification, grade, class, (as applicable) for each material used in the filter designs..

10.2.11 Design Qualification Test Report prepared to support qualification of filter designs in accordance with AG-1 Article FK-5100. Provide a Certificate of Conformance with this test report that summarizes Section FK conformance status of the filter designs. Reference AG-1 Article FK-8200.

10.2.12 The Supplier shall provide objective evidence acceptable to the Buyer that the requirements of ASME AG-1 Articles I-3000 and I-5000 have been satisfied. Reference AG-1 Mandatory Appendix FC-I-4120.

10.2.13 Copies of the AG-1 FK-5600 Production Test results.

10.2.14 Filter Inspection Record and Packaging Certificate to satisfy AG-1 Articles FK-6300 and FK-5500.

10.3 Drawings

10.3.1 All drawings shall be submitted as CAD drawings in MicroStation, or MicroStation convertible format.

10.3.2 Drawings showing the following information shall be submitted to Buyer for review prior to fabrication:

10.3.3 The outline dimensions of the HEPA Filter, including outline and detail drawings for each component.

10.3.4 Details of construction and fabrication drawings including fabrication tolerances.

10.3.5 The weight of individual components.

10.3.6 The ASTM or equivalent designation for materials.

10.4 Procedures

Procedures to be submitted shall include:

10.4.1 Test procedures to support FK-5100 Qualification and FK-5600 Production Testing.

10.4.2 Supplier's filter inspection, packaging, and shipping preparation procedure(s) as required to meet the intent of AG-1 Articles FK-5500, FK-6300 and FK-7000.

10.4.3 Supplier recommendations (e.g., procedure) for receiving inspection and storage.

10.5 Calculations

Calculations to be submitted shall include:

10.5.1 Submit applicable engineering data/calculations/performance charts that demonstrate compliance with this Specification.

10.6 Manuals

Manuals and instructions to be submitted shall include:

10.6.1 Quality Assurance Manual.

10.7 Certificates of Conformance

10.7.1 The Supplier shall provide Certificates of Conformance complying with ASME AG-1 FK-8200. The following clarifications apply:

10.7.1.1 In regard to where conflicts between the Supplier's design and ASME AG-1 Sections FK exist, the Supplier shall identify the respective code articles that do not apply. This may be accomplished by direct reference on the Certificate of Conformance to Buyer accepted submittal drawings and/or Supplier Deviation Disposition Request(s).

10.7.1.2 Copies of all filter case material certifications shall be provided. These certifications shall state all applicable material standards with year or edition to permit compliance assessment with Article FK-2000.

10.7.2 Furnish UL-586 certificate to meet evidence requirement of Article FK-5160.

10.8 Schedules

Lists and schedules shall include schedule of engineering, material purchase, and fabrication. Lists and schedules shall be submitted to the Buyer's Expediter.

10.9 Materials Certificates/Statistics

Reference Section 10.7 of this Specification.

10.10 Data

10.10.1 The Supplier shall provide HEPA Filter performance data sheets and/or design drawings that include the following data.

10.10.1.1 Name of manufacturer, make, model number

10.10.1.2 Media area

10.10.1.3 Pleat depth, pleat length

10.10.1.4 Capacity, initial resistance, temperature rating

10.10.1.5 Dimensions with fabrication tolerances

10.10.1.6 Seal diameter

10.10.1.7 Weight

10.10.1.8 Materials of construction

10.10.1.9 Sealant type

10.10.1.10 Gasket materials

Table 1 Remote Change Radial Flow HEPA Filter Limiting Criteria

Criteria	Basis Statement
The outer diameter (OD) of the filter, inclusive of all design features (e.g. seal channel) and fabrication tolerances shall not exceed 21 inches.	Export of waste filter from facility C5 cave requires use of remote equipment, export basket, and 55 gallon waste container. This process limits the dimensions of the waste item (i.e. filter).
The length of the filter, inclusive of all design features and fabrication tolerances shall not exceed 26-1/2 inches.	The current design of the export basket limits the filter size which may be inserted into the basket. The basket is inserted into a 55 gallon waste container.

Appendix A:

HEPA Filter Data Sheet

HEPA FILTER DATA SHEET FOR STANDARD NUCLEAR GRADE HEPA FILTERS (ASME AG-1 SECTION FK COMPLIANT FILTERS)	**MR No.** 24590-QL-MRA-MKH0-00003 **DATA SHEET No. / Rev.** 24590-###-MKD-###-##### / Rev.#	**Page 1 of 2**

Quality Level Q (no exceptions)		
Service / Application: *Note: Facility, System, Room and PPOE Number required only for filters designated as Dedicated Facility Spare Parts* RPP-WTP Facility & System:_____ Facility Rm # (where PPOE is located):_____ PPOE Number:_____ Filter Type (1 or 3 Only):_____ Safe or Remote Change (NA for Type 3): _____ Filter Quantity:_____ **Parent Piece of Equipment (PPOE)**	Generic (RPP-WTP) Spare Part?	☐ Yes ☐ No
	Dedicated Facility Spare Part?	☐ Yes ☐ No
	Potential for Wetting?	☐ Yes ☐ No
	Potential for Corrosive Atmosphere?	☐ Yes ☐ No
	Potential exposure to HNO_3 acid?	☐ Yes ☐ No
	Potential exposure to HF acid?	☐ Yes ☐ No
	Potential for High Temperature (>200°F)	☐ Yes ☐ No
Recommended Manufacturer:_____ Recommended Manufacturer's part number:_____ Manufacturer's part number (as furnished): *		

ASME AG-1 Table FK-4000-4 Performance Requirements (Note: Completion of this section not required for Type 3 Safe Change Housing Vacuum Relief Filters)	
Temperature (Max. Continuous Rating is 250°F)	Normal Operating °F (°C):_____
	Minimum Operating °F (°C):_____ Maximum Operating °F (°C):_____
	Duration for Minimum:_____ and :_____Maxiumum Temperatures
Note(s):	
Airflow Rate (Type 1 Max. Rating is 2,000 acfm / filter)	Normal Operating:_____ scfm :_____ acfm
	Minimum:_____ scfm :_____ acfm
	Maximum:_____ scfm :_____ acfm
	Temperature and Pressure for Standard Conditions:_____°F _____ atm
Note(s):	
Relative Humidity	Minimum:_____% Maximum:_____%
Note(s):	
Chemical Exposure (Concentration data for corrosive environments)	Normal operating condition:
	Upset condition & duration:
Note(s): Filter media is glass (boron silicate microfiber formed into paper with an acrylic latex polymer binder) and contains silicone for water repellency. Acid resistance obtained with addition of Nomex®.	
Radiation	Radiological dose level (mrem/hr):
	Total integrated dose for 10 yr filter life (rads):
	Radiation Limits: 2.0×10^7 rads integrated dose
Note(s): Limit based upon radiation affect on Blu-Jel® sealing properties.	
Biological Exposure	

Ref. 24590-WTP-3PS-MKH0-T0002 Rev. 2

HEPA FILTER DATA SHEET FOR STANDARD NUCLEAR GRADE HEPA FILTERS (ASME AG-1 SECTION FK COMPLIANT FILTERS)	MR No. 24590-QL-MRA-MKH0-00003 DATA SHEET No. / Rev. 24590-###-MKD-###-##### / Rev.#	Page 2 of 2

Note(s):

- All Filters shall be tested at the DOE Filter Test Facility (FTF)
- Filters must be tested per UL 586. Objective evidence shall include a UL-586 label.
- FILTERS SHALL BE IN ACCORDANCE WITH SPECIFICATION 24590-WTP-3PS-MKH0-T0002 AND BUYER ACCEPTED SUPPLIER SUBMITTAL DRAWINGS.

Additional Instructions: _____

Rev	Date	Purpose	Originator	Checker	Approver	R.E. Approval
0		Issued for Purchase				P Sullivan

Ref. 24590-WTP-3PS-MKH0-T0002 Rev. 2

ISSUED BY
RPP-WTP PDC

R10902453

RIVER PROTECTION PROJECT – WASTE TREATMENT PLANT

ENGINEERING SPECIFICATION

FOR

General Centrifugal Pumps to Meet Requirements of ASME B73.1M-2001 and ASME B73.2M-2003 for Commercial (CM) Components

Content applicable to ALARA? ☒ Yes ☐ No

ADR No.
24590-WTP-ADR-M-03-007

Rev
0

NOTE: Contents of this document are Dangerous Waste Permit affecting.

Quality Level
CM
DOE Contract No. DE-AC27-01RV14136

REV	DATE	BY	CHECK	REVIEW	E&NS	QA	DPEM
3	5/5/08	U. Sen	B. Foster	G. Goolsby	M. Rosenthal N/A	M. Ehlinger 5/6/08 M. Sheridan Walmaster	John Julyk
2	2/13/05	T. Henry	G. Goolsby / Chris Morley	M. Hoffmann		G. Warner	G. Duncan
1	4/08/03	W. Honsaker	G. Goolsby	M. Hoffmann		G. Warner	G. Duncan
0	6/4/02	G. Goolsby	GEC/WGH	SK for BR		G. Warner	G. Duncan

SPECIFICATION No.
24590-WTP-3PS-MPC0-T0002

Rev
3

Revision History

Revision	Reason for Revision
0	Issued for Use
1	Reissued for Use with General Revisions
2	Incorporate the following SCNs: 24590-WTP-3PN-MPC0-00007, -00010, -00012, -00014, -00015, -00020, & 00021 Incorporate the following SDDRs: 24590-WTP-SDDR-PROC-05-00097, 24590-WTP-SDDR-PROC-04-00614, -04-00659, -04-00660, -04-00804, -04-00895, -04-00928, -04-01117, & -05-00039 and 24590-WTP-SDDR-PROC-05-00096
3	Used current templates for specification cover sheet and specification; Revised sections 1.1, 1.2.5, 2.2, 3.2.1, 3.2.2, 3.5.5, 4.2.1, 5.2.1, 10.1.1, 10.2.9, 10.2.11; 10.2.12; Added section 2.4; Deleted sections 6.6.3, 7.4.3

Notice

Please note that source, special nuclear, and byproduct materials, as defined in the Atomic Energy Act of 1954 (AEA), are regulated at the US Department of Energy (DOE) facilities exclusively by DOE acting pursuant to its AEA authority. DOE asserts, that pursuant to the AEA, it has sole and exclusive responsibility and authority to regulate source, special nuclear, and byproduct materials at DOE-owned nuclear facilities. Information contained herein on radionuclides is provided for process description purposes only.

Contents

Notice iii

1 Scope 1

1.1 Project Description and Location 1

1.2 Equipment, Material, and Services Required 1

1.3 Work by Others 1

1.4 Definitions and Acronyms 2

2 Applicable Documents 3

2.1 General 3

2.2 Codes and Industry Standards 3

2.3 Reference Documents 4

2.4 Government Documents 4

3 Design Requirements 4

3.1 Basic Function 4

3.2 Performance 4

3.3 Design Conditions 5

3.4 Environmental Conditions 5

3.5 Mechanical Requirements 5

3.6 Loadings 6

3.7 Electric Motors 6

3.8 Instrumentation and Control Requirements 6

3.9 Accessibility and Maintenance 6

4 Materials 7

4.1 Construction 7

4.2 Prohibited Materials 7

4.3 Special Requirements 7

4.4 Storage of Special Materials (e.g., Stainless Steel) Prior to Work 7

5 Fabrication 8

5.1 Welding 8

5.2 Assembly 8

6 Tests and Inspections 8

6.1 Personnel Qualifications 8

6.2 Non-Destructive Examinations 8

6.3 Shop Tests 8
6.4 Site Tests 9
6.5 Positive Material Identification 9
6.6 Safety Requirements 9
7 Preparation for Shipment 9
7.1 Cleanliness 9
7.2 Painting 9
7.3 Tagging 9
7.4 Packaging 10
8 Quality Assurance 10
8.1 QA Requirements Specific to Item(s) or Service 10
8.2 Program QA Elements 10
9 Configuration Management 10
10 Documentation and Submittals 10
10.1 General 10
10.2 Submittals 11
11 Design Changes Incorporated by Reference 12

Figures

Figure 1 Pump Operating Range 13

1 Scope

1.1 Project Description and Location

The Hanford Tank Waste Treatment and Immobilization Plant (WTP) is a complex of waste treatment facilities where the U.S. Department of Energy (DOE) Hanford Site tank waste will be put into stable glass form. The WTP Contractor will design, build and start-up the WTP pretreatment and vitrification facilities for the DOE Office of River Protection. The waste treatment facilities will pretreat and immobilize the low-activity waste and high-level waste currently stored in underground storage tanks at the Hanford Site.

The Hanford Site occupies an area of about 560 square miles and is located along the Columbia River, north of the city of Richland, Washington. The WTP Facility will be constructed at the east-end of the 200 East Area of the Hanford Site. The Counties of Benton, Franklin, and Grant surround the Hanford Site.

1.2 Equipment, Material, and Services Required

Seller shall design, fabricate and test, centrifugal pumps and accessories in accordance with ANSI/ASME Standards B73.1M & B73.2M including:

1.2.1 Horizontal centrifugal pumps complete with electric motor, baseplate, and accessories as specified in individual Pump Data Sheets.

1.2.2 Vertical in-line centrifugal pumps complete with electric motor and accessories as specified in individual Pump Data Sheets.

1.2.3 Specific modifications to pump, attachments, baseplate, baseplate attachments, electric motor, and/or electric motor attachments are detailed in individual Pump Data Sheets.

1.2.4 Deleted

1.2.5 Stainless steel (SS) shim packs for each foot mounting position for each pump and driver. The shims shall be cut and slotted to match each support baseplate. Unless otherwise agreed to by the Buyer, each shim pack shall contain the following:

1 each SS shim 0.250" in thickness
2 each SS shim 0.125" in thickness
2 each SS shim 0.0625" in thickness
2 each SS shim 0.040" in thickness
2 each SS shim 0.010" in thickness
2 each SS shim 0.005" in thickness

1.3 Work by Others

1.3.1 Material unloading and storage at job site

1.3.2 Installation labor

1.3.3 External piping

1.3.4 Electrical power supply

1.3.5 Wiring external to the pump

1.3.6 Motor starters (except adjustable speed drive motors)

1.4 Definitions and Acronyms

1.4.1 Definitions – See ANSI/ASME B73.1M and ANSI/ASME B73.2M and:

Buyer

Bechtel National Inc. for the WTP.

Seller

Designer, manufacturer, fabricator, vendor, supplier, bidder who provides equipment, components, services or other products for delivery or direct benefit to the Buyer.

1.4.2 Acronyms of Organizations and Terms

ABMA	American Bearing Manufacturers Association
AIHA	American Industrial Hygiene Association
ANSI	American National Standards Institute
ASME	American Society of Mechanical Engineers
AWS	American Welding Society
BEP	Best Efficiency Point
NEMA	National Electrical Manufacturers Association
NPSH	Net Positive Suction Head
PIP	Process Industry Practices

2 Applicable Documents

2.1 General

2.1.1 Work shall be done in accordance with the applicable referenced codes, standards and documents listed below, which are an integral part of this specification.

2.1.2 When specific chapters, sections, parts, or paragraphs are listed following a code, industry standard, or reference document, only those chapters, sections, parts, or paragraphs of the document are applicable and shall be applied. If a date or revision is not listed, the latest issue including addenda at the time of Request for Quote (RFQ) shall apply, **except for material standards where the Seller ensures that the revision associated with currently available material is acceptable for the intended use of the material.** When more than one code, standard, or referenced document covers the same topic, the requirements for all must be met with the most stringent combination of requirements.

2.2 Codes and Industry Standards

ANSI/ASME B73.1M	*Specification for Horizontal End Suction Centrifugal Pumps for Chemical Process - 2001*
ANSI/ASME B73.2M	*Specification for Vertical In-Line Centrifugal Pumps for Chemical Process - 2003*
ANSI/ASME B16.1	*Cast Iron Pipe Flanges and Flanged Fittings*
ANSI/ASME B16.5	*Pipe Flanges and Flanged Fittings*
ANSI/ABMA 9	*Load Ratings and Fatigue Life for Ball Bearings*
ANSI/ABMA 11	*Load Ratings and Fatigue Life for Roller Bearings*
ANSI/ASME B15.1	*Safety Standard for Mechanical Power Transmission Apparatus*
ASME B1.1	*Unified Inch Screw Threads*
ASME Section VIII, Division 1	*American Society of Mechanical Engineers, Boiler and Pressure Vessel Code, Section VIII, Division 1, "Rules for Construction of Pressure Vessels"*
ASME Section IX	*BPVC Section IX, Qualification Standard for Welding and Brazing Procedures, Welders, Brazers, and Welding and Brazing Operators*
	Deleted
PIP RESP002	*Design of ASME B73.1 and General Purpose Pump Baseplates*
	Deleted
	Deleted
UBC	*Uniform Building Code - 1997*
	Deleted

	Deleted
HIS	*Hydraulic Institute Standards*
	Deleted

2.3 Reference Documents

24590-WTP-3PS-G000-T0001	*General Specification for Supplier Quality Assurance Program Requirements*
24590-WTP-3PS-G000-T0002	*Specification for Positive Material Identification (PMI)*
24590-WTP-3PS-G000-T0003	*General Specification for Packaging, Shipping, Handling and Storage Requirements*
24590-WTP-3PS-EVV1-T0001	*Engineering Specification for Low Voltage Adjustable Speed Drives*
24590-WTP-3PS-MUMI-T0001	*Specification for Medium Voltage Induction Motors*
24590-WTP-3PS-MUMI-T0002	*Specification for Low Voltage Induction Motors*
24590-WTP-3PS-FB01-T0001	*Engineering Specification for Structural Design Loads for Seismic Category III & IV Equipment and Tanks*

2.4 Government Documents

40 CFR 264	*Code of Federal Regulations Part 264—Standards for Owners and Operators of Hazardous Waste Treatment, Storage and Disposal Facilities*
29 CFR 1910	*Code of Federal Regulations Part 1910—Occupational Safety and Health Standards (OSHA) - 1995*

3 Design Requirements

3.1 Basic Function

3.1.1 The centrifugal pumps shall provide motive force required to move various process liquids (defined in individual Pump Data Sheets) in the facilities that make up the WTP Project.

3.2 Performance

3.2.1 Pump head capacity characteristic curves shall be selected to rise continuously as flow is reduced to shutoff. Head rise to shut-off shall be at least 10 % of the head at the rated capacity.

3.2.2 Pump shall be capable of a minimum head increase of 5 % at the rated flow by installing a new impeller, up to the maximum allowable shown on the Seller's typical pump curves.

3.2.3 The net positive suction head (NPSH) available shall exceed the NPSH required by at least 3 ft from minimum continuous flow to 110 % of rated operating point.

3.2.4 Pumps with suction Specific Speeds (N_{ss}) greater than 11,000 require approval from the Buyer.

3.2.5 Both the normal and rated flow rates shall be within the acceptable and preferred flow rate ranges established in Figure 1. Buyer approval is required before deviating from this chart.

3.3 Design Conditions

3.3.1 Equipment and accessories are to be used in a plant with a design life of 40 years. The design objective for pumps purchased to this Specification shall be 40 years of useful life with periodic maintenance as recommended by the Seller. Maintainable items will be specified for cost-effective design lives taking into account current technology and standards.

3.3.2 Specific design conditions shall be detailed in individual Pump Data Sheets for each pump.

3.4 Environmental Conditions

3.4.1 Pumps shall be subjected to the operating conditions specified in individual Pump Data Sheets.

3.4.2 When noted in individual Pump Data Sheets, the seal elastomer components shall use radiation-tolerant materials.

When noted in individual Pump Data Sheets, bearings may require special radiation resistant lubricants.

3.5 Mechanical Requirements

3.5.1 See individual Pump Data Sheets.

3.5.2 Suction and discharge nozzles shall be flanged in accordance with ANSI/ASME B73.1M, [paragraph 4.2] and/or ANSI/ASME B73.2M, [paragraph 4.2]. See individual Pump Data Sheets for additional requirements.

3.5.3 Modifications and/or special nozzle configurations are specified in individual Pump Data Sheets.

3.5.4 Seal gland shall be as specified in ANSI/ASME B73.1M, [paragraph 4.6.6] or ANSI/ASME B73.2M, [paragraph 4.6.6]. For services where the pump case is a higher grade alloy, the seal gland shall be of the same material as the pump case or an alloy of greater corrosion resistance. See paragraph 6.5 of this specification for positive material identification requirements.

3.5.5 Unless otherwise specified, horizontal end suction centrifugal pumps shall be supplied with suitable baseplates designed for grouting in accordance with reference PIP RESP002 [section 4].

3.5.6 The underside of fabricated baseplates, beneath pump and driver supports, shall have reinforcing cross members welded to full depth. The members shall be shaped to be held in position by the grout. All welding shall be continuous. Stitch welding, top or bottom, is unacceptable.

3.6 Loadings

3.6.1 Seller shall submit allowable flange loadings to Buyer for review.

3.6.2 Pumps shall be designed for seismic loads as specified in the individual Pump Data Sheets. Design loads shall be calculated in accordance with *Engineering Specification for Structural Design Loads for Seismic Category III & IV Equipment and Tanks* (24590-WTP-3PS-FB01-T0001).

3.7 Electric Motors

3.7.1 Medium and Low Voltage Induction Motors shall conform to specifications *Specification for Medium Voltage Motors* (24590-WTP-3PS-MUMI-T0001) and *Specification for Low Voltage Motors* (24590-WTP-3PS-MUMI-T0002) respectively.

3.7.2 Adjustable speed drives shall be in accordance with *Engineering Specification for Low Voltage Adjustable Speed Drives* (24590-WTP-3PS-EVV1-T0001).

3.7.3 Electric Motors shall be sized so that they are not overloaded at any point on the performance curve.

3.7.4 For other requirements see individual motor data sheets, if provided; otherwise see additional motor specifications listed in the individual pump data sheets.

3.8 Instrumentation and Control Requirements

3.8.1 Barrier fluid systems, when specified in individual Pump Data Sheets, shall be equipped with seal failure detection as required by 40 CFR 264. Switch supplied shall be a single pole double throw (SPDT), hermetically sealed dry contact design suitable for the environmental conditions where it is located.

3.8.2 Seal failure detection on barrier fluid systems, shall include discreet contacts for Buyer's external alarm as required by 40 CFR 264.

3.9 Accessibility and Maintenance

3.9.1 Frequency of inspection and maintenance intervals shall be in accordance with equipment Seller's recommendations or as required by plant maintenance.

3.9.2 Buyer's layout specifies access and space requirements to facilitate maintenance during normal plant operation or scheduled shutdown.

3.9.3 Detailed drawings of facility specific maintenance equipment requirements, if any, are referenced in individual pump data sheets.

3.9.4 Seller shall advise recommended screen size or perforation size in startup strainers for each pump application.

4 Materials

4.1 Construction

4.1.1 See individual Pump Data Sheets.

4.1.2 Horizontal end suction centrifugal pump construction shall be in accordance with ANSI/ASME B73.1M.

4.1.3 Vertical in-line centrifugal pump construction shall be in accordance with ANSI/ASME B73.2M.

4.1.4 Restrictions to repair of pressure containing or wetted parts shall be in accordance with ANSI/ASME B73.1M [paragraph 4.8] and/or ANSI/ASME B73.2M [paragraph 4.8].

4.2 Prohibited Materials

4.2.1 Bronze, copper, lead, zinc, tin, antimony, cadmium, their alloys or materials containing such metals as their basic constituents, or molybdenum and halogens, shall not be used in direct contact with stainless steel, with the exception of oil impregnated bronze bearings. This prohibition applies to the use of tools, fixtures, paints, coatings and sealing compounds, and any other equipment or materials used by the Seller in handling, assembly and storage of stainless steel parts or components.

4.2.2 The use of asbestos is prohibited.

4.3 Special Requirements

Special conditions and requirements, if any, are detailed in individual pump data sheets.

4.4 Storage of Special Materials (e.g., Stainless Steel) Prior to Work

Storage of Special Materials (Seller's Location) shall be in accordance with the Seller's QAP and *General Specification for Packaging, Shipping, Handling and Storage Requirements* (24590-WTP-3PS-G000-T0003).

5 Fabrication

5.1 Welding

5.1.1 Weld repairs required to certify pressure containing parts shall be performed and inspected by qualified operators using procedures which are qualified in accordance with Section VIII, Division 1 and Section IX of the ASME Code.

5.1.2 Weld repair records shall be included with document submittal package.

5.2 Assembly

5.2.1 Pump and driver mounted by the Seller shall be properly aligned prior to shipment. To ensure final alignment can be achieved in the field, the equipment Seller shall align the pump and driver within 0.002 inch parallel offset. The driver shall not be bolt bound in any direction and hold down bolts shall not be undercut or undersized to relieve this condition.

5.2.2 Each pump, motor and baseplate assembly shall include all components and accessories fully assembled, piped and wired, requiring only setting on the foundation and connecting Buyer's piping, electrical, and control systems.

6 Tests and Inspections

6.1 Personnel Qualifications

Seller's inspection and test personnel qualifications shall be verified by Buyer's supplier quality representative.

6.2 Non-Destructive Examinations

Hydrostatic tests on machined parts shall be in accordance with ANSI/ASME B73.1M, [paragraph 5.2.1] or ANSI/ASME B73.2M, [paragraph 5.2.1]. See individual pump data sheets for additional tests.

6.3 Shop Tests

6.3.1 Buyer's inspection plan shall indicate tests and inspections to be witnessed. The individual Pump Data Sheets may further define inspection, test requirements, and pump media type.

6.3.2 Pump performance tests shall be performed per Hydraulic Institute Standards (HIS) as required by ANSI/ASME B73.1M [paragraph 5.2] or ANSI/ASME B73.2M [paragraph 5.2].

6.3.3 Hydrostatic testing of equipment shall be performed using potable water with chlorine content of no more than 50 ppm.

6.4 Site Tests

Buyer's startup personnel shall perform field tests after installation. Buyer may request Seller's assistance during startup at no additional cost.

6.5 Positive Material Identification

Positive material identification (PMI) shall be performed in accordance with *Specification for Positive Material Identification (PMI)* (24590-WTP-3PS-G000-T0002).

6.6 Safety Requirements

6.6.1 See individual pump data sheets for specific safety requirements.

6.6.2 Safety guards shall be furnished in accordance with ANSI/ASME B73.1M, [paragraph 4.12.1] or ANSI/ASME B73.2M [paragraph 4.12.1].

6.6.3 Deleted

7 Preparation for Shipment

7.1 Cleanliness

All dirt, oil, grease, loose mill scale, weld splatter and other foreign matter shall be removed from all surfaces in accordance with *General Specification for Packaging, Handling and Storage Requirements.*

7.2 Painting

Manufacturer's standard procedures shall be submitted for Buyer's review.

7.3 Tagging

7.3.1 Nameplate shall be provided and attached as specified in of ANSI/ASME B73.1M [paragraph 5.3] or ANSI/ASME B73.2M [paragraph 5.3].

7.3.2 Buyer's equipment number listed on the individual pump data sheets shall be included on nameplate.

7.3.3 Buyer's instrument tag numbers listed on the individual instrument data sheets shall be included on name tags affixed to instruments. Seller shall supply stainless steel wired instrument tags engraved with Buyer's purchase order number, item number, and instrument tag number.

7.4 Packaging

7.4.1 All equipment shall be packed, securely anchored, and protected for shipment in accordance with *General Specification for Packaging, Handling, and Storage Requirements*. Non-mounted drivers (if approved by Buyer) shall be shipped along with the main pump assembly unless otherwise agreed by Buyer or specified on individual pump data sheets.

7.4.2 Pumps, drive motors, and all furnished auxiliaries shall be shipped fully assembled on their specific baseplates. Special applications requiring different shipping instructions are detailed in individual pump data sheets.

7.4.3 Deleted

8 Quality Assurance

8.1 QA Requirements Specific to Item(s) or Service

8.1.1 The Seller's quality assurance program (QAP) requirements are included in *General Specification for Supplier Quality Assurance Program Requirements* (24590-WTP-3PS-G000-T0001).

8.1.2 Seller's QAP manual shall be submitted to Buyer for review in accordance with *General Specification for Supplier Quality Assurance Program Requirement .*

8.2 Program QA Elements

Seller's QAP, at a minimum shall contain the requirements detailed in the Supplier QAP requirements data sheets listed in Section 2 of the material requisition.

9 Configuration Management

Equipment covered by this Specification is identified with equipment numbers listed in individual pump data sheets. Each item is identified in accordance with Tagging in Paragraph 7.3 of this specification.

10 Documentation and Submittals

10.1 General

10.1.1 Documents required by Buyer shall be made available in as prescribed in Appendix A of ANSI/ASME B73.1M and/or ANSI/ASME B73.2M. See section 3 of the Material Requisition for submittal format requirements.

10.1.2 Submittals and document quantities including drawings, installation procedures, inspection and test reports, calculations, manuals, certificates of conformance, schedules and material certificates are detailed in section 3 (G-321-E Form) of the material requisition.

10.2 Submittals

10.2.1 Drawings

Drawings shall be inclusive of all following requirements:

10.2.2 Outline drawings of pump assembly, including outline and detail drawings for each component as follows:

- Pump
- Motor
- Seal
- Coupling

10.2.3 Mounting dimensions and information required for the design of supports and foundations

10.2.4 Locations and identification of parts included in the parts list

10.2.5 Wiring, schematic diagrams and data; diagrams including wire gauges applicable to the supplied units only; external connections for power and measurement shown on these diagrams; submittals to meeting requirements specified in *Specification for Medium Voltage Motors* (24590-WTP-3PS-MUMI-T0001, paragraph 10.1) or *Specification for Low Voltage Motors* (24590-WTP-3PS-MUMI-T0002, paragraph 10.1) as applicable

10.2.6 Pump performance curve showing NPSH required, horsepower, efficiency, flow vs. head at applicable speeds

10.2.7 Drawing submittal requirements as shown on G-321-E form of the material requisition

10.2.8 Mechanical seal drawing for pumps specified in individual pump data sheets

10.2.9 Parts List

A list of all pump parts for start-up and 1-year operation shall be provided by Seller as prescribed in ANSI/ASME B73.1M or ANSI/ASME B73.2M. Seller shall identify useful shelf life and storage requirements of parts anticipated to have functional life spans shorter than the pump design life.

10.2.10 Inspection and Test Reports

Seller shall provide test reports in accordance with ANSI/ASME B73.1M [paragraph 5.2] or ANSI/ASME B73.2M [paragraph 5.2]. See section 5 and section 3 of the material requisition.

10.2.11 Forces and Moments

Allowable external forces and moments on pump nozzles shall be provided as prescribed in ANSI/ASME B73.1M [paragraph 5.1.2] and/or ANSI/ASME B73.2M [paragraph 5.1.2].

10.2.12 Manuals

Manuals shall be supplied to provide information on the correct installation, operation, and maintenance of the pump assembly. Manuals shall be as prescribed in ANSI/ASME B73.1M [paragraph 7.3.8] or ANSI/ASME B73.2M [paragraph 7.3.8].

10.2.13 Schedules

Seller shall provide fabrication and delivery schedule and progress reports for pumps described in individual pump data sheets. See section 3 of the material requisition for submittal requirements.

11 Design Changes Incorporated by Reference

24590-WTP-SDDR-PROC-04-00614

24590-WTP-SDDR-PROC-04-00659

24590-WTP-SDDR-PROC-04-00660

24590-WTP-SDDR-PROC-04-00804

24590-WTP-SDDR-PROC-04-00895

24590-WTP-SDDR-PROC-04-00928

24590-WTP-SDDR-PROC-04-01117

24590-WTP-SDDR-PROC-05-00039

24590-WTP-SDDR-PROC-05-00097

Figure 1 Pump Operating Range

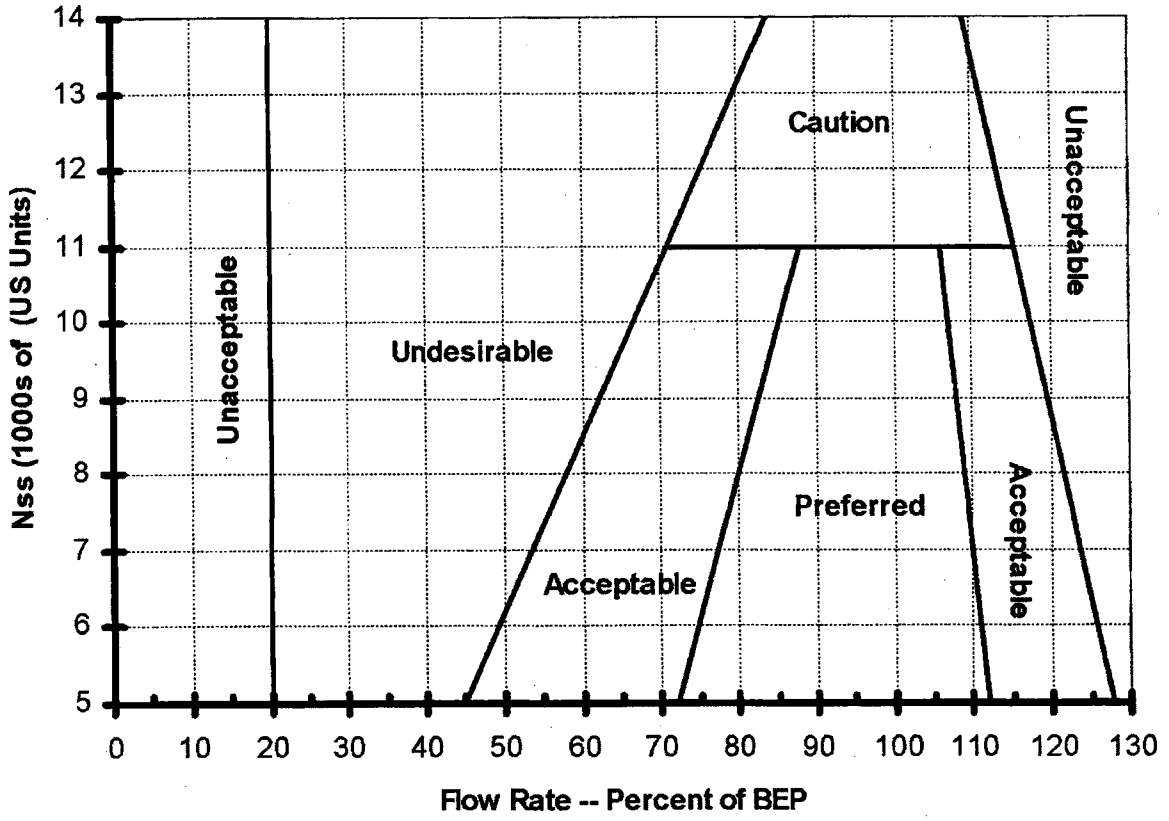

ISSUED BY
RPP-WTP PDC

R10895154

RIVER PROTECTION PROJECT – WASTE TREATMENT PLANT

ENGINEERING SPECIFICATION

FOR

Sealless Centrifugal Pumps to Meet Requirements of API Standard 685, First Edition, for Quality Level Q

Content applicable to ALARA? ☒ **Yes** ☐ **No**

ADR No.
24590-WTP-ADR-M-05-0002

Rev
0

Quality Level
Q
DOE Contract No. DE-AC27-01RV14136

REV	DATE	BY	CHECK	REVIEW	E&NS	QA	DPEM
2	4/15/08	U. Sen	Bruce Foster	~~J. Julyk~~ G. Goolsby 4/15/08	R. Carlstrom	M. Ehlinger	~~R. Voke~~ John Julyk 4/15/08
1	6/27/05	T. Henry	K. Becker	C. Morley	D. Lord	G. Warner	R. Voke
0	6/4/02	J. Albretsen	G. Goolsby	B. Rao		G. Warner	G. Duncan

SPECIFICATION No.
24590-WTP-3PS-MPC0-T0003

Rev
2

Revision History

Revision	Reason for Revision
0	Issue for Use
1	Issue to incorporate requirements of DVR # 24590-WTP-DVR-M-04-0004 (report #DVIR-PMP-
	025), SCNs 24590-WTP-3PN-MPC0-00001, 24590-WTP-3PN-MPC0-00003, 24590-WTP-3PN-
	MPC0-00011, & 24590-WTP-3PN-MPC0-00018
2	Issued to incorporate SCNs 24590-WTP-3PN-MPC0-00027, 24590-WTP-3PN-MPC0-00029,
	~~and SDDRs 24590-WTP-SDDR-M-05-00719, 24590-WTP-SDDR-M-06-00369~~; Added dBA and
	SRD acronyms in section 1.4.3; Deleted section 2.3.6; Deleted "or other low melting point metals"
	in section 4.2.1; Deleted 'QL-1' or 'QL-2' in and replaced with 'Q' on cover sheet and in sections
	3.11,3.6.3 and 8.2; Deleted section 3.7.3; Appendix A second paragraph, second line, added 'SRD'.

4/21/08
4/21/08

Contents

1 Scope 1
1.1 Project Description and Location 1
1.2 Equipment, Material, and Services Required 1
1.3 Work by Others 2
1.4 Definitions and Acronyms 2
1.5 Safety/Quality Classifications 3
2 Applicable Documents 3
2.1 Codes 3
2.2 Industry Standards 3
2.3 Engineering Standards 5
3 Design Requirements 5
3.1 Basic Function 5
3.2 Performance 6
3.3 Design Conditions 6
3.4 Environmental Conditions 8
3.5 Mechanical Requirements 8
3.6 Loadings 8
3.7 Electrical Requirements 9
3.8 Instrumentation and Control Requirements 9
3.9 Accessibility and Maintenance 9
4 Materials 9
4.1 Construction 9
4.2 Prohibited Materials 9
4.3 Special Requirements 10
4.4 Storage of Special Materials (e.g., stainless steel) prior to work 10
5 Fabrication 10
5.1 Welding 10
5.2 Assembly 10
5.3 Heat Treatment 10
5.4 Other Processes (as required) 10
6 Tests and Inspections 10
6.1 Personnel Qualifications 10

6.2 Non-Destructive Examinations 11
6.3 Shop Tests 11
6.4 Site Tests 11
7 Preparation for Shipment 11
7.1 Cleanliness 11
7.2 Painting 11
7.3 Tagging 11
7.4 Packaging 11
8 Quality Assurance 12
8.1 QA requirements specific to item(s) or service 12
8.2 Program QA elements 12
9 Configuration Management 12
10 Documentation and Submittals 12
10.1 General 12
10.2 Drawings and Parts Lists 13
10.3 Procedures 13
10.4 Inspection and Test Reports 13
10.5 Calculations 13
10.6 Manuals 14
10.7 Schedules 14

Appendices

Appendix A ..... A-i

1 Scope

1.1 Project Description and Location

The River Protection Project-Waste Treatment Plant (WTP) is a complex of waste treatment facilities where the US Department of Energy (DOE) Hanford Site tank waste will be put into stable glass form. The WTP Contractor will design, build and start-up the WTP pretreatment and vitrification facilities for the DOE Office of River Protection (ORP). The waste treatment facilities will pretreat and immobilize the low-activity waste (LAW) and high-level waste (HLW) currently stored in underground storage tanks at the Hanford Site.

The Hanford Site occupies an area of about 560 square miles and is located along the Columbia River, north of the city of Richland, Washington. The WTP Facility will be constructed at the east-end of the 200 East Area of the Hanford Site. The counties of Benton, Franklin, and Grant surround the Hanford Site.

1.2 Equipment, Material, and Services Required

Design, furnish materials, fabricate, assemble, test and deliver sealless centrifugal pumps and accessories in accordance with this specification, including:

1.2.1 Sealless Centrifugal pumps, each complete with electric motor and accessories specified on the individual Pump Data Sheets per API Standard 685, 1st Edition and individual Motor Data Sheets, if provided.

1.2.2 Stainless steel shim packs shall be furnished for each foot mounting position for each pump and driver. The shims shall be cut and slotted to match each support baseplate. Each shim pack shall contain:

1 each SS shim 0.250" in thickness
2 each SS shim 0.125" in thickness
2 each SS shim 0.0625" in thickness
2 each SS shim 0.040" in thickness
2 each SS shim 0.010" in thickness
2 each SS shim 0.005" in thickness

1.2.3 Services of an installation supervisor when required.

1.2.4 Sets of all special tools required for installation and maintenance. The order will specify the quantity of tool sets to be furnished.

1.2.5 One lot of consumable spare parts per item for start up and one year operation.

1.2.6 Each pump, motor and baseplate assembly shall include all components and accessories fully assembled, piped and wired, requiring only setting on the foundation and connecting to the Buyer's piping, electrical and control systems.

1.2.7 The Seller shall advise recommended openings in start-up strainers for each pump application.

1.3 Work by Others

1.3.1 Material unloading and storage at jobsite

1.3.2 Installation labor

1.3.3 Foundation and anchor bolts

1.3.4 Interconnecting pipework external to unit

1.3.5 Electric power supply and connection

1.3.6 Wiring external to pump and driver

1.3.7 Motor starters

1.4 Definitions and Acronyms

1.4.1 Definitions - API Standard 685 is the same as API 685 or API Standard 685-2000, referenced in the following sections of this specification:

Deleted

1.4.2 Acronyms of Organizations

Deleted
Deleted

ANSI American National Standards Institute
API American Petroleum Institute
ASME American Society of Mechanical Engineers
ASNT American Society for Nondestructive Testing

Deleted
Deleted
Deleted
Deleted

Deleted

1.4.3 Other Acronyms

BPVC	Boiler and Pressure Vessel Code (ASME)
CFR	Code of Federal Regulations
LAW	Low-Activity Waste
HLW	High Level Waste
WTP	Waste Treatment Plant
RFQ	Request for Quote
BEP	Best Efficiency Point
GPM	Gallons Per Minute
NPSH	Net Positive Suction Head
NPSHR	Net Positive Suction Head Required
QAP	Quality Assurance Program
NDE	Non-Destructive Examination
SRD	Safety Requirements Document
dBA	Decibels

1.5 Safety/Quality Classifications

Quality Level and Seismic Category of each pump described in this specification will be on the individual Pump Data Sheets.

2 Applicable Documents

2.1 Codes

2.1.1 Work shall be done in accordance with the referenced codes, standards, and documents listed below, which are an integral part of this specification.

2.1.2 When specific chapters, sections, parts, or paragraphs are listed following a code, industry standard, or reference document, only those chapters, sections, parts, or paragraphs of the document are applicable and shall be applied. If a date or revision is not listed, the latest issue, including addenda, at the time of Request for Quote (RFQ) shall apply. When more than one code, standard, or referenced document covers the same topic, the requirements for all must be met with the most stringent governing.

2.2 Industry Standards

Includes but not limited to:

2.2.1 Deleted

2.2.2 Deleted

2.2.3 Deleted

2.2.4 Deleted

2.2.5 Deleted

2.2.6 API Std. 685 -2000, 1st Ed. - Sealless Centrifugal Pumps for Petroleum, Heavy Duty Chemical, and Gas Industry Services, as tailored in Appendix A.

2.2.7 Deleted

2.2.8 Deleted

2.2.9 Deleted

2.2.10 Deleted

2.2.11 Deleted

2.2.12 Deleted

2.2.13 Deleted

2.2.14 ASNT SNT-TC-1A, June, 1980 Edition through 2001 Edition - Personnel Qualification and Certification in Nondestructive Testing

2.2.15 Deleted

2.2.16 Deleted

2.2.17 Deleted

2.2.18 Deleted

2.2.19 Deleted

2.2.20 Deleted

2.2.21 ASME B31.3-1996, Process Piping

2.2.22 ASME Section VIII, Div 1, Rules for Construction of Pressure Vessels

1.1.1 ASME Section II, Div 1, Materials

1.1.1 ASME Section V, Nondestructive Examination

1.1.1 ASME Section IX, Welding and Brazing Qualifications

2.3 Engineering Standards

2.3.1 24590-WTP-3PS-G000-T0001, General Specification for Supplier Quality Assurance Program Requirements

2.3.2 24590-WTP-3PS-G000-T0002, Engineering Specification for Positive Material Identification (PMI) for Shop Fabrication

2.3.3 24590-WTP-3PS-G000-T0003, Engineering Specification for Packaging, Handling and Storage Requirements

2.3.4 24590-WTP-3PS-MUMI-T0001, Engineering Specification for Medium Voltage Induction Motors

2.3.5 24590-WTP-3PS-MUMI-T0002, Engineering Specification for Low Voltage Induction Motors

2.3.6 Deleted

2.3.7 24590-WTP-3PS-SS90-T0001, Engineering Specification for Seismic Qualification of Seismic Category I/II Equipment and Tanks

2.3.8 24590-WTP-3PS-FB01-T0001, Engineering Specification for Structural Design Loads for Seismic Category III & IV Equipment and Tanks

3 Design Requirements

3.1 Basic Function

3.1.1 These centrifugal pumps will move liquids to/from/between locations that require a Q pump.

3.1.2 The pumps may be located in "hot cells" which will require remote maintenance and handling design features. (See the individual Pump Data Sheets.)

3.2 Performance

See the individual Pump Data Sheets.

3.3 Design Conditions

3.3.1 See the individual Pump Data Sheets.

3.3.2 The equipment and appurtenances will be used in a plant that has a nominal design life of 40 years. The design objective for these centrifugal pumps shall be based on a useful life expectancy of 40 years with periodic maintenance as recommended by the Seller.

3.3.3 This (Bechtel WTP) specification covers the minimum requirements for sealless centrifugal pumps designed in accordance with API Standard 685, First Edition, *Sealless Centrifugal Pumps for Petroleum, Heavy Duty Chemical, and Gas Industry Services* as modified by this section. Bulleted items in API 685 not addressed in this specification shall have the decisions noted on the individual Pump Data Sheets.

The term "Seller" in this specification is equivalent to "Vendor" in API 685. The term "Buyer" in this specification is equivalent to "Purchaser" in API 685.

API 685 Paragraph Numbers

The paragraph numbers in this section correspond to those in API 685 and each of the paragraphs denotes an "Addition", "Decision", or "Modification" to the API requirements.

2.2 (Decision) Pumps shall comply with applicable US Standards unless a Code or Standard specified dictates otherwise.

5.1 (Decision) Dimensions shall be US Standard.

5.4 Delete

6.1.1 (Modification) Design service life is 40 years. See Paragraph 3.3.2 of this (Bechtel WTP) specification.

6.1.10 (Decision) Pump Suction Specific Speed (S) shall not exceed 12,000 (calculated using rotative speed in rev/min, BEP flow at the maximum diameter impeller in GPM and NPSH in feet). Pumps offered with suction specific speeds >12,000 may be accepted subject to the Buyer's written acceptance.

6.1.12 (Addition) Pumps for parallel operation shall have equal head rise (within ± 1 % as measured on the performance test) to shutoff.

6.1.15 (Addition) Noise level shall not exceed 85 dBA measured 3 ft from the edge of the baseplate.

6.1.29 (Decision) Pumps and auxiliaries shall be suitable for outdoor installation in the climatic zone specified on the data sheets, but will be normally located indoors.

6.4.3.6 (Decision) Pressure gauge connections shall not be provided.

6.4.3.8.3 (Decision) Cylindrical threads shall not be used.

6.4.3.9 Delete

6.7.4.1 (Addition) The wear ring running clearance (adjusted for temperature) and diameter, shall be clearly stated in the proposal for each service. Pump efficiencies shall be based on the corrected clearances.

8.3.2.1a (Modification) Special-design pumps, as approved by the Buyer, may be segmentally tested at the appropriate section pressure. Hydrostatic testing, whether on a component basis or assembled pump, shall be done after all welding (such as piping connections, drain, vents, seal welding) has been completed.

8.3.3.2.1 (Modification) Bearing temperatures shall be measured at all five points of the performance test.

8.3.4.1 (Addition) NPSHR test shall be performed if the NPSH required by the pump differs from the specified available NPSH by 3 feet or less. The NPSH test will be a vacuum tank suppression test unless a suction valve throttling test has been approved by the Buyer.

9.1.5.2.10 (Addition) If non-sparking coupling guards are required, they shall be specified on the Data Sheets.

9.1.5.3.3 (Addition) Centers of mounting pads shall be at the correct relative elevation with 0.002 inch per foot of separation between the pads. Each pad shall be machined flat to within 0.002 inch total variation across the surfaces.

9.1.5.3.4 (Addition) Stainless steel shim packs shall be furnished for each foot mounting position for each pump and driver. The shims shall be cut and slotted to match each support baseplate. Each shim pack shall contain shims as specified in Paragraph 1.2.2 of this (Bechtel WTP) specification.

9.2.2.4 Plug and socket connection is acceptable for canned motor pumps.

Section 10 Seller's Data: The requirements of Section 3 of the purchasing documents shall be applicable in addition to the API 685 requirements.

End of Comments to API 685

3.3.4 All piping shall be designed to meet the requirements of ASME B31.3 - 1996.

3.4 Environmental Conditions

3.4.1 See individual Pump Data Sheets.

3.4.2 When noted on the Data Sheets, motors shall have radiation shielding or radiation hardened motors, as specified. The shielding shall be furnished by the motor Seller with consideration for motor cooling air flow.

3.4.3 When noted on the Data Sheets, all bearings shall have special radiation resistant lubricants.

3.4.4 When noted on the Data Sheets, the seal elastomer components shall use high radiation-tolerance materials.

3.5 Mechanical Requirements

3.5.1 See API Standard 685 and the individual Pump Data Sheets.

3.5.2 To insure that final alignment can be achieved in the field, the equipment manufacturer shall align the pump and driver to within 0.010 inch parallel offset and 0.002 inch/inch angular in the shop. The bolts shall be centered in their holes after the preliminary alignment. Undercutting of hold-down bolts is not acceptable.

Note: Hold-down bolts shall not be bolt bound after final alignment in the field. The hold-down bolt shall be reasonably centered, based on visual inspection after the final field alignment.

3.6 Loadings

3.6.1 Must meet API 685 requirements.

3.6.2 Pumps shall be designed for seismic loads as specified in the individual Pump Data Sheets. Design loads shall be calculated in accordance with 24590-WTP-3PS-SS90-T0001, *Engineering Specification for Seismic Qualification of Seismic Category I/II Equipment and Tanks or 24590-WTP-3PS-FB01-T0001, Engineering Specification for Structural Design Loads for Seismic Category III & IV Equipment and Tanks.*

3.6.3 The maximum allowable stress values for pumps designated Quality Level Q and Seismic Category SC-I or SC-II or SC-III shall be in accordance with ASME Section VIII, Div 1, Part UG, Section UG-23 (d).

3.7 Electrical Requirements

3.7.1 See the individual Motor Data Sheets, if provided, otherwise the individual Pump Data Sheets.

3.7.2 Electric motors shall meet the requirements of the applicable sections of API-685, Sealless Centrifugal Pumps for Petroleum, Heavy Duty Chemical, and Gas Industry Services.

3.7.3 Deleted.

3.8 Instrumentation and Control Requirements

See the individual Pump Data Sheets.

3.9 Accessibility and Maintenance

3.9.1 When Remote Handling capability is required per the individual Pump Data Sheet and/or in Section 2 of the Material Requisition, Technical Notes, detailed specifications and drawings of the Remote Handling requirements will be included. Pumps shall be furnished with Remote Handling provisions in accordance with Project requirements.

3.9.2 Detailed drawings of modifications for Remote Handling shall be furnished for Buyer review prior to the start of work.

4 Materials

4.1 Construction

See the individual Pump Data Sheets and, if provided, the individual Motor Data Sheets.

4.2 Prohibited Materials

4.2.1 Bronze, copper, lead, zinc, tin, antimony, cadmium, their alloys, or molybdenum and halogens, shall not be used in direct contact with stainless steel, with the exception of bronze bearings. This prohibition applies to the use of tools, fixtures, paints, coatings and sealing compounds, and any other equipment or materials used by the Seller in handling, assembly and storage of stainless steel parts or components.

4.2.2 The use of Teflon seals is prohibited.

4.2.3 The use of asbestos is prohibited.

4.3 Special Requirements

See the individual Pump Data Sheets and, if provided, the individual Motor Data Sheets.

4.4 Storage of Special Materials (e.g., stainless steel) prior to work

The Seller shall advise any special storage requirements.

5 Fabrication

5.1 Welding

5.1.1 Welding and weld repairs shall follow the requirements of API 685 and other referenced codes and standards as applicable.

5.1.2 Weld repair records shall be included with the document package.

5.2 Assembly

Where possible, the pump, motor, and baseplate assemblies shall be shipped as a complete package. When this is not possible, Seller shall advise Buyer in advance.

5.3 Heat Treatment

Heat treatment shall be conducted as required by Seller, API 685 and other referenced codes and standards.

5.4 Other Processes (as required)

Positive Material Identification is required for pressure retaining casings per Engineering Specification 24590-WTP-3PS-G000-T0002.

6 Tests and Inspections

6.1 Personnel Qualifications

Qualification of Seller's inspection and test personnel will be verified by the Buyer's Supplier Quality Representative.

6.2 Non-Destructive Examinations

Personnel performing non-destructive examinations or reviewing such test results shall be certified to ASNT Standard SNT-TC-1A.

6.3 Shop Tests

6.3.1 Seller shall conduct and be responsible for all shop tests listed in the individual Pump Data Sheets, the individual Motor Data Sheet (if provided), API 685 and other applicable standards and reference documents. Tests may be witnessed by the Buyer's Supplier Quality Representative.

6.3.2 Seller shall furnish all facilities necessary for the performance of such tests. In the event Seller's own facilities are not suitable for such tests, Seller shall advise Buyer and obtain advanced written permission for using alternative facilities. This shall include testing to verify remote handling requirements, if specified.

6.4 Site Tests

Buyer's startup personnel will run field performance tests after installation. Buyer may request Seller's assistance during startup.

7 Preparation for Shipment

7.1 Cleanliness

All dirt, oil, grease, loose mill scale, weld spatter and other foreign matter shall be removed from all surfaces per API 685 and Engineering Specification 24590-WTP-3PS-G000-T0003.

7.2 Painting

After visual examination, all exposed surfaces shall be primed and coated in accordance with Seller's standard procedures and API 685. Seller shall submit their conforming procedures as part of the documentation package. Color, if specified, shall be advised later.

7.3 Tagging

Tagging shall be per Paragraph 6.15 of API 685.

7.4 Packaging

7.4.1 All equipment shall be packed, securely anchored and protected for shipment in accordance with Engineering Specification 24590-WTP-3PS-G000-T0003. Pumps, drive motors and all furnished auxiliaries shall be shipped fully assembled on their

specific baseplates. Non-mounted drivers, if approved by Buyer, shall be shipped along with the main assembly.

7.4.2 Special applications requiring different shipping instructions shall be mutually agreed by Buyer and Seller.

8 Quality Assurance

8.1 QA requirements specific to item(s) or service

8.1.1 The Supplier Quality Assurance Program (QAP) requirements are included in Engineering Specification 24590-WTP-3PS-G000-T0001.

8.1.2 Seller's QAP Manual shall be submitted to Buyer for review in accordance with Engineering Specification 24590-WTP-3PS-G000-T0001.

8.2 Program QA elements

Seller's QAP, as a minimum, shall contain the requirements detailed in the Q datasheet of ANSI/ASME NQA-1 (1989) Quality Assurance Program Requirements attached to Section 2 of the purchasing documents.

9 Configuration Management

Equipment and/or components covered by this specification are identified with Plant Item (equipment tag) numbers as given in the individual Data Sheets. Each item shall be tagged per Section 7.3.

10 Documentation and Submittals

10.1 General

10.1.1 Submittals and document quantities, including Drawings, Installation Procedures, Inspection and Test Reports, Calculations, Manuals, Certificates of Conformance, Schedules, Material Certificates, and others appropriate to the purchased equipment, are detailed in Section 3 of the purchasing documents, including Forms G-321-E and G-321-V, and Section 10.3 of API 685.

10.1.2 The documents and data shall include information listed in the Descriptions in Appendix O of API 685.

10.2 Drawings and Parts Lists

10.2.1 Drawings shall satisfy Section 3 of the purchasing documents, and Section 10.3 of API 685.

10.2.2 Priced recommended spare parts lists for start-up and one (1) year's operation along with complete lists of equipment parts with drawings showing assembly locations shall be provided, per Paragraph 10.3.5 of API 685. Seller shall identify limits to shelf-life and storage requirements of parts anticipated to have functional life spans shorter than the equipment design life.

10.3 Procedures

10.3.1 All exposed surfaces shall be cleaned and painted in accordance with Seller's standard procedures and API 685. Seller shall submit their cleaning and painting procedures.

10.3.2 Seller shall submit all mechanical, electrical, and NDE test procedures for Buyer review.

10.3.3 Seller shall submit weld repair procedures for Buyer review if applicable.

10.4 Inspection and Test Reports

10.4.1 Inspection and Test Reports shall be provided in accordance with Sections 3 and 5 of the purchasing documents, and Appendix O of API 685. Reports shall include NDE, hydro static, mechanical, electrical, and hydraulic test reports.

10.5 Calculations

10.5.1 The Seller shall submit the analysis results or test results from section 3.6 of this specification for review by Buyer.

10.5.2 Forces and Moments capabilities, as a minimum, shall meet requirements of Paragraph 6.5 of API 685. Calculations, if specified, shall be furnished.

10.6 Manuals

10.6.1 Manuals shall be furnished to provide information on the correct installation, operation and maintenance of the equipment assembly. The manuals shall be as described in Appendix O of API 685.

10.7 Schedules

10.7.1 Manufacturing schedules and progress reports shall be furnished and sent directly to the Project Expeditor as shown in Section 3 of the purchasing documents.

11 Design Changes Incorporated by reference

*24590-WTP-SDDR-M-05-00719
*24590-WTP-SDDR-M-06-00369

Appendix A

API Standard 685, Sealless Centrifugal Pumps for Petroleum, Heavy Duty Chemical, and Gas Industry Services, First Edition, October 2000.

WTP Specific Tailoring

The following tailoring of API 685 is required for use as an implementing standard for centrifugal pumps handling waste streams required by SRD Safety Criterion 4.2-2 confinement requirements.

Sections 6.3 Pressure Casings, 6.5 External Nozzles Forces and Moments, 6.11 Materials, 6.12 Castings, 6.13 Welding, 6.14 Low Temperature, 7.3 Piping and Appurtenances, 8.2.2 Material Inspection, and 8.3.2 Hydrostatic Test

Sealless centrifugal pumps which provide a confinement function in accordance with Safety Criterion 4.2-2 shall meet the requirements of sections 6.3, 6.5, 6.11, 6.12, 6.13, 6.14, 7.3, 8.2.2, and 8.3.2 of API Standard 685-2000.

Justification: The API sections listed above are required to meet the SRD 4.2-2 requirements for confinement design for Important to Safety sealless pumps. This approach ensures that pumping equipment supplied and installed in the WTP can be relied upon to maintain confinement of radioactive process streams during operating conditions including shutdown. ASME Sections II, V, VIII, and IX are referenced in these standards as the acceptance standards for the materials, design, welding, heat treating, and inspection.

API Standard 685, section 6.5, provides the allowable nozzle loadings.

API Standard 685, section 6.3 pressure casings, referencing ASME Section VIII, Div. I, requires that stress used in the design for any given material shall not exceed ASME Section II values for the same material.

API Standard 685, section 6.11 specifies ASME Section VIII, Div. 1 and ASME Section IX, for the materials, casting factors, welding, and weld quality to be used as the acceptance standards for maintaining pressure integrity of WTP pumps.

API Standard 685, section 6.12 allows the repair of weldable steel used in castings provided it is done in accordance with ASME Section IX.

API Standard 685, section 6.13 requires that welding of piping, pressure-containing parts, and wetted parts and heat treatment of welds shall be performed in accordance with ASME Section VIII and ASME Section IX.

API Standard 685, section 6.14 requires that pumps operated at a low temperature comply with the material requirement in ASME Section VIII.

API Standard 685, section 7.3 specifies that the piping design, materials, joint fabrication, examination, and inspection be done in accordance with ASME B31.3.

API Standard 685, section 8.2.2 states that for material inspection including radiography, ultrasonic, magnetic particle, and liquid penetration inspection shall meet the acceptance standard used for casting per ASME Section V or ASME Section VIII, Div.1.

API Standard 685, section 8.3.2 requires the hydrostatic test to be maintained for a minimum of 30 minutes at 1.5 times maximum allowable working pressure for leaks or seepage through the casing or casing joint, and it is more stringent than ASME Section VIII or ASME B31.3-1996 for pressure boundary testing. Section 8.3.2 references ANSI/ASME B31.3 or Section II, Division 1 of the ASME Code for arriving at test pressures.

API Standard 685 sections 6.3, 6.5, 6.11, 6.12, 6.13, 6.14, 7.3, 8.2.2, and 8.3.2 include the applicable ASME Section VIII, Div.1, and ASME B31.3, requirements, and provide adequate requirements to ensure the confinement design for Important to Safety sealless pumps.

R10749770

ISSUED BY
RPP-WTP PDC

RIVER PROTECTION PROJECT – WASTE TREATMENT PLANT

ENGINEERING SPECIFICATION

FOR

Air-Operated Diaphragm Pumps

Content applicable to ALARA? ☐ Yes ☒ No

ADR No. **Rev**

Quality Level
CM
DOE Contract No. DE-AC27-01RV14136

NOTE: Contents of this document are Dangerous Waste Permit affecting.

REV	DATE	BY	CHECK	REVIEW	E&NS	QA	DPEM
3	2/14/07	U. Sen	C. Knauss		N/A	M. Ehlinger	J. Julyk
2	1/21/03	J. Albretsen	W. Honsaker		-	G. Warner	G. Duncan
1	12/11/02	J. Albretsen	W. Honsaker	-	-	G. Warner	G. Duncan
0	10/10/02	J. Albretsen	W. Honsaker			G. Warner	B. Rao for G. Duncan

SPECIFICATION No. 24590-WTP-3PS-MPPD-T0001 **Rev** 3

Revision History

Revision	Reason for Revision
0	Issue for Use
1	Reissue with new ALARA Coversheet
2	Corrected Project Number on Coversheet
3	Incorporated SCNs 24590-WTP-3PN-MPPD-00001, 00002, 00003 and 00005; Incorporated by
	Reference 24590- WTP-SDDR -PROC-04-00987, 00988, 00991 and 01123, 24590-WTP- SDDR-
	M-05-00110, Rev 1; Revised to current project format

Contents

1 Scope 1
1.1 Project Description and Location 1
1.2 Equipment, Material, and Services Required 1
1.3 Work by Others 1
1.4 Definitions and Acronyms 2
1.5 Quality/Seismic Classifications 2
2 Applicable Documents 2
2.1 General 2
2.2 Codes and Industry Standards 3
2.3 Engineering Specifications 3
3 Design Requirements 3
3.1 Basic Function 3
3.2 Performance 3
3.3 Design Conditions 3
3.4 Environmental Conditions 5
3.5 Mechanical Requirements 5
3.6 Loadings 5
3.7 Instrumentation and Control Requirements 6
4 Materials 6
4.1 General 6
4.2 Prohibited Materials 6
5 Fabrication 6
5.1 General 6
5.2 Welding 6
5.3 Assembly 7
6 Tests 7
6.1 General 7
6.2 Hydrostatic Tests 7
6.3 Positive Material Identification 7
7 Preparation for Shipment 7
7.1 Cleanliness 7
7.2 Painting 8
7.3 Tagging 8
7.4 Packaging and Shipping Instructions 8

8 Quality Assurance 9
8.1 General Requirements 9
9 Configuration Management 9
10 Documentation and Submittals 9
10.1 General 9
10.2 Drawings 9
10.3 Parts List 10
10.4 Test Reports 10
10.5 Forces and Moments 10
10.6 Manuals 10
10.7 Other 10
10.8 Records 10
11 Design Changes Incorporated by Reference 11

1 Scope

1.1 Project Description and Location

The River Protection Project-Waste Treatment Plant (WTP) is a complex of waste treatment facilities where the US Department of Energy (DOE) Hanford Site tank waste will be put into stable glass form. The WTP Contractor will design, build and start-up the WTP pretreatment and vitrification facilities for the DOE Office of River Protection (ORP). The waste treatment facilities will pretreat and immobilize the low-activity waste (LAW) and high-level waste (HLW) currently stored in underground storage tanks at the Hanford Site.

The Hanford Site occupies an area of about 560 square miles and is located along the Columbia River, north of the city of Richland, Washington. The WTP Facility will be constructed at the east end of the 200 East Area of the Hanford Site. The counties of Benton, Franklin, and Grant surround the Hanford Site.

1.2 Equipment, Material, and Services Required

The Seller shall design, furnish materials, fabricate, shop test, and deliver air-operated diaphragm pumps in accordance with this specification and the requirements contained in the Material Requisition. Each pump assembly shall include all components and accessories required to develop the performance described in this specification and the Pump Data Sheets. The Seller shall provide the following as a minimum:

1.2.1 Air-powered double-diaphragm pumps, each complete with non-lubricated air distribution valve, relief valve, air filter, regulator, air exhaust muffler and the accessories specified on individual Pump Data Sheets for Air-Operated Diaphragm Pumps.

1.2.2 Pumps shall be fully assembled, piped and wired, requiring only setting on the foundation and connecting to the Buyer's pipe, air supply and control systems.

1.2.3 Sets of any special tools required for installation and maintenance. The number of tool sets will be specified in the Material Requisition.

1.2.4 One lot of consumable spare parts per item for start-up and one year of operation.

1.3 Work by Others

1.3.1 Material unloading and storage at jobsite

1.3.2 Installation labor

1.3.3 Foundation and anchor bolts

1.3.4 Interconnecting pipework external to unit

1.3.5 Plant Service Air supply

1.3.6 Wiring external to pump

1.4 Definitions and Acronyms

1.4.1 Definitions

Quality Level	WTP Project's quality classifications of structures, systems, and components based on their importance to safety. See Supplier Quality Assurance Program Requirements Datasheet and individual Pump Data Sheets for quality requirements.
Commercial Quality	Structures, systems, components, and associated services that are required to meet the requirements of DOE Order 414.1A. See Supplier Quality Assurance Program Requirements Datasheet and individual Pump Data Sheets for Quality Requirements.
Seismic Category	WTP Project's seismic classifications of structures, systems, and components based on their safety function. See 24590-WTP-3PS-FB01-T0001, Engineering Specification for Structural Design Loads for Seismic Qualification of Seismic Category III & IV Equipment and Tanks, and individual Pump Data Sheets for seismic requirements.

1.4.2 Acronyms of organizations and terms

ASME	American Society of Mechanical Engineers
HI	Hydraulic Institute
MSS	Manufacturing Standardization Society of the Valve and Fittings Industry
OSHA	Occupational Safety and Health Administration

1.5 Quality/Seismic Classifications

Quality Level and Seismic Category of each pump described in this specification will be listed on the individual Pump Data Sheets.

2 Applicable Documents

2.1 General

2.1.1 Work shall be done in accordance with the referenced codes, standards, and documents listed below, which are an integral part of this specification.

2.1.2 When specific chapters, sections, parts, or paragraphs are listed following a code, industry standard, or reference document, only those chapters, sections, parts, or paragraphs of the document are applicable and shall be applied. If a date or revision is not listed, the latest issue, including addenda, at the time of Request for Quote (RFQ) shall apply, *except for*

material standards where the Seller ensures that the revision associated with currently available material is acceptable for the intended use of the material. When more than one code, standard, or referenced document covers the same topic, the requirements for all must be met with the most stringent combination of requirements.

2.2 Codes and Industry Standards

Sponsor	Number	Subject
ASME	B1.1	Unified Inch Screw Threads
ASME	B1.20.1	Pipe threads, General Purpose (Inch)
ASME	B16.5	Pipe Flanges and Flanged Fittings
ASME	B16.11	Forged Fittings, Socket-Welding and Threaded
MSS	SP-55	Quality Standard for Steel Castings for Valves, Flanges and Fittings and other Piping Components
OSHA	1910.95	Occupation Noise Exposure

2.3 Engineering Specifications

2.3.1 24590-WTP-3PS-G000-T0001,General Specification for Supplier Quality Assurance Program Requirements

2.3.2 24590-WTP-3PS-G000-T0002, Specification for Positive Material Identification (PMI)

2.3.3 24590-WTP-3PS-G000-T0003,General Specification for Packaging, Shipping, Handling and Storage Requirements

2.3.4 24590-WTP-3PS-FB01 -T0001, Engineering Specification for Structural Design Loads for Seismic Qualification of Seismic Category III & IV Equipment and Tanks

3 Design Requirements

3.1 Basic Function

These air-operated diaphragm pumps will transfer liquids that may have high solids content and/or be radioactive and/or hazardous.

3.2 Performance

See the individual Pump Data Sheets.

3.3 Design Conditions

3.3.1 See the individual Pump Data Sheets.

3.3.2 Air-powered pumps shall be of double-diaphragm, double-acting type complete with enclosure, diaphragms, check valves, and air distribution valve. The pump design shall allow access for adjustment or replacement of liquid components, including seals, check valves,

other wetted parts that require maintenance. Equipment shall be designed to run safely to the relief-valve setting. The check valves shall be removable from the liquid end for servicing or replacement. The diaphragms shall be connected by means of a solid steel shaft. The pump flow rate shall be adjustable, by means of the furnished regulator, over the specific turndown ratio, no less than 10: 1, while the pump is running.

3.3.2.1 The design of the equipment shall be no less than utility grade suitable for continuous operation at the minimum and maximum capabilities of the furnished pump.

3.3.2.2 Maximum interchangeability of pump components is desired among similar pump designs. Parts in identical pump designs shall be completely interchangeable.

3.3.3 Diaphragms

3.3.3.1 Pumps shall be provided with diaphragms rated for no less than 110% of the duty conditions.

3.3.3.2 Diaphragms shall be used to provide isolation and transmit pressure from air to pumped fluid. Diaphragm materials shall be compatible with fluids contacted at all specified temperatures. Diaphragms shall be of sufficient thickness and density to prevent permeation.

3.3.3.3 Deleted.

3.3.4 Pump Check Valves

The suction and discharge check valve cartridges or seats and elements shall be replaceable in the field. Proper guiding of check valve elements shall be provided for quick seating action and maximum seal life.

3.3.5 Pressure-Containing Parts

3.3.5.1 Pressure-containing parts shall be positively bolted together (wing bolts, set screws, and clamps shall not be used) and shall be designed to prevent damaging distortion caused by temperature, pressure, torque, and allowable external forces and moments.

3.3.5.2 Through bolting is preferred. Tapped holes in pressure retaining parts shall be kept to a minimum. Studs shall be used in preference to cap screws. Sufficient metal (in addition to the metal allowance for corrosion) shall be left around the bottom of drilled and tapped holes to prevent leakage.

3.3.5.3 Threading shall conform to ASME B1.1.

3.3.5.4 Clearances shall be provided to bolt locations to permit ease of access and the use of socket or box-type wrenches.

3.3.6 Nozzles and Miscellaneous Connections

3.3.6.1 Process and air connections shall be flanged. Flanges shall conform to ASME B16.5 standards except that marking requirements are not applicable. Flanges shall have through bolting. The back surface of all flanges shall be full or spot-faced at the bolt circle. The

suction nozzle flanges (ratings) shall be designed for the same pressure as the discharge flange.

3.3.6.2 Pipe threads shall be taper pipe threads in conformance with ASME B1.20.1. Tapped openings not used shall be plugged with a solid metal plug of material equal to the material of the tapped components and furnished in accordance with ASME B16.11. Plugs shall be of corrosion resistant material. Threads shall be lubricated.

3.3.6.3 Auxiliary piping and tubing, and/or conduit or cable for instrumentation, when furnished by the pump manufacturer, shall be securely supported to resist vibration and damage in the field. Auxiliary tubing shall be heavy-wall stainless steel suitable for the service conditions. Connection for auxiliary systems shall be as specified. A means for disassembly (unions, flanges, connections, etc.) shall be provided.

3.3.7 Pump unit shall have a noise level less than 85 dBA when measured 3 feet in any direction from pump unit. **(OSHA** 1910.95) Seller shall furnish expected noise data.

3.4 Environmental Conditions

3.4.1 See individual Pump Data Sheets.

3.4.2 Pumps and auxiliaries shall be suitable for outdoor installation in the climatic zone specified on the data sheets, but will be normally located indoors. Indoor and outdoor environmental conditions will be specified on the individual Pump Data Sheets.

3.5 Mechanical Requirements

3.5.1 See the individual Pump Data Sheets.

3.5.2 Assuming normal maintenance practices are performed by Buyer as recommended by Seller and based on information provided in individual Pump Data Sheets, Seller shall provide data similar to the following for the pump:

- estimated service life
- common modes of failure (i.e., diaphragm failure, etc.) and the estimated hours until such an event occurs
- maintenance time for replacement of major maintenance items (such as diaphragms), assuming normal work environments

3.6 Loadings

3.6.1 See the individual Pump Data Sheets for Seismic Classification. Equipment shall be designed for the seismic forces corresponding to that defined in 24590-WTP-3PS-FB01-T0001, Engineering Specification for Structural Design Loads for Seismic Qualification of Seismic Category III & IV Equipment and Tanks as applicable.

3.6.2 Seller shall advise maximum allowable nozzle forces and moments.

3.7 Instrumentation and Control Requirements

3.7.1 See individual Pump Data Sheets.

3.7.2 If noted in individual Pump Data Sheets, pumps shall be provided with electronic diaphragm failure/ leak detection system. Seller shall submit output signal specifications for Buyer review.

4 Materials

4.1 General

Materials used in constructing the equipment shall be suitable for the specified service and subject to review and acceptance by Buyer. Where specific materials are identified in the individual Pump Data Sheets, the base bid shall be based on their use. However, the Seller may additionally offer the option of utilizing alternative materials of equal or superior properties for Buyer's consideration.

4.2 Prohibited Materials

4.2.1 Mercury and other low melting point metals, their alloys, or materials containing such metals as their basic constituents shall not be used in the construction of pumps.

4.2.2 Products which contain asbestos are prohibited. This prohibition includes items such as gaskets even though the item is encapsulated or the asbestos fibers are impregnated with binder material.

5 Fabrication

5.1 General

5.1.1 Use Seller's standard procedures and those of sub-suppliers for fabrication and manufacture of items covered by this specification provided they do not render these items unsuitable for service and conditions specified herein. Where Seller's (or sub-suppliers) standard procedures conflict with applicable specifications, codes or other standards, apply the most stringent requirements to fabricate and manufacture equipment specified.

5.1.2 All equipment shall be furnished neatly finished and free of burrs and fins.

5.1.3 Conform to MSS-SP-55 for visual examination acceptance standards of all casting surfaces. Impregnated castings shall not be furnished.

5.2 Welding

Fabricated sections and repairs shall be welded using Weld Procedure Specifications (WPSs), Procedure Qualification Records (PQRs), Weld Filler Materials, Preheat, Post Weld Heat Treatment, and Welder Performance Tests in accordance with Seller's Quality Assurance Program and related Procedures.

5.3 Assembly

All components furnished under this specification shall be preassembled in Seller's shop to maximum extent consistent with shipping, handling, and erection constraints.

6 Tests

Specified tests shall be conducted in accordance with applicable HI Standards, except as noted in this section. The chloride content of liquids used to test austenitic stainless steel materials shall not exceed 50 parts per million. To prevent deposition of chlorides as a result of evaporative drying, all residual liquid shall be removed from tested parts at the conclusion of the test.

6.1 General

6.1.1 Seller shall conduct and be responsible for all shop tests listed in the individual Pump Data Sheets and other applicable standards and reference documents. Tests may be witnessed by the Buyer's Supplier Quality Representative.

6.1.2 As a minimum, every pump shall have a hydrostatic and a performance test. Seller shall submit testing procedures for Buyer review and acceptance.

6.1.3 Seller shall furnish all facilities necessary for the performance of such tests. In the event Seller's own facilities are not suitable for such tests, Seller shall advise Buyer and obtain advanced written permission for using alternative facilities.

6.1.4 The Seller shall supply Buyer with all certified test data whether witnessed or not.

6.2 Hydrostatic Tests

Pressure retaining casings shall be hydrostatically tested at not less than 125 percent of design (shutoff) pressure or 150 percent of head at specified rated condition, whichever is greater. Hydrostatic test pressure shall be maintained for at least 10 minutes and checked for leaks.

6.3 Positive Material Identification

If specified on individual Pump Data Sheets, Positive Material Identification (PMI) will be required for pressure retaining casings, see 24590-WTP-3PS-G000-T0002, Specification for Positive Material Identification (PMI). Seller shall submit their PMI Procedures and PMI Verification Reports to the Buyer as required in this specification.

7 Preparation for Shipment

7.1 Cleanliness

All dirt, oil, grease, loose mill scale, cuttings, weld spatter, and other foreign matter shall be removed from all interior and exterior surfaces per 24590-WTP-3PS-G000-T0003, General Specification for Packaging, Shipping, Handling and Storage Requirements.

7.2 Painting

7.2.1 After visual examination, all exposed ferrous surfaces shall be primed and coated in accordance with Seller's standard procedures. Color, if specified, shall be advised later.

7.2.2 Machined faces and fittings, preparations for field welding, parts to be embedded in concrete, nonferrous parts, nameplates, and instruction plates shall not be painted. Rust preventative means, such as coating with a preservative, shall be employed to provide protection of ferrous surfaces during shipment and storage.

7.2.3 Seller shall submit their cleaning and coating procedure for Buyer's review prior to performing the work.

7.3 Tagging

7.3.1 Each pump shall be provided with a permanent corrosion-resistant nameplate(s) securely attached at a readily visible location on the equipment and on any other major piece of auxiliary equipment.

7.3.2 The nameplate(s) shall be stamped with the following information in units consistent with the datasheet:

7.3.2.1 Plant item (equipment tag) number.

7.3.2.2 Purchase order number.

7.3.2.3 Seller's size and model number.

7.3.2.4 Pump serial number.

7.3.2.5 Capacity.

7.3.2.6 Minimum and maximum inlet air pressure.

7.3.2.7 Maximum pump discharge pressure @ maximum inlet air pressure.

7.3.2.8 Casing hydrostatic test pressure.

7.3.2.9 Maximum allowable working pressure (MAWP).

7.3.3 In addition to being stamped on the nameplate(s), the pump serial number shall be plainly and permanently marked on the pump casing(s).

7.3.4 Nameplate(s) shall be of austenitic stainless steel or of nickel-copper alloy (Monel or its equivalent). Attachment pins shall be of the same material. Welding is not permitted.

7.4 Packaging and Shipping Instructions

7.4.1 All equipment shall be packed, securely anchored, and protected for shipment in accordance with 24590-WTP-3PS-G000-T0003, General Specification for Packaging, Shipping,

Handling, and Storage Requirements. The Seller shall submit his Shipping Preparation Procedures for Buyer's Review.

7.4.2 All lifting points shall be clearly marked. Lifting lugs shall be provided for pump assemblies.

7.4.3 All openings shall be covered or plugged with substantial one piece plywood, metal or plastic closures, securely fastened and suitable for prolonged exposure prior to final installation.

7.4.4 Packaging shall provide protection for equipment during transit and storage. Equipment may be stored outdoors at jobsite for as long as one year before it is installed.

8 Quality Assurance

8.1 General Requirements

8.1.1 The Seller's Quality Assurance Program (QAP) Requirements are included in 24590-WTP-3PS-G000-T0001, Supplier Quality Assurance Program.

8.1.2 Seller's QAP Manual shall be submitted to Buyer for review in accordance with 24590-WTP-3PS-G000-T0001, Supplier Quality Assurance Program.

8.1.3 Seller's QAP, as a minimum, shall contain the requirements detailed in the Supplier Quality Assurance Program Requirements Data Sheet(s) listed in Section 2 of the Material Requisition.

9 Configuration Management

Equipment and/or components covered by this specification are identified with Plant Item (equipment tag) numbers as given in the individual Data Sheets. Each item shall be tagged per Paragraph 7.3.

10 Documentation and Submittals

10.1 General

Submittals and document quantities shall be submitted as summarized on Forms G-321-E, for Engineering Documents, and G-321-V for Quality Documents. See Material Requisition Section 3.

10.2 Drawings

Drawings shall be inclusive of all following requirements:

10.2.1 Outline drawings of pump assembly, including outline and detail drawings, for each component.

10.2.2 Mounting dimensions and information required for the design of supports and/or foundations.

10.2.3 Dimensions and details for process flanges and other connections.

10.2.4 Locations and identification of parts included in the parts list.

10.2.5 Wiring schematic diagrams and data. Diagrams shall include wire gauges applicable to the supplied units only. External connections for measurement shall be shown on these diagrams.

10.2.6 Gasket, seal, and diaphragm drawings.

10.3 Parts List

Recommended spare parts lists for start-up and one (1) year's operation along with complete lists of prices and equipment parts with drawings showing sectional view of identified parts and assembly locations shall be provided. Seller shall identify limits to shelf-life and storage requirements of parts anticipated to have functional life spans shorter than the equipment design life.

10.4 Test Reports

10.4.1 Completed Data Sheets, as applicable, incorporating required information

10.4.2 Performance curves showing NPSH required, air consumption, efficiency, flow vs. pressure at applicable inlet air pressures.

10.4.3 Hydrostatic test results

10.5 Forces and Moments

Maximum allowable external forces and moments on pump nozzles shall be provided.

10.6 Manuals

Manuals shall be furnished to provide information on the correct storage, installation, operation, and maintenance of the equipment assembly.

10.7 Other

Noise data per paragraph 3.3.7.

10.8 Records

The following Documents shall be submitted for review and maintained on file at Seller's shop and be accessible for Buyer's review:

10.8.1 Hydrostatic test procedures

10.8.2 Performance test procedures

10.8.3 Cleaning and painting procedures

10.8.4 Shipping preparation procedures

11 Design Changes Incorporated by Reference

1. 24590-WTP-SDDR-PROC-04-00987 - Allows Impregnation of casting components for air motor
2. 24590-WTP-SDDR-PROC-04-00988 - Allows attachment of nameplates with stainless steel wire
3. 24590-WTP-SDDR-PROC-04-00991 - Allows reduction of hydrotest duration from 10 minutes to 9 minutes
4. 24590-WTP-SDDR-PROC-04-01123 - Allows Material Test Reports with ASTM year not matching specification requirements
5. 24590-WTP-SDDR-M-05-00110, Rev 1 - Item IV, Allows exceptions to specification sections 3.3.7, 7.3.3, 7.4.2, and 10.4.2

ISSUED BY
RPP WTP PDC
12/3/02
DATE

RIVER PROTECTION PROJECT – WASTE TREATMENT PLANT

ENGINEERING SPECIFICATION

FOR

FIELD-ERECTED TANKS DESIGN and FABRICATION

Content applicable to ALARA? ☐ Yes ☒ No

ADR No. **Rev**

DIM No. 00001 **Rev 0**
24590-WTP-3PI-MTF5-~~T0001~~ 12-3-02

DOE Contract No.
DE-AC27-01RV14136

REV	DATE	REASON FOR REVISION	BY	CHECK	QA	APEM/DCE
			P.Prakash		G.Warner	M.Hoffman
0	03DEC2002	Issued for Purchase	P.Prakash	C.Slater	G.Warner	M.Hoffman

SPECIFICATION No. **Rev**
24590-WTP-3PS-MTF5-T0001 0

Processed/Data Entry ☐ Copied/QA ☐ Scanned ☐ Filed
12/3/02 MZ

Contents

1 Scope 1
1.1 Description and Location 1
1.2 Definitions 1
1.3 Conflicts 1
1.4 Buyer's Responsibilities 1
1.5 Seller's Responsibilities 1
2 Applicable Documents 2
2.1 Codes and Industry Standards 2
2.2 Related Documents 3
2.3 Project Documents 3
3 Quality Assurance 3
4 Design Requirements 3
4.1 Basic Requirements 3
4.2 Loading 3
4.3 Corrosion Allowance 4
4.4 Corrosion Control 4
4.5 Nozzles and Manways 4
4.6 Nozzle Loading 5
4.7 Nozzle Reinforcement 5
4.8 Internal Components 6
4.9 External Components 6
5 Materials 6
5.1 General 6
5.2 Pipe Fittings 6
6 Fabrication 6
6.1 General 6
6.2 Layout 7
6.3 Welding Requirements 7
7 Tests and Inspections 7
7.1 Non-Destructive Examinations 7
7.2 Hydrotest and Settling Measurement 7
7.3 Cathodic Protection 8
7.4 Final Inspection of Completed Tank 8

8 Preparation for Completion 8
8.1 General 8
9 Documentation and Submittals 8
9.1 General 8

1 Scope

1.1 Description and Location

1.1.1 This specification together with the subcontract and Drawings covers the requirements for the design, fabrication, and testing of steel tanks for the U.S. Department of Energy, Office of River Protection, River Protection Project – Waste Treatment Plant (RPP-WTP) located at Hanford Site in the southeastern part of Washington State.

1.1.2 This specification covers tanks designed to API Standard 650, AWWA D100, and NFPA 22 standards only.

1.2 Definitions

1.2.1 **MDS**: The Buyer's mechanical data sheet.

1.2.2 **Drawings**: The Buyer's Drawings include the tank equipment assembly drawing and any associated standard drawings.

1.2.3 **Quality Level:** Establishes the quality assurance program requirements. For the purposes of this specification, Quality Level also determines radiographic and ultrasonic testing requirements. Buyer assigns Quality Levels on the MDS.

1.2.4 **Seismic Category:** Classification of tanks defining the required condition, status, and operating function during and after a seismic event. The Seismic Category determines the analysis method and acceptance criteria appropriate for the intended service and safety function of the tank. Buyer assigns Seismic Category on the MDS.

1.2.5 **Buyer:**/ Contractor

1.2.6 **Seller:**/ Subcontractor

1.3 Conflicts

1.3.1 In cases of conflicts between this specification and other drawings or specifications, the Seller shall call attention to the conflict and request an interpretation by the Buyer.

1.3.2 All deviations from this specification, the subcontract, or the Drawings shall have the written approval of the Buyer.

1.4 Buyer's Responsibilities

1.4.1 Process design of the tank for performance, capacity, or configuration is the Buyer's responsibility, and is not part of this specification.

1.5 Seller's Responsibilities

1.5.1 Seller shall assume complete responsibility for the design, fabrication, testing, inspection, and documentation as required by the Buyer and detailed in the subcontract.

1.5.2 Buyer's review of the Seller's drawings, or release of the tank by the Buyer's representative, shall in no way relieve the Seller of the responsibility for complying with all the requirements of this specification and the subcontract.

1.5.3 The Seller shall substantiate any necessary changes to the MDS and Drawings and obtain approval from the Buyer.

2 Applicable Documents

2.1 Codes and Industry Standards

2.1.1 Unless otherwise noted, all codes and standards referenced herein shall be to the latest editions, addenda, and supplements at the time of the issue of the subcontract.

2.1.2 American Petroleum Institute, API Standard 650, "Welded Steel Tanks for Oil Storage."

2.1.3 American Petroleum Institute, API Standard 653, "Tank Inspection, Repair, Alteration, and Reconstruction."

2.1.4 American Water Works Association, AWWA D100, "Welded Steel Tanks for Water Storage."

2.1.5 National Fire Protection Association, NFPA 22, "Standard for Water Tanks for Private Fire Protection."

2.1.6 American Society of Civil Engineers, ASCE 7-98, "Minimum Design Loads for Buildings and Other Structures."

2.1.7 American Society for Nondestructive Testing, Inc., Recommended Practice No. SNT-TC-1A, 1980 Edition.

2.1.8 Occupational Safety and Health Administration Regulations, OSHA 29 CFR Part 1910, "Walking-Working Surfaces."

2.1.9 American Society of Mechanical Engineers, ASME B16.5, "Pipe Flanges and Flange Fittings NPS 1/2 through NPS 24."

2.1.10 National Fire Protection Association, NFPA 70, "National Electrical Code"

2.1.11 National Fire Protection Association, NFPA 780, "Standard for Installation of Lightning Protection Systems"

2.1.12 Underwriters Laboratories Inc., UL 96, "Lightning Protection Components"

2.1.13 NACE International Recommended Practices, RP0196, "Galvanic Anode Cathodic Protection of Internal Submerged Surfaces of Steel Water Storage Tanks"

2.1.14 NACE International Recommended Practices, RP0193, "External Cathodic Protection of On-Grade Carbon Steel Storage Tank Bottom

2.2 Related Documents

2.2.1 Other project specifications, standards, and standard details as listed or referenced in Exhibits E and F of the subcontract shall be used as applicable for the design and fabrication of the tanks.

2.3 Project Documents

2.3.1 RPP-WTP Specification for Tank Welding, 24590-WTP-3PS-MTSS-T0001.

2.3.2 RPP-WTP Engineering Specification for Coating and Lining of Field Erected Tanks, 24590-WTP-3PS-AFPS-T0005.

2.3.3 RPP-WTP Specification for Instrumentation for Packaged Systems, 24590-WTP-3PS-JQ07-T0001.

2.3.4 RPP-WTP Engineering Specification for Hot and Anti-Sweat Thermal Insulation, 24590-WTP-3PS-NN00-T0001.

2.3.5 RPP-WTP General Specification for Supplier Quality Assurance Program Requirements, 24590-WTP-3PS-G000-T0001.

3 Quality Assurance

3.1 Section 9 of the material requisition or Exhibit J of the subcontract and the *RPP-WTP General Specification for Supplier Quality Assurance Program Requirements* covers quality assurance requirements. Refer to the MDS for the quality level specified for the tank.

4 Design Requirements

4.1 Basic Requirements

4.1.1 Unless otherwise specified, all tanks shall be designed and fabricated in accordance with the Drawings, design standard identified on the MDS, and any additional requirements of this specification, MDS, and the referenced Drawings.

4.1.2 Seller shall consider design details and material thickness shown on Drawings and MDS as the minimum requirements.

4.1.3 Seller shall not scale Drawings.

4.2 Loading

4.2.1 Seismic analysis shall be performed per the requirements of the seismic design standard identified on the MDS.

4.2.2 If wind, snow, or other loadings are specified on the MDS, the design for such loadings shall be based on the requirements of the *ASCE 7-98*, using the loading parameters identified on the MDS.

4.3 Corrosion Allowance

4.3.1 Corrosion allowance is specified on the MDS and shall be applied to each surface exposed to process vapor or liquid. Internal piping shall have the specified corrosion allowance applied to both internal and external surfaces.

4.3.2 Unless otherwise specified, corrosion allowance shall not be applied to external tank surfaces.

4.4 Corrosion Control

4.4.1 If specified on the MDS, the cathodic protection system shall be designed according to NACE RP0196, RP0193.. The system, along with protective coating, shall protect the interior of the tank along with the bottom in contact with the earth.

4.5 Nozzles and Manways

4.5.1 All nozzles shall be set-in type or through type with full penetration welds. All inside nozzle neck edges shall be rounded to 1/8-inch minimum radius. Set-in type nozzles shall be flush with the inside wall of the shell or roof.

4.5.2 Flanges shall be weld neck or slip-on per *ASME B16.5*.

4.5.3 Flange bolt holes shall straddle plant north-south orientations.

4.5.4 The following illustrate acceptable and unacceptable nozzle configurations and welding:

Acceptable Nozzle Connections

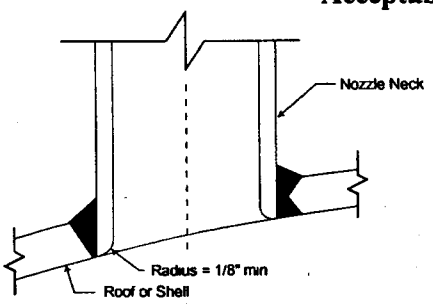

Set-in Nozzle with Full Penetration Weld

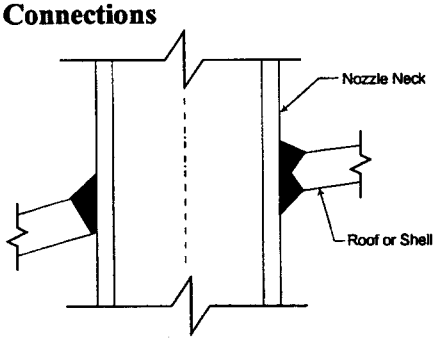

Through Nozzle with Full Penetration Weld

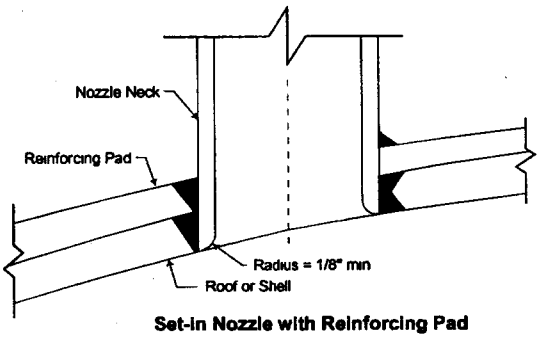

Set-in Nozzle with Reinforcing Pad

Unacceptable Nozzle Connections

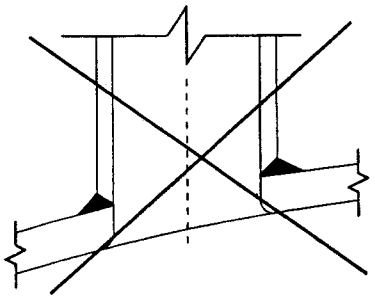

Set-on Nozzle with Full Penetration Weld

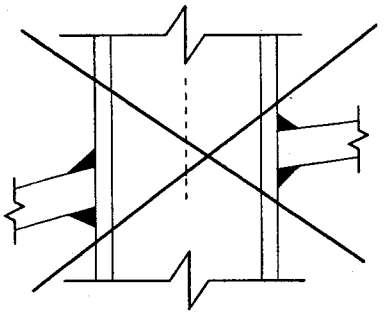

Through Nozzle with Double Fillet Weld

4.6 Nozzle Loading

4.6.1 Seller shall reinforce nozzles as required to limit deflections given the piping loads and deflection limits determined by the Buyer.

4.7 Nozzle Reinforcement

4.7.1 Nozzle reinforcing pads shall have one-piece construction. Pad thickness shall be the same as the penetrated shell and have one 1/8 inch NPT telltale hole for testing purposes. On completion of all fabrication activities, the hole shall be fitted with a screwed plug of the same material as the reinforcement plate.

4.8 Internal Components

4.8.1 Design and layout of support members for tank internals shall be the responsibility of the Seller.

4.9 External Components

4.9.1 If the MDS specifies insulation, the Seller shall design the insulation systems and supports for the insulation function designated on the MDS and according to the requirements of *RPP-WTP Engineering Specification for Hot and Anti-Sweat Thermal Insulation.*

4.9.2 If specified on the Drawings, Seller shall provide and install pipe support clips. The material of the clip or reinforcing pad shall match the material of the shell.

4.9.3 Stainless steel grounding lugs shall be installed on all tanks as indicated on the Drawings.

4.9.4 All tanks shall have a nameplate of Type 300 stainless steel attached securely on a bracket welded to the tank at the location indicated on the Drawings. Bracket shall be the same material type as the adjoining tank shell. The nameplate shall include the Equipment Number in addition to all markings mandated by the tank design standard.

4.9.5 All ladders, platforms, landings and cages shall be designed and fabricated per *OSHA 29 CFR Part 1910.*

4.9.6 Heaters, grounding lugs, and instrumentation shall conform to NFPA 70, NFPA 780, and UL 96.

5 Materials

5.1 General

5.1.1 Materials shall be new, and free from defects. Material shall be furnished to the specification and grade shown on the MDS. The Seller shall not substitute materials without written approval from the Buyer. The Seller shall furnish certificates of compliance that the material meets the required specification.

5.2 Pipe Fittings

5.2.1 Pipe fittings shall conform to the appropriate ASME and ANSI standards for materials and dimensions unless otherwise stated in the subcontract.

6 Fabrication

6.1 General

6.1.1 Fabrication tolerances shall be in accordance with the tank design standard indicated on the MDS.

6.1.2 All stamps used for identification reference markings shall be of the low stress type. Stampings shall not be located near discontinuities.

6.1.3 When rolling any austenitic stainless plate, care shall be taken to prevent carbon pickup or contamination of rolled material. The work area shall be free of carbon steel grindings and general cleanliness shall be maintained to preclude carbon contamination.

6.1.4 Only stainless steel brushes, clean iron-free sand, ceramic or stainless steel grit shall be used for cleaning stainless steel or non-ferrous alloy surfaces. Cleaning tools or materials shall not have been previously used on carbon steel.

6.2 Layout

6.2.1 The longitudinal seams of adjacent shell courses shall be staggered by a minimum length (measured from the toe of the welds) of 5 times the plate thickness, or 4 inches whichever is greater.

6.2.2 Plate layouts shall be arranged so that longitudinal and circumferential weld seams clear all nozzles, manways, and their reinforcing pads to the maximum extent possible. A minimum clearance of eight times the plate thickness from the toes of the welds is required.

6.3 Welding Requirements

6.3.1 Seller shall comply with the *RPP-WTP Specification for Tank Welding.*

6.3.2 All welding shall be continuous. Stitch welding is prohibited.

7 Tests and Inspections

7.1 Non-Destructive Examinations

7.1.1 The NDE work must be performed by an inspector certified to the requirements of *SNT-TC-1A*. Either Level II or Level III inspectors certified to SNT-TC-1A shall interpret the results.

7.2 Hydrotest and Settling Measurement

7.2.1 All tanks shall be hydro-tested and measured for settlement according to the requirements of *API Standard 653*. In addition, the following sequence for hydro-testing shall be followed: The tanks shall be filled with water at a constant rate. The water shall be held for 24 hours during which the settlement of foundation shall be measured. If settlement is observed, measurements shall be taken every 24 hours until settlement stops. All settlement measurements shall be recorded. After settlement stops, the water shall be held for 7 days. After obtaining clearance from Buyer, the tanks shall be drained and dried thoroughly.

7.2.2 Tanks made of austenitic stainless steel materials shall be hydro-tested with potable water containing no more than 50 PPM chloride.

7.3 Cathodic Protection

7.3.1 Cathodic protection systems shall be tested to show compliance with NACE RP-0196-1996, RP0193-2001..

7.4 Final Inspection of Completed Tank

7.4.1 All external and internal examinations will be carried out by the Buyer's representative, unless otherwise agreed to in the approved quality assurance program. The finished dimensions and cleanliness of the tank shall comply with the relevant drawings and specifications after completion of all tests.

8 Preparation for Completion

8.1 General

8.1.1 Machined carbon steel surfaces, which are not protected by blind flanges, shall be coated with rust preventative.

8.1.2 All flanged openings, which are not provided with a cover, shall be protected by an *ASME B16.5* carbon steel blind flange of the same rating as the flange, a full-faced rubber gasket with a minimum thickness of 1/8 inch and carbon steel bolts with stainless steel washers.

9 Documentation and Submittals

9.1 General

9.1.1 Seller shall comply with the requirements of Exhibit I, Attachments A and B of the subcontract, as applicable. Furnish all applicable drawings, design calculations, reports of special analyses, welding procedures with procedure qualification records, test procedures, test reports, certificates of compliance, operating manuals, installation manuals, maintenance manuals and all other required documents.

9.1.2 Design calculations shall include relevant design standard formulas and source paragraph references, values used in the formulas, and calculated results with comparison to acceptable values. Where calculations are based on other than the specified design standard formulas, the source of the formulas shall be referenced. Where a computer program is used for calculations, a brief program description shall be given, including name and version of the program. If the program is not commercially available to industry, Seller shall maintain and provide, upon request, program documentation. Calculations shall include, but not be limited to:

- Design standard calculations
- Seismic calculations
- Support calculations
- Nozzle load analysis for local and gross effect, when required
- Design of attachments, both internal and external

- Cathodic protection design calculations.

9.1.3 Seller shall make a complete set of Buyer approved drawings and other documents available to the Buyer's representative at the time the quality surveillance activities are being conducted.

9.1.4 All records pertaining to the non-destructive examinations, base materials, filler materials, fabrication, and inspection shall be traceable to the area and part inspected and be accessible for Buyer's examination.

9.1.5 Seller shall provide certified copies of the test reports as required by Exhibit I of the subcontract.

R10771151

ISSUED BY
RPP-WTP PDC

RIVER PROTECTION PROJECT – WASTE TREATMENT PLANT

ENGINEERING SPECIFICATION

FOR

Pressure Vessel Design and Fabrication

Content applicable to ALARA? ☒ Yes ☐ No

ADR No.
24590-WTP-ADR-M-03-008

Rev
1

Quality Level
Q
DOE Contract No. DE-AC27-01RV14136

NOTE: Contents of this document are Dangerous Waste Permit affecting.

REV	DATE	BY	CHECK	REVIEW	E&NS	QA	DPEM
3	4/23/07	R. Simmons	M.A Seed MIKE SEED			AL S. AKERMAN	J. JULIK
2	1/03Nov04	R. Tiwari	C. Slater	N/A	N/A	G. Warner	M. Hoffmann
1	MAS 4/13/07 ~~7Jan03~~ 7/1/03	R. Simmons	C. Slater	M. Hoffmann	N/A	G. Warner	M. Hoffmann for G. Duncan
0	22Apr02	R. Simmons	C. Slater	N/A	N/A	G. Warner	G. Duncan

SPECIFICATION No.
24590-WTP-3PS-MV00-T0001

Rev
3

Revision History

Revision	Reason for Revision
0	Issued for Design
1	Rewritten, Incorporates Design Changes: 24590-WTP-3PN-MV00-00001 24590-WTP-3PN-MV00-00002 24590-WTP-SDDR-PROC-02-0145 24590-WTP-SDDR-PROC-02-0155 24590-WTP-SDDR-PROC-02-0183 24590-WTP-SDDR-PROC-03-0023 24590-WTP-SDDR-PROC-03-0053 24590-WTP-SDDR-PROC-03-0075 24590-WTP-SDDR-PROC-03-0082 24590-WTP-SDDR-PROC-03-0083 24590-WTP-SDDR-PROC-03-0086 24590-WTP-SDDR-PROC-03-0100 Issued for Use
2	Incorporates Design Changes: 24590-WTP-3PN-MV00-00009 24590-WTP-3PN-MV00-00011 Added Black Cell and Primary Confinement Definitions and Requirements Revised Radiographic Acceptance Requirements Revised Reference to ADR Issued for Use
3	Incorporates Change Documents Listed in Section 11. Revised Section 3.7 to Support Nozzle Loads other than Appendix A. Changed to 'Design Level' grading system Issued for Use

Contents

1 Scope 1
1.1 Description and Location 1
1.2 Definitions 1
1.3 Conflicts 2
1.4 Buyer's Responsibilities 2
1.5 Seller's Responsibilities 2
2 Applicable Documents 2
2.1 General 2
2.2 Codes and Industry Standards 2
2.3 Related Documents 3
2.4 Project Documents 3
3 Design Requirements 4
3.1 Basic Requirements 4
3.2 Loading 4
3.3 Corrosion Allowance 4
3.4 Heads 5
3.5 Supports and Anchors 5
3.6 Nozzles and Manways 5
3.7 Nozzle Loading 6
3.8 Nozzle Reinforcement 7
3.9 Internal Components 8
3.10 External Components 8
4 Materials 9
4.1 General 9
4.2 Pipe Fittings 10
5 Fabrication 10
5.1 General 10
5.2 Layout 11
5.3 Nozzles, Manways, and Reinforcing Pads 11
5.4 Welding Requirements 12
6 Design and NDE Requirements 12
6.1 All Design Levels 12
6.2 Additional Requirements for Design Level 1 (L-1) Vessels 13
6.3 Additional Requirements for Design Level 2 (L-2) Vessels 14

6.4 Additional Requirements for Commercial Grade (CM) Vessels 14
6.5 Additional Requirements for Vessels Located in a Black Cell 15
7 Tests and Inspections 15
7.1 Hardness Testing for Austenitic Stainless Steel Components 15
7.2 Nondestructive Examinations 16
7.3 Hydrotests 16
7.4 Leak Tests 17
7.5 Obstruction Test 17
7.6 Final Inspection of Completed Vessel 17
8 Preparation and Shipment 17
8.1 Cleaning 17
8.2 Packaging 18
8.3 Shipping 18
9 Documentation and Submittals 18
10 Quality Assurance 19
10.1 General Requirements 19
10.2 Additional Requirements for Quality Level Q Vessels 19
11 Revision History (Internal Use Only) 20
11.1 Specification Change Notices 20
11.2 Design Changes Incorporated by Design 20
11.3 Design Changes Incorporated by Reference 20

Appendices

Appendix A Minimum Nozzle Design Loads A-1

1 Scope

1.1 Description and Location

This specification, together with the purchase order and Drawings, covers the requirements for the design, fabrication, and testing of pressure vessels for the Hanford Tank Waste Treatment and Immobilization Plant (WTP) project located in the southeastern part of Washington State.

1.2 Definitions

1.2.1 **MDS**: The Buyer's mechanical data sheet.

1.2.2 **ECDS**: The section of the MDS titled Equipment Cyclic Data Sheet. If components of a vessel are subjected to cyclical loading, those loads will be detailed in the ECDS.

1.2.3 **Drawings**: The Buyer's Drawings include the vessel general outline drawing and any associated standard drawings.

1.2.4 **Quality Level:** Establishes the quality assurance program requirements. **Formerly**, Quality Level also **determined** allowable nozzle reinforcement methods and nondestructive examination (NDE) requirements. **Refer to the Design Level for these requirements.** Buyer assigns Quality Levels on the MDS or Drawings.

1.2.5 **Seismic Category:** Classification of vessels defining the required condition, status, and operating function during and after a seismic event. The Seismic Category determines the analysis method and acceptance criteria appropriate for the intended service and safety function of the vessel. Buyer assigns Seismic Category on the MDS.

1.2.6 **Containment:** Components that contain active process fluids inside the plant process system. Refer to the MDS for the containment classification of components.

Primary Confinement – The boundary within which the process fluids, gasses and vapors are contained and confined during the plant process operation. In this document, the entire process vessel and nozzle walls are generally referred to as the Primary Confinement.

Primary Containment – The part of the Primary Confinement that is in contact with the process fluid. This is typically the wetted portion of the vessel wall below the top of the overflow.

Auxiliary Containment – This term is used in this document to identify the portion of a Primary Confinement that is not subject to a static pressure head of liquid but may be in contact with splashing liquid, vapor or gases. This is typically the vessel components above the prescribed high operating liquid level.

Secondary Containment – The boundary that will contain process liquid if the Primary Containment is breached. This boundary will not normally be in contact with the process liquid. Typically, this is the cell liner or wall structure of the facility.

1.2.7 **Black Cell:** Shielded cells for which no maintenance or entry is planned for the 40-year design life of the plant.

1.2.8 **Design Level: Determines allowable nozzle reinforcement methods and nondestructive examination (NDE) requirements. Buyer assigns Design Levels on the MDS or Drawings.**

1.3 Conflicts

In cases of conflicts between this specification and other drawings or specifications, the Seller shall call attention to the conflict and request an interpretation by the Buyer.

1.4 Buyer's Responsibilities

Process design of the vessel for performance, capacity, or configuration is the Buyer's responsibility, and is not part of this specification.

1.5 Seller's Responsibilities

1.5.1 Seller shall assume complete responsibility for the design, fabrication, testing, inspection, and documentation as required by the Buyer and detailed in the purchase order.

1.5.2 Buyer's review of the Seller's drawings, or release of the vessel for shipment by the Buyer's representative, shall in no way relieve the Seller of the responsibility for complying with all the requirements of this specification and the purchase order.

1.5.3 The Seller shall substantiate any necessary changes to the MDS, Drawings, specifications and purchase order and obtain approval from the Buyer.

2 Applicable Documents

2.1 General

2.1.1 Work shall be in accordance with the referenced codes, standards, and documents listed below, which are integral parts of this specification.

2.1.2 When specific chapters, sections, parts, or paragraphs are listed following a code, industry standard, or reference document, only those chapters, sections, parts, or paragraphs of the document are applicable and shall be applied. When more than one code, standard, or referenced document covers the same topic, the requirements for all must be met with the most stringent governing.

2.2 Codes and Industry Standards

2.2.1 The Seller shall apply the latest issue, including addenda, at the time of request for quote **or award as applicable** for the following codes and industry standards. **Use of any other edition, revision, or issue requires Buyer approval.**

2.2.1.1 ASME Section VIII, Division 1, *Rules for Construction of Pressure Vessels,* American Society of Mechanical Engineers

2.2.1.2 ASME Section II, *Materials,* American Society of Mechanical Engineers **(Seller may use the latest edition)**

2.2.1.3 ASME Section V, *Nondestructive Examination,* American Society of Mechanical Engineers

2.2.1.4 NBIC, *National Board Inspection Code*, National Board of Boiler and Pressure Vessel Inspectors

2.2.1.5 WRC-107, *Local Stresses in Spherical and Cylindrical Shells due to External Loading,* Welding Research Council

2.2.1.6 WRC-297, *Local Stresses in Cylindrical Shells due to External Loadings on Nozzles–Supplement to WRC Bulletin No. 107,* Welding Research Council

2.2.1.7 PFI Standard ES-24, *Pipe Bending Methods, Tolerances, Process and Mechanical Requirements*, Pipe Fabrication Institute, Engineering and Fabrication Standard

2.2.2 The Seller shall apply the issue and addenda as referenced in Table U-3 of ASME Section VIII, Division 1 for the following codes and industry standards:

2.2.2.1 ASME B16.5, *Pipe Flanges and Flange Fittings NPS 1/2 through NPS 24*

2.2.2.2 ASME B16.47, *Large Diameter Steel Flanges NPS 26 through NPS 60*

2.2.2.3 SNT-TC-1A, *Recommended Practice No. SNT-TC-1A*, American Society for Nondestructive Testing, Inc. **June 1980 Edition through 2001 Edition and its applicable supplements**

2.2.3 The Seller shall apply the issue and addenda as stated for the following codes and industry standards:

2.2.3.1 ASCE 7-98, *Minimum Design Loads for Buildings and Other Structures*, American Society of Civil Engineers

2.2.3.2 ASME NQA-1, *Quality Assurance Program Requirements for Nuclear Facilities*, 1989 Edition

2.3 Related Documents

Other project specifications, standards, and standard details as listed or referenced in Section 2 of the purchase order shall be used as applicable for the design and fabrication of the vessels.

2.4 Project Documents

2.4.1 24590-WTP-3PS-MV00-T0002, *Engineering Specification for Seismic Qualification Criteria for Pressure Vessels*

2.4.2 24590-WTP-3PS-MV00-T0003, *Engineering Specification for Pressure Vessel Fatigue Analysis*

2.4.3 24590-WTP-3PS-G000-T0002, *Engineering Specification for Positive Material Identification*

2.4.4 24590-WTP-MV-M59T-00001, *Pressure Vessel Tolerances Standard Details*

2.4.5 24590-WTP-3PS-MVB2-T0001, *Engineering Specification for Welding of Pressure Vessel, Heat Exchangers and Boilers*

2.4.6 24590-WTP-3PS-G000-T0001, *General Specification for Supplier Quality Assurance Program Requirements*

2.4.7 24590-WTP-3PS-G000-T0003, *General Specification for Packaging, Shipping, Handling and Storage Requirements*

3 Design Requirements

3.1 Basic Requirements

3.1.1 Unless otherwise specified, all vessels shall be designed and fabricated in accordance with ASME Section VIII, Division 1, any additional requirements of this specification, MDS, and the referenced Drawings.

3.1.2 Pressure vessels shall be U-stamped and registered with the NBIC. Any exceptions are indicated on the MDS.

3.1.3 Seller shall consider design details and material thickness shown on Drawings and MDS as the minimum requirements.

3.1.4 Seller shall not scale Drawings.

3.2 Loading

3.2.1 Seismic analysis shall be performed per the requirements of 24590-WTP-3PS-MV00-T0002.

3.2.2 If wind or snow loadings are specified on the MDS, the design for such loadings shall be based on the requirements of the ASCE 7, using the indicated wind and snow loading parameters.

3.2.3 If the MDS contains an ECDS, the Seller shall analyze for fatigue per the requirements detailed in the 24590-WTP-3PS-MV00-T0003.

3.2.4 Unless indicated otherwise on the MDS or Drawings, the Seller shall design the vessels to support process liquid filled to the top of the overflow.

3.3 Corrosion Allowance

3.3.1 Corrosion allowance is specified on the MDS and shall be applied to each surface exposed to process vapor or liquid. Internal piping, charge vessels, and pulse jet mixers shall have the specified corrosion allowance applied to both internal and external surfaces.

3.3.2 Unless otherwise specified, corrosion allowance shall not be applied to external vessel surfaces.

3.4 Heads

The Seller shall use head shapes as specified on the vessel drawing. Deviations from this profile may be considered for economic, space or fabrication concerns. Any change, however, requires the approval of the Buyer.

3.5 Supports and Anchors

3.5.1 Seller shall provide vessel supports as illustrated on the Drawings.

3.5.2 Supports and anchors shall be designed to secure the buoyant vessel in case the vessel is empty and submerged to the level indicated in the MDS.

3.6 Nozzles and Manways

3.6.1 Nozzle wall thickness shall be per ASME Section VIII, Division 1 and at least that specified on the Drawings. Seller shall understand that minimum nozzle thicknesses indicated on the Drawings may not support the nozzle loading requirements listed in Appendix A.

3.6.2 Nozzles and manways and their reinforcements located on the head shall be located fully within the crown region of the head unless noted otherwise on the Drawing.

3.6.3 All nozzles shall be set-in type or through type with full penetration welds. All nozzles, which are flush with the inside surface of the vessel, shall be rounded to 1/8 inch minimum radius as shown below. Nozzles for pressure relief devices, vents, and drainage shall be flush with the inside surface of the vessel. Nozzles with internal projection in primary containment shall have an additional fillet weld between the internal projection and the inside surface of the shell or head.

The following illustrates acceptable and unacceptable nozzle configurations and welding:

Acceptable Nozzle Connections

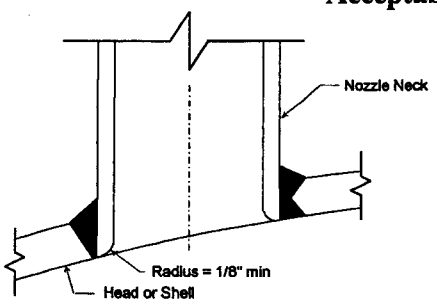

Set-in Nozzle with Full Penetration Weld

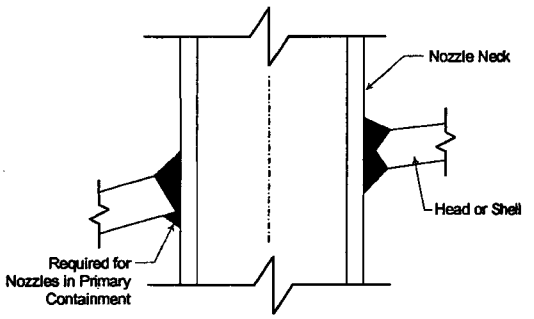

Through Nozzle with Full Penetration Weld

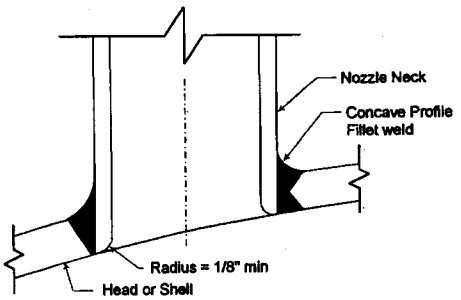

Set-in Nozzle with Full Penetration Weld for Fatigue Service

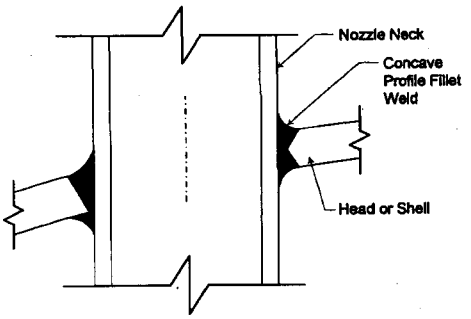

Through Nozzle for Fatigue Service

Unacceptable Nozzle Connections

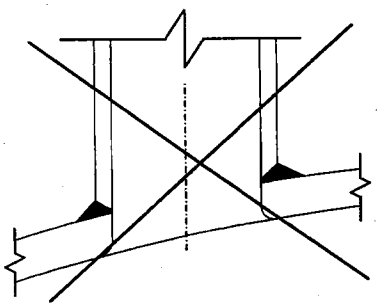

Set-on Nozzle with Full Penetration Weld

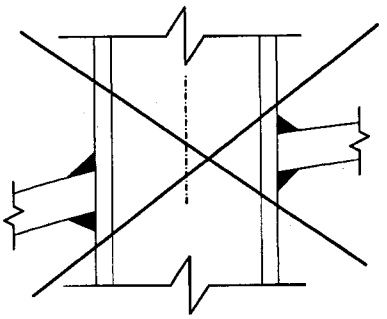

Through Nozzle with Double Fillet Weld

3.6.4 Flange boltholes shall straddle natural vessel centerlines unless otherwise specified.

3.7 Nozzle Loading

3.7.1 **Unless otherwise specified on the MDS,** Seller shall design nozzles for the minimum nozzle design loads listed in the applicable table of Appendix A for the connected pipe size. Seller shall design nozzles according to the methods of WRC-107, WRC-297, or finite element analysis as applicable.

3.7.2 Appendix A lists minimum design nozzle loads by nozzle size, connecting pipe material, and Seismic Category for weight, seismic, and thermal expansion cases. The coordinate system conforms to the 'right hand rule'. **Loads provided in Appendix A do not have a sign convention, Seller must ensure that the direction of load application provides the most conservative stresses at the nozzle to shell or head junction.** The Y-axis is vertical and in the direction of gravity regardless of the orientation of the nozzle. Loads act at the juncture of the nozzle and shell.

Deleted load combinations

3.7.3 The nozzle loads provided are for the piping connected to the external nozzle. If a nozzle projects and is loaded internally to the vessel, design the nozzle for the sum of the internal and external loads.

3.7.4 The nozzle loads due to thermal expansion listed in Appendix A are estimated based on the operating temperature of 350° F. If the maximum operating temperature of a vessel is less then 350° F, the nozzle thermal loads may be reduced by a scale factor **of the absolute value of**

$$\left|\frac{X-70}{350-70}\right|$$

where X is the maximum **vessel** operating temperature.

3.8 Nozzle Reinforcement

3.8.1 When required, suitable nozzle reinforcements must be provided. Reinforcement methods are limited depending on the assigned **Design** Level and cell designation. Refer to Section 6 for allowable reinforcement methods. If the wall thickness of the nozzle neck is greater than that of the connecting piping, the requirements of ASME Section VIII, Division 1, Figure UW-13.4 shall be satisfied.

3.8.2 Nozzle reinforcing pads, where permitted, shall have one-piece construction. Pad thickness shall not exceed 1.5 times the thickness of the penetrated shell. To meet nozzle loading requirements, pad diameter may exceed the limits of reinforcement per ASME Section VIII, Division 1. Pad width shall be at least 2 inches but shall not exceed ten times the thickness of the pad. Each pad shall have one 1/8 inch nominal pipe size (NPT) telltale hole for testing purposes. On completion of all fabrication activities, the hole shall be fitted with a screwed plug of the same material as the reinforcement plate.

3.8.3 The following illustrates acceptable reinforcement practices for nozzles irrespective of **Design** Level:

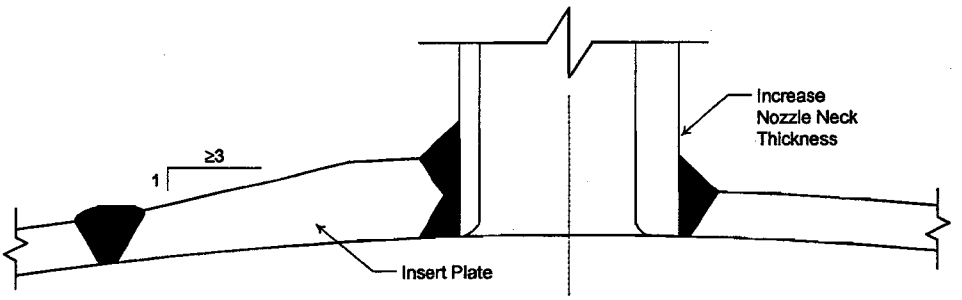

Nozzle Reinforcement Methods 3
for All Design Levels

3.8.4 Nozzles on Commercial Grade vessels not located in a black cell may use external reinforcing pads. As a warning, the nozzle loads specified in Appendix A may exceed the practical use of repads. In such cases, the Seller should consider locally increasing the thickness of the shell or head with an insert plate or increasing the nozzle neck thickness as required. The following illustrates acceptable reinforcing practices for nozzles on Commercial Grade vessels not located in a black cell:

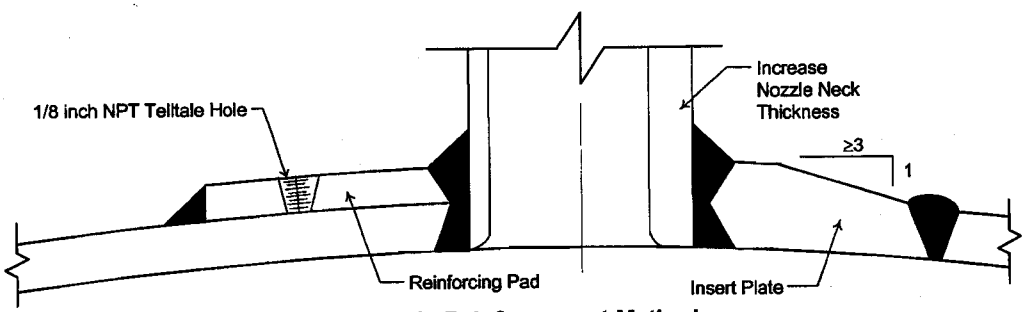

Nozzle Reinforcement Methods
Only for Commercial Grade Vessels
Not Located in a Black Cell

3.9 Internal Components

3.9.1 Design of support members for vessel internals shall be the responsibility of the Seller. For pulse jet mixers, charge vessels, and their supports, the Seller shall submit a preliminary layout for review prior to detail design.

3.9.2 Seller shall design support members to avoid the column of space directly below the manway.

3.9.3 The design of internal supports shall consider stresses caused by differential thermal expansion.

3.9.4 If indicated on Drawings, the internal surface of the head or shell subjected to direct impingement of process fluid shall be protected by a wear plate. See the MDS for the wear plate material.

3.10 External Components

3.10.1 If the MDS specifies insulation, the Seller shall provide and install insulation supports per the Drawings.

3.10.2 Lifting and tailing lugs shall be provided and installed by the Seller per the Drawings. The Seller may propose alternate designs and submit for Buyer approval prior to detail design.

3.10.3 The Seller is responsible for determining the necessity of stiffening rings. The material shall match the material of the shell and attachment welds shall be continuous on both sides of the ring.

3.10.4 If specified on the Drawings, Seller shall provide and install support clips for piping or platforms. The materials welded to the shell shall match the material of the shell.

3.10.5 If indicated on the Drawings, Seller shall provide and install grounding lugs.

3.10.6 Seller shall provide all vessels with a nameplate of Type 300 stainless steel attached securely on a bracket welded to the vessel at the location indicated on the Drawings. The bracket shall be the same material type as the adjoining vessel shell. The nameplate shall be in accordance with the specified Drawing.

3.10.7 The base of the vertical vessel support skirt shall be marked, using a line of welding bead, at the 0 degree orientation as shown on the Drawings.

3.10.8 If a separate ring beam support is specified on the vessel drawing, the top flange shall be marked, using a line of welding bead, at the 0 degree orientation as shown on the Drawings.

4 Materials

4.1 General

4.1.1 Materials shall be new and free from defects. Classification of fabrication materials shall be in accordance with ASME Section II. The Seller shall furnish legible copies of the mill test reports from the manufacturer for materials comprising the Primary Confinement, supports, and welded attachments. Other materials shall be provided with certified statements that the material meets the requirements of ASME Section II.

4.1.2 Material shall be furnished to the specification and grade shown on the MDS. The fabricator shall not substitute materials without written approval from the Buyer.

4.1.3 Contact materials including marking materials, temperature indicating crayons, adhesive backed and pressure sensitive tape, and barrier and wrap materials may be used only under the following limits:

- The total halogen content shall not exceed 200 parts per million (PPM)
- The total sulfur content shall not exceed 400 PPM
- No intentionally added low melting point metals such as lead, zinc, copper, tin, antimony and mercury.

Anti spatter compounds shall not contain chlorine, fluorine, sulfur, mercury or other low melting point metals.

Materials and residue shall be completely removed when no longer required. Cleaning materials may be non-halogenated solvents or potable water containing no more than 50 PPM chloride. Contact materials shall be controlled and documented in accordance with the Seller's inspection and test plan as approved by the Buyer.

4.1.4 Seller shall maintain a positive system of identification of materials used in the fabrication of each vessel per 24590-WTP-3PS-G000-T0002.

4.2 Pipe Fittings

Pipe fittings shall conform to the appropriate ASME and ANSI standards for materials and dimensions unless otherwise stated in the purchase order.

5 Fabrication

5.1 General

5.1.1 Seller shall, if necessary, provide temporary stiffening and jigging to prevent shell distortion during fabrication, welding processes, heat treatment, hydrostatic testing, or shipment.

5.1.2 Fabrication tolerances shall be in accordance with ASME Section VIII, Division 1 and standard drawing 24590-WTP-MV-M59T-00001.

5.1.3 The sequence of fabrication shall be planned to permit maximum access to the internal surfaces to enable examination of all welds.

5.1.4 Plates and pipes shall be cut to size and shape by machining, grinding, shearing, plasma, laser, or water jet cutting. Plates, 3/8 inch thick and above, cut by shearing, shall either be dye penetrant tested on the sheared edge or have 3/8 inch allowance left on the edges which shall be removed by machining or grinding. All thickness of plate or pipe cut by air plasma cutting shall have the edges dressed to a smooth, bright finish. Material cut by the inert gas shielded plasma, laser or water jet process will not require further dressing other than deburring. All lubricants, burrs, and debris shall be removed after cutting.

5.1.5 All stamps used for identification reference markings shall be of the low stress type. Stampings shall not be located near discontinuities.

5.1.6 If a butt welded seam is required between materials of different thickness, the thicker material shall normally be machined on the side away from the process liquid. Machining shall ensure a smooth finished profile with no sharp corners and shall be in accordance with ASME Section VIII, Division 1.

5.1.7 When rolling any austenitic stainless plate, care shall be taken to prevent carbon pickup or contamination of rolled material. The work area shall be free of carbon steel grindings and general cleanliness shall be maintained to preclude carbon contamination.

5.1.8 Only stainless steel brushes, clean iron-free sand, ceramic or stainless steel grit shall be used for cleaning stainless steel or nonferrous alloy surfaces. Cleaning tools or materials shall not have been previously used on carbon steel.

5.1.9 Internal piping bends shall have a center line radius of four times the pipe nominal diameter. In confined spaces, the centerline radius may be reduced to three times the outside diameter of the pipe. The pipe shall not be terminated or butt welded within the bend, a straight length of 4 inches is recommended.

5.1.10 Pipe bending methods, tolerances, processes, and material requirements shall comply with PFI Standard ES-24 and require Buyer's approval. These requirements shall apply equally to tube bending processes.

5.2 Layout

5.2.1 Plate size shall be chosen to minimize welding. For horizontal vessels, the longitudinal seams in cylindrical shells and conical heads, shall be located above the specified normal operating level, where practical. Longitudinal seams shall be completed before welding any adjoining circumferential seam.

5.2.2 The longitudinal seams of adjacent shell courses shall be staggered by a minimum length (measured from the toe of the welds) of 5 times the plate thickness, or 4 inches whichever is greater. Where it is considered impractical to meet this requirement, Seller shall submit a proposed layout to the Buyer for approval.

5.2.3 For large diameter formed heads, where two or more plates are butt welded prior to forming, the butt welds shall be located such that the weld in the knuckle region is minimized.

5.2.4 Saddles shall be continuously welded to the shell. Welded seams under the saddle or wear plate are not permitted. Longitudinal weld seams in the shell should not be located within 15 degrees of the horn of the saddle or wear plate.

5.2.5 Plate layouts shall be arranged so that longitudinal and circumferential weld seams clear all nozzles, manways, and their reinforcing pads to the maximum extent possible. A minimum clearance of eight times the plate thickness from the toes of the welds is required. Where it is considered impractical to meet this requirement, Seller shall submit a proposed layout to the Buyer for approval.

5.2.6 Structural attachment welds such as internal support rings or clips, external stiffening rings, insulation support rings, and ladder, platform or pipe support clips shall clear weld seams by a minimum of 2 inches. If overlap of pad type structural attachments and weld seams is unavoidable, the portion of the seam to be covered shall be ground flush and radiographically examined before the attachment is welded. The seam shall be radiographed per ASME Section VIII, Division 1, Paragraph UW-51 for a minimum distance of 2 inches beyond the edge of the overlapping attachment. Radiographic examination of longitudinal weld seams is not required when single plate edge type attachments such as tray support rings, stiffening rings, insulation support rings, ladder, platform, or pipe support clips cross such weld seams.

5.3 Nozzles, Manways, and Reinforcing Pads

5.3.1 For forged nozzles connecting to pipe of lesser wall thickness, the Seller shall prepare the nozzles per ASME Section VIII, Division 1 Figure UW-13.4.

5.3.2 If a manway is specified with a welded cover, the cover shall be tack welded to the manway neck, prepared for field welding to the manway neck, sealed to prevent dirt and water from entering the vessel using adhesive tape which meets the contact material requirements. The cover shall be marked with the plant item number of the vessel.

5.3.3 Nozzles to be butt welded to connecting pipe shall be prepared for field welding and fitted with a plastic or rubber protective cover and sealed to prevent dirt and water from entering the vessel using adhesive tape which meets the contact material requirements.

5.4 Welding Requirements

5.4.1 Seller shall comply with 24590-WTP-3PS-MVB2-T0001.

5.4.2 All welding shall be continuous. Stitch welding is prohibited.

5.4.3 Joints shall be assembled and retained in position for welding. The use of manipulators or other devices to permit welding in the flat position should be employed where practical.

5.4.4 All attachments such as lugs, brackets, nozzles, pads and reinforcements around openings and other members (when permitted) shall follow the contour and shape of the surface to which they will be attached. The gap at all exposed edges to be welded shall not exceed the greater of 1/16 inch or one-twentieth of the thickness of the attachment at the point of attachment.

5.4.5 Where fillet welds only are used, the maximum gap between the components being joined shall be 1/8 inch. The components shall be clamped or otherwise maintained together during welding.

5.4.6 Attachment point of spiders, braces, or other temporary attachments shall match the material of the vessel.

5.4.7 All temporary attachments shall be removed prior to shop hydrotest unless specifically approved by the Buyer.

5.4.8 Moved to paragraph 3.9.4

5.4.9 Where practical, internal structural component **and piping** welds shall be full penetration. Fillet welded attachments are subject to approval by the Buyer.

6 Design and NDE Requirements

6.1 All Design Levels

6.1.1 The shell and head sections which are subjected to concentrated or large loads through welded attachments (such as lifting and tailing lugs or agitator mountings) shall, prior to welding, be ultrasonically examined over 100 percent of the areas, in accordance with the following:

- For connections or attachments directly welded to the shell or head, the area tested shall extend 3 inches beyond the extremity of the proposed weldment
- For connections or attachments welded via a reinforcement or doubler plate, the shell area tested shall extend 5 inches beyond each side of the perimeter of the proposed fillet weld attaching the reinforcing or doubler plate to the shell or head

6.1.2 All full penetration welds attaching internal or external structural components to the heads or shell shall be ultrasonically tested. If fillet welds are permitted by the Buyer and are not readily ultrasonically tested, they may be dye-penetrant tested with approval from the Buyer.

6.1.3 All full penetration welds forming part of the jacket shall be ultrasonically tested.

6.1.4 Records of the NDE and other tests shall be submitted to the Buyer as described in the purchase order.

6.1.5 All welds joining the nozzle neck to the shell or heads, which are not radiographically or ultrasonically tested shall be dye penetrant tested.

6.2 Additional Requirements for Design Level 1 (L-1) Vessels

6.2.1 All nozzle reinforcement on L-1 vessels shall be integral. Using additional reinforcing elements such as reinforcing rings or pads is prohibited. Reinforcing material shall be taken as excess thickness on the shell or head and nozzle neck. Additional reinforcing material may be provided, when required, by increasing the shell, head or nozzle thickness, or by providing a thicker insert plate of a suitable diameter, butt welded into the shell or the head.

6.2.2 The following weldments shall be subject to volumetric testing:

- All welds forming part of the primary containment, including weldments joining nozzles to the vessel shell or head.
- Where a main seam butt weld is located such that only part of its length lies within the Primary Containment, the complete length of that particular seam
- All butt welds in internal piping
- For multi-chambered vessels, where an adjacent chamber is categorized other than L-1, all interconnecting butt welds which provide Primary Containment between the two chambers to L-1 requirements
- For vessels fitted with a shell-type jacket, all Primary Containment welds in the main shell enclosed by the jacket and found satisfactory prior to fitting the jacket and associated rings.

Radiography is the preferred method of volumetric testing. Where it is considered impractical to perform radiographic examination due to joint configuration, the Seller may propose ultrasonic examinations.

6.2.3 Where components attach to any part of the vessel by full or partial penetration tee weld (including a corner weld), the parent plate in the vicinity of the weld shall be ultrasonically tested prior to welding, to ensure that no defects are present that could result in laminar type tearing during welding.

In particular, the following components shall always be examined as detailed above:

- Supports for vessel internals
- Vessel supports where a small local area of the vessel takes the support load (ultrasonic inspection is not required for skirt or ring supported vessels)

6.3 Additional Requirements for Design Level 2 (L-2) Vessels

6.3.1 All nozzle reinforcement on L-2 vessels shall be integral. Using additional reinforcing elements, such as reinforcing rings or pads, is prohibited. Reinforcing material shall be taken as excess thickness on the shell or head and nozzle neck. Additional reinforcing material may be provided, when required, by increasing the shell, head or nozzle thickness, or by providing a thicker insert plate of a suitable diameter, butt welded into the shell or the head.

6.3.2 The following weldments shall be subject to volumetric testing:

- At least 10 percent of the length of each welders production of welds forming part of the Primary Containment. The minimum extent of volumetric testing shall include all "T" junctions, and 10 percent of the remaining longitudinal weld with a 6 inches minimum length of volumetric testing.
- For nozzle-to-shell welds located in the Primary Containment, at least 10 percent of the number of welds made by each welder over 100 percent of its circumference, with a minimum of one nozzle to shell weld per vessel.
- All butt welds in internal piping

Radiography is the preferred method of volumetric testing. Where it is considered impractical to perform radiographic examination due to joint configuration, the Seller may propose ultrasonic examinations.

6.3.3 Where components attach to any part of the vessel by full or partial penetration tee weld (including a corner weld), the parent plate in the vicinity of the weld shall be ultrasonically tested prior to welding, to ensure that no defects are present that could result in laminar type tearing during welding.

In particular, the following components shall always be examined as detailed above:

- Supports for vessel internals.
- Vessel supports where a small local area of the vessel takes the support load (ultrasonic inspection is not required for skirt or ring supported vessels)

6.4 Additional Requirements for Commercial Grade (CM) Vessels

6.4.1 Nozzles may use either a pad or integral reinforcement.

6.4.2 The following weldments shall be subject to volumetric testing unless otherwise indicated on the MDS or Drawings:

- At least 10 percent of the length of each welder's production of vessel main seam butt welds. The minimum extent of volumetric testing shall include all "T" junctions and 10 percent of the remaining longitudinal weld with a 6 inches minimum length of volumetric testing.
- For nozzle-to-shell welds located in the Primary Containment, at least 10 percent of the number of welds made by each welder over 100 percent of its circumference.
- At least 10 percent of butt welds in internal piping for the full circumference.

Radiography is the preferred method of volumetric testing. Where it is considered impractical to perform radiographic examination due to joint configuration, the Seller may propose ultrasonic examinations.

6.5 Additional Requirements for Vessels Located in a Black Cell

6.5.1 If a vessel is located in a Black Cell, it shall be noted on the MDS.

6.5.2 All nozzle reinforcement shall be integral regardless of **Design** Level. Using additional reinforcing elements, such as reinforcing rings or pads, is prohibited. Reinforcing material shall be taken as excess thickness on the shell or head and nozzle neck. Additional reinforcing material may be provided, when required, by increasing the shell, head or nozzle thickness, or by providing a thicker insert plate of a suitable diameter, butt welded into the shell or the head.

6.5.3 All welds joining components of the Primary Confinement shall be subject to full volumetric testing. Radiography is the preferred method of volumetric testing. Where it is considered impractical to perform radiographic examination due to joint configuration, the Seller may propose ultrasonic examinations.

6.5.4 **All load bearing welds on internal components and supports, which include pulse jet mixer and charge vessel supports, dip pipe supports, sparger supports, instrumentation piping supports, and pump discharge and return line supports shall, as a minimum be dye-penetrant tested. All other internal welds are not subject to this requirement, but shall be visually inspected in accordance with ASME Section VIII, Division 1 requirements.**

7 Tests and Inspections

7.1 Hardness Testing for Austenitic Stainless Steel Components

7.1.1 Hardness testing is required when austenitic stainless steel plate is cold formed to make sections such as angles and channels. This requirement is not applicable to the cold forming of dished heads, which is covered by the relevant section of ASME Section VIII, Division 1.

7.1.2 Hardness testing is required when austenitic stainless steel pipe is cold formed for bends with a centerline radius less than three times the nominal pipe diameter.

7.1.3 Any cold forming process, which may significantly increase hardness, shall be in accordance with an approved procedure, which contains hardness testing. The procedure shall be submitted for Buyer's approval.

7.1.4 Hardness testing shall be performed on areas subject to the greatest deformation after cold working or any rework or rectification. The maximum permitted hardness is HRB 92.

7.1.5 If the maximum permitted hardness is exceeded, the Seller shall solution anneal in accordance with the applicable ASME specification for that material. Seller shall submit a written procedure for suitable heat treatment and testing for Buyer's approval.

7.2 Nondestructive Examinations

7.2.1 Radiography, ultrasonic testing, and dye penetrant examination, where specified or required, shall be performed in accordance with ASME Section VIII, Division 1 and ASME Section V.

7.2.2 All mandatory nondestructive examination (visual, surface flaw, and **volumetric**) of vessel shall be carried out after the completion of fabrication, including any heat treatment. Where Seller carries out additional nondestructive examination prior to any heat treatment process, such examinations shall be included in the Quality Plan or Inspection Schedule. The Buyer's representative need not witness this additional nondestructive examination; however, the records of such inspection shall be made available to the Buyer's representative.

7.2.3 Nondestructive examination must be performed by an inspector certified to the requirements of SNT-TC-1A. The interpretation of the results shall be by either Level II or Level III inspectors certified to SNT-TC-1A. **Visual examination is not included in this requirement.**

7.2.4 Ultrasonic testing, where specified by the Buyer or proposed by the Seller, shall be in accordance with Appendix 12 of ASME Section VIII, Division 1.

7.2.5 Radiographic acceptance criteria shall be in accordance with ASME Section VIII, Division 1, Paragraph UW-51 where full radiography is required or UW-52 where spot radiography is required.

7.2.6 Deleted

7.3 Hydrotests

7.3.1 If paint is specified, the vessel shall not be painted prior to the pressure test.

7.3.2 All welds shall be sufficiently cleaned and free of scale or paint prior to hydrostatic testing.

7.3.3 Testing of vessels or components made of austenitic stainless steel materials shall be conducted with potable water containing no more than 50 PPM chloride.

7.3.4 For vessels of carbon and low alloy steel, before application of the test pressure, the test water and the vessel material shall be allowed to equalize to approximately the same temperature. The temperature of the pressure resisting components during the pressure test, regardless of test media, shall be at least 30° F warmer than the minimum design metal temperature to be stamped on the nameplate, but need not exceed 120° F.

7.3.5 The final hydrostatic test pressure shall be held for a minimum of one hour.

7.3.6 After completion of the hydrostatic test, the vessel shall be drained, dried, cleaned thoroughly inside and outside to remove grease, loose scale, rust, and dirt and closed as quickly as practicable. Test water shall not be in contact with austenitic stainless steel for more than 72 hours, unless treated with an appropriate biocide.

7.3.7 If field assembly or erection is involved, the final hydrostatic test shall be at the job site. The Seller or the field subcontractor shall provide the Buyer with a detailed test procedure for review and approval prior to testing.

7.3.8 A horizontal vessel shall be tested while resting on its support saddles without additional supports or cribbing.

7.3.9 Tall vertical vessels may be shop hydrotested in the horizontal position. The vessel shall be designed for vertical hydrotest loading. These vessels must be adequately supported during the hydrotest to prevent damage.

7.3.10 Each chamber of a multi-chamber vessel (jacketed vessel) shall be subject to a hydrotest pressure with atmospheric pressure in the adjacent chamber.

7.4 Leak Tests

7.4.1 If gas or pneumatic testing is specified in the MDS, Drawings or in the purchase order, the Seller shall conduct the tests in accordance with ASME Section V.

7.4.2 Reinforcing pad attachment welds and accessible surfaces of inside nozzle to vessel wall welds shall be tested for leaks with 15 PSIG dry air or nitrogen and bubble forming solution. This test shall be performed prior to the final hydrostatic or pneumatic test as applicable.

7.5 Obstruction Test

Seller shall ensure and document that all internals, internal piping, and jacketing are free from obstructions.

7.6 Final Inspection of Completed Vessel

Final inspection of the completed vessel shall be the sole responsibility of the Seller. The finished dimensions and cleanliness of the vessels shall comply with the relevant Drawings and specifications after completion of all tests.

8 Preparation and Shipment

8.1 Cleaning

8.1.1 Seller shall comply with 24590-WTP-3PS-G000-T0003.

8.1.2 If specified in the purchase order and in any event following hot working or heat treatment, the equipment shall be descaled. The procedure to be used by Seller shall be submitted for Buyer's prior approval.

8.1.3 If blast (mechanical) descaling process is specified in the purchase order for stainless steel construction, clean and iron-free glass or ceramic beads, or sand of alumina or zirconia type shall be used. The type, grade, and chemical composition of the abrasive shall be submitted for Buyer's approval prior to its use. Recycling of abrasive is prohibited. Blast cleaning shall not be used on weld metal or as a final finish on fabrications.

8.2 Packaging

8.2.1 Machined carbon steel surfaces, which are not protected by blind flanges, shall be coated with rust preventative. Rust preventative coating shall be approved by Buyer.

8.2.2 All flanged openings, which are not provided with a cover, shall be protected by an ASME B16.5 or B16.47 carbon steel blind flange of the same rating as the flange, a full faced rubber gasket with a minimum thickness of 1/8 inch and carbon steel bolts with stainless steel washers.

8.2.3 For internal parts, suitable supports shall be provided to avoid damage during shipment. Temporary internal bracing shall be painted yellow and a label, located near the nameplate shall state that the vessel contains temporary bracing that must be removed.

8.2.4 Small parts, which are to be shipped loose, shall be bagged or boxed and marked with the order and plant item number of the vessel.

8.3 Shipping

8.3.1 Seller shall take all necessary precautions in loading by blocking and bracing the vessel and furnishing all necessary material to prevent damage.

8.3.2 The Seller shall verify, by calculation, that the vessel and internals will withstand loads occurring during shipping for the chosen mode of transportation. The Buyer shall inform the Seller of the chosen mode of transportation.

9 Documentation and Submittals

9.1 Seller shall comply with the requirements of forms G321-E and G321-V of the material requisition or Exhibit I, Attachment A, B and C of the subcontract, as applicable. Furnish all applicable drawings, design calculations, reports of special analyses, welding procedure specifications with procedure qualification records, test procedures, and all other required documents.

9.2 Design calculations shall include relevant ASME Section VIII, Division 1 formulas and source paragraphs, values used in the formulas, the calculated results and comparison with acceptable values. Where calculations are based on other than the ASME Section VIII, Division 1 formulas, the source of the formulas shall be referenced. Where a computer program is used for calculations, a brief program description shall be given, including name and version of the program. If the program is not commercially available to industry, Seller shall maintain and provide, upon request, program documentation. Calculations shall include, but not be limited to:

- Code calculations
- Seismic calculations including base horizontal seismic force and moment and loads for anchorage and anchor bolt design
- Support calculations including empty weight, operating weight and location of center of gravity
- Calculations associated with lifting and erection of the vessel

- Nozzle load analysis for local and gross effect, per WRC-107, WRC-297 or by other approved method
- Design of attachments, both internal and external
- Thermal and discontinuity stresses as applicable
- Fatigue analysis as applicable for vessels in fatigue services

9.3 Seller shall make a complete set of Buyer approved drawings and other documents available to the Buyer's representative at the time the quality surveillance activities are being conducted.

9.4 All records pertaining to the nondestructive examination, base materials, filler materials, fabrication, and inspection shall be traceable to the area and part inspected and be accessible for Buyer's examination.

9.5 Seller shall provide certified copies of the test reports including ASME Section VIII, Division 1 data reports as specified in the purchase order.

10 Quality Assurance

10.1 General Requirements

10.1.1 The Seller's quality assurance program (QAP) requirements are included in 24590-WTP-3PS-G000-T0001.

10.1.2 Seller's QAP manual shall be submitted to buyer for review in accordance with 24590-WTP-3PS-G000-T0001.

10.1.3 Seller's QAP, as a minimum, shall contain the requirements detailed in the Supplier Quality Assurance Program Requirements Data Sheets listed in section 2 of the material requisition.

10.2 Additional Requirements for Quality Level Q Vessels

10.2.1 Seller shall have in place a QA program meeting the requirements of ASME NQA-1, marked as applicable in Supplier Quality Assurance Program Requirements Data Sheet attached to the material requisition, and 24590-WTP-3PS-G000-T0001.

10.2.2 The successful bidder must pass a pre-award survey by the Buyer. Seller shall demonstrate that its quality program is in compliance with the procurement quality requirements listed in the Supplier Quality Assurance Program Requirements Data Sheet.

10.2.3 All items shall be manufactured in accordance with the Seller's Quality Assurance Program that meets the requirements of ASME NQA-1, and has been previously evaluated and accepted by the RPP-WTP Quality Organization.

10.2.4 Seller shall submit their QAP and work plan to Buyer for review prior to commencement of work. The plan shall include documents and procedures to implement the work and include a matrix of essential quality assurance elements cross-referenced with the documents and procedures.

11 Revision History (Internal Use Only)

11.1 Specification Change Notices

- 24590-WTP-3PN-MV00-00001
- 24590-WTP-3PN-MV00-00002
- 24590-WTP-3PN-MV00-00009
- 24590-WTP-3PN-MV00-00011
- **24590-WTP-3PN-MV00-00012**
- **24590-WTP-3PN-MV00-00014**
- **24590-WTP-3PN-MV00-00015**
- **24590-WTP-3PN-MV00-00016 with modifications:**
  - **24590-WTP-SDDR-PROC-05-00100 is incorporated by reference in lieu of 24590-WTP-SDDR-PROC-04-00100**
  - **24590-WTP-SDDR-PROC-05-00197 is incorporated by reference in lieu of 24590-WTP-SDDR-PROC-04-00197**
- **24590-WTP-3PN-MV00-00017**
- **24590-WTP-3PN-MV00-00019**
- **24590-WTP-3PN-MV00-00020**
- **24590-WTP-3PN-MV00-00022**

11.2 Design Changes Incorporated by Design

- 24590-WTP-SDDR-PROC-02-0145
- 24590-WTP-SDDR-PROC-02-0155
- 24590-WTP-SDDR-PROC-02-0183
- 24590-WTP-SDDR-PROC-03-0023
- 24590-WTP-SDDR-PROC-03-0053
- 24590-WTP-SDDR-PROC-03-0075
- 24590-WTP-SDDR-PROC-03-0082
- 24590-WTP-SDDR-PROC-03-0083
- 24590-WTP-SDDR-PROC-03-0086
- 24590-WTP-SDDR-PROC-03-0100

11.3 Design Changes Incorporated by Reference

- 24590-WTP-SDDR-PROC-02-0128
- 24590-WTP-SDDR-PROC-02-0136
- 24590-WTP-SDDR-PROC-02-0182
- 24590-WTP-SDDR-PROC-03-0020
- 24590-WTP-SDDR-PROC-03-0066
- 24590-WTP-SDDR-PROC-03-0076
- 24590-WTP-SDDR-PROC-03-0157
- 24590-WTP-SDDR-PROC-03-0168
- 24590-WTP-SDDR-PROC-03-0169
- 24590-WTP-SDDR-PROC-03-0226
- 24590-WTP-SDDR-PROC-03-0240

- 24590-WTP-SDDR-PROC-03-0242
- 24590-WTP-SDDR-PROC-03-0255
- 24590-WTP-SDDR-PROC-03-0263
- 24590-WTP-SDDR-PROC-03-0285
- 24590-WTP-SDDR-PROC-04-00130
- 24590-WTP-SDDR-PROC-04-00184
- 24590-WTP-SDDR-PROC-04-00201
- 24590-WTP-SDDR-PROC-04-00216
- 24590-WTP-SDDR-PROC-04-00269
- 24590-WTP-SDDR-PROC-04-00411
- 24590-WTP-SDDR-PROC-04-00551
- 24590-WTP-SDDR-PROC-04-00613
- 24590-WTP-SDDR-PROC-04-00645
- 24590-WTP-SDDR-PROC-04-00744
- 24590-WTP-SDDR-PROC-04-00788
- 24590-WTP-SDDR-PROC-04-00873
- 24590-WTP-SDDR-PROC-04-00890
- 24590-WTP-SDDR-PROC-04-00931
- 24590-WTP-SDDR-PROC-04-00970
- 24590-WTP-SDDR-PROC-04-00971
- 24590-WTP-SDDR-PROC-04-01078
- 24590-WTP-SDDR-PROC-04-01087
- 24590-WTP-SDDR-PROC-04-01121
- 24590-WTP-SDDR-PROC-04-01275
- 24590-WTP-NCR-CON-03-077
- 24590-WTP-NCR-CON-03-202
- 24590-WTP-NCR-CON-04-0080
- 24590-WTP-FCR-M-03-045
- 24590-WTP-FCR-M-03-062
- 24590-WTP-FCR-M-04-0053
- 24590-WTP-FCR-M-04-0058
- 24590-WTP-SDDR-PROC-05-00032
- 24590-WTP-SDDR-PROC-05-00046
- 24590-WTP-SDDR-PROC-05-00100
- 24590-WTP-SDDR-PROC-05-00101
- 24590-WTP-SDDR-PROC-05-00197
- 24590-WTP-SDDR-PROC-05-00202
- 24590-WTP-SDDR-PROC-05-00235
- 24590-WTP-SDDR-PROC-05-00279
- 24590-WTP-SDDR-PROC-05-00280
- 24590-WTP-SDDR-PROC-05-00332
- 24590-WTP-SDDR-PROC-05-00398
- 24590-WTP-SDDR-PROC-05-00452
- 24590-WTP-SDDR-PROC-05-00476
- 24590-WTP-SDDR-PROC-05-00480
- 24590-WTP-SDDR-PROC-05-00603
- 24590-WTP-SDDR-PROC-05-00604
- 24590-WTP-SDDR-PROC-05-00605

- 24590-WTP-SDDR-M-05-00017
- 24590-WTP-SDDR-M-05-00086
- 24590-WTP-SDDR-M-05-00090
- 24590-WTP-SDDR-M-05-00107
- 24590-WTP-SDDR-M-05-00114
- 24590-WTP-SDDR-M-05-00122
- 24590-WTP-SDDR-M-05-00189
- 24590-WTP-SDDR-M-05-00205
- 24590-WTP-SDDR-M-05-00227
- 24590-WTP-SDDR-M-05-00253
- 24590-WTP-SDDR-M-05-00266
- 24590-WTP-SDDR-M-05-00282
- 24590-WTP-SDDR-M-05-00284
- 24590-WTP-SDDR-M-05-00396
- 24590-WTP-SDDR-M-05-00439
- 24590-WTP-SDDR-M-05-00470
- 24590-WTP-SDDR-M-05-00590
- 24590-WTP-SDDR-M-05-00654
- 24590-WTP-SDDR-M-05-00675
- 24590-WTP-SDDR-M-05-00683
- 24590-WTP-SDDR-M-05-00688
- 24590-WTP-SDDR-M-05-00691
- 24590-WTP-SDDR-M-05-00725
- 24590-WTP-SDDR-M-05-00752
- 24590-WTP-SDDR-M-06-00088
- 24590-WTP-SDDR-M-06-00130
- 24590-WTP-SDDR-M-06-00352
- 24590-WTP-SDDR-MS-07-00001

Appendix A Minimum Nozzle Design Loads

Horizontal Shell Top Nozzle

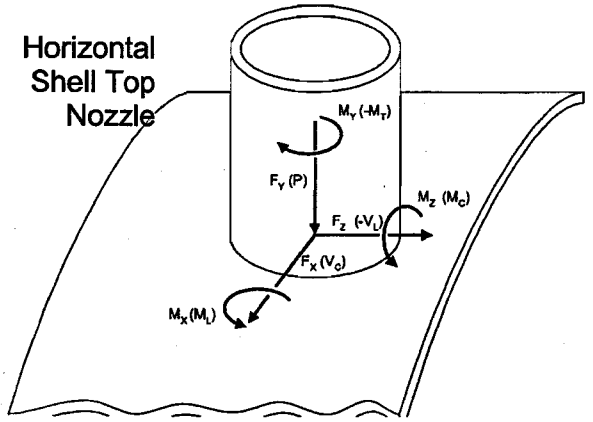

Horizontal Shell Bottom Nozzle

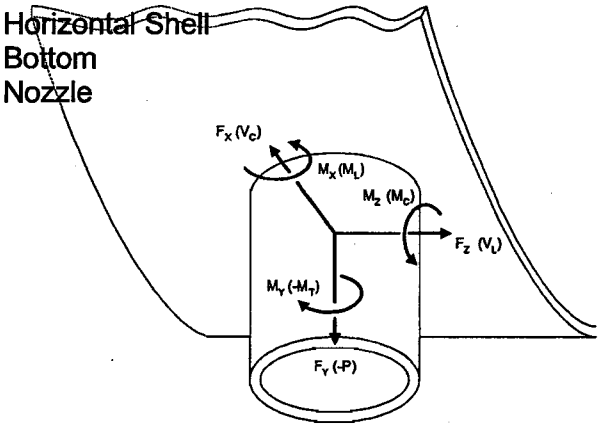

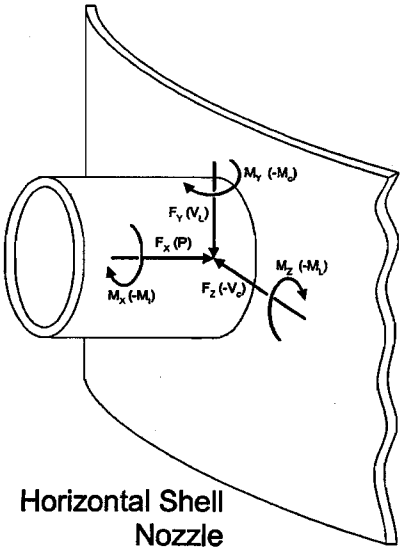

Horizontal Shell Nozzle

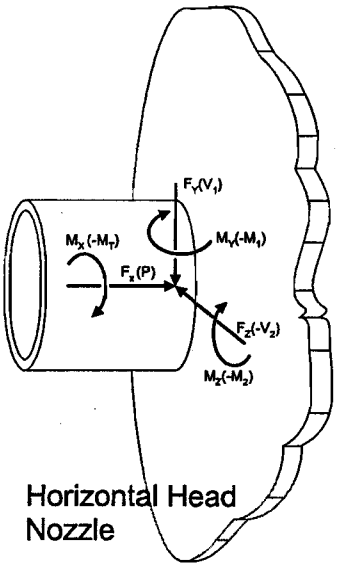

Horizontal Head Nozzle

Vertical Top Head Nozzle

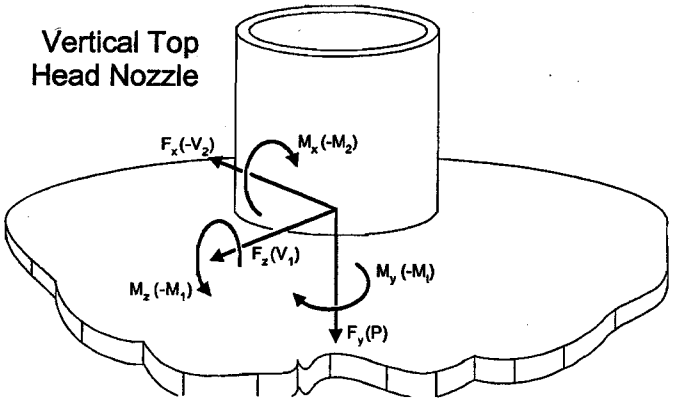

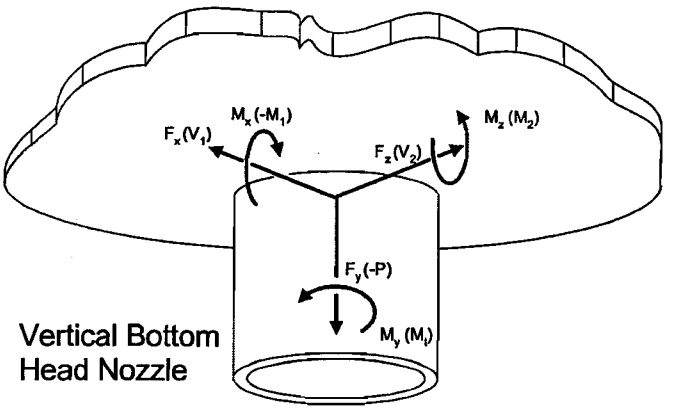

Vertical Bottom Head Nozzle

Table A1- Minimum Nozzle Loads Due to Stainless Steel Piping on Vessels Designated as SC-I

Pipe Size	Load Type	Forces			Moments		
		Fx (lb)	Fy (lb)	Fz (lb)	Mx (ft-lb)	My (ft-lb)	Mz (ft-lb)
1 in	Weight	10	16	10	10	6	6
	Seismic	30	20	30	37	55	55
	Thermal	30	26	40	38	77	77
1-1/2 in	Weight	20	32	20	24	15	15
	Seismic	60	40	60	91	137	137
	Thermal	64	56	86	96	192	192
2 in	Weight	36	56	36	42	26	26
	Seismic	106	70	106	158	237	237
	Thermal	114	100	152	169	337	337
3 in	Weight	69	111	69	158	99	99
	Seismic	215	143	215	623	934	934
	Thermal	228	203	305	664	1330	1330
4 in	Weight	116	186	116	288	180	180
	Seismic	365	243	365	1170	1760	1760
	Thermal	393	350	524	1260	2520	2520
6 in	Weight	279	446	279	797	498	498
	Seismic	884	590	884	3230	4850	4850
	Thermal	980	872	1310	3580	7160	7160
8 in	Weight	311	497	311	988	618	618
	Seismic	978	653	978	3930	5890	5890
	Thermal	1190	1060	1590	4800	9590	9590
10 in	Weight	351	561	351	1880	1180	1180
	Seismic	1090	728	1090	7340	11000	11000
	Thermal	1270	1130	1690	8500	17000	17000
12 in	Weight	485	776	485	2710	1700	1700
	Seismic	1510	1010	1510	10500	15800	15800
	Thermal	1780	1580	2370	12400	24800	24800
14 in	Weight	581	930	581	3320	2080	2080
	Seismic	1800	1200	1800	12600	18900	18900
	Thermal	2140	1900	2860	15000	30100	30100
16 in	Weight	729	1170	729	4170	2610	2610
	Seismic	2280	1520	2280	16100	24200	24200
	Thermal	2800	2490	3730	19800	39500	39500
18 in	Weight	911	1460	911	5070	3170	3170
	Seismic	2820	1880	2820	20000	29900	29900
	Thermal	3550	3160	4730	25200	50300	50300
20 in	Weight	1120	1790	1120	6310	3950	3950
	Seismic	3400	2270	3400	23900	35800	35800
	Thermal	4440	3950	5920	31200	62400	62400
22 in	Weight	1340	2150	1340	7300	4560	4560
	Seismic	4030	2690	4030	28100	42200	42200
	Thermal	5430	4830	7240	37900	75800	75800
24 in	Weight	1570	2510	1570	8510	5320	5320
	Seismic	4710	3140	4710	32400	48700	48700
	Thermal	6560	5840	8750	45200	90400	90400

Note: Unless otherwise specified on the MDS utilize the minimum nozzle loads specified above

Table A2- Minimum Nozzle Loads Due to Stainless Steel Piping on Vessels Designated as SC-II, III, and IV

Pipe Size	Load Type	Forces			Moments		
		Fx (lb)	Fy (lb)	Fz (lb)	Mx (ft-lb)	My (ft-lb)	Mz (ft-lb)
1 in	Weight	10	16	10	11	7	7
	Seismic	66	44	66	92	137	137
	Thermal	28	24	38	38	77	77
1-1/2 in	Weight	20	32	20	26	16	16
	Seismic	138	92	138	228	342	342
	Thermal	58	52	78	96	192	192
2 in	Weight	34	56	34	46	29	29
	Seismic	244	162	244	398	597	597
	Thermal	104	92	138	169	337	337
3 in	Weight	71	113	71	180	112	112
	Seismic	491	327	491	1570	2350	2350
	Thermal	209	185	278	664	1330	1330
4 in	Weight	120	192	120	342	214	214
	Seismic	834	557	834	2960	4440	4440
	Thermal	356	317	474	1260	2520	2520
6 in	Weight	290	462	290	951	595	595
	Seismic	2025	1350	2025	8290	12400	12400
	Thermal	875	777	1170	3580	7160	7160
8 in	Weight	333	534	333	1210	758	758
	Seismic	2360	1580	2360	10700	16000	16000
	Thermal	1050	938	1410	4800	9590	9590
10 in	Weight	361	578	361	2210	1380	1380
	Seismic	2540	1690	2540	19400	29100	29100
	Thermal	1110	991	1490	8500	17000	17000
12 in	Weight	502	803	502	3240	2020	2020
	Seismic	3510	2340	3510	28100	42100	42100
	Thermal	1550	1380	2070	12400	24800	24800
14 in	Weight	591	946	591	3870	2420	2420
	Seismic	4160	2780	4160	33900	50900	50900
	Thermal	1850	1640	2460	15000	30100	30100
16 in	Weight	757	1210	757	5080	3180	3180
	Seismic	5310	3540	5310	44100	66100	66100
	Thermal	2380	2120	3180	19800	39500	39500
18 in	Weight	1200	1930	1200	8190	5120	5120
	Seismic	8490	5660	8490	71500	107000	107000
	Thermal	2990	2660	3980	25200	50300	50300
20 in	Weight	1280	2050	1280	8630	5400	5400
	Seismic	8910	5940	8910	75900	114000	114000
	Thermal	3660	3260	4880	31200	62400	62400
22 in	Weight	1380	2200	1380	9380	5860	5860
	Seismic	9510	6340	9510	81500	122000	122000
	Thermal	4420	3930	5900	37900	75800	75800
24 in	Weight	1600	2570	1600	11000	6870	6870
	Seismic	11100	7430	11100	96100	144000	144000
	Thermal	5240	4660	6990	45200	90400	90400

Note: Unless otherwise specified on the MDS, utilize the minimum nozzle loads specified above

Table A3- Minimum Nozzle Loads Due to Carbon Steel Piping on Vessels Designated as SC-I

Pipe Size	Load Type	Forces			Moments		
		Fx (lb)	Fy (lb)	Fz (lb)	Mx (ft-lb)	My (ft-lb)	Mz (ft-lb)
1 in	Weight	10	16	10	11	7	7
	Seismic	30	20	30	45	67	67
	Thermal	36	32	46	53	106	106
1-1/2 in	Weight	20	32	20	28	18	18
	Seismic	60	40	60	111	166	166
	Thermal	72	64	96	132	265	265
2 in	Weight	34	54	34	50	31	31
	Seismic	100	68	100	192	288	288
	Thermal	122	108	162	232	465	465
3 in	Weight	68	108	68	192	120	120
	Seismic	207	138	207	755	1130	1130
	Thermal	251	222	335	915	1830	1830
4 in	Weight	113	180	113	357	223	223
	Seismic	344	230	344	1420	2130	2130
	Thermal	420	374	561	1740	3480	3480
6 in	Weight	260	416	260	1000	626	626
	Seismic	792	528	792	3950	5930	5930
	Thermal	989	879	1320	4930	9870	9870
8 in	Weight	302	482	302	1290	806	806
	Seismic	932	621	932	5250	7870	7870
	Thermal	1170	1040	1560	6610	13200	13200
10 in	Weight	411	658	411	2390	1500	1500
	Seismic	1270	848	1270	9130	13700	13700
	Thermal	1630	1450	2180	11700	23400	23400
12 in	Weight	608	973	608	3760	2350	2350
	Seismic	1880	1250	1880	14200	21300	21300
	Thermal	2430	2160	3240	18400	36800	36800
14 in	Weight	744	1190	744	4710	2940	2940
	Seismic	2350	1560	2350	18500	27800	27800
	Thermal	3030	2700	4040	23900	47900	47900
16 in	Weight	1030	1650	1030	7040	4400	4400
	Seismic	3250	2170	3250	27700	41500	41500
	Thermal	4200	3730	5600	35800	71500	71500
18 in	Weight	1410	2250	1410	9840	6150	6150
	Seismic	4240	2830	4240	38700	58000	58000
	Thermal	5580	4960	7440	50900	102000	102000
20 in	Weight	1730	2770	1730	12700	7970	7970
	Seismic	5340	3560	5340	49600	74400	74400
	Thermal	7160	6360	9540	66500	133000	133000
22 in	Weight	2080	3340	2080	13100	8200	8200
	Seismic	6290	4190	6290	50300	75500	75500
	Thermal	8590	7640	11500	68800	138000	138000
24 in	Weight	2650	4240	2650	20700	12900	12900
	Seismic	7980	5320	7980	79900	120000	120000
	Thermal	11100	9870	14800	111000	222000	222000

Note: Unless otherwise specified on the MDS, utilize the minimum nozzle loads specified above

Table A4- Minimum Nozzle Loads Due to Carbon Steel Piping on Vessels Designated as SC-II, III or IV

Pipe Size	Load Type	Forces			Moments		
		Fx (lb)	Fy (lb)	Fz (lb)	Mx (ft-lb)	My (ft-lb)	Mz (ft-lb)
1 in	Weight	10	16	10	13	8	8
	Seismic	68	46	68	110	166	166
	Thermal	32	30	44	53	106	106
1-1/2 in	Weight	20	32	20	31	20	20
	Seismic	140	92	140	275	412	412
	Thermal	68	60	90	132	265	265
2 in	Weight	34	54	34	55	34	34
	Seismic	234	156	234	480	721	721
	Thermal	114	100	150	232	465	465
3 in	Weight	62	99	62	176	110	110
	Seismic	482	321	482	1910	2870	2870
	Thermal	231	206	308	915	1830	1830
4 in	Weight	104	167	104	335	209	209
	Seismic	804	536	804	3610	5420	5420
	Thermal	387	344	516	1740	3480	3480
6 in	Weight	243	389	243	949	593	593
	Seismic	1860	1250	1860	10200	15200	15200
	Thermal	906	806	1210	4930	9870	9870
8 in	Weight	353	564	353	1450	903	903
	Seismic	2690	1800	2690	13400	20200	20200
	Thermal	1320	1180	1770	6610	13200	13200
10 in	Weight	384	615	384	2600	1630	1630
	Seismic	2920	1950	2920	23700	35600	35600
	Thermal	1450	1290	1930	11700	23400	23400
12 in	Weight	567	908	567	4150	2590	2590
	Seismic	4310	2880	4310	37100	55600	55600
	Thermal	2140	1910	2860	18400	36800	36800
14 in	Weight	707	1130	707	5400	3380	3380
	Seismic	5380	3590	5380	48100	72200	72200
	Thermal	2670	2380	3570	23900	47900	47900
16 in	Weight	980	1570	980	8040	5020	5020
	Seismic	7450	4970	7450	71900	108000	108000
	Thermal	3700	3290	4940	35800	71500	71500
18 in	Weight	1300	2080	1300	11300	7090	7090
	Seismic	9890	6590	9890	102000	152000	152000
	Thermal	4950	4400	6600	50900	102000	102000
20 in	Weight	1640	2630	1640	14900	9330	9330
	Seismic	12500	8320	12500	132000	198000	198000
	Thermal	6300	5600	8400	66500	133000	133000
22 in	Weight	1900	3040	1900	15400	9620	9620
	Seismic	14400	9610	14400	135000	203000	203000
	Thermal	7330	6520	9770	68800	138000	138000
24 in	Weight	2510	4020	2510	24800	15500	15500
	Seismic	19000	12700	19000	217000	326000	326000
	Thermal	9760	8680	13000	111000	222000	222000

Note: Unless otherwise specified on the MDS, utilize the minimum nozzle loads specified above

R10893256

ISSUED BY
RPP-WTP PDC

RIVER PROTECTION PROJECT – WASTE TREATMENT PLANT

ENGINEERING SPECIFICATION

FOR

Activated Carbon Bed Adsorbers

Content applicable to ALARA? ☒ Yes ☐ No

ADR No.
24590-WTP-ADR-M-04-0004

Rev
0

NOTE: Contents of this document are Dangerous Waste Permit affecting.

Quality Level
Q
DOE Contract No. DE-AC27-01RV14136

REV	DATE	BY	CHECK	REVIEW	E&NS	QA	DPEM
3	4/8/08	R. Jablonski	C. Knauss	G. Goolsby	Mark Rosenthal	M. Ehlinger	J. Julyk
2	18-May-05	D. Pease	K. Chin	C. Morley	S. Woolfolk/ Todd Allen	G. Warner	M. Hoffmann
1	02-Nov-04	D. Pease	S. Ngakan	C. Morley	S. Woolfolk/ M. Medsker	G. Warner	M. Hoffman
0	06-Aug-04	D. Pease	S. Ngakan	C. Morley	B. Spezialetti	G. Warner	M. Hoffmann

SPECIFICATION No.
24590-WTP-3PS-MWK0-T0001

Rev
003

Revision History

Revision	Reason for Revision
0	Issued for Purchase of HLW adsorbers. LAW adsorbers are on hold pending approval of ABAR 24590-WTP-SE-ENS-03-1261 Rev 0.
1	Issued for Purchase based on DTD number 24590-LAW-DTD-ENS-04-0002, with LAW adsorber ITS equipment for carbon bed fire mitigation on hold. This includes: Isolation valves, high temperature switch and interlock, and COx monitor and interlocks.
2	Incorporated SCN number 24590-WTP-3PN-MWK0-00001 and SDDRs 24590-WTP-SDDR-PROC-04-01020, 24590-WTP-SDDR-PROC-04-01040, 24590-WTP-SDDR-PROC-05-00392, 24590-WTP-SDDR-PROC-05-00602, 24590-WTP-SDDR-PROC-05-00652, 24590-WTP-SDDR-PROC-05-00701, and 24590-WTP-SDDR-M-05-00018. Revised LAW instrumentation requirements for remote mounting of analyzers and transmitters. Revised Figures 1 and 2 to clarify instrumentation requirements. Added appendix B and C to clarify testing requirements for carbon media. LAW adsorber ITS equipment for carbon bed fire mitigation is still on hold. This includes: Isolation valves, high temperature switch and interlock, and COx monitors and interlocks.
3	Incorporated SCN 24590-WTP-3PN-MWK0-00002 and ~~SDDRs 24590-WTP-SDDR-M-06-00286, 24590-WTP-SDDR-M-06-00287,~~ and 24590-WTP-SDDR-MS-07-00051. Revised Appendix B and C testing requirements. Added WTP specific tailoring of codes (appendix D-J). Updated HLW ITS List. Updated Environmental Requirements based on EQ Room Data Sheets. Changed CO and COx analyzers from supplier's scope to buyer's. Added Hg Monitor Probe connection detail (Fig 3).

RJ 4/23/06

Contents

1 Scope 1
1.1 Project Description and Location 1
1.2 Equipment, Material, and Services Required 1
1.3 Work by Others 4
1.4 Acronyms 4
1.5 Definitions 6
1.6 Safety/Quality Classifications 7
2 Applicable Documents 8
2.1 General 8
2.2 Codes 8
2.3 Industry Standards 9
2.4 Reference Documents/Drawings 9
3 Design Requirements 11
3.1 General Requirements 11
3.2 Basic Function 13
3.3 Optional Electric Preheater 14
3.4 Performance 14
3.5 Design Conditions 15
3.6 Environmental Conditions 15
3.7 Mechanical Requirements 16
3.8 Discharge Filter Requirements 17
3.9 Lifting Requirements 17
3.10 Loadings 18
3.11 Bag-in/Bag-out Procedure Requirements 18
3.12 CFD Model and Analysis Requirements 19
3.13 Thermal Requirements 20
3.14 Activated Carbon Bed Adsorber Design Analysis Requirements 21
3.15 Electrical Requirements 22
3.16 Instrumentation and Control Requirements 22
3.17 Accessibility and Maintenance 25
4 Materials 26
4.1 General 26
4.2 Construction 27
4.3 Insulation 27

4.4 Piping 28
4.5 Prohibited Materials 28
4.6 Storage of Special Materials (e.g., stainless steel) prior to work 29
5 Fabrication 29
5.1 General Requirements 29
5.2 Assembly 29
5.3 Tolerances 30
5.4 Welding 30
5.5 Coating 31
6 Tests and Inspections 32
6.1 General Requirements 32
6.2 Weld Testing and Inspection 33
6.3 Personnel Qualifications 33
6.4 Laboratory Tests 34
6.5 Shop Tests 34
6.6 Site Tests 35
6.7 Bag-in/Bag-out Procedure Demonstration 35
7 Preparation for Shipment 36
7.1 General Requirements 36
7.2 Cleanliness 36
7.3 Tagging 36
7.4 Documentation 37
7.5 Shipment Preparation Instructions 37
8 Quality Assurance 37
8.1 General Requirements 37
8.2 Quality (Q) Related Components 38
8.3 Supplier Deviation 38
9 Configuration Management 38
10 Documentation and Submittals 39
10.1 General 39
10.2 Drawings 40
10.3 30% Design Review 41
10.4 90% Design Review 41
10.5 Calculations 41
10.6 Schedules 42

10.7 Reporting Appendix A, B, and C Test Results 42
11 References 43
11.1 Incorporated Design Changes 43
11.2 Design Changes Incorporated by Reference 44

Figures

Figure 1 HLW Activated Carbon Bed Adsorber Schematic 45
Figure 2 LAW Activated Carbon Bed Adsorber Schematic 46
Figure 3 Mercury Gas Monitor Probe Flange Connection 47

Tables

Table 1 Important to Safety Equipment List (HLW) 48
Table 2 Important to Safety Equipment List (LAW) 63

Appendices

Appendix A Mandatory Ammonium Nitrate Test Requirements for LAW Carbon Bed Adsorbers ..... A-i
Appendix B Warranty Testing ..... B-i
Appendix B Warranty Testing ..... B-ii
Appendix C Permit Testing ..... C-i
Appendix D WTP Specific Tailoring of ASME AG-1-1997 ..... D-i
Appendix E WTP Specific Tailoring of ASME B31.3-1996 ..... E-i
Appendix F WTP Specific Tailoring of AISC (ASD) ..... F-i
Appendix G WTP Specific Tailoring of ASME NQA-1-1989 ..... G-i
Appendix H WTP Specific Tailoring of IEEE Std. 384 ..... H-i
Appendix I WTP Specific Tailoring of IEEE Std. 323 ..... I-i
Appendix J WTP Specific Tailoring of IEEE Std. 344 ..... J-i

1 Scope

1.1 Project Description and Location

The Hanford Tank Waste Treatment and Immobilization Plant (WTP) is a complex of waste treatment facilities where the US Department of Energy (DOE) Hanford Site tank waste will be pretreated and immobilized into stable glass form via vitrification. The WTP Contractor will design, build, and startup the WTP pretreatment and vitrification facilities for the DOE Office of River Protection (ORP). The waste treatment facilities will pretreat and immobilize the low activity waste (LAW) and high level waste (HLW) currently stored in underground storage tanks at the Hanford Site.

The Hanford Site occupies an area of about 560 square miles and is located along the Columbia River, north of Richland, WA in the U.S.A. The WTP Facility will be constructed at the east end of the 200 East Area of the Hanford Site. The counties of Benton, Franklin, and Grant surround the Hanford Site.

1.2 Equipment, Material, and Services Required

This specification provides the requirements for the design, analysis, fabrication, project management, quality assurance, inspection, testing, qualification, and labeling of the Activated Carbon Bed Adsorbers, associated filters, gaskets, insulation, piping, fasteners, shims, and special tools for use in the High Level Waste (HLW) and Low Activity Waste (LAW) facilities. This specification also provides the requirements for the conception, demonstration, design, fabrication, quality assurance, inspection, testing, qualification, and supply of activated carbon, testing equipment, testing apparatus, testing materials, manuals, instructions, and procedures.

The scope of work for the Seller includes all work specifically defined in this specification. Work shall include, but is not limited to, the following:

1.2.1 Provide fully detailed designs, drawings, supporting calculations, supporting analysis, supporting models, procedures, and all labor, materials, fasteners, tooling, equipment, apparatus, instrumentation, shop drawings, and services necessary to manufacture, test, inspect, label, and package Activated Carbon Bed Adsorbers in accordance with this specification and the Mechanical Data Sheets in Section 2 of the purchasing documents.

1.2.2 Provide Buyer with a breakdown (by paragraph) of the following codes, industry standards, and referenced documents to be applied to each aspect of the Activated Carbon Bed Adsorbers detailed design, drawings, analysis, fabrication, quality assurance, inspection, testing, qualification, labeling, packaging, handling, and shipment for review prior to beginning detailed design:

- ASME AG-1-1997, including WTP specific tailoring
- ASME AG-1a-2000
- ASME N509-1989
- ASME B&PVC, Section VIII, Div 1

If an entire section or part of the above listed codes and standards applies, a breakdown by paragraph is not required. Only the part or section shall be listed.

1.2.3 Provide design calculation in accordance with this specification and applicable codes. Calculations shall include, but not be limited to:

- Code calculations
- Seismic calculations
- Support calculations (Include resultant reactions at support locations)
- Calculations associated with lifting and erection of the vessel
- Nozzle loads and movements per thermal and seismic calculations
- Thermal and discontinuity stresses as applicable
- Fatigue analysis as applicable for pressure vessels in fatigue services

1.2.4 Provide a three-dimensional (3-D) computational fluid dynamics (CFD) model and analysis of the Activated Carbon Bed Adsorbers. CFD model and analysis shall include necessary Buyer supplied inlet piping to model the velocity profile of the offgas air stream entering the adsorber.

1.2.5 Provide thermal calculations for the Activated Carbon Bed Adsorber units and support frames in accordance with the requirements of this specification and Mechanical Data Sheets (MDSs) in section 2 of the purchasing documents. Select insulation material (i.e. calcium silicate, mineral wool, etc.) to meet thermal requirements of this specification.

1.2.6 Provide an analysis of the Activated Carbon Bed Adsorber design to determine expected adsorber changeout frequency.

1.2.7 Delete.

1.2.8 Provide connecting piping and actuated on/off control valves to configure two (2) Activated Carbon Bed Adsorber units in a single offgas stream to be operated in either series or parallel with the ability to isolate one unit for maintenance and still operate. Activated Carbon Bed Adsorber units shall be configured for automatic (remote) operation from Buyer's integrated control network.

1.2.9 Provide internal water deluge fire suppression system to allow flooding of the Activated Carbon Beds. Fire detection shall include a combination of carbon monoxide (CO/COx) monitors, temperature monitors, and isolation valves. CO/COx monitors shall be interlocked to isolation valves. Process water for carbon bed flooding is a backup to bed isolation. Provide high liquid level interlocks operated from radar level indicators.

1.2.10 Provide fire detection and suppression system acceptance tests.

1.2.11 Provide control logic and I/O mapping for automatic configuration and fire suppression system.

1.2.12 In addition to the field testing requirements set forth in ASME AG-1, Section TA, and/or ASME N509, Section 9, conduct the following acceptance tests in the shop, on each Activated Carbon Bed Adsorber unit prior to shipment:

- Visual Inspection
- Structural Capability Test
- System Bypass Test

- Mechanical Test
- Differential Pressure Test
- Airflow Distribution Test
- Electrical Air Heater Performance Test (per design)

1.2.13 Provide challenge gas and challenge gas injection and sampling ports/manifolds.

1.2.14 Provide detailed bag-in/bag-out procedure for removal and replacement of adsorbent and any other filter(s) required.

1.2.15 Provide all personnel, equipment, apparatus, labor, personal protection equipment (PPE), materials, glovebags, bags, HEPA filters, etc. to simulate field conditions, demonstrate, and videotape the bag-in/bag-out procedure using fully assembled Activated Carbon Bed Adsorber equipment in shop.

1.2.16 Provide material certified test reports, welding procedures, insulation installation procedures, testing procedures, testing results, quality assurance procedures, quality assurance inspection results, and all other procedures and documentation required per this specification.

1.2.17 Provide transportation, storage, and installation instructions for the Activated Carbon Bed Adsorber units per the Seller's recommendations and the requirements of this specification.

1.2.18 Package and prepare the Activated Carbon Bed Adsorber units for shipment to the WTP site. Packaging shall be sufficient to allow outdoor storage for a period of up to one year at the WTP site, without Buyer action except routine inspection. Environmental conditions for storage are found in section 3.6 of this specification.

1.2.19 Provide all equipment, instrumentation, labor, and materials to perform a shop lifting test, demonstrating that the lifting lugs or attachment points are adequate to support the Activated Carbon Bed Adsorber units without distortion. Lifting lugs or attachment points shall be placed such that the equipment remains essentially level during the lift without tilting or swaying. Seller shall provide shop test report on lifting points provided on the Activated Carbon Bed Adsorber equipment.

1.2.20 Provide Material Safety Data Sheets (MSDSs) for loaded Activated Carbon Bed Adsorber and all other materials used in the construction of the Activated Carbon Bed Adsorber units.

1.2.21 Provide operation and maintenance manuals, with sequence of operations, and recommended spare parts list.

1.2.22 Provide a set of special tools for each Activated Carbon Bed Adsorber required for operation, bag-in/bag-out, sampling, and maintenance.

1.2.23 Provide design for structural attachment to the Buyer's provided embeds.

1.2.24 Provide junction boxes to accommodate wiring to remote mounted Seller control panels as requirement for LAW Buyer supplied instrumentation racks. Seller shall provide wiring schedule, diagrams, and documentation to facilitate installation of wiring from equipment to remote control panels and LAW instrumentation racks.

1.3 Work by Others

Any item not specifically listed as being supplied by the Buyer shall be provided by the Seller. The Buyer shall supply the following:

1.3.1 Shipping to jobsite.

1.3.2 Unloading and storage of all materials and equipment at jobsite.

1.3.3 Activated Carbon Bed Adsorber installation labor at jobsite.

1.3.4 Foundation, embeds, and anchor bolts.

1.3.5 Electric power supply.

1.3.6 External wiring.

1.3.7 External connection to Buyer's instrumentation and controls.

1.3.8 Control system.

1.3.9 Piping external to the Activated Carbon Bed Adsorber unit package.

1.3.10 Pressure drop indicators for pressure drop piping connections.

1.3.11 Installation of insulation.

1.3.12 Instrument racks.

1.4 Acronyms

AGS	American Glovebox Society
AISC	American Institute of Steel Construction
ASD	Adjustable Speed Drive
ASME	American Society of Mechanical Engineers
ASTM	International Society for Testing and Materials
AWS	American Welding Society
CFD	Computational Fluid Dynamics
CFR	Code of Federal Regulations
3-D	Three-Dimensional
DF	Decontamination Factor
DOE	US Department of Energy

ESF	Engineered Safety Feature
ERDA	Energy Research and Development Administration
FMEA	Failure Mode and Effect Analysis
HEPA	High Efficiency Particulate Air
HCl	Hydrogen Chloride
HLW	High Level Waste
HF	Hydrogen Fluoride
HVAC	Heating, Ventilation, and Air-Conditioning
HOP	High Level Waste Secondary Offgas Treatment System
FFB	Foundation Field Bus
ICN	Integrated Control Network
IEEE	Institute of Electrical and Electronics Engineers
ISA	Instrument Service Air
ITS	Important to Safety
LAW	Low Activity Waste
LVP	Low Activity Waste Secondary Offgas System
MR	Material Requisition
MDS	Mechanical Data Sheet
MSDS	Material Safety Data Sheet
NDE	Nondestructive Evaluation/Examination
NRTL	Nationally Recognized Testing Laboratory
ORP	Office of River Protection
OSHA	Occupational Safety and Health Administration
P&ID	Piping and Instrumentation Diagram
PMI	Positive Material Identification
PPE	Personal Protection Equipment
ppm	Parts per million
psf	pounds per square foot (lb/ft^2)
PSV	Pressure Safety Valve
QA	Quality Assurance
QAP	Quality Assurance Program
QL	Quality Level
SC	Seismic Category
scfm	Standard Cubic Feet per Minute

SDDR	Supplier Deviation Disposition Request
SS	Stainless Steel
TBD	To Be Determined
UL	Underwriters Laboratories, Inc.
VSL	Vitreous State Laboratory of The Catholic University of America
WAC	Washington Administrative Code
WTP	Hanford Tank Waste Treatment and Immobilization Plant

1.5 Definitions

Activated Carbon Bed Adsorber Unit: Refers to complete Carbon Bed equipment assembly. This includes two (2) full capacity Carbon Bed Adsorbers, connecting pipe work, valves, instrumentation, and support frame for Carbon Bed Adsorbers and piping.

Activated Carbon Bed Adsorber expert: One who has extensive knowledge regarding the characteristics and application of Activated Carbon Bed Adsorbers. Must have a minimum of five (5) years experience.

Adsorbent Media: A solid having the ability to concentrate and hold other substances.

Adsorber: A device or vessel containing adsorbent (e.g., an adsorber cell filled with adsorbent).

Bag-in/Bag-out: A method of introducing and removing items from a contaminated enclosure where a bag provides a physical barrier at all times during the operation that prevents the spread of contamination.

Buyer's Representative(s): The Buyer's designee(s), who shall witness onsite operations at the seller and sub-seller sites and perform onsite inspections and surveillance.

Bypass, Leakage: A pathway through which contaminated air can escape treatment by the installed HEPA and/or adsorber banks. Examples are leaks in filters and filter mounting frames, defective or inefficient isolation dampers that result in the uncontrolled flow through adjacent plenums, and unsealed penetrations for electrical conduits, pipes, floor drains, etc.

Challenge Gas: A gas of known characteristics, under specified conditions, used for the purpose of testing. For in-shop and in-place/field testing of adsorbers required by this specification. The challenge gas to be used shall depend on what is recommended by the Activated Carbon Bed Adsorber manufacturer. Challenge gas shall be an environmentally safe non-ozone depleting substance, if possible.

Engineered Safety Feature (ESF): A nuclear air treatment system, HVAC system, gas processing system, or a component that serves to control and limit the consequences of releases of energy and radioactivity.

Glovebag: A temporary barrier to contain or prevent the spread of contamination generally during system maintenance or production. The area or component is surrounded by the portable glovebox boundary material, usually a flexible plastic film. Personnel perform work inside the glovebag through glovesleeves and gloves while remaining outside the containment area. Other access ports are provided to allow for equipment and service penetrations as necessary. Additional openings can be provided through the use of zippers, velcro closures, and bag-out ports.

HEPA Filter: A high efficiency particulate air filter having a fibrous medium with a particle removal efficiency of at least 99.97 % when tested with essentially monodispersed 0.3 μm test aerosol particles.

Mounting Frame: A structure against which adsorbers may be snugly mounted and supported in a position that permits the passage of air or gas and provides a surface to hold the sealing gasket, thereby avoiding a potential bypass or leakage path for the non-filtered air or gas.

Paragraph: When a paragraph of this specification, referenced documents, referenced codes, or referenced standards is referenced in this specification, the paragraph referenced and all subparagraphs and sub-subparagraphs of the paragraph referenced shall be considered inclusive.

Quality Level: The quality level identifies the quality requirements to be applied to the equipment. The identified quality levels are Q and CM (Commercial). Quality requirements are specifically defined on the associated mechanical data sheets (MDSs) and supplier quality assurance program (QAP) requirements data sheets.

Seismic Category: Specific requirements for each seismic category are defined in reference documents listed in section 2.4 of this specification.

Special Tools: Any tooling required to perform maintenance on the Activated Carbon Bed Adsorber unit or for Activated Carbon Bed Adsorber and discharge filter removal and replacement. Includes tools that must be specially designed and fabricated and tools that are readily available in the commercial market.

1.6 Safety/Quality Classifications

1.6.1 Activated Carbon Bed Adsorber units for HLW shall meet the quality level requirements of Q as shown on the associated MDSs and supplier quality assurance program requirements data sheet. Seismic category shall be SC-III as shown on the associated MDSs and defined in reference documents listed in section 2.4 of this specification.

1.6.2 Activated Carbon Bed Adsorber units for LAW shall meet the quality level requirements of Q as shown on the associated MDSs and supplier quality assurance program requirements data sheet. Seismic category shall be SC-III as shown on the associated MDSs and defined in reference documents listed in section 2.4 of this specification.

2 Applicable Documents

2.1 General

2.1.1 Work shall be done in accordance with the referenced codes, standards, and documents listed below, which are an integral part of this specification.

2.1.2 When specific chapters, sections, parts, or paragraphs are listed following a code, industry standard, or reference document, only those chapters, sections, parts, or paragraphs of the document are applicable and shall be applied. For the codes and standards listed in section 2, the specific revision or effective date identified, as well as the specific revision or effective date of codes and standards that they incorporate by reference (daughter codes and standards), shall be followed. If a date or revision is not identified, the latest issue, including addenda, at the time of quotation, shall apply. The effective dates and revisions listed in section 2 shall apply to subsequent references to the codes and standards within this specification. When more than one code, standard, or referenced document covers the same topic, the requirements for all must be met with the most stringent governing. The use of any other edition, revision, or issue requires buyer's approval.

2.1.3 Unless specified otherwise, requirements apply to both HLW and LAW design, fabrication, testing, storage, and handling.

2.2 Codes

2.2.1 ASME AG-1-1997, Code on Nuclear Air and Gas Treatment, Sections AA, FE, FF, and TA. See Appendix D for WTP specific tailoring.

2.2.2 ASME AG-1a-2000, Addenda to ASME AG-1-1997 Code on Nuclear Air and Gas Treatment, Section HA.

2.2.3 ASME B31.3-1996, Process Piping. See Appendix E for WTP specific tailoring.

2.2.4 ASME Boiler and Pressure Vessel Code, Section VIII, Div. 1, Rules for Construction of Pressure Vessels.

2.2.5 DOE-RL-92-36, Hanford Site Hoisting and Rigging Manual.

2.2.6 AWS D1.6, Structural Welding Code-Stainless Steel.

2.2.7 Delete.

2.2.8 AISC (ASD), 9th Edition, American Institute of Steel Construction. See Appendix F for WTP specific tailoring.

2.2.9 29 CFR 1910, Occupational Safety and Health Standards (OSHA).

2.3 Industry Standards

2.3.1 AGS-G001 ©1998, Guideline for Gloveboxes, Second Edition.

2.3.2 ASME N509-1989, Nuclear Power Plant Air-Cleaning Units and Components, Sections 1, 2, 3, 4 – (Paragraphs 4.3, 4.4, 4.6.1 through 4.6.7.2, 4.11, 4.12. 4.13(a)), 5 – (Paragraphs 5.5, 5.6.5.5 and 5.6.5.6), 7 – (Paragraph 7.2), 8 – (Paragraph 8.2), 9, Appendix C, and Appendix D.

2.3.3 ASME N510-1989, (Rev.1995), Testing of Nuclear Air Treatment Systems, Sections 1 through 8, 11, 13, 14, 15, and appendices.

2.3.4 ASME NQA-1-1989, Quality Assurance Program Requirements for Nuclear Facilities. See Appendix G for WTP specific tailoring.

2.3.5 ASME Y14.100, Engineering Drawing Practices.

2.3.6 ASTM E84, Standard Test Method for Surface Burning Characteristics of Building Materials.

2.3.7 ASTM F593, Standard Specification for Stainless Steel Bolts, Hex Cap Screws, and Studs.

2.3.8 ASTM F594, Standard Specification for Stainless Steel Nuts.

2.3.9 ERDA 76-21, Nuclear Air Cleaning Handbook, Chapter 1 (All), Chapter 2 (Paragraphs 2.1 through 2.4.16), Chapter 3 (Paragraphs 3.1, 3.4.1, 3.4.2, 3.4.5, 3.4.6), Chapter 4 (Paragraphs 4.3 through 4.3.5, 4.5.9), Chapter 7 (All), Chapter 8 (All), Chapter 9 (Paragraph 9.4.1).

2.3.10 NACE Standard RP0198, The Control of Corrosion Under Thermal Insulation and Fireproofing Materials-A Systems Approach.

2.3.11 PIP INIH1000, Hot Insulation Installation Details.

2.3.12 RR-C-271D, Federal Specification for chains and attachments, welded and weldless.

2.3.13 NEMA 4, Enclosures for Electrical Equipment.

2.3.14 IEEE Std. 384, Standard Criteria for Independence of Class 1E Equipment and Circuits. See Appendix H for WTP specific tailoring.

2.3.15 IEEE Std. 323, Standard for Qualifying Class 1E Equipment for Nuclear Power Generating Stations. See Appendix I for WTP specific tailoring.

2.3.16 IEEE Std. 344, Recommended Practice for Seismic Qualification of Class 1E Equipment for Nuclear Power Generating Stations. See Appendix J for WTP specific tailoring.

2.4 Reference Documents/Drawings

2.4.1 24590-WTP-3PS-G000-T0001, *General Specification for Supplier Quality Assurance Program Requirements*

2.4.2 24590-WTP-3PS-G000-T0002, *Engineering Specification for Positive Material Identification (PMI) for Shop Fabrication*

2.4.3 24590-WTP-3PS-G000-T0003, *Engineering Specification for Packaging, Handling, and Storage Requirements*

2.4.4 24590-WTP-3PS-NWP0-T0001, *Engineering Specification for General Welding and NDE Requirements for Supplier Fabricated Piping*

2.4.5 24590-WTP-3PS-MVB2-T0001, *Engineering Specification for Welding of Pressure Vessels, Heat Exchangers and Boilers*

2.4.6 24590-WTP-3PS-JQ07-T0001, *Engineering Specification for Instrumentation for Package Systems*

2.4.7 24590-WTP-3PS-SS00-T0001, *Engineering Specification for Welding of Carbon Structural Steel*

2.4.8 24590-WTP-3PS-SS00-T0002, *Engineering Specification for Welding of Structural Stainless Steel and Welding of Structural Carbon Steel to Structural Stainless Steel*

2.4.9 24590-WTP-3PS-FB01-T0001, *Engineering Specification for Structural Design Loads for Seismic Category III and IV Equipment and Tanks*

2.4.10 24590-WTP-3PS-NN00-T0001, *Engineering Specification for Thermal Insulation for Mechanical Systems*

2.4.11 24590-WTP-3PS-JA03-T0001, *Engineering Specification for Gas Analyzers*

2.4.12 24590-WTP-3PB-P000-TS11V, *Piping Material Classification, Pipe Class S11V*

2.4.13 24590-WTP-3PB-P000-TS11N, *Piping Material Classification, Pipe Class S11N*

2.4.14 24590-WTP-3PS-PV00-T0001, *Engineering Specification for Technical Supply Conditions for Valves*

2.4.15 24590-WTP-3PS-JV15-T0001, *Engineering Specification for Actuators for On/Off Valves*

2.4.16 24590-WTP-3PS-EKP0-T0001, *Engineering Specification for Electrical Requirements for Packaged Equipment*

2.4.17 24590-WTP-3PS-MUMI-T0002, *Engineering Specification for Low Voltage Induction Motors*

2.4.18 24590-WTP-3PS-PS02-T0001, *Engineering Specification for Shop Fabrication of Piping*

2.4.19 24590-WTP-3PS-MV00-T0001, *Engineering Specification for Pressure Vessel Design and Fabrication*

2.4.20 24590-WTP-3PS-JQ06-T0005, *Environmental Qualification of Control and Electrical Systems and Components*

2.4.21 24590-WTP-J8-50-00001, *Controls and Instrumentation Radar Installation Wave Guide Spool Joining Details.*

2.4.22 24590-WTP-MV-M59T-00016002, *Vessel Connections Standard Details Sheet 2 of 3*

2.4.23 24590-WTP-3PS-AFPS-T0001, *Engineering Specification for Shop Applied Special Protective Coatings for Steel Items and Equipment*

2.4.24 24590-WTP-3PS-G000-T0015, *Engineering Specification for Environmental Qualification of Mechanical Equipment*

2.4.25 24590-WTP-3PS-G000-T0014, *Engineering Specification for Supplier Design Analyses*

2.4.26 24590-HLW-M6-HOP-00011, *P&ID - HLW Melter Offgas System Melter 1 Secondary Offgas Treatment Sheet 3 of 3.*

2.4.27 24590-HLW-M6-HOP-20011, *P&ID - HLW Melter Offgas System Melter 2 Secondary Offgas Treatment Sheet 3 of 3.*

2.4.28 24590-LAW-M6-LVP-00004, *P&ID - LAW Melters Secondary Offgas Vessel Vent Process System Mercury Mitigation Equipment.*

3 Design Requirements

3.1 General Requirements

3.1.1 The Activated Carbon Bed Adsorbers and support frame shall be designed per this specification, the applicable documents listed in section 2 of this specification, and the MDSs in section 2 of the purchasing documents.

3.1.2 The detailed design of the Activated Carbon Bed Adsorbers shall be performed by personnel who have past experience in the design, fabrication, and testing of Activated Carbon Bed Adsorber banks or HEPA filter banks to meet the requirements set forth in ASME AG-1, ASME AG-1a, and NQA-1. Qualifications for personnel conducting the detailed design of the Activated Carbon Bed Adsorber shall be provided to the Buyer for review.

3.1.3 All calculations, modeling, analyses, drawings, and documentation shall be performed and/or completed using U.S. customary units.

3.1.4 The design of the Activated Carbon Bed Adsorber pressure boundary shall be per the requirements of ASME Boiler and Pressure Vessel Code, Section VIII, Div.1. (Code stamp is not required) Design pressure used shall be as specified on the MDSs. Design temperature shall be determined by Seller based on thermal analysis specified in section 3.13.5 for conditions generated during a carbon bed fire.

3.1.5 The design of the Activated Carbon Bed Adsorbers shall be per Seller and shall meet the performance requirements of this specification, appendices, and MDSs in section 2 of the purchasing documents.

3.1.6 Each Activated Carbon Bed Adsorber shall be equipped with a fire suppression system. Fire detection shall include a combination of CO monitors and carbon bed temperature monitors for fire detection. Refer to Figure 1 and 2 for additional information related to CO/COx monitors and temperature monitors specific to each HLW and LAW Activated Carbon Bed Adsorber. (For HLW, each fire detection system shall allow the isolation of one carbon bed upon detection of a fire, such that one Activated Carbon Bed Adsorber will not affect the fire detection capability in the other unit.) Refer to Figure 1 for HLW CO monitor and isolation valve configuration requirements. (For LAW, COx monitors shall be located on the inlet and outlet of the Activated Carbon Bed Adsorber unit.) LAW Activated Carbon Bed Adsorber shall only be isolated with pneumatic valves on the inlet as shown in Figure 2.

3.1.7 The Activated Carbon Bed Adsorbers shall be designed for carbon bed isolation as the primary means of fire suppression. Seller shall also design a water flood fire suppression system in accordance with applicable requirements of ASME AG-1, subarticle FE-4620, and MDSs in section 2 of the purchasing documents. Seller shall account for increased pressure inside the carbon bed vessel caused by activation of the fire suppression system and flooding of the carbon bed with water. (i.e. PSV valves with vent lines routed to offgas piping downstream of isolation.) Seller shall work closely with Buyer in determining required flow-rates for fire suppression water.

3.1.8 The Activated Carbon Bed Adsorber units and all permanently attached appurtenances (i.e. piping manifold, insulation, valves, and maintenance platforms) shall be designed to fit within the space envelope specified on the MDSs in section 2 of the purchasing documents.

3.1.9 Piping including supports shall be designed per the requirements of ASME B31.3 (Process Piping). Flanges used for connection to Buyer's piping shall be class 150 and meet the requirements of ASME B31.3.

3.1.10 The CFD model and analysis, thermal analysis, Activated Carbon Bed Adsorber analysis, and seismic analysis to be provided per this specification must verify that the final detailed design of the Activated Carbon Bed Adsorber and support frame meets the requirements set forth in this specification.

3.1.11 Each Activated Carbon Bed Adsorber Bed unit shall include all items listed or implied including, but not limited to, the following:

- Housing with inlet, outlet, support frame with anchorage provisions, platform supports, discharge filter receiver, piping connections and manifolds for testing and sampling, piping connections for pressure drop indication, insulation supports and hold-downs, lifting lugs, internal baffles, and mixing vanes (if mixing vanes required).
- Fire suppression system, inlet and drain piping, shall be piped to equipment edge with flange.
- Activated Carbon Bed Adsorbers, with pneumatic loading and gravity unloading of activated carbon.
- Platform with grating and guardrails

3.1.12 All testing and sampling piping, connections, ports, and manifolds shall be permanently attached to the Activated Carbon Bed Adsorbers and easily accessible for shop and field testing. If required pipe length is not feasible within the space envelope or down stream of

carbon bed isolation valves, the Seller shall supply mixing vanes/diffusers to adequately mix test gases in accordance with applicable code requirements. Refer to Figures 1 and 2 for additional clarification on test port locations. The Seller shall work closely with the Buyer to determine best locations for testing and sampling piping, connections, ports, and manifolds.

3.1.13 The Activated Carbon Bed Adsorbers shall be designed for use with a bag-in/bag-out procedure to be developed by the Seller to facilitate adsorber removal and replacement operations. The Seller shall work closely with the Buyer on developing the bag-in/bag-out procedure.

3.1.14 The Activated Carbon Bed Adsorber shall be designed to attach insulation to the exterior of the pressure boundary. The design shall ensure the insulation is installed per the requirements of Buyer Specification 24590-WTP-3PS-NN00-T0001, *Thermal Insulation for Mechanical Systems* and section 4.3 of this specification.

3.1.15 Containment of melter offgas is an ITS function of the activated carbon bed adsorber units for both HLW and LAW. Design of the pressure boundary and support frame shall ensure containment of melter offgas during nominal, maximum, and design conditions. Pressure boundary must also be maintained during and post SC-III event. Refer to Tables 1 and 2 included in this specification for a detailed breakdown of ITS and Non-ITS equipment/components.

3.2 Basic Function

3.2.1 General

3.2.1.1 Each offgas stream consists of two (2) Activated Carbon Bed Adsorbers that can be operated in either series or parallel with the ability to isolate one unit for maintenance during operation. During normal operation, the Activated Carbon Bed Adsorbers will operate in a lead/lag series arrangement.

3.2.1.2 The Activated Carbon Bed Adsorber units are located downstream of HEPA filter banks operating with a minimum particulate removal efficiency of 99%.

3.2.1.3 Each Activated Carbon Bed Adsorber unit shall consist of a vessel, connecting piping, air actuated on/off control valves, adsorber bed(s), insulation, water fire suppression system, and a discharge filter.

3.2.2 HLW Activated Carbon Bed Adsorber

3.2.2.1 HLW Activated Carbon Bed Adsorbers shall be used to remove mercury (Hg) from the HLW melter secondary offgas HOP system.

3.2.2.2 Each Activated Carbon Bed Adsorber vessel shall be designed with a Seller specified activated carbon media and number of beds to meet performance criteria specified in section 3.4 of this specification and the MDSs in section 2 of the purchasing documents.

3.2.3 LAW Activated Carbon Bed Adsorber

3.2.3.1 LAW Activated Carbon Bed Adsorber shall be used to remove mercury (Hg), iodine (I2), HCl, and HF from the LAW melter secondary offgas LVP system.

3.2.3.2 Each Activated Carbon Bed Adsorber vessel shall be designed with a Seller specified activated carbon media and beds to meet performance criteria specified in section 3.4 of this specification and the MDSs in section 2 of the purchasing documents. The Seller may supply separate or mixed beds for acid gas removal.

3.3 Optional Electric Preheater

3.3.1 If determined necessary by Seller, to prevent condensate from forming in the activated carbon media during startup or after replacement, the Seller shall propose an electric preheater.

3.3.2 Electric preheater shall use an electric element and fan to preheat the carbon bed upon start-up or after media replacement.

3.3.3 The preheater shall be mounted on a 4 ft by 4 ft skid frame that must be located within the space envelope specified in the MDSs in section 2 of the purchasing documents.

3.3.4 Seller shall submit proposed control system and instrumentation for the preheater in accordance with Buyer specification 24590-WTP-3PS-JQ07-T0001 *Instrumentation for Package Systems*, and with the requirements of this specification.

3.4 Performance

3.4.1 General

3.4.1.1 The Activated Carbon Bed Adsorber units shall be designed for a minimum service life of 40 years. Where specific components cannot meet the specified service requirement, they shall be identified, and a mechanism for their replacement and/or maintenance shall be incorporated into the design. Refer to section 10.1.12 of this specification for additional component design reliability requirements.

3.4.1.2 The Activated Carbon Bed Adsorbers shall be designed for a minimum adsorbent life expectancy as required by the MDSs when operating 8,760 hours per year.

3.4.1.3 As applicable to design, the root mean square of the velocities in a traverse shall be within ± 20 % of the average velocity across the front face of the Activated Carbon Beds. If required, ports shall be provided on one foot intervals to confirm velocity distribution.

3.4.1.4 Instrumentation, valves, and related appurtenances shall meet the performance requirements of Buyer specification 24590-WTP-3PS-JQ07-T0001, *Instrumentation for Package Systems*.

3.4.1.5 Actuators for On/Off valves shall meet the performance requirements of Buyer specification 24590-WTP-3PS-JV15-T0001, *Actuators for On/Off Valves*.

3.4.2 HLW

3.4.2.1 Refer to MDSs in Section 2 of the purchasing documents for specified mercury decontamination factors (DF)/removal efficiencies and carbon media design life requirements.

3.4.2.2 Carbon media performance shall be affirmed by warranty testing specified in Appendix B of this specification.

3.4.3 LAW

3.4.3.1 Refer to MDS in Section 2 of the purchasing documents for specified mercury, iodine, HCl, and HF decontamination factors (DFs)/removal efficiencies and carbon media design life requirements.

3.4.3.2 Carbon media performance shall be affirmed by warranty testing specified in Appendix B of this specification.

3.5 Design Conditions

3.5.1 The Activated Carbon Bed Adsorber units shall be designed to meet design conditions specified in the MDSs in Section 2 of the purchasing documents.

3.5.2 The Activated Carbon Bed Adsorber units shall be considered non-ESF as defined in ASME AG-1, Article AA-1000.

3.5.3 The Activated Carbon Bed Adsorber units shall be designed to meet Level C service limits as defined in ASME AG-1, Paragraph AA-4214.

3.6 Environmental Conditions

3.6.1 The HLW Activated Carbon Bed Adsorber units will be installed indoors in an area maintained between 59 °F and 83 °F dry-bulb temperature during normal operation. The LAW Activated Carbon Bed Adsorber unit will be installed indoors in an area maintained between 59 °F and 95 °F dry-bulb temperature during normal operation. HLW and LAW Nominal radiation exposure is 10 mRad/hr. See Equipment Environmental Qualfication data, located in the MDSs, for additional room environmental conditions.

3.6.2 Prior to installation, the Activated Carbon Bed Adsorber units may be stored outdoors at ambient temperature extremes ranging from (-)35 °F dry-bulb to 118 °F dry-bulb and a relative humidity of 0 to 100%.

3.6.3 Control and electrical equipment required to meet ITS functions of containment of melter offgas, bed isolation for fire suppression, and prevention of flooding of secondary offgas system on introduction of liquids (LAW only) shall be designed and fabricated to meet environmental qualifications in accordance with engineering specification 24590-WTP-3PS-JQ06-T0005, *Engineering Specification for Environmental Qualification of Control and*

Electrical Systems and Components, for a harsh environment. See Table 1 and 2 for list of ITS components.

3.6.4 *Control and electrical equipment shall be exposed to a maximum room temperature of 161* °F for LAW and 153 °F for HLW. See Equipment Environmental Qualification data, located in the MDSs, for additional room environmental conditions.

3.6.5 Mechanical equipment/components required to meet ITS functions of containment of melter offgas, bed isolation for fire suppression, and prevention of flooding of secondary offgas system on introduction of liquids (LAW only) shall be designed and fabricated to meet environmental qualifications in accordance with engineering specification 24590-WTP-3PS-G000-T0015, *Engineering Specification for Environmental Qualification of Mechanical Equipment*, for a harsh environment. See Table 1 and 2 for list of ITS components.

3.7 Mechanical Requirements

3.7.1 General

3.7.1.1 Sample ports shall be provided downstream of each bed for monitoring HCl and HF.

3.7.1.2 Each carbon bed shall be equipped with three (3) vertical and three (3) horizontal ports to obtain physical samples at three locations within the bed. The Seller shall provide special tools to physically retrieve samples. Seller may also propose the use of cylindrical media samples located external to the housing.

3.7.1.3 Valves and actuators shall meet the requirements of Buyer specification 24590-WTP-3PS-PV00-T0001, *Technical Supply Conditions for Valves*, and 24590-WTP-3PS-JV15-T0001, *Actuators for On/Off Valves*. Valve type, fail position, material, and flange requirements shall be as specified on the MDSs in section 2 of the purchasing documents. Refer to figures 1 and 2 for additional information.

3.7.2 Loadings

3.7.2.1 Pneumatic loading shall lift activated carbon media to the fill chute. The carbon media shall be gravity loaded through the fill chute. If permissible in the equipment space envelope required on the MDSs, Seller may propose an alternative loading system using an integral jib crane to lift carbon media super sacks for bulk loading.

3.7.2.2 Pneumatic loading system shall be complete with hopper, piping, vacuum blower, mounting equipment, and air filters necessary to safely lift the activated carbon adsorbent media. If determined necessary by Seller, vibration equipment shall be designed and supplied for loading of the carbon media into the Activated Carbon Bed Adsorbers.

3.7.2.3 The loading equipment shall be transferable to other Activated Carbon Bed Adsorber units within that facility. Rate of loading shall be specified by the Seller to minimize possible damage or degradation of the Activated Carbon Media.

3.7.2.4 Transferable loading equipment may be located in maintenance aisle ways as shown in the MDSs in section 2 of the purchasing documents. Location shall be specified by the Seller. Seller shall work closely with the Buyer with respect to equipment size.

3.7.3 Unloading System

3.7.3.1 Spent carbon media shall be gravity unloaded directly into 55 gal drums for disposal. Seller shall allow for clearance of the 55 gal drum and bag-in/bag-out operations in accordance with applicable code requirements. If required to meet the space envelope specified in the MDSs, the Seller may propose the use an unloading system to elevate the carbon media into a 55 gal drum. Buyer prefers to use loading equipment for unloading.

3.7.3.2 If determined necessary by Seller, vibration equipment shall be designed and supplied for unloading of the carbon media.

3.7.3.3 Spent carbon is considered hazardous and potentially radioactive and must be contained during unloading through the use of a bag-out procedure as required in section 3.11 of this specification.

3.8 Discharge Filter Requirements

3.8.1 The discharge filters for the Activated Carbon Bed Adsorber units shall be rated for at least 300 °F with an efficiency of 99% at 5 microns and have a minimum capacity of two (2) times the design flowrate. Each discharge filter shall also be equipped with a differential pressure gage to measure pressure drop across the filter.

3.9 Lifting Requirements

3.9.1 Lifting lugs shall be installed on each Activated Carbon Bed Adsorber unit for balanced lifting and handling. Seller shall identify the weight and center of gravity of each unit and submit a report for Buyer review.

3.9.2 All lifting points shall be designed and tested in accordance with the requirements of Buyer specification 24590-WTP-3PS-G000-T0003, *Packaging, Handling, and Storage Requirements*. The allowable design stress shall equal the applicable code allowable design stress at ambient temperature.

3.9.3 The lifting lugs shall be designed to permit lifting of the Activated Carbon Bed Adsorber units without distortion or damage to the components or lifting lugs.

3.9.4 Lifting lugs shall be accessible without removal of covers and guardrails.

3.9.5 The lifting lugs must accept standard lifting equipment. Chain blocks or braiding shall not be permitted. If applicable, the lifting lugs shall be designed to accept Crosby shackles or equivalent meeting Federal Specification RR-C-271D.

3.9.6 Sampling and testing connections and ports shall not be used for lifting.

3.9.7 Seller shall provide any special designed equipment that is required to handle the component and is not available from a commercial source. Such equipment may include but is not limited to rigging devices such as spreader beams, structural lifting devices, strongbacks, and yokes. Rigging devices shall be designed, tested, and tagged in accordance with the applicable requirements of DOE-RL-92-36.

3.9.8 All lifting points on the Activated Carbon Bed Adsorber units shall be proof tested in shop. Test and examination certificates shall be provided to the Buyer for review.

3.10 Loadings

3.10.1 The Activated Carbon Bed Adsorber and support frames shall be self-supporting, capable of carrying the static loads of components, thermal expansion loads, seismic loads, full flood fire suppression water loads, and capable of handling the stresses imposed during shipment, installation, and operation.

3.10.2 Loads to be considered for the structural design of the Activated Carbon Bed Adsorbers and support frame shall be in accordance with applicable codes, standards, and reference documents listed in section 2 of this specification. As a minimum, loadings and stresses to be imposed shall meet Level C service limits as described in ASME AG-1, Paragraph AA-4214 and be in accordance with Buyer specification 24590-WTP-3PS-FB01-T0001, *Engineering Specification for Structural Design Loads for Seismic Category III and IV Equipment and Tanks.*

3.10.3 Loads and stresses imposed for design of the vessel housings shall be in accordance with ASME Boiler and Pressure Vessel Code, Section VIII, Div. 1.

3.10.4 Nozzle design shall consider seismic, thermal, and combination loads. Loads shall be in accordance with the requirements of the MDSs in section 2 of the purchasing documents.

3.11 Bag-in/Bag-out Procedure Requirements

3.11.1 Seller shall provide a detailed bag-in/bag-out procedure using a pneumatic loading system and gravity unloading of the Activated Carbon Bed Adsorber media and discharge filters using PPE, bags, a glovebag (if required), and special tools. Procedure shall assume carbon bed is isolated and not in operation. If unloading system is used, Seller's bag-out procedure shall include this additional equipment.

3.11.2 Bag-in/bag-out procedure shall note the necessary steps needed to safely bag-out media after a water deluge (i.e. additional drying of media, vibration, etc.).

3.11.3 Procedure shall include proposed means of activated carbon adsorbent media delivery (i.e. 40 lb bags, 55 gal drums, etc.).

3.11.4 Seller shall work with Buyer to determine PPE requirements to be included in the procedure for personnel conducting adsorbent and filter removal and replacement.

3.11.5 If a glovebag is required to perform the bag-in/ bag-out procedure, it shall conform to AGS-G001, and ERDA 76-21, Paragraph 2.2.1 and Chapter 7. Seller shall work with Buyer to determine whether or not a glovebag will be necessary.

3.11.6 Drawings of bags and glovebag (if glovebag is required) to be used shall be included in the bag-in/bag-out procedure. Drawings shall show configuration with dimensions and identify any equipment, filters, either/or apparatus to be an integral part of the bags and glovebag. Drawings shall also identify material, manufacturer, either/or model numbers of all bag and glovebag components.

3.11.7 The bag-in/bag-out procedure shall be written to ensure that confinement is not broken at any time.

3.11.8 Personnel shall not need to break the plane of the pressure boundary or discharge filter access openings at any time to perform the bag-in/bag-out procedure.

3.12 CFD Model and Analysis Requirements

3.12.1 The 3-D CFD model, required per section 1 of this specification, shall demonstrate the effects of internal structures and components on offgas flow distribution through the Activated Carbon Bed Adsorbers.

3.12.2 The 3-D CFD model shall include the following components of the Activated Carbon Bed Adsorber units:

- Housing including inlet (with transition fittings and necessary inlet piping to model turbulent flow entering the unit), outlet, inlet plenum, outlet plenum, discharge filter, manifolds for testing and sampling, and any required internal baffles, mixing vanes, and/or cross-venting holes.
- Activated carbon bed(s).

3.12.3 The 3-D graphical results from the CFD model shall include:

- Analysis of changes to the Activated Carbon Bed Adsorber units to enhance offgas flow effectiveness.
- Analysis of the effect of including additional baffles, mixing vanes, and/or cross-venting holes as required to study local offgas flow effects to achieve uniform offgas flow distribution through the adsorbers.
- Analysis of changes to the Activated Carbon Bed Adsorber units to minimize the overall dimensions.

3.12.4 The 3-D graphical results from the CFD model shall demonstrate uniform offgas distribution through the adsorber beds at 75% of the design flowrate with ± 10 % variation in flowrate.

3.12.5 Provide pressure drop to velocity relationship per adsorber bed(s) as part of the CFD analysis based on carbon media testing.

3.12.6 The Seller shall provide the documented results from the 3-D CFD analysis in report form to the Buyer. The CFD report shall provide a complete offgas flow analysis and shall include 3-D graphical results of the model and any calculations performed. The reports shall, at minimum, include:

- Definition of analysis objective
- Identification of equipment for analysis

- General description of equipment supplemented by drawings and sketches
- Functional requirements per this specification
- Purpose of analysis
- Definition of design criteria and inputs with corresponding sources
- Results of literature searches and other applicable background data
- Applicable codes, standards, and reference documents per section 2 of this specification broken down by chapter, section, and paragraph, as applicable
- Analysis methodology
- Description of computer(s) used to conduct analysis
- Description of software/computer programs used for modeling and any calculations and limitations, justification for choice of program, and evidence and description of program validation method.
- Assumptions (indicate those that must be verified as the design proceeds)
- Analyses conducted with results
- Summary of analysis results
- Conclusions
- Location for Buyer review signatures

All assumptions shall be plainly identified and data present (including their uncertainty) with precise logic. Actual accomplishments of the work shall be clearly stated.

3.12.7 The final CFD report shall convey information to several disciplines, many of whom may be less familiar with the general subject than the authors. Care shall be taken to use simple statements and expressions and to make statements as concise as possible. If highly technical terms are necessary, they shall be adequately explained and defined.

3.13 Thermal Requirements

3.13.1 Refer to MDSs in section 2 of the purchasing documents for mechanical design data pertaining to thermal design information.

3.13.2 Thermal analyses shall include the effects of stresses resulting from potential variations in temperatures due to startup, normal operation, shutdowns, carbon bed fire, and thermal cycling of the Activated Carbon Bed Adsorber units. Analyses shall determine nozzle deflections in all directions per thermal expansion or other approved method. The calculations shall consider that the maintenance platforms shall be connected together with mechanical fasteners during normal operation.

3.13.3 Thermal analyses shall confirm the insulation temperature of Seller selected insulation and all exterior uninsulated portions of the Activated Carbon Bed Adsorber units with potential for personnel exposure, do not exceed 140 °F at maximum design temperature, in accordance with the requirements of Buyer specification 24590-WTP-3PS-NN00-T0001, *Thermal Insulation for Mechanical Systems*. Thermal calculations shall also confirm heat loss to the room is within the requirements of the MDSs. Refer to section 4.3 of this specification for addition insulation requirements.

3.13.4 The thermal analyses shall confirm the thickness and extent of insulation required on the bottom of the Activated Carbon Bed Adsorber units so that the average temperature of the

Buyer's concrete foundation directly under and within three feet of the skid boundary does not exceed 100 °F.

3.13.5 Seller shall perform a thermal analysis to determine and define the thermal conditions generated during a carbon bed fire. This analysis shall define the maximum and design temperatures for the carbon bed pressure boundary and isolation valves. Seller shall determine equilibrium design temperature for a carbon bed fire based on Seller specified CO/COx analyzer set points and the carbon bed being isolated. This equilibrium design temperature shall be used in ASME Boiler and Pressure Vessel Code, Section VIII, Div.1 calculations for design of the Activated Carbon Bed Adsorber pressure boundary. If determined necessary, based on Seller operating procedures, operators shall have the option of activating the water deluge fire suppression system. Seller shall assume a minimum response time of one hour or any operator action. Design temperature determined by this thermal analysis shall confirm valve selection (valve material, seat material, leak tightness, etc.) for pressure boundary valves and process isolation valves.

3.14 Activated Carbon Bed Adsorber Design Analysis Requirements

3.14.1 The Seller shall conduct and submit separate Activated Carbon Bed Adsorber design analyses for LAW and HLW facilities. The design analysis of the Activated Carbon Bed Adsorber units shall be conducted by an Activated Carbon Bed Adsorber expert to determine the expected adsorbent changeout frequency for the final Activated Carbon Bed Adsorber design. Seller shall provide personnel qualifications to the Buyer for review prior to beginning adsorber design.

3.14.2 Analysis shall be conducted considering operation of the Activated Carbon Bed Adsorber units at design conditions outlined in this specification and MDSs.

3.14.3 Analysis shall determine expected adsorbent changeout frequency based on the gas composition and load information specified in the MDSs in Section 2 of the purchasing documents.

3.14.4 Assume that the offgas flow through the Activated Carbon Bed Adsorbers may vary as much as ± 10 % from the design flowrate specified in the MDSs in section 2 of the purchasing documents.

3.14.5 Seller shall provide the documented results of the Activated Carbon Bed Adsorber analysis with any graphical results, as applicable, in report form to the Buyer prior to fabrication. Refer to section 3.12.6 and 3.12.7 for the minimum requirements of the report.

3.14.6 The final Activated Carbon Bed Adsorber design analysis report shall convey information to several disciplines, many of whom may be less familiar with the general subject than the authors. Care shall be taken to use simple statements and expressions and to make statements as concise as possible. If highly technical terms are necessary, they shall be adequately explained and defined.

3.15 Electrical Requirements

3.15.1 Electrical equipment necessary to meet the requirements of this specification and appendices shall be designed, fabricated, and tested in accordance with Buyer specification 24590-WTP-3PS-EKP0-T0001, *Electrical Requirements for Packaged Equipment.*

3.15.2 The Buyer will provide a single feed for each Activated Carbon Bed Adsorber unit. The Seller shall be responsible for determining electrical load and for the distribution of power within the Activated Carbon Bed Adsorber unit. The Seller shall provide a disconnect switch at the connection point for the Buyer's power feed for each Activated Carbon Bed Adsorber.

3.15.3 Delete

3.15.4 Motors shall operate continuously under running conditions at rated load and meet the requirements of Engineering Specification 24590-WTP-3PS-MUMI-T0002, *Low Voltage Induction Motors.*

3.16 Instrumentation and Control Requirements

3.16.1 General

3.16.1.1 Instrumentation included in the Seller's scope of work shall meet the requirements of Buyer specification 24590-WTP-3PS-JQ07-T0001, *Instrumentation for Package Systems.* Refer to Figure 1 and 2 for general instrumentation layout and additional requirements for both HLW and LAW respectively. Buyer shall provide the appropriate ABB control system components (i.e. I/O modules, power supplies) to the Seller for fabrication into the Seller's control panel. Seller shall provide non-ABB manufactured equipment (fiber optic converters, fiber optic patch cables and plates, terminals, circuit breaker, wiring, etc.) and panel fabrication.

Seller shall design their control panel to utilize the ABB control system equipment and provide a General Arrangement drawing with a Bill of Materials identifying all parts to be provided by the Buyer. Seller shall provide I/O list for all instruments.

Seller shall provide control narrative, logic drawings, and related items as specified in 24590-WTP-3PS-JQ07-T0001, *Instrumentation for Package Systems.* Buyer shall provide programming according to Seller's specification of the monitoring and control requirements. Buyer shall provide controller, software, and attend and support the factory test of the equipment at the Seller's facility.

3.16.1.2 Analyzers and analyzer systems included in the Seller's scope of work shall meet the requirements of Buyer specification 24590-WTP-3PS-JA03-T0001, *Gas Analyzers.* Refer to Figure 1 and 2 for general analyzer layout and additional requirements. Seller shall work closely with the Buyer in establishing the performance criteria and location of the Hg analyzer(s). Enclosures for gas analyzers shall be NEMA 4. Analyzer cabinets shall be SC-III and designed in accordance with Buyer specification 24590-WTP-3PS-FB01-T0001, *Engineering specification for Structural Design Loads for Seismic Category III and IV Equipment and Tanks.*

3.16.2 Activated Carbon Bed Adsorber

3.16.2.1 The following instruments shall be included with the HLW Activated Carbon Bed Adsorber Units as a minimum, refer to section 1.6 of this specification for additional QA with subsequent testing requirements for these instruments:

- Inlet temperature elements, thermowell, and indicating transmitter on inlet to each Activated Carbon Bed.
- Inlet CO analyzer sample collection tap and return for Buyer supplied ITS CO analyzer.
- Differential pressure indicating transmitter on each Activated Carbon Bed Adsorber vessel.
- Carbon Bed temperature elements, thermowells, and indicating transmitter. (two for each guard media and two for each primary media).
- Radar level indicator for each Activated Carbon Bed Adsorber vessel.
- Differential pressure indicating transmitter on each discharge filter.
- Outlet CO analyzer sample collection tap and return for Buyer supplied ITS CO analyzer.
- Delete.
- Mercury monitor sample tap from each Activated Carbon Bed Adsorber with common return for Buyer supplied mercury analyzer. See Figure 3 for Mercury monitor sample tap requirements.

3.16.2.2 The following instruments shall be included with the LAW Activated Carbon Bed Adsorber Units as a minimum, refer to section 1.6 of this specification for additional QA with subsequent testing requirements for these instruments:

- Two (2) inlet temperature elements (ITS).
- Two (2) inlet COx analyzer sample collection taps and returns for Buyer supplied ITS COx analyzer.
- Differential pressure instrument on each Activated Carbon Bed Adsorber vessel (with ISA purges on each pressure leg).
- Carbon Bed temperature elements with thermowells and transmitters. (two for guard media, two for primary media).
- Two (2) radar level indicators for each Activated Carbon Bed Adsorber vessel (ITS).
- Differential pressure instrument on each discharge filter (with ISA purges on each pressure leg).
- One (1) outlet temperature elements.
- Two (2) outlet COx analyzer sample collection taps and returns for Buyer supplied ITS COx analyzer.
- Mercury monitor sample tap from each Activated Carbon Bed Adsorber with common return for Buyer supplied mercury analyzer. See Figure 3 for Mercury monitor sample tap requirements.
- HF/HCl monitor sample tap and return tap for Buyer supplied HF/HCl analyzer.

3.16.2.3 Deleted.

3.16.2.4 As listed in 3.16.2.1 and 3.16.2.2, each Activated Carbon Bed shall have at least four (4) temperature instruments and transmitters. Temperature elements shall be provided with thermowells that meet the inspection and testing requirements per the specified Q quality level and the requirements of Buyer specification 24590-WTP-3PS-JQ07-T0001, *Instrumentation for Package Systems.* Seller shall work closely with the Buyer in determining the location of the temperature instruments.

3.16.2.5 As listed in 3.16.2.1 and 3.16.2.2, each Activated Carbon Bed vessel shall have radar level indicator(s). Radar level indicators shall be Ohmart-Vega meeting Appendix B requirements of Buyer specification 24590-WTP-3PS-JQ07-T0001, *Instrumentation for Package Systems.* Seller proposed substitutions shall be well documented as to the relative technical advantages and exclude commercial considerations.

3.16.2.6 Seller shall provide control logic required to operate the Activated Carbon Bed Adsorber Units including the fire suppression system in accordance with the performance requirements of this specification and MDSs.

3.16.2.7 The Activated Carbon Bed Adsorber Units shall be designed with a single instrumentation tie-in point for connection to Buyer's Integrated Control Network (ICN) in accordance with the requirements of Buyer specification 24590-WTP-3PS-JQ07-T0001, *Instrumentation for Package Systems.* Design drawings shall show the location of instrumentation tie-in point. Instrumentation specified ITS shall have a separate tie-in point for connection to Buyer's Programmable Protection System (PPJ) in accordance with section 3.4.4 of Buyer specification 24590-WTP-3PS-JQ07-T0001, *Instrumentation for Package Systems*, and the requirements of IEEE Std. 384.

3.16.2.8 The following instrumentation for LAW and HLW are specified ITS and shall have isolated hardwires to Buyer's programmable protection system (PPJ) in accordance with the requirements of section 3.4.4 of Buyer specification 24590-WTP-3PS-JQ07-T0001, *Instrumentation for Package Systems for ITS instrumentation*, and the requirements of IEEE Std. 384.

- Inlet temperature elements for LAW Activated Carbon Bed Adsorbers
- Radar level indicators for LAW Activated Carbon Bed Adsorbers
- Control and electrical components related to HLW and LAW Activated Carbon Bed Adsorber pneumatic isolation valves. (Instrument air supply shall have two solenoid valves in series, one solenoid valve is independently hardwired for connection to Buyer's PPJ, the second solenoid valve is wired to the Seller's control panel. All isolation valves are fail closed, refer to Figures 1 and 2 for additional information.)
- Buyer supplied inlet and outlet CO analyzers for HLW. Buyer supplied inlet and outlet COx analyzers for LAW.

3.16.2.9 The following instrumentation shall meet the requirements of Buyer specification 24590-WTP-3PS-JQ06-T0005, *Environmental Qualification of Control and Electrical Systems and Components.*

- Inlet temperature elements for LAW Activated Carbon Bed Adsorbers
- Radar level indicators for LAW Activated Carbon Bed Adsorbers

- Control and electrical components related to HLW and LAW Activated Carbon Bed Adsorber pneumatic isolation valves

3.16.2.10 LAW instrumentation shall be remote mounted in adjacent rooms. Seller shall design for remote mounting of the control system and related instrumentation. Instrumentation not mounted in Seller's control panel shall be mounted on Buyer procured instrument racks (i.e. transmitters, solenoid valves, etc.). Seller shall provide wiring schedule, junction boxes, tubing connections, connection diagrams, and documentation to facilitate installation of wiring from equipment to remote control panels and instrument racks. Instrumentation mounted on Buyer procured instrument racks shall be supplied with the necessary mounting brackets (universal). Installation of remote tubing and wiring is within Buyer's scope.

3.16.2.11 Delete.

3.16.3 Optional Preheater

3.16.3.1 Seller shall propose control system for electric pre-heater with over heat protection in accordance with section 3.3 of this specification.

3.16.3.2 Proposed control system shall be in accordance with the requirements of Buyer specification 24590-WTP-3PS-JQ07-T0001, *Engineering Specification for Instrumentation for Package Systems.*

3.17 Accessibility and Maintenance

3.17.1 General

3.17.1.1 Accessibility and maintenance requirements shall be per this specification.

3.17.1.2 Seller's recommended accessibility and maintenance requirements for each piece of equipment shall be included in the Seller's applicable submittals.

3.17.1.3 Frequency of inspection and maintenance intervals shall be in accordance with Seller's recommendations.

3.17.1.4 All valves shall be accessible for maintenance and operation. Maintenance and replacement of valves shall be outlined in Seller's operation and maintenance procedures.

3.17.1.5 Seller shall design and supply any special tools required to perform maintenance activities and describe its use in applicable procedures.

3.17.1.6 If the equipment weight (i.e. valves, actuators, loading/unloading equipment, etc.) is in excess of 50 pounds the Seller shall design and supply jib cranes, lifting beams, or rigs in accordance with the requirements of DOE-RL-92-36.

3.17.2 Platform Requirements

3.17.2.1 Equipment, instrumentation, and electrical components that are 6 feet and over from ground level shall be provided with permanent work platforms with fixed ladders/stairs to perform maintenance.

3.17.2.2 The Activated Carbon Bed Adsorber unit maintenance platforms and ladders shall be designed to meet the requirements set forth in 29 CFR 1910, Occupational Safety and Health Standards (OSHA), Subpart D, Walking-Working Surfaces, and AISC 9th Edition.

3.17.2.3 The Activated Carbon Bed Adsorber unit maintenance platforms shall include guardrails. The guardrails shall be made out of piping.

3.17.2.4 The guardrails shall be designed per 29 CFR 1910.23.

3.17.2.5 The minimum live load for the column platforms shall be 100 psf. If platforms are to be used for laydown during maintenance, use a minimum live load of 250 psf.

3.17.2.6 The fixed ladder to be installed on the maintenance platforms shall meet the requirements set forth in 29 CFR 1910.27.

3.17.2.7 The maintenance platforms must be able to be attached to the Activated Carbon Bed Adsorber units without welding after the adsorbers are placed in the HLW and LAW facilities.

3.17.2.8 All openings in guardrails of each Activated Carbon Bed Adsorber unit maintenance platform shall have a safety gate or chain designed per the requirements of 29 CFR 1910.23.

4 Materials

4.1 General

4.1.1 Material used for the pressure boundary including control instrumentation shall comply with Buyer specification 24590-WTP-3PS-G000-T0002, *Positive Material Identification* (PMI) *for Shop Fabrication.* In accordance with the requirements of the PMI specification the Cr, Ni, Mo, content of the pressure boundary materials including weld consumables must be verified before and after fabrication.

4.1.2 Seller shall submit manufacturer cut sheets and MSDSs for all gaskets used for the pressure boundary. All gaskets, seal pads, caulks, and adhesives used must be certified for contact with austenitic stainless steel.

4.1.3 The Activated Carbon Bed Media shall have impurities less than 0.1 weight percent carbonate, oxide, or nitrate. Seller shall provide written certification that the amount of impurities in the carbon media is less than 0.1 weight percent carbonate, oxide, or nitrate.

4.1.4 Performance of the Activated Carbon Bed for removal of HCl, HF, and radioactive iodine (I^{129}) associated with the LAW system is required, (an HCl, HF, and iodine guard bed is not required for the HLW offgas). The guard bed for HF, located upstream of the mercury removal bed, may contain adsorbent such as acid washed activated carbon or activated alumina. The activated alumina media is not required to be acid washed.

4.1.5 The Activated Carbon Bed Media shall meet applicable ASTM methods for particle size distribution.

4.2 Construction

4.2.1 Materials used in the construction of the Activated Carbon Bed Adsorber units shall conform to the requirements of ASME AG-1, Article AA-3000, ASME AG-1a, Article HA-3000, this specification, and the MDSs in section 2 of the purchasing documents. Material property and performance data for any materials not covered in ASME AG-1, ASME AG-1a or this specification shall be submitted to the Buyer for review prior to incorporation into the design of the Activated Carbon Bed Adsorber units. All materials in contact with the adsorber and process piping shall be 300 series stainless steel. Performance data shall indicate that material is acceptable for environmental and specific service conditions.

4.2.2 All materials used in the construction of the Activated Carbon Bed Adsorber units shall be resistant to radiation levels indicated in subsection 3.6 of this specification and be able to operate under environmental and design conditions described in ASME N509 (paragraph 4.4) and MDSs in section 2 of the purchasing documents.

4.2.3 Seller shall maintain a record of ASME or ASTM numbers, material test reports, and manufacturer material certifications for all materials used for construction of the Activated Carbon Bed Adsorber units. Seller shall provide copies to the Buyer.

4.2.4 All materials used in the manufacture of the Activated Carbon Bed Adsorber units, support frames, and shims shall be new and unused. Where specific criteria are not provided, material selection shall be determined by the Seller and have properties and composition suitable for the specific service conditions and consistent with this specification.

4.2.5 Dissimilar metal couples shall be avoided due to corrosion potential.

4.2.6 Activated Carbon Bed Adsorber housing material shall be in accordance with the requirement of the MDSs. Discharge filter covers shall be constructed of 316 L stainless steel.

4.2.7 The Activated Carbon Bed Adsorber support frames, pipe supports, and maintenance platforms shall be made of Carbon Steel. Special attention shall be placed on securing the stainless steel carbon bed adsorbers and piping to the carbon steel support structure to prevent galvanic corrosion.

4.2.8 The discharge filter frame shall be composed entirely of 316 L stainless steel.

4.2.9 Deleted.

4.3 Insulation

4.3.1 The Seller shall provide detailed insulation installation procedures complete with sketches showing methods and details for applying and securing external insulation, metal jacketing, etc., to the Activated Carbon Bed Adsorber Units and necessary piping. The insulation procedures shall be in accordance with PIP INIH 1000 and NACE Standard RP0198, Buyer specification 24590-WTP-3PS-NN00-T0001 *Thermal Insulation for Mechanical Systems*, and this specification.

4.3.2 Procedures for insulation thicknesses greater than three (3) inches shall be applied in multiple layers with staggered joints. Each layer of multiple layer and double insulation shall be held in place separately.

4.3.3 Procedures for insulation installation shall include jacketing the insulation with 304 L stainless steel following the requirements of Buyer specification 24590-WTP-3PS-NN00-T0001 *Thermal Insulation for Mechanical Systems*, and this specification. The stainless steel jacketing shall be 0.024 inches thick flat and smooth sheet. The jacketing shall be furnished in the annealed or soft condition with a regular 2B mill finish and have a factory applied moisture barrier.

4.3.4 Seller shall recommend cements, mastics, and adhesives that will be suitable for the maximum design temperature of the Activated Carbon Bed Adsorber units. The mixing of cements, mastics, etc., shall be done with deionized water. All recommended cements, mastics, adhesives must by certified for contact with austenitic stainless steel.

4.3.5 Procedures shall include cleaning instructions for surfaces to be insulated. Procedures should note that surfaces to be insulated must be dry and free of loose scale, dirt, and oil before the insulation is applied.

4.3.6 The design shall provide for removable/replaceable insulation on flanges, manholes, doors, and access openings.

4.3.7 All recommended insulation components, including facings, mastic, and adhesives, shall meet ASTM E84 fire hazard rating not to exceed 25 for flame spread and 50 for fuel contributed and smoke developed. Ratings used are determined by Underwriters Laboratories, Inc. (UL).

4.4 Piping

4.4.1 All applicable materials used for piping and related appurtenances shall be in accordance with the requirements of the MDSs and Buyer specification 24590-WTP-3PB-P000-TS11V *Piping Material Classification Pipe Class S11V*, for HLW, and Buyer specification 24590-WTP-3PB-P000-TS11N *Piping Material Classification Pipe Class S11N*, for LAW.

4.4.2 Special attention shall be placed on securing stainless steel piping to the carbon steel support structure to prevent galvanic corrosion.

4.5 Prohibited Materials

4.5.1 Mercury and other low melting point metals, their alloys, or materials containing such metals as their basic constituents shall not be used in the construction of the Activated Carbon Bed Adsorber units and shims.

4.5.2 Molybdenum and halides shall not be used in direct contact with stainless steel.

4.5.3 Asbestos shall not be included in any component of the Activated Carbon Bed Adsorber units.

4.5.4 Halide containing materials shall not be used in any component of the Activated Carbon Bed Adsorber units, unless otherwise noted in this specification.

4.6 Storage of Special Materials (e.g., stainless steel) prior to work

4.6.1 Stainless steel is susceptible to corrosion caused by the contact and interaction with incompatible materials. All stainless steel material shall be stored in separate areas away from other materials.

4.6.2 Storage of activated carbon and testing media shall be per the manufacturer's instructions to prevent contamination and degradation. Activated carbon and testing media storage requirements and instructions shall be provided by the Seller to the Buyer for review prior to purchase.

5 Fabrication

5.1 General Requirements

5.1.1 The Activated Carbon Bed Adsorber units shall be fabricated per this specification and the applicable documents listed in section 2 of this specification.

5.1.2 ASME Boiler and Pressure Vessel Code, Section VIII, Div. 1 shall only be applied to the fabrication of the housing pressure boundary of the Activated Carbon Bed Adsorber units. The housing pressure boundary shall be fabricated in accordance with ASME Boiler and Pressure Vessel Code, Section VIII, Div. 1. **U-stamp and National Board Registration for the Activated Carbon Bed Adsorbers are not required.**

5.1.3 Identification of fabrication methods shall be included in the detailed design of the Activated Carbon Bed Adsorber units.

5.1.4 All fabrication shall be performed by personnel qualified in accordance with this specification and applicable documents in section 2 of this specification.

5.1.5 Piping shall be fabricated in accordance with the requirements of ASME B31.3 and Buyer specification 24590-WTP-3PS-PS02-T0001, *Shop Fabrication of Piping.*

5.2 Assembly

5.2.1 Flatness of the completed Activated Carbon Bed Adsorbers and support frames shall be 1/8 inch per foot minimum, with no greater than 3/16 inch over the entire length, except for areas around cutouts. Areas around cutouts shall be flat within 1/16 inch per foot.

5.2.2 Cutout locations shall be within ± 1/8 inch and cutout size shall be within ± 1/16 inch.

5.2.3 The Activated Carbon Bed Adsorber units and shims shall have edges that are both smooth and not sharp to the touch.

5.2.4 The method of fabrication shall minimize the number and amount of seams, overlaps, or other discontinuities, which could trap radioactive contamination.

5.3 Tolerances

All tolerances, surface flatness, and finish requirements for assembly and fabrication shall be determined and specified by the Seller when completing the detailed design to meet performance requirements set forth in this specification. At a minimum, all tolerances, surface flatness, and finish requirements shall be per all applicable codes, standards, and reference documents in section 2 of this specification.

5.4 Welding

5.4.1 Seller shall develop detailed welding, weld inspection, NDE, and weld repair procedures for fabrication of the Activated Carbon Bed Adsorber units and submit them to the Buyer for review prior to fabrication. Procedures shall include acceptance criteria. The procedures shall conform to the following, as applicable:

- Buyer Specification 24590-WTP-3PS-SS00-T0001
- Buyer Specification 24590-WTP-3PS-SS00-T0002
- Buyer Specification 24590-WTP-3PS-NWP0-T0001
- Buyer Specification 24590-WTP-3PS-MVB2-T0001 (Pressure Boundary Only)
- ASME AG-1a, Article HA-6000
- ASME AG-1, Articles FE-6000
- ASME Boiler and Pressure Vessel Code, Section VIII, Div. 1 (Pressure Boundary Only)
- ASME B31.3
- AWS D1.6

5.4.2 Activated Carbon Bed Adsorber welding, weld inspection, NDE, and weld repair shall be carried out in accordance with the applicable procedures developed per the previous paragraph.

5.4.3 Activated Carbon Bed Adsorber welder qualifications shall be performed in accordance with requirements of the referenced specifications and codes listed in section 5.4.1 of this specification.

5.4.4 Welding or material manipulation shall be carried out indoors and only when the ambient, piping, or plate temperature is above 41°F, or higher where elevated temperatures are called for by a process.

5.4.5 Personnel performing Activated Carbon Bed Adsorber weld inspections shall be qualified in accordance with ASME AG-1, Paragraph AA-6335, ASME Boiler and Pressure Vessel Code, Section VIII, Div. 1, Buyer specification 24590-WTP-3PS-SS00-T0002, *Specification for Welding of Structural Stainless Steel and Welding of Structural Carbon Steel to Structural Stainless Steel* and 24590-WTP-3PS-SS00-T0001, *Specification for Welding of Structural Carbon Steel.*

5.4.6 Repairs required as a result of weld rejection by either the Seller's or Buyer's inspection shall be fully documented in accordance with Seller's Quality Assurance Program (QAP). Activated Carbon Bed Adsorber weld repairs shall be performed in accordance with ASME AG-1, subsubarticle AA-6330 and ASME Boiler and Pressure Vessel Code, Section VIII

(housing pressure boundary only). Weld repair records shall be included with Seller's quality verification document package to be submitted to Buyer.

5.4.7 Joints and seams shall be fabricated in accordance with ASME AG-1a, subsubarticle HA-4330 and ASME Boiler and Pressure Vessel Code, Section VIII (housing pressure boundary only).

5.4.8 Welding procedures and welder qualification records shall be submitted to Buyer for review and permission to proceed prior to start of fabrication. Each procedure shall be prepared and qualified in accordance with the requirements of the listed standards in section 5.4.1 of this specification.

5.4.9 Seller shall submit a weld verification report including a weld map which identifies the specific weld procedure and NDE procedure utilized for each weld joint.

5.5 Coating

5.5.1 Seller shall provide coating for carbon steel surfaces in accordance with 24590-WTP-3PS-AFPS-T0001, *Engineering Specification for Shop Applied Special Protective Coatings for Steel Items and Equipment*, Appendix D, Item # 8.20. System code D applies.

5.5.2 Coating finish color shall be in accordance with 24590-WTP-3PS-AFPS-T0001, *Engineering Specification for Shop Applied Special Protective Coatings for Steel Items and Equipment*, Appendix E, ANSI 70 Gray.

5.5.3 All carbon steel to stainless steel weld areas shall remain free of any zinc filled coatings, such as the P02 primer contained in system code D. Surfaces that were previously coated with zinc filled material, and subsequently ground off, are considered to be contaminated with zinc. Stainless steel shall not be welded to these surfaces.

5.5.4 Zinc filled coatings shall be held back from the carbon steel to stainless steel welds by 3 to 4 inches for shop welds and 4 to 5 inches for field welds. Coating hold back requirements are further defined in 24590-WTP-3PS-AFPS-T0001, *Engineering Specification for Shop Applied Special Protective Coatings for Steel Items and Equipment*, section 2.2.1.

5.5.5 The following coating materials may be applied directly to stainless steel surfaces:

- Sherwin Williams Macropoxy 646
- Carboline Carbogard 890

5.5.6 Insulated surfaces (applicable only to carbon steel in contact with stainless steel) with an operating temperature no greater than 200 °F shall be coated with system code H (see 24590-WTP-3PS-AFPS-T0001, *Engineering Specification for Shop Applied Special Protective Coatings for Steel Items and Equipment*, Appendix C, Table 2, limited to the coating materials listed in section 5.5.5 above). The coating shall be applied to all carbon steel surfaces overlapping 1 inch on to the stainless steel. Insulated surfaces (applicable only to carbon steel in contact with stainless steel) with an operating temperature from 200 °F to 300 °F shall be coated with system code G (see 24590-WTP-3PS-AFPS-T0001, *Engineering Specification for Shop Applied Special Protective Coatings for Steel Items and Equipment*, Appendix C, Table 2). The coating material specified for use in system code G is not acceptable for direct

application over stainless steel surfaces or stainless steel to carbon steel welds. Coat carbon steel surfaces with system code G to within 1-2 inches of the carbon steel-stainless steel weld. Do not overlap coating onto weld area or onto stainless steel material. Zinc primers without top-coating and hot dip galvanizing are not acceptable on surfaces that will be insulated.

5.5.7 Carbon steel components of gratings, platform assemblies, ladder assemblies, crane rail, and supports shall be hot dip galvanized in accordance with 24590-WTP-3PS-AFPS-T0001, *Engineering Specification for Shop Applied Special Protective Coatings for Steel Items and Equipment,* Appendix D, Note 15.

5.5.8 Components that are coated to manufacturer's standard shall be in accordance with 24590-WTP-3PS-AFPS-T0001, *Engineering Specification for Shop Applied Special Protective Coatings for Steel Items and Equipment,* section 6.2.1.2.

6 Tests and Inspections

6.1 General Requirements

6.1.1 The Activated Carbon Bed Adsorber units shall be tested and inspected per this specification, applicable documents listed in section 2 of this specification, and all appendices, addenda, and attachments. Seller shall submit shop and field test plans for Buyer review.

6.1.2 Seller shall conduct and be responsible for all testing and inspections required per this specification, applicable codes, applicable standards, and reference documents.

6.1.3 Seller shall submit a detailed test and inspection plan identifying all the inspections and tests planned, including recommended witness and hold points. Buyer's inspector will advise the Seller of witness and hold points and identify the shop tests that the Buyer intends to witness.

6.1.4 Seller shall develop and submit to Buyer detailed test procedures for conducting all shop and field acceptance testing required per this specification, applicable codes, standards, and reference documents for review by the Buyer prior to Activated Carbon Bed Adsorber fabrication. Procedures shall include acceptance criteria and detailed drawings of the shop and field testing configurations. Seller shall identify on drawings location of taps, ports, piping connections, and/or manifolds made on housing and ductwork in order to take measurements during shop and field tests. These taps, ports, piping connections, and/or manifolds shall be temporarily capped for use in the field during acceptance testing. Seller shall provide instructions on permanently sealing these taps after field acceptance testing. Drawings shall be scalable and shall include plan and elevation views of the following:

- Activated Carbon Bed Adsorber
- Any Seller furnished materials, fittings, and ductwork required to perform the tests
- Seller furnished discharge filter(s)
- All Seller furnished equipment, apparatus, and instrumentation

6.1.5 Seller shall develop and submit to Buyer detailed testing and inspection procedures for conducting all testing and inspections required per this specification, applicable codes,

standards, and reference documents for review by the Buyer prior to Activated Carbon Bed Adsorber fabrication.

6.1.6 Seller shall complete reports of all testing and inspections and submit them to Buyer. Reports shall identify the component tested, date performed, applicable test procedure, acceptance criteria, person performing the test or inspection, test results, and conclusions. Drawings of test setups shall be included. All testing and inspection results shall be certified.

6.1.7 Control and calibration of measuring and test equipment shall be in accordance with ASME AG-1, subarticle AA-5130.

6.1.8 All shop testing and inspection instruments used to conduct testing on the Activated Carbon Bed Adsorber units shall meet the requirements set forth in ASME AG-1, Article TA-3000. All testing and inspection instruments shall be in calibration and traceable to the appropriate national standard.

6.1.9 Any non-conforming work, in accordance with Seller's acceptance criteria, shall be redone by the Seller at Seller's cost.

6.2 Weld Testing and Inspection

6.2.1 Activated Carbon Bed Adsorber welds shall be inspected, examined, and tested in accordance with ASME AG-1, subarticle AA-6330, ASME Boiler and Pressure Vessel Code, Section VIII, Div. 1 (housing pressure boundary only), and Buyer specification 24590-WTP-3PS-MV00-T0001, *Pressure Vessel Design and Fabrication.*

6.2.2 Activated Carbon Bed Adsorber support frame welds shall be inspected, examined, and tested in accordance with Buyer specification 24590-WTP-3PS-SS00-T0002, *Engineering Specification for Welding of Structural Stainless Steel and Welding of Structural Carbon Steel to Structural Stainless Steel* and 24590-WTP-3PS-SS00-T0001, *Engineering Specification for Welding of Carbon Structural Steel.*

6.2.3 Piping shall be inspected, examined, and tested in accordance with ASME B31.3, Buyer specification 24590-WTP-3PS-PS02-T0001, *Shop Fabrication of Piping,* and Buyer specification 24590-WTP-3PS-NWP0-T0001, *General Welding and NDE Requirements for Supplier Fabricated Piping.*

6.2.4 As applicable, per code requirements, Seller shall submit Radiographic, Liquid Penetrant, and Ultrasonic Examination procedures for review, prior to fabrication.

6.2.5 Exposed radiograph film must be submitted along with technique and reader sheets. Film must be packaged in such a manner as to preclude moisture and handling damage.

6.3 Personnel Qualifications

6.3.1 All inspection and testing shall be performed by personnel qualified per the requirements set forth in this specification and all applicable documents in section 2 of this specification.

6.3.2 Seller shall submit personnel qualification documents, including years of experience for Seller's inspection and test personnel, for Buyer review.

6.4 Laboratory Tests

6.4.1 Seller shall conduct and be responsible for laboratory testing of Activated Carbon Media in accordance with appendix A, B, and C of this specification. Laboratory tests shall be conducted in accordance with the applicable sections of NQA-1. The test plan shall include a matrix cross-referencing the QA requirements to implementing procedures for the work and justifying elements that are not applicable.

6.4.2 Seller shall submit laboratory test plan and procedures for Buyer review prior to the start of testing in accordance with the requirements of the G-321-E in section 3 of the purchasing documents.

6.4.3 A final report shall be submitted for Buyer review in accordance with the requirements of section 10.7 of this engineering specification. The final report shall support the engineering design of the Activated Carbon Bed Adsorber Units. In addition to the requirements of section 10.7, the final report shall show conformance with required DFs as outlined in section 3.4 of this specification and specified in the MDSs. Any effects related to the design of the Activated Carbon Bed Adsorber Units shall be identified in the final report.

6.5 Shop Tests

6.5.1 Seller shall provide all materials, labor, tools, equipment, apparatus, instrumentation, testing media, and challenge gas to conduct all shop testing on the Activated Carbon Bed Adsorber units.

6.5.2 All shop tests requiring that adsorbent media be installed in the Activated Carbon Bed Adsorber units shall be conducted using activated carbon. The Seller shall ensure that the Activated Carbon Bed Adsorber does not become contaminated or degraded at any time before, during, or after completion of shop testing.

6.5.3 Testing media shall be loaded into adsorber cells and tested per applicable sections of ASME AG-1, Article FE-5000. Seller shall issue manufacturer's information for testing media to the Buyer for review prior to purchase.

6.5.4 Electrical and instrumentation tests shall be conducted in accordance with the requirements of Buyer specification 24590-WTP-3PS-EKP0-T0001, *Electrical Requirements for Packaged Equipment*, and 24590-WTP-3PS-JQ07-T0001, *Instrumentation for Package Systems*. Electrical and instrumentation test reports shall be submitted for Buyer review.

6.5.5 Seller shall conduct the following acceptance tests in the shop on each unit using air at ambient temperature, prior to shipment:

- Visual Inspection
- Structural Capability Test

- System Bypass Test
- Mechanical Test
- Differential Pressure Test
- Airflow Distribution Test
- Electrical Air Heater Performance Test (per design)

All Activated Carbon Bed Adsorber shop acceptance testing procedures shall conform to ASME AG-1 (Section TA), N509 (Section 9), N510, and ERDA 76-21 (Chapter 8).

6.5.6 Deleted.

6.5.7 Pneumatic testing per ASME Boiler and Pressure Vessel Code, Section VIII, Div. 1 shall be conducted on the Activated Carbon Bed Adsorber housing pressure boundary. U-stamp and National Board Registration for the Activated Carbon Bed Adsorbers are not required.

6.5.8 Structural Capability Test: Conduct at pressure and conditions specified in the MDSs.

6.5.9 System Bypass Test: At ± 10 % of design flowrate through the Activated Carbon Bed Adsorber, challenge gas leakage rate shall not exceed 0.1 % at 99.9 % efficiency.

6.5.10 All test results shall be documented, certified, and submitted to the Buyer for review.

6.6 Site Tests

All Activated Carbon Bed Adsorber field acceptance testing procedures shall conform to ASME AG-1 (Section TA), N509 (Section 9), N510, and ERDA 76-21 (Chapter 8).

6.7 Bag-in/Bag-out Procedure Demonstration

6.7.1 Demonstration shall be conducted in Seller's shop on one (1) of the fully assembled Activated Carbon Bed Adsorber units and witnessed by Buyer's Representatives. The Activated Carbon Bed Adsorber to be used for the demonstration shall be chosen by the Buyer.

6.7.2 Demonstration shall include removal and replacement of one (1) activated carbon adsorber bed adsorbent and the discharge filter(s) for one (1) Activated Carbon Bed Adsorber unit for each HLW and LAW facility. Actual adsorber bed adsorbent to be removed shall be chosen by the Buyer.

6.7.3 When conducting the demonstration, Seller personnel shall be wearing all PPE required per the final bag-in/bag-out procedure.

6.7.4 Field conditions shall be simulated in the shop when performing the bag-in/bag-out procedure demonstration, which will include pulling a vacuum on the Activated Carbon Bed Adsorber, room clearance, and lifting constraints.

7 Preparation for Shipment

7.1 General Requirements

7.1.1 The Activated Carbon Bed Adsorber units shall be packaged/prepared for shipment, handled, and stored in accordance with Buyer specification 24590-WTP-3PS-G000-T0003 *Engineering Specification for Packaging, Handling, and Storage Requirements*, and ASME AG-1a, Article HA-7000, (Level C).

7.1.2 The activated carbon media shall be packaged/prepared for shipment, handled, and stored in accordance with Buyer specification 24590-WTP-3PS-G000-T0003 *Engineering Specification for Packaging, Shipping, Handling and Storage Requirements*, ASME AG-1, Article FE-7000 and FF-7000, (Level B).

7.1.3 The Activated Carbon Bed Adsorber units, activated carbon media, and shims shall not be packaged for shipping until all shop tests and inspections have been performed and the Buyer's Representative reviews the results.

7.2 Cleanliness

7.2.1 Cleanliness shall be per the applicable documents in Paragraphs 7.1.1 and 7.1.2 of this specification.

7.2.2 Solvents and cleaning solutions used on stainless steel shall have a halogen content of less than 200 ppm.

7.3 Tagging

7.3.1 Tagging of the Activated Carbon Bed Adsorber units shall be as specified in ASME AG-1, Article FE-9000 and ASME AG-1a, Article HA-9000. Tagged information shall also include associated plant item number specified in the data sheets that are in Section 2 of the purchasing documents.

7.3.2 A stainless steel nameplate shall be rigidly attached to the Activated Carbon Bed Adsorber units in a prominent position for ease of visibility and include:

- manufacturer's name
- shop location
- date of manufacture
- serial number
- equipment ratings (pressure, flow, temperature)
- plant item number
- weight of assembly
- purchase order number

7.3.3 Nameplates shall be visible after the insulation is installed, or a duplicate nameplate shall be provided on the top of the insulation. Nameplate shall be located for easy access and reading.

7.3.4 All field testing materials and filters shall be tagged as required for field testing.

7.3.5 Seller shall use Buyer supplied tag numbers for valves, instrumentation, junction boxes, racks, and panels.

7.4 Documentation

7.4.1 Seller shall ensure that appropriate documentation is prepared and, if required, signed by the appropriate person(s). The shipping documentation shall accurately reflect specific traceability to the items being shipped.

7.4.2 Seller shall ensure that appropriate documentation is prepared for the Activated Carbon Bed Adsorber units, activated carbon, and shims. At a minimum, documentation shall include the following information, as applicable:

- Manufacturer name, model number, and serial number
- Plant Item Number

7.5 Shipment Preparation Instructions

7.5.1 Shipment of items shall be conducted in accordance with ASME AG-1a, Article HA-7300, Buyer specification 24590-WTP-3PS-G000-T0003 *Engineering Specification for Packaging, Handling, and Storage Requirements.*

7.5.2 The Activated Carbon Bed Adsorber units shall be shipped completely assembled except for activated carbon. Activated carbon shall be shipped separately.

7.5.3 Weatherproof shipping lists (two per packaged item) shall be prepared and submitted, and shall clearly identify the contents of each package sent to the Buyer. All submittals and shipping boxes shall be identified with the Buyer's purchase order number.

7.5.4 Seller shall provide a complete identification and location of temporary material contained within the equipment for shipment, handling, or storage that must be removed prior to commissioning (e.g., shipping blocks, desiccant bags, components shipped inside larger sections, etc.). In addition, the Seller shall provide instructions for removal of temporary materials, as required.

7.5.5 The Activated Carbon Bed Adsorber units and shims shall be mounted on skids, in crates, or in boxes as suited for the intended method of transport. Lifting weight and center of gravity shall be clearly marked on both the equipment and its shipping documents.

8 Quality Assurance

8.1 General Requirements

8.1.1 The Seller's QAP Requirements are included in Buyer specification 24590-WTP-3PS-G000-T0001, *General Specification for Supplier Quality Assurance Program Requirements.*

8.1.2 Seller's QAP Manual shall be submitted to Buyer for review in accordance with Buyer specification 24590-WTP-3PS-G000-T0001, *General Specification for Supplier Quality Assurance Program Requirements.*

8.1.3 Seller's QAP, as a minimum, shall contain the requirements detailed in the Supplier Quality Assurance Program Requirements Data Sheets listed in Section 2 of the purchasing documents.

8.2 Quality (Q) Related Components

8.2.1 Seller shall have in place a QAP meeting the requirements of ASME-NQA-1, marked as applicable in Supplier Quality Assurance Program Requirements Data Sheet attached to the purchasing documents, and Buyer specification 24590-WTP-3PS-G000-T0001, *General Specification for Supplier Quality Assurance Program Requirements.*

8.2.2 The successful bidder must pass a pre-award survey by the Buyer. Seller shall demonstrate that its quality program is in compliance with the procurement quality requirements listed in the Supplier Quality Assurance Program Requirements Data Sheet. The Seller shall allow the Buyer, its agent, and DOE access to their facility and records pertaining to this purchase order for the purpose of Quality Assurance (QA) Audits and Surveillance at mutually agreed times.

8.2.3 All items shall be manufactured in accordance with the Seller's QAP that meets the requirements of ASME NQA-1, and has been previously evaluated and accepted by the WTP Quality Organization.

8.2.4 Seller shall submit their QAP and work plan to Buyer for review prior to commencement of work. The plan shall include documents and procedures to implement the work and include a matrix of essential QA elements cross referenced with the documents/procedures.

8.3 Supplier Deviation

8.3.1 Each Supplier shall be required to identify and promptly document all deviations from the requirements of the procuring documents. In addition, the supplier shall be required to describe the recommended disposition based on appropriate analysis. Submittals of request for deviations from lower-tier suppliers shall be through the prime supplier to RPP-WTP.

Supplier-proposed deviations from procurement documents shall be initiated by use of Supplier Deviation Disposition Request (SDDR) form in section 2 of the purchasing documents.

9 Configuration Management

Equipment and or components covered by this specification are identified with Plant Item numbers shown in the MDSs. Each item shall be identified in accordance with Tagging in section 7 of this specification.

10 Documentation and Submittals

10.1 General

10.1.1 Seller shall submit to Buyer all detailed designs, documentation, procedures, instructions, calculations, analyses, laboratory results, models, manufacturer data, inspection plans and reports, test plans and reports, certifications, certificates, qualification records, manuals, MSDSs, video tapes, and drawings required per this specification, the applicable codes, standards, and reference documents in section 2 of this specification, and the purchasing documents.

10.1.2 All detailed designs, drawings, shop drawings, supporting calculations, supporting analyses, support models, procedures, instructions, manufacturer data, operation manuals, and maintenance manuals shall be issued to the Buyer for review prior to manufacture of the Activated Carbon Bed Adsorber units, special tools, and/or the purchase of special tools, filters, and gaskets.

10.1.3 Seller shall submit storage requirements and instructions for Buyer's review.

10.1.4 Seller shall submit to Buyer Engineering and Quality Verification documents in the forms and quantities shown in Form G-321-E, Engineering Document Requirements, and Form G-321-V, Quality Verification Document Requirements attached to the purchasing documents.

10.1.5 Seller shall submit a report identifying any deviations and/or conflicts per Section 2 of the purchasing documents to the Buyer for review.

10.1.6 Each documentation transmittal package shall have a documentation inventory sheet attached listing all documents and the number of pages each.

10.1.7 MDSs in Section 2 of the purchasing documents and motor data sheets shall be marked-up by the Seller and submitted to the Buyer for review with the detailed design. Seller shall fill in all information that is marked with an asterisk (*) and mark-up actual overall Activated Carbon Bed Adsorber dimensions based on the detailed design.

10.1.8 Seller shall provide all operation manuals (include media changeout operations and any media conditioning requirements), maintenance manuals, initial setup and startup instructions, special tools, and spare parts lists for Activated Carbon Bed Adsorber components, as applicable.

10.1.9 Provide nominal and maximum inlet and outlet nozzle loadings, deflections, and moments in all directions for Activated Carbon Bed Adsorber units per thermal and seismic analysis results.

10.1.10 Provide Activated Carbon Bed Adsorber unit support and anchorage design load analyses including seismic, thermal, and combination loads.

10.1.11 Provide MSDS for Seller's recommended challenge gas.

10.1.12 The Seller shall provide equipment reliability figures for all major components and sub-components of the Carbon Bed Adsorber system. The definition of components and sub-

components is at the vendor's discretion. The reliability figures shall include, as a minimum, the following:

- Failure rate, or mean time between failure (whichever is available)
- Estimated modes of failure (example, Drive gear failure, motor burnout, brake failure, etc.). This may be delineated in a FMEA. The method used to perform the FMEA (example, MIL-STD-1629) and the year shall be specified. In addition, all assumptions used to perform the FMEA shall be stated.
- Recommended maintenance and frequency, as applicable
- Estimated time to perform the recommended maintenance, as applicable

The data above shall be based on the physical and environmental conditions delineated in this specification. Where possible, the seller shall compare the figures for the equipment in this specification to similar equipment sold and serviced by the vendor. The source for all estimates and any underlying assumptions shall be stated. If software is used to perform the FMEA, the seller shall specify the software used and the version (example software, Relex, Isogen, Reliasoft, etc.)

10.1.13 Provide installation manual per the requirements of engineering specification 24590-WTP-3PS-G000-T0003, *Packaging, Handling, and Storage Requirements.*

10.1.14 Provide site handling and storage instructions per the requirements of section 3.9 and engineering specification 24590-WTP-3PS-G000-T0003, *Packaging, Handling, and Storage Requirements.*

10.1.15 All analyses shall be submitted in accordance with the requirements of 24590-WTP-3PS-G000-T0014, *Engineering Specification for Supplier Design Analyses.*

10.2 Drawings

10.2.1 Seller shall provide all drawings required per this specification and the applicable documents in section 2 of this specification.

10.2.2 All drawings shall be produced per the drawing practices set forth in ASME Y14.100, Engineering Drawing Practices.

10.2.3 Seller shall submit drawings and diagrams for Buyer's review prior to fabrication, and/or purchase of appurtenance equipment. Drawing and diagram submittals shall include as a minimum, but are not limited to, the following:

- Outline drawings showing dimensions, services, insulation, and foundation and mounting details.
- Outline drawing showing electrical and instrumentation tie-in points.
- Outline drawing showing locations of piping connections with nozzle schedule, including sizes of piping connections with nominal and maximum nozzle loadings, deflections, and moments in all directions.
- Insulation detail drawing(s) mapping installation
- Overall piping and instrumentation diagram (P&ID) for the Activated Carbon Bed Adsorber Units using Buyers supplied instrumentation and equipment tag numbers.

- Interconnection diagram showing details of all internal connections and Buyer external connections, including required location and sizes of wiring connections (including other connections to Buyer's control system).
- Overall single line diagram (wiring diagram) showing all electrical equipment and wiring in the Activated Carbon Bed Adsorber Unit.
- Control logic diagrams showing input signal paths required to accomplish a response.
- Assembly drawings with sufficient information and detail to facilitate assembly of the component parts of an equipment item.
- Shop detail drawings that provide information and detail to facilitate fabrication, manufacture, or installation.

10.3 30% Design Review

10.3.1 Seller shall conduct a 30 % design review with the Buyer. Seller shall submit all drawings, procedures, calculations, laboratory testing results, analyses, and information necessary to conduct the 30 % design review to the Buyer for review.

10.3.2 Finalized outline dimensions of the Activated Carbon Bed Adsorber units shall be included in the 30 % design review. Finalized dimensions shall, at a minimum, include the following:

- Overall dimensions and size for Activated Carbon Bed Adsorber units
- P&IDs
- Control logic diagrams
- Activated Carbon Bed Adsorber unit inlet and outlet nozzle locations
- Discharge filter location and size
- Testing port and manifold locations and size
- Adsorber cell overall dimensions
- Mounting details (anchor size, location, layout, etc.)
- Preliminary bag-in/bag-out plan
- Fire water inlet and drain locations and sizes

10.4 90% Design Review

Seller shall conduct a 90 % design review with the Buyer. Seller shall submit all drawings, procedures, calculations, analyses, and information necessary to conduct the 90 % design review to the Buyer for review.

10.5 Calculations

All calculations to be provided shall be orderly, complete, and sufficiently clear to permit verification. The body of the calculations shall include:

- A concise statement of the purpose of the calculation
- Input data, applicable criteria, and stated assumptions
- A list of references used, including drawings, codes, standards, and computer programs (indicate the version or issue date)
- A discussion of rationale used for design assumption basis
- Equations used for all computations

- Numerical calculations including identification of units used
- A concise statement addressing the calculation results and/or recommendations
- A table of contents for complex calculations

10.6 Schedules

10.6.1 A detailed schedule of laboratory testing, engineering, document submittals, material purchases, fabrication, shop tests, and shipment shall be submitted.

10.6.2 All procedures and instructions shall be completed and submitted to the Buyer a minimum of eight (8) weeks prior to Activated Carbon Bed Adsorber shipment.

10.7 Reporting Appendix A, B, and C Test Results

A test plan and supporting documentation (operating procedures, materials and testing equipment control lists, analytical procedures) must provide a full record of the testing requirements, testing equipment configuration, operating conditions, assumptions, and any other relevant information. In addition to, or consistent with, the test plan content required by the Quality Assurance Project Plan for RPP-WTP, current revision, the test plan shall include directly or by reference (as appropriate) the following information:

- **Document Number** – Test plan number in the document header.
- **Document Hierarchy** – Statement in the test plan text referencing the governing test specification.
- **Background** – Summary level discussion of past results and current data needs that provide context and relevancy of the testing to the WTP Project.
- **Test Prerequisites** – Definition and/or reference of laboratory testing, engineering analyses, small-scale testing needed to support testing.
- **Test Conditions** – Test variables and operating conditions (e.g., duration of operations at steady state conditions, range of equipment operating conditions, process flows, pressures, temperatures, differential pressures, etc.) identified in tables or other efficient formats.
- **Sample Data Requirements** – A table listing the sample type, location, frequency, number of replicates, and planned analyses to be performed. Minimum data accuracy requirements shall be addressed.
- **Test Modifications** – Test Plan shall contain a statement defining how changes or modifications in operations or testing will be documented in the "desk copy" or similar controlling documentation during the test and who has the authority to authorize changes or modifications depending on the significance of the change.
- **Equipment Configuration Record** – The equipment configuration for the test or document reference where the configuration can be found. Statement defining where any changes or modifications to the baseline equipment will be recorded, e.g., laboratory record book.
- **M&TE** – A list identifying measuring and test equipment (M&TE) used to collect data to meet Test Specification requirements, data reported to the project in the summary report or other data reporting formats, and M&TE relied upon for control or modeling purposes. Accuracy and sensitivity achievable for each instrument.

- **Supporting Procedures** – A list of applicable technical and operating procedures or a referenced document that contains the list of documents required for operating the test equipment and associated support systems, sample preparation and analytical procedures, etc.
- **Unique Sample Identification** – Description of or document reference defining method to label, store and maintain samples.
- **Reporting and Analyses Requirements** – Process data that will be obtained and reported, Rate versus time, average temperature versus time, and analyses are required to satisfy each test objective. Planned data analyses, e.g., comparison to theoretical or published predictions, empirical fitting, etc., required to meet objectives.
- **Personnel Qualification** – List of any special training needs.
- **Quality Assurance** – Statement identifying applicable quality assurance requirements. Any exceptions to the approved quality assurance plan shall be described.

A final report shall be submitted within 60 days of completing testing and sample analyses. Test report content shall include (compatible with the individual test objectives):

- Approval sheet signed by the principal investigator, data validation peer reviewer, and project manager,
- Summarize the tests performed, including the date of the tests, and applicable test specification and test plan,
- Provide a clear description of the purpose of the test and state how the completed test met that purpose,
- Describe the unit operations in which the tests were performed and contrast test conditions with planned operating conditions of the RPP-WTP, as appropriate,
- Present and discuss test results and compare against the "success" criteria. Discuss whether or not the findings of the test performed are consistent with previous test reports, whether the expected WTP design or operational conditions are appropriate for the system, or have implications for safety, permitting, or operability,
- Data collected and its acceptability,
- Actions taken in connection with any nonconformances noted,
- Identification of the measuring and test equipment used during the test,
- Describe deviations from the approved test plan, or expected configuration conditions, that occurred during the conduct of the test,
- Comprehensive list of all samples providing the date/time of sampling, sample type, and sample label,
- Data tables listing monitored parameter values.
- A discussion of how the test results validate equipment sizing and performance.

11 References

11.1 Incorporated Design Changes

- 24590-WTP-3PN-MWK0-00001

- 24590-WTP-3PN-MWK0-00002
- 24590-WTP-SDDR-PROC-04-01020
- 24590-WTP-SDDR-PROC-04-01040
- 24590-WTP-SDDR-PROC-05-00392
- 24590-WTP-SDDR-PROC-05-00602
- 24590-WTP-SDDR-PROC-05-00652
- 24590-WTP-SDDR-PROC-05-00701
- 24590-WTP-SDDR-M-05-00018
- 24590-WTP-SDDR-MS-07-00051

11.2 Design Changes Incorporated by Reference

- 24590-WTP-SDDR-M-06-00286
- 24590-WTP-SDDR-M-06-00287

ted Carbon Bed Adsorber Schematic

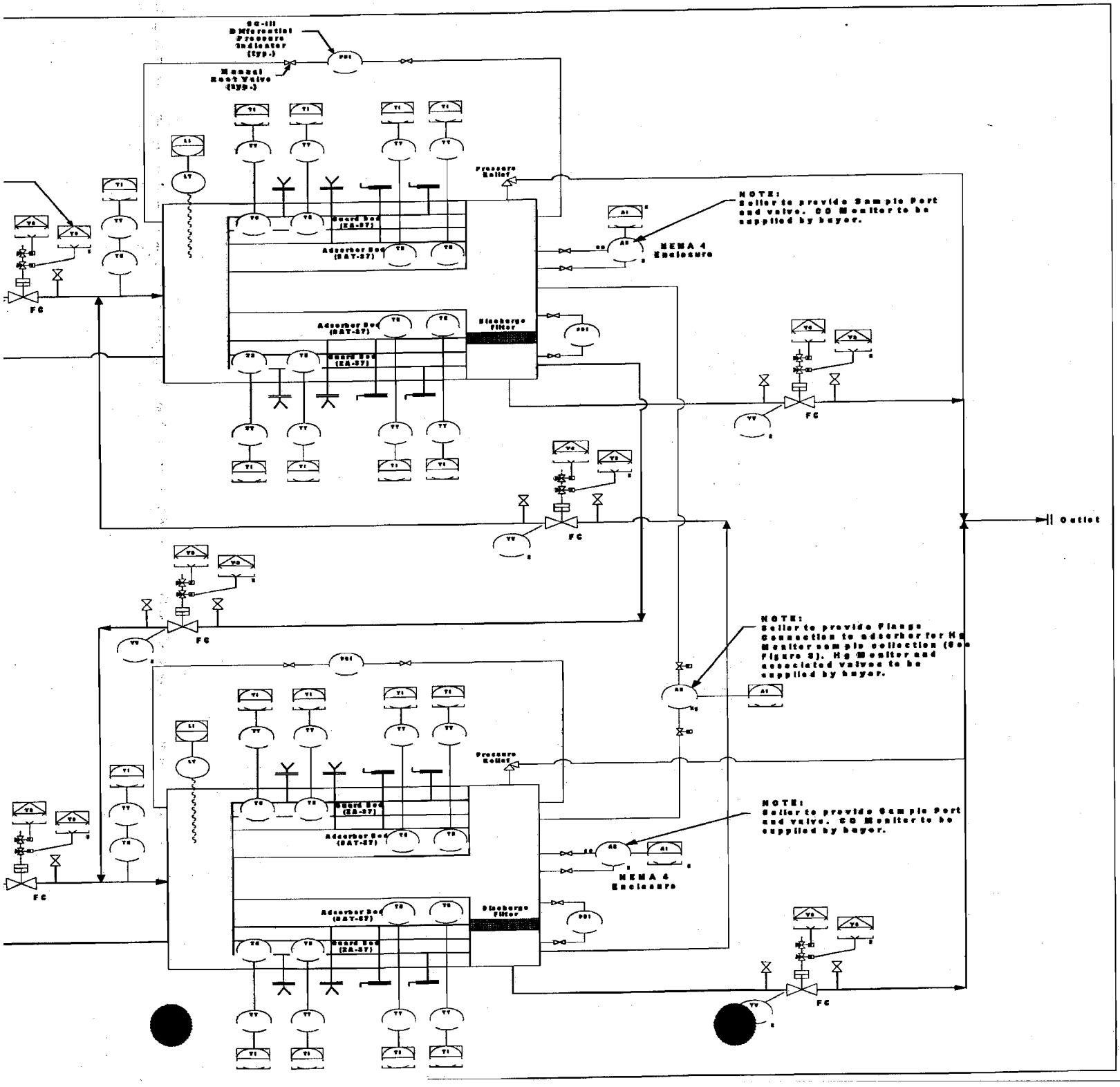

Notes:

1. This figure is only intended to giv flow through the Activated Carb major components are shown. R HOP-00011 and 24590-HLV specification for all components t
2. Deleted.
3. Pneumatic loading or manual sys
4. Buyer supplied mercury analyze select Activated Carbon Bed Ads
5. Instrument air tubing is not sh supplied on a common header, flanged.
6. Seller shall supply a single ele Activated Carbon Bed Adsorber.
7. Except for ITS instrumentation i single instrumentation interface Bed Adsorbers in accordance v specification 24590-WTP-3PS-JC
8. Required PSV and vent lines for shown. System shall be per Sell
9. Mercury analyzer is shown for c Seller's scope of supply. See f Seller provided mercury probe cc
10. ITS solenoids identified for the actuators.
11. CO analyzers are shown for cla Seller's scope of supply. Selle valve for CO analyzer sample col

Legend:

	Control Room Transmitter – Continuous Software (Operator Accessible)
	Control Room Transmitter - Discrete Software (Operator Accessible)
	Hardware – Field Mounted (Operator Accessible)
	Actuated Butterfly Valve
	Manual Valve

Some information illegible, howeve adequate design i

ed Carbon Bed Adsorber Schematic

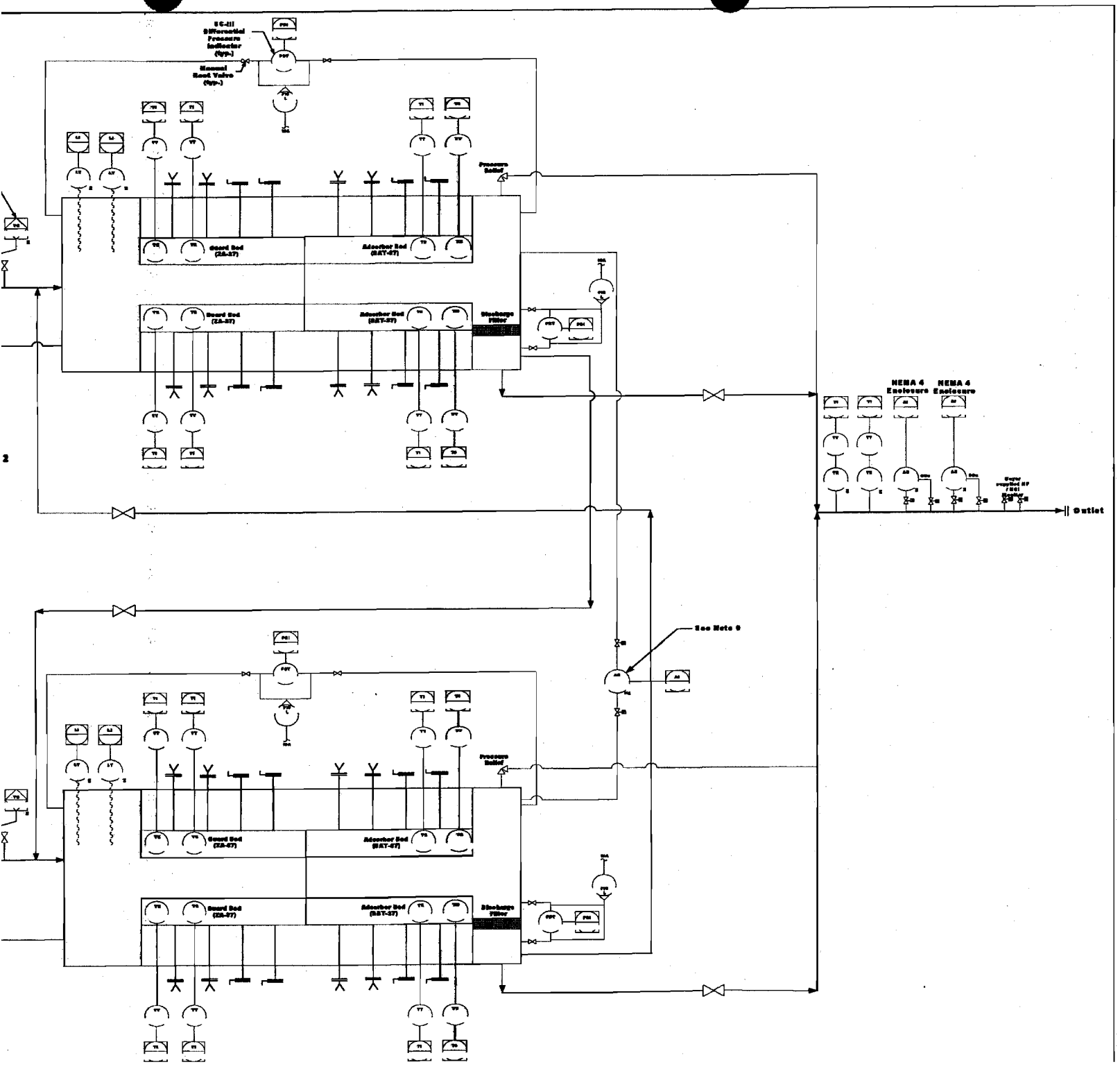

Notes:

1. This figu only intended to gi flow thr the Activated Carl major components are shown. LVP-00004 and this specificati included.
2. Deleted.
3. Pneumatic loading or manual sys
4. Mercury analyzer is manually Carbon Bed Adsorber to be moni
5. Instrument air tubing is not sh supplied on a common header, flanged.
6. Seller shall supply a single ele Activated Carbon Bed Adsorber.
7. Except for ITS instrumentation i single instrumentation interface Bed Adsorbers in accordance v specification 24590-WTP-3PS-JC
8. Required PSV and vent lines for shown. System shall be per Sell
9. Mercury analyzer is shown for Seller's scope of supply. See Seller provided mercury probe fla
10. All transmitters and solenoids sh supplied instrumentation racks lo
11. PDT's shall have rotometer ISA
12. COx analyzers are shown for cl Seller's scope of supply. Sell valve for CO analyzer sample co

Legend:

	Control Room Transmitter – Continuous Software (Operator Accessible)		F
	Control Room Transmitter - Discrete Software (Operator Accessible)		C
	Hardware – Field Mounted (Operator Accessible)		R (1
	Actuated Butterfly Valve		C
	Manual Valve		

Some inform
illegible, ho
adequate des
Signature:

Figure 3 **Mercury Gas Monitor Probe Flange Connection**

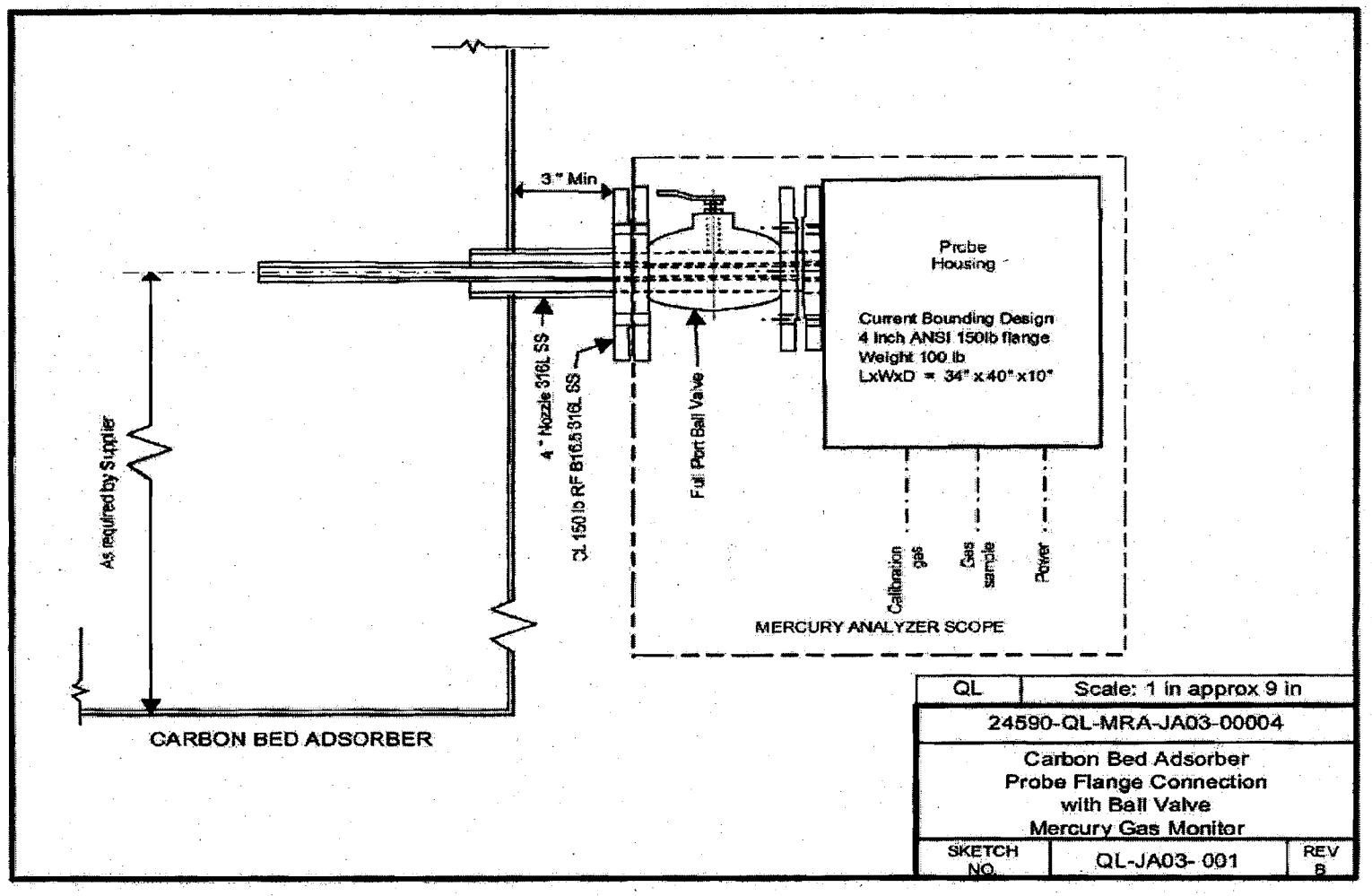

Table 1 Important to Safety Equipment List (HLW)

IMPORTANT TO SAFETY EQUIPMENT LIST

COMPONENT TAG NO.:
24590-HLW-MV-HOP-ADBR-00001A/B
24590-HLW-MV-HOP-ADBR-00002A/B

Important to Safety function for the activated carbon bed adsorber units for both HLW and LAW is defined in section 3.1.15 of engineering specification 24590-WTP-3PS-MWK0-T0001. This function is defined as containment of melter offgas during normal, maximum, and design conditions. Pressure boundary must be maintained during and post SC-III event.

Drawing Number	Item No.	Description	Material or Vendor	QTY	ITS/non-ITS	QL/CM	CGD	COMMENTS
D8169	D8169-1	Air Slot with Sample Holes	D8169-1	1	Non-ITS	CM	No	Does not function to contain melter offgas. This part forms part of the carbon media screen
Inlet Air Slot	D8169-2	Air Slot without Sample Holes	D8169-2	1	Non-ITS	CM	No	Does not function to contain melter offgas. This part forms part of the carbon media screen
	D8169-3	Vertical Channel LH	12GA SHT 316L SS	1	Non-ITS	CM	No	Does not function to contain melter offgas. This part forms part of the carbon media screen
	D8169-4	Vertical Channel RH	12GA SHT 316L SS	1	Non-ITS	CM	No	Does not function to contain melter offgas. This part forms part of the carbon media screen
	D8169-5	Horizontal Channel	12GA SHT 316L SS	20	Non-ITS	CM	No	Does not function to contain melter offgas. This part forms part of the carbon media screen
	D8169-6	Lower Channel	12GA SHT 316L SS	2	Non-ITS	CM	No	Does not function to contain melter offgas. This part forms part of the carbon media screen
	D8169-7	Upper Channel	12GA SHT 316L SS	2	Non-ITS	CM	No	Does not function to contain melter offgas. This part forms part of the carbon media screen
	D8169-8	Vertical Flat Bar (118)	12GA SHT 316L SS	2	Non-ITS	CM	No	Does not function to contain melter offgas. This part forms part of the carbon media screen
	D8169-9	Vertical Flat Bar (123.53)	12GA SHT 316L SS	2	Non-ITS	CM	No	Does not function to contain melter offgas. This part forms part of the carbon media screen
	D8169-10	Backing Washer	12GA SHT 316L SS	3	Non-ITS	CM	No	Does not function to contain melter offgas. This part forms part of the carbon media screen
	D8169-11	Perforated Sheet (22.38)	20GA SHT 316L SS	10	Non-ITS	CM	No	Does not function to contain melter offgas. This part forms part of the carbon media screen
	D8169-12	Perforated Sheet (10.44)	20GA SHT 316L SS	2	Non-ITS	CM	No	Does not function to contain melter offgas. This part forms part of the carbon media screen
D8170	D8170-1	Vertical Channel	12GA SHT 316L SS	2	Non-ITS	CM	No	Does not function to contain melter offgas. This part forms part of the carbon media screen
Outlet Air Slot	D8170-2	Horizontal Channel	12GA SHT 316L SS	10	Non-ITS	CM	No	Does not function to contain melter offgas. This part forms part of the carbon media screen
	D8170-3	Lower Channel	12GA SHT 316L SS	1	Non-ITS	CM	No	Does not function to contain melter offgas. This part forms part of the carbon media screen
	D8170-4	Upper Channel	12GA SHT 316L SS	1	Non-ITS	CM	No	Does not function to contain melter offgas. This part forms part of the carbon media screen
	D8170-5	Vertical Flat Bar	12GA SHT 316L SS	2	Non-ITS	CM	No	Does not function to contain melter offgas. This part forms part of the carbon media screen
	D8170-6	Perforated Sheet (22.38)	20GA SHT 316L SS	10	Non-ITS	CM	No	Does not function to contain melter offgas. This part forms part of the carbon media screen
	D8170-7	Perforated Sheet (10.44)	20GA SHT 316L SS	2	Non-ITS	CM	No	Does not function to contain melter offgas. This part forms part of the carbon media screen
D8171	D8171-1	Air Slot with Sample Holes	D8169-1	1	Non-ITS	CM	No	Does not function to contain melter offgas. This part forms part of the carbon media screen
Bed Air Slot	D8171-2	Air Slot without Sample Holes	D8169-2	1	Non-ITS	CM	No	Does not function to contain melter offgas. This part forms part of the carbon media screen
	D8171-3	Vertical Channel	12GA SHT 316L SS	2	Non-ITS	CM	No	Does not function to contain melter offgas. This part forms part of the carbon media screen
	D8171-4	Horizontal Channel	12GA SHT 316L SS	20	Non-ITS	CM	No	Does not function to contain melter offgas. This part forms part of the carbon media screen
	D8171-5	Lower Channel	12GA SHT 316L SS	2	Non-ITS	CM	No	Does not function to contain melter offgas. This part forms part of the carbon media screen
	D8171-6	Upper Channel	12GA SHT 316L SS	2	Non-ITS	CM	No	Does not function to contain melter offgas. This part forms part of the carbon media screen
	D8171-7	Backing Washer	12GA SHT 316L SS	6	Non-ITS	CM	No	Does not function to contain melter offgas. This part forms part of the carbon media screen
	D8171-8	Perforated Sheet (22.38)	20GA SHT 316L SS	20	Non-ITS	CM	No	Does not function to contain melter offgas. This part forms part of the carbon media screen

Drawing Number	Item No.	Description	Material or Vendor	QTY	ITS/non-ITS	QL/CM	CGD	COMMENTS
	D8171-9	Perforated Sheet (10.44)	20GA SHT 316L SS	4	Non-ITS	CM	No	Does not function to contain melter offgas. This part forms part of the carbon media screen
	D8171-10	Vertical Channel W/Holes	12GA SHT 316L SS	2	Non-ITS	CM	No	Does not function to contain melter offgas. This part forms part of the carbon media screen
D8179	D8179-1	Inlet Air Slot with Sample Holes	D8169-1	1	Non-ITS	CM	No	Does not function to contain melter offgas. This part forms part of the carbon media screen
Adsorber Assembly	D8179-2	Inlet Air Slot without Sample Holes	D8169-2	1	Non-ITS	CM	No	Does not function to contain melter offgas. This part forms part of the carbon media screen
	D8179-3	Outlet Air Slot	D8170	1	Non-ITS	CM	No	Does not function to contain melter offgas. This part forms part of the carbon media screen
	D8179-4	Bed Air Slot with Sample Holes	D8171-1	1	Non-ITS	CM	No	Does not function to contain melter offgas. This part forms part of the carbon media screen
	D8179-5	Bed Air Slots without Sample Holes	D8171-2	1	Non-ITS	CM	No	Does not function to contain melter offgas. This part forms part of the carbon media screen
	D8179-6	Tubing	1 1/2 OD x 0.120 WT, 316L SS	3	Non-ITS	CM	No	Does not function to contain melter offgas. This part forms part of the carbon media screen, used to fill the hole spaced used for the grate theft sample.
	D8179-7	Pipe Coupling	1 1/4 x 3000#, 316L SS	3	ITS	QL	Yes	
	D8179-8	Inlet Plate	12GA SHT 316L SS	1	Non-ITS	CM	No	Does not function to contain melter offgas. Plate is used to channel air into the air slots and through the carbon media.
	D8179-9	Outlet Plate	12GA SHT 316L SS	2	Non-ITS	CM	No	Does not function to contain melter offgas. Plate is used to channel air into the air slots and through the carbon media.
	D8179-10	Divider Plate	12GA SHT 316L SS	2	Non-ITS	CM	No	Does not function to contain melter offgas. Plate is used in the top plenum of the carbon media beds to separate the different medias and aid in carbon media loading.
	D8179-11	Cover Plate	12GA SHT 316L SS	2	Non-ITS	CM	No	Does not function to contain melter offgas. Plate is used to channel air into the air slots and through the carbon media.
D8183	D8183-1	Adsorber Assembly	D8179	1	ITS	QL	Yes *	The pipe coupling called out as part of this assembly functions to contain melter offgas, therefore, the whole assembly is designated ITS. * For Item# D8183-1 should refer to drawing D8179 for the safety / quality designation and CGD requirements.
Housing Weldment	D8183-2	Back Panel	D8188-1	1	ITS	QL	Yes	
	D8183-3	Front Panel	D8188-2	1	ITS	QL	Yes	
	D8183-4	Bottom Panel	D8188-4	1	ITS	QL	Yes	
	D8183-5	Top Panel	D8188-5	1	ITS	QL	Yes	
	D8183-6	Top Panel W/Holes	D8188-6	1	ITS	QL	Yes	
	D8183-7	Top Panel	D8188-7	1	ITS	QL	Yes	
	D8183-8	Top End Panel	D8188-8	2	ITS	QL	Yes	
	D8183-9	Inlet End Panel	D8188-9	1	ITS	QL	Yes	
	D8183-10	Outlet End Panel	D8188-10	1	ITS	QL	Yes	
	D8183-11	Hopper Side Main Bed	D8188-11	8	ITS	QL	Yes	
	D8183-12	Hopper Side Guard Bed Panel	D8188-12	8	ITS	QL	Yes	
	D8183-13	Hopper End Main Bed Panel	D8188-13	8	ITS	QL	Yes	
	D8183-14	Hopper End Guard Bed Panel	D8188-14	8	ITS	QL	Yes	
	D8183-15	Hopper Bottom Panel	D8188-15	8	ITS	QL	Yes	
	D8183-16	Manway Flange	D8188-16	2	ITS	QL	Yes	
	D8183-17	Reinforcement Plate 18"	D8188-18	2	ITS	QL	Yes	
	D8183-18	Reinforcement Plate 14"	D8188-19	4	ITS	QL	Yes	
	D8183-19	Reinforcement Plate 8"	D8188-20	12	ITS	QL	Yes	
	D8183-20	Cylinder 18" I.D.	D8188-21	2	ITS	QL	Yes	
	D8183-21	Discharge Filter MTG Plate	D8198	1	Non-ITS	CM	No	Does not function to contain melter offgas. This is the internal rack used to hold the discharge filters.
	D8183-22	Slide Gate Assembly	D8215-2	8	ITS	QL	Yes	
	D8183-23	Lifting Lug	B8218	4	Non-ITS	CM	No	Does not function to contain melter offgas. Lifting lugs do not form part of the pressure boundary and are only used to handle the housings for transportation and installation.
	D8183-24	Plate (126.62)	1/4 PL 316L SS	8	ITS	QL	Yes	
	D8183-25	Plate (120)	1/4 PL 316L SS	8	ITS	QL	Yes	
	D8183-26	Plate (84)	1/4 PL 316L SS	2	ITS	QL	Yes	
	D8183-27	Plate (6.25)	3/8 PL 316L SS	8	ITS	QL	Yes	
	D8183-28	Plate (5.62)	3/8 PL 316L SS	20	ITS	QL	Yes	

Drawing Number	Item No.	Description	Material or Vendor	QTY	ITS/non-ITS	QL/CM	CGD	COMMENTS
	D8183-29	I-Beam (131.88)	6 X 12.5 # HRS	8	ITS	QL	Yes	
	D8183-30	I-Beam (120)	6 X 12.5 # HRS	6	ITS	QL	Yes	
	D8183-31	I-Beam (84.5)	6 X 12.5 # HRS	2	ITS	QL	Yes	
	D8183-32	Pipe T.O.E. (4.5)	1/2 SCH 40 316L SS	1	ITS	QL	Yes	
	D8183-33	Pipe T.O.E. (12)	2 SCH 40 316L SS	1	ITS	QL	Yes	
	D8183-34	Pipe (23.62)	2 SCH 40 316L SS	1	ITS	QL	Yes	
	D8183-35	Pipe (18.00)	2 SCH 40 316L SS	1	ITS	QL	Yes	
	D8183-36	Pipe (3.00)	2 SCH 40 316L SS	1	ITS	QL	Yes	
	D8183-37	Pipe (8.88)	8 SCH 40 316L SS	12	ITS	QL	Yes	
	D8183-38	Pipe (6.38)	8 SCH 40 316L SS	8	ITS	QL	Yes	
	D8183-39	Pipe (6.38)	1/4 SCH 40 316L SS	1	ITS	QL	Yes	
	D8183-40	Weld Neck Flange	2 X 150# 316L SS	2	ITS	QL	Yes	
	D8183-41	Slip-on Flange	8 X 150# 316L SS	12	ITS	QL	Yes	
	D8183-42	Weld Neck Flange	14 X 150# 316L SS	4	ITS	QL	Yes	
	D8183-43	90° Elbow	2 SCH 40 316L SS	2	ITS	QL	Yes	
	D8183-44	Hex HD Bolt	HEX HD BOLT (1.75)	24	ITS	QL	Yes	
	D8183-45	Bag-out Flange	D8188-22	2	ITS	QL	Yes	
	D8183-46	Door Flange	D8188-23	2	ITS	QL	Yes	
	D8183-47	Re-Bar Flange	D8188-24	2	ITS	QL	Yes	
	D8183-48	Round Bar	1/4 DIA ROUND BAR 316L SS	A/R	Non-ITS	CM	No	Does not function to contain melter offgas. This round bar is used to help hold a bag in place during a discharge filter bag-in/bag-out operation.
	D8183-49	Pipe Support Assy	D8228-1	1	ITS	QL	Yes	
	D8183-50	Pipe Support Assy	D8228-2	2	ITS	QL	Yes	
	D8183-51	Reinforcement PL (17.0 OD)	3/8 PL 316L SS	3	ITS	QL	Yes	
	D8183-52	Reinforcement PL (15.5 OD)	3/8 PL 316L SS	1	ITS	QL	Yes	
	D8183-53	Reinforcement PL (18 OD)	3/8 PL 316L SS	2	ITS	QL	Yes	
	D8183-54	Reinforcement PL (4.00 OD)	3/8 PL 316L SS	5	ITS	QL	Yes	
	D8183-55	Pipe Support Assy	D8574	1	ITS	QL	Yes	
	D8183-56	Plug	3/8 PL 316L SS	1	ITS	QL	Yes	
D8188	D8188-1	Back Panel	3/8 PL 316L SS	1	ITS	QL	Yes	
Housing WLDMT	D8188-2	Front Panel	3/8 PL 316L SS	1	ITS	QL	Yes	
Details	D8188-3	Front Panel	3/8 PL 316L SS	2	ITS	QL	Yes	
	D8188-4	Bottom Panel	3/8 PL 316L SS	1	ITS	QL	Yes	
	D8188-5	Top Panel	3/8 PL 316L SS	1	ITS	QL	Yes	
	D8188-6	Top Panel w/ Hole	3/8 PL 316L SS	1	ITS	QL	Yes	
	D8188-7	Top Panel	3/8 PL 316L SS	1	ITS	QL	Yes	
	D8188-8	Top End Panel	3/8 PL 316L SS	2	ITS	QL	Yes	
	D8188-9	Inlet End Panel	3/8 PL 316L SS	1	ITS	QL	Yes	
	D8188-10	Outlet End Panel	3/8 PL 316L SS	1	ITS	QL	Yes	
	D8188-11	Hopper Side Main Bed	3/8 PL 316L SS	8	ITS	QL	Yes	
	D8188-12	Hopper Side Guard Bed Panel	3/8 PL 316L SS	8	ITS	QL	Yes	
	D8188-13	Hopper End Main Bed Panel	3/8 PL 316L SS	8	ITS	QL	Yes	
	D8188-14	Hopper End Guard Bed Panel	3/8 PL 316L SS	8	ITS	QL	Yes	
	D8188-15	Hopper Bottom Panel	3/8 PL 316L SS	8	ITS	QL	Yes	
	D8188-16	Manway Flange	3/4 PL 316L SS	2	ITS	QL	Yes	
	D8188-17	Manway Cover	1/2 PL 316L SS	2	ITS	QL	Yes	
	D8188-18	Reinforcement Plate 16"	3/4 X 1 RECT BAR 316L SS	2	ITS	QL	Yes	
	D8188-19	Reinforcement Plate 14"	3/4 X 1 RECT BAR 316L SS	1	ITS	QL	Yes	
	D8188-20	Reinforcement Plate 8"	3/8 X 1 RECT BAR 316L SS	12	ITS	QL	Yes	
	D8188-21	Cylinder 18" I.D.	3/16 PL 316L SS	2	ITS	QL	Yes	
	D8188-22	Bag-out Flange	3/16 PL 316L SS	2	ITS	QL	Yes	
	D8188-23	Door Flange	3/4 X 3 RECT BAR 316L SS	2	ITS	QL	Yes	
	D8188-24	Re-Bar Flange	1 X 3 RECT BAR 316L SS	2	ITS	QL	Yes	
D8196	D8196-1	Plate (32.88)	1/4 PL 316L SS	1	Non-ITS	CM	No	Does not function to contain melter offgas. This is the internal rack used to hold the discharge filters.
Discharge Filter MTG	D8196-2	Plate (33.38)	1/4 PL 316L SS	1	Non-ITS	CM	No	Does not function to contain melter offgas. This is the internal rack used to hold the discharge filters.
Plate	D8196-3	Plate (23.75)	1/4 PL 316L SS	1	Non-ITS	CM	No	Does not function to contain melter offgas. This is the internal rack used to hold the discharge filters.
	D8196-4	Plate (21.75)	1/4 PL 316L SS	4	Non-ITS	CM	No	Does not function to contain melter offgas. This is the internal rack used to hold the discharge filters.

Drawing Number	Item No.	Description	Material or Vendor	QTY	ITS/non-ITS	QL/CM	CGD	COMMENTS
	D8188-5	Z-Bar (6.19)	12GA SHT 316L SS	2	Non-ITS	CM	No	Does not function to contain melter offgas. This is the internal rack used to hold the discharge filters.
	D8188-6	Z-Bar (6.60)	12GA SHT 316L SS	2	Non-ITS	CM	No	Does not function to contain melter offgas. This is the internal rack used to hold the discharge filters.
	D8188-7	Strip	20GA SHT 316L SS	4	Non-ITS	CM	No	Does not function to contain melter offgas. This is the internal rack used to hold the discharge filters.
	D8188-8	Pull Rod	18GA SHT 316L SS	2	Non-ITS	CM	No	Does not function to contain melter offgas. This is used to help remove the discharge filters during the bag-in/bag-out operation.
D8215 Slide Gate Assembly	D8215-1	Pipe	8 SCH 40 316L SS	1	ITS	QL	Yes	
	D8215-2	Flange	1 PLATE 316L SS	1	ITS	QL	Yes	
	D8215-3	Flange	1 PLATE 316L SS	1	ITS	QL	Yes	
	D8215-4	Slide	7GA SHT 316L SS	1	ITS	QL	Yes	
	D8215-5	O-Ring	1/4 DIA SOLID NEOPRENE	1	ITS	QL	Yes	
	D8215-6	Hex HD Bolt	3/4-10UNC 316 SS	8	ITS	QL	Yes	
	D8215-7	Hex Nut	3/4-10UNC 316 SS	8	ITS	QL	Yes	
	D8215-8	Lock Washer	3/4 I.D. 316 SS	8	ITS	QL	Yes	
D8217	D8217-1	Adsorber Assembly	D8179	1	ITS	QL	Yes *	The pipe coupling called out are part of this assembly functions to contain melter offgas, therefore, the whole assembly is designated ITS. * For Item# D8217-1 should refer to drawing D8179 for the safety / quality designation and CGD requirements.
Housing Weldment	D8217-2	Back Panel	D8188-1	1	ITS	QL	Yes	
	D8217-3	Front Panel	D8188-2	1	ITS	QL	Yes	
	D8217-4	Bottom Panel	D8188-4	1	ITS	QL	Yes	
	D8217-5	Top Panel	D8188-5	1	ITS	QL	Yes	
	D8217-6	Top Panel W/Holes	D8188-6	1	ITS	QL	Yes	
	D8217-7	Top Panel	D8188-7	1	ITS	QL	Yes	
	D8217-8	Top End Panel	D8188-8	2	ITS	QL	Yes	
	D8217-9	Inlet End Panel	D8188-9	1	ITS	QL	Yes	
	D8217-10	Outlet End Panel	D8188-10	1	ITS	QL	Yes	
	D8217-11	Hopper Side Main Bed	D8188-11	8	ITS	QL	Yes	
	D8217-12	Hopper Side Guard Bed Panel	D8188-12	8	ITS	QL	Yes	
	D8217-13	Hopper End Main Bed Panel	D8188-13	8	ITS	QL	Yes	
	D8217-14	Hopper End Guard Bed Panel	D8188-14	8	ITS	QL	Yes	
	D8217-15	Hopper Bottom Panel	D8188-15	8	ITS	QL	Yes	
	D8217-16	Manway Flange	D8188-16	2	ITS	QL	Yes	
	D8217-17	Reinforcement Plate 16"	D8188-18	2	ITS	QL	Yes	
	D8217-18	Reinforcement Plate 14"	D8188-19	4	ITS	QL	Yes	
	D8217-19	Reinforcement Plate 6"	D8188-20	12	ITS	QL	Yes	
	D8217-20	Cylinder 16" I.D.	D8188-21	2	ITS	QL	Yes	
	D8217-21	Discharge Filter MTG Plate	D8196	1	Non-ITS	CM	No	Does not function to contain melter offgas. This is the internal rack used to hold the discharge filters.
	D8217-22	Slide Gate Assembly	D8215-2	8	ITS	QL	Yes	
	D8217-23	Lifting Lug	S8216	4	Non-ITS	CM	No	Does not function to contain melter offgas. Lifting lugs do not form part of the pressure boundary and are only used to handle the housings for transportation and installation.
	D8217-24	Plate (126.62)	1/4 PL 316L SS	8	ITS	QL	Yes	
	D8217-25	Plate (120)	1/4 PL 316L SS	8	ITS	QL	Yes	
	D8217-26	Plate (64)	1/4 PL 316L SS	2	ITS	QL	Yes	
	D8217-27	Plate (6.25)	3/8 PL 316L SS	8	ITS	QL	Yes	
	D8217-28	Plate (5.62)	3/8 PL 316L SS	20	ITS	QL	Yes	
	D8217-29	I-Beam (131.88)	6 X 12.5 # HRS	8	ITS	QL	Yes	
	D8217-30	I-Beam (120)	6 X 12.5 # HRS	6	ITS	QL	Yes	
	D8217-31	I-Beam (64.5)	6 X 12.5 # HRS	2	ITS	QL	Yes	
	D8217-32	Pipe T.O.E. (4.5)	1/2 SCH 40 316L SS	1	ITS	QL	Yes	
	D8217-33	Pipe T.O.E. (12)	2 SCH 40 316L SS	1	ITS	QL	Yes	
	D8217-34	Pipe (23.62)	2 SCH 40 316L SS	1	ITS	QL	Yes	
	D8217-35	Pipe (18.00)	2 SCH 40 316L SS	1	ITS	QL	Yes	
	D8217-36	Pipe (3.00)	2 SCH 40 316L SS	1	ITS	QL	Yes	
	D8217-37	Pipe (8.88)	8 SCH 40 316L SS	12	ITS	QL	Yes	
	D8217-38	Pipe (6.38)	8 SCH 40 316L SS	8	ITS	QL	Yes	
	D8217-39	Pipe (6.38)	14 SCH 40 316L SS	1	ITS	QL	Yes	

Drawing Number	Item No.	Description	Material or Vendor	QTY	ITS/non-ITS	GL/CM	CGD	COMMENTS
	D8217-40	Weld Neck Flange	2 X 150# 316L SS	2	ITS	QL	Yes	
	D8217-41	Slip-on Flange	8 X 150# 316L SS	12	ITS	QL	Yes	
	D8217-42	Weld Neck Flange	14 X 150# 316L SS	4	ITS	QL	Yes	
	D8217-43	90° Elbow	2 SCH 40 316L SS	2	ITS	QL	Yes	
	D8217-44	Hex HD Bolt	HEX HD BOLT (1.75)	24	ITS	QL	Yes	
	D8217-45	Bag-out Flange	D8188-22	2	ITS	QL	Yes	
	D8217-46	Door Flange	D8188-23	2	ITS	QL	Yes	
	D8217-47	Re-Bar Flange	D8188-24	2	ITS	QL	Yes	
	D8217-48	Round Bar	1/4 DIA ROUND BAR 316L SS	A/R	Non-ITS	CM	No	Does not function to contain melter offgas. This round bar is used to help hold a bag in place during a discharge filter bag-in/bag-out operation.
	D8217-49	Pipe Support Assy	D8228-1	1	ITS	QL	Yes	
	D8217-50	Pipe Support Assy	D8229-2	2	ITS	QL	Yes	
	D8217-51	Reinforcement PL (17.0 OD)	3/8 PL 316L SS	3	ITS	QL	Yes	
	D8217-52	Reinforcement PL (15.5 OD)	3/8 PL 316L SS	1	ITS	QL	Yes	
	D8217-53	Reinforcement PL (18 OD)	3/8 PL 316L SS	2	ITS	QL	Yes	
	D8217-54	Reinforcement PL (4.00 OD)	3/8 PL 316L SS	3	ITS	QL	Yes	
	D8217-55	Plug	3/8 PL 316L SS	1	ITS	QL	Yes	
D8218 Base Frame Assembly	D8218-1	W-Beam (278.50)	8 X 31# HRS ASTM A-36	2	ITS	QL	Yes	
	D8218-2	W-Beam (88.96)	8 X 31# HRS ASTM A-36	4	ITS	QL	Yes	
	D8218-3	W-Beam (46.50)	10 X 31# HRS ASTM A-36	6	ITS	QL	Yes	
	D8218-4	Plate	1.0 PL HRS ASTM A-36	8	ITS	QL	Yes	
	D8218-5	Channel (7.12)	4 X 5.4# HRS ASTM A-36	2	ITS	QL	Yes	
	D8218-6	Channel (81.25)	4 X 5.4# HRS ASTM A-36	1	ITS	QL	Yes	
D8220 Ladder Assembly	D8220-1	Flat Bar (191.5)	1/2 X 2 1/2 FL HRS ASTM A-36	2	Non-ITS	CM	No	Does not function to contain melter offgas. Ladder and all associated parts are external to the pressure boundary and form part of the maintenance platform.
	D8220-2	Flat Bar (35.5)	1/2 X 2 1/2 FL HRS ASTM A-36	2	Non-ITS	CM	No	Does not function to contain melter offgas. Ladder and all associated parts are external to the pressure boundary and form part of the maintenance platform.
	D8220-3	Flat Bar (5.5)	1/2 X 2 1/2 FL HRS ASTM A-36	2	Non-ITS	CM	No	Does not function to contain melter offgas. Ladder and all associated parts are external to the pressure boundary and form part of the maintenance platform.
	D8220-4	Flat Bar (10.25)	1/4 X 2 FL HRS ASTM A-36	2	Non-ITS	CM	No	Does not function to contain melter offgas. Ladder and all associated parts are external to the pressure boundary and form part of the maintenance platform.
	D8220-5	Pipe	3/4 BAR CS	16	Non-ITS	CM	No	Does not function to contain melter offgas. Ladder and all associated parts are external to the pressure boundary and form part of the maintenance platform.
	D8220-6	Flat Bar (13.06)	1/4 X 2 FL HRS ASTM A-36	2	Non-ITS	CM	No	Does not function to contain melter offgas. Ladder and all associated parts are external to the pressure boundary and form part of the maintenance platform.
	D8220-7	Flat Bar (8.00)	1/4 X 2 FL HRS ASTM A-36	2	Non-ITS	CM	No	Does not function to contain melter offgas. Ladder and all associated parts are external to the pressure boundary and form part of the maintenance platform.
D8222 Housing Assembly	D8222-1	Housing Weldment Unit A	D8183	1	ITS	QL	Yes	
	D8222-2	Manway Cover	D8198-17	2	ITS	QL	Yes	
	D8222-3	Slide Gate Assembly	D8215	8	ITS	QL	Yes	
	D8222-4	Access Door Discharge Filter	D8224	2	ITS	QL	Yes	
	D8222-5	Carbon Sample Plug Assembly	B8284	3	ITS	QL	Yes	
	D8222-6	Electrical Enclosure/gauge panel assy Unit A	D8285	1	ITS	QL	Yes *	PDITs contain a small amount of melter offgas making the pressure boundary function of the PDITs an ITS function. This makes the assembly ITS. * For Item# D8222-6 should refer to drawing D8285 for the safety / quality designation and CGD requirements.
	D8222-7	Blind Flange Modified	8 X 150# 316L SS	3	ITS	QL	Yes	
	D8222-8	Blind Flange	8 X 150# 316L SS	9	ITS	QL	Yes	
	D8222-9	Pipe Plug	1 1/4 X 150# 316L SS	3	ITS	QL	Yes	
	D8222-10	Pipe Coupling	1 1/4 X 3000# 316L SS	3	ITS	QL	Yes	
	D8222-11	Pipe Coupling	1 1/2 X 3000# 316L SS	1	ITS	QL	Yes	
	D8222-12	Pipe T.O.E. (6.38)	1/2 SCH 40 316L SS	5	ITS	QL	Yes	
	D8222-13	Pipe T.O.E. (19.38)	1/2 SCH 40 316L SS	2	ITS	QL	Yes	

Drawing Number	Item No.	Description	Material or Vendor	QTY	ITS/non-ITS	QL/CM	CGD	COMMENTS
	D8222-14	Thermowell (27")	B8309-2	1	ITS	QL	Yes	
	D8222-15	Thermowell (46")	B8309-3	4	ITS	QL	Yes	
	D8222-16	Thermowell (86")	B8309-4	4	ITS	QL	Yes	
	D8222-17	Temperature Element (27")	2904100-015	1	ITS	CM	No	Additional Protection Class (APC), may be purchased as commercial component.
	D8222-18	Temperature Element (46")	2904100-015	4	ITS	CM	No	Additional Protection Class (APC), may be purchased as commercial component.
	D8222-19	Temperature Element (86")	2904100-015	1	ITS	CM	No	Additional Protection Class (APC), may be purchased as commercial component.
	D8222-20	Radar Level Detector	2904100-017	1	ITS	QL	Yes	
	D8222-21	Manual Valve 1/2"	2904100-019	8	ITS	QL	Yes	
	D8222-22	Ball Valve 2"	2904100-020	1	ITS	QL	Yes	
	D8222-23	Gasket B/O Door 3/8THK x 1WD	Silicone Closed Cell Sponge	128	ITS	QL	Yes	
	D8222-24	Gasket 8" Flange		12	ITS	QL	Yes	
	D8222-25	Gasket Manway 3/8THK x 1WD		2	ITS	QL	Yes	
	D8222-26	Hex Nut	1/2-13UNC 316 SS	24	ITS	QL	Yes	
	D8222-27	Hex Nut	3/4-10UNC 316 SS	224	ITS	QL	Yes	
	D8222-28	Hex HD Bolt (2.5)	3/4-10UNC 316 SS	32	ITS	QL	Yes	
	D8222-29	Hex HD Bolt (3.5)	3/4-10UNC 316 SS	192	ITS	QL	Yes	
	D8222-30	Flat Washer	1/2 I.D. 316 SS	24	ITS	QL	Yes	
	D8222-31	Flat Washer	3/4 I.D. 316 SS	224	ITS	QL	Yes	
	D8222-32	DELETED						
	D8222-33	Solenoid Valve 1/2"	2904100-022	1	ITS	QL	Yes	
D8223 Housing Assembly	D8223-1	Housing Weldment Unit B	D8217	1	ITS	QL	Yes	
	D8223-2	Manway Cover	D8198-17	2	ITS	QL	Yes	
	D8223-3	Slide Gate Assembly	D8215	8	ITS	QL	Yes	
	D8223-4	Access Door Discharge Filter	D8224	2	ITS	QL	Yes	
	D8223-5	Carbon Sample Plug Assembly	B8284	3	ITS	QL	Yes	
	D8223-6	Electrical Enclosure/gauge panel assy Unit A	D8286	1	ITS	QL	Yes *	PDITs contain a small amount of meter offgas making the pressure boundary function of the PDITs an ITS function. This makes the assembly ITS. * For Item# D8223-6 should refer to drawing D8286 for the safety / quality designation and CGD requirements.
	D8223-7	Blind Flange Modified	8 X 150# 316L SS	3	ITS	QL	Yes	
	D8223-8	Blind Flange	8 X 150# 316L SS	9	ITS	QL	Yes	
	D8223-9	Pipe Plug	1 1/4 X 150# 316L SS	3	ITS	QL	Yes	
	D8223-10	Pipe Coupling	1 1/4 X 3000# 316L SS	3	ITS	QL	Yes	
	D8223-11	Pipe Coupling	1 1/2 X 3000# 316L SS	1	ITS	QL	Yes	
	D8223-12	Pipe T.O.E. (9.38)	1/2 SCH 40 316L SS	5	ITS	QL	Yes	
	D8223-13	Pipe T.O.E. (19.38)	1/2 SCH 40 316L SS	2	ITS	QL	Yes	
	D8223-14	Thermowell (27")	B8309-2	1	ITS	QL	Yes	
	D8223-15	Thermowell (46")	B8309-3	4	ITS	QL	Yes	
	D8223-16	Thermowell (86")	B8309-4	4	ITS	QL	Yes	
	D8223-17	Temperature Element (27")	2904100-015	1	ITS	CM	No	Additional Protection Class (APC), may be purchased as commercial component.
	D8223-18	Temperature Element (46")	2904100-015	4	ITS	CM	No	Additional Protection Class (APC), may be purchased as commercial component.
	D8223-19	Temperature Element (86")	2904100-015	1	ITS	CM	No	Additional Protection Class (APC), may be purchased as commercial component.
	D8223-20	Radar Level Detector	2904100-017	1	ITS	QL	Yes	
	D8223-21	Manual Valve 1/2"	2904100-019	8	ITS	QL	Yes	
	D8223-22	Ball Valve 2"	2904100-020	1	ITS	QL	Yes	
	D8223-23	Gasket B/O Door 3/8THK x 1WD	Silicone Closed Cell Sponge	128	ITS	QL	Yes	
	D8223-24	Gasket 8" Flange		12	ITS	QL	Yes	
	D8223-25	Gasket Manway 3/8THK x 1WD		2	ITS	QL	Yes	
	D8223-26	Hex Nut	1/2-13UNC 316 SS	24	ITS	QL	Yes	
	D8223-27	Hex Nut	3/4-10UNC 316 SS	224	ITS	QL	Yes	
	D8223-28	Hex HD Bolt (2.5)	3/4-10UNC 316 SS	32	ITS	QL	Yes	
	D8223-29	Hex HD Bolt (3.5)	3/4-10UNC 316 SS	192	ITS	QL	Yes	
	D8223-30	Flat Washer	1/2 I.D. 316 SS	24	ITS	QL	Yes	
	D8223-31	Flat Washer	3/4 I.D. 316 SS	224	ITS	QL	Yes	
	D8223-32	DELETED						

Drawing Number	Item No.	Description	Material or Vendor	QTY	ITS/non-ITS	QL/CM	CGD	COMMENTS
	D8223-33	Solenoid Valve 1/2"	2904100-022	1	ITS	QL	Yes	
D8224	D8224-1	Plate-1	3/16 PL 316L SS	1	ITS	QL	Yes	
Access Door Discharge	D8224-2	Plate-2	3/16 PL 316L SS	2	ITS	QL	Yes	
Filter	D8224-3	Plate-3	3/16 PL 316L SS	2	ITS	QL	Yes	
	D8224-4	Flat bar-1	3/4 X 2 RECT BAR 316L SS	2	ITS	QL	Yes	
	D8224-5	Flat bar-2	3/4 X 2 RECT BAR 316L SS	2	ITS	QL	Yes	
	D8224-6	Flat bar-3	1/4 X 2 RECT BAR 316L SS	1	Non-ITS	CM	No	Does not function to contain melter offgas. This bar is used to make a lifting lug for the access door.
D8226	D8226-1	I-Beam (25')	4 X 7.7# HRS ASTM A-36	1	Non-ITS	CM	No	Does not function to contain melter offgas. Crane trolley and all associated parts are external to the pressure boundary and are used as part of the carbon media loading operation.
Crane Trolley Assembly	D8226-2	Square Tube (81.25)	4 X 4 X 1/4 WT HRS	4	Non-ITS	CM	No	Does not function to contain melter offgas. Crane trolley and all associated parts are external to the pressure boundary and are used as part of the carbon media loading operation.
	D8226-3	Square Tube (113.75)	4 X 4 X 1/4 WT HRS	6	Non-ITS	CM	No	Does not function to contain melter offgas. Crane trolley and all associated parts are external to the pressure boundary and are used as part of the carbon media loading operation.
	D8226-4	Angle (6.00)	2 X 2 X 1/4 WT HRS	7	Non-ITS	CM	No	Does not function to contain melter offgas. Crane trolley and all associated parts are external to the pressure boundary and are used as part of the carbon media loading operation.
	D8226-5	Angle (3.00)	2 X 2 X 1/4 WT HRS	2	Non-ITS	CM	No	Does not function to contain melter offgas. Crane trolley and all associated parts are external to the pressure boundary and are used as part of the carbon media loading operation.
	D8226-6	Angle (3.00)	2 X 2 X 1/4 WT HRS	2	Non-ITS	CM	No	Does not function to contain melter offgas. Crane trolley and all associated parts are external to the pressure boundary and are used as part of the carbon media loading operation.
	D8226-7	Flat Bar (6.00)	1/4 X 2 FL HRS ASTM A-36	1	Non-ITS	CM	No	Does not function to contain melter offgas. Crane trolley and all associated parts are external to the pressure boundary and are used as part of the carbon media loading operation.
	D8226-8	Flat Bar (67.56)	1/4 X 2 FL HRS ASTM A-36	2	Non-ITS	CM	No	Does not function to contain melter offgas. Crane trolley and all associated parts are external to the pressure boundary and are used as part of the carbon media loading operation.
	D8226-9	Plate (3.00 X 4.00)	1/4 PL HRS ASTM A-36	1	Non-ITS	CM	No	Does not function to contain melter offgas. Crane trolley and all associated parts are external to the pressure boundary and are used as part of the carbon media loading operation.
	D8226-10	Plate (6.00 X 8.00)	1/4 PL HRS ASTM A-36	3	Non-ITS	CM	No	Does not function to contain melter offgas. Crane trolley and all associated parts are external to the pressure boundary and are used as part of the carbon media loading operation.
	D8226-11	Plate (6.00 X 6.00)	1/4 PL HRS ASTM A-36	1	Non-ITS	CM	No	Does not function to contain melter offgas. Crane trolley and all associated parts are external to the pressure boundary and are used as part of the carbon media loading operation.
	D8226-12	Plate (7.00 X 7.00)	1/4 PL HRS ASTM A-36	8	Non-ITS	CM	No	Does not function to contain melter offgas. Crane trolley and all associated parts are external to the pressure boundary and are used as part of the carbon media loading operation.
	D8226-13	Hex HD Bolt (2.00)	1/2-13UNC GR 8 PL	20	Non-ITS	CM	No	Does not function to contain melter offgas. Crane trolley and all associated parts are external to the pressure boundary and are used as part of the carbon media loading operation.
	D8226-14	Hex Nut	1/2-13UNC GR 8 PL	20	Non-ITS	CM	No	Does not function to contain melter offgas. Crane trolley and all associated parts are external to the pressure boundary and are used as part of the carbon media loading operation.
	D8226-15	Look Washer	1/2 NOM ID GR 8 PL	20	Non-ITS	CM	No	Does not function to contain melter offgas. Crane trolley and all associated parts are external to the pressure boundary and are used as part of the carbon media loading operation.
	D8226-16	Electric Hoist	McMaster - Carr	1	Non-ITS	CM	No	Does not function to contain melter offgas. Crane trolley and all associated parts are external to the pressure boundary and are used as part of the carbon media loading operation.
D8229	D8229-1	Pipe Support with Gusset	D8229-1	1	ITS	QL	Yes	
Pipe Support Assembly	D8229-2	Pipe Support without Gusset	D8229-2	1	ITS	QL	Yes	
	D8229-3	I-Beam	6 X 12.5# HRS ASTM A-36	2	ITS	QL	Yes	
	D8229-4	Angle	2 X 2 X 1/4 WT HRS ASTM A-36	1	ITS	QL	Yes	
	D8229-5	Plate (1.50 X 7.00)	1/4 PL 316L SS	2	ITS	QL	Yes	
	D8229-6	Plate (6.50 X 1.50)	1/4 PL 316L SS	4	ITS	QL	Yes	

Drawing Number	Item No.	Description	Material or Vendor	QTY	ITS/non-ITS	QL/CM	CGD	COMMENTS
	D8229-7	Sheet	12GA SHT 316L SS	2	ITS	QL	Yes	
	D8229-8	Stud	1/2-13UNC X 3.0 LG, 316L SS	4	ITS	QL	Yes	
	D8229-9	SQ Beveled Washer	18-8 SS	4	ITS	QL	Yes	
	D8229-10	Hex Nut	1/2-13UNC 316 SS	4	ITS	QL	Yes	
D8250	D8250-1	Channel (23.28 X 128.00)	3/16 PL HRS ASTM A-36	2	Non-ITS	CM	No	Does not function to contain melter offgas. Platform assembly and all associated parts are external to the pressure boundary and are used for maintenance operations.
Platform Assembly	D8250-2	Channel (11.4 X 272.50)	3/16 PL HRS ASTM A-36	3	Non-ITS	CM	No	Does not function to contain melter offgas. Platform assembly and all associated parts are external to the pressure boundary and are used for maintenance operations.
	D8250-3	Channel (9.9 X 91.25)	3/16 PL HRS ASTM A-36	3	Non-ITS	CM	No	Does not function to contain melter offgas. Platform assembly and all associated parts are external to the pressure boundary and are used for maintenance operations.
	D8250-4	Channel (9.9 X 28.56)	3/16 PL HRS ASTM A-36	10	Non-ITS	CM	No	Does not function to contain melter offgas. Platform assembly and all associated parts are external to the pressure boundary and are used for maintenance operations.
	D8250-5	Channel (11.4 X 6.00)	3/16 PL HRS ASTM A-36	6	Non-ITS	CM	No	Does not function to contain melter offgas. Platform assembly and all associated parts are external to the pressure boundary and are used for maintenance operations.
	D8250-6	Pipe (278.40)	1 1/2 SCH 40 CS	2	Non-ITS	CM	No	Does not function to contain melter offgas. Platform assembly and all associated parts are external to the pressure boundary and are used for maintenance operations.
	D8250-7	Pipe (30.40)	1 1/2 SCH 40 CS	1	Non-ITS	CM	No	Does not function to contain melter offgas. Platform assembly and all associated parts are external to the pressure boundary and are used for maintenance operations.
	D8250-8	Pipe (19.40)	1 1/2 SCH 40 CS	1	Non-ITS	CM	No	Does not function to contain melter offgas. Platform assembly and all associated parts are external to the pressure boundary and are used for maintenance operations.
	D8250-9	Pipe (71.65)	1 1/2 SCH 40 CS	1	Non-ITS	CM	No	Does not function to contain melter offgas. Platform assembly and all associated parts are external to the pressure boundary and are used for maintenance operations.
	D8250-10	Pipe (48.15)	1 1/2 SCH 40 CS	1	Non-ITS	CM	No	Does not function to contain melter offgas. Platform assembly and all associated parts are external to the pressure boundary and are used for maintenance operations.
	D8250-11	Pipe (40.50)	1 1/2 SCH 40 CS	6	Non-ITS	CM	No	Does not function to contain melter offgas. Platform assembly and all associated parts are external to the pressure boundary and are used for maintenance operations.
	D8250-12	Pipe (40.50)	1 1/2 SCH 40 CS	4	Non-ITS	CM	No	Does not function to contain melter offgas. Platform assembly and all associated parts are external to the pressure boundary and are used for maintenance operations.
	D8250-13	Pipe (41.96)	1 1/2 SCH 40 CS	4	Non-ITS	CM	No	Does not function to contain melter offgas. Platform assembly and all associated parts are external to the pressure boundary and are used for maintenance operations.
	D8250-14	Pipe (88.73)	1 1/2 SCH 40 CS	1	Non-ITS	CM	No	Does not function to contain melter offgas. Platform assembly and all associated parts are external to the pressure boundary and are used for maintenance operations.
	D8250-15	Pipe (88.10)	1 1/2 SCH 40 CS	8	Non-ITS	CM	No	Does not function to contain melter offgas. Platform assembly and all associated parts are external to the pressure boundary and are used for maintenance operations.
	D8250-16	Pipe (59.23)	1 1/2 SCH 40 CS	1	Non-ITS	CM	No	Does not function to contain melter offgas. Platform assembly and all associated parts are external to the pressure boundary and are used for maintenance operations.
	D8250-17	Pipe (45.23)	1 1/2 SCH 40 CS	1	Non-ITS	CM	No	Does not function to contain melter offgas. Platform assembly and all associated parts are external to the pressure boundary and are used for maintenance operations.
	D8250-18	Pipe (27.46)	1 1/2 SCH 40 CS	1	Non-ITS	CM	No	Does not function to contain melter offgas. Platform assembly and all associated parts are external to the pressure boundary and are used for maintenance operations.
	D8250-19	Pipe (16.48)	1 1/2 SCH 40 CS	1	Non-ITS	CM	No	Does not function to contain melter offgas. Platform assembly and all associated parts are external to the pressure boundary and are used for maintenance operations.

Drawing Number	Item No.	Description	Material or Vendor	QTY	ITS/non-ITS	QE/CM	CGD	COMMENTS
	D8250-20	Angle (6.00 X 7.70)	3/16 PL HRS ASTM A-36	2	Non-ITS	CM	No	Does not function to contain melter offgas. Platform assembly and all associated parts are external to the pressure boundary and are used for maintenance operations.
	D8250-21	Plate (7.00 X 7.00)	1/4 PL HRS ASTM A-36	8	Non-ITS	CM	No	Does not function to contain melter offgas. Platform assembly and all associated parts are external to the pressure boundary and are used for maintenance operations.
	D8250-22	Plate (5.50 X 7.00)	1/4 PL HRS ASTM A-36	2	Non-ITS	CM	No	Does not function to contain melter offgas. Platform assembly and all associated parts are external to the pressure boundary and are used for maintenance operations.
	D8250-23	Plate (3.5 X 7.00)	1/4 PL HRS ASTM A-36	6	Non-ITS	CM	No	Does not function to contain melter offgas. Platform assembly and all associated parts are external to the pressure boundary and are used for maintenance operations.
	D8250-24	Hook (3.00)	1/4 DIA BAR HRS ASTM A-36	2	Non-ITS	CM	No	Does not function to contain melter offgas. Platform assembly and all associated parts are external to the pressure boundary and are used for maintenance operations.
	D8250-25	Bracket (2.25)	1/4 X 2 FL HRS ASTM A-36	4	Non-ITS	CM	No	Does not function to contain melter offgas. Platform assembly and all associated parts are external to the pressure boundary and are used for maintenance operations.
	D8250-26	Plate (2.61 X 17.50)	3/16 PL HRS ASTM A-36	8	Non-ITS	CM	No	Does not function to contain melter offgas. Platform assembly and all associated parts are external to the pressure boundary and are used for maintenance operations.
	D8250-27	Plate (2.61 X 5.62)	3/16 PL HRS ASTM A-36	9	Non-ITS	CM	No	Does not function to contain melter offgas. Platform assembly and all associated parts are external to the pressure boundary and are used for maintenance operations.
	D8250-28	Flat Bar (276.50)	1/4 X 4 FL HRS ASTM A-36	2	Non-ITS	CM	No	Does not function to contain melter offgas. Platform assembly and all associated parts are external to the pressure boundary and are used for maintenance operations.
	D8250-29	Flat Bar (124.00)	1/4 X 4 FL HRS ASTM A-36	1	Non-ITS	CM	No	Does not function to contain melter offgas. Platform assembly and all associated parts are external to the pressure boundary and are used for maintenance operations.
	D8250-30	Flat Bar (69.75)	1/4 X 4 FL HRS ASTM A-36	1	Non-ITS	CM	No	Does not function to contain melter offgas. Platform assembly and all associated parts are external to the pressure boundary and are used for maintenance operations.
	D8250-31	Flat Bar (28.50)	1/4 X 4 FL HRS ASTM A-36	1	Non-ITS	CM	No	Does not function to contain melter offgas. Platform assembly and all associated parts are external to the pressure boundary and are used for maintenance operations.
	D8250-32	Chain (28.00)	3/16 304L SS	1	Non-ITS	CM	No	Does not function to contain melter offgas. Platform assembly and all associated parts are external to the pressure boundary and are used for maintenance operations.
	D8250-33	Chain (82.50)	3/16 304L SS	1	Non-ITS	CM	No	Does not function to contain melter offgas. Platform assembly and all associated parts are external to the pressure boundary and are used for maintenance operations.
	D8250-34	Grating (26.12 WD X 99.0 LG)	1 1/2 X 3/16 BEARING BAR	2	Non-ITS	CM	No	Does not function to contain melter offgas. Platform assembly and all associated parts are external to the pressure boundary and are used for maintenance operations.
	D8250-35	Grating (26.12 WD X 75.0 LG)	1 1/2 X 3/16 BEARING BAR	1	Non-ITS	CM	No	Does not function to contain melter offgas. Platform assembly and all associated parts are external to the pressure boundary and are used for maintenance operations.
	D8250-36	Grating (29.88 WD X 75.0 LG)	1 1/2 X 3/16 BEARING BAR	3	Non-ITS	CM	No	Does not function to contain melter offgas. Platform assembly and all associated parts are external to the pressure boundary and are used for maintenance operations.
	D8250-37	Grating (29.88 WD X 26.5 LG)	1 1/2 X 3/16 BEARING BAR	6	Non-ITS	CM	No	Does not function to contain melter offgas. Platform assembly and all associated parts are external to the pressure boundary and are used for maintenance operations.
	D8250-38	Angle (28.56)	1 1/2 X 1 1/2 X 3/16 ASTM A-36	2	Non-ITS	CM	No	Does not function to contain melter offgas. Platform assembly and all associated parts are external to the pressure boundary and are used for maintenance operations.
	D8250-39	Angle (83.25)	1 1/2 X 1 1/2 X 3/16 ASTM A-36	1	Non-ITS	CM	No	Does not function to contain melter offgas. Platform assembly and all associated parts are external to the pressure boundary and are used for maintenance operations.

Drawing Number	Item No.	Description	Material or Vendor	QTY	ITS/non-ITS	QE/CM	CGD	COMMENTS
	D8250-40	Angle (91.25)	1 1/2 X 1 1/2 X 3/16 ASTM A-36	1	Non-ITS	CM	No	Does not function to contain melter offgas. Platform assembly and all associated parts are external to the pressure boundary and are used for maintenance operations.
	D8250-41	Channel (9.90 X 83.25)	3/16 PL HRS ASTM A-36	3	Non-ITS	CM	No	Does not function to contain melter offgas. Platform assembly and all associated parts are external to the pressure boundary and are used for maintenance operations.
	D8250-42	Grating Retainer Plate (3.00 X 4.00)	3/16 PL HRS ASTM A-36	12	Non-ITS	CM	No	Does not function to contain melter offgas. Platform assembly and all associated parts are external to the pressure boundary and are used for maintenance operations.
D8251	D8251-1	Channel (23.28 X 126.00)	3/16 PL HRS ASTM A-36	2	Non-ITS	CM	No	Does not function to contain melter offgas. Platform assembly and all associated parts are external to the pressure boundary and are used for maintenance operations.
Platform Assembly	D8251-2	Channel (11.4 X 272.50)	3/16 PL HRS ASTM A-36	3	Non-ITS	CM	No	Does not function to contain melter offgas. Platform assembly and all associated parts are external to the pressure boundary and are used for maintenance operations.
	D8251-3	Channel (9.9 X 91.25)	3/16 PL HRS ASTM A-36	3	Non-ITS	CM	No	Does not function to contain melter offgas. Platform assembly and all associated parts are external to the pressure boundary and are used for maintenance operations.
	D8251-4	Channel (9.9 X 26.56)	3/16 PL HRS ASTM A-36	10	Non-ITS	CM	No	Does not function to contain melter offgas. Platform assembly and all associated parts are external to the pressure boundary and are used for maintenance operations.
	D8251-5	Channel (11.4 X 6.00)	3/16 PL HRS ASTM A-36	6	Non-ITS	CM	No	Does not function to contain melter offgas. Platform assembly and all associated parts are external to the pressure boundary and are used for maintenance operations.
	D8251-6	Pipe (278.40)	1 1/2 SCH 40 CS	2	Non-ITS	CM	No	Does not function to contain melter offgas. Platform assembly and all associated parts are external to the pressure boundary and are used for maintenance operations.
	D8251-7	Pipe (30.40)	1 1/2 SCH 40 CS	1	Non-ITS	CM	No	Does not function to contain melter offgas. Platform assembly and all associated parts are external to the pressure boundary and are used for maintenance operations.
	D8251-8	Pipe (19.40)	1 1/2 SCH 40 CS	1	Non-ITS	CM	No	Does not function to contain melter offgas. Platform assembly and all associated parts are external to the pressure boundary and are used for maintenance operations.
	D8251-9	Pipe (71.65)	1 1/2 SCH 40 CS	1	Non-ITS	CM	No	Does not function to contain melter offgas. Platform assembly and all associated parts are external to the pressure boundary and are used for maintenance operations.
	D8251-10	Pipe (48.15)	1 1/2 SCH 40 CS	1	Non-ITS	CM	No	Does not function to contain melter offgas. Platform assembly and all associated parts are external to the pressure boundary and are used for maintenance operations.
	D8251-11	Pipe (40.50)	1 1/2 SCH 40 CS	6	Non-ITS	CM	No	Does not function to contain melter offgas. Platform assembly and all associated parts are external to the pressure boundary and are used for maintenance operations.
	D8251-12	Pipe (40.50)	1 1/2 SCH 40 CS	4	Non-ITS	CM	No	Does not function to contain melter offgas. Platform assembly and all associated parts are external to the pressure boundary and are used for maintenance operations.
	D8251-13	Pipe (41.98)	1 1/2 SCH 40 CS	4	Non-ITS	CM	No	Does not function to contain melter offgas. Platform assembly and all associated parts are external to the pressure boundary and are used for maintenance operations.
	D8251-14	Pipe (68.73)	1 1/2 SCH 40 CS	1	Non-ITS	CM	No	Does not function to contain melter offgas. Platform assembly and all associated parts are external to the pressure boundary and are used for maintenance operations.
	D8251-15	Pipe (68.10)	1 1/2 SCH 40 CS	8	Non-ITS	CM	No	Does not function to contain melter offgas. Platform assembly and all associated parts are external to the pressure boundary and are used for maintenance operations.
	D8251-16	Pipe (59.23)	1 1/2 SCH 40 CS	1	Non-ITS	CM	No	Does not function to contain melter offgas. Platform assembly and all associated parts are external to the pressure boundary and are used for maintenance operations.
	D8251-17	Pipe (45.23)	1 1/2 SCH 40 CS	1	Non-ITS	CM	No	Does not function to contain melter offgas. Platform assembly and all associated parts are external to the pressure boundary and are used for maintenance operations.

Drawing Number	Item No.	Description	Material or Vendor	QTY	ITS/non-ITS	QL/CM	CGD	COMMENTS
	D8261-38	Angle (28.56)	1 1/2 X 1 1/2 X 3/16 ASTM A-36	2	Non-ITS	CM	No	Does not function to contain melter offgas. Platform assembly and all associated parts are external to the pressure boundary and are used for maintenance operations.
	D8261-39	Angle (63.25)	1 1/2 X 1 1/2 X 3/16 ASTM A-36	1	Non-ITS	CM	No	Does not function to contain melter offgas. Platform assembly and all associated parts are external to the pressure boundary and are used for maintenance operations.
	D8251-40	Angle (91.25)	1 1/2 X 1 1/2 X 3/16 ASTM A-36	1	Non-ITS	CM	No	Does not function to contain melter offgas. Platform assembly and all associated parts are external to the pressure boundary and are used for maintenance operations.
	D8251-41	Channel (9.80 X 63.25)	3/16 PL HRS ASTM A-36	3	Non-ITS	CM	No	Does not function to contain melter offgas. Platform assembly and all associated parts are external to the pressure boundary and are used for maintenance operations.
	D8251-42	Grating Retainer Plate (3.00 X 4.00)	3/16 PL HRS ASTM A-36	12	Non-ITS	CM	No	Does not function to contain melter offgas. Platform assembly and all associated parts are external to the pressure boundary and are used for maintenance operations.
D8282 Piping Assembly 14"	D8282-1	Inlet Pipe Assembly	D8282-1	1	ITS	QL	Yes	
	D8282-2	Crossover Pipe Assembly	D8282-2	1	ITS	QL	Yes	
	D8282-3	Outlet Pipe Assembly	D8282-3	1	ITS	QL	Yes	
	D8282-4	Crossover Pipe Assembly	D8282-4	1	ITS	QL	Yes	
	D8282-5	Butterfly Valve W/ Operator	2904100-009 W/ 2904100-011	6	ITS	QL	Yes	
	D8282-6	Weld Neck Flange	14 X 150# 316L SS	18	ITS	QL	Yes	
	D8282-7	Weld Neck Flange	2 X 150# 316L SS	1	ITS	QL	Yes	
	D8282-8	90° Elbow LR	14 SCH 40 316L SS	5	ITS	QL	Yes	
	D8282-9	Straight Tee	14 SCH 40 316L SS	2	ITS	QL	Yes	
	D8282-10	Pipe (Cut at Assembly)	14 SCH 10 316L SS	456 in	ITS	QL	Yes	
	D8282-11	Pipe (8.19)	2 SCH 40 316L SS	1	ITS	QL	Yes	
	D8282-12	Pipe T.O.E. (10.00)	1/2 SCH 40 316L SS	1	ITS	QL	Yes	
	D8282-13	Pipe T.O.E. (3.19)	1/2 SCH 40 316L SS	11	ITS	QL	Yes	
	D8282-14	DELETED						
	D8282-15	Manual Valve 1/2"	2904100-019	12	ITS	QL	Yes	
	D8282-16	Thermowell	58308-1	1	ITS	QL	Yes	
	D8282-17	Hex HD Bolt	1-8UNC 316 SS	120	ITS	QL	Yes	
	D8282-18	Flat Washer	316 SS	120	ITS	QL	Yes	
	D8282-19	Bellows Ass'y	2904100-021	4	ITS	QL	Yes	
	D8282-20	90° Elbow SR	14 SCH 40 316L SS	1	ITS	QL	Yes	
D8285 Electrical Enclosure	D8285-1	Panel (12.00 X 62.50)	12GA SHT 316L SS	1	ITS	QL	Yes	Panel is used for mounting of the PDITs which have an ITS pressure boundary function.
	D8285-2	Z-Bar 50"	7GA SHT 316L SS	1	ITS	QL	Yes	Used to mount the electrical enclosures with PDITs to the carbon bed adsorber units. PDITs have an ITS pressure boundary function.
	D8285-3	Enclosure	Hoffman	1	Non-ITS	CM	No	Does not function to contain melter offgas. Electrical enclosure internal component used for commercial instrumentation.
	D8285-4	Sub-Panel	Hoffman	1	Non-ITS	CM	No	Does not function to contain melter offgas. Electrical enclosure internal component used for commercial instrumentation.
	D8285-5	Temp. Transmitter	2904100-008	9	ITS	CM	No	Additional Protection Class (APC), may be purchased as commercial component.
	D8285-6	Diff. Press. X-Mitter	2904100-018	2	ITS	QL	Yes	
	D8285-7	5 Valve Manifold	Swagelok	2	ITS	QL	Yes	
	D8285-8	Mounting Channel	Allen Bradley	A/R	Non-ITS	CM	No	Does not function to contain melter offgas. Electrical enclosure internal component used for commercial instrumentation.
	D8285-9	End Plate	Allen Bradley	10	Non-ITS	CM	No	Does not function to contain melter offgas. Electrical enclosure internal component used for commercial instrumentation.
	D8285-10	End Clamp	Allen Bradley	5	Non-ITS	CM	No	Does not function to contain melter offgas. Electrical enclosure internal component used for commercial instrumentation.
	D8285-11	Marker Card	Allen Bradley	A/R	Non-ITS	CM	No	Does not function to contain melter offgas. Electrical enclosure internal component used for commercial instrumentation.

Drawing Number	Item No.	Description	Material or Vendor	QTY	ITS/non-ITS	QL/CM	CQD	COMMENTS
	D8285-12	Terminal	Allen Bradley	108	Non-ITS	CM	No	Does not function to contain melter offgas. Electrical enclosure internal component used for commercial instrumentation.
	D8285-13	Circuit Breaker	Allen Bradley	3	Non-ITS	CM	No	Does not function to contain melter offgas. Electrical enclosure internal component used for commercial instrumentation.
	D8285-14	Spur Block J-Box	Pepperl - Fuchs	2	Non-ITS	CM	No	Does not function to contain melter offgas. Electrical enclosure internal component used for commercial instrumentation.
	D8285-15	Profibus DP Station	2904100-043	1	Non-ITS	CM	No	Does not function to contain melter offgas. Electrical enclosure internal component used for commercial instrumentation.
	D8285-16	Fiber Optic Repeater	2904100-041	1	Non-ITS	CM	No	Does not function to contain melter offgas. Electrical enclosure internal component used for commercial instrumentation.
	D8285-17	Fiber Optic Housing	2904100-042	1	Non-ITS	CM	No	Does not function to contain melter offgas. Electrical enclosure internal component used for commercial instrumentation.
	D8285-18	Power Supply	Phoenix	1	Non-ITS	CM	No	Does not function to contain melter offgas. Electrical enclosure internal component used for commercial instrumentation.
	D8285-19	External GFCI Recpt.	Grace	2	Non-ITS	CM	No	Does not function to contain melter offgas. Electrical enclosure internal component used for commercial instrumentation.
	D8285-20	Wire Duct	Panduit	A/R	Non-ITS	CM	No	Does not function to contain melter offgas. Electrical enclosure internal component used for commercial instrumentation.
	D8285-21	Duct Cover	Panduit	A/R	Non-ITS	CM	No	Does not function to contain melter offgas. Electrical enclosure internal component used for commercial instrumentation.
	D8285-22	Wire Duct	Panduit	A/R	Non-ITS	CM	No	Does not function to contain melter offgas. Electrical enclosure internal component used for commercial instrumentation.
	D8285-23	Duct Cover	Panduit	A/R	Non-ITS	CM	No	Does not function to contain melter offgas. Electrical enclosure internal component used for commercial instrumentation.
	D8285-24	Duct Cover	Panduit	A/R	Non-ITS	CM	No	Does not function to contain melter offgas. Electrical enclosure internal component used for commercial instrumentation.
	D8285-25	Wire Duct	Panduit	A/R	Non-ITS	CM	No	Does not function to contain melter offgas. Electrical enclosure internal component used for commercial instrumentation.
	D8285-26	Hex Nut	3/8-16UNC 316 SS	12	ITS	QL	Yes	
	D8285-27	Hex HD Bolt 1.00 LG	3/8-16UNC 316 SS	8	ITS	QL	Yes	
	D8285-28	Hex HD Bolt 2.00 LG	3/8-16UNC 316 SS	4	ITS	QL	Yes	
	D8285-29	Lock Washer	3/8-16UNC 316 SS	12	ITS	QL	Yes	
	D8285-30	TVSS	Ferraz Shawmut	1	Non-ITS	CM	No	Does not function to contain melter offgas. Electrical enclosure internal component used for commercial instrumentation.
	D8285-31	Enclosure	Hoffman	2	Non-ITS	CM	No	Does not function to contain melter offgas. Electrical enclosure internal component used for commercial instrumentation.
	D8285-32	Circuit Breaker	Allen Bradley	1	Non-ITS	CM	No	Does not function to contain melter offgas. Electrical enclosure internal component used for commercial instrumentation.
D8286 Electrical Enclosure	D8286-1	Panel (12.00 X 62.50)	12GA SHT 316L SS	1	ITS	QL	Yes	Panel is used for mounting of the PDITs which have an ITS pressure boundary function.
	D8286-2	Z-Bar 50"	7GA SHT 316L SS	1	ITS	QL	Yes	Used to mount the electrical enclosures with PDITs to the carbon bed adsorber units. PDITs have an ITS pressure boundary function.
	D8286-3	Enclosure	Hoffman	1	Non-ITS	CM	No	Does not function to contain melter offgas. Electrical enclosure internal component used for commercial instrumentation.
	D8286-4	Sub-Panel	Hoffman	1	Non-ITS	CM	No	Does not function to contain melter offgas. Electrical enclosure internal component used for commercial instrumentation.
	D8286-5	Temp. Transmitter	2904100-008	6	ITS	CM	No	Additional Protection Class (APC), may be purchased as commercial component.
	D8286-6	Diff. Press. X-Mitter	2904100-016	2	ITS	QL	Yes	
	D8286-7	5 Valve Manifold	Swagelok	2	ITS	QL	Yes	
	D8286-8	Mounting Channel	Allen Bradley	A/R	Non-ITS	CM	No	Does not function to contain melter offgas. Electrical enclosure internal component used for commercial instrumentation.
	D8286-9	End Plate	Allen Bradley	10	Non-ITS	CM	No	Does not function to contain melter offgas. Electrical enclosure internal component used for commercial instrumentation.
	D8286-10	End Clamp	Allen Bradley	5	Non-ITS	CM	No	Does not function to contain melter offgas. Electrical enclosure internal component used for commercial instrumentation.
	D8286-11	Marker Card	Allen Bradley	A/R	Non-ITS	CM	No	Does not function to contain melter offgas. Electrical enclosure internal component used for commercial instrumentation.
	D8286-12	Terminal	Allen Bradley	108	Non-ITS	CM	No	Does not function to contain melter offgas. Electrical enclosure internal component used for commercial instrumentation.

Drawing Number	Item No.	Description	Material or Vendor	QTY	ITS/non-ITS	QL/CM	CGD	COMMENTS
	D8286-13	Circuit Breaker	Allen Bradley	3	Non-ITS	CM	No	Does not function to contain melter offgas. Electrical enclosure internal component used for commercial instrumentation.
	D8286-14	Spur Block J-Box	Pepperl - Fuchs	2	Non-ITS	CM	No	Does not function to contain melter offgas. Electrical enclosure internal component used for commercial instrumentation.
	D8286-15	Profibus DP Station	2904100-043	1	Non-ITS	CM	No	Does not function to contain melter offgas. Electrical enclosure internal component used for commercial instrumentation.
	D8286-16	Fiber Optic Repeater	2904100-041	1	Non-ITS	CM	No	Does not function to contain melter offgas. Electrical enclosure internal component used for commercial instrumentation.
	D8286-17	Fiber Optic Housing	2904100-042	1	Non-ITS	CM	No	Does not function to contain melter offgas. Electrical enclosure internal component used for commercial instrumentation.
	D8286-18	Power Supply	Phoenix	1	Non-ITS	CM	No	Does not function to contain melter offgas. Electrical enclosure internal component used for commercial instrumentation.
	D8286-19	External GFCI Recpt.	Grace	2	Non-ITS	CM	No	Does not function to contain melter offgas. Electrical enclosure internal component used for commercial instrumentation.
	D8286-20	Wire Duct	Panduit	A/R	Non-ITS	CM	No	Does not function to contain melter offgas. Electrical enclosure internal component used for commercial instrumentation.
	D8286-21	Duct Cover	Panduit	A/R	Non-ITS	CM	No	Does not function to contain melter offgas. Electrical enclosure internal component used for commercial instrumentation.
	D8286-22	Wire Duct	Panduit	A/R	Non-ITS	CM	No	Does not function to contain melter offgas. Electrical enclosure internal component used for commercial instrumentation.
	D8286-23	Duct Cover	Panduit	A/R	Non-ITS	CM	No	Does not function to contain melter offgas. Electrical enclosure internal component used for commercial instrumentation.
	D8286-24	Duct Cover	Panduit	A/R	Non-ITS	CM	No	Does not function to contain melter offgas. Electrical enclosure internal component used for commercial instrumentation.
	D8286-25	Wire Duct	Panduit	A/R	Non-ITS	CM	No	Does not function to contain melter offgas. Electrical enclosure internal component used for commercial instrumentation.
	D8286-26	Hex Nut	3/8-16UNC 316 SS	12	ITS	QL	Yes	
	D8286-27	Hex HD Bolt 1.00 LG	3/8-16UNC 316 SS	8	ITS	QL	Yes	
	D8286-28	Hex HD Bolt 2.00 LG	3/8-16UNC 316 SS	4	ITS	QL	Yes	
	D8286-29	Lock Washer	3/8-16UNC 316 SS	12	ITS	QL	Yes	
	D8286-30	TVSS	Ferraz Shawmut	1	Non-ITS	CM	No	Does not function to contain melter offgas. Electrical enclosure internal component used for commercial instrumentation.
	D8286-31	Enclosure	Hoffman	2	Non-ITS	CM	No	Does not function to contain melter offgas. Electrical enclosure internal component used for commercial instrumentation.
	D8286-32	Circuit Breaker	Allen Bradley	1	Non-ITS	CM	No	Does not function to contain melter offgas. Electrical enclosure internal component used for commercial instrumentation.
D8287 Piping Assembly 2"	D8287-1	Pipe (Cut at Assembly)	2 SCH 40 316L SS	30R	ITS	QL	Yes	
	D8287-2	Weld Neck Flange	2 X 150# 316L SS	7	ITS	QL	Yes	
	D8287-3	90o Elbow	2 SCH 40 316L SS	9	ITS	QL	Yes	
	D8287-4	Tee	2 SCH 40 316L SS	1	ITS	QL	Yes	
	D8287-5	Gasket		7	ITS	QL	Yes	
	D8287-6	Rupture Disc		2	ITS	QL	Yes	
	D8287-7	Hex HD Bolt (2.5)	5/8-11UNC 316 SS	12	ITS	QL	Yes	
	D8287-8	Hex HD Bolt (3.00)	5/8-11UNC 316 SS	8	ITS	QL	Yes	
	D8287-9	Hex Nut	5/8-11UNC 316 SS	20	ITS	QL	Yes	
D8304 Final Assembly	D8304-1	Base Frame Assembly (1A/B)	D8218	1	ITS	QL	Yes	
	D8304-2	Base Frame Assembly (2A/B)	D8218	1	ITS	QL	Yes	
	D8304-3	Housing Assembly (1A)	D8222	1	ITS	QL	Yes	
	D8304-4	Housing Assembly (2A)	D8222	1	ITS	QL	Yes	
	D8304-5	Housing Assembly (1B)	D8223	1	ITS	QL	Yes	
	D8304-6	Housing Assembly (2B)	D8223	1	ITS	QL	Yes	
	D8304-7	Platform Assembly (1A/B)	D8250	1	ITS	QL	Yes	
	D8304-8	Platform Assembly (2A/B)	D8251	1	ITS	QL	Yes	
	D8304-9	Ladder Assembly (1A/B)	D8220	1	Non-ITS	CM	No	Does not function to contain melter offgas. Ladder and all associated parts are external to the pressure boundary and form part of the maintenance platform.
	D8304-10	Ladder Assembly (2A/B)	D8220	1	Non-ITS	CM	No	Does not function to contain melter offgas. Ladder and all associated parts are external to the pressure boundary and form part of the maintenance platform.
	D8304-11	Crane Trolley Assembly (1A/B)	D8226	1	Non-ITS	CM	No	Does not function to contain melter offgas. Crane trolley and all associated parts are external to the pressure boundary and are used as part of the carbon media loading operation.

Drawing Number	Item No.	Description	Material or Vendor	QTY	ITS/non-ITS	QL/CM	CGD	COMMENTS
	D8304-12	Crane Trolley Assembly (2A/B)	D8226	1	Non-ITS	CM	No	Does not function to contain melter offgas. Crane trolley and all associated parts are external to the pressure boundary and are used as part of the carbon media loading operation.
	D8304-13	Inlet Pipe Assembly (1A/B)	D8282-1	1	ITS	QL	Yes	
	D8304-14	Crossover Pipe Assembly (1A/B)	D8282-2	1	ITS	QL	Yes	
	D8304-15	Outlet Pipe Assembly (1A/B)	D8282-3	1	ITS	QL	Yes	
	D8304-16	Crossover Pipe Assembly (1A/B)	D8282-4	1	ITS	QL	Yes	
	D8304-17	Inlet Pipe Assembly (2A/B)	D8282-1	1	ITS	QL	Yes	
	D8304-18	Crossover Pipe Assembly (2A/B)	D8282-2	1	ITS	QL	Yes	
	D8304-19	Outlet Pipe Assembly (2A/B)	D8282-3	1	ITS	QL	Yes	
	D8304-20	Crossover Pipe Assembly (2A/B)	D8282-4	1	ITS	QL	Yes	
	D8304-21	Pipe Assembly 2" (1A/B)	D8287	1	ITS	QL	Yes	
	D8304-22	Pipe Assembly 2" (2A/B)	D8287	1	ITS	QL	Yes	
	D8304-23	Spacer (1/4 THK 4.0 X 4.0)	Alumina Silicate Ceramic	100	ITS	QL	Yes	
	D8304-24	Gasket 2"		10	ITS	QL	Yes	
	D8304-25	Gasket 14"		20	ITS	QL	Yes	
	D8304-26	Hex HD Bolt (1.50)	1/2-13UNC 316 SS	76	ITS	QL	Yes	
	D8304-27	Hex HD Bolt (2.00)	1/2-13UNC 316 SS	200	ITS	QL	Yes	
	D8304-28	Hex Nut	1/2-13UNC 316 SS	276	ITS	QL	Yes	
	D8304-29	Look Washer	1/2 I.D. 316 SS	276	ITS	QL	Yes	
	D8304-30	Hex HD Bolt (2.50)	5/8-11UNC 316 SS	8	ITS	QL	Yes	
	D8304-31	Hex HD Bolt (3.00)	5/8-11UNC 316 SS	16	ITS	QL	Yes	
	D8304-32	Hex Nut	5/8-11UNC 316 SS	24	ITS	QL	Yes	
	D8304-33	Hex HD Bolt (4.50)	1-8UNC 316 SS	144	ITS	QL	Yes	
	D8304-34	Hex HD Bolt (2.50)	1-8UNC 316 SS	144	ITS	QL	Yes	
	D8304-35	Hex Nut	1-8UNC 316 SS	144	ITS	QL	Yes	
	D8304-36	Insulation	Calcium-Silicate	2400 ft²	Non-ITS	CM	No	Does not function to contain melter offgas. Insulation is not provided by IONEX.
	D8304-37	High Temperature Adhesive	Calbond R Gold	A/R	Non-ITS	CM	No	Does not function to contain melter offgas. Insulation bonding material is not provided by IONEX.
	D8304-38	Sealing Caulk	PERMATEX HI-TEMP RED RTV	A/R	Non-ITS	CM	No	Does not function to contain melter offgas. RTV is recommended for sealing the joints of the cladding and is not provided by IONEX.
	D8304-39	Flat Washer	1/2 ID X 1.26 OD 316 SS	552	ITS	QL	Yes	
	D8304-40	Name Plate (S/Ns 01 THRU 06)	B8221	1	Non-ITS	CM	No	Does not function to contain melter offgas. Nameplate is external to the pressure boundary and is only used to identify the equipment.
	D8304-41	3-Way Solenoid Valve	Valcor	12	ITS	QL	No	Valcor solenoid valves have been procured from a qualified supplier. No CGD necessary.
	D8304-42	3-Way Solenoid Valve	ASCO	12	Non-ITS	CM	No	Does not function to contain melter offgas. This 3-way solenoid valve is used during normal operation to activate the 14 inch butterfly valves to either isolate the units for maintenance or adjust the flow of offgas.
D8317	D8317-1	I-Beam	8 X 12.5# HRS ASTM A-36	2	Non-ITS	CM	No	Does not function to contain melter offgas. External to the pressure boundary and is considered a none perminate piece of plant equipment. Used only for handling the equipment during transportation and installation.
Spreader bar	D8317-2	Plate	1.0 PLATE ASTM A-36	4	Non-ITS	CM	No	Does not function to contain melter offgas. External to the pressure boundary and is considered a none perminate piece of plant equipment. Used only for handling the equipment during transportation and installation.
	D8317-3	Plate	1.0 PLATE ASTM A-36	4	Non-ITS	CM	No	Does not function to contain melter offgas. External to the pressure boundary and is considered a none perminate piece of plant equipment. Used only for handling the equipment during transportation and installation.

Drawing Number	Item No.	Description	Material or Vendor	QTY	ITS/non-ITS	QL/CM	CGD	COMMENTS
	D8317-4	Anchor Shackle (25000#)	McMaster - Carr	12	Non-ITS	CM	No	Does not function to contain melter offgas. External to the pressure boundary and is considered a none perminate piece of plant equipment. Used only for handling the equipment during transportation and installation.
	D8317-5	Sling (11200#)	McMaster - Carr	4	Non-ITS	CM	No	Does not function to contain melter offgas. External to the pressure boundary and is considered a none perminate piece of plant equipment. Used only for handling the equipment during transportation and installation.
	D8317-6	Name Plate (4.00 X 7.00)	11GA SHT 304L SS	2	Non-ITS	CM	No	Does not function to contain melter offgas. External to the pressure boundary and is considered a none perminate piece of plant equipment. Used only for handling the equipment during transportation and installation.
D8574 Inlet Pipe Support Assy	D8574-1	I-Beam	6 X 12.5# HRS ASTM A-36	1	ITS	QL	Yes	
	D8574-2	Angle (34.62)	2 X 2 X 1/4 ANGLE ASTM A-36	1	ITS	QL	Yes	
	D8574-3	Plate (22.38)	1/4 PL 316L SS	1	ITS	QL	Yes	
	D8574-4	Plate (21.38)	1/4 PL 316L SS	1	ITS	QL	Yes	
	D8574-5	Plate (4.00)	1/4 PL 316L SS	4	ITS	QL	Yes	
	D8574-6	Plate (7.00)	1/4 PL 316L SS	2	ITS	QL	Yes	
	D8574-7	Plate (2.75)	1/4 PL 316L SS	2	ITS	QL	Yes	
	D8574-8	Hex HD Bolt (2.0)	1/2-13UNC 316 SS	4	ITS	QL	Yes	
	D8574-9	Lock Washer	1/2 I.D. 316 SS	4	ITS	QL	Yes	
	D8574-10	Hex Nut	1/2-13UNC 316 SS	4	ITS	QL	Yes	

NOTE:
Weld filler metal used for pressure boundary welds has been specified ITS. Refer to IONEX CGD plans for dedication requirements specified to stainless steel and carbon steel filler metal.

Table 2 Important to Safety Equipment List (LAW)

IMPORTANT TO SAFETY EQUIPMENT LIST

COMPONENT TAG NO.:
24590-LAW-MV-LVP-ADBR-00001A/B

Important to Safety function for the activated carbon bed adsorber units for both HLW and LAW is defined in section 3.1.15 of engineering specification 24590-WTP-3PS-MWK0-T0001. This function is defined as containment of melter offgas during normal, maximum, and design conditions. Pressure boundary must be maintained during and post SC-III event.

Drawing Number	Item No.	Description	Material or Vendor	QTY	ITS/non-ITS	QL/CM	CGD	COMMENTS

NOTE: ITS List shall be added to Table 2, as detailed design work is completed.

Appendix A

Mandatory Ammonium Nitrate Test Requirements for LAW Carbon Bed Adsorbers

Appendix A
Mandatory Ammonium Nitrate Test Requirements for LAW Carbon Bed Adsorbers

1.0 Purpose

The purpose of appendix A testing is to determine if sufficient amounts of ammonium nitrate can form in the LAW offgas pipeline, in the guard bed, and in the activated carbon bed adsorber media to increase the propagation rate of a bed fire.

2.0 Overview

The potential for ammonia and nitrous oxides to form ammonium nitrate within the LAW carbon bed adsorber media is unknown. A significant accumulation of ammonium nitrate within the bed media has been raised as a fire safety concern. It is postulated that ammonium nitrate may increase the rate a bed fire propagates, potentially modifying the current bed-fire mitigation strategy. It should be noted that VSL carbon bed testing has shown large temperature exotherms resulting from NOx. It may be necessary to condition the carbon media before testing with large NOx concentrations.

3.0 Objectives

1. Test 1 - Determine formation of NH_4NO_3 in the proposed LAW activated carbon adsorber media(s) configuration if the inlet gas contains NO_X and NH_3.
2. Test 2 - Assess the hazards associated with NH_4NO_3 adsorbed in the proposed LAW activated carbon adsorber media(s), (i.e. fire propagation).

4.0 Quality Assurance

Tests shall be performed in accordance with the applicable sections of NQA-1. The Test Plan will include a matrix cross-referencing the QA requirements to implementing procedures for the work, and justifying elements that are not applicable.

5.0 Test Conditions

Each of the tests in the following sections have been formulated to address the test objectives from Section 3.

The activated carbon beds proposed for the LAW off gas systems will operate under the conditions defined in mechanical data sheets. The appropriate media for each test will be selected and described in the Vendor Test Plan. The Test Plan will detail the test conditions and data collection for each test based on the media and operating conditions.

Testing will be done with a bench scale apparatus using air and water for humidity as the bulk gas.

Carbon test beds shall be insulated such that the temperature drop across the beds does not exceed 1.0 °C with dry hot air passing through the test beds at the test temperature.

5.1 Test 1 - Determine NH_4NO_3 formation in the proposed LAW activated carbon adsorption system(s).

a. Test conditions
- Sorbent - By vendor
- Bed residence time – By vendor
- Superficial gas velocity – by vendor
- Inlet HEPA temperature – 50 °C (bounding case in exception with mechanical data sheets)
- Relative humidity – 50 % (bounding case in exception with mechanical data sheets)
- Gas composition:
    a. Bulk gas – Air and water vapor
    b. Other constituents –
        i. Inlet NH_3 concentration - 10 ppm
        ii. Inlet CO concentration - 170 ppm
        iii. Inlet NO concentration - 4000 ppm
        iv. Inlet NO_2 concentration - 4000 ppm
- Inlet gas HEPA filtered to remove particulate ammonium nitrate formed prior to the carbon bed with two AG-1 certified HEPA filters operating in series.
- Eight (8) seconds gas residence time to simulate ammonium nitrate formation, prior to HEPA filtration.
- Residence time from the HEPA filters to the carbon bed is specified as 2.8 seconds.

b. Test duration
- By vendor

c. Data to be obtained
- Inlet and outlet NO, NO_2, NH_3 concentrations.
- Quantity of NH_4NO_3 - accumulated in the pipeline, HEPAs, and bed media at the end of test.
- Temperature profile of bed during loading.

5.2 Test 2 - Perform standard calorimeter test (i.e., ASTM E 1623-04 or equivalent) to measure exotherm of new bed media compared to bed media containing two years of accumulated ammonium nitrate.

5.3 Test 3 - If a substantial quantity of ammonium nitrate or a substantial exotherm is determined, re-run Test 1 and Test 2 with the addition of offgas pre-heat to 70 °C just prior to HEPA filtration.

5.4 Test 4 - If a substantial (>140 °F) temperature change is measured in the bed, re-run Test 1 with 50% of the NO and NO_2 concentrations.

6.0 Success Criteria

1. Quantization of ammonium nitrate formed in-situ on bed media, extrapolated to a two-year bed life.
2. Calorimeter test data of new bed media compared to bed media containing ammonium nitrate accumulated in two-years of bed life.
3. If Test 1 does not yield detectable levels of ammonium nitrate on the bed media, detection level shall be assumed and extrapolated to a two-year bed life. If Test 3 does not yield detectable levels of ammonium nitrate on the bed media, Test results shall take special note of this observation with no extrapolation to a two-year bed life.

Appendix B

Warranty Testing

Appendix B
Warranty Testing

1.0 Purpose

The purpose of appendix B testing is to validate performance guarantees related to removal efficiencies and design life for the carbon bed adsorber media in a prototypic LAW and HLW offgas.

2.0 Overview

Mercury is present in many of the DOE's mixed wastes including the high-level tank wastes, which will be processed in the WTP. When this waste is processed in the WTP Low-Activity Waste (LAW) and High-Level Waste (HLW) melter systems, the resulting offgas will contain mercury (Hg) and hydrogen fluoride (HF). Sulfur-activated carbon (S-AC) has been successfully used to remove mercury from offgas. However, it has generally been used with elemental mercury and under conditions that are not representative of WTP melter offgas. Concerns related to the adsorption behavior of elemental and oxidized forms of mercury, such as mercuric chloride, have been raised regarding mercury removal efficiency and breakthrough capacity, which could have a direct impact on sizing of the adsorption system and the frequency at which S-AC must be changed. Test apparatus will include two adsorbent columns (lead and lag adsorbers), each with guard and primary activated carbon media as described in the mechanical data sheets (24590-HLW-MVD-HOP-00011, 24590-HLW-MVD-HOP-20011, 24590-LAW-MVD-LVP-00004), representative of the WTP Lead and Lag Adsorbers.

VSL testing demonstrated that a rapid temperature rise resulted when water vapor was introduced to Kombisorb BAT-37. A temperature increase rapidly progressed through the VSL test bed. However, media temperatures quickly returned to normal as the bed became acclimated to water (except for heat losses). Introduction of NOx to the Kombisorb BAT 37 resulted in an initial temperature rise followed by a gradual temperature reduction as the media became acclimated to the NOx (elevated temperatures continued as long as NOx feed continued). Because virgin activated carbon media had a much greater sensitivity to NOx, it was necessary to establish a procedure for ramping feed of NOx to the bed (referred to as conditioning). The addition of Organics is very important, however acetonitrile (to be used in this phase of the testing) did not show much of a temperature effect. Nonetheless, the INL test plan should include a separate ramp procedure for NOx and organics.

VSL testing only evaluated the primary bed material, Kombisorb BAT 37. Because it may be possible that other important temperature effects may exist within the guard bed material, Kombisorb ZA-37, the testing shall also address the effects that the simulant offgas stream composition may have on the guard bed media temperature.

VSL testing identified the need to condition virgin Kombisorb BAT 37 to water, NOx, and organics. The Vendor Test Plan shall address conditioning of virgin activated carbon media, based on review of the following VSL steps:

- As NOx and organic ramping is initiated, actions should be taken to either stop ramps or reduce rates at a temperature threshold of 120°C.

- As NOx and organic approach full rates and during steady state operations, temperatures up to 130°C are permissible.
- Organic feed shall be stopped if activated carbon media temperature exceeds 130°C.
- If at any time the carbon media temperature reaches 140°C, both NOx and organic feed shall be stopped.

Steady-state for the activated carbon adsorbers will be reached when the gas outlet temperature for the lag bed operates at less than a 1°C change for one hour and monitoring of total hydrocarbons (THC) is maintained within a 1 to 3% variation for one hour. Once steady-state media temperatures and THC concentrations are reached, introduction of mercury to the test apparatus may be initiated.

3.0 Objectives

1. Test 1 - Determine removal efficiency and loading of mercury on the guard and primary beds for the lead and lag adsorbers with HLW simulated offgas. Confirm compliance with removal efficiency requirements and 12 month design life for the HLW lead adsorber. Confirm that the maximum media operating temperatures in the lead and lag adsorbers are below 130°C.

2. Test 2 - Determine removal efficiency and loading of mercury, hydrogen chloride, hydrogen fluoride, and iodine on the guard and primary beds for the lead and lag adsorber with LAW simulated offgas. Confirm compliance with removal efficiency requirements and 24 month design life for LAW lead adsorber. Confirm that the maximum media operating temperatures in the lead and lag adsorbers are below 130°C.

4.0 Quality Assurance

Tests shall be performed in accordance with the applicable sections of NQA-1. The Test Plan will include a matrix cross-referencing the QA requirements to implementing procedures for the work, and justifying elements that are not applicable.

5.0 Test Conditions

Each of the tests in the following sections have been formulated to address the test objectives from Section 3.

The activated carbon beds proposed for the HLW and LAW off gas systems will operate under the conditions defined in mechanical data sheets (24590-HLW-MVD-HOP-00011, 24590-HLW-MVD-HOP-20011, 24590-LAW-MVD-LVP-00004). The appropriate media for each test will be selected and described in the Vendor Test Plan. The Test Plan will detail the test conditions and data collection for each test based on the media and operating conditions, including steps for conditioning of virgin activated carbon media.

Testing will be done with a bench scale apparatus using air and water for humidity as the bulk gas.

Carbon test beds shall be insulated such that the temperature drop across the beds does not exceed 1.0°C with dry hot air passing through the test beds at test temperatures. Heat tracing may also be used in combination with the insulation as a means to compensate for differences between size of the test apparatus and the WTP activated carbon units. If heaters are used, the minimum number of zone controls shall be 4 (1 for the guard and 1 for the primary activated carbon media sections in both the lead and lag adsorbers).

5.1 Test 1 - Measure mercury removal efficiency and the mercury profile through the adsorbent bed using a simulated HLW offgas that includes acetonitrile.

A. Test conditions:
- Sorbent - Donau Kombisorb BAT 37 and ZA 37
- Residence time – by vendor, to match Mechanical Data Sheet
- Superficial gas velocity – by vendor, to match Mechanical Data Sheet
- Inlet temperature – 94°C ± 0.5°C
- Mercury concentration – 52,600 µg/dscm ± 50 µg/dscm
- Relative humidity – 18.6% ± 1%
- Gas composition (actual composition):
    a. Bulk gas – Air and water vapor
    b. Concentration of organic:
        i. acetonitrile – 2 ppm ± 0.05 ppm
    c. Other components
        i. CO_2 – 0.4% ± 0.03%
        ii. CO – 5.2 ppm ± 0.2 ppm
        iii. NO – 480 ppm ± 10 ppm
        iv. NO_2 – 370 ppm ± 10 ppm
        v. HF – 6.2 ppm ± 0.2 ppm

B. Test duration:
- Initial period to condition the virgin sorbents with the test gases and to reach steady-state operations.
- 100 hours (continuous operation) or until breakthrough of mercury.

C. Data to be obtained:
- Measure Total Hydrocarbons at the outlet of the lead and lag adsorbers
- Measure inlet and outlet mercury concentrations for the lead and lag adsorbers.
- Measure mercury profile in the lead and lag adsorbers (guard and primary beds) at end of test.
- Measure inlet and outlet offgas temperatures of lead and lag adsorbers.
- Measure sulfur content of three representative samples of virgin primary media and three representative samples of primary media taken after completion of testing from the location where maximum bed temperature was reached.
- Media temperature at two equally spaced locations along the centerline of the guard bed and primary bed for both the lead and lag adsorbers (total of 4 per adsorber).
- Time at which breakthrough occurs (if realized) for any adsorbed constituents for the lead and lag adsorbers. Breakthrough is defined as the concentration at which emissions reaches 50% of the specified removal efficiency. For example, breakthrough for mercury would be 26.3 µg/dscm using the DF of 1000 and maximum mercury loading of 52,552 µg/dscm shown in the mechanical data sheets.
- Limits established for step changes to NOx concentrations (and any other limiting gas stream components determined by testing).

D. Calculations:
- Hg removal efficiency and loading (mercury profile) for the lead and lag adsorbers.
- Estimated time for breakthrough of Hg for the lead and lag test adsorbers and for the WTP lead and lag adsorbers. (Mercury concentration specified in section A is the maximum concentration required for removal efficiency calculations. Design life shall be a ratio based on nominal mercury concentration 7,608 µg/dscm.)
- Correlation of lead and lag adsorber guard and primary bed temperatures and offgas constituents.
- Analysis of the impact of key gas components on sorbent temperatures during conditioning and operational phases.

E. Performance:
- Mercury removal efficiency - 99.9%
- Carbon media temperature maintained below maximum operating temperature (130°C)
- Media Design life - 12 months (WTP lead adsorber)

5.2 Test 2 - Measure mercury, hydrogen fluoride, and hydrogen chloride , and Iodine removal efficiencies through the adsorbent beds and organic removal using a simulated LAW offgas that also includes acetonitrile.

A. Test conditions
- Sorbents – Donau Kombisorb BAT 37 and ZA 37
- Residence time – by vendor to match mechanical data sheet
- Superficial gas velocity – by vendor to match mechanical data sheet
- Inlet temperature – 105 °C± 0.5 °C *(Nominal Condition on Mechanical Data Sheet)*
- Mercury concentration - 24,000 µg/dscm ± 50 µg/dscm
    i. Elemental mercury 85wt% ± 1 wt% Hg^0
    ii. Oxidized mercury 15wt% ± 1 wt% Hg^{+2} ($HgCl_2$)
- Relative humidity – 10.2 % ± 1% *(Nominal Condition on Mechanical Data Sheet)*
- Gas composition (actual composition):
    a. Bulk gas – Air and water vapor
    b. Concentration of organic:
        i. acetonitrile – 50 ppm ± 1.5 ppm
    c. Inlet hydrogen chloride (HCl) concentration - 46 ppm ± 1.5 ppm
    d. Inlet hydrogen fluoride (HF) concentration - 2.8 ppm ± 0.1 ppm
    e. Inlet iodine (I) concentration - 1.0 ppm ± 0.1 ppm
    f. Other components:
        i. Inlet CO concentration - 480 ppm ± 10 ppm
        ii. Inlet NO concentration - 3800 ppm ± 50 ppm
        iii. Inlet NO_2 concentration - 5600 ppm ± 50 ppm
        iv. Inlet CO_2 concentration - 1.2% ± 0.5%
        v. Inlet SO_2 concentration - 5.0 ppm ± 0.1 ppm

B. Test duration:
- Initial period to condition the virgin sorbent with the test gases and to reach steady-state operations.
- 100 hours or until breakthrough of mercury (Continuous).

C. Data to be obtained:
- Measure Total Hydrocarbons at the outlet of the lead and lag adsorbers
- Measure inlet and outlet mercury concentrations for the lead and lag adsorbers.
- Measure mercury profile in the lead and lag adsorbers (guard and primary beds) at end of test.
- Measure inlet and outlet hydrogen fluoride concentrations of the lead and lag adsorbers.
- Measure inlet and outlet hydrogen chloride concentrations of the lead and lag adsorbers.
- Measure inlet and outlet Iodine concentrations of the lead and lag adsorbers.
- Measure inlet and outlet organic concentrations of the lead and lag adsorbers.
- Measure inlet and outlet offgas temperatures of the lead and lag adsorbers.
- Measure sulfur content of three representative samples of virgin primary media and three representative samples of primary media taken after completion of testing from the location where maximum bed temperature was reached.
- Media temperature at two equally spaced locations along the centerline of the guard bed and primary bed for both the lead and lag adsorbers (total of 4 per adsorber).
- Time at which breakthrough occurs (if realized) for any adsorbed constituents for the lead and lag adsorbers.
- Limits established for step changes to NOx concentrations (and any other limiting gas stream components determined by testing).

D. Calculations:
- Mercury removal efficiency and loading (mercury profile) for the lead and lag adsorbers.
- Estimated time for breakthrough of mercury for the lead and lag test adsorbers and for the WTP lead and lag adsorbers. (Mercury concentration specified in Section A is the maximum concentration required for DRE. Design life shall be a ratio based on nominal mercury concentration 320 μg/dscm).
- Iodine removal efficiency and loading for the lead adsorber.
- Estimated time for breakthrough of iodine for the test lead and lag test adsorber and for the WTP lead and lag adsorbers.
- Hydrogen fluoride removal efficiency and loading for the lead adsorber.
- Estimated time for lead and lag adsorber breakthrough of hydrogen fluoride for the lead and lag test adsorbers and for the WTP adsorbers.
- Hydrogen chloride removal efficiency and loading for the lead and lag adsorbers.
- Estimated time for breakthrough of hydrogen chloride for the lead and lag test adsorber and for the WTP adsorbers.
- Correlation of lead and lag adsorber guard and primary bed temperatures and offgas constituents.
- Analysis of the impact of key gas components on sorbent temperatures during conditioning and operational phases.

E. Performance:
- Mercury removal efficiency - 99.8%
- Hydrogen chloride removal efficiency - 97%.
- Hydrogen fluoride removal efficiency - 97%

- Iodine removal efficiency - 99%
- Carbon media temperature maintained below maximum operating temperature (130°C)
- Design life - 24 months (WTP lead adsorber)

6.0 Success Criteria

1. Verification that specified removal efficiencies for required offgas constituents are achieved.
2. Quantization of load profiles for required offgas constituents and verification of WTP bed life.
3. Verification that carbon media temperature controls maintain carbon media temperature below its maximum allowable operating temperature of 130°C.

Appendix C

Permit Testing

Appendix C
Permit Testing

1.0 Purpose

The purpose of appendix C testing is to determine removal efficiency and loading of spiked organics for WTP offgas permitting.

2.0 Overview

Test apparatus shall consist of two adsorbent columns (each with guard and primary activated carbon media) as described in mechanical data sheets (MDSs), representing the WTP Lead and Lag Adsorbers.

Permit requirements for the WTP melter offgas systems specify compliance with Maximum Achievable Control Technology (MACT) incinerator standards for mercury and organic (VOC and SVOC) destruction. The WTP project has conducted systems tests at the Vitreous State Laboratory (VSL) of the melter offgas systems, to determine if the offgas systems, as designed, will meet MACT requirements. However, the test carbon bed used at VSL did not contain a guard bed and in other respects (e.g., gas residence time) the VSL test bed was not representative of the WTP carbon bed design. VSL testing has also shown large temperature exotherms exist, resulting from NOx and organics (allyl alcohol and naphthalene) in the offgas stream.

VSL testing only evaluated the primary bed material, Kombisorb BAT 37. Because it may be possible that other important temperature effects may exist within the guard bed material, Kombisorb ZA 37, the testing shall also address the effects the simulant offgas stream composition may have on guard bed media temperature.

VSL testing identified the need to condition virgin Kombisorb BAT 37 to water, NOx, and organics. The Vendor Test Plan shall address conditioning of virgin activated carbon media, based on review of the following VSL steps:

- As NOx and organic ramping is initiated, actions should be taken to either stop ramps or reduce rates at a temperature threshold of 120°C.
- As NOx and organic approach full rates and during steady state operations, temperatures up to 130°C are permissible.
- Organic feed shall be stopped if activated carbon media temperature exceeds 130°C.
- If at any time the carbon media temperature reaches 140°C, both NOx and organic feed shall be stopped.

Steady-state for the activated carbon adsorbers will be reached when the gas outlet temperature for the lag bed operates at less than a 1°C change for one hour and monitoring of total hydrocarbons (THC) is maintained within a 1 to 3% variation for one hour. Once steady-state media temperatures and THC concentrations are reached, introduction of mercury to the test apparatus may be initiated.

3.0 Objectives

1. Test 1 - Determine removal efficiency and loading of mercury, allyl alcohol, and naphthalene on the guard and primary test beds for the lead and lag adsorbers with HLW simulated offgas. Measure

media temperatures and establish maximum allowable changes in NOx and allyl alcohol concentrations required to maintain control of bed temperatures due to adsorption and exothermic reactions. Confirm that the maximum media operating temperatures in the lead and lag adsorbers are below 130°C.

2. Test 2 - Determine removal efficiency and loading of mercury, hydrogen chloride, allyl alcohol, and naphthalene on the guard and primary test beds for both lead and lag adsorbers with LAW simulated offgas. Measure media temperatures and establish maximum allowable changes in NOx and allyl alcohol concentrations required to maintain control of bed temperatures due to adsorption and exothermic reactions. Confirm that the maximum media operating temperatures for the lead and lag adsorbers are below 130°C.

4.0 Quality Assurance

Tests shall be performed in accordance with the applicable sections of NQA-1. The Test Plan will include a matrix cross-referencing the QA requirements to implementing procedures for the work, and justifying elements that are not applicable.

5.0 Test Conditions

Each of the tests in the following sections have been formulated to address the test objectives from Section 3.

The activated carbon beds proposed for the HLW and LAW off gas systems will operate under the conditions defined in this section of Appendix C. The appropriate media for each test will be selected and described in the Vendor Test Plan. Test media shall be consistent with that proposed for the WTP carbon bed adsorbers. The Test Plan will detail the test conditions and data collection for each test based on the media and operating conditions, including steps for conditioning of virgin activated carbon media.

Testing will be done with a bench scale apparatus using air and water for humidity as the bulk gas. Carbon test beds shall be insulated such that the temperature drop across the beds does not exceed 1.0°C with dry hot air passing through the test beds at test temperatures. Heat tracing may also be used in combination with the insulation as a means to compensate for differences between size of the test apparatus and the WTP activated carbon units. If heaters are used, the minimum number of zone controls shall be 4 (1 for the guard and 1 for the primary activated carbon media sections in both the lead and lag adsorbers).

5.1 Test 1 - Measure mercury and allyl alcohol/naphthalene removal efficiencies, using a simulated HLW offgas.

A. Test conditions:
- Sorbent - Donau Kombisorb BAT-37 and ZA-37
- Residence time – by vendor, to match Mechanical Data Sheet
- Superficial gas velocity – by vendor, to Match Mechanical Data Sheet
- Inlet temperature – 94°C ± 0.5°C
- Mercury concentration – 52,600 µg/dscm ± 50 µg/dscm
- Relative humidity – 18.6 % ± 1%
- Gas composition:
    a. Bulk gas – Air and water vapor
    b. Concentrations of organics:

i. Allyl alcohol – 1400 ppm ± 20 ppm (dry)
ii. Naphthalene – 35 ppm ± 1 ppm (dry)

c. Other components (actual composition):
i. CO_2 – 1.2% ± 0.03%
ii. CO – 900 ppm ± 20 ppm
iii. NO – 480 ppm ± 10 ppm
iv. NO_2 – 370 ppm ± 10 ppm
v. HF – 6.2 ppm ± 0.2 ppm

B. Test duration:
- Initial period to condition the virgin sorbent with the test gases and to reach steady-state operations.
- 100 hours (continuous operation) or until breakthrough of mercury.

C. Data to be obtained:
- Measure Total Hydrocarbons at the outlet of the lead and lag adsorbers
- Measure inlet and outlet mercury concentrations for the lead and lag adsorbers.
- Measure mercury profile in the lead adsorber (guard and primary beds) at end of test.
- Measure inlet and outlet offgas temperatures for the lead and lag adsorbers.
- Measure sulfur content of three representative samples of virgin primary media and three representative samples of primary media taken after completion of testing from the location where maximum bed temperature was reached.
- Measure inlet and outlet allyl alcohol and naphthalene concentrations in the lead and lag adsorbers.
- Media temperature at two equally spaced locations along the centerline of the guard bed and primary bed for both the the lead and lag adsorbers (total of 4 per adsorber).
- Time at which breakthrough occurs (if realized) for allyl alcohol and naphthalene for the lead and lag adsorbers.
- Limits established for step changes to NOx and allyl alcohol concentrations (and any other limiting gas stream components determined by testing).

D. Calculations:
- Mercury removal efficiency and loading (mercury profile) for the lead and lag adsorbers.
- Estimated time for breakthrough of mercury for the lead and lag test adsorbers and for the WTP lead and lag adsorbers.
- Allyl alcohol and naphthalene removal efficiency and loading for the lead and lag adsorbers.
- Estimated time for breakthrough of allyl alcohol and naphthalene for the lead and lag adsorbers.
- Correlation of guard and primary bed temperatures and offgas constituents for the lead and lag adsorber.
- Analysis of the impact of key gas components on sorbent temperatures during conditioning and operational phases.

E. Performance:
- Mercury removal efficiency - 99.9%
- Carbon media temperature maintained below maximum allowable operating temperature for the media (130°C)

5.2 Test 2 - Measure mercury, hydrogen chloride, allyl alcohol, and naphthalene removal efficiencies using a simulated LAW offgas.

A. Test conditions.
- Sorbents – Donau Kombisorb BAT-37 and ZA-37
- Residence time – by vendor, to match Mechanical Data Sheet
- Superficial gas velocity – by vendor, to Match Mechanical Data Sheet
- Inlet temperature – 105°C ± 0.5°C *(Nominal Condition on Mechanical Data Sheet)*
- Mercury concentration - 24,000 µg/dscm ± 50 µg/dscm
    i. Elemental mercury 85wt% ± 1 wt% Hg^0
    ii. Oxidized mercury 15wt% ± 1 wt% Hg^{+2} ($HgCl_2$)
- Relative humidity – 10.2% ± 1% *(Nominal Condition on Mechanical Data Sheet))*
- Gas composition:
    a. Bulk gas – Air and water vapor
    b. Concentrations of organics:
        i. Acetonitrile – 50 ppm ± 1.5 ppm
        ii. Allyl alcohol – 100 ppm ± 3 ppm (dry)
        iii. Naphthalene – 35 ppm ± 1 ppm (dry)
    c. Inlet hydrogen chloride concentration - 46 ppm ± 1.5 ppm
    d. Other components (actual composition):
        i. Inlet CO concentration - 480 ppm ± 10 ppm
        ii. Inlet NO concentration - 3800 ppm ± 50 ppm
        iii. Inlet NO_2 concentration - 5600 ppm ± 50 ppm
        iv. Inlet CO_2 concentration - 2% ± 0.5%v.
        v. Inlet SO_2 concentration - 5.0 ppm ± 0.1 ppmB.

B. Test duration:
- Initial period to condition the virgin sorbent with the test gases and to reach steady-state operations.
- 100 hours (continuous operation) or until breakthrough of mercury.

C. Data to be obtained:
- Measure Total Hydrocarbons at the outlet of the lead and lag adsorbers
- Measure inlet and outlet mercury concentrations for the lead and lag adsorbers.
- Measure mercury profile in the lead adsorber (guard and primary beds) at end of test.
- Measure inlet and outlet hydrogen chloride concentrations of the lead and lag adsorbers.
- Measure inlet and outlet allyl alcohol and naphthalene concentrations of the lead and lag adsorbers.
- Measure inlet and outlet offgas temperatures of lead and lag adsorbers.
- Measure sulfur content of three representative samples of virgin primary media and three representative samples of primary media taken after completion of testing from the location where maximum bed temperature was reached.

- Media temperatures at two equally spaced locations along the centerline of the guard bed and primary bed for both the lead and lag adsorbers (total of 4 per adsorber).
- Time at which breakthrough occurs (if realized) for allyl alcohol and naphthalene for the lead and lag adsorbers.
- .Limits established for step changes to NOx and allyl alcohol concentrations (and any other limiting gas stream components determined by testing).

D. Calculations:
- Mercury removal efficiency and loading (mercury profile) for the lead and lag adsorbers.
- Estimated time for breakthrough of mercury for the lead and lag test adsorbers and for the WTP lead and lag adsorbers.
- Hydrogen chloride removal efficiency and loading for the lead and lag adsorbers.
- Estimated time for breakthrough of hydrogen chloride for the lead and lag test adsorbers and for the WTP lead and lag adsorbers.
- Allyl alcohol and naphthalene removal efficiency and loading for the lead and lag adsorbers.
- Estimated time for breakthrough of allyl alcohol and naphthalene for the lead and lag adsorbers.
- Correlation of guard and primary bed temperatures and offgas constituents for the lead and lag adsorbers.
- Analysis of the impact of key gas components on sorbent temperatures during conditioning and operational phases.

E. Performance:
- Mercury removal efficiency - 99.8%
- Hydrogen chloride removal efficiency - 97%
- Carbon media temperature maintained below maximum allowable operating temperature for the media (130°C)

6.0 Success Criteria

1. Quantization of the removal efficiencies required offgas constituents.
2. Quantization of load profiles for required offgas constituents and determination of WTP bed life.
3. Quantization of carbon media temperature and controls to maintain carbon media below the maximum allowable operating temperature for the activated carbon media of 130°C.

Note that it is possible that the specified test conditions may result in activated carbon media temperatures that do not satisfy the success criteria. In that event, the testing will continue at the reduced allyl alcohol rate that is required to satisfy the success criteria. Because the reduced rate may not satisfy project needs, additional scope for addition of an optional testing may be required to be performed as follows:

Optional Test:
- Retest with the lead bed only on-line to demonstrate the maximum allyl alcohol and naphthalene rates that satisfy the success criteria.

Appendix D

WTP Specific Tailoring of ASME AG-1-1997

Appendix D
WTP Specific Tailoring of ASME AG-1-1997

35.0 ASME AG-1, Code on Nuclear Air and Gas Treatment

Revision: 1997 (R2000)
Sponsoring Organization: The American Society of Mechanical Engineers

WTP Specific Tailoring

The following tailoring of ASME AG-1 is required for use by the RPP-WTP project as an implementing standard for the use of Important-to-Safety (ITS) radial HEPA filter systems and the use of ITS axial flow HEPA filters as inbleed units in the Laboratory CSV Exhaust System. Where not specifically identified herein, the remainder of the code requirements are invoked.

Section FK is added as an addendum to ASME AG-1-1997 with the ASME AG-1a-2000 Addenda AG-1 edition invoked on the project.

Page 228.9; Article HA-2000 Reference Documents

Revise Article HA-2000 as follows:

Change the code edition of ASME N509 as applied as a referenced (daughter) standard to AG-1 from 1989, reaffirmed December 6, 1996 to 2002.

Justification: The version of the ASME N509 Standard currently referenced as a daughter by AG-1 was issued in 1989 and Reaffirmed in 1996. At the time the N509-1989 (R1996) code was selected to be a daughter of AG-1, the ASME AG-1 code did not include requirements for HEPA filter housings. These requirements were later added in the 2000 Addenda to the AG-1 code. The ASME N509-2002 edition does not provide component requirements for HEPA filter housings and HEPA filters but instead refers the user to AG-1 for this information. Therefore, by making this change it will reduce potential redundancies and conflicts.

Page 228.16; Subsubarticle HA-4420 Access Doors and Panels

Revise Subsubarticle HA-4420 as follows for remote change housings:

Not applicable. The requirements of this article are not applicable to Remote Change Radial HEPA Filter Housings; the access doors and panels shall satisfy HA-4500, Pressure Boundary Leakage, and HA-5300, Pressure Boundary Leakage Testing.

Justification: Remote housings are not designed to "incorporate a means for adjusting compression forces, gasket compression..." There are not hinges or latches in the design and they are not designed for manual operation. Therefore, the requirements described in this code article are not applicable.

The remote housing design requires remote access, using a grapple to manipulate doors in a cave environment that may become subject to contamination and high radiation fields. The design incorporates low maintenance features not subject to failure (i.e., vertical housings and heavy doors). The housing doors seal by virtue of their weight alone. Door guides are included. A bar placed across the tops of the doors (and pinned in position) is used to ensure the doors remain in place during seismic events.

Page 228.18; Paragraph HA-4443 Clamping Mechanism

Revise Paragraph HA-4443 as follows for remote change and safe change radial HEPA housings:

Replace the text with: The requirements of this article are not applicable to Safe Change and Remote Change Radial HEPA Filter Housings. For Safe Change and Remote Change Radial HEPA filter housings, the design shall ensure that the housing knife-edge is embedded into the pliable filter sealant and will provide a seal for the complete perimeter of each filter.

Justification: The remote change housings are not side access housings and are not designed for manual operation. There are no clamping mechanisms or filter indexing mechanisms. The weight of the remote filter and differential pressure across the filter is relied upon to ensure that the knife-edge is embedded into the fluid seal.

The safe change housings are front access and are not walk-in style. The filter is not accessed from its side. Therefore, filter retrieval features and filter indexing mechanisms do not apply. A clamping mechanism that is capable of moving the filter (e.g., for side access housings) is not required. The safe change housings are designed to allow a person to insert and remove each filter.

Subarticle FK-4100 General Design

Revise second paragraph of Subarticle FK-4100 as follows for remote change and safe change radial HEPA filter designs:

Replace the text with: For Remote Change and Safe Change Radial HEPA Filters, the total media area provided within the filter pack shall be such that maximum media velocity is 6.5 fl/min (2.0 m/min) at the rated flow.

Justification: The RPP-WTP radial filter design is based upon a UK Atomic Energy Standard Specification AESS 30/95100. This Standard contains an equivalent requirement to that found in AG-1. It states: "The effective area of filter medium used for each insert shall be not less than 3.0 sq m for every 100 l/s rated airflow." The Project proposes to meet this criterion. Converting these metric units for a UK 950 l/s (~2,000 cfm) rated filter equates to approximately 6.5 fl/min media velocity or a minimum of 308 sq. ft of media.

The DOE Nuclear Air Cleaning Handbook (Reference DOE-HDBK-1169-2003 Chapter 2.3.7 and Figure 2.8(a)) illustrates the importance and intent behind this code requirement. AG-1 Subsubarticle FK-1130 states that a HEPA filter shall have *"a minimum efficiency of 99.97% (that is, a maximum particle penetration of 0.03%)for 0.3 micrometer diameter test aerosol particles."* This defines the minimum performance of a HEPA type filter. The curves depicted in Figure 2.8(a) of the Handbook show that at 10.5 ft/min air velocity, the 0.30-micron particle size can be expected to penetrate a HEPA filter such that the AG-1 FK-1130 performance requirement would not be met.

Numerous aerosol penetration tests have been performed on the proposed filter design both inside prototype housings and on individual prototype radial filters designed with a media area of 236 sq. ft., or approximately 8.5 ft/min media velocity. Each test demonstrated that a filter design with media velocities of this magnitude would meet the qualification performance requirements as stated in AG-1 (e.g., 99.97% efficiency or better for penetration of 0.3-micron particles).

The proposed RPP-WTP design uses a filter with approximately 325 sq. ft. of effective media area, or a media velocity of approximately 6.1 ft/min. This represents a small improvement on the UK design and therefore continues to meet the UK Standard requirement.

Further addition of filter media to meet the more restrictive AG-1 Section FK requirement would possibly result in other undesirable design and performance characteristics (e.g., increased DP, reduced pleat spacing). The filter geometry is also limited by many other design restrictions including: available building space, personnel filter handling limitations, and waste disposal package limitations.

Table FK-4000-1

Revise Table FK-4000-1 rating information for the 2,000 acfm filter as follows for remote change and safe change HEPA radial filter designs:

TABLE FK-4000-1 (TAILORED)
TYPE 1 RADIAL FLOW HEPA FILTER – NOMINAL RATINGS

Maximum Rated Air Flow		Maximum Resistance	
(acfm)	(m^3/hr)	Inches WC	Pa
40	68	1.3	325
100	170	1.3	325
250	425	1.3	325
500	850	1.3	325

2/7/2005 3:51 PM

1000	1700	1.3	325
1500	2550	1.3	325
2000	3400	1.6	400

Justification: A new filter design is being developed with the intent of qualifying it in accordance with the AG-1 code. The RPP-WTP radial flow HEPA filter design originated from UK Atomic Energy Standard Specification AESS 30/95100. The radial flow HEPA filters will be designed for a maximum initial pressure drop of approximately 1.55 inches WC at a rated flow of 2,000 cfm. This is just slightly greater than (~ delta of 0.15 inches WC) the acceptance criterion stated in UK Atomic Energy Standard Specification AESS 30/95100. This increase in observed pressure drop is primarily due to small design differences between the UK design and the design proposed for use in the RPP-WTP. These differences include increases in filter pack depth, increases in faceguard to media pack gaps (used to enhance protection of the media), and space to accommodate the filters gel seal channel. The UK filter pack depth is approximately 68mm or ~2.7 inches. The RPP-WTP filters are available in 1-inch increment pack depths with a 3-inch pack depth proposed for use on the RPP-WTP. The slightly deeper RPP-WTP media pack design will increase the filter media area and increase the removal efficiency for small particles. The benefits gained in the RPP-WTP radial filter design are viewed to outweigh the negligible increase in airflow resistance (~ 3 to 5% of typical filter loading at change-out of filter element).

Paragraph FK-6211 **Flatness and Squareness**

Revise Paragraph FK-6211 (a) as follows for remote change and safe change radial HEPA filter designs:

Type 1 filter flange and end cap tolerances shall meet the following criteria: parallel within $\frac{1}{8}$ in., flat within $\frac{1}{16}$ in.

Justification: TAILORING OF PARALLELISM TOLERANCE: The tailoring presented above changes the code requirement for flange to end cap parallelism from 1/16 in. to 1/8 in. For the Remote Change Filter, the inlet flange, which includes the gel channel with a nominal width of 3/4 in., creates the seal and supports the filter inside the housing. The outlet end cap is fully suspended inside the housing by the opposite inlet flange (i.e., outlet end cap does not touch the housing and is not used to form the seal). Parallelism to within 1/8 in. will ensure that an adequate housing-to-filter seal is created. For the Safe Change Filter, as with the remote filter, the seal is formed by insertion of a housing knife-edge into a filter gel filled channel with a nominal width of 3/4 in. The gel channel is located on the filter inlet flange. Parallelism to within 1/8 in. will ensure an adequate housing-to-filter seal is created.

TAILORING OF SQUARENESS TOLERANCE: The "squareness" tolerance from FK-6211 is being addressed with a tolerance for circular runout as stated in tailoring for FK-6212. Circular runout controls the cumulative variations that may be present in the positional relationship between the inlet flange and outlet end cap. Inspection for circular runout is equivalent to and meets the code requirement to maintain the squareness characteristic while taking into account the entire length of the filter. Maintaining radial

filter circular runout to within the 3/32" tolerance will ensure the filter forms an adequate seal within the filter housing.

Paragraph FK-6212 **Overall Dimensions**

Replace Paragraph FK-6212 as follows for the remote change and safe change radial HEPA filter design: Type 1 filter length shall be (+0 / -1/8 in.), circular runout of filter flange with respect to the filter end cap shall be within 3/32 in., all other dimensions ±1/16 in.

Justification: "Seal ring" and "seal face" are terms specific to Section FK radial filters with gaskets and therefore dimensions and tolerances associated with these terms are not applicable to the Type 1 gel seal radial filters to be used at the RPP-WTP.

TAILORING OF CONCENTRICITY: Concentricity is the condition in which the axes of all cross-sectional elements of a surface of revolution are common to the axis of a datum feature. Concentricity is being replaced with a tolernnce for circular runout as a more practical method to verify roundness. Runout refers to the result of rotating a part about its central axis while measuring with a dial indicator its surface deviation from perfect roundness. With circular runout, the dial indicator is not moved along the direction of the axis of the part (as with "total runout"). Circular runout is therefore applied independently at each single circular element along the length of the part as the part is rotated through 360 degrees. The tolerance for circular runout provided in the tailored text controls the cumulative variations that may be present in the positional relationship between the inlet flange and outlet end cap.
The 3/32 in. tolerance provided for circular runout will ensure the filter forms an adequate seal within the filter housing.

TAILORING OF GENERAL DESIGN TOLERANCE OF +/- 1/16 IN.: REPLACE: "all other dimensions +/- 1/16 in." WITH: "all other dimensions +/- 1/16 in. with exception that design filter media to faceguard gap shall be +/- 1/8 in. (i.e., to maintain a minimum media to faceguard gap of 1/8").

Justification: The proposed design is verified to be safe through code required filter qualification testing as described in Section FK-5100.

Section FG **Mounting Frames**

Not Applicable.

Justification: The ASME Committee on Nuclear Air and Gas Treatment (CONAGT) has stated that Section FG only applies to walk in housings. None of the filter housings (i.e., radial or axial filter designs) to be installed on the RPP-WTP Project is a "walk in" design. Reference ASME Technical Interpretation File # 05-990, RPP-WTP CCN # 107935).

Page 607; Paragraph TA-4632 **Airflow Distribution Test (AD)**

Revise Paragraph TA-4632 as follows for remote change and safe change radial HEPA housings:

Replace "downstream" with "upstream". Add for clarity: "For Remote Change and Safe Change Radial HEPA filter banks, flow measurement location is upstream vs. code required downstream."

Justification: The requirement for flow measurements to be taken downstream of each HEPA filter in a bank is in order to verify equal flow distribution between filters in a bank. In traditional axial flow systems, a measurement location downstream is preferred due to the improvements in the flow conditions (i.e., flow straightening) inside the housing created by the filter itself. However, due to the difference in configuration created by the radial filter, the flow profile both entering and exiting the filter is extremely complex (i.e., not uniform over the filter face). Testing and analysis (computational fluid dynamic models) performed on prototype units to date have determined that taking the flow measurement upstream and inside the filter (inlet) using a hot wire anemometer provides the most repeatable measurement. Accuracy of the measurement is still hindered by flow conditions and anemometer placement; however, increased precision is obtained by taking an average of multiple measurements at multiple locations within each filter inlet. Predicted results from CFD modeling have agreed with actual field measurements using this technique. The project intends to design (based on the prototype tests) and use an anemometer instrument developed specifically for the radial filter design and place it at the inlet (i.e., upstream) side of the filter. Verification, in the field, of acceptable air distribution between filters in a bank can then be accomplished, as the code requires.

Page 607; Paragraph TA-4633 Air-Aerosol Mixing Test (AA)

Revise Paragraph TA-4633 as follows for axial housings used as LAB C5V Inbleeds:

This article is not applicable to LAB C5V inbleed axial filter housings.

Justification: The intent of this test is to verify that the test aerosol is uniformly mixed in the air stream when it reaches the filter in order to verify that each filter in a filter bank is being challenged. This test is concerned primarily with designs and layouts where a single point injection of aerosol in close proximity to the filter bank may result in non-uniform distribution of the test agent.

The Laboratory Facility C5V Inbleed housing is designed such that each filter is assigned its own aerosol injection manifold. The manifold design and its proximity to the filters have been qualified to meet the aerosol mixing test criteria presented in AG-1. The housing is not designed to accommodate the air-aerosol mixing field-commissioning test per TA-4633. However, the housing design is not being modified for RPP-WTP use and aerosol mixing, by virtue of the manufacturer test sections, will not be impacted by the installation in the RPP-WTP Laboratory Facility.

Appendix E

WTP Specific Tailoring of ASME B31.3-1996

Appendix E
WTP Specific Tailoring of ASME B31.3-1996

26.0 ASME B31.3-1996, Process Piping

Revision: 1996
Sponsoring Organization: ASME

WTP Specific Tailoring

The following tailoring of ASME B31.3, *Process Piping*, is required for use by the WTP contractor as an Implementing Standard for: (1) the fabrication and installation of those portions of the C5V ductwork that are being embedded in concrete, (2) the use of ASME B16.9 welding tees in accordance with ASME B31.3-2002, (3) use of vacuum box leak testing, and (4) the ASME B31.3-1998, paragraph 345.2.3(c), allowance for not leak testing closure welds outside of inaccessible areas.

- The tailored sections of ASME B31.3 applicable to embedded ductwork will only be utilized to the extent that it will cover the fabrication, installation, and inspection (and associated testing) of Category D fluid service piping being used as C5 ductwork. Air testing requirements for this ductwork will be compliant with ASME AG-1. Below is a description of those portions of ASME B31.3 that apply to fabrication, installation, and inspection of Category D fluid service piping and the sections of the SRD that they will apply to.
- The tailored sections of ASME B31.3 applicable to welding tees will only be used for ASME B16.9 welding tees. As long as the stress intensification factors from ASME B31.3-2002 are used in the stress analysis for the welding tees, welding tees fabricated to either the 1996 or the 2002 edition of ASME B31.3 can be used. Below is a description of those portions of ASME B31.3, Appendix D, Table D300, that apply to welding tees and the section of the SRD to which they will apply.
- The tailored paragraphs of ASME B31.3 applicable to vacuum box leak testing, in lieu of hydrostatic or pneumatic leak testing, will only be used to leak test full penetration circumferential piping field butt welds inside an inaccessible area (as defined in Appendix H, Section 6.0) out to the first isolation component outside the inaccessible area. Further, if the 100 % volumetric inspection using ultrasonic examination per ASME B31.3 paragraph 344.6, is conducted for welds to be vacuum box tested, then the ultrasonic examination shall be conducted using a method that creates and maintains a reproducible computerized image(s) of the entire weld in the axial and radial direction.
- The tailored paragraphs of ASME B31.3 adopting the provisions of ASME B31.3 (c) - 1998 Addendum paragraph 345.2.3(c) are applicable to all ASME B31.3 piping in all facilities except for closure welds in accessible areas.

Piping providing a confinement function in accordance with SRD 4.4-3 will comply with the following sections of ASME B31.3-1996, *Process Piping*. These sections of ASME B31.3 are applicable for embedded ductwork.

Chapter 3, Materials

Chapter 5, Fabrication

Table 341.3.2, Visual acceptance criteria for Category D fluid service piping

Justification: Due to wall thickness requirements of duct embedded in concrete, piping materials are required. ASME B31.3 will apply to materials, fabrication, and inspection standards as appropriate. Testing requirements for nuclear air treatment systems will be consistent with ASME AG-1.

Piping providing a confinement function in accordance with SRD 5.1-2 will comply with the following sections of ASME B31.3-1996, *Process Piping*. These sections of ASME B31.3 are applicable for embedded ductwork.

Chapter 3, Materials

Chapter 5, Fabrication

Table 341.3.2, Visual acceptance criteria for Category D fluid service piping

Justification: Due to wall thickness requirements of duct embedded in concrete, piping materials are required. ASME B31.3 will apply to materials, fabrication, and inspection standards as appropriate. Testing requirements for nuclear air treatment systems will be consistent with ASME AG-1.

Piping providing a confinement function in accordance with SRD 4.2-2 will comply with ASME B31.3-1996, *Process Piping*, with the following modification:

In Table D300, the description of welding tee per ASME B16.9 shall be revised so it is consistent with that shown in Table D300 of ASME B31.3-2002:

		Stress Intensification Factor [Notes (2), (3)]			
Description	**Flexibility Factor k**	**Out-of-Plane, i_o**	**In-Plane i_i**	**Flexibility Characteristic, h**	**Sketch**
Welded tee per ASME B16.9 [Notes (2), (4), (6), (11), (13)]	1	$\frac{0.9}{h^{2/3}}$	3/4 i_o + 1/4	$3.1\frac{T}{r_2}$	Same as ASME B31.3-1996

This means that for welding tees per ASME B16.9, note 11 in Table D300 is also changed to:

(11) If $r_x \geq 1/8D_o$ and $T_c \geq 1.5\overline{T}$, a flexibility characteristic of $4.4T/r_2$ may be used.

Justification: The use of a lower flexibility characteristic for welding tees per ASME B.16.9 in accordance with ASME B31.3-2002 will increase both the out-of-plane and in-plane stress intensification factors. The increased stress intensification factors will reduce the allowable out-of-plane and in-plane moments that can be applied to the welding tee and keep the calculated stress below the stresses allowable by ASME B31.3-1996.

Important to Safety piping within the scope of SRD 4.2-2 shall comply with ASME B31.3-1996, Chapter V, Paragraph 345, using the following approach for vacuum box leak testing. Vacuum box leak testing, in lieu of hydrostatic or pneumatic leak testing, may be used to leak test full penetration circumferential piping, field butt welds inside an inaccessible area (as defined in Appendix H, Section 6.0) out to the first isolation component outside the inaccessible area, only under the following conditions:

Vacuum Box Leak Test Method - The vacuum box leak test shall be in accordance with a Bubble Test - Vacuum Box Technique method specified in ASME BPV Code, Section V, Article 10, Appendix II, subject to the requirements listed below:

(a) Sensitivity of the test shall be demonstrated to be not less than 1E-3 atm-ml/sec at 15 psig.

(b) The test pressure shall be a partial vacuum of at least 7 psi below atmosphere, applied to the outside of the weld.

(c) The required partial vacuum shall be maintained for at least 20 sec examination time.

In addition, the following limitations and restrictions shall apply to the application of vacuum box leak testing in lieu of a hydrostatic or a pneumatic leak test:

- Vacuum box leak testing will only be used to leak test circumferential piping field welds inside an inaccessible area (as defined in Appendix H, Section 6.0). This includes any welds in extensions of piping systems contained or originating in accessible areas between the inaccessible area boundary and the first isolation valve or device beyond the inaccessible area boundary;
- It shall only be used for piping field welds where required to avoid damage to components, ensure the safety to construction workers, perform leak tests of field welds where physical limitations prevent hydrostatic or pneumatic leak testing as prescribed in ASME B31.3-1996 paragraph 345.4 and paragraph 345.5 respectively;
- Pipe welds that are to be vacuum box leak tested will be assessed for suitability. The number of welds to be vacuum box leak tested shall be limited to a maximum of three welds between termination points (two termination or closure welds and one intermediate weld) on a given pipe system except where physical limitations prevent examination by hydrostatic or pneumatic leak testing. DOE will be informed of such exceptions, and may at its discretion and within 48 hours of being informed, respond to BNI on the suitability of the use of vacuum box leak testing for such instances. Termination points may be tanks, vessels, valves, etc. (Specifically excluded from the definition of termination points are junctions where the piping changes design class). This could be either the last two closure welds in an inaccessible area or the last closure weld in the inaccessible area and the last closure weld outside the

inaccessible area. In addition, vacuum box leak testing would be permitted for the connection welds between construction modules if this is limited to one module-to-module weld per piping run within the cells. This is in addition to termination welds on the piping run. A module is defined as a pre-leak-tested subassembly containing multiple pipe spools;

- Vacuum box leak testing shall be limited to full penetration girth butt welds, on straight pipe or between straight pipe and pipe components of the same nominal pipe size and same wall thickness on both sides of the weld at the weld location. The following configurations are candidates for vacuum box testing:

  (a) Straight pipe to straight pipe connection butt welds

  (b) Straight pipe to 90° elbow connection butt welds

  (c) Straight pipe to 45° elbow connection butt welds

  (d) Straight pipe to concentric reducer connection butt welds

  (e) Straight pipe to eccentric reducer connection butt welds

  (f) Straight pipe to butt welding tee connection butt welds

  (g) Straight pipe to butt welding reduced outlet tee connection butt welds

  (h) Straight pipe to valve nozzle connection butt welds

  (i) Straight pipe to tank or vessel nozzle connection welds

  (j) Straight pipe to safe-end of a weldolet connection butt welds - full penetration butt welded connection only

  (k) Straight pipe to pipe cap connection butt welds

  Prior to the application of vacuum box testing using any of the candidate configurations on piping butt welds at the WTP, the Contractor must successfully demonstrate to the DOE, for the candidate configuration, that (1) all portions of the weld to be inspected are visible and can be inspected in accordance with the ASME Boiler and Pressure and Vessel Code, Section V, Article 10, Appendix II - 1995; (2) the vacuum box can adequately maintain a partial vacuum of 7 psid; and (3) vacuum box leak testing can be accomplished in the time limits and other requirements established by this procedure. The DOE shall be advised at least 7 days in advance of any demonstration to qualify a new weld configuration so that they can witness the demonstration. The Contractor shall document any demonstration relied upon to justify the use of vacuum box leak testing on a new configuration. Further, vacuum box leak testing shall be conducted with a vacuum box that completely encapsulates the weld, at the test location;

- All welds shall be 100 % volumetrically inspected in accordance with ASME B31.3-1996, paragraphs 344.5 or 344.6. If the 100 % volumetric inspection is conducted using ultrasonic examination per ASME B31.3-1996 paragraph 344.6, then the ultrasonic examination shall be conducted using a method that creates and maintains a reproducible computerized image(s) of the entire weld in the axial and radial direction;
- It shall be limited to welds made using the Orbital welding machines. The only exception is that vacuum leak box testing may be used on manual welds if the 100 % volumetric inspection was conducted by radiography per ASME B31.3-1996 paragraph 344.5;
- The piping systems and or components on both sides of the weld to be vacuum box leak tested shall have been subjected to a hydrostatic leak test in accordance with ASME B31.3-1996

paragraph 345.4, a pneumatic test in accordance with ASME B31.3-1996 paragraph 345.5, a combination pneumatic-hydrostatic leak test in accordance with ASME B31.3-1996 paragraph 345.6, or in the case of components, leak tested in accordance with the Code or Standard applicable to the design of the component;

- At a minimum, a flexibility analysis in accordance with ASME B31.3-1996 paragraphs 319.4.2 (a) and (b) shall be required on any piping systems that contain welds that are to be vacuum leak box tested. In addition, a comprehensive flexibility analysis in accordance with ASME B31.3-1996 paragraphs 319.4.2 (c) and (d) shall be performed on any piping systems that contain welds that are to be vacuum box leak tested when the piping systems have a design temperature greater than or equal to 150 °F;
- For manual welds, the requirements of ASME B31.3-1996 paragraph 344.7.1 (a) through (g) shall be invoked on any weld to be vacuum box leak tested with the exception that the requirement of subparagraph 344.7.1 (e) "... aided by liquid penetrant or magnetic particle examination when specified in the engineering design" shall not be required. For welds made using Orbital welding machines, the requirements of ASME B31.3-1996 paragraph 344.7.1 (a), (b), (c), (d), and (g) shall be invoked. The requirements of 344.7.1 (e) and (f) shall not be required. The implementation of these requirements shall be documented in the weld inspection report;
- Pipe welds and the associated line numbers that are to be vacuum leak box tested shall be identified in advance of the testing. This identification shall be documented in the controlled document Weld List, which must include this information prior to the initiation of any vacuum box leak testing associated with those welds and line numbers. It is understood that the controlled document Weld List may need to be revised and updated periodically through the construction phase of the WTP Project; and
- The following special requirements shall be placed on the training programs used to certify the technicians that will be conducting the vacuum box leak tests:
  1. The BNI Construction Manager shall pre-approve the technician qualifying examination(s) for vacuum box leak testing;
  2. The BNI Construction Manager shall pre-approve the qualifications of each Level III technician preparing or giving the examinations for vacuum box leak testing;
  3. DOE ORP at their discretion shall reserve the right to observe any and/or all practical leak test examinations and review of the results of any and/or all written vacuum box leak test examinations;
  4. The minimum topical content of each Level II examination shall be specified by BNI, and approved by DOE;
  5. The 80 % correct criteria for passing the examination shall apply to each part of the three part examinations that are to be given;
  6. BNI shall provide reasonable assurance that they will take adequate measures to assure the integrity of written examination is maintained; and
  7. There shall be several versions of each examination in use to assure Level II knowledge and ability concerning vacuum box leak testing is confirmed.

Justification: The requirement for the vacuum box leak test sensitivity is consistent with the ASME B31.3 requirement for a sensitive leak test as given in ASME B31.3-1996 paragraph 345.8 and for at least 7 psi vacuum and an examination time of at least 20 seconds. The limitations in using vacuum box leak testing better define when this method can be used. DOE ORP may further change the definition and application of these special vacuum box leak testing criteria based on the Contractor's experience with their use, or the Contractor's request for a change.

Piping system closure welds outside of inaccessible areas (as defined in SRD Appendix II, Section 6.0) shall comply with the requirements of ASME B31.3-1998, subparagraph 345.2.3(c). When ASME B31.3-1998, subparagraph 345.2.3(c) is invoked the following restrictions shall apply:

- It shall not be invoked on any closure welds on piping systems in inaccessible areas as defined in Section 6.0 of Appendix II of the SRD. This includes any welds in extensions of piping systems contained or originating in inaccessible areas, between the inaccessible area boundary and the first isolation valve, or device beyond the inaccessible area boundary;
- It shall only be invoked on full penetration butt welds in straight pipe, full penetration butt welds at the safe-end of an equipment nozzle, or full penetration butt welds at the safe-end of branch connections. [The safe-end is defined as the piping to equipment nozzle connecting weld or the branch connection to branch piping connecting welds.];
- The requirements of ASME B31.3(c) - 1998, subparagraph 345.2.3 (c) shall be met;
- The piping systems and or components on both sides of the closure weld shall have been subjected to a hydrostatic leak test in accordance with ASME B31.3-1996 paragraph 345.4, a pneumatic leak test in accordance with ASME B31.3-1996 paragraph 345.5, a combination pneumatic-hydrostatic leak test in accordance with ASME B31.3-1996 paragraph 345.6, or in the case of components leak tested in accordance with the Code or Standard applicable to the design of the component;
- For manual welds, the requirements of ASME B31.3-1996 paragraph 344.7.1 (a) through (g) shall be invoked with the exception that the requirement of subparagraph 344.7.1 (e) "...aided by liquid penetrant or magnetic particle examination when specified in the engineering design" shall not be required. For welds made using the Orbital welding machines, the requirements of ASME B31.3 -1996 paragraph 344.7.1 (a), (b), (c), (d), and (g) shall be invoked. The implementation of these requirements shall be documented in the weld inspection report;
- Piping welds and the associated line numbers for which the closure weld classification is invoked shall be documented in a controlled document Weld List;
- Piping components may include mechanical elements other than piping; and
- In addition, BNI shall incorporate these requirements into the appropriate specification. DOE-ORP may further change the definition and application on the use of closure welds based on the Contractor's experience with their use or the Contractor's request for a change.

Justification: This change does not change the safety function of any pressure boundary components. The requirement to leak test pressure boundary field welds is primarily to ensure the reliability of the welds in addition to the reliability provided by the other required examinations. The exception allowed by ASME B31.3-1998, paragraph 345.2.3 that the final weld connecting piping systems or components which have been successfully tested in accordance with

paragraph 345 need not be leak tested provided the weld is examined in-process in accordance with paragraph 344.7 (a), (b), (c), (d), and (g) and passes with 100 % radiographic examination in accordance with paragraph 344.5 or 100 % ultrasonic examination in accordance with paragraph 344.6 provides adequate assurance that the weld is reliable and leak tight. The change continues to provide adequate safety since it requires that all piping closure welds that are not leak tested are in-process examined and 100 % volumetrically examined which exceeds the requirements of ASME B31.3-1996 for closure welds that are leak tested. The inability to hydrostatically or pneumatically leak test these closure welds does not affect the soundness of the welds.

Appendix F

WTP Specific Tailoring of AISC (ASD)

Appendix F

WTP Specific Tailoring of AISC (ASD)

9.0 AISC M016, Manual of Steel Construction, Allowable Stress Design (ASD)

Revision: 9th Edition
Sponsoring Organization: American Institute of Steel Construction

WTP Specific Tailoring

The following tailoring of M016 is required for use by the WTP contractor as an implementing standard for design of structural steel for Seismic Category III SSCs.

No specific section

Load combinations for design of structural steel members utilize those identified in UBC 97, section 1612.3.

Justification: These load combinations represent the commercial requirements for allowable stress design of structural steel. Use of these load combinations will ensure compliance with the commercial design in accordance with the UBC.

No specific section

Seismic detailing requirements shall be in accordance with UBC 97, Chapter 22, Division V, section 2214, for moderate seismic risk structures.

Justification: The requirements contained in this section obtain accepted industry practice for design of important commercial steel structures. Use of this section will ensure compliance with the commercial design in accordance with the UBC.

Appendix G
WTP Specific Tailoring of ASME NQA-1-1989

Appendix G
WTP Specific Tailoring of ASME NQA-1-1989

C.37 ASME NQA-1-1989, Quality Assurance Program Requirements for Nuclear Facilities

Revision: 1989

Sponsoring Organization: The American Society of Mechanical Engineers

WTP Specific Tailoring

The following tailoring of ASME NQA-1-1989 is required for use by the WTP project as an implementing standard to perform Commercial Grade Dedication activities using ASME NQA-1-2004.

NQA-1-1989, Supplement S-1 **Terms and Definitions**

Replace the Commercial Grade Item definition with definition from NQA-1-2004, Part I, Section 400:

Commercial Grade Item: a safety class/safety significant structure, system, or component (SSC), or part thereof, that affects its safety function, that was not designed and manufactured in accordance with the requirements of this Standard.

Justification: By tailoring NQA-1-1989 to incorporate elements of NQA-1-2004, the Commercial Grade Item definition is broadened to reflect current industry practices related to Commercial Grade Dedication. Currently there are gaps among NQA-1 qualified suppliers and utilization of NQA-1-2004 will enable WTP to employ technically acceptable suppliers not available under the provision of NQA-1-1989. The NQA-1-1989 standard was established primarily to provide for the purchase of replacement parts for nuclear-related facilities and is not sufficient to support the purchase of commodities and equipment needed for a new facility.

Commercial Grade Items may be either off the shelf/catalog items or "engineered items", i.e., items for which some custom design effort is required by the supplier to meet purchaser requirements. If the critical characteristics of an "engineered item" cannot be verified solely based on material or performance attributes, verification of critical design characteristics should be based on NQA-1-2004, Section 704 (e.g., by design verification methods) or by application of alternate standards for qualification of suppliers of Safety Class/Safety Significant items.

NQA-1-1989, Supplement S-1 **Terms and Definitions**

Add to the reference section ASME NQA-1-1989, Supplement S-1, the following definitions from NQA-1-2004, Part I, Section 400:

Commercial Grade Service: a service that was not provided in accordance with the requirements of this standard.

Critical Characteristics: important design, material, and performance characteristics of a commercial grade item or service that, once verified, will provide reasonable assurance that the item or service will perform its intended safety function.

Dedication: an acceptance process performed in accordance with this Standard to provide reasonable assurance that a commercial grade item or service will successfully perform its intended safety function and, in this respect, is deemed equivalent to an item or services provided under the requirements of this Standard.

Dedicating Entity: the organization that performs the dedication process.

Justification: The tailoring of the NQA-1-1989, by adding definitions of Commercial Grade Service, Critical Characteristic, Dedication, Dedicating Entity, and Safety Function to NQA-1-2004, allows for the use of the Commercial Grade Dedication process to procure equipment requiring design services by the supplier. This incorporates definitions consistent with NQA-1-2004 text.

NQA-1-1989, Supplement 7S-1 Supplementary Requirements for Control of Purchased Items and Services

Replace NQA-1-1989 supplement 7S-1 Section 10, Titled Commercial Grade Items in its entirety with NQA-1-2004, Requirement 7, Section 700.

Justification: NQA-1-2004 provides greater flexibility for implementing the Commercial Grade Dedication process while assuring that equipment acquired under these processes will support their safety functions.

Modify new Section 701 General as follows:

701 General

When Commercial Grade Items or Services are utilized, the dedicating entity can utilize the requirements of this section for procurement and acceptance of items or services as an acceptable alternative to Sections 2 through 9 of this Supplement, except that Supplier evaluation and selection, where determined necessary by the Purchaser, shall be in accordance with Section 3.1 of this Supplement. The applicable requirements of this Standard shall apply to dedication activities for acceptance.

When a Commercial Grade Item has been delivered or installed, prior to the decision to dedicate, the dedicating entity can utilize the requirements of this section for acceptance of the item when the critical characteristics can be verified solely by inspections, tests, or analyses.

Justification: Corrects the section numbers to correspond to the appropriate section of NQA-1-1989 and provides for use of Commercial Grade Dedication for delivered and/or installed SSCs whose safety classification is subsequently upgraded.

Modify (referenced section number only) new Section 704.2 Source Verification as follows:

704.2 Source Verification

Source verification is only applicable to the actual item(s) or service(s) that are verified at the Supplier's facility or other applicable location. Source verification shall be performed in accordance with Section 8.2.2 of this Supplement, including a checklist or plan with the documented evidence of the source verification furnished to the dedicating entity and shall include or address the following:

(a) identification of the item(s) or service(s) included within the scope of the source verification

(b) identification of the critical characteristics, including acceptance criteria, to be controlled by the Supplier

(c) verification of the Supplier's processes and controls are effectively implemented for the identified critical characteristics

(d) identification of the activities witnessed during the source verification and the results obtained

(e) documentation of the adequacy of the Supplier's processes and controls.

Justification: Corrects the paragraph number to correspond to the appropriate section of NQA-1-1989.

Appendix H

WTP Specific Tailoring of IEEE Std. 384

Appendix H
WTP Specific Tailoring of IEEE Std. 384

19.0 IEEE-384, IEEE Standard Criteria for Independence of Class 1E Equipment and Circuits

Revision: 1992

Sponsoring Organization: The Institute of Electrical and Electronics Engineers, Inc.

RPP-WTP Specific Tailoring

The following tailoring of IEEE-384 is required for use by the RPP-WTP project as an implementing standard for SDC, SC, SDS, or SS electrical equipment and circuit design.

All Sections Clarification of Nuclear Power Generating Station Terminology

The term "Standby Generator" in the Standard is synonymous with "Emergency Generator" in the RPP-WTP.

Justification: As determined by the ISM review process, the Standby Generators on the RPP-WTP are not classified as SDC or SC while the Emergency Generators are classified as SDC or SC.

Section 2.0, Purpose

Replace with the following:

This standard establishes the criteria for implementation of the independence requirements of IEEE 603-1998 (as tailored in C.33) and IEEE 308-1991 (as tailored in C.18).

Justification: This section was revised to clarify that SRD implementing standards IEEE 603-1998 and IEEE 308-1991 are tailored in Appendix C.

Section 3.0, References

The following reference standards, do not apply for the RPP-WTP.

- [1] ANSI/ANS-58.2-1988, Design Basis for Protection of Light Water Nuclear Power Plants Against the Effects of Postulated Pipe Rupture.

Justification: This document is applicable to the high pressure steam lines found in nuclear power generating stations and doesn't apply for the RPP-WTP.

- [4] ANSI/NFPA 803-1988, Fire Protection for Light Water Nuclear Power Plants.

Justification: This document specifically addresses nuclear power generating stations. Per section 4.5 of volume II of the SRD, the RPP-WTP will use NFPA 801-2003 as an implementing standard for fire protection.

- [11] IEEE Std 494-1974 (reaff 1990), IEEE Standard Method for Identification of Documents Related to Class 1E Equipment and Systems for Nuclear Power Generating Stations.

Justification: This standard has been withdrawn by the IEEE standards committee and no replacement standard has been recommended. This standard is not called out as an implementing standard in the SRD. Procedures for

identification of documents related to SDC, SC, SDS, or SS equipment will be developed internally for the RPP-WTP project.

Replace the 1991 version of IEEE 603 with the following version.

IEEE Std 603-1998, *IEEE Standard Criteria for Safety Systems for Nuclear Power Generating Stations.*

Justification: SRD Safety Criterion 4.4-4 lists the 1998 version of IEEE 603 as an implementing standard for SDC and SC electrical power systems. The 1998 revision of IEEE 603 shall be used in place of the 1991 revision called out as a reference in the body of IEEE 384-1992 for SDC and SC electrical power systems only.

The following reference Standards shall be included:

- [16] DOE/RL-96-0006, Revision 1, *Top-level Radiological, Nuclear, and Process Safety Standards and Principles for TWRS Privatization Contractors.*

Justification: Called out as a regulatory basis in the SRD.

- [17] ANSI/ISA-S84.01-1996, *Application of Safety Instrumented Systems for the Process Industries.*

Justification: Replaces IEEE-603 for Control and Instrumentation Systems at the WTP, per 24590-WTP-ABCN-ESH-01-027.

- [18] NFPA 801-2003, *Standard for Fire Protection for Facilities Handling Radioactive Materials.*

Justification: Called out as an implementing standard under safety criteria 4.5-1 through 4.5-4.

Section 4.0, Definitions

- The definition of **design basis events** shall be replaced with the following:

"Postulated events providing bounding conditions for establishing the performance requirements of structures, systems, and components that are necessary to: 1) ensure the integrity of the safety boundaries protecting the worker; 2) place and maintain the facility in a safe state indefinitely; or 3) prevent or mitigate the event consequences so that the radiological exposures to the general public or the workers would not exceed appropriate limits. The Design-Basis Events also establish the performance requirements of the structures, systems and components whose failure under Design-Basis Event conditions could adversely affect any of the above functions."

Justification: This definition is from DOE/RL-96-0006.

Section 5.3, Equipment and Circuits Requiring Independence

Replace with the following sentence:

Equipment and circuits requiring independence shall be determined during the ISM review cycle and shall be identified on documents and drawings in a distinctive manner.

Justification: The reference to IEEE-494 is not applicable since this standard has been withdrawn by the IEEE standards committee and no replacement standard has been recommended. This standard is not called out as an

---

implementing standard in the SRD. The ISM process will provide reliability requirements for each control strategy. These reliability requirements determine when control strategies require independence, redundancy, and seismic qualifications.

Section 6.1.3.2, Area Boundaries

Replace the reference to NFPA 803-1988[4] with NFPA 801-2003 [18].

Justification: Standard NFPA 803-1998 is not applicable for the RPP-WTP. Per section 4.5 of the SRD, NFPA 801-2003 shall be used for the RPP-WTP.

Section 6.5, Containment Electrical Penetrations

Not applicable for the RPP-WTP.

Justification: Containment electrical penetration assemblies are unique to the containment structure of Nuclear Power Generating Stations and have no equivalent in the RPP-WTP project.

Appendix I

WTP Specific Tailoring of IEEE Std. 323

Appendix I
WTP Specific Tailoring of IEEE Std. 323

23.0 IEEE-323, Qualifying Class 1E Equipment for Nuclear Power Generating Stations

Revision: 1983

Sponsoring Organization: The Institute of Electrical and Electronics Engineers, Inc.

RPP-WTP Specific Tailoring

The following tailoring of IEEE-323 is required for use by the RPP-WTP project as an implementing standard for ITS electrical and instrument system design.

Section 1.1, Scope

- This Standard applies to SSCs designated as SDC, SC, SDS, or SS (where the SS SSCs is required to perform a credited safety function in a harsh environment).

Justification: SS SSCs, which are required to perform a safety function in a harsh environment, have been included within the scope of this standard.

Section 2, References

The following reference Standard shall be included:

- [9] DOE/RL-96-0006, Revision 3, Top-level Radiological, Nuclear, and Process Safety Standards and Principles for the RPP Waste Treatment Plant Contractor.

Justification: The added references are applicable for the RPP-WTP project.

Section 3, Definitions

- Modify the definition of **harsh environment** to be: An environment expected as the result of the postulated service condition appropriate for the design basis event of the RPP-WTP. It is an environment that exceeds the conditions of a mild environment. Equipment that do not experience an environment beyond a mild environment during a design basis event can be considered to be in a mild environment.

Justification: A **harsh environment**, as defined by this standard, applies to a Nuclear Power Generating Station and are the result of a loss of cooling accident (LOCA)/high energy line brake (HELB) inside the containment and post-LOCA or HELB outside containment. The modified definition applies to RPP-WTP.

This modified definition is further supported by 10 CFR 50.49, Environmental qualification of electric equipment important to safety for nuclear power plants, which states, in section C: " Requirements for (1) dynamic and seismic qualification of electric equipment important to safety, (2) protection of electric equipment important to safety against other natural phenomena and external events, and (3) environmental qualification of electric equipment important to safety located in a mild environment are not included within the scope of this section. A mild environment is an environment that would at no time be significantly more severe than the environment that would occur during normal plant operation, including anticipated operational occurrences."

The definition of **mild environment** within the standard states:

"An environment expected as a result of normal service conditions and extremes (abnormal) in service conditions where seismic is the only design basis event (DBE) of consequences."

Therefore the normal operating environment for a SSC is considered a "mild environment" by this definition.

The following definition is applicable for the RPP-WTP:

- The definition of **design basis events** shall be added with the definition from DOE/RL-96-0006, which states:

  "Postulated events providing bounding conditions for establishing the performance requirements of structures, systems, and components that are necessary to: 1) ensure the integrity of the safety boundaries protecting the worker; 2) place and maintain the facility in a safe state indefinitely; or 3) prevent or mitigate the event consequences so that the radiological exposures to the general public or the workers would not exceed appropriate limits. The Design-Basis Events also establish the performance requirements of the structures, systems and components whose failure under Design-Basis Event conditions could adversely affect any of the above functions."

Justification: The above listed definition was added to be applicable to the RPP-WTP project.

Section 7, Simulated Test Profiles

Delete this section.

Justification: This section is specific to Nuclear Power Generating Stations and describes profiles and margin for LOCA/HELB harsh environments.

Appendix J

WTP Specific Tailoring of IEEE Std. 344

Appendix J

WTP Specific Tailoring of IEEE Std. 344

22.0 IEEE-344, IEEE Recommended Practice for Seismic Qualification of Class 1E Equipment for Nuclear Power Generating Stations

Revision: 1987(R1993)

Sponsoring Organization: The Institute of Electrical and Electronics Engineers, Inc.

RPP-WTP Specific Tailoring

The following tailoring of IEEE-344 is required for use by the RPP-WTP project as an implementing standard for SDC/SDS or SC/SS Seismic Class 1 electrical and instrument system design.

Pages 1-43, All Sections **Clarification of Nuclear Power Generating Station Terminology**

The term "Class 1E" in the Standard applies to "SC-1" in the RPP-WTP.

Justification: The Scope, section 1.0, of IEEE-344 applies to equipment that needs to function during and after an SSE for a Nuclear Power Generating Station. For RPP-WTP the equipment that needs to function during and after a design basis earthquake is SDC/SDS/SC/SS equipment which must be qualified to SC-1.

Page 1, Section 1.2 **References**

Delete reference [5] CFR (Code of Federal Regulations), Title 10: Energy, Part 100, Reactor Site Criteria, published by office of the Federal Register, 1992.

Justification: Reference [5] contains radiation dose criteria and seismic criteria for Nuclear Power Generating Stations and is not applicable to the RPP-WTP project. The applicable criteria for RPP-WTP is found in 24590-WTP-SRD-ESH-01-001-02, Safety Requirements Document (SRD) Volume II, Safety Criteria 2.0-1 for radiological dose and 2.0-2 for chemical hazards. The applicable seismic criteria is contained in 24590-WTP-SRD-ESH-01-001-02, Safety Requirements Document (SRD) Volume II, in section 4.1 General Design, Safety Criterion 4.1-3. This Safety Criterion defines Seismic Category (SC) I, II and III and provides seismic loads and source documents.

Delete reference [3] ANSI/IEEE Std 382-1985, *IEEE Standard for Qualification of Actuators for Power Operated Valve Assemblies with Safety-Related Functions for Nuclear Power Plants*.

Justification: This standard will be replaced with IEEE Std 382-1996. The IEEE Std 382-1996 includes a Required Input Motion (RIM) curve.

Pages 1-2, Section 2. **Definitions**

Delete the definitions for **Operating basis earthquake (OBE)** and **safe shutdown earthquake (SSE)**.

Add a definition for **design basis earthquake** as: Earthquakes for RPP-WTP and the applicability to systems, structures and components (SSCs) is contained in 24590-WTP-SRD-ESH-01-001-02, Safety Requirements Document (SRD) Volume II, in section 4.1 General Design, Safety Criterion 4.1-3. This Safety Criterion defines Seismic Classes (SC) I, II and III and provide seismic loads and source documents.

Justification: The definition of OBE and SSE are applicable to Nuclear Power Generating Stations and the new definitions is applicable to the RPP-WTP project as defined in the SRD. This is consistent with the tailoring of AISC N690 as documented in ABCN-013.

Pages 1-43, All Sections Clarification of OBE and SSE

The term SSE in the standard is treated as a design basis earthquake. The requirement to apply and document the loads of a number of OBEs before an SSE is deleted from the standard.

Justification: The earthquake applicable to RPP-WTP is the design basis earthquake. The requirement to subject equipment to several OBEs prior to an SSE is not included in the requirements of the SRD for the RPP-WTP project. This is consistent with the tailoring of AISC N690 as documented in ABCN-013.

Page 13, Section 7.1.3.2, Repairs

In the fifth line delete the words, ", such as LOCA,".

Justification: LOCA is a term specific to Nuclear Power Generating Stations and not to the RPP-WTP project.

Page 15, Section 7.1.5, Vibrational Aging

In the last paragraph change the first sentence to read, "The purpose of the vibrational aging is to show that the lower levels of normal and transient vibration associated with plant operation will not adversely affect an equipment's performance of its safety function nor cause any condition to exist that, if undetected, would cause failure of such performance during a subsequent design basis earthquake.

Justification: This sentence within the standard included additional vibration aging of an OBE, but used the terms "lower intensity earthquake" rather than OBE. The rewording is needed to clarify the meaning of the sentence. The requirement to subject equipment to several OBEs prior to an SSE is not included in the requirements of the SRD for the RPP-WTP project. The earthquake applicable to RPP-WTP is the design basis earthquake. This is consistent with the tailoring of AISC N690 as documented in ABCN-013.

Page 16, Section 7.1.6.1, Hydrodynamic Loads

Delete the words, "and the loss-of-coolant accident (LOCA)

Justification: LOCA is a term specific to Nuclear Power Generating Stations and not to the RPP-WTP project.

R10768152

ISSUED BY
RPP-WTP PDC

RIVER PROTECTION PROJECT – WASTE TREATMENT PLANT

ENGINEERING SPECIFICATION

FOR

PROCESS BULGE DESIGN AND FABRICATION

Content applicable to ALARA? ☒ Yes ☐ No

ADR No.
24590-WTP-ADR-M-03-016

Rev
1

Quality Level
Q
DOE Contract No. DE-AC27-01RV14136

NOTE: Contents of this document are Dangerous Waste Permit affecting.

REV	DATE	BY	CHECK	REVIEW	E&NS	QA	DPEM
6	3/26/07	D. Harris	L. Donovan	G. Goolsby	K. Gibson	M. Ehlinger	R. Voke
5	1/31/06	W. Donigan	P. Pinto	C. Morley	J. Hinckley	S. Akerman	R. Voke
4	9/4/04	Sentanu	C. Dunstan	C. Morley	N/A	G. Warner	M. Hoffmann
3	7/22/04	Sentanu	C. Dunstan	C. Morley	N/A	G. Warner	G. Duncan
2	9/23/03	C. Dunstan	Sentanu	C. Morley	N/A	G. Warner	G. Duncan
1	7/11/02	C. Dunstan	C. Morley	B. Rao	N/A	G. Warner	G. Duncan
0	5/23/02	C. Dunstan	C. Morley	B. Posta	N/A	G. Warner	G. Duncan
A							

SPECIFICATION No.
24590-WTP-3PS-MX00-T0001

Rev
6

Revision History

Revision	Reason for Revision
A	
0	Issued for Use
1	Document Revision
2	General Revision; Incorporated SDDR 24590-WTP-SDDR-PROC-03-0106 and SCNs 24590-WTP-3PN-MX00-00003 & 24590-WTP-3PN-MX00-00004
3	**Issued for use only for LAW bulges, not PTF bulges.** Incorporated SCN 24590-WTP-3PN-MX00-00006, add 24590-WTP-3PS-JQ06-T0003, 24590-WTP-3PS-JQ06-T0005, 24590-WTP-3PS-JR00-T0010, Implementing Standards for ANSI/AISC N690 in Appendix A, Implementing Standards for AISC M016 in Appendix B, Lifting Equipment Requirements and Nozzle Load Requirements.
4	Issued for Purchase, add column davit requirements
5	Issued for Purchase; incorporated SCNs 24590-WTP-3PN-MX00-00014, -00018, -00020, -00022, and -00023; Clarified Support for Actuator Assemblies; Clarified NDE Personnel Qualification Requirements; Included WTP Specific Tailoring of ASME B31.3-1996.
6	Issued for Purchase; Incorporated by Reference SDDR's 24590-WTP-M-06-00074 and 24590-WTP-M-06-00282, Incorporated changes resulting from CRPT-06-219 (formally CAR-06-250), removed nozzle load tables and place them on the appropriate Process Bulge Data Sheet, included Appendix D for load combinations to be used in analysis.

Contents

1 Scope 1
1.1 Project Description and Location 1
1.2 Equipment, Material, and Services Required 1
1.3 Work by Others 2
1.4 Acronyms 2
1.5 Definitions 3
1.6 Safety/Quality Classifications 5
2 Applicable Documents 5
2.1 General 5
2.2 Codes and Standards 5
2.3 Engineering Standards 6
2.4 Reference Documents/Drawings 6
3 Design Requirements 7
3.1 Basic Function 7
3.1.1 Process Pumps 7
3.1.2 Process Valve Assemblies 8
3.1.3 Instrumentation 9
3.1.4 Electrical Equipment 11
3.1.5 Bulge Construction 11
3.2 Performance 12
3.3 Design Conditions 12
3.4 Environmental Conditions 12
3.5 Mechanical Requirements 13
3.5.1 Process Bulge Confinement – General Requirements 13
3.5.2 Process Bulge Support Frame 14
3.5.3 Process Bulge Shielding 15
3.5.4 Maintenance Platforms 17
3.5.5 Lifting Points 17
3.5.6 Fasteners 18
3.5.7 Pipework 19
3.5.8 Wall Penetrations 19
3.5.9 Floor Penetrations 20
3.5.10 Column Davits 20
3.6 Loadings 21
3.6.1 Seismic 21
3.6.2 Operation 21
3.6.3 Maintenance 22
3.6.4 Nozzle Load 22
3.7 Accessibility and Maintenance 23
4 Materials 23
4.1 Positive Material Identification 23

4.2 Construction 24
4.3 Prohibited Materials 24
4.4 Special Requirements 25
4.5 Storage of Special Materials (e.g., stainless steel) prior to work 25
5 Fabrication 25
5.1 General Requirements 25
5.2 Assembly 25
5.3 Tolerances 26
5.3.1 Machined Components: 26
5.3.2 Fabricated Components: 26
6 Tests and Inspections 27
6.1 Non-Destructive Examinations 27
6.2 Personnel Qualifications 27
6.3 Shop Tests 27
6.3.1 General Requirements 27
6.3.2 Surface Finish Inspection 28
6.3.3 Visual Weld Inspection 28
6.3.4 Liquid Penetrant Test 29
6.3.5 Radiography 29
6.3.6 Final Inspection 30
6.3.7 Environmental Qualification 30
6.4 Control of Measurement and Test Equipment 30
6.5 Inspection and Test Status 31
6.6 Control of Nonconforming Items 31
7 Preparation for Shipment 31
7.1 General Requirements 31
7.2 Cleanliness 31
7.3 Painting 31
7.4 Tagging 31
7.5 Packaging 32
7.6 Documentation 32
7.7 Shipping Instructions 32
8 Quality Assurance 33
8.1 General Requirements 33
8.2 Quality (Q) Related Components 33
9 Configuration Management 33
10 Documentation and Submittals 33
10.1 General Requirements 33
10.2 30% Design Review 35

10.3 60% Design Review 35
10.4 90% Design Review 36
10.5 Final Design Review 36
10.6 Drawings 36
10.7 Calculations 36
10.8 Schedules 38
11 References 38
11.1 Incorporated Design Changes 38
11.2 Design Changes Incorporated by Reference 39

Appendices

Appendix A - ANSI /AISC N690 Tailoring A-1
Appendix B - AISC M016 Tailoring B-1
Appendix C - ASME B31.3 Tailoring C-1
Appendix D - Combined Loadings D-1

Tables

Table 1 Process Pipe and Sleeve Pipe Sizes 44
Table 2 Minimum Design Loads for PTF Bulges 45
Table 3 Minimum Design Loads for LAW Bulges 46

Figures

Figure 1 Typical Representation of Process Pipework and Sleeve Pipes Penetrating the Cell Wall 40
Figure 2 Typical Representations of Process Pipework and Floor Penetrations 41
Figure 3 Conceptual Weir Design as a Primary and Secondary Strainer 42
Figure 4 Conceptual Anchor Washers that Allow Drainage to Pass Through 43

1 Scope

1.1 Project Description and Location

1.1.1 The River Protection Project-Waste Treatment and Immobilization Plant (RPP-WTP) is a complex of waste treatment facilities where the U.S. Department of Energy Hanford Site tank waste will be put into stable glass form. The Waste Treatment and Immobilization Plant Contractor will design, build and start-up the RPP-WTP pretreatment and vitrification facilities for the DOE Office of River Protection. The waste treatment facilities will pretreat and immobilize the low-activity waste and high-level waste currently stored in underground storage tanks at the Hanford Site.

The Hanford Site occupies an area of about 560 square miles and is located along the Columbia River, north of the city of Richland, Washington. The RPP-WTP Facility will be constructed at the east end of the 200 East Area of the Hanford Site. The Counties of Benton, Franklin, and Grant surround the Hanford Site.

1.2 Equipment, Material, and Services Required

1.2.1 This specification establishes the requirements for the design, fabrication, project management, quality assurance, inspection, and testing of Process Bulges for use in the RPP-WTP Facilities.

1.2.2 The Seller shall provide fully detailed designs and all labor, materials, equipment, and services necessary to manufacture the Process Bulges in accordance with this specification, Piping and Instrumentation Diagrams (P&IDs), and Process Bulge Data Sheet. Any discrepancies between this specification, referenced specifications, P&IDs, and the Process Bulge Data Sheet shall be brought to the attention of the Buyer for resolution.

1.2.3 The scope of work includes, but is not limited to:

- Detail design of all pipework, confinement, support, maintenance platforms, column davits, and shielding systems as required.
- Fabrication and/or assembly of all items and components.
- Performance testing of equipment to verify and demonstrate functionality and conformance to the design and technical requirements described in this **specification.**
- Leak/pressure testing of all process systems to demonstrate primary and secondary confinement.
- Documentation of testing procedures, testing results, operation and maintenance procedures, and quality assurance procedures.

- Design document review in progressively complete package form. Delivery shall include 30%, 60%, 90%, and final design reviews.
- Preparation for shipping and packaging of all equipment.
- Environmental Qualification of equipment and/or components (as required) and determination of "Qualified Life".

1.2.4 The Seller shall also provide all special tools and/or equipment necessary for operation and maintenance of the Process Bulges and their components. The Seller shall prepare drawings of special tools and/or equipment and submit them to the Buyer for review. Special tools shall not include small hand tools available in the commercial market.

1.2.5 Specific activities excluded from the scope of this specification include:

- On site unloading
- Installation
- Commissioning

1.2.6 The Seller shall not be responsible for the supply of process pumps; the Buyer shall issue this equipment to the Seller as contractor furnished equipment for incorporation into the fabrication. Refer to the MR for the scope of procurement responsibilities for valves, actuators, and instrumentation.

1.3 Work by Others

1.3.1 The Seller may subcontract any portion of the work, provided the quality assurance requirements of this specification are maintained, and provided the Buyer approves the subcontractor and the scope of work.

1.3.2 The Seller will be ultimately responsible for the completeness and quality of all work covered in this specification.

1.4 Acronyms

AISC	American Institute of Steel Construction
ANSI	American National Standards Institute
AP	Air Permit
APC	Additional Protection Class
ASME	American Society of Mechanical Engineers
ASTM	American Society for Testing and Materials
CM	Commercial Material
DBE	Design Basis Earthquake
DOE	U.S. Department of Energy
EQDS	Environmental Qualification Data Sheet
ECDS	**Equipment Cyclic Data Sheets**
ITS	Important to Safety
M&TE	Measurement and Test Equipment
MR	Material Requisition
MDS	**Mechanical Data Sheet**

MSDS	Material Safety Data Sheet
NRTL	Nationally Recognized Testing Laboratory
NQA	National Quality Assurance
OSHA	Occupational Safety & Health Administration
P&ID	Piping and Instrumentation Diagram
PCB	Polychlorinated Biphenyl
PMI	Positive Material identification
PO	Purchase Order
PT	Liquid Penetrant Test
QA	Quality Assurance
QAM	Quality Assurance Manual
QARD	Quality Assurance Requirements and Description
QL	Quality Level
RFQ	Request for Quote
RPP-WTP	River Protection Project-Waste Treatment Plant
RRC	Risk Reduction Class
SC	Safety Class
SC	Seismic Category
SDC	Safety Design Class
SDS	Safety Design Significant
SRD	Safety Requirements Document
SS	Safety Significant
SWL	Safe Working Load
UBC	Uniform Building Code
UL	Underwriters Laboratories, Inc.
UNC	Unified National Coarse
VT	Visual Test
WAC	Washington Administrative Code

1.5 Definitions

Buyer: Bechtel National Inc. for the RPP-WTP.

Seller: Manufacturer, assembler, fabricator, vendor, supplier, or equal who provides equipment, systems, components, services, or other products for delivery or direct benefit to the Buyer.

Buyer's Representative(s): The Buyer's designee(s), who shall witness onsite operations at the seller and sub-seller sites and perform onsite inspections and surveillance.

HEPA Filter: A high efficiency particulate air filter having a fibrous medium with a particle removal efficiency of 99.97% when tested with essentially mono-dispersed 0.3 μm test aerosol particles.

Important to Safety (ITS): Systems, structures, and components (SSCs) that serve to provide reasonable assurance that the facility can be operated without undue risk to the health and safety of the workers and the public. ITS encompasses the broad class of facility features addressed (not necessarily explicitly) in the top-level radiological, nuclear, and process safety standards and principles that contribute to the safe operation and protection of workers and the public during all phases and aspects of facility operations (e.g., normal operation as well as accident mitigation). ITS includes SSCs designed as Safety Design

Class (SDC)/ *Safety Class (SC)*, Safety Design Significant (SDS)/ *Safety Significant (SS)*, and Risk Reduction Class (RRC)/*Additional Protection Class (APC)*.

Paragraph: When a paragraph of this specification, referenced document, referenced codes, or referenced standards is referenced in this specification, the paragraph referenced and all subparagraphs and sub-subparagraphs of the paragraph shall be considered inclusive.

Quality Level (QL): The quality level identifies the quality requirements to be applied to items and activities. The identified quality levels are Q, and CM.

Quality (Q): Q items and activities shall meet the applicable requirements of NQA-1 (1989).

Commercial Material (CM): Those permanent plant SSCs not identified as Q, are CM (which includes both RRC/APC and Non-ITS).

Risk Reduction Class (RRC) - Initial Safety Classification: RRC Systems, Structures, and Components are Important to Safety Systems, Structures, and Components that are neither Safety Design Class nor Safety Design Significant.

Additional Protection Class (APC) - Replacement Safety Classification: Systems, Structures, and Components are Important to Safety Systems, Structures, and Components that are neither Safety Class (SC) nor Safety Significant (SS).

Safety Design Class (SDC) - Initial Safety Classification: an SSC whose safety function is to prevent a worker or maximally exposed member of the public from receiving a radiological or chemical exposure that exceeds the exposure standards defined in the Safety Requirements Document (SRD) , or that is credited for the prevention of a critically event.

Safety Class (SC) - Replacement Safety classification: an SSC, including portions of process systems whose preventive or mitigative function is necessary to limit radioactive material exposure to the public, as determined from safety analyses.

Safety Design Significant (SDS) - Initial Safety Classification: an SSC that is required to ensure that exposure standards for normal operation are not exceeded; whose failure would directly prevent a SDC SSC from performing its safety function; or that implements the defense-in-depth requirements of the SRD Appendix B, section 3.0, Table 1.

Safety Significant (SS) - Replacement Safety Classification: an SSC that is not designated as SC, but whose preventive or mitigate function is a major contributor to defense-in-depth and/or worker safety as determined by safety analyses.

Seismic Category (SC): RPP-WTP seismic classifications for SSCs based on their safety function. Seismic Categories are I (SC-I), II (SC-II), III (SC-III), IV (SC-IV), and V (SC-V).

Seismic Category I (SC-I): ITS equipment/tanks that have a safety function. For the design of SC-I components, no credit for inelastic energy absorption is allowed. SC-I equipment/tanks shall be functional during and after a DBE.

Seismic Category II (SC-II): ITS equipment/tanks whose failure during a seismic event could prevent a SC-I SSC from performing its seismic safety function. For the design of

SC-II equipment/tanks, credit for inelastic energy absorption is allowed. SC-II components shall maintain control and confinement of hazardous materials during and after a DBE, but do not need to be functional.

Seismic Category III (SC-III): (a) ITS SSC, but without SC-I or SC-II safety function, but with a chemical hazard. (b) Non-ITS SSC which has an inventory of radioactive or hazardous material in an amount less than ITS significant quantity.

Seismic Category IV (SC-IV): Non-ITS SSC without an inventory of radioactive or hazardous material, but must meet UBC 1997 loadings.

Seismic Category V (SC-V): Non-ITS SSC not requiring seismic design.

Risk: the product of probability and consequences of any event considered. These factors are, to the extent possible, assigned numeric values so that results of risk evaluations can be ordered using appropriate descriptions.

Safety Classification: categorized as SDC/SC, SDS/SS, or RRC/APC.

1.6 Safety/Quality Classifications

The Quality Level (QL) and Seismic Category (SC) of the Process Bulges are specified on the data sheets in section 2 of the MR.

2 Applicable Documents

2.1 General

2.1.1 Work shall be done in accordance with the referenced codes, standards and documents listed below, which are an integral part of this specification.

2.1.2 For the codes and standards listed below, the specific revision or effective date identified, as well as the specific revision or effective date of codes and standards that they incorporate by reference (daughter codes and standards), shall be followed. If a date or revision is not identified, the latest issue, including addenda, at the time of quotation, shall apply. For material standards associated with CM equipment, the Seller shall ensure that the revision associated with currently available material is acceptable for the intended use of the material. The effective dates and revisions listed in section 2 shall apply to subsequent references to the codes and standards within this specification.

2.2 Codes and Standards

2.1.1	WAC 296-24	Washington Administrative Code General Safety and Health Standards
2.1.2	ANSI/AISC N690-94	Specification for the Design, Fabrication, and Erection of Steel Safety-Related Structures for Nuclear Facilities, as tailored in Appendix A **of this specification**

2.1.3	AISC M016-1989	Manual of Steel Construction, Allowable Stress Design, Ninth Edition, as tailored in Appendix B **of this specification**
2.1.4	ASME NQA-1-1989	Quality Assurance Program Requirements for Nuclear Facilities
2.1.5	NFPA 70-1999	National Electrical Code
2.1.6	SNT-TC-1A-**1989**	Society for Non-Destructive Testing
2.1.7	ASME B31.3-1996	Process Piping **as tailored in Appendix C of this specification**
2.1.8	ASME Section VIII **Division 1**	Boiler and Pressure Vessel Code, ***Rules for Construction of Pressure Vessels***
2.1.9	**ASME Section VIII Division 2**	**Boiler and Pressure Vessel Code,** ***Alternate Rules for Construction of Pressure Vessels***
2.1.10	ASME Y14.100	Engineering Drawing Practices
2.1.11	ASME B30.20	Below-the-Hook Lifting Devices

2.3 Engineering Standards

Any additional Engineering Specifications/Standards proposed for use by the Seller shall be reviewed by the Buyer prior to incorporation into the design.

2.4 Reference Documents

2.4.1	24590-WTP-3PS-SS90-T0001	Engineering Specification for Seismic Qualification of Seismic Category I/II Equipment and Tanks
2.4.2	24590-WTP-3PS-P000-T0001	Engineering Specification for Piping Material Classes General Description and Summary
2.4.3	24590-WTP-3PS-JQ06-T0003	Engineering Specification for Seismic Qualification of Control and Electrical Systems and Components
2.4.4	24590-WTP-3PS-JQ06-T0005	Engineering Specification for Environmental Qualification of Control and Electrical Systems and Components
2.4.5	24590-WTP-3PS-JQ07-T0001	Engineering Specification for Instrumentation for Package Systems
2.4.6	24590-WTP-3PS-JR00-T0010	Engineering Specification for Liquid Effluent Gamma Monitor - QL
2.4.7	24590-WTP-3PS-JV15-T0001	Engineering Specification for Actuators for On/Off Valves
2.4.8	24590-WTP-3PS-EKP0-T0001	Engineering Specification for Electrical Requirements for Packaged Equipment
2.4.9	24590-WTP-3PS-PS02-T0001	Engineering Specification for Shop Fabrication of Piping
2.4.10	24590-WTP-3PS-G000-T0003	Engineering Specification for Packaging, Handling and Storage Requirements
2.4.11	24590-WTP-3PS-G000-T0001	General Specification for Supplier Quality Assurance Program Requirements
2.4.12	24590-WTP-3PS-G000-T0002	Engineering Specification for Positive Material Identification (PMI)

2.4.13	24590-WTP-3PS-PV00-T0001	Engineering Specification for Technical Supply Conditions for Valves
2.4.14	24590-WTP-3PS-AFPS-T0001	Engineering Specification for Shop Applied Special Protective Coatings for Steel Items and Equipment
2.4.15	24590-WTP-PW-P30T-00001	WTP End Prep Detail for Field Butt Welds
2.4.16	24590-WTP-3PS-SS00-T0002	Engineering Specification for Welding of Structural Stainless Steel and Welding of Structural Carbon Steel to Structural Stainless Steel
2.4.17	24590-WTP-3PS-FB01-T0001	Engineering Specification for Structural Design Loads for Seismic Category III & IV Equipment and Tanks
2.4.18	RR-C-271D	Federal Specification Chains and Attachments, Welded and Weldless
2.4.19	DOE-RL-92-36	Hanford Site Hoisting and Rigging Manual - Hoists, Jib Cranes, and Monorail Systems
2.4.20	OSHA 29 CFR 1910.179	Occupational Safety and Health Standards Overhead and Gantry Cranes
2.4.21	**24590-WTP-3PS-M000-T0002**	**Engineering Specification for Mechanical Handling Equipment Design & Manufacture**
2.4.22	**24590-WTP-3PS-MV00-T0003**	**Engineering Specification for Pressure Vessel Fatigue Analysis**
2.4.23	**24590-WTP-DC-ST-01-001**	**Structural Design Criteria**

3 Design Requirements

3.1 Basic Function

To support the use of 'hands on' maintainable equipment for process applications in out-cell areas, the Process Bulges are required to provide confinement structures for the safe operation and maintenance of process equipment such as pumps, valves, instruments and associated equipment. The Process Bulges shall have an expected working life of 40 years. Where specific components cannot meet this requirement they shall be identified and a mechanism for their replacement and/or maintenance shall be incorporated into the design.

3.1.1 Process Pumps

3.1.1.1 The Buyer shall supply all process pumps. The process pumps are vertically mounted centrifugal canned motor type and facilitate top-access maintenance techniques.

3.1.1.2 The Seller shall be responsible for the installation of the pumps including all necessary services, supports, electrical and instrumentation requirements.

3.1.1.3 The pump impeller and motor assembly shall be removable vertically.

3.1.1.4 When indicated on the P&ID the Seller shall furnish the pumps with a cooling water flush line to the motor/bearing assembly. The water flush

shall be sacrificial and utilized only where the process fluid is unsuitable for use as the cooling medium.

3.1.1.5 Pump motor housings should be 'potted' to minimize internal fluid hold-up and should be oil free.

3.1.1.6 Power and instrumentation cabling to the pump/motor shall be run in sealed stainless steel conduit through the pump access plate to a terminal box mounted on the pump/motor access plate.

3.1.1.7 Pump supports shall be rigid to minimize pump vibration, deflection, and nozzle loadings.

3.1.1.8 If the pump includes a recirculation cooling water flush line, the line shall be hard piped to the pump, with a removable line from the top of the motor. If a cyclone solids separator is included, it shall be placed to allow an open vertical path for removal of the pump impeller and motor assembly. The cyclone solid separator shall be supported from the side of the Bulge containment.

3.1.2 Process Valve Assemblies

3.1.2.1 **The Seller shall purchase the valves, extended drive spindles and actuators from the Buyer's valve distributor. The Buyer will provide valve distributor upon issuance of the MR for the Bulges. Valves, extended drive spindles and actuators shall be purchased in accordance with specifications 24590-WTP-3PS-PV00-T0001, *Engineering Specification for Technical Supply Conditions for Valves* and 24590-WTP-3PS-JV15-T0001, *Engineering Specification for Actuator On/Off Valves*.**

3.1.2.2 Valves located inside the Process Bulge shall be top accessible valves with extended drive spindles. They shall be operated with either a pneumatic actuator or manually, external to the Bulge confinement. Each drive spindle requires the ability to be locked in place, external to the Bulge.

3.1.2.3 Actuators are pneumatic piston types and supplied complete with solenoid pilot valve, position limit switches, and visual semaphore indication. **Non-ITS** Actuators shall be Fieldbus interface compatible in accordance with specification 24590-WTP-3PS-JV15-T0001, *Engineering Specification for Actuators for On/Off Control Valves*. **ITS Actuators shall be hard wired classic I/O in accordance with specification 24590-WTP-3PS-JQ07-T0001, *Engineering Specification for Instrumentation for Package Systems*.**

3.1.2.4 All actuator/valve assemblies shall be 'fail closed' type unless otherwise stated on the P&ID.

3.1.2.5 All actuators shall be located externally on the top face of the Bulge. A nameplate shall be placed on top of each actuator to allow identification

of the valve from above. Refer to 24590-WTP-3PS-JV15-T0001, *Engineering Specification for Actuator On/Off Valves*, section 7.1, Nameplate, for general mechanical nameplate requirements and attachment details.

3.1.2.6 Manual valves shall have a label attached to the top cap assembly. The label shall identify the valve number and position indication. Nameplate material shall be three-ply laminated plastic with white face, black core. The nameplate size shall be 2 1/2-inch length, 1 inch wide and 1/16-inch thickness. The letter size shall not be smaller than 1/4 inch; font shall be condensed gothic text, and engrave letters through the core with a round or square end cutter; V-shaped are not acceptable and shall be permanently affixed with by means of adhesive and 316 stainless steel screws.

3.1.2.7 Valve tags shall be removed from the valve bodies and attached to the top cap assemblies, external to the Bulge, to prevent them from becoming a sump plugging hazard if they become disconnected from the valve.

3.1.2.8 Extended Drive Shafts connecting the actuators to the valves shall be fitted with rotary seals to maintain confinement, and designed with double universal joints and a telescopic section to allow movement/misalignment of the valves in all three planes. In Bulges with shielding the Extended Drive Shaft shall be designed to prevent a vertical shine path.

3.1.2.9 The Seller shall furnish an air manifold (1" diameter minimum) on the top face of the Process Bulge to supply air to the valve actuators, complete with an air filter and pressure regulator. Each actuator shall be connected to the manifold using 3/8" 316 flexible stainless steel braided tubing and an isolation valve. The manifold and flexible connections shall be sized for the concurrent operation of all actuators. The location of the manifold should be routed so as to minimize the length of connections but must not prevent the removal of any access plate or plug.

3.1.2.10 Each air isolation valve requires a valve nameplate. The nameplate shall have the same number as its corresponding process valve.

3.1.2.11 The Seller shall provide a Valve Inspection Report detailing items inspected, dimensional inspections performed, verification of inspections required by section 5 and 11 of 24590-WTP-3PS-PV00-T0001, *Engineering Specification for Technical Supply Conditions for Valves,* as well as 8.3 of 24590-WTP-3PS-JV15-T0001, *Engineering Specifications for Actuators for On/Off Control Valves* by valve manufacturer (as a minimum). Results shall be documented and submitted in accordance with Section 3 (G-321-V Form) of the MR.

3.1.3 Instrumentation

3.1.3.1 The Seller shall purchase instrumentation in accordance with specification 24590-WTP-3PS-JQ07-T0001, Engineering Specification for Instrumentation for Package Systems.

3.1.3.2 Instrumentation signal transmission shall be per the instrumentation **Data Sheet.**

3.1.3.3 When the instrument **Data Sheet** calls for Foundation Fieldbus, appropriate junction devices and compliant cable products shall be provided. Systems shall consist of:

1) Appropriate four or eight spur blocks with stainless steel receptacles Pepperl + Fuchs F2-JBSC-4.FF.7/8S.LED or F2-JBSC-8.FF.7/8S.LED or Buyer approved equal.

2) Spur cable shall be armored type, Pepperl + Fuchs C-V9-G-OR-XXXM-PVC-V9-FF-S or Buyer approved equal.

3) All unused spur block points shall be capped with a closure cap. Pepperl + Fuchs V9-R-F-COV or Buyer approved equal. The location of the junction should be on the side of the Bulge. Spur cable shall be routed so as to minimize the length, but should not prevent removal of any access plate.

4) The Pepperl + Fuchs V9-R-M2-S, 2-wire connector shall be installed/pre-wired in the head of all Foundation Fieldbus instruments. The Turck RSFV 49-*M/14.5 connector may be used if the ground lug (Terminal 4) is not connected (cut and tap green/yellow (ground)).

3.1.3.4 Each spurblock shall have a nameplate attached to the Bulge near the associated spurblock. These nameplates shall identify the spurblock tag number, spurblock terminals, and associated equipment/instrument by terminal connection.

3.1.3.5 Where Foundation Fieldbus is not used, terminals and junction boxes shall be provided for instrument signals in accordance with specification 24590-WTP-3PS-JQ07-T0001, *Engineering Specification for Instrumentation for Package Systems.*

3.1.3.6 ITS instrumentation systems and components qualification shall be in accordance with specification 24590-WTP-3PS-JQ06-T0005, *Engineering Specification for Environmental Qualification of Control and Electrical Systems and Components*. The Buyer will provide requirements to the Seller in specifications, Technical Notes of the Material Requisition, or **Data Sheets**, as needed.

3.1.3.7 Gamma Monitor design shall be in according with specification 24590-WTP-3PS-JR00-T0010, *Engineering Specification for Liquid Effluents Gamma Monitor - QL.*

3.1.3.8 If the Quality Level and Seismic Category for instruments inside the bulges are not specified on a datasheet they shall be the same as the Quality Level and Seismic Category specified for the Bulge they are contained in. Furthermore, for instruments that have components

internal and external to the bulge, the internal components shall be qualified to the conditions inside the bulge (e.g., radiation and contamination levels), and the external components shall be qualified to the room conditions as specified on the data sheets.

3.1.4 Electrical Equipment

3.1.4.1 All electrical equipment and material, including industrial control panels and cabinets that are assemblies of industrial control devices, shall be suitable for installation and use in conformity with the provisions of NFPA 70-1999. Suitability of equipment shall be evidenced by listing or labeling as a completed assembly by Underwriters Laboratories (UL). Equipment and assemblies not listed or labeled shall be required to bear a UL "Field Evaluated Product" mark. Equipment and materials listed, labeled or field evaluated by other nationally recognized testing laboratories (NRTLs) as recognized by OSHA, may be accepted only after receipt of prior written approval from the Buyer.

3.1.4.2 Refer to specification 24590-WTP-3PS-EKP0-T0001, *Engineering Specification for Electrical Requirements for Packaged Equipment,* for AC voltage requirements.

3.1.4.3 A motor starter and controller shall be integral to the 480V MCC, 13.8/4.16 kV - 480V AC Secondary Unit Substation (Load Center), or the 13.8 kV switchgear. A local controller shall be used if specified. Refer to specification 24590-WTP-3PS-EKP0-T0001, *Engineering Specification for Electrical Requirements for Packaged Equipment,* for general information.

3.1.4.4 Refer to specification 24590-WTP-3PS-EKP0-T0001, *Engineering Specification for Electrical Requirements for Packaged Equipment,* for cable and wiring requirements.

3.1.4.5 Refer to specification 24590-WTP-3PS-EKP0-T0001, *Engineering Specification for Electrical Requirements for Packaged Equipment,* Appendix A, for nameplate requirements for electrical enclosures, equipment, and devices.

3.1.5 Bulge Construction

3.1.5.1 Process Bulges shall generally be comprised of a pipework assembly including pumps, instruments, valves and fittings as required, a confinement assembly, a confinement support structure, and when required, a Maintenance Platform and/or a shielding assembly.

3.1.5.2 Process Bulges shall be furnished with 1" diameter removable inspection plugs to allow access for a 'video-scope'. The plugs shall be located to provide the best access for the viewing of all internal equipment. The number of inspection plugs shall be minimized.

3.2 Performance

3.2.1 Process Bulges shall be designed and fabricated to fulfill the mechanical and process requirements identified on the Data Sheets and drawings identified under section 2 of the MR.

3.2.2 The Seller shall demonstrate that air operated valves complete a full on-off cycle in less than 5 seconds. Refer to 24590-WTP-3PS-JV15-T0001, *Engineering Specification for Actuators for On/Off Valves*, for supplied plant air pressure.

3.2.3 Actuators shall be sized for 80-psig-supply pressure.

3.3 Design Conditions

3.3.1 Process Bulge pipework shall be designed in accordance with the Piping Class Sheets identified in the Process Bulge Data Sheet. Refer to specification 24590-WTP-3PS-P000-T0001, *Engineering Specification for Piping Material Classes General Description and Summary* for general requirements. Specifications for individual pipe classes will be provided, as needed, with the MR.

3.3.2 A recommended spare parts list shall be generated for all components requiring maintenance/replacement over a 40-year life.

3.4 Environmental Conditions

3.4.1 **Equipment Requirements**

The Bulge SSCs shall be evaluated and accepted by the Seller as suitable for continuous operation in service conditions as specified in the Buyer's MDS.

3.4.2 Outdoor Environment Conditions

Site ambient condition is an extreme temperature range of minus 23°F dry-bulb to 113°F dry-bulb, rain, wind, snow, ice, direct sunlight, and a relative humidity of 0% to 100%.

3.4.3 Ambient lighting levels for Process Bulge areas will be 30 Lumens/ft^2

3.4.4 Radiation exposure will be as indicated on the Process Bulge Data Sheets and Instrument Data Sheets.

3.4.5 Bulges may be stored outdoors for 12 months prior to installation.

3.4.6 The Environmental Qualification classification will be specified as either "harsh", "mild", or "N/A" **on the Buyer's Process Bulge Data Sheets**. Environmental Qualification is not applicable to CM bulges or components. A mild environment is **an environment expected as a result of normal service conditions and extremes (abnormal) in service conditions where seismic is the only design basis event (DBE) of consequences**. Similarly, a harsh environment is **an environment expected as the result of the postulated service condition appropriate for the design basis event of the RPP-WTP. It is an environment that exceeds the**

conditions of a mild environment. In the event that a component is specified as having to be qualified for a harsh environment, the **Buyer** will indicate **what the** conditions **are that the** equipment shall be qualified **to via the Buyer's MDS.**

3.5 Mechanical Requirements

Process Bulges shall be designed and fabricated in accordance with the technical documents identified under section 2 of the MR. Variations to the design documents are permitted provided that the Seller's proposals meet the criteria stated herein, are communicated through drawings, and a general description of the proposed variation is reviewed and approved by the Buyer prior to fabrication.

3.5.1 Process Bulge Confinement – General Requirements

3.5.1.1 Applicable Bulge Enclosure Design Standards

- **SC-I and SC-II Bulge Enclosure confinement systems shall be designed and fabricated in accordance with ANSI/AISC N690-1994, *Specification for the Design, Fabrication, and Erection of Steel Safety Related Structures for Nuclear Facilities*, as tailored by the Buyer and included as Appendix A of this specification. See Appendix D-1 for the required combined loadings and allowables for ANSI/AISC N690 - 94 designs.**

- **SC-III and SC-IV Bulge Enclosure confinement systems shall be designed and fabricated in accordance with AISC M016-1989, *Manual of Steel Construction, Allowable Stress Design, Ninth Edition*, as tailored by the Buyer and included as Appendix B of this specification. See Appendix D-2 for the required combined loadings and allowables for AISC M016-1989 designs.**

3.5.1.2 The Process Bulge confinement shall be fabricated using fully radiused (1" internal radius) corners along **the** side and bottom edges to assist decontamination. Confinement plate thickness shall be as specified on the Process Bulge Data Sheet.

3.5.1.3 The confinement shall incorporate removable roof plates bolted to a roof support structure using 3/8" UNC stainless steel welded stud bolts and 1/8" thick flat elastomer gaskets. The roof plates shall provide gross access to the Bulge internal systems.

3.5.1.4 The roof plates support structure shall be fabricated from 4"x3" stainless steel angle section as a minimum.

3.5.1.5 The confinement roof structure shall be designed to support the static and dynamic loads including seismic loads from the valve actuator assemblies if there is no shielding.

3.5.1.6 All confinement welds shall be continuous.

3.5.1.7 The base of the confinement shall slope in all directions to a fabricated drain. Minimum design requirements for the drain shall be a single strainer, designed to be manually removable from the exterior of the Bulge. When noted on the Process Bulge **Data Sheet**, the drain shall be fitted with a primary and a secondary strainer and level instrumentation. The primary strainer shall incorporate a weir **(See Figure 3 for a conceptual design of a weir)** in its design to enable leak detection and level instrument testing. The primary strainer assembly shall be operable from the outside of the Bulge via an extended drive spindle.

3.5.1.8 As a minimum, the floor of the Bulge shall have a fall of 1:100 and the drain shall be located at the lowest point.

3.5.1.9 The base shall be adequately supported externally to prevent liquid traps caused by distortion during welding.

3.5.1.10 The confinement's external and internal surface finish shall be equal or better than that specified on the Process Bulge Data Sheet. All proposed surface finishes must be to a standard approved by the Buyer's inspector.

3.5.1.11 The **Bulge** confinement shall be designed for an **abnormal** internal negative pressure **as specified on the Buyer's MDS,** and a positive internal pressure equal to that when completely filled with **process fluid. The specific gravity of the process fluid can be found on the Buyer's MDS**. There shall be no internal stiffeners unless approved by the Buyer.

3.5.1.12 Wash rings/spray nozzles shall be installed within the Bulge confinement at a high level to facilitate decontamination of the Bulge and pipework. The Seller shall determine the number and position of the wash rings. If spray nozzles are used, threaded connections are allowed at the connection of the nozzle and the pipe. Refer to the Process Bulge Data Sheet for pressure and flow limits supplied to the wash ring/spray nozzle.

3.5.1.13 A HEPA filter connection shall be located above the maximum height of the Bulge confinement.

3.5.2 Process Bulge Support Frame

3.5.2.1 The Bulge support frame shall be designed to support the confinement structure completely filled with **process fluid** and, when no shielding is required, a Maintenance Platform and column davits as required. **The specific gravity of the process fluid can be found on the Buyer's MDS.**

3.5.2.2 The confinement structure shall be installed within a Bulge support frame fabricated using a minimum of 4" x 2" heavy gauge stainless steel rectangular hollow section.

3.5.2.3 The confinement shall incorporate stiffening pads at all frame connection points and connection shall be accomplished using continuous fillet welds.

3.5.2.4 The support frame shall incorporate leveling and hold-down features to secure the Bulge to the building structure, and to satisfy the requirements noted in section 3.6.1. The leveling and hold-down features shall conform to the Buyer's embed plate location drawings, provided in section 2 of the MR.

3.5.2.5 The support frame shall be designed such as to eliminate open section ends or any open ends shall be closed with fully welded end plates.

3.5.2.6 The support frame will be welded to carbon steel interface pads by the Buyer as referenced in Section 3.5.2.8 of this specification. Seller shall specify weld details to satisfy the seismic requirements in section 3.6.1 of this specification.

3.5.2.7 Applicable Bulge Support Frame Design Standards

- **SC-I and SC-II Bulge Support Frames shall be designed and fabricated in accordance with ANSI/AISC N690-1994, *Specification for the Design, Fabrication, and Erection of Steel Safety Related Structures for Nuclear Facilities*, as tailored by the Buyer and included as Appendix A of this specification. See Appendix D for exert of the appropriate load combinations and allowables from AISC N690 – 94, *Specification for the Design, Fabrication, and Erection of Steel Safety-Related Structures for Nuclear Facilities.***

- **SC-III and SC-IV Bulge Support Frames shall be designed and fabricated in accordance with AISC M016-1989, *Manual of Steel Construction, Allowable Stress Design, Ninth Edition*, as tailored by the Buyer and included as Appendix B of this specification. See Appendix D for exert of the appropriate load combinations and allowables from AISC M016-1989, *Manual of Steel Construction, Allowable Stress Design, Ninth Edition.***

3.5.2.8 The Process Bulge Skirt or Support Frame, as appropriate, shall be designed to allow for 1/2" gap between skirt or frame and facility embed plates to allow for carbon steel interface pads and leveling features as indicated in Figure 2. Seller shall specify weld details to satisfy seismic requirements in Section 3.6.1 of this specification.

3.5.3 Process Bulge Shielding

3.5.3.1 Where indicated on the Process Bulge Data Sheets the Bulges shall be fitted with carbon steel shielding plates to the specified thickness.

3.5.3.2 Shielding structures shall be completely self-supporting and shall be constructed using a layered methodology, as required, with each layer of shielding being securely bolted and doweled to its predecessor. The initial layer of shielding plates shall be bolted to the Bulge support frame to ensure positional accuracy of shielding access plugs. 180° and 90° butt joints between adjacent shielding plates shall be alternately overlapped to maintain the required shielding thickness.

3.5.3.3 Shielding structures shall be designed to support the Maintenance Platform, valve actuator assemblies, and column davits, when required.

3.5.3.4 Access plugs shall be provided in the roof shielding plates with suitably engineered lifting points to facilitate pump/motor, valve and instrument access.

3.5.3.5 Access plugs shall be designed to be locked in position.

3.5.3.6 When specified on the Process Bulge Data Sheet internal shielding plates shall be provided between adjacent pumps (when more than one pump is installed) and between pump and valve sections of the Process Bulge.

3.5.3.7 The maximum weight for a single shielding plate or plug required to be removable for maintenance operations shall not exceed 500 pounds. The minimum thickness of the shielding plate shall not be less than 1".

3.5.3.8 The maximum weight for a single shielding plate not routinely removed for maintenance operations shall not exceed 2,500 pounds. The minimum thickness of the shielding plate shall not be less than 1".

3.5.3.9 Each plate shall be uniquely identified using 1/2" high stamped characters to assist assembly and have suitable attachment points for lifting eyes. A sequentially numbered assembly map shall also be provided to assist in installing the shielding plates on site.

3.5.3.10 Where extended drive spindles pass through shielding plates the drive spindles shall be designed such that shielding integrity is not compromised.

3.5.3.11 Shielding will be welded to the facility embeds by Buyer. Seller shall specify weld details to satisfy the seismic requirements in the section 3.6.1 of this specification.

3.5.3.12 Applicable Structural Mounting Component Design Standards

- **SC-I and SC-II Structural Mounting Components shall be designed and fabricated in accordance with ANSI/AISC N690-1994, *Specification for the Design, Fabrication, and Erection of Steel Safety Related Structures for Nuclear Facilities*, as tailored by the Buyer and included as Appendix A of this specification. See Appendix D-1 for the required combined loadings and allowables for ANSI/AISC N690 - 94 designs.**

- **SC-III and SC-IV Bulge Structural Mounting Components shall be designed and fabricated in accordance with AISC M016-1989, *Manual of Steel Construction, Allowable Stress Design, Ninth Edition*, as tailored by the Buyer and included as Appendix B of this specification. See Appendix D-2 for the required combined loadings and allowables for AISC M016-1989 designs.**

3.5.4 Maintenance Platforms

3.5.4.1 The Maintenance Platforms shall be designed to meet **both** the requirements set forth in WAC 296-24, **and the following structural code requirements:**

- **SC-I and SC-II Bulge Maintenance Platforms shall be designed and fabricated in accordance with ANSI/AISC N690-1994, *Specification for the Design, Fabrication, and Erection of Steel Safety Related Structures for Nuclear Facilities*, as tailored by the Buyer and included as Appendix A of this specification. See Appendix D-1 for the required combined loadings and allowables for ANSI/AISC N690 - 94 designs.**

- **SC-III and SC-IV Bulge Maintenance Platforms shall be designed and fabricated in accordance with AISC M016-1989, *Manual of Steel Construction, Allowable Stress Design, Ninth Edition*, as tailored by the Buyer and included as Appendix B of this specification. See Appendix D-2 for the required combined loadings and allowables for AISC M016-1989 designs.**

3.5.4.2 The Maintenance Platform shall have a grid of removable grating sections to allow access to the Bulge below. Each removable section shall be positioned to facilitate maintenance of the Bulge equipment.

3.5.4.3 The Maintenance Platforms shall include guardrails. The guardrails shall be designed per WAC 296-24-750.

3.5.4.4 All openings in the guardrail shall have a safety gate or chain designed per the requirements of WAC 296-24-750.

3.5.4.5 The Maintenance Platform shall be designed in sections and shall be removable. The maximum weight of one section shall not exceed 2,500 pounds. The sections shall be bolted together and bolted to the supporting frame or shielding.

3.5.4.6 The Maintenance Platform shall be bolted to either the external layer of shielding, or the Bulge support frame if no shielding is required.

3.5.4.7 A fixed ladder shall be provided to allow access onto the Maintenance Platform. The ladder shall meet the requirements set forth in WAC 296-24-810. Use a concentrated load of 300 pounds for the ladder design.

3.5.5 Lifting Points

3.5.5.1 Bulges shall not be lifted with the shielding structure attached.

3.5.5.2 External pipework and fittings shall not be used for lifting.

3.5.5.3 Lifting points shall accept standard lifting equipment; chain blocks, wire rope or braiding shall not be permitted. If applicable, the lifting lugs shall be designed to accept Crosby shackles or equivalent meeting Federal

3.5.5.4 All lifting attachments shall have either a safety factor of 3 based on the material yield strength, or 5 based on the material ultimate strength, whichever is most conservative. The lifting points shall have a label clearly identifying its unique number and SWL.

3.5.5.5 All lifting points shall be proof tested in situ and provided with test and examination certificates.

3.5.5.6 Items of equipment having eyebolts fitted, or having lifting points identified, shall be such that the point of lift is over the center of gravity of the equipment. Fitted eyebolts shall be removable for examination.

3.5.5.7 Seller shall provide any special designed lifting equipment not available from a commercial source. Such equipment may include, but is not limited to, rigging devices, such as spreader beams, structural lifting devices, strongbacks, and yokes. Rigging devices shall be designed, tested, and tagged in accordance with the applicable requirements of ASME B30.20.

3.5.6 Fasteners

3.5.6.1 UNC series threads shall be used for all screw fasteners and components with mating threads. This thread form shall be used throughout unless otherwise specified on equipment **Data Sheets**.

3.5.6.2 Steel bolts, screws, and nuts shall be in accordance with **ASME B31.3-1996 as tailored in Appendix C of this specification .**

3.5.6.3 Stainless steel bolts and cap screws shall be used except where repeated assembly and disassembly are required. In that case bolts and cap screws shall be fabricated from 'Nitronic 60' or equivalent to prevent galling. Stainless steel nuts shall be of type 300 stainless steel in accordance with ASTM F594, unless otherwise stated.

3.5.6.4 Welded Stud Connectors: Capacitor discharge stainless steel weld studs shall be ASTM F593, with the following minimum mechanical properties:

a. Tensile Strength:	95,000 psi
b. Yield Strength:	60,000 psi
c. Elongation:	20% in 4 diameters

3.5.6.5 The use of hexagon headed bolts with sufficient clearance for socket wrenches is preferred. The range of bolt sizes shall be kept to a minimum in order to limit the number of tools required.

3.5.6.6 High tensile steel fasteners shall not be employed in the construction of lifting equipment.

3.5.6.7 Bolts and set screws in rotating or reciprocating components, or where subject to vibration, shall be locked by a split pin, tab washer or wire, subject to prior approval of the method by the Buyer. Setscrews used for locking purposes do not require locking. Washers, plain or spring, shall not be used unless specifically called for on drawings.

3.5.6.8 Sufficient envelope clearances are required around the bolt head for sockets.

3.5.7 Pipework

3.5.7.1 All piping shall be designed to meet the requirements of ASME B31.3 1996, ***Process Piping,*** **as tailored in Appendix C of this specification.**

3.5.7.2 All pipework systems shall be self-draining with no liquid traps. Direction and magnitude (if specified) of slope shall be as indicated on the P&ID. Unless otherwise specified on the Process Bulge Data Sheet the minimum pipe slope shall be 1:120.

3.5.7.3 All materials for pumps, pipework, valves and fittings shall be in accordance with the P&ID and Process Bulge Data Sheet and fabricated using 100% butt-welded construction unless otherwise stated.

3.5.7.4 Radiographic examination shall be carried out on all primary confinement pipework butt-welds using 100% radiography for Q components or 20% radiography for all other quality levels.

3.5.7.5 Where pipework passes through shielding plates these penetrations shall be positioned such that shielding integrity is not compromised e.g. in areas that have no direct shine-path to the radiological source.

3.5.8 Wall Penetrations

3.5.8.1 All process pipework leaving the Bulge and penetrating a wall shall be contained within a sleeve pipe. This sleeve pipe will provide secondary containment for the primary pipe. Refer to Table 1 for associated sleeve sizes. The Bulge drain and ventilation line (when required) do not require a sleeve pipe.

3.5.8.2 For pipes sloping into the Bulges, the sleeve pipe shall penetrate the Bulge confinement. An anchor washer shall be welded to the high end of the sleeve. The low-end of the sleeve is open to the Bulge confinement, allowing the process pipe to move freely. **When the Bulge P&ID's indicate that the sleeve pipes continue beyond the Seller's scope of supply, then the design shall provide appropriate drainage through the anchor washer by incorporation of a drain hole or open slot on the bottom end of the anchor washer.** See Figure 1 **& 4.**

3.5.8.3 For pipe sloping away from the Bulge confinement, the sleeve pipe shall be welded to the external side of the Bulge confinement. The low-end of

the sleeve is open in the black cell, allowing the process pipe to move freely. See Figure 1.

3.5.8.4 The sleeve pipe and **anchor** washer material shall be **same as** that used for the Bulge confinement.

3.5.9 Floor Penetrations

3.5.9.1 All process pipework leaving the Bulge and penetrating a floor shall be contained within a sleeve pipe. The sleeve pipe will provide secondary confinement for the primary pipe. Refer to Table 1 for associated sleeve sizes. The Bulge drain and ventilation line (when required) do not require a sleeve pipe, See Figure 2.

3.5.9.2 The sleeve pipes shall be welded to the external side of Bulge confinement plate. The sleeve pipe material shall be equal to that used for the Bulge confinement.

3.5.9.3 Deleted

3.5.9.4 Deleted

3.5.10 Column Davits

3.5.10.1 All column davits shall be designed to operate in the space envelope indicated in the Process Bulge Data Sheet. The boom and mast dimensions shall be determined by the Seller.

3.5.10.2 The column davits shall meet the requirements of DOE-RL-92-36, *Hanford Site Hoisting and Rigging Manual Hoists, Jib Cranes, and Monorail Systems*, and OSHA 29 CFR 1910.179 *Occupational Safety and Health Standards Overhead and Gantry Cranes*.

3.5.10.3 The column davits shall meet the performance and material requirements identified in the Process Bulge Data Sheet.

3.5.10.4 The column davits shall be manufacture's standard products, having minimum capacity 500 lbs, unless otherwise specified in the Process Bulge Data Sheet.

3.5.10.5 Seller shall design the column davits to lift valves, actuators, pumps, top cover plates, shielding plugs, gratings, etc. for maintenance operations.

3.5.10.6 The column davits shall be supported by Process Bulge support frame. The thrust and pull forces under load shall be considered.

3.5.10.7 The column davits shall be design to be interchangeable between as many Process Bulges as reasonable. The quantity of the required column davits is specified in section 2 of the MR.

3.5.10.8 The location and the number of column davit supports shall be determined by the Seller, unless otherwise specified in Process Bulge Data Sheet.

3.6 Loadings

3.6.1 Seismic

3.6.1.1 The Seismic Category is identified on the Process Bulge Data Sheet.

3.6.1.2 Seismic Category (SC) I & II Equipment design shall be in accordance with specification 24590-WTP-3PS-SS90-T0001, *Engineering Specification for Seismic Qualification of Seismic Category I/II Equipment and Tanks.*

3.6.1.3 For Seismic Category (SC) III & IV Equipment seismic design shall be in accordance with 24590-WTP-3PS-FB01-T0001, *Engineering Specification for Structural Design Loads for Seismic Category III & IV Equipment and Tanks.*

3.6.1.4 Where required, the Buyer will provide seismic data to enable the Seller to carry out a dynamic seismic analysis for each Process Bulge. Analyses shall be carried out for the pipework (including where applicable pumps with integral motors), confinement, support and shielding systems.

3.6.1.5 Where the ITS instrumentation system and component data sheets indicate SC-I for functional qualification, components shall be designed in according with specification 24590-WTP-3PS-JQ06-T0003, *Engineering Specification for Seismic Qualification of Control and Electrical Systems and Components.*

3.6.1.6 Seismic Detailing requirements for Seismic Category (SC) I & II Equipment shall be in accordance with UBC 1997, Chapter 22, Division V, Section 2213 per Table 1 of the *Structural Design Criteria*, 24590-WTP-DC-ST-01-0001.

3.6.1.7 Seismic Detailing requirements for Seismic Category (SC) III & IV Equipment shall be in accordance with UBC 1997, Chapter 22, Division V, Section 2214 per Table 1 of the *Structural Design Criteria*, 24590-WTP-DC-ST-01-0001.

3.6.1.8 Seller shall provide a Seismic Data Report/Analysis demonstrating the Bulge designs meet the requirements specified in sections 3.6.1.2 or 3.6.1.3 of this specification.

3.6.2 Operation

3.6.2.1 All pumps, pipework, valves and fittings shall be adequately supported so as to minimize vibration, deflection and nozzle loadings.

3.6.2.2 Roof plate structures must be adequately supported to accommodate valve actuator static and dynamic loads.

3.6.3 Maintenance

3.6.3.1 During valve maintenance operations access will be required onto the shielding and roof plate structures. Therefore in addition to the normal operational loads these structures shall be designed to support personnel access loads of 500 lbs.

3.6.4 Nozzle Load

3.6.4.1 The Seller shall design the Bulge to **withstand the nozzle** loading **from the Buyer's facility installed piping.**

- **For LAW &** PTF bulges; the **nozzle** loads listed in **the Process Bulge Data Sheets** are the minimum design loads acting on the Bulges from facility installed piping at the juncture of the nozzle and shell **(unless otherwise noted, see section 3.6.4.2 of this specification). Buyer external pipe nozzle loads for the LAW and PTF Bulges are listed in the Process Bulge Data Sheets in section 2.5 of this specification.**

  Seller shall apply these external loads, in the combined loading sections of Appendix D-1, D-2, and D-3 as applicable.

3.6.4.2 Nozzle load application for wall penetrating pipework shall be applied as follows:

- **At the anchor washer for pipes sloping towards / into the Bulge confinement.**
- **At the Bulge confinement plate for pipes sloping away from the Bulge confinement.**
- **Seller shall calculate the deadweight and seismic loads for open-ended sleeves and apply them as an external load at the Bulge confinement plate.**

Refer to Figure 1.

3.6.4.3 Nozzle loads for floor penetrating pipework shall be applied at the Bulge confinement plate. Refer to Figure 2.

3.6.4.4 When required, the Seller shall either design suitable reinforcement pads in the confinement plates or increase the confinement thickness.

3.6.4.5 **For confinement shell to pipe nozzle connections, ASME Section VIII, Division 2, Appendix 4, Figure 4-130.1, *Stress Categories and Limits of Stress Intensity*, shall be used for establishing combined allowable stress limits, for pipe nozzle to confinement shell design, by analysis only. However, stress values from ASME Section II, Part D, Table 1A for ASME SectionVIII, Division 1 shall be used as the allowable stress S in meeting the stress limits of ASME Section VIII, Division 2,**

Appendix 4, Figure 4-130.1, in lieu of design stress intensity Sm. (See Appendix D-3 for combined loading and allowable requirements)

3.6.5 Fatigue Analysis

3.6.5.1 The Bulge transfer frequency consists of cycle of process fluid through the line followed shortly after by a flush transfer.

3.6.5.2 Seller shall analyze for fatigue per the requirements detailed in 24590-WTP-3PS-MV00-T0003, *Engineering Specification for Pressure Vessel Fatigue Analysis.*

3.6.5.3 The Process Bulge Data Sheets contain the cyclic information on each nozzle in the ECDS section of the Data Sheet.

3.7 Accessibility and Maintenance

3.7.1 Equipment that is expected to require maintenance, calibration or replacement e.g. pumps/motors, valves and instruments shall be located in areas of the Bulge that offer the best access; this will usually be the front and sides of the Bulge.

3.7.2 The location of equipment within the Bulge shall be such that any items requiring lifting during maintenance can be accessed with the column davits supplied by the Seller.

3.7.3 The Bulge roof plates and shielding top plates shall incorporate equipment access ports and shielding plugs respectively for the maintenance of pumps/motors, valves and instruments.

3.7.4 Each access port shall be contained within a bagging ring or tenting flange to facilitate bagging/tenting techniques to maintain confinement during maintenance.

3.7.5 Where indicated on the Process Bulge Data Sheet, pumps shall be fitted with extended casing bolts that shall pass through seals in the pump access plate. The bolts shall enable the pump motor/impeller unit to be unbolted from the pump casing without breaking confinement.

3.7.6 The centerline of the closest piece of internal equipment shall be a minimum of 15" from the cell wall.

4 Materials

4.1 Positive Material Identification

4.1.1 Refer to specification 24590-WTP-3PS-G000-T0002, *Engineering Specification for Positive Material Identification (PMI)* for Positive Material Identification requirements.

4.2 Construction

4.2.1 Seller shall provide Material Safety Data Sheets (MSDS) for all coatings and materials used in the construction of the Process Bulge.

4.2.2 Process fluids may contain caustic solutions (up to pH-14) but nitric acid solutions may also be used for decontamination of the pipework, pump, valves, and instruments/instrument tubing both inside and outside of the pipework assembly. All materials selected by the Seller shall be suitably corrosion and radiation resistant for the specified service.

4.2.3 Materials shall be as specified in the Process Bulge Data Sheet and Instrument Data Sheets. Any proposed substitutes or concessions shall be agreed with the Buyer prior to procurement or incorporation into the work.

4.2.4 All materials shall be new and comply with this specification and relevant standards.

4.2.5 All flanges and pipe fittings shall be welded-neck and long radius types respectively unless otherwise specified and shall conform to ANSI standards.

4.2.6 No threaded flanges or fittings shall be used for process pipework.

4.2.7 Material certificates shall be supplied for all stainless steel pipe, plate, sheet and sections. Materials without specified mill test certificates must be approved by the Buyer prior to ordering; however additional material analysis may be required, either by wet or dry methods, to verify compliance with test certification or to determine material composition. Where such testing is required, any additional costs shall be the responsibility of the Seller.

4.2.8 The Seller shall have and implement provisions to ensure that materials used or supplied are not counterfeit or of suspect origin. Particular attention should be given to high strength bolting material (grade 5 strength equivalent and higher) and pipe fittings.

4.2.9 Appendix C, *Radiation Resistant Materials*, of Engineering Specification 24590-WTP-3PS-M000-T0002, *Engineering Specification for Mechanical Handling Equipment Design & Manufacture*, may be used when selecting non-metallic materials. All Non-metallic components shall be selected to resist the radiation levels specified on the data sheets. In particular this refers to items such as gaskets, seals, o-rings, and other similar items

4.3 Prohibited Materials

4.3.1 No asbestos containing materials, bronze, copper, lead, **Beryllium,** zinc, mercury, tin, antimony, cadmium, or other low melting point metals, PCBs or compounds of lead base paints or lubricants containing lithium or boron shall be used. 'Teflon' or compounds thereof must be qualified for use with the radiation levels specified on the Process Bulge Data Sheet.

4.4 Special Requirements

4.4.1 Where special requirements or restrictions are to be applied to the established items, these will be specified on the Process Bulge Data Sheets or in accompanying contractual documentation. In the absence of such instructions, the manufacturer's standard product shall be supplied as specified or as approved by the Buyer.

4.5 Storage of Special Materials (e.g., stainless steel) prior to work

4.5.1 Stainless steel is susceptible to corrosion caused by the contact and interaction with incompatible materials. All stainless steel material shall be stored in separate areas away from other materials.

4.5.2 The Seller shall submit Material Control Procedures for controlling, handling, storage and trace ability of materials such as weld rods, production items or Government Owned materials.

5 Fabrication

The Seller shall obtain written Final Design approval from the Buyer prior to the start of fabrication activities.

5.1 General Requirements

5.1.1 For all piping, refer to Specification 24590-WTP-3PS-PS02-T0001, *Engineering Specification for Shop Fabrication of Piping*. All welding procedures must be pre-approved by the Buyer prior to the start of fabrication.

5.1.2 Structural welding procedures shall be carried out in accordance with **ANSI**/AISC N690 – 94, *Specification for the Design, Fabrication, and Erection of Steel Safety-Related Structures for Nuclear Facilities* **as tailored in Appendix A of this specification,** and specification 24590-WTP-3PS-SS00-T0002, *Engineering Specification for Welding of Structural Stainless Steel and Welding of Structural Carbon Steel to Structural Stainless Steel*. All welding procedures must be pre-approved by the Buyer prior to start of fabrication.

5.2 Assembly

5.2.1 Flatness of the completed Bulge confinements shall be 1/8" per foot, with no greater than 3/16" over the entire length of the Bulge except for areas around cutouts. Areas around cutouts shall be flat within 1/16" per foot.

5.2.2 Cutout locations shall be within +/- 1/8" and cutout size shall be within +/- 1/16" except where noted on the Buyer sketches.

5.2.3 All Bulge confinement corners shall have a 1" +/- 1/16" internal radius.

5.2.4 The minimum material thickness for Bulge confinements shall be in accordance with the Process Bulge Data Sheet.

5.2.5 The Process Bulges shall have edges that are both smooth and not sharp to the touch.

5.2.6 The method of fabrication shall minimize the number and amount of seams, overlaps, or other discontinuities, which could trap radioactive contamination.

5.3 Tolerances

Manufacturing and fabrication tolerances for all equipment, accessories, and components shall conform to the following requirements:

5.3.1 Machined Components:

5.3.1.1 Machined surfaces shall be aligned within +/- 0.5 degrees of design conditions.

5.3.1.2 THICKNESS: Thickness tolerances shall conform to the requirements of the referenced commercial standard. In the absence of such criteria, allowable thickness shall be plus 0.010 inches, minus 0.005 inches.

5.3.1.3 DIMENSIONS: **Buyers preferred dimension scheme,**

a) $0 \le D < 4$ in	+/- 0.010 inch
b) 4 in $\le D <$ 36 in	+/- 0.020 inch
c) 3 ft $\le D <$ 10 ft	+/- 0.030 inch
d) 10 ft $\le D <$ 20 ft	+/- 0.060 inch
e) Over 20 feet	+/- 0.13 inch.

Note: D equals the desired dimension.

5.3.2 Fabricated Components:

5.3.2.1 Nozzle and flange alignment shall be within +/- 0.5 degrees of design conditions.

5.3.2.2 Rotating shaft alignment shall be specified by the Seller to minimize valve-turning torque at the actuator.

5.3.2.3 Thickness tolerances shall conform to the requirements of the referenced commercial standard applicable to the material being fabricated. When plate thicknesses are specified herein or in other supporting documentation they shall be considered to mean minimum thickness.

5.3.2.4 DIMENSIONS: **Buyers preferred dimension scheme,**

a) $0 \le D < 4$ in	+/- 0.020 inch
b) 4 in $\le D <$ 36 in	+/- 0.040 inch
c) 3 ft $\le D <$ 10 ft	+/- 0.060 inch
d) 10 ft $\le D <$ 20 ft	+/- 0.13 inch.
e) Over 20 feet	+/- 0.25 inch.

Note: D equals the desired dimension.

5.3.2.5 Weld joint preparation, for field welds, shall be in accordance with drawing 24590-WTP-PW-P30T-00001, *WTP End Prep Detail for Field Butt Welds*.

6 Tests and Inspections

6.1 Non-Destructive Examinations

6.1.1 Unless otherwise specified all welds shall be inspected in accordance with the requirements outlined in the reference 24590-WTP-3PS-PS02-T0001, *Engineering Specification for Shop Fabrication of Piping*. All primary pipework for **Q** components shall be inspected in accordance with Appendix A of 24590-WTP-3PS-PS02-T0001.

6.1.2 All welds performed on the Process Bulge Confinement, Support Frame, Shielding, or other structural/support components shall be inspected in accordance with the requirements of the appropriate standard as specified in Sections 3.5.1.1, 3.5.2.7, and 3.5.3.12 of this specification.

6.2 Personnel Qualifications

6.2.1 Non-Destructive Examinations of non-structural components shall be performed by an inspector certified to the requirements of SNT-TC-1A-**1989**. The interpretation of the results shall be by either Level II or Level III inspectors certified to SNT-TC-1A-**1989**.

6.2.2 For Personnel Qualification requirements for structural components, refer to **ANSI**/AISC N690-94, *Specification for the Design, Fabrication, and Erection of Steel Safety-Related Structures for Nuclear Facilities* **as tailored in Appendix A of this specification**, or AISC M016-1989, *Manual of Steel Construction, Allowable Stress Design*, Ninth Edition, as Tailored in Appendix B **of this specification.**

6.2.3 Personnel performing visual inspections of welds shall be either a Certified Weld Inspector (CWI) of the American Welding Society (AWS) or a SNT Level II or Level III inspector.

6.3 Shop Tests

6.3.1 General Requirements

6.3.1.1 The Process Bulge piping shall be hydrostatically tested in accordance with ASME B31.3 1996 **as tailored in Appendix C of this specification**. The Seller shall submit hydrostatic test procedures to Buyer for review and permission to proceed, prior to commencement of testing. The pipework shall be dried after testing.

6.3.1.2 The Process Bulge confinement shall be flooded with test water. After a period of 12 hours there shall be no visible sign of leakage. The confinement shall be dried after testing.

6.3.1.3 Test water used for hydrostatic testing shall be tested for chlorides. The chloride content of the test medium shall not exceed 50 ppm and the water temperature shall not exceed 120°F.

6.3.1.4 Where installed, the Seller shall demonstrate a full removal and replacement operation for pumps, valves, and instruments utilizing the tent or bag-in/bag-out method. The Seller shall provide maintenance manual(s) detailing procedures for removal and replacement of valves, instrumentation, and pumps. Spare o-rings, valve seats, and seals shall be ordered to replace original maintainable parts used in the removal/replacement demonstration. The Seller shall demonstrate the assembly and disassembly of the shielding.

6.3.1.5 The Seller shall demonstrate the correct operation of all valves.

6.3.1.6 Seller shall submit procedures for and perform a wiring insulation test and continuity check. Refer to 24590-WTP-3PS-EKP0-T0001, *Engineering Specification for Electrical Requirements for Packaged Equipment,* section 7.1 for additional testing requirements. Results of the test and check shall be included in the required documentation packages.

6.3.1.7 Seller shall demonstrate all internal equipment and surfaces are thoroughly washed by the spray rings/nozzles.

6.3.1.8 Seller shall demonstrate operation, assembly and disassembly of the column davits.

6.3.2 Surface Finish Inspection

6.3.2.1 The Seller shall develop and implement a procedure for visually inspecting the surface finish of each manufactured item. The inspections shall be performed after completion of all fabrication, cleaning, and testing, and just prior to final packaging.

6.3.2.2 Inspection of weld surface finishes, shall confirm that design requirements listed on the Process Bulge **Data Sheet** have been met.

6.3.2.3 Following inspection, the Seller shall document acceptance of surface finishes.

6.3.3 Visual Weld Inspection

6.3.3.1 The Seller shall develop and implement a procedure to perform visual weld inspections (visual tests, VT) to inspect each weld. The inspection for piping shall be developed in accordance with ASME B31.3 - 1996 **as tailored in Appendix C of this specification**, and shall include inspection materials and acceptance criteria. The remaining VT shall be

developed in accordance with ASME Section VII, **Div 1**. The visual weld inspection procedure shall be submitted to the Buyer for review and approval, prior to the inspection. Surface porosity and undercutting is not allowed.

6.3.3.2 The Seller shall prepare a visual weld inspection report for each fabricated item, which records inspection results, the date and time of inspection, and signatures of certified inspection personnel performing the inspection.

6.3.3.3 The visual weld inspection reports shall be included in the required documentation packages.

6.3.3.4 The Seller shall summarize the VT results in the weld map report for each item.

6.3.3.5 The Seller shall notify the Buyer in advance of inspection. The Buyer may send representatives to witness or perform an independent inspection.

6.3.4 Liquid Penetrant Test

6.3.4.1 The Seller shall develop and implement a procedure to perform a liquid penetrant test (PT) to inspect each weld, excluding handrails. PT testing for piping shall be in accordance with ASME B31.3 – 1996 **as tailored in Appendix C of this specification**. All Remaining PT shall be developed in accordance with ASME Section VII, **Div 1**, and shall include inspection materials, dwell time for dye and developer, and acceptance criteria. The liquid penetrant procedure shall be submitted to the Buyer for review and acceptance, prior to testing.

6.3.4.2 Acceptance criteria for PT inspection shall be in accordance with ASME B31.3 - 1996 **as tailored in Appendix C of this specification**. Surface porosity and undercutting is not allowed.

6.3.4.3 The Seller shall prepare a liquid penetrant test report for each weld connection on each fabricated item, which will record PT inspection results, the weld number, the date and time of inspection, and signatures of the certified inspection personnel performing the test.

6.3.4.4 The Seller shall include the liquid penetrant test reports in the required documentation packages.

6.3.4.5 The Seller shall summarize the PT results in the weld map report for each item.

6.3.4.6 The Seller shall notify the Buyer in advance of the test. The Buyer may send representatives to witness or perform an independent test.

6.3.5 Radiography

6.3.5.1 The Seller shall develop and implement a procedure to perform radiographic weld examinations of piping butt-welds as specified in

3.5.7.4 and of structural welds. The inspection shall be in accordance with ANSI/AISC N690-94 **as tailored in Appendix A of this specification**, AISC M016-1989 **as tailored in Appendix B of this specification**, or ASME B31.3-1996 **as tailored in Appendix C of this specification**, as appropriate, and shall include inspection materials and acceptance criteria. The weld radiography procedure shall be submitted to the Buyer for review and approval, prior to performing the radiographic examinations.

6.3.5.2 The Seller shall prepare a weld inspection report for fabricated piping systems, which records inspection results, the date and time of the inspection, and signatures of certified personnel performing the inspection.

6.3.5.3 The weld inspection report shall be included in the required documentation packages along with the exposed film, a copy of the technique and the reader sheets. The film must be suitably packaged to preclude moisture and handling damage.

6.3.5.4 The Seller shall summarize the radiography results in the weld map report for each item.

6.3.5.5 The Seller shall notify the Buyer in advance of inspection. The Buyer may send representatives to witness or perform an independent inspection.

6.3.6 Final Inspection

6.3.6.1 The Seller shall develop and implement a procedure for final inspection of each fabricated item. The inspections shall be performed after completion of all fabrication, cleaning, and testing, and just prior to final packaging.

6.3.6.2 The Seller shall inspect all surfaces for contamination. Visible evidence of contamination is not acceptable.

6.3.6.3 The Seller shall prepare a final inspection report for each item, which documents the results of the final inspection. The Seller shall include the final inspection report in the documentation package for each piece.

6.3.7 Environmental Qualification

6.3.7.1 The Seller shall develop and implement a procedure to perform environmental qualification tests, or similar, when applicable to provide evidence that the equipment supplied is qualified for its environmental design conditions.

6.4 Control of Measurement and Test Equipment

6.4.1 Testing shall be performed using calibrated equipment when required. The equipment shall be calibrated against certified measurement standards, having known valid relationships to national standards, at established intervals to ensure accuracy.

6.4.2 The Seller shall maintain records and mark equipment to show calibration status.

6.4.3 The Seller shall notify the Buyer when M&TE are found to be out of calibration after being used for inspection purposes, in compliance with this specification.

6.5 Inspection and Test Status

The Seller shall maintain a positive system for identifying inspection and testing status of items and systems.

6.6 Control of Nonconforming Items

The Seller shall provide a method of notifying the Buyer of fabrication items and activities, which do not conform to requirements.

7 Preparation for Shipment

7.1 General Requirements

7.1.1 Refer to section 7 of the Material Requisition for general requirements and Specification 24590-WTP-3PS-G000-T0003, *Engineering Specification for Packaging, Handling, and Storage Requirements.*

7.2 Cleanliness

7.2.1 Refer to 24590-WTP-3PS-PS02-T0001, *Engineering Specification for Shop Fabrication of Piping* for general requirements.

7.3 Painting

7.3.1 All ferrous surfaces other than corrosion resistant steel and finished machined mating surfaces shall be prepared and painted by the Seller in accordance with the paint manufacturer's instructions. Refer to specification 24590-WTP-3PS-AFPS-T0001, *Engineering Specification for Shop Applied Special Protective Coatings for Steel Items and Equipment* for painting requirements.

7.4 Tagging

7.4.1 A stainless steel nameplate containing the following information shall be rigidly attached to each Bulge. The nameplate shall be located in a prominent position for ease of visibility. The information shall be stamped or etched using 1/2" high characters. The nameplate shall include the following information, minimum:

Seller's Name/Address/Phone Number
Date of Manufacture
Buyer's Purchase Order Number
Seller's Contract Number
Plant Item Number
Weight of Assembly

7.4.2 When shipping loose bolting material, both Q and CM shall be placed in separate containers (box, bag). The container shall be marked with the Buyer Purchase Order Number, Plant Item Number, and Bill of Material item number to facilitate material control and assembly.

7.4.3 Each column davit shall be tagged with a permanent stainless steel tag indicating for which Bulges it was designed.

7.5 Packaging

7.5.1 Refer to 24590-WTP-3PS-G000-T0003, *Engineering Specification for Packaging, Handling and Storage Requirements* for general requirements.

7.6 Documentation

7.6.1 Seller shall ensure that appropriate documentation is prepared and, if required, signed by the appropriate person(s). The shipping documentation shall accurately reflect specific traceability to the items being shipped.

7.6.2 Seller shall ensure that appropriate documentation is prepared for the Process Bulges. At a minimum, documentation shall include the following information, as applicable:

- Manufacturer name, model number, and serial number
- Plant Item Number

7.7 Shipping Instructions

Shipping shall be conducted in accordance with Buyer specification 24590-WTP-3PS-G000-T0003, *Engineering Specification for Packaging, Handling and Storage Requirements.*

7.7.1 Process Bulges shall be shipped completely assembled. When required, shielding, Maintenance Platforms, and ladders shall be shipped separately.

7.7.2 Weatherproof shipping lists (two per packaged item) shall be prepared and submitted, and shall clearly identify the contents of each package sent to the Buyer. All submittals and shipping boxes shall be identified with the Buyer's PO number.

7.7.3 Seller shall provide a complete identification and location of temporary material contained within the equipment for shipment, handling, or storage that must be removed prior to commissioning (e.g., shipping blocks, glove bags, components shipped inside larger sections, etc.). In addition, the Seller shall provide instructions for the removal of temporary materials, as required.

7.7.4 The Process Bulges shall be mounted on skids, in crates, or in boxes, as suited for the intended method of transport. Lifting weight shall be clearly marked on both the equipment and its shipping documents.

8 Quality Assurance

8.1 General Requirements

The Quality Level will be identified on the Process Bulge Data Sheet and on the QA Data Sheet issued with the MR. Refer to section 9 of the Material Requisition for general requirements, and Specification 24590-WTP-3PS-G000-T0001, *General Specification for Supplier Quality Assurance Program Requirements*.

8.2 Quality (Q) Related Components

8.2.1 Seller shall have in place a QA program meeting the requirements of NQA-1 (1989), marked as applicable in the Supplier Quality Assurance Program Requirements Data Sheet attached to the MR, and Specification 24590-WTP-3PS-G000-T0001, *General Specification for Supplier Quality Assurance Program Requirements*.

8.2.2 The successful bidder must pass a pre-award survey by the Buyer. Seller shall demonstrate that its quality program is in compliance with the procurement quality requirements listed in the Supplier Quality Assurance Program Requirements Data Sheet. The Seller shall allow the Buyer, Buyer's Representative, and DOE access to their facility and records pertaining to this PO for the purpose of QA audits and surveillance at mutually agreed times.

8.2.3 All items shall be manufactured in accordance with the Seller's Quality Assurance Program that meets the requirements of NQA-1 (1989), and has been previously evaluated and accepted by the RPP-WTP QA organization.

8.2.4 Seller shall submit their QA program and work plan to the Buyer for review prior to commencement of work. The plan shall include documents and procedures to implement work and include a matrix of essential QA elements cross-referenced with documents/procedures.

9 Configuration Management

Equipment and/or components covered by this specification are identified with Plant Item Numbers, shown on the data sheets included in section 2 of the MR. Bulges shall be identified in accordance with Tagging in section 7.4 of this specification.

10 Documentation and Submittals

10.1 General Requirements

10.1.1 Seller shall submit to the Buyer all detailed designs, documentation, procedures, instructions, calculations, analyses, manufacturer's data, inspection reports, test reports, certifications, certificates, manuals, MSDS, and drawings required per this specification, the applicable codes, standards, and reference documents in Section 2 of this specification, and the MR.

10.1.2 Seller shall submit to Buyer Engineering and Quality Verification documents in the forms and quantities shown in Form G-321-E, *Engineering Document Requirements,* and Form G-321-V, *Quality Verification Document Requirements* attached to the MR.

10.1.3 Seller shall submit a report identifying any deviations and/or conflicts per Section 2 of the MR to the Buyer for review.

10.1.4 All documentation submittal packages shall have a documentation inventory sheet attached, listing all documents and the number of pages.

10.1.5 All detailed designs, drawings, supporting calculations, supporting analysis, supporting models, procedures, instructions, manufacturer data, operations manuals, and maintenance manuals shall be issued to the Buyer for review prior to the manufacture of the Process Bulges, special tools, and/or purchase of special tools and gaskets.

10.1.6 Seller shall submit storage requirements and instructions for Buyer's review. Documentation shall include maintenance requirements for the equipment and its components while in storage.

10.1.7 Data sheets in section 2 of the MR shall be marked-up by the Seller and submitted to the Buyer for the review with the detailed design. Seller shall fill in all of the information that is marked as "To be determined by the vendor" and mark-up actual overall Process Bulge dimensions based on the detailed design.

10.1.8 Seller shall provide all operations manuals, maintenance manuals, and spare parts lists for Process Bulges and components, as applicable.

10.1.9 Seller shall provide a Certificate of Compliance to the Buyer, which certifies that any equipment or components requiring Environmental Qualification (as specified in Section 2 of the Material Requisition) are qualified for their specified environment. As a minimum, Environmental Qualification Documentation shall contain:

- Identification of each type of equipment, component, or sub-component subject to Environmental Qualification (e.g. solenoids, wire, pressure transmitters, etc.)
- Equipment tag numbers, as applicable
- Environmental Qualification Conditions in accordance with requirements as specified in the Technical Notes of the MR
- Qualification method
- Qualified Life under specified conditions

10.2 30% Design Review

10.2.1 Seller shall conduct a 30% design review with the Buyer. Seller shall submit all drawings, procedures, calculations, analysis, and supplementary information necessary to conduct the 30% design review to the Buyer for review.

10.2.2 Finalized outline dimensions for the Process Bulges shall be included in the 30% design review. Finalized dimensions shall, at a minimum, include the following:

- dimensioned layout drawings of the Process Bulge, shielding and Maintenance Platform
- pipe slopes and nozzle locations
- platform configuration and attachments, ladder location, and openings in the platform guardrails
- penetration in walls/floor details
- volume of the internal pipework
- weight of the Process Bulge including shielding and Maintenance Platform, where required
- anchor requirements (anchor size, location, layout, etc.)
- completed Buyer supplied Mechanical Data Sheets, Electrical Data Sheets, and Instrument Data Sheets, as applicable
- preliminary maintenance procedure, including bag-in/bag-out procedure.

10.3 60% Design Review

10.3.1 Seller shall conduct a 60% design review with the Buyer. Seller shall submit all drawings, procedures, calculations, analyses, and supplementary information necessary to conduct the 60% design review to the Buyer for review including as a minimum:

- equipment assembly/arrangement drawings
- shop detail drawings with sufficient detail to facilitate fabrication, manufacture, or installation. This includes a complete Bill of Material (BOM), internal piping details, cross-sectional details, structural details, and anchor details
- wiring diagrams including schematic diagrams and interconnecting wiring diagrams for electrical/instrumentation requirements
- instrument air schematic diagrams
- engineering calculations and analyses (seismic and nozzle loads)

10.4 90% Design Review

10.4.1 Seller shall conduct a 90% design review with the Buyer. Seller shall submit all drawings, procedures, calculations, analyses, and information necessary to conduct a 90% design review to the Buyer for review.

10.5 Final Design Review

10.5.1 The Seller shall provide a final design report including all design documents, manuals, and drawings that are required by this specification.

10.6 Drawings

10.6.1 All drawings shall be produced per the drawing practices set forth in ASME Y14.100, *Engineering Drawing Practices.*

10.6.2 As-built drawings, with final dimensions, shall be developed and submitted after completion of the Bulge fabrication.

10.7 Calculations

All calculations to be provided shall be orderly, complete, and sufficiently clear to permit verification. The body of the calculations shall include:

- **The calculation shall be identifiable by: Subject (including component identifier), Originator, Reviewer, Approver, Revision and Date.**
- **Definition of the objective of the analysis (e.g; Purpose, Objective or Scope)**
- **Methodology**
- **Definition of design inputs and their sources**
- **References with identification of specific editions, revisions, dates**
- **Identification of assumptions and indication of those that require verification. If none of the assumptions require verification, the calculation shall state such.**
- **Identification of computer calculations including:**
  - **Computer Type**
  - **Identification of the program and revision/version**
  - **Evidence of or reference to the computer program verification**
  - **Bases or reference to the bases supporting application of the computer program to the specific physical problem being solved. (See sections 10.7.1.1, 10.7.1.2 and 10.7.1.3 for design code requirements)**
- **Equations used for all computations**
- **Numerical calculations including identification of units used**
- **A concise statement addressing the calculation results and/or recommendations**

- A table of contents for complex calculations

10.7.1 Design Stress Reports

Design Stress Reports shall include, as a minimum, the following information

10.7.1.1 ANSI/AISC N690 and AISC M016 for Bulge Enclosure Confinement Design

- All modeling inputs, applied loads, constraints, assumptions, etc., shall be provided for configuration compliance reviews.
- Compliance to the buckling requirements of ANSI/AISC N690 or AISC M016, as applicable, shall be provided. Note that the buckling formula in section Q1.5.9.1 of the ANSI/AISC N690-1994 code shall apply to AISC M016 for austenitic stainless steel buckling qualification.
- For each load case supply the resulting reaction loads at each of the embed interfaces.
- Weld sizing calculations, for all welds, shall be provided. Fillet welds are to be evaluated for shear stress on the basis of resultant loads on the throat along with considerations for the base metal.
- Bolt evaluation shall be performed in accordance with ANSI/AISC N690, section Q1.6.3 or AISC M016 requirements.
- For Finite Element Analysis (FEA) by Computer Program, submit the bases or reference to the bases that supports applicability of the computer program to the specific physical problem being solved. (e.g.; application /validation to steel code formulas and allowable stresses).
- For FEA, resultants must be cast in forms appropriate to code criteria being considered, e.g., column buckling with shell element models could be evaluated with axial stresses averaged over the member section to represent the appropriate axial compressive stress. The analysis must clearly identify the loads and criteria being addressed

10.7.1.2 ASME VIII, Div 2, Appendix 4, Nozzle to Shell Design Only

- All modeling inputs, applied loads, constraints, assumptions, etc., shall be provided for configuration compliance reviews.
- Compliance to ASME VIII, Div 2, Appendix 4, sections 4-131, 4-132, 4-133 and 4-134 shall be provided for the nozzle to shell connections.
- Weld sizing calculations, for all welds, shall be provided.
- For FEA Computer Program analysis, submittal for the bases or reference to the bases supporting application of the

computer program to the specific physical problem being solved. (e.g.; application/validation to the ASME VIII, Div 2, Appendix 4, Maximum Shear Stress Theory.)

- **Tresca (max shear) stress intensity outputs for each combined loading condition shall be compared with the allowable stress limit. Von Mises values are not acceptable.**

10.7.1.3 ASME B31.3 Piping Design

- **All modeling inputs, applied loads, constraints, assumptions, etc., shall be provided for configuration compliance reviews.**
- **ASME B31.3 piping stress analysis shall show all pipe supports, guides and anchor points. Pipe support details shall be provided. All nozzle displacements, seismic anchor moments, component deadweights and nozzle flexibilities shall be applied in the analysis.**
- **For Bulges that are SC-I and SC-II, supply the resulting nozzle displacements (in the X, Y, Z directions) at the location where the Buyers nozzle loads are applied.**
- **All other structural qualifications, such as: pipe supports, lifting lugs/devices, platforms/ladders, etc.**
- **For FEA Computer Program analysis, submittal for the bases or reference to the bases supporting application of the computer program to the specific physical problem being solved. [e.g.; application/validity to the ASME B31.3 design requirements in accordance with B31.3-96, section 300(c)(3)].**

10.8 Schedules

10.8.1 A detailed schedule of engineering, document submittal, material purchase, fabrication, shop tests, and shipment shall be submitted.

10.8.2 All procedures and instructions shall be completed and submitted to the Buyer a minimum of eight (8) weeks prior to Process Bulge shipment.

11 References

11.1 Incorporated Design Changes

- 24590-WTP-3PN-MX00-00003
- 24590-WTP-SDDR-PROC-03-0106
- 24590-WTP-3PN-MX00-00004
- 24590-WTP-3PN-MX00-00006
- 24590-WTP-3PN-MX00-00014
- 24590-WTP-3PN-MX00-00018
- 24590-WTP-3PN-MX00-00020

- 24590-WTP-3PN-MX00-00022
- 24590-WTP-3PN-MX00-00023

11.2 Design Changes Incorporated by Reference

- 24590-WTP-SDDR-PROC-03-0102
- 24590-WTP-SDDR-PROC-02-0063
- 24590-WTP-SDDR-PROC-05-00601
- 24590-WTP-SDDR-M-05-00332
- 24590-WTP-SDDR-M-05-00474
- 24590-WTP-SDDR-M-05-00685
- **24590-WTP-SDDR-M-06-00074**
- **24590-WTP-SDDR-M-06-00282**

Figure 1 Typical Representation of Process Pipework and Sleeve Pipes Penetrating the Cell Wall

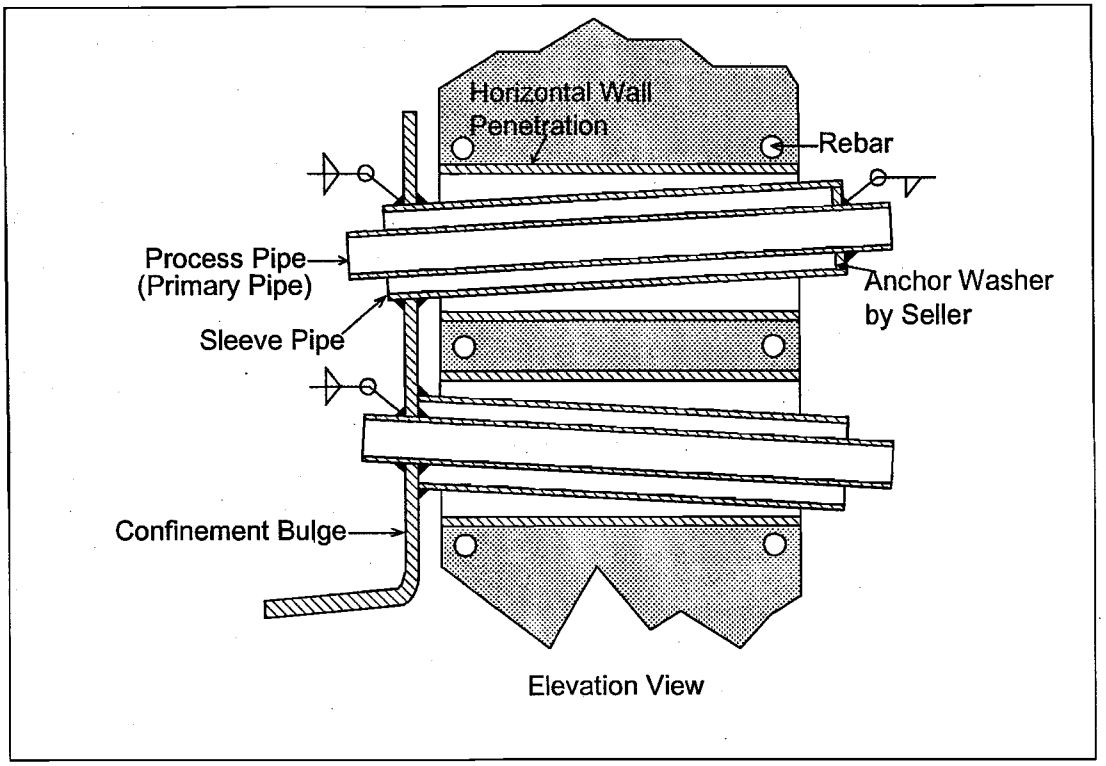

Figure 2 Typical Representations of Process Pipework and Floor Penetrations

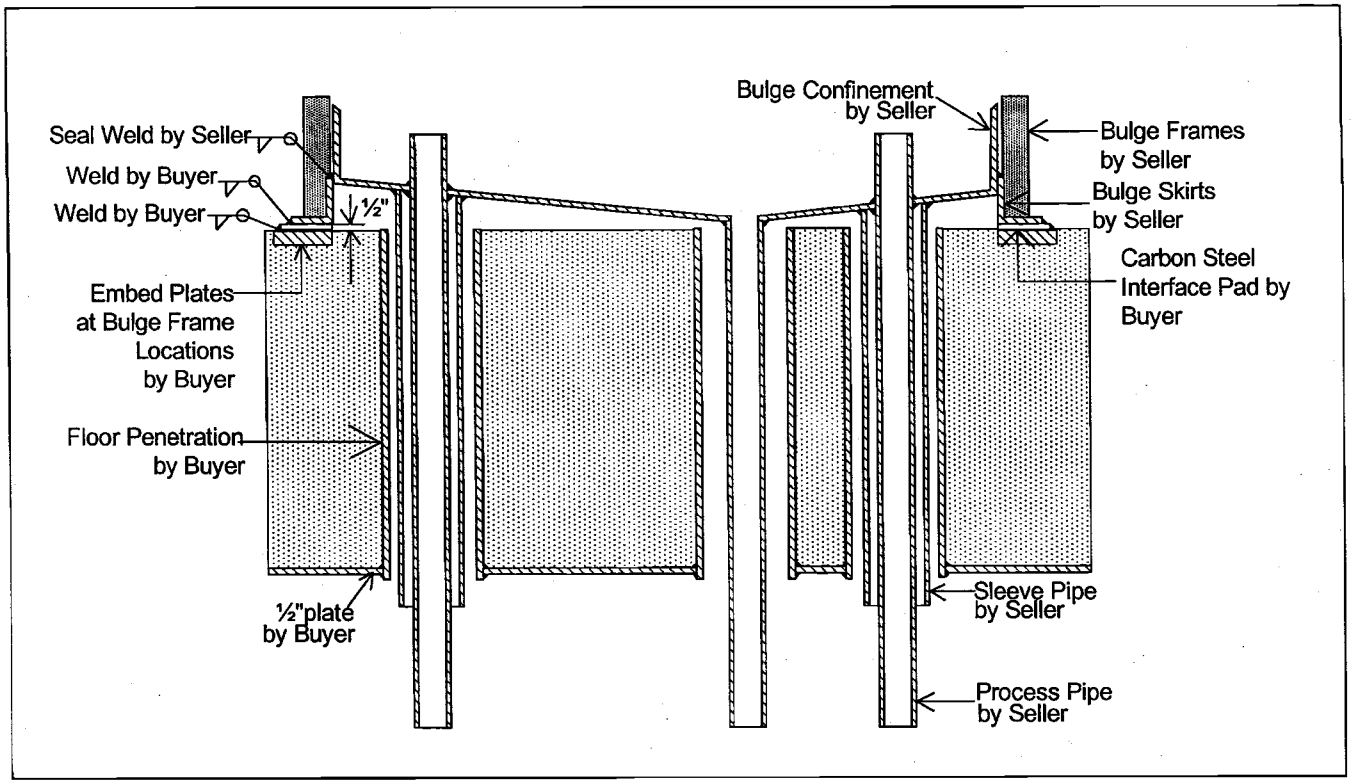

Figure 3 Conceptual Weir Design as a Primary and Secondary Strainer

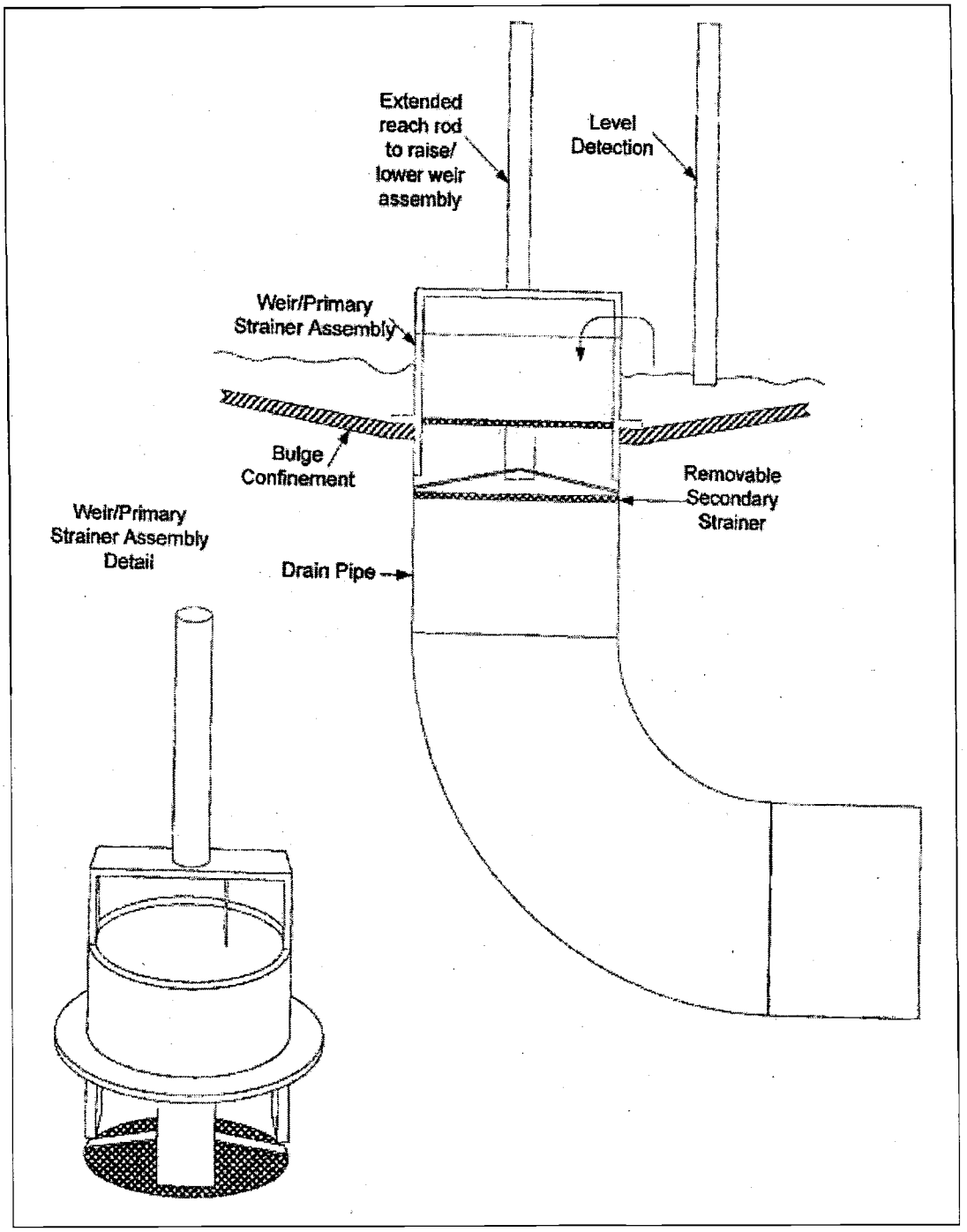

Figure 4 Conceptual Anchor Washers that Allow Drainage to Pass Through

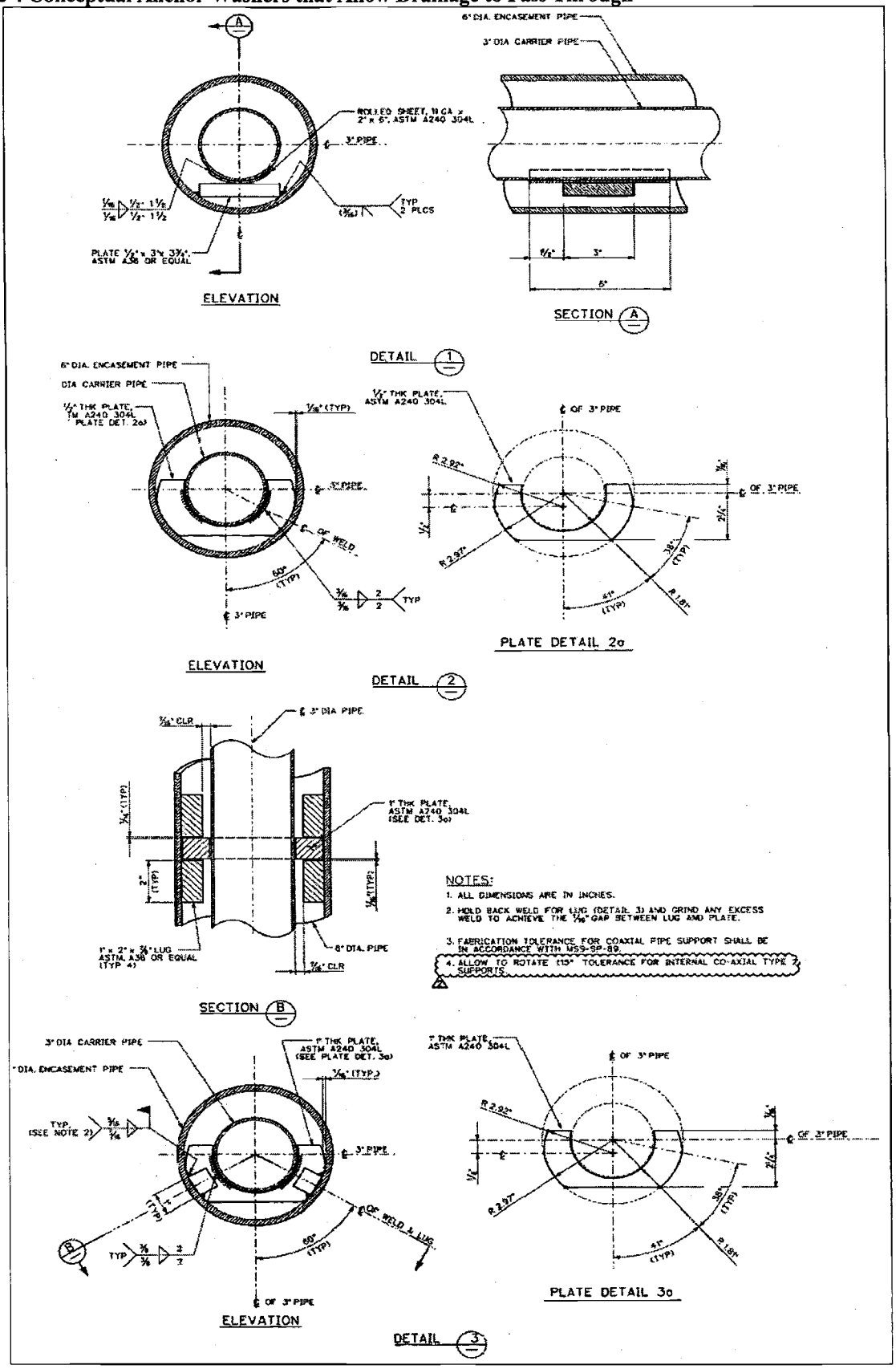

Table 1 **Process Pipe and Sleeve Pipe Sizes**

Process Pipe Size	Sleeve Pipe Size	Sleeve Pipe Schedule
1.0"	2.0"	40S
1.5"	3.0"	40S
2.0"	3.0"	40S
3.0"	4.0"	10S
4.0"	6.0"	10S
6.0"	8.0"	10S

Table 2 Minimum Design Loads for PTF Bulges

Deleted, PTF Bulge nozzle loads are located on appropriate PTF Bulge Data Sheet.

Table 3 Minimum Design Loads for LAW Bulges

Deleted, LAW & UFP Bulge nozzle loads are located on appropriate LAW & UFP Bulge Data Sheet

Appendix A - ANSI /AISC N690 Tailoring

Implementing Standards for ANSI/AISC N690, "Specification for the Design, Fabrication, and Erection of Steel Safety-Related Structures for Nuclear Facilities"

Revision: 1994
Sponsoring Organization: American National Standards Institute/American Institute of Steel Construction
WTP Specific Tailoring

The following tailoring of ANSI/AISC N690 is required for use by the WTP contractor as an Implementing Standard for structural design.

Page 22, Section Q1.5.7.1 Primary Stresses

Revise the stress limit coefficients for compression in Table Q1.5.7.1 as follows:

- 1.3 instead of 1.5 [stated in footnote (c)] in load combinations 2,5, and 6
- 1.4 instead of 1.6 in load combinations 7, 8, and 9
- 1.6 instead of 1.7 in load combination 11

Justification: These changes are made for consistency with the NRC requirements of Appendix F of section 3.8.4 of NUREG-0800 (Draft Rev. 2).

Page 22, Section Q1.5.7.1 Primary Stresses

Delete the following load combinations:

4. D + L + Eo
6. D + L + Ro + To + Eo

Justification: These load combinations are required for evaluation of an Operation Basis Earthquake (OBE). The WTP project has not identified an OBE event.

Appendix B - AISC M016 Tailoring

Implementing Standards for AISC M016, Manual of Steel Construction, Allowable Stress Design (ASD)

Revision: 9th Edition
Sponsoring Organization: American Institute of Steel Construction

WTP Specific Tailoring

The following tailoring of M016 is required for use by the WTP contractor as an implementing standard for design of structural steel for Seismic Category III SSCs.

No specific section

Load combinations for design of structural steel members utilize those identified in UBC 97, section 1612.3.

Justification: These load combinations represent the commercial requirements for allowable stress design of structural steel. Use of these load combinations will ensure compliance with the commercial design in accordance with the UBC.

No specific section

Seismic detailing requirements shall be in accordance with UBC 97, Chapter 22, Division V, section 2214, for moderate seismic risk structures.

Justification: The requirements contained in this section contain accepted industry practice for design of important commercial steel structures. Use of this section will ensure compliance with the commercial design in accordance with the UBC.

Appendix C - ASME B31.3 Tailoring

Implementing Standards for ASME B31.3, "Process Piping"

Revision: 1996
Sponsoring Organization: ASME

WTP Specific Tailoring

The following tailoring of ASME B31.3, *Process Piping*, is required for use by the WTP as an Implementing Standard for: (1) the fabrication and installation of those portions of the C5V ductwork that are being embedded in concrete, (2) the use of ASME B16.9 welding tees in accordance with ASME B31.3-2002, (3) use of vacuum box leak testing, and (4) the ASME B31.3-1998, paragraph 345.2.3(c), allowance for not leak testing closure welds outside of inaccessible areas.

- The tailored sections of ASME B31.3 applicable to welding tees will only be used for ASME B16.9 welding tees. As long as the stress intensification factors from ASME B31.3-2002 are used in the stress analysis for the welding tees, welding tees fabricated to either the 1996 or the 2002 edition of ASME B31.3 can be used. Below is a description of those portions of ASME B31.3, Appendix D, Table D300, that apply to welding tees and the section of the SRD to which they will apply.

Piping providing a confinement function in accordance with SRD 4.2-2 will comply with ASME B31.3-1996, *Process Piping*, with the following modifications:

In Table D300, the description of welding tee per ASME B16.9 Shall be revised so it is consistent with that shown in Table D300 of ASME B31.3-2002

Description	Flexibility Factor k	Stress Intensification Factor [Notes (2), (3)] Out-of-Plane, i_o	In-Plane i_I	Flexibility Characteristic, h	Sketch
Welded tee per ASME B16.9 [Notes (2), (4), (6), (11), (13)]	1	$\frac{0.9}{h^{2/3}}$	$3/4\ i_o + 1/4$	$3.1\frac{\overline{T}}{r_2}$	Same as ASME B31.3-1996

This means that for welding tees per ASME B16.9, note 11 in Table D300 is also changed to:

(11) If $r_x \geq 1/8 D_b$ and $T_c \geq 1.5\overline{T}$, a flexibility characteristic of $4.4\,\overline{T}/r_2$ may be used.

Justification: The use of a lower flexibility characteristic for welding tees per ASME B16.9 in accordance with ASME B31.3-2002 will increase both the out-of-plane and in-plane stress intensification factors. The increased stress intensification factors will reduce the allowable out-of-plane and in-plane moments that can be applied to the welding tee and keep the calculated stress below the stress allowable by ASME B31.3-1996

Appendix D - Combined Loadings

D-1 Combined Loadings for ANSI/AISC N690 - Bulge Confinement, Frame Designs, Structural Mounting Components, & Maintenance Platform

Combined Loading (See notes 2, 3, 4 and 8)	Load Application	ANSI/AISC N690 Allowable Stress S_{N690} = *S (See Note 1)
$P_{Normal} + D + L + Noz_{(D)}$	All	S
$P_{Normal} + D + L + R_0 + T_0$	All	S (See note 5)
$P_{Normal} + D + L + R_0 + S_{Bulge} + T_0$ $P_{Abnormal} + D + L + T_a + R_0 + S_{Bulge}$	Load combination also applies except for the design of members in compression and shear, or for bolted connections	1.6S
$P_{Normal} + D + L + R_0 + T_0 + S_{Bulge}$ $P_{Abnormal} + D + L + T_a + R_0$	Load combination also applies for the design of members in compression and shear and for bolted connections.	1.4S
$P_{Abnormal} + D + L + T_a + R_0 + S_{Bulge}$	Load combination applies for the design of members in compression.	1.6S
$P_{Abnormal} + D + L + T_a + R_0 + S_{Bulge}$	Load combination applies for design of members in shear and for design of bolted connections	1.4S

* S is the allowable stress per Allowable Stress Design Method

NOTES:

1) For temperatures above 150 ^{0}F the minimum yield stress, F_y, and F_u shall be reduced by 5% for every 100 ^{0}F increase in temperature above 100 ^{0}F as required by AISC N690, section CQ1.5. Ref: ANSI/AISC N690-1994, section CQ1.5.

   The modulus of elasticity, E, shall be reduced per Equation D-1. Ref: ASCE Manuals and Reports on Engineering Practice No. 78, Structural Fire Protection, Appendix A.1.2.2

2) Where any load reduces the effect of other loads, the corresponding coefficient for that load shall be taken as 0.9 if it can be demonstrated that the load is always present or occurs simultaneously with other loads. Otherwise, the coefficient for that load shall be taken as zero.

3) All load combinations shall be checked for zero live load condition.

4) Pressure load P_{Normal} or $P_{Anormal}$ shall be based on worse case minimum or maximum values.

5) For primary plus secondary stress, the allowable limits are increased by a factor of 1.3 per Appendix A above.

6) In no instance shall the allowable stress exceed $0.7F_u$ in axial tension nor $0.7F_u$ times the ratio Z/S for tension plus bending.

7) Secondary stresses which are used to limit primary stresses shall be treated as primary stresses. Excluded are the nozzle to shell connections.

8) The Combined Loading equations are directly referenced from the *Structural Design Criteria*, 24590-WTP-DC-ST-01-0001.

Equation D-1

$$E_{\text{Re duction}} = \left[1 + \left(\frac{(5/9)x(Temp - 32)}{2000\ L_N\left[\frac{(5/9)x(Temp - 32)}{1100}\right]}\right)\right] x(E)$$

Nomenclature:

L_N = natural logarithm

P_{Normal} = Maximum or Minimum Confinement Pressure for Normal Conditions

$P_{Abnormal}$ = Maximum or Minimum Confinement Pressure for Abnormal Conditions

D = Deadweight
Noz (D) = Piping Nozzle Loads: Deadweight (D) from Vendor and Buyer Piping
L = Live Loads
$\mathbf{R_0}$ = Piping Nozzle Reaction Loads: [Deadweight (D) + Thermal (T) + Seismic (S)] from Vendor and Buyer Piping
$\mathbf{T_0}$ = Thermal Loads during Normal Operating Conditions
$\mathbf{T_a}$ = Thermal Loads during Accident Conditions
$\mathbf{S_{Bulge}}$ = Seismic Bulge Load (24590-WTP-3PS-SS90-T0001 for SC-I/II)

D-2 Combined Loadings for AISC M016 - Bulge Confinement, Frame Designs, Structural Mounting Components, & Maintenance Platform

Combined Loading (see Note 2)	AISC M016 Allowable Stress S_{N690} = *S (see Note 3)
$D + L + Noz_{(D)}$	S
$\pm P_{Normal} + D + L + Noz_{(D)}$	S
$\pm P_{Abnormal} + D + L + Noz_{(D+T)} + (0.714 \times S_{Bulge})$	1.33S

* S is the allowable stress per Allowable Stress Design Method.

NOTES:

1) The buckling formula in section Q1.5.9.1 of the ANSI/AISC N690-1994 code shall apply to AISC M016 for austenitic stainless steel material buckling qualification (e.g.., compression, compression and bending).
2) Pressure load P_{normal} or $P_{abnormal}$ shall be based on worse case minimum or maximum values.
3) For temperatures above 150 ^{0}F the modulus of elasticity, E, and the minimum yield stress, F_y, shall be reduced to the values of Equation 3-1 and Equation 3-2 respectfully. Ref: ASCE Manuals and Reports on Engineering Practice No. 78, Structural Fire Protection, Appendix A.1.2.2.
4) Where any load reduces the effect of other loads, the corresponding coefficient for that load shall be taken as 0.9 if it can be demonstrated that the load is always present or occurs simultaneously with other loads. Otherwise, the coefficient for that load shall be taken as zero

Equation D-1

$$E_{\text{Re duction}} = \left[1 + \left(\frac{(5/9)x(Temp - 32)}{2000\ L_N\left[\frac{(5/9)x(Temp - 32)}{1100}\right]}\right)\right] x(E)$$

Equation D-2

$$F_{y\ \text{Re duction}} = \left[1 + \left(\frac{(5/9)x(Temp - 32)}{900\ L_N\left[\frac{(5/9)x(Temp - 32)}{1750}\right]}\right)\right] x(F_y)$$

Nomenclature:

$\mathbf{L_N}$ = natural logarithm
$\mathbf{P_{Normal}}$ = Maximum or Minimum Confinement Pressure for Normal Conditions
$\mathbf{P_{Abnormal}}$ = Maximum or Minimum Confinement Pressure for Abnormal Conditions
D = Deadweight
L = Live Loads
$\mathbf{Noz_{(D+T)}}$ = Piping Nozzle Loads: [Deadweight (D) + Thermal (T)] from Vendor and Buyer Piping
$\mathbf{S_{Bulge}}$ = Seismic Bulge Load (24590-WTP-3PS-FB01-T0001 for SC-III/IV)

D-3 Combined Loadings for ASME VIII, Div 2, Appendix 4, Nozzle to Confinement Shell Design

Normal Loading	1) Stress Limits Per ASME VIII, Div 2, Appendix 4, Fig. 4-130.1 2) Allowable Stress per ASME VIII, Div 1. (see Note 1) $S_{ASME\ VIII,\ Div\ 1\ @\ Max\ Op\ Temp\ F} = **S$
$P_{Normal} + D + L + Noz_{(D+T)}$	1.5S
$P_{Normal} + D + L + Noz_{(D+T)} + \Delta T$	$*S_{PS} > 3S$ or $2S_y$
Abnormal Loading	1) Stress Limits Per ASME VIII, Div 2, Appendix 4, Fig. 4-130.1 2) Allowable Stress per ASME VIII, Div 1. (see Note 2) $S_{ASME\ VIII,\ Div1\ @\ Max\ Abnormal\ Temp\ F} = **S$
$P_{Abnormal} + D + L + Noz_{(D+T)} + S_{Nozzle} + S_{Bulge}$	$1.5 \times 1.2S = 1.8S$
$P_{Abnormal} + D + L + Noz_{(D+T)} + S_{Nozzle} + S_{Bulge} + \Delta T$	$*S_{PS} > 3S$ or $2S_y$

* Allowable yield stress S_y shall be per ASME II, Part D, Table Y-1.

** Allowable stress S shall be per ASME VIII, Div 1 as specified in ASME II, Part D, Table 1A as follows:

Where two stress values are specified for the same material and related to deformation governed by a footnote:

- Use the higher stress value for abnormal conditions
- Use the lower stress value for normal conditions

NOTES:

1) Primary membrane stress shall be 1S for normal conditions and 1.2S for abnormal conditions.
2) If applicable, peak stresses shall be evaluated per the stress limits and allowables of ASME VIII, Div 2, Appendix 4, Figure 4-130.1.

Nomenclature:

P_{Normal} = Maximum or Minimum Confinement Pressure for Normal Conditions

$P_{Abnormal}$ = Maximum or Minimum Confinement Pressure for Abnormal Conditions

D = Deadweight

L = Live Loads

$Noz_{(D+T)}$ = Piping Nozzle Loads: [Deadweight (D) + Thermal (T)] from Vendor and Buyer Piping

S_{Nozzle} = Piping Nozzle Loads: Seismic (S) from Vendor and Buyer Piping

S_{Bulge} = Seismic Bulge Load (24590-WTP-3PS-SS90-T0001 for SC-I/II or 24590-WTP-3PS-FB01-T0001 for SC-III/IV)

ΔT = Minimum Shell to Maximum Pipe Differential Temperature: [(Pipe Nozzle Operating Temp) − (59^0F)]

Drawings and Documents

Operating Unit Group 10 – Appendix 7.9
WTP Documents Applicable to All Areas
Material Selection Documentation

The documents listed in the following table are incorporated by reference into this permit and are subject to the requirements set forth in Part I Standard Conditions, Part II General Facility Conditions, and Part III Operating Unit Group 10 Conditions. Upon request, copies of the documents can be viewed at the Nuclear Waste Program Resource Center located at 3100 Port of Benton Blvd. Richland, WA. Appointments for viewing can be scheduled by calling (509) 372-7950.

Drawing/Document Number	***Description***
24590-WTP-PER-M-02-001, Rev 3	Material Selections for Building Secondary Containment / Leak Detection
24590-WTP-PER-M-02-002, Rev 2	Materials for Ancillary Equipment
RESERVED	RESERVED

Source documents (which do not include a "P" in the last set of numbers, e.g. "-P0001," or "-TP001") should be used in conjunction with any document change notices issued against them.

We are currently transitioning from permit documents (which do include a "P" in the last set of numbers) to source documents. At the end of the transition period, permit submittals will contain source documents and will be incorporated into the permit as described in Ecology Publication # 07-05-006 (www.ecy.wa.gov/biblio/nwp.html).

1
2
3
4
5

This page intentionally left blank.

R10961007

ISSUED BY
RPP-WTP PDC

Document title: **Materials for Ancillary Equipment**

Contract number: DE-AC27-01RV14136

Department: Engineering

Author(s): DE Mitchell

Principal author signature:

Document number: 24590-WTP-PER-M-02-002, Rev 2

Checked by: JR Divine

Checker signature:

Date of issue: 10/21/08

Issue status: Approved

Approved by: SW Vail

Approver's position: Supervisor, Materials Engineering Technology

Approver signature:

This bound document contains a total of 8 sheets

River Protection Project
Waste Treatment Plant
2435 Stevens Center Place
Richland, WA 99354
United States of America
Tel: 509 371 2000

Notice

Please note that source, special nuclear, and byproduct materials, as defined in the Atomic Energy Act of 1954 (AEA), are regulated at the US Department of Energy (DOE) facilities exclusively by DOE acting pursuant to its AEA authority. DOE asserts that pursuant to the AEA, it has sole and exclusive responsibility and authority to regulate source, special nuclear, and byproduct materials at DOE-owned nuclear facilities. Information contained herein on radionuclides is provided for process description purposes only.

History Sheet

Rev	Date	Reason for revision	Revised by
0	8/22/02	Issued for Permitting Use	JR Divine
1	3/19/04	Issued for Permitting Use	JR Divine
2	10/21/08	Total Revision, Issued for Permitting Use	DE Mitchell

Contents

1 Introduction 1
2 Applicable Documents 1
3 Description 1
3.1 Heat Exchangers 2
3.2 Pumps 2
3.3 Piping 2
4 Application of the information 3
5 Summary 4

1 Introduction

The Washington Administrative Code, 173-303-640(3)(a), states that the tank system and ancillary equipment shall be compatible with the waste. This report addresses material selection for corrosion protection of WTP ancillary waste containment equipment. External corrosion protection of pipe in direct contact with the soil or water is not addressed in this report.

According to WAC-173-303-040, Definitions: "Ancillary equipment" means any device including, but not limited to, such devices as piping, fittings, flanges, valves, and pumps, that is used to distribute, meter, or control the flow of dangerous waste from its point of generation to a storage or treatment tank(s), between dangerous waste storage and treatment tanks to a point of disposal on-site, or to a point of shipment for disposal off-site. The definition as used here does not include gaskets, seals, or other non-metallic components.

2 Applicable Documents

The Washington Administrative Code, WAC-173-303-640, Tank Systems

3 Description

The waste containment piping and ancillary equipment material selection is based on the Corrosion Evaluations performed for vessels, tanks, columns, evaporators, ultrafilters, filtration units, lutepots, and breakpots (herein after all are referred to as vessels). Corrosion Evaluations include reviews of:

- General Corrosion,
- Pitting Corrosion,
- End Grain Corrosion,
- Stress Corrosion Cracking,
- Crevice Corrosion,
- Corrosion at Welds,
- Microbiologically Induced Corrosion (MIC),
- Fatigue/Corrosion Fatigue,
- Vapor Phase Corrosion,
- Erosion,
- Galling,
- Fretting/Wear,
- Galvanic Corrosion,
- Cavitation, and
- Creep

3.1 Heat Exchangers

Corrosion Evaluations for process heat exchangers address both the process and cooling sides of the heat exchanger

In tube heat exchangers the shell has a suitable corrosion allowance based on the shell material, the design life of the heat exchanger, and fluid contained by the shell. The corrosion allowance of the tubes might be zero where provisions have been made to replace the heat exchanger and/or tubes, and adding material to the tubes will greatly increase the heat transfer resistance and the size of the heat exchanger.

3.2 Pumps

Corrosion Evaluations are prepared, as required, for the containment boundaries of the pump. For pumps, where more wear can be expected due to increased velocities, a Corrosion Evaluation is prepared for the component to ensure that the materials specified are consistent with the expected chemistry, pH, temperature, and process conditions. Based on the design life of centrifugal pumps, the less easily replaced volute casing has a larger corrosion allowance than the impeller, which may have to be replaced as the efficiency of the pump decreases.

3.3 Piping

Because of the detailed corrosion analysis done on each vessel and the large number of pipes entering or leaving each vessel, a conservative approach has been used. This approach is to construct ancillary equipment downstream of a source vessel of the same material as the vessel and with the same or greater corrosion allowance. If the service seen in the downstream line warrants a different material or corrosion allowance, approval from the Materials Engineering Technology (MET) group is required.

Some exceptions to this philosophy include offgas lines or liquid pipelines exposed to multiple liquids or piping exposed to the same waste stream as the vessel but for shorter periods of times and at the same or lower temperatures as the vessel. Under these conditions, a less resistant material or lower corrosion allowance would be acceptable.

Drain piping that drains to vessels is typically 316L stainless steel. This is based on their limited use and flushing after use.

Exceptions are made for extremely long lines, such as for transfer lines between facilities, that will be flushed and, if needed, flushed with alkaline solutions after each use. Exceptions can also be made if the component is maintainable. In those cases, the alloy selected may be slightly less corrosion resistant but fully qualified for its use and expected life. If the restrictions given for an exemption cannot be met or the specified alloy is not available, then a more corrosion resistant alloy, as specified on the Corrosion Evaluation for the vessel, may be used. Steam ejectors located in some vessels and the downstream lines are subjected to an elevated temperature, they may be fabricated from the more corrosion resistant Hastelloy C-22.

Several high performance materials, erosion and corrosion resistant, are used in the WTP piping systems. These include:

UNS No.	Trade Name	Typical WTP Application
S30403	304L	air, water, reagents, nitric acid, waste, some vent systems
S31603	316L	water, dilute nitric acid, waste, vent systems
N08367/N08926	6% Mo	waste
N06022	Alloy C-22	waste
R50400	Ti-2	canister, cerium nitrate, decontamination

When chemical compatibility is not a question, but erosion is a concern, additional erosion allowances will be specified.

Slurries without glass formers:
Generally the corrosion resistant alloys, i.e. stainless steel, 6% Mo, and C-22, are also resistant to erosion when the slurry velocity is less than 12 feet per second and undissolved solids content is less than or equal to 2wt%. In this case the erosion allowance is 0.004 inch for a 40 yr allowance.

When the undissolved solids content is greater than 2wt% but less than or equal to approximately 27.3 wt% the erosion allowance is 0.016 inch.

When the velocity and/or undissolved solids content is greater or other materials of construction specified, the erosion allowance shall be justified by calculation.

Slurries with glass formers:
When slurry velocity is less than 10 feet per second, a 40 yr erosion allowance of 1/8 inch is added. When velocities are greater than 10 feet per second the erosion allowance, or other materials of construction, shall be justified by calculation.

As noted above, selection criteria are documented in the Corrosion Evaluations.

4 Application of the information

The lowest acceptable piping materials are shown on Material Selection Guide drawings which depict the materials for major process lines. A piping class that is consistent with the material shown on the Material Selection Guide, the process fluid code, and the solids content of the fluid are shown by the piping class for each pipeline on the Piping and Instrument Diagram (P&ID). As part of the check procedure to ensure that the correct material has been chosen, the P&ID is routed through the MET group as required to ensure that the piping class chosen meets the required material and corrosion allowances.

5 Summary

1. Ancillary equipment is fabricated from the same material, or better, as the source vessel unless otherwise specified by the MET group.

2. The corrosion allowances used for the ancillary equipment are the same as that of the source vessel unless the MET group determines that the service seen in the downstream line warrants a different material, corrosion allowance, or other modification.

3. Any exceptions to (1 or 2) are evaluated by the MET group and may result in additional operating restrictions.

4. As part of the check procedure to ensure that the correct material has been chosen, the P&ID is routed through the MET group as required to ensure that the piping class chosen meets the required material and corrosion allowances.

Drawings and Documents

Operating Unit Group 10 – Appendix 7.11
WTP Documents Applicable to All Areas
IQRPE Reports

The documents listed in the following table are incorporated by reference into this permit and are subject to the requirements set forth in Part I Standard Conditions, Part II General Facility Conditions, and Part III Operating Unit Group 10 Conditions. Upon request, copies of the documents can be viewed at the Nuclear Waste Program Resource Center located at 3100 Port of Benton Blvd. Richland, WA. Appointments for viewing can be scheduled by calling (509) 372-7950.

Drawing/Document	***Description***
24590-CM-HC4-HXYG-00138-02-00056, Rev 00A	IQRPE Integrity Assessment Report for WTP Underground Transfer Lines & Ancillary Equipment
RESERVED	RESERVED

Source documents (which do not include a "P" in the last set of numbers, e.g. "-P0001," or "-TP001") should be used in conjunction with any document change notices issued against them.

We are currently transitioning from permit documents (which do include a "P" in the last set of numbers) to source documents. At the end of the transition period, permit submittals will contain source documents and will be incorporated into the permit as described in Ecology Publication # 07-05-006 (www.ecy.wa.gov/biblio/nwp.html).

This page intentionally left blank.

Drawings and Documents

Operating Unit Group 10 – Appendix 7.12
WTP Documents Applicable to All Areas
Installation Plans

The documents listed in the following table are incorporated by reference into this permit and are subject to the requirements set forth in Part I Standard Conditions, Part II General Facility Conditions, and Part III Operating Unit Group 10 Conditions. Upon request, copies of the documents can be viewed at the Nuclear Waste Program Resource Center located at 3100 Port of Benton Blvd. Richland, WA. Appointments for viewing can be scheduled by calling (509) 372-7950.

Drawing/Document Number	***Description***
24590-WTP-PER-CON-02-001, Rev 5	Installation of Tank Systems & Miscellaneous Unit Systems
24590-WTP-PER-M-06-001 Rev 0	Tank System and Miscellaneous Unit System Piping Weld Nondestructive Examination Requirements
RESERVED	RESERVED

Source documents (which do not include a "P" in the last set of numbers, e.g. "-P0001," or "-TP001") should be used in conjunction with any document change notices issued against them.

We are currently transitioning from permit documents (which do include a "P" in the last set of numbers) to source documents. At the end of the transition period, permit submittals will contain source documents and will be incorporated into the permit as described in Ecology Publication # 07-05-006 (www.ecy.wa.gov/biblio/nwp.html).

This page intentionally left blank.

Drawings and Documents

Operating Unit Group 10 – Appendix 7.15
WTP Documents Applicable to All Areas
Operating Documents

The documents listed in the following table are incorporated by reference into this permit and are subject to the requirements set forth in Part I Standard Conditions, Part II General Facility Conditions, and Part III Operating Unit Group 10 Conditions. Upon request, copies of the documents can be viewed at the Nuclear Waste Program Resource Center located at 3100 Port of Benton Blvd. Richland, WA. Appointments for viewing can be scheduled by calling (509) 372-7950.

Drawing/Document Number	***Description***
24590-WTP-PER-HV-02-001, Rev 1	Fugitive Emissions Control Description
24590-WTP-PER-M-02-005, Rev 1	Description for Access for Conducting Integrity Assessments
RESERVED	RESERVED

Source documents (which do not include a "P" in the last set of numbers, e.g. "-P0001," or "-TP001") should be used in conjunction with any document change notices issued against them.

We are currently transitioning from permit documents (which do include a "P" in the last set of numbers) to source documents. At the end of the transition period, permit submittals will contain source documents and will be incorporated into the permit as described in Ecology Publication # 07-05-006 (www.ecy.wa.gov/biblio/nwp.html).

This page intentionally left blank.

Operating Unit Group 10 – Appendix 8.0

Where information regarding treatment, management, and disposal of the radioactive source, byproduct material, and/or special nuclear components of mixed waste (as defined by the Atomic Energy Act of 1954, as amended) has been incorporated into this permit, it is not incorporated for the purpose of regulating the radiation hazards of such components under the authority of this permit and chapter 70.105 RCW. In the event of any conflict between Permit Condition III.10.A and any statement relating to the regulation of source, special nuclear, and byproduct material contained in portions of the permit application that are incorporated into this permit, Permit Condition III.10.A will prevail.

Operating Unit Group 10 – Appendix 8.0

Pretreatment Facility Building
Index

Appendix 8.1	Process Flow Diagrams
Appendix 8.2	Piping and Instrumentation Diagrams
Appendix 8.3	System Description Documentation (RESERVED)
Appendix 8.4	General Arrangement Drawings
Appendix 8.5	Civil, Structural, and Architectural Criteria and Typical Design Details
Appendix 8.6	Mechanical Drawings
Appendix 8.7	Specifications
Appendix 8.8	Engineering Calculations
Appendix 8.9	Material Selection Documentation
Appendix 8.10	Critical Systems Equipment/Instrument List
Appendix 8.11	IQRPE Reports
Appendix 8.12	Installation Plans (RESERVED)
Appendix 8.13	Instrument Control Logic and Narrative Descriptions
Appendix 8.14	Descriptions of Instrument Installation and Testing Procedures (RESERVED)
Appendix 8.15	Demonstration Test Plan (RESERVED)
Appendix 8.16	Demonstration Test Report (RESERVED)
Appendix 8.17	Treatment Effectiveness Report (RESERVED)
Appendix 8.18	Operating Documents (RESERVED)

This page intentionally left blank.

Drawings and Documents

Operating Unit Group 10 – Appendix 8.1
Pretreatment Building
Process Flow Diagrams

The documents listed in the following table are incorporated by reference into this permit and are subject to the requirements set forth in Part I Standard Conditions, Part II General Facility Conditions, and Part III Operating Unit Group 10 Conditions. Upon request, copies of the documents can be viewed at the Nuclear Waste Program Resource Center located at 3100 Port of Benton Blvd. Richland, WA. Appointments for viewing can be scheduled by calling (509) 372-7950.

Drawing/Document Number	*Description*
24590-PTF-M5-V17T-P0003, Rev 0	Process Flow Diagram (FRP System)
24590-PTF-M5-V17T-00004001, Rev 3	Process Flow Diagram (FEP System Sheet 1 of 2)
24590-PTF-M5-V17T-00004002, Rev 3	Process Flow Diagram (FEP System Sheet 2 of 2)
24590-PTF-M5-V17T-P0005, Rev 0	Process Flow Diagram (TLP System)
24590-PTF-M5-V17T-P0006, Rev 0	Process Flow Diagram (TCP System)
24590-PTF-M5-V17T-P0007, Rev 0	Process Flow Diagram (HLP System)
24590-PTF-M5-V17T-P0008, Rev 0	Process Flow Diagram (HLP System)
24590-PTF-M5-V17T-P0009, Rev 0	Process Flow Diagram (UFP System)
24590-PTF-M5-V17T-P0010, Rev 0	Process Flow Diagram (UFP System)
24590-PTF-M5-V17T-P0011, Rev 0	Process Flow Diagram (UFP System)
24590-PTF-M5-V17T-P0012, Rev 0	Process Flow Diagram (CXP System)
24590-PTF-M5-V17T-P0013, Rev 0	Process Flow Diagram (CXP System)
24590-PTF-M5-V17T-P0014, Rev 1	Process Flow Diagrams (CNP System)
24590-PTF-M5-V17T-P0020, Rev 1	Process Flow Diagram (RDP System)
24590-PTF-M5-V17T-P0021001, Rev 0	Process Flow Diagrams (PVP System)
24590-PTF-M5-V17T-P0021002, Rev 0	Process Flow Diagrams (PJV System)
24590-PTF-M5-V17T-P0021004, Rev 0	Process Flow Diagrams (PVP System)
24590-PTF-M5-V17T-P0022001, Rev 0	Process Flow Diagram (PWD System)
24590-PTF-M5-V17T-P0022002, Rev 2	Process Flow Diagram (PWD System)

24590-PTF-M5-V17T-P0022003, Rev 0	Process Flow Diagram (PWD/RLD Systems)
24590-PTF-M5-V17T-P0022004, Rev 0	Process Flow Diagram (RLD System)
24590-PTF-M5-V17T-P0025, Rev 0	Process Flow Diagram (CXP System)
RESERVED	RESERVED

Source documents (which do not include a "P" in the last set of numbers, e.g. "-P0001," or "-TP001") should be used in conjunction with any document change notices issued against them.

We are currently transitioning from permit documents (which do include a "P" in the last set of numbers) to source documents. At the end of the transition period, permit submittals will contain source documents and will be incorporated into the permit as described in Ecology Publication # 07-05-006 (www.ecy.wa.gov/biblio/nwp.html).

PLANT ITEM NUMBER	FEP-VSL-00017A	FEP-PMP-00010A/11A	FEP-PMP-00010B/11B	FEP-VSL-00021	FEP-VSL-00022	FEP-VSL-00017B	FEP-PMP-00007A/B	FEP-VSL-00005	FEP-PMP-00006A/B
DESCRIPTION	WASTE FEED EVAPORATOR FEED VESSEL	REBOILER CONDENSATE RECYCLE PUMPS	REBOILER CONDENSATE TRANSFER PUMPS	REBOILER CONDENSATE TRANSFER VESSEL	REBOILER CONDENSATE TRANSFER VESSEL	WASTE FEED EVAPORATOR FEED VESSEL	WASTE FEED EVAPORATOR FEED PUMP	WASTE FEED EVAPORATOR CONDENSATE VESSEL	WASTE FEED EVAPORATOR CONDENSATE PUMP
BATCH VOLUME	50,000 GAL					50,000 GAL	-	4144 GAL OPERATION VOLUME	-
OPERATING DUTY/CAPACITY	-	1.7 GPM	43 GPM	225 GAL MOV	225 GAL MOV	-	50 GPM	-	82 GPM

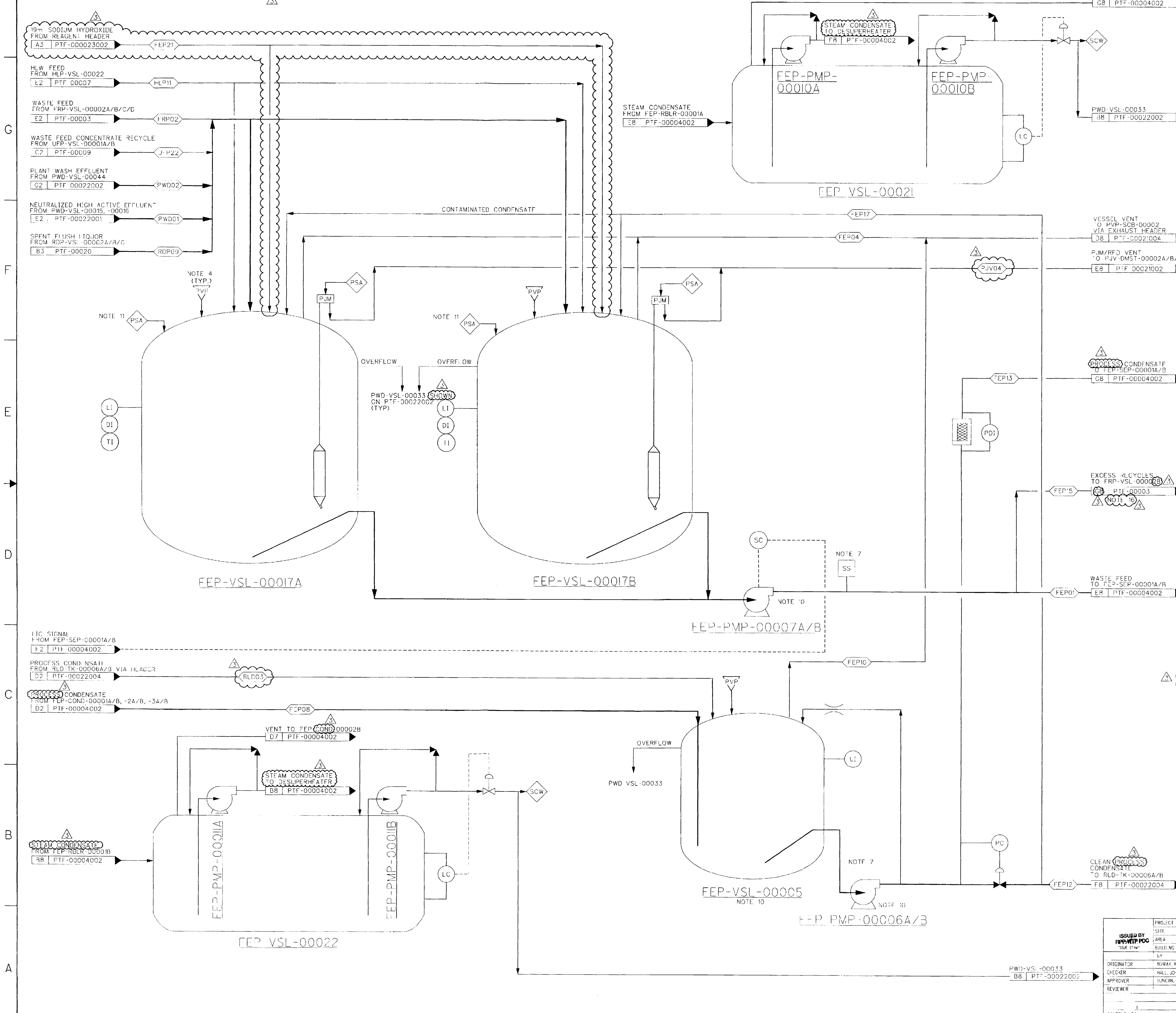

NOTES:

1. VESSELS FEP-VSL-00017A/B AND FEP-VSL-00005 WILL BE FITTED WITH WASH RINGS FOR DECONTAMINATION PURPOSES.
2. DELETED
3. ONLY MAIN PROCESS CONTROL INSTRUMENTS ARE SHOWN.
4. VESSELS FEP-VSL-00017A/B AND FEP-VSL-00005 WILL HAVE A PASSIVE AIR INLET LINE (SEE 24590-PTF-M5-V17T-00021003) TO PURGE THE VESSEL VAPOR SPACE.
5. DELETED
6. CONTENTS OF THIS DOCUMENT ARE DANGEROUS WASTE PERMIT AFFECTING.
7. LOCAL SAMPLE COLLECTION AVAILABLE FOR VESSEL FEP-VSL-00005. VESSELS FEP-VSL-00017A/B UTILIZE REMOTE SAMPLING.
8, 9. DELETED
10. COMPONENTS ARE SHARED BY EACH OF THE TWO EVAPORATOR TRAINS. SEE SHEET 2 FOR COMPONENTS DEDICATED TO EACH EVAPORATOR TRAIN.
11. FORCED PURGE AIR SUPPLY WILL BE PROVIDED TO THE VESSEL VIA A SEPARATE NOZZLE FROM THE PLANT SERVICE AIR HEADER WITH BACKUP IMPORTANT TO SAFETY AIR FOR HYDROGEN MITIGATION. THE PVP SYSTEM WILL INCLUDE THE PIPING, VALVES, AND INSTRUMENTS FOR THE FORCED PURGE AIR SUPPLY.
12, 13. DELETED
14. REVISION 2: INCORPORATED 24590-PTF-M5N-V17T-00055. ADDED FEP-VSL-00021 AND -00022. DELETED NOTE 12. REVISED NOTES 1 AND 4.
15. REFER TO 24590-WTP-M5-V17T-00001 FOR LEGEND AND SYMBOLS.
16. FEP-SEP-00001A/B AND FEP-VSL-00017A/B HAVE THE ABILITY TO FEED INTO ANY OF THE (4) FEED RECEIPT VESSELS. ALTERNATIVE ROUTING TO FRP-VSL-00002A/C/D IS VIA JUMPER CONNECTION.
17. REVISION 3: REVISED TO INCORPORATE FEP21 STREAM AND OFF-SHEET CONNECTORS, REVISED EQUIPMENT DATA, REVISED PJV04 AND RLD03 STREAM LABELS, AND ADDED/DELETED NOTES.

HOLD/OPEN ITEMS:

NONE

REFERENCES:

NONE

DRAWING INDEX		
DWG NO	REV	TITLE
24590-PTF-M5-V17T-00004001	3	PROCESS FLOW DIAGRAM - WASTE FEED EVAPORATION - SHEET 1 OF 2 - SYSTEM FEP
24590-PTF-M5-V17T-00004002	3	PROCESS FLOW DIAGRAM - WASTE FEED EVAPORATION - SHEET 2 OF 2 - SYSTEM FEP

Please note that source, special nuclear, and byproduct materials, as defined in the Atomic Energy Act of 1954 (AEA) are regulated at the U. S. Department of Energy (DOE) facilities exclusively by DOE acting pursuant to its AEA authority. DOE asserts that pursuant to AEA, it has sole and exclusive responsibility and authority to regulate source, special nuclear, and byproduct materials at DOE-owned nuclear facilities. Information contained herein on radionuclides is provided for process description purposes only.

REV	DESCRIPTION	ORG	CHKD	RVWD	APVD	DATE
3	REVISED PER NOTE 17			ELS		1/31/08
2	REVISED PER NOTE 14	SNR	DRR	JWO	RV	5/25/06
C	ISSUED FOR DESIGN	RN	JCH	NA	GD	7/19/02

REVISION HISTORY

ISSUED BY RPP-WTP PDC
ISSUE STAMP

PROJECT No.	24590	
SITE	HANFORD	
AREA	200E	
BUILDING No.	10	
	BY	DATE
ORIGINATOR	NOWAK, RAYMOND	7/16/02
CHECKER	HALL, JOHN C.	7/16/02
APPROVER	DUNCAN, GARTH	7/19/02
REVIEWER		

CONTENT APPLICABLE TO ALARA? [X] YES [ ] NO
ADR NO. 24590-PTF-ADR-PR-03-018 REV: 0
SAFETY SCREEN REQUIRED? [X] YES [ ] NO F&NS INITIAL IF YES

RIVER PROTECTION PROJECT
WASTE TREATMENT PLANT
2435 STEVENS CENTER PLACE
RICHLAND, WA 99354

CONTRACT No: DE-AC27-01RV14136

PROCESS FLOW DIAGRAM
WASTE FEED EVAPORATION
SHEET 1 OF 2
SYSTEM FEP

SCALE: NONE

24590-PTF-M5-V17T-00004001 REV 3

SAFETY SCREEN IS REQUIRED FOR DRAWING TYPES IDENTIFIED IN 24590-WTP-GPP-SREG-002

'E' SIZE - 44x34
COMPUTER GENERATED - MANUAL CHANGES NOT PERMITTED

R10881724

24590-PTF-M5-V17T-00004002

	FLP-RBLR-00001A/B	FEP-PMP-00009A/B	FEP-SEP-00001A/B	FEP-PMP-00008A/B	FEP-COND-00001A/B	FEP-COND-00002A/B	FEP-COND-00003A/B
PLANT ITEM NUMBER							
DESCRIPTION	WASTE FEED EVAPORATOR REBOILER	WASTE FEED EVAPORATOR RECIRCULATION PUMP	WASTE FEED EVAPORATOR SEPARATOR VESSEL	WASTE FEED EVAPORATOR CONCENTRATE PUMP	WASTE FEED EVAPORATOR PRIMARY CONDENSER	WASTE FEED EVAPORATOR INTERCONDENSER	WASTE FEED EVAPORATOR AFTERCONDENSER
BATCH VOLUME							
OPERATING DUTY/CAPACITY	19 MM BTU/HR	1,000 GPM	4819 GAL OPERATION VOLUME	50 GPM (3)	17.2 MM BTU/HR	0.44 MM BTU/HR	0.17 MM BTU/HR

NOTES:

1. DELETED
2. CONDENSERS FEP-COND-00003A/B TO BE INSTALLED AT A BAROMETRIC HEIGHT ABOVE VESSEL FEP-VSL-00005.
3. VESSELS FEP-SEP-00001A/B (C-B5) INSTALLED ABOVE PUMPS FEP-PMP-00009A/B TO MEET NPSH REQUIREMENT FOR THE PURPOSE OF PREVENTING CAVITATION.
4. C3/R3 ROOM AIR IS PROVIDED FOR NORMAL VACUUM CONTROL.
5. ONLY MAIN PROCESS CONTROL INSTRUMENTS ARE SHOWN.

(6-10) DELETED

11. THE RECIRCULATION PUMPS REQUIRE AMPERAGE INDICATION.
12. PROCESS CONDENSATE DIVERSION FROM EACH PRIMARY CONDENSER (FEP-COND-00001A OR B) SHALL HAVE THE CAPABILITY TO REFLUX TO THE SEPARATOR OF ORIGIN OR TO "RECYCLE" OFF-SPEC CONDENSATE TO THE ALTERNATE SEPARATOR VESSEL TO FACILITATE DOUBLE-EFFECT EVAPORATION. ALL PROCESS CONDENSATE RETURNED TO A SEPARATOR VESSEL SHALL BE VIA SEAL LOOP.
13. INDIRECT MEASUREMENT OF PUMP DISCHARGE RATE WILL BE MADE BASED ON MOTOR TRUE POWER MEASUREMENT AND PUMP PERFORMANCE CURVE.
14. WASTE FEED EVAPORATOR TO BE DESIGNED BY VENDOR (SEE ENGINEERING SPECIFICATION 24590-PTF-3PS-MEVV-T0001 FOR DETAILS) COMPONENTS DEDICATED TO EACH EVAPORATOR TRAIN ARE LABELED WITH THE CORRESPONDING SUFFIX "A" OR "B". SEE SHEET 1 FOR COMPONENTS SHARED BY EACH OF THE TWO EVAPORATOR TRAINS.
15. FORCED PURGE AIR IS SUPPLIED TO SUPPORT HYDROGEN MITIGATION. FORCED PURGE AIR SUPPLY WILL BE PROVIDED TO THE VESSEL VIA A SEPARATE NOZZLE FROM THE PLANT SERVICE AIR HEADER WITH BACK-UP IMPORTANT TO SAFETY. AIR FOR HYDROGEN MITIGATION, THE PVP SYSTEM WILL INCLUDE THE PIPING, VALVES, AND INSTRUMENTS FOR THE FORCED PURGE AIR SUPPLY. FORCED AIR PURGE WILL FOLLOW THE PATH OF THE SEPARATOR OVERHEADS TO PURGE HYDROGEN THAT COULD ACCUMULATE IN THE CONDENSERS.
16. THE REBOILER SHELL SIDE AND REBOILER CONDENSATE TRANSFER VESSEL REQUIRE VACUUM SOURCE.
17. CONTENTS OF THIS DOCUMENT ARE DANGEROUS WASTE PERMIT AFFECTING.
18. RADIOACTIVITY DIVERTS STEAM CONDENSATE FROM SCW SYSTEM TO PWD-VS-00033.
19. ISOLATION VALVES AND C3/R3 ROOM AIR ARE PROVIDED TO PREVENT BACKFLOW OF CONTAMINATED AIR FROM PVP SYSTEM TO SHELL SIDE OF REBOILER UPON LOSS OF EJECTOR STEAM FLOW.

(20, 21) DELETED

22. TEMPERATURE AND PRESSURE ARE USED BY THE TEMPERATURE CONTROLLER AS INPUT IN DETERMINING REQUIRED FLOWRATE FROM THE REBOILER CONDENSATE TRANSFER VESSEL.

23. DELETED

24. REVISION 2 INCORPORATED 24590-PTF-M5N-V17T-00055 AND 00056. DELETED NOTES 6, 8, 20, AND 21. REVISED NOTE 16. MODIFIED 24590-PTF-M5N-V17T-00065 BY VOIDING FFP-VSL-00021 AND 00022. TO 24590-PTF-M5-V17T-00004001.
25. REFER TO 24590-WTP-M5-V17T-00001 FOR LEGEND AND SYMBOLS.
26. FEP-SEP-00001A/B AND FEP-VSL-00017A/B HAVE THE ABILITY TO FEED INTO ANY OF THE (4) FEED RECEIVER VESSELS. ALTERNATIVE ROUTING TO FRP-VSL-00002A/C/D IS VIA JUMPER CONNECTION.
27. REVISION 3: INCORPORATED 24590-PTF-M5N-V17T-00084 AND UPDATED OFF-SHEET CONNECTOR, ADDED STREAM FEP 19, REVISED/ADDED/DELETED NOTES.

HOLD/OPEN ITEMS:

NONE

REFERENCES

NONE

Please note that source, special nuclear, and byproduct materials, as defined in the Atomic Energy Act of 1954 (AEA) are regulated at the U. S. Department of Energy (DOE) facilities exclusively by DOE acting pursuant to its AEA authority. DOE asserts that pursuant to AEA, it has sole and exclusive responsibility and authority to regulate source, special nuclear, and byproduct materials at DOE-owned nuclear facilities. Information contained herein on radionuclides is provided for process description purposes only.

REV	DESCRIPTION	ORIG	CHKD	APVD	DATE
3	REVISED PER NOTE 27	SNR	DNR	DNO	5/25/06
2	REVISED PER NOTE 24	EN	JH	NA	7/19/02
0	ISSUED FOR DESIGN	EN	JH	NA	7/19/02

REVISION HISTORY

	BY	DATE
ORIGINATOR	NOWAK, RAYMOND	7/15/02
CHECKER	HALL, JOHN C.	7/15/02
APPROVER	DUNCAN, CARTH	7/19/02
REVIEWER		

ISSUED BY RPP-WTP PDC — ISSUE STAMP

PROJECT No. 24590 | SITE HANFORD | AREA 200E | BUILDING No. 10

CONTENT APPLICABLE TO NRC? [X] YES [ ] NO
ADR NO. 24590-PTF-3DP-PR-05-018 REV. 0
SAFETY SCREEN IS REQUIRED FOR DRAWING TYPES IDENTIFIED IN 24590-WTP-GPP-MGT-002

BECHTEL — RIVER PROTECTION PROJECT WASTE TREATMENT PLANT 2435 STEVENS CENTER PLACE RICHLAND, WA 99354

CONTRACT No. DE-AC27-01RV14136

PROCESS FLOW DIAGRAM WASTE FEED EVAPORATION SHEET 2 OF 2 SYSTEM FEP

SCALE: NONE | 24590-PTF-M5-V17T-00004002 | REV 3

E-SIZE = 44 x 34
COMPUTER GENERATED / MANUAL CHANGES NOT PERMITTED

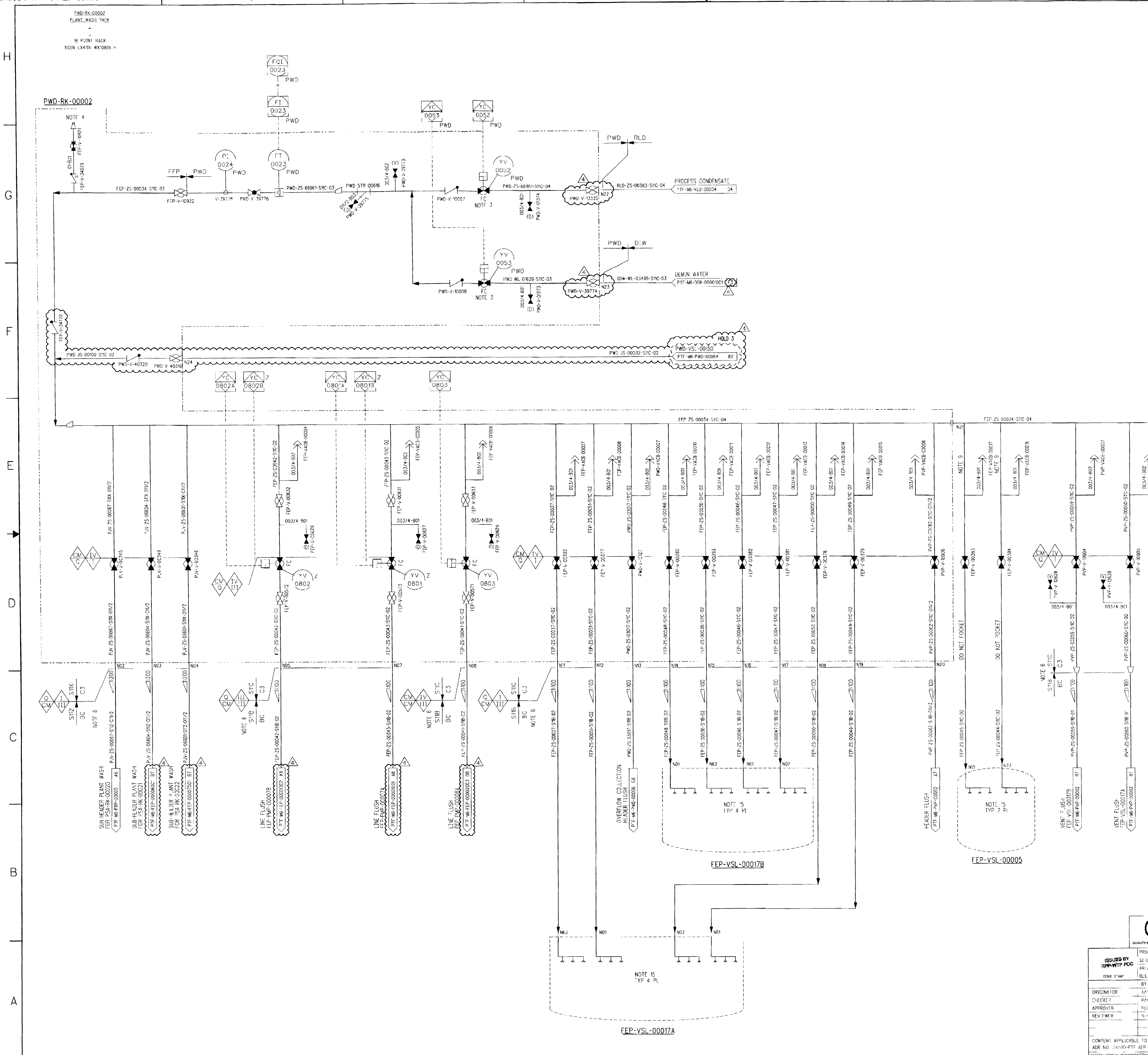

NOTES:

1. SEE DRAWINGS 24590-WTP-M6-50-00001 THROUGH 24590-WTP-M6-50-00008 FOR GENERAL NOTES, SYMBOLS AND LEGEND, AND GENERAL SLOPE REQUIREMENTS.
2. DELETED
3. VALVES INTERLOCKED TO PREVENT MULTIPLE VALVE OPERATION.
4. REAGENT/PLANT WASH/AIR SERVICES PROVIDED AT UTILITY STATION.
5. DELETED
6. PIPE SLEEVE PENETRATIONS BETWEEN OCCUPATIONAL AREAS AND INACCESSIBLE/REMOTE AREAS (R5) SHALL HAVE SHADOW SHIELDING TO MITIGATE DIRECT RADIATION SHINE OR BE JOGGLED, AS DETERMINED BY ENVIRONMENTAL AND NUCLEAR SAFETY. ALL PIPE/SLEEVE INTERFACES SHALL BE SEALED USING APPROVED FIRE-RATED PENETRATION SEAL DESIGNS TO MAINTAIN THE INTEGRITY OF THE FIRE WALL BETWEEN AREAS.
7. CONTENTS OF THIS DRAWING ARE DANGEROUS WASTE PERMIT AFFECTING.
8. THE PRESSURE BOUNDARY FOR ALL SYSTEMS, STRUCTURES AND COMPONENTS SHOWN ON THIS DRAWING IS IDENTIFIED AS QUALITY LEVEL CM AND SEISMIC CATEGORY SC-IV, UNLESS OTHERWISE NOTED.
9. FLUSH CONNECTIONS TO EQUIPMENT LOCATED IN C3 AREAS SHALL NOT PENETRATE C5 AREAS.
10. SHADOW SHIELDING, IF REQUIRED BY ENVIRONMENTAL AND NUCLEAR SAFETY, WILL BE PROVIDED BY BECHTEL.
11. DELETED
12. REVISION 2: INCORPORATED 24590-PTF-M6N-M80T-00008 AND 24590-PTF-M6N-FEP-00015 WITH SPARE NOZZLES, ASSIGNED PIPELINE NUMBERS. REVISED NOTE 8. ADDED ROOT VALVE TO PI-0805, ADDED NOZZLE NUMBERS, DELETED COMPONENT IDENTIFIER FOR SPECIALTY ITEM, RELOCATED 3 PIPELINES. DELETED PIPELINE. ADDED FLOW TOTALIZER, REDUCERS AND VENTS. DELETED NOZZLE NUMBERS N24 & N25. REALIGNED NOZZLES N21, N22 AND N23.
13. DELETED
14. REVISION 3: INCORPORATED 24590-PTF-M6N-M80T-00025. MODIFIED NOTES. SIGNIFICANT REVISION PER PWD WASH REDESIGN. SYSTEM REQUIRES DESIGN REVERIFICATION.
15. PIPE ROUTING LIMITED TO A MAXIMUM OF AN 8 FT STRAIGHT VERTICAL DROP AT THE CONNECTION TO THE VESSEL.
16. BLACK CELL PIPING TO BE SUPPORTED FOR MAXIMUM WATERFALL AND FOR THE EXPECTED DYNAMIC FORCES DURING THE TRANSITION FROM A DRY PIPE TO A LIQUID-FULL PIPE.
17. REVISION 4: REVISED TO INCORPORATE 24590-PTF-M6N-FEP-00084, ADDED CHEMICAL INJECTION LINE AND CORRECTED OFF SHEET CONNECTIONS. LINE SIZE FOR PVP-ZS-00062-S11C, AND S11B, TO REMAIN 1 1/2".

HOLD/OPEN ITEMS:

1. DELETED
2. DELETED
3. ON HOLD PENDING ISSUANCE OF PWD P&ID.

REFERENCES:

1. THE REQUIRED BATCH SEQUENCES, PERMISSIVES, INTERLOCKS, ALARMS AND OPERATOR INTERFACE POINTS ARE FULLY DESCRIBED IN THE SOFTWARE FUNCTIONAL SPECIFICATION, FOR FEP-WASTE FEED EVAPORATOR PROCESS SYSTEM, 24590-PTF-3PS-FEP-T0001.
2. FOR PERMISSIVES AND INTERLOCKS TO IMPORTANT TO SAFETY SYSTEMS (ITS) REFER TO SAFETY SYSTEM REQUIREMENTS SPECIFICATION 24590-PTF-3PS-PPJ-T0003 (FUTURE).

Please note that source, special nuclear, and byproduct materials, as defined in the Atomic Energy Act of 1954 (AEA) are regulated at the U. S. Department of Energy (DOE) facilities exclusively by DOE acting pursuant to its AEA authority. DOE asserts that pursuant to AEA, it has sole and exclusive responsibility and authority to regulate source, special nuclear, and byproduct materials at DOE-owned nuclear facilities. Information contained herein on radionuclides is provided for process description purposes only.

Q
QUALITY DESIGNATOR

REV	DESCRIPTION	ORG	CHKD	RVWD	APVD	DATE
4	REVISED PER NOTE 17	CEJ	RWR	CEX / ELS	JJO / RLF	1-31-08
3	REVISED PER NOTE 14	SNR	DRR	RES	JJ	5/26/06
2	MAJOR REVISION, SEE NOTE 12	RM	JL	JJ	RV	12/7/04
0	ISSUED FOR CONSTRUCTION	AD	RV	N/A	RV	1/29/03

REVISION HISTORY

ISSUED BY RPP-WTP PDC
ISSUE STAMP

PROJECT No.	24590
SITE	HANFORD
AREA	200E
BUILDING No.	10

	BY	DATE
ORIGINATOR	AARON DONNELLY	1/22/03
CHECKER	RAM VORIA	1/22/03
APPROVER	ROBERT VOKE	1/29/03
REVIEWER	N/A	N/A

CONTENT APPLICABLE TO ALARA? [X] YES [ ] NO
ADR NO. 24590-PTF-ADR-M-02-030 REV: 2
SAFETY SCREEN REQUIRED? [X] YES [ ] NO E&NS INITIAL IF YES

BECHTEL

RIVER PROTECTION PROJECT
WASTE TREATMENT PLANT
2435 STEVENS CENTER PLACE
RICHLAND, WA 99354

CONTRACT No: DE-AC27-01RV14136

P&ID - PTF
WASTE FEED EVAPORATION UTILITY SERVICES PLANT WASH RACK

SCALE: NONE

24590-PTF-M6-FEP-00008 REV 4

SAFETY SCREEN IS REQUIRED FOR DRAWING TYPES IDENTIFIED IN 24590-WTP-GPP-SREG-002

'E' SIZE - 44x34
COMPUTER GENERATED - MANUAL CHANGES NOT PERMITTED

R10881752
01/28/2008 11:24:49 AM

Drawings and Documents

Operating Unit Group 10 – Appendix 8.2
Pretreatment Building
Piping and Instrumentation Diagrams

The documents listed in the following table are incorporated by reference into this permit and are subject to the requirements set forth in Part I Standard Conditions, Part II General Facility Conditions, and Part III Operating Unit Group 10 Conditions. Upon request, copies of the documents can be viewed at the Nuclear Waste Program Resource Center located at 3100 Port of Benton Blvd. Richland, WA. Appointments for viewing can be scheduled by calling (509) 372-7950.

Drawing/Document Number	***Description***
24590-PTF-M6-CNP-P0001, Rev 0	Piping & Instrumentation Diagram Cesium Nitric Acid Recovery Process System Eluate Contingency Storage Vessel
24590-PTF-M6-CNP-P0002, Rev 0	Piping & Instrumentation Diagram Cesium Nitric Acid Recovery Process System Recovered Nitric Acid Vessel
24590-PTF-M6-CNP-P0003, Rev 0	Piping & Instrumentation Diagram Cesium Nitric Acid Recovery Utility Services – PSA Rack
24590-PTF-M6-CNP-P0004, Rev 0	Piping & Instrumentation Diagram Cesium Nitric Acid Recovery Utility Services – PSA Rack
24590-PTF-M6-CNP-P0005, Rev 0	Piping & Instrumentation Diagram Cesium Nitric Acid Recovery Utility Services – Plant Wash Rack
24590-PTF-M6-CNP-P0008, Rev 1	Piping & Instrumentation Diagram Cesium Nitric Acid Recovery Process System Evaporator Vessel
24590-PTF-M6-CNP-P0010, Rev 1	Piping & Instrumentation Diagram Cesium Nitric Acid Recovery Process System Rectifier and Condensers
24590-PTF-M6-CXP-P0001, Rev 0	Piping & Instrumentation Diagram Cesium Ion Exchange Process Vessels System
24590-PTF-M6-CXP-P0002, Rev 0	Piping & Instrumentation Diagram Cesium Ion Exchange Columns System

24590-PTF-M6-CXP-P0003, Rev 0	Piping & Instrumentation Diagram Cesium Ion Exchange Columns System
24590-PTF-M6-CXP-P0005, Rev 0	Piping & Instrumentation Diagram Cesium Ion Exchange Utility Services – PSA Rack
24590-PTF-M6-CXP-P0007, Rev 0	Piping & Instrumentation Diagram Cesium Ion Exchange Utility Services – Plant Wash Rack
24590-PTF-M6-CXP-P0010, Rev 0	Piping & Instrumentation Diagram Cesium Ion Exchange Treated LAW Collection Vessels System
24590-PTF-M6-CXP-P0011, Rev 0	Piping & Instrumentation Diagram Cesium Ion Exchange Utility Services – PSA Rack
24590-PTF-M6-CXP-P0012, Rev 0	Piping & Instrumentation Diagram Cesium Ion Exchange Utility Services – PSA Rack
24590-PTF-M6-CXP-P0013, Rev 0	Piping & Instrumentation Diagram Cesium Ion Exchange Utility Services – Plant Wash Rack
24590-PTF-M6-FEP-00001001, Rev 0	Piping & Instrumentation Diagram Waste Feed Evaporation Process System Evaporator Feed Vessel FEP-VSL-00017A
24590-PTF-M6-FEP-00001002, Rev 0	Piping & Instrumentation Diagram Waste Feed Evaporation Process System Evaporator Feed Vessel FEP-VSL-00017B
24590-PTF-M6-FEP-00002001, Rev 0	Piping & Instrumentation Diagram Waste Feed Evaporation Process System Separator FEP-SEP-00001A
24590-PTF-M6-FEP-00002002, Rev 0	Piping & Instrumentation Diagram Waste Feed Evaporation Process System Reboiler FEP-RBLR-00001A
24590-PTF-M6-FEP-00002003, Rev 0	Piping & Instrumentation Diagram Waste Feed Evaporation Process System Pump FEP-PMP-00008A
24590-PTF-M6-FEP-00003001, Rev 0	Piping & Instrumentation Diagram Waste Feed Evaporation Process System Condensate Collection FEP-VSL-00005
24590-PTF-M6-FEP-00003002, Rev 0	Piping & Instrumentation Diagram Waste Feed Evaporation Process System Condensers FEP-COND-00001A/2A/3A

24590-PTF-M6-FEP-00004001, Rev 0	Piping & Instrumentation Diagram Waste Feed Evaporation Process System Separator FEP-SEP-00001B
24590-PTF-M6-FEP-00004002, Rev 0	Piping & Instrumentation Diagram Waste Feed Evaporation Process System Reboiler FEP-RBLR-00001B
24590-PTF-M6-FEP-00004003, Rev 0	Piping & Instrumentation Diagram Waste Feed Evaporation Process System Pump FEP-PMP-00008B
24590-PTF-M6-FEP-00005001, Rev 0	Piping & Instrumentation Diagram Waste Feed Evaporation Process System Condensers FEP-COND-00001B/2B/3B
24590-PTF-M6-FEP-00006001, Rev 0	Piping & Instrumentation Diagram Waste Feed Evaporation Utility Services PSA Rack
24590-PTF-M6-FEP-00006002, Rev 0	Piping & Instrumentation Diagram Waste Feed Evaporation Utility Services PSA Rack
24590-PTF-M6-FEP-00006004, Rev 0	Piping & Instrumentation Diagram Waste Feed Evaporation Utility Services PSA Rack
24590-PTF-M6-FEP-00007001, Rev 0	Piping & Instrumentation Diagram Waste Feed Evaporation Utility Services PSA Rack
24590-PTF-M6-FEP-00007002, Rev 0	Piping & Instrumentation Diagram Waste Feed Evaporation Utility Services PSA Rack
24590-PTF-M6-FEP-00007003, Rev 0	Piping & Instrumentation Diagram Waste Feed Evaporation Utility Services PSA Rack
24590-PTF-M6-FEP-00007004, Rev 0	Piping & Instrumentation Diagram Waste Feed Evaporation Utility Services PSA Rack
24590-PTF-M6-FEP-00008, Rev 4	Piping & Instrumentation Diagram Waste Feed Evaporation Utility Services Plant Wash Rack
24590-PTF-M6-FRP-00001, Rev 3	Piping & Instrumentation Diagram Waste Feed Receipt Vessels (FRP-VSL-00002A and FRP-VSL-00002B)
24590-PTF-M6-FRP-00002, Rev 3	Piping & Instrumentation Diagram Waste Feed Receipt Vessels FRP-VSL-00002C and FRP-VSL-00002D
24590-PTF-M6-FRP-00003, Rev 3	Piping & Instrumentation Diagram Waste Feed Receipt Process System FRP-PMP-00001 and FRP-PMP-00002A

24590-PTF-M6-FRP-00005, Rev 3	Piping &Instrumentation Diagram Waste Feed Receipt Utility Systems - PSA Rack
24590-PTF-M6-FRP-00006, Rev 3	Piping & Instrumentation Diagram Waste Feed Receipt Utility Systems - PSA Rack
24590-PTF-M6-FRP-00007, Rev 3	Piping & Instrumentation Diagram Waste Feed Receipt Utility Systems - PSA Rack
24590-PTF-M6-FRP-00008, Rev 3	Piping & Instrumentation Diagram Waste Feed Receipt Utility Systems - PSA Rack
24590-PTF-M6-FRP-00009, Rev 3	Piping & Instrumentation Diagram Waste Feed Receipt Utility Systems –Plant Wash Rack
24590-PTF-M6-FRP-00010, Rev 3	Piping & Instrumentation Diagram Waste Feed Receipt Utility Systems –Plant Wash Rack
24590-PTF-M6-HLP-P0001, Rev 1	Piping &Instrumentation Diagram HLP System HLW Lag Storage and Blending Process Vessel HLP-VSL-00027A/B
24590-PTF-M6-HLP-P0002, Rev 1	Piping & Instrumentation Diagram HLP System HLW Feed Receipt Vessel HLP-VSL-00022
24590-PTF-M6-HLP-P0003, Rev 1	Piping & Instrumentation Diagram HLP System HLW Feed Blending Process Vessel HLP-VSL-00028
24590-PTF-M6-HLP-00005001, Rev 0	Piping & Instrumentation Diagram HLW Lag Storage and Feed Blending Process System Utility Services PSA-RK-00033
24590-PTF-M6-HLP-00005002, Rev 0	Piping & Instrumentation Diagram HLW Lag Storage and Feed Blending Process System Utility Services PSA-RK-00033
24590-PTF-M6-HLP-00005003, Rev 0	Piping & Instrumentation Diagram HLW Lag Storage and Feed Blending Process System Utility Services PSA-RK-00033
24590-PTF-M6-HLP-00005004, Rev 0	Piping & Instrumentation Diagram HLW Lag Storage and Feed Blending Process System Utility Services PSA-RK-00033
24590-PTF-M6-HLP-00005005, Rev 0	Piping & Instrumentation Diagram HLW Lag Storage and Feed Blending Process System Utility Services PSA-RK-00033

24590-PTF-M6-HLP-00005006, Rev 0	Piping & Instrumentation Diagram HLW Lag Storage and Feed Blending Process System Utility Services PSA-RK-00033
24590-PTF-M6-HLP-00005007, Rev 0	Piping & Instrumentation Diagram HLW Lag Storage and Feed Blending Process System Vessel PJM HLP-VSL-00027A/B
24590-PTF-M6-HLP-00006001, Rev 0	Piping & Instrumentation Diagram HLW Lag Storage and Feed Blending Process System Utility Services PSA-RK-00035
24590-PTF-M6-HLP-00006002, Rev 0	Piping & Instrumentation Diagram HLW Lag Storage and Feed Blending Process System Utility Services PSA-RK-00035
24590-PTF-M6-HLP-00006003, Rev 0	Piping & Instrumentation Diagram HLW Lag Storage and Feed Blending Process System Utility Services PSA-RK-00035
24590-PTF-M6-HLP-00006004, Rev 0	Piping & Instrumentation Diagram HLW Lag Storage and Feed Blending Process System Utility Services PSA-RK-00035
24590-PTF-M6-HLP-00006005, Rev 0	Piping & Instrumentation Diagram HLW Lag Storage and Feed Blending Process System Utility Services PSA-RK-00035
24590-PTF-M6-HLP-00006006, Rev 0	Piping & Instrumentation Diagram HLW Lag Storage and Feed Blending Process System Utility Services PSA-RK-00035
24590-PTF-M6-HLP-00006007, Rev 0	Piping & Instrumentation Diagram HLW Lag Storage and Feed Blending Process System Vessel PJM HLP-VSL-00027B/28
24590-PTF-M6-HLP-00007001, Rev 0	Piping & Instrumentation Diagram HLW Lag Storage and Feed Blending Process System Utility Services PSA-RK-00036
24590-PTF-M6-HLP-00007002, Rev 0	Piping & Instrumentation Diagram HLW Lag Storage and Feed Blending Process System Utility Services PSA-RK-00036
24590-PTF-M6-HLP-00007003, Rev 0	Piping & Instrumentation Diagram HLW Lag Storage and Feed Blending Process System Utility Services PSA-RK-00036
24590-PTF-M6-HLP-00007004, Rev 0	Piping & Instrumentation Diagram HLW Lag Storage and Feed Blending Process System Utility Services PSA-RK-00036

24590-PTF-M6-HLP-00007005, Rev 0	Piping & Instrumentation Diagram HLW Lag Storage and Feed Blending Process System Utility Services PSA-RK-00036
24590-PTF-M6-HLP-00007006, Rev 0	Piping & Instrumentation Diagram HLW Lag Storage and Feed Blending Process System Utility Services PSA-RK-00036
24590-PTF-M6-HLP-00007007, Rev 0	Piping & Instrumentation Diagram HLW Lag Storage and Feed Blending Process System Vessel PJM HLP-VSL-00022
24590-PTF-M6-HLP-00009001, Rev 0	Piping & Instrumentation Diagram HLW Lag Storage and Feed Blending System Plant Wash Rack PWD-RK-00005
24590-PTF-M6-HLP-00009002, Rev 0	Piping & Instrumentation Diagram HLW Lag Storage and Feed Blending System Plant Wash Rack PWD-RK-00005
24590-PTF-M6-HLP-00009003, Rev 0	Piping & Instrumentation Diagram HLW Lag Storage and Feed Blending System Plant Wash Rack PWD-RK-00005
24590-PTF-M6-HLP-00010001, Rev 0	Piping & Instrumentation Diagram HLW Lag Storage and Feed Blending System Plant Wash Rack PWD-RK-00006
24590-PTF-M6-HLP-00010002, Rev 0	Piping & Instrumentation Diagram HLW Lag Storage and Feed Blending System Plant Wash Rack PWD-RK-00006
24590-PTF-M6-HLP-00010003, Rev 0	Piping & Instrumentation Diagram HLW Lag Storage and Feed Blending System Plant Wash Rack PWD-RK-00006
24590-PTF-M6-PIH-P0001, Rev 0	Piping & Instrumentation Diagram PTF Mechanical Handling, Hot Cell Maintenance Cave P-0123A Utilities, System PIH
24590-PTF-M6-PJV-00001, Rev 3	Piping & Instrumentation Diagram Pulse Jet Ventilation System Air Racks to Demisters
24590-PTF-M6-PJV-P0002, Rev 0	Piping & Instrumentation Diagram Pulse Jet Ventilation System Inlet Header to Demister Outlet
24590-PTF-M6-PJV-P0004, Rev 0	Piping & Instrumentation Diagram Pulse Jet Ventilation System Utility Service Plant Wash Rack

24590-PTF-M6-PVP-00002, Rev 3	Piping & Instrumentation Diagram Pretreatment Vessel Vent Process System Exhaust from Vessels
24590-PTF-M6-PVP-P0004, Rev 0	Piping & Instrumentation Diagram Pretreatment Vessel Vent Process System VOC Oxidation Unit to Fans
24590-PTF-M6-PVP-P0009, Rev 0	Piping & Instrumentation Diagram Process Vessel Vent System Demineralized Water Rack
24590-PTF-M6-PVP-P0017, Rev 0	Piping & Instrumentation Diagram Pretreatment Vessel Vent Process System Caustic Scrubber to HEMEs
24590-PTF-M6-PVP-00018001, Rev 0	Piping & Instrumentation Diagram Pretreatment Vessel Vent Process System HEMEs to Primary HEPA Filters
24590-PTF-M6-PVP-00018002, Rev 0	Piping & Instrumentation Diagram Pretreatment Vessel Vent Process System HEME Drain Collection PVP-VSL-00001/PVP-BULGE-00002
24590-PTF-M6-PWD-00001, Rev 2	Piping & Instrumentation Diagram Plant Wash & Disposal System Effluent Collection Tree
24590-PTF-M6-PWD-00002001, Rev 0	Piping & Instrumentation Diagram Plant Wash & Disposal System Effluent Collection PWD-VSL-00044
24590-PTF-M6-PWD-00002002, Rev 0	Piping & Instrumentation Diagram Plant Wash & Disposal System Effluent Collection PWD-VSL-00033/00043
24590-PTF-M6-PWD-P0003, Rev 0	Piping & Instrumentation Diagram Plant Wash & Disposal System Effluent Collection PWD-VSL-00015 and 00016
24590-PTF-M6-PWD-00005, Rev 3	Piping and Instrumentation Diagram Plant Wash & Disposal System Effluent Collection Headers Drains
24590-PTF-M6-PWD-00006, Rev 2	Piping and Instrumentation Diagram Plant Wash & Disposal System Plant Wash & Disposal System Effluent Collection Headers, Overflows

24590-PTF-M6-PWD-00007, Rev 3	Piping & Instrumentation Diagram System PWD Plant Wash & Disposal Effluent Collection Header Bulge & Rack Drains
24590-PTF-M6-PWD-00008, Rev 3	Piping & Instrumentation Diagram Plant Wash & Disposal System C5/R5 Process Cell Sumps
24590-PTF-M6-PWD-P0009, Rev 0	Piping & Instrumentation Diagram Plant Wash & Disposal System C5/R5 Process Cell Sumps
24590-PTF-M6-PWD-00010, Rev 3	Piping & Instrumentation Diagram Plant Wash & Disposal System C3/R3/C5/R5 Process Cell Sumps
24590-PTF-M6-PWD-P0011, Rev 0	Piping & Instrumentation Diagram Plant Wash & Disposal System C3/C5 and C5 Area Floor Drains
24590-PTF-M6-PWD-00012, Rev 2	Piping &Instrumentation Diagram Plant Wash & Disposal System C3/R3 and C5/R5 Cell Sumps
24590-PTF-M6-PWD-P0014, Rev 0	Piping &Instrumentation Diagram Plant Wash & Disposal System C5/R5 Hot Cell Sumps
24590-PTF-M6-PWD-P0018, Rev 0	Piping & Instrumentation Diagram Plant Wash & Disposal Utility Services – PSA Rack
24590-PTF-M6-PWD-P0019, Rev 0	Piping & Instrumentation Diagram Plant Wash & Disposal Utility Services – PSA Rack
24590-PTF-M6-PWD-00020001, Rev 0	Piping & Instrumentation Diagram Plant Wash & Disposal Utility Services – PSA Rack
24590-PTF-M6-PWD-00020002, Rev 0	Piping & Instrumentation Diagram Plant Wash & Disposal Utility Services – PSA Rack
24590-PTF-M6-PWD-00020003, Rev 0	Piping & Instrumentation Diagram Plant Wash & Disposal Utility Services – PSA Rack
24590-PTF-M6-PWD-00020004, Rev 0	Piping & Instrumentation Diagram Plant Wash & Disposal Utility Services – PSA Rack
24590-PTF-M6-PWD-00020005, Rev 0	Piping & Instrumentation Diagram Plant Wash & Disposal Utility Services – PSA Rack
24590-PTF-M6-PWD-00020006, Rev 0	Piping & Instrumentation Diagram Plant Wash & Disposal Utility Services – PSA Rack
24590-PTF-M6-PWD-00021001, Rev 0	Piping & Instrumentation Diagram Plant Wash & Disposal Utility Services – PSA Rack

24590-PTF-M6-PWD-00021002, Rev 0	Piping & Instrumentation Diagram Plant Wash & Disposal Utility Services – PSA Rack
24590-PTF-M6-PWD-00021003, Rev 0	Piping & Instrumentation Diagram Plant Wash & Disposal Utility Services – PSA Rack
24590-PTF-M6-PWD-00021004, Rev 0	Piping & Instrumentation Diagram Plant Wash & Disposal Utility Services – PSA Rack
24590-PTF-M6-PWD-00021005, Rev 0	Piping & Instrumentation Diagram Plant Wash & Disposal Utility Services – PSA Rack
24590-PTF-M6-PWD-00021006, Rev 0	Piping & Instrumentation Diagram Plant Wash & Disposal Utility Services – PSA Rack
24590-PTF-M6-PWD-00023001, Rev 0	Piping & Instrumentation Diagram Plant Wash & Disposal Utility Services – PSA Rack
24590-PTF-M6-PWD-00023002, Rev 0	Piping & Instrumentation Diagram Plant Wash & Disposal Utility Services – PSA Rack
24590-PTF-M6-PWD-00023003, Rev 0	Piping & Instrumentation Diagram Plant Wash & Disposal Utility Services – PSA Rack
24590-PTF-M6-PWD-00023004, Rev 0	Piping & Instrumentation Diagram Plant Wash & Disposal Utility Services – PSA Rack
24590-PTF-M6-PWD-00023005, Rev 0	Piping & Instrumentation Diagram Plant Wash & Disposal Utility Services – PSA Rack
24590-PTF-M6-PWD-00024001, Rev 0	Piping & Instrumentation Diagram Plant Wash & Disposal Utility Services – PSA Rack
24590-PTF-M6-PWD-00024002, Rev 0	Piping & Instrumentation Diagram Plant Wash & Disposal Utility Services – PSA Rack
24590-PTF-M6-PWD-00024003, Rev 0	Piping & Instrumentation Diagram Plant Wash & Disposal Utility Services – PSA Rack
24590-PTF-M6-PWD-00024004, Rev 0	Piping & Instrumentation Diagram Plant Wash & Disposal Utility Services – PSA Rack
24590-PTF-M6-PWD-00024005, Rev 0	Piping & Instrumentation Diagram Plant Wash & Disposal Utility Services – PSA Rack
24590-PTF-M6-PWD-00024006, Rev 0	Piping & Instrumentation Diagram Plant Wash & Disposal Utility Services – PSA Rack
24590-PTF-M6-PWD-00024007, Rev 0	Piping & Instrumentation Diagram Plant Wash & Disposal Utility Services – PSA Rack
24590-PTF-M6-PWD-00025001, Rev 0	Piping & Instrumentation Diagram Plant Wash & Disposal Utility Services – PSA Rack

24590-PTF-M6-PWD-00025002, Rev 0	Piping & Instrumentation Diagram Plant Wash & Disposal Utility Services – PSA Rack
24590-PTF-M6-PWD-00025003, Rev 0	Piping & Instrumentation Diagram Plant Wash & Disposal Utility Services – PSA Rack
24590-PTF-M6-PWD-00025004, Rev 0	Piping & Instrumentation Diagram Plant Wash & Disposal Utility Services – PSA Rack
24590-PTF-M6-PWD-00026, Rev 2	Piping & Instrumentation Diagram Plant Wash & Disposal Utility Services – PSA Rack
24590-PTF-M6-PWD-P0029, Rev 0	Piping & Instrumentation Diagram Plant Wash & Disposal Utility Services – Plant Wash Rack
24590-PTF-M6-PWD-00033, Rev 2	Piping & Instrumentation Diagram Plant Wash & Disposal Utility Services – Plant Wash Rack
24590-PTF-M6-PWD-P0034, Rev 0	Piping & Instrumentation Diagram Plant Wash & Disposal Utility Services – Plant Wash Rack
24590-PTF-M6-PWD-00041, Rev 3	Piping & Instrumentation Diagram Plant Wash & Disposal System C2 Area Floor Drains Collection Vessel
24590-PTF-M6-PWD-00043, Rev 3	Piping & Instrumentation Diagram Plant Wash & Disposal System C3 Area Floor Drains (El 0-0 thru 56-0)
24590-PTF-M6-PWD-00044, Rev 3	Piping & Instrumentation Diagram Plant Wash & Disposal System C3 Area Floor Drains (El 0-0 thru 56-0)
24590-PTF-M6-PWD-P0046, Rev 0	Piping & Instrumentation Diagram Plant Wash & Disposal Utility Services – Plant Wash Rack
24590-PTF-M6-PWD-00050, Rev 2	Piping & Instrumentation Diagram Plant Wash & Disposal System Secondary Containment Leak Detection System
24590-PTF-M6-PWD-00051, Rev 2	Piping & Instrumentation Diagram Plant Wash & Disposal System Secondary Containment Leak Detection System
24590-PTF-M6-PWD-00057, Rev 4	Piping & Instrumentation Diagram Plant Wash & Disposal System Underground Transfer Lines

24590-PTF-M6-PWD-00058, Rev 4	Piping & Instrumentation Diagram Plant Wash & Disposal System Underground Transfer Lines
24590-PTF-M6-RDP-00001, Rev 3	Piping & Instrumentation Diagram Ion Exchange Spent Resin Collection & Dewatering Process
24590-PTF-M6-RDP-00002, Rev 4	Piping & Instrumentation Diagram Ion Exchange Spent Resin Collection and Dewatering
24590-PTF-M6-RDP-00006, Rev 3	Piping &Instrumentation Diagram Ion Exchange Spent Resin Collection and Dewatering Utility Systems – PSA Rack
24590-PTF-M6-RLD-00001, Rev 2	Piping & Instrumentation Diagram Radioactive Liquid Waste Disposal System Process Condensate RLD-TK-00006A/B (Q)
24590-PTF-M6-RLD-00002, Rev 3	Piping & Instrumentation Diagram Radioactive Liquid Waste Disposal System Process Condensate RLD-PMP-00011A/B, 12A/B & 14A/B
24590-PTF-M6-RLD-00003001, Rev 0	Piping & Instrumentation Diagram Radioactive Liquid Waste Disposal System Effluent Collection RLD-VSL-00017A
24590-PTF-M6-RLD-00003002, Rev 0	Piping & Instrumentation Diagram Radioactive Liquid Waste Disposal System Effluent Collection RLD-VSL-00017B
24590-PTF-M6-RLD-00003003, Rev 0	Piping & Instrumentation Diagram Radioactive Liquid Waste Disposal System Effluent Collection RLD-PMP-00005A/B
24590-PTF-M6-RLD-00004, Rev 2	Piping & Instrumentation Diagram Radioactive Liquid Waste Disposal System Process Condensate Distribution
24590-PTF-M6-RLD-00006, Rev 3	Piping & Instrumentation Diagram Radioactive Liquid Waste Disposal System Plant Wash
24590-PTF-M6-TCP-00001001, Rev 0	Piping and Instrumentation Diagram Treated LAW Concentrate Storage System TCP-VSL-00001

24590-PTF-M6-TCP-00001002, Rev 0	Piping and Instrumentation Diagram Treated LAW Concentrate Storage System TCP-VSL-00001
24590-PTF-M6-TCP-00002001, Rev 0	Piping and Instrumentation Diagram Treated LAW Concentrate Storage Process System Utility Rack PSA-RK-00001
24590-PTF-M6-TCP-00002002, Rev 0	Piping and Instrumentation Diagram Treated LAW Concentrate Storage Process System Utility Rack PSA-RK-00001
24590-PTF-M6-TCP-00002003, Rev 0	Piping and Instrumentation Diagram Treated LAW Concentrate Storage Process System Utility Rack PSA-RK-00001
24590-PTF-M6-TCP-00002004, Rev 0	Piping and Instrumentation Diagram Treated LAW Concentrate Storage Process System Utility Rack PSA-RK-00001
24590-PTF-M6-TCP-00002005, Rev 0	Piping and Instrumentation Diagram Treated LAW Concentrate Storage Process System PJMs TCP-VSL-00001
24590-PTF-M6-TLP-00001, Rev 3	Piping & Instrumentation Diagram Treated LAW Evaporation Process System LAW SBS Condensate Receipt TLP-VSL-00009A & 9B
24590-PTF-M6-TLP-P0002, Rev 0	Piping & Instrumentation Diagram Treated LAW Evaporation Process System Condensers & Condensate Collection TLP-VSL-00002
24590-PTF-M6-TLP-P0003, Rev 0	Piping & Instrumentation Diagram Treated LAW Evaporation Process System Separator TLP-SEP-00001
24590-PTF-M6-TLP-P0005, Rev 0	Piping & Instrumentation Diagram Treated LAW Evaporation Utility Services PSA Rack
24590-PTF-M6-TLP-P0006, Rev 0	Piping & Instrumentation Diagram Treated LAW Evaporation Utility Services PSA Rack
24590-PTF-M6-TLP-P0007, Rev 0	Piping & Instrumentation Diagram Treated LAW Evaporation Utility Services Plant Wash Rack
24590-PTF-M6-UFP-00001001, Rev 0	Piping & Instrumentation Diagram Ultrafiltration Process System Feed Preparation Vessel UFP-VSL-00001A

24590-PTF-M6-UFP-00001002, Rev 0	Piping & Instrumentation Diagram Ultrafiltration Process System Bubblers UFP-VSL-00001A
24590-PTF-M6-UFP-00001003, Rev 0	Piping & Instrumentation Diagram Ultrafiltration Process System UFP-PMP-00041A and UFP-HX-00041A
24590-PTF-M6-UFP-00001004, Rev 0	Piping & Instrumentation Diagram Ultrafiltration Process System Feed Preparation Vessel UFP-VSL-00001B
24590-PTF-M6-UFP-00001005, Rev 0	Piping & Instrumentation Diagram Ultrafiltration Process System Bubblers UFP-VSL-00001B
24590-PTF-M6-UFP-00001006, Rev 0	Piping & Instrumentation Diagram Ultrafiltration Process System UFP-PMP-00041B and UFP-HX-00041B
24590-PTF-M6-UFP-00001007, Rev 0	Piping & Instrumentation Diagram Ultrafiltration Process System Feed Preparation Header UFP-VSL-00001A/B
24590-PTF-M6-UFP-P0002, Rev 0	Piping &Instrumentation Diagram Ultrafiltration System Vessel UFP-VSL-00002A
24590-PTF-M6-UFP-P0003, Rev 0	Piping & Instrumentation Diagram Ultrafiltration System Vessel UFP-VSL-00002B
24590-PTF-M6-UFP-P0004, Rev 1	Piping & Instrumentation Diagram Ultrafiltration Permeate Collection System Vessels UFP-VSL-00062A/B/C
24590-PTF-M6-UFP-P0005, Rev 0	Piping & Instrumentation Diagram Ultrafiltration Utility Services – PSA Rack
24590-PTF-M6-UFP-P0006, Rev 0	Piping & Instrumentation Diagram Ultrafiltration Utility Services – PSA Rack
24590-PTF-M6-UFP-P0007, Rev 0	Piping & Instrumentation Diagram Ultrafiltration Utility Services – PSA Rack
24590-PTF-M6-UFP-P0008, Rev 0	Piping & Instrumentation Diagram Ultrafiltration Utility Services – PSA Rack
24590-PTF-M6-UFP-P0009, Rev 0	Piping & Instrumentation Diagram Ultrafiltration Utility Services – PSA Rack

24590-PTF-M6-UFP-P0010, Rev 0	Piping & Instrumentation Diagram Ultrafiltration Utility Services – PSA Rack
24590-PTF-M6-UFP-P0011, Rev 0	Piping & Instrumentation Diagram Ultrafiltration Utility Services – PSA Rack
24590-PTF-M6-UFP-P0013, Rev 0	Piping & Instrumentation Diagram Ultrafiltration Utility Services – HPS Rack
24590-PTF-M6-UFP-P0015, Rev 0	Piping & Instrumentation Diagram Ultrafiltration Utility Services – Plant Wash Rack
24590-PTF-M6-UFP-P0016, Rev 0	Piping &Instrumentation Diagram Ultrafiltration Reagents & Process Air Bulge
24590-PTF-M6-UFP-P0017, Rev 0	Piping & Instrumentation Diagram (UFP System)
RESERVED	RESERVED

Source documents (which do not include a "P" in the last set of numbers, e.g. "-P0001," or "-TP001") should be used in conjunction with any document change notices issued against them.

We are currently transitioning from permit documents (which do include a "P" in the last set of numbers) to source documents. At the end of the transition period, permit submittals will contain source documents and will be incorporated into the permit as described in Ecology Publication # 07-05-006 (www.ecy.wa.gov/biblio/nwp.html).

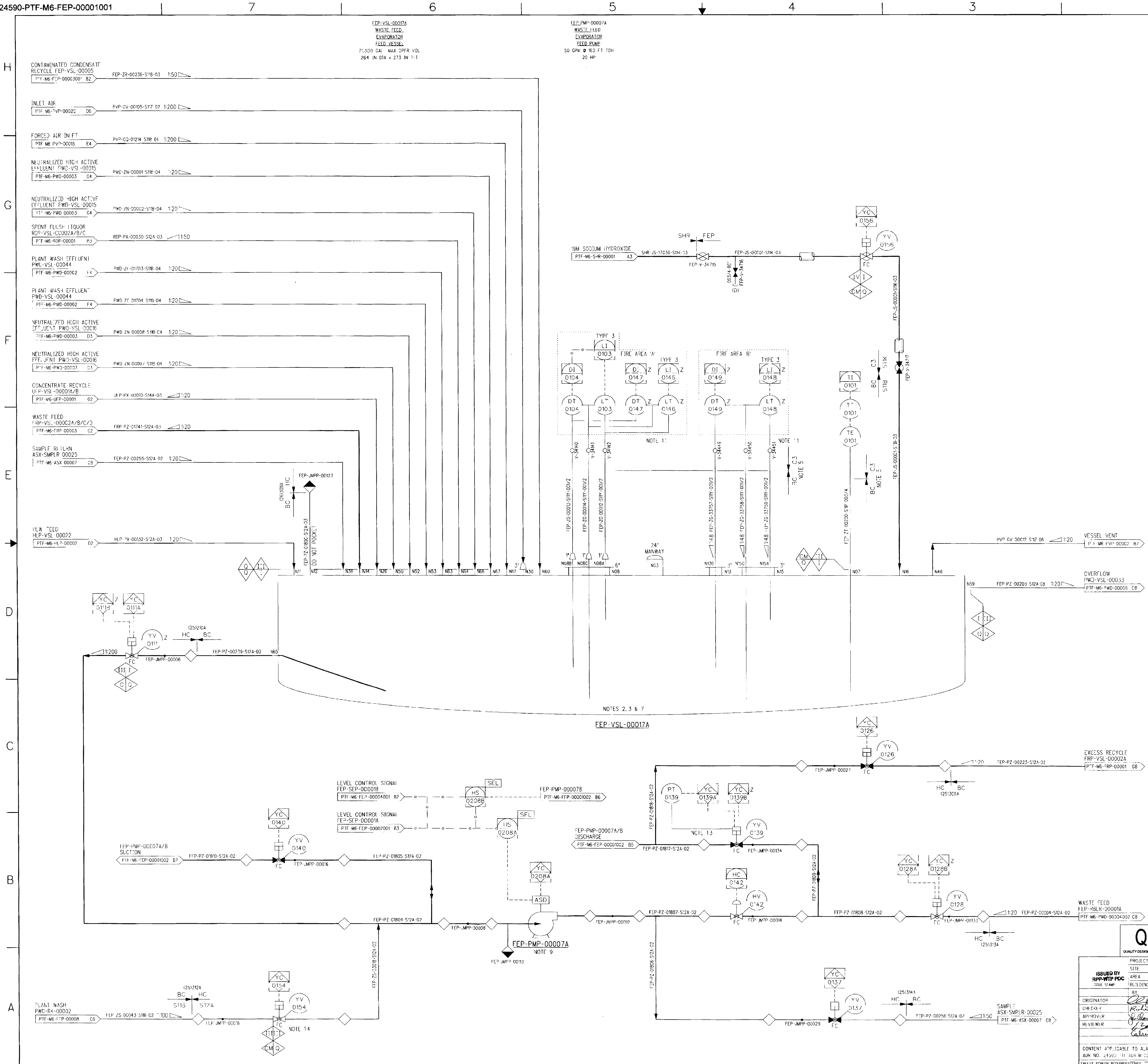

NOTES:

1. SEE DRAWINGS 24590-WTP-M6-50-00001 THROUGH 24590-WTP-M6-50-00008 FOR GENERAL NOTES, SYMBOLS AND LEGEND, AND GENERAL SLOPE REQUIREMENTS.
2. SEE DRAWINGS 24590-PTF-M6-FEP-00006001, 00006002, AND 24590-PTF-M6-FEP-00007001, 00007002 FOR PULSE JET MIXER REPRESENTATION AND NOZZLES UTILIZED.
3. SEE DRAWING 24590-PTF-M6-FEP-00008 FOR UTILITY PLANT WASH REPRESENTATION AND NOZZLES UTILIZED.
4. THE PRESSURE BOUNDARY FOR ALL SYSTEMS, STRUCTURES AND COMPONENTS ON THIS DRAWING ARE QUALITY LEVEL Q AND SEISMIC CATEGORY SC-I, UNLESS OTHERWISE NOTED.
5. PIPE SLEEVE PENETRATIONS BETWEEN OCCUPATIONAL AREAS AND INACCESSIBLE/REMOTE AREAS (R5) SHALL HAVE SHADOW SHIELDING TO MITIGATE DIRECT RADIATION SHINE OR BE JOGGLED, AS DETERMINED BY ENVIRONMENTAL AND NUCLEAR SAFETY. ALL PIPE/SLEEVE INTERFACES SHALL BE SEALED USING APPROVED FIRE-RATED PENETRATION SEAL DESIGNS TO MAINTAIN THE INTEGRITY OF THE FIRE WALL BETWEEN AREAS.
6. CONTENTS OF THIS DRAWING ARE DANGEROUS WASTE PERMIT AFFECTING.
7. ALL INTERNAL SUPPORTS AND WELDS THAT INTERACT WITH THE PRIMARY CONTAINMENT BARRIER (VESSEL) SHALL MAINTAIN EQUAL QUALITY LEVEL AND SEISMIC CATEGORY AS THE PARENT.
8. INDICATED SLOPES ARE CONSIDERED MINIMUM.
9. SEE DRAWING 24590-PTF-M6-PSW-00009 FOR PUMP SEAL WATER CONNECTIONS.
10. SEE DRAWING 24590-PTF-M6-ISA-00008 FOR BUBBLER RACKS AND SYSTEM CONNECTIONS.
11. QUALITY LEVEL Q AND SEISMIC CATEGORY SC-I BACKFLOW PREVENTION IS INSTALLED UPSTREAM OF LEVEL INSTRUMENTATION.
12. SEISMIC CATEGORY AND QUALITY LEVEL SHOWN ON THIS P&ID ARE THE MINIMUM REQUIREMENTS. DESIGN, FABRICATION, AND INSTALLATION MAY BE TO HIGHER REQUIREMENTS.
13. PRESSURE TRANSMITTER IS USED TO DETERMINE NON-ITS/APC VALVE POSITION. PRESSURE TRANSMITTER IS LOCATED ON INSTRUMENT RACK IN OUT-CELL AREA. VALVE CONTAINS ITS, QUALITY LEVEL Q AND SEISMIC CATEGORY SC-III LIMIT SWITCHES FOR ITS VALVE POSITION.
14. VALVE IS USED TO CONTROL WATER COLUMN SEPARATION DURING FLUSHING.
15. THIS DRAWING IS CONVERTED FROM SINGLE SHEET TO MULTI SHEET DRAWING AND IN PART SUPERSEDES 24590-PTF-M6-FEP-00001 REV 4. THIS DRAWING INCLUDES INFORMATION FROM 24590-PTF-M6N-FEP-00089 AND 24590-PTF-M6N-M80I-00038.

HOLD/OPEN ITEMS:

NONE

REFERENCES:

1. THE REQUIRED BATCH SEQUENCES, PERMISSIVES, INTERLOCKS, ALARMS AND OPERATOR INTERFACE POINTS ARE FULLY DESCRIBED IN THE SOFTWARE FUNCTIONAL SPECIFICATION FOR FEP WASTE FEED EVAPORATOR PROCESS SYSTEM, 24590-PTF-3PS-FEP-T0001 AND SOFTWARE FUNCTIONAL SPECIFICATION FOR PTF EVAPORATOR TRAIN 24590-PTF-3PS-TLP-T0002.
2. FOR PERMISSIVES AND INTERLOCKS FOR IMPORTANT TO SAFETY SYSTEMS (ITS) REFER TO SAFETY SYSTEM REQUIREMENT SPECIFICATIONS 24590-PTF-3PS-PPJ-T0003, (FUTURE) -T0005, (FUTURE) AND -T0016.

Please note that source, special nuclear, and byproduct materials, as defined in the Atomic Energy Act of 1954 (AEA) are regulated at the U. S. Department of Energy (DOE) facilities exclusively by DOE acting pursuant to its AEA authority. DOE asserts that pursuant to AEA, it has sole and exclusive responsibility and authority to regulate source, special nuclear, and byproduct materials at DOE-owned nuclear facilities. Information contained herein on radionuclides is provided for process description purposes only.

DRAWING INDEX		
DWG NO	REV	TITLE
24590-PTF-M6-FEP-00001001	0	WASTE FEED EVAPORATION PROCESS SYSTEM
24590-PTF-M6-FEP-00001002	0	WASTE FEED EVAPORATION PROCESS SYSTEM

Q
QUALITY DESIGNATOR

REV	DESCRIPTION	ORG	CHKD	RVWD	APVD	DATE
0	ISSUED FOR CONSTRUCTION SEE NOTE 15		RST	ELS CER		1/31/08

REVISION HISTORY

ISSUED BY RPP-WTP PDC
ISSUE STAMP

PROJECT No.	24590
SITE	HANFORD
AREA	200E
BUILDING No.	10

	BY	DATE
ORIGINATOR		1/30/08
CHECKER	Richard Tomaszczak	1-31-08
APPROVER		1-31-08
REVIEWER		1/31/08
	Calvin Rasley	1/30/08

CONTENT APPLICABLE TO ALARA? [X] YES [ ] NO
ADR NO. 24590-PTF-ADR-M-02-030 REV: 2
SAFETY SCREEN REQUIRED? [X] YES [ ] NO F&NS INITIAL IF YES

BECHTEL
RIVER PROTECTION PROJECT
WASTE TREATMENT PLANT
2435 STEVENS CENTER PLACE
RICHLAND, WA 99354

CONTRACT No: DE-AC27-01RV14136

P&ID - PTF WASTE FEED EVAPORATION PROCESS SYSTEM EVAPORATOR FEED VESSEL FEP-VSL-00017A

SCALE: NONE
24590-PTF-M6-FEP-00001001
REV 0

SAFETY SCREEN IS REQUIRED FOR DRAWING TYPES IDENTIFIED IN 24590-WTP-GPP-SREG-002
'E' SIZE - 44x34
COMPUTER GENERATED - MANUAL CHANGES NOT PERMITTED
R10881727
01/28/2008 11:43:55 AM

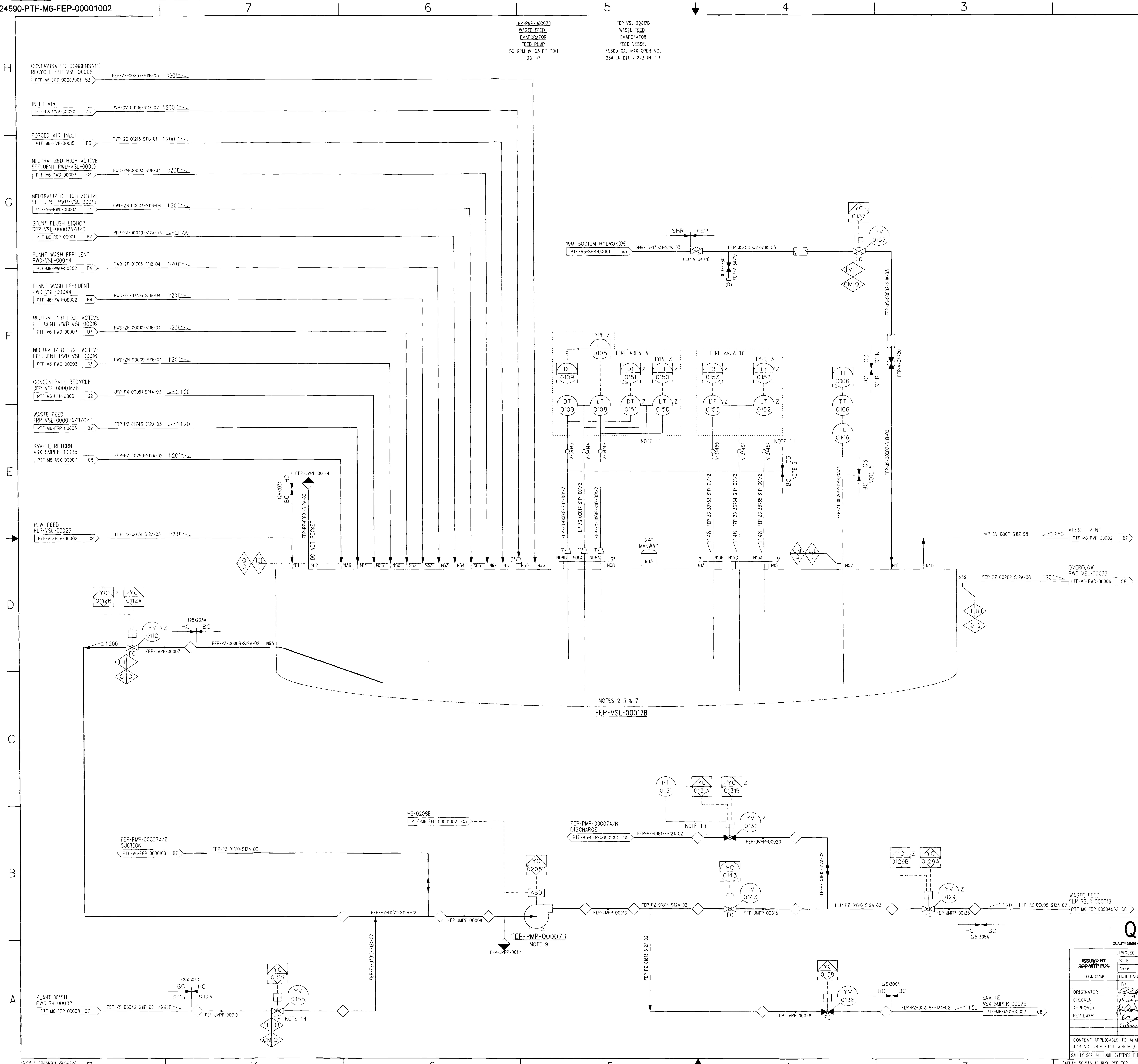

NOTES:

1. SEE DRAWINGS 24590-WTP-M6-50-00001 THROUGH 24590-WTP-M6-50-00008 FOR GENERAL NOTES, SYMBOLS AND LEGEND, AND GENERAL SLOPE REQUIREMENTS.
2. SEE DRAWINGS 24590-PTF-M6-FEP-00007001, AND -00007002 FOR PULSE JET MIXER REPRESENTATION AND NOZZLES UTILIZED.
3. SEE DRAWING 24590-PTF-M6-FEP-00008 FOR UTILITY PLANT WASH REPRESENTATION AND NOZZLES UTILIZED.
4. THE PRESSURE BOUNDARY FOR ALL SYSTEMS, STRUCTURES AND COMPONENTS ON THIS DRAWING ARE QUALITY LEVEL Q AND SEISMIC CATEGORY SC-I, UNLESS OTHERWISE NOTED.
5. PIPE SLEEVE PENETRATIONS BETWEEN OCCUPATIONAL AREAS AND INACCESSIBLE/REMOTE AREAS (R5) SHALL HAVE SHADOW SHIELDING TO MITIGATE DIRECT RADIATION SHINE OR BE JOGGLED, AS DETERMINED BY ENVIRONMENTAL AND NUCLEAR SAFETY. ALL PIPE/SLEEVE INTERFACES SHALL BE SEALED USING APPROVED FIRE-RATED PENETRATION SEAL DESIGNS TO MAINTAIN THE INTEGRITY OF THE FIRE WALL BETWEEN AREAS.
6. CONTENTS OF THIS DRAWING ARE DANGEROUS WASTE PERMIT AFFECTING.
7. ALL INTERNAL SUPPORTS AND WELDS THAT INTERACT WITH THE PRIMARY CONTAINMENT BARRIER (VESSEL) SHALL MAINTAIN EQUAL QUALITY LEVEL AND SEISMIC CATEGORY AS THE PARENT.
8. INDICATED SLOPES ARE CONSIDERED MINIMUM.
9. SEE DRAWING 24590-PTF-M6-PSW-00009 FOR PUMP SEAL WATER CONNECTIONS.
10. SEE DRAWING 24590-PTF-M6-ISA-00008 FOR BUBBLER RACKS AND SYSTEM CONNECTIONS.
11. QUALITY LEVEL Q AND SEISMIC CATEGORY SC-I BACKFLOW PREVENTION IS INSTALLED UPSTREAM OF LEVEL INSTRUMENTATION.
12. SEISMIC CATEGORY AND QUALITY LEVEL SHOWN ON THIS P&ID ARE THE MINIMUM REQUIREMENTS. DESIGN, FABRICATION, AND INSTALLATION MAY BE TO HIGHER REQUIREMENTS.
13. PRESSURE TRANSMITTER IS USED TO DETERMINE NON ITS/APC VALVE POSITION. PRESSURE TRANSMITTER IS LOCATED ON INSTRUMENT RACK IN OUT-CELL AREA. VALVE CONTAINS ITS, QUALITY LEVEL Q AND SEISMIC CATEGORY SC-III LIMIT SWITCHES FOR ITS VALVE POSITION.
14. VALVE IS USED TO CONTROL WATER COLUMN SEPARATION DURING FLUSHING.
15. THIS DRAWING IS CONVERTED FROM SINGLE SHEET TO MULTI-SHEET DRAWING AND IN PART SUPERSEDES 24590-PTF-M6-FEP-00001 REV 4. THIS DRAWING INCLUDES INFORMATION FROM 24590-PTF-M6N-FEP-00089 AND 24590-PTF-M6N-M80T-00038.

HOLD/OPEN ITEMS:

NONE

REFERENCES:

1. THE REQUIRED BATCH SEQUENCES, PERMISSIVES, INTERLOCKS, ALARMS AND OPERATOR INTERFACE POINTS ARE FULLY DESCRIBED IN THE SOFTWARE FUNCTIONAL SPECIFICATION FOR FEP-WASTE FEED EVAPORATOR PROCESS SYSTEM, 24590-PTF-3PS-FEP-T0001 AND SOFTWARE FUNCTIONAL SPECIFICATION FOR PTF EVAPORATOR TRAIN 24590-PTF-3PS-HP-T0002.
2. FOR PERMISSIVES AND INTERLOCKS FOR IMPORTANT TO SAFETY SYSTEMS (ITS) REFER TO SAFETY SYSTEM REQUIREMENT SPECIFICATIONS 24590-PTF-3PS-PPJ-T0003, (FUTURE) -T0005, (FUTURE) AND -T0016.

Please note that source, special nuclear, and byproduct materials, as defined in the Atomic Energy Act of 1954 (AEA) are regulated at the U. S. Department of Energy (DOE) facilities exclusively by DOE acting pursuant to its AEA authority. DOE asserts that pursuant to AEA, it has sole and exclusive responsibility and authority to regulate source, special nuclear, and byproduct materials at DOE-owned nuclear facilities. Information contained herein on radionuclides is provided for process description purposes only.

Q
QUALITY DESIGNATOR

REV	DESCRIPTION	ORG	CHKD	RVWD	APVD	DATE
0	ISSUED FOR CONSTRUCTION SEE NOTE 15	CBJ	RST	ELS	RLA	1-31-08

REVISION HISTORY

ISSUED BY RPP-WTP PDC
ISSUE STAMP

PROJECT No.	24590
SITE	HANFORD
AREA	200E
BUILDING No.	10

RIVER PROTECTION PROJECT
WASTE TREATMENT PLANT
2435 STEVENS CENTER PLACE
RICHLAND, WA 99354

	BY	DATE
ORIGINATOR	[signature]	1/30/08
CHECKER	Richard Tometezak	1-31-08
APPROVER	[signature]	1-31-08
REVIEWER	[signature]	1/31/08
	Calvin Rasley	1/30/08

CONTENT APPLICABLE TO ALARA? [X] YES [ ] NO
ADR NO. 24590-PTF-ADR-M-02-030 REV: 2
SAFETY SCREEN REQUIRED? [X] YES [ ] NO E&NS INITIAL IF YES SPG

CONTRACT No: DE-AC27-01RV14136

P&ID - PTF WASTE FEED EVAPORATION PROCESS SYSTEM EVAPORATOR FEED VESSEL FEP-VSL-00017B

SCALE: NONE

24590-PTF-M6-FEP-00001002 REV 0

SAFETY SCREEN IS REQUIRED FOR DRAWING TYPES IDENTIFIED IN 24590-WTP-GPP-SREG-002

'E' SIZE - 44x34
COMPUTER GENERATED - MANUAL CHANGES NOT PERMITTED

R10881728
01/28/2008 11:43:09 AM

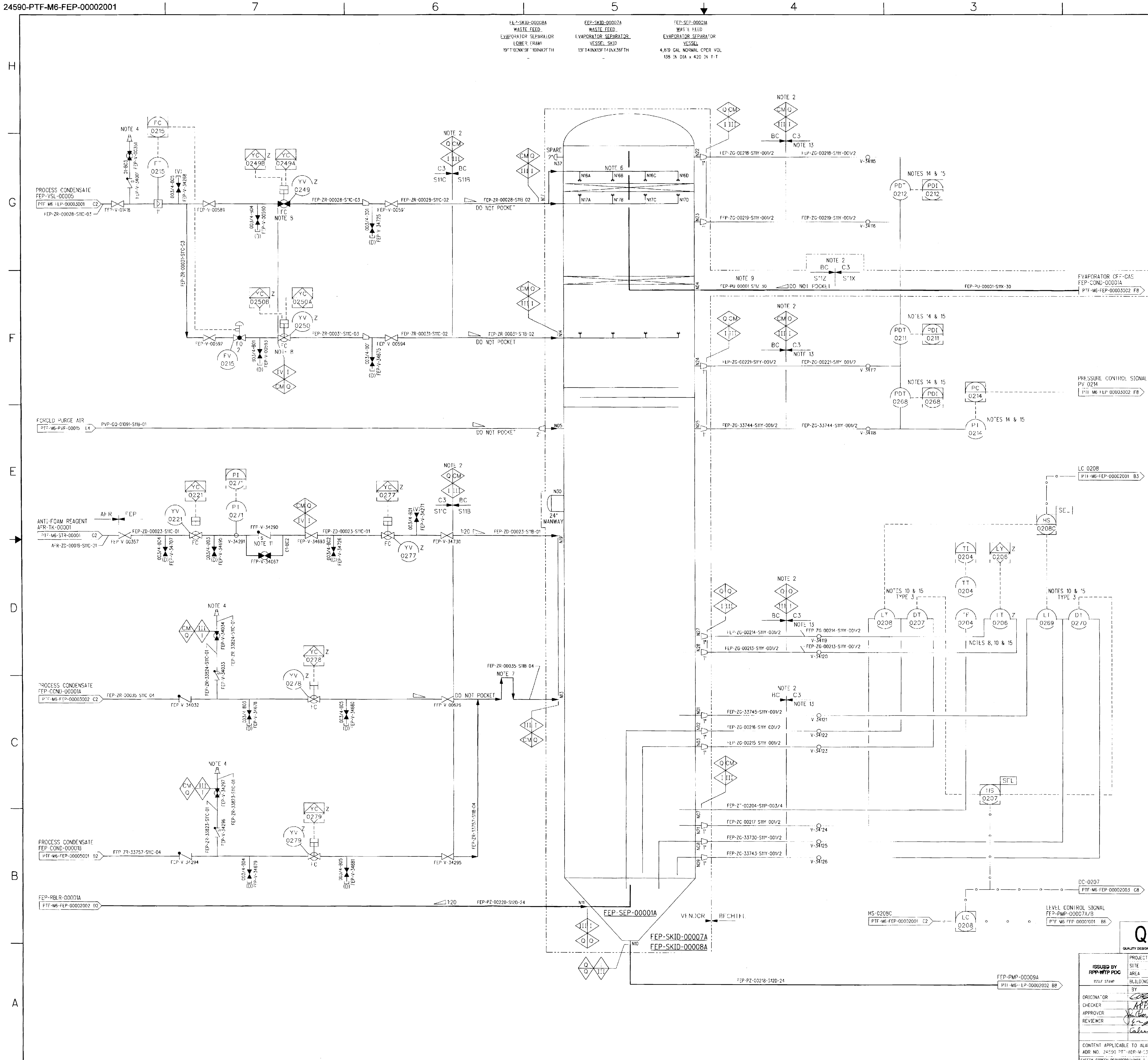

NOTES:

1. SEE DRAWINGS 24590-WTP-M6-50-00001 THROUGH 24590-WTP-M6-50-00008 FOR GENERAL NOTES, SYMBOLS AND LEGEND, AND GENERAL SLOPE REQUIREMENTS.
2. PIPE SLEEVE PENETRATIONS BETWEEN OCCUPATIONAL AREAS AND INACCESSIBLE/REMOTE AREAS (R5) SHALL HAVE SHADOW SHIELDING TO MITIGATE DIRECT RADIATION SHINE OR BE JOGGLED, AS DETERMINED BY ENVIRONMENTAL AND NUCLEAR SAFETY. ALL PIPE/SLEEVE INTERFACES SHALL BE SEALED USING APPROVED FIRE RATED PENETRATION SEAL DESIGNS TO MAINTAIN THE INTEGRITY OF THE FIRE WALL BETWEEN AREAS.
3. THE PRESSURE BOUNDARY FOR ALL SYSTEMS, STRUCTURES, AND COMPONENTS SHOWN ON THIS DRAWING IS QUALITY LEVEL Q AND SEISMIC CATEGORY SC I, UNLESS OTHERWISE NOTED.
4. REAGENT/PLANT WASH/AIR SERVICES PROVIDED AT LOCAL UTILITY STATION.
5. CONTENTS OF THIS DOCUMENT ARE DANGEROUS WASTE PERMIT AFFECTING.
6. SPRAY NOZZLES FOR UPPER DEMISTER PAD ARE MOUNTED EXTERNALLY AROUND THE PERIMETER OF THE SEPARATOR SHELL. THESE NOZZLES ARE SHOWN INTERNALLY TO DEPICT THE FUNCTION RATHER THAN LOCATION.
7. MINIMUM HYDRAULIC SEAL HEIGHT IS 3'-6".
8. SEPARATOR HIGH-LEVEL DETECTION INSTRUMENTATION LY-206/LT-206, ASSOCIATED PIPING, AND VALVES YV-0249 AND YV 0250 ARE DESIGNATED QUALITY LEVEL Q AND SEISMIC CATEGORY SC-I.
9. LINE FEP-PU-00001 SHALL BE PROVIDED BY FEP-SKID-00007A VENDOR, SEPARATE FROM SKID.
10. SEE DRAWING 24590-PTF-M6-ISA-00008 FOR BUBBLER RACKS AND SYSTEM CONNECTIONS.
11. 1" CHECK VALVE OPENING PRESSURE 55 PSIG.
12. EQUIPMENT WITHIN VENDOR BOUNDARY IS TO BE SUPPLIED BY VENDOR. PIPING AND PIPE SUPPORT TO BE PROVIDED BY BECHTEL. EQUIPMENT DESIGN DEPENDENT ON VENDOR SYSTEM DESIGN.
13. QUALITY LEVEL Q AND SEISMIC CATEGORY SC-I BACKFLOW PREVENTION TO BE PLACED UPSTREAM OF ALL LEVEL AND PRESSURE INSTRUMENTATION.
14. SEPARATOR PDT AND PT WILL BE AIR PURGED.
15. SENSING LINES UTILIZING AIR TO BE EQUIPPED FOR HUMIDIFICATION AND PERIODIC WATER FLUSH CAPABILITIES.
16. THIS DRAWING IS CONVERTED FROM SINGLE SHEET TO MULTI-SHEET DRAWING AND IN PART SUPERSEDES 24590-PTF-M6-FEP-00002 REV 4. THIS DRAWING INCLUDES INFORMATION FROM 24590-PTF-M6PN FEP-00002.

HOLD/OPEN ITEMS:

NONE

REFERENCES:

1. THE REQUIRED BATCH SEQUENCES, PERMISSIVES, INTERLOCKS, ALARMS AND OPERATOR INTERFACE POINTS ARE FULLY DESCRIBED IN THE SOFTWARE FUNCTIONAL SPECIFICATION FOR FEP WASTE FEED EVAPORATION PROCESS SYSTEM, 24590-PTF-3PS-FEP-T0001 AND SOFTWARE FUNCTIONAL SPECIFICATION FOR PTF EVAPORATOR TRAIN 24590-PTF-3PS-TLP-T0002 .
2. FOR PERMISSIVES AND INTERLOCKS TO IMPORTANT TO SAFETY SYSTEMS (ITS), REFER TO SAFETY SYSTEM REQUIREMENT SPECIFICATIONS 24590-PTF-3PS-PPJ-T0004 (FUTURE), AND -T0016.

Please note that source, special nuclear, and byproduct materials, as defined in the Atomic Energy Act of 1954 (AEA) are regulated at the U. S. Department of Energy (DOE) facilities exclusively by DOE acting pursuant to its AEA authority. DOE asserts that pursuant to AEA, it has sole and exclusive responsibility and authority to regulate source, special nuclear, and byproduct materials at DOE-owned nuclear facilities. Information contained herein on radionuclides is provided for process description purposes only.

DRAWING INDEX

DWG NO	REV	TITLE
24590-PTF-M6-FEP-00002001	0	WASTE FEED EVAPORATION PROCESS SYSTEM
24590-PTF-M6-FEP-00002002	0	WASTE FEED EVAPORATION PROCESS SYSTEM
24590-PTF-M6-FEP-00002003	0	WASTE FEED EVAPORATION PROCESS SYSTEM

REVISION HISTORY

REV	DESCRIPTION	ORG	CHKD	RVWD	APVD	DATE
0	ISSUED FOR CONSTRUCTION SEE NOTE 16		APP	ELS		1-31-08

Q
QUALITY DESIGNATOR

ISSUED BY RPP-WTP PDC
ISSUE STAMP

PROJECT No.	24590
SITE	HANFORD
AREA	200E
BUILDING No.	10

	BY	DATE
ORIGINATOR		1/30/08
CHECKER		1/30/08
APPROVER		1-31-08
REVIEWER		1/31/08
		1/30/08

CONTENT APPLICABLE TO ALARA? [X] YES [ ] NO
ADR NO. 24590-PTF-ADR-M-03-012 REV: 2
SAFETY SCREEN REQUIRED? [X] YES [ ] NO E&NS INITIAL IF YES

BECHTEL
RIVER PROTECTION PROJECT
WASTE TREATMENT PLANT
2435 STEVENS CENTER PLACE
RICHLAND, WA 99354

CONTRACT No: DE-AC27-01RV14136

P&ID-PTF WASTE FEED EVAPORATION PROCESS SYSTEM SEPARATOR FEP-SEP-00001A

SCALE: NONE
24590-PTF-M6-FEP-00002001
REV 0

SAFETY SCREEN IS REQUIRED FOR DRAWING TYPES IDENTIFIED IN 24590-WTP-GPP-SREG-002

'E' SIZE - 44x34
COMPUTER GENERATED - MANUAL CHANGES NOT PERMITTED

R10881730
01/30/2008 07:28:10 AM

24590-PTF-M6-FEP-00002002

FEP-PMP-00009A
WASTE FEED EVAPORATOR RECIRCULATION PUMP
11,000 GPM @ 10 FT TDH
75 HP

FEP-RBLR-00001A
WASTE FEED EVAPORATOR REBOILER
17.8 MM BTU/HR
72 IN DIA x 180 IN H

NOTES:

1. SEE DRAWINGS 24590-WTP-M6-50-00001 THROUGH 24590-WTP-M6-50-00008 FOR GENERAL NOTES, SYMBOLS AND LEGEND, AND GENERAL SLOPE REQUIREMENTS.
2. RECIRCULATION PUMP DISCHARGE RATE WILL BE ESTIMATED BASED ON MOTOR AMPERAGE MEASUREMENT AND PUMP PERFORMANCE CURVE.
3. PIPE SLEEVE PENETRATIONS BETWEEN OCCUPATIONAL AREAS AND INACCESSIBLE/REMOTE AREAS (RS) SHALL HAVE SHADOW SHIELDING TO MITIGATE DIRECT RADIATION SHINE OR BE JOGGLED, AS DETERMINED BY ENVIRONMENTAL AND NUCLEAR SAFETY. ALL PIPE/SLEEVE INTERFACES SHALL BE SEALED USING APPROVED FIRE-RATED PENETRATION SEAL DESIGNS TO MAINTAIN THE INTEGRITY OF THE FIRE WALL BETWEEN AREAS.
4. THE PRESSURE BOUNDARY FOR ALL SYSTEMS, STRUCTURES, AND COMPONENTS SHOWN ON THIS DRAWING IS QUALITY LEVEL Q AND SEISMIC CATEGORY SC-III, UNLESS OTHERWISE NOTED.
5. CONTENTS OF THIS DOCUMENT ARE DANGEROUS WASTE PERMIT AFFECTING.
6. RECYCLED STEAM CONDENSATE IS INJECTED INTO THE REBOILER STEAM SUPPLY TO REDUCE SUPERHEAT TEMPERATURE AND PRESSURE ARE USED BY THE TEMPERATURE CONTROLLER AS INPUT IN DETERMINING REQUIRED FLOWRATE FROM THE REBOILER CONDENSATE TRANSFER VESSEL.
7. SEE DRAWING 24590 PTF-M6-PSW-00009 FOR PUMP SEAL WATER CONNECTIONS.
8. RAM 0241 IN LOCAL ROOM AND SUPPLEMENTED WITH A ROTATING BEACON.
9. PLANT DESIGN TO MAXIMIZE SLOPE WITH SPACE AVAILABLE. NO POCKETS.
10. EQUIPMENT WITHIN VENDOR BOUNDARY IS TO BE SUPPLIED BY VENDOR; PIPING, MANUAL VALVES, AND FIELD SUPPORTS TO BE PROVIDED BY BECHTEL EQUIPMENT DESIGN DEPENDENT ON VENDOR SYSTEM DESIGN.
11. THERMOWELL DOWN STREAM OF DESUPERHEATER TO BE SHIELDED TO PREVENT POSSIBLE SATURATED STEAM DURING STARTUP OR LOAD CHANGES FROM CONDENSING ON THE WELL AND PREVENTING CORRECT TEMPERATURE READOUT.
12. MINIMIZE LENGTH OF RELIEF VALVE INLET PIPING AND LOCATE REDUCER AS CLOSE AS POSSIBLE TO THE RELIEF VALVE. MINIMIZE TOTAL LENGTH OF DISCHARGE PIPING AND LOCATE EXPANSION AS CLOSE AS POSSIBLE TO THE RELIEF.
13. ROTOR TYPE SELECTOR VALVE REQUIRED TO MEET INLET PRESSURE DROP REQUIREMENTS.
14. THIS DRAWING IS CONVERTED FROM SINGLE SHEET TO MULTI-SHEET DRAWING AND IN PART SUPERSEDES 24590-PTF-M6-FEP-00002 REV 2.

HOLD/OPEN ITEMS:

NONE

REFERENCES:

1. THE REQUIRED BATCH SEQUENCES, PERMISSIVES, INTERLOCKS, ALARMS AND OPERATOR INTERFACE POINTS ARE FULLY DESCRIBED IN THE SOFTWARE FUNCTIONAL SPECIFICATION FOR FEP-WASTE FEED EVAPORATION PROCESS SYSTEM, 24590-PTF-3PS-FEP-T0001 AND SOFTWARE FUNCTIONAL SPECIFICATION FOR PTF EVAPORATOR TRAIN 24590-PTF-3PS-TLP-T0002 .
2. FOR PERMISSIVES AND INTERLOCKS TO IMPORTANT TO SAFETY SYSTEMS (ITS) REFER TO SAFETY SYSTEM REQUIREMENT SPECIFICATIONS 24590-PTF-3PS-PJJ-T0004 (-OTHER), AND -T0076.

Please note that source, special nuclear, and byproduct materials, as defined in the Atomic Energy Act of 1954 (AEA) are regulated at the U. S. Department of Energy (DOE) facilities exclusively by DOE acting pursuant to its AEA authority. DOE asserts that pursuant to AEA, it has sole and exclusive responsibility and authority to regulate source, special nuclear, and byproduct materials at DOE-owned nuclear facilities. Information contained herein on radionuclides is provided for process description purposes only.

REV	DESCRIPTION	ORG	CHKD	RVWD	APVD	DATE
0	ISSUED FOR CONSTRUCTION SEE NOTE 14					1-31-08

REVISION HISTORY

Q — QUALITY DESIGNATION

ISSUED BY RPP-WTP PDC — ISSUE STAMP

	BY	DATE
ORIGINATOR		1/30/08
CHECKER		1/30/08
APPROVER		1-31-08
REVIEWER		1/31/08
		1/30/08

CONTENT APPLICABLE TO ALARA? [X] YES [ ] NO
ADR NO.: 24590-WTP-ADR-ENG-07-002 REV: 2
SAFETY SCREEN REQUIRED? [ ] YES [X] NO EWS INITIAL IF YES
SAFETY SCREEN IS REQUIRED FOR DRAWING TYPES CONTAINED IN 24590-WTP-GPP-SWEG-002

PROJECT No. 24590
SITE HANFORD
AREA 200
BUILDING No. 70

RIVER PROTECTION PROJECT
WASTE TREATMENT PLANT
2435 STEVENS CENTER PLACE
RICHLAND, WA 99354

CONTRACT No. DE-AC27-01RV14136

P&ID-PTF
WASTE FEED EVAPORATION PROCESS SYSTEM
REBOILER
FEP-RBLR-00001A

SCALE: NONE

24590-PTF-M6-FEP-00002002 — REV 0

"C" SIZE - 44x34 MANUAL
COMPUTER GENERATED DRAWING. CHANGES NOT PERMITTED

FORM F-TDP-DWN-02-2003

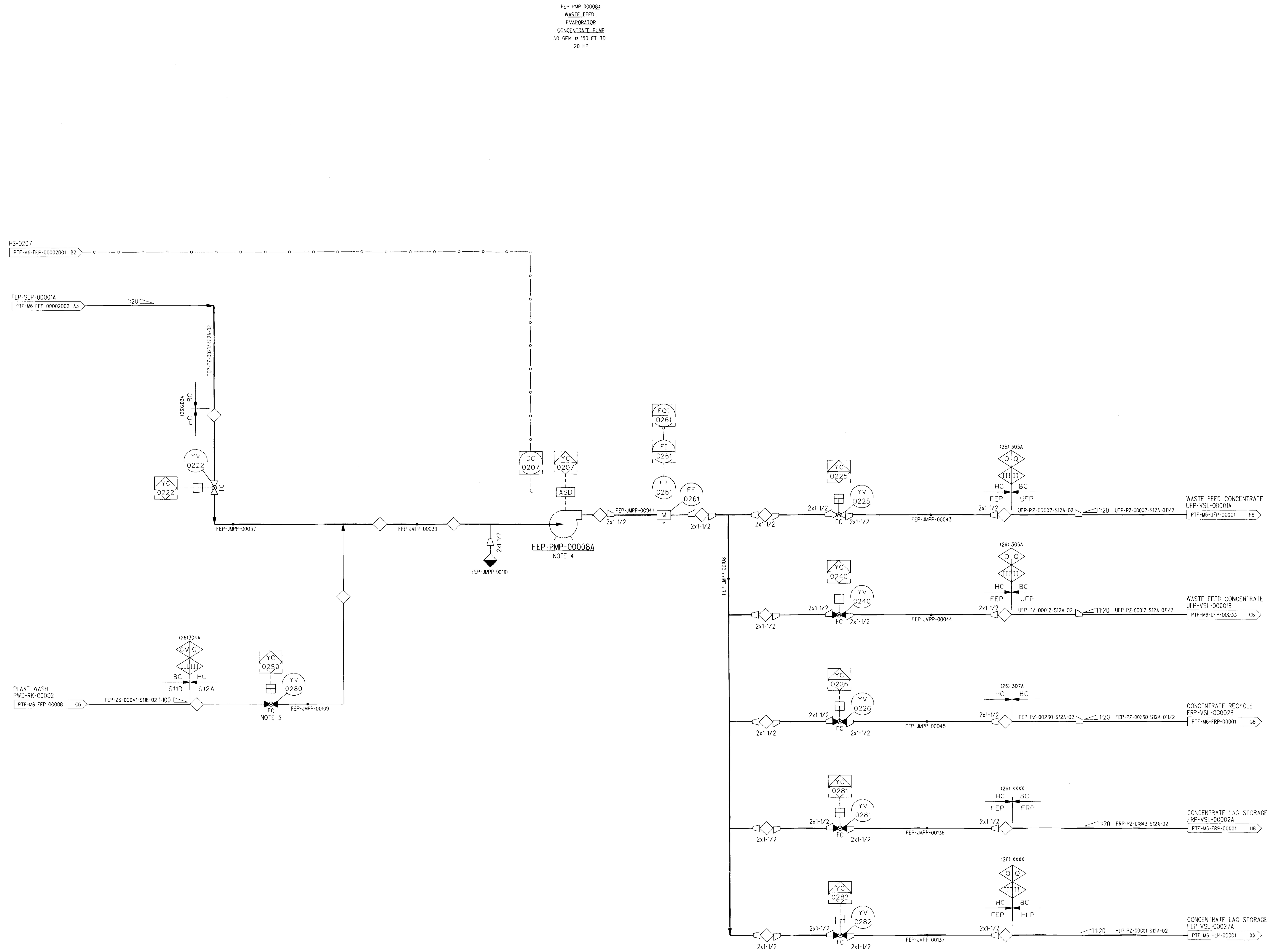

NOTES:

1. SEE DRAWINGS 24590 WTP-M6-50-00001 THROUGH 24590-WTP-M6-50-00008 FOR GENERAL NOTES, SYMBOLS AND LEGEND, AND GENERAL SLOPE REQUIREMENTS.
2. THE PRESSURE BOUNDARY FOR ALL SYSTEMS, STRUCTURES, AND COMPONENTS SHOWN ON THIS DRAWING IS QUALITY LEVEL Q AND SEISMIC CATEGORY SC III, UNLESS OTHERWISE NOTED.
3. CONTENTS OF THIS DOCUMENT ARE DANGEROUS WASTE PERMIT AFFECTING.
4. SEE DRAWING 24590-PTF M6 PSW-00009 FOR PUMP SEAL WATER CONNECTIONS.
5. VALVE TO BE USED TO CONTROL WATER COLUMN SEPARATION DURING FLUSHING.
6. THIS DRAWING IS CONVERTED FROM SINGLE SHEET TO MULTI-SHEET DRAWING AND IN PART SUPERSEDES 24590-PTF-M6 FEP-00002 REV 4. THIS DRAWING INCLUDES INFORMATION FROM 24590-PTF-M6N-FEP-00087.

HOLD/OPEN ITEMS:

NONE

REFERENCES:

1. THE REQUIRED BATCH SEQUENCES, PERMISSIVES, INTERLOCKS, ALARMS AND OPERATOR INTERFACE POINTS ARE FULLY DESCRIBED IN THE SOFTWARE FUNCTIONAL SPECIFICATION FOR FEP-WASTE FEED EVAPORATION PROCESS SYSTEM, 24590-PTF-3PS-FEP-T0001 AND SOFTWARE FUNCTIONAL SPECIFICATION FOR PTF EVAPORATOR TRAIN 24590 PTF-3PS-TLP-T0002 .
2. FOR PERMISSIVES AND INTERLOCKS TO IMPORTANT TO SAFETY SYSTEMS (ITS), REFER TO SAFETY SYSTEM REQUIREMENT SPECIFICATIONS 24590-PTF 3PS-PPJ-T0004 (FUTURE), AND -T0016.

Please note that source, special nuclear, and byproduct materials, as defined in the Atomic Energy Act of 1954 (AEA) are regulated at the U. S. Department of Energy (DOE) facilities exclusively by DOE acting pursuant to its AEA authority. DOE asserts that pursuant to AEA, it has sole and exclusive responsibility and authority to regulate source, special nuclear, and byproduct materials at DOE-owned nuclear facilities. Information contained herein on radionuclides is provided for process description purposes only.

Q
QUALITY DESIGNATOR

REV	DESCRIPTION	ORG	CHKD	RVWD	APVD	DATE
0	ISSUED FOR CONSTRUCTION SEE NOTE 6	CEJ	APP	ELS / CER	RW	1-31-08

REVISION HISTORY

ISSUED BY RPP-WTP PDC
ISSUE STAMP

PROJECT No.	24590
SITE	HANFORD
AREA	2005
BUILDING No.	10

	BY	DATE
ORIGINATOR	[signature]	1/30/08
CHECKER	AP Frich	1/30/08
APPROVER	[signature]	1-31-08
REVIEWER	[signature]	1/31/08
	Calvin Kasley	1/30/08

CONTENT APPLICABLE TO ALARA? [X] YES [ ] NO
ADR NO. 24590 PTF-ADR-M-03-012 REV: 2
SAFETY SCREEN REQUIRED? [X] YES [ ] NO E&NS INITIAL IF YES

BECHTEL
RIVER PROTECTION PROJECT
WASTE TREATMENT PLANT
2435 STEVENS CENTER PLACE
RICHLAND, WA 99354

CONTRACT No: DE-AC27-01RV14136

P&ID-PTF WASTE FEED EVAPORATION PROCESS SYSTEM PUMP FEP-PMP-00008A

SCALE: NONE
24590-PTF-M6-FEP-00002003
REV 0

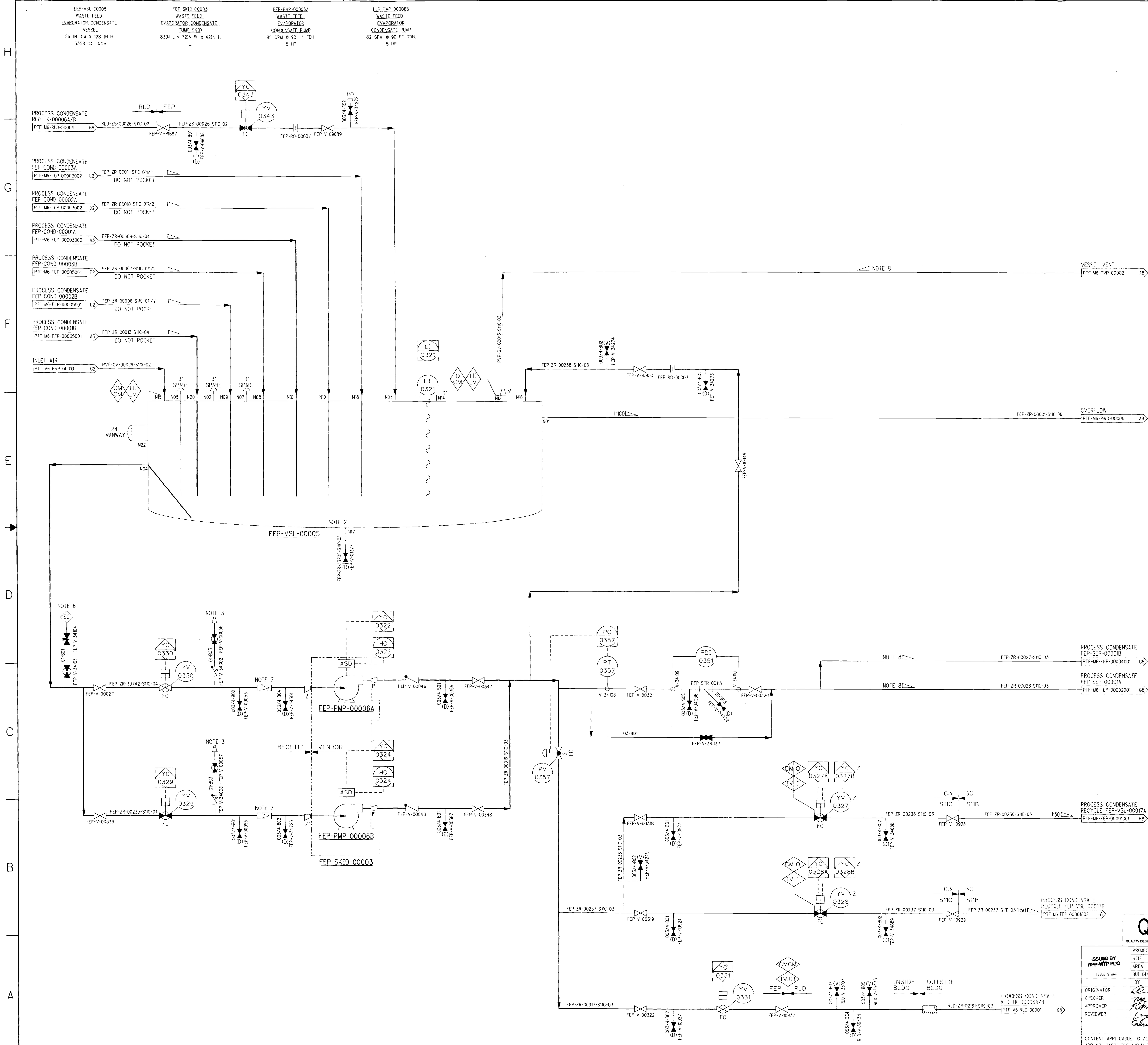

NOTES:

1. SEE DRAWINGS 24590-WTP-M6-50-00001 THROUGH 24590-WTP-M6-50-00008 FOR GENERAL NOTES, SYMBOLS AND LEGEND, AND GENERAL SLOPE REQUIREMENTS.
2. SEE DRAWING 24590-PTF-M6-FEP-00008 FOR PLANT WASH REPRESENTATION AND NOZZLES UTILIZED.
3. REAGENT/PLANT WASH/AIR SERVICES PROVIDED AT LOCAL UTILITY STATION.
4. CONTENTS OF THIS DOCUMENT ARE DANGEROUS WASTE PERMIT AFFECTING.
5. THE PRESSURE BOUNDARY FOR ALL SYSTEMS, STRUCTURES, AND COMPONENTS ARE QUALITY LEVEL CM AND SEISMIC CATEGORY SC-IV, UNLESS OTHERWISE NOTED.
6. LOCATE THE SAMPLE CONNECTION IN AN ACCESSIBLE AREA AND IN SAFE LOCATION TO FACILITATE SAMPLE COLLECTION. THE BALL VALVE, NEEDLE VALVE, AND SAMPLE CONNECTION POINT SHALL BE WITHIN OPERATOR'S IMMEDIATE REACH WHILE COLLECTION A SAMPLE. PROVIDE A NIPPLE DOWNSTREAM OF THE NEEDLE VALVE WITH A MNPT TERMINUS CLOSED BY A FNPT CAP. DO NOT POCKET THE LINE. DOWNSTREAM OF THE BALL VALVE, THE LINE SHALL BE FREE DRAINING.
7. STRAINERS CAN BE REMOVED AFTER START UP.
8. SLOPE TO BE MAXIMIZED BASED ON SPACE AVAILABILITY. DO NOT POCKET.
9. THIS DRAWING IS CONVERTED FROM SINGLE SHEET TO MULTI SHEET DRAWING AND IN PART SUPERSEDES 24590-PTF-M6-FEP-00003 REV 4. THIS DRAWING INCLUDES INFORMATION FROM 24590-PTF-M6N-FEP-00001 AND -00002.

HOLD/OPEN ITEMS:

NONE

REFERENCES:

1. THE REQUIRED BATCH SEQUENCES, PERMISSIVES, INTERLOCKS, ALARMS AND OPERATOR INTERFACE POINTS ARE FULLY DESCRIBED IN THE SOFTWARE FUNCTIONAL SPECIFICATION, FOR FEP-WASTE FEED EVAPORATION PROCESS SYSTEM, 24590-PTF-3PS-FEP-T0001 AND SOFTWARE FUNCTIONAL SPECIFICATION FOR THE EVAPORATOR TRAIN 24590-PTF-3PS-TLP-T0002.
2. FOR PERMISSIVES AND INTERLOCKS TO IMPORTANT TO SAFETY SYSTEMS (ITS) REFER TO SAFETY SYSTEM REQUIREMENT SPECIFICATION 24590-PTF-3PS-FPJ-T0016.

Please note that source, special nuclear, and byproduct materials, as defined in the Atomic Energy Act of 1954 (AEA) are regulated at the U. S. Department of Energy (DOE) facilities exclusively by DOE acting pursuant to its AEA authority. DOE asserts that pursuant to AEA, it has sole and exclusive responsibility and authority to regulate source, special nuclear, and byproduct materials at DOE-owned nuclear facilities. Information contained herein on radionuclides is provided for process description purposes only.

DRAWING INDEX		
DWG NO	REV	TITLE
24590-PTF-M6-FEP-00003001	0	WASTE FEED EVAPORATION PROCESS SYSTEM
24590-PTF-M6-FEP-00003002	0	WASTE FEED EVAPORATION PROCESS SYSTEM

Q
QUALITY DESIGNATOR

REVISION HISTORY

REV	DESCRIPTION	ORG	CHKD	RVWD	APVD	DATE
0	ISSUED FOR CONSTRUCTION SEE NOTE 9	[signature]	[signature]	[signature]	[signature]	1-31-08

ISSUED BY RPP-WTP PDC
ISSUE STAMP

PROJECT No.	24590
SITE	HANFORD
AREA	200E
BUILDING No.	10

RIVER PROTECTION PROJECT
WASTE TREATMENT PLANT
2435 STEVENS CENTER PLACE
RICHLAND, WA 99354

CONTRACT No: DE-AC27-01RV14136

	BY	DATE
ORIGINATOR	[signature]	1/31/08
CHECKER	[signature]	1/31/08
APPROVER	[signature]	1-31-08
REVIEWER	[signature]	1/31/08
	[signature]	1/31/08

CONTENT APPLICABLE TO ALARA? [X] YES [ ] NO
ADR NO. 24590-PTF-ADR-M-03-012 REV: 2
SAFETY SCREEN REQUIRED? [X] YES [ ] NO E&NS INITIAL IF YES [initials]

P&ID - PTF WASTE FEED EVAPORATION PROCESS SYSTEM CONDENSATE COLLECTION FEP-VSL-00005

SCALE: NONE
24590-PTF-M6-FEP-00003001
REV 0

SAFETY SCREEN IS REQUIRED FOR DRAWING TYPES IDENTIFIED IN 24590-WTP-GPP-SREG-002
'E' SIZE - 44x34
COMPUTER GENERATED - MANUAL CHANGES NOT PERMITTED
R10881734
01/30/2008 03:50:09 PM

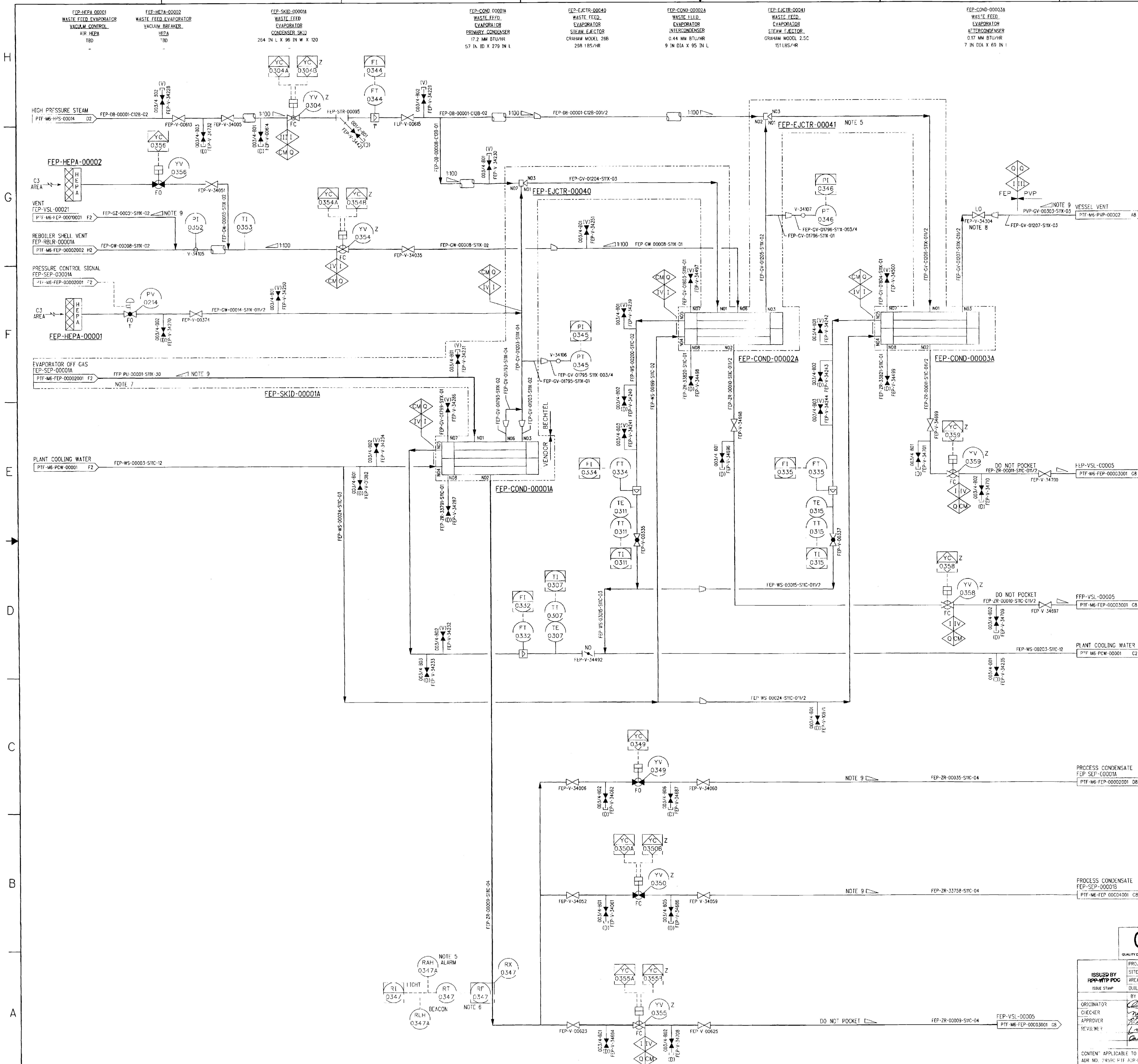

NOTES:

1. SEE DRAWINGS 24590-WTP-M6-50-00001 THROUGH 24590 WTP-M6-50 00008 FOR GENERAL NOTES, SYMBOLS AND LEGEND, AND GENERAL SLOPE REQUIREMENTS.
2. SEE DRAWING 24590-PTF-M6-FEP-00008 FOR PLANT WASH REPRESENTATION AND NOZZLES UTILIZED.
3. CONTENTS OF THIS DOCUMENT ARE DANGEROUS WASTE PERMIT AFFECTING.
4. THE PRESSURE BOUNDARY FOR ALL SYSTEMS, STUCTURES, AND COMPONENTS SHOWN ON THIS DRAWING ARE QUALITY LEVEL Q AND SEISMIC CATEGORY SC-I, UNLESS OTHERWISE NOTED.
5. ALARM RAH-0347A TO BE LOCATED NEAR CONDENSER FEP-COND-00001A AND SUPPLEMENTED WITH A ROTATING BEACON.
6. INSTALL RADIATION MONITOR ON HORIZONTAL PIPE SEGMENT THAT WILL INSURE FIXED AND CONSTANT VOLUME.
7. LINE FEP-PU-00001 SHALL BE PROVIDED BY FEP-SKID-00001A VENDOR SEPARATE FROM SKID.
8. VALVE IS MAINTAINED OPEN FOR SAFETY REASONS TO PROVIDE PRIMARY AIR PURGE PATH FOR FEP SEPARATOR VESSEL AND CONDENSERS, FEP-SEP-00001A, FEP-COND-00001A, FEP-COND-00002A, AND FEP-COND-00003A.
9. SLOPE TO BE MAXIMIZED BASED ON SPACE AVAIABILITY. DO NOT POCKET.
10. THIS DRAWING IS CONVERTED FROM SINGLE SHEET TO MULTI-SHEET DRAWING AND IN PART SUPERSEDES 24590-PTF-M6-FEP-00003 REV 4. THIS DRAWING INCLUDES INFORMATION FROM 24590-PTF-M6N-FEP-00081, 24590-PTF-M6PN-FEP-00002, AND -00004.

HOLD/OPEN ITEMS:

NONE

REFERENCES:

1. THE REQUIRED BATCH SEQUENCES, PERMISSIVES, INTERLOCKS, ALARMS AND OPERATOR INTERFACE POINTS ARE FULLY DESCRIBED IN THE SOFTWARE FUNCTIONAL SPECIFICATION FOR FEP-WASTE FEED EVAPORATION PROCESS SYSTEM, 24590-PTF-3PS-FEP-T0001 AND SOFTWARE FUNCTIONAL SPECIFICATION FOR THE EVAPORATOR TRAIN 24590-PTF-3PS-TLP-T0002.
2. FOR PERMISSIVES AND INTERLOCKS TO IMPORTANT TO SAFETY SYSTEMS (ITS), REFER TO SAFETY SYSTEM REQUIREMENT SPECIFICATION 24590-PTF-3PS-PPJ-T0016.

Please note that source, special nuclear, and byproduct materials, as defined in the Atomic Energy Act of 1954 (AEA) are regulated at the U. S. Department of Energy (DOE) facilities exclusively by DOE acting pursuant to its AEA authority. DOE asserts that pursuant to AEA, it has sole and exclusive responsibility and authority to regulate source, special nuclear, and byproduct materials at DOE-owned nuclear facilities. Information contained herein on radionuclides is provided for process description purposes only.

Q
QUALITY DESIGNATOR

REV	DESCRIPTION	ORG	CHKD	RVWD	APVD	DATE
0	ISSUED FOR CONSTRUCTION SEE NOTE 10					1-31-08

REVISION HISTORY

ISSUED BY RPP-WTP PDC
ISSUE STAMP

PROJECT No.	24590
SITE	HANFORD
AREA	200E
BUILDING No.	10

	BY	DATE
ORIGINATOR		1/31/08
CHECKER		1/31/08
APPROVER		1-31-08
REVIEWER		1/31/08
		1/31/08

CONTENT APPLICABLE TO ALARA? [X] YES [ ] NO
ADR NO. 24590-PTF-ADR-M-03-012 REV: 2
SAFETY SCREEN REQUIRED? [X] YES [ ] NO E&NS INITIAL IF YES

RIVER PROTECTION PROJECT
WASTE TREATMENT PLANT
2435 STEVENS CENTER PLACE
RICHLAND, WA 99354

CONTRACT No: DE-AC27-01RV14136

P&ID - PTF WASTE FEED EVAPORATION PROCESS SYSTEM CONDENSERS FEP-COND-00001A/2A/3A

SCALE: NONE
24590-PTF-M6-FEP-00003002
REV 0

SAFETY SCREEN IS REQUIRED FOR DRAWING TYPES IDENTIFIED IN 24590-WTP-GPP-SREG-002
E SIZE 44x34
COMPUTER GENERATED - MANUAL CHANGES NOT PERMITTED
R10881735
01/31/2008 09:33:56 AM

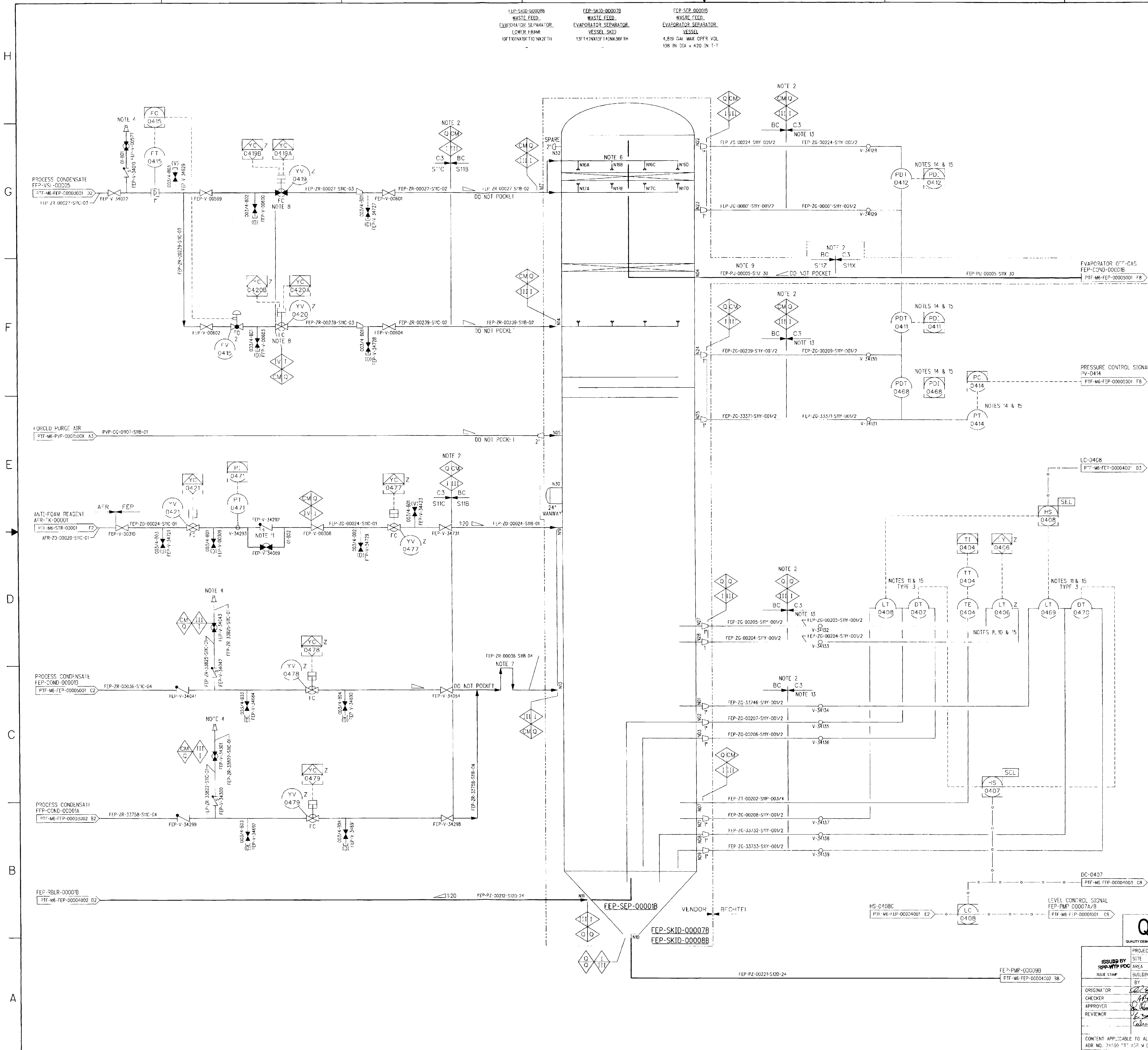

NOTES:

1. SEE DRAWINGS 24590-WTP-M6-50-00001 THROUGH 24590-WTP-M6-50-00008 FOR GENERAL NOTES, SYMBOLS AND LEGEND, AND GENERAL SLOPE REQUIREMENTS.
2. PIPE SLEEVE PENETRATIONS BETWEEN OCCUPATIONAL AREAS AND INACCESSIBLE/REMOTE AREAS (R5) SHALL HAVE SHADOW SHIELDING TO MITIGATE DIRECT RADIATION SHINE OR BE JOGGLED, AS DETERMINED BY ENVIRONMENTAL AND NUCLEAR SAFETY. ALL PIPE/SLEEVE INTERFACES SHALL BE SEALED USING APPROVED FIRE-RATED PENETRATION SEAL DESIGNS TO MAINTAIN THE INTEGRITY OF THE FIRE WALL BETWEEN AREAS.
3. THE PRESSURE BOUNDARY FOR ALL SYSTEMS, STRUCTURES, AND COMPONENTS SHOWN ON THIS DRAWING IS QUALITY LEVEL Q AND SEISMIC CATEGORY SC I, UNLESS OTHERWISE NOTED.
4. REAGENT/PLANT WASH/AIR SERVICES PROVIDED AT LOCAL UTILITY STATION.
5. CONTENTS OF THIS DOCUMENT ARE DANGEROUS WASTE PERMIT AFFECTING.
6. SPRAY NOZZLES FOR UPPER DEMISTER PAD ARE MOUNTED EXTERNALLY AROUND THE PERIMETER OF THE SEPARATOR SHELL. THESE NOZZLES ARE SHOWN INTERNALLY TO DEPICT THE FUNCTION RATHER THAN LOCATION.
7. MINIMUM HYDRAULIC SEAL HEIGHT IS 3'-6".
8. SEPARATOR HIGH-LEVEL DETECTION INSTRUMENTATION LY 0406/LT 0406, ASSOCIATED PIPING, AND VALVES YV-0419 AND YV-0420 ARE DESIGNATED QUALITY LEVEL Q AND SEISMIC CATEGORY SC I.
9. LINE FEP-PJ-00005 SHALL BE PROVIDED BY FEP-SKID-00007B VENDOR, SEPARATE FROM SKID.
10. SEE DRAWING 24590-PTF-M6-ISA-00008 FOR BUBBLER RACKS AND SYSTEM CONNECTIONS.
11. 1" CHECK VALVE OPENING PRESSURE 55 PSIG.
12. EQUIPMENT WITHIN VENDOR BOUNDARY IS TO BE SUPPLIED BY VENDOR. PIPING AND PIPE SUPPORT TO BE PROVIDED BY BECHTEL. EQUIPMENT DESIGN DEPENDENT ON VENDOR SYSTEM DESIGN.
13. QUALITY LEVEL Q AND SEISMIC CATEGORY SC-I BACKFLOW PREVENTION TO BE PLACED UPSTREAM OF ALL LEVEL AND PRESSURE INSTRUMENTATION.
14. SEPARATOR PDT AND PT WILL BE AIR PURGED.
15. SENSING LINES UTILIZING AIR TO BE EQUIPPED FOR HUMIDIFICATION AND PERIODIC WATER FLUSH CAPABILITIES.
16. THIS DRAWING IS CONVERTED FROM SINGLE SHEET TO MULTI-SHEET DRAWING AND IN PART SUPERSEDES 24590-PTF-M6-FEP-00004 REV 4. THIS DRAWING INCLUDES INFORMATION FROM 24590-PTF-M6PN-FEP-00002.

HOLD/OPEN ITEMS:

NONE

REFERENCES:

1. THE REQUIRED BATCH SEQUENCES, PERMISSIVES, INTERLOCKS, ALARMS AND OPERATOR INTERFACE POINTS ARE FULLY DESCRIBED IN THE SOFTWARE FUNCTIONAL SPECIFICATION FOR FEP-WASTE FEED EVAPORATION PROCESS SYSTEM, 24590-PTF-3PS-FEP-T0001 AND SOFTWARE FUNCTIONAL SPECIFICATION FOR PTF EVAPORATOR TRAIN 24590-PTF-3PS-TLP-T0002 .
2. FOR PERMISSIVES AND INTERLOCKS TO IMPORTANT TO SAFETY SYSTEMS (ITS), REFER TO SAFETY SYSTEM REQUIREMENT SPECIFICATIONS 24590-PTF-3PS-PPJ-T0004 (FUTURE), AND TOC16.

Please note that source, special nuclear, and byproduct materials, as defined in the Atomic Energy Act of 1954 (AEA) are regulated at the U. S. Department of Energy (DOE) facilities exclusively by DOE acting pursuant to its AEA authority. DOE asserts that pursuant to AEA, it has sole and exclusive responsibility and authority to regulate source, special nuclear, and byproduct materials at DOE-owned nuclear facilities. Information contained herein on radionuclides is provided for process description purposes only.

DRAWING INDEX

DWG NO	REV	TITLE
24590-PTF-M6-FEP-00004001	0	WASTE FEED EVAPORATION PROCESS SYSTEM
24590-PTF-M6-FEP-00004002	0	WASTE FEED EVAPORATION PROCESS SYSTEM
24590-PTF-M6-FEP-00004003	0	WASTE FEED EVAPORATION PROCESS SYSTEM

REVISION HISTORY

REV	DESCRIPTION	ORG	CHKD	RVWD	APVD	DATE
0	ISSUED FOR CONSTRUCTION SEE NOTE 16	[illegible]	APP	ELS	RCK	1-31-08

Q
QUALITY DESIGNATOR

ISSUED BY RPP-WTP PDC
ISSUE STAMP

PROJECT No.	24590
SITE	HANFORD
AREA	200E
BUILDING No.	10

	BY	DATE
ORIGINATOR	[signature]	30 Jan 08
CHECKER	[signature]	1/30/08
APPROVER	[signature]	1-31-08
REVIEWER	[signature]	1/31/08
	[signature]	1/30/08

CONTENT APPLICABLE TO ALARA? [X] YES [ ] NO
ADR NO. 24590-PTF-ADR-M-03-012 REV: 2
SAFETY SCREEN REQUIRED? [X] YES [ ] NO LBNS INITIAL IF YES [initials]

BECHTEL
RIVER PROTECTION PROJECT
WASTE TREATMENT PLANT
2435 STEVENS CENTER PLACE
RICHLAND, WA 99354

CONTRACT No: DE-AC27-01RV14136

P&ID-PTF WASTE FEED EVAPORATION PROCESS SYSTEM SEPARATOR FEP-SEP-00001B

SCALE: NONE

24590-PTF-M6-FEP-00004001 REV 0

SAFETY SCREEN IS REQUIRED FOR DRAWING TYPES IDENTIFIED IN 24590-WTP-GPP-SREG-002

'E' SIZE - 44x34
COMPUTER GENERATED - MANUAL CHANGES NOT PERMITTED

R10881737

01/30/2008 12:52:36 PM

FORM: 1 JANUARY 12, 2007

PLOTTED BY: rndritter

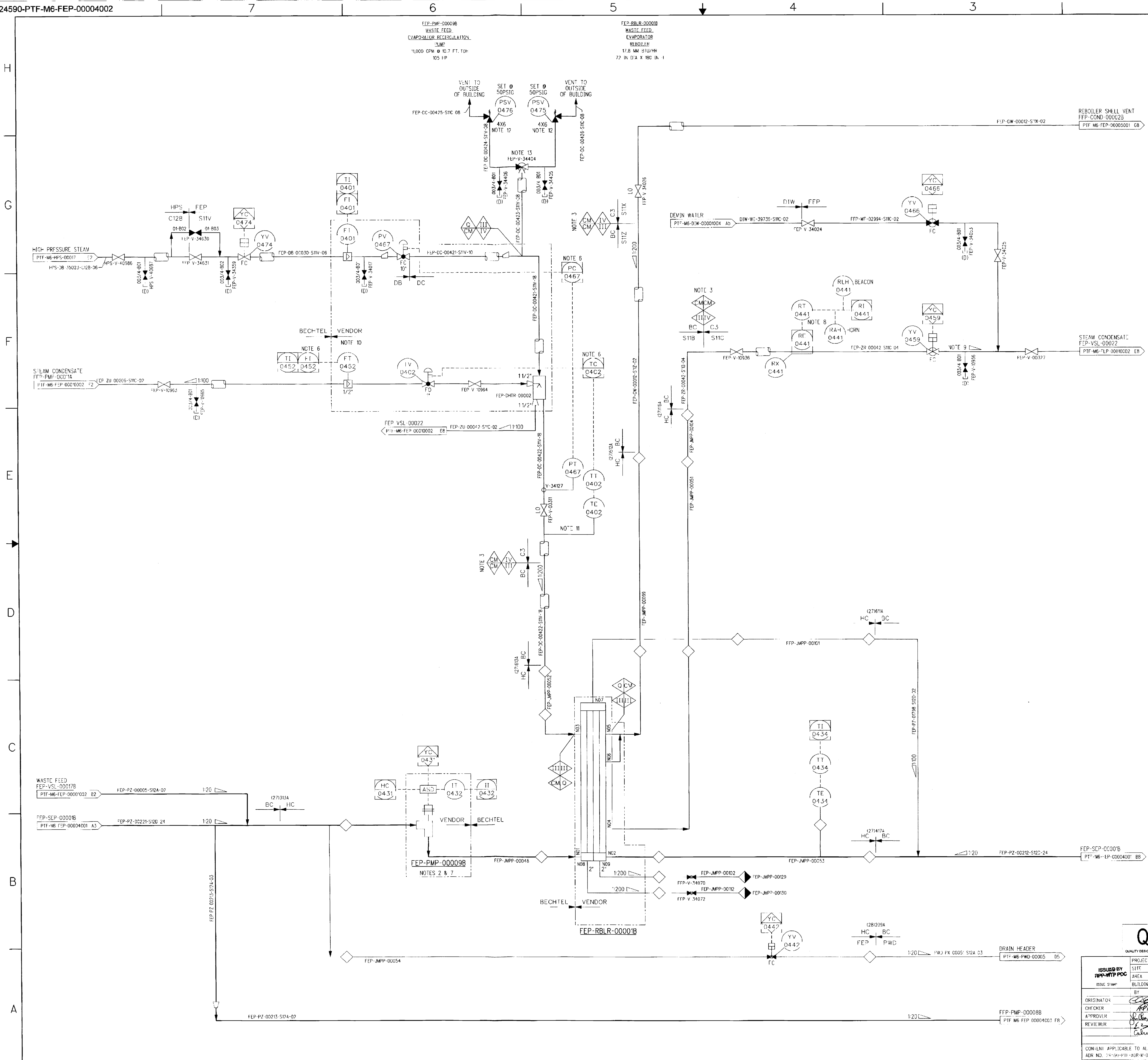

NOTES:

1. SEE DRAWINGS 24590 WTP M6 50-00001 THROUGH 24590-WTP-M6-50-00008 FOR GENERAL NOTES, SYMBOLS AND LEGEND, AND GENERAL SLOPE REQUIREMENTS.
2. RECIRCULATION PUMP DISCHARGE RATE WILL BE ESTIMATED BASED ON MOTOR AMPERAGE MEASUREMENT AND PUMP PERFORMANCE CURVE.
3. PIPE SLEEVE PENETRATIONS BETWEEN OCCUPATIONAL AREAS AND INACCESSIBLE/REMOTE AREAS (R5) SHALL HAVE SHADOW SHIELDING TO MITIGATE DIRECT RADIATION SHINE OR BE JOGGLED, AS DETERMINED BY ENVIRONMENTAL AND NUCLEAR SAFETY. ALL PIPE/SLEEVE INTERFACES SHALL BE SEALED USING APPROVED FIRE RATED PENETRATION SEAL DESIGNS TO MAINTAIN THE INTEGRITY OF THE FIRE WALL BETWEEN AREAS.
4. THE PRESSURE BOUNDARY FOR ALL SYSTEMS, STRUCTURES, AND COMPONENTS SHOWN ON THIS DRAWING IS QUALITY LEVEL Q AND SEISMIC CATEGORY SC III, UNLESS OTHERWISE NOTED.
5. CONTENTS OF THIS DOCUMENT ARE DANGEROUS WASTE PERMIT AFFECTING.
6. RECYCLED STEAM CONDENSATE IS INJECTED INTO THE REBOILER STEAM SUPPLY TO REDUCE SUPERHEAT. TEMPERATURE AND PRESSURE ARE USED BY THE TEMPERATURE CONTROLLER AS INPUT IN DETERMINING REQUIRED FLOWRATE FROM THE REBOILER CONDENSATE TRANSFER VESSEL.
7. SEE DRAWING 24590-PTF-M6-PSW-00009 FOR PUMP SEAL WATER CONNECTIONS.
8. RAH-0441 IN LOCAL ROOM AND SUPPLEMENTED WITH A ROTATING BEACON.
9. PLANT DESIGN TO MAXIMIZE SLOPE WITH SPACE AVAILABLE. NO POCKETS.
10. EQUIPMENT WITHIN VENDOR BOUNDARY IS TO BE SUPPLIED BY VENDOR. PIPING, MANUAL VALVES, AND PIPE SUPPORT TO BE PROVIDED BY BECHTEL. EQUIPMENT DESIGN DEPENDENT ON VENDOR SYSTEM DESIGN.
11. THERMOWELL DOWN STREAM OF DESUPERHEATER TO BE SHIELDED TO PREVENT POSSIBLE SATURATED STEAM DURING STARTUP OR LOAD CHANGES FROM CONDENSING ON THE WELL AND PREVENTING CORRECT TEMPERATURE READOUT.
12. MINIMIZE LENGTH OF RELIEF VALVE INLET PIPING AND LOCATE REDUCER AS CLOSE AS POSSIBLE TO THE RELIEF VALVE. MINIMIZE TOTAL LENGTH OF DISCHARGE PIPING AND LOCATE EXPANSION AS CLOSE AS POSSIBLE TO THE RELIEF.
13. ROTOR TYPE SELECTOR VALVE REQUIRED TO MEET INLET PRESSURE DROP REQUIREMENTS.
14. THIS DRAWING IS CONVERTED FROM SINGLE SHEET TO MULTI-SHEET DRAWING AND IN PART SUPERSEDES 24590-PTF-M6-FEP-00004 REV 4.

HOLD/OPEN ITEMS:

NONE

REFERENCES:

1. THE REQUIRED BATCH SEQUENCES, PERMISSIVES, INTERLOCKS, ALARMS AND OPERATOR INTERFACE POINTS ARE FULLY DESCRIBED IN THE SOFTWARE FUNCTIONAL SPECIFICATION FOR FEP-WASTE FEED EVAPORATION PROCESS SYSTEM, 24590 PTF 3PS-FEP-T0001 AND SOFTWARE FUNCTIONAL SPECIFICATION FOR PTF EVAPORATOR TRAIN 24590-PTF-3PS-TLP-T0002 .
2. FOR PERMISSIVES AND INTERLOCKS TO IMPORTANT TO SAFETY SYSTEMS (ITS), REFER TO SAFETY SYSTEM REQUIREMENT SPECIFICATIONS 24590-PTF-3PS-PPJ-T0004 (FUTURE), AND -T0016.

Please note that source, special nuclear, and byproduct materials, as defined in the Atomic Energy Act of 1954 (AEA) are regulated at the U. S. Department of Energy (DOE) facilities exclusively by DOE acting pursuant to its AEA authority. DOE asserts that pursuant to AEA, it has sole and exclusive responsibility and authority to regulate source, special nuclear, and byproduct materials at DOE-owned nuclear facilities. Information contained herein on radionuclides is provided for process description purposes only.

Q
QUALITY DESIGNATOR

REVISION HISTORY

REV	DESCRIPTION	ORG	CHKD	RVWD	APVD	DATE
0	ISSUED FOR CONSTRUCTION SEE NOTE 14		APP	ELS		1-31-08

ISSUED BY RPP-WTP PDC
ISSUE STAMP

PROJECT No.	24590
SITE	HANFORD
AREA	200E
BUILDING No.	10

	BY	DATE
ORIGINATOR		1/30/08
CHECKER		1/30/08
APPROVER		1-31-08
REVIEWER		1/31/08
	Calvin Rosley	1/30/08

CONTENT APPLICABLE TO ALARA? [X] YES [ ] NO
ADR NO. 24590-PTF-ADR-M-03-012 REV: 2
SAFETY SCREEN REQUIRED? [X] YES [ ] NO E&NS INITIAL IF YES

RIVER PROTECTION PROJECT
WASTE TREATMENT PLANT
2435 STEVENS CENTER PLACE
RICHLAND, WA 99354

CONTRACT No. DE AC27 01RV14136

P&ID-PTF WASTE FEED EVAPORATION PROCESS SYSTEM REBOILER FEP-RBLR-00001B

SCALE: NONE
24590-PTF-M6-FEP-00004002
REV 0

SAFETY SCREEN IS REQUIRED FOR DRAWING TYPES IDENTIFIED IN 24590-WTP-GPP-SRFG-002

E SIZE - 44x34
COMPUTER GENERATED - MANUAL CHANGES NOT PERMITTED

R10881738
01/30/2008 12:51:31 PM

FEP-PMP-00008B
WASTE FEED
EVAPORATOR
CONCENTRATE PUMP
50 GPM @ 216 FT TDH
20 HP

NOTES:

1. SEE DRAWINGS 24590-WTP-M6-50-00001 THROUGH 24590-WTP-M6-50-00008 FOR GENERAL NOTES, SYMBOLS AND LEGEND, AND GENERAL SLOPE REQUIREMENTS.
2. THE PRESSURE BOUNDARY FOR ALL SYSTEMS, STRUCTURES, AND COMPONENTS SHOWN ON THIS DRAWING IS QUALITY LEVEL Q AND SEISMIC CATEGORY SC-III, UNLESS OTHERWISE NOTED.
3. CONTENTS OF THIS DOCUMENT ARE DANGEROUS WASTE PERMIT AFFECTING.
4. SEE DRAWING 24590-PTF-M6-PSW-00009 FOR PUMP SEAL WATER CONNECTIONS.
5. VALVE TO BE USED TO CONTROL WATER COLUMN SEPARATION DURING FLUSHING.
6. THIS DRAWING IS CONVERTED FROM SINGLE SHEET TO MULTI-SHEET DRAWING AND IN PART SUPERSEDES 24590-PTF-M6-FEP-00004 REV 4. THIS DRAWING INCLUDES INFORMATION FROM 24590-PTF-M6N-FEP-00087.

HOLD/OPEN ITEMS:

NONE

REFERENCES:

1. THE REQUIRED BATCH SEQUENCES, PERMISSIVES, INTERLOCKS, ALARMS AND OPERATOR INTERFACE POINTS ARE FULLY DESCRIBED IN THE SOFTWARE FUNCTIONAL SPECIFICATION FOR FEP-WASTE FEED EVAPORATION PROCESS SYSTEM, 24590-PTF-3PS-FFP-T0001 AND SOFTWARE FUNCTIONAL SPECIFICATION FOR PTF EVAPORATOR TRAIN 24590-PTF-3PS-TLP-T0002.
2. FOR PERMISSIVES AND INTERLOCKS TO IMPORTANT TO SAFETY SYSTEMS (ITS), REFER TO SAFETY SYSTEM REQUIREMENT SPECIFICATIONS 24590-PTF-3PS-MHP-T0004 (U-U UNIT) AND -T0016.

Please note that source, special nuclear, and byproduct materials, as defined in the Atomic Energy Act of 1954 (AEA) are regulated at the U. S. Department of Energy (DOE) facilities exclusively by DOE acting pursuant to its AEA authority. DOE asserts that pursuant to AEA, it has sole and exclusive responsibility and authority to regulate source, special nuclear, and byproduct materials at DOE-owned nuclear facilities. Information contained herein on radionuclides is provided for process description purposes only.

REV	DESCRIPTION	ORG	CHKD	RVWD	APVD	DATE
0	ISSUED FOR CONSTRUCTION SET NOTE 6	CEG	APP	LJ-S	MK	1-31-08

REVISION HISTORY

Q
QUALITY DESIGNATOR

ISSUED BY RPP-WTP POC
FOR STAMP

	BY	DATE
ORIGINATOR		1/30/08
CHECKER		1/31/08
APPROVER		1-31-08
REVIEWER		1/31/08
		1/31/08

CONTENT APPLICABLE TO A/E? ☐ YES ☐ NO
ADR NO. 24590-PTF-ADR-M-08-02 REV. 1
SAFETY SCREEN REQUIRED? ☐ YES ☐ NO BASIS INITIAL ☐ YES

SAFETY SCREEN IS REQUIRED FOR DRAWING TYPES IDENTIFIED IN 24590-WTP-GPP-SWE-002

PROJECT No.	24590
SITE	HANFORD
AREA	200E
BUILDING No.	90

BECHTEL

RIVER PROTECTION PROJECT
WASTE TREATMENT PLANT
2435 STEVENS CENTER PLACE
RICHLAND, WA 99354

CONTRACT No. DE-AC27-01RV14136

P&ID-PTF
WASTE FEED EVAPORATION PROCESS SYSTEM PUMP FEP-PMP-00008B

SCALE:	24590-PTF-M6-FEP-00004003	REV
NONE		0

E SIZE 44x34
COMPUTER GENERATED - MANUAL CHANGES NOT PERMITTED

FORM 11.SCN.10 02/2007

PRINTED BY: [illegible]
CHECK SECTION: [illegible]

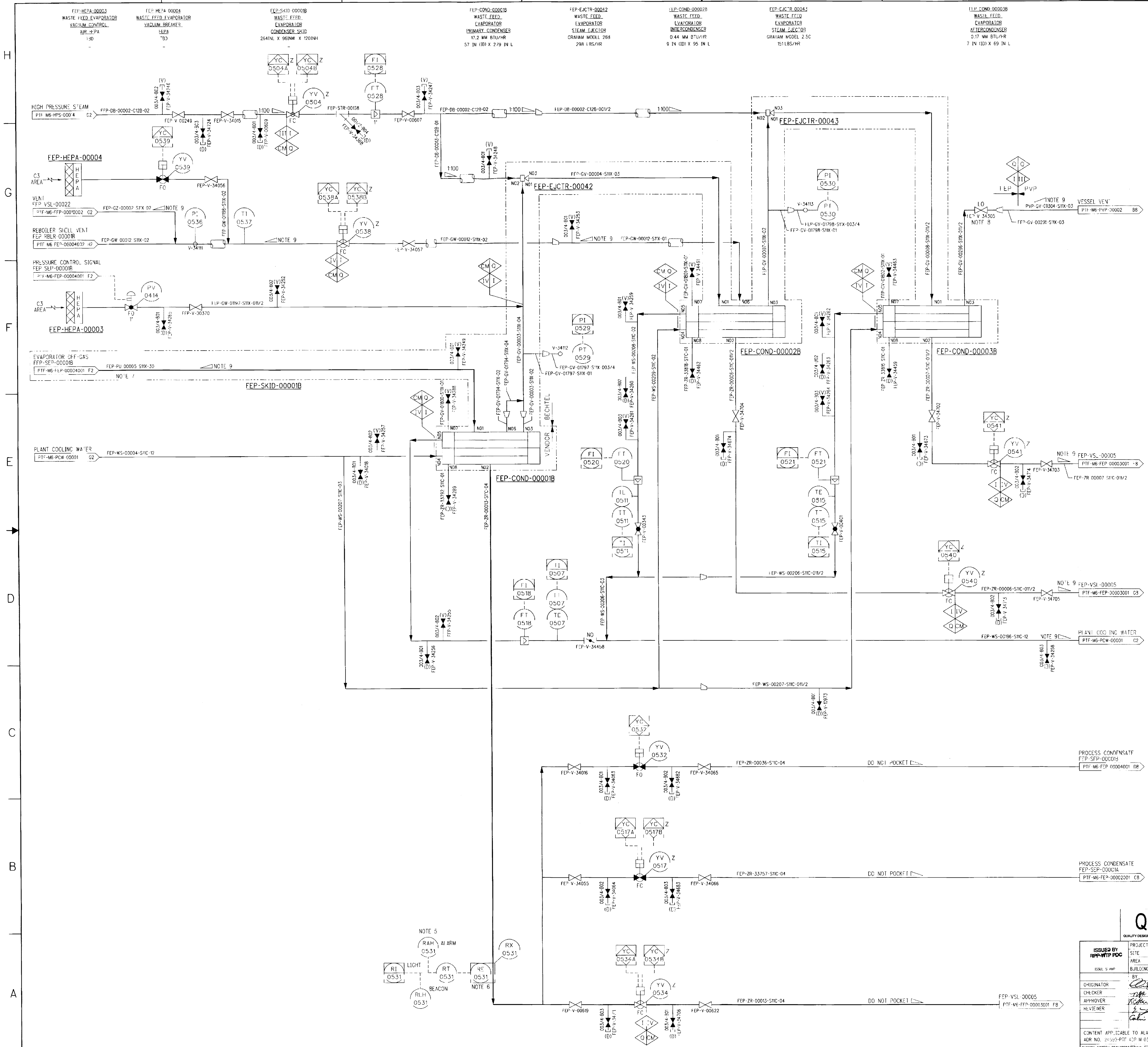

NOTES:

1. SEE DRAWINGS 24590-WTP-M6-50-00001 THROUGH 24590-WTP-M6-50-00008 FOR GENERAL NOTES, SYMBOLS AND LEGEND, AND GENERAL SLOPE REQUIREMENTS.
2. SEE DRAWING 24590-PTF-M6-FEP-00008 FOR PLANT WASH REPRESENTATION AND NOZZLES UTILIZED.
3. THE PRESSURE BOUNDARY FOR ALL SYSTEMS, STRUCTURES, AND COMPONENTS SHOWN ON THIS DRAWING ARE QUALITY LEVEL Q AND SEISMIC CATEGORY SC-I, UNLESS OTHERWISE NOTED.
4. CONTENTS OF THIS DOCUMENT ARE DANGEROUS WASTE PERMIT AFFECTING.
5. ALARMS RAH-0531 TO BE LOCATED NEAR CONDENSERS FEP-COND-00001A/B AND SUPPLEMENTED WITH A ROTATING BEACON.
6. INSTALL RADIATION MONITOR ON HORIZONTAL PIPE SEGMENT THAT WILL INSURE FIXED AND CONSTANT VOLUME.
7. LINE FEP-PU-00005 SHALL BE PROVIDED BY FEP-SKID-00001B VENDOR SEPARATE FROM SKID.
8. VALVE IS MAINTAINED OPEN FOR SAFETY REASONS TO PROVIDE PRIMARY AIR PURGE PATH FOR FEP SEPARATOR VESSEL AND CONDENSERS, FEP-SEP-00001B, FEP-COND-00001B, FEP-COND 00002B, AND FEP-COND-00003B.
9. SLOPE TO BE MAXIMIZED BASED ON SPACE AVAILABILITY. DO NOT POCKET.
10. THIS DRAWING IS CONVERTED FROM SINGLE SHEET TO MULTI-SHEET DRAWING AND IN PART SUPERSEDES 24590-PTF-M6-FEP-00005 REV 4. THIS DRAWING INCLUDES INFORMATION FROM 24590-PTF-M6N-FEP-00081, 24590-PTF-M6PN FEP 00002 AND -00003.

HOLD/OPEN ITEMS:

NONE

REFERENCES:

1. THE REQUIRED BATCH SEQUENCES, PERMISSIVES, INTERLOCKS, ALARMS AND OPERATOR INTERFACE POINTS ARE FULLY DESCRIBED IN THE SOFTWARE FUNCTIONAL SPECIFICATION FOR FEP-WASTE FEED EVAPORATION PROCESS SYSTEM, 24590-PTF-3PS-FEP-T0001 AND SOFTWARE FUNCTIONAL SPECIFICATION FOR THE EVAPORATOR TRAIN 24590-PTF 3PS TLP T0002.
2. FOR PERMISSIVES AND INTERLOCKS TO IMPORTANT TO SAFETY SYSTEMS (ITS), REFER TO SAFETY SYSTEM REQUIREMENTS SPECIFICATION 24590-PTF-3PS-PPJ-10016.

Please note that source, special nuclear, and byproduct materials, as defined in the Atomic Energy Act of 1954 (AEA) are regulated at the U. S. Department of Energy (DOE) facilities exclusively by DOE acting pursuant to its AEA authority. DOE asserts that pursuant to AEA, it has sole and exclusive responsibility and authority to regulate source, special nuclear, and byproduct materials at DOE-owned nuclear facilities. Information contained herein on radionuclides is provided for process description purposes only.

DRAWING INDEX		
DWG NO	REV	TITLE
24590-PTF-M6-FEP-00005001	0	WASTE FEED EVAPORATION PROCESS SYSTEM

Q
QUALITY DESIGNATOR

REV	DESCRIPTION	ORG	CHKD	RVWD	APVD	DATE
0	ISSUED FOR CONSTRUCTION SEE NOTE 10	[signature]	NTD	ELS / CEX	RCS	1-31-08

REVISION HISTORY

ISSUED BY RPP-WTP PDC
ISSUE STAMP

PROJECT No.	24590
SITE	HANFORD
AREA	200E
BUILDING No.	10

RIVER PROTECTION PROJECT
WASTE TREATMENT PLANT
2435 STEVENS CENTER PLACE
RICHLAND, WA 99354

CONTRACT No: DE-AC27-01RV14136

	BY	DATE
ORIGINATOR	[signature]	1/31/08
CHECKER	[signature]	1/31/08
APPROVER	[signature]	1-31-08
REVIEWER	[signature]	1/31/08
	[signature]	1/31/08

CONTENT APPLICABLE TO ALARA? [X] YES [ ] NO
ADR NO. 24590-PTF ADR M 03 012 REV: 2
SAFETY SCREEN REQUIRED? [X] YES [ ] NO E&NS INITIAL IF YES [initials]

P&ID - PTF WASTE FEED EVAPORATION PROCESS SYSTEM CONDENSERS FEP-COND-00001B/2B/3B

SCALE: NONE
24590-PTF-M6-FEP-00005001
REV 0

SAFETY SCREEN IS REQUIRED FOR DRAWING TYPES IDENTIFIED IN 24590-WTP-GPP-SREG-002
2
'E' SIZE - 44x34
COMPUTER GENERATED - MANUAL CHANGES NOT PERMITTED
R10881741
01/30/2008 03:38:06 PM

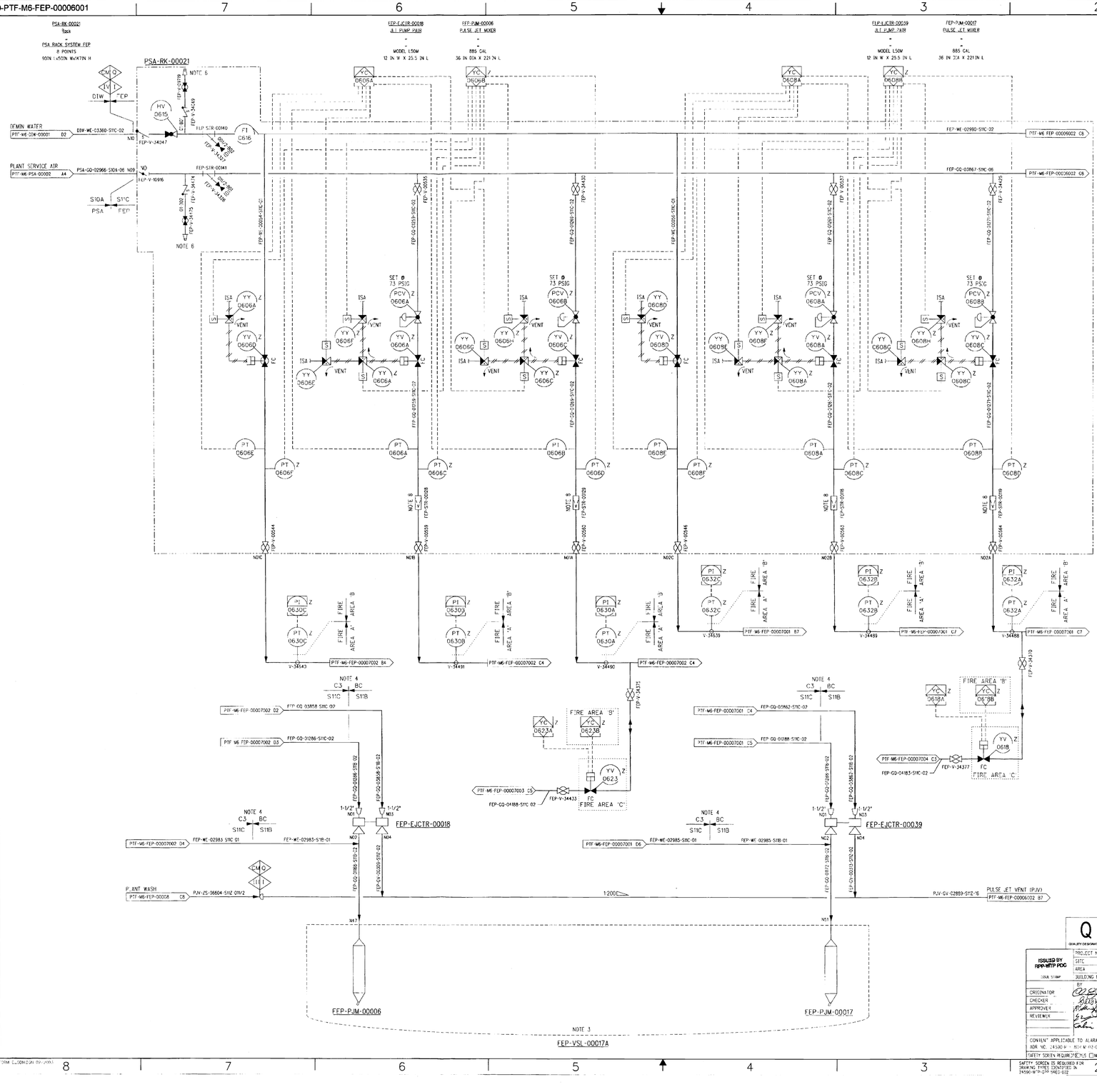

NOTES:

1. SEE DRAWING 24590-WTP-M6-50-00001 THROUGH 24590-WTP-M6-50-00008 FOR GENERAL NOTES, SYMBOLS AND LEGEND, AND GENERAL SLOPE REQUIREMENTS.
2. SEE ITS FLUIDICS PJM CONTROLLER DETAIL 5 ON LEGEND SHEET 24590-WTP-M6-50-00007.
3. FOR PROCESS INFORMATION REFER TO DRAWING 24590-PTF-M6-FEP-00001001.
4. PIPE SLEEVE PENETRATIONS BETWEEN OCCUPATIONAL AREAS AND INACCESSIBLE/REMOTE AREAS (RS) SHALL HAVE SHADOW SHIELDING TO MITIGATE DIRECT RADIATION SHINE OR BE JOGGLED, AS DETERMINED BY ENVIRONMENTAL & NUCLEAR SAFETY. ALL PIPE/SLEEVE INTERFACES SHALL BE SEALED USING APPROVED FIRE-RATED PENETRATION SEAL DESIGNS TO MAINTAIN THE INTEGRITY OF THE FIRE WALL BETWEEN AREAS.
5. CONTENTS OF THIS DOCUMENT ARE DANGEROUS WASTE PERMIT AFFECTING.
6. REAGENT/ PLANT WASH / AIR SERVICES PROVIDED AT A LOCAL UTILITY STATION.
7. THE PRESSURE BOUNDARY FOR ALL SYSTEMS, STRUCTURES, AND COMPONENTS ON THIS DRAWING "S QUALITY" LEVEL Q AND SEISMIC CATEGORY SC-I, UNLESS OTHERWISE NOTED.
8. STRAINER IS A CONICAL PILGRIM HAT TYPE STRAINER WITH PERFORATED 1/8 INCH DIAMETER STAGGERED HOLES ON 3/16 INCH CENTERS PERMANENTLY INSTALLED UPSTREAM OF FLANGED VALVE.
9. THIS DRAWING IS CONVERTED FROM SINGLE SHEET TO MULTI-SHEET DRAWING AND IN PART SUPERSEDES 24590-PTF-M6-FEP-00006 REV 3.

HOLD/OPEN ITEMS:

NONE

REFERENCES:

1. THE REQUIRED BATCH SEQUENCES, PERMISSIVES, INTERLOCKS, ALARMS AND OPERATOR INTERFACE POINTS ARE FULLY DESCRIBED IN THE SOFTWARE FUNCTIONAL SPECIFICATION, FOR FEP-WASTE FEED EVAPORATOR PROCESS SYSTEM, 24590-PTF-3PS-FEP-T0001.
2. FOR PERMISSIVES AND INTERLOCKS TO IMPORTANT TO SAFETY SYSTEMS (ITS), REFER TO SOFTWARE FUNCTIONAL SPECIFICATION 24590-PTF-3PS-PPJ-T0004 (FUTURE).

Please note that source, special nuclear, and byproduct materials, as defined in the Atomic Energy Act of 1954 (AEA) are regulated at the U. S. Department of Energy (DOE) facilities exclusively by DOE acting pursuant to its AEA authority. DOE asserts that pursuant to AEA, it has sole and exclusive responsibility and authority to regulate source, special nuclear, and byproduct materials at DOE-owned nuclear facilities. Information contained herein on radionuclides is provided for process description purposes only.

DRAWING INDEX

DWG NO	REV	TITLE
24590-PTF-M6-FEP-00006001	0	WASTE FEED EVAPORATION UTILITY SERVICES
24590-PTF-M6-FEP-00006002	0	WASTE FEED EVAPORATION UTILITY SERVICES
24590-PTF-M6-FEP-00006003	0	WASTE FEED EVAPORATION UTILITY SERVICES
24590-PTF-M6-FEP-00006004	0	WASTE FEED EVAPORATION UTILITY SERVICES

REVISION HISTORY

REV	DESCRIPTION	ORG	CHKD	RVWD	APVD	DATE
0	ISSUED FOR CONSTRUCTION SEE NOTE 9	CEM	[illegible]	[illegible]	CEM	1-31-08

Q — QUALITY DESIGNATION

ISSUED BY RPP-WTP PDC

PROJECT No.	24590
SITE	HANFORD
AREA	200E
DOE/RL STAMP	BUILDING No. 0

	BY	DATE
ORIGINATOR	[illegible]	1/31/08
CHECKER	[illegible]	1/31/08
APPROVER	[illegible]	1-31-08
REVIEWER	[illegible]	1/31/08
	[illegible]	1/31/08

CONTENT APPLICABLE TO ALARA? [X] YES [ ] NO
ADR No. 24590-WTP-ADR-M6-07-030 REV 2
SAFETY SCREEN IS REQUIRED FOR DRAWING TYPES IDENTIFIED IN 24590-WTP-QIP-SWES-002? [ ] NO [ ] YES INITIAL IF YES

RIVER PROTECTION PROJECT
WASTE TREATMENT PLANT
2435 STEVENS CENTER PLACE
RICHLAND, WA 99354

CONTRACT No: DE-AC27-01RV14136

P&ID - PTF WASTE FEED EVAPORATION UTILITY SERVICES PSA RACK

SCALE: NONE
24590-PTF-M6-FEP-00006001
REV: 0

E-SIZE - 44x34
COMPUTER GENERATED MANUAL CHANGES NOT PERMITTED

m=1668743
01/31/2008 08:59:43 AM

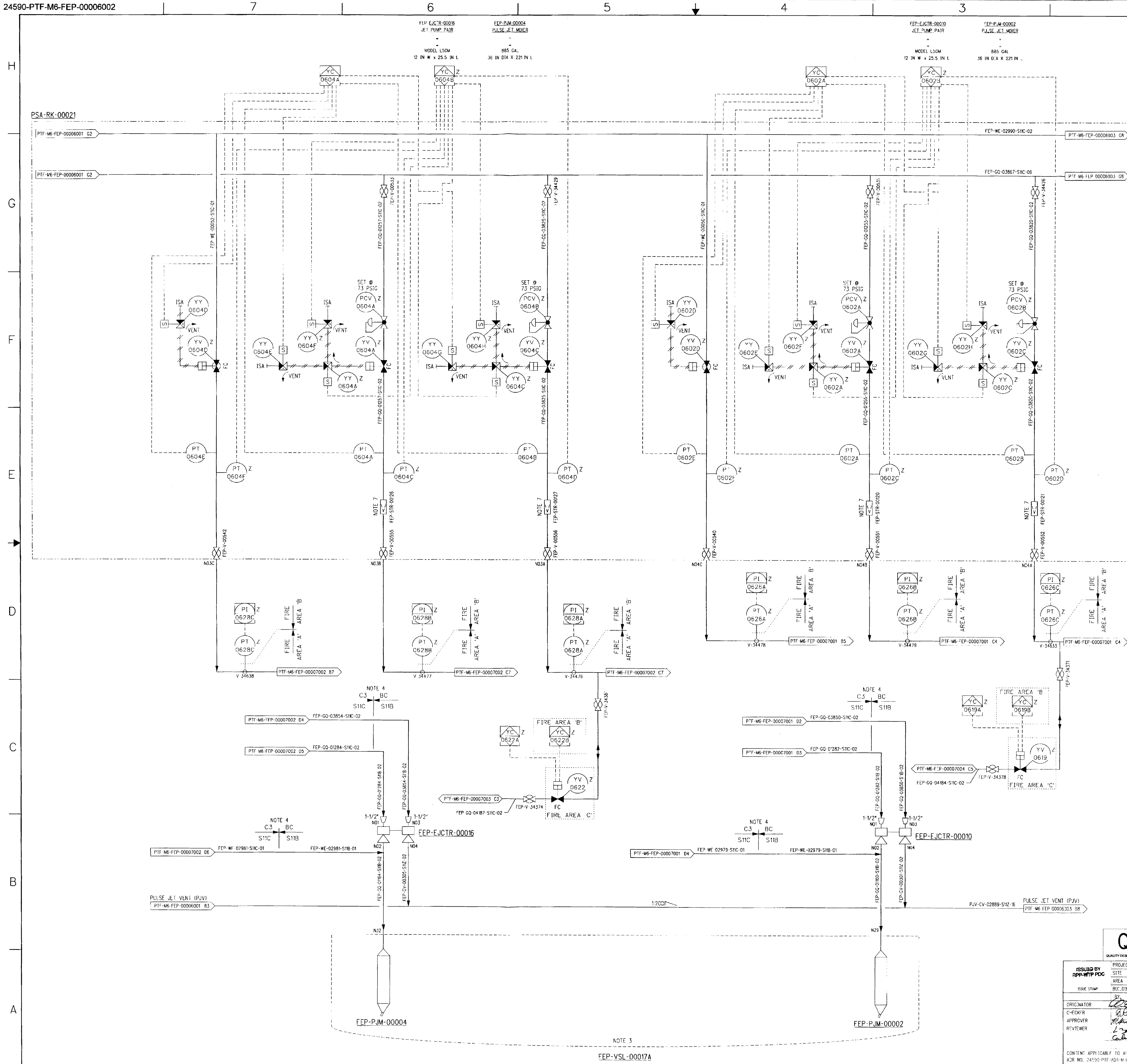

NOTES:

1. SEE DRAWING 24590-WTP-M6-50-00001 THROUGH 24590-WTP-M6-50-00008 FOR GENERAL NOTES, SYMBOLS AND LEGEND, AND GENERAL SLOPE REQUIREMENTS.
2. SEE ITS FLUIDICS PJM CONTROLLER DETAIL 5 ON LEGEND SHEET 24590-WTP-M6-50-00007.
3. FOR PROCESS INFORMATION REFER TO DRAWING 24590-PTF-M6-FEP-00001001.
4. PIPE SLEEVE PENETRATIONS BETWEEN OCCUPATIONAL AREAS AND INACCESSIBLE/REMOTE AREAS (R5) SHALL HAVE SHADOW SHIELDING TO MITIGATE DIRECT RADIATION SHINE OR BE JOGGLED, AS DETERMINED BY ENVIRONMENTAL & NUCLEAR SAFETY. ALL PIPE/SLEEVE INTERFACES SHALL BE SEALED USING APPROVED FIRE RATED PENETRATION SEAL DESIGNS TO MAINTAIN THE INTEGRITY OF THE FIRE WALL BETWEEN AREAS.
5. CONTENTS OF THIS DOCUMENT ARE DANGEROUS WASTE PERMIT AFFECTING.
6. THE PRESSURE BOUNDARY FOR ALL SYSTEMS, STRUCTURES, AND COMPONENTS ON THIS DRAWING IS QUALITY LEVEL Q AND SEISMIC CATEGORY SC-I, UNLESS OTHERWISE NOTED.
7. STRAINER IS A CONICAL PILGRIM HAT TYPE STRAINER WITH PERFORATED 1/8 INCH DIAMETER STAGGERED HOLES ON 3/16 INCH CENTERS PERMANENTLY INSTALLED UPSTREAM OF FLANGED VALVE.
8. THIS DRAWING IS CONVERTED FROM SINGLE SHEET TO MULTI-SHEET DRAWING AND IN PART SUPERSEDES 24590-PTF-M6-FEP-00006 REV 3.

HOLD/OPEN ITEMS:

NONE

REFERENCES:

1. THE REQUIRED BATCH SEQUENCES, PERMISSIVES, INTERLOCKS, ALARMS AND OPERATOR INTERFACE POINTS ARE FULLY DESCRIBED IN THE SOFTWARE FUNCTIONAL SPECIFICATION, FOR FEP WASTE FEED EVAPORATOR PROCESS SYSTEM, 24590-PTF-3PS-FEP-T0001.
2. FOR PERMISSIVES AND INTERLOCKS TO IMPORTANT TO SAFETY SYSTEMS (ITS), REFER TO SOFTWARE FUNCTIONAL SPECIFICATION 24590-PTF-3PS-PPJ-T0004 (FUTURE).

Please note that source, special nuclear, and byproduct materials, as defined in the Atomic Energy Act of 1954 (AEA) are regulated at the U. S. Department of Energy (DOE) facilities exclusively by DOE acting pursuant to its AEA authority. DOE asserts that pursuant to AEA, it has sole and exclusive responsibility and authority to regulate source, special nuclear, and byproduct materials at DOE-owned nuclear facilities. Information contained herein on radionuclides is provided for process description purposes only.

REV	DESCRIPTION	ORG	CHKD	RVWD	APVD	DATE
0	ISSUED FOR CONSTRUCTION SEE NOTE 8					1-31-08

REVISION HISTORY

Q — QUALITY DESIGNATOR

ISSUED BY RPP-WTP PDC — ISSUE STAMP

PROJECT No.	24590
SITE	HANFORD
AREA	200E
BUILDING No.	10

	BY	DATE
ORIGINATOR		1/31/08
CHECKER		1/31/08
APPROVER		1-31-08
REVIEWER		1/31/08
		1/31/08

CONTENT APPLICABLE TO ALARA? [X] YES [ ] NO
ADR NO. 24590-PTF-ADR-M-02-030 REV: 2
SAFETY SCREEN REQUIRED? [X] YES [ ] NO E&NS INITIAL IF YES

BECHTEL
RIVER PROTECTION PROJECT
WASTE TREATMENT PLANT
2435 STEVENS CENTER PLACE
RICHLAND, WA 99354

CONTRACT No: DE-AC27-01RV14136

P&ID - PTF WASTE FEED EVAPORATION UTILITY SERVICES PSA RACK

SCALE: NONE

24590-PTF-M6-FEP-00006002 REV 0

SAFETY SCREEN IS REQUIRED FOR DRAWING TYPES IDENTIFIED IN 24590-WTP-GPP-SREG-002

2

'E' SIZE - 44x34
COMPUTER GENERATED - MANUAL CHANGES NOT PERMITTED

R1C881744

01/31/2008

24590-PTF-M6-FEP-00006004

NOTES:

1. SEE DRAWING 24590-WTP-M6-50-00001 THROUGH 24590-WTP-M6-50-00008 FOR GENERAL NOTES, SYMBOLS AND LEGEND, AND GENERAL SLOPE REQUIREMENTS.
2. SEE ITS FLUIDICS PJM CONTROLLER DETAIL 5 ON LEGEND SHEET 24590-WTP-M6-50-00007.
3. FOR PROCESS INFORMATION REFER TO DRAWING 24590-PTF-M6-FEP-00001001.
4. PIPE SLEEVE PENETRATIONS BETWEEN OCCUPATIONAL AREAS AND INACCESSIBLE/REMOTE AREAS (RS) SHALL HAVE SHADOW SHIELDING TO MITIGATE DIRECT RADIATION SHINE OR BE JOGGLED, AS DETERMINED BY ENVIRONMENTAL & NUCLEAR SAFETY. ALL PIPE/SLEEVE INTERFACES SHALL BE SEALED USING APPROVED FIRE-RATED PENETRATION SEAL DESIGNS TO MAINTAIN THE INTEGRITY OF THE FIRE WALL BETWEEN AREAS.
5. CONTENTS OF THIS DOCUMENT ARE DANGEROUS WASTE PERMIT AFFECTING.
6. THE PRESSURE BOUNDARY FOR ALL SYSTEMS, STRUCTURES, AND COMPONENTS ON THIS DRAWING IS QUALITY LEVEL Q AND SEISMIC CATEGORY SC-1, UNLESS OTHERWISE NOTED.
7. STRAINER IS A CONICAL PILGRIM HAT TYPE STRAINER WITH PERFORATED 1/8 INCH DIAMETER STAGGERED HOLES ON 3/16 INCH CENTERS PERMANENTLY INSTALLED UPSTREAM OF FLANGED VALVE.
8. THIS DRAWING IS CONVERTED FROM SINGLE SHEET TO MULTI-SHEET DRAWING AND IN PART SUPERSEDES 24590-PTF-M6-FEP-00006 REV 3.

HOLD/OPEN ITEMS:

NONE

REFERENCES:

1. THE REQUIRED BATCH SEQUENCES, PERMISSIVES, INTERLOCKS, ALARMS AND OPERATOR INTERFACE POINTS ARE FULLY DESCRIBED IN THE SOFTWARE FUNCTIONAL SPECIFICATION, FOR FEP WASTE FEED EVAPORATOR PROCESS SYSTEM, 24590-PTF-3PS-FFP-T0001.
2. FOR PERMISSIVES AND INTERLOCKS TO IMPORTANT TO SAFETY SYSTEMS (ITS), REFER TO SOFTWARE FUNCTIONAL SPECIFICATION 24590-PTF-3PS-PPL-T0004 (FUTURE).

Please note that source, special nuclear, and byproduct materials, as defined in the Atomic Energy Act of 1954 (AEA) are regulated at the U. S. Department of Energy (DOE) facilities exclusively by DOE acting pursuant to its AEA authority. DOE asserts that pursuant to AEA, it has sole and exclusive responsibility and authority to regulate source, special nuclear, and byproduct materials at DOE-owned nuclear facilities. Information contained herein on radionuclides is provided for process description purposes only.

Q	0	ISSUED FOR CONSTRUCTION SEE NOTE 8	CBT 1-31-08
QUALITY DESIGNATION	REV	DESCRIPTION	ORIG CHKD RVWD APVD DATE

REVISION HISTORY

ISSUED BY RPP-WTP PDC — PROJECT No. 24590; SITE WAN-GWO; AREA 2000; ISSUE STAMP BUILDING No. 10

	BY	DATE
ORIGINATOR		1/31/08
CHECKER		1/31/08
APPROVER		1-31-08
REVIEWER		1/31/08
		1/31/08

CONTENT APPLICABLE TO ALARAT [X] YES [ ] NO
ADR NO. 24590-PTF-ADR-M-07-030 REV. 2
SAFETY SCREEN REQUIRED? [ ] YES [X] NO BY [illegible]
SAFETY SCREEN IS REQUIRED FOR DRAWING TYPES IDENTIFIED IN 24590 WTP GPP-SREQ-002

BECHTEL — RIVER PROTECTION PROJECT WASTE TREATMENT PLANT 2435 STEVENS CENTER PLACE RICHLAND, WA 99354

CONTRACT No. DE-AC27-01RV14136

P&ID - PTF WASTE FEED EVAPORATION UTILITY SERVICES PSA RACK

SCALE: NONE	24590-PTF-M6-FEP-00006004	REV 0

E.S.Z.: 44x34
COMPUTER GENERATED - MANUAL CHANGES NOT PERMITTED

01-31-2008 09:05:46 AM

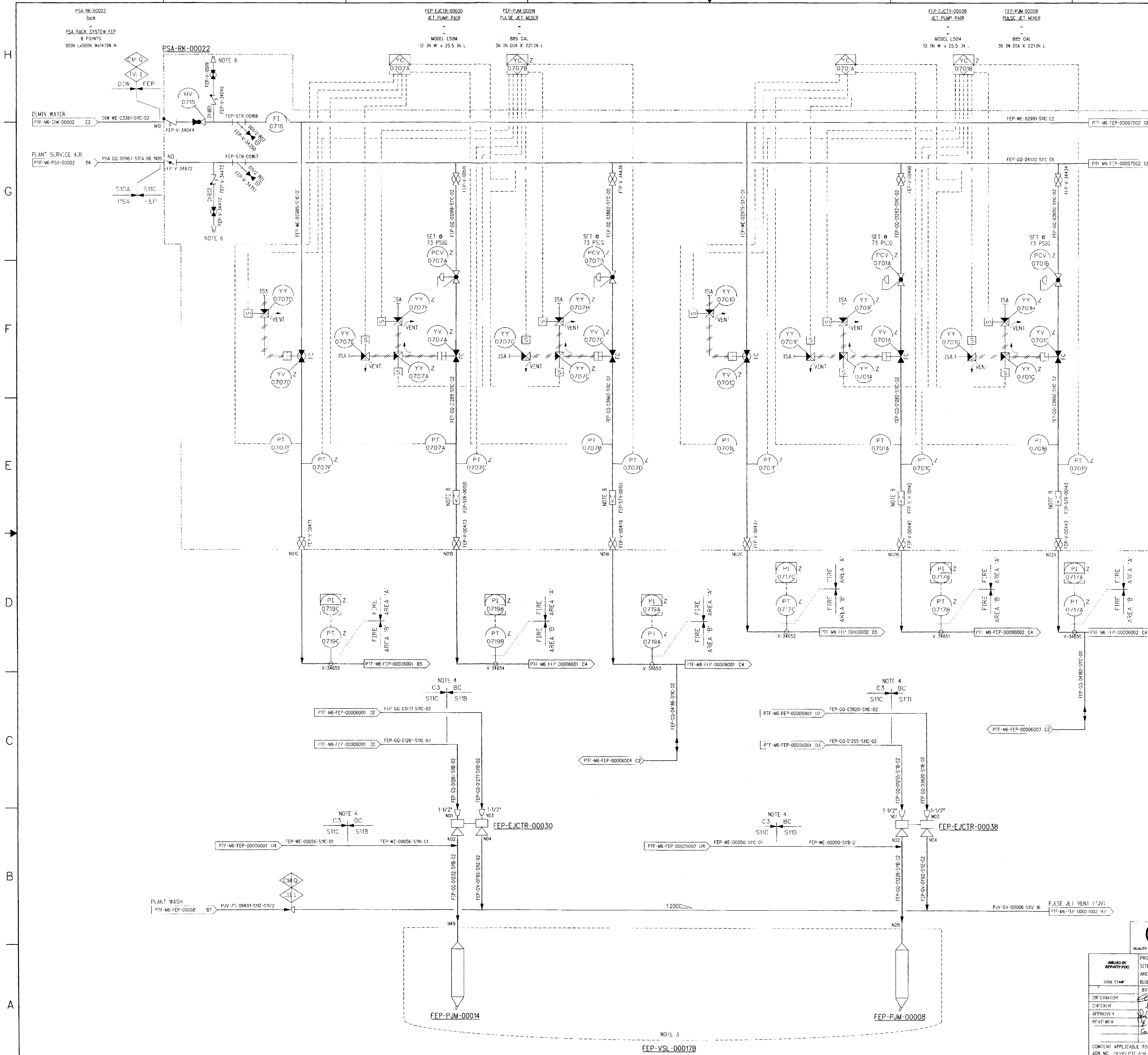

NOTES:

1. SEE DRAWING 24590-WTP-M6-50-00001 THROUGH 24590-WTP-M6-50-00008 FOR GENERAL NOTES, SYMBOLS AND LEGEND, AND GENERAL SLOPE REQUIREMENTS.
2. SEE ITS FLUIDICS PJM CONTROLLER DETAIL 5 ON LEGEND SHEET 24590-WTP-M6-50-00007.
3. FOR PROCESS INFORMATION REFER TO DRAWING 24590-PTF-M6-FEP-00001002.
4. PIPE SLEEVE PENETRATIONS BETWEEN OCCUPATIONAL AREAS AND INACCESSIBLE/REMOTE AREAS (R5) SHALL HAVE SHADOW SHIELDING TO MITIGATE DIRECT RADIATION SHINE OR BE JOGGLED, AS DETERMINED BY ENVIRONMENTAL & NUCLEAR SAFETY. ALL PIPE/SLEEVE INTERFACES SHALL BE SEALED USING APPROVED FIRE-RATED PENETRATION SEAL DESIGNS TO MAINTAIN THE INTEGRITY OF THE FIRE WALL BETWEEN AREAS.
5. CONTENTS OF THIS DOCUMENT ARE DANGEROUS WASTE PERMIT AFFECTING.
6. REAGENT/ PLANT WASH / AIR SERVICES PROVIDED AT A LOCAL UTILITY STATION.
7. THE PRESSURE BOUNDARY FOR ALL SYSTEMS, STRUCTURES, AND COMPONENTS ON THIS DRAWING IS QUALITY LEVEL Q AND SEISMIC CATEGORY SC-I, UNLESS OTHERWISE NOTED.
8. STRAINER IS A CONICAL PILGRIM HAT TYPE STRAINER WITH PERFORATED 1/8 INCH DIAMETER STAGGERED HOLES ON 3/16 INCH CENTERS PERMANENTLY INSTALLED UPSTREAM OF FLANGED VALVE.
9. THIS DRAWING IS CONVERTED FROM SINGLE SHEET TO MULTI-SHEET DRAWING AND IN PART SUPERSEDES 24590-PTF-M6-FEP 00007 REV 3.

HOLD/OPEN ITEMS:

NONE

REFERENCES:

1. THE REQUIRED BATCH SEQUENCES, PERMISSIVES, INTERLOCKS, ALARMS AND OPERATOR INTERFACE POINTS ARE FULLY DESCRIBED IN THE SOFTWARE FUNCTIONAL SPECIFICATION, FOR FEP WASTE FEED EVAPORATOR PROCESS SYSTEM, 24590-PTF-3PS-FEP-10001.
2. FOR PERMISSIVES AND INTERLOCKS TO IMPORTANT TO SAFETY SYSTEMS (ITS), REFER TO SOFTWARE FUNCTIONAL SPECIFICATION 24590-PTF-3PS-PPJ-10004 (FUTURE).

Please note that source, special nuclear, and byproduct materials, as defined in the Atomic Energy Act of 1954 (AEA) are regulated at the U. S. Department of Energy (DOE) facilities exclusively by DOE acting pursuant to its AEA authority. DOE asserts that pursuant to AEA, it has sole and exclusive responsibility and authority to regulate source, special nuclear, and byproduct materials at DOE-owned nuclear facilities. Information contained herein on radionuclides is provided for process description purposes only.

DRAWING INDEX

DWG NO	REV	TITLE
24590-PTF-M6-FEP-00007001	0	WASTE FEED EVAPORATION UTILITY SERVICES
24590-PTF-M6-FEP-00007002	0	WASTE FEED EVAPORATION UTILITY SERVICES
24590-PTF-M6-FEP-00007003	0	WASTE FEED EVAPORATION UTILITY SERVICES
24590-PTF-M6-FEP-00007004	0	WASTE FEED EVAPORATION UTILITY SERVICES

REVISION HISTORY

REV	DESCRIPTION	ORG	CHKD	RVWD	APVD	DATE
0	ISSUED FOR CONSTRUCTION SEE NOTE 9	[signature]	[signature]	CER / ELS	[signature]	1-31-08

Q
QUALITY DESIGNATOR

ISSUED BY RPP-WTP PDC
ISSUE STAMP

PROJECT No.	24590
SITE	HANFORD
AREA	2000
BUILDING No.	10

	BY	DATE
ORIGINATOR	[signature]	1/30/08
CHECKER	[signature]	1/30/08
APPROVER	[signature]	1-31-08
REVIEWER	[signature]	1/31/08
	Calvin Rasley	1/30/08

CONTENT APPLICABLE TO ALARA? [X] YES [ ] NO
ADR NO. 24590-PTF-ADR-M-02-030 REV: 2
SAFETY SCREEN REQUIRED? [X] YES [ ] NO E&NS INITIAL IF YES [initials]

RIVER PROTECTION PROJECT
WASTE TREATMENT PLANT
2435 STEVENS CENTER PLACE
RICHLAND, WA 99354

CONTRACT No: DE-AC27-01RV14136

P&ID - PTF WASTE FEED EVAPORATION UTILITY SERVICES PSA RACK

SCALE: NONE

24590-PTF-M6-FEP-00007001 REV 0

SAFETY SCREEN IS REQUIRED FOR DRAWING TYPES IDENTIFIED IN 24590-WTP-GPP-SREG-002

'E' SIZE 44x34
COMPUTER GENERATED - MANUAL CHANGES NOT PERMITTED

R10881749

01/30/2008 03:22:38 PM

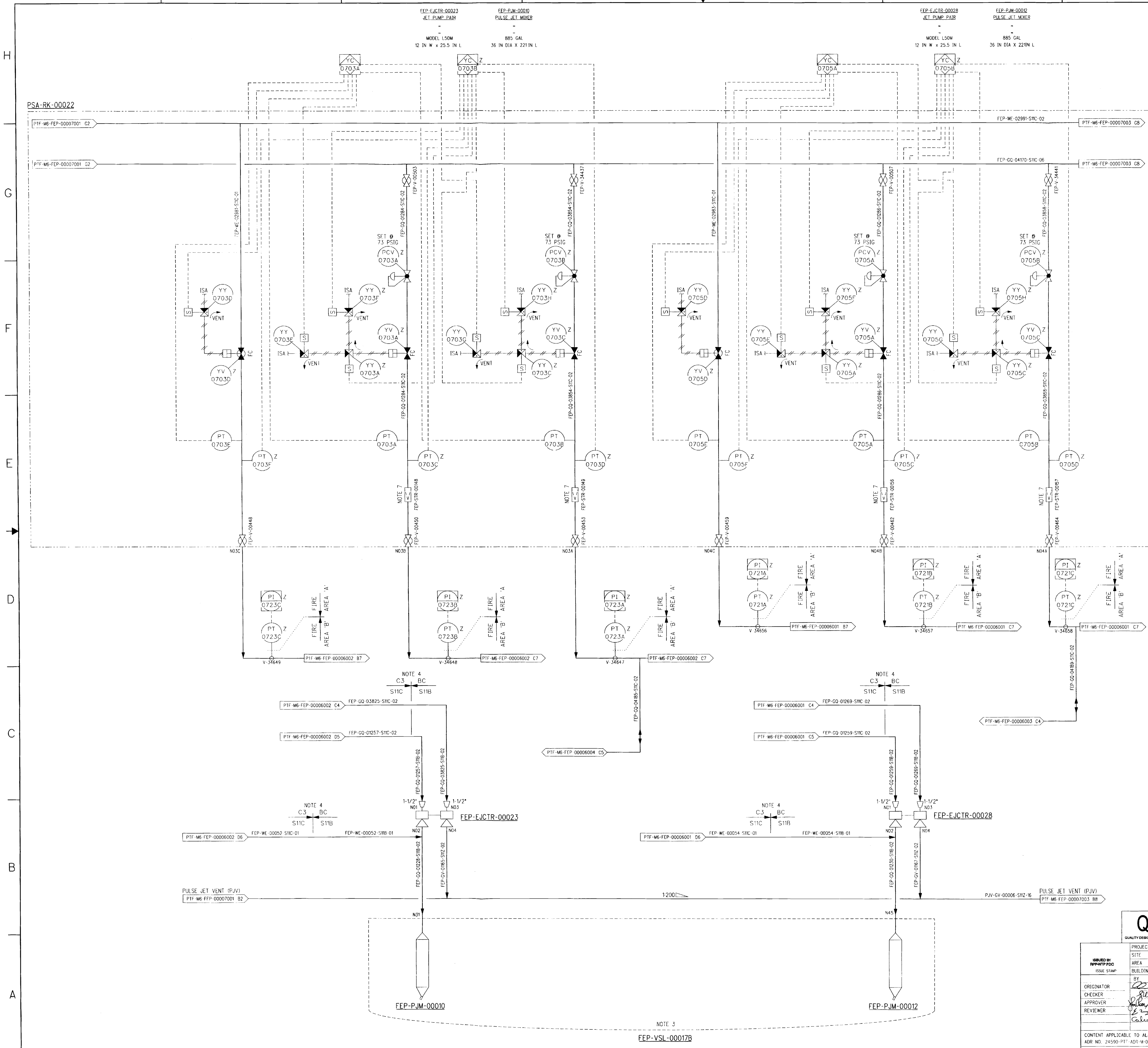

NOTES:

1. SEE DRAWING 24590-WTP-M6-50-00001 THROUGH 24590-WTP-M6-50-00008 FOR GENERAL NOTES, SYMBOLS AND LEGEND, AND GENERAL SLOPE REQUIREMENTS.
2. SEE ITS FLUIDICS PJM CONTROLLER DETAIL 5 ON LEGEND SHEET 24590-WTP-M6-50-00007.
3. FOR PROCESS INFORMATION REFER TO PIPING & INSTRUMENTATION DIAGRAM 24590-PTF-M6-FEP-00001002.
4. PIPE SLEEVE PENETRATIONS BETWEEN OCCUPATIONAL AREAS AND INACCESSIBLE/REMOTE AREAS (R5) SHALL HAVE SHADOW SHIELDING TO MITIGATE DIRECT RADIATION SHINE OR BE JOGGLED, AS DETERMINED BY ENVIRONMENTAL & NUCLEAR SAFETY. ALL PIPE/SLEEVE INTERFACES SHALL BE SEALED USING APPROVED FIRE-RATED PENETRATION SEAL DESIGNS TO MAINTAIN THE INTEGRITY OF THE FIRE WALL BETWEEN AREAS.
5. CONTENTS OF THIS DOCUMENT ARE DANGEROUS WASTE PERMIT AFFECTING.
6. THE PRESSURE BOUNDARY FOR ALL SYSTEMS, STRUCTURES, AND COMPONENTS ON THIS DRAWING IS QUALITY LEVEL Q AND SEISMIC CATEGORY SC-I, UNLESS OTHERWISE NOTED.
7. STRAINER IS A CONICAL PILGRIM HAT TYPE STRAINER WITH PERFORATED 1/8 INCH DIAMETER STAGGERED HOLES ON 3/16 INCH CENTERS PERMANENTLY INSTALLED UPSTREAM OF FLANGED VALVE.
8. THIS DRAWING IS CONVERTED FROM SINGLE SHEET TO MULTI-SHEET DRAWING AND IN PART SUPERSEDES 24590-PTF-M6-FEP-00007 REV 3.

HOLD/OPEN ITEMS:

NONE

REFERENCES:

1. THE REQUIRED BATCH SEQUENCES, PERMISSIVES, INTERLOCKS, ALARMS AND OPERATOR INTERFACE POINTS ARE FULLY DESCRIBED IN THE SOFTWARE FUNCTIONAL SPECIFICATION, FOR FEP-WASTE FEED EVAPORATOR PROCESS SYSTEM, 24590-PTF-3PS-FEP-T0001.
2. FOR PERMISSIVES AND INTERLOCKS TO IMPORTANT TO SAFETY SYSTEMS (ITS), REFER TO SOFTWARE FUNCTIONAL SPECIFICATION 24590-PTF-3PS-PPJ-T0004 (FUTURE).

Please note that source, special nuclear, and byproduct materials, as defined in the Atomic Energy Act of 1954 (AEA) are regulated at the U. S. Department of Energy (DOE) facilities exclusively by DOE acting pursuant to its AEA authority. DOE asserts that pursuant to AEA, it has sole and exclusive responsibility and authority to regulate source, special nuclear, and byproduct materials at DOE-owned nuclear facilities. Information contained herein on radionuclides is provided for process description purposes only.

Q
QUALITY DESIGNATOR

REV	DESCRIPTION	ORG	CHKD	RVWD	APVD	DATE
0	ISSUED FOR CONSTRUCTION SEE NOTE 8			ELS		1-31-08

REVISION HISTORY

ISSUED BY RPP-WTP PDC
ISSUE STAMP

PROJECT No.	24590
SITE	HANFORD
AREA	200E
BUILDING No.	10

	BY	DATE
ORIGINATOR		1/30/08
CHECKER		1/30/08
APPROVER		1-31-08
REVIEWER		1/31/08
		1/30/08

CONTENT APPLICABLE TO ALARA? [X] YES [ ] NO
ADR NO. 24590-PTF-ADR-M-02-030 REV: 2
SAFETY SCREEN REQUIRED? [X] YES [ ] NO E&NS INITIAL IF YES

BECHTEL
RIVER PROTECTION PROJECT
WASTE TREATMENT PLANT
2435 STEVENS CENTER PLACE
RICHLAND, WA 99354

CONTRACT No: DE-AC27-01RV14136

P&ID - PTF WASTE FEED EVAPORATION UTILITY SERVICES PSA RACK

SCALE: NONE
24590-PTF-M6-FEP-00007002
REV 0

SAFETY SCREEN IS REQUIRED FOR DRAWING TYPES IDENTIFIED IN 24590-WTP-GPP-SREG-002
'E' SIZE - 44x34
COMPUTER GENERATED - MANUAL CHANGES NOT PERMITTED
R10881749
01/30/2008 03:21:47 PM
PLOTTED BY: mcritter

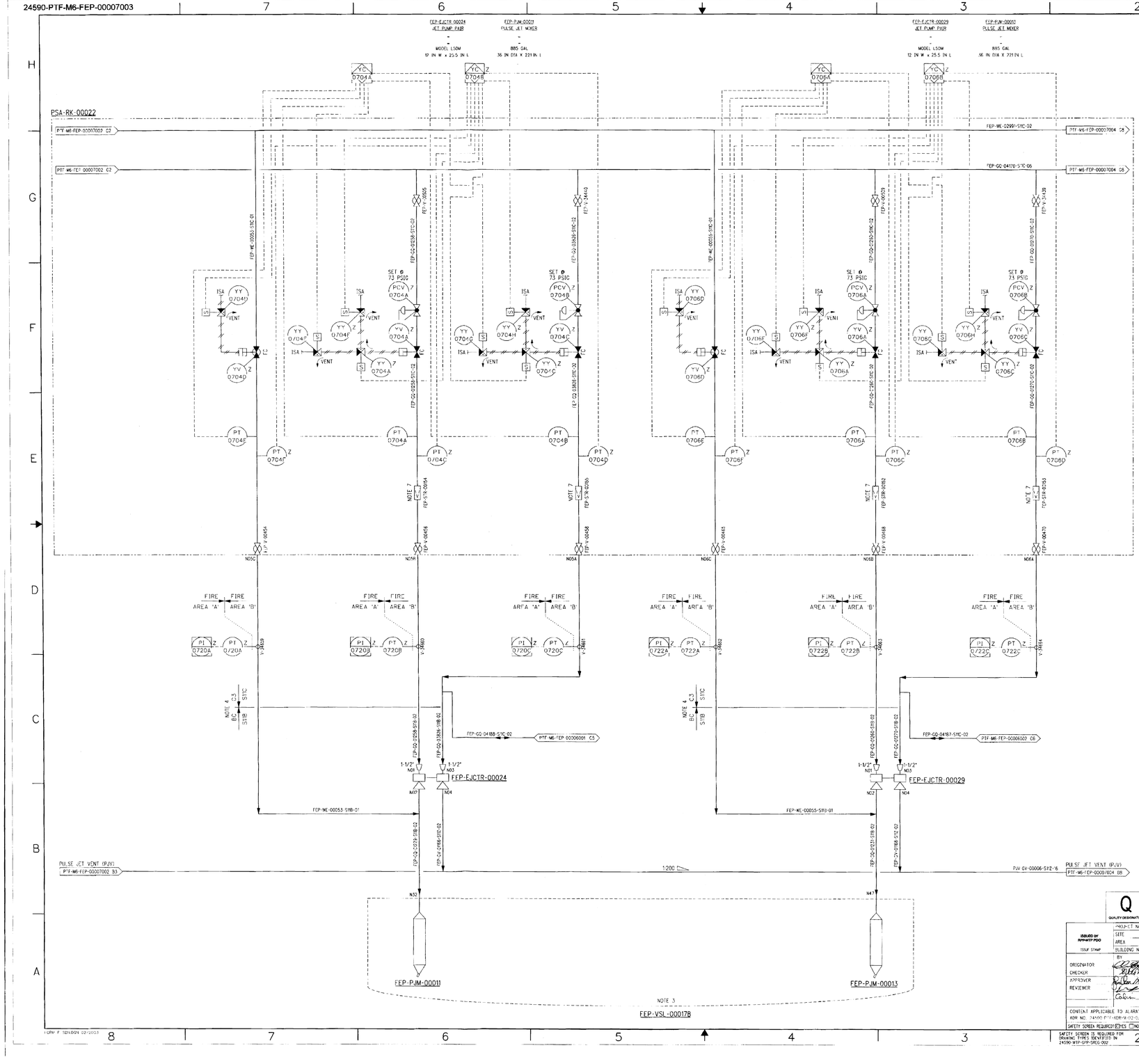

NOTES:

1. SEE DRAWING 24590-WTP-M6-50-00001 THROUGH 24590-WTP-M6-50-00008 FOR GENERAL NOTES, SYMBOLS AND LEGEND, AND GENERAL SLOPE REQUIREMENTS.
2. SEE ITS FLUIDICS PJM CONTROLLER DETAIL 5 ON LEGEND SHEET 24590-WTP-M6-50-00007.
3. FOR PROCESS INFORMATION REFER TO PIPING & INSTRUMENTATION DIAGRAM 24590-PTF-M6-FEP-00001002.
4. PIPE SLEEVE PENETRATIONS BETWEEN OCCUPATIONAL AREAS AND INACCESSIBLE/REMOTE AREAS (R5) SHALL HAVE SHADOW SHIELDING TO MITIGATE DIRECT RADIATION SHINE OR BE JOGGLED, AS DETERMINED BY ENVIRONMENTAL & NUCLEAR SAFETY. ALL PIPE/SLEEVE INTERFACES SHALL BE SEALED USING APPROVED FIRE-RATED PENETRATION SEAL DESIGNS TO MAINTAIN THE INTEGRITY OF THE FIRE WALL BETWEEN AREAS.
5. CONTENTS OF THIS DOCUMENT ARE DANGEROUS WASTE PERMIT AFFECTING.
6. THE PRESSURE BOUNDARY FOR ALL SYSTEMS, STRUCTURES, AND COMPONENTS ON THIS DRAWING IS QUALITY LEVEL Q AND SEISMIC CATEGORY SC-1, UNLESS OTHERWISE NOTED.
7. STRAINER IS A CONICAL PILGRIM HAT TYPE STRAINER WITH PERFORATED 1/8 INCH DIAMETER STAGGERED HOLES ON 3/16 INCH CENTERS PERMANENTLY INSTALLED UPSTREAM OF FLANGED VALVE.
8. THIS DRAWING IS CONVERTED FROM SINGLE SHEET TO MULTI-SHEET DRAWING AND IN PART SUPERSEDES 24590-PTF-M6-FEP-00007 REV 3.

HOLD/OPEN ITEMS:

NONE

REFERENCES:

1. THE REQUIRED BATCH SEQUENCES, PERMISSIVES, INTERLOCKS, ALARMS AND OPERATOR INTERFACE POINTS ARE FULLY DESCRIBED IN THE SOFTWARE FUNCTIONAL SPECIFICATION, FOR FEP-WASTE FEED EVAPORATOR PROCESS SYSTEM, 24590-PTF-3PS-FEP-T0001.
2. FOR PERMISSIVES AND INTERLOCKS TO IMPORTANT TO SAFETY SYSTEMS (ITS) REFER TO SOFTWARE FUNCTIONAL SPECIFICATION 24590-PTF-3PS-PPJ-T0004 (FUTURE).

Please note that source, special nuclear, and byproduct materials, as defined in the Atomic Energy Act of 1954 (AEA) are regulated at the U. S. Department of Energy (DOE) facilities exclusively by DOE acting pursuant to its AEA authority. DOE asserts that pursuant to AEA, it has sole and exclusive responsibility and authority to regulate source, special nuclear, and byproduct materials at DOE-owned nuclear facilities. Information contained herein on radionuclides is provided for process description purposes only.

REV	DESCRIPTION	ORG	CHKD	RVWD	APVD	DATE
0	ISSUED FOR CONSTRUCTION SEE NOTE 8	CER				1-31-08

REVISION HISTORY

QUALITY DESIGNATOR: Q

ISSUED BY RPP-WTP PDO

PROJECT No.	24590
SITE	HANFORD
AREA	200E
BUILDING No.	N/A

ISSUE STAMP

	BY	DATE
ORIGINATOR		1/30/08
CHECKER		1/30/08
APPROVER		1-31-08
REVIEWER		1/31/08
		1/30/08

CONTENT APPLICABLE TO ALARA? [X] YES [ ] NO
ADR NO. 24590-PTF-ADR-M-02-0.03 REV 2
SAFETY SCREEN REQUIRED? [ ] YES [X] NO EXMS INITIAL IF YES
SAFETY SCREEN IS REQUIRED FOR DRAWING TYPES IDENTIFIED IN 24590-WTP-GPP-ORD-002

CONTRACT No. DE-AC27-01RV14136

RIVER PROTECTION PROJECT
WASTE TREATMENT PLANT
2435 STEVENS CENTER PLACE
RICHLAND, WA 99354

P&ID - PTF
WASTE FEED EVAPORATION UTILITY SERVICES PSA RACK

SCALE: NONE

24590-PTF-M6-FEP-00007003

REV 0

SIZE: D - 44x34

COMPUTER GENERATED - MANUAL CHANGES NOT PERMITTED

1/30/2008 03:20:58 PM

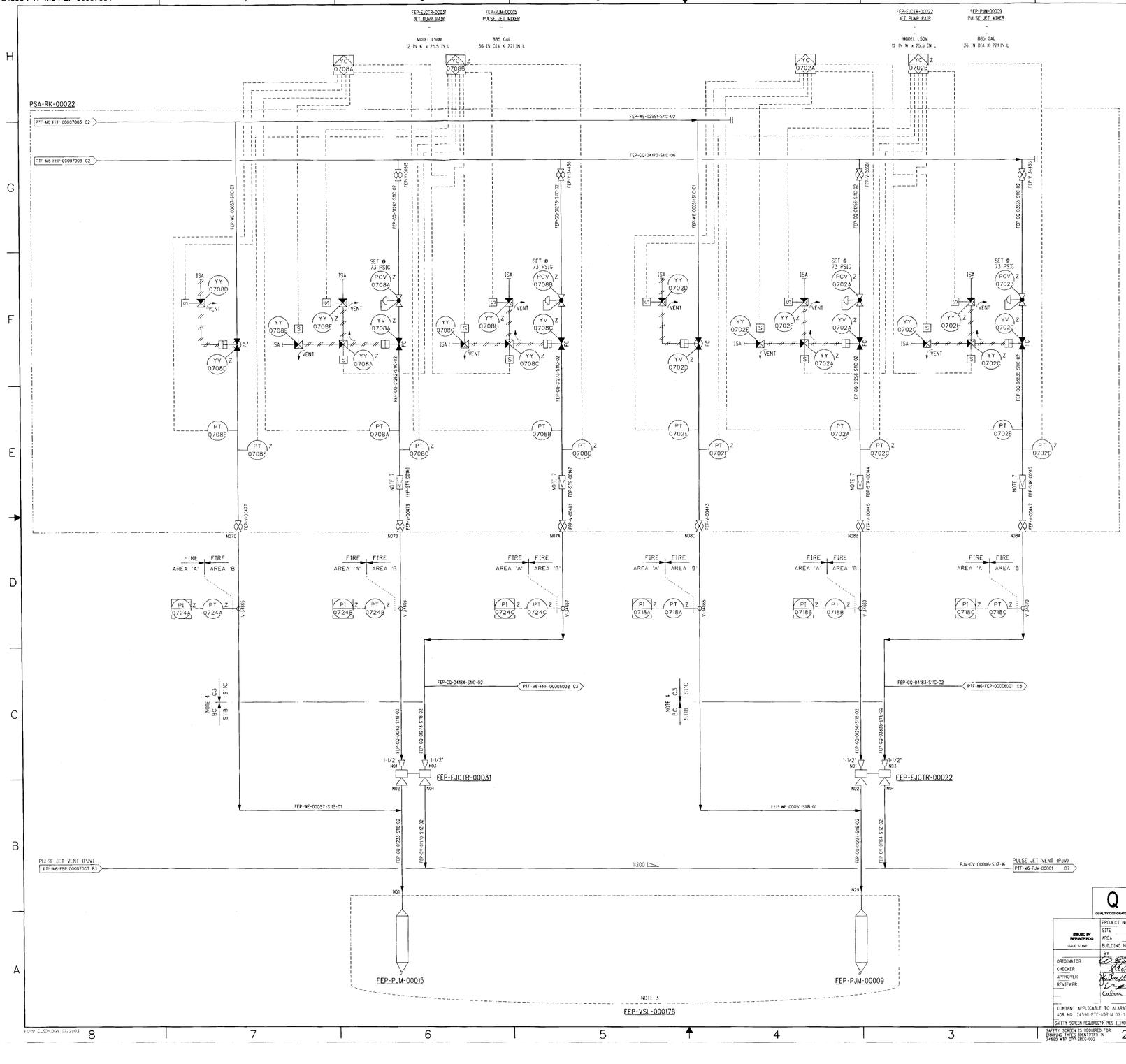

NOTES:

1. SEE DRAWING 24590-WTP-M6-50-00001 THROUGH 24590-WTP-M6-50-00008 FOR GENERAL NOTES, SYMBOLS AND LEGEND, AND GENERAL SLOPE REQUIREMENTS.
2. SEE ITS FLUIDICS PJM CONTROLLER DETAIL 5 ON LEGEND SHEET 24590-WTP-M6-50-00007.
3. FOR PROCESS INFORMATION REFER TO PIPING & INSTRUMENTATION DIAGRAM 24590-PTF-M6-FEP-00001002.
4. PIPE SLEEVE PENETRATIONS BETWEEN OCCUPATIONAL AREAS AND INACCESSIBLE/REMOTE AREAS (RS) SHALL HAVE SHADOW SHIELDING TO MITIGATE DIRECT RADIATION SHINE OR BE JOGGED, AS DETERMINED BY ENVIRONMENTAL & NUCLEAR SAFETY. ALL PIPE/SLEEVE INTERFACES SHALL BE SEALED USING APPROVED FIRE-RATED PENETRATION SEAL DESIGNS TO MAINTAIN THE INTEGRITY OF THE FIRE WALL BETWEEN AREAS.
5. CONTENTS OF THIS DOCUMENT ARE DANGEROUS WASTE PERMIT AFFECTING.
6. THE PRESSURE BOUNDARY FOR ALL SYSTEMS, STRUCTURES, AND COMPONENTS ON THIS DRAWING IS QUALITY LEVEL Q AND SEISMIC CATEGORY SC-1, UNLESS OTHERWISE NOTED.
7. STRAINER IS A CONICAL PILGRIM HAT TYPE STRAINER WITH PERFORATED 1/8 INCH DIAMETER STAGGERED HOLES ON 3/16 INCH CENTERS PERMANENTLY INSTALLED UPSTREAM OF FLANGED VALVE.
8. THIS DRAWING IS CONVERTED FROM SINGLE SHEET TO MULTI-SHEET DRAWING AND IN PART SUPERSEDES 24590-PTF-M6-FEP-00007 REV 3.

HOLD/OPEN ITEMS:

NONE

REFERENCES:

1. THE REQUIRED BATCH SEQUENCES, PERMISSIVES, INTERLOCKS, ALARMS AND OPERATOR INTERFACE POINTS ARE FULLY DESCRIBED IN THE SOFTWARE FUNCTIONAL SPECIFICATION FOR FEP-WASTE FEED EVAPORATOR PROCESS SYSTEM, 24590-PTF-3PS-FEP-T0001.
2. FOR PERMISSIVES AND INTERLOCKS TO IMPORTANT TO SAFETY SYSTEMS (ITS), REFER TO SOFTWARE FUNCTIONAL SPECIFICATION 24590-PTF-3PS-PPJ-T0004 (FUTURE).

Please note that source, special nuclear, and byproduct materials, as defined in the Atomic Energy Act of 1954 (AEA) are regulated at the U. S. Department of Energy (DOE) facilities exclusively by DOE acting pursuant to its AEA authority. DOE asserts that pursuant to AEA, it has sole and exclusive responsibility and authority to regulate source, special nuclear, and byproduct materials at DOE-owned nuclear facilities. Information contained herein on radionuclides is provided for process description purposes only.

REV	DESCRIPTION	ORG	CHKD	RVWD	APVD	DATE
0	ISSUED FOR CONSTRUCTION SEE NOTE 8	[illegible]	[illegible]	[illegible]	[illegible]	1-31-08

REVISION HISTORY

Q QUALITY DESIGNATOR

ISSUED BY INFRASTRUCTURE ISSUE STAMP

PROJECT No.	24590	
SITE	HANFORD	
AREA	200E	
BUILDING No.	90	
ORIGINATOR	[illegible]	1/30/08
CHECKER	[illegible]	1/30/08
APPROVER	[illegible]	1-31-08
REVIEWER	[illegible]	1/31/08
	[illegible]	1/30/08

CONVENT APPLICABLE TO ALARA? [X] YES [ ] NO
ADR NO. 24590-PTF-ADR-M-09-0030 REV. 2
SAFETY SCREEN REQUIRED? [ ] YES [X] NO EMS INITIAL IF YES
SAFETY SCREEN IS REQUIRED FOR DRAWING TYPES IDENTIFIED IN 24590 WTP QPP SREG-002

BECHTEL

RIVER PROTECTION PROJECT
WASTE TREATMENT PLANT
2435 STEVENS CENTER PLACE
RICHLAND, WA 99354

CONTRACT No. DE-AC27-01RV14136

P&ID - PTF
WASTE FEED EVAPORATION
UTILITY SERVICES
PSA RACK

SCALE: NONE

24590-PTF-M6-FEP-00007004

REV 0

"E" SIZE - 44x34
COMPUTER GENERATED - MANUAL CHANGES NOT PERMITTED

01/30/2008 03:20:10 PM

PLOTTED BY: [illegible]
PLOT FILE: [illegible]

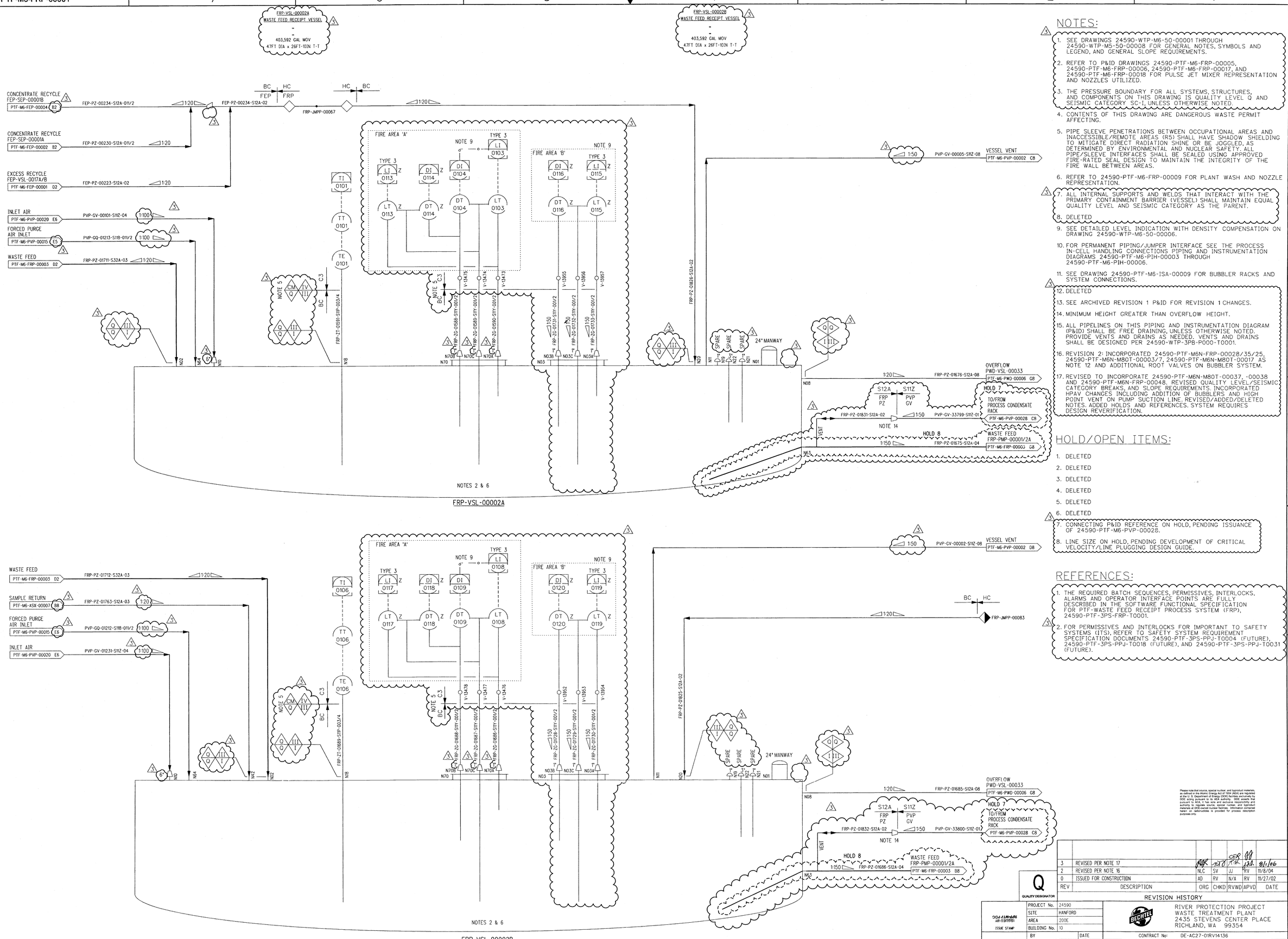

NOTES:

1. SEE DRAWINGS 24590-WTP-M6-50-00001 THROUGH 24590-WTP-M6-50-00008 FOR GENERAL NOTES, SYMBOLS AND LEGEND, AND GENERAL SLOPE REQUIREMENTS.
2. REFER TO P&ID DRAWINGS 24590-PTF-M6-FRP-00005, 24590-PTF-M6-FRP-00006, 24590-PTF-M6-FRP-00017, AND 24590-PTF-M6-FRP-00018 FOR PULSE JET MIXER REPRESENTATION AND NOZZLES UTILIZED.
3. THE PRESSURE BOUNDARY FOR ALL SYSTEMS, STRUCTURES, AND COMPONENTS ON THIS DRAWING IS QUALITY LEVEL Q AND SEISMIC CATEGORY SC-1, UNLESS OTHERWISE NOTED.
4. CONTENTS OF THIS DRAWING ARE DANGEROUS WASTE PERMIT AFFECTING.
5. PIPE SLEEVE PENETRATIONS BETWEEN OCCUPATIONAL AREAS AND INACCESSIBLE/REMOTE AREAS (RS) SHALL HAVE SHADOW SHIELDING TO MITIGATE DIRECT RADIATION SHINE OR BE JOGGLED, AS DETERMINED BY ENVIRONMENTAL AND NUCLEAR SAFETY. ALL PIPE/SLEEVE INTERFACES SHALL BE SEALED USING APPROVED FIRE-RATED SEAL DESIGN TO MAINTAIN THE INTEGRITY OF THE FIRE WALL BETWEEN AREAS.
6. REFER TO 24590-PTF-M6-FRP-00009 FOR PLANT WASH AND NOZZLE REPRESENTATION.
7. ALL INTERNAL SUPPORTS AND WELDS THAT INTERACT WITH THE PRIMARY CONTAINMENT BARRIER (VESSEL) SHALL MAINTAIN EQUAL QUALITY LEVEL AND SEISMIC CATEGORY AS THE PARENT.
8. DELETED
9. SEE DETAILED LEVEL INDICATION WITH DENSITY COMPENSATION ON DRAWING 24590-WTP-M6-50-00006.
10. FOR PERMANENT PIPING/JUMPER INTERFACE SEE THE PROCESS IN-CELL HANDLING CONNECTIONS PIPING AND INSTRUMENTATION DIAGRAMS 24590-PTF-M6-PIH-00003 THROUGH 24590-PTF-M6-PIH-00006.
11. SEE DRAWING 24590-PTF-M6-ISA-00009 FOR BUBBLER RACKS AND SYSTEM CONNECTIONS.
12. DELETED
13. SEE ARCHIVED REVISION 1 P&ID FOR REVISION 1 CHANGES.
14. MINIMUM HEIGHT GREATER THAN OVERFLOW HEIGHT.
15. ALL PIPELINES ON THIS PIPING AND INSTRUMENTATION DIAGRAM (P&ID) SHALL BE FREE DRAINING, UNLESS OTHERWISE NOTED. PROVIDE VENTS AND DRAINS AS NEEDED. VENTS AND DRAINS SHALL BE DESIGNED PER 24590-WTP-3PB-P000-T0001.
16. REVISION 2: INCORPORATED 24590-PTF-M6N-FRP-00028/35/25, 24590-PTF-M6N-M80T-00003/7, 24590-PTF-M6N-M80T-00017 AS NOTE 12 AND ADDITIONAL ROOT VALVES ON BUBBLER SYSTEM.
17. REVISED TO INCORPORATE 24590-PTF-M6N-M80T-00037, -00038 AND 24590-PTF-M6N-FRP-00048. REVISED QUALITY LEVEL/SEISMIC CATEGORY BREAKS, AND SLOPE REQUIREMENTS. INCORPORATED HPAV CHANGES INCLUDING ADDITION OF BUBBLERS AND HIGH POINT VENT ON PUMP SUCTION LINE. REVISED/ADDED/DELETED NOTES, ADDED HOLDS AND REFERENCES. SYSTEM REQUIRES DESIGN REVERIFICATION.

HOLD/OPEN ITEMS:

1. DELETED
2. DELETED
3. DELETED
4. DELETED
5. DELETED
6. DELETED
7. CONNECTING P&ID REFERENCE ON HOLD, PENDING ISSUANCE OF 24590-PTF-M6-PVP-00028.
8. LINE SIZE ON HOLD, PENDING DEVELOPMENT OF CRITICAL VELOCITY/LINE PLUGGING DESIGN GUIDE.

REFERENCES:

1. THE REQUIRED BATCH SEQUENCES, PERMISSIVES, INTERLOCKS, ALARMS AND OPERATOR INTERFACE POINTS ARE FULLY DESCRIBED IN THE SOFTWARE FUNCTIONAL SPECIFICATION FOR PTF-WASTE FEED RECEIPT PROCESS SYSTEM (FRP), 24590-PTF-3PS-FRP-T0001.
2. FOR PERMISSIVES AND INTERLOCKS FOR IMPORTANT TO SAFETY SYSTEMS (ITS), REFER TO SAFETY SYSTEM REQUIREMENT SPECIFICATION DOCUMENTS 24590-PTF-3PS-PPJ-T0004 (FUTURE), 24590-PTF-3PS-PPJ-T0018 (FUTURE), AND 24590-PTF-3PS-PPJ-T0031 (FUTURE).

Please note that source, special nuclear, and byproduct materials, as defined by the Atomic Energy Act of 1954 (AEA) are regulated by the U. S. Department of Energy (DOE) facilities exclusively by DOE acting pursuant to its AEA authority. DOE asserts that pursuant to AEA, it has sole and exclusive responsibility and authority to regulate source, special nuclear, and byproduct materials at DOE-owned nuclear facilities. Information contained herein on these commodities is provided for process description purposes only.

REV	DESCRIPTION	ORG	CHKD	RVWD	APVD	DATE
3	REVISED PER NOTE 17	RGK	JJO	CER	JJJ	9/1/06
2	REVISED PER NOTE 16	NLC	SV	JJ	RV	11/8/04
0	ISSUED FOR CONSTRUCTION	AD	RV	N/A	RV	11/27/02

REVISION HISTORY

Q
QUALITY DESIGNATOR

	BY	DATE
ORIGINATOR	AARON DONNELLY	11/27/02
CHECKER	RAM VORTA	11/27/02
APPROVER	ROBERT VOKE	11/27/02
REVIEWER	N/A	

CONTENT APPLICABLE TO ALARA? [X] YES [ ] NO
ADR NO. 24590-PTF-ADR-M-02-007 REV: 5
SAFETY SCREEN REQUIRED? [X] YES [ ] NO EXNS INITIAL IF YES

ISSUED BY RPP-WTP PDC
ISSUE STAMP

PROJECT No.	24590
SITE	HANFORD
AREA	200E
BUILDING No.	10

RIVER PROTECTION PROJECT
WASTE TREATMENT PLANT
2435 STEVENS CENTER PLACE
RICHLAND, WA 99354

CONTRACT No: DE-AC27-01RV14136

P&ID - PTF WASTE FEED RECEIPT VESSELS FRP-VSL-00002A AND FRP-VSL-00002B

SCALE: NONE

24590-PTF-M6-FRP-00001

REV 3

SAFETY SCREEN IS REQUIRED FOR DRAWING TYPES IDENTIFIED IN 24590-WTP-GPP-SREG-002

"E" SIZE - 44x34
COMPUTER GENERATED - MANUAL CHANGES NOT PERMITTED

R10702075

07/24/2006 09:43:42 AM

PLOTTED BY: ewebb
C:\Work\dms0383\24PTFM6FRP00001.dgn

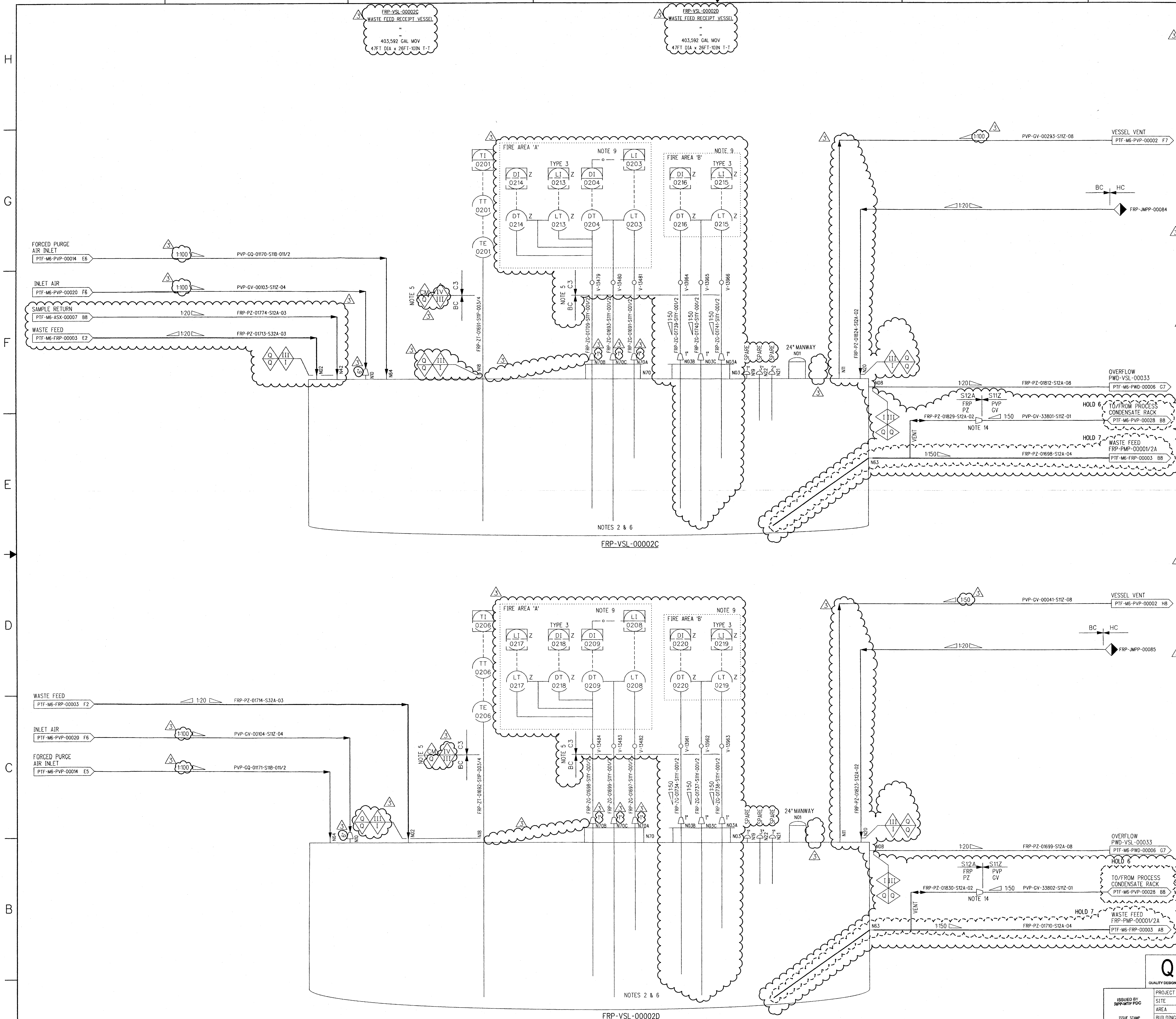

NOTES:

1. SEE DRAWINGS 24590-WTP-M6-50-00001 THROUGH 24590-WTP-M6-50-00008 FOR GENERAL NOTES, SYMBOLS AND LEGEND, AND GENERAL SLOPE REQUIREMENTS.
2. REFER TO DRAWINGS 24590-PTF-M6-FRP-00007, 24590-PTF-M6-FRP-00008, 24590-PTF-M6-FRP-00019 AND 24590-PTF-M6-FRP-00020 FOR PULSE JET MIXER REPRESENTATION AND NOZZLES UTILIZED.
3. THE PRESSURE BOUNDARY FOR ALL SYSTEMS, STRUCTURES, AND COMPONENTS ON THIS DRAWING IS QUALITY LEVEL Q AND SEISMIC CATEGORY SC-I, UNLESS OTHERWISE NOTED.
4. CONTENTS OF THIS DOCUMENT ARE DANGEROUS WASTE PERMIT AFFECTING.
5. PIPE SLEEVE PENETRATIONS BETWEEN OCCUPATIONAL AREAS AND INACCESSIBLE/REMOTE AREAS (R5) SHALL HAVE SHADOW SHIELDING TO MITIGATE DIRECT RADIATION SHINE OR BE JOGGLED, AS DETERMINED BY ENVIRONMENTAL AND NUCLEAR SAFETY. ALL PIPE/SLEEVE INTERFACES SHALL BE SEALED USING APPROVED FIRE-RATED SEAL DESIGN TO MAINTAIN THE INTEGRITY OF THE FIRE WALL BETWEEN AREAS.
6. REFER TO DRAWING 24590-PTF-M6-FRP-00010 FOR PLANT WASH AND NOZZLE REPRESENTATION.
7. ALL INTERNAL SUPPORTS AND WELDS THAT INTERACT WITH THE PRIMARY CONTAINMENT BARRIER (VESSEL) SHALL MAINTAIN EQUAL QUALITY AND SEISMIC CATEGORY AS THE PARENT.
8. DELETED
9. SEE DETAILED LEVEL INDICATION WITH DENSITY COMPENSATION ON DRAWING 24590-WTP-M6-50-00006.
10. DELETED
11. FOR PERMANENT PIPING JUMPER INTERFACE SEE THE PROCESS IN-CELL HANDLING JUMPER CONNECTIONS PIPING AND INSTRUMENTATION DIAGRAMS 24590-PTF-M6-PIH-00003 THROUGH 24590-PTF-M6-PIH-00006.
12. SEE DRAWING 24590-PTF-M6-ISA-00009 FOR BUBBLER RACKS AND CONNECTIONS.
13. REVISION 2: REVISED TO INCORPORATE 24590-PTF-M6N-FRP-00026, 24590-PTF-M6N-FRP-00029, 24590-PTF-M6N-M80T-00003, 24590-PTF-M6N-M80T-00007, AND 24590-PTF-M6N-M80T-00017. ADDED NOTES 10 AND 13. ADDED ROOT VALVES.
14. MINIMUM HEIGHT GREATER THAN OVERFLOW HEIGHT.
15. ALL PIPELINES ON THIS PIPING AND INSTRUMENTATION DIAGRAM (P&ID) SHALL BE FREE DRAINING, UNLESS OTHERWISE NOTED. PROVIDE VENTS AND DRAINS AS NEEDED. VENTS AND DRAINS SHALL BE DESIGNED PER 24590-WTP-3PB-P000-T0001.
16. SEE ARCHIVED REVISION 1 P&ID FOR REVISION 1 CHANGES.
17. REVISED TO INCORPORATE 24590-PTF-M6N-M80T-00037, -00038, 24590-PTF-M6N-FRP-00039 AND 24590-WTP-FCR-M-05-0032. REVISED QUALITY LEVEL/SEISMIC CATEGORY BREAKS, AND SLOPE REQUIREMENTS. INCORPORATED HPAV CHANGES INCLUDING ADDITION OF BUBBLERS AND HIGH POINT VENT ON PUMP SUCTION LINE. REVISED/ADDED/DELETED NOTES. ADD HOLDS AND REFERENCES. SYSTEM REQUIRES DESIGN REVERIFICATION.

HOLD/OPEN ITEMS:

1. DELETED
2. DELETED
3. DELETED
4. DELETED
5. DELETED
6. CONNECTING P&ID REFERENCE ON HOLD PENDING ISSUANCE OF 24590-PTF-M6-PVP-00028.
7. LINE SIZE ON HOLD PENDING DEVELOPMENT OF CRITICAL VELOCITY/LINE PLUGGING DESIGN GUIDE.

REFERENCES:

1. THE REQUIRED BATCH SEQUENCES, PERMISSIVES, INTERLOCKS, ALARMS AND OPERATOR INTERFACE POINTS ARE FULLY DESCRIBED IN THE SOFTWARE FUNCTIONAL SPECIFICATION FOR PTF WASTE FEED RECEIPT PROCESS SYSTEM FRP, 24590-PTF-3PS-FRP-T0001.
2. FOR PERMISSIVES AND INTERLOCKS FOR IMPORTANT TO SAFETY SYSTEMS (ITS), REFER TO SAFETY SYSTEM REQUIREMENT SPECIFICATION DOCUMENTS 24590-PTF-3PS-PPJ-T0004 (FUTURE), 24590-PTF-3PS-PPJ-T0018 (FUTURE), AND 24590-PTF-3PS-PPJ-T0031 (FUTURE).

Please note that source, special nuclear, and byproduct materials, as defined in the Atomic Energy Act of 1954 (AEA) are regulated at the U. S. Department of Energy (DOE) facilities exclusively by DOE acting pursuant to its AEA authority. DOE asserts that pursuant to AEA, it has sole and exclusive responsibility and authority to regulate source, special nuclear, and byproduct materials at DOE-owned nuclear facilities. Information contained herein on radionuclides is provided for process description purposes only.

Q
QUALITY DESIGNATOR

REV	DESCRIPTION	ORG	CHKD	RVWD	APVD	DATE
3	REVISED PER NOTE 17	[illegible]	[illegible]	CER [illegible]	[illegible]	8/1/06
2	SEE NOTE 13	RJR	NLC	JJ	RV	11/09/04
0	ISSUED FOR CONSTRUCTION	AD	RV	N/A	RV	11/27/02

REVISION HISTORY

ISSUED BY RPP-WTP PDC
ISSUE STAMP

PROJECT No.	24590
SITE	HANFORD
AREA	200E
BUILDING No.	10

	BY	DATE
ORIGINATOR	AARON DONNELLY	11/27/02
CHECKER	RAM VORIA	11/27/02
APPROVER	ROBERT VOKE	11/27/02
REVIEWER	N/A	

CONTENT APPLICABLE TO ALARA? [X] YES [ ] NO
ADR NO. 24590-PTF-ADR-M-02-007 REV: 5
SAFETY SCREEN REQUIRED? [X] YES [ ] NO E&NS INITIAL IF YES [illegible]

BECHTEL
RIVER PROTECTION PROJECT
WASTE TREATMENT PLANT
2435 STEVENS CENTER PLACE
RICHLAND, WA 99354

CONTRACT No: DE-AC27-01RV14136

P&ID - PTF WASTE FEED RECEIPT VESSELS FRP-VSL-00002C AND FRP-VSL-00002D

SCALE: NONE
24590-PTF-M6-FRP-00002
REV 3

FRP-PMP-00002A
WASTE FEED TRANSFER PUMP
=
100 GPM @ 88 FT. TDH
20 HP

FRP-PMP-00001
WASTE FEED RETURN PUMP
=
125 GPM @ 423 FT. TDH
150 HP

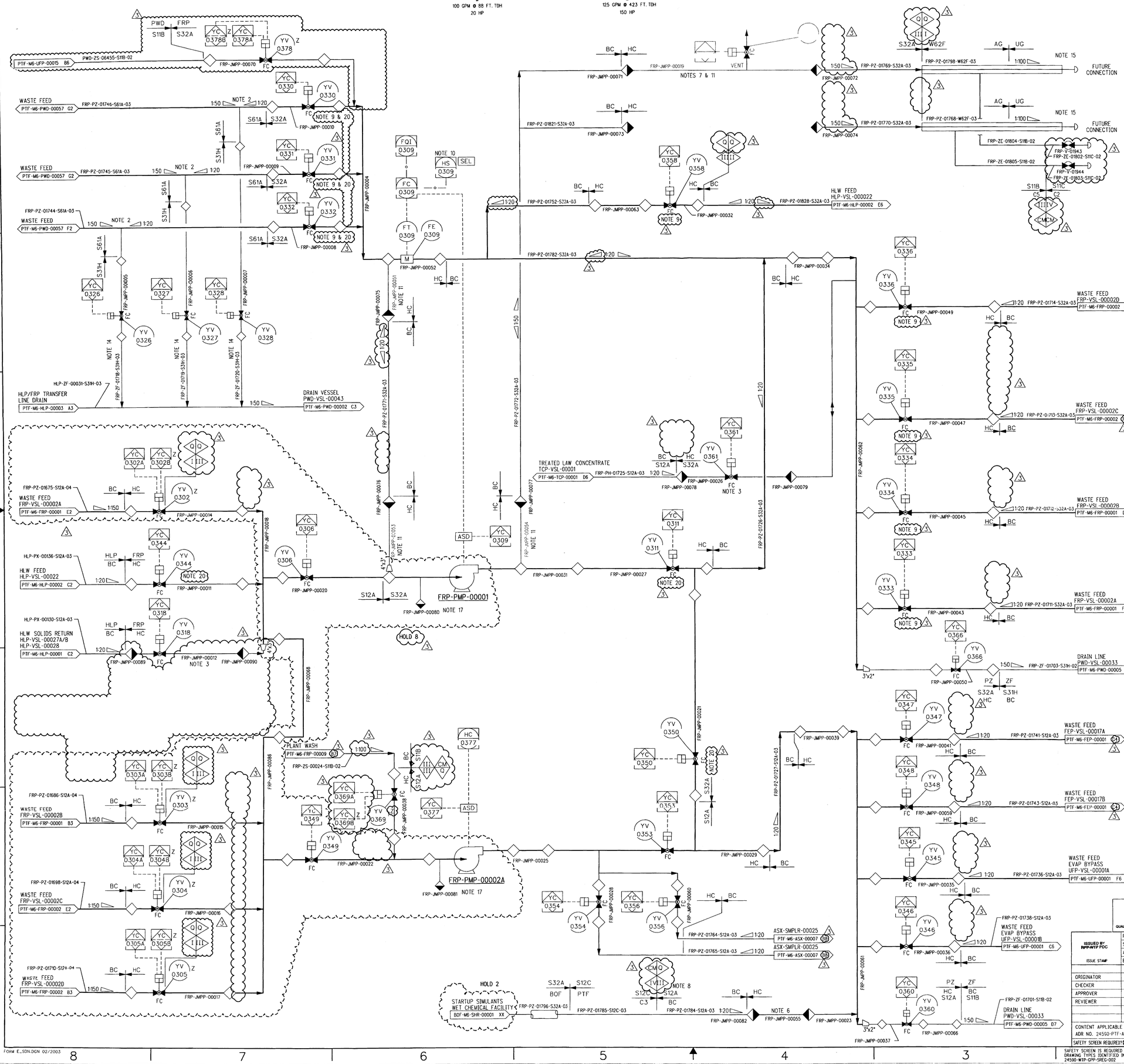

NOTES:

1. SEE DRAWINGS 24590-WTP-M6-50-00001 THROUGH 24590-WTP-M5-50-00008 FOR GENERAL NOTES, SYMBOLS AND LEGEND, AND GENERAL SLOPE REQUIREMENTS.
2. LOW POINT DRAIN. BOTH LINES WILL SLOPE TO THIS POINT.
3. JUMPER NORMALLY REMOVED; INSTALLED ONLY FOR REQUIRED TRANSFER VIA THIS JUMPER.
4. DELETED
5. THE PRESSURE BOUNDARY FOR ALL SYSTEMS, STRUCTURES AND COMPONENTS ON THIS DRAWING IS QUALITY LEVEL Q AND SEISMIC CATEGORY SC-III, UNLESS OTHERWISE NOTED.
6. JUMPER INSTALLED FOR COLD COMMISSIONING/STARTUP ONLY. JUMPER TO BE BLANKED DURING NORMAL OPERATIONS.
7. FUTURE JUMPER CONNECTION. JUMPER TO BE DESIGNED ONLY AND NORMALLY BLANKED AT THE HOT CELL WALL. JUMPER WILL BE DESIGNED TO BE USED TO CONNECT LINE FRP-PZ-01772-S32A-03 TO LINE FRP-PZ-01769-S32A-03 OR TO CONNECT LINE FRP-PZ-01821-S32A-03 TO FRP-PZ-01770-S32A-03 AS REQUIRED. PROVIDE AIR AND ELECTRICAL SUPPLY FOR FUTURE JUMPER CONNECTION. VENT SIZE IS 3/4 INCH.
8. PIPE SLEEVE PENETRATIONS BETWEEN OCCUPATIONAL AREAS AND INACCESSIBLE/REMOTE AREAS (R5) SHALL HAVE SHADOW SHIELDING TO MITIGATE DIRECT RADIATION SHINE OR BE JOGGLED, AS DETERMINED BY ENVIRONMENTAL AND NUCLEAR SAFETY. ALL PIPE/SLEEVE INTERFACES SHALL BE SEALED USING APPROVED FIRE-RATED PENETRATION SEAL DESIGNS TO MAINTAIN THE INTEGRITY OF THE FIRE WALL BETWEEN AREAS.
9. VALVES WILL BE ACTUATED SLOWLY IN CONJUNCTION WITH PUMP SHUTDOWN TO PREVENT WATER HAMMER.
10. FLOW INSTRUMENTATION WILL BE DUAL FLOW ELEMENT. SET POINT FOR FC-0309 WILL BE SELECTED FROM THE FOLLOWING:
    FRP-FT-0309 (24590-PTF-M6-FRP-00003)
    HLP-FT-0278 (24590-PTF-M6-HLP-00003)
    HLP-FT-0273 (24590-PTF-M6-HLP-00003)
    HLP-FT-0266 (24590-PTF-M6-HLP-00002)
    HLP-FT-0143 (24590-PTF-M6-HLP-00001)
    HLP-FT-0146 (24590-PTF-M6-HLP-00001)
    OPERATOR INPUT WHEN PUMPING FROM FRP-VSL-00002A/B/C/D.
11. JUMPERS FRP-JMPP-00051, FRP-JMPP-00053, FRP-JMPP-00054, AND FRP-JMPP-00019 ARE TO BE DESIGNED, NOT FABRICATED. WHEN FABRICATED JUMPERS WILL BE INSTALLED ONLY FOR REQUIRED TRANSFER VIA THESE JUMPERS.
12. CONTENTS OF THIS DRAWING ARE DANGEROUS WASTE PERMIT AFFECTING.
13. DELETED
14. JUMPERS WILL BE 2 INCH PIPE WITH 3x2 JUMPER CONNECTORS.
15. SPARE LINES FOR FUTURE CONNECTIONS SHALL BE CAPPED 5 FEET FROM THE FOUNDATION OF THE PRETREATMENT FACILITY.
16. DELETED
17. REFER TO PUMP SEAL WATER DISTRIBUTION DRAWING: 24590-PTF-M6-PSW-00009.
18. FOR PERMANENT PIPING/JUMPER INTERFACE SEE THE PROCESS IN-CELL HANDLING JUMPER CONNECTIONS PIPING AND INSTRUMENTATION DIAGRAMS 24590-PTF-M6-PIH-00003 THROUGH 24590-PTF-M6-PIH-00006.
19. REVISION 2: INCORPORATE 24590-PTF-M6N-M8OT-00003, 24590-PTF-M6N-M8OT-00007, 24590-PTF-M6N-FRP-00034, 24590-PTF-M6N-FRP-00027, AND 24590-PTF-M6N-FRP-00030. ADD MATERIAL SPECIFICATION BREAKS. DELETE SPECIALTY ITEM TAGS FOR QUICK CONNECTS, DELETE ITS INTERLOCK ON FRP-PMP-00002A, RESEQUENCED FRP-PMP-00002A CONTROLLER AND DELETED PIPELINE COMPONENT TAGS IN THE HOTCELL.
20. THE SAFETY FUNCTION OF VALVES IS PERFORMED BY POSITION SWITCHES ONLY. POSITION SWITCHES ARE CLASSIFIED AS QUALITY LEVEL Q, SEISMIC CATEGORY SC-III, AND ARE WIRED TO THE PROGRAMABLE PROTECTION SYSTEM.
21. ALL PIPELINES ON THE PIPING AND INSTRUMENTATION DIAGRAM (P&ID) SHALL BE FREE DRAINING, UNLESS OTHERWISE NOTED. PROVIDE VENTS AND DRAINS AS NEEDED. VENTS AND DRAINS SHALL BE DESIGNED PER 24590-WTP-3PB-P000-T0001.
22. REVISED TO INCORPORATE 24590-PTF-M6N-M8OT-00037, -00038, 24590-PTF-M6N-FRP-00037, AND -00038. REVISED QUALITY/SEISMIC BREAKS, SLOPE REQUIREMENTS AND INCORPORATED HPAV CHANGES. ADDED/REVISED/DELETED NOTES. ADDED HOLDS AND REFERENCES. SYSTEM REQUIRES DESIGN REVERIFICATION.

HOLD/OPEN ITEMS:

1. DELETED
2. DRAWING BORDER COORDINATES AND LAYOUT OF THE STARTUP SIMULANT LINE FROM THE WET CHEMICAL FACILITY ARE ON HOLD PENDING FURTHER DEVELOPMENT.
3. 3-7. DELETED
8. PENDING DEVELOPMENT OF CRITICAL VELOCITY/LINE PLUGGING DESIGN GUIDE.

REFERENCES:

1. THE REQUIRED BATCH SEQUENCES, PERMISSIVES, INTERLOCKS, ALARMS AND OPERATOR INTERFACE POINTS ARE FULLY DESCRIBED IN THE SOFTWARE FUNCTIONAL SPECIFICATION FOR PTF WASTE FEED RECEIPT PROCESS SYSTEM FRP, 24590-PTF-3PS-FRP-T0001.
2. FOR PERMISSIVES AND INTERLOCKS FOR IMPORTANT TO SAFETY SYSTEMS (ITS) REFER TO SAFETY SYSTEM REQUIREMENT SPECIFICATION DOCUMENTS 24590-PTF-3PS-PPJ-T0005 (FUTURE) AND 24590-PTF-3PS-PPJ-T0031 (FUTURE).

Please note that source, special nuclear, and byproduct materials, as defined in the Atomic Energy Act of 1954 (AEA) are regulated at the U. S. Department of Energy (DOE) facilities exclusively by DOE acting pursuant to its AEA authority. DOE asserts that Bechtel BWXT Idaho, LLC has no authority or responsibility or authority to regulate source, special nuclear, and byproduct materials at DOE-owned nuclear facilities. Information contained herein on radionuclides is provided for process description purposes only.

REV	DESCRIPTION	ORG	CHKD	RVWD	APVD	DATE
3	REVISED PER NOTE 22	[illegible]	[illegible]	CER [illegible]	[illegible]	8/1/06
2	SEE NOTE 19	NLC	SV	JJ	RV	11/03/04
0	ISSUED FOR CONSTRUCTION	AR	RV	N/A	RV	11/27/02

REVISION HISTORY

Q QUALITY DESIGNATOR

ISSUED BY: RPP-WTP PDC

ISSUE STAMP

	BY	DATE
ORIGINATOR	AARON DONNELLY	11/27/02
CHECKER	RAM, VORIA	11/27/02
APPROVER	ROBERT VOKE	11/27/02
REVIEWER	N/A	

PROJECT No. 24590
SITE HANFORD
AREA 200E
BUILDING No. 10

CONTENT APPLICABLE TO ALARA? [X] YES [ ] NO
ADR NO. 24590-PTF-ADR-M-02-007 REV: 5
SAFETY SCREEN REQUIRED? [X] YES [ ] NO EMS INITIAL IF YES [illegible]

SAFETY SCREEN IS REQUIRED FOR DRAWING TYPES IDENTIFIED IN 24590-WTP-GPP-SREG-002

BECHTEL

RIVER PROTECTION PROJECT
WASTE TREATMENT PLANT
2435 STEVENS CENTER PLACE
RICHLAND, WA 99354

CONTRACT No: DE-AC27-01RV14136

P&ID-PTF WASTE FEED RECEIPT PROCESS SYSTEM FRP-PMP-00001 AND FRP-PMP-00002A

SCALE: NONE

24590-PTF-M6-FRP-00003 REV 3

E SIZE - 44x34
COMPUTER GENERATED - MANUAL CHANGES NOT PERMITTED

R1070207

07/24/2006 02:16:25 PM

PLOTTED BY: wmahoney
C:\Work\gms\0383\PTFM6FRP00003.dgn

FORM E_SDN.DGN 02/2003

PSA-RK-00020
PLANT SERVICE
AIR RACK SYSTEM
FLUIDICS CONTROL
12 POINTS
156 IN X 52 IN X 147 IN

FRP-EJCTR-00003 JET PUMP PAIR EJECTOR	FRP-PJM-00062 PULSE JET MIXER	FRP-EJCTR-00004 JET PUMP PAIR EJECTOR	FRP-PJM-00063 PULSE JET MIXER	FRP-EJCTR-00005 JET PUMP PAIR EJECTOR	FRP-PJM-00064 PULSE JET MIXER	FRP-EJCTR-00006 JET PUMP PAIR EJECTOR	FRP-PJM-00065 PULSE JET MIXER	FRP-EJCTR-00007 JET PUMP PAIR EJECTOR	FRP-PJM-00066 PULSE JET MIXER	FRP-EJCTR-00008 JET PUMP PAIR EJECTOR	FRP-PJM-00067 PULSE JET MIXER
MODEL L50M	1614 GAL 54 IN (D) X 195 IN (O/L)	MODEL L50M	1614 GAL 54 IN (D) X 195 IN (O/L)	MODEL L50M	1614 GAL 54 IN (D) X 195 IN (O/L)	MODEL L50M	1614 GAL 54 IN (D) X 195 IN (O/L)	MODEL L50M	1614 GAL 54 IN (D) X 195 IN (O/L)	MODEL L50M	1614 GAL 54 IN (D) X 195 IN (O/L)

PSA-RK-00020

DEMIN WATER
PTF-M6-DIW-00001 E2
DIW-WE-03359-S11C-02
DIW FRP
HV 0517
NOTE 18
D1-801
FRP-V-09740
FRP-V-13464
FRP-STR-00309
FI 0518
FRP-V-13465
02-801
FRP-V-13553
PSA S10A
FRP S11C
PLANT SERVICE AIR
PTF-M6-PSA-00002 B5
PSA-GQ-02965-S10A-06
FRP-V-13853
FRP-V-13854
FRP-V-13855
NOTE 18
SET @ 73 PSIG
PCV 0532
PI 0533
PLANT SERVICE AIR
PTF-M6-PSA-00002 B5
PSA-GQ-51053-S11C-04
PSA FRP
PSA-V-35934
V-13971
FRP-WE-20025-S11C-02
PTF-M6-FRP-00017 G8
FRP-GQ-04262-S11C-06
PTF-M6-FRP-00017 G8
YC 0501A/0501B Z
YC 0502A/0502B Z
YC 0503A/0503B Z
YC 0504A/0504B Z
YC 0505A/0505B Z
YC 0506A/0506B Z
FRP-WE-01788-S11C-01
FRP-WE-01789-S11C-01
FRP-WE-01790-S11C-01
FRP-WE-01791-S11C-01
FRP-WE-01792-S11C-01
FRP-WE-01793-S11C-01
FRP-GQ-04234-S11C-02
FRP-GQ-04235-S11C-02
FRP-GQ-04236-S11C-02
FRP-GQ-04237-S11C-02
FRP-GQ-04238-S11C-02
FRP-GQ-04239-S11C-02
FRP-GQ-04240-S11C-02
FRP-GQ-04241-S11C-02
FRP-GQ-04242-S11C-02
FRP-GQ-04243-S11C-02
FRP-GQ-04244-S11C-02
FRP-GQ-04245-S11C-02
FRP-V-01082
FRP-V-01083
FRP-V-01084
FRP-V-01085
FRP-V-01086
FRP-V-01087
FRP-V-01088
FRP-V-01089
FRP-V-01090
FRP-V-01091
FLUIDICS CONTROLLER DETAIL 5 ASSY. NO. 7
NOTE 2
FRP-STR-00177
FRP-STR-00178
FRP-STR-00179
FRP-STR-00180
FRP-STR-00181
FRP-STR-00182
FRP-STR-00183
FRP-STR-00184
FRP-STR-00185
FRP-STR-00186
FRP-STR-00187
FRP-STR-00188
FRP-V-01042
FRP-V-01043
FRP-V-01044
FRP-V-01045
FRP-V-01046
FRP-V-01047
FRP-V-01054
FRP-V-01055
FRP-V-01056
FRP-V-01057
FRP-V-01058
FRP-V-01059
FRP-V-01060
FRP-V-01061
FRP-V-01062
FRP-V-01063
N01C N01B N01A N02C N02B N02A N03C N03B N03A N04C N04B N04A N05C N05B N05A N06C N06B N06A
FIRE AREA 'A'
FIRE AREA 'B'
NOTE 16 (TYP 12 PLCS)
V-13990 V-13991 V-13992 V-13993 V-13994 V-13995 V-13996 V-13997 V-13998 V-13999 V-14000 V-14001 V-14002 V-14003 V-14004 V-14005 V-14006 V-14007
PT 0520A/0520B/0520C
PT 0521A/0521B/0521C
PT 0522A/0522B/0522C
PT 0523A/0523B/0523C
PT 0524A/0524B/0524C
PT 0525A/0525B/0525C
PI 0520A/0520B/0520C
PI 0521A/0521B/0521C
PI 0522A/0522B/0522C
PI 0523A/0523B/0523C
PI 0524A/0524B/0524C
PI 0525A/0525B/0525C
HOLD 6
YV 0526/0527/0528/0529/0530/0531 Z
YC 0526/0527/0528/0529/0530/0531 Z
FRP-GQ-20103-S11C-02
FRP-GQ-20104-S11C-02
FRP-GQ-20105-S11C-02
FRP-GQ-20106-S11C-02
FRP-GQ-20107-S11C-02
FRP-GQ-20136-S11C-02
FRP-V-13599 FRP-V-13600
FRP-V-13601 FRP-V-13603
FRP-V-13602 FRP-V-13604
FRP-V-13605 FRP-V-13606
FRP-V-13607 FRP-V-13608
FRP-V-13609 FRP-V-13610
FC
FRP-GQ-20057-S11C-04
PTF-M6-FRP-00017 B8
FIRE AREA 'B'
FIRE AREA 'A'
FRP-WE-01788-S11B-01
FRP-WE-01789-S11B-01
FRP-WE-01790-S11B-01
FRP-WE-01791-S11B-01
FRP-WE-01792-S11B-01
FRP-WE-01793-S11B-01
FRP-GQ-04234-S11B-02
FRP-GQ-04235-S11B-02
FRP-GQ-04236-S11B-02
FRP-GQ-04237-S11B-02
FRP-GQ-04238-S11B-02
FRP-GQ-04239-S11B-02
FRP-GQ-04240-S11B-02
FRP-GQ-04241-S11B-02
FRP-GQ-04242-S11B-02
FRP-GQ-04243-S11B-02
FRP-GQ-04244-S11B-02
FRP-GQ-04245-S11B-02
FRP-EJCTR-00003
FRP-EJCTR-00004
FRP-EJCTR-00005
FRP-EJCTR-00006
FRP-EJCTR-00007
FRP-EJCTR-00008
1 1/2" N01 N02 N03 N04
C3 S11C
BC S11B
NOTE 5
CM Q III 1
FRP-GQ-03095-S11B-02
FRP-GV-03095-11Z-02
FRP-GQ-03097-S11B-02
FRP-GV-03098-S11Z-02
FRP-GQ-03099-S11B-02
FRP-GV-03100-S11Z-02
FRP-GQ-03101-S11B-02
FRP-GV-03102-S11Z-02
FRP-GQ-03103-S11B-02
FRP-GV-03104-S11Z-02
FRP-GQ-03105-S11B-02
FRP-GV-03106-S11Z-02
1:200
PJV-GV-00023-S11Z-20
PTF-M6-FRP-00017 B8
N45 N46 N47 N48 N49 N50
PLANT WASH
PTF-M6-FRP-00008 B8
PJV-25-00007-S11Z-02 1:100
FRP-PJM-00062
FRP-PJM-00063
FRP-PJM-00064
FRP-PJM-00065
FRP-PJM-00066
FRP-PJM-00067
NOTE 3
FRP-VSL-00002A

NOTES:

1. SEE DRAWING 24590-WTP-M6-50-00001 THROUGH 24590-WTP-M6-50-00008 FOR GENERAL NOTES, SYMBOLS AND LEGEND, AND GENERAL SLOPE REQUIREMENTS.
2. SEE JET PUMP PAIR CONTROL DETAIL ON DRAWING 24590-WTP-M6-50-00007. ASSEMBLY DATA ON 24590-WTP-M6-50-00006.
3. FOR PROCESS INFORMATION REFER TO DRAWING 24590-PTF-M6-FRP-00001.
4. DELETED
5. PIPE SLEEVE PENETRATIONS BETWEEN OCCUPATIONAL AREAS AND INACCESSIBLE/REMOTE AREAS (R5) SHALL HAVE SHADOW SHIELDING TO MITIGATE DIRECT RADIATION SHINE OR BE JOGGLED, AS DETERMINED BY ENVIRONMENTAL AND NUCLEAR SAFETY. ALL PIPE/SLEEVE INTERFACES SHALL BE SEALED USING APPROVED FIRE-RATED PENETRATION SEAL DESIGNS TO MAINTAIN THE INTEGRITY OF THE FIRE WALL BETWEEN AREAS.
6. CONTENTS OF THIS DRAWING ARE DANGEROUS WASTE PERMIT AFFECTING.
7. DELETED
8. DELETED
9. ALL INTERNAL SUPPORTS AND WELDS THAT INTERACT WITH THE PRIMARY CONTAINMENT BARRIER (VESSEL) SHALL MAINTAIN EQUAL QUALITY AND SEISMIC CATEGORY AS THE PARENT.
10. DELETED
11. DELETED
12. DELETED
13. DELETED
14. THE PRESSURE BOUNDARY FOR ALL SYSTEMS, STRUCTURES, AND COMPONENTS ON THIS DRAWING IS QUALITY LEVEL Q AND SEISMIC CATEGORY SC-I, UNLESS OTHERWISE NOTED.
15. REVISION 2: INCORPORATED 24590-PTF-M6N-M8OT-00005, 24590-PTF-M6N-M8OT-00007, 2590-PTF-M6N-M8OT-00012, 24590-PTF-M6N-FRP-00019 AND 24590-PTF-M6N-FRP-00032, REVISED NOTE TO INCLUDE PULSE MIXERS. DELETED CHECK VALVE ON PSA HEADER AND ADDED NOTES 13 AND 14. REVISED NOTES 2, 3, 4, AND 12. REVISED QUALITY LEVELS AND SEISMIC CATEGORIES.
16. STRAINER IS A CONICAL PILGRIM HAT TYPE PERFORATED WITH 1/8 INCH DIAMETER HOLES ON 3/16 INCH CENTERS PERMANENTLY INSTALLED. MINIMUM OPEN FLOW AREA SHALL BE 150% OF PIPE CROSS SECTIONAL AREA.
17. ALL PIPELINES ON THIS PIPING AND INSTRUMENTATION DIAGRAM (P&ID) SHALL BE FREE DRAINING, UNLESS OTHERWISE NOTED. PROVIDE VENTS AND DRAINS AS NEEDED. VENTS AND DRAINS SHALL BE DESIGNED PER 24590-WTP-3PB-P000-T0001.
18. REAGENT/PLANT WASH/AIR SERVICES PROVIDED AT A LOCAL UTILITY STATION.
19. SEE ARCHIVED REVISION 1 P&ID FOR REVISION 1 CHANGES.
20. PSA-RK-00020 RACK DETAILS CONTINUED ON P&ID 24590-PTF-M6-FRP-00017.
21. MAJOR REVISION, NO CHANGE CLOUDS REQUIRED. INCORPORATED 24590-PTF-M6N-M8OT-0036, -0037, AND -0038. INCORPORATION OF DCN 24590-PTF-M6N-M8OT-00035 IN THIS REVISION IS MODIFIED (DIRECT REVISION) BY IMPLEMENTATION OF DTD 24590-PTF-DTD-ENS-06-002, REV 0. IMPLEMENTED DECISION TO DEVIATE 24590-PTF-DTD-ENS-06-002, REV 0. ADDITIONAL INFORMATION ADDED TO PROVIDE MULTIPLE PULSED JET MIXER OVERBLOW DETECTION AND PREVENTION. AIR RACK COMPONENTS AND ARRANGEMENT CHANGED DUE TO LAYOUT CONSTRAINTS. REVISED/ADDED/DELETED NOTES, HOLDS AND REFERENCES. SYSTEM REQUIRES REVERIFICATION.

HOLD/OPEN ITEMS:

1. DELETED
2. DELETED
3. DELETED
4. DELETED
5. DELETED
6. INSTRUMENTATION, PRESSURE SENSING LINES AND ROOT VALVES ON HOLD PENDING RESOLUTION OF THE 'B' AND 'C' PRESSURE TRANSMITTER DELETION.

REFERENCES:

1. THE REQUIRED BATCH SEQUENCES, PERMISSIVES, INTERLOCKS, ALARMS AND OPERATOR INTERFACE POINTS ARE FULLY DESCRIBED IN THE SOFTWARE FUNCTIONAL SPECIFICATION, FOR FRP-WASTE FEED RECEIPT PROCESS SYSTEM, 24590-PTF-3PS-FRP-T0001.
2. DELETED
3. FOR PERMISSIVES AND INTERLOCKS TO IMPORTANT TO SAFETY SYSTEM REQUIREMENT SPECIFICATION 24590-PTF-3PS-PPJ-T0018 (FUTURE), -T0022 (FUTURE), -T0031 (FUTURE).

Please note that source, special nuclear, and byproduct materials, as defined in the Atomic Energy Act of 1954 (AEA) are regulated at the U. S. Department of Energy (DOE) facilities exclusively by DOE acting pursuant to its AEA authority. DOE asserts that pursuant to AEA it has sole and exclusive responsibility and authority to regulate nuclear safety hazards of these types of materials at DOE owned nuclear facilities. Information contained herein on radionuclides is provided for process description purposes only.

REV	DESCRIPTION	ORG	CHKD	RVWD	APVD	DATE
3	REVISED PER NOTE 21	SBT	MAR	KSK	JAL	08/03/06
2	MAJOR REVISION SEE NOTE 15	NLC	SV	JJ	RES	01/21/05
0	ISSUED FOR CONSTRUCTION	AD	RS	N/A	RV	11/27/02

REVISION HISTORY

Q QUALITY DESIGNATOR

ISSUED BY RPP-WTP PDC

PROJECT No.	24590	
SITE	HANFORD	
AREA	200E	
BUILDING No.	10	
	BY	DATE
ORIGINATOR	AARON DONNELLEY	11/27/02
CHECKER	ROBERT STEVENS	11/27/02
APPROVER	ROBERT VOKE	11/27/02
REVIEWER	N/A	

CONTENT APPLICABLE TO ALARA? [X] YES [ ] NO
ADR NO. 24590-PTF-ADR-M-02-007 REV: 5
SAFETY SCREEN REQUIRED? [X] YES [ ] NO EWS INITIAL IF YES

BECHTEL
RIVER PROTECTION PROJECT
WASTE TREATMENT PLANT
2435 STEVENS CENTER PLACE
RICHLAND, WA 99354

CONTRACT No: DE-AC27-01RV14136

P & ID - PTF
WASTE FEED RECEIPT
UTILITY SERVICES - PSA RACK

SCALE: NONE
24590-PTF-M6-FRP-00005
REV 3

'E' SIZE - 44x34
COMPUTER GENERATED - MANUAL CHANGES NOT PERMITTED

SAFETY SCREEN IS REQUIRED FOR DRAWING TYPES IDENTIFIED IN 24590-WTP-GPP-SREQ-002

R10702065

08/02/2006 02:38:17 PM

PLOTTED BY: edonn
C:\Work\dms0837\PTFM6FRP00005.dgn

FORM E_SDN.DGN 02/2003

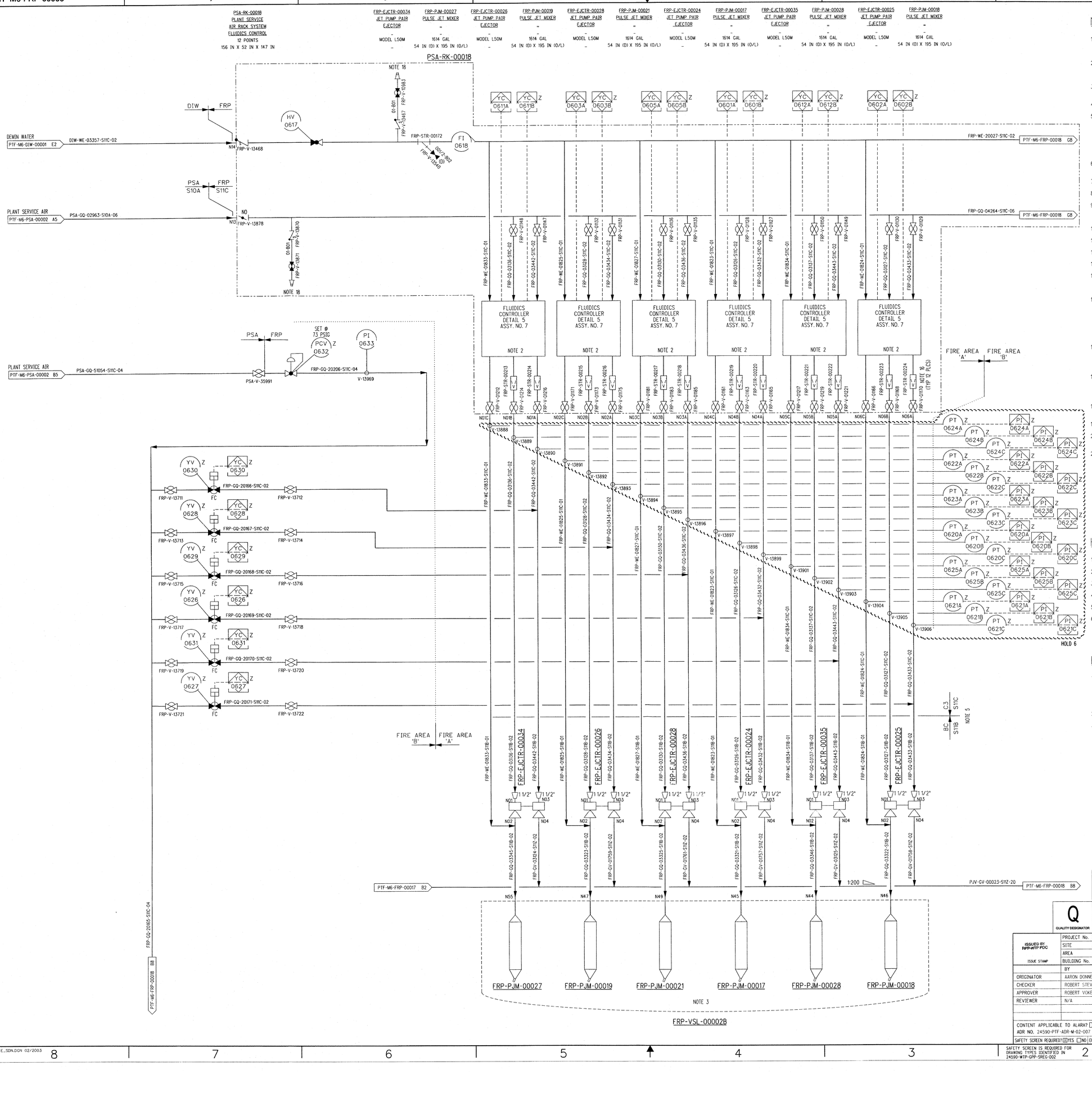

NOTES:

1. SEE DRAWING 24590-WTP-M6-50-00001 THROUGH 24590-WTP-M6-50-00008 FOR GENERAL NOTES, SYMBOLS AND LEGEND, AND GENERAL SLOPE REQUIREMENTS.
2. SEE JET PUMP PAIR CONTROL DETAIL ON DRAWING 24590-WTP-M6-50-00007. ASSEMBLY DATA ON 24590-WTP-M6-50-00006.
3. FOR PROCESS INFORMATION REFER TO DRAWING 24590-PTF-M6-FRP-00001.
4. DELETED
5. PIPE SLEEVE PENETRATIONS BETWEEN OCCUPATIONAL AREAS AND INACCESSIBLE/REMOTE AREAS (R5) SHALL HAVE SHADOW SHIELDING TO MITIGATE DIRECT RADIATION SHINE OR BE JOGGLED, AS DETERMINED BY ENVIRONMENTAL AND NUCLEAR SAFETY. ALL PIPE/SLEEVE INTERFACES SHALL BE SEALED USING APPROVED FIRE-RATED PENETRATION SEAL DESIGNS TO MAINTAIN THE INTEGRITY OF THE FIRE WALL BETWEEN AREAS.
6. CONTENTS OF THIS DRAWING ARE DANGEROUS WASTE PERMIT AFFECTING.
7. DELETED
8. DELETED
9. ALL INTERNAL SUPPORTS AND WELDS THAT INTERACT WITH THE PRIMARY CONTAINMENT BARRIER (VESSEL) SHALL MAINTAIN EQUAL QUALITY AND SEISMIC CATEGORY AS THE PARENT.
10. DELETED
11. DELETED
12. DELETED
13. DELETED
14. THE PRESSURE BOUNDARY FOR ALL SYSTEMS, STRUCTURES AND COMPONENTS ON THIS DRAWING IS QUALITY LEVEL Q AND SEISMIC CATEGORY SC-I, UNLESS OTHERWISE NOTED.
15. REVISION 2: INCORPORATED 24590-PTF-M6N-M8OT-00005, 24590-PTF-M6N-M8OT-00007, 24590-PTF-M6N-M8OT-000112, 24590-PTF-M6N-FRP-00020 AND 24590-PTF-M6N-FRP-00032. REVISED NOTE TO INCLUDE PULSE JET MIXERS. DELETED CHECK VALVE ON PSA HEADER AND QUICK DISCONNECT TAG. ADDED NOTES 13 AND 14. REVISED NOTES 2, 3, 4 & 12. REVISED QUALITY LEVELS AND SEISMIC CATEGORIES.
16. STRAINER IS A CONICAL PILGRIM HAT TYPE PERFORATED WITH 1/8 INCH DIAMETER HOLES ON 3/16 INCH CENTERS PERMANENTLY INSTALLED. MINIMUM OPEN FLOW AREA SHALL BE 150% OF PIPE CROSS SECTIONAL AREA.
17. ALL PIPELINES ON THIS PIPING AND INSTRUMENTATION DIAGRAM (P&ID) SHALL BE FREE DRAINING, UNLESS OTHERWISE NOTED. PROVIDE VENTS AND DRAINS AS NEEDED. VENTS AND DRAINS SHALL BE DESIGNED PER 24590-WTP-3PB-P000-T0001.
18. REAGENT/PLANT WASH/AIR SERVICES PROVIDED AT A LOCAL UTILITY STATION.
19. SEE ARCHIVED REVISION 1 P&ID FOR REVISION 1 CHANGE.
20. PSA-RK-00018 RACK DETAILS CONTINUED ON P&ID 24590-PTF-M6-FRP-00018.
21. MAJOR REVISION, NO CHANGE CLOUDS REQUIRED. INCORPORATED 24590-PTF-M6N-M8OT-0036, -0037, AND -0038. INCORPORATION OF DCN 24590-PTF-M6N-M8OT-00036 IN THIS REVISION IS MODIFIED (DIRECT REVISION) BY IMPLEMENTATION OF DTD 24590-PTF-DTD-ENS-06-002, REV 0. IMPLEMENTED DECISION TO DEVIATE 24590-PTF-DTD-ENS-06-002, REV 0. ADDITIONAL INFORMATION ADDED TO PROVIDE MULTIPLE PULSED JET MIXER OVERBLOW DETECTION AND PREVENTION. AIR RACK COMPONENTS AND ARRANGEMENT CHANGED DUE TO LAYOUT CONSTRAINTS. REVISED/ADDED/DELETED NOTES, HOLDS AND REFERENCES. SYSTEM REQUIRES REVERIFICATION.

HOLD/OPEN ITEMS:

1. DELETED
2. DELETED
3. DELETED
4. DELETED
5. DELETED
6. INSTRUMENTATION, PRESSURE SENSING LINES AND ROOT VALVES ON HOLD PENDING RESOLUTION OF THE 'B' AND 'C' PRESSURE TRANSMITTER DELETION.

REFERENCES:

1. THE REQUIRED BATCH SEQUENCES, PERMISSIVES, INTERLOCKS, ALARMS AND OPERATOR INTERFACE POINTS ARE FULLY DESCRIBED IN THE SOFTWARE FUNCTIONAL SPECIFICATION, FOR FRP-WASTE FEED RECEIPT PROCESS SYSTEM, 24590-PTF-3PS-FRP-T0001.
2. DELETED
3. FOR PERMISSIVES AND INTERLOCKS TO IMPORTANT TO SAFETY SYSTEMS (ITS), REFER TO SAFETY SYSTEM REQUIREMENT SPECIFICATIONS 24590-PTF-3PS-PPJ-T0018, (FUTURE) -T0022 (FUTURE) AND -T0031 (FUTURE).

Please note that source, special nuclear, and byproduct materials, as defined in the Atomic Energy Act of 1954 (AEA) are regulated by the U.S. Nuclear Regulatory Commission (NRC) except where DOE, acting pursuant to its AEA authority, DOE asserts that pursuant to AEA, it has sole and exclusive responsibility and authority to regulate source, special nuclear, and byproduct materials at DOE-owned nuclear facilities. Information contained in this drawing communicates is provided for process description purposes only.

REV	DESCRIPTION	ORG	CHKD	RVWD	APVD	DATE
3	REVISED PER NOTE 21	[illegible]	DRN	CER	[illegible]	08/03/06
2	MAJOR REVISION SEE NOTE 15	NLC	SV	JJ	RES	01/21/05
0	ISSUED FOR CONSTRUCTION	AD	RS	N/A	RV	11/27/02

QUALITY DESIGNATOR: Q

REVISION HISTORY

ISSUED BY RPP-WTP PDC

ISSUE STAMP

PROJECT No.	24590	
SITE	HANFORD	
AREA	200E	
BUILDING No.	10	
	BY	DATE
ORIGINATOR	AARON DONNELLEY	11/27/02
CHECKER	ROBERT STEVENS	11/27/02
APPROVER	ROBERT VOKE	11/27/02
REVIEWER	N/A	

CONTENT APPLICABLE TO ALARA? [X] YES [ ] NO
ADR NO. 24590-PTF-ADR-M-02-007 REV: 5
SAFETY SCREEN REQUIRED? [X] YES [ ] NO EMRS INITIAL IF YES [illegible]

SAFETY SCREEN IS REQUIRED FOR DRAWING TYPES IDENTIFIED IN 24590-WTP-GPP-SREG-002

RIVER PROTECTION PROJECT
WASTE TREATMENT PLANT
2435 STEVENS CENTER PLACE
RICHLAND, WA 99354

CONTRACT No: DE-AC27-01RV14136

P & ID - PTF
WASTE FEED RECEIPT
UTILITY SERVICES - PSA RACK

SCALE: NONE

24590-PTF-M6-FRP-00006

REV 3

"E" SIZE - 44x34
COMPUTER GENERATED - MANUAL CHANGES NOT PERMITTED

R10702086

08/02/2006 02:39:00 PM

PLOTTED BY: eidorn
C:\Work\dms0383\PTF\M6\FRP00006.dgn

24590-PTF-M6-FRP-00007

PSA-RK-00016
PLANT SERVICE
AIR RACK SYSTEM
FLUIDICS CONTROL
12 POINTS
164 IN X 50 IN X 147 IN

FRP-EJCTR-00056 JET PUMP PAIR EJECTOR	FRP-PJM-00002 PULSE JET MIXER	FRP-EJCTR-00055 JET PUMP PAIR EJECTOR	FRP-PJM-00001 PULSE JET MIXER	FRP-EJCTR-00046 JET PUMP PAIR EJECTOR	FRP-PJM-00004 PULSE JET MIXER	FRP-EJCTR-00047 JET PUMP PAIR EJECTOR	FRP-PJM-00029 PULSE JET MIXER	FRP-EJCTR-00057 JET PUMP PAIR EJECTOR	FRP-PJM-00003 PULSE JET MIXER	FRP-EJCTR-00048 JET PUMP PAIR EJECTOR	FRP-PJM-00030 PULSE JET MIXER
MODEL L50M	1614 GAL 54 IN (D) X 195 IN (O/L)	MODEL L50M	1614 GAL 54 IN (D) X 195 IN (O/L)	MODEL L50M	1614 GAL 54 IN (D) X 195 IN (O/L)	MODEL L50M	1614 GAL 54 IN (D) X 195 IN (O/L)	MODEL L50M	1614 GAL 54 IN (D) X 195 IN (O/L)	MODEL L50M	1614 GAL 54 IN (D) X 195 IN (O/L)

PSA-RK-00016 NOTE 20

DEMIN WATER — DIW-WE-03355-S11C-02 — PTF-M6-DIW-00001 E2 — DIW — FRP — HV 0717 — N14 — FRP-V-13300 — NOTE 18 — FRP-V-09727 — D1-801 — FRP-V-13299 — FRP-STR-00166 — FI 0718 — FRP-V-13889 — D2-801 — FRP-V-13888

PLANT SERVICE AIR — PSA-GQ-02935-S10A-06 — PTF-M6-PSA-00002 A7 — PSA — S10A — FRP — S11C — NO — N13 — FRP-V-13885 — D2-801 — FRP-V-13886 — FRP-V-13887 — NOTE 18

PLANT SERVICE AIR — PSA-GQ-51055-S11C-04 — PTF-M6-PSA-00002 A7 — PSA — FRP — SET @ 73 PSIG — PCV 0732 — PI 0733 — PSA-V-35993 — V-13970

PLANT WASH — PWD-ZS-03682-S11Z-01 1/2 — PTF-M6-PWD-00029 B6 — 1:100 — CMQ

PJV-GV-00020-S11Z-18 — PTF-M6-FRP-00019 B8 — 1:200

FRP-GQ-20177-S11C-04 — PTF-M6-FRP-00019 B8

FRP-WE-20024-S11C-02 — PTF-M6-FRP-00019 G8

FRP-GQ-04268-S11C-06 — PTF-M6-FRP-00019 G8

FLUIDICS CONTROLLER DETAIL 5 ASSY. NO. 7 — NOTE 2 (x6)

FIRE AREA 'A' | FIRE AREA 'B' — NOTE 16 (TYP. 12 PLCS)

FIRE AREA 'B' | FIRE AREA 'A'

HOLD 6

C3 — S11C — BC — S11B — NOTE 5

FRP-EJCTR-00056 — FRP-PJM-00002
FRP-EJCTR-00055 — FRP-PJM-00001
FRP-EJCTR-00046 — FRP-PJM-00004
FRP-EJCTR-00047 — FRP-PJM-00029
FRP-EJCTR-00057 — FRP-PJM-00003
FRP-EJCTR-00048 — FRP-PJM-00030

NOTE 3

FRP-VSL-00002C

NOTES:

1. SEE DRAWING 24590-WTP-M6-50-00001 THROUGH 24590-WTP-M6-50-00008 FOR GENERAL NOTES, SYMBOLS AND LEGEND, AND GENERAL SLOPE REQUIREMENTS.
2. SEE JET PUMP PAIR CONTROL DETAIL ON DRAWING 24590-WTP-M6-50-00007. ASSEMBLY DATA ON 24590-WTP-M6-50-00006.
3. FOR PROCESS INFORMATION REFER TO DRAWING 24590-PTF-M6-FRP-00002.
4. DELETED
5. PIPE SLEEVE PENETRATIONS BETWEEN OCCUPATIONAL AREAS AND INACCESSIBLE/REMOTE AREAS (R5) SHALL HAVE SHADOW SHIELDING TO MITIGATE DIRECT RADIATION SHINE OR BE JOGGLED, AS DETERMINED BY ENVIRONMENTAL AND NUCLEAR SAFETY. ALL PIPE/SLEEVE INTERFACES SHALL BE SEALED USING APPROVED FIRE-RATED PENETRATION SEAL DESIGNS TO MAINTAIN THE INTEGRITY OF THE FIREWALL BETWEEN AREAS.
6. CONTENTS OF THIS DRAWING ARE DANGEROUS WASTE PERMIT AFFECTING.
7. DELETED
8. DELETED
9. ALL INTERNAL SUPPORTS AND WELDS THAT INTERACT WITH THE PRIMARY CONTAINMENT BARRIER (VESSEL) SHALL MAINTAIN EQUAL QUALITY AND SEISMIC CATEGORY AS THE PARENT.
10. DELETED
11. DELETED
12. DELETED
13. DELETED
14. THE PRESSURE BOUNDARY FOR ALL SYSTEMS, STRUCTURES, AND COMPONENTS ON THIS DRAWING IS QUALITY LEVEL Q AND SEISMIC CATEGORY SC-I, UNLESS OTHERWISE NOTED.
15. REVISION 2: INCORPORATED 24590-PTF-M6N-M8OT-00005, 24590-PTF-M6N-M8OT-00007, 24590-PTF-M6N-M8OT-00012, 24590-PTF-M6N-FRP-00021 AND 24590-PTF-M6N-FRP-00032. REVISED NOTE TO INCLUDE PULSE JET MIXERS. DELETED CHECK VALVE ON PSA HEADER AND QUICK CONNECT TAG. ADDED NOTES 13 & 14. REVISED NOTES 2, 3, 4 & 12. REVISED QUALITY LEVELS AND SEISMIC CATEGORIES.
16. STRAINER IS A CONICAL PILGRIM HAT TYPE PERFORATED WITH 1/8 INCH DIAMETER HOLES ON 3/16 INCH CENTERS PERMANTLY INSTALLED. MINIMUM OPEN FLOW AREA SHALL BE 150% OF PIPE CROSS SECTIONAL AREA.
17. ALL PIPELINES ON THE PIPING AND INSTRUMENTATION DIAGRAM (P&ID) SHALL BE FREE DRAINING, UNLESS OTHERWISE NOTED. PROVIDE VENTS AND DRAINS AS NEEDED. VENTS AND DRAINS SHALL BE DESIGNED PER 24590-WTP-3PB-P000-T0001.
18. REAGENT/ PLANT WASH/ AIR SERVICES PROVIDED AT A LOCAL UTILITY STATION.
19. SEE ARCHIVED REVISION 1 P&ID FOR REVISION 1 CHANGES.
20. PSA-RK-00016 RACK DETAILS CONTINUED ON 24590-PTF-M6-FRP-00019.
21. MAJOR REVISION, NO CHANGE CLOUDS REQUIRED. INCORPORATED 24590-PTF-M6N-M8OT-0036, -0037, AND -0038. INCORPORATION OF DCN 24590-PTF-M6N-M8OT-00036 IN THIS REVISION IS MODIFIED (DIRECT REVISION) BY IMPLEMENTATION OF DTD 24590-PTF-DTD-ENS-06-002, REV 0. IMPLEMENTED DECISION TO DEVIATE 24590-PTF-DTD-ENS-06-002, REV 0. ADDITIONAL INFORMATION ADDED TO PROVIDE MULTIPLE PULSED JET MIXER OVERBLOW DETECTION AND PREVENTION. AIR RACK COMPONENTS AND ARRANGEMENT CHANGED DUE TO LAYOUT CONSTRAINTS. REVISED/ADDED/DELETED NOTES, HOLDS AND REFERENCES. SYSTEM REQUIRES REVERIFICATION.

HOLD/OPEN ITEMS:

1-5. DELETED

6. INSTRUMENTATION, PRESSURE SENSING LINES AND ROOT VALVES ON HOLD PENDING RESOLUTION OF THE 'B' AND 'C' PRESSURE TRANSMITTER DELETION.

REFERENCES:

1. THE REQUIRED BATCH SEQUENCES, PERMISSIVES, INTERLOCKS, ALARMS AND OPERATOR INTERFACE POINTS ARE FULLY DESCRIBED IN THE SOFTWARE FUNCTIONAL SPECIFICATION, FOR FRP-WASTE FEED RECEIPT PROCESS SYSTEM, 24590-PTF-3PS-FRP-T0001.
2. DELETED
3. FOR PERMISSIVES AND INTERLOCKS TO IMPORTANT TO SAFETY SYSTEMS (ITS), REFER TO SAFETY SYSTEM REQUIREMENT SPECIFICATIONS 24590-PTF-3PS-PPJ-T0018 (FUTURE), -T0022 (FUTURE), -T0031 (FUTURE).

Please note that source, special nuclear, and byproduct materials, as defined in the Atomic Energy Act of 1954 (AEA) are regulated at the U. S. Department of Energy (DOE) facilities exclusively by DOE and not by the NRC or any Agreement State. Therefore, pursuant to AEA, it has sole and exclusive responsibility and authority to regulate source, special nuclear, and byproduct materials at DOE-owned nuclear facilities. Information contained herein on radionuclides is provided for process description purposes only.

REV	DESCRIPTION	ORG	CHKD	RVWD	APVD	DATE
3	REVISED PER NOTE 21	[illegible]	[illegible]	CER [illegible]	[illegible]	08/03/06
2	MAJOR REVISION SEE NOTE 15	NLC	SV	JJ	RES	01/21/05
0	ISSUED FOR CONSTRUCTION	AD	RS	N/A	RV	11/27/02

REVISION HISTORY

Q — QUALITY DESIGNATOR

ISSUED BY RPP-WTP PDC — ISSUE STAMP

PROJECT No.	24590
SITE	HANFORD
AREA	200E
BUILDING No.	10

	BY	DATE
ORIGINATOR	AARON DONNELLEY	11/27/02
CHECKER	ROBERT STEVENS	11/27/02
APPROVER	ROBERT VOKE	11/27/02
REVIEWER	N/A	

CONTENT APPLICABLE TO ALARA? [X] YES [ ] NO
ADR NO. 24590-PTF-ADR-M-02-007 REV: 5
SAFETY SCREEN REQUIRED? [X] YES [ ] NO ENNS INITIAL IF YES

SAFETY SCREEN IS REQUIRED FOR DRAWING TYPES IDENTIFIED IN 24590-WTP-GPP-SREG-002

"E" SIZE - 44x34 COMPUTER GENERATED - MANUAL CHANGES NOT PERMITTED

BECHTEL

RIVER PROTECTION PROJECT
WASTE TREATMENT PLANT
2435 STEVENS CENTER PLACE
RICHLAND, WA 99354

CONTRACT No: DE-AC27-01RV14136

P & ID - PTF
WASTE FEED RECEIPT
UTILITY SERVICES - PSA RACK

SCALE: NONE

24590-PTF-M6-FRP-00007 — REV 3

R10702067

08/02/2006 02:39:42 PM

PLOTTED BY: eldern
C:\Work\dm\03837\PTF\M6\FRP\00007.dgn

FORM E_SDN.DGN 02/2003

PSA-RK-00014 PLANT SERVICE AIR RACK SYSTEM	FRP-PJM-00015 PULSE JET MIXER	FRP-PJM-00014 PULSE JET MIXER	FRP-PJM-00013 PULSE JET MIXER	FRP-PJM-00011 PULSE JET MIXER	FRP-PJM-00010 PULSE JET MIXER	FRP-PJM-00012 PULSE JET MIXER	FRP-EJCTR-00078 JET PUMP PAIR EJECTOR	FRP-EJCTR-00077 JET PUMP PAIR EJECTOR	FRP-EJCTR-00076 JET PUMP PAIR EJECTOR	FRP-EJCTR-00074 JET PUMP PAIR EJECTOR	FRP-EJCTR-00073 JET PUMP PAIR EJECTOR	FRP-EJCTR-00075 JET PUMP PAIR EJECTOR
FLUIDICS CONTROL	"	"	"	"	"	"	"	"	"	"	"	"
12 POINTS	1614 GAL	1614 GAL	1614 GAL	1614 GAL	1614 GAL	1614 GAL	MODEL L50M	MODEL L50M	MODEL L50M	MODEL L50M	MODEL L50M	MODEL L50M
164 IN X 50 IN X 147 IN	54 IN (D) X 195 IN (O/L)	54 IN (D) X 195 IN (O/L)	54 IN (D) X 195 IN (O/L)	54 IN (D) X 195 IN (O/L)	54 IN (D) X 195 IN (O/L)	54 IN (D) X 195 IN (O/L)	"	"	"	"	"	"

NOTES:

1. SEE DRAWING 24590-WTP-M6-50-00001 THROUGH 24590-WTP-M6-50-00008 FOR GENERAL NOTES, SYMBOLS AND LEGEND, AND GENERAL SLOPE REQUIREMENTS.
2. SEE JET PUMP PAIR CONTROL DETAIL ON DRAWING 24590-WTP-M6-50-00007. ASSEMBLY DATA ON 24590-WTP-M6-50-00006.
3. FOR PROCESS INFORMATION REFER TO DRAWING 24590-PTF-M6-FRP-00002.
4. DELETED
5. PIPE SLEEVE PENETRATIONS BETWEEN OCCUPATIONAL AREAS AND INACCESSIBLE/REMOTE AREAS (R5) SHALL HAVE SHADOW SHIELDING TO MITIGATE DIRECT RADIATION SHINE OR BE JOGGLED, AS DETERMINED BY ENVIRONMENTAL AND NUCLEAR SAFETY. ALL PIPE/SLEEVE INTERFACES SHALL BE SEALED USING APPROVED FIRE-RATED PENETRATION SEAL DESIGNS TO MAINTAIN THE INTEGRITY OF THE FIREWALL BETWEEN AREAS.
6. CONTENTS OF THIS DRAWING ARE DANGEROUS WASTE PERMIT AFFECTING.
7. DELETED
8. DELETED
9. ALL INTERNAL SUPPORTS AND WELDS THAT INTERACT WITH THE PRIMARY CONTAINMENT BARRIER (VESSEL) SHALL MAINTAIN EQUAL QUALITY AND SEISMIC CATEGORY AS THE PARENT.
10. DELETED
11. DELETED
12. DELETED
13. DELETED
14. THE PRESSURE BOUNDARY FOR ALL SYSTEMS, STRUCTURES, AND COMPONENTS ON THIS DRAWING IS QUALITY LEVEL Q AND SEISMIC CATEGORY SC-I, UNLESS OTHERWISE NOTED.
15. REVISION 2: INCORPORATED 24590-PTF-M6N-M8OT-00005, 24590-PTF-M6N-M8OT-00007, 24590-PTF-M6N-M8OT-00012 24590-PTF-M6N-FRP-00022 AND 24590-PTF-M6N-FRP-00032. REVISED NOTE TO INCLUDE PULSE JET MIXERS. DELETED CHECK VALVE ON PSA HEADER AND QUICK CONNECT TAG. ADDED NOTES 13 & 14, REVISED NOTES 2, 3, 4 & 12. REVISED QUALITY LEVEL AND SEISMIC CATAGORIES.
16. STRAINER IS A CONICAL PILGRIM HAT TYPE PERFORATED WITH 1/8 INCH DIAMETER HOLES ON 3/16 INCH CENTERS PERMANTLY INSTALLED. MINIMUM OPEN FLOW AREA SHALL BE 150% OF PIPE CROSS SECTIONAL AREA.
17. ALL PIPELINES ON THE PIPING AND INSTRUMENTATION DIAGRAM (P&ID) SHALL BE FREE DRAINING, UNLESS OTHERWISE NOTED. PROVIDE VENTS AND DRAINS AS NEEDED. VENTS AND DRAINS SHALL BE DESIGNED PER 24590-WTP-3PB-P000-T0001.
18. REAGENT/ PLANT WASH/ AIR SERVICES PROVIDED AT A LOCAL UTILITY STATION.
19. SEE ARCHIVED REVISION 1 P&ID FOR REVISION 1 CHANGES.
20. PSA-RK-00014 RACK DETAILS CONTINUED ON 24590-PTF-M6-FRP-00020.
21. MAJOR REVISION, NO CHANGE CLOUDS REQUIRED. INCORPORATED 24590-PTF-M6N-M8OT-0036, -0037, AND -0038. INCORPORATION OF DCN 24590-PTF-M6N-M8OT-00036 IN THIS REVISION IS MODIFIED (DIRECT REVISION) BY IMPLEMENTATION OF DTD 24590-PTF-DTD-ENS-06-002, REV 0. IMPLEMENTED DECISION TO DEVIATE 24590-PTF-DTD-ENS-06-002, REV 0. ADDITIONAL INFORMATION ADDED TO PROVIDE MULTIPLE PULSED JET MIXER OVERBLOW DETECTION AND PREVENTION. AIR RACK COMPONENTS AND ARRANGEMENT CHANGED DUE TO LAYOUT CONSTRAINTS. REVISED/ADDED/DELETED NOTES, HOLDS AND REFERENCES. SYSTEM REQUIRES REVERIFICATION.

HOLD/OPEN ITEMS:

1. DELETED
2. DELETED
3. DELETED
4. DELETED
5. DELETED
6. INSTRUMENTATION, PRESSURE SENSING LINES AND ROOT VALVES ON HOLD PENDING RESOLUTION OF THE 'B' AND 'C' PRESSURE TRANSMITTER DELETION.

REFERENCES:

1. THE REQUIRED BATCH SEQUENCES, PERMISSIVES, INTERLOCKS, ALARMS AND OPERATOR INTERFACE POINTS ARE FULLY DESCRIBED IN THE SOFTWARE FUNCTIONAL SPECIFICATION, FOR FRP-WASTE FEED RECEIPT PROCESS SYSTEM, 24590-PTF-3PS-FRP-T0001.
2. DELETED
3. FOR PERMISSIVES AND INTERLOCKS TO IMPORTANT TO SAFETY SYSTEMS (ITS), REFER TO SAFETY SYSTEM REQUIREMENT SPECIFICATIONS 24590-PTF-3PS-PPJ-T0018 (FUTURE), -T0022 (FUTURE), AND -T0031 (FUTURE).

Please note that source, special nuclear, and byproduct materials, as defined in the Atomic Energy Act of 1954 (AEA) are regulated by the U.S. Department of Energy (DOE) and its contractors when DOE acting pursuant to its AEA authority. DOE asserts that pursuant to AEA, it has sole and exclusive responsibility and authority to regulate source, special nuclear, and byproduct materials at DOE-owned nuclear facilities. Information contained herein on radionuclides is provided for process description purposes only.

REV	DESCRIPTION	ORG	CHKD	RVWD	APVD	DATE
3	REVISED PER NOTE 21	BR	CMR	TCC	GH	08/03/06
2	MAJOR REVISION SEE NOTE 15	NLC	SV	JJ	RES	01/21/05
0	ISSUED FOR CONSTRUCTION	AD	RS	N/A	RV	11/27/02

REVISION HISTORY

Q — QUALITY DESIGNATOR

ISSUED BY: RPP-WTP PDC

ISSUE STAMP

	BY	DATE
ORIGINATOR	AARON DONNELLEY	11/27/02
CHECKER	ROBERT STEVENS	11/27/02
APPROVER	ROBERT VOKE	11/27/02
REVIEWER	N/A	

CONTENT APPLICABLE TO ALARA? [X] YES [ ] NO
ADR NO. 24590-PTF-ADR-M-02-007 REV: 5
SAFETY SCREEN REQUIRED? [X] YES [ ] NO EANS INITIAL IF YES [ ]

SAFETY SCREEN IS REQUIRED FOR DRAWING TYPES IDENTIFIED IN 24590-WTP-GPP-SREQ-002

PROJECT No. 24590
SITE HANFORD
AREA 200E
BUILDING No. 10

BECHTEL

RIVER PROTECTION PROJECT
WASTE TREATMENT PLANT
2435 STEVENS CENTER PLACE
RICHLAND, WA 99354

CONTRACT No: DE-AC27-01RV14136

P&ID - PTF
WASTE FEED RECEIPT
UTILITY SYSTEMS - PSA RACK

'E' SIZE - 44 x 34
COMPUTER GENERATED - MANUAL CHANGES NOT PERMITTED

SCALE: NONE

24590-PTF-M6-FRP-00008

REV 3

R1070020008

08/02/2006 02:40:25 PM

PLOTTED BY: eldorn
C:\Work\dms03837\PTFM6FRP00008.dgn

FORM E_SDN.DGN 02/2003

24590-PTF-M6-FRP-00009

PWD-RK-00003 – PLANT WASH RACK 162IN LX 48IN WX 204IN H 20 POINTS

NOTES:

3 1. SEE DRAWINGS 24590-WTP-M6-50-00001 THROUGH 24590-WTP-M6-50-00008 FOR GENERAL NOTES, SYMBOLS AND LEGEND, AND GENERAL SLOPE REQUIREMENTS.

2. DELETED

3. VALVES INTERLOCKED TO PREVENT MULTIPLE VALVE OPERATION.

4. REAGENT/PLANT WASH/AIR SERVICES PROVIDED AT LOCAL UTILITY STATION.

5. WASH LINES FOR PRESSURIZED PROCESS PIPING WILL HAVE ACTUATED VALVES LOCATED IN THE HOT CELL FOR SYSTEM ISOLATION.

6. PIPE SLEEVE PENETRATIONS BETWEEN OCCUPATIONAL AREAS AND INACCESSIBLE/REMOTE AREAS (R5) SHALL HAVE SHADOW SHIELDING TO MITIGATE DIRECT RADIATION SHINE OR BE JOGGLED, AS DETERMINED BY ENVIRONMENTAL AND NUCLEAR SAFETY. ALL PIPE/SLEEVE INTERFACES SHALL BE SEALED USING APPROVED FIRE-RATED PENETRATION SEAL DESIGNS TO MAINTAIN THE INTEGRITY OF THE FIRE WALL BETWEEN AREAS.

7. CONTENTS OF THIS DOCUMENT ARE DANGEROUS WASTE PERMIT AFFECTING.

3 8. THE PRESSURE BOUNDARY FOR ALL SYSTEMS, STRUCTURES, AND COMPONENTS ON THIS DRAWING IS QUALITY LEVEL CM, AND SEISMIC CATEGORY SC-IV, UNLESS OTHERWISE NOTED.

9. DELETED

10. ALL INTERNAL SUPPORTS AND WELDS THAT INTERACT WITH THE PRIMARY CONTAINMENT BARRIER (VESSEL) SHALL MAINTAIN EQUAL QUALITY AND SEISMIC CATEGORY AS THE PARENT.

3 11. DELETED

12. FOR PERMANENT PIPING/JUMPER INTERFACE SEE THE PROCESS IN-CELL HANDLING JUMPER CONNECTIONS PIPING AND INSTRUMENTATION DIAGRAMS 24590-PTF-M6-PIH-00003 THROUGH 24590-PTF-M6-PIH-00006.

13. REVISION 2: INCORPORATED 24590-PTF-M6N-M80T-00007 AND 24590-PTF-M6N-FRP-00024. REVISED NOTE 8. ADDED ROOT VALVE TO PI-0916, DELETED SPECIALTY ITEM COMPONENT IDENTIFIER. REVISED SLOPES ADDED NOZZLE NUMBERS, REDUCERS & FLOW TOTALIZER. ADDED NOTE 12 & DELETED JUMPER DESCRIPTION.

3 14. ALL PIPELINES ON THE PIPING AND INSTRUMENTATION DIAGRAM (P&ID) SHALL BE FREE DRAINING, UNLESS OTHERWISE NOTED. PROVIDE VENTS AND DRAINS AS NEEDED. VENTS AND DRAINS SHALL BE DESIGNED PER 24590-WTP-3PB-P000-T0001.

15. PIPE ROUTING LIMITED TO A MAXIMUM OF AN 8 FT. STRAIGHT VERTICAL DROP AT THE CONNECTION TO THE VESSEL.

16. BLACK CELL PIPING TO BE SUPPORTED FOR MAXIMUM WATERFALL AND FOR THE EXPECTED DYNAMIC FORCES DURING THE TRANSITION FROM A DRY PIPE TO A LIQUID-FULL PIPE.

17. HOT CELL FLUSH CONNECTION EXPECTED TO BE USED FOR CELL CLEANING AND MAINTENANCE. FLUSH LINE MAY BE USED FOR OTHER FUNCTIONS AS REQUIRED DURING PLANT OPERATION.

18. PLANT WASH RACK IS QUALITY LEVEL Q AND SEISMIC CATEGORY SC-I.

19. INCORPORATED 24590-PTF-M6N-M80T-00037, AND -00038. INCORPORATED 24590-PTF-M6N-M80T-00025, SUBSEQUENTLY MODIFIED. DELETED BECHTEL/VENDOR BOUNDARY LABEL. ADDED DRAIN LABELS, PIPE SLOPES, VACUUM BREAKERS AND SPECTACLE BLIND. ADDED/REVISED/DELETED NOTES. UPDATED QUALITY LEVELS, SEISMIC CLASSIFICATIONS, STRAINER CALL OUT AND ALARA DOCUMENT REVISION. SYSTEM REQUIRES DESIGN REVERIFICATION.

HOLD/OPEN ITEMS:

1. DELETED

REFERENCES:

1. THE REQUIRED BATCH SEQUENCES, PERMISSIVES, INTERLOCKS, ALARMS AND OPERATOR INTERFACE POINTS ARE FULLY DESCRIBED IN THE SOFTWARE FUNCTIONAL SPECIFICATION, FOR FRP-WASTE FEED RECEIPT PROCESS SYSTEM, 24590-PTF-3PS-FRP-T0001.

Please note that source, special nuclear, and byproduct materials, as defined in the Atomic Energy Act of 1954 (AEA) are regulated at the U. S. Department of Energy (DOE) facilities exclusively by DOE acting pursuant to its AEA authority. DOE asserts that pursuant to AEA, it has sole and exclusive responsibility and authority to regulate the radiological aspects of byproduct materials at DOE-owned nuclear facilities. Information contained herein on radionuclides is provided for process description purposes only.

REV	DESCRIPTION	ORG	CHKD	RVWD	APVD	DATE
3	REVISED PER NOTE 19	VJ				08/03/06
2	MAJOR REVISION, SEE NOTE 13.	RM	LIA	JJ	RV	12/7/04
1	REVISED AS NOTED AND INCORPORATED 24590-PTF-DCA-M-03-018 REV 0	RM	RM	JJ	RV	09/18/03
0	ISSUED FOR CONSTRUCTION	AD	RS	N/A	RV	11/27/02

CER 99

REVISION HISTORY

Q – QUALITY DESIGNATOR

ISSUED BY RPP-WTP PDC

ISSUE STAMP

PROJECT No.	24590
SITE	HANFORD
AREA	200E
BUILDING No.	10

	BY	DATE
ORIGINATOR	AARON DONNELLY	11/27/02
CHECKER	ROBERT STEVENS	11/27/02
APPROVER	ROBERT VOKE	11/27/02
REVIEWER	N/A	

CONTENT APPLICABLE TO ALARA? [X] YES [ ] NO
ADR NO. 24590-PTF-ADR-M-02-007 REV: 5
SAFETY SCREEN REQUIRED? [X] YES [ ] NO EBMS INITIAL IF YES

SAFETY SCREEN IS REQUIRED FOR DRAWING TYPES IDENTIFIED IN 24590-WTP-GPP-SREG-002

'E' SIZE - 44x34
COMPUTER GENERATED - MANUAL CHANGES NOT PERMITTED

RIVER PROTECTION PROJECT
WASTE TREATMENT PLANT
2435 STEVENS CENTER PLACE
RICHLAND, WA 99354

CONTRACT No: DE-AC27-01RV14136

P&ID - PTF
WASTE FEED RECEIPT
UTILITY SERVICES
PLANT WASH RACK

SCALE: NONE

24590-PTF-M6-FRP-00009 REV 3

R1070206B

08/02/2006 02:01:40 PM

PLOTTED BY: mdorn
C:\Work\dms03837\PTFM6FRP00009.dgn

FORM E_SDN.DGN 02/2003

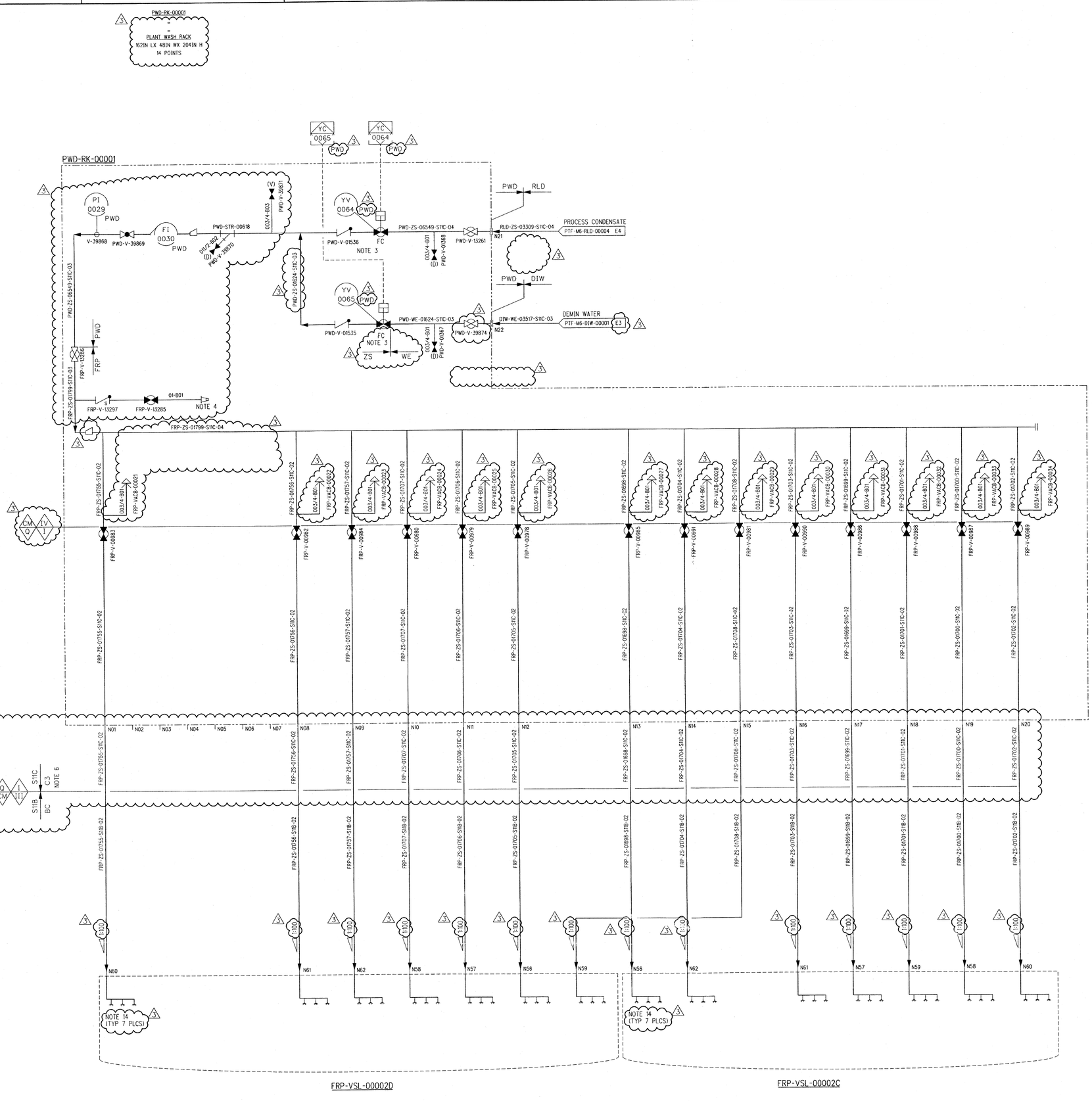

NOTES:

1. SEE DRAWINGS 24590-WTP-M6-50-00001 THROUGH 24590-WTP-M6-50-00008 FOR GENERAL NOTES, SYMBOLS AND LEGEND, AND GENERAL SLOPE REQUIREMENTS.
2. DELETED
3. VALVES INTERLOCKED TO PREVENT MULTIPLE VALVE OPERATION.
4. REAGENT/PLANT WASH/AIR SERVICES PROVIDED AT UTILITY STATION.
5. DELETED
6. PIPE SLEEVE PENETRATIONS BETWEEN OCCUPATIONAL AREAS AND INACCESSIBLE/REMOTE AREAS (R5) SHALL HAVE SHADOW SHIELDING TO MITIGATE DIRECT RADIATION SHINE OR BE JOGGLED, AS DETERMINED BY ENVIRONMENTAL AND NUCLEAR SAFETY. ALL PIPE/SLEEVE INTERFACES SHALL BE SEALED USING APPROVED FIRE-RATED PENETRATION SEAL DESIGNS TO MAINTAIN THE INTEGRITY OF THE FIRE WALL BETWEEN AREAS.
7. CONTENTS OF THIS DOCUMENT ARE DANGEROUS WASTE PERMIT AFFECTING.
8. THE PRESSURE BOUNDARY FOR ALL SYSTEMS, STRUCTURES AND COMPONENTS ON THIS DRAWING IS QUALITY LEVEL CM AND SEISMIC CATEGORY SC-IV, UNLESS OTHERWISE NOTED.
9. DELETED
10. ALL INTERNAL SUPPORTS AND WELDS THAT INTERACT WITH THE PRIMARY CONTAINMENT BARRIER (VESSEL) SHALL MAINTAIN EQUAL QUALITY AND SEISMIC CATEGORY AS THE PARENT.
11. DELETED
12. REVISION 2: INCORPORATED 24590-PTF-M6N-M8OT-00007, 24590-PTF-M6N-FRP-00023 AND 24590-PTF-M6N-FRP-00036. REVISED NOTE 8, ADDED ROOT VALVE ON PI-1005. DELETED SPECIALTY ITEM COMPONENT IDENTIFIER, REVISED SLOPES AND ADDED NOZZLE NUMBERS.
13. ALL PIPELINES ON THE PIPING AND INSTRUMENTATION DIAGRAM (P&ID) SHALL BE FREE DRAINING, UNLESS OTHERWISE NOTED. PROVIDE VENTS AND DRAINS AS NEEDED. VENTS AND DRAINS SHALL BE DESIGNED PER 24590-WTP-3PB-P000-T0001.
14. PIPE ROUTING LIMITED TO A MAXIMUM OF AN 8 FT STRAIGHT VERTICAL DROP AT THE CONNECTION TO THE VESSEL.
15. BLACK CELL PIPING TO BE SUPPORTED FOR MAXIMUM WATERFALL AND FOR THE EXPECTED DYNAMIC FORCES DURING THE TRANSITION FROM A DRY PIPE TO A LIQUID-FULL PIPE.
16. PLANT WASH RACK IS QUALITY LEVEL Q AND SEISMIC CATEGORY SC-I.
17. INCORPORATED 24590-PTF-M6N-M8OT-00037, -00038 AND 24590-WTP-FCR-P-05-0119. INCORPPRATED 24590-PTF-M6N-M8OT-00025, SUBSEQUENTLY MODIFIED. DELETED BECHTEL/VENDOR BOUNDARY LABEL. ASSIGNED PIPELINE NUMBERS. DELETED PIPELINES. CHANGED FRP-V-13297 TO SPRING LOADED. ADDED VALVE, VACUUM BREAKERS, FLOW INDICATOR, REDUCERS, VENT AND DRAIN LABELS, AND PIPE SLOPES. UPDATED QUALITY LEVELS, SEISMIC CLASSIFICATIONS, STRAINER CALLOUT AND ALARA DOCUMENT REVISION. ADDED/REVISED/DELETED NOTES. SYSTEM REQUIRES DESIGN REVERIFICATION.

HOLD/OPEN ITEMS:

1. DELETED

REFERENCES:

1. THE REQUIRED BATCH SEQUENCES, PERMISSIVES, INTERLOCKS, ALARMS AND OPERATOR INTERFACE POINTS ARE FULLY DESCRIBED IN THE SOFTWARE FUNCTIONAL SPECIFICATION, FOR FRP-WASTE FEED RECEIPT PROCESS SYSTEM, 24590-PTF-3PS-FRP-T0001.

Please note that source, special nuclear, and byproduct materials, as defined in the Atomic Energy Act of 1954 (AEA) are regulated at the U. S. Department of Energy (DOE) facilities exclusively by DOE acting pursuant to its AEA authority. DOE asserts that regulation by the U.S. Nuclear Regulatory Commission or under its authority to regulate source, special nuclear, and byproduct materials at DOE-owned nuclear facilities. Information contained herein on radionuclides is provided for process description purposes only.

REV	DESCRIPTION	ORG	CHKD	RVWD	APVD	DATE
3	REVISED PER NOTE 17	KT	KRR	RSK	JJ	08/03/06
2	MAJOR REVISION, SEE NOTE 12.	RM	LIA	JJ	RV	11/29/04
1	REVISED AS NOTED AND INCORPORATED 24590-PTF-DCA-M-03-018 REV. 0	RM	RM	JJ	RV	09/18/03
0	ISSUED FOR CONSTRUCTION	AD	RS	N/A	RV	11/27/02

CER JJ

REVISION HISTORY

Q — QUALITY DESIGNATOR

ISSUED BY RPP-WTP PDC — ISSUE STAMP

PROJECT No.	24590
SITE	HANFORD
AREA	200E
BUILDING No.	10

	BY	DATE
ORIGINATOR	AARON DONNELLY	11/27/02
CHECKER	ROBERT STEVENS	11/27/02
APPROVER	ROBERT VOKE	11/27/02
REVIEWER	N/A	

CONTENT APPLICABLE TO ALARA? [X] YES [ ] NO
ADR NO. 24590-PTF-ADR-M-02-007 REV: 5
SAFETY SCREEN REQUIRED? [X] YES [ ] NO E&NS INITIAL IF YES JJ

SAFETY SCREEN IS REQUIRED FOR DRAWING TYPES IDENTIFIED IN 24590-WTP-GPP-SREQ-002

BECHTEL — RIVER PROTECTION PROJECT
WASTE TREATMENT PLANT
2435 STEVENS CENTER PLACE
RICHLAND, WA 99354

CONTRACT No: DE-AC27-01RV14136

P&ID - PTF WASTE FEED RECEIPT UTILITY SERVICES - PLANT WASH RACK

SCALE: NONE

24590-PTF-M6-FRP-00010 REV 3

"E" SIZE - 44x34
COMPUTER GENERATED - MANUAL CHANGES NOT PERMITTED

R10702070

08/02/2006 01:20:26 PM

Plotted By: rdavis
C:\Work\dms03837\PTFM6FRP00010.dgn

FORM E_SDN.DGN 02/2003

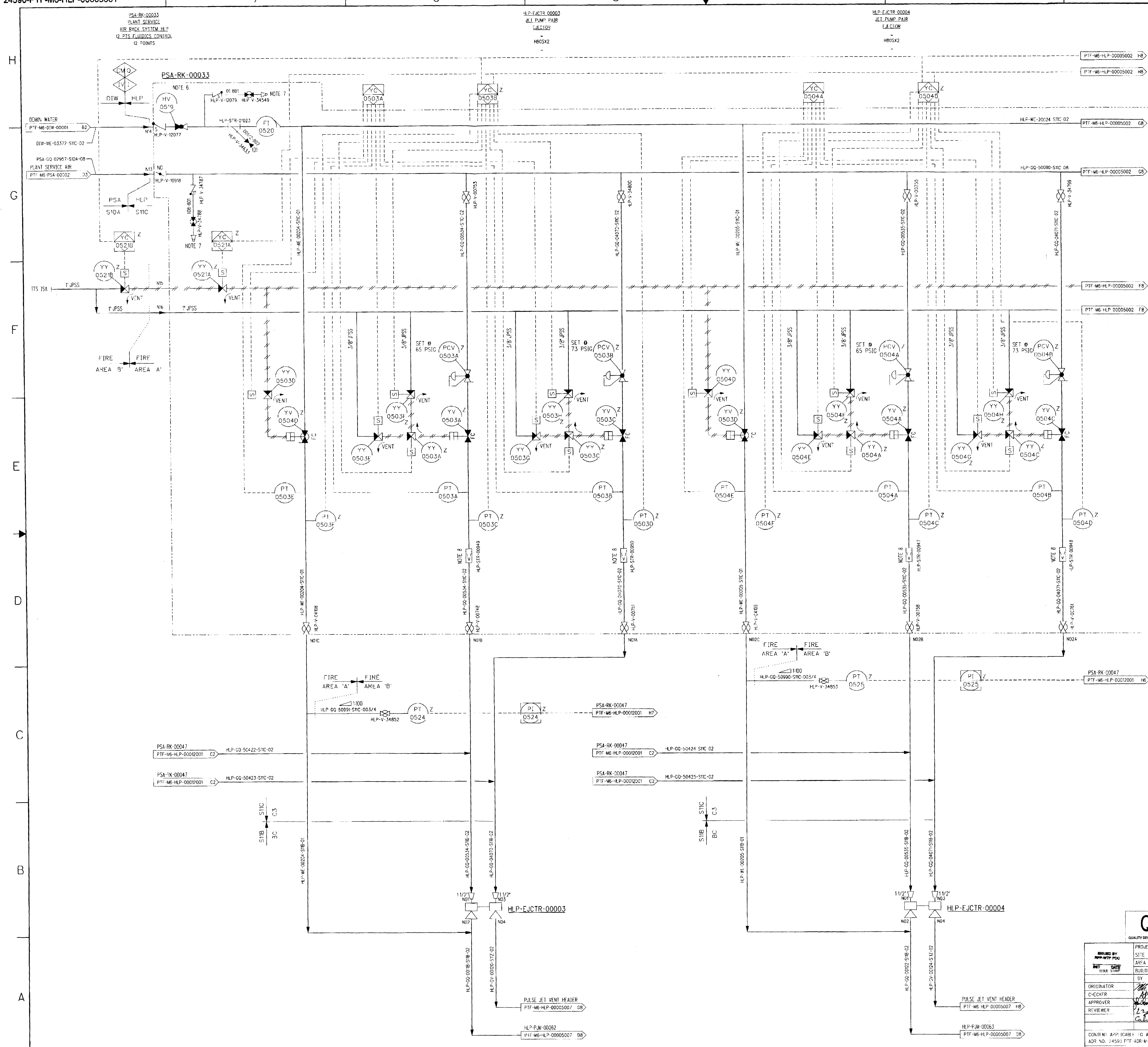

NOTES:

1. SEE DRAWINGS 24590-WTP-M6-50-00001 THROUGH 24590-WTP-M6-50-00008 FOR GENERAL NOTES, SYMBOLS AND LEGEND, AND GENERAL SLOPE REQUIREMENTS.
2. CONTENTS OF THIS DOCUMENT ARE DANGEROUS WASTE PERMIT AFFECTING.
3. THE PRESSURE BOUNDARY FOR ALL COMPONENTS ON THIS DRAWING IS QUALITY LEVEL Q AND SEISMIC CATEGORY SC-I, UNLESS OTHERWISE NOTED.
4. ALL LINES SHOWN ON THIS DRAWING SHALL BE FREE DRAINING, UNLESS OTHERWISE NOTED.
5. FOR PROCESS INFORMATION REFER TO DRAWING 24590-PTF-M6-HLP-00001 (HLP VSL 00027A).
6. SEE PJM JET PUMP PAIR CONTROL DETAILS 6 AND 7 ON DRAWING 24590-WTP-M6-50-00007.
7. CONNECTION PROVIDED FOR REAGENTS, PLANT WASH AND SERVICE AIR.
8. STRAINER IS A CONICAL PILGRIM HAT TYPE PERFORATED, WITH 1/8 INCH DIAMETER STAGGERED HOLES ON 3/16 INCH CENTERS PERMANENTLY INSTALLED.
9. THIS DRAWING IS CONVERTED FROM A SINGLE SHEET TO MULTI-SHEET DRAWINGS AND, IN PART, SUPERSEDES 24590 PTF M6 HLP 00005 REV 2. THIS DRAWING INCLUDES INFORMATION FROM 24590-PTF-M6N-HLP-00039, -00043, -00053, 24590-PTF-M6N-M80T-00014, -00037, AND -00038.

HOLD/OPEN ITEMS:

NONE

REFERENCES:

1. THE REQUIRED BATCH SEQUENCES, PERMISSIVES, INTERLOCKS, ALARMS AND OPERATOR INTERFACE POINTS ARE FULLY DESCRIBED IN THE SOFTWARE FUNCTIONAL SPECIFICATION, FOR HLW LAG STORAGE AND FEED BLENDING PROCESS (HLP) SYSTEM, 24590-PTF-3PS-HLP-T0001.
2. FOR PERMISSIVES AND INTERLOCKS IMPORTANT TO SAFETY (ITS) SYSTEMS, REFER TO SAFETY SYSTEM REQUIREMENT SPECIFICATION FOR HYDROGEN PURGE AND MIXING SYSTEMS, 24590-PTF-3PS-PPJ-T0004 (FUTURE).

Please note that source, special nuclear, and byproduct materials, as defined in the Atomic Energy Act of 1954 (AEA) are regulated at the U. S. Department of Energy (DOE) facilities exclusively by DOE acting pursuant to its AEA authority. DOE asserts that pursuant to AEA, it has sole and exclusive responsibility and authority to regulate source, special nuclear, and byproduct materials at DOE-owned nuclear facilities. Information contained herein on radionuclides is provided for process description purposes only.

DRAWING INDEX

DWG NO	REV	TITLE
24590-PTF-M6-HLP-00005001	0	HLW LAG STORAGE & FEED BLEEDING UTIL SERV
24590-PTF-M6-HLP-00005002	0	HLW LAG STORAGE & FEED BLEEDING UTIL SERV
24590-PTF-M6-HLP-00005003	0	HLW LAG STORAGE & FEED BLEEDING UTIL SERV
24590-PTF-M6-HLP-00005004	0	HLW LAG STORAGE & FEED BLEEDING UTIL SERV
24590-PTF-M6-HLP-00005005	0	HLW LAG STORAGE & FEED BLEEDING UTIL SERV
24590-PTF-M6-HLP-00005006	0	HLW LAG STORAGE & FEED BLEEDING UTIL SERV
24590-PTF-M6-HLP-00005007	0	HLW LAG STORAGE & FEED BLEEDING UTIL SERV

Q
QUALITY DESIGNATOR

REVISION HISTORY

REV	DESCRIPTION	ORG	CHKD	RVWD	APVD	DATE
0	ISSUED FOR CONSTRUCTION SEE NOTE 9	MOD	APP	CEK ELS	JBA RLK	4/25/08

ISSUED BY RPP-WTP PDC
INIT DATE
ISSUE STAMP

PROJECT No.	24590
SITE	HANFORD
AREA	200E
BUILDING No.	10

	BY	DATE
ORIGINATOR	[signature]	4/21/08
CHECKER	[signature]	4/21/08
APPROVER	[signature]	4/25/08
REVIEWER	[signature]	4/22/08
	[signature]	4/23/08

CONTENT APPLICABLE TO ALARA? [X] YES [ ] NO
ADR NO. 24590-PTF-ADR-M-02-005 REV: 7
SAFETY SCREEN REQUIRED? [X] YES [ ] NO E&NS INITIAL IF YES

BECHTEL
RIVER PROTECTION PROJECT
WASTE TREATMENT PLANT
2435 STEVENS CENTER PLACE
RICHLAND, WA 99354

CONTRACT No: DE-AC27-01RV14136

P&ID - PTF
HLW LAG STORAGE AND FEED BLENDING PROCESS SYSTEM UTILITY SERVICES PSA-RK-00033

SCALE: NONE | 24590-PTF-M6-HLP-00005001 | REV 0

SAFETY SCREEN IS REQUIRED FOR DRAWING TYPES IDENTIFIED IN 24590-WTP-GPP-SREG-002

'E' SIZE - 44x34
COMPUTER GENERATED - MANUAL CHANGES NOT PERMITTED

R10900596

04/21/2008 07:42:57 AM

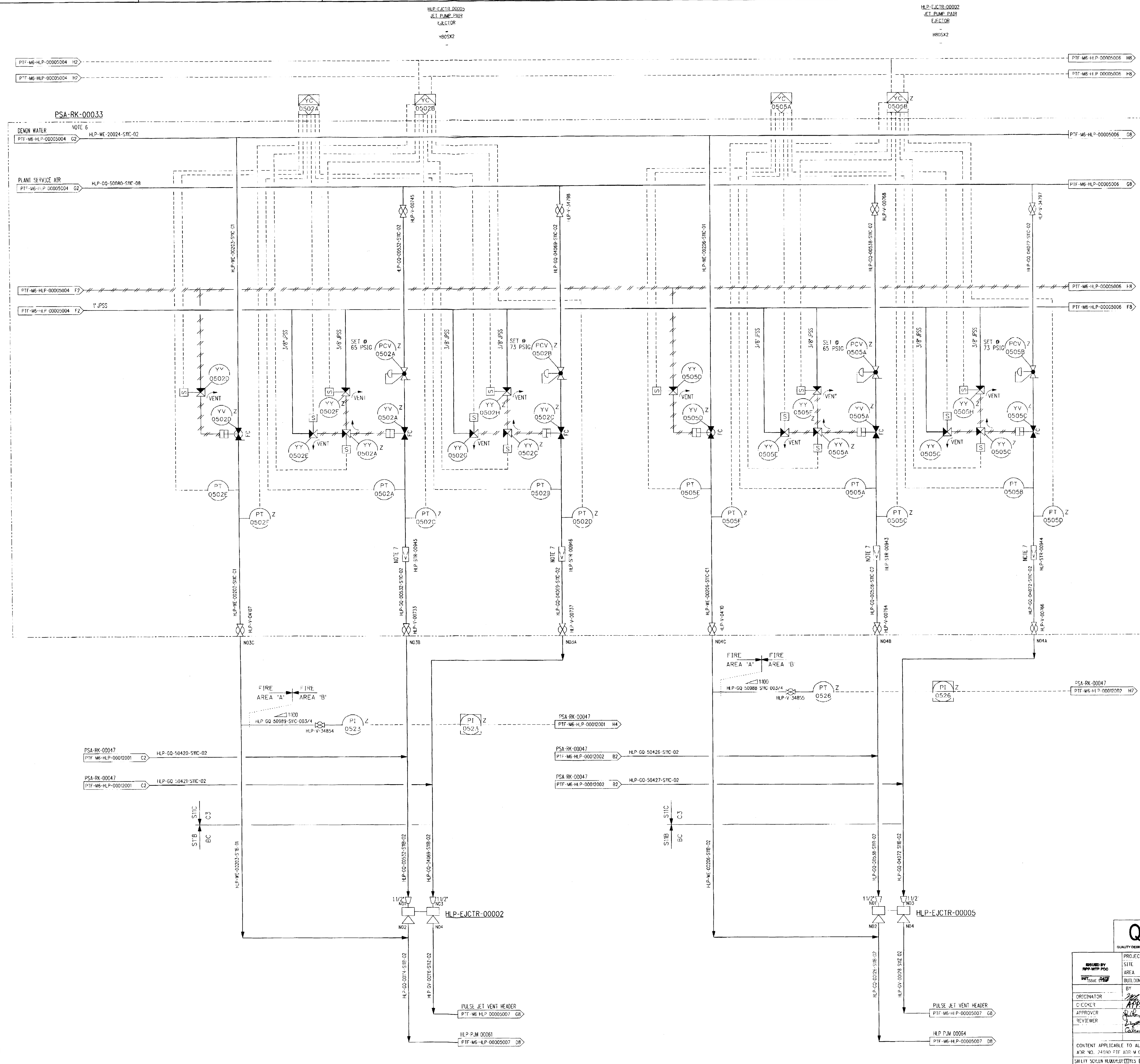

NOTES:

1. SEE DRAWINGS 24590-WTP-M6-50-00001 THROUGH 24590-WTP-M6-50-00008 FOR GENERAL NOTES, SYMBOLS AND LEGEND, AND GENERAL SLOPE REQUIREMENTS.
2. CONTENTS OF THIS DOCUMENT ARE DANGEROUS WASTE PERMIT AFFECTING.
3. THE PRESSURE BOUNDARY FOR ALL COMPONENTS ON THIS DRAWING IS QUALITY LEVEL Q AND SEISMIC CATEGORY SC-I.
4. ALL LINES SHOWN ON THIS DRAWING SHALL BE FREE DRAINING, UNLESS OTHERWISE NOTED.
5. FOR PROCESS INFORMATION REFER TO DRAWING 24590-PTF-M6-HLP-00001 (HLP-VSL-00027A).
6. SEE PJM JET PUMP PAIR CONTROL DETAIL 6 ON DRAWING 24590-WTP-M6-50-00007.
7. STRAINER IS A CONICAL PILGRIM HAT TYPE PERFORATED, WITH 1/8 INCH DIAMETER STAGGERED HOLES ON 3/16 INCH CENTERS PERMANENTLY INSTALLED.
8. THIS DRAWING IS CONVERTED FROM A SINGLE SHEET TO MULTI-SHEET DRAWINGS AND, IN PART, SUPERSEDES 24590-PTF-M6-HLP-00005 REV 2. THIS DRAWING INCLUDES INFORMATION FROM 24590-PTF-M6N-HLP-00039, -00053, 24590-PTF-M6N-M80T-00014, -00037, AND -00038.

HOLD/OPEN ITEMS:

NONE

REFERENCES:

1. THE REQUIRED BATCH SEQUENCES, PERMISSIVES, INTERLOCKS, ALARMS AND OPERATOR INTERFACE POINTS ARE FULLY DESCRIBED IN THE SOFTWARE FUNCTIONAL SPECIFICATION, FOR HLW LAG STORAGE AND FEED BLENDING PROCESS (HLP) SYSTEM, 24590-PTF-3PS-HLP-T0001.
2. FOR PERMISSIVES AND INTERLOCKS IMPORTANT TO SAFETY (ITS) SYSTEMS, REFER TO SAFETY SYSTEM REQUIREMENT SPECIFICATION FOR HYDROGEN PURGE AND MIXING SYSTEMS, 24590-PTF-3PS-PPJ-T0004 (FUTURE).

Please note that source, special nuclear, and byproduct materials, as defined in the Atomic Energy Act of 1954 (AEA) are regulated at the U. S. Department of Energy (DOE) facilities exclusively by DOE acting pursuant to its AEA authority. DOE asserts that pursuant to AEA, it has sole and exclusive responsibility and authority to regulate source, special nuclear, and byproduct materials at DOE-owned nuclear facilities. Information contained herein on radionuclides is provided for process description purposes only.

Q
QUALITY DESIGNATOR

REV	DESCRIPTION	ORG	CHKD	RVWD	APVD	DATE
0	ISSUED FOR CONSTRUCTION SEE NOTE 8	MDD	APP	ELS / CER		4/25/08

REVISION HISTORY

ISSUED BY RPP-WTP PDC
INIT ISSUE STAMP DATE

PROJECT No.	24590
SITE	HANFORD
AREA	200E
BUILDING No.	10

BECHTEL
RIVER PROTECTION PROJECT
WASTE TREATMENT PLANT
2435 STEVENS CENTER PLACE
RICHLAND, WA 99354

	BY	DATE
ORIGINATOR		4/21/08
CHECKER	APPRINTS	4/21/08
APPROVER		4/25/08
REVIEWER		4/22/08
	Calvin Rooly	4/23/08

CONTRACT No: DE-AC27-01RV14136

P&ID - PTF
HLW LAG STORAGE AND FEED BLENDING PROCESS SYSTEM UTILITY SERVICES
PSA-RK-00033

CONTENT APPLICABLE TO ALARA? [X] YES [ ] NO
ADR NO. 24590-PTF-ADR-M-02-005 REV: 7
SAFETY SCREEN REQUIRED? [X] YES [ ] NO E&NS INITIAL IF YES

SCALE: NONE

24590-PTF-M6-HLP-00005002 REV 0

SAFETY SCREEN IS REQUIRED FOR DRAWING TYPES IDENTIFIED IN 24590-WTP-GPP-SREG-002

'E' SIZE - 44x34
COMPUTER GENERATED - MANUAL CHANGES NOT PERMITTED

R10900597

04/21/2008 01:26:36 PM

PLOTTED BY: mmcmill

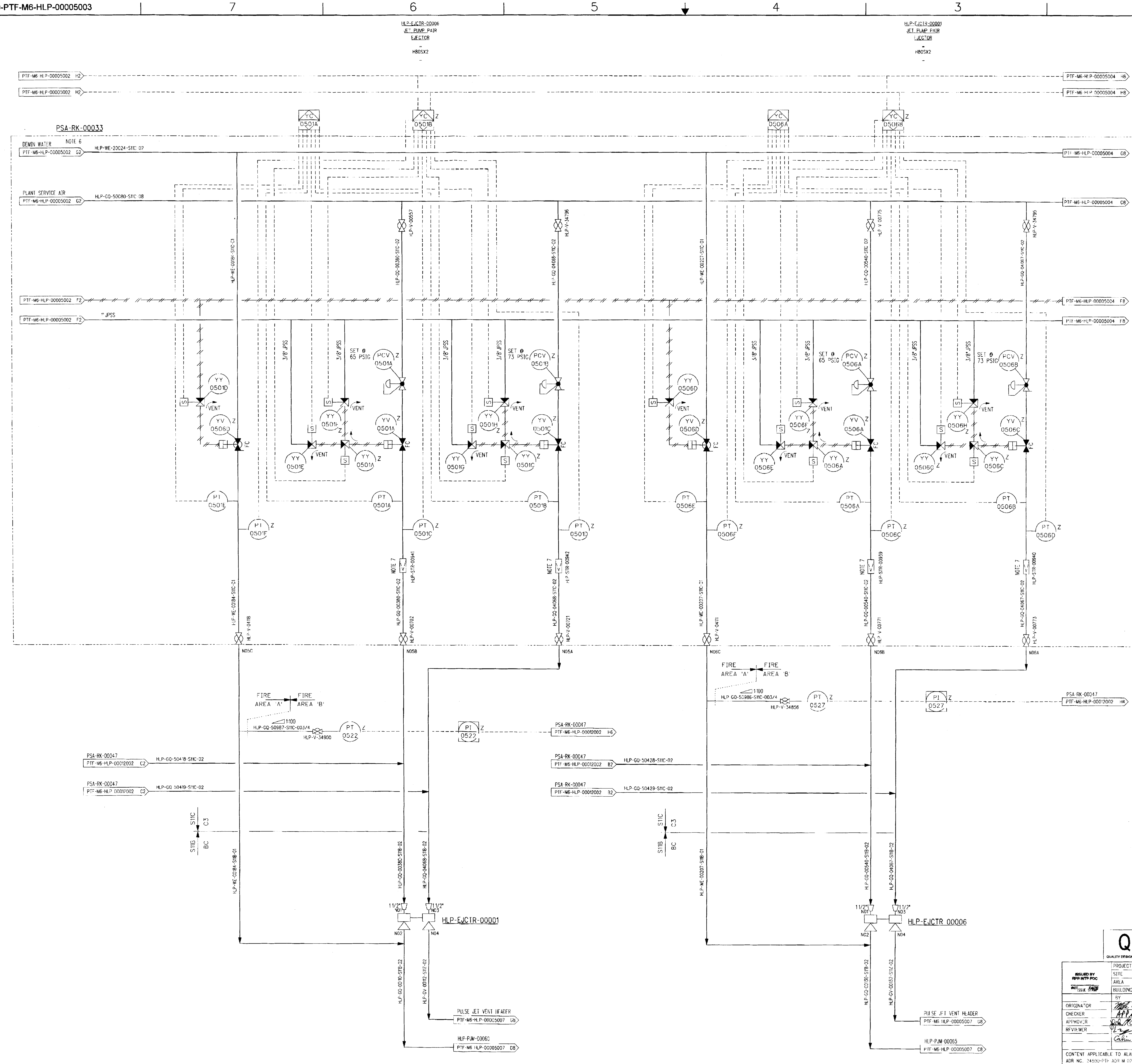

NOTES:

1. SEE DRAWINGS 24590-WTP-M6-50 00001 THROUGH 24590-WTP-M6-50 00008 FOR GENERAL NOTES, SYMBOLS AND LEGEND, AND GENERAL SLOPE REQUIREMENTS.
2. CONTENTS OF THIS DOCUMENT ARE DANGEROUS WASTE PERMIT AFFECTING.
3. THE PRESSURE BOUNDARY FOR ALL COMPONENTS ON THIS DRAWING IS QUALITY LEVEL Q AND SEISMIC CATEGORY SC-I.
4. ALL LINES SHOWN ON THIS DRAWING SHALL BE FREE DRAINING, UNLESS OTHERWISE NOTED.
5. FOR PROCESS INFORMATION REFER TO DRAWING 24590-PTF-M6-HLP-00001 (HLP VSL-00027A).
6. SEE PJM JET PUMP PAIR CONTROL DETAIL 6 ON DRAWING 24590-WTP-M6-50-00007.
7. STRAINER IS A CONICAL PILGRIM HAT TYPE PERFORATED, WITH 1/8 INCH DIAMETER STAGGERED HOLES ON 3/16 INCH CENTERS PERMANENTLY INSTALLED.
8. THIS DRAWING IS CONVERTED FROM A SINGLE SHEET TO MULTI-SHEET DRAWINGS AND, IN PART, SUPERSEDES 24590-PTF-M6-HLP-00005 REV 2. THIS DRAWING INCLUDES INFORMATION FROM 24590-PTF-M6N-HLP-00039, -00053, 24590-PTF-M6N-M80I-00014, -00037, AND -00038.

HOLD/OPEN ITEMS:

NONE

REFERENCES:

1. THE REQUIRED BATCH SEQUENCES, PERMISSIVES, INTERLOCKS, ALARMS AND OPERATOR INTERFACE POINTS ARE FULLY DESCRIBED IN THE SOFTWARE FUNCTIONAL SPECIFICATION, FOR HLW LAG STORAGE AND FEED BLENDING PROCESS (HLP) SYSTEM, 24590-PTF-3PS-HLP-T0001.
2. FOR PERMISSIVES AND INTERLOCKS IMPORTANT TO SAFETY (ITS) SYSTEMS, REFER TO SAFETY SYSTEM REQUIREMENT SPECIFICATION FOR HYDROGEN PURGE AND MIXING SYSTEMS, 24590-PTF-3PS-PPJ-T0004 (FUTURE).

Please note that source, special nuclear, and byproduct materials, as defined in the Atomic Energy Act of 1954 (AEA) are regulated at the U. S. Department of Energy (DOE) facilities exclusively by DOE acting pursuant to its AEA authority. DOE asserts that pursuant to AEA, it has sole and exclusive responsibility and authority to regulate source, special nuclear, and byproduct materials at DOE-owned nuclear facilities. Information contained herein on radionuclides is provided for process description purposes only.

Q
QUALITY DESIGNATOR

REV	DESCRIPTION	ORG	CHKD	RVWD	APVD	DATE
0	ISSUED FOR CONSTRUCTION SEE NOTE 8	MDD	APP	CEK ELS	JDM ...	4/25/08

REVISION HISTORY

ISSUED BY RPP-WTP PDC
INIT ISSUE STAMP DATE

PROJECT No.	24590
SITE	HANFORD
AREA	200F
BUILDING No.	10

BECHTEL
RIVER PROTECTION PROJECT
WASTE TREATMENT PLANT
2435 STEVENS CENTER PLACE
RICHLAND, WA 99354

	BY	DATE
ORIGINATOR	[signature]	4/18/08
CHECKER	[signature]	4/17/08
APPROVER	[signature]	4/25/08
REVIEWER	[signature]	4/22/08
	[signature]	4/23/08

CONTENT APPLICABLE TO ALARA? [X] YES [ ] NO
ADR NO. 24590-PTF-ADR-M-02-005 REV: 7
SAFETY SCREEN REQUIRED? [X] YES [ ] NO E&NS INITIAL IF YES [initials]

CONTRACT No: DE-AC27-01RV14136

P&ID - PTF
HLW LAG STORAGE AND FEED BLENDING PROCESS SYSTEM UTILITY SERVICES PSA-RK-00033

SCALE: NONE

24590-PTF-M6-HLP-00005003 REV 0

SAFETY SCREEN IS REQUIRED FOR DRAWING TYPES IDENTIFIED IN 24590-WTP-GPP-SREG-002

2

'E' SIZE - 44x34
COMPUTER GENERATED - MANUAL CHANGES NOT PERMITTED

R10900598

04/16/2008 05:45:15 PM

PLOTTED BY: mmmcmill

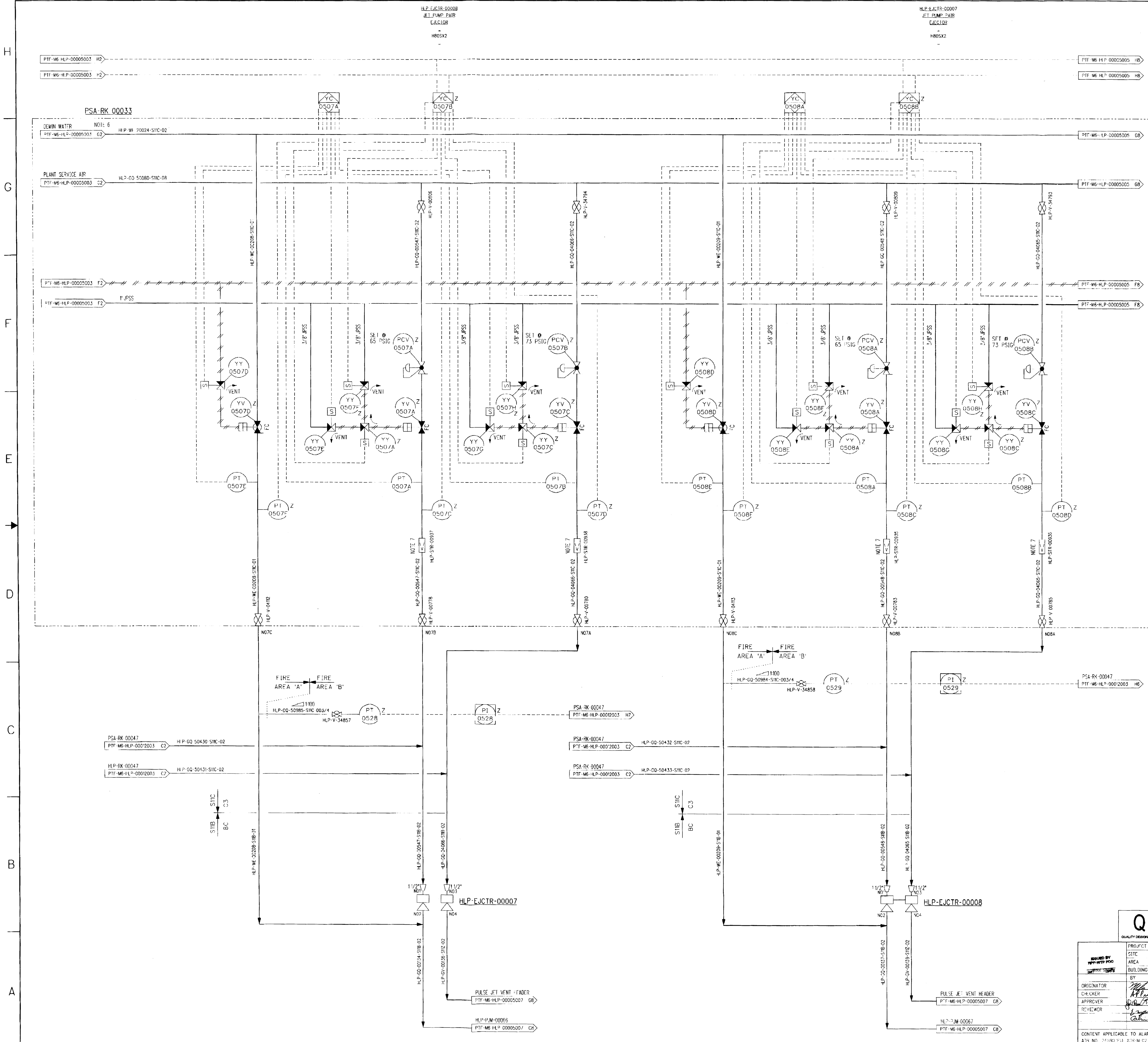

NOTES:

1. SEE DRAWINGS 24590-WTP-M6-50-00001 THROUGH 24590 WTP M6 50 00008 FOR GENERAL NOTES, SYMBOLS AND LEGEND, AND GENERAL SLOPE REQUIREMENTS.
2. CONTENTS OF THIS DOCUMENT ARE DANGEROUS WASTE PERMIT AFFECTING.
3. THE PRESSURE BOUNDARY FOR ALL COMPONENTS ON THIS DRAWING IS QUALITY LEVEL Q AND SEISMIC CATEGORY SC-I.
4. ALL LINES SHOWN ON THIS DRAWING SHALL BE FREE DRAINING, UNLESS OTHERWISE NOTED.
5. FOR PROCESS INFORMATION REFER TO DRAWING 24590 PTF-M6-HLP-00001 (HLP VSL-00027A).
6. SEE PJM JET PUMP PAIR CONTROL DETAIL 6 ON DRAWING 24590-WTP-M6-50-00007.
7. STRAINER IS A CONICAL PILGRIM HAT TYPE PERFORATED, WITH 1/8 INCH DIAMETER STAGGERED HOLES ON 3/16 INCH CENTERS PERMANENTLY INSTALLED.
8. THIS DRAWING IS CONVERTED FROM A SINGLE SHEET TO MULTI-SHEET DRAWINGS AND, IN PART, SUPERSEDES 24590-PTF-M6-HLP-00005 REV 2. THIS DRAWING INCLUDES INFORMATION FROM 24590-PTF-M6N-HLP-00039, -00053, 24590-PTF-M6N-M80T-00014, -00037, AND -00038.

HOLD/OPEN ITEMS:

NONE

REFERENCES:

1. THE REQUIRED BATCH SEQUENCES, PERMISSIVES, INTERLOCKS, ALARMS AND OPERATOR INTERFACE POINTS ARE FULLY DESCRIBED IN THE SOFTWARE FUNCTIONAL SPECIFICATION, FOR HLW LAG STORAGE AND FEED BLENDING PROCESS (HLP) SYSTEM, 24590-PTF-3PS-HLP-T0001.
2. FOR PERMISSIVES AND INTERLOCKS IMPORTANT TO SAFETY (ITS) SYSTEMS, REFER TO SAFETY SYSTEM REQUIREMENT SPECIFICATION FOR HYDROGEN PURGE AND MIXING SYSTEMS, 24590-PTF-3PS-PPJ-T0004 (FUTURE).

Please note that source, special nuclear, and byproduct materials, as defined in the Atomic Energy Act of 1954 (AEA) are regulated at the U. S. Department of Energy (DOE) facilities exclusively by DOE acting pursuant to its AEA authority. DOE asserts that pursuant to AEA, it has sole and exclusive responsibility and authority to regulate source, special nuclear, and byproduct materials at DOE-owned nuclear facilities. Information contained herein on radionuclides is provided for process description purposes only.

Q
QUALITY DESIGNATOR

REV	DESCRIPTION	ORG	CHKD	RVWD	APVD	DATE
0	ISSUED FOR CONSTRUCTION SEE NOTE 8	MDD	APP	ELS	[illegible]	4/25/08

REVISION HISTORY

ISSUED BY RPP-WTP PDC

PROJECT No.	24590
SITE	HANFORD
AREA	200E
BUILDING No.	10

	BY	DATE
ORIGINATOR	[signature]	4/18/08
CHECKER	[signature]	4/17/08
APPROVER	[signature]	4/25/08
REVIEWER	[signature]	4/22/08
	[signature]	4/23/08

CONTENT APPLICABLE TO ALARA? [X] YES [ ] NO
ADR NO. 24590-PTF-ADR-M-02-005 REV: 7
SAFETY SCREEN REQUIRED? [X] YES [ ] NO F&NS INITIAL IF YES

BECHTEL
RIVER PROTECTION PROJECT
WASTE TREATMENT PLANT
2435 STEVENS CENTER PLACE
RICHLAND, WA 99354

CONTRACT No: DE-AC27-01RV14136

P&ID - PTF HLW LAG STORAGE AND FEED BLENDING PROCESS SYSTEM UTILITY SERVICES PSA-RK-00033

SCALE: NONE
24590-PTF-M6-HLP-00005004
REV 0

SAFETY SCREEN IS REQUIRED FOR DRAWING TYPES IDENTIFIED IN 24590-WTP-GPP-SREG-002
'E' SIZE - 44x34
COMPUTER GENERATED - MANUAL CHANGES NOT PERMITTED
R10900599
04/26/2008 05:46:05 PM

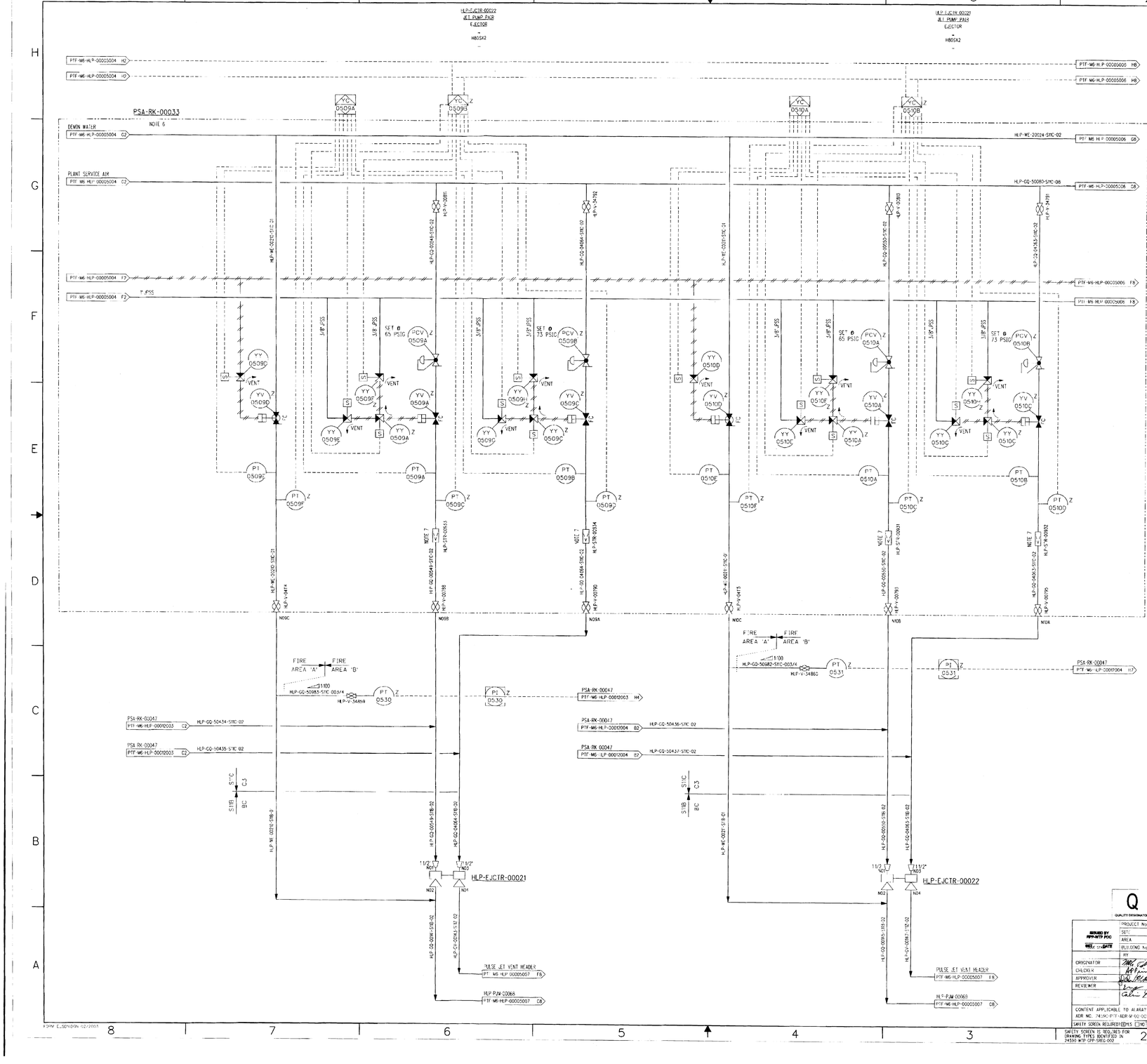

NOTES:

1. SEE DRAWINGS 24590-WTP-M6-50-00001 THROUGH 24590-WTP-M6-50-00008 FOR GENERAL NOTES, SYMBOLS AND LEGEND, AND GENERAL SLOPE REQUIREMENTS.
2. CONTENTS OF THIS DOCUMENT ARE DANGEROUS WASTE PERMIT AFFECTING.
3. THE PRESSURE BOUNDARY FOR ALL COMPONENTS ON THIS DRAWING IS QUALITY LEVEL 0 AND SEISMIC CATEGORY SC-1.
4. ALL LINES SHOWN ON THIS DRAWING SHALL BE FREE DRAINING, UNLESS OTHERWISE NOTED.
5. FOR PROCESS INFORMATION REFER TO DRAWING 24590-PTF-M6-HLP-00001 (HLP-VSI -00077B).
6. SEE PJM JET PUMP PAIR CONTROL DETAIL 6 ON DRAWING 24590-WTP-M6-50-00007.
7. STRAINER IS A CONICAL PILGRIM HAT TYPE PERFORATED, WITH 1/8 INCH DIAMETER STAGGERED HOLES ON 3/16 INCH CENTERS PERMANENTLY INSTALLED.
8. THIS DRAWING IS CONVERTED FROM A SINGLE SHEET TO MULTI-SHEET DRAWINGS AND, IN PART, SUPERSEDES 24590-PTF-M6-HLP-00005 REV 2. THIS DRAWING INCLUDES INFORMATION FROM 24590-PTF-M6N-HLP-00039, -00043, -00053, 24590-PTF-M6N M80T 00014, -00037, AND -00038.

HOLD/OPEN ITEMS:

NONE

REFERENCES:

1. THE REQUIRED BATCH SEQUENCES, PERMISSIVES, INTERLOCKS, ALARMS AND OPERATOR INTERFACE POINTS ARE FULLY DESCRIBED IN THE SOFTWARE FUNCTIONAL SPECIFICATION FOR HLW LAG STORAGE AND FEED BLENDING PROCESS (HLP) SYSTEM, 24590-PTF-3PS-HLP-T0001.
2. FOR PERMISSIVES AND INTERLOCKS IMPORTANT TO SAFETY (ITS) SYSTEMS, REFER TO SAFETY SYSTEM REQUIREMENT SPECIFICATION FOR HYDROGEN PURGE AND MIXING SYSTEMS, 24590-PTF-3PS-PJV T0004 (FUTURE).

Please note that source, special nuclear, and byproduct materials, as defined in the Atomic Energy Act of 1954 (AEA) are regulated at the U. S. Department of Energy (DOE) facilities exclusively by DOE acting pursuant to its AEA authority. DOE asserts that pursuant to AEA, it has sole and exclusive responsibility and authority to regulate source, special nuclear, and byproduct materials at DOE-owned nuclear facilities. Information contained herein on radionuclides is provided for process description purposes only.

Q
QUALITY DESIGNATOR

REV.	DESCRIPTION	ORG	CHKD	RVWD	APVD	DATE
0	ISSUED FOR CONSTRUCTION SEE NOTE 8	APP	APP	CCR	VEA	4/25/08

REVISION HISTORY

ISSUED BY APP-WTP PDC	PROJECT No.	24590
	SITE	HANFORD
WBS/ STRUCTURE	AREA	2605
	BUILDING No.	90

	BY	DATE
ORIGINATOR		4/17/08
CHECKER		4/17/08
APPROVER		4/25/08
REVIEWER		4/25/08

CONTENT APPLICABLE TO ALARA? [X] YES [ ] NO
ADR NO.: 24590-PTF-ADR-M-02-002 REV.: 2

SAFETY SCREEN REQUIRED? [ ] YES [X] NO (EMS INITIAL IF YES)
SAFETY SCREEN IS REQUIRED FOR DRAWING TYPES IDENTIFIED IN 24590-WTP-DSP-SRD-002

RIVER PROTECTION PROJECT
WASTE TREATMENT PLANT
2435 STEVENS CENTER PLACE
RICHLAND, WA 99354

CONTRACT No: DE-AC27-01RV14136

P&ID - PTF
HLW LAG STORAGE AND FEED BLENDING PROCESS SYSTEM UTILITY SERVICES PSA-RK-00033

SCALE: NONE
SIZE: 44 x 34
COMPUTER GENERATED - MANUAL CHANGES NOT PERMITTED

24590-PTF-M6-HLP-00005005 REV 0

R1000005

04/25/2008 09:47:27 AM

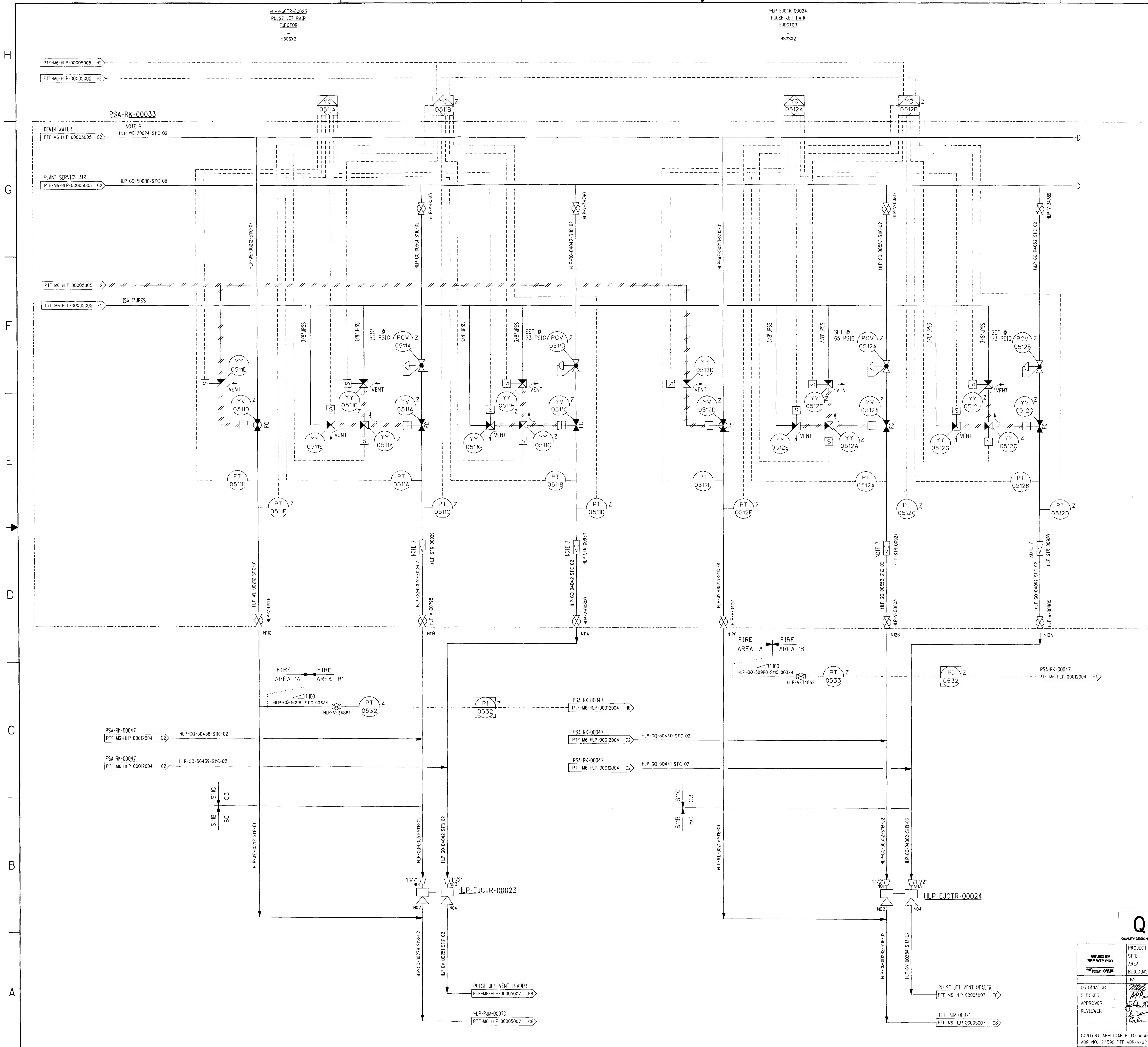

NOTES:

1. SEE DRAWINGS 24590-WTP-M6-50-00001 THROUGH 24590-WTP-M6-50-00008 FOR GENERAL NOTES, SYMBOLS AND LEGEND, AND GENERAL SLOPE REQUIREMENTS.
2. CONTENTS OF THIS DOCUMENT ARE DANGEROUS WASTE PERMIT AFFECTING.
3. THE PRESSURE BOUNDARY FOR ALL COMPONENTS ON THIS DRAWING IS QUALITY LEVEL Q AND SEISMIC CATEGORY SC-I.
4. ALL LINES SHOWN ON THIS DRAWING SHALL BE FREE DRAINING, UNLESS OTHERWISE NOTED.
5. FOR PROCESS INFORMATION REFER TO DRAWING 24590-PTF-M6-HLP-00001 (HLP-VSL-00027B).
6. SEE PJM JET PUMP PAIR CONTROL DETAIL 6 ON DRAWING 24590-WTP-M6-50-00007.
7. STRAINER IS A CONICAL PILGRIM HAT TYPE PERFORATED, WITH 1/8 INCH DIAMETER STAGGERED HOLES ON 3/16 INCH CENTERS PERMANENTLY INSTALLED.
8. THIS DRAWING IS CONVERTED FROM A SINGLE SHEET TO MULTI-SHEET DRAWINGS AND, IN PART, SUPERSEDES 24590-PTF-M6-HLP-00005 REV 2. THIS DRAWING INCLUDES INFORMATION FROM 24590-PTF-M6N-HLP-00039, -00053, 24590-PTF-M6N-M80T-00014, -00037, AND -00038.

HOLD/OPEN ITEMS:

NONE

REFERENCES:

1. THE REQUIRED BATCH SEQUENCES, PERMISSIVES, INTERLOCKS, ALARMS AND OPERATOR INTERFACE POINTS ARE FULLY DESCRIBED IN THE SOFTWARE FUNCTIONAL SPECIFICATION, FOR HLW LAG STORAGE AND FEED BLENDING PROCESS (HLP) SYSTEM, 24590-PTF-3PS-HLP-T0001.
2. FOR PERMISSIVES AND INTERLOCKS IMPORTANT TO SAFETY (ITS) SYSTEMS, REFER TO SAFETY SYSTEM REQUIREMENT SPECIFICATION FOR HYDROGEN PURGE AND MIXING SYSTEMS, 24590-PTF-3PS-PPJ-T0004 (FUTURE).

Please note that source, special nuclear, and byproduct materials, as defined in the Atomic Energy Act of 1954 (AEA) are regulated at the U. S. Department of Energy (DOE) facilities exclusively by DOE acting pursuant to its AEA authority. DOE asserts that pursuant to AEA, it has sole and exclusive responsibility and authority to regulate source, special nuclear, and byproduct materials at DOE-owned nuclear facilities. Information contained herein on radionuclides is provided for process description purposes only.

Q
QUALITY DESIGNATOR

REV	DESCRIPTION	ORG	CHKD	RVWD	APVD	DATE
0	ISSUED FOR CONSTRUCTION SEE NOTE 8	MDD	APP	CER ELS	RCL	4/25/08

REVISION HISTORY

ISSUED BY RPP-WTP PDC
ISSUE STAMP

PROJECT No.	24590
SITE	HANFORD
AREA	200E
BUILDING No.	10

	BY	DATE
ORIGINATOR	[signature]	4/17/08
CHECKER	[signature]	4/17/08
APPROVER	[signature]	4/25/08
REVIEWER	[signature]	4/22/08
	[signature]	4/23/08

CONTENT APPLICABLE TO ALARA? [X] YES [ ] NO
ADR NO. 24590-PTF-ADR-M-02-005 REV: 7
SAFETY SCREEN REQUIRED? [X] YES [ ] NO E&NS INITIAL IF YES

BECHTEL
RIVER PROTECTION PROJECT
WASTE TREATMENT PLANT
2435 STEVENS CENTER PLACE
RICHLAND, WA 99354

CONTRACT No: DE-AC27-01RV14136

P&ID - PTF
HLW LAG STORAGE AND FEED BLENDING PROCESS SYSTEM UTILITY SERVICES PSA-RK-00033

SCALE: NONE
24590-PTF-M6-HLP-00005006
REV 0

SAFETY SCREEN IS REQUIRED FOR DRAWING TYPES IDENTIFIED IN 24590-WTP-GPP-SREG-002
'E' SIZE - 44x34
COMPUTER GENERATED - MANUAL CHANGES NOT PERMITTED
R10900601
04/16/2008 05:48:21 PM

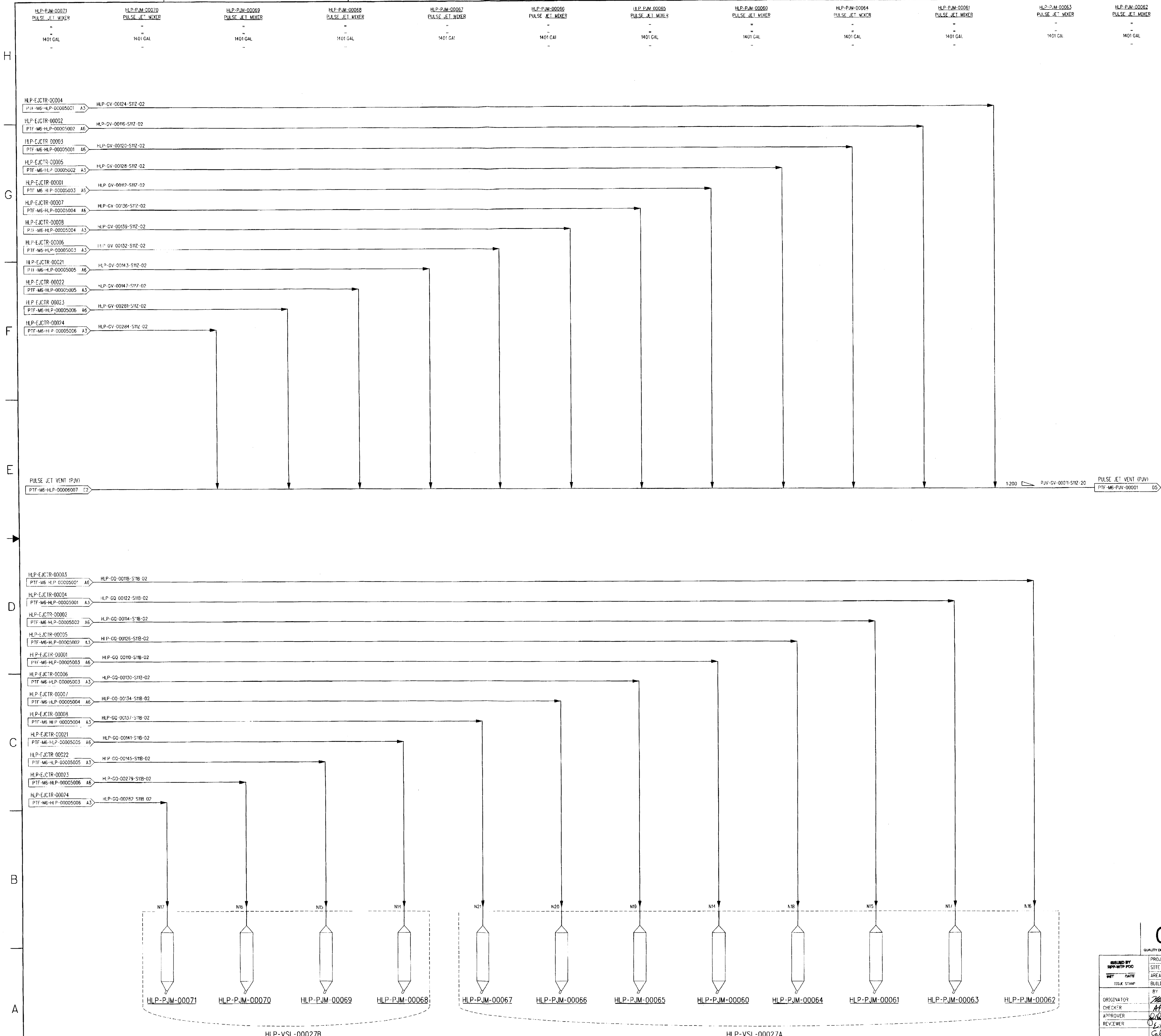

NOTES:

1. SEE DRAWINGS 24590-WTP-M6-50-00001 THROUGH 24590-WTP-M6-50-00008 FOR GENERAL NOTES, SYMBOLS AND LEGEND, AND GENERAL SLOPE REQUIREMENTS.
2. CONTENTS OF THIS DOCUMENT ARE DANGEROUS WASTE PERMIT AFFECTING.
3. THE PRESSURE BOUNDARY FOR ALL COMPONENTS ON THIS DRAWING IS QUALITY LEVEL Q AND SEISMIC CATEGORY SC-I.
4. ALL LINES SHOWN ON THIS DRAWING SHALL BE FREE DRAINING, UNLESS OTHERWISE NOTED.
5. FOR PROCESS INFORMATION REFER TO DRAWINGS 24590-PTF-M6-HLP-00001 (HLP-VSL-00027A/B).
6. THIS DRAWING IS CONVERTED FROM A SINGLE SHEET TO MULTI SHEET DRAWINGS AND, IN PART, SUPERSEDES 24590-PTF-M6-HLP-00005 REV 2. THIS DRAWING INCLUDES INFORMATION FROM 24590-PTF-M6N-HLP-00039, -00053, 24590-PTF-M6N-M80T-00014, -00037, AND -00038.

HOLD/OPEN ITEMS:

NONE

REFERENCES:

1. THE REQUIRED BATCH SEQUENCES, PERMISSIVES, INTERLOCKS, ALARMS AND OPERATOR INTERFACE POINTS ARE FULLY DESCRIBED IN THE SOFTWARE FUNCTIONAL SPECIFICATION, FOR HLW LAG STORAGE AND FEED BLENDING PROCESS (HLP) SYSTEM, 24590-PTF-3PS-HLP-T0001.
2. FOR PERMISSIVES AND INTERLOCKS IMPORTANT TO SAFETY (ITS) SYSTEMS, REFER TO SAFETY SYSTEM REQUIREMENT SPECIFICATION FOR HYDROGEN PURGE AND MIXING SYSTEMS, 24590-PTF-3PS-PPJ-T0004 (FUTURE).

Please note that source, special nuclear, and byproduct materials, as defined in the Atomic Energy Act of 1954 (AEA) are regulated at the U. S. Department of Energy (DOE) facilities exclusively by DOE acting pursuant to its AEA authority. DOE asserts that pursuant to AEA, it has sole and exclusive responsibility and authority to regulate source, special nuclear, and byproduct materials at DOE-owned nuclear facilities. Information contained herein on radionuclides is provided for process description purposes only.

Q
QUALITY DESIGNATOR

REV	DESCRIPTION	ORG	CHKD	RVWD	APVD	DATE
0	ISSUED FOR CONSTRUCTION SEE NOTE 6	MDD	APP	ELS	JDM	4/25/08

REVISION HISTORY

ISSUED BY RPP-WTP PDC
INIT DATE
ISSUE STAMP

PROJECT No.	24590
SITE	HANFORD
AREA	200E
BUILDING No.	10

BECHTEL
RIVER PROTECTION PROJECT
WASTE TREATMENT PLANT
2435 STEVENS CENTER PLACE
RICHLAND, WA 99354

	BY	DATE
ORIGINATOR	[signature]	4/17/08
CHECKER	[signature]	4/17/08
APPROVER	[signature]	4/25/08
REVIEWER	[signature]	4/22/08
	[signature]	4/23/08

CONTENT APPLICABLE TO ALARA? [X] YES [ ] NO
ADR NO. 24590-PTF-ADR-M-02-005 REV: 7
SAFETY SCREEN REQUIRED? [X] YES [ ] NO E&NS INITIAL IF YES

CONTRACT No: DE AC27 01RV14136

P&ID - PTF
HLW LAG STORAGE AND FEED BLENDING PROCESS SYSTEM VESSEL PJM HLP-VSL-00027A/B

SCALE: NONE
24590-PTF-M6-HLP-00005007
REV 0

SAFETY SCREEN IS REQUIRED FOR DRAWING TYPES IDENTIFIED IN 24590-WTP-GPP-SREG-002
'E' SIZE - 44x34
COMPUTER GENERATED - MANUAL CHANGES NOT PERMITTED
R10900602
04/17/2008 07:26:52 AM

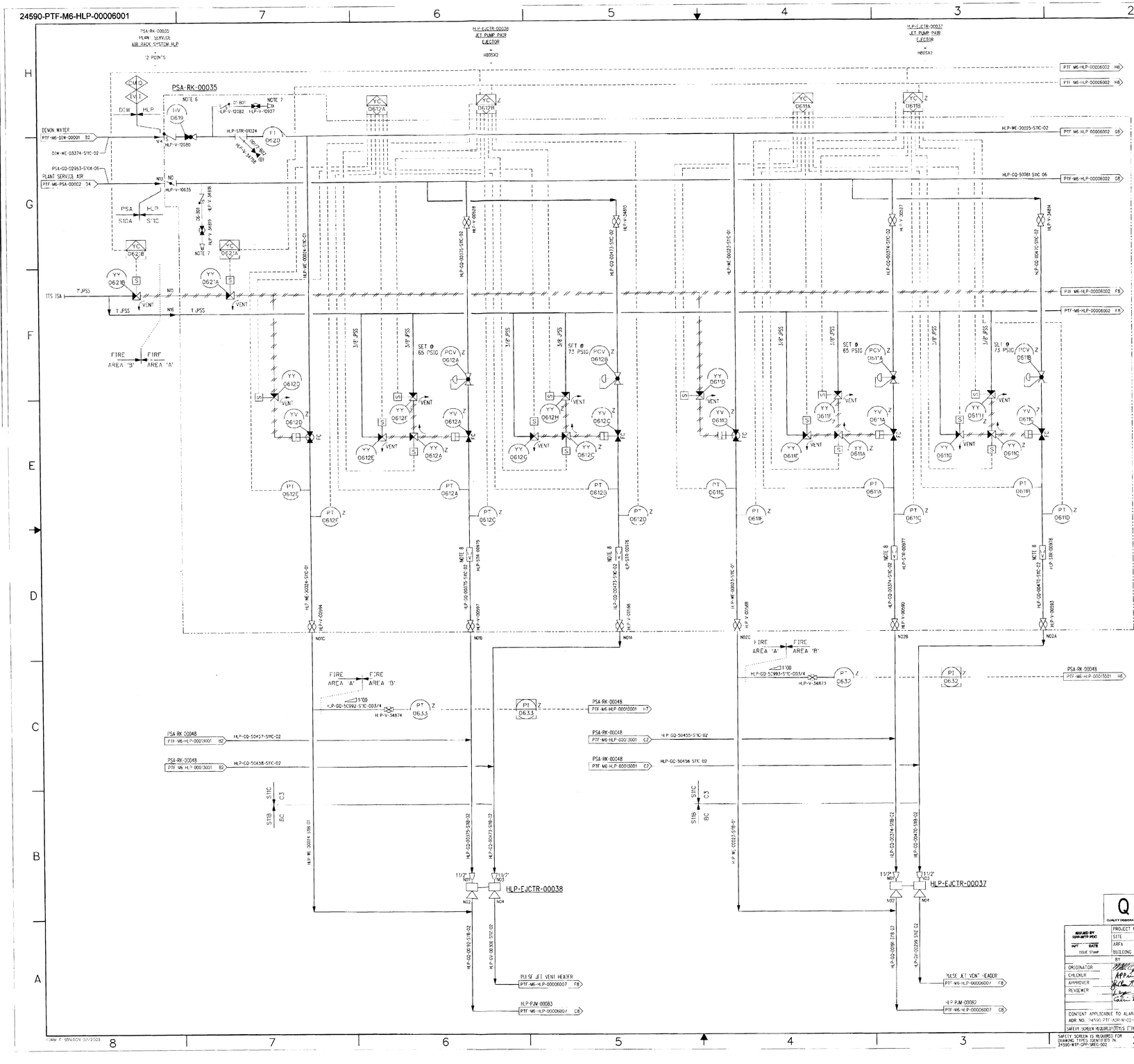

NOTES:

1. SEE DRAWINGS 24590-WTP-M6-50-00001 THROUGH 24590-WTP-M6-50-00008 FOR GENERAL NOTES, SYMBOLS AND LEGEND, AND GENERAL SLOPE REQUIREMENTS.
2. CONTENTS OF THIS DOCUMENT ARE DANGEROUS WASTE PERMIT AFFECTING.
3. THE PRESSURE BOUNDARY FOR ALL COMPONENTS ON THIS DRAWING IS QUALITY LEVEL Q AND SEISMIC CATEGORY SC-I, UNLESS OTHERWISE NOTED.
4. ALL LINES SHOWN ON THIS DRAWING SHALL BE FREE DRAINING, UNLESS OTHERWISE NOTED.
5. FOR PROCESS INFORMATION REFER TO DRAWING 24590-PTF-M6-HLP-00003 (HLP-VSL-00028).
6. SEE PJM JET PUMP PAIR CONTROL DETAILS 6 AND 7 ON DRAWING 24590-WTP-M6-50-00007.
7. CONNECTION PROVIDED FOR REAGENTS, PLANT WASH AND SERVICE AIR.
8. STRAINER IS A CONICAL PILGRIM HAT TYPE PERFORATED, WITH 1/8 INCH DIAMETER STAGGERED HOLES ON 3/16 INCH CENTERS PERMANENTLY INSTALLED.
9. THIS DRAWING IS CONVERTED FROM A SINGLE SHEET TO MULTI-SHEET DRAWINGS AND, IN PART, SUPERSEDES 24590-PTF-M6-HLP-00006 REV 2. THIS DRAWING INCLUDES INFORMATION FROM 24590-PTF-M6N-HLP-00034, -00054, 24590-PTF-VEN-M6OT-00016, -00015, -00017, AND -00038.

HOLD/OPEN ITEMS:

NONE

REFERENCES:

1. THE REQUIRED BATCH SEQUENCES, PERMISSIVES, INTERLOCKS, ALARMS AND OPERATOR INTERFACE POINTS ARE FULLY DESCRIBED IN THE SOFTWARE FUNCTIONAL SPECIFICATION, FOR HLW LAG STORAGE AND FEED BLENDING PROCESS (HLP) SYSTEM, 24590-PTF-3PS-HLP-10001.
2. FOR PERMISSIVES AND INTERLOCKS IMPORTANT TO SAFETY (ITS) SYSTEMS, REFER TO SAFETY SYSTEM REQUIREMENT SPECIFICATION FOR HYDROGEN PURGE AND MIXING SYSTEMS, 24590-PTF-3PS-PRJ-T0004 (FUTURE).

Please note that source, special nuclear, and byproduct materials, as defined in the Atomic Energy Act of 1954 (AEA) are regulated at the U. S. Department of Energy (DOE) facilities exclusively by DOE acting pursuant to its AEA authority. DOE asserts that pursuant to AEA, it has sole and exclusive responsibility and authority to regulate source, special nuclear, and byproduct materials at DOE-owned nuclear facilities. Information contained herein on radionuclides is provided for process description purposes only.

DRAWING INDEX

DWG NO	REV	TITLE
24590-PTF-M6-HLP-00006001	0	HLW LAG STORAGE & FEED BLEEDING UTIL SERV
24590-PTF-M6-HLP-00006002	0	HLW LAG STORAGE & FEED BLEEDING UTIL SERV
24590-PTF-M6-HLP-00006003	0	HLW LAG STORAGE & FEED BLEEDING UTIL SERV
24590-PTF-M6-HLP-00006004	0	HLW LAG STORAGE & FEED BLEEDING UTIL SERV
24590-PTF-M6-HLP-00006005	0	HLW LAG STORAGE & FEED BLEEDING UTIL SERV
24590-PTF-M6-HLP-00006006	0	HLW LAG STORAGE & FEED BLEEDING UTIL SERV
24590-PTF-M6-HLP-00006007	0	HLW LAG STORAGE & FEED BLEEDING UTIL SERV

REVISION HISTORY

REV	DESCRIPTION	ORG	CHK'D	QEW'D	APVD	DATE
0	ISSUED FOR CONSTRUCTION SEE NOTE 9	MJD	MP	EG	JSM	4/25/08

Q QUALITY DESIGNATION

ISSUED BY DELIVERY POC
SITE HANFORD
INIT DATE
ISSUE STAMP
AREA 2007
BUILDING No. 10

	BY	DATE
ORIGINATOR		4/18/08
CHECKER	MP MP	4/21/08
APPROVER		4/25/08
REVIEWER		4/23/08

CONTENT APPLICABLE TO ALARA? [X] YES [ ] NO
ADR NO. 24590-PTF-ADR-M-02-005 REV: 7
SAFETY SCREEN REQUIRED? [ ] YES [X] NO EWG INITIAL IF YES

RIVER PROTECTION PROJECT
WASTE TREATMENT PLANT
2435 STEVENS CENTER PLACE
RICHLAND, WA 99354

CONTRACT No. DE-AC27-01RV14136

P&ID - PTF
HLW LAG STORAGE AND FEED BLENDING PROCESS SYSTEM UTILITY SERVICES PSA-RK-00035

SCALE: NONE
SIZE: 44x34
COMPUTER GENERATED - MANUAL CHANGES NOT PERMITTED

24590-PTF-M6-HLP-00006001 REV 0

FORM F 59160N 02/2003

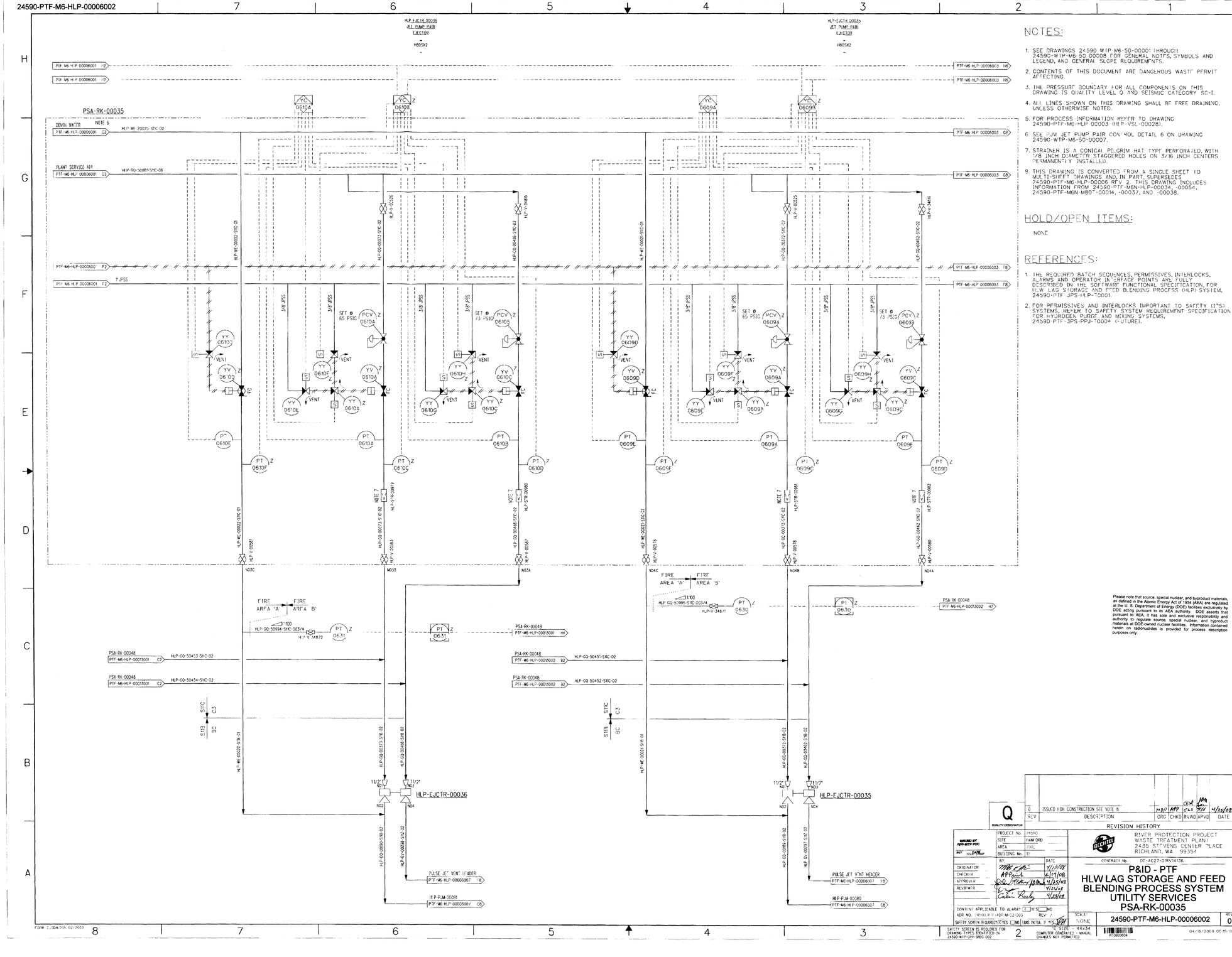

NOTES:

1. SEE DRAWINGS 24590-WTP-M6-50-00001 THROUGH 24590-WTP-M6-50-00008 FOR GENERAL NOTES, SYMBOLS AND LEGEND, AND GENERAL SLOPE REQUIREMENTS.
2. CONTENTS OF THIS DOCUMENT ARE DANGEROUS WASTE PERMIT AFFECTING.
3. THE PRESSURE BOUNDARY FOR ALL COMPONENTS ON THIS DRAWING IS QUALITY LEVEL Q AND SEISMIC CATEGORY SC-1.
4. ALL LINES SHOWN ON THIS DRAWING SHALL BE FREE DRAINING, UNLESS OTHERWISE NOTED.
5. FOR PROCESS INFORMATION REFER TO DRAWING 24590-PTF-M6-HLP-00003 (HLP-VSL-00028).
6. SEE PJM JET PUMP PAIR CONTROL DETAIL 6 ON DRAWING 24590-WTP-M6-50-00007.
7. STRAINER IS A CONICAL PILGRIM HAT TYPE PERFORATED, WITH 1/8 INCH DIAMETER STAGGERED HOLES ON 3/16 INCH CENTERS PERMANENTLY INSTALLED.
8. THIS DRAWING IS CONVERTED FROM A SINGLE SHEET TO MULTI-SHEET DRAWINGS AND, IN PART, SUPERSEDES 24590-PTF-M6-HLP-00006 REV. 2. THIS DRAWING INCLUDES INFORMATION FROM 24590-PTF-MEN-HLP-00034, -00054, 24590-PTF-MEN-M87-00014, -00037, AND -00038.

HOLD/OPEN ITEMS:

NONE

REFERENCES:

1. THE REQUIRED BATCH SEQUENCES, PERMISSIVES, INTERLOCKS, ALARMS AND OPERATOR INTERFACE POINTS ARE FULLY DESCRIBED IN THE SOFTWARE FUNCTIONAL SPECIFICATION, FOR HLW LAG STORAGE AND FEED BLENDING PROCESS (HLP) SYSTEM, 24590-PTF-3PS-HLP-T0001.
2. FOR PERMISSIVES AND INTERLOCKS IMPORTANT TO SAFETY (ITS) SYSTEMS, REFER TO SAFETY SYSTEM REQUIREMENT SPECIFICATION FOR HYDROGEN PURGE AND MIXING SYSTEMS, 24590-PTF-3PS-PPJ-T0004 (FUTURE).

Please note that source, special nuclear, and byproduct materials, as defined in the Atomic Energy Act of 1954 (AEA) are regulated at the U. S. Department of Energy (DOE) facilities exclusively by DOE acting pursuant to its AEA authority. DOE asserts that pursuant to AEA, it has sole and exclusive responsibility and materials at DOE-owned nuclear facilities. Information contained herein on radionuclides is provided for process description purposes only.

REV	DESCRIPTION	ORG	CHKD	RVWD	APVD	DATE
0	ISSUED FOR CONSTRUCTION SEE NOTE 8	MDI	APP	CEK	RSW	4/25/08

REVISION HISTORY

Q — QUALITY DESIGNATOR

ISSUED BY RPP-WTP PMO — PTF ISSUE/RELEASE DATE

	BY	DATE
ORIGINATOR	MDI	4/17/08
CHECKER	APPatch	4/17/08
APPROVER	[illegible]	4/25/08
REVIEWER	Calvin Rudy	4/24/08

CONTENT APPLICABLE TO ALARA? [X] YES [ ] NO
ADR NO.: 24590 PTF-ADR-M-02-005 REV: 2
SAFETY SCREEN REQUIRED? [ ] YES [X] NO [ ] N/A INITIAL IF YES
SAFETY SCREEN IS REQUIRED FOR DRAWING TYPES IDENTIFIED IN 24590-WTP-DPP-SREG-002

PROJECT No.	24590
SITE	HANFORD
AREA	ORCL
BUILDING No.	81

RIVER PROTECTION PROJECT
WASTE TREATMENT PLANT
2435 STEVENS CENTER PLACE
RICHLAND, WA 99354

CONTRACT No: DE-AC27-01RV14136

P&ID - PTF
HLW LAG STORAGE AND FEED BLENDING PROCESS SYSTEM UTILITY SERVICES
PSA-RK-00035

SCALE: NONE

24590-PTF-M6-HLP-00006002 REV 0

IC SIZE - 44x34
COMPUTER GENERATED - MANUAL CHANGES NOT PERMITTED

FORM D_DESN_SCN 02/2003

SAFETY SCREEN IS REQUIRED FOR DRAWING TYPES IDENTIFIED IN 24590-WTP-DPP-SREG-002

04/25/2008 05:15:19 PM

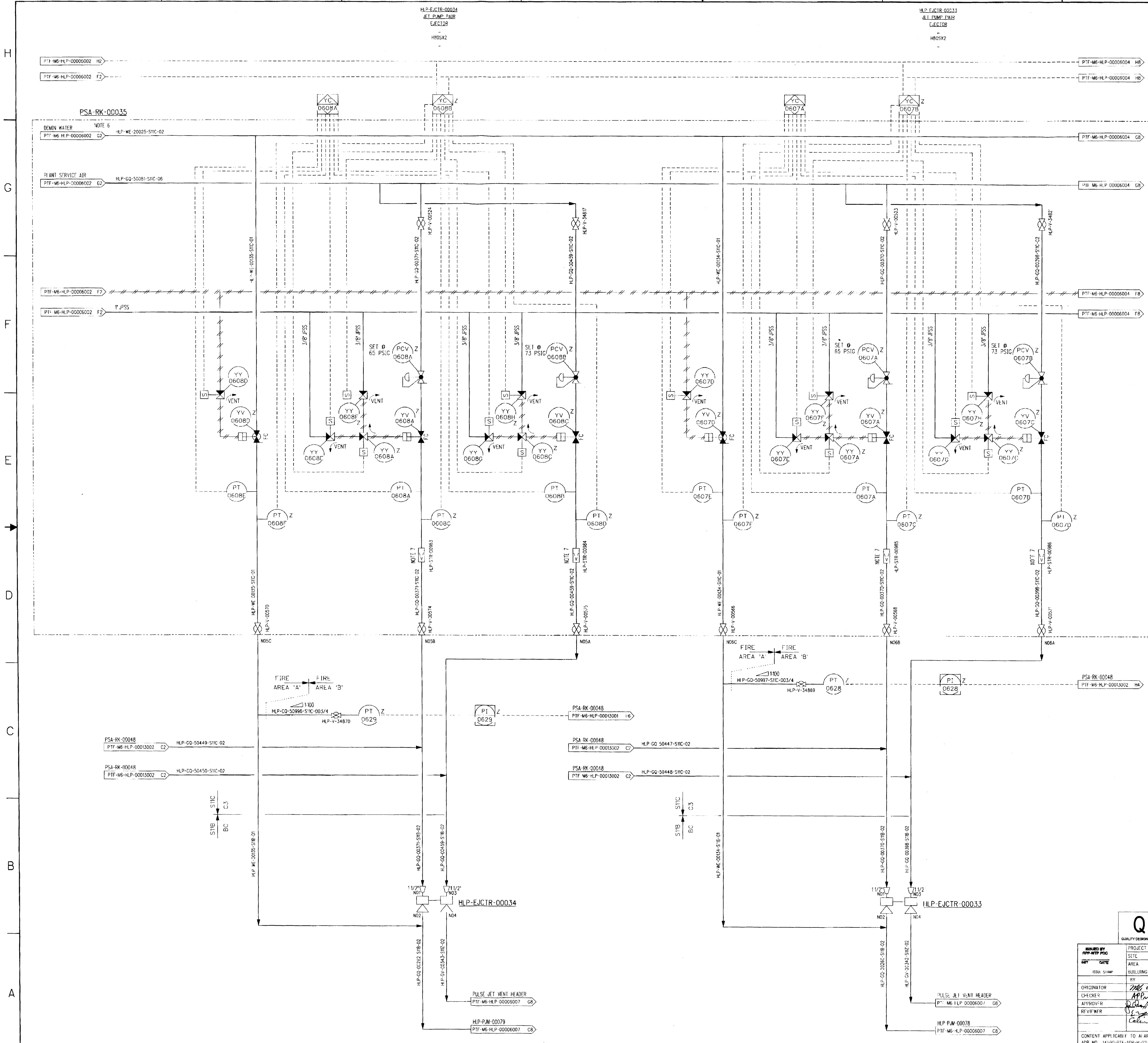

NOTES:

1. SEE DRAWINGS 24590-WTP-M6-50-00001 THROUGH 24590-WTP-M6-50-00008 FOR GENERAL NOTES, SYMBOLS AND LEGEND, AND GENERAL SLOPE REQUIREMENTS.
2. CONTENTS OF THIS DOCUMENT ARE DANGEROUS WASTE PERMIT AFFECTING.
3. THE PRESSURE BOUNDARY FOR ALL COMPONENTS ON THIS DRAWING IS QUALITY LEVEL Q AND SEISMIC CATEGORY SC-I.
4. ALL LINES SHOWN ON THIS DRAWING SHALL BE FREE DRAINING, UNLESS OTHERWISE NOTED.
5. FOR PROCESS INFORMATION REFER TO DRAWING 24590-PTF-M6-HLP-00003 (HLP-VSL-00028).
6. SEE PJM JET PUMP PAIR CONTROL DETAIL 6 ON DRAWING 24590-WTP-M6-50-00007.
7. STRAINER IS A CONICAL PILGRIM HAT TYPE PERFORATED, WITH 1/8 INCH DIAMETER STAGGERED HOLES ON 3/16 INCH CENTERS PERMANENTLY INSTALLED.
8. THIS DRAWING IS CONVERTED FROM A SINGLE SHEET TO MULTI SHEET DRAWINGS AND, IN PART, SUPERSEDES 24590-PTF-M6-HLP-00006 REV 2. THIS DRAWING INCLUDES INFORMATION FROM 24590-PTF-M6N-HLP-00034, -00054, 24590-PTF-M6N-M80T-00014, -00037, AND -00038.

HOLD/OPEN ITEMS:

NONE

REFERENCES:

1. THE REQUIRED BATCH SEQUENCES, PERMISSIVES, INTERLOCKS, ALARMS AND OPERATOR INTERFACE POINTS ARE FULLY DESCRIBED IN THE SOFTWARE FUNCTIONAL SPECIFICATION, FOR HLW LAG STORAGE AND FEED BLENDING PROCESS (HLP) SYSTEM, 24590-PTF-3PS-HLP-T0001.
2. FOR PERMISSIVES AND INTERLOCKS IMPORTANT TO SAFETY (ITS) SYSTEMS, REFER TO SAFETY SYSTEM REQUIREMENT SPECIFICATION FOR HYDROGEN PURGE AND MIXING SYSTEMS, 24590-PTF-3PS-PPJ-T0004 (FUTURE).

Please note that source, special nuclear, and byproduct materials, as defined in the Atomic Energy Act of 1954 (AEA) are regulated at the U. S. Department of Energy (DOE) facilities exclusively by DOE acting pursuant to its AEA authority. DOE asserts that pursuant to AEA, it has sole and exclusive responsibility and authority to regulate source, special nuclear, and byproduct materials at DOE-owned nuclear facilities. Information contained herein on radionuclides is provided for process description purposes only.

Q
QUALITY DESIGNATOR

REV	DESCRIPTION	ORG	CHKD	RVWD	APVD	DATE
0	ISSUED FOR CONSTRUCTION SEE NOTE 8	MDD	APP	CEK ELS	JDM	4/25/08

REVISION HISTORY

ISSUED BY RPP-WTP PDC		
INIT DATE	PROJECT No.	24590
	SITE	HANFORD
	AREA	200E
ISSUE STAMP	BUILDING No.	10

RIVER PROTECTION PROJECT
WASTE TREATMENT PLANT
2435 STEVENS CENTER PLACE
RICHLAND, WA 99354

CONTRACT No: DE-AC27-01RV14136

	BY	DATE
ORIGINATOR	[signature]	4/17/08
CHECKER	[signature]	4/17/08
APPROVER	[signature]	4/25/08
REVIEWER	[signature]	4/22/08
	Calvin Healy	4/23/08

CONTENT APPLICABLE TO ALARA? [X] YES [ ] NO
ADR NO. 24590-PTF-ADR-M-02-005 REV: 7
SAFETY SCREEN REQUIRED? [X] YES [ ] NO E&NS INITIAL IF YES

P&ID - PTF
HLW LAG STORAGE AND FEED BLENDING PROCESS SYSTEM UTILITY SERVICES PSA-RK-00035

SCALE: NONE

24590-PTF-M6-HLP-00006003 REV 0

SAFETY SCREEN IS REQUIRED FOR DRAWING TYPES IDENTIFIED IN 24590-WTP-GPP-SREG-002

'E' SIZE - 44x34
COMPUTER GENERATED - MANUAL CHANGES NOT PERMITTED

R10900605

04/16/2008 06:15:19 PM

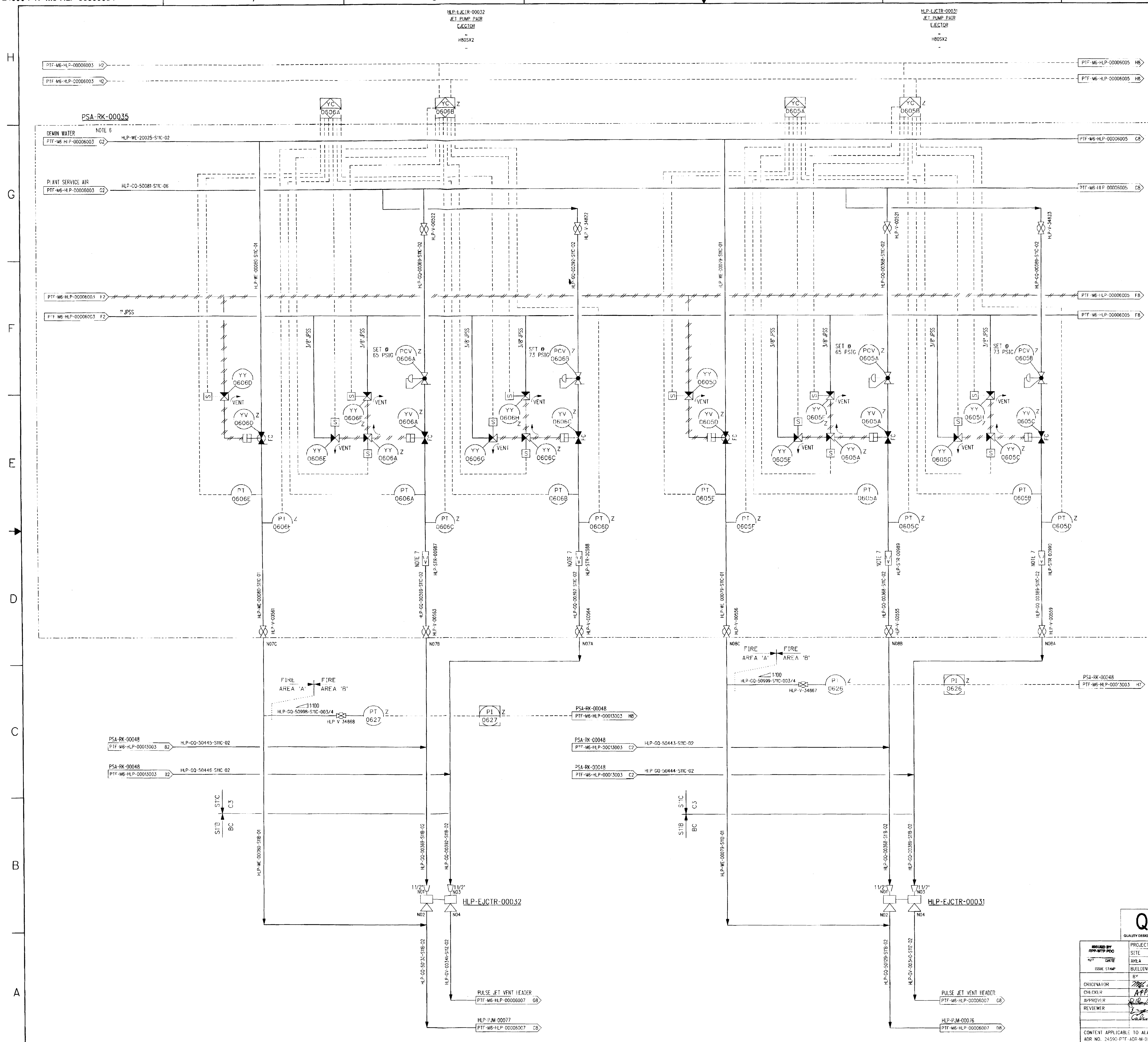

NOTES:

1. SEE DRAWINGS 24590-WTP-M6-50-00001 THROUGH 24590-WTP-M6-50-00008 FOR GENERAL NOTES, SYMBOLS AND LEGEND, AND GENERAL SLOPE REQUIREMENTS.
2. CONTENTS OF THIS DOCUMENT ARE DANGEROUS WASTE PERMIT AFFECTING.
3. THE PRESSURE BOUNDARY FOR ALL COMPONENTS ON THIS DRAWING IS QUALITY LEVEL Q AND SEISMIC CATEGORY SC-I.
4. ALL LINES SHOWN ON THIS DRAWING SHALL BE FREE DRAINING, UNLESS OTHERWISE NOTED.
5. FOR PROCESS INFORMATION REFER TO DRAWING 24590-PTF-M6-HLP-00003 (HLP-VSL-00028).
6. SEE PJM JET PUMP PAIR CONTROL DETAIL 6 ON DRAWING 24590-WTP-M6-50-00007.
7. STRAINER IS A CONICAL PILGRIM HAT TYPE PERFORATED, WITH 1/8 INCH DIAMETER STAGGERED HOLES ON 3/16 INCH CENTERS PERMANENTLY INSTALLED.
8. THIS DRAWING IS CONVERTED FROM A SINGLE SHEET TO MULTI-SHEET DRAWINGS AND, IN PART, SUPERSEDES 24590-PTF-M6-HLP-00006 REV 2. THIS DRAWING INCLUDES INFORMATION FROM 24590-PTF-M6N-HLP-00034, -00054, 24590-PTF-M6N-M80T-00014, -00037, AND -00038.

HOLD/OPEN ITEMS:

NONE

REFERENCES:

1. THE REQUIRED BATCH SEQUENCES, PERMISSIVES, INTERLOCKS, ALARMS AND OPERATOR INTERFACE POINTS ARE FULLY DESCRIBED IN THE SOFTWARE FUNCTIONAL SPECIFICATION, FOR HLW LAG STORAGE AND FEED BLENDING PROCESS (HLP) SYSTEM, 24590-PTF-3PS-HLP-T0001.
2. FOR PERMISSIVES AND INTERLOCKS IMPORTANT TO SAFETY (ITS) SYSTEMS, REFER TO SAFETY SYSTEM REQUIREMENT SPECIFICATION FOR HYDROGEN PURGE AND MIXING SYSTEMS, 24590-PTF-3PS-PPJ-T0004 (FUTURE).

Please note that source, special nuclear, and byproduct materials, as defined in the Atomic Energy Act of 1954 (AEA) are regulated at the U. S. Department of Energy (DOE) facilities exclusively by DOE acting pursuant to its AEA authority. DOE asserts that pursuant to AEA, it has sole and exclusive responsibility and authority to regulate source, special nuclear, and byproduct materials at DOE-owned nuclear facilities. Information contained herein on radionuclides is provided for process description purposes only.

Q
QUALITY DESIGNATOR

REVISION HISTORY

REV	DESCRIPTION	ORG	CHKD	RVWD	APVD	DATE
0	ISSUED FOR CONSTRUCTION SEE NOTE 8					4/25/08

ISSUED BY RPP-WTP PDC
INIT DATE
ISSUE STAMP

PROJECT No.	24590
SITE	HANFORD
AREA	200E
BUILDING No.	10

	BY	DATE
ORIGINATOR		4/17/08
CHECKER		4/17/08
APPROVER		4/25/08
REVIEWER		4/22/08
		4/23/08

CONTENT APPLICABLE TO ALARA? [X] YES [ ] NO
ADR NO. 24590-PTF-ADR-M-02-005 REV: 7
SAFETY SCREEN REQUIRED? [X] YES [ ] NO E&NS INITIAL IF YES

RIVER PROTECTION PROJECT
WASTE TREATMENT PLANT
2435 STEVENS CENTER PLACE
RICHLAND, WA 99354

CONTRACT No: DE-AC27-01RV14136

P&ID - PTF HLW LAG STORAGE AND FEED BLENDING PROCESS SYSTEM UTILITY SERVICES PSA-RK-00035

SCALE: NONE

24590-PTF-M6-HLP-00006004 REV 0

SAFETY SCREEN IS REQUIRED FOR DRAWING TYPES IDENTIFIED IN 24590-WTP-GPP-SREG-002

'E' SIZE - 44x34
COMPUTER GENERATED - MANUAL CHANGES NOT PERMITTED

R10900606

04/16/2008 06:15:18 PM

24590-PTF-M6-HLP-00006005

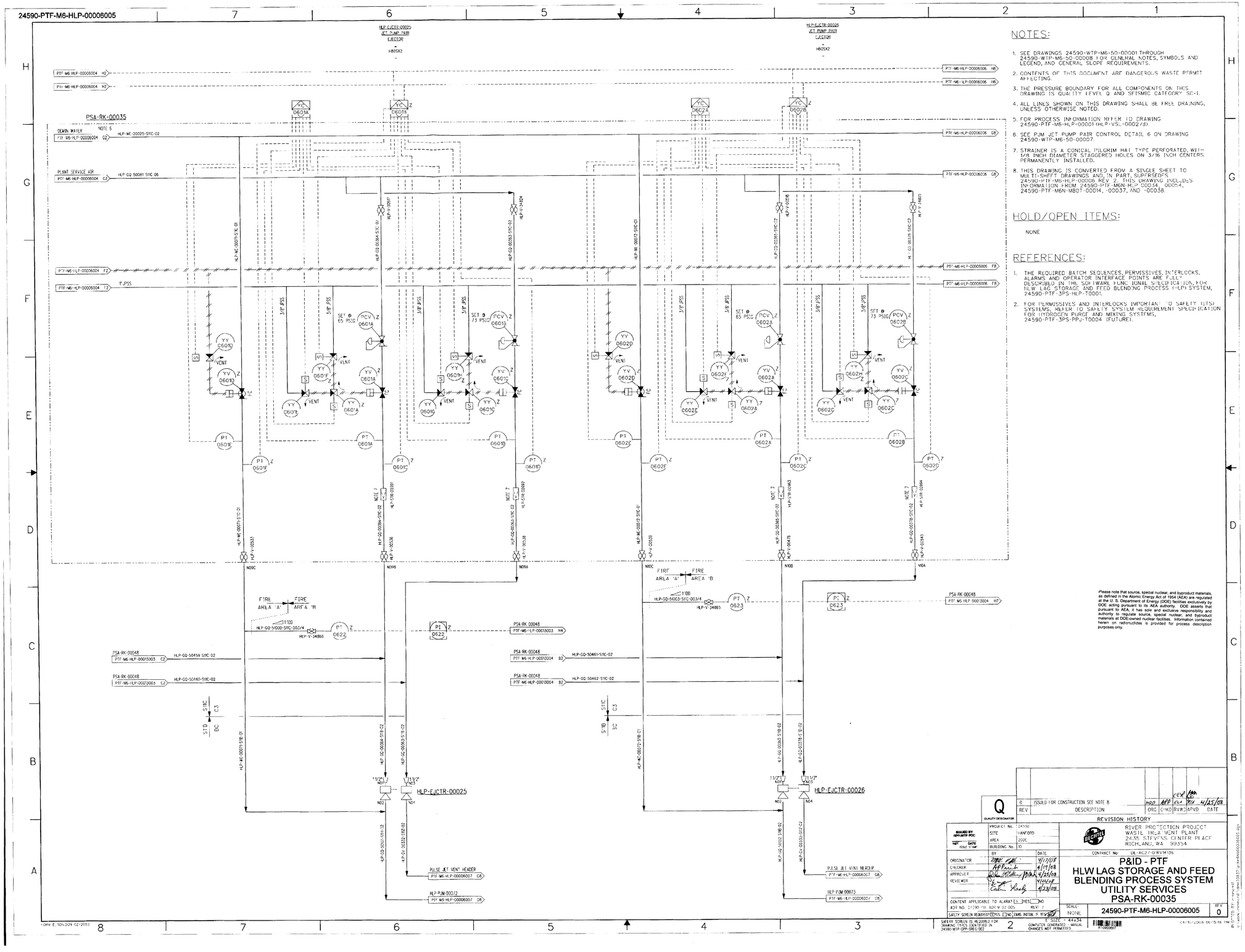

NOTES:

1. SEE DRAWINGS 24590-WTP-M6-50-00001 THROUGH 24590-WTP-M6-50-00008 FOR GENERAL NOTES, SYMBOLS AND LEGEND, AND GENERAL SLOPE REQUIREMENTS.
2. CONTENTS OF THIS DOCUMENT ARE DANGEROUS WASTE PERMIT AFFECTING.
3. THE PRESSURE BOUNDARY FOR ALL COMPONENTS ON THIS DRAWING IS QUALITY LEVEL Q AND SEISMIC CATEGORY SC-1.
4. ALL LINES SHOWN ON THIS DRAWING SHALL BE FREE DRAINING, UNLESS OTHERWISE NOTED.
5. FOR PROCESS INFORMATION REFER TO DRAWING 24590-PTF-M6-HLP-00001(HLP-VSL-00027/8).
6. SEE PJM JET PUMP PAIR CONTROL DETAIL 6 ON DRAWING 24590-WTP-M6-50-00007.
7. STRAINER IS A CONICAL PILGRIM HAT TYPE PERFORATED, WITH 1/8 INCH DIAMETER STAGGERED HOLES ON 3/16 INCH CENTERS PERMANENTLY INSTALLED.
8. THIS DRAWING IS CONVERTED FROM A SINGLE SHEET TO MULTI-SHEET DRAWINGS AND, IN PART, SUPERSEDES 24590-PTF-M6-HLP-00006 REV. 2. THIS DRAWING INCLUDES INFORMATION FROM 24590-PTF-MGN-HLP-00034, -00054, 24590-PTF-MGN-MBOT-00014, -00037, AND -00038.

HOLD/OPEN ITEMS:

NONE

REFERENCES:

1. THE REQUIRED BATCH SEQUENCES, PERMISSIVES, INTERLOCKS, ALARMS AND OPERATOR INTERFACE POINTS ARE FULLY DESCRIBED IN THE SOFTWARE FUNCTIONAL SPECIFICATION FOR HLW LAG STORAGE AND FEED BLENDING PROCESS (-LFP) SYSTEM, 24590-PTF-3PS-HLP-T0001.
2. FOR PERMISSIVES AND INTERLOCKS IMPORTANT TO SAFETY (ITS) SYSTEMS, REFER TO SAFETY SYSTEM REQUIREMENT SPECIFICATION FOR HYDROGEN PURGE AND MIXING SYSTEMS, 24590-PTF-3PS-PPJ-T0004 (FUTURE).

Please note that source, special nuclear, and byproduct materials, as defined in the Atomic Energy Act of 1954 (AEA) are regulated at the U. S. Department of Energy (DOE) facilities exclusively by DOE acting pursuant to its AEA authority. DOE asserts that pursuant to AEA, it has sole and exclusive responsibility and authority to regulate source, special nuclear, and byproduct materials at DOE-owned nuclear facilities. Information contained herein on radionuclides is provided for process description purposes only.

Q — QUALITY DESIGNATOR

REV	DESCRIPTION	ORG	CHKD	RVWR	APVD	DATE
0	ISSUED FOR CONSTRUCTION SEE NOTE 8	ADD	APP	CLK	YCH	4/25/08

REVISION HISTORY

ISSUED BY OPERATING POC — ISSUE STAMP — DATE

	BY	DATE
ORIGINATOR		4/17/08
CHECKER		4/17/08
APPROVER		4/25/08
REVIEWER		4/24/08
		4/23/08

CONTENT APPLICABLE TO ALARA? [X] YES [ ] NO
ADR NO. 24590-PTF-ADR-M-02-005 HLW: 7
SAFETY SCREEN REQUIRED? [ ] YES [X] NO EMS INITIAL IF YES

SAFETY SCREEN IS ACCEPABLE FOR DRAWING TYPES IDENTIFIED IN 24590-WTP-GPP-SWE-0-002

PROJECT No. 24590
SITE HANFORD
AREA 200E
BUILDING No. 10

CONTRACT No. DE-AC27-01RV14136

RIVER PROTECTION PROJECT
WASTE TREATMENT PLANT
2435 STEVENS CENTER PLACE
RICHLAND, WA 99354

P&ID - PTF
HLW LAG STORAGE AND FEED BLENDING PROCESS SYSTEM UTILITY SERVICES
PSA-RK-00035

SCALE: NONE — T SIZE = 44x34

24590-PTF-M6-HLP-00006005 — REV 0

4/25/2008 08:15:16 PM

© WTP Contract

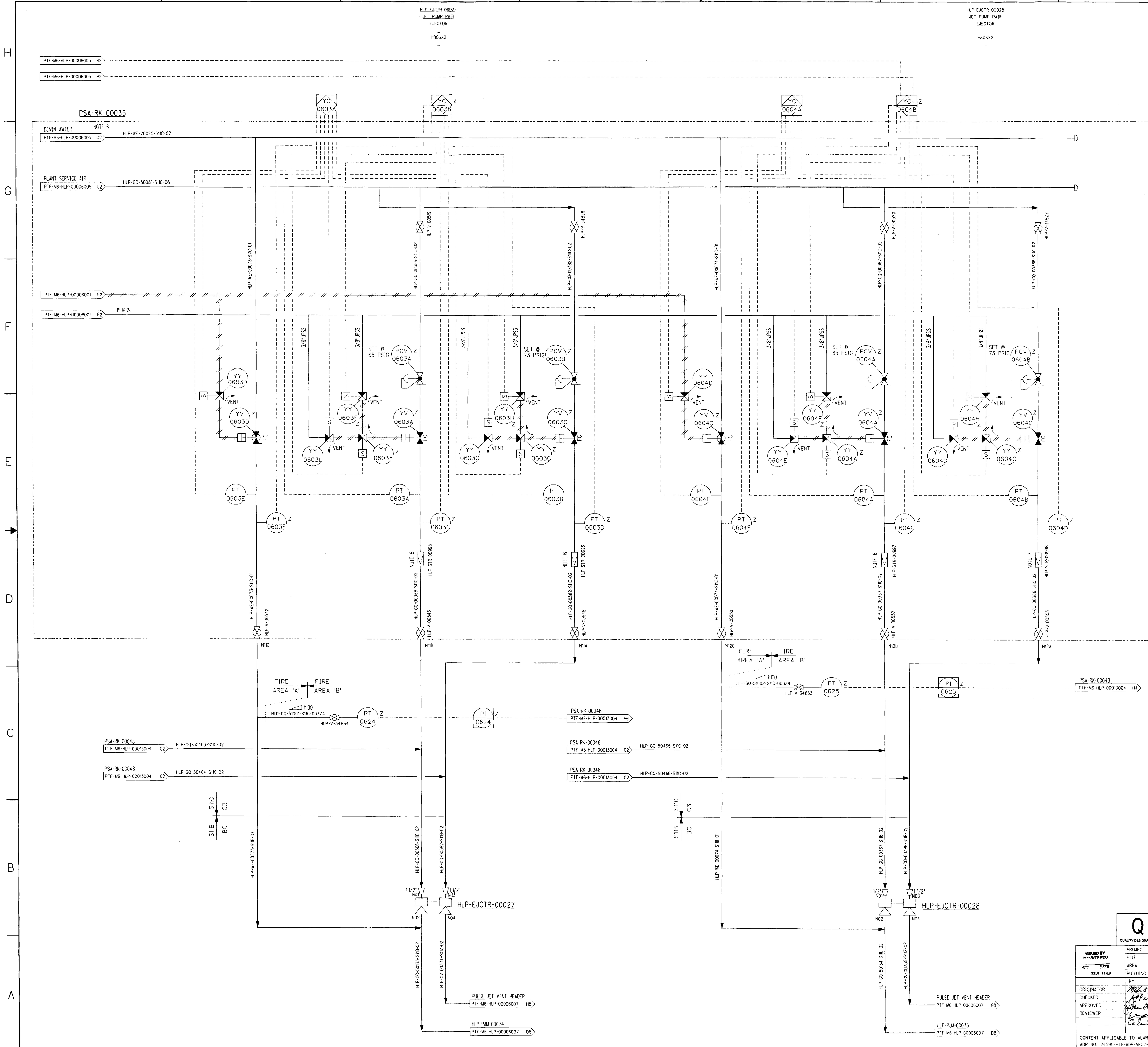

NOTES:

1. SEE DRAWINGS 24590-WTP-M6-50-00001 THROUGH 24590-WTP-M6-50-00008 FOR GENERAL NOTES, SYMBOLS AND LEGEND, AND GENERAL SLOPE REQUIREMENTS.
2. CONTENTS OF THIS DOCUMENT ARE DANGEROUS WASTE PERMIT AFFECTING.
3. THE PRESSURE BOUNDARY FOR ALL COMPONENTS ON THIS DRAWING IS QUALITY LEVEL Q AND SEISMIC CATEGORY SC I.
4. ALL LINES SHOWN ON THIS DRAWING SHALL BE FREE DRAINING, UNLESS OTHERWISE NOTED.
5. FOR PROCESS INFORMATION REFER TO DRAWING 24590-PTF-M6-HLP-00001 (HLP-VSL-00027B).
6. SEE PJM JET PUMP PAIR CONTROL DETAIL 6 ON DRAWING 24590-WTP-M6-50-00007.
7. STRAINER IS A CONICAL PILGRIM HAT TYPE PERFORATED, WITH 1/8 INCH DIAMETER STAGGERED HOLES ON 3/16 INCH CENTERS PERMANENTLY INSTALLED.
8. THIS DRAWING IS CONVERTED FROM A SINGLE SHEET TO MULTI-SHEET DRAWINGS AND, IN PART, SUPERSEDES 24590-PTF-M6-HLP-00006 REV 2. THIS DRAWING INCLUDES INFORMATION FROM 24590-PTF-M6N-HLP-00034, -00054, 24590-PTF-M6N-M801-00014, -00037, AND -00038.

HOLD/OPEN ITEMS:

NONE

REFERENCES:

1. THE REQUIRED BATCH SEQUENCES, PERMISSIVES, INTERLOCKS, ALARMS AND OPERATOR INTERFACE POINTS ARE FULLY DESCRIBED IN THE SOFTWARE FUNCTIONAL SPECIFICATION, FOR HLW LAG STORAGE AND FEED BLENDING PROCESS (HLP) SYSTEM, 24590-PTF-3PS-HLP-T0001.
2. FOR PERMISSIVES AND INTERLOCKS IMPORTANT TO SAFETY (ITS) SYSTEMS, REFER TO SAFETY SYSTEM REQUIREMENT SPECIFICATION FOR HYDROGEN PURGE AND MIXING SYSTEMS, 24590-PTF-3PS-PPJ-T0004 (FUTURE).

Please note that source, special nuclear, and byproduct materials, as defined in the Atomic Energy Act of 1954 (AEA) are regulated at the U. S. Department of Energy (DOE) facilities exclusively by DOE acting pursuant to its AEA authority. DOE asserts that pursuant to AEA, it has sole and exclusive responsibility and authority to regulate source, special nuclear, and byproduct materials at DOE-owned nuclear facilities. Information contained herein on radionuclides is provided for process description purposes only.

Q
QUALITY DESIGNATOR

REV	DESCRIPTION	ORG	CHKD	RVWD	APVD	DATE
0	ISSUED FOR CONSTRUCTION SEE NOTE 8	MDD	APP	ELS / CEK	PJK	4/25/08

REVISION HISTORY

ISSUED BY RPP-WTP PDC
INIT DATE
ISSUE STAMP

PROJECT No.	24590
SITE	HANFORD
AREA	200E
BUILDING No.	10

RIVER PROTECTION PROJECT
WASTE TREATMENT PLANT
2435 STEVENS CENTER PLACE
RICHLAND, WA 99354

CONTRACT No: DE-AC27-01RV14136

	BY	DATE
ORIGINATOR	[signature]	4/17/08
CHECKER	[signature]	4/17/08
APPROVER	[signature]	4/25/08
REVIEWER	[signature]	4/22/08
	[signature]	4/23/08

CONTENT APPLICABLE TO ALARA? [X] YES [ ] NO
ADR NO. 24590-PTF-ADR-M-02-005 REV: 1
SAFETY SCREEN REQUIRED? [X] YES [ ] NO FANS INITIAL IF YES

P&ID - PTF
HLW LAG STORAGE AND FEED BLENDING PROCESS SYSTEM UTILITY SERVICES PSA-RK-00035

SCALE: NONE
24590-PTF-M6-HLP-00006006
REV 0

SAFETY SCREEN IS REQUIRED FOR DRAWING TYPES IDENTIFIED IN 24590-WTP-CPP-SREG-002
'E' SIZE 44x34
COMPUTER GENERATED - MANUAL CHANGES NOT PERMITTED
R10900608
04/16/2008 06:15:18 PM
PLOTTED BY: mmmcmil

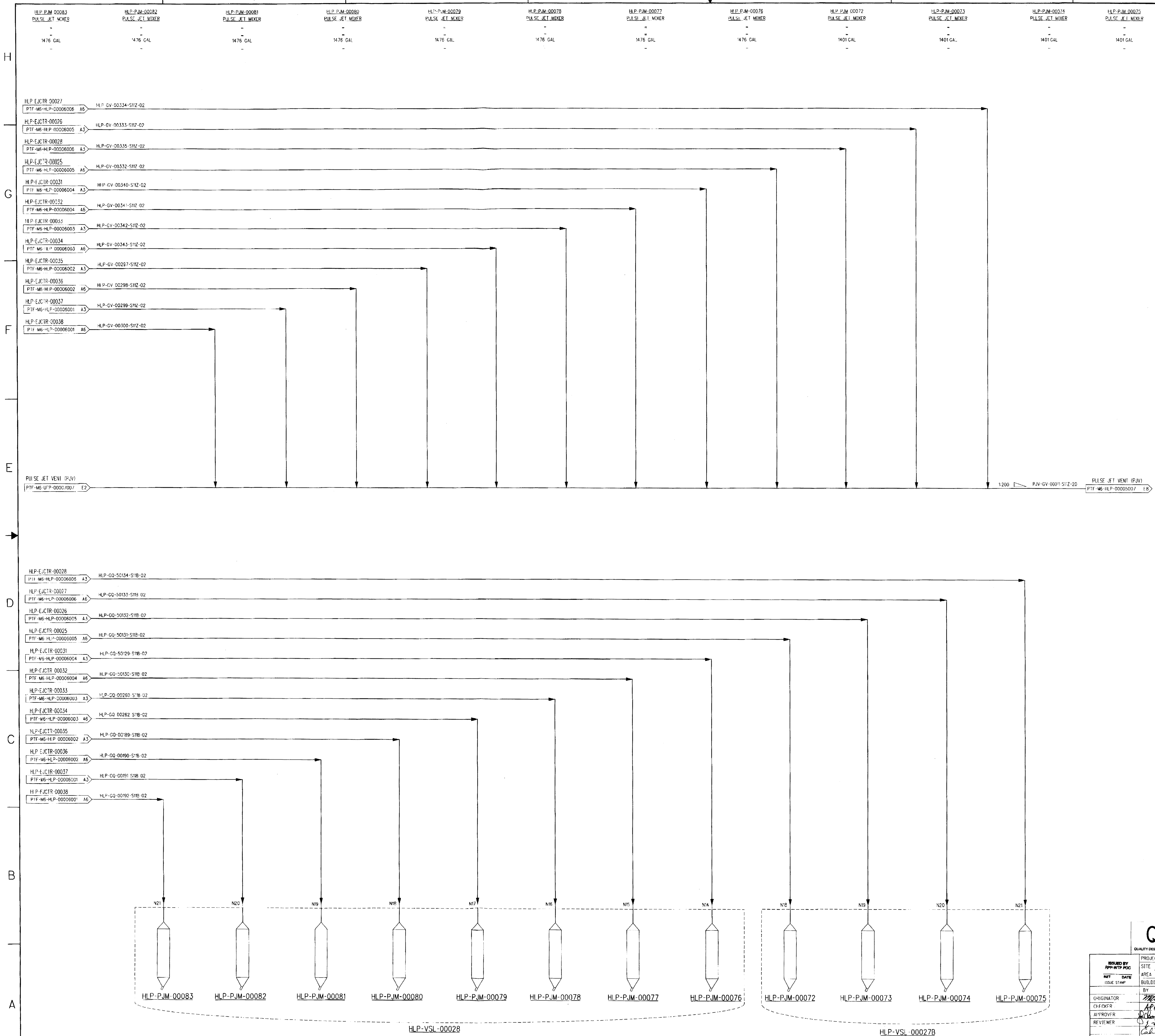

NOTES:

1. SEE DRAWINGS 24590-WTP-M6-50-00001 THROUGH 24590-WTP-M6-50-00008 FOR GENERAL NOTES, SYMBOLS AND LEGEND, AND GENERAL SLOPE REQUIREMENTS.
2. CONTENTS OF THIS DOCUMENT ARE DANGEROUS WASTE PERMIT AFFECTING.
3. THE PRESSURE BOUNDARY FOR ALL COMPONENTS ON THIS DRAWING IS QUALITY LEVEL Q AND SEISMIC CATEGORY SC-I.
4. ALL LINES SHOWN ON THIS DRAWING SHALL BE FREE DRAINING, UNLESS OTHERWISE NOTED.
5. FOR PROCESS INFORMATION REFER TO DRAWINGS 24590-PTF-M6-HLP-00001 (HLP-VSL-00027B) AND 24590-PTF-M6-HLP-00003 (HLP-VSL-00028).
6. THIS DRAWING IS CONVERTED FROM A SINGLE SHEET TO MULTI-SHEET DRAWINGS AND, IN PART, SUPERSEDES 24590-PTF-M6-HLP-00006 REV 2. THIS DRAWING INCLUDES INFORMATION FROM 24590-PTF-M6N-HLP-00034, -00054, 24590-PTF-M6N-M80T-00037, AND -00038.

HOLD/OPEN ITEMS:

NONE

REFERENCES:

1. THE REQUIRED BATCH SEQUENCES, PERMISSIVES, INTERLOCKS, ALARMS AND OPERATOR INTERFACE POINTS ARE FULLY DESCRIBED IN THE SOFTWARE FUNCTIONAL SPECIFICATION, FOR HLW LAG STORAGE AND FEED BLENDING PROCESS (HLP) SYSTEM, 24590-PTF-3PS-HLP-T0001.
2. FOR PERMISSIVES AND INTERLOCKS IMPORTANT TO SAFETY (ITS) SYSTEMS, REFER TO SAFETY SYSTEM REQUIREMENT SPECIFICATION FOR HYDROGEN PURGE AND MIXING SYSTEMS, 24590-PTF-3PS-PPJ-T0004 (FUTURE).

Please note that source, special nuclear, and byproduct materials, as defined in the Atomic Energy Act of 1954 (AEA) are regulated at the U. S. Department of Energy (DOE) facilities exclusively by DOE acting pursuant to its AEA authority. DOE asserts that pursuant to AEA, it has sole and exclusive responsibility and authority to regulate source, special nuclear, and byproduct materials at DOE-owned nuclear facilities. Information contained herein on radionuclides is provided for process description purposes only.

Q
QUALITY DESIGNATOR

REV	DESCRIPTION	ORG	CHKD	RVWD	APVD	DATE
0	ISSUED FOR CONSTRUCTION SEE NOTE 6	MDD	APP	CER ELS		4/25/08

REVISION HISTORY

ISSUED BY RPP-WTP PDC
INIT DATE
ISSUE STAMP

PROJECT No	24590
SITE	HANFORD
AREA	200E
BUILDING No.	10

RIVER PROTECTION PROJECT
WASTE TREATMENT PLANT
2435 STEVENS CENTER PLACE
RICHLAND, WA 99354

CONTRACT No: DE-AC27-01RV14136

	BY	DATE
ORIGINATOR		4/17/08
CHECKER		4/17/08
APPROVER		4/25/08
REVIEWER		4/22/08
		4/23/08

CONTENT APPLICABLE TO ALARA? [X] YES [ ] NO
ADR NO. 24590-PTF-ADR-M-02-005 REV: 7
SAFETY SCREEN REQUIRED? [X] YES [ ] NO E&NS INITIAL IF YES

P&ID - PTF
HLW LAG STORAGE AND FEED BLENDING PROCESS SYSTEM VESSEL PJM HLP-VSL-00027B/28

SCALE: NONE
24590-PTF-M6-HLP-00006007
REV 0

SAFETY SCREEN IS REQUIRED FOR DRAWING TYPES IDENTIFIED IN 24590-WTP-GPP-SREG-002

'E' SIZE - 44x34
COMPUTER GENERATED - MANUAL CHANGES NOT PERMITTED

R10900609

04/16/2008 06:15:17 PM

FORM E 50/4DON 02/2002

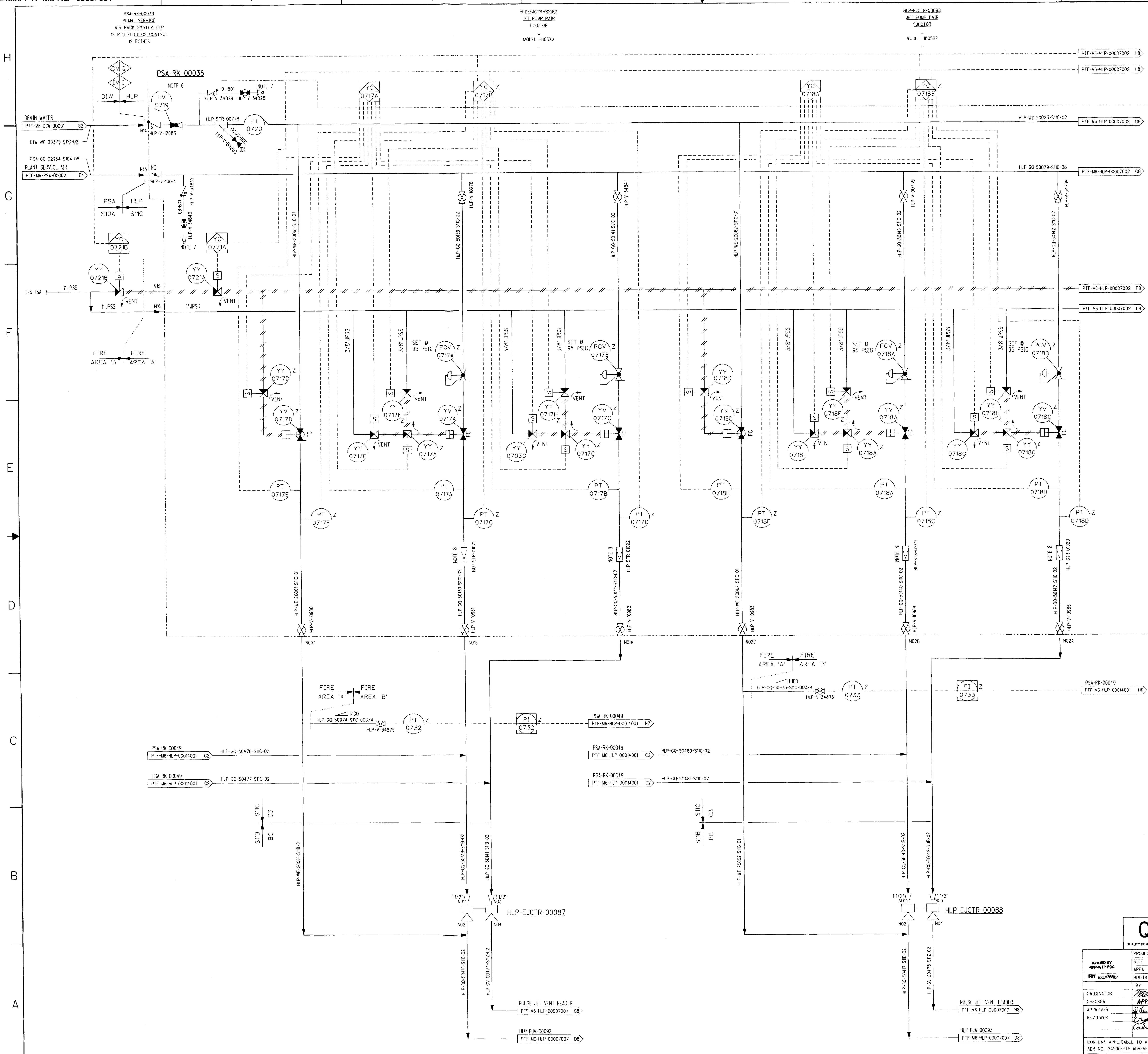

NOTES:

1. SEE DRAWINGS 24590-WTP-M6-50-00001 THROUGH 24590-WTP-M6-50-00008 FOR GENERAL NOTES, SYMBOLS AND LEGEND, AND GENERAL SLOPE REQUIREMENTS.
2. CONTENTS OF THIS DOCUMENT ARE DANGEROUS WASTE PERMIT AFFECTING.
3. THE PRESSURE BOUNDARY FOR ALL COMPONENTS ON THIS DRAWING IS QUALITY LEVEL Q AND SEISMIC CATEGORY SC I, UNLESS OTHERWISE NOTED.
4. ALL LINES SHOWN ON THIS DRAWING SHALL BE FREE DRAINING, UNLESS OTHERWISE NOTED.
5. FOR PROCESS INFORMATION REFER TO DRAWING 24590-PTF-M6-HLP-00002 (HLP-VSL-00022).
6. SEE PJM JET PUMP PAIR CONTROL DETAILS 6 AND 7 ON DRAWING 24590-WTP-M6-50-00007.
7. CONNECTION PROVIDED FOR REAGENTS, PLANT WASH AND SERVICE AIR.
8. STRAINER IS A CONICAL PILGRIM HAT TYPE PERFORATED, WITH 1/8 INCH DIAMETER STAGGERED HOLES ON 3/16 INCH CENTERS PERMANENTLY INSTALLED.
9. THIS DRAWING IS CONVERTED FROM A SINGLE SHEET TO MULTI-SHEET DRAWINGS AND, IN PART, SUPERSEDES 24590-PTF-M6-HLP-00007 REV 2. THIS DRAWING INCLUDES INFORMATION FROM 24590-PTF-M6N-HLP-00035, -00055, 24590-PTF-M6N-M80T-00014, -00015, -00037, AND -00038.

HOLD/OPEN ITEMS:

NONE

REFERENCES:

1. THE REQUIRED BATCH SEQUENCES, PERMISSIVES, INTERLOCKS, ALARMS AND OPERATOR INTERFACE POINTS ARE FULLY DESCRIBED IN THE SOFTWARE FUNCTIONAL SPECIFICATION, FOR HLW LAG STORAGE AND FEED BLENDING PROCESS (HLP) SYSTEM, 24590-PTF-3PS-HLP-T0001.
2. FOR PERMISSIVES AND INTERLOCKS IMPORTANT TO SAFETY (ITS) SYSTEMS, REFER TO SAFETY SYSTEM REQUIREMENT SPECIFICATION FOR HYDROGEN PURGE AND MIXING SYSTEMS, 24590-PTF-3PS-PPJ-T0004 (FUTURE).

Please note that source, special nuclear, and byproduct materials, as defined in the Atomic Energy Act of 1954 (AEA) are regulated at the U. S. Department of Energy (DOE) facilities exclusively by DOE acting pursuant to its AEA authority. DOE asserts that pursuant to AEA, it has sole and exclusive responsibility and authority to regulate source, special nuclear, and byproduct materials at DOE-owned nuclear facilities. Information contained herein on radionuclides is provided for process description purposes only.

DRAWING INDEX

DWG NO	REV	TITLE
24590-PTF-M6-HLP-00007001	0	HLW LAG STORAGE & FEED BLEEDING UTIL SERV
24590-PTF-M6-HLP-00007002	0	HLW LAG STORAGE & FEED BLEEDING UTIL SERV
24590-PTF-M6-HLP-00007003	0	HLW LAG STORAGE & FEED BLEEDING UTIL SERV
24590-PTF-M6-HLP-00007004	0	HLW LAG STORAGE & FEED BLEEDING UTIL SERV
24590-PTF-M6-HLP-00007005	0	HLW LAG STORAGE & FEED BLEEDING UTIL SERV
24590-PTF-M6-HLP-00007006	0	HLW LAG STORAGE & FEED BLEEDING UTIL SERV
24590-PTF-M6-HLP-00007007	0	HLW LAG STORAGE & FEED BLEEDING UTIL SERV

Q
QUALITY DESIGNATOR

REVISION HISTORY

REV	DESCRIPTION	ORG	CHKD	RVWD	APVD	DATE
0	ISSUED FOR CONSTRUCTION SEE NOTE 9	MDD	APP	CEK ELS	JDM RCK	4/25/08

ISSUED BY RPP-WTP PDC

PROJECT No.	24590
SITE	HANFORD
AREA	200E
BUILDING No.	10

RIVER PROTECTION PROJECT
WASTE TREATMENT PLANT
2435 STEVENS CENTER PLACE
RICHLAND, WA 99354

CONTRACT No: DE-AC27 01RV14136

	BY	DATE
ORIGINATOR	[signature]	4/21/08
CHECKER	APPruitt	4/21/08
APPROVER	[signature]	4/25/08
REVIEWER	[signature]	4/22/08
	Calvin Kealy	4/23/08

CONTENT APPLICABLE TO ALARA? [X] YES [ ] NO
ADR NO. 24590-PTF-ADR-M-02-005 REV: 7
SAFETY SCREEN REQUIRED? [X] YES [ ] NO E&NS INITIAL IF YES

P&ID - PTF
HLW LAG STORAGE AND FEED BLENDING PROCESS SYSTEM UTILITY SERVICES
PSA-RK-00036

SCALE: NONE
24590-PTF-M6-HLP-00007001 REV 0

SAFETY SCREEN IS REQUIRED FOR DRAWING TYPES IDENTIFIED IN 24590-WTP-GPP-SREG-002
'E' SIZE - 44x34
COMPUTER GENERATED - MANUAL CHANGES NOT PERMITTED
R10900610
04/21/2008 07:38:59 AM

24590-PTF-M6-HLP-00007002

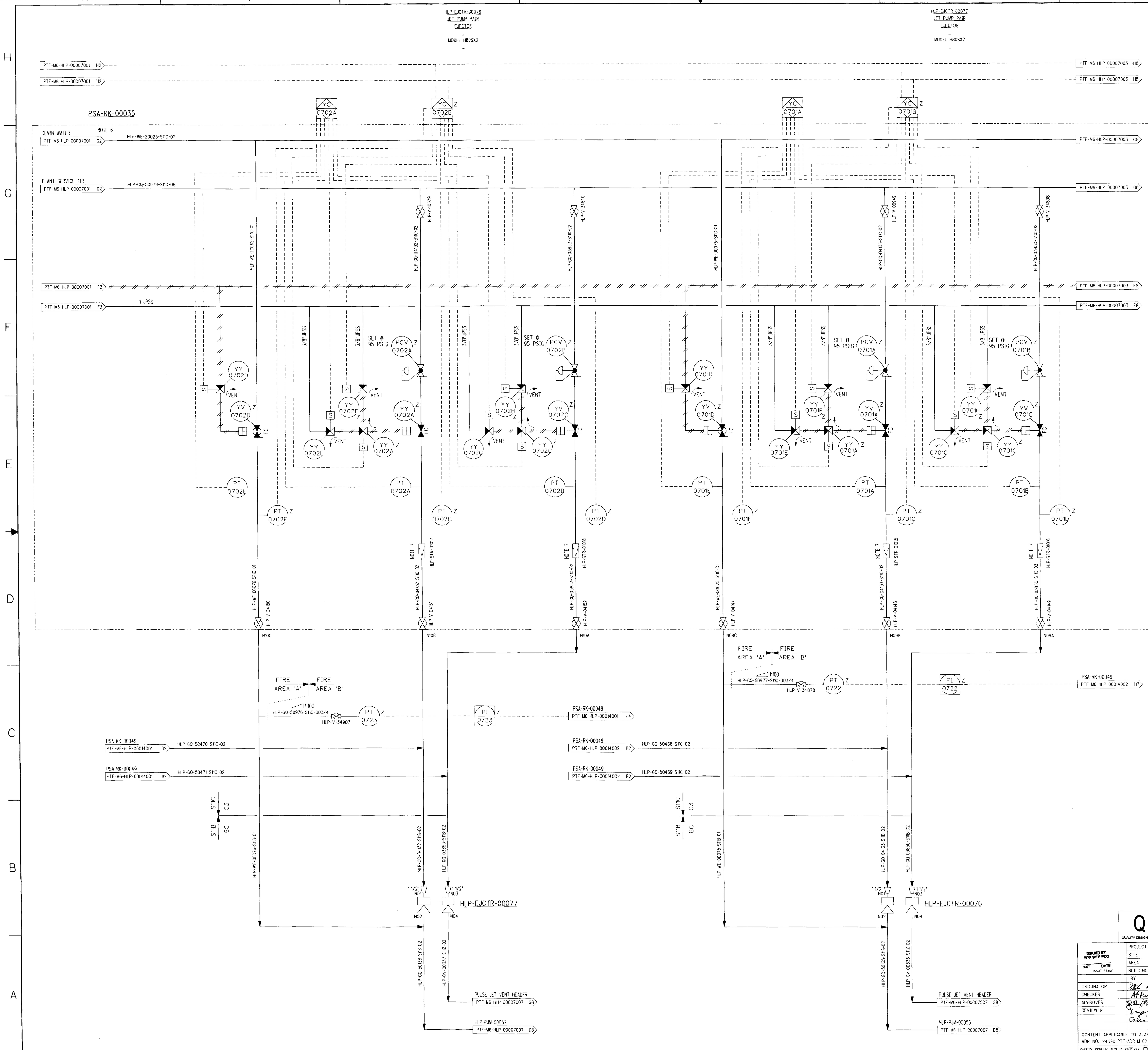

NOTES:

1. SEE DRAWINGS 24590-WTP-M6-50 00001 THROUGH 24590-WTP-M6-50-00008 FOR GENERAL NOTES, SYMBOLS AND LEGEND, AND GENERAL SLOPE REQUIREMENTS.
2. CONTENTS OF THIS DOCUMENT ARE DANGEROUS WASTE PERMIT AFFECTING.
3. THE PRESSURE BOUNDARY FOR ALL COMPONENTS ON THIS DRAWING IS QUALITY LEVEL Q AND SEISMIC CATEGORY SC-I.
4. ALL LINES SHOWN ON THIS DRAWING SHALL BE FREE DRAINING, UNLESS OTHERWISE NOTED.
5. FOR PROCESS INFORMATION REFER TO DRAWING 24590-PTF-M6-HLP-00002 (HLP VSL 00022).
6. SEE PJM JET PUMP PAIR CONTROL DETAIL 6 ON DRAWING 24590-WTP-M6-50-00007.
7. STRAINER IS A CONICAL PILGRIM HAT TYPE PERFORATED, WITH 1/8 INCH DIAMETER STAGGERED HOLES ON 3/16 INCH CENTERS PERMANENTLY INSTALLED.
8. THIS DRAWING IS CONVERTED FROM A SINGLE SHEET TO MULTI-SHEET DRAWINGS AND, IN PART, SUPERSEDES 24590-PTF-M6-HLP-00007 REV 2. THIS DRAWING INCLUDES INFORMATION FROM 24590-PTF-M6N-HLP-00035, -00055, 24590 PTF M6N M80T-00014, -00037, AND -00038.

HOLD/OPEN ITEMS:

NONE

REFERENCES:

1. THE REQUIRED BATCH SEQUENCES, PERMISSIVES, INTERLOCKS, ALARMS AND OPERATOR INTERFACE POINTS ARE FULLY DESCRIBED IN THE SOFTWARE FUNCTIONAL SPECIFICATION, FOR HLW LAG STORAGE AND FEED BLENDING PROCESS (HLP) SYSTEM, 24590-PTF-3PS-HLP-T0001.
2. FOR PERMISSIVES AND INTERLOCKS IMPORTANT TO SAFETY (ITS) SYSTEMS, REFER TO SAFETY SYSTEM REQUIREMENT SPECIFICATION FOR HYDROGEN PURGE AND MIXING SYSTEMS, 24590-PTF-3PS-PPJ-T0004 (FUTURE).

Please note that source, special nuclear, and byproduct materials, as defined in the Atomic Energy Act of 1954 (AEA) are regulated at the U. S. Department of Energy (DOE) facilities exclusively by DOE acting pursuant to its AEA authority. DOE asserts that pursuant to AEA, it has sole and exclusive responsibility and authority to regulate source, special nuclear, and byproduct materials at DOE-owned nuclear facilities. Information contained herein on radionuclides is provided for process description purposes only.

Q
QUALITY DESIGNATOR

REV	DESCRIPTION	ORG	CHKD	RVWD	APVD	DATE
0	ISSUED FOR CONSTRUCTION SEE NOTE 8	MDD	APP	ELS		4/25/08

REVISION HISTORY

ISSUED BY RPP-WTP PDC
INIT DATE
ISSUE STAMP

PROJECT No.	24590
SITE	HANFORD
AREA	200L
BUILDING No.	10

RIVER PROTECTION PROJECT
WASTE TREATMENT PLANT
2435 STEVENS CENTER PLACE
RICHLAND, WA 99354

CONTRACT No: DE-AC27-01RV14136

	BY	DATE
ORIGINATOR		4/18/08
CHECKER		4/21/08
APPROVER		4/25/08
REVIEWER		4/22/08
		4/23/08

P&ID - PTF
HLW LAG STORAGE AND FEED BLENDING SYSTEM UTILITY SERVICES
PSA-RK-00036

CONTENT APPLICABLE TO ALARA? [X] YES [ ] NO
ADR NO. 24590-PTF-ADR-M 02 005 REV: 7
SAFETY SCREEN REQUIRED? [X] YES [ ] NO E&NS INITIAL IF YES

SCALE: NONE | 24590-PTF-M6-HLP-00007002 | REV 0

SAFETY SCREEN IS REQUIRED FOR DRAWING TYPES IDENTIFIED IN 24590-WTP-GPP-SREG-002

'E' SIZE - 44x34
COMPUTER GENERATED - MANUAL CHANGES NOT PERMITTED

R10900611

04/18/2008 02:39:27 PM

FORM E_50N.DOC 02/2003

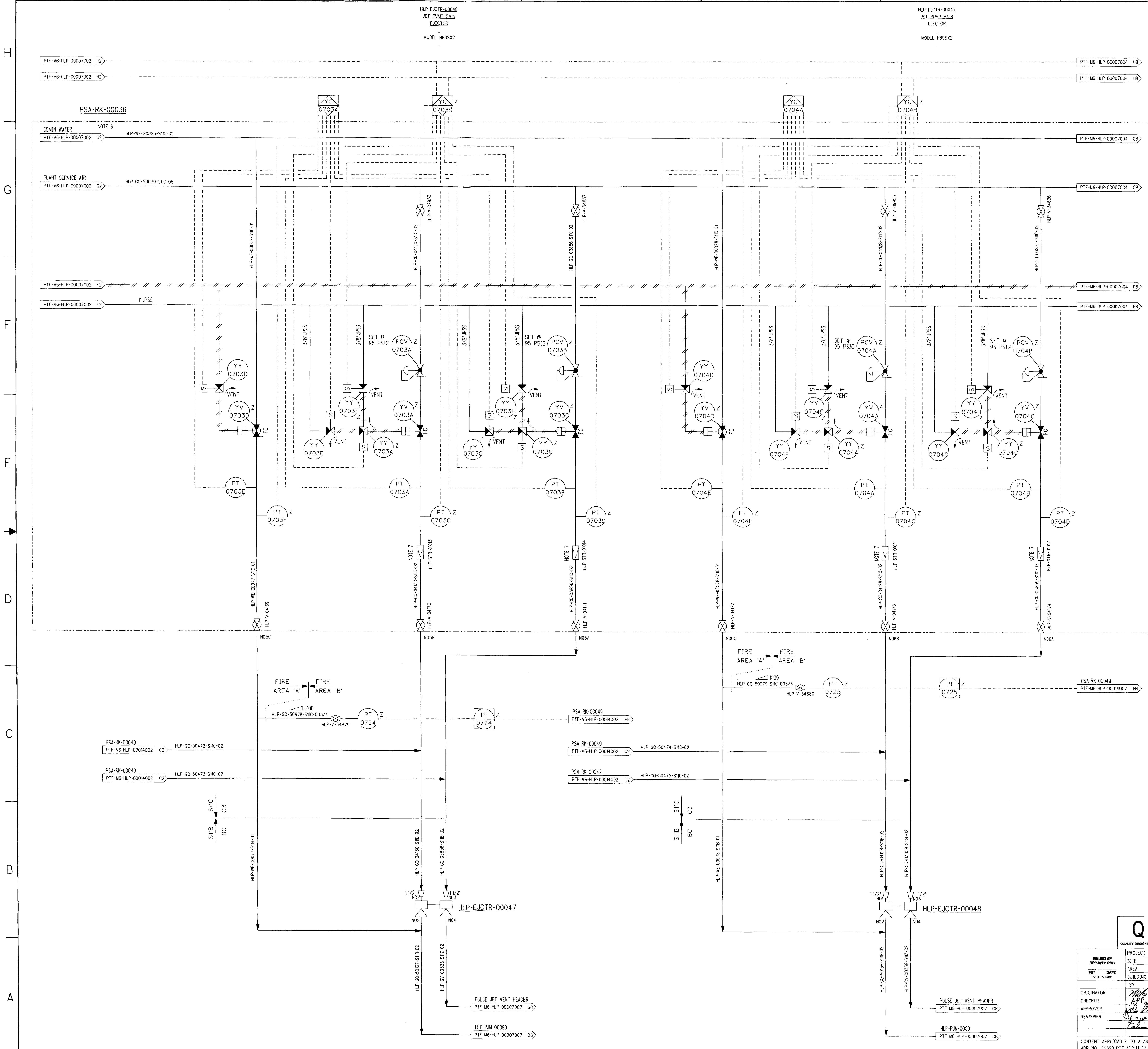

NOTES:

1. SEE DRAWINGS 24590-WTP-M6-50 00001 THROUGH 24590-WTP-M6-50-00008 FOR GENERAL NOTES, SYMBOLS AND LEGEND, AND GENERAL SLOPE REQUIREMENTS.
2. CONTENTS OF THIS DOCUMENT ARE DANGEROUS WASTE PERMIT AFFECTING.
3. THE PRESSURE BOUNDARY FOR ALL COMPONENTS ON THIS DRAWING IS QUALITY LEVEL Q AND SEISMIC CATEGORY SC-I.
4. ALL LINES SHOWN ON THIS DRAWING SHALL BE FREE DRAINING, UNLESS OTHERWISE NOTED.
5. FOR PROCESS INFORMATION REFER TO DRAWING 24590-PTF-M6-HLP-00002 (HLP VSL 00022).
6. SEE PJM JET PUMP PAIR CONTROL DETAIL 6 ON DRAWING 24590-WTP-M6 50 00007.
7. STRAINER IS A CONICAL PILGRIM HAT TYPE PERFORATED, WITH 1/8 INCH DIAMETER STAGGERED HOLES ON 3/16 INCH CENTERS PERMANENTLY INSTALLED.
8. THIS DRAWING IS CONVERTED FROM A SINGLE SHEET TO MULTI-SHEET DRAWINGS AND, IN PART, SUPERSEDES 24590-PTF-M6-HLP-00007 REV 2. THIS DRAWING INCLUDES INFORMATION FROM 24590-PTF-M6N-HLP-00035, -00055, 24590 PTF-M6N-M80T-00014, -00037, AND -00038.

HOLD/OPEN ITEMS:

NONE

REFERENCES:

1. THE REQUIRED BATCH SEQUENCES, PERMISSIVES, INTERLOCKS, ALARMS AND OPERATOR INTERFACE POINTS ARE FULLY DESCRIBED IN THE SOFTWARE FUNCTIONAL SPECIFICATION, FOR HLW LAG STORAGE AND FEED BLENDING PROCESS (HLP) SYSTEM, 24590-PTF-3PS-HLP-T0001.
2. FOR PERMISSIVES AND INTERLOCKS IMPORTANT TO SAFETY (ITS) SYSTEMS, REFER TO SAFETY SYSTEM REQUIREMENT SPECIFICATION FOR HYDROGEN PURGE AND MIXING SYSTEMS, 24590-PTF-3PS-PPJ-T0004 (FUTURE).

Please note that source, special nuclear, and byproduct materials, as defined in the Atomic Energy Act of 1954 (AEA) are regulated at the U. S. Department of Energy (DOE) facilities exclusively by DOE acting pursuant to its AEA authority. DOE asserts that pursuant to AEA, it has sole and exclusive responsibility and authority to regulate source, special nuclear, and byproduct materials at DOE-owned nuclear facilities. Information contained herein on radionuclides is provided for process description purposes only.

Q
QUALITY DESIGNATOR

REV	DESCRIPTION	ORG	CHKD	RVWD	APVD	DATE
0	ISSUED FOR CONSTRUCTION SEE NOTE 8	MDD	APP	CER ELS		4/25/08

REVISION HISTORY

ISSUED BY RPP-WTP PDC
INIT DATE
ISSUE STAMP

PROJECT No.	24590
SITE	HANFORD
AREA	200
BUILDING No.	10

	BY	DATE
ORIGINATOR		4/17/08
CHECKER	APP	4/17/08
APPROVER		4/25/08
REVIEWER		4/22/08
		4/23/08

CONTENT APPLICABLE TO ALARA? [X] YES [ ] NO
ADR NO. 24590-PTF-ADR-M-02-005 REV: 7
SAFETY SCREEN REQUIRED? [X] YES [ ] NO E&NS INITIAL IF YES

BECHTEL
RIVER PROTECTION PROJECT
WASTE TREATMENT PLANT
2435 STEVENS CENTER PLACE
RICHLAND, WA 99354

CONTRACT No: DE AC27-01RV14136

P&ID - PTF
HLW LAG STORAGE AND FEED BLENDING PROCESS SYSTEM UTILITY SERVICES
PSA-RK-00036

SCALE: NONE
24590-PTF-M6-HLP-00007003
REV 0

SAFETY SCREEN IS REQUIRED FOR DRAWING TYPES IDENTIFIED IN 24590-WTP-GPP-SREG-002
'E' SIZE - 44x34
COMPUTER GENERATED - MANUAL CHANGES NOT PERMITTED
R10900612
04/16/2008 06:15:16 PM

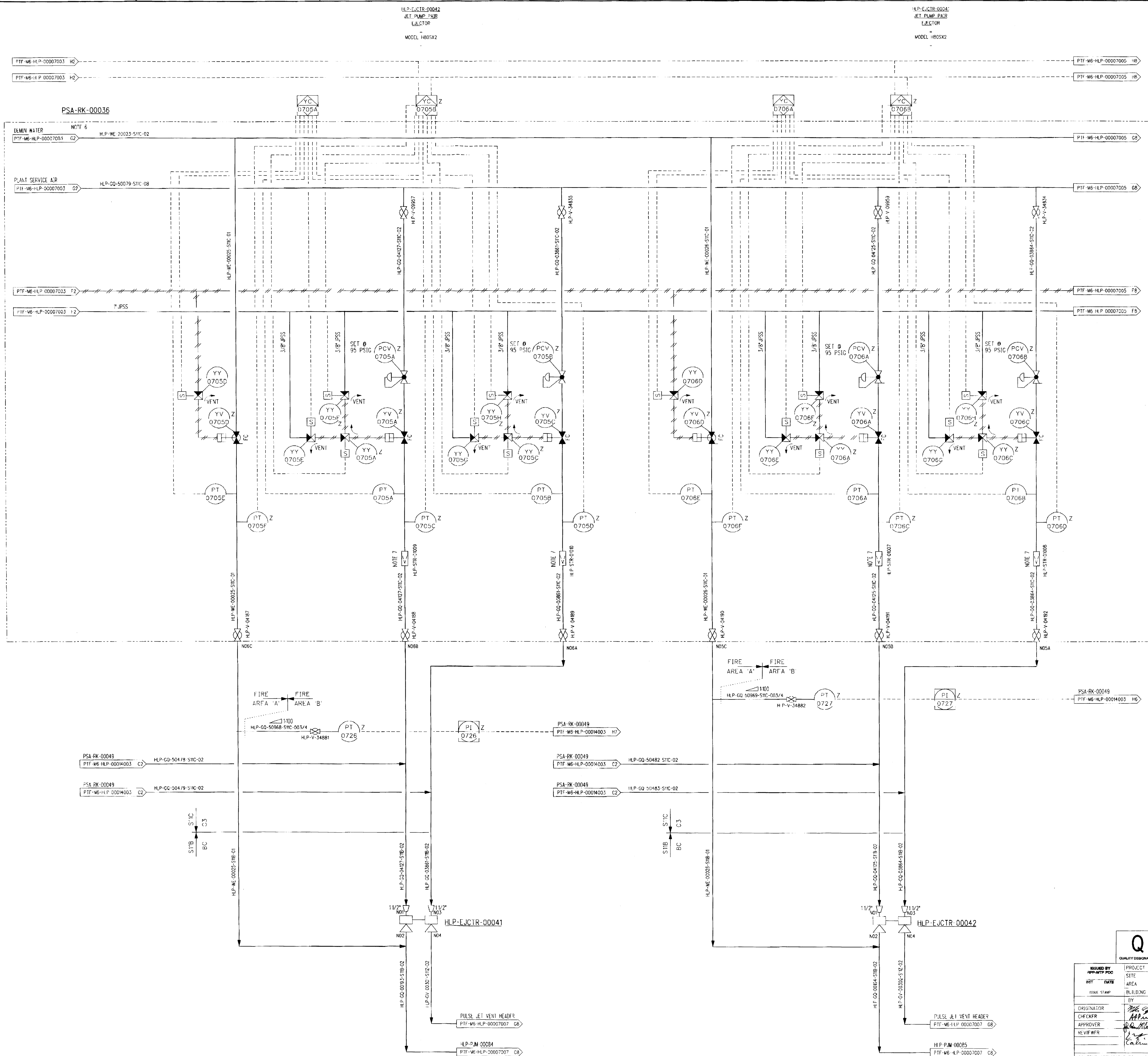

NOTES:

1. SEE DRAWINGS 24590-WTP-M6-50-00001 THROUGH 24590-WTP-M6-50-00008 FOR GENERAL NOTES, SYMBOLS AND LEGEND, AND GENERAL SLOPE REQUIREMENTS.
2. CONTENTS OF THIS DOCUMENT ARE DANGEROUS WASTE PERMIT AFFECTING.
3. THE PRESSURE BOUNDARY FOR ALL COMPONENTS ON THIS DRAWING IS QUALITY LEVEL Q AND SEISMIC CATEGORY SC-I.
4. ALL LINES SHOWN ON THIS DRAWING SHALL BE FREE DRAINING, UNLESS OTHERWISE NOTED.
5. FOR PROCESS INFORMATION REFER TO DRAWING 24590-PTF-M6-HLP-00002 (HLP-VSL-00022).
6. SEE PJM JET PUMP PAIR CONTROL DETAIL 6 ON DRAWING 24590-WTP-M6-50-00007.
7. STRAINER IS A CONICAL PILGRIM HAT TYPE PERFORATED, WITH 1/8 INCH DIAMETER STAGGERED HOLES ON 3/16 INCH CENTERS PERMANENTLY INSTALLED.
8. THIS DRAWING IS CONVERTED FROM A SINGLE SHEET TO MULTI SHEET DRAWINGS AND, IN PART, SUPERSEDES 24590-PTF-M6-HLP-00007 REV 2. THIS DRAWING INCLUDES INFORMATION FROM 24590-PTF-M6N-HLP-00035, -00055, 24590-PTF-M6N-M80T-00014, -00037, AND -00038.

HOLD/OPEN ITEMS:

NONE

REFERENCES:

1. THE REQUIRED BATCH SEQUENCES, PERMISSIVES, INTERLOCKS, ALARMS AND OPERATOR INTERFACE POINTS ARE FULLY DESCRIBED IN THE SOFTWARE FUNCTIONAL SPECIFICATION, FOR HLW LAG STORAGE AND FEED BLENDING PROCESS (HLP) SYSTEM, 24590-PTF-3PS-HLP-T0001.
2. FOR PERMISSIVES AND INTERLOCKS IMPORTANT TO SAFETY (ITS) SYSTEMS, REFER TO SAFETY SYSTEM REQUIREMENT SPECIFICATION FOR HYDROGEN PURGE AND MIXING SYSTEMS, 24590-PTF-3PS-PPJ-T0004 (FUTURE).

Please note that source, special nuclear, and byproduct materials, as defined in the Atomic Energy Act of 1954 (AEA) are regulated at the U. S. Department of Energy (DOE) facilities exclusively by DOE acting pursuant to its AEA authority. DOE asserts that pursuant to AEA, it has sole and exclusive responsibility and authority to regulate source, special nuclear, and byproduct materials at DOE-owned nuclear facilities. Information contained herein on radionuclides is provided for process description purposes only.

Q
QUALITY DESIGNATOR

REV	DESCRIPTION	ORG	CHKD	RVWD	APVD	DATE
0	ISSUED FOR CONSTRUCTION SEE NOTE 8	MDD	APP	CER ELS	BM RK	4/25/08

REVISION HISTORY

ISSUED BY RPP-WTP PDC
INIT DATE
ISSUE STAMP

PROJECT No.	24590
SITE	HANFORD
AREA	200E
BUILDING No.	10

RIVER PROTECTION PROJECT
WASTE TREATMENT PLANT
2435 STEVENS CENTER PLACE
RICHLAND, WA 99354

CONTRACT No: DE AC27-01RV14136

	BY	DATE
ORIGINATOR	[signature]	4/21/08
CHECKER	APP	4/21/08
APPROVER	[signature]	4/25/08
REVIEWER	[signature]	4/22/08
	Calvin Keely	4/23/08

CONTENT APPLICABLE TO ALARA? [X] YES [ ] NO
ADR NO. 24590-PTF-ADR-M-02-005 REV: 7
SAFETY SCREEN REQUIRED? [X] YES [ ] NO E&NS INITIAL IF YES

P&ID - PTF
HLW LAG STORAGE AND FEED BLENDING PROCESS SYSTEM UTILITY SERVICES PSA-RK-00036

SCALE: NONE
24590-PTF-M6-HLP-00007004
REV 0

SAFETY SCREEN IS REQUIRED FOR DRAWING TYPES IDENTIFIED IN 24590-WTP-GPP-SREG-002
2
'E' SIZE - 44x34
COMPUTER GENERATED - MANUAL CHANGES NOT PERMITTED
R10900613
04/21/2008 07:30:37 AM
PLOTTED BY: mmmcml

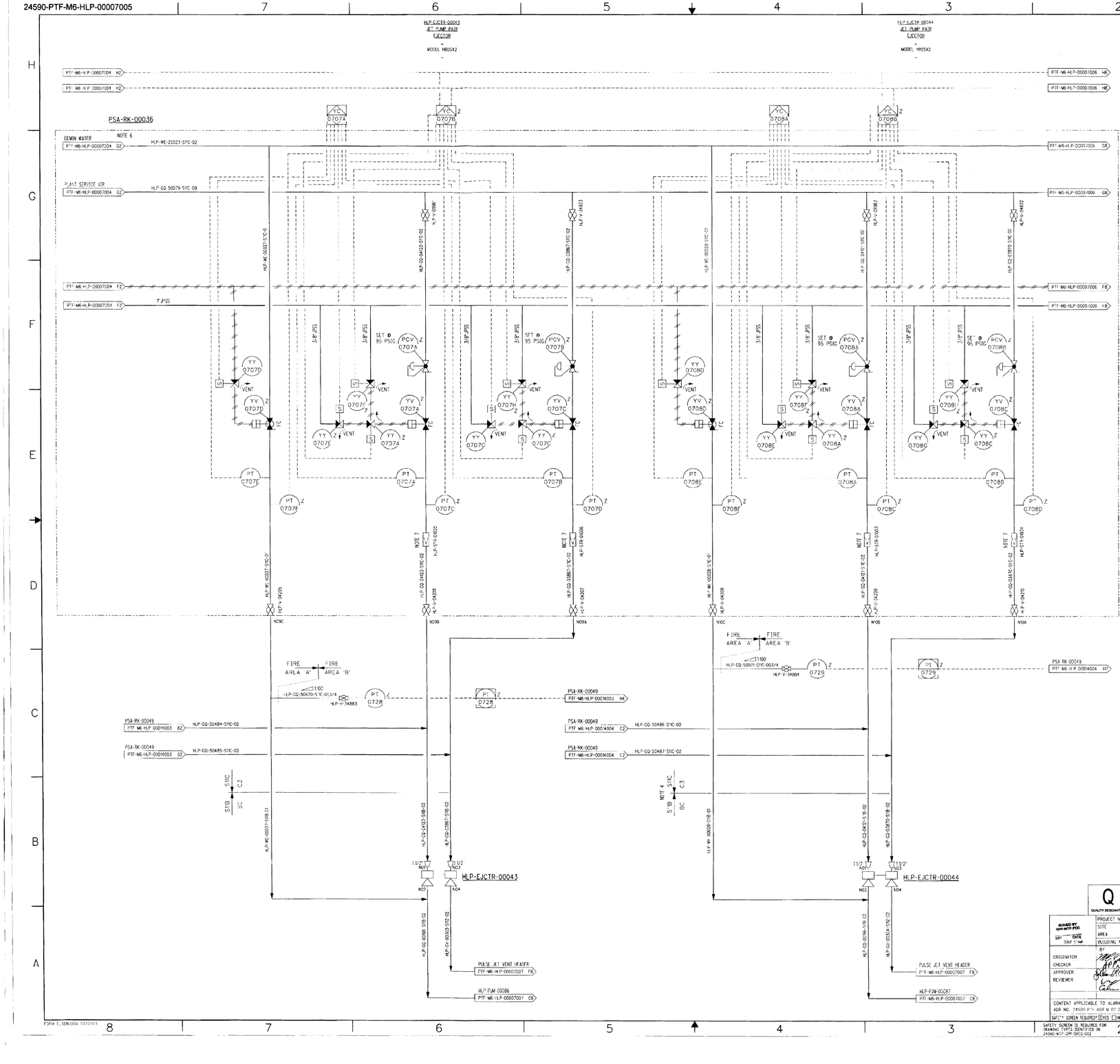

NOTES:

1. SEE DRAWINGS 24590-WTP-M6-50-00001 THROUGH 24590-WTP-M6-50-00008 FOR GENERAL NOTES, SYMBOLS AND LEGEND, AND GENERAL SLOPE REQUIREMENTS.
2. CONTENTS OF THIS DOCUMENT ARE DANGEROUS WASTE PERMIT AFFECTING.
3. THE PRESSURE BOUNDARY FOR ALL COMPONENTS ON THIS DRAWING IS QUALITY LEVEL 0 AND SEISMIC CATEGORY SC-1.
4. ALL LINES SHOWN ON THIS DRAWING SHALL BE FREE DRAINING, UNLESS OTHERWISE NOTED.
5. FOR PROCESS INFORMATION REFER TO DRAWING 24590-PTF-M6-HLP-00002 (LP VSL 00022).
6. SET PUM JET PUMP PAIR CONTROL DETAIL 6 ON DRAWING 24590-WTP-M6-50-00007.
7. STRAINER IS A CONICAL PILGRIM HAT TYPE PERFORATED WITH 1/8 INCH DIAMETER STAGGERED HOLES ON 3/16 INCH CENTERS PERMANENTLY INSTALLED.
8. THIS DRAWING IS CONVERTED FROM A SINGLE SHEET TO MULTI-SHEET DRAWINGS AND, IN PART, SUPERSEDES 24590-PTF-M6-HLP-00007 REV 2. THIS DRAWING INCLUDES INFORMATION FROM 24590-PTF-M6N-HLP-00035, -00055, 24590-PTF-M6N-M80T-00014, -00037, AND -00038.

HOLD/OPEN ITEMS:

NONE

REFERENCES:

1. THE REQUIRED BATCH SEQUENCES, PERMISSIVES, INTERLOCKS, ALARMS AND OPERATOR INTERFACE POINTS ARE FULLY DESCRIBED IN THE SOFTWARE FUNCTIONAL SPECIFICATION FOR HLW LAG STORAGE AND FEED BLENDING PROCESS (HLP) SYSTEM, 24590-PTF-3PS-HLP-T0001.
2. FOR PERMISSIVES AND INTERLOCKS IMPORTANT TO SAFETY (ITS) SYSTEMS, REFER TO SAFETY SYSTEM REQUIREMENT SPECIFICATION FOR HYDROGEN PURGE AND MIXING SYSTEMS, 24590-PTF-3PS-PPJT-T0004 (FUTURE).

Please note that source, special nuclear, and byproduct materials, as defined in the Atomic Energy Act of 1954 (AEA) are regulated at the U.S. Department of Energy (DOE) facilities exclusively by DOE acting pursuant to its AEA authority. DOE asserts that pursuant to AEA, it has sole and exclusive responsibility and authority to regulate source, special nuclear, and byproduct materials at DOE-owned nuclear facilities. Information contained herein on radionuclides is provided for process description purposes only.

Q	0	ISSUED FOR CONSTRUCTION SEE NOTE 8	MDD	APP	4/25/08
QUALITY DESIGNATOR	REV	DESCRIPTION	ORG	CHKD	RVWD APVD DATE

REVISION HISTORY

ISSUED BY RPP-WTP PDC — DATE ISSUED FOR IMP

	BY	DATE
ORIGINATOR		4/17/08
CHECKER		4/17/08
APPROVER		4/25/08
REVIEWER		4/25/08

CONTENT APPLICABLE TO ALARA? [X] YES [ ] NO
ADR NO. 24590-PTF-ADR-M-07-005 REV: 2
SAFETY SCREEN REQUIRED? [X] YES [ ] NO (ENG INITIAL IF YES)
SAFETY SCREEN IS REQUIRED FOR DRAWING TYPES IDENTIFIED IN 24590-WTP-GPP-SREQ-002

BECHTEL

RIVER PROTECTION PROJECT
WASTE TREATMENT PLANT
2435 STEVENS CENTER PLACE
RICHLAND, WA 99354

CONTRACT No. DE-AC27-01RV14136

P&ID - PTF
HLW LAG STORAGE AND FEED BLENDING PROCESS SYSTEM UTILITY SERVICES PSA-RK-00036

SCALE: NONE

24590-PTF-M6-HLP-00007005 — REV 0

1ST SHEET 44x34 — COMPUTER GENERATED - MANUAL CHANGES NOT PERMITTED

R19900614

04/25/2008 08:41:35 PM

PLOTTED BY mmcnutt
C:\Documents and Settings\mmcnutt\Desktop\24590-PTF-M6-HLP-00007005.dgn

PSFM ELSEVIER 02/2003

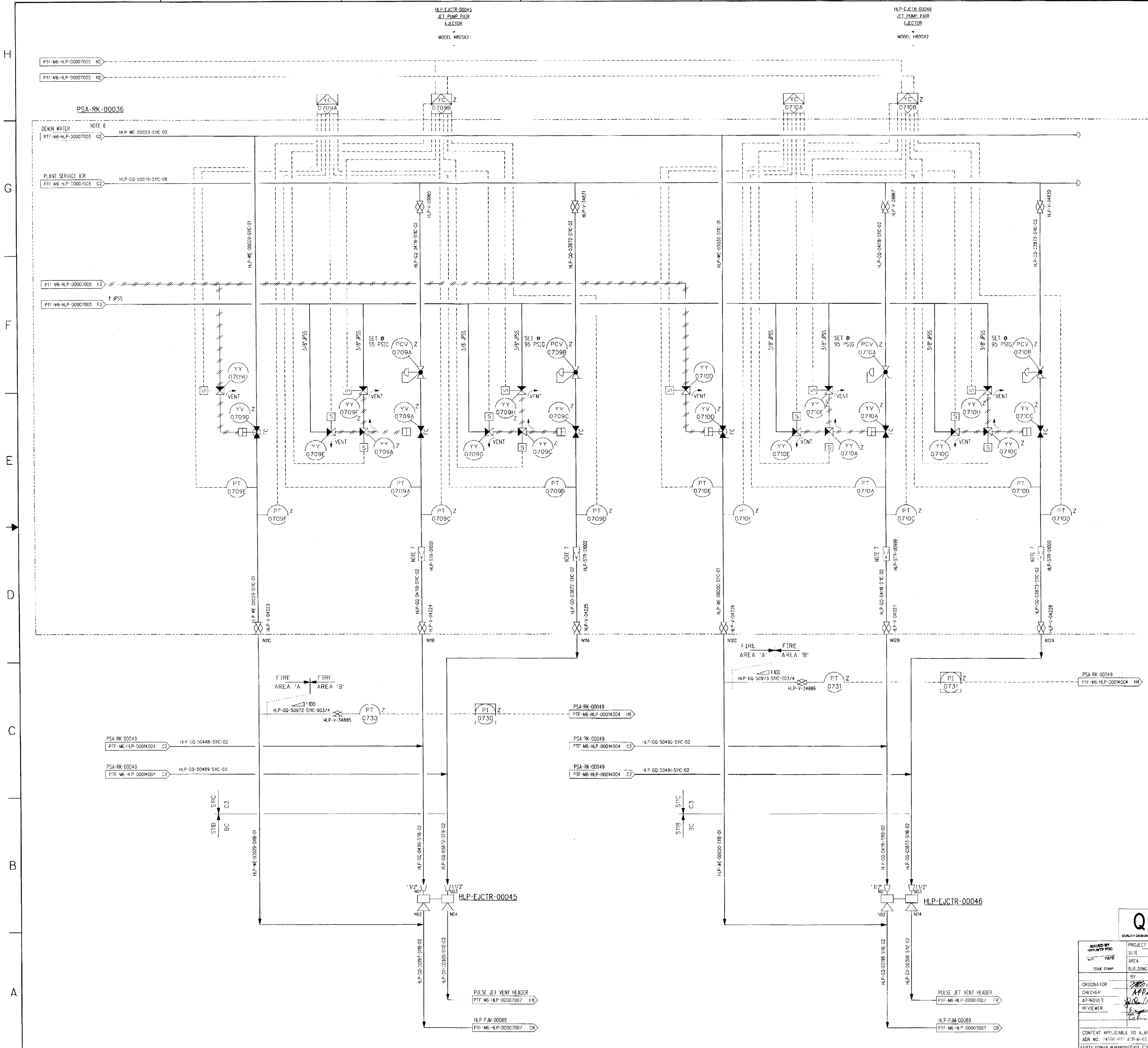

NOTES:

1. SEE DRAWINGS 24590-WTP-M6-50-00001 THROUGH 24590-WTP-M6-50-00008 FOR GENERAL NOTES, SYMBOLS AND LEGEND, AND GENERAL SLOPE REQUIREMENTS.
2. CONTENTS OF THIS DOCUMENT ARE DANGEROUS WASTE PERMIT AFFECTING.
3. THE PRESSURE BOUNDARY FOR ALL COMPONENTS ON THIS DRAWING IS QUALITY LEVEL Q AND SEISMIC CATEGORY SC I.
4. ALL LINES SHOWN ON THIS DRAWING SHALL BE FREE DRAINING, UNLESS OTHERWISE NOTED.
5. FOR PROCESS INFORMATION REFER TO DRAWING 24590-PTF-M6-HLP-00002 (HLP-VSL-00022).
6. SEE PJM JET PUMP PAIR CONTROL DETAIL 6 ON DRAWING 24590-WTP-M6-50-00007.
7. STRAINER IS A CONICAL PILGRIM HAT TYPE PERFORATED, WITH 1/8 INCH DIAMETER STAGGERED HOLES ON 3/16 INCH CENTERS PERMANENTLY INSTALLED.
8. THIS DRAWING IS CONVERTED FROM A SINGLE SHEET TO MULTI-SHEET DRAWINGS AND, IN PART, SUPERSEDES 24590-PTF-M6-HLP-00007 REV 2. THIS DRAWING INCLUDES INFORMATION FROM 24590-PTF-M6N-HLP-00035, -00055, 24590-PTF-M6N-M80T-00014, -00037, AND -00038.

HOLD/OPEN ITEMS:

NONE

REFERENCES:

1. THE REQUIRED BATCH SEQUENCES, PERMISSIVES, INTERLOCKS, ALARMS AND OPERATOR INTERFACE POINTS ARE FULLY DESCRIBED IN THE SOFTWARE FUNCTIONAL SPECIFICATION, FOR HLW LAG STORAGE AND FEED BLENDING PROCESS (HLP) SYSTEM, 24590-PTF-3PS-HLP-T0001.
2. FOR PERMISSIVES AND INTERLOCKS IMPORTANT TO SAFETY (ITS) SYSTEMS, REFER TO SAFETY SYSTEM REQUIREMENT SPECIFICATION FOR HYDROGEN PURGE AND MIXING SYSTEMS, 24590-PTF-3PS-PPJ-T0004 (FUTURE).

Please note that source, special nuclear, and byproduct materials, as defined in the Atomic Energy Act of 1954 (AEA) are regulated at the U. S. Department of Energy (DOE) facilities exclusively by DOE acting pursuant to its AEA authority. DOE asserts that pursuant to AEA, it has sole and exclusive responsibility and authority to regulate source, special nuclear, and byproduct materials at DOE-owned nuclear facilities. Information contained herein on radionuclides is provided for process description purposes only.

Q
QUALITY DESIGNATOR

REV	DESCRIPTION	ORG	CHKD	RVWD	APVD	DATE
0	ISSUED FOR CONSTRUCTION SEE NOTE 8	MDD	APP	ELS		4/25/08

REVISION HISTORY

ISSUED BY RPP-WTP PDC
INIT DATE
ISSUE STAMP

PROJECT No.	24590
SITE	HANFORD
AREA	200E
BUILDING No.	10

BECHTEL
RIVER PROTECTION PROJECT
WASTE TREATMENT PLANT
2435 STEVENS CENTER PLACE
RICHLAND, WA 99354

	BY	DATE
ORIGINATOR		4/17/08
CHECKER		4/17/08
APPROVER		4/25/08
REVIEWER		4/22/08
		4/23/08

CONTRACT No: DE-AC27-01RV14136

P&ID - PTF
HLW LAG STORAGE AND FEED BLENDING PROCESS SYSTEM UTILITY SERVICES PSA-RK-00036

CONTENT APPLICABLE TO ALARA? [X] YES [ ] NO
ADR NO. 24590-PTF-ADR-M-02-005 REV: 7
SAFETY SCREEN REQUIRED? [X] YES [ ] NO E&NS INITIAL IF YES

SCALE: NONE
24590-PTF-M6-HLP-00007006
REV 0

SAFETY SCREEN IS REQUIRED FOR DRAWING TYPES IDENTIFIED IN 24590-WTP-GPF-SREC-002
'E' SIZE - 44x34
COMPUTER GENERATED - MANUAL CHANGES NOT PERMITTED
R10900615
04/16/2008 06:15:15 PM
FORM E_SDN8004 02/2003

24590-PTF-M6-HLP-00007007

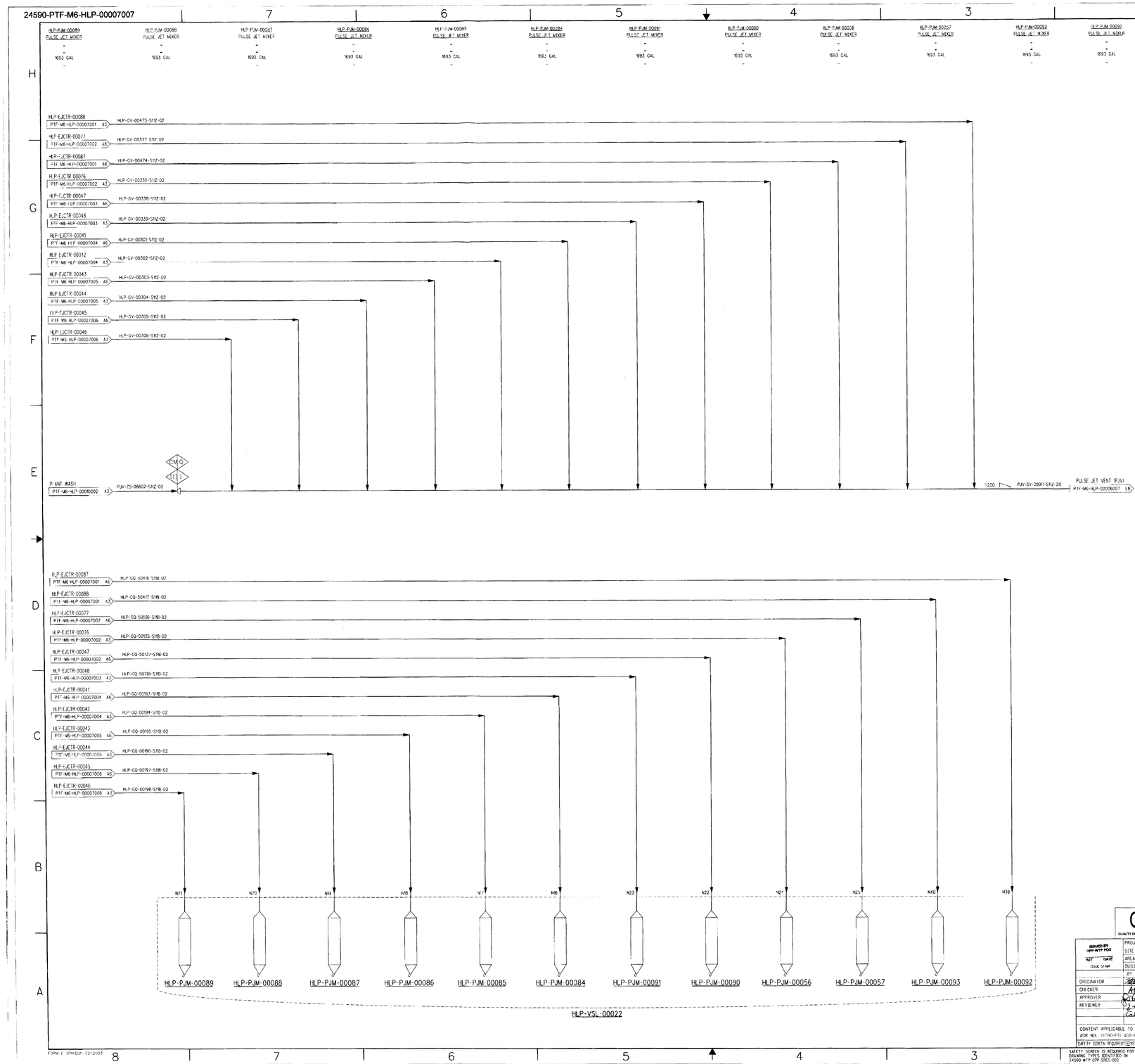

NOTES:

1. SEE DRAWINGS 24590-WTP-M6-50-00001 THROUGH 24590-WTP-M6-50-00008 FOR GENERAL NOTES, SYMBOLS AND LEGEND, AND GENERAL SLOPE REQUIREMENTS.
2. CONTENTS OF THIS DOCUMENT ARE DANGEROUS WASTE PERMIT AFFECTING.
3. THE PRESSURE BOUNDARY FOR ALL COMPONENTS ON THIS DRAWING IS QUALITY LEVEL Q AND SEISMIC CATEGORY SC-I.
4. ALL LINES SHOWN ON THIS DRAWING SHALL BE FREE DRAINING, UNLESS OTHERWISE NOTED.
5. FOR PROCESS INFORMATION REFER TO DRAWING 24590-PTF-M6-HLP-00002 (HLP-VS-00022).
6. THIS DRAWING IS CONVERTED FROM A SINGLE SHEET TO MULTI-SHEET DRAWINGS AND, IN PART, SUPERSEDES 24590 PTF M6 HLP 00007 REV 2. THIS DRAWING INCLUDES INFORMATION FROM 24590-PTF-M6N-HLP-00005, -00006, 24590-PTF-M6N-M8T-00037, AND -00038.

HOLD/OPEN ITEMS:

NONE

REFERENCES:

1. THE REQUIRED BATCH SEQUENCES, PERMISSIVES, INTERLOCKS, ALARMS AND OPERATOR INTERFACE POINTS ARE FULLY DESCRIBED IN THE SOFTWARE FUNCTIONAL SPECIFICATION, FOR HLW LAG STORAGE AND FEED BLENDING PROCESS (HLP) SYSTEM, 24590-PTF-3PS-HLP-T0001.
2. FOR PERMISSIVES AND INTERLOCKS IMPORTANT TO SAFETY (ITS) SYSTEMS, REFER TO SAFETY SYSTEM REQUIREMENT SPECIFICATION FOR HYDROGEN PURGE AND MIXING SYSTEMS, 24590-PTF-3PS-PPJJ-T0004 (FUTURE).

Please note that source, special nuclear, and byproduct materials, as defined in the Atomic Energy Act of 1954 (AEA) are regulated at the U. S. Department of Energy (DOE) facilities exclusively by DOE acting pursuant to its AEA authority. DOE asserts that pursuant to AEA, it has sole and exclusive responsibility and authority to regulate source, special nuclear, and byproduct materials at DOE-owned nuclear facilities. Information contained herein on radionuclides is provided for process description purposes only.

QUALITY DESIGNATOR	REV	DESCRIPTION	ORG	CHKD	RVWD	APVD	DATE
Q	0	ISSUED FOR CONSTRUCTION SEE NOTE 6	MDD	APP	ECS	JBW	4/25/08

REVISION HISTORY

ISSUED BY rpp-WTP PDO

RFT DATE

ISSUE STAMP

	BY	DATE
ORIGINATOR		4/17/08
CHECKER	APPinch	4/19/08
APPROVER		4/25/08
REVIEWER		4/24/08
		4/24/08

CONTENT APPLICABLE TO ALARA? [X] YES [ ] NO
ADM NO. 24590-PTF-ADM-M-T7-0004 REV: 7
SAFETY CONTR REQUIREMENTS CINDTANS INITIAL IF YES

PROJECT No. 24590
SITE HANFORD
AREA 200E
BUILDING No. 99

BECHTEL NATIONAL, INC.

RIVER PROTECTION PROJECT
WASTE TREATMENT PLANT
2435 STEVENS CENTER PLACE
RICHLAND, WA 99354

CONTRACT No. DE-AC27-01RV14136

P&ID - PTF
HLW LAG STORAGE AND FEED BLENDING PROCESS SYSTEM VESSEL PJM HLP-VSL-00022

SAFETY SCREEN IS REQUIRED FOR DRAWING TYPES IDENTIFIED IN 24590-WTP-DPP-SRCI-002

SCALE: NONE

D SIZE: 44x34
COMPUTER GENERATED - MANUAL CHANGES NOT PERMITTED

24590-PTF-M6-HLP-00007007 REV 0

04/15/2008 08:15:10 PM

FORM E SW4DGN 02/2003

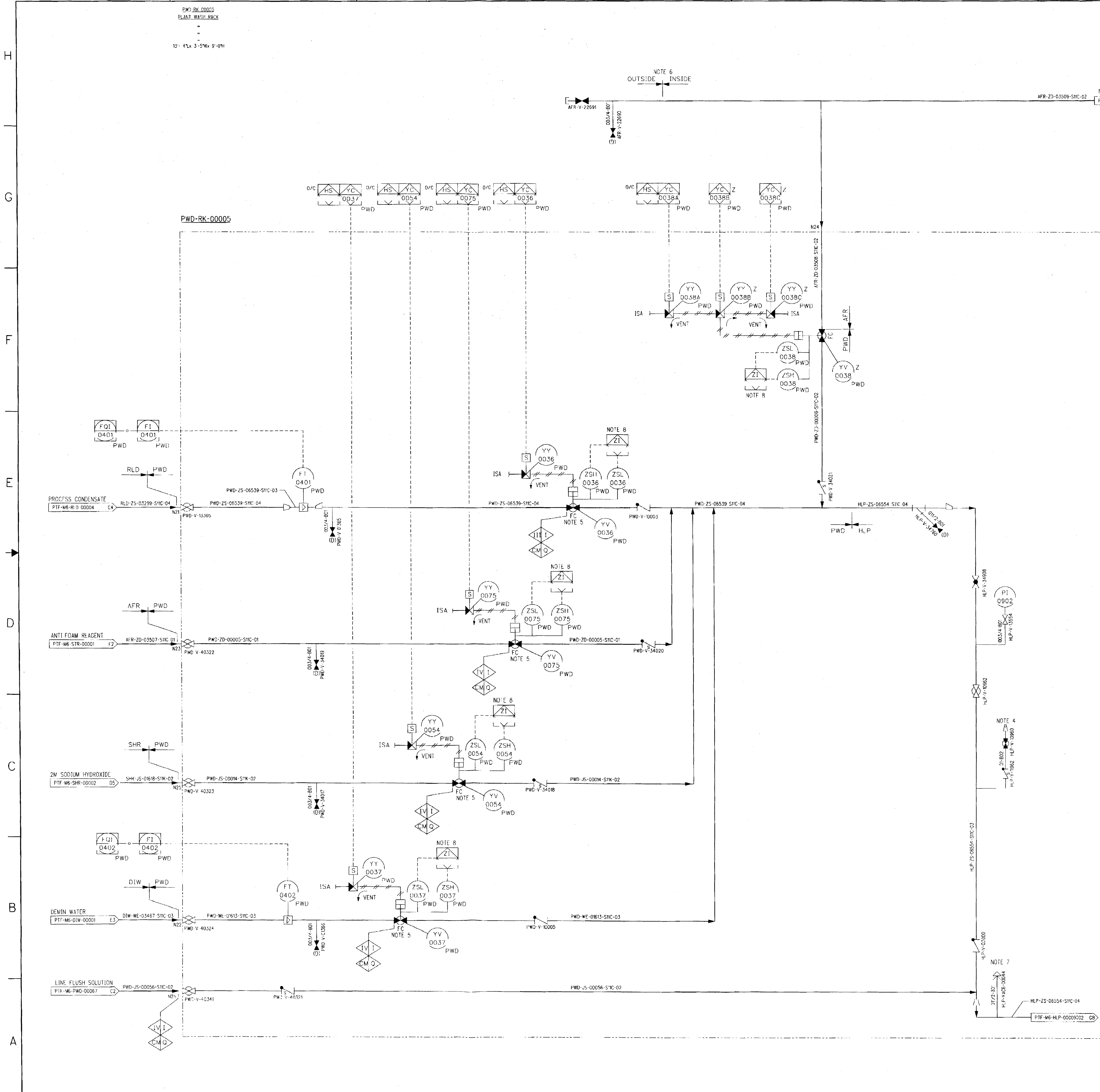

NOTES:

1. SEE DRAWINGS 24590-WTP-M6-50-00001 THROUGH 24590-WTP-M6-50-00008 FOR GENERAL NOTES, SYMBOLS AND LEGEND, AND GENERAL SLOPE REQUIREMENTS.
2. CONTENTS OF THIS DOCUMENT ARE DANGEROUS WASTE PERMIT AFFECTING.
3. THE PRESSURE BOUNDARY FOR ALL COMPONENTS ON THIS DRAWING IS IDENTIFIED AS IMPORTANT TO SAFETY (ITS), QUALITY LEVEL Q AND SEISMIC CATEGORY SC-I, UNLESS OTHERWISE NOTED.
4. CONNECTION PROVIDED FOR REAGENTS, PLANT WASH, AND SERVICE AIR.
5. VALVES INTERLOCKED TO PREVENT MULTIPLE VALVE OPERATION.
6. ANTI-FOAM REAGENT WILL BE PROVIDED ON AS NEEDED BASIS POST DESIGN BASIS EARTHQUAKE CONDITION.
7. BRANCH TO BE CONNECTED TO HORIZONTAL RUN OF HEADER PIPE.
8. DEVICE IS LOCATED OUTSIDE OF THE RACK BOUNDARY AND IN THE INTEGRATED CONTROL NETWORK (ICN).
9. THIS DRAWING IS CONVERTED FROM A SINGLE SHEET TO MULTI-SHEET DRAWINGS AND, IN PART, SUPERSEDES 24590-PTF-M6-HLP-00009 REV 2. THIS DRAWING INCLUDES INFORMATION FROM 24590-PTF-M6N-HLP-00040, -00049, 24590-PTF-M6N-M80T-00025, -00026, -00037, -00038.

HOLD/OPEN ITEMS:

NONE

REFERENCES:

1. THE REQUIRED BATCH SEQUENCES, PERMISSIVES, INTERLOCKS, ALARMS AND OPERATOR INTERFACE POINTS ARE FULLY DESCRIBED IN THE SOFTWARE FUNCTIONAL SPECIFICATION FOR PWD-PLANT WASH AND DISPOSAL PROCESS SYSTEM 24590-PTF-3PS-PWD-T0001 AND FOR HLP-HIGH LEVEL WASTE LAG STORAGE AND FEED BLENDING PROCESS SYSTEM 24590-PTF-3PS-HLP-T0001, AND FOR PVP PRETREATMENT VESSEL VENT PROCESS SYSTEM 24590-PTF-3PS-PVP-T0001.
2. FOR PERMISSIVES AND INTERLOCKS TO IMPORTANT TO SAFETY SYSTEM (ITS) REFER TO SAFETY SYSTEM REQUIREMENT SPECIFICATION FOR HYDROGEN PURGE AND MIXING SYSTEMS, 24590-PTF-3PS-PPJ-T0004 (FUTURE).

Please note that source, special nuclear, and byproduct materials, as defined in the Atomic Energy Act of 1954 (AEA) are regulated at the U. S. Department of Energy (DOE) facilities exclusively by DOE acting pursuant to its AEA authority. DOE asserts that pursuant to AEA, it has sole and exclusive responsibility and authority to regulate source, special nuclear, and byproduct materials at DOE-owned nuclear facilities. Information contained herein on radionuclides is provided for process description purposes only.

DRAWING INDEX

DWG NO	REV	TITLE
24590-PTF-M6-HLP-00009001	0	HLP SYSTEM UTILITY SERVICES PWD-RK-00005
24590-PTF-M6-HLP-00009002	0	HLP SYSTEM UTILITY SERVICES PWD-RK-00005
24590-PTF-M6-HLP-00009003	0	HLP SYSTEM UTILITY SERVICES PWD-RK-00005

REVISION HISTORY

REV	DESCRIPTION	ORG	CHKD	RVWD	APVD	DATE
0	ISSUED FOR CONSTRUCTION SEE NOTE 9	MDD	APP	CER ELS	JWO RCA	5/28/08

Q
QUALITY DESIGNATOR

ISSUED BY RPP-WTP PDC
ISSUE STAMP

PROJECT No.	24590
SITE	HANFORD
AREA	200E
BUILDING No.	10

RIVER PROTECTION PROJECT
WASTE TREATMENT PLANT
2435 STEVENS CENTER PLACE
RICHLAND, WA 99354

CONTRACT No: DE-AC27 01RV14136

	BY	DATE
ORIGINATOR	[signature]	5/27/08
CHECKER	[signature]	5/27/08
APPROVER	[signature]	5/28/08
REVIEWER	[signature]	5/28/08
	[signature]	5/28/08

CONTENT APPLICABLE TO ALARA? [X] YES [ ] NO
ADR NO. 24590-PTF-ADR-M-02-005 REV: 7
SAFETY SCREEN REQUIRED? [X] YES [ ] NO E&NS INITIAL IF YES

P&ID - PTF
HLW LAG STORAGE AND FEED BLENDING SYSTEM PLANT WASH RACK PWD-RK-00005

SCALE: NONE

24590-PTF-M6-HLP-00009001 REV 0

PWD-RK-00005

PTF-M6-HLP-00009001 B3

HLP-ZS-06554-S1C-04

PTF-M6-HLP-00009003 G8

PWD-BLND-00018

PWD-V-3039

HLP-V-00495

PVP-V-25380

PVP-V-25878

HLP-V-25823

HLP-V-9356

HLP-V-9832

HLP-V-00825

HLP-V-9836

HLP-V-00836

PWD-ZE-06424-S1C-C2

HLP-ZS-06537-S1C-02

PVP-ZS-00077-S1C-02

HLP-ZS-06543-S1C-01

HLP-ZS-06545-S1C-02

HLP-ZS-06543-S1C-03

HLP-ZS-06542-S1C-02

HLP-ZS-06539-S1C-02

HLP-ZS-06541-S1C-02

HLP-ZS-06542-S1C-02

HLP-ZS-06539-S1C-02

HLP-ZS-06540-S1C-02

PVP-ZS-00077-S1C-02

N01	1102A	1102B	1102C
N02	0901A	0901B	0901C
N04	1104A	1104B	1104C

ISA

VENT

ZSH 1102

ZSL 1102

ZSH 0901

ZSL 0901

ZSH 1104

ZSL 1104

NOTE 6

N03

NOTE 5

HLP-BRKPT-00004

N07

N08

V11

NOTE 5

HLP-VSL-00027A

PROCESS VESSEL VENT HEADER FLUSH

PTF-M6-PVP-00002 D2

HLP-PMP-00019B

PTF-M6-HLP-00003 C8

HLP-PVP-00019A

PTF-ME-HLP-00003 D6

HLP-PMP-00017B

PTF-M6-HLP-00001 A5

PTF-M6-PVP-00002 C2

ITS WATER FLUSH

PTF-M6-DIW-00004001 XX

PWD-ZS-67038-S1C-02

PWD-ZS-67039-S1C-02

PWD-ZS-67040-S1C-02

NOTES:

1. SEE DRAWINGS 24590-WTP-M6-50-00001 THROUGH 24590-WTP-M6-50-00008 FOR GENERAL NOTES, SYMBOLS AND LEGEND, AND GENERAL SLOPE REQUIREMENTS.
2. CONTENTS OF THIS DOCUMENT ARE DANGEROUS WASTE PERMIT AFFECTING.
3. THE PRESSURE BOUNDARY FOR ALL COMPONENTS ON THIS DRAWING IS IDENTIFIED AS IMPORTANT TO SAFETY (ITS), QUALITY LEVEL Q AND SEISMIC CATEGORY SC-I, UNLESS OTHERWISE NOTED. PLANT WASH RACK IS QUALITY LEVEL Q AND SEISMIC CATEGORY SC-I. ALL INTERNAL SUPPORTS AND WELDS THAT INTERACT WITH THE PRIMARY CONTAINMENT BARRIER (VESSEL) SHALL MAINTAIN EQUAL QUALITY AND SEISMIC CATEGORY AS THE PARENT.
4. FOR PROCESS INFORMATION REFER TO DRAWING 24590 PTF M6-HLP-00001 (HLP-VSL-00027A) AND (HLP-BRKPT 00004).
5. PIPE ROUTING LIMITED TO A MAXIMUM OF AN 8'-1" STRAIGHT VERTICAL DROP AT THE CONNECTION TO THE VESSEL.
6. DEVICE IS LOCATED OUTSIDE OF THE RACK BOUNDARY AND IN THE INTEGRATED CONTROL NETWORK (ICN).
7. THIS DRAWING IS CONVERTED FROM A SINGLE SHEET TO MULTI-SHEET DRAWINGS AND, IN PART, SUPERSEDES 24590 PTF M6-HLP-00009 REV 2. THIS DRAWING INCLUDES INFORMATION FROM 24590-PTF-M6N-HLP-00040, -00049, 24590-PTF-M6N-M8DT-00025, -00026, -00037, -00038.

HOLD/OPEN ITEMS:

NONE

REFERENCES:

1. THE REQUIRED BATCH SEQUENCES, PERMISSIVES, INTERLOCKS, ALARMS AND OPERATOR INTERFACE POINTS ARE FULLY DESCRIBED IN THE SOFTWARE FUNCTIONAL SPECIFICATION FOR PWD-PLANT WASH AND DISPOSAL PROCESS SYSTEM 24590-PTF-3PS-PWD-T0001 AND FOR HLP-HIGH LEVEL WASTE LAG STORAGE AND FEED BLENDING PROCESS SYSTEM 24590-PTF-3PS-HLP-T0001 AND /OR PVP-PRETREATMENT VESSEL VENT PROCESS SYSTEM 24590-PTF-3PS-PVP-T0001.
2. FOR PERMISSIVES AND INTERLOCKS TO IMPORTANT TO SAFETY SYSTEM (ITS) REFER TO SAFETY SYSTEM REQUIREMENT SPECIFICATION FOR HYDROGEN PURGE AND MIXING SYSTEMS, 24590-PTF-3PS-PPU-T0004 (FUTURE).

Please note that source, special nuclear, and byproduct materials, as defined in the Atomic Energy Act of 1954 (AEA) are regulated at the U. S. Department of Energy (DOE) facilities exclusively by DOE acting pursuant to its AEA authority. DOE asserts that pursuant to AEA, it has sole and exclusive responsibility and authority to regulate source, special nuclear, and byproduct materials at DOE-owned nuclear facilities. Information contained herein on radionuclides is provided for process description purposes only.

REV	DESCRIPTION	ORG	CHKD	RVWD	APVD	DATE
0	ISSUED FOR CONSTRUCTION SEE NOTE 7	HDD	APD	CEK	KRA	05/12/08

REVISION HISTORY

Q — QUALITY DESIGNATOR

ISSUED BY REMOTE PDO RIGHT STAMP

	BY	DATE
ORIGINATOR		5/1/08
CHECKER		5/15/08
APPROVER		5/9/08
REVIEWER		5/14/08
		5/14/08

CONTENT APPLICABLE TO ALARA? [X] YES [ ] NO

ADR NO.: 24590-PTF-NOR-W-02-005 REV.: 7

SAFETY SCREEN REQUIRED? [X] YES [ ] NO (DAAS INITIAL IF YES)

SAFETY SCREEN IS REQUIRED FOR DRAWING TYPES IDENTIFIED IN 24590-WTP-GPP-SREQ-002

PROJECT No. 24590
SITE HANFORD
AREA 200E
BUILDING No. 10

BECHTEL

RIVER PROTECTION PROJECT
WASTE TREATMENT PLANT
2435 STEVENS CENTER PLACE
RICHLAND, WA 99354

CONTRACT No: DE-AC27-01RV14136

P&ID - PTF
HLW LAG STORAGE AND FEED BLENDING SYSTEM PLANT WASH RACK PWD-RK-00005

SCALE: NONE

24590-PTF-M6-HLP-00009002

REV. 0

E SIZE = 44x34

COMPUTER GENERATED - MANUAL CHANGES NOT PERMITTED

R10N22012

05/12/2008 03:31:00 PM

FORM E_SDNDGN 02/2003

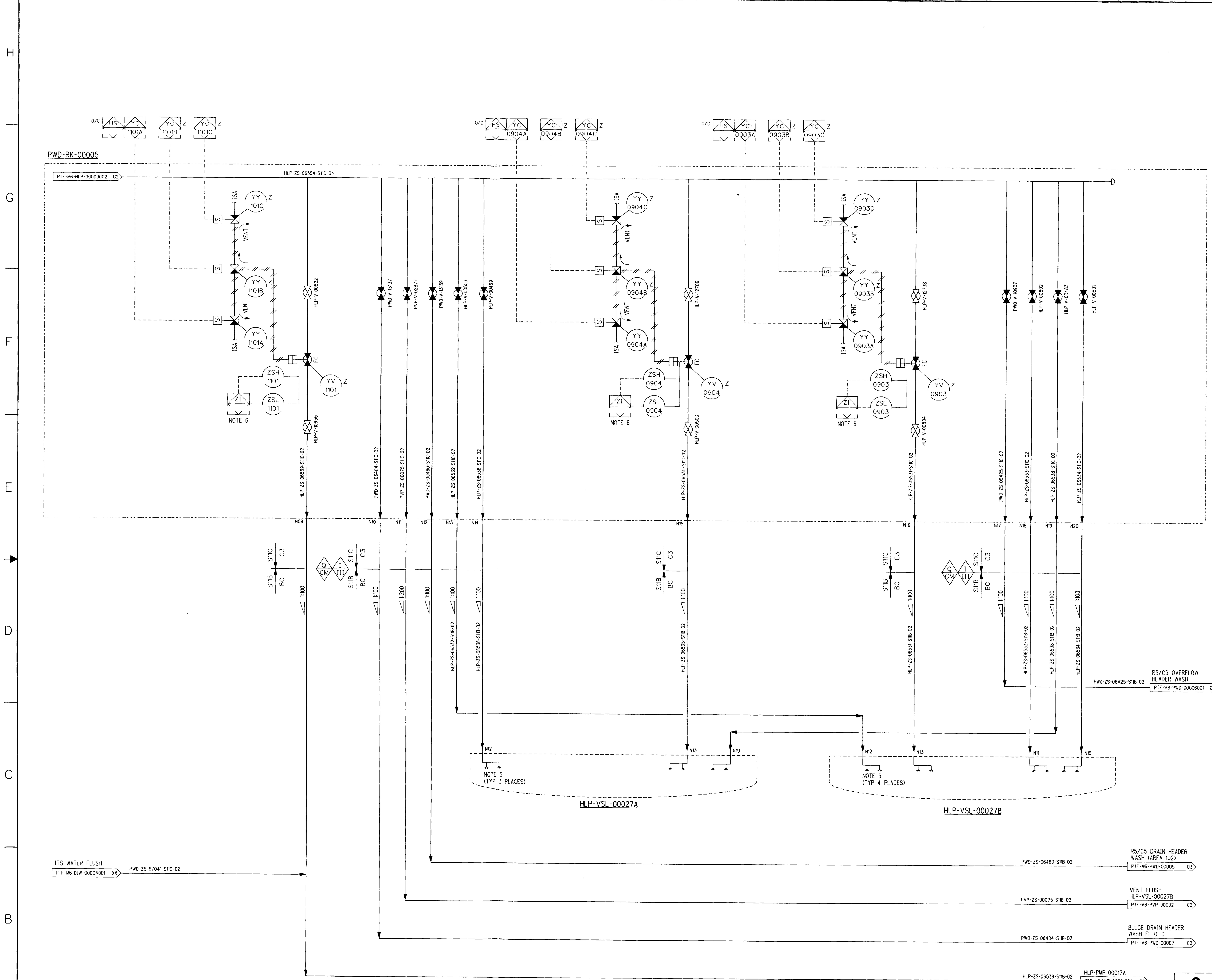

NOTES:

1. SEE DRAWINGS 24590-WTP-M6-50-00001 THROUGH 24590-WTP-M6-50-00008 FOR GENERAL NOTES, SYMBOLS AND LEGEND, AND GENERAL SLOPE REQUIREMENTS.
2. CONTENTS OF THIS DOCUMENT ARE DANGEROUS WASTE PERMIT AFFECTING.
3. THE PRESSURE BOUNDARY FOR ALL COMPONENTS ON THIS DRAWING IS IDENTIFIED AS IMPORTANT TO SAFETY (ITS), QUALITY LEVEL Q AND SEISMIC CATEGORY SC-I, UNLESS OTHERWISE NOTED. PLANT WASH RACK IS QUALITY LEVEL Q AND SEISMIC CATEGORY SC-I. ALL INTERNAL SUPPORTS AND WELDS THAT INTERACT WITH THE PRIMARY CONTAINMENT BARRIER (VESSEL) SHALL MAINTAIN EQUAL QUALITY AND SEISMIC CATEGORY AS THE PARENT.
4. FOR PROCESS INFORMATION REFER TO DRAWING 24590-PTF-M6-HLP-00001 (HLP-VSL-00027A/B).
5. PIPE ROUTING LIMITED TO A MAXIMUM OF AN 8 FT STRAIGHT VERTICAL DROP AT THE CONNECTION TO THE VESSEL, EXCEPT PIPELINES HLP-ZS-06536 AND HLP-ZS-06538 (HLP-VSL-00027A) ARE LIMITED TO A MAXIMUM OF 8 FT 6 IN STRAIGHT VERTICAL DROP.
6. DEVICE IS LOCATED OUTSIDE OF THE RACK BOUNDARY AND IN THE INTEGRATED CONTROL NETWORK (ICN).
7. THIS DRAWING IS CONVERTED FROM A SINGLE SHEET TO MULTI-SHEET DRAWINGS AND, IN PART, SUPERSEDES 24590-PTF-M6-HLP-00009 REV 2. THIS DRAWING INCLUDES INFORMATION FROM 24590-PTF-M6N-HLP-00040, -00049, 24590-PTF-M6N-M80T-00025, -00026, -00037, -00038.

HOLD/OPEN ITEMS:

NONE

REFERENCES:

1. THE REQUIRED BATCH SEQUENCES, PERMISSIVES, INTERLOCKS, ALARMS AND OPERATOR INTERFACE POINTS ARE FULLY DESCRIBED IN THE SOFTWARE FUNCTIONAL SPECIFICATION FOR PWD-PLANT WASH AND DISPOSAL PROCESS SYSTEM 24590-PTF-3PS-PWD-T0001 AND FOR HLP-HIGH LEVEL WASTE LAG STORAGE AND FEED BLENDING PROCESS SYSTEM 24590-PTF-3PS-HLP-T0001, AND FOR PVP-PRETREATMENT VESSEL VENT PROCESS SYSTEM 24590 PTF-3PS-PVP-T0001.
2. FOR PERMISSIVES AND INTERLOCKS TO IMPORTANT TO SAFETY SYSTEM (ITS) REFER TO SAFETY SYSTEM REQUIREMENT SPECIFICATION FOR HYDROGEN PURGE AND MIXING SYSTEMS, 24590-PTF-3PS-PPJ-T0004 (FUTURE).

Please note that source, special nuclear, and byproduct materials, as defined in the Atomic Energy Act of 1954 (AEA) are regulated at the U. S. Department of Energy (DOE) facilities exclusively by DOE acting pursuant to its AEA authority. DOE asserts that pursuant to AEA, it has sole and exclusive responsibility and authority to regulate source, special nuclear, and byproduct materials at DOE-owned nuclear facilities. Information contained herein on radionuclides is provided for process description purposes only.

Q
QUALITY DESIGNATOR

REV	DESCRIPTION	ORG	CHKD	RVWD	APVD	DATE
0	ISSUED FOR CONSTRUCTION SEE NOTE 7	MOD	APP	ELS	RGS	05/19/08

REVISION HISTORY

ISSUED BY RPP-WTP PDC
ISSUE STAMP

PROJECT No.	24590
SITE	HANFORD
AREA	200E
BUILDING No.	10

RIVER PROTECTION PROJECT
WASTE TREATMENT PLANT
2435 STEVENS CENTER PLACE
RICHLAND, WA 99354

CONTRACT No: DE-AC27-01RV14136

	BY	DATE
ORIGINATOR	[signature]	5/12/08
CHECKER	[signature]	5/13/08
APPROVER	[signature]	5/19/08
REVIEWER	[signature]	5/14/08
	[signature]	5/14/08

CONTENT APPLICABLE TO ALARA? [X] YES [ ] NO
ADR NO. 24590-PTF-ADR-M-02 005 REV: 7
SAFETY SCREEN REQUIRED? [X] YES [ ] NO E&NS INITIAL IF YES

P&ID - PTF HLW LAG STORAGE AND FEED BLENDING SYSTEM PLANT WASH RACK PWD-RK-00005

SCALE: NONE
24590-PTF-M6-HLP-00009003
REV 0

SAFETY SCREEN IS REQUIRED FOR DRAWING TYPES IDENTIFIED IN 24590-WTP-GPP-SREG-002
'E' SIZE - 44x34
COMPUTER GENERATED - MANUAL CHANGES NOT PERMITTED
R10922013
05/12/2008 03:30:59 PM
PLOTTED BY mmcmill
C:\Work\mmcmill\dms03837\PTFM6HLP00009003.dgn
FORM E_SEN.DGN 02/2003

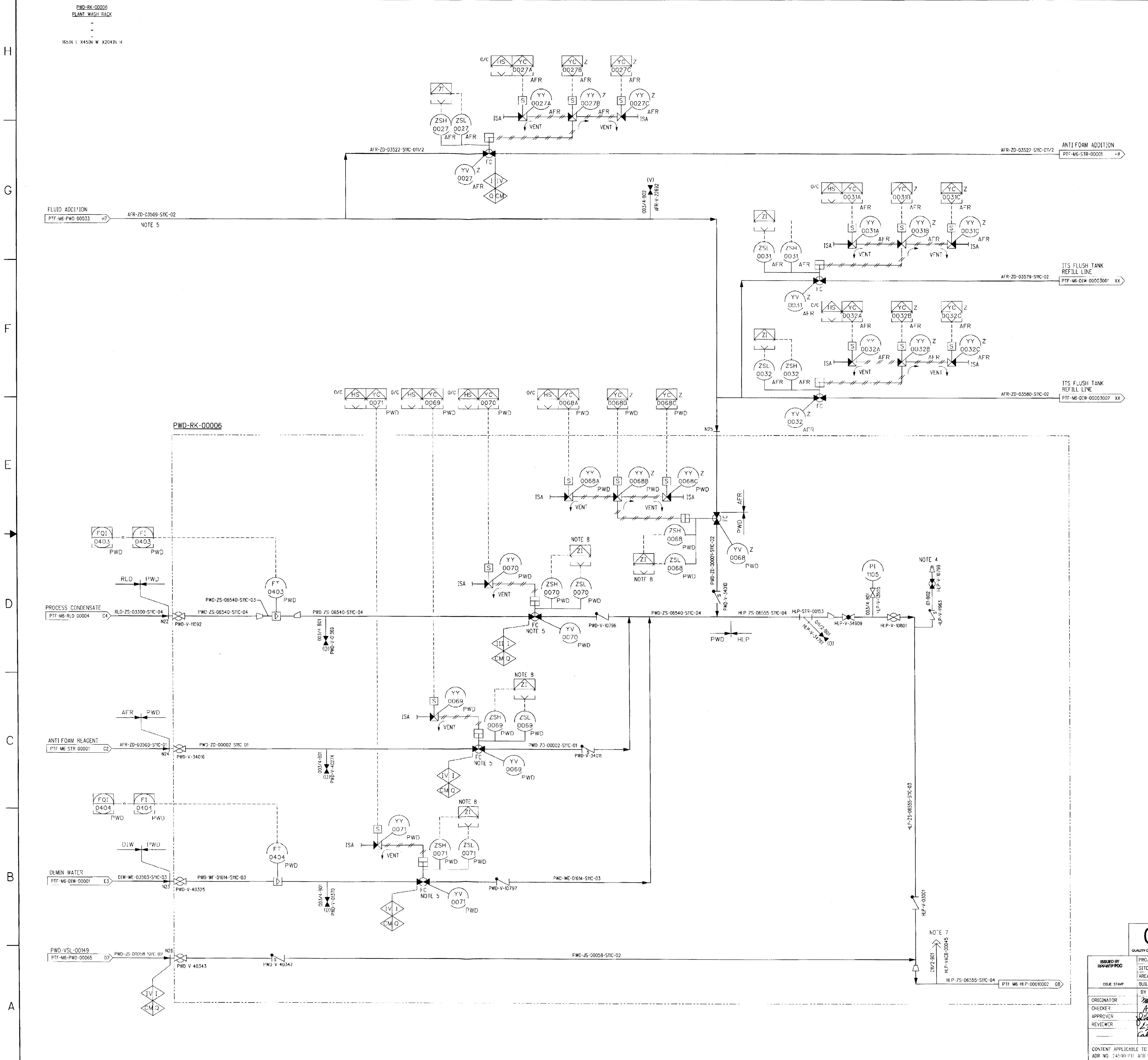

NOTES:

1. SEE DRAWINGS 24590-WTP-M6-50-00001 THROUGH 24590-WTP-M6-50-00008 FOR GENERAL NOTES, SYMBOLS AND LEGEND, AND GENERAL SLOPE REQUIREMENTS.
2. CONTENTS OF THIS DOCUMENT ARE DANGEROUS WASTE PERMIT AFFECTING.
3. THE PRESSURE BOUNDARY FOR ALL COMPONENTS ON THIS DRAWING IS IDENTIFIED AS IMPORTANT TO SAFETY (ITS), QUALITY LEVEL Q AND SEISMIC CATEGORY SC-I, UNLESS OTHERWISE NOTED.
4. CONNECTION PROVIDED FOR REAGENTS, PLANT WASH, AND SERVICE AIR.
5. VALVES INTERLOCKED TO PREVENT MULTIPLE VALVE OPERATION.
6. ANTI-FOAM REAGENT WILL BE PROVIDED ON AS NEEDED BASIS POST DESIGN BASIS EARTHQUAKE CONDITION.
7. BRANCH TO BE CONNECTED TO HORIZONTAL RUN OF HEADER PIPE.
8. DEVICE IS LOCATED OUTSIDE OF THE RACK BOUNDARY AND IN THE INTEGRATED CONTROL NETWORK (ICN).
9. THIS DRAWING IS CONVERTED FROM A SINGLE SHEET TO MULTI-SHEET DRAWINGS AND, IN PART, SUPERSEDES 24590-PTF-M6-HLP-00010 REV 2. THIS DRAWING INCLUDES INFORMATION FROM 24590-PTF-M6N-HLP-00050, -00051, 24590-PTF-M6N-M80T-00025, -00026, -00037, -00038.

HOLD/OPEN ITEMS:

NONE

REFERENCES:

1. THE REQUIRED BATCH SEQUENCES, PERMISSIVES, INTERLOCKS, ALARMS AND OPERATOR INTERFACE POINTS ARE FULLY DESCRIBED IN THE SOFTWARE FUNCTIONAL SPECIFICATION FOR PWD-PLANT WASH AND DISPOSAL PROCESS SYSTEM 24590-PTF-3PS-PWD-T0001 AND FOR HLP-HIGH LEVEL WASTE LAG STORAGE AND FEED BLENDING PROCESS SYSTEM 24590-PTF-3PS-HLP-T0001, AND FOR PVP-PRETREATMENT VESSEL VENT PROCESS SYSTEM 24590-PTF-3PS-PVP-T0001.
2. FOR PERMISSIVES AND INTERLOCKS TO IMPORTANT TO SAFETY SYSTEM (ITS) REFER TO SAFETY SYSTEM REQUIREMENT SPECIFICATION FOR HYDROGEN PURGE AND MIXING SYSTEMS, 24590-PTF-3PS-PPJ-T0004 (FUTURE).

Please note that source, special nuclear, and byproduct materials, as defined in the Atomic Energy Act of 1954 (AEA) are regulated at the U. S. Department of Energy (DOE) facilities exclusively by DOE acting pursuant to its AEA authority. DOE asserts that pursuant to AEA, it has sole and exclusive responsibility and authority to regulate source, special nuclear, and byproduct materials at DOE-owned nuclear facilities. Information contained herein on radionuclides is provided for process description purposes only.

DRAWING INDEX

DWG NO	REV	TITLE
24590-PTF-M6-HLP-00010001	0	HLP SYSTEM UTILITY SERVICES PWD-RK-00006
24590-PTF-M6-HLP-00010002	0	HLP SYSTEM UTILITY SERVICES PWD-RK-00006
24590-PTF-M6-HLP-00010003	0	HLP SYSTEM UTILITY SERVICES PWD-RK-00006

REVISION HISTORY

REV	DESCRIPTION	ORG	CHKD	RVWD	APVD	DATE
0	ISSUED FOR CONSTRUCTION SEE NOTE 9	MDD	APP	ELS	RLK	5/27/08

Q
QUALITY DESIGNATOR

ISSUED BY RPP-WTP PDC
ISSUE STAMP

PROJECT No.	24590
SITE	HANFORD
AREA	200E
BUILDING No.	10

RIVER PROTECTION PROJECT
WASTE TREATMENT PLANT
2435 STEVENS CENTER PLACE
RICHLAND, WA 99354

CONTRACT No: DE-AC27-01RV14136

	BY	DATE
ORIGINATOR	[signature]	5/22/08
CHECKER	APPinto	5/22/08
APPROVER	[signature]	5/27/08
REVIEWER	[signature]	5/27/08
	[signature]	5/23/08

CONTENT APPLICABLE TO ALARA? [X] YES [ ] NO
ADR NO. 24590-PTF-ADR-M-02-005 REV: 7
SAFETY SCREEN REQUIRED? [X] YES [ ] NO E&NS INITIAL IF YES

P&ID - PTF
HLW LAG STORAGE AND FEED BLENDING SYSTEM PLANT WASH RACK PWD-RK-00006

SCALE: NONE
24590-PTF-M6-HLP-00010001 REV 0

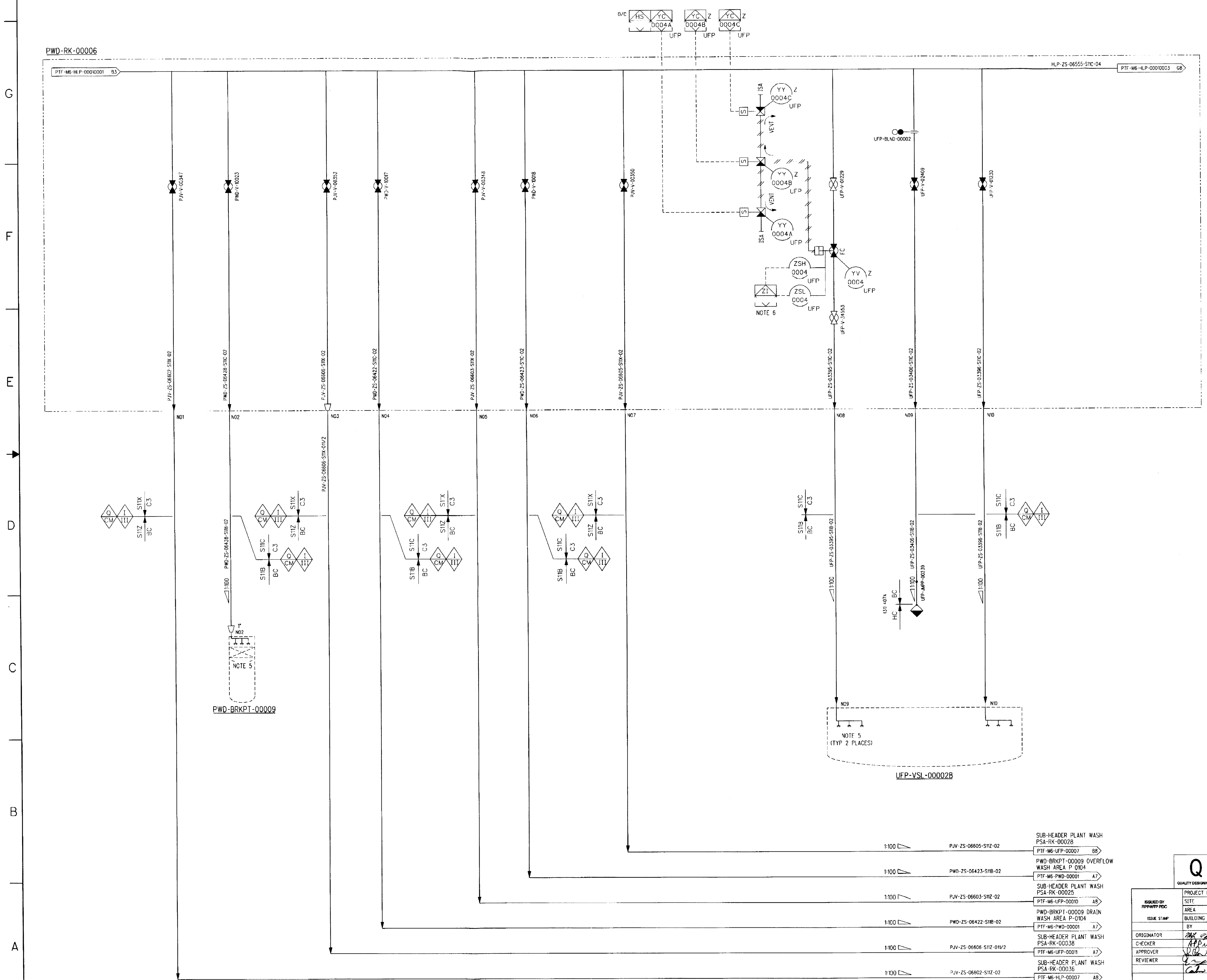

NOTES:

1. SEE DRAWINGS 24590-WTP-M6-50-00001 THROUGH 24590-WTP-M6-50-00008 FOR GENERAL NOTES, SYMBOLS AND LEGEND, AND GENERAL SLOPE REQUIREMENTS.
2. CONTENTS OF THIS DOCUMENT ARE DANGEROUS WASTE PERMIT AFFECTING.
3. THE PRESSURE BOUNDARY FOR ALL COMPONENTS ON THIS DRAWING IS IDENTIFIED AS IMPORTANT TO SAFETY (ITS), QUALITY LEVEL Q AND SEISMIC CATEGORY SC-I, UNLESS OTHERWISE NOTED. ALL INTERNAL SUPPORTS AND WELDS THAT INTERACT WITH THE PRIMARY CONTAINMENT BARRIER (VESSEL) SHALL MAINTAIN EQUAL QUALITY AND SEISMIC CATEGORY AS THE PARENT.
4. FOR PROCESS INFORMATION, REFER TO DRAWINGS 24590-PTF-M6 PWD-00001 (PWD-BRKPT-00009) AND 24590-PTF-M6-UFP-00003001 (UFP-VSL-00002B).
5. PIPE ROUTING LIMITED TO A MAXIMUM OF AN 8 FT STRAIGHT VERTICAL DROP AT THE CONNECTION TO THE VESSEL.
6. DEVICE IS LOCATED OUTSIDE OF THE RACK BOUNDARY AND IN THE INTEGRATED CONTROL NETWORK (ICN).
7. THIS DRAWING IS CONVERTED FROM A SINGLE SHEET TO MULTI-SHEET DRAWINGS AND, IN PART, SUPERSEDES 24590-PTF-M6-HLP-00010 REV 2. THIS DRAWING INCLUDES INFORMATION FROM 24590-PTF-M6N-HLP-00051, 24590-PTF-M6N-M80T-00025, -00026, -00037, 00038.

HOLD/OPEN ITEMS:

NONE

REFERENCES:

1. THE REQUIRED BATCH SEQUENCES, PERMISSIVES, INTERLOCKS, ALARMS AND OPERATOR INTERFACE POINTS ARE FULLY DESCRIBED IN THE SOFTWARE FUNCTIONAL SPECIFICATION FOR PWD-PLANT WASH AND DISPOSAL PROCESS SYSTEM 24590-PTF-3PS-PWD-T0001 AND FOR HLP-HIGH LEVEL WASTE LAG STORAGE AND FEED BLENDING PROCESS SYSTEM 24590-PTF-3PS-HLP-T0001, AND FOR PVP-PRETREATMENT VESSEL VENT PROCESS SYSTEM 24590-PTF 3PS-PVP-T0001.
2. FOR PERMISSIVES AND INTERLOCKS TO IMPORTANT TO SAFETY SYSTEM (ITS) REFER TO SAFETY SYSTEM REQUIREMENT SPECIFICATION FOR HYDROGEN PURGE AND MIXING SYSTEMS, 24590-PTF-3PS-PPJ-T0004 (FUTURE).

Please note that source, special nuclear, and byproduct materials, as defined in the Atomic Energy Act of 1954 (AEA) are regulated at the U. S. Department of Energy (DOE) facilities exclusively by DOE acting pursuant to its AEA authority. DOE asserts that pursuant to AEA, it has sole and exclusive responsibility and authority to regulate source, special nuclear, and byproduct materials at DOE-owned nuclear facilities. Information contained herein on radionuclides is provided for process description purposes only.

Q
QUALITY DESIGNATOR

REV	DESCRIPTION	ORG	CHKD	RVWD	APVD	DATE
0	ISSUED FOR CONSTRUCTION SEE NOTE 7	MDD	APP	ELS	RCL	05/19/08

REVISION HISTORY

ISSUED BY RPP-WTP PDC

ISSUE STAMP

PROJECT No.	24590
SITE	HANFORD
AREA	200E
BUILDING No.	10

	BY	DATE
ORIGINATOR	[signature]	5/12/08
CHECKER	[signature]	5/13/08
APPROVER	[signature]	5/19/08
REVIEWER	[signature]	5/14/08
	[signature]	5/14/08

CONTENT APPLICABLE TO ALARA? [X] YES [ ] NO
ADR NO. 24590-PTF-ADR-M 02 005 REV: 7
SAFETY SCREEN REQUIRED? [X] YES [ ] NO E&NS INITIAL IF YES [initials]

RIVER PROTECTION PROJECT
WASTE TREATMENT PLANT
2435 STEVENS CENTER PLACE
RICHLAND, WA 99354

CONTRACT No: DE-AC27-01RV14136

P&ID - PTF
HLW LAG STORAGE & FEED BLENDING SYSTEM PLANT WASH RACK PWD-RK-00006

SCALE: NONE

24590-PTF-M6-HLP-00010002 REV 0

SAFETY SCREEN IS REQUIRED FOR DRAWING TYPES IDENTIFIED IN 24590-WTP-GPP-SREG-002

'E' SIZE - 44x34
COMPUTER GENERATED - MANUAL CHANGES NOT PERMITTED

R10922014 05/12/2008 03:30:58 PM

PLOTTED BY: mmmcmill
C:\Work\mmmcmill\dmsC3837\PTFM6HLP00010002.dgn

FORM E_SDN.DGN 02/2003

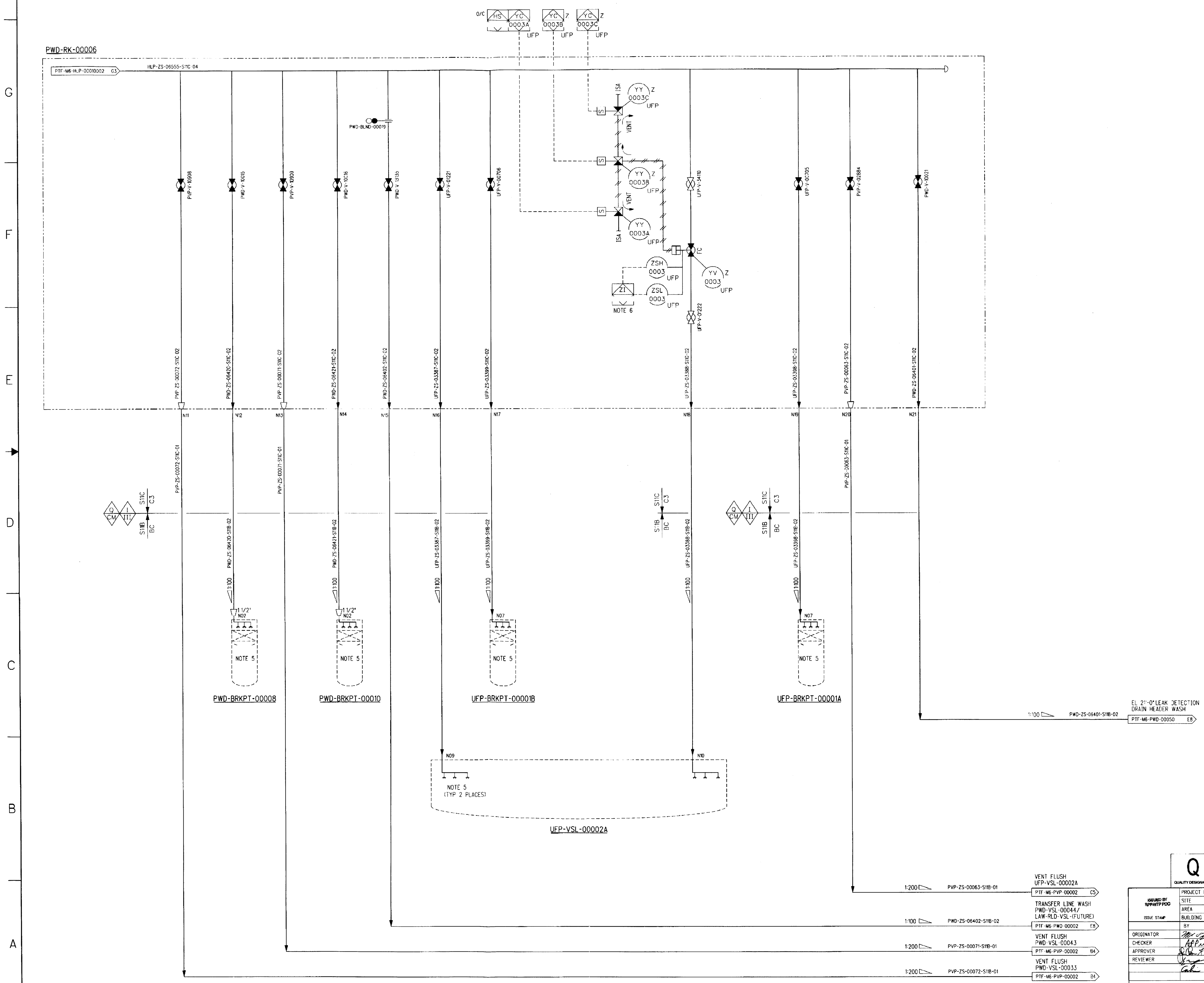

NOTES:

1. SEE DRAWINGS 24590-WTP-M6-50-00001 THROUGH 24590-WTP-M6-50-00008 FOR GENERAL NOTES, SYMBOLS AND LEGEND, AND GENERAL SLOPE REQUIREMENTS.
2. CONTENTS OF THIS DOCUMENT ARE DANGEROUS WASTE PERMIT AFFECTING.
3. THE PRESSURE BOUNDARY FOR ALL COMPONENTS ON THIS DRAWING IS IDENTIFIED AS IMPORTANT TO SAFETY (ITS), QUALITY LEVEL Q AND SEISMIC CATEGORY SC-I, UNLESS OTHERWISE NOTED. PLANT WASH RACK IS QUALITY LEVEL Q AND SEISMIC CATEGORY SC-I. ALL INTERNAL SUPPORTS AND WELDS THAT INTERACT WITH THE PRIMARY CONTAINMENT BARRIER (VESSEL) SHALL MAINTAIN EQUAL QUALITY AND SEISMIC CATEGORY AS THE PARENT.
4. FOR PROCESS INFORMATION, REFER TO DRAWINGS 24590-PTF-M6-PWD-00001 (PWD-BRKPT-00008/00010), 24590-PTF-M6-UFP-00001 (UFP-BRKPT-00001A/B) AND -00002 (UFP-VSL-00002A).
5. PIPE ROUTING LIMITED TO A MAXIMUM OF AN 8 FT STRAIGHT VERTICAL DROP AT THE CONNECTION TO THE VESSEL.
6. DEVICE IS LOCATED OUTSIDE OF THE RACK BOUNDARY AND IN THE INTEGRATED CONTROL NETWORK (ICN).
7. THIS DRAWING IS CONVERTED FROM A SINGLE SHEET TO MULTI-SHEET DRAWINGS AND, IN PART, SUPERSEDES 24590-PTF-M6-HLP-00010 REV 2. THIS DRAWING INCLUDES INFORMATION FROM 24590-PTF-M6N-HLP-00051, 24590-PTF-M6N-M80T-00025, -00026, -00037, -00038.

HOLD/OPEN ITEMS:

NONE

REFERENCES:

1. THE REQUIRED BATCH SEQUENCES, PERMISSIVES, INTERLOCKS, ALARMS AND OPERATOR INTERFACE POINTS ARE FULLY DESCRIBED IN THE SOFTWARE FUNCTIONAL SPECIFICATION FOR PWD-PLANT WASH AND DISPOSAL PROCESS SYSTEM 24590-PTF-3PS-PWD-T0001 AND FOR HLP-HIGH LEVEL WASTE LAG STORAGE AND FEED BLENDING PROCESS SYSTEM 24590-PTF-3PS-HLP-T0001, AND FOR PVP-PRETREATMENT VESSEL VENT PROCESS SYSTEM 24590-PTF-3PS-PVP-T0001.
2. FOR PERMISSIVES AND INTERLOCKS TO IMPORTANT TO SAFETY SYSTEM (ITS) REFER TO SAFETY SYSTEM REQUIREMENT SPECIFICATION FOR HYDROGEN PURGE AND MIXING SYSTEMS, 24590-PTF-3PS-PPJ-T0004 (FUTURE).

Please note that source, special nuclear, and byproduct materials, as defined in the Atomic Energy Act of 1954 (AEA) are regulated at the U. S. Department of Energy (DOE) facilities exclusively by DOE acting pursuant to its AEA authority. DOE asserts that pursuant to AEA, it has sole and exclusive responsibility and authority to regulate source, special nuclear, and byproduct materials at DOE-owned nuclear facilities. Information contained herein on radionuclides is provided for process description purposes only.

Q
QUALITY DESIGNATOR

REV	DESCRIPTION	ORG	CHKD	RVWD	APVD	DATE
0	ISSUED FOR CONSTRUCTION SEE NOTE 7	MOD	APP	ELS CER	RCA	05/19/08

REVISION HISTORY

ISSUED BY RPP-WTP PDC	PROJECT No.	24590
	SITE	HANFORD
	AREA	200E
ISSUE STAMP	BUILDING No.	10

	BY	DATE
ORIGINATOR	[signature]	5/12/08
CHECKER	[signature]	5/13/08
APPROVER	[signature]	5/19/08
REVIEWER	[signature]	5/14/08
	[signature]	5/14/08

CONTENT APPLICABLE TO ALARA? [X] YES [ ] NO
ADR NO. 24590-PTF-ADR-M-02-005 REV: 7
SAFETY SCREEN REQUIRED? [X] YES [ ] NO E&NS INITIAL IF YES [initials]

BECHTEL
RIVER PROTECTION PROJECT
WASTE TREATMENT PLANT
2435 STEVENS CENTER PLACE
RICHLAND, WA 99354

CONTRACT No: DE-AC27-01RV14136

P&ID - PTF HLW LAG STORAGE AND FEED BLENDING SYSTEM PLANT WASH RACK PWD-RK-00006

SCALE: NONE
24590-PTF-M6-HLP-00010003
REV 0

SAFETY SCREEN IS REQUIRED FOR DRAWING TYPES IDENTIFIED IN 24590-WTP-GPP-SREG-002
'E' SIZE - 44x34
COMPUTER GENERATED - MANUAL CHANGES NOT PERMITTED
R10922015
05/12/2008 03:30:57 PM
PLOTTED BY: mmmcmill
C:\Work\mmmcmill\dms03837\PTFM6HLP00010003.dgn
FORM E_SDN.DGN 02/2003

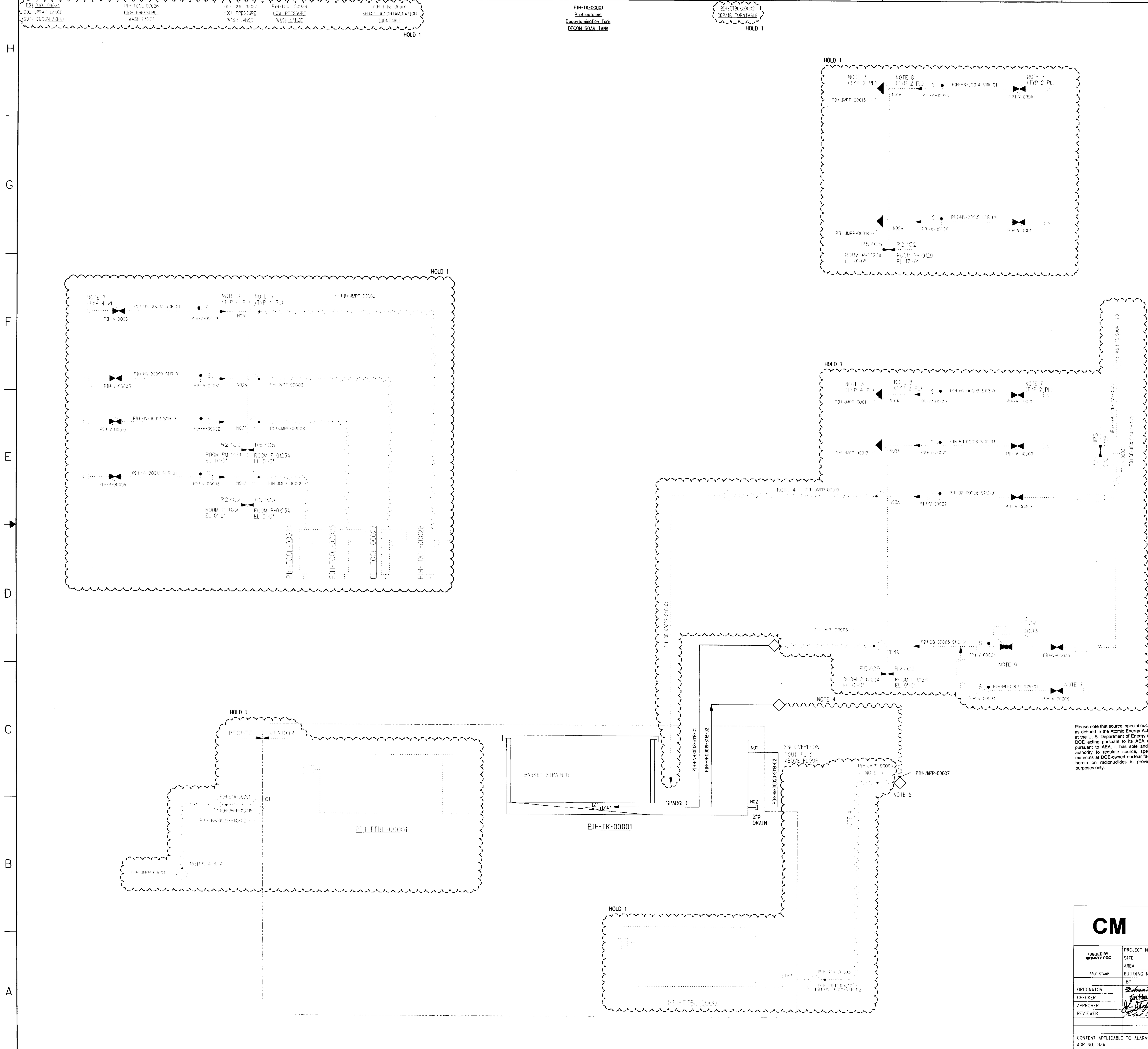

NOTES:

1. SEE DRAWINGS 24590-WTP-M6-50-P0001 THROUGH 24590-WTP-M6-50-P0006 FOR GENERAL NOTES, SYMBOLS AND LEGENDS, AND GENERAL SLOPE REQUIREMENTS.
2. ALL SYSTEMS, STRUCTURES AND COMPONENTS ON THIS DRAWING ARE NON-IMPORTANT TO SAFETY (NON-ITS) COMMERCIAL GRADE CM AND SEISMIC CATEGORY SC-III, UNLESS OTHERWISE NOTED.
3. REMOTE QUICK DISCONNECTS SHALL BE INSTALLED WITH FEMALE CONNECTOR LOCATED ON THE UPSTREAM SIDE AND MALE CONNECTOR ON DOWNSTREAM SIDE.
4. FLEX JUMPERS SHALL HAVE HORIZONTAL RUNS PROTECTED BY STRUCTURAL MEMBERS WITH FLEX PORTION AT EACH END.
5. THESE JUMPERS ARE CONNECTED TO PWD-EJECTR-00066 AS NEEDED.
6. JUMPER CONNECTED TO PWD-EJECTR-00065 AS NEEDED.
7. NAR, SHR, OR DIW ARE CONNECTED AS NEEDED.
8. JOGGLE PLUGS SHALL BE DESIGNED WITH REMOTE QUICK DISCONNECTS ON R5/C5 (ROOM P-0123A) END. BLANKED CONNECTORS SHALL BE INSTALLED WHEN NOT IN USE. BEVELED ENDS SHALL BE DESIGNED FOR R2/C2 END.
9. SPRING RETURN TO CENTER HAND SWITCH LOCATED ON THE LOCAL OPERATOR INTERFACE (LOI) IN ROOM P-0129A.
10. CONTENTS OF THIS DOCUMENT ARE DANGEROUS WASTE PERMIT AFFECTING.
11. THE PORTIONS OF THIS DRAWING SHOWN IN PHANTOM ARE CONSIDERED NON-PERMIT AFFECTING AND NOT SUBJECT TO THE REGULATORY REQUIREMENTS OF THE WAC CODE FOR THE DANGEROUS WASTE PERMIT TO THE EXTENT THAT THOSE PORTIONS DO NOT IMPACT DANGEROUS WASTE AREAS/OPERATIONS.

HOLDS/OPEN ITEMS:

1. THESE PORTIONS OF THE DRAWING WILL BE ISSUED AT A LATER DATE.

REFERENCE:

1. FOR DETAIL OF PIH-TK-00001 SEE DPD DRAWING 24590-PTF-M0-PIH-P0019001 AND 24590-PTF-M0-PIH-P0019002.
2. FOR DETAIL OF JOGGLE PLUGS SEE DRAWING 24590-PTF-M0-M10T-00058.

PLEASE NOTE THAT SOURCE, SPECIAL NUCLEAR AND BYPRODUCT MATERIALS, AS DEFINED IN THE ATOMIC ENERGY ACT OF 1954 (AEA), ARE REGULATED AT THE U.S. DEPARTMENT OF ENERGY (DOE) FACILITIES EXCLUSIVELY BY DOE ACTING PURSUANT TO ITS AEA AUTHORITY. DOE ASSERTS, THAT PURSUANT TO THE AEA, IT HAS SOLE AND EXCLUSIVE RESPONSIBILITY AND AUTHORITY TO REGULATE SOURCE, SPECIAL NUCLEAR, AND BYPRODUCT MATERIALS AT DOE-OWNED NUCLEAR FACILITIES. INFORMATION CONTAINED HEREIN ON RADIONUCLIDES IS PROVIDED FOR PROCESS DESCRIPTION PURPOSES ONLY.

CM

REV	DESCRIPTION	ORG	CHKD	RVWD	APVD	DATE
0	ISSUED FOR PERMITTING USE	ZB	[signature]	[signature]	[signature]	7/20/06

REVISION HISTORY

ISSUED BY RPP-WTP PDC

ISSUE STAMP

PROJECT No.	24590
SITE	HANFORD
AREA	200E
BUILDING No.	10

RIVER PROTECTION PROJECT
WASTE TREATMENT PLANT
2435 STEVENS CENTER PLACE
RICHLAND, WA 99354

	BY	DATE
ORIGINATOR	[signature]	7/17/06
CHECKER	[signature]	7/17/06
APPROVER	[signature]	7/20/06
REVIEWER	[signature]	7/17/06

CONTRACT No: DE-AC27-01RV14136

P&ID - PTF MECHANICAL HANDLING, HOT CELL MAINTENANCE CAVE P-0123A UTILITIES, SYSTEM PIH

CONTENT APPLICABLE TO ALARA? [XX] YES [ ] NO
ADR NO. N/A REV:
SAFETY SCREEN REQUIRED? [ ] YES [X] NO E&NS INITIAL IF YES ____

SCALE: NONE | 24590-PTF-M6-PIH-P0001 | REV 0

SAFETY SCREEN IS REQUIRED FOR DRAWING TYPES IDENTIFIED IN 24590-WTP-GPP-SREG-002

'F' SIZE 44x34
COMPUTER GENERATED - MANUAL CHANGES NOT PERMITTED

R10700055

07/17/2006 04:25:22 PM

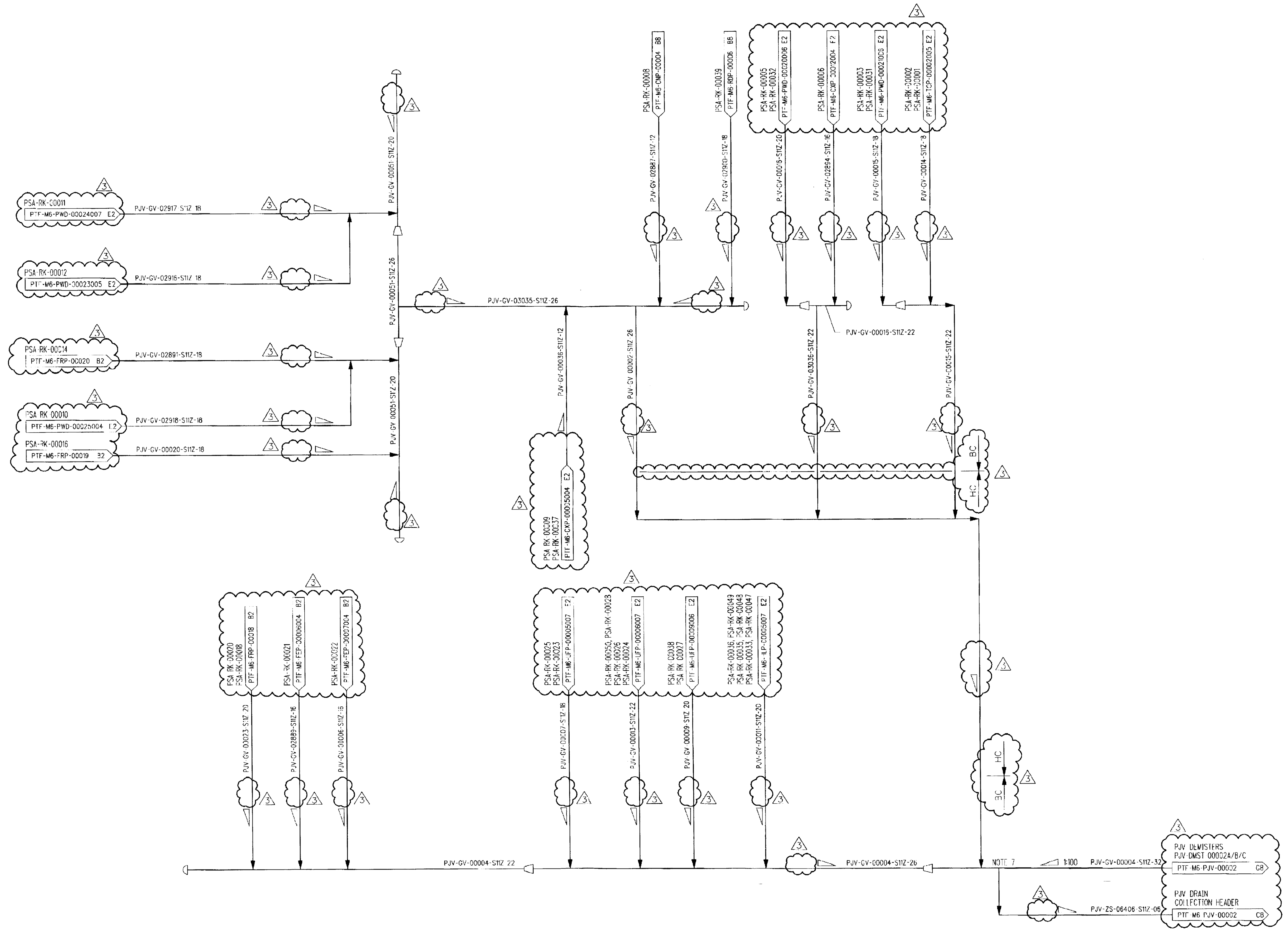

NOTES:

1. SEE DRAWINGS 24590-WTP M6-50-00001 THROUGH 24590-WTP M6-50-00008 FOR GENERAL NOTES, SYMBOLS AND LEGEND, AND GENERAL SLOPE REQUIREMENTS.
2. DELETED
3. THE PRESSURE BOUNDARY FOR ALL COMPONENTS ON THIS DRAWING IS QUALITY LEVEL Q AND SEISMIC CATEGORY SC-I, UNLESS OTHERWISE NOTED. (3)
4. DELETED
5. CONTENTS OF THIS DOCUMENT ARE DANGEROUS WASTE PERMIT AFFECTING.
6. DELETED
7. HORIZONTAL SECTION OF THE HEADER PIPE NEAR THE LOW POINT DRAIN MAY BE FLAT.
8. REVISION 2: REVISED TO INCORPORATE 24590-PTF-M6N-PJV-00016, 24590-PTF-M6N-PJV-00018 AND 24590-PTF-M6N-PJV-00024. DELETED, REVISED AND ADDED NOTES. ADDED SLOPES AND SYMBOLS, LINE NUMBERS, REFERENCED NOTE 7. SYSTEM REQUIRES DESIGN REVERIFICATION.
9. ALL LINES ON THIS DRAWING SHALL BE FREE DRAINING. EXCEPT BLACK CELL LINES WHICH ARE SELF-DRAINING, UNLESS OTHERWISE NOTED. (3)
10. REVISION 3: REVISED TO UPDATE OFF SHEET CONNECTORS. ADDED/ REVISED NOTES.

HOLD/OPEN ITEMS:

1-3. DELETED

REFERENCES:

NONE

Please note that source, special nuclear, and byproduct materials, as defined in the Atomic Energy Act of 1954 (AEA) are regulated at the U. S. Department of Energy (DOE) facilities exclusively by DOE acting pursuant to its AEA authority. DOE asserts that pursuant to AEA, it has sole and exclusive responsibility and authority to regulate source, special nuclear, and byproduct materials at DOE-owned nuclear facilities. Information contained herein on radionuclides is provided for process description purposes only.

Q
QUALITY DESIGNATOR

REV	DESCRIPTION	ORG	CHKD	RVWD	APVD	DATE
3	REVISED PER NOTE 10	AW	SJ	ELS / CEX	RM	9/30/08
2	REVISED PER NOTE 8	JD	RV	RS	JJ	5/26/06
0	ISSUED FOR CONSTRUCTION	RM	AS	JJ	RV	5/1/03

REVISION HISTORY

ISSUED BY RPP-WTP PDC
ISSUE STAMP

PROJECT No.	24590
SITE	HANFORD
AREA	20CF
BUILDING No.	10

	BY	DATE
ORIGINATOR	RYAN MCCLAUGHRY	4/28/03
CHECKER	ALEX SCHEVCHENKO	4/28/03
APPROVER	ROBERT VOKE	5/1/03
REVIEWER	JOHN JULYK	4/30/03

CONTENT APPLICABLE TO ALARA? [X] YES [ ] NO
ADR NO. 24590-PTF-ADR-M-02-059 REV: 3
SAFETY SCREEN REQUIRED? [X] YES [ ] NO E&NS INITIAL IF YES G071

BECHTEL
RIVER PROTECTION PROJECT
WASTE TREATMENT PLANT
2435 STEVENS CENTER PLACE
RICHLAND, WA 99354

CONTRACT No: DE-AC27-01RV14136

P&ID - PTF
PULSE JET VENTILATION SYSTEM AIR RACKS TO DEMISTERS

SCALE: NONE

24590-PTF-M6-PJV-00001 REV 3

SAFETY SCREEN IS REQUIRED FOR DRAWING TYPES IDENTIFIED IN 24590-WTP-GPP-SRFG-002

"E" SIZE 44x34
COMPUTER GENERATED MANUAL CHANGES NOT PERMITTED

R10971342

09/30/2008 02:31:07 PM

24590-PTF-M6-PVP-00002

NOTES:

1. SEE DRAWINGS 24590-WTP-M6-50-00001 THROUGH 24590-WTP-M6-50-00008 FOR GENERAL NOTES, SYMBOLS AND LEGEND AND GENERAL SLOPE REQUIREMENTS.
2. THE PRESSURE BOUNDARY FOR ALL COMPONENTS ON THIS DRAWING IS QUALITY LEVEL Q AND SEISMIC CATEGORY SC-I, UNLESS OTHERWISE NOTED.
3. DELETED
4. CONTENTS OF THIS DOCUMENT ARE DANGEROUS WASTE PERMIT AFFECTING.
5. ALL LINES SHOWN ON THIS DRAWING SHALL BE FREE DRAINING EXCEPT BLACK CELL LINES WHICH ARE SELF DRAINING, UNLESS OTHERWISE NOTED.
6. HEAT TRACING AND INSULATION TO EXTEND INSIDE THE BUILDING.
7. VALVE SHALL CLOSE ON LOSS OF PRESSURE CONTROL AT THE SCRUBBER.
8. DELETED
9. ALL PLANT WASH CONNECTIONS INSIDE THE BLACK CELL AREAS ARE QUALITY LEVEL CM AND SEISMIC CATEGORY SC-III, UNLESS OTHERWISE NOTED.
10. INDIVIDUAL VESSEL VENT LINE SLOPES AND PLANT WASH CONNECTIONS MAY BE IMPLEMENTED TO FLOW WASH TOWARD THE VESSEL OR THE VENT HEADER. WASH CONNECTIONS MUST BE MADE AT THE HIGH POINT.
11. VESSEL VENT PLANT WASH LINES FOR NON-NEWTONIAN VESSELS ARE QUALITY LEVEL Q AND SEISMIC CATEGORY SC-I.
12. REVISION 3: REVISED TO INCORPORATE 24590-PTF-MEN-M8OT-00002, 24590-PTF-M6N-M8OT-00037, 24590-PTF-M6N-PVP-00029, 24590-PTF-M6N-PVP-00035, 24590-PTF-M6N-PVP-00041, AND 24590 PTF-M6N-PVP-00057, AND FURTHER REVISED ADDED HIGH POINT VENT HEATERS, REVISED SEISMIC AND QUALITY FLAGS AND OFF SHEET CONNECTORS. REVISED/ADDED/DELETED NOTES AND REFERENCES.

HOLD/OPEN ITEMS:

1-7. DELETED

REFERENCE:

1. THE REQUIRED BATCH SEQUENCES, PERMISSIVES, INTERLOCKS, ALARMS AND OPERATOR INTERFACE POINTS ARE FULLY DESCRIBED IN THE PVP SYSTEM LOGIC DIAGRAMS (FUTURE) AND THE PVP SYSTEM DESCRIPTION (FUTURE REVISION).

Please note that source, special nuclear, and byproduct materials, as defined in the Atomic Energy Act of 1954 (AEA) are regulated at the U. S. Department of Energy (DOE) facilities exclusively by DOE acting pursuant to its AEA authority. DOE asserts that pursuant to AEA, it has sole and exclusive responsibility and authority to regulate source, special nuclear, and byproduct materials at DOE-owned nuclear facilities. Information contained herein on radionuclides is provided for process description purposes only.

REV	DESCRIPTION	CHG	CHKD	RVWD	APVD	DATE
3	REVISED PER NOTE 12					
2	MAJOR REVISION INCORPORATE 24590-PTF MSN PVP 00010, AND PLANT DESIGN LAYOUT	PAL	MH	JJ	Rv	08/08/01
0	ISSUED FOR CONSTRUCTION		AM	SA	JG	2/26/02

QUALITY DESIGNATOR: Q

REVISION HISTORY

ISSUED BY RPP-WTP PDC

ISSUE STAMP

	BY	DATE
ORIGINATOR	ANTONIO MOLINA	12/27/02
CHECKER	JULIANA ARMES	12/27/02
APPROVER	DOUGLAS WOLF	12/31/02
REVIEWER		

CONTENT APPLICABLE TO ALARA? [X] YES [ ] NO

ADR NO. 24590-PTF-ADR-M-03-001 REV: 1

SAFETY SCREEN REQUIRED? [ ] YES [X] NO EWG INITIAL IF YES

SAFETY SCREEN IS REQUIRED FOR DRAWING TYPES IDENTIFIED IN 24590-WTP-OPP-SHEC-002

COMPUTER GENERATED. MANUAL CHANGES NOT PERMITTED

BECHTEL

PROJECT No. 24590
SITE
AREA 200E
BUILDING No. N/A

CONTRACT No. DE-AC27-01RV14136

RIVER PROTECTION PROJECT
WASTE TREATMENT PLANT
2435 STEVENS CENTER PLACE
RICHLAND, WA 99354

P&ID - PTF PRETREATMENT VESSEL VENT PROCESS SYSTEM EXHAUST FROM VESSELS

SCALE: NO SCALE

24590-PTF-M6-PVP-00002 REV 3

R1090581

24590-PTF-M6-PVP-00002_R3.dgn

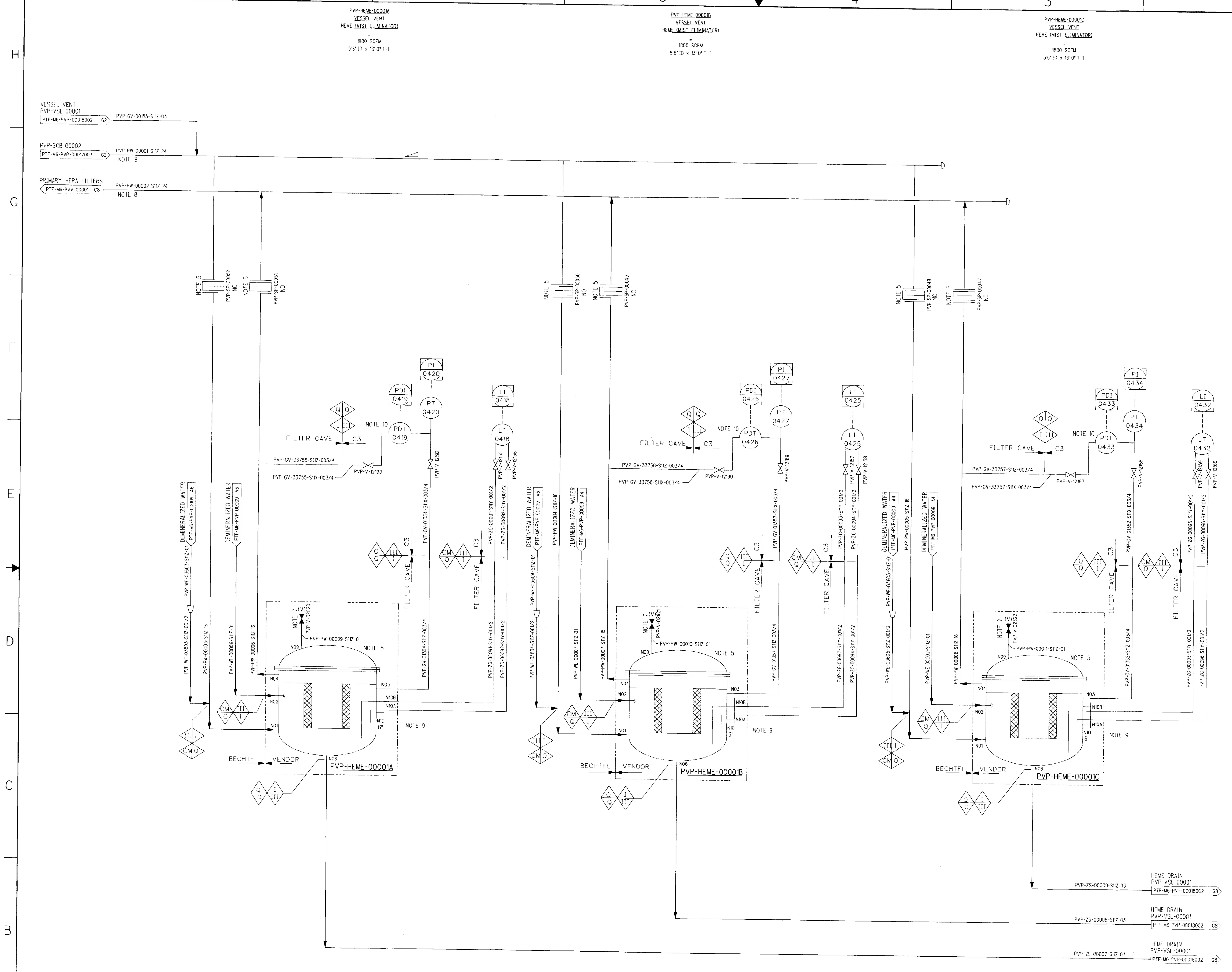

NOTES:

1. SEE DRAWINGS 24590-WTP-M6-50-00001 THROUGH 24590-WTP-M6-50-00008 FOR GENERAL NOTES, SYMBOLS AND LEGEND, AND GENERAL SLOPE REQUIREMENTS.
2. CONTENTS OF THIS DRAWING ARE DANGEROUS WASTE PERMIT AFFECTING.
3. THE PRESSURE BOUNDARY FOR ALL COMPONENTS SHOWN ON THIS DRAWING IS QUALITY LEVEL Q, AND SEISMIC CATEGORY SC-I, UNLESS OTHERWISE NOTED.
4. ALL LINES SHOWN ON THIS DRAWING SHALL BE FREE DRAINING, UNLESS OTHERWISE NOTED.
5. ALL EQUIPMENT AND COMPONENTS IN THE FILTER CAVE ARE REMOTELY OPERATED/MAINTAINED BY THE OVERHEAD CRANE.
6. HIGH EFFICIENCY MIST ELIMINATORS ARE THREE 50% CAPACITY VESSELS.
7. TOP VENTS ARE 1", 1/4-TURN VALVE BY VENDOR AND REMOTELY OPERATED IN THE FILTER CAVE.
8. HIGH EFFICIENCY MIST ELIMINATOR INLET VENT PIPING ELEVATION IS LOWER THAN OUTLET VENT PIPING.
9. SEE DRAWING 24590-PTF-M6-ISA-00009 FOR BUBBLER RACKS AND SYSTEM CONNECTIONS.
10. INSTRUMENT IDENTIFIED AS A BARCT INSTRUMENT.
11. THIS DRAWING IS CONVERTED FROM A SINGLE SHEET TO MULTI-SHEET DRAWING AND IN PART SUPERSEDES 24590-PTF-M6-PVP-00018, REV 2. THIS DRAWING INCLUDES INFORMATION FROM 24590-PTF-M6N-M80T-00036, -00037, 24590-PTF-M6N PVP-00049, AND FURTHER MODIFIED TO UPDATE COMPARTMENT, QUALITY LEVEL AND SEISMIC BREAKS, CLARIFY SLOPING REQUIREMENTS; CORRECTED VESSEL NOZZLE N10 DESIGNATORS; REMOVE DESIGN HOLD; IDENTIFY BARCT INSRUMENTATION; AND REFLECT CURRENT DRAFTING PRACTICES.

HOLD/OPEN ITEMS:

NONE

REFERENCES:

1. THE REQUIRED OPERATIONAL SEQUENCES, PERMISSIVES, INTERLOCKS, ALARMS, AND OPERATOR INTERFACE POINTS ARE FULLY DESCRIBED IN THE PVP SYSTEM LOGIC DIAGRAMS (FUTURE) AND THE PVP SYSTEM DESCRIPTION (FUTURE REVISION).

Please note that source, special nuclear, and byproduct materials, as defined in the Atomic Energy Act of 1954 (AEA) are regulated at the U. S. Department of Energy (DOE) facilities exclusively by DOE acting pursuant to its AEA authority. DOE asserts that pursuant to AEA, it has sole and exclusive responsibility and authority to regulate source, special nuclear, and byproduct materials at DOE-owned nuclear facilities. Information contained herein on radionuclides is provided for process description purposes only.

DRAWING INDEX	
DWG NO	TITLE
24590-PTF-M6-PVP-00018001	PRETREATMENT VESSEL VENT PROCESS SYSTEM
24590-PTF-M6-PVP-00018002	PRETREATMENT VESSEL VENT PROCESS SYSTEM

Q
QUALITY DESIGNATOR

REV	DESCRIPTION	ORG	CHKD	RVWD	APVD	DATE
0	ISSUED FOR CONSTRUCTION SEE NOTE 11	CRJ	PH	CEK ELS	JDM KCL	10/31/08

REVISION HISTORY

ISSUED BY RPP-WTP PDC

PROJECT No.	24590
SITE	HANFORD
AREA	200E
BUILDING No.	10

	BY	DATE
ORIGINATOR		10/28/08
CHECKER		10/28/08
APPROVER		10/31/08
REVIEWER		10/28/08
		10/30/08

CONTENT APPLICABLE TO ALARA? [X] YES [ ] NO
ADR NO. 24590-PTF-ADR-M-03-001 REV: 3
SAFETY SCREEN REQUIRED? [X] YES [ ] NO F&NS INITIAL IF YES GDH

BECHTEL
RIVER PROTECTION PROJECT
WASTE TREATMENT PLANT
2435 STEVENS CENTER PLACE
RICHLAND, WA 99354

CONTRACT No: DE-AC27-01RV14136

P&ID - PTF PRETREATMENT VESSEL VENT PROCESS SYSTEM HEMES TO PRIMARY HEPA FILTERS

SCALE: NONE

24590-PTF-M6-PVP-00018001 REV 0

'E' SIZE - 44x34
COMPUTER GENERATED MANUAL CHANGES NOT PERMITTED

R10982090

10/27/2008 07:20:01 AM

24590-PTF-M6-PVP-00018002

PVP-HEPA-00004 / HEPA 3 1118 = 24 SCFM @ 0.85 IN WC PRESSURE DROP

PVP-VSL-00001 VESSEL VENT HEME DRAIN COLLECTION VESSEL 6 FT ID x 7 FT 4 IN T-T 1650 GAL MAX OPER VOL

PVP-PMP-00002A VESSEL VENT HEME DRAIN TRANSFER PUMP 50 GPM @ 61 FT TDH 3 HP

PVP-PMP-00002B VESSEL VENT HEME DRAIN TRANSFER PUMP 50 GPM @ 61 FT TDH 3 HP

PVP-BULGE-00002 VESSEL VENT HEME DRAIN VESSEL PUMP BULGE ABLE X60 W X59 H

PROCESS CONDENSATE PTF-M6-RLD-00004 E9 — RLD-ZS-00030-S11C-02 — PVP-ZS-00015-S11X-02 — PVP-V-10869 — 2" SCH 40S (ID=3.07") — RLD PVP — C4 S11X — BC S11Z

PVP-HFME-00001C DRAIN PTF-M6-PVP-00018001 B2 — PVP-ZS-00009-S11Z-03

PVP-HFME-00001B DRAIN PTF-M6-PVP-00018001 B2 — PVP-ZS-00008-S11Z-03

PVP HFME 00001A DRAIN PTF-M6-PVP-00018001 B2 — PVP-ZS-00007-S11Y-03

PVP-GV-00155-S11Z-03 — HEME INLET VENT HEADER PTF-M6-PVP-00018001 H8

LI 0438 — NOTE 8 — 0438 — PVP-PDT-12981 — PVP-PDT-12982 — C3 — BC FILTER CAVE — BC FILTER CAVE

PVP-ZS-00009-S11C-02/2 — PVP-ZS-00008-S11C-02/2 — PVP-ZS-00007-S11C-02/2 — PVP-ZS-00005-S11C-02 — PVP-ZS-00003-S11C-02

24" MANWAY — N01 N02 N03 N04 N05 — N04A — N04B — N04C — N04D — N04E — N04F — N04G — N04H — N04J — N04K — N04L — N04M — N04N — N04P — N04Q — N04R — N04S — N04T — N04U — N04V — N04W — N04X — N04Y — N04Z — N04AA — N04AB — N04AC — N04AD — N04AE — N04AF — N04AG — N04AH — N04AJ — N04AK — N04AL — N04AM — N04AN — N04AP — N04AQ — N04AR — N04AS — N04AT — N04AU — N04AV — N04AW — N04AX — N04AY — N04AZ — N04BA — N04BB — N04BC — N04BD — N04BE — N04BF — N04BG — N04BH — N04BJ — N04BK — N04BL — N04BM — N04BN — N04BP — N04BQ — N04BR — N04BS — N04BT — N04BU — N04BV — N04BW — N04BX — N04BY — N04BZ — N04CA — N04CB — N04CC — N04CD — N04CE — N04CF — N04CG — N04CH — N04CJ — N04CK — N04CL — N04CM — N04CN — N04CP — N04CQ — N04CR — N04CS — N04CT — N04CU — N04CV — N04CW — N04CX — N04CY — N04CZ — N04DA — N04DB — N04DC — N04DD — N04DE — N04DF — N04DG — N04DH — N04DJ — N04DK — N04DL — N04DM — N04DN — N04DP — N04DQ — N04DR — N04DS — N04DT — N04DU — N04DV — N04DW — N04DX — N04DY — N04DZ — N04EA — N04EB — N04EC — N04ED — N04EE — N04EF — N04EG — N04EH — N04EJ — N04EK — N04EL — N04EM — N04EN — N04EP — N04EQ — N04ER — N04ES — N04ET — N04EU — N04EV — N04EW — N04EX — N04EY — N04EZ — N04FA — N04FB — N04FC — N04FD — N04FE — N04FF — N04FG — N04FH — N04FJ — N04FK — N04FL — N04FM — N04FN — N04FP — N04FQ — N04FR — N04FS — N04FT — N04FU — N04FV — N04FW — N04FX — N04FY — N04FZ — N04GA — N04GB — N04GC — N04GD — N04GE — N04GF — N04GG — N04GH — N04GJ — N04GK — N04GL — N04GM — N04GN — N04GP — N04GQ — N04GR — N04GS — N04GT — N04GU — N04GV — N04GW — N04GX — N04GY — N04GZ — N04HA — N04HB — N04HC — N04HD — N04HE — N04HF — N04HG — N04HH — N04HJ — N04HK — N04HL — N04HM — N04HN — N04HP — N04HQ — N04HR — N04HS — N04HT — N04HU — N04HV — N04HW — N04HX — N04HY — N04HZ — N04JA — N04JB — N04JC — N04JD — N04JE — N04JF — N04JG — N04JH — N04JJ — N04JK — N04JL — N04JM — N04JN — N04JP — N04JQ — N04JR — N04JS — N04JT — N04JU — N04JV — N04JW — N04JX — N04JY — N04JZ — N04KA — N04KB — N04KC — N04KD — N04KE — N04KF — N04KG — N04KH — N04KJ — N04KK — N04KL — N04KM — N04KN — N04KP — N04KQ — N04KR — N04KS — N04KT — N04KU — N04KV — N04KW — N04KX — N04KY — N04KZ — N04LA — N04LB — N04LC — N04LD — N04LE — N04LF — N04LG — N04LH — N04LJ — N04LK — N04LL — N04LM — N04LN — N04LP — N04LQ — N04LR — N04LS — N04LT — N04LU — N04LV — N04LW — N04LX — N04LY — N04LZ — N04MA — N04MB — N04MC — N04MD — N04ME — N04MF — N04MG — N04MH — N04MJ — N04MK — N04ML — N04MM — N04MN — N04MP — N04MQ — N04MR — N04MS — N04MT — N04MU — N04MV — N04MW — N04MX — N04MY — N04MZ — N04NA — N04NB — N04NC — N04ND — N04NE — N04NF — N04NG — N04NH — N04NJ — N04NK — N04NL — N04NM — N04NN — N04NP — N04NQ — N04NR — N04NS — N04NT — N04NU — N04NV — N04NW — N04NX — N04NY — N04NZ — N04PA — N04PB — N04PC — N04PD — N04PE — N04PF — N04PG — N04PH — N04PJ — N04PK — N04PL — N04PM — N04PN — N04PP — N04PQ — N04PR — N04PS — N04PT — N04PU — N04PV — N04PW — N04PX — N04PY — N04PZ — N04QA — N04QB — N04QC — N04QD — N04QE — N04QF — N04QG — N04QH — N04QJ — N04QK — N04QL — N04QM — N04QN — N04QP — N04QQ — N04QR — N04QS — N04QT — N04QU — N04QV — N04QW — N04QX — N04QY — N04QZ — N04RA — N04RB — N04RC — N04RD — N04RE — N04RF — N04RG — N04RH — N04RJ — N04RK — N04RL — N04RM — N04RN — N04RP — N04RQ — N04RR — N04RS — N04RT — N04RU — N04RV — N04RW — N04RX — N04RY — N04RZ — N04SA — N04SB — N04SC — N04SD — N04SE — N04SF — N04SG — N04SH — N04SJ — N04SK — N04SL — N04SM — N04SN — N04SP — N04SQ — N04SR — N04SS — N04ST — N04SU — N04SV — N04SW — N04SX — N04SY — N04SZ — N04TA — N04TB — N04TC — N04TD — N04TE — N04TF — N04TG — N04TH — N04TJ — N04TK — N04TL — N04TM — N04TN — N04TP — N04TQ — N04TR — N04TS — N04TT — N04TU — N04TV — N04TW — N04TX — N04TY — N04TZ — N04UA — N04UB — N04UC — N04UD — N04UE — N04UF — N04UG — N04UH — N04UJ — N04UK — N04UL — N04UM — N04UN — N04UP — N04UQ — N04UR — N04US — N04UT — N04UU — N04UV — N04UW — N04UX — N04UY — N04UZ — N04VA — N04VB — N04VC — N04VD — N04VE — N04VF — N04VG — N04VH — N04VJ — N04VK — N04VL — N04VM — N04VN — N04VP — N04VQ — N04VR — N04VS — N04VT — N04VU — N04VV — N04VW — N04VX — N04VY — N04VZ — N04WA — N04WB — N04WC — N04WD — N04WE — N04WF — N04WG — N04WH — N04WJ — N04WK — N04WL — N04WM — N04WN — N04WP — N04WQ — N04WR — N04WS — N04WT — N04WU — N04WV — N04WW — N04WX — N04WY — N04WZ — N04XA — N04XB — N04XC — N04XD — N04XE — N04XF — N04XG — N04XH — N04XJ — N04XK — N04XL — N04XM — N04XN — N04XP — N04XQ — N04XR — N04XS — N04XT — N04XU — N04XV — N04XW — N04XX — N04XY — N04XZ — N04YA — N04YB — N04YC — N04YD — N04YE — N04YF — N04YG — N04YH — N04YJ — N04YK — N04YL — N04YM — N04YN — N04YP — N04YQ — N04YR — N04YS — N04YT — N04YU — N04YV — N04YW — N04YX — N04YY — N04YZ — N04ZA — N04ZB — N04ZC — N04ZD — N04ZE — N04ZF — N04ZG — N04ZH — N04ZJ — N04ZK — N04ZL — N04ZM — N04ZN — N04ZP — N04ZQ — N04ZR — N04ZS — N04ZT — N04ZU — N04ZV — N04ZW — N04ZX — N04ZY — N04ZZ

OVERFLOW PWD-VSL-00033 — PTF-M6-PWD-00002002 C7 — NOTE 7 — PVP-ZS-00001-S11Z-04 — N07

PVP-VSL-00001 NOTE 1 — N06

FT 0468 — TC 0468 — PVP-V-02811 — PVP-ZS-00473-S11Z-02 — N01

FI 0468 — YC 0439 — YC 0441 — YC 0477 — YC 0469 — YC 0471 — YC 0476 — FT 0470 — FI 0470

YV 0477 — FO — S11Z — S11B — NOTE 6

PVP-ZS-00473-S11B-02

BC BULGE — PVP-ZS-00473-S11Z-02

VENDOR — BECHTEL

PVP-ZE-00229-S11C-01 — PVP-V-11147 — PVP-V-02812 — NOTE 5

BULGE C3 — PVP-ZE-00229-S11C-01

PVP-PMP-00002A — PVP-PMP-00002B

PDI 0484 — FDT 0484 — PVP-PDT-12985 — 2" SCH 40S (ID=2.067") — PVP-PL-00258-S11Z-03 — N03 — C3 AREA ROOM P-0101A — PVP-HEPA-00047

PVP-ZS-00035-S11B-03 — PVP-V-00179 — PVP-V-00180 — PVP-V-00182 — PVP-V-00183 — PVP-ZS-00024-S11B-03 — PVP-ZS-00033-S11B-01 — PVP-ZS-00021-S11B-01 — PVP-ZS-00005-S11B-02 — PVP-ZS-00006-S11B-02 — PVP-V-07827 — PVP-V-07828 — PVP-ZS-00005-S11B-02 — PWD-VSL-00044 PTF-M6-PWD-00002001 C8

YV 0469 — FC — NOTE 6 — YV 0470 — T — P 0470 — YV 0471 — FC

BULGE BC — BULGE BC — PVP-PL-00259-S11Z-03 — C5 AREA ROOM P-0102A — N09 — 1100

PVP-BULGE-00002 NOTE 3

PVP-ZY-00036-S11B-03 — PWD-VSL-00033 PTF-M6-PWD-00007 C1

LEAK 0473 — LSH 0473 — PVP-PDT-12979 — PVP-V-12100 — PVP-ZE-00288-S11B-01 — PVP-ZE-03735-S11B-01 — PVP-V-07826 — PVP-ZE-00288-S11C-01 — N05 — N06 — 1100 — N08 — N07 — BULGE — BC — PVP-ZS-00004-S11B-01

NOTES:

1. SEE DRAWINGS 24590-WTP-M6-50-00001 THROUGH 24590-WTP-M6-50-00008 FOR GENERAL NOTES, SYMBOLS AND LEGEND, AND GENERAL SLOPE REQUIREMENTS.
2. CONTENTS OF THIS DRAWING ARE DANGEROUS WASTE PERMIT AFFECTING.
3. THE PRESSURE BOUNDARY FOR ALL COMPONENTS SHOWN ON THIS DRAWING IS QUALITY LEVEL Q AND SEISMIC CATEGORY SC-III, UNLESS OTHERWISE NOTED. THE BULGE ENCLOSURE IS QUALITY LEVEL Q AND SEISMIC CATEGORY SC-II. PVP-VSL-00001 IS QUALITY LEVEL QM AND SEISMIC CATEGORY SC-II.
4. ALL LINES SHOWN ON THIS DRAWING SHALL BE FREE DRAINING, EXCEPT BLACK CELL LINES WHICH ARE SELF DRAINING, UNLESS OTHERWISE NOTED.
5. REAGENT/PLANT WASH/AIR SERVICES PROVIDED AT UTILITY STATION.
6. VALVES CYCLE ON TRANSFER REQUIREMENTS.
7. THE OVERFLOW LINE SHALL BE DIPPED INTO VESSEL PWD-VSL-00033.
8. SEE DRAWING 24590-PTF-M6-ISA-00010 FOR BUBBLER RACKS AND SYSTEM CONNECTIONS.
9. THIS DRAWING IS CONVERTED FROM A SINGLE SHEET TO MULTI-SHEET DRAWING AND IN PART SUPERSEDES 24590-PTF-M6-PVP-00018, REV. 2. THIS DRAWING INCLUDES INFORMATION FROM 24590-PTF-M6N-V8001, 00027, -00028, -00031, -00036, -00037, -00045, 24590-PTF-M6N-PVP-00039, -00042, -00046, -00049, AND FURTHER MODIFIED TO UPDATE COMPARTMENT, QUALITY LEVEL AND SEISMIC BREAKS, CLARIFY SLOPING REQUIREMENTS, REMOVE DESIGN HOLDS AND REFLECT CURRENT DRAFTING PRACTICES.

HOLD/OPEN ITEMS:

NONE

REFERENCES:

1. THE REQUIRED OPERATIONAL SEQUENCES, PERMISSIVES, INTERLOCKS, ALARMS, AND OPERATOR INTERFACE POINTS ARE FULLY DESCRIBED IN THE PVP SYSTEM LOGIC DIAGRAMS (FUTURE) AND THE PVP SYSTEM DESCRIPTION (FUTURE REVISION).

Please note that source, special nuclear, and byproduct materials, as defined in the Atomic Energy Act of 1954 (AEA) are regulated at the U. S. Department of Energy (DOE) facilities exclusively by DOE acting pursuant to its AEA authority. DOE asserts that pursuant to AEA, it has sole and exclusive responsibility and authority to regulate source, special nuclear, and byproduct materials at DOE-owned nuclear facilities. Information contained herein on radionuclides is provided for process description purposes only.

Q QUALITY DESIGNATION

REV	DESCRIPTION	DRC	CHKD	RVWD-APVD	DATE
0	ISSUED FOR CONSTRUCTION SEE NOTE 9	CRS	BH	CEK, MPR, RKD	10/3/08

REVISION HISTORY

ISSUED BY RPP-WTP PDC — ISSAC ITHIP

	PROJECT No.	24590
	SITE	HANFORD
	AREA	200W
	BUILDING No.	101

	BY	DATE
ORIGINATOR	[illegible]	10/3/08
CHECKER	Patti Matsuda	10/30/08
APPROVER	Rick Ford	10/31/08
REVIEWER	[illegible]	11/3/08
	Carl Healy	10/30/08

CONTENT APPLICABLE TO ALARA? [X] YES [ ] NO — ADR NO. 24590-PTF-ADR-M-00-001 REV. 3

SAFETY SIGN-IN REQUIRED? [ ] YES [ ] NO [ ] NAS INITIAL IF YES [ ]

SEE SHEET 2 FOR REQUIRED DRAWING TYPES IDENTIFIED IN 24590-WTP-GPP-MGT-002

BECHTEL

RIVER PROTECTION PROJECT WASTE TREATMENT PLANT 2435 STEVENS CENTER PLACE RICHLAND, WA 99354

CONTRACT No. DE-AC27-01RV14136

P&ID - PTF
PRETREATMENT VESSEL VENT PROCESS SYSTEM
HEME DRAIN COLLECTION
PVP-VSL-00001 / PVP-BULGE-00002

SCALE: NONE — 24590-PTF-M6-PVP-00018002 — REV. 0

R1006289

COMPUTER GENERATED - MANUAL CHANGES NOT PERMITTED

THIS DRAWING IS THE PROPERTY OF BECHTEL NATIONAL, INC. UNAUTHORIZED USE OTHER THAN THAT SPECIFICALLY AUTHORIZED BY BECHTEL NATIONAL, INC. IS PROHIBITED. THE INFORMATION HEREON IS CONFIDENTIAL AND NOT TO BE DISCLOSED TO OTHERS WITHOUT THE WRITTEN CONSENT OF BECHTEL NATIONAL, INC.

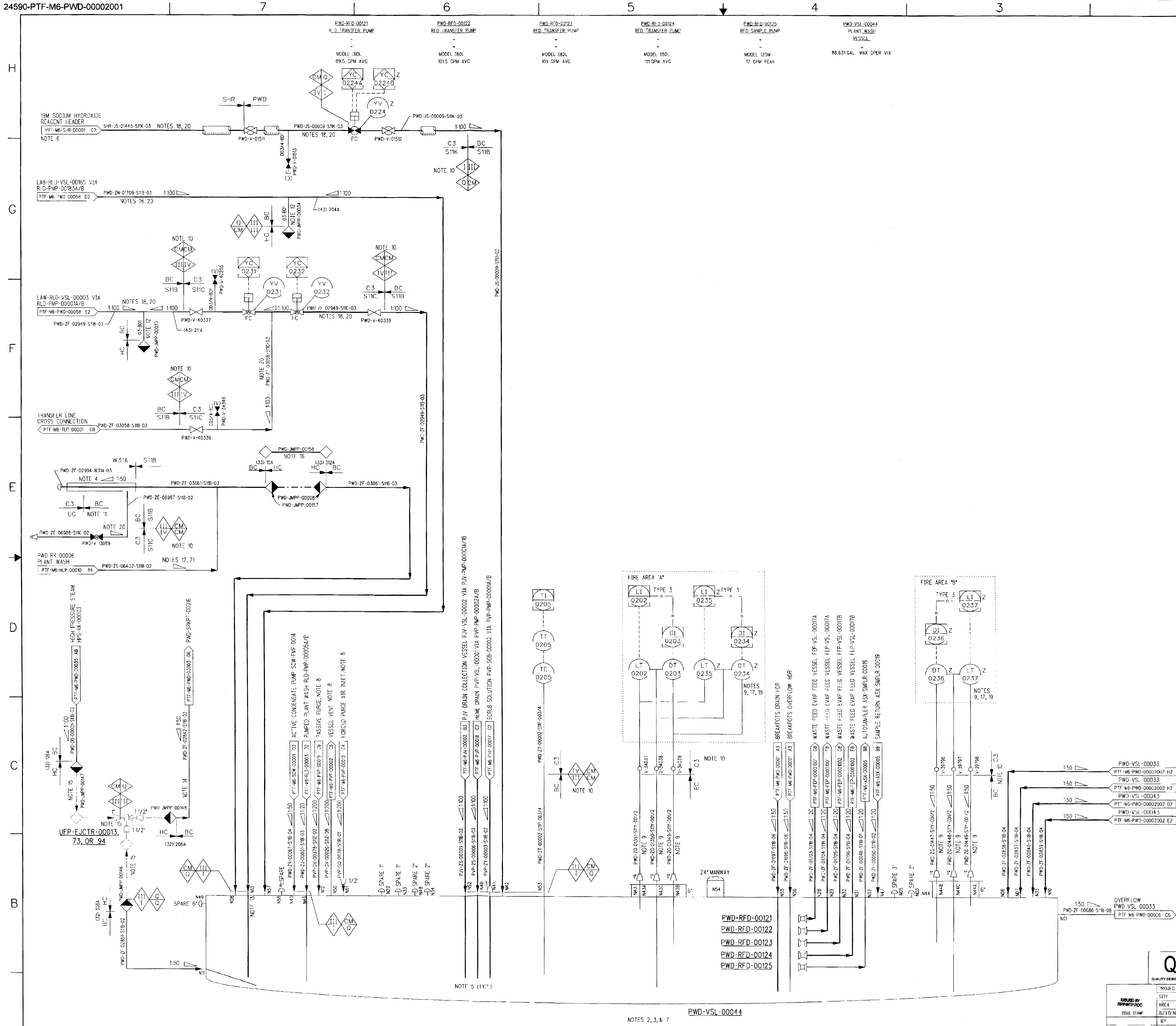

NOTES:

1. SEE DRAWINGS 24590-WTP-M6-50-00001 THROUGH 24590-WTP-M6-50-00008 FOR GENERAL NOTES, SYMBOLS AND LEGEND, AND GENERAL SLOPE REQUIREMENTS.
2. REFER TO DRAWINGS 24590-PTF-M6-UFP-00007, -00008, -00009, AND -00011 FOR PULSE JET MIXERS AND CHARGE VESSELS REPRESENTATION AND NOZZLES UTILIZED.
3. REFER TO DRAWING 24590-PTF-M6-PWD-00046 FOR PLANT WASH REPRESENTATION AND NOZZLES UTILIZED.
4. TRANSFER LINE IS PROVIDED TO ACCOMMODATE CONTAMINATED EFFLUENT FROM PROPOSED FUTURE LAW FACILITY AND RLD-VSL (FUTURE). BATTERY LIMITS FOR PIPING IS 5 FEET OUTSIDE PRETREATMENT FACILITY AND LOCATED AT NORTH TUNNEL. ENCASEMENT PIPING IS TO BE TERMINATED 1 FOOT INSIDE THE PRETREATMENT BUILDING.
5. LINES SHALL BE DIPPED INTO THE PROCESS FLUID AS SHOWN TO ACHIEVE A HYDRAULIC SEAL.
6. 19-MOLAR SODIUM HYDROXIDE TO BE ABOVE 86° F.
7. THE PRESSURE BOUNDARY FOR THE VESSEL IS QUALITY LEVEL Q AND SEISMIC CATEGORY SC-I. THE PRESSURE BOUNDARY FOR REVERSE FLOW DIVERTERS IS QUALITY LEVEL CM AND SEISMIC CATEGORY SC-III. THE PRESSURE BOUNDARY FOR PIPE WORK TO AND FROM THE VESSEL IS QUALITY LEVEL Q AND SEISMIC CATEGORY SC-III, UNLESS OTHERWISE SPECIFIED. ALL INTERNAL SUPPORTS AND WELDS THAT INTERACT WITH THE PRIMARY CONTAINMENT BARRIER (VESSEL) SHALL MAINTAIN EQUAL QUALITY AND SEISMIC CATEGORY AS THE PARENT.
8. THE PRESSURE BOUNDARY FOR PIPELINES OF AIR PURGE AND VESSEL VENT ARE QUALITY LEVEL Q AND SEISMIC CATEGORY SC-I.
9. THE PRESSURE BOUNDARY FOR INDICATED LEVEL AND DENSITY LINES INCLUDING DIP LEGS SHALL BE QUALITY LEVEL Q AND SEISMIC CATEGORY SC-I.
10. PIPE SLEEVE PENETRATIONS BETWEEN OCCUPATIONAL AREAS AND INACCESSIBLE/REMOTE AREAS (R5) SHALL HAVE SHADOW SHIELDING TO MITIGATE DIRECT RADIATION SHINE OR BE JOGGLED, AS DETERMINED BY ENVIRONMENTAL AND NUCLEAR SAFETY. ALL PIPE/SLEEVE INTERFACES SHALL BE SEALED USING APPROVED FIRE-RATED PENETRATION SEAL DESIGN TO MAINTAIN THE INTEGRITY OF THE FIRE WALL BETWEEN THE AREAS.
11. LINE IS INSIDE THE BUILDING.
12. WASH LINES TO BE CONNECTED AT THE HIGH POINTS, AND DRAIN LINES TO BE CONNECTED AT THE LOW POINTS.
13. A 1/4 INCH DIAMETER HOLE TO BE PROVIDED AT THE TOP OF DIP PIPE TO ACHIEVE A SIPHON BREAK.
14. MAINTAIN MINIMUM 10 DIAMETERS STRAIGHT PIPE RUN ON EJECTOR DISCHARGE LINES.
15. TO EMPTY PWD-VSL-00044, THE VESSEL WILL USE ONE OF THE THREE TRANSFERABLE PERMEATE VESSEL EMPTYING EJECTORS UFP-EJCTR-00013, UFP-EJCTR-00073, OR UFP-EJCTR-00094 FROM P&ID 24590-PTF-M6-UFP-00004. FOR EJECTORS AND REQUIRED RELATED JUMPERS SEE EMPTYING EJECTOR JUMPER TABLE.

EMPTYING EJECTOR JUMPER TABLE			
EJECTOR NUMBER	JUMPERS REQUIRED FOR EJECTOR INSTALLATION		
	STEAM JUMPER	DISCHARGE JUMPER	SUCTION JUMPER
UFP-EJCTR-00013	UFP-JMPP-00006	UFP-JMPP-00180	UFP-JMPP-00203
UFP-EJCTR-00073	UFP-JMPP-00235	UFP-JMPP-00178	UFP-JMPP-00205
UFP-EJCTR-00094	UFP-JMPP-00234	UFP-JMPP-00179	UFP-JMPP-00204

16. FUTURE JUMPER CONNECTION. JUMPER WITH CONTROL VALVE TO BE DESIGNED BY PLANT DESIGN, NOT FABRICATED AS JUMPER EQUIPMENT TAG PWD-JMPP-00158. AIR AND ELECTRICAL CONNECTIONS WILL BE REQUIRED FOR FUTURE USE.
17. SEE DRAWING 24590-PTF-M6-ISA-00010 FOR BUBBLER PACK AND SYSTEM CONNECTIONS.
18. PROVIDE VENTS AND DRAINS AS NEEDED. VENTS AND DRAINS SHALL BE DESIGNED PER 24590-WTP-3PB-P000-T0001.
19. REQUIRES ITS INSTRUMENT-GRADE AIR.
20. THIS LINE TO BE FREE DRAINING WITH NO POCKETS.
21. BLACK CELL PIPING TO BE SUPPORTED FOR WATERFALL AND FOR EXPECTED DYNAMIC FORCES DURING THE TRANSITION FROM A DRY PIPE TO A LIQUID-FULL PIPE.
22. CONTENTS OF THIS DOCUMENT ARE DANGEROUS WASTE PERMIT AFFECTING.
23. THIS DRAWING IS CONVERTED FROM SINGLE SHEET TO MULTI SHEET DRAWING AND IN PART SUPERSEDES 24590-PTF-M6-PWD-00002, REV 3. THIS DRAWING INCLUDES INFORMATION FROM 24590-PTF-M6N-M80T-00017-00026, -00049, 24590-PTF-M6N-PWD-00183, 00218, -00281, -00309 AND -00311.

HOLD/OPEN ITEMS:

NONE

Please note that source, special nuclear, and byproduct materials, as defined in the Atomic Energy Act of 1954 (AEA) are regulated at the U. S. Department of Energy (DOE) facilities exclusively by DOE acting pursuant to its AEA authority. DOE asserts that pursuant to AEA, it has sole and exclusive responsibility and authority to regulate source, special nuclear, and byproduct materials at DOE-owned nuclear facilities. Information contained herein on radionuclides is provided for process description purposes only.

REFERENCES:

1. THE REQUIRED BATCH SEQUENCES, PERMISSIVES, INTERLOCKS, ALARMS AND OPERATOR INTERFACE POINTS ARE FULLY DESCRIBED IN THE SOFTWARE FUNCTIONAL SPECIFICATION, FOR PLANT WASH AND DISPOSAL SYSTEM, 24590-PTF-3PS-PWD-T0001.
2. FOR PERMISSIVES AND INTERLOCKS TO IMPORTANT TO SAFETY SYSTEMS REFER TO SAFETY SYSTEM REQUIREMENT DOCUMENTS. 24590-PTF-3PS-PPJ-T0018 (FUTURE), -T0022 (FUTURE).
3. FOR PERMISSIVES AND INTERLOCKS TO AUTO SAMPLING SYSTEM REFER TO SOFTWARE FUNCTIONAL SPECIFICATION 24590-WTP-3PS-ASX-T0001 (FUTURE).

DRAWING INDEX		
DWG NO	REV	TITLE
24590-PTF-M6-PWD-00002001	0	PLANT WASH & DISPOSAL SYSTEM EFFLUENT COLLECTION PWD-VSL-00044
24590-PTF-M6-PWD-00002002	0	PLANT WASH & DISPOSAL SYSTEM EFFLUENT COLLECTION PWD-VSL-00044

Q
QUALITY DESIGNATOR

REV	DESCRIPTION	ORG	CHKD	RVWD	APVD	DATE
0	ISSUED FOR CONSTRUCTION SEE NOTE 23	TKC	APP	ELS		3/18/08

REVISION HISTORY

PROJECT No.	24590
SITE	HANFORD
AREA	200E
BUILDING No.	10

ORIGINATOR / CHECKER / APPROVER / REVIEWER — DATE: 3/13/08, 3/13/08, 3/18/08, 3/13/08, 3/13/08

RIVER PROTECTION PROJECT
WASTE TREATMENT PLANT
2435 STEVENS CENTER PLACE
RICHLAND, WA 99354

CONTRACT No: DE-AC27-01RV14136

P&ID - PTF
PLANT WASH & DISPOSAL SYSTEM EFFLUENT COLLECTION PWD-VSL-00044

CONTENT APPLICABLE TO ALARA? [X] YES [ ] NO
ADR NO. 24590-PTF-ADR-M-08-0001 REV: 0
SAFETY SCREEN REQUIRED? [X] YES [ ] NO E&NS INITIAL IF YES

SCALE: NONE

24590-PTF-M6-PWD-00002001 REV 0

SAFETY SCREEN IS REQUIRED FOR DRAWING TYPES IDENTIFIED IN 24590-WTP-GPP-SREG-002

'E' SIZE - 44x34
COMPUTER GENERATED - MANUAL CHANGES NOT PERMITTED

R10844316

03/13/2008 08:12:52 AM

FORM F-SPI-0009 07/2007

24590-PTF-M6-PWD-00002002

PWD-EJCTR-00120 VESSEL EMPTYING EJECTOR — MODEL 1H2, 30 GPM
PWD-VSL-00033 ULTIMATE OVERFLOW VESSEL — 31,476 GAL MAX OPER VOL, 288 IN ID x 89 IN (T-T)
PWD-RFD-00131 RFD TRANSFER PUMP — MODEL 180L, 83 GPM AVG
PWD-RFD-00132 RFD TRANSFER PUMP — MODEL 180L, 68.5 GPM AVG
PWD-EJCTR-00119 VESSEL EMPTYING EJECTOR — MODEL 1H2, 30 GPM
PWD-VSL-00043 HLW EFFLUENT TRANSFER VESSEL — 26,580 GAL MAX OPER VOL, 288 IN ID x 89 IN (T-T)
PWD-RFD-00142 RFD TRANSFER PUMP — MODEL 180L, 79 GPM AVG
PWD-RFD-00141 RFD TRANSFER PUMP — MODEL 180L, 76 GPM AVG

PWD VSL 00044 PTF-M6-PWD-00002001 C2
PWD VSL 00044 PTF-M6-PWD-00002901 C2
PWD-VSL-00044 PTF-M6-PWD-00003001 C2
PWD-VSL-00044 PTF-M6-PWD-02003001 C2
PWD-RK-00046 PTF-M6-PWD-00005 A7
PWD-SLMP-00040 PTF-M6-PWD-00002 H6

NOTES:

1. SEE DRAWINGS 24590-WTP-M6-50-00001 THROUGH 24590-WTP-M6-50-00008 FOR GENERAL NOTES, SYMBOLS AND LEGEND, AND GENERAL SLOPE REQUIREMENTS.
2. REFER TO DRAWINGS 24590-PTF-M6-PWD-00020001 THRU 00020006 AND 24590-PTF-M6-PWD 00021001 THRU 00021006 FOR PULSE JET MIXERS AND CHARGE VESSELS REPRESENTATION AND NOZZLES UTILIZED.
3. REFER TO DRAWINGS 24590-PTF-M6-PWD-00025 AND 24590-PTF-M6-PWD-00045 FOR PLANT WASH REPRESENTATION AND NOZZLES UTILIZED.
4. SPARE HIGH-LEVEL WASTE TRANSFER LINE IS PROVIDED TO ACCOMMODATE POTENTIAL MODIFICATIONS DURING COMMISSIONING.
5. LINES TO BE DIPPED INTO THE PROCESS FLUID AS SHOWN TO ACHIEVE A HYDRAULIC SEAL.
6. BLACK CELL PIPING TO BE SUPPORTED FOR WATERFALL AND FOR EXPECTED DYNAMIC LOADS DURING THE TRANSITION FROM A DRY PIPE TO A LIQUID-FULL PIPE.
7. THE PRESSURE BOUNDARY FOR VESSELS ARE QUALITY LEVEL Q AND SEISMIC CATEGORY SC-III. THE PRESSURE BOUNDARY FOR PIPE WORK TO AND FROM THE VESSELS IS QUALITY LEVEL Q AND SEISMIC CATEGORY SC-III, UNLESS OTHERWISE NOTED. ALL INTERNAL SUPPORTS AND WELDS THAT INTERACT WITH THE PRIMARY CONTAINMENT BARRIER (VESSEL) SHALL MAINTAIN EQUAL QUALITY AND SEISMIC CATEGORY AS THE PARENT.
8. THE PRESSURE BOUNDARY FOR PIPELINES OF AIR PURGE, VESSEL VENT ARE QUALITY LEVEL Q AND SEISMIC CATEGORY SC-I.
9. THE PRESSURE BOUNDARY FOR INDICATED LEVEL AND DENSITY LINES INCLUDING DIP LEGS SHALL BE QUALITY LEVEL Q AND SEISMIC CATEGORY SC-I.
10. PIPE SLEEVE PENETRATIONS BETWEEN OCCUPATIONAL AREAS AND INACCESSIBLE/REMOTE AREAS (RS) SHALL HAVE SHADOW SHIELDING TO MITIGATE DIRECT RADIATION SHINE OR BE JOGGLED, AS DETERMINED BY ENVIRONMENTAL AND NUCLEAR SAFETY. ALL PIPE/SLEEVE INTERFACES SHALL BE SEALED USING APPROVED FIRE-RATED PENETRATION SEAL DESIGN TO MAINTAIN THE INTEGRITY OF THE FIRE WALL BETWEEN THE AREAS.
11. CONTENTS OF THIS DOCUMENT ARE DANGEROUS WASTE PERMIT AFFECTING.
12. MAINTAIN MINIMUM 10 DIAMETERS STRAIGHT PIPE RUN ON EJECTOR DISCHARGE LINES.
13. LEVEL INDICATION LOCATED IN PLANT WASH RACK PWD-RK-00046.
14. SEE DRAWING 24590-PTF-M6-ISA-00010 FOR BUBBLER PACK AND SYSTEM CONNECTIONS.
15. REQUIRES ITS INSTRUMENT-QUALITY AIR.
16. PIPE ROUTING LIMITED TO MAXIMUM OF AN 8 FOOT STRAIGHT VERTICAL DROP AT THE CONNECTION TO THE VESSEL.
17. THIS DRAWING IS CONVERTED FROM SINGLE SHEET TO MULTI SHEET DRAWING AND IN PART SUPERSEDES 24590-PTF-M6-PWD-00002, REV 3. THIS DRAWING INCLUDES INFORMATION FROM 24590-PTF-MRN-MRGT-00017-00025, -00026, 24590-PTF-MRN-PWD-00083, -00218, -00223, -00281, AND -00309.

HOLD/OPEN ITEMS:

NONE

REFERENCES:

1. THE REQUIRED BATCH SEQUENCES, PERMISSIVES, INTERLOCKS, ALARMS AND OPERATOR INTERFACE POINTS ARE FULLY DESCRIBED IN THE SOFTWARE FUNCTIONAL SPECIFICATION, "FOR PLANT WASH AND DISPOSAL SYSTEM, 24590-PTF-3PS-PWD-T0001.
2. FOR PERMISSIVES AND INTERLOCKS TO IMPORTANT TO SAFETY SYSTEMS REFER TO SAFETY SYSTEM REQUIREMENT DOCUMENTS 24590-PTF-3PS-PPU-T0018 (FUTURE), -T0021 (FUTURE), AND -T0022 (FUTURE).

Please note that source, special nuclear, and byproduct materials, as defined in the Atomic Energy Act of 1954 (AEA) are regulated at the U. S. Department of Energy (DOE) facilities exclusively by pursuant to its AEA authority. DOE asserts that authority to regulate source, special nuclear, and byproduct materials at DOE-owned nuclear facilities. Information contained herein on radionuclides is provided for process description purposes only.

REV	DESCRIPTION	ORG	CHKD	REVWD	APVD	DATE
0	ISSUED FOR CONSTRUCTION SEE NOTE 17	PRC	APP	ECR 1124	1164	3/26/08

REVISION HISTORY

Q — QUALITY DESIGNATOR

ISSUED BY ENGINEERING FOR ISSUE STAMP

	BY	DATE
ORIGINATOR	Steve Campbell	3/27/08
CHECKER	APPROVED	3/27/08
APPROVER		3/28/08
REVIEWER		3/27/08
	Colleen Bradley	3/27/08

CONTENT APPLICABILITY CRITERIA? ☐ YES ☐ NO
ADR NO. 24590 PTF ADR-M-08-0001 REV: 0
SAFETY SCREEN REQUIRED? ☐ YES ☐ NO (ENG INITIAL IF YES/SCR #)
SAFETY SCREEN IS RESOLVED FOR DRAWING THIS REVISION IN 24590-WTP-SPS-SSP-S-002

PROJECT No. 24590
SITE HANFORD
AREA 200E
BUILDING No. 10

BECHTEL — RIVER PROTECTION PROJECT WASTE TREATMENT PLANT, 2435 STEVENS CENTER PLACE, RICHLAND, WA 99354

CONTRACT No.: DE-AC27-03RW14136

P&ID - PTF
PLANT WASH & DISPOSAL SYSTEM EFFLUENT COLLECTION PWD-VSL-00033/00043

SCALE: NONE — SIZE: 44x34 — COMPUTER GENERATED - MANUAL CHANGES NOT PERMITTED

24590-PTF-M6-PWD-00002002 — REV 0

03/27/2008 01:20:24 AM

FORM 1_SECTION 27/2007

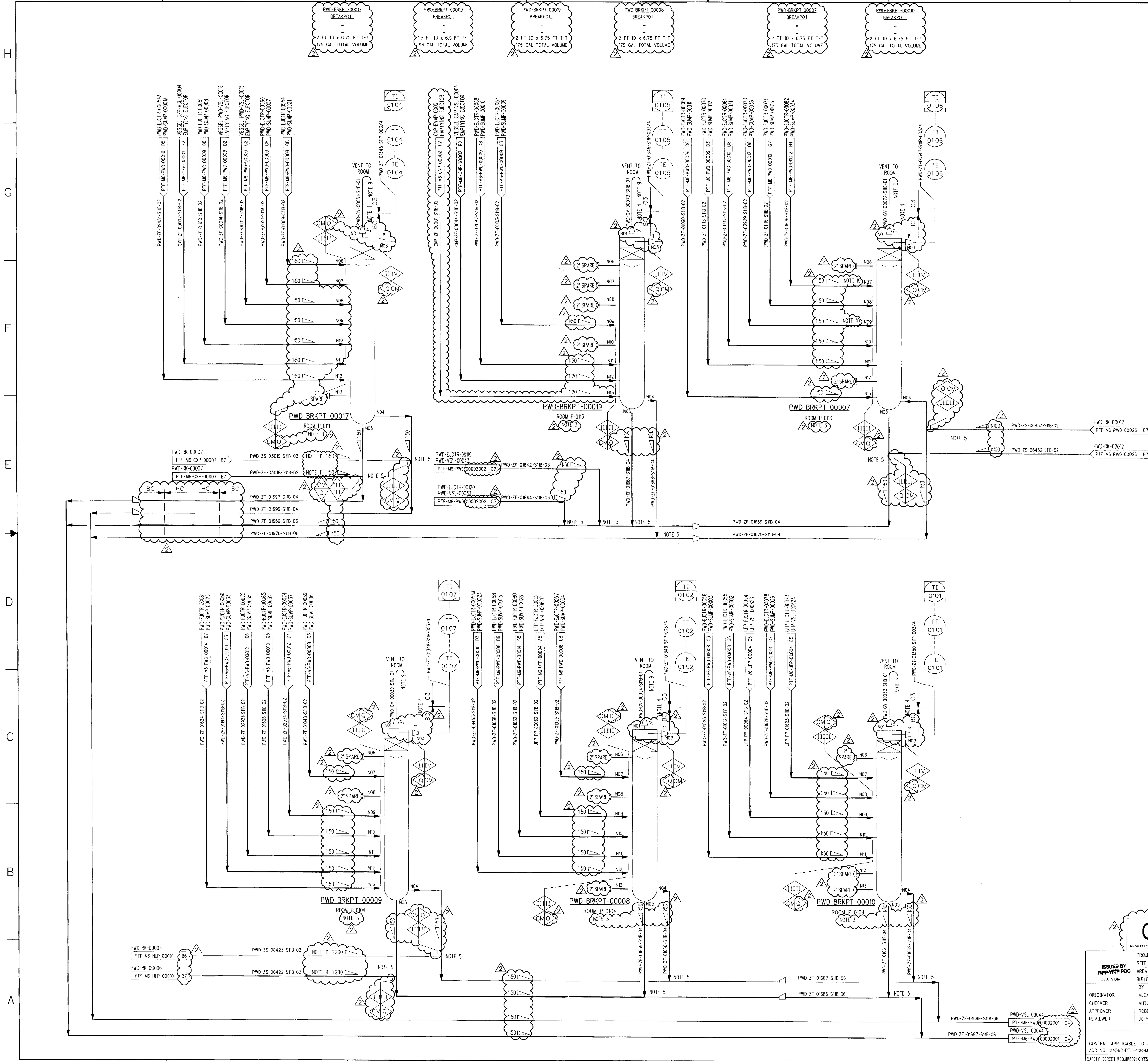

NOTES:

1. SEE DRAWINGS 24590-WTP-M6-50-00001 THROUGH 24590-WTP-M6-50-00008 FOR GENERAL NOTES, SYMBOLS AND LEGEND, AND GENERAL SLOPE REQUIREMENTS.
2. THE PRESSURE BOUNDARY FOR ALL BREAK POTS ON THIS DRAWING ARE TO BE QUALITY LEVEL Q AND SEISMIC CATEGORY SC-II. THE PRESSURE BOUNDARY FOR ALL PIPING AND OTHER COMPONENTS ARE TO BE QUALITY LEVEL Q AND SEISMIC CATEGORY SC III UNLESS OTHERWISE NOTED.
3. WASH RINGS FOR BREAKPOTS ARE SHOWN ON 24590-PTF-M6-CXP-00007, 24590-PTF-M6-PWD-00026, AND 24590-PTF-M6-HLP-00010.
4. PIPE SLEEVE PENETRATIONS BETWEEN OCCUPATIONAL AREAS AND INACCESSIBLE/REMOTE AREAS (R5) SHALL HAVE SHADOW SHIELDING TO MITIGATE DIRECT RADIATION SHINE OR BE JOGGLED, AS DETERMINED BY ENVIRONMENTAL AND NUCLEAR SAFETY. ALL PIPE/SLEEVE INTERFACES SHALL BE SEALED USING APPROVED FIRE-RATED PENETRATION SEAL DESIGNS TO MAINTAIN THE INTEGRITY OF THE FIRE WALL BETWEEN AREAS.
5. A 45-DEGREE WYE PIPE FITTING SHALL BE USED AT THIS CONNECTION AND LOCATION.
6. DELETED
7. CONTENTS OF THIS DOCUMENT ARE DANGEROUS WASTE PERMIT AFFECTING.
8. DELETED
9. THE END OF THE VENT LINE IS TO BE A MINIMUM OF 4" ABOVE THE BREAKPOT.
10. THE MINIMUM SLOPE REQUIREMENT OF LINES AT EXISTING WALL PENETRATIONS IS BEING RELAXED TO MATCH THE SLOPE OF THE PENETRATION. WITHIN 8 FEET ADJACENT TO THE PENETRATIONS, THE SLOPE MAY BE RELAXED FROM 1:20 TO A MINIMUM OF 1:50. THE PORTION OF THE LINE ADJACENT TO THE WALL PENETRATION SHALL HAVE NO TRAPS OR POCKETS THAT WILL HOLD OR ACCUMULATE LIQUIDS OR SOLIDS.
11. DRAIN LINES SHALL BE SELF DRAINING
12. REVISION 2: REVISED TO INCORPORATE 24590-PTF-MGN-M80T-00017, -00027, -00037, -00038, 24590-PTF-M6N-PWD-00187, -00216, -00233, AND 00249. INCORPORATED REDLINE COMMENTS. ADDED/DELETED/REVISED NOTES AND REFERENCES.

HOLD/OPEN ITEMS:

1.- 4. DELETED

REFERENCES:

1. THE REQUIRED BATCH SEQUENCES, PERMISSIVES, INTERLOCKS, ALARMS, AND OPERATOR INTERFACE POINTS ARE FULLY DESCRIBED IN THE SOFTWARE FUNCTIONAL SPECIFICATION, FOR PWD-PLANT WASH AND DISPOSAL SYSTEM, 24590-PTF-3PS PWD T0001.

Please note that source, special nuclear, and byproduct materials, as defined in the Atomic Energy Act of 1954 (AEA) are regulated at the U. S. Department of Energy (DOE) facilities exclusively by DOE acting pursuant to its AEA authority. DOE asserts that pursuant to AEA, it has sole and exclusive responsibility and authority to regulate source, special nuclear, and byproduct materials at DOE-owned nuclear facilities. Information contained herein on radionuclides is provided for process description purposes only.

Q
QUALITY DESIGNATOR

REV	DESCRIPTION	ORG	CHKD	RVWD	APVD	DATE
2	REVISED PER NOTE 12	PU	Sun	CEX ELS	JJM RCA	2/20/08
1	RELEASED HOLDS, INCORPORATED DESIGN CHANGES AND 24590-PTF-M6N-PWD-00091, 24590-PTF-M6N-PWD-00135, AND 24590-PTF-M6N-M80T-00007	WR	AM	RV	JJ	5/28/04
0	ISSUED FOR CONSTRUCTION	AS	AM	RV	JJ	4/23/03

REVISION HISTORY

ISSUED BY RPP-WTP PDC
ISSUE STAMP

PROJECT No.	24590
SITE	HANFORD
AREA	200E
BUILDING No.	10

BECHTEL
RIVER PROTECTION PROJECT
WASTE TREATMENT PLANT
2435 STEVENS CENTER PLACE
RICHLAND, WA 99354

	BY	DATE
ORIGINATOR	ALEX SHEVCHENKO	4/18/03
CHECKER	ANTONIO MOLINA	4/18/03
APPROVER	ROBERT VOKE	4/23/03
REVIEWER	JOHN JULYK	4/18/03

CONTRACT No: DE-AC27-01RV14136

P&ID - PTF
PLANT WASH & DISPOSAL SYSTEM
EFFLUENT COLLECTION TREE

CONTENT APPLICABLE TO ALARA? [X] YES [ ] NO
ADR NO. 24590-PTF-ADR-M-08-0001 REV: 0
SAFETY SCREEN REQUIRED? [X] YES [ ] NO E&NS INITIAL IF YES GDH

SCALE: NONE | 24590-PTF-M6-PWD-00001 | REV 2

SAFETY SCREEN IS REQUIRED FOR DRAWING TYPES IDENTIFIED IN 24590-WTP-GPP-SREG-002

'E' SIZE - 44x34
COMPUTER GENERATED - MANUAL CHANGES NOT PERMITTED

R10884411
02/04/2008 02:47:35 PM

PLOTTED BY: mdritter
C:\Work\mdritter\dms03837\PTFM6PWD00001.dgn

FORM K_DSN-004 02/2003

NOTES:

1. SEE DRAWINGS 24590-WTP-M6-50-00001 THROUGH 24590-WTP-M6-50-00008 FOR GENERAL NOTES, SYMBOLS AND LEGEND, AND GENERAL SLOPE REQUIREMENTS.
2. THE PRESSURE BOUNDARY FOR ALL PIPING AND COMPONENTS IN THIS DRAWING ARE QUALITY LEVEL Q AND SEISMIC CATEGORY SC-III, UNLESS OTHERWISE NOTED.
3. PIPE SLEEVE PENETRATIONS BETWEEN OCCUPATIONAL AREAS AND INACCESSIBLE/REMOTE AREAS (RB) SHALL HAVE SHADOW SHIELDING TO MITIGATE DIRECT RADIATION SHINE OR BE JOGGLED, AS DETERMINED BY ENVIRONMENTAL AND NUCLEAR SAFETY. ALL PIPE/SLEEVE INTERFACES SHALL BE SEALED USING APPROVED FIRE-RATED PENETRATION SEAL DESIGN TO MAINTAIN THE INTEGRITY OF THE FIRE WALL BETWEEN AREAS.
4. CONTENTS OF THIS DOCUMENTS ARE DANGEROUS WASTE PERMIT AFFECTING.

5-6. DELETED

7. REVISION 2: REVISED INCORPORATING 24590-PTF-M6N-M80T-00007, -PWD-00092, -00158, AND -00196 ADDITIONAL CHANGES TO THE DRAWING ARE LISTED BELOW: MOVED LINE PWD-ZS-06449-S11C-02 TO THE RIGHT OF LINE PWD-ZS-06450-S11C-02 REVISED HOW AND WHERE LINES TLP-ZR-00298-S1C-02, CNP-ZR-00267-S1C-02, CHW-WN-00035-S11C-02, AND PWD-ZS-06450-S11C-02 CONNECT TO HEADER PWD-ZS-06512-S11C-04. REVISED THE SLOPES TO MATCH THE CONNECTING DRAWINGS FOR LINES PWD-PX-02993-S32A-02 AND PWD-PX-00051-S12A-03.
8. REVISION 3: REVISED TO INCORPORATE 24590-PTF-M6N-M80T-00026, -00037, -00038, 24590-PTF-M6N-PWD-00234, -00250, -00270, -00271, -00281, AND 00311. MODIFIED OFF SHEET CONNECTOR DATA. CHANGED LINE NUMBER CNP-ZR-00267 TO CNP-ZR-00295. ADDED COLLECTION HEADER DESIGNATIONS. ADDED AND MODIFIED SLOPES. DELETED WATER DRAIN HEADERS AND RELATED LINES AND VALVE. ADDED AND MODIFIED QUALITY LEVEL AND SEISMIC CATEGORY BREAKS PER ISM AND SED DOCUMENTS. SUBSTANTIFIED HOT CELL AND BLACK CELL BOUNDARY WITH INDICATOR. ADDED/DELETED NOTES AND HOLDS. SYSTEM REQUIRES DESIGN VERIFICATION.

HOLD/OPEN ITEMS:

1-2. DELETED

3. HOLD FOR ISOLATION VALVE DETERMINATION

REFERENCES:

NONE

Please note that source, special nuclear, and byproduct materials, as defined in the Atomic Energy Act of 1954 (AEA) are regulated at the U. S. Department of Energy (DOE) facilities exclusively by DOE acting pursuant to its AEA authority. DOE asserts that pursuant to AEA, it has sole and exclusive responsibility and authority to regulate source, special nuclear, and byproduct materials at DOE-owned nuclear facilities. Information contained herein on radionuclides is provided for process description purposes only.

RFV	DESCRIPTION	ORC	CHKD	RVWD	APVD	DATE
3	REVISED PER NOTE 8	PR	[illegible]	[illegible]	[illegible]	2/5/08
2	REVISED AS SHOWN IN NOTE 7	GK	AM	JJ	RV	11/15/04
0	ISSUED FOR CONSTRUCTION	RM	AM	N/A	RV	11/27/02

REVISION HISTORY

Q QUALITY DESIGNATOR

ISSUED BY RPP-WTP POC

FSML STAMP

PROJECT No.	24590
SITE	HANFORD
AREA	200E
BUILDING No.	10

	BY	DATE
ORIGINATOR	HYAN MCCLAUGHRY	11/27/02
CHECKER	ANTONIO MOLINA	11/27/02
APPROVER	ROBERT VOKE	11/27/02
REVIEWER	N/A	

CONTENT APPLICABLE TO ALARA? [X] YES [ ] NO

A/E NO. 24590-PTF-ASP-M-08-0005 REV. 0

SAFETY SCREEN REQUIRED? [ ] YES [ ] NO | EMS INITIAL Y YES [ ] NO

SAFETY SCREEN IS REQUIRED FOR DRAWING TYPES IDENTIFIED IN 24590-WTP-GPP-SWE-000 2

BECHTEL

RIVER PROTECTION PROJECT
WASTE TREATMENT PLANT
2435 STEVENS CENTER PLACE
RICHLAND, WA 99354

CONTRACT No: DE-AC27-01RV14136

P&ID - PTF
PLANT WASH & DISPOSAL SYSTEM
EFFLUENT COLLECTION HEADERS DRAINS

SCALE: NONE

24590-PTF-M6-PWD-00005

REV 3

E SIZE - 44x34
COMPUTER GENERATED - MANUAL CHANGES NOT PERMITTED

02/14/2008 03:56:48 PM

C:\Documents and Settings\23577\Desktop\24590-PTF-M6-PWD-00005.dgn

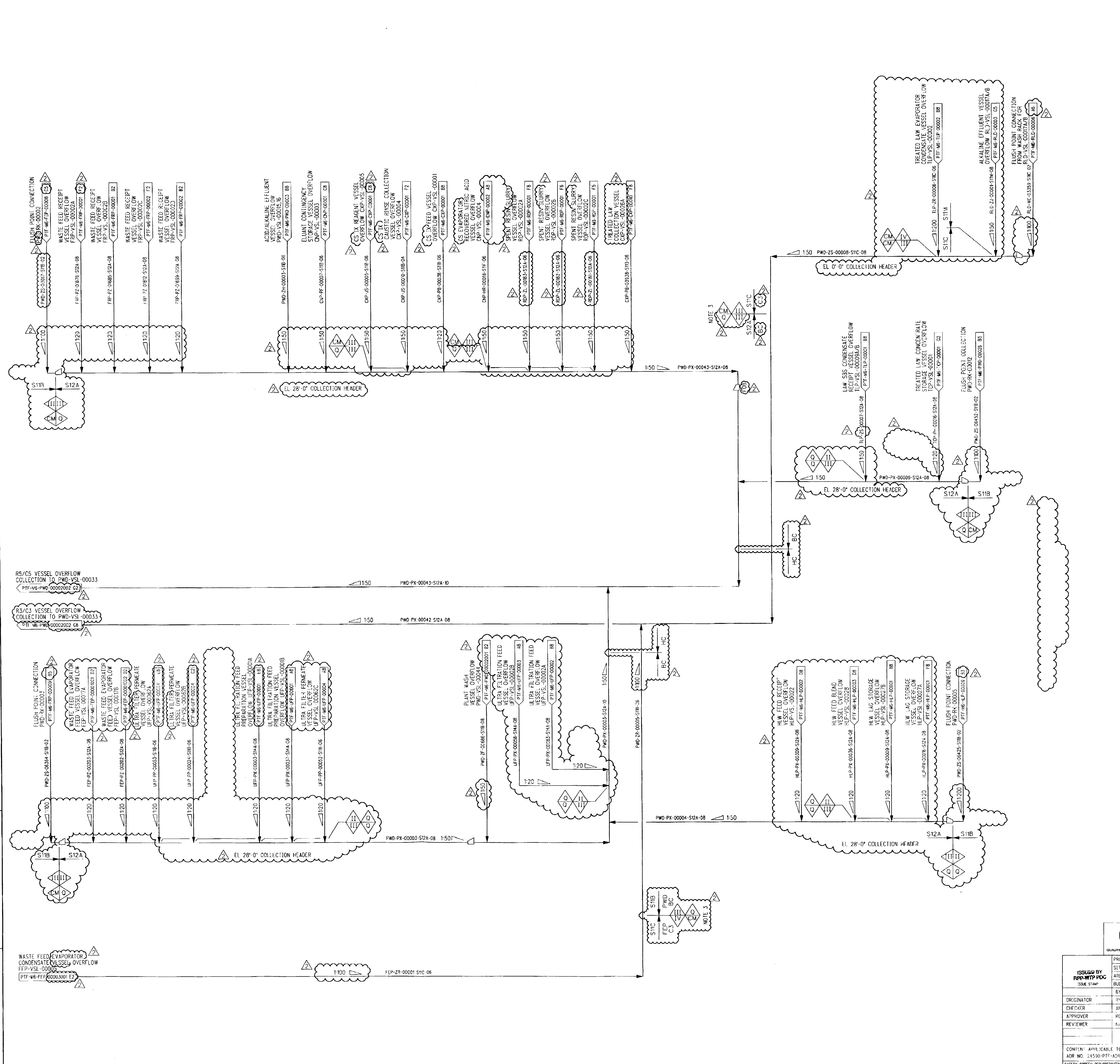

NOTES:

1. SEE DRAWINGS 24590-WTP-M6-50-00001 THROUGH 24590-WTP-M6-50-00008 FOR GENERAL NOTES, SYMBOLS AND LEGEND, AND GENERAL SLOPE REQUIREMENTS.
2. THE PRESSURE BOUNDARY FOR ALL SYSTEMS, STRUCTURES, AND COMPONENTS ON THIS DRAWING IS QUALITY LEVEL Q AND SEISMIC CATEGORY SC-III, UNLESS OTHERWISE NOTED.
3. PIPE SLEEVE PENETRATIONS BETWEEN OCCUPATIONAL AREAS AND INACCESSIBLE/REMOTE AREAS (R5) SHALL HAVE SHADOW SHIELDING TO MITIGATE DIRECT RADIATION SHINE OR BE JOGGLED, AS DETERMINED BY ENVIRONMENTAL AND NUCLEAR SAFETY. ALL PIPE/SLEEVE INTERFACES SHALL BE SEALED USING APPROVED FIRE-RATED PENETRATION SEAL DESIGN TO MAINTAIN THE INTEGRITY OF THE FIRE WALL BETWEEN AREAS.
4. CONTENTS OF THIS DOCUMENT ARE DANGEROUS WASTE PERMIT AFFECTING UNLESS OTHERWISE NOTED.
5. REVISION 2: REVISED TO INCORPORATE 24590-PTF-M6N-M80T-00007, -00026, -00037, 24590-PTF-M6N-PWD-00174, -00228, -00245, -00270, AND -00311. ADDED REDUCERS. MODIFIED OFF SHEET CONNECTION DATA. ADDED PIPE LINE SPEC BREAKS. ADDED SLOPE INDICATORS. ADDED AND MODIFIED QUALITY LEVEL AND SEISMIC BREAKS PER ISM AND SED DOCUMENTS. ADDED/REVISED NOTES.

HOLD/OPEN ITEMS:

1. DELETED

REFERENCES:

NONE

Please note that source, special nuclear, and byproduct materials, as defined in the Atomic Energy Act of 1954 (AEA) are regulated at the U. S. Department of Energy (DOE) facilities exclusively by DOE acting pursuant to its AEA authority. DOE asserts that pursuant to AEA, it has sole and exclusive responsibility and authority to regulate source, special nuclear, and byproduct materials at DOE-owned nuclear facilities. Information contained herein on radionuclides is provided for process description purposes only.

Q
QUALITY DESIGNATOR

REV	DESCRIPTION	ORG	CHKD	RVWD	APVD	DATE
2	REVISED PER NOTE 5	PK	Bur	ELS CEA	RCL	2/15/08
1	REVISED AS NOTED	CK	RM	JJ	RV	9/29/03
0	ISSUED FOR CONSTRUCTION	RM	AM	N/A	RV	11/27/02

REVISION HISTORY

ISSUED BY RPP-WTP PDC
ISSUE STAMP

PROJECT No.	24590
SITE	HANFORD
AREA	200E
BUILDING No.	10

	BY	DATE
ORIGINATOR	RYAN MCCLAUGHRY	11/27/02
CHECKER	ANTONIO MOLINA	11/27/02
APPROVER	ROBERT VOKE	11/27/02
REVIEWER	N/A	

CONTENT APPLICABLE TO ALARA? [X] YES [ ] NO
ADR NO. 24590-PTF-ADR-M-08-0001 REV: 0
SAFETY SCREEN REQUIRED? [X] YES [ ] NO E&NS INITIAL IF YES GDH

BECHTEL

RIVER PROTECTION PROJECT
WASTE TREATMENT PLANT
2435 STEVENS CENTER PLACE
RICHLAND, WA 99354

CONTRACT No: DE-AC27-01RV14136

P&ID - PTF PLANT WASH & DISPOSAL SYSTEM EFFLUENT COLLECTION HEADERS, OVERFLOWS

SCALE: NONE

24590-PTF-M6-PWD-00006 REV 2

SAFETY SCREEN IS REQUIRED FOR DRAWING TYPES IDENTIFIED IN 24590-WTP-GPP-SREG-002

2

'E' SIZE - 44x34
COMPUTER GENERATED - MANUAL CHANGES NOT PERMITTED

R10884412

02/04/2008 08:34:37 AM

PLOTTED BY eidern
C:\Work\eidern\dms03837\PTFM6PWD00006.dgn

FORM K-1074.00N 02/2003

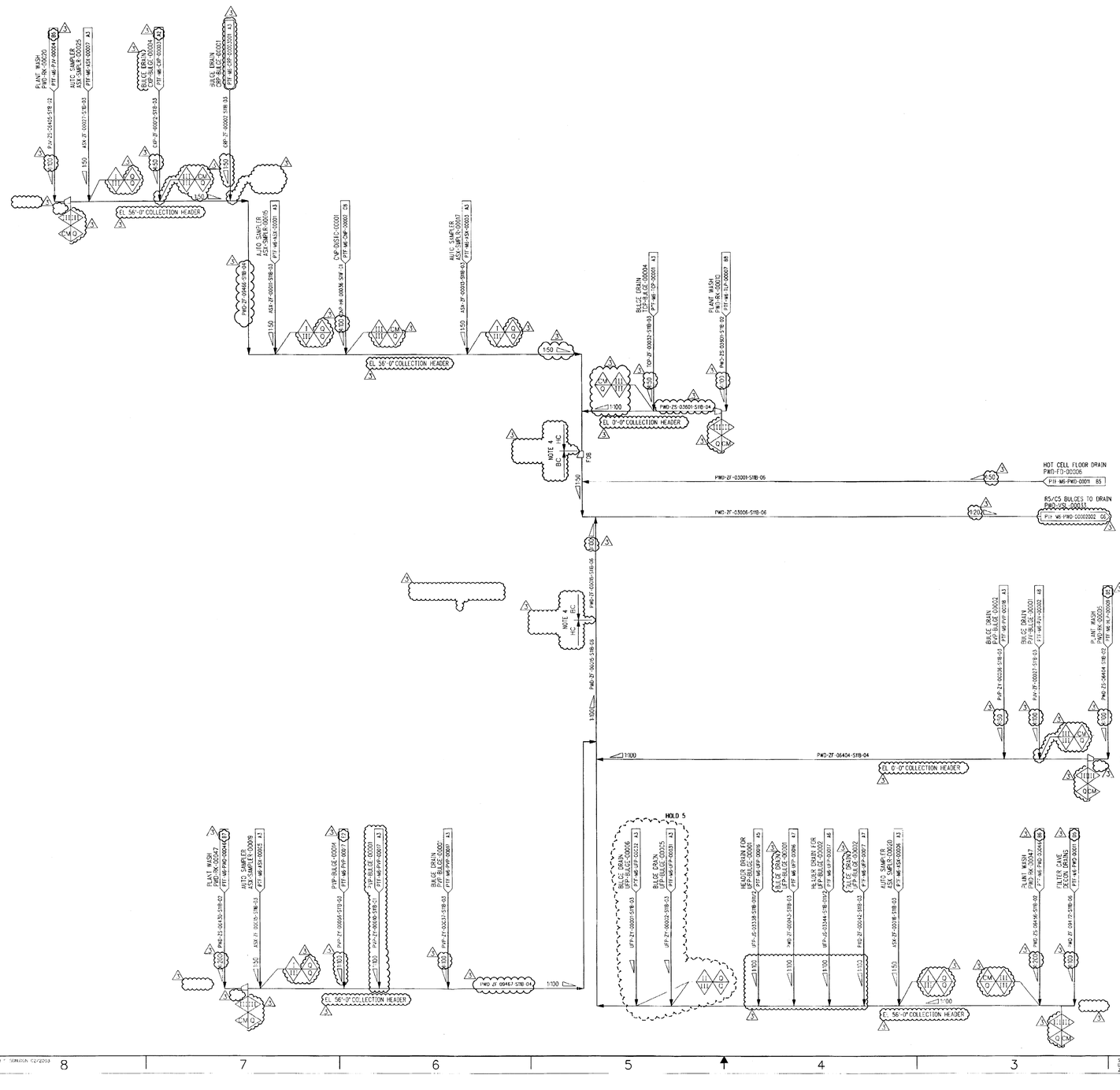

NOTES:

1. SEE DRAWING 24590-WTP-M6-50-00001 THROUGH 24590-WTP-M6-50-00008 FOR GENERAL NOTES, SYMBOLS AND LEGEND, AND GENERAL SLOPE REQUIREMENTS.
2. THE PRESSURE BOUNDARY FOR ALL SYSTEMS, STRUCTURES AND COMPONENTS ON THIS DRAWING IS QUALITY LEVEL Q AND SEISMIC CATEGORY SC-III, UNLESS OTHERWISE NOTED.
3. CONTENTS OF THIS DOCUMENT ARE DANGEROUS WASTE PERMIT AFFECTING.
4. PIPE SLEEVE PENETRATIONS BETWEEN OCCUPATIONAL AREAS AND INACCESSIBLE/REMOTE AREAS (RS) SHALL HAVE SHADOW SHIELDING TO MITIGATE DIRECT RADIATION SHINE OR BE JOGGLED, AS DETERMINED BY ENVIRONMENTAL AND NUCLEAR SAFETY. ALL PIPE/SLEEVE INTERFACES SHALL BE SEALED USING APPROVED FIRE-RATED PENETRATION SEAL DESIGN TO MAINTAIN THE INTEGRITY OF THE FIRE WALL BETWEEN AREAS.
5. DELETED
6. REVISION 2: INCORPORATED THE FOLLOWING CHANGES: 24590-PTF-M6N-M80T-00007, -PW2-00081, -00144, -00159 AND -00202. 24590-PTF-M6N-PWD-00159 ITEM 2 REVISED THE SEISMIC AND QUALITY LEVEL FOR LINE CNP-HR-00036-S1IF-01 WHICH HAVE CHANGED TO COMMERCIAL GRADE CM AND SEISMIC CATEGORY SC-III. 24590-PTF-M6N-PWD-00202 THE NORMAL, MAXIMUM AND DESIGN TEMPERATURES ARE CHANGING TO 100, 125, AND 150 FOR LINES ASX-ZF-00011-S1IB-03, ASX-ZF-00013-S1IB-03, ASX-ZF-00015-S1IB-03, ASX-ZF-00016-S1IB-03, AND ASX-ZF-00027-S1IB-03. ADDED LINE PWD-ZF-09472-S1IB-06 TO EL 56'-0" COLLECTION HEADER. PWD-ZF-00015-S1IB-06, CHANGED THE SEISMIC AND QUALITY LEVEL FOR LINE CRP-ZF-00002-S1IB-02 TO MATCH CONNECTING DRAWING. CHANGED SEISMIC AND QUALITY LEVEL FOR LINE CRP-ZF-00012-S1IB-03 TO MATCH WHAT 24590-WTP-SED-ENS-03-002-02 CALLS OUT FOR BULGE DRAINS AND CHANGED THE GRID COORDINATES TO G8.
7. REVISION 3: REVISED TO INCORPORATE 24590-PTF-M6N-M80T-00037, -00038, -00045, 24590-PTF-M6N-PWD-00281, AND -00311 REVISED/ADDED/DELETED NOTES AND HOLDS.

HOLD/OPEN ITEMS:

1-4. DELETED

5. ON HOLD PENDING ISSUANCE OF UFP P&ID.

REFERENCES:

NONE

Please note that source, special nuclear, and byproduct materials, as defined in the Atomic Energy Act of 1954 (AEA) are regulated at the U. S. Department of Energy (DOE) facilities exclusively by DOE acting pursuant to its AEA authority. DOE asserts that pursuant to AEA, it has sole and exclusive responsibility and authority to regulate source, special nuclear, and byproduct materials at DOE-owned nuclear facilities. Information contained herein on radionuclides is provided for process description purposes only.

REV	DESCRIPTION	ORG	CHKD	RVWD	APVD	DATE
3	REVISED PER NOTE 7	PW	[illegible]		CER	1/8
2	REVISED PER NOTE 6	WR	JD	JJ	RV	11/15/04
1	ISSUED FOR CONSTRUCTION	RM	RM	N/A	RV	12/09/02

REVISION HISTORY

Q — QUALITY DESIGNATION

ISSUED BY RPP-WTP PDC — ISSUE STAGE

	PROJECT No.	24590
	SITE	HANFORD
	AREA	200E
	BUILDING No.	N/A

	BY	DATE
ORIGINATOR	TERRY MCCLAUGHRY	12/06/02
CHECKER	ROOSEVELT MOLINA	12/06/02
APPROVER	ROBERT VOKE	12/09/02
REVIEWER	N/A	

CONTENT APPLICABLE TO ALARA? ☒ YES ☐ NO
ADR NO. 24590-PTF-ADR-M-00007 REV. 0
SAFETY SCREEN REQUIRED? ☐ YES ☒ NO INITIAL IF YES
SAFETY SCREEN IS REQUIRED ON DRAWING TYPES IDENTIFIED IN 24590-WTP-GPP-SRTS-0007

BECHTEL

RIVER PROTECTION PROJECT
WASTE TREATMENT PLANT
2435 STEVENS CENTER PLACE
RICHLAND, WA 99354

CONTRACT No: DE-AC27-01RV14136

P&ID - PTF
SYSTEM PWD
PLANT WASH & DISPOSAL
EFFLUENT COLLECTION HEADER
BULGE & RACK DRAINS

SCALE: NONE
24590-PTF-M6-PWD-00007
REV: 3

E SIZE - 44x34
COMPUTER GENERATED - MANUAL CHANGES NOT PERMITTED

02/04/2008 08:35:34 AM

FORM T - REVISION 02/2003

24590-PTF-M6-PWD-00008

PWD-EJCTR-00054	PWD-SUMP-00001	PWD-EJCTR-00057	PWD-SUMP-00004	PWD-EJCTR-00152	PWD-EJCTR-00055	PWD-SUMP-00002	PWD-EJCTR-00058	PWD-SUMP-00005	PWD-EJCTR-00056	PWD-SUMP-00003	PWD-EJCTR-00059	PWD-SUMP-00006
FEED: RECEIPT CELL SUMP	FEED: RECEIPT C3 CELL SUMP	ULTRAFILTRATION CELL SUMP	ULTRAFILTRATION C5 CELL SUMP	ULTRAFILTRATION CELL SUMP	FEED: RECEIPT CELL SUMP	FEED: RECEIPT C5 CELL SUMP	HLW: RECEIPT / STORAGE CELL SUMP	HLW: RECEIPT / STORAGE C5 CELL SUMP	FEED: EVAPORATOR CELL SUMP	FEED: EVAPORATOR C5 CELL SUMP	HLW: RECEIPT / STORAGE CELL SUMP	HLW: RECEIPT / STORAGE C5 CELL SUMP
EMPTYING: EJECTOR	EMPTYING: EJECTOR	EMPTYING: EJECTOR	EMPTYING: EJECTOR	EMPTYING: EJECTOR	EMPTYING: EJECTOR	EMPTYING: EJECTOR	EMPTYING: EJECTOR	EMPTYING: EJECTOR	EMPTYING: EJECTOR	EMPTYING: EJECTOR	EMPTYING: EJECTOR	EMPTYING: EJECTOR
12.75 IN x 3.5 IN x 2 IN - 50 GPM	30 IN D x 27 IN H - 75 CAL MAX	12.75 IN x 3.5 IN x 2 IN - 50 GPM	30 IN D x 27 IN H - 75 CAL MAX	12.75 IN x 3.5 IN x 2 IN - 50 GPM	12.75 IN x 3.5 IN x 2 IN - 50 GPM	30 IN D x 27 IN H - 75 CAL MAX	12.75 IN x 3.5 IN x 2 IN - 50 GPM	30 IN D x 27 IN H - 75 CAL MAX	12.75 IN x 3.5 IN x 2 IN - 50 GPM	30 IN D x 27 IN H - 75 CAL MAX	12.75 IN x 3.5 IN x 2 IN - 50 GPM	30 IN D x 27 IN H - 75 CAL MAX

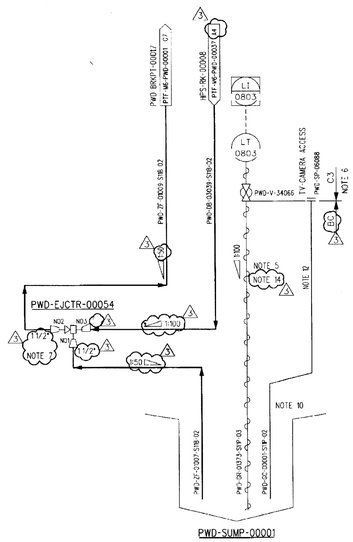

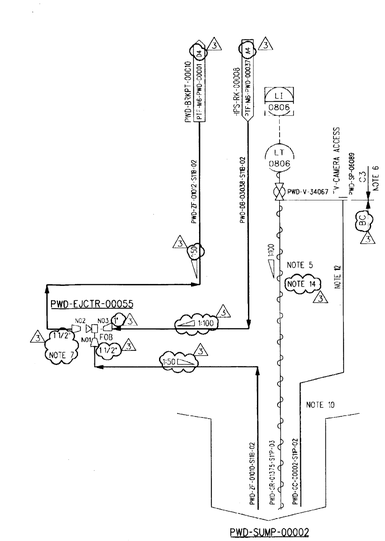

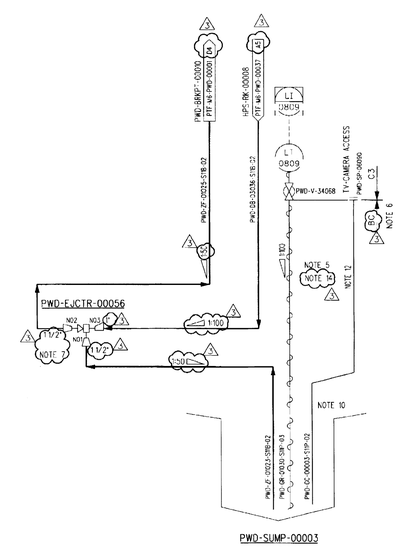

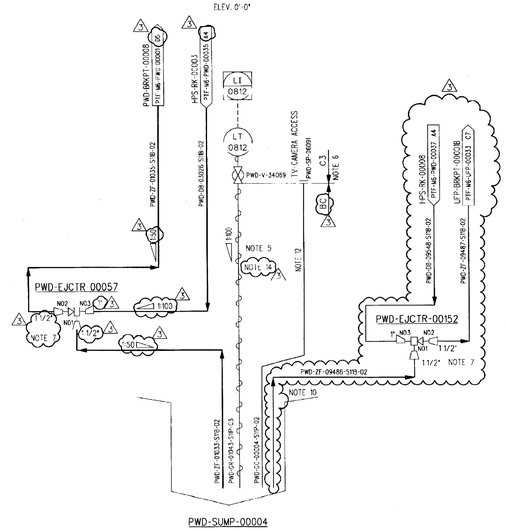

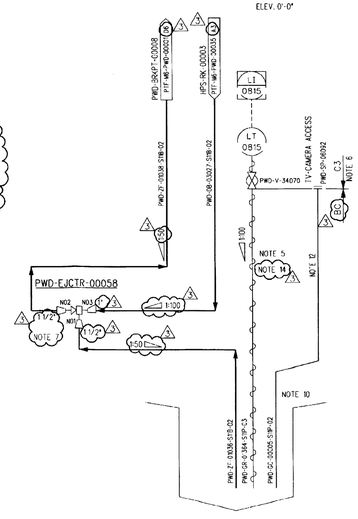

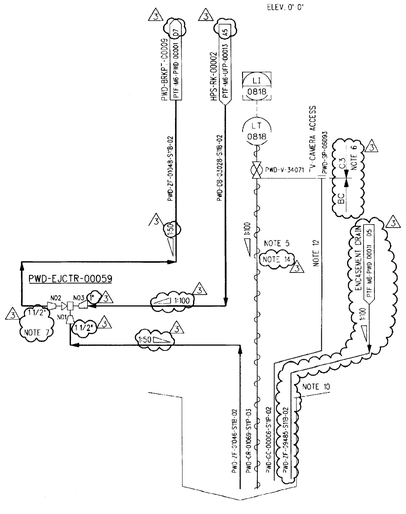

NOTES:

1. SEE DRAWINGS 24590-WTP-M6-50-00001 THROUGH 24590-WTP-M6-50-00008, FOR GENERAL NOTES, SYMBOLS AND LEGEND, AND GENERAL SLOPE REQUIREMENTS.
2. THE PRESSURE BOUNDARY FOR ALL SYSTEMS, STRUCTURES AND COMPONENTS ON THIS DRAWING IS QUALITY LEVEL CM AND SEISMIC CATEGORY SC-III, UNLESS OTHERWISE NOTED.
3. 1-4: DELETED
4. 5. INSTALL RADAR-TYPE LEAK DETECTION AND LEVEL MONITORING INSTRUMENT. PROVIDE 1/2" CLEARANCE BETWEEN END OF LEVEL METER WAVE-GUIDE AND SUMP BOTTOM. THE CONTROL AND INSTRUMENTATION SOFTWARE SPECIFICATION WILL DETERMINE THE CELL SUMP EMPTYING PROCESS CONTROL.
6. PIPE SLEEVE PENETRATIONS BETWEEN OCCUPATIONAL AREAS AND INACCESSIBLE/REMOTE AREAS (R5) SHALL HAVE SHADOW SHIELDING TO MITIGATE DIRECT RADIATION SHINE OR BE JOGGLED, AS DETERMINED BY ENVIRONMENTAL AND NUCLEAR SAFETY. ALL PIPE/SLEEVE INTERFACES SHALL BE SEALED USING APPROVED FIRE-RATED PENETRATION SEAL DESIGN TO MAINTAIN THE INTEGRITY OF THE FIRE WALL BETWEEN AREAS.
7. MAINTAIN MINIMUM 10 PIPE DIAMETERS STRAIGHT PIPE RUN ON EJECTOR DISCHARGE LINE. PROVIDE 1/2" CLEARANCE BETWEEN END OF EJECTORS SUCTION PIPE AND SUMP BOTTOM. SUMP EMPTYING EJECTOR CAPACITIES ARE TO BE DETERMINED BY VENDOR.
8. DELETED
9. CONTENTS OF THIS DOCUMENT ARE DANGEROUS WASTE PERMIT AFFECTING.
10. POSITION END OF TV-CAMERA GUIDE PIPE AT ELEVATION -2".
11. DELETED
12. NO SLOPE REQUIRED.
13. REVISION 2: REVISED INCORPORATING THE FOLLOWING CHANGES: 24590-PTF-M6N-M80T-00007, -PWD-00165, -00175, AND -00191. 24590-PTF-M6N-PWD-00165 ADDED "INI PWD-ZF-03004-S1B-04. THIS LINE HAS BEEN DELETED. 24590-PTF-M6N-PWD-00191 THE PLANT ITEM LIST CALLS ITEMS 24590-PTF-PY PWD-SP-06088, -06089, -06090, 06091, -06092, AND -06093 AS NOT BEING DWP. PER THE PERMITTING DRAWING THESE ARE DWP AND WILL BE MARKED "YES". THE DCN ALSO CHANGED THE OFF SHEET CONNECTOR FOR PWD-03-03027-S1B-02, CURRENTLY IT CALLS OUT A GRID COORDINATE OF B6 THIS IS CHANGING TO B3. ADDED NOTE 12, NO SLOPE REQUIRED, FOR THE CAMERA PONI LINES.
14. NO SLOPE AT WALL PENETRATION. DO NOT POCKET.
15. REVISION 3: REVISED TO INCORPORATE 24590-PTF-M6N-M80T-00027, -00037, -00038, AND 24590-PTF-M6N-PWD-00253. ADDED EMPTYING EJECTOR PWD-EJCTR-000152 AND ASSOCIATED PIPING AS A BACK UP IN SUMP PWD-SUMP-00004. MODIFIED EQUIPMENT DATA. MODIFIED OFF-SHEET CONNECTOR DATA. ADDED SLOPES. ADDED AND MODIFIED QUALITY LEVELS AND SEISMIC CATEGORIES PER ISM AND SED DOCUMENTS. ADDED/DELETED/REVISED NOTES AND REFERENCES.

HOLD/OPEN ITEMS:

1. DELETED

REFERENCES:

1. THE REQUIRED BATCH SEQUENCES, PERMISSIVES, INTERLOCKS, ALARMS AND OPERATOR INTERFACE POINTS ARE FULLY DESCRIBED IN "THE SOFTWARE FUNCTIONAL SPECIFICATION, FOR PWD-PLANT WASH AND DISPOSAL SYSTEM, 24590-PTF-3PS-PWD-T0001.
2. REFER TO DRAWING 24590-PTF-MO-M171-00003 FOR "V-CAMERA GUIDE PIPE WALL PENETRATION AND SHIELDING INFORMATION.
3. REFER TO DRAWING 24590-WTP-JB-50-00001 AND 24590 PTF-JB-10-00007 FOR RADAR INSTALLATION WAVE GUIDE SPOOL JOINING DETAILS.

Please note that source, special nuclear, and byproduct materials, as defined in the Atomic Energy Act of 1954 (AEA) are regulated DOE activities pursuant to its AEA authority. DOE asserts that authority to regulate source, special nuclear, and byproduct materials at DOE-owned nuclear facilities. Information contained herein on radionuclides is provided for process description purposes only.

REV	DESCRIPTION	ORG	CHKD	RVWD	APVD	DATE
3	REVISED PER NOTE 15	MG	BWH	GLS	RGA	1/28/08
2	REVISED PER NOTE 13	MG	MH	JJ	RV	11/5/04
0	ISSUED FOR CONSTRUCTION	AS	AE	N/A	RV	11/22/02

REVISION HISTORY

CM QUALITY DESIGNATOR

ISSUED BY RPP-WTP PDC

	BY	DATE
ORIGINATOR	ALEX SHEVCHENKO	11/22/02
CHECKER	ALI ELKHADER	11/22/02
APPROVER	ROBERT VOKE	11/22/02
REVIEWER	N/A	

CONTENT APPLICABLE TO ALARA? [X] YES [ ] NO
ADR NO. 24590-PTF-ADR-PR-02-002 REV. 5
SAFETY SCREEN REQUIRED? [ ] YES [ ] NO EVAL INITIAL IF YES
SAFETY SCREEN IS REQUIRED FOR DRAWING TYPES IDENTIFIED IN 24590-WTP-GPP-SRED-002

PROJECT No. 24590
SITE HANFORD
AREA 200E
BUILDING No. 10

RIVER PROTECTION PROJECT
WASTE TREATMENT PLANT
2435 STEVENS CENTER PLACE
RICHLAND, WA 99354

CONTRACT No: DE-AC27-01RV14136

P&ID - PTF
PLANT WASH & DISPOSAL SYSTEM
C5/R5 PROCESS CELL
SUMPS

SCALE: NONE

24590-PTF-M6-PWD-00008

REV: 3

E SIZE 44x34
COMPUTER GENERATED - MANUAL CHANGES NOT PERMITTED

01/28/2008 07:09:55 AM

FILE: M:\pwd\24590-PTF-M6-PWD-00008.dgn
C:\Documents and Settings\ashevchenko\Desktop\24590-PTF-M6-PWD-00008.dgn

FORM E_SIZE.DGN 02/2003

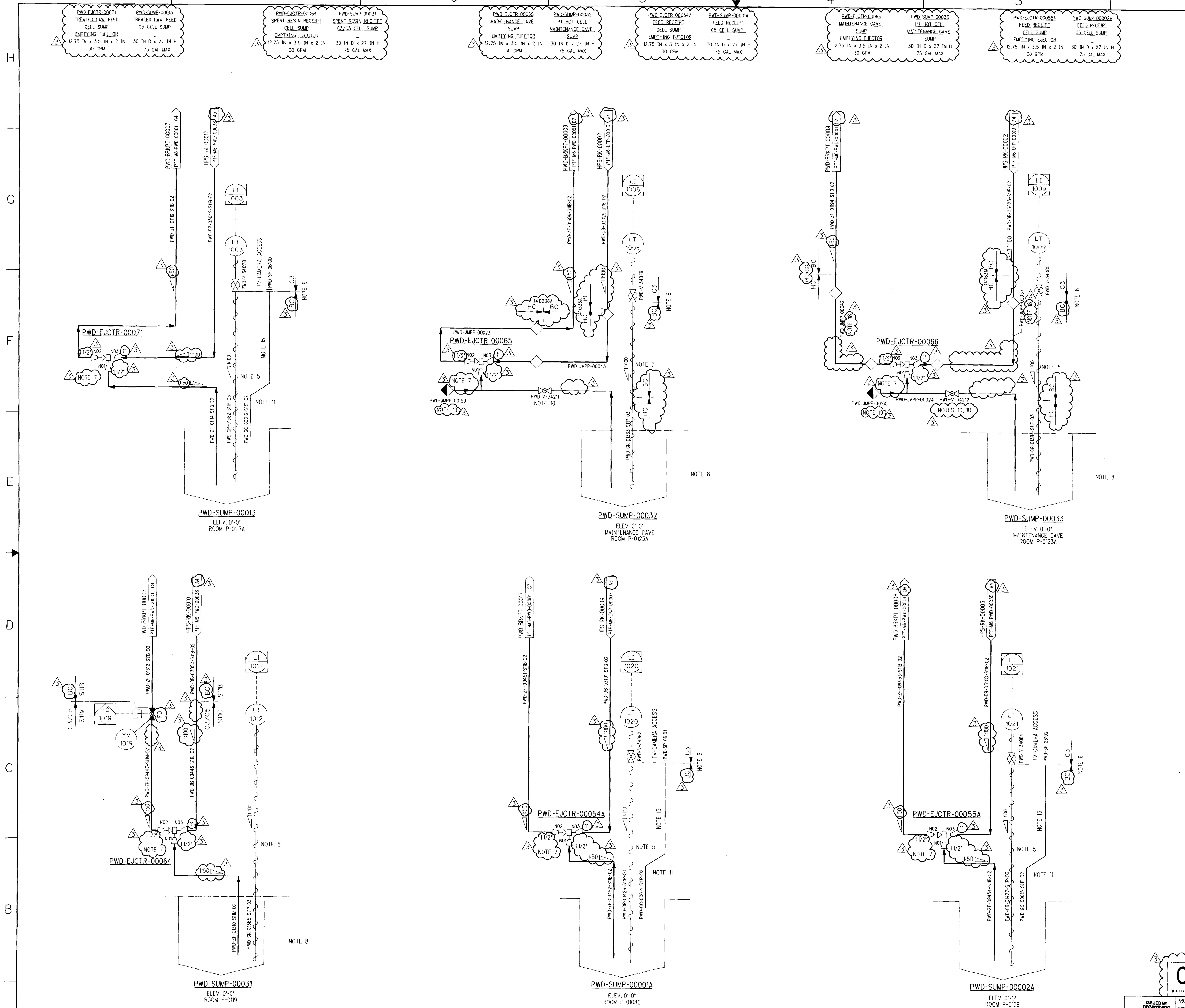

NOTES:

1. SEE DRAWINGS 24590-WTP-M6-50-00001 THROUGH 24590-WTP-M6-50-00008 FOR GENERAL NOTES, SYMBOLS AND LEGEND, AND GENERAL SLOPE REQUIREMENTS.

2. THE PRESSURE BOUNDARY FOR ALL SYSTEMS, STRUCTURES, AND COMPONENTS ON THIS DRAWING IS QUALITY LEVEL CM AND SEISMIC CATEGORY SC-III, UNLESS OTHERWISE NOTED.

3-4. DELETED

5. INSTALL RADAR-TYPE LEAK DETECTION AND LEVEL MONITORING INSTRUMENT. PROVIDE 1/2" CLEARANCE BETWEEN END OF LEVEL METER WAVE-GUIDE AND SUMP BOTTOM. THE CONTROL AND INSTRUMENTATION SOFTWARE SPECIFICATION WILL DETERMINE THE CELL SUMP EMPTYING PROCESS CONTROL.

6. PIPE SLEEVE PENETRATIONS BETWEEN OCCUPATIONAL AREAS AND INACCESSIBLE/REMOTE AREAS (R5) SHALL HAVE SHADOW SHIELDING TO MITIGATE DIRECT RADIATION SHINE OR BE JOGGLED, AS DETERMINED BY ENVIRONMENTAL AND NUCLEAR SAFETY. ALL PIPE/SLEEVE INTERFACES SHALL BE SEALED USING APPROVED FIRE-RATED PENETRATION SEAL DESIGNS TO MAINTAIN THE INTEGRITY OF THE FIRE WALL BETWEEN AREAS.

7. MAINTAIN MINIMUM 10 PIPE DIAMETERS STRAIGHT PIPE RUN ON EJECTOR DISCHARGE LINE. PROVIDE 1/2" CLEARANCE BETWEEN END OF EJECTOR'S SUCTION PIPE AND SUMP BOTTOM. STEAM SUPPLYING LINES MUST BE INSULATED WITHIN PERSONNEL ACCESSIBLE AREA. SUMP EMPTYING EJECTOR CAPACITIES ARE TO BE DETERMINED BY VENDOR.

8. SUMPS ARE TO BE COVERED WITH STAINLESS STEEL GRATING AND REMOVABLE SCREEN MESH WITH 1/4" DIAMETER HOLES TO PROTECT FROM DEBRIS.

9. CONTENTS OF THIS DOCUMENT ARE DANGEROUS WASTE PERMIT AFFECTING.

10. CONFIGURATION OF VALVES ON SUMP EMPTYING EJECTOR SUCTION PIPE WILL, DICTATE IF EJECTOR IS TRANSFER FROM THE SUMP OR DRIP PANS/DECON TANK.

11. POSITION END OF TV-CAMERA GUIDE PIPELINE AT ELEVATION -2".

12. DELETED

13-14. DELETED

15. NO SLOPE REQUIRED.

16. REVISION 2: REVISED INCORPORATING 24590-PTF-M6N-M80T-00007, -PWD-00167, -00175, AND -00192 WITH THE FOLLOWING EXCEPTION: 24590-PTF-M6N-PWD-00167 ITEM 6, THE GRID COORDINATES FOR PWD-EJCTR-00066 CHANGED TO B4. 24590-PTF-M6N-PWD-00192 ITEM 3, THE GRID COORDINATES FOR PWD-EJCTR-00055A CHANGED TO B3 AND ITEM 6 THE PLANT ITEM LIST CALLS ITEMS 24590-PTF-PY-PWD-SP 06100, -06101, AND -06102 AS NOT BEING DWP. PER THE PERMITTING DRAWING THESE ARE DWP AND WILL BE MARKED YES. DELETED LINE RDP-ZF 00323-S11B-001/2 AND LINERS PWD LINER-00001, -00010, -00014 AND -00015. DELETED LINE NUMBER PWD-ZF-01604-S11B-02 AND PWD-ZF-01604-S11B-02-01B01 FROM JUMPER PWD-JMPP-00023 AND RE TAGGED VALVE PWD-V-00870 TO PWD-V-34211. DELETED LINE NUMBER PWD-ZF-01192-S11B-02 AND PWD-ZF-01192-S11B-02-01B01 FROM JUMPER PWD-JMPP-00024 AND RETAGGED VALVE PWD-V 00871 TO PWD-V-34212.

17. NO SLOPE AT WALL PENETRATIONS, NO POCKET

18. TO OPERATE PIH SOAK TOWER EJECTOR REMOVE PWD-JMPP-00037/00042 AND CONNECT PIH JMPP-0005/7 TO PWD-DB-03025-S11B-02 AND PWD-ZF-01194-S11B-02 RESPECTIVELY (SEE PTF-M6-PIH-00001).

19. TO DRAIN PIH-TTBL-00001/00002 REMOVE PWD-JMPP-00159/00160 AND INSTALL PIH-JMPP-00001/00004, RESPECTIVELY (SEE PTF-M6-PIH-00001).

20. REVISION 3: REVISED TO INCORPORATE 24590-PTF-M6N-PWD-M801-00027, -00037, -00038 AND 24590-PTF-M6N-PWD-00255. MODIFIED EQUIPMENT DATA. MODIFIED OFF SHEET CONNECTOR DATA. ADDED HOT CELL AND BLACK CELL BREAKS. ADDED ALTERNATE JUMPERS. DELETED JUMPER SLOPES. CHANGED QUALITY AND SEISMIC LEVELS PER ISM SED DOCUMENTS. ADDED PIPING ISOMETRIC/JUMPER SUPPORT INTERFACE NOZZLE NUMBERS. ADDED/DELETED/REVISED NOTES AND REFERENCES.

HOLD/OPEN ITEMS:

1. DELETED

REFERENCES:

1. THE REQUIRED BATCH SEQUENCES, PERMISSIVES, INTERLOCKS, ALARMS AND OPERATOR INTERFACE POINTS ARE FULLY DESCRIBED IN THE SOFTWARE FUNCTIONAL SPECIFICATION FOR PWD-PLANT WASH AND DISPOSAL SYSTEM, 24590-PTF-3PS-PWD-T0001.

2. REFER TO DRAWING NUMBER 24590-PTF-M0-M17T-00003 FOR TV-CAMERA GUIDE PIPE PENETRATION AND SHIELDING INFORMATION.

3. REFER TO DRAWING 24590-WTP-J8-50-00001 FOR RADAR INSTALLATION WAVE GUIDE SPOOL JOINING DETAIL.

Please note that source, special nuclear, and byproduct materials, as defined in the Atomic Energy Act of 1954 (AEA) are regulated at the U. S. Department of Energy (DOE) facilities exclusively by DOE acting pursuant to its AEA authority. DOE asserts that pursuant to AEA, it has sole and exclusive responsibility and authority to regulate source, special nuclear, and byproduct materials at DOE-owned nuclear facilities. Information contained herein on radionuclides is provided for process description purposes only.

CM
QUALITY DESIGNATOR

REV	DESCRIPTION	ORG	CHKD	RVWD	APVD	DATE
3	REVISED PER NOTE 20	PL	BLM	CER ELS	JBM RCH	02/05/08
2	MAJOR REVISION, SEE NOTE 16	WR	KE	JJ	RV/RS	11/15/04
0	ISSUED FOR CONSTRUCTION	AS	AE	N/A	RV	11/22/02

REVISION HISTORY

ISSUED BY RPP-WTP PDC
ISSUE STAMP

PROJECT No.	24590
SITE	HANFORD
AREA	200E
BUILDING No.	10

	BY	DATE
ORIGINATOR	ALEX SHEVCHENKO	11/22/02
CHECKER	ALI ELKHADER	11/22/02
APPROVER	ROBERT VOKE	11/22/02
REVIEWER	N/A	

CONTENT APPLICABLE TO ALARA? [X] YES [ ] NO
ADR NO. 24590-PTF-ADR-M-08-0001 REV: 0
SAFETY SCREEN REQUIRED? [X] YES [ ] NO E&NS INITIAL IF YES GD7H

BECHTEL
RIVER PROTECTION PROJECT
WASTE TREATMENT PLANT
2435 STEVENS CENTER PLACE
RICHLAND, WA 99354

CONTRACT No: DE-AC27-01RV14136

P&ID - PTF PLANT WASH & DISPOSAL SYSTEM C3/R3/C5/R5 PROCESS CELL SUMPS

SCALE: NONE
24590-PTF-M6-PWD-00010
REV 3

SAFETY SCREEN IS REQUIRED FOR DRAWING TYPES IDENTIFIED IN 24590-WTP-GPP-SREG-002

'E' SIZE - 44x34
COMPUTER GENERATED MANUAL CHANGES NOT PERMITTED

R10883630
01/30/2008 04:20:18 PM
PLOTTED BY: mritter
C:\Work\mritter\drrs03637\PTFM6PWD00010.dgn

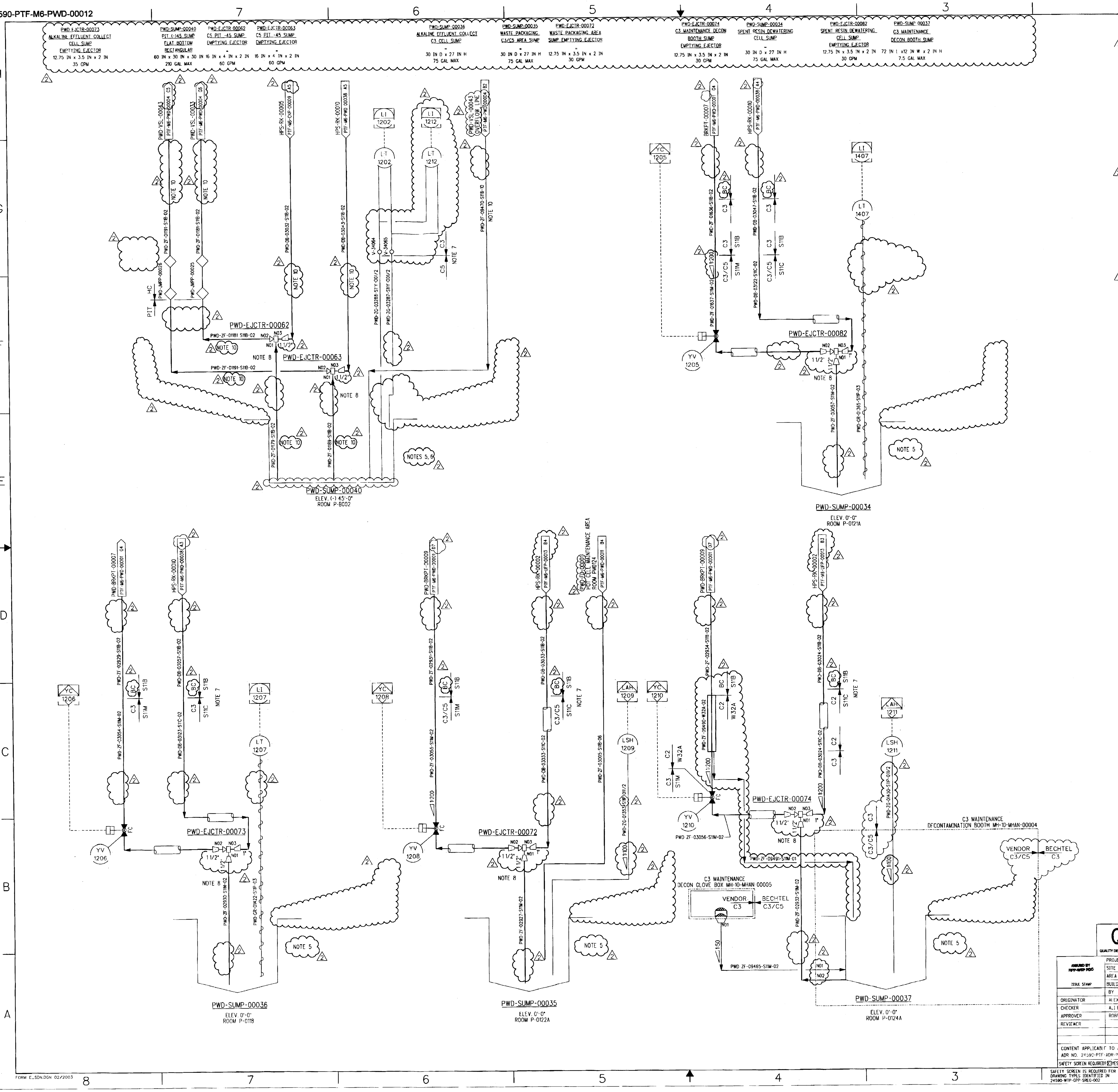

NOTES:

1. SEE DRAWINGS 24590-WTP-M6-50-00001, THROUGH 24590-WTP-M6-50-00008, FOR GENERAL NOTES, SYMBOLS AND LEGEND, AND GENERAL SLOPE REQUIREMENTS.
2. THE PRESSURE BOUNDARY FOR ALL SYSTEMS, STRUCTURES, AND COMPONENTS ON THIS DRAWING IS QUALITY LEVEL CM AND SEISMIC CATEGORY SC-III, UNLESS OTHERWISE NOTED.

3.-4. DELETED

5. PROVIDE 1/2" CLEARANCE BETWEEN END OF LEVEL METER WAVE-GUIDE AND SUMP BOTTOM. THE CONTROL AND INSTRUMENTATION SOFTWARE SPECIFICATION WILL DETERMINE THE CELL SUMP EMPTYING PROCESS CONTROL. PWD-SUMP-00040 HAS A BUBBLER ALSO REQUIRING 1/2" CLEARANCE.
6. PWD-SUMP-00040 IS A FLAT BOTTOM LINED SUMP WITH A COLLECTION TROUGH EQUIPPED WITH BUBBLER-TYPE LEVEL MONITORING INSTRUMENTS. PROVIDE 1/4" CLEARANCE BETWEEN INSTRUMENT AIR LINE END AND SUMP BOTTOM..
7. PIPE SLEEVE PENETRATIONS BETWEEN OCCUPATIONAL AREAS AND INACCESSIBLE/REMOTE AREAS (R5) SHALL HAVE SHADOW SHIELDING TO MITIGATE DIRECT RADIATION SHINE OR BE JOGGLED, AS DETERMINED BY ENVIRONMENTAL AND NUCLEAR SAFETY. ALL PIPE/SLEEVE INTERFACES SHALL BE SEALED USING APPROVED FIRE-RATED PENETRATION SEAL DESIGN TO MAINTAIN THE INTEGRITY OF THE FIRE WALL BETWEEN AREAS.
8. MAINTAIN STRAIGHT PIPE RUN OF MINIMUM 10 PIPE DIAMETERS ON EJECTOR DISCHARGE. PROVIDE 1/2" CLEARANCE BETWEEN END OF EJECTORS SUCTION PIPE AND SUMP BOTTOM. EMPTYING EJECTOR CAPACITIES ARE TO BE DETERMINED BY VENDOR. STEAM SUPPLYING LINES MUST BE INSULATED WITHIN R3/C3 ACCESSIBLE AREA.
9. CONTENTS OF THIS DOCUMENT ARE DANGEROUS WASTE PERMIT AFFECTING.
10. THIS LINE IS TO BE DESIGNED QUALITY LEVEL Q AND SEISMIC CATEGORY SC-III.
11. FOR PERMANENT PIPING/JUMPER INTERFACE SEE THE PROCESS IN-CELL HANDLING JUMPER CONNECTIONS PIPING AND INSTRUMENTATION DIAGRAMS 24590-PTF-M6-PIH-00003 THROUGH 24590-PTF-M6-PIH-00006.
12. NO SLOPE AT WALL PENETRATION. DO NOT POCKET.
13. REVISION 1: INCORPORATED 24590-PTF-M6N-PWD-00002, -00025 AND 24590-PTF-DCA-M-03-021 REV 0.
14. REVISION 2: REVISED TO INCORPORATE 24590-PTF-M6N-PWD-M80T-00027, -00037, 24590-PTF-M6N-PWD-00168, -00193 AND -00256. INCORPORATED AND FURTHER REVISED 24590-PTF-M6N-PWD-M80T-00007. MODIFIED EQUIPMENT DATA AND OFF SHEET CONNECTOR DATA. ADDED AND MODIFIED SLOPES, QUALITY LEVEL AND SEISMIC CATEGORIES PER ISM AND SED DOCUMENTS. ADDED/REVISED NOTES AND REFERENCES.

HOLD/OPEN ITEMS:

1, 2. DELETED

REFERENCES:

1. THE REQUIRED BATCH SEQUENCES, PERMISSIVES, INTERLOCKS, ALARMS AND OPERATOR INTERFACE POINTS ARE FULLY DESCRIBED IN THE SOFTWARE FUNCTIONAL SPECIFICATION, FOR PWD-PLANT WASH AND DISPOSAL SYSTEM, 24590-PTF-3PS-PWD-T0001.

Please note that source, special nuclear, and byproduct materials, as defined in the Atomic Energy Act of 1954 (AEA) are regulated at the U. S. Department of Energy (DOE) facilities exclusively by DOE acting pursuant to its AEA authority. DOE asserts that pursuant to AEA, it has sole and exclusive responsibility and authority to regulate source, special nuclear, and byproduct materials at DOE-owned nuclear facilities. Information contained herein on radionuclides is provided for process description purposes only.

Q
QUALITY DESIGNATOR

REV	DESCRIPTION	ORG	CHKD	RVWD	APVD	DATE
2	REVISED PER NOTE 14	[signature]	[signature]	CER ELS	RLG [signature]	11/08/07
1	REVISED PER NOTE 13	RM	RM	JJ	RV	09/29/03
0	ISSUED FOR CONSTRUCTION	AS	AE	N/A	RV	11/22/02

REVISION HISTORY

ISSUED BY RPP-WTP PDC ISSUE STAMP	PROJECT No.	24590
	SITE	HANFORD
	AREA	200E
	BUILDING No.	10

	BY	DATE
ORIGINATOR	ALEX SHEVCHENKO	11/22/02
CHECKER	ALI ELKHADER	11/22/02
APPROVER	ROBERT VOKE	11/22/02
REVIEWER		

BECHTEL
RIVER PROTECTION PROJECT
WASTE TREATMENT PLANT
2435 STEVENS CENTER PLACE
RICHLAND, WA 99354

CONTRACT No: DE-AC27-01RV14136

P&ID - PTF
PLANT WASH & DISPOSAL SYSTEM C3/R3 AND C5/R5 CELL SUMPS

CONTENT APPLICABLE TO ALARA? [X] YES [ ] NO
ADR NO. 24590-PTF-ADR-PR-02-002 REV: 5
SAFETY SCREEN REQUIRED? [X] YES [ ] NO E&NS INITIAL IF YES [initials]

SCALE: NONE | 24590-PTF-M6-PWD-00012 | REV 2

SAFETY SCREEN IS REQUIRED FOR DRAWING TYPES IDENTIFIED IN 24590-WTP-GPP-SREG-002

'E' SIZE - 44x34
COMPUTER GENERATED - MANUAL CHANGES NOT PERMITTED

R10853265

10/24/2007 5:44:07 PM

PLOTTED BY: cejensen
C:\Work\cejensen\ams03837\PTFM6PWD00012.dgn

FORM E_SDN.DGN 02/2003

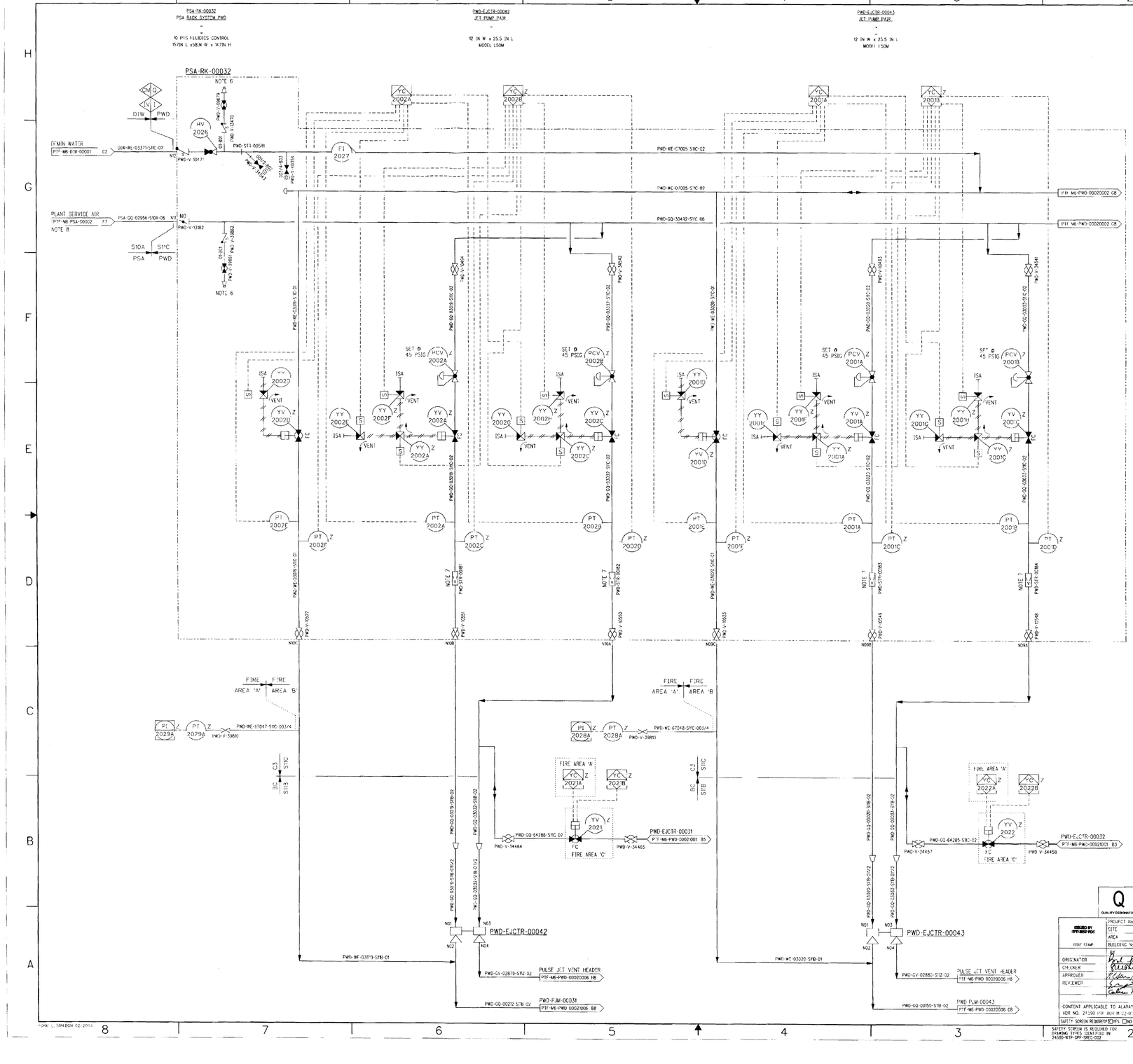

NOTES:

1. SEE DRAWINGS 24590-WTP-M6-50-00001 THROUGH 24590-WTP-M6-50-00008 FOR GENERAL NOTES, SYMBOLS AND LEGEND, AND GENERAL SLOPE REQUIREMENTS.
2. SEE JET PUMP PAIR CONTROL DETAILS 4 (RFD) AND 5 (PJM) ON LEGEND SHEET 24590-WTP-M6-50-00007.
3. FOR PROCESS INFORMATION REFER TO PIPING & INSTRUMENTATION DIAGRAM 24590-PTF-M6-PWD-00002.
4. THE PRESSURE BOUNDARY FOR ALL SYSTEMS, STRUCTURES AND COMPONENTS ON THIS DRAWING (INCLUDING PULSE JET VENT LINES) IS QUALITY LEVEL 0 AND SEISMIC CATEGORY SC-I, UNLESS OTHERWISE NOTED.
5. CONTENTS OF THIS DOCUMENT ARE DANGEROUS WASTE PERMIT AFFECTING.
6. REAGENTS, PLANT WASH AND AIR SERVICE PROVIDED AT A LOCAL UTILITY STATION.
7. STRAINER IS A CONICAL PILGRIM HAT TYPE STRAINER WITH PERFORATED 1/8 INCH DIAMETER STAGGERED HOLES ON 3/16 INCH CENTERS PERMANENTLY INSTALLED UPSTREAM OF FLANGED VALVE.
8. PLANT SERVICE AIR WILL BE SUPPLIED DURING NORMAL OPERATION, ITS AIR WILL BE SUPPLIED DURING A DESIGN BASIS ACCIDENT.
9. THIS DRAWING IS CONVERTED FROM A SINGLE SHEET TO MULTI-SHEET DRAWINGS AND, IN PART, SUPERCEDES 24590-PTF-M6-PWD 00020 REV 3. THIS DRAWING INCLUDES INFORMATION FROM 24590-PTF-MEN-PWD-00024D, 24590-PTF-MSN-M80T-00036, -00037, AND -00038. OTHER CHANGES FROM SUPERSEDED DRAWING INCLUDE: ADDED AUTOMATED VALVE ISOLATED IN FIRE AREA C; INTERCONNECTED SUCTION LEGS WITH CORRESPONDING LOOPS PER HPAV SOLUTION; ADDED 1" I/U TO FLUSH LINE FOR EACH PJM. INSTRUMENTS DESIGNATED IN ALTERNATE FIRE AREA 'A' OR 'B'; ADDED REAGENT INTRODUCTION ON PSA HEADER; ADDED INDIVIDUAL SUCTION PSA DROP FROM THE HEADER; REMOVED ISOLATION VALVE FROM DIW SUPPLY LINE AND STRAINER ASSEMBLE FROM PSAHEADER; REPLACED WYE WITH CONICAL STRAINERS; CHANGED MANUAL BALL VALVE TO BUTTERFLY VALVE; REVISED LINE SIZES; REVISED FY-2009 AND FY-2010 DISCRETE SOFTWARE SYMBOL, NOT ACCESSIBLE TO OPERATOR; ADDED/DELETED/REVISED NOTES, HOLDS, AND REFERENCES.

HOLD/OPEN ITEMS:

NONE

REFERENCES:

1. THE REQUIRED BATCH SEQUENCES, PERMISSIVES, INTERLOCKS, ALARMS, AND OPERATOR INTERFACE POINTS ARE FULLY DESCRIBED IN THE SOFTWARE FUNCTIONAL SPECIFICATION FOR PLANT WASH AND DISPOSAL (PWD) SYSTEM, 24590-PTF-3PS-PWD-T0001.
2. FOR PERMISSIVES AND INTERLOCKS IMPORTANT TO SAFETY SYSTEMS (ITS) REFER TO SOFTWARE REQUIREMENT SPECIFICATION 24590-PTF-3PS-PPJ-T0018 (FUTURE), T0022 (FUTURE), AND T0031 (FUTURE).

Please note that source, special nuclear, and byproduct materials, as defined in the Atomic Energy Act of 1954 (AEA) are regulated at the U. S. Department of Energy (DOE) facilities exclusively by DOE acting pursuant to its AEA authority. DOE asserts that pursuant to AEA, it has sole and exclusive responsibility and authority to regulate source, special nuclear, and byproduct materials at DOE-owned nuclear facilities. Information contained herein on radionuclides is provided for process description purposes only.

DRAWING INDEX

DWG NO	REV	TITLE
24590-PTF-M6-PWD-00020001	0	PLANT WASH & DISPOSAL UTILITY SERVICES
24590-PTF-M6-PWD-00020002	0	PLANT WASH & DISPOSAL UTILITY SERVICES
24590-PTF-M6-PWD-00020003	0	PLANT WASH & DISPOSAL UTILITY SERVICES
24590-PTF-M6-PWD-00020004	0	PLANT WASH & DISPOSAL UTILITY SERVICES
24590-PTF-M6-PWD-00020005	0	PLANT WASH & DISPOSAL UTILITY SERVICES
24590-PTF-M6-PWD-00020006	0	PLANT WASH & DISPOSAL UTILITY SERVICES

REVISION HISTORY

REV	DESCRIPTION	ORG	CHKD	RVWD	APVD	DATE
0	ISSUED FOR CONSTRUCTION SEE NOTE 9	R	[illegible]	CDP	JBH	3/11/03

Q QUALITY DESIGNATOR

ISSUE STAMP

	BY	DATE
ORIGINATOR	[illegible]	3/10/03
CHECKER	[illegible]	3/10/03
APPROVER	[illegible]	3/10/03
REVIEWER	[illegible]	3/10/03

CONTENT APPLICABLE TO ALARA? [X] YES [ ] NO

ADR NO. 24590 PTF ADR M-12-02-2 REV 1

SAFETY SCREEN REQUIRED? [X] YES [ ] NO (TANKS INITIAL IF YES) GOA

SAFETY SCREEN IS REQUIRED FOR DRAWING TYPES IDENTIFIED IN 24590-WTP-GPP-SREQ-002

PROJECT No. 24590
SITE HANFORD
AREA 200E
BUILDING No. 91

BECHTEL NATIONAL, INC.
RIVER PROTECTION PROJECT
WASTE TREATMENT PLANT
2435 STEVENS CENTER PLACE
RICHLAND, WA 99354

CONTRACT No. DE-AC27-01RV14136

P&ID - PTF
PLANT WASH & DISPOSAL UTILITY SERVICES PSA RACK

SCALE: NONE

24590-PTF-M6-PWD-00020001 REV 0

D-SIZE 44x34
COMPUTER GENERATED - MANUAL CHANGES NOT PERMITTED

DO NOT SCALE DRAWING

*DRAWING TEMPLATE 02-2003

05/10/2006 07:50:09 AM

24590-PTF-M6-PWD-00020002

PWD-EJCTR-00044
JET PUMP PAIR
12 IN W x 25.5 IN L
MODEL 1.50M

PWD-EJCTR-00045
JET PUMP PAIR
12 IN W x 25.5 IN L
MODEL 1.50M

PSA-RK-00032

PTF-M6-PWD-00020001 G2

PTF-M6-PWD-00020003 G8

PWD-WE-07005-S1C-02

PWD-GQ-30462-S1C-05

PWD-WE-03021-S1B-01

PWD-WE-03022-S1B-01

PWD-GV-02881-S1Z-02

PWD-GV-02882-S1Z-02

PWD-PJM-00033

PWD-PJM-00036

PWD-GQ-00076-S1B-02

PWD-GQ-00025-S1B-02

PWD-WE-67049-S1C-0034

PWD-WE-67050-S1C-0034

PWD-GQ-64284-S1C-02

PWD-GQ-64283-S1C-02

PWD-EJCTR-00033

PWD-EJCTR-00034

PTF-M6-PWD-00021002 B5

PTF-M6-PWD-00021022 B3

PWD-EJCTR-00044

PWD-EJCTR-00045

PULSE JET VENT HEADER

PTF-M6-PWD-00020006 G8

PTF-M6-PWD-00021006 U8

FIRE AREA 'A'

FIRE AREA 'B'

FIRE AREA 'C'

SET @ 45 PSIG

VENT

ISA

NOTE 6

NOTES:

1. SEE DRAWINGS 24590-WTP-M6-50-00001 THROUGH 24590-WTP-M6-50-00008 FOR GENERAL NOTES, SYMBOLS AND LEGEND, AND GENERAL SLOPE REQUIREMENTS.
2. SEE JET PUMP PAIR CONTROL DETAILS 4 (RFD) AND 5 (PJM) ON LEGEND SHEET 24590-WTP-M6-50-00007.
3. FOR PROCESS INFORMATION REFER TO PIPING & INSTRUMENTATION DIAGRAM 24590-PTF-M6-PWD-00002.
4. THE PRESSURE BOUNDARY FOR ALL SYSTEMS, STRUCTURES AND COMPONENTS ON THIS DRAWING (INCLUDING PULSE JET VENT LINES) IS QUALITY LEVEL Q AND SEISMIC CATEGORY SC-1, UNLESS OTHERWISE NOTED.
5. CONTENTS OF THIS DOCUMENT ARE DANGEROUS WASTE PERMIT AFFECTING.
6. STRAINER IS A CONICAL PILGRIM HAT TYPE STRAINER WITH PERFORATED 1/8 INCH DIAMETER STAGGERED HOLES ON 3/16 INCH CENTERS PERMANENTLY INSTALLED UPSTREAM OF FLANGED VALVE.
7. PLANT SERVICE AIR WILL BE SUPPLIED DURING NORMAL OPERATION, ITS AIR WILL BE SUPPLIED DURING A DESIGN BASIS ACCIDENT.
8. THIS DRAWING IS CONVERTED FROM A SINGLE SHEET TO MULTI-SHEET DRAWINGS AND, IN PART, SUPERCEDES 24590-PTF-M6-PWD-00020 REV 3. THIS DRAWING INCLUDES INFORMATION FROM 24590-PTF-M6N-PWD 00240, 24590-PTF-M6N-M80T 00036, -00037, AND -00038. OTHER CHANGES FROM SUPERSEDED DRAWING INCLUDE: ADDED AUTOMATED VALVE ISOLATED IN FIRE AREA 'C' INTERCONNECTED SUCTION LEGS WITH CORRESPONDING LOOPS PER HPAV SOLUTION; ADDED PI'S TO FLUSH LINE FOR EACH PJM; INSTRUMENTS DESIGNATED IN ALTERNATE FIRE AREA 'A' OR 'B'; ADDED REAGENT INTRODUCTION ON PSA HEADER; ADDED INDIVIDUAL SUCTION PSA DROP FROM THE HEADER; REMOVED ISOLATION VALVE FROM DIW SUPPLY LINE AND STRAINER ASSEMBLE FROM PSA HEADER; REPLACED WYE WITH CONICAL STRAINERS; CHANGED MANUAL BALL VALVE TO BUTTERFLY VALVE; REVISED LINE SIZES; REVISED FY-2009 AND FY-2010 DISCRETE SOFTWARE SYMBOL, NOT ACCESSIBLE TO OPERATOR; ADDED/DELETED/REVISED NOTES, HOLDS, AND REFERENCES.

HOLD/OPEN ITEMS:

NONE

REFERENCES:

1. THE REQUIRED BATCH SEQUENCES, PERMISSIVES, INTERLOCKS, ALARMS, AND OPERATOR INTERFACE POINTS ARE FULLY DESCRIBED IN THE SOFTWARE FUNCTIONAL SPECIFICATION FOR PLANT WASH AND DISPOSAL (PWD) SYSTEM, 24590 PTF-SPS-PWD-T0001.
2. FOR PERMISSIVES AND INTERLOCKS IMPORTANT TO SAFETY SYSTEMS (ISS) REFER TO SOFTWARE REQUIREMENT SPECIFICATION 24590-PTF-SPS-PJU-T0018 (FUTURE), T0022 (FUTURE), AND T0031 (FUTURE).

Please note that source, special nuclear, and byproduct materials, as defined in the Atomic Energy Act of 1954 (AEA) are regulated at the U. S. Department of Energy (DOE) facilities exclusively by DOE acting pursuant to its AEA authority. DOE asserts that pursuant to AEA, it has sole and exclusive responsibility and authority to regulate source, special nuclear, and byproduct materials at DOE-owned nuclear facilities. Information contained herein on radionuclides is provided for process description purposes only.

REV	DESCRIPTION	ORG	CHKD	RVWD	APVD	DATE
Q	ISSUED FOR CONSTRUCTION SEE NOTE 8					
0						

QUALITY DESIGNATOR

REVISION HISTORY

ISSUED BY RPP-WTP PDC

ISSUE STAMP

	BY	DATE
ORIGINATOR		3/10/08
CHECKER		3/10/08
APPROVER		3/11/08
REVIEWER		3/10/08

PROJECT No. 24590
SIN
AREA 200
BUILDING No. 52

CONTENT APPLICABLE TO ALARA? [X] YES [ ] NO
ADR NO. 24590-PTF-ADR-M-07-002 REV. 1
SAFETY SCREEN REQUIREMENTS ☐ NO, EWS INITIAL IF YES
SAFETY SCREEN IS REQUIRED FOR DRAWING TYPES IDENTIFIED IN 24590-WTP-PRC-QA-02

RIVER PROTECTION PROJECT
WASTE TREATMENT PLANT
2435 STEVENS CENTER PLACE
RICHLAND, WA 99354

CONTRACT No. DE-AC27-08RV14136

P&ID - PTF
PLANT WASH & DISPOSAL
UTILITY SERVICES
PSA RACK

SCALE: NONE
SIZE: 34x34
24590-PTF-M6-PWD-00020002
REV 0

COMPUTER GENERATED - MANUAL CHANGES NOT PERMITTED

03/10/2008 07:55:05 AM

FORM T 9748924 02/2003

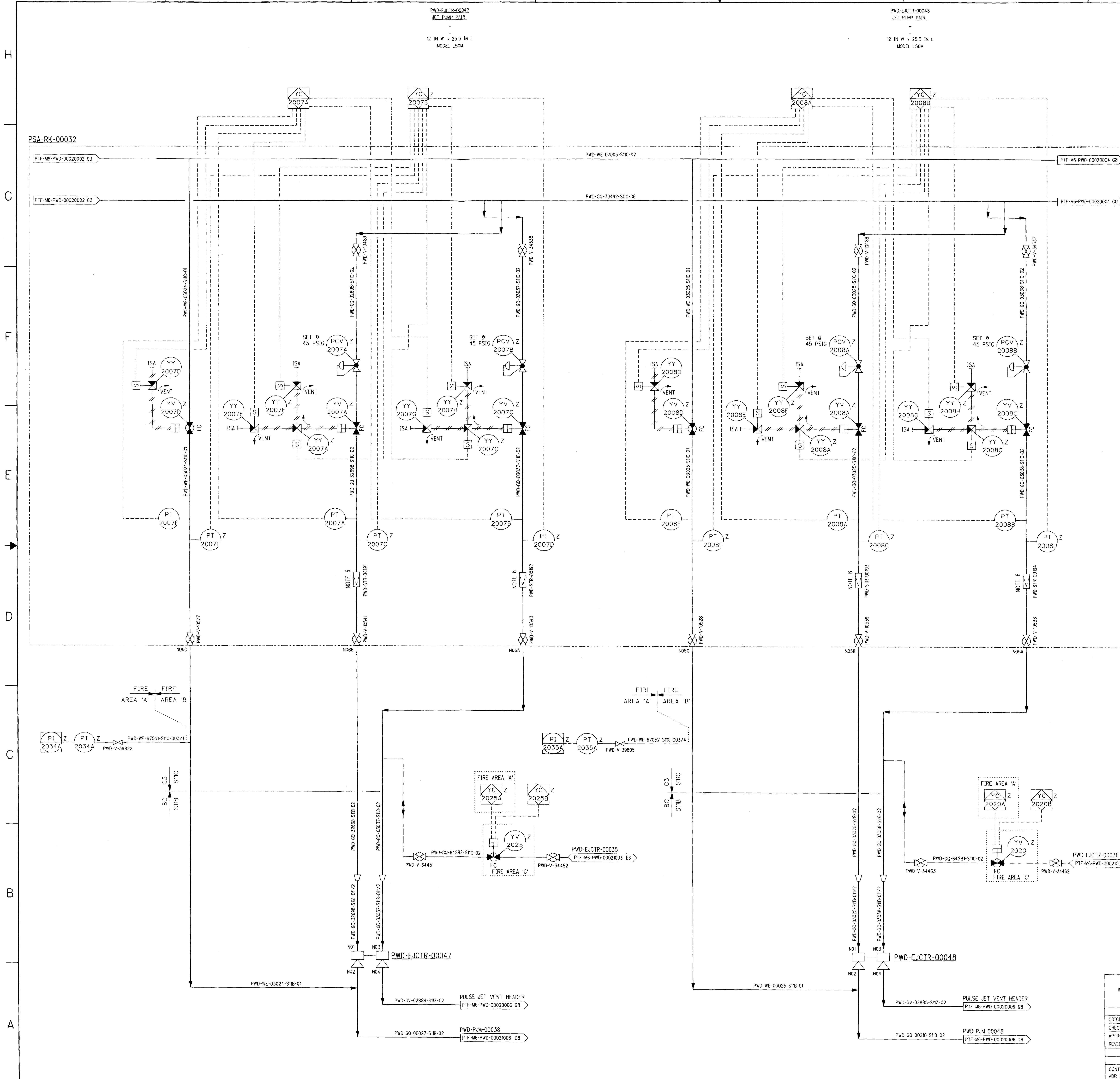

NOTES:

1. SEE DRAWINGS 24590-WTP-M6-50-00001 THROUGH 24590-WTP-M6-50-00008 FOR GENERAL NOTES, SYMBOLS AND LEGEND, AND GENERAL SLOPE REQUIREMENTS.
2. SEE JET PUMP PAIR CONTROL DETAILS 4 (RFD) AND 5 (PJM) ON LEGEND SHEET 24590-WTP-M6-50-00007.
3. FOR PROCESS INFORMATION REFER TO PIPING & INSTRUMENTATION DIAGRAM 24590-PTF-M6-PWD-00002.
4. THE PRESSURE BOUNDARY FOR ALL SYSTEMS, STRUCTURES AND COMPONENTS ON THIS DRAWING (INCLUDING PULSE JET VENT LINES) IS QUALITY LEVEL Q AND SEISMIC CATEGORY SC-I, UNLESS OTHERWISE NOTED.
5. CONTENTS OF THIS DOCUMENT ARE DANGEROUS WASTE PERMIT AFFECTING.
6. STRAINER IS A CONICAL PILGRIM HAT TYPE STRAINER WITH PERFORATED 1/8 INCH DIAMETER STAGGERED HOLES ON 3/16 INCH CENTERS PERMANENTLY INSTALLED UPSTREAM OF FLANGED VALVE.
7. PLANT SERVICE AIR WILL BE SUPPLIED DURING NORMAL OPERATION, ITS AIR WILL BE SUPPLIED DURING A DESIGN BASIS ACCIDENT.
8. THIS DRAWING IS CONVERTED FROM A SINGLE SHEET TO MULTI-SHEET DRAWINGS AND, IN PART, SUPERCEDES 24590-PTF-M6-PWD-00020 REV 3. THIS DRAWING INCLUDES INFORMATION FROM 24590-PTF-M6N-PWD-00240, 24590-PTF-M6N-M80T-00036, -00037, AND -00038. OTHER CHANGES FROM SUPERSEDED DRAWING INCLUDE: ADDED AUTOMATED VALVE ISOLATED IN FIRE AREA C; INTERCONNECTED SUCTION LEGS WITH CORRESPONDING LOOPS PER HPAV SOLUTION; ADDED PT/PI TO FLUSH LINE FOR EACH PJM, INSTRUMENTS DESIGNATED IN ALTERNATE FIRE AREA 'A' OR 'B'; ADDED REAGENT INTRODUCTION ON PSA HEADER; ADDED INDIVIDUAL SUCTION PSA DROP FROM THE HEADER; REMOVED ISOLATION VALVE FROM DIW SUPPLY LINE AND STRAINER ASSEMBLE FROM PSAHEADER; REPLACED WYE WITH CONICAL STRAINERS; CHANGED MANUAL BALL VALVE TO BUTTERFLY VALVE; REVISED LINE SIZES; REVISED FY-2009 AND FY-2010 DISCRETE SOFTWARE SYMBOL, NOT ACCESSIBLE TO OPERATOR; ADDED/DELETED/REVISED NOTES, HOLDS, AND REFERENCES.

HOLD/OPEN ITEMS:

NONE

REFERENCES:

1. THE REQUIRED BATCH SEQUENCES, PERMISSIVES, INTERLOCKS, ALARMS, AND OPERATOR INTERFACE POINTS ARE FULLY DESCRIBED IN THE SOFTWARE FUNCTIONAL SPECIFICATION FOR PLANT WASH AND DISPOSAL (PWD) SYSTEM, 24590-PTF-3PS-PWD-T0001.
2. FOR PERMISSIVES AND INTERLOCKS IMPORTANT TO SAFETY SYSTEMS (ITS) REFER TO SOFTWARE REQUIREMENT SPECIFICATION 24590-PTF-3PS-PPJ-T0018 (FUTURE), T0022 (FUTURE), AND T0031 (FUTURE).

Please note that source, special nuclear, and byproduct materials, as defined in the Atomic Energy Act of 1954 (AEA) are regulated at the U. S. Department of Energy (DOE) facilities exclusively by DOE acting pursuant to its AEA authority. DOE asserts that pursuant to AEA, it has sole and exclusive responsibility and authority to regulate source, special nuclear, and byproduct materials at DOE-owned nuclear facilities. Information contained herein on radionuclides is provided for process description purposes only.

REV	DESCRIPTION	ORG	CHKD	RVWD	APVD	DATE
0	ISSUED FOR CONSTRUCTION SEE NOTE 8			ELS		3/11/08

REVISION HISTORY

Q
QUALITY DESIGNATOR

ISSUED BY RPP-WTP PDC
ISSUE STAMP

PROJECT No.	24590
SITE	HANFORD
AREA	200F
BUILDING No.	10

	BY	DATE
ORIGINATOR		3/10/08
CHECKER		3/10/08
APPROVER		3/11/08
REVIEWER		3/10/08
		3/10/08

CONTENT APPLICABLE TO ALARA? [X] YES [ ] NO
ADR NO. 24590-PTF-ADR-M-02-010 REV: 1
SAFETY SCREEN REQUIRED? [X] YES [ ] NO L&NS INITIAL IF YES

BECHTEL
RIVER PROTECTION PROJECT
WASTE TREATMENT PLANT
2435 STEVENS CENTER PLACE
RICHLAND, WA 99354

CONTRACT No: DE-AC27-01RV14136

P&ID - PTF PLANT WASH & DISPOSAL UTILITY SERVICES PSA RACK

SCALE: NONE

24590-PTF-M6-PWD-00020003 REV 0

SAFETY SCREEN IS REQUIRED FOR DRAWING TYPES IDENTIFIED IN 24590-WTP-GPP-SREG-002

'E' SIZE - 44x34
COMPUTER GENERATED - MANUAL CHANGES NOT PERMITTED

03/10/2008 07:58:05 AM

PLOTTED BY: mdritter
C:\Work\mdritter\dms03837\PTF-M6PWD00020003.dgn

R10887417

PWD-EJCTR-00041
JET PUMP PAIR
-
12 IN W x 25.5 IN L
MODEL L50W

PWD-EJCTR-00042
JET PUMP PAIR
-
12 IN W x 32 IN L
MODEL H60L

PSA-RK-00032

PTF-M6-PWD-00020003 G2

PTF-M6-PWD-00020003 G2

PTF-M6-PWD-00020005 D5

PTF-M6-PWD-00020005 D5

PWD-WC-67053-S11C-003/4

PWD-WC-03027-S11C-01

PWD-WC-03028-S11B-01

PWD-WC-03028-S11B-02

PWD-WC-03028-S11B-03

PWD-WC-03028-S11B-01/2

PWD-WC-03028-S11B-02/2

PWD-WC-03028-S11B-03/2

PWD-GQ-30492-S11C-06

PWD-GQ-03028-S11C-01

PWD-GQ-03028-S11C-02

PWD-GQ-03028-S11C-03

PWD-GQ-03028-S11B-01/2

PWD-GQ-03028-S11B-02/2

PWD-GQ-03028-S11B-03/2

PWD-GQ-03027-S11C-01

PWD-GQ-03027-S11B-01

PWD-GQ-03027-S11B-02

PWD-GQ-03027-S11B-03

PWD-GQ-03027-S11B-01/2

PWD-GQ-03027-S11B-02/2

PWD-GQ-03027-S11B-03/2

PWD-GQ-00145-S11B-02

PWD-GQ-00146-S11B-02

PWD-GQ-00147-S11B-02

PWD-GQ-00148-S11B-02

PWD-GQ-00145-S11B-01/2

PWD-GQ-00146-S11B-01/2

PWD-GQ-00147-S11B-01/2

PWD-GQ-00148-S11B-01/2

PWD-GQ-00145-S11B-03/2

PWD-GQ-00146-S11B-03/2

PWD-GQ-00147-S11B-03/2

PWD-GQ-00148-S11B-03/2

PWD-GQ-00145-S11B-02/2

PWD-GQ-00146-S11B-02/2

PWD-GQ-00147-S11B-02/2

PWD-GQ-00148-S11B-02/2

PWD-GQ-00145-S11B-01

PWD-GQ-00146-S11B-01

PWD-GQ-00147-S11B-01

PWD-GQ-00148-S11B-01

PWD-GQ-00145-S11B-03

PWD-GQ-00146-S11B-03

PWD-GQ-00147-S11B-03

PWD-GQ-00148-S11B-03

PWD-GQ-00145-S11B-01/2

PWD-GQ-00146-S11B-01/2

PWD-GQ-00147-S11B-01/2

PWD-GQ-00148-S11B-01/2

PWD-GQ-00145-S11B-03/2

PWD-GQ-00146-S11B-03/2

PWD-GQ-00147-S11B-03/2

PWD-GQ-00148-S11B-03/2

PWD-GQ-00145-S11B-02/2

PWD-GQ-00146-S11B-02/2

PWD-GQ-00147-S11B-02/2

PWD-GQ-00148-S11B-02/2

PWD-V-34455

PWD-V-34456

PWD-V-34457

PWD-V-34458

PWD-V-34459

PWD-V-34460

PWD-V-34461

PWD-V-34448

PWD-V-34450

PWD-V-40360

PWD-V-10551

PWD-V-10552

PWD-V-10553

PWD-V-10554

PWD-V-10555

PWD-V-10556

PWD-V-10557

PWD-V-10558

PWD-V-39802

PWD-EJCTR-00037
PTF-M6-PWD-00070104 R6

PWD-EJCTR-00131
PTF-M6-PWD-00020005 B5

PWD-EJCTR-00041

PWD-EJCTR-00142

PWD-GV-02878-S11Z-02

PWD-GV-02887-S11Z-03

PULSE JET VENT HEADER
PTF-M6-PWD-00020006 F8

PULSE JET VENT HEADER
PTF-M6-PWD-00020006 F8

PWD-PJM-00041
PTF-M6-PWD-00020006 D8

PWD-VSL-00042
PTF M6 PWD-00020005 D8

PWD-GQ-00220-S11B-03

PWD-GQ-64279-S11C-003/4

PWD-GQ-61280-S11C-02

SET @ 45 PSIG

SET @ 75 PSIG

FIRE AREA 'A'

FIRE AREA 'B'

FIRE AREA 'C'

NOTE 6

NOTE 7

NOTE 9

NOTES:

1. SEE DRAWINGS 24590-WTP-M6-50-00001 THROUGH 24590-WTP-M6-50-00008 FOR GENERAL NOTES, SYMBOLS AND LEGEND, AND GENERAL SLOPE REQUIREMENTS.
2. SEE JET PUMP PAIR CONTROL DETAILS 4 (RFD) AND 5 (PJM) ON LEGEND SHEET 24590-WTP-M6-50-00001.
3. FOR PROCESS INFORMATION REFER TO PIPING & INSTRUMENTATION DIAGRAM 24590-PTF-M6-PWD-00002.
4. THE PRESSURE BOUNDARY FOR ALL SYSTEMS, STRUCTURES AND COMPONENTS ON THIS DRAWING (INCLUDING PULSE JET VENT LINES) IS QUALITY LEVEL 2 AND SEISMIC CATEGORY SC-1, UNLESS OTHERWISE NOTED.
5. CONTENTS OF THIS DOCUMENT ARE DANGEROUS WASTE PERMIT AFFECTING.
6. A 45° WYE PIPE FITTING SHALL BE USED AT THIS CONNECTION AND LOCATION.
7. STRAINER IS A CONICAL PILGRIM HAT TYPE STRAINER WITH PERFORATED 1/8 INCH DIAMETER STAGGERED HOLES ON 3/16 INCH CENTERS PERMANENTLY INSTALLED UPSTREAM OF FLANGED VALVE.
8. PLANT SERVICE AIR WILL BE SUPPLIED DURING NORMAL OPERATION, ITS AIR WILL BE SUPPLIED DURING A DESIGN BASIS ACCIDENT.
9. THE PCV CONTROL LINE TO BE CONNECTED TO A STRAIGHT RUN OF PIPE 3 TO 5 FEET DOWNSTREAM OF THE PCV. THE PCV TO HAVE 3 FEET OF STRAIGHT PIPE RUN ON BOTH SIDES OF THE VALVE.
10. THIS DRAWING IS CONVERTED FROM A SINGLE SHEET TO MULTI-SHEET DRAWINGS AND, IN PART, SUPERSEDES 24590-PTF-M6-PWD 00020 REV 3. THIS DRAWING INCLUDES INFORMATION FROM 24590-PTF-MSN-PWD-00240, 24590-PTF-MSN-M807-00036, -00037, AND -00038. OTHER CHANGES FROM SUPERSEDED DRAWING INCLUDE ADDED AUTOMATED VALVE ISOLATED IN FIRE AREA C INTERCONNECTED SUCTION LEGS WITH CORRESPONDING LOOPS P&K HPAV SOLUTION; ADDED PT/PI TO FLUSH LINE FOR EACH PJM. INSTRUMENTS DESIGNATED IN ALTERNATE FIRE AREA A OR B; ADDED REAGENT INTRODUCTION ON PSA HEADER; ADDED INDIVIDUAL SUCTION PSA DROP FROM THE HEADER; REMOVED ISOLATION VALVE FROM DIW SUPPLY LINE AND STRAINER ASSEMBLY FROM YSA HEADER; REPLACED WYE WITH CONICAL STRAINERS; CHANGED MANUAL BALL VALVE TO BUTTERFLY VALVE; REVISED LINE SIZES; REVISED FY-2009 AND FY-2010 DISCRETE SOFTWARE SYMBOL, NOT ACCESSIBLE TO OPERATOR; ADDED/DELETED/REVISED NOTES, HOLDS, AND REFERENCES.

HOLD/OPEN ITEMS:

NONE

REFERENCES:

1. THE REQUIRED BATCH SEQUENCES, PERMISSIVES, INTERLOCKS, ALARMS, AND OPERATOR INTERFACE POINTS ARE FULLY DESCRIBED IN THE SOFTWARE FUNCTIONAL SPECIFICATION FOR PLANT WASH AND DISPOSAL (PWD) SYSTEM, 24590-PTF-3PS PWD-T0001.
2. FOR PERMISSIVES AND INTERLOCKS IMPORTANT TO SAFETY SYSTEMS (ITS), REFER TO SOFTWARE REQUIREMENT SPECIFICATION, 24590-PTF 3PS-PPJ-T0018 (FUTURE), -T0022 (FUTURE), AND -T0031 (FUTURE).

Please note that source, special nuclear, and byproduct materials, as defined in the Atomic Energy Act of 1954 (AEA) are regulated at the U. S. Department of Energy (DOE) facilities exclusively by DOE acting pursuant to its AEA authority. DOE asserts that pursuant to AEA, it has sole and exclusive responsibility and materials at DOE-owned nuclear facilities. Information contained herein on radionuclides is provided for process description purposes only.

REVISION HISTORY						
REV	DESCRIPTION	ORG	CHKD	RVWD	APVD	DATE
0	ISSUED FOR CONSTRUCTION SEE NOTE 10					3/11/08

Q — QUALITY DESIGNATOR

ISSUED BY RPP-WTP PDC	PROJECT No.	24590
	SITE	HANFORD
ISSUE STAMP	AREA	200E
	BUILDING No.	70

	BY	DATE
ORIGINATOR		3/10/08
CHECKER		3/10/08
APPROVER		3/10/08
REVIEWER		3/10/08

CONTENT APPLICABLE TO ALARA? [X] YES [ ] NO
ADR NO. 24590-PTF-ADR-M-02-010 REV. 1
SAFETY SCREEN REQUIREMENTS: [ ] NO [ ] EARS (INITIAL IF YES)

SAFETY SCREEN IS REQUIRED FOR DRAWING TYPES IDENTIFIED IN 24590-WTP-GPP-SRT-002

"E" SIZE 41.5 x 34
COMPUTER GENERATED - MANUAL CHANGES NOT PERMITTED

RIVER PROTECTION PROJECT
WASTE TREATMENT PLANT
2435 STEVENS CENTER PLACE
RICHLAND, WA 99354

CONTRACT No: DE-AC27-01RV14136

P&ID - PTF
PLANT WASH & DISPOSAL UTILITY SERVICES PSA RACK

SCALE: NONE

24590-PTF-M6-PWD-00020004

REV 0

05/19/2008 07:57:08 AM

COPYRIGHT © 2008 BECHTEL NATIONAL, INC. ALL RIGHTS RESERVED.
THIS DRAWING IS THE PROPERTY OF BECHTEL NATIONAL, INC. AND IS NOT TO BE USED IN ANY WAY DETRIMENTAL TO THE INTERESTS OF BECHTEL NATIONAL, INC.

PWD-EJCTR-00045
JET PUMP PAIR
12 IN W x 25.5 IN L
MODEL 1604

PWD-EJCTR-00141
JET PUMP PAIR
12 IN W x 32 IN L
MODEL 1980

PSA-RK-00032

PTF-M6-PWD-00020004 G2

PTF-M6-PWD-00020004 G2

PWD-WE-07005-S11C-02

PWD-GQ-30492-S11C-06

PWD-WE-03023-S11C-01

PWD-GQ-03023-S11C-02

PWD-GQ-03038-S11C-02

PWD-WE-03026-S11C-01

PWD-GQ-03026-S11C-03

PWD-GQ-03039-S11C-01V2

PWD-GQ-03021-S11C-02

PWD-GQ-03039-S11C-02

PWD-WE-03023-S11B-01V2

PWD-GQ-03038-S11B-02

PWD-GQ-03026-S11B-02

PWD-GQ-03039-S11B-01V2

PWD-GQ-03026-S11B-03

PWD-WE-03026-S11B-01

PWD-GQ-03039-S11B-01

PWD-GQ-64278-S11C-02

PWD-GQ-64277-S11C-03/4

PWD-GQ-00206-S11B-02

PWD-GQ-00206-S11B-03

PWD-GV-02883-S11Z-02

PWD-GV-02886-S11Z-03

PWD-GQ-00218-S11B-03

PWD-PJM-00046

PWD-VSL-00C141

PWD-V-40359

PWD-V-34444

PWD-V-34445

PWD-V-34447

PWD-V-59199

PWD-V-10526

PWD-V-10543

PWD-V-10542

PWD-V-10529

PWD-V-10537

PWD-V-10538

PWD-SPR-00869

PWD-SPR-00880

PWD-SPR-00895

PWD-SPR-00896

PWD-V-10467

PWD-V-34434

PWD-V-10487

PWD-V-34433

2006A 2006B 2006C 2006D 2006E 2006F 2006G 2006H

2009A 2009B 2009C 2009D 2009E 2009F 2009G 2009H

2016A 2016B 2017A 2017B 2033A

PCV 2006A PCV 2006B PCV 2009A PCV 2009B

SET @ 45 PSIG

SET @ 75 PSIG

PWD EJCTR-00038
PTF-M6-PWD-00021004 R3

PTF-M6-PWD-00021005 R3

PULSE JET VENT HEADER
PTF-M6-PWD-00020006 F8

PULSE JET VENT HEADER
PTF-M6-PWD-00020006 F8

PTF-M6-PWD-00020006 D8

PTF-M6-PWD-00020006 E8

FIRE AREA 'A'

FIRE AREA 'B'

FIRE AREA 'C'

NOTE 6

NOTE 7

NOTES:

1. SEE DRAWINGS 24590-WTP-M6-50-00001 THROUGH 24590-WTP-M6-50-00008 FOR GENERAL NOTES, SYMBOLS AND LEGEND, AND GENERAL SLOPE REQUIREMENTS.
2. SEE JET PUMP PAIR CONTROL DETAILS 4 (RFD) AND 5 (PJM) ON LEGEND SHEET 24590-WTP-M6-50-00007.
3. FOR PROCESS INFORMATION REFER TO PIPING & INSTRUMENTATION DIAGRAM 24590-PTF-M6-PWD-00002.
4. THE PRESSURE BOUNDARY FOR ALL SYSTEMS, STRUCTURES AND COMPONENTS ON THIS DRAWING (INCLUDING PUI SF JET VENT LINES) IS QUALITY LEVEL Q AND SEISMIC CATEGORY SC-I, UNLESS OTHERWISE NOTED.
5. CONTENTS OF THIS DOCUMENT ARE DANGEROUS WASTE PERMIT AFFECTING.
6. A 45° WYE PIPE FITTING SHALL BE USED AT THIS CONNECTION AND LOCATION.
7. STRAINER IS A CONICAL PILGRIM HAT TYPE STRAINER WITH PERFORATED 1/8 INCH DIAMETER STAGGERED HOLES ON 3/16 INCH CENTERS PERMANENTLY INSTALLED UPSTREAM OF FLANGED VALVE.
8. PLANT SERVICE AIR WILL BE SUPPLIED DURING NORMAL OPERATION, ITS AIR WILL BE SUPPLIED DURING A DESIGN BASIS ACCIDENT.
9. THE PCV CONTROL LINE TO BE CONNECTED TO A STRAIGHT RUN OF PIPE 3 TO 5 FEET DOWNSTREAM OF THE PCV. THE PCV TO HAVE 3 FEET OF STRAIGHT PIPE RUN ON BOTH SIDES OF THE VALVE.
10. THIS DRAWING IS CONVERTED FROM A SINGLE SHEET TO MULTI SHEET DRAWINGS AND, IN PART SUPERCEDES 24590-PTF-M6-PWD-00020 REV. 3. THIS DRAWING INCLUDES INFORMATION FROM 24590-PTF-M6N-PWD-00040, 24590-PTF-M6N-M6D1-00036, -00037, AND -00038. OTHER CHANGES FROM SUPERSEDED DRAWING INCLUDE: ADDED AUTOMATED VALVE ISOLATED IN FIRE AREA C-INTERCONNECTED SUCTION LEGS WITH CORRESPONDING LOOPS PER HPAV SOLUTION; ADDED PT/PI TO FLUSH LINE FOR EACH PJM. INSTRUMENTS DESIGNATED IN ALTERNATE FIRE AREA 'A' OR 'B'; ADDED REAGENT INTRODUCTION ON PSA HEADER; ADDED INDIVIDUAL SUCTION PSA DROP FROM THE HEADER; REMOVED ISOLATION VALVE FROM DIW SUPPLY LINE AND STRAINER ASSEMBLE FROM PSAHEADER; REPLACED WYE WITH CONICAL STRAINERS; CHANGED MANUAL BALL VALVE TO BUTTERFLY VALVE; REVISED LINE SIZES; REVISED FY 2009 AND FY-2010 DISCRETE SOFTWARE SYMBOL; NOT ACCESSIBLE TO OPERATOR; ADDED/DELETED/REVISED NOTES, HOLDS, AND REFERENCES.

HOLD/OPEN ITEMS:

NONE

REFERENCES:

1. THE REQUIRED BATCH SEQUENCES, PERMISSIVES, INTERLOCKS, ALARMS, AND OPERATOR INTERFACE POINTS ARE FULLY DESCRIBED IN THE SOFTWARE FUNCTIONAL SPECIFICATION FOR PLANT WASH AND DISPOSAL (PWD) SYSTEM, 24590-PTF-3PS-PWD-T0001.
2. FOR PERMISSIVES AND INTERLOCKS IMPORTANT TO SAFETY SYSTEMS (ITS), REFER TO SOFTWARE REQUIREMENT SPECIFICATION 24590-PTF-3PS-PPJ-T0018 (FUTURE), -T0022 (FUTURE), AND -T0031 (FUTURE).

Please note that source, special nuclear, and byproduct materials, as defined in the Atomic Energy Act of 1954 (AEA) are regulated at the U. S. Department of Energy (DOE) facilities exclusively by DOE acting pursuant to its AEA authority. DOE asserts that pursuant to AEA, it has sole and exclusive responsibility and materials at DOE-owned nuclear facilities. Information contained herein on radionuclides is provided for process description purposes only.

REVISION HISTORY

REV	DESCRIPTION	ORG	CHKD	RVWD	APVD	DATE
Q	ISSUED FOR CONSTRUCTION SEE NOTE 10	PE	CSR	CLS	RGS	3/11/08

Q QUALITY DESIGNATOR

ISSUED BY RPP-WRAP PDC

PROJECT No.	24590
SITE	HANFORD
AREA	200E
BUILDING No.	10

	BY	DATE
ORIGINATOR	[illegible]	3/10/08
CHECKER	[illegible]	3/10/08
APPROVER	[illegible]	3/11/08
REVIEWER	[illegible]	3/10/08
	[illegible]	3/10/08

CONTENT APPLICABLE TO ALARA? [X] YES [ ] NO
AOR NO. 24590-PTF-AOR-M-02-010 REV.: 1

SAFETY SCREEN PERFORMED? [X] YES [ ] NO [ ] EMS INITIAL IF YES [illegible] [ ] N/A
SAFETY SCREEN IS REQUIRED FOR DRAWING TYPES IDENTIFIED IN 24590-WTP-GPP-SWLC-0C2

COMPUTER GENERATED - MANUAL CHANGES NOT PERMITTED

RIVER PROTECTION PROJECT
WASTE TREATMENT PLANT
2435 STEVENS CENTER PLACE
RICHLAND, WA 99354

CONTRACT No: DE-AC27-01RV14136

P&ID - PTF
PLANT WASH & DISPOSAL
UTILITY SERVICES
PSA RACK

SCALE: NONE

24590-PTF-M6-PWD-00020005

REV: 0

44x34

DO NOT SCALE DRAWING

R:\24590_PTF_ENGR\M6\PTF\M6PWD00020005.DGN

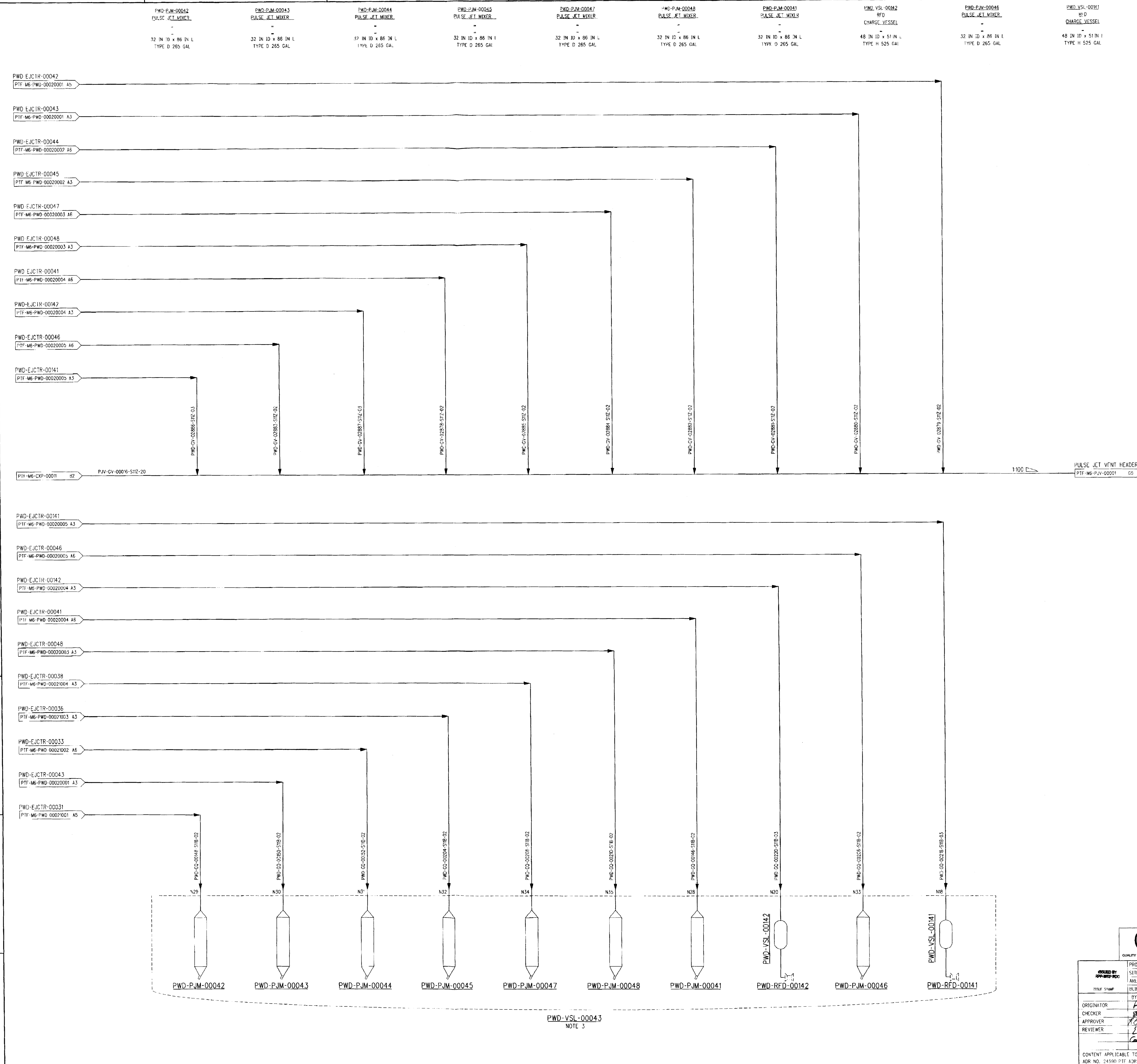

NOTES:

1. SEE DRAWING 24590-WTP-M6-50-00001 THROUGH 24590 WTP-M6-50-00008 FOR GENERAL NOTES, SYMBOLS AND LEGEND, AND GENERAL SLOPE REQUIREMENTS.
2. FOR PROCESS INFORMATION REFER TO PIPING & INSTRUMENTATION DIAGRAM 24590-PTF-M6-PWD-00002.
3. THE PRESSURE BOUNDARY FOR ALL SYSTEMS, STRUCTURES AND COMPONENTS ON THIS DRAWING (INCLUDING PULSE JET VENT LINES) IS QUALITY LEVEL Q AND SEISMIC CATEGORY SC-I, UNLESS OTHERWISE NOTED. CHARGE VESSELS ARE QUALITY LEVEL CM AND SEISMIC CATEGORY SC-III.
4. CONTENTS OF THIS DOCUMENT ARE DANGEROUS WASTE PERMIT AFFECTING.
5. THIS DRAWING IS CONVERTED FROM A SINGLE SHEET TO MULTI-SHEET DRAWINGS AND, IN PART, SUPERCEDES 24590-PTF-M6-PWD-00020 REV 3. THIS DRAWING INCLUDES INFORMATION FROM 24590-PTF-M6N-PWD-00240, 24590-PTF-M6N-M80T-00036, -00037, AND -00038. OTHER CHANGES FROM SUPERSEDED DRAWING INCLUDE: ADDED AUTOMATED VALVE ISOLATED IN FIRE AREA C; INTERCONNECTED SUCTION LEGS WITH CORRESPONDING LOOPS PER HPAV SOLUTION; ADDED PI/PI TO FLUSH LINE FOR EACH PJM, INSTRUMENTS DESIGNATED IN ALTERNATE FIRE AREA 'A' OR 'B'; ADDED REAGENT INTRODUCTION ON PSA HEADER; ADDED INDIVIDUAL SUCTION PSA DROP FROM THE HEADER; REMOVED ISOLATION VALVE FROM DIW SUPPLY LINE AND STRAINER ASSEMBLE FROM PSAHEADER; REPLACED WYE WITH CONICAL STRAINERS; CHANGED MANUAL BALL VALVE TO BUTTERFLY VALVE; REVISED LINE SIZES; REVISED FY-2009 AND FY-2010 DISCRETE SOFTWARE SYMBOL, NOT ACCESSIBLE TO OPERATOR; ADDED/DELETED/REVISED NOTES, HOLDS, AND REFERENCES.

HOLD/OPEN ITEMS:

NONE

REFERENCES:

NONE

Please note that source, special nuclear, and byproduct materials, as defined in the Atomic Energy Act of 1954 (AEA) are regulated at the U. S. Department of Energy (DOE) facilities exclusively by DOE acting pursuant to its AEA authority. DOE asserts that pursuant to AEA, it has sole and exclusive responsibility and authority to regulate source, special nuclear, and byproduct materials at DOE-owned nuclear facilities. Information contained herein on radionuclides is provided for process description purposes only.

Q
QUALITY DESIGNATOR

REV	DESCRIPTION	ORG	CHKD	RVWD	APVD	DATE
0	ISSUED FOR CONSTRUCTION SEE NOTE 5	[signature]	[signature]	CER ELS	JBm RCA	3/11/08

REVISION HISTORY

ISSUED BY RPP-WTP PDC
ISSUE STAMP

PROJECT No.	24590
SITE	HANFORD
AREA	200E
BUILDING No.	10

	BY	DATE
ORIGINATOR	[signature]	3/10/08
CHECKER	[signature]	3/10/08
APPROVER	[signature]	3/11/08
REVIEWER	[signature]	3/10/08
	[signature]	3/10/08

CONTENT APPLICABLE TO ALARA? [X] YES [ ] NO
ADR NO. 24590 PTF ADR-M 02-010 REV: 1
SAFETY SCREEN REQUIRED? [X] YES [ ] NO E&NS INITIAL IF YES GOH

BECHTEL
RIVER PROTECTION PROJECT
WASTE TREATMENT PLANT
2435 STEVENS CENTER PLACE
RICHLAND, WA 99354

CONTRACT No: DE-AC27-01RV14136

P&ID - PTF PLANT WASH & DISPOSAL UTILITY SERVICES PSA RACK

SCALE: NONE

24590-PTF-M6-PWD-00020006 REV 0

SAFETY SCREEN IS REQUIRED FOR DRAWING TYPES IDENTIFIED IN 24590-WTP-GPP-SREG-002

'E' SIZE - 44x34
COMPUTER GENERATED - MANUAL CHANGES NOT PERMITTED

03/10/2008 07:55:10 AM

PLOTTED BY: mdritter

R1C883762

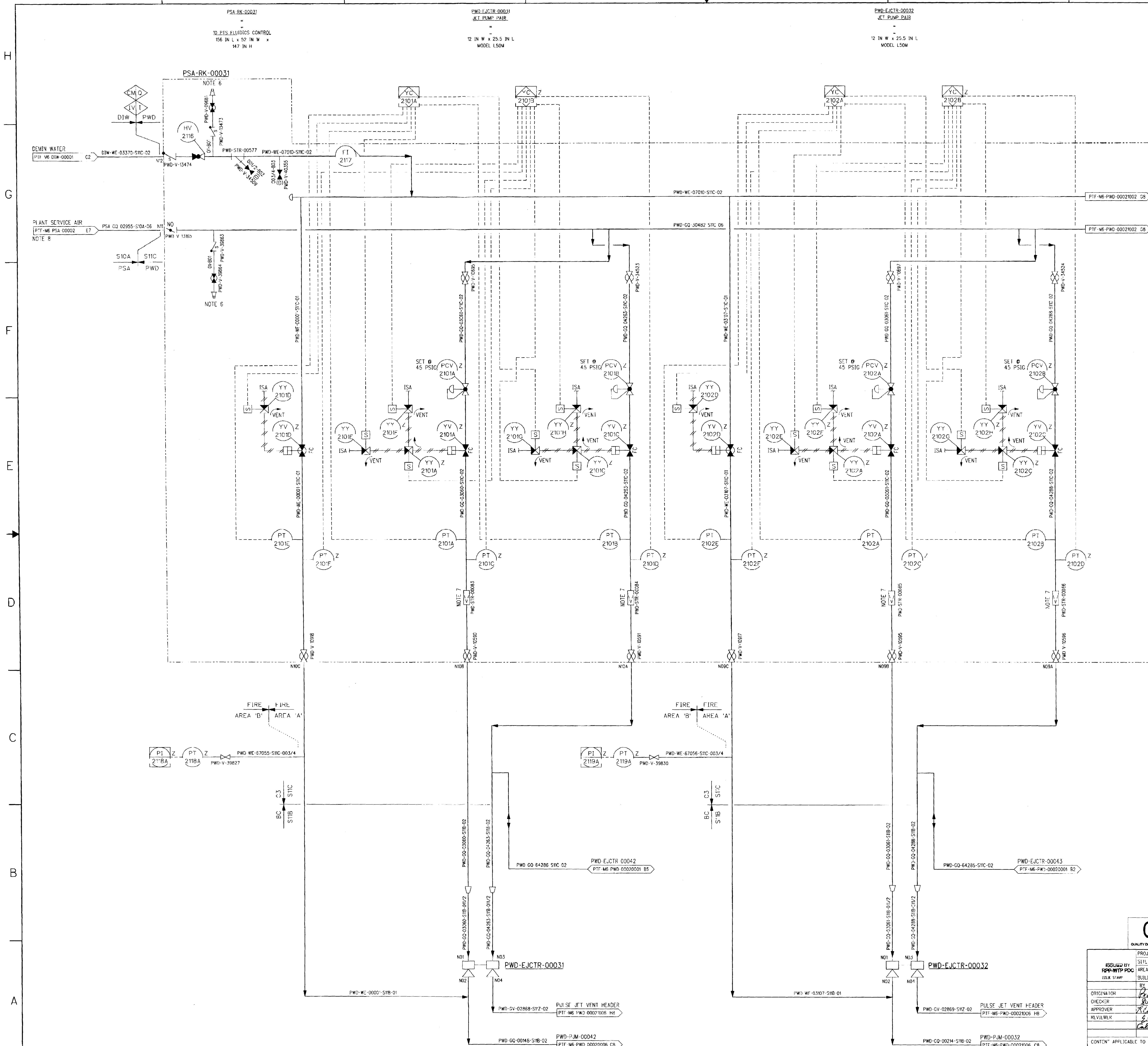

NOTES:

1. SEE DRAWINGS 24590-WTP-M6-50-00001 THROUGH 24590-WTP-M6-50-00008 FOR GENERAL NOTES, SYMBOLS AND LEGEND, AND GENERAL SLOPE REQUIREMENTS.
2. SEE JET PUMP PAIR CONTROL DETAILS 4 (RFD) AND 5 (PJM) ON LEGEND SHEET 24590-WTP-M6-50-00007.
3. FOR PROCESS INFORMATION REFER TO PIPING & INSTRUMENTATION DIAGRAM 24590-PTF-M6-PWD-00002.
4. THE PRESSURE BOUNDARY FOR ALL SYSTEMS, STRUCTURES AND COMPONENTS ON THIS DRAWING (INCLUDING PULSE JET VENT LINES) IS QUALITY LEVEL Q AND SEISMIC CATEGORY SC-I, UNLESS OTHERWISE NOTED.
5. CONTENTS OF THIS DOCUMENT ARE DANGEROUS WASTE PERMIT AFFECTING.
6. REAGENTS, PLANT WASH AND AIR SERVICE PROVIDED AT A LOCAL UTILITY STATION.
7. STRAINER IS A CONICAL PILGRIM HAT TYPE STRAINER WITH PERFORATED 1/8 INCH DIAMETER STAGGERED HOLES ON 3/16 INCH CENTERS PERMANENTLY INSTALLED UPSTREAM OF FLANGED VALVE.
8. PLANT SERVICE AIR WILL BE SUPPLIED DURING NORMAL OPERATION, ITS AIR WILL BE SUPPLIED DURING A DESIGN BASIS ACCIDENT.
9. THIS DRAWING IS CONVERTED FROM A SINGLE SHEET TO MULTI-SHEET DRAWINGS AND, IN PART, SUPERCEDES 24590-PTF-M6-PWD-00021 REV 3. THIS DRAWING INCLUDES INFORMATION FROM 24590-PTF-M6N-PWD-00241, 24590-PTF-M6N-M80T-00036, -00037, AND -00038. OTHER CHANGES FROM SUPERSEDED DRAWING INCLUDE: ADDED AUTOMATED VALVE ISOLATED IN FIRE AREA C; INTERCONNECTED SUCTION LEGS WITH CORRESPONDING LOOPS PER HPAV SOLUTION; ADDED PT/PI TO FLUSH LINE FOR EACH PJM, INSTRUMENTS DESIGNATED IN ALTERNATE FIRE AREA 'A' OR 'B'; ADDED REAGENT INTRODUCTION ON PSA HEADER; ADDED INDIVIDUAL SUCTION PSA DROP FROM THE HEADER; REMOVED ISOLATION VALVE FROM DIW SUPPLY LINE AND STRAINER ASSEMBLY FROM PSA HEADER; REPLACED WYE WITH CONICAL STRAINERS; CHANGED MANUAL BALL VALVE TO BUTTERFLY VALVE; REVISED LINE SIZES; REVISED FY-2109 AND FY-2110 DISCRETE SOFTWARE SYMBOL, NOT ACCESSIBLE TO OPERATOR; ADDED/DELETED/REVISED NOTES, HOLDS, AND REFERENCES.

HOLD/OPEN ITEMS:

NONE

REFERENCES:

1. THE REQUIRED BATCH SEQUENCES, PERMISSIVES, INTERLOCKS, ALARMS, AND OPERATOR INTERFACE POINTS ARE FULLY DESCRIBED IN THE SOFTWARE FUNCTIONAL SPECIFICATION FOR PLANT WASH AND DISPOSAL (PWD) SYSTEM, 24590 PTF 3PS PWD T0001.
2. FOR PERMISSIVES AND INTERLOCKS IMPORTANT TO SAFETY SYSTEMS (ITS), REFER TO SOFTWARE REQUIREMENT SPECIFICATION 24590-PTF 3PS-PPJ-T0018 (FUTURE), -T0022 (FUTURE), AND T0031 (FUTURE).

Please note that source, special nuclear, and byproduct materials, as defined in the Atomic Energy Act of 1954 (AEA) are regulated at the U. S. Department of Energy (DOE) facilities exclusively by DOE acting pursuant to its AEA authority. DOE asserts that pursuant to AEA, it has sole and exclusive responsibility and authority to regulate source, special nuclear, and byproduct materials at DOE-owned nuclear facilities. Information contained herein on radionuclides is provided for process description purposes only.

DRAWING INDEX

DWG NO	REV	TITLE
24590-PTF-M6-PWD-00021001	0	PLANT WASH & DISPOSAL UTILITY SERVICES
24590-PTF-M6-PWD-00021002	0	PLANT WASH & DISPOSAL UTILITY SERVICES
24590-PTF-M6-PWD-00021003	0	PLANT WASH & DISPOSAL UTILITY SERVICES
24590-PTF-M6-PWD-00021004	0	PLANT WASH & DISPOSAL UTILITY SERVICES
24590-PTF-M6-PWD-00021005	0	PLANT WASH & DISPOSAL UTILITY SERVICES
24590-PTF-M6-PWD-00021006	0	PLANT WASH & DISPOSAL UTILITY SERVICES

Q
QUALITY DESIGNATOR

REVISION HISTORY

REV	DESCRIPTION	ORG	CHKD	RVWD	APVD	DATE
0	ISSUED FOR CONSTRUCTION SEE NOTE 9			CEX ELS	JPM RCA	3/11/08

ISSUED BY RPP-WTP PDC
ISSUE STAMP

PROJECT No.	24590
SITE	HANFORD
AREA	200E
BUILDING No.	10

	BY	DATE
ORIGINATOR		3/10/08
CHECKER		3/10/08
APPROVER		3/11/08
REVIEWER		3/10/08
		3/10/08

CONTENT APPLICABLE TO ALARA? [X] YES [ ] NO
ADR NO. 24590-PTF-ADR-M-02-010 REV: 1
SAFETY SCREEN REQUIRED? [X] YES [ ] NO F&NS INITIAL IF YES GDH

BECHTEL
RIVER PROTECTION PROJECT
WASTE TREATMENT PLANT
2435 STEVENS CENTER PLACE
RICHLAND, WA 99354

CONTRACT No: DE-AC27-01RV14136

P&ID - PTF PLANT WASH & DISPOSAL UTILITY SERVICES PSA RACK

SCALE: NONE

24590-PTF-M6-PWD-00021001

REV 0

SAFETY SCREEN IS REQUIRED FOR DRAWING TYPES IDENTIFIED IN 24590-WTP-GPP-SREG-002

'E' SIZE - 44x34
COMPUTER GENERATED - MANUAL CHANGES NOT PERMITTED

03/10/2008 07:54:15 AM

PLOTTED BY: mcritter

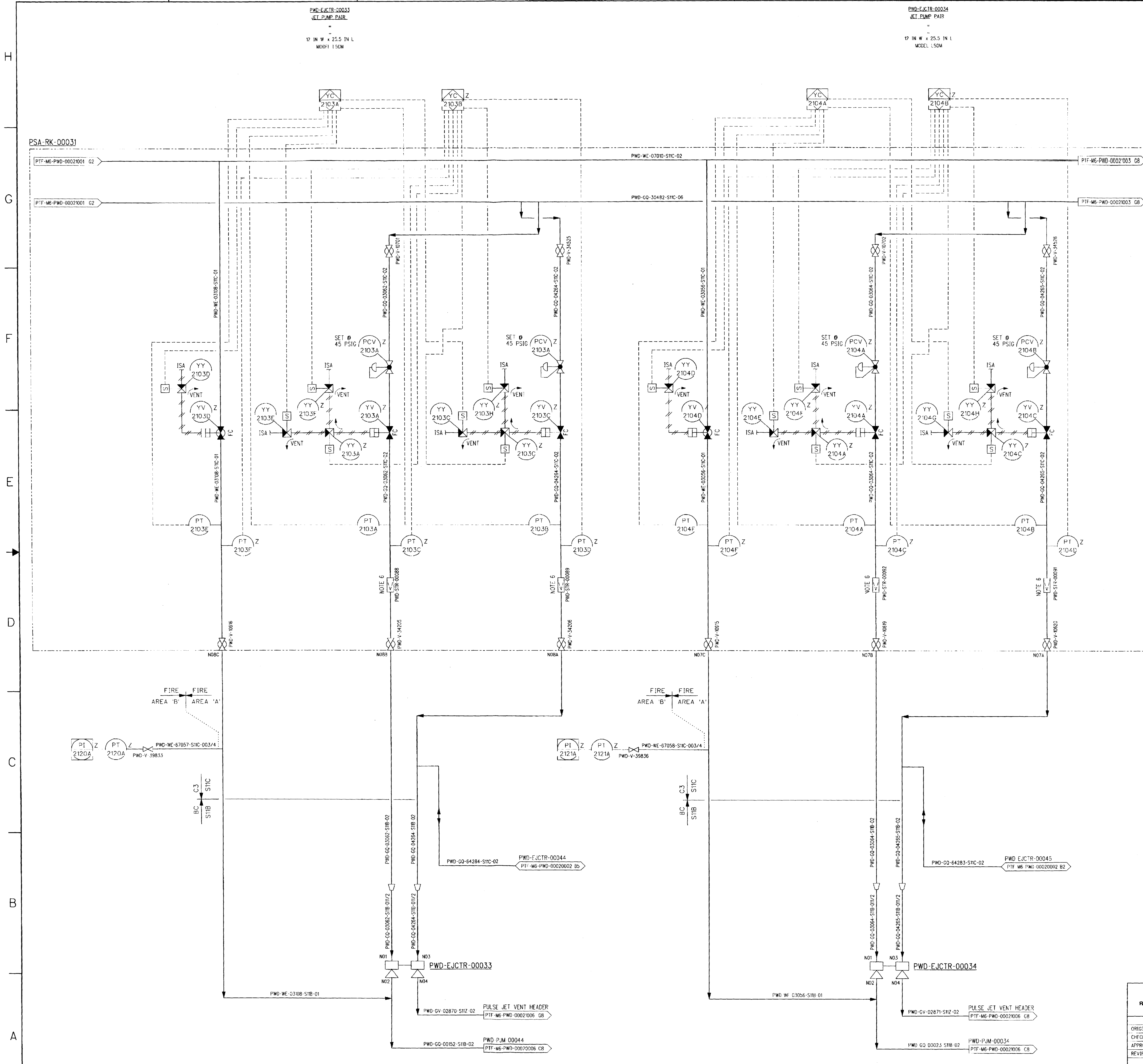

NOTES:

1. SEE DRAWINGS 24590-WTP-M6-50-00001 THROUGH 24590 WTP M6-50-00008 FOR GENERAL NOTES, SYMBOLS AND LEGEND, AND GENERAL SLOPE REQUIREMENTS.
2. SEE JET PUMP PAIR CONTROL DETAILS 4 (RFD) AND 5 (PJM) ON LEGEND SHEET 24590-WTP-M6-50-00007.
3. FOR PROCESS INFORMATION REFER TO PIPING & INSTRUMENTATION DIAGRAM 24590-PTF-M6-PWD-00002.
4. THE PRESSURE BOUNDARY FOR ALL SYSTEMS, STRUCTURES AND COMPONENTS ON THIS DRAWING (INCLUDING PULSE JET VENT LINES) IS QUALITY LEVEL Q AND SEISMIC CATEGORY SC-I, UNLESS OTHERWISE NOTED.
5. CONTENTS OF THIS DOCUMENT ARE DANGEROUS WASTE PERMIT AFFECTING.
6. STRAINER IS A CONICAL PILGRIM HAT TYPE STRAINER WITH PERFORATED 1/8 INCH DIAMETER STAGGERED HOLES ON 3/16 INCH CENTERS PERMANENTLY INSTALLED UPSTREAM OF FLANGED VALVE.
7. PLANT SERVICE AIR WILL BE SUPPLIED DURING NORMAL OPERATION, ITS AIR WILL BE SUPPLIED DURING A DESIGN BASIS ACCIDENT.
8. THIS DRAWING IS CONVERTED FROM A SINGLE SHEET TO MULTI-SHEET DRAWINGS AND, IN PART, SUPERCEDES 24590-PTF-M6-PWD-00021 REV 3. THIS DRAWING INCLUDES INFORMATION FROM 24590-PTF-M6N-PWD-00241, 24590-PTF-M6N-M80T-00036, -00037, AND -00038. OTHER CHANGES FROM SUPERSEDED DRAWING INCLUDE: ADDED AUTOMATED VALVE ISOLATED IN FIRE AREA C; INTERCONNECTED SUCTION LEGS WITH CORRESPONDING LOOPS PER HPAV SOLUTION; ADDED PT/PI TO FLUSH LINE FOR EACH PJM, INSTRUMENTS DESIGNATED IN ALTERNATE FIRE AREA 'A' OR 'B'; ADDED REAGENT INTRODUCTION ON PSA HEADER; ADDED INDIVIDUAL SUCTION PSA DROP FROM THE HEADER; REMOVED ISOLATION VALVE FROM DIW SUPPLY LINE AND STRAINER ASSEMBLY FROM PSA HEADER; REPLACED WYE WITH CONICAL STRAINERS; CHANGED MANUAL BALL VALVE TO BUTTERFLY VALVE; REVISED LINE SIZES; REVISED FY-2109 AND FY-2110 DISCRETE SOFTWARE SYMBOL, NOT ACCESSIBLE TO OPERATOR; ADDED/DELETED/REVISED NOTES, HOLDS, AND REFERENCES.

HOLD/OPEN ITEMS:

NONE

REFERENCES:

1. THE REQUIRED BATCH SEQUENCES, PERMISSIVES, INTERLOCKS, ALARMS, AND OPERATOR INTERFACE POINTS ARE FULLY DESCRIBED IN THE SOFTWARE FUNCTIONAL SPECIFICATION FOR PLANT WASH AND DISPOSAL (PWD) SYSTEM, 24590 PTF-3PS-PWD-T0001.
2. FOR PERMISSIVES AND INTERLOCKS IMPORTANT TO SAFETY SYSTEMS (ITS), REFER TO SOFTWARE REQUIREMENT SPECIFICATION 24590-PTF-3PS-PPJ-T0018 (FUTURE), T0022 (FUTURE), AND -T0031 (FUTURE).

Please note that source, special nuclear, and byproduct materials, as defined in the Atomic Energy Act of 1954 (AEA) are regulated at the U. S. Department of Energy (DOE) facilities exclusively by DOE acting pursuant to its AEA authority. DOE asserts that pursuant to AEA, it has sole and exclusive responsibility and authority to regulate source, special nuclear, and byproduct materials at DOE-owned nuclear facilities. Information contained herein on radionuclides is provided for process description purposes only.

REV	DESCRIPTION	ORG	CHKD	RVWD	APVD	DATE
0	ISSUED FOR CONSTRUCTION SEE NOTE 8			CEX ECS	JBM	3/11/08

REVISION HISTORY

Q
QUALITY DESIGNATOR

ISSUED BY RPP-WTP PDC
ISSUE STAMP

PROJECT No.	24590
SITE	HANFORD
AREA	200E
BUILDING No.	10

	BY	DATE
ORIGINATOR		3/10/08
CHECKER		3/10/08
APPROVER		3/11/08
REVIEWER		3/10/08
		3/10/08

CONTENT APPLICABLE TO ALARA? [X] YES [ ] NO
ADR NO. 24590-PTF-ADR-M-02-010 REV: 1
SAFETY SCREEN REQUIRED? [X] YES [ ] NO E&NS INITIAL IF YES GDH

BECHTEL
RIVER PROTECTION PROJECT
WASTE TREATMENT PLANT
2435 STEVENS CENTER PLACE
RICHLAND, WA 99354

CONTRACT No: DE-AC27-01RV14136

P&ID - PTF
PLANT WASH & DISPOSAL UTILITY SERVICES PSA RACK

SCALE: NONE
24590-PTF-M6-PWD-00021002
REV 0

SAFETY SCREEN IS REQUIRED FOR DRAWING TYPES IDENTIFIED IN 24590-WTP-GPP-SREG-002

'F' SIZE 44x34
COMPUTER GENERATED - MANUAL CHANGES NOT PERMITTED

03/10/2008 07:53:13 AM

PLOTTED BY: mdritter
C:\Work\mdritter\ams03837\PTF-M6PWD00021002.dgn

R10883764

FORM F-SDN-REV 10/2003

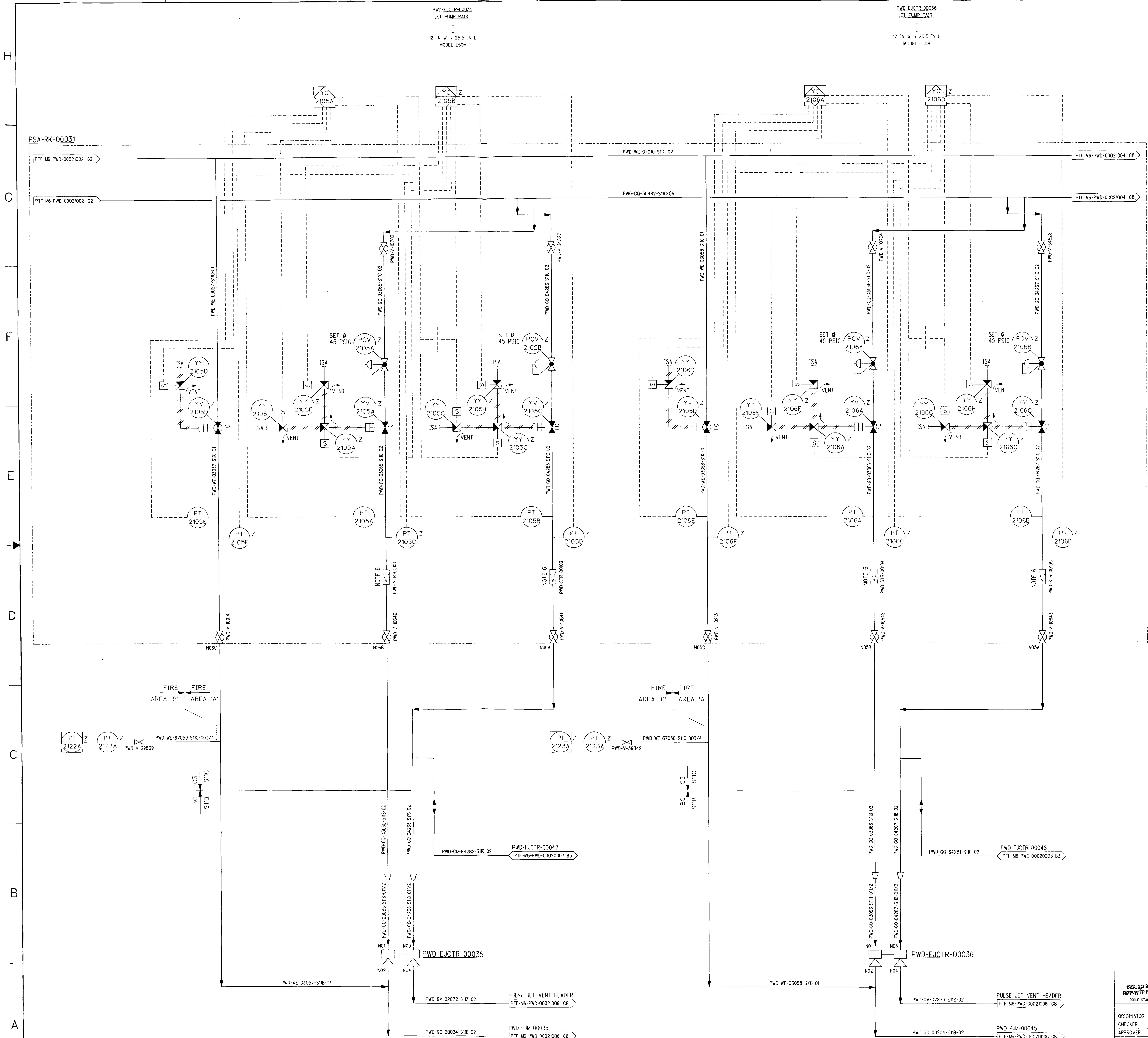

NOTES:

1. SEE DRAWINGS 24590-WTP-M6-50-00001 THROUGH 24590-WTP-M6-50-00008 FOR GENERAL NOTES, SYMBOLS AND LEGEND, AND GENERAL SLOPE REQUIREMENTS.
2. SEE JET PUMP PAIR CONTROL DETAILS 4 (RFD) AND 5 (PJM) ON LEGEND SHEET 24590-WTP-M6-50-00007.
3. FOR PROCESS INFORMATION REFER TO PIPING & INSTRUMENTATION DIAGRAM 24590-PTF-M6-PWD-00002.
4. THE PRESSURE BOUNDARY FOR ALL SYSTEMS, STRUCTURES AND COMPONENTS ON THIS DRAWING (INCLUDING PULSE JET VENT LINES) IS QUALITY LEVEL Q AND SEISMIC CATEGORY SC-I, UNLESS OTHERWISE NOTED.
5. CONTENTS OF THIS DOCUMENT ARE DANGEROUS WASTE PERMIT AFFECTING.
6. STRAINER IS A CONICAL PILGRIM HAT TYPE STRAINER WITH PERFORATED 1/8 INCH DIAMETER STAGGERED HOLES ON 3/16 INCH CENTERS PERMANENTLY INSTALLED UPSTREAM OF FLANGED VALVE.
7. PLANT SERVICE AIR WILL BE SUPPLIED DURING NORMAL OPERATION, ITS AIR WILL BE SUPPLIED DURING A DESIGN BASIS ACCIDENT.
8. THIS DRAWING IS CONVERTED FROM A SINGLE SHEET TO MULTI-SHEET DRAWINGS AND, IN PART, SUPERCEDES 24590-PTF-M6-PWD-00021 REV 3. THIS DRAWING INCLUDES INFORMATION FROM 24590-PTF-M6N-PWD-00241, 24590-PTF-M6N-M80T-00036, -00037, AND -00038. OTHER CHANGES FROM SUPERSEDED DRAWING INCLUDE: ADDED AUTOMATED VALVE ISOLATED IN FIRE AREA C; INTERCONNECTED SUCTION LEGS WITH CORRESPONDING LOOPS PER HPAV SOLUTION; ADDED PT/PI TO FLUSH LINE FOR EACH PJM, INSTRUMENTS DESIGNATED IN ALTERNATE FIRE AREA 'A' OR 'B'; ADDED REAGENT INTRODUCTION ON PSA HEADER; ADDED INDIVIDUAL SUCTION PSA DROP FROM THE HEADER; REMOVED ISOLATION VALVE FROM DIW SUPPLY LINE AND STRAINER ASSEMBLY FROM PSA HEADER; REPLACED WYE WITH CONICAL STRAINERS; CHANGED MANUAL BALL VALVE TO BUTTERFLY VALVE; REVISED LINE SIZES; REVISED FY-2109 AND FY-2110 DISCRETE SOFTWARE SYMBOL, NOT ACCESSIBLE TO OPERATOR; ADDED/DELETED/REVISED NOTES, HOLDS, AND REFERENCES.

HOLD/OPEN ITEMS:

NONE

REFERENCES:

1. THE REQUIRED BATCH SEQUENCES, PERMISSIVES, INTERLOCKS, ALARMS, AND OPERATOR INTERFACE POINTS ARE FULLY DESCRIBED IN THE SOFTWARE FUNCTIONAL SPECIFICATION FOR PLANT WASH AND DISPOSAL (PWD) SYSTEM, 24590-PTF-3PS-PWD-T0001.
2. FOR PERMISSIVES AND INTERLOCKS IMPORTANT TO SAFETY SYSTEMS (ITS), REFER TO SOFTWARE REQUIREMENT SPECIFICATION 24590-PTF-3PS-PPJ-T0018 (FUTURE), -T0022 (FUTURE), AND -T0031 (FUTURE).

Please note that source, special nuclear, and byproduct materials, as defined in the Atomic Energy Act of 1954 (AEA) are regulated at the U. S. Department of Energy (DOE) facilities exclusively by DOE acting pursuant to its AEA authority. DOE asserts that pursuant to AEA, it has sole and exclusive responsibility and authority to regulate source, special nuclear, and byproduct materials at DOE-owned nuclear facilities. Information contained herein on radionuclides is provided for process description purposes only.

REV	DESCRIPTION	ORG	CHKD	RVWD	APVD	DATE
0	ISSUED FOR CONSTRUCTION SEE NOTE 8			ECS CEA	RH JOM	3/11/08

REVISION HISTORY

Q
QUALITY DESIGNATOR

ISSUED BY RPP-WTP PDC
ISSUE STAMP

PROJECT No.	24590
SITE	HANFORD
AREA	200E
BUILDING No.	10

RIVER PROTECTION PROJECT
WASTE TREATMENT PLANT
2435 STEVENS CENTER PLACE
RICHLAND, WA 99354

CONTRACT No: DE-AC27-01RV14136

	BY	DATE
ORIGINATOR		3/10/08
CHECKER		3/10/08
APPROVER		3/11/08
REVIEWER		3/10/08
		3/10/08

CONTENT APPLICABLE TO ALARA? [X] YES [ ] NO
ADR NO. 24590-PTF-ADR-M-02-010 REV: 1
SAFETY SCREEN REQUIRED? [X] YES [ ] NO E&NS INITIAL IF YES GDH

P&ID - PTF
PLANT WASH & DISPOSAL UTILITY SERVICES PSA RACK

SCALE: NONE

24590-PTF-M6-PWD-00021003 REV 0

SAFETY SCREEN IS REQUIRED FOR DRAWING TYPES IDENTIFIED IN 24590-WTP-GPP-SREG-002

'E' SIZE - 44x34
COMPUTER GENERATED - MANUAL CHANGES NOT PERMITTED

03/10/2008 07:52:07 AM

FORM F-SN-TOC-02/2001

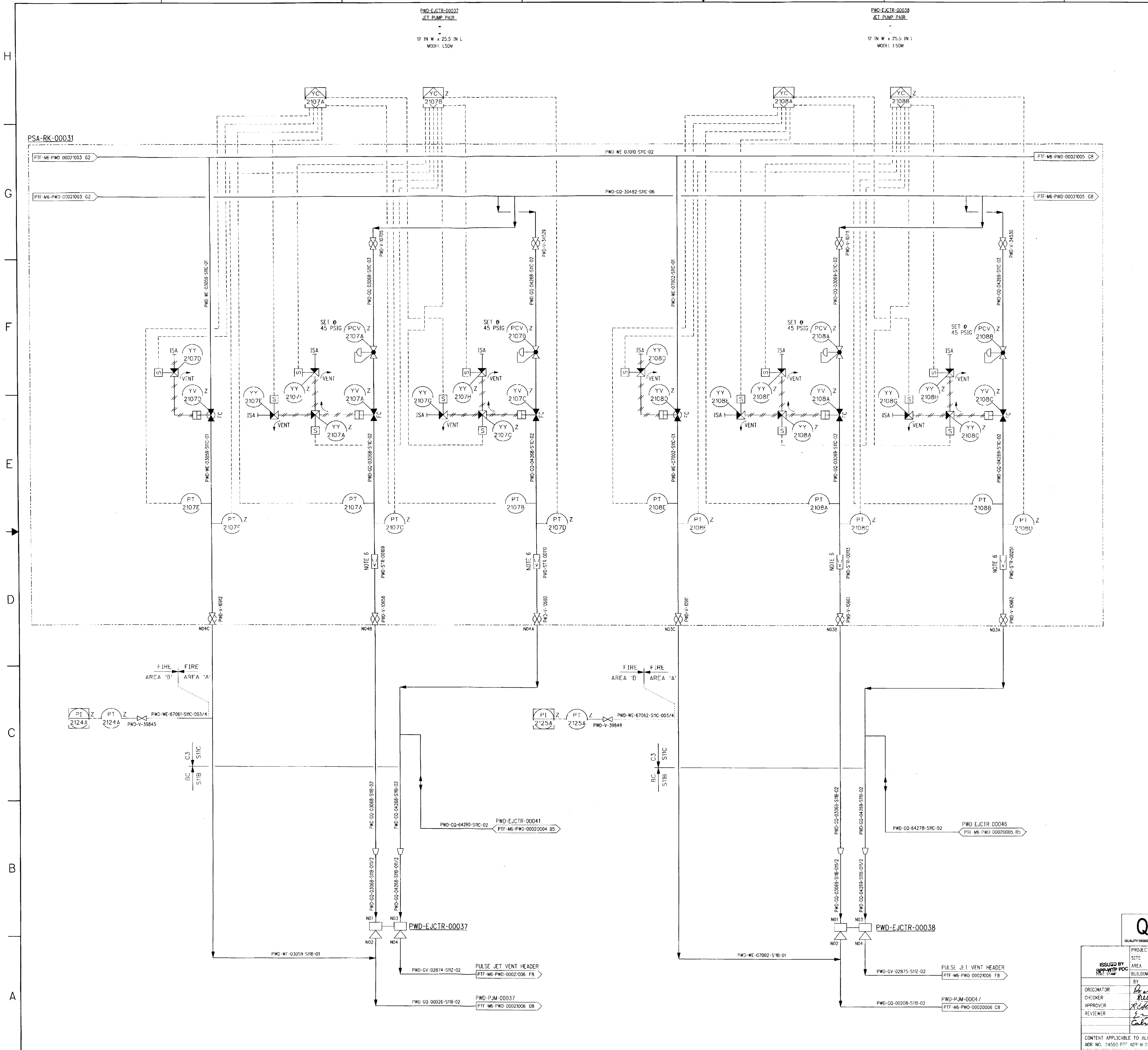

NOTES:

1. SEE DRAWINGS 24590-WTP-M6-50-00001 THROUGH 24590-WTP-M6-50-00008 FOR GENERAL NOTES, SYMBOLS AND LEGEND, AND GENERAL SLOPE REQUIREMENTS.
2. SEE JET PUMP PAIR CONTROL DETAILS 4 (RFD) AND 5 (PJM) ON LEGEND SHEET 24590-WTP-M6-50-00007.
3. FOR PROCESS INFORMATION REFER TO PIPING & INSTRUMENTATION DIAGRAM 24590-PTF-M6-PWD-00002.
4. THE PRESSURE BOUNDARY FOR ALL SYSTEMS, STRUCTURES AND COMPONENTS ON THIS DRAWING (INCLUDING PULSE JET VENT LINES) IS QUALITY LEVEL Q AND SEISMIC CATEGORY SC-I, UNLESS OTHERWISE NOTED.
5. CONTENTS OF THIS DOCUMENT ARE DANGEROUS WASTE PERMIT AFFECTING.
6. STRAINER IS A CONICAL PILGRIM HAT TYPE STRAINER WITH PERFORATED 1/8 INCH DIAMETER STAGGERED HOLES ON 3/16 INCH CENTERS PERMANENTLY INSTALLED UPSTREAM OF FLANGED VALVE.
7. PLANT SERVICE AIR WILL BE SUPPLIED DURING NORMAL OPERATION, ITS AIR WILL BE SUPPLIED DURING A DESIGN BASIS ACCIDENT.
8. THIS DRAWING IS CONVERTED FROM A SINGLE SHEET TO MULTI-SHEET DRAWINGS AND, IN PART, SUPERCEDES 24590-PTF-M6-PWD-00021 REV 3. THIS DRAWING INCLUDES INFORMATION FROM 24590-PTF-M6N-PWD-00241, 24590-PTF-M6N-M80T-00036, -00037, AND -00038. OTHER CHANGES FROM SUPERSEDED DRAWING INCLUDE: ADDED AUTOMATED VALVE ISOLATED IN FIRE AREA C; INTERCONNECTED SUCTION LEGS WITH CORRESPONDING LOOPS PER HPAV SOLUTION; ADDED PT/PI TO FLUSH LINE FOR EACH PJM, INSTRUMENTS DESIGNATED IN ALTERNATE FIRE AREA 'A' OR 'B'; ADDED REAGENT INTRODUCTION ON PSA HEADER; ADDED INDIVIDUAL SUCTION PSA DROP FROM THE HEADER; REMOVED ISOLATION VALVE FROM DIW SUPPLY LINE AND STRAINER ASSEMBLY FROM PSA HEADER; REPLACED WYE WITH CONICAL STRAINERS; CHANGED MANUAL BALL VALVE TO BUTTERFLY VALVE; REVISED LINE SIZES; REVISED FY-2109 AND FY-2110 DISCRETE SOFTWARE SYMBOL, NOT ACCESSIBLE TO OPERATOR; ADDED/DELETED/REVISED NOTES, HOLDS, AND REFERENCES.

HOLD/OPEN ITEMS:

NONE

REFERENCES:

1. THE REQUIRED BATCH SEQUENCES, PERMISSIVES, INTERLOCKS, ALARMS, AND OPERATOR INTERFACE POINTS ARE FULLY DESCRIBED IN THE SOFTWARE FUNCTIONAL SPECIFICATION FOR PLANT WASH AND DISPOSAL (PWD) SYSTEM, 24590 PTF 3PS PWD T0001.
2. FOR PERMISSIVES AND INTERLOCKS IMPORTANT TO SAFETY SYSTEMS (ITS), REFER TO SOFTWARE REQUIREMENT SPECIFICATION 24590-PTF-3PS-PPJ-T0018 (FUTURE), -T0022 (FUTURE), AND T0031 (FUTURE).

Please note that source, special nuclear, and byproduct materials, as defined in the Atomic Energy Act of 1954 (AEA) are regulated at the U. S. Department of Energy (DOE) facilities exclusively by DOE acting pursuant to its AEA authority. DOE asserts that pursuant to AEA, it has sole and exclusive responsibility and authority to regulate source, special nuclear, and byproduct materials at DOE-owned nuclear facilities. Information contained herein on radionuclides is provided for process description purposes only.

Q
QUALITY DESIGNATOR

REV	DESCRIPTION	ORG	CHKD	RVWD	APVD	DATE
0	ISSUED FOR CONSTRUCTION SEE NOTE 8	[signature]	[signature]	CEK / ELS	JDM / RCS	3/11/08

REVISION HISTORY

ISSUED BY RPP-WTP PDC
ISSUE STAMP

PROJECT No.	24590
SITE	HANFORD
AREA	200E
BUILDING No.	10

	BY	DATE
ORIGINATOR	[signature]	3/10/08
CHECKER	[signature]	3/10/08
APPROVER	[signature]	3/11/08
REVIEWER	[signature]	3/10/08
	[signature]	3/10/08

CONTENT APPLICABLE TO ALARA? [X] YES [ ] NO
ADR NO. 24590-PTF-ADR-M-02-010 REV: 1
SAFETY SCREEN REQUIRED? [X] YES [ ] NO E&NS INITIAL IF YES GDH

RIVER PROTECTION PROJECT
WASTE TREATMENT PLANT
2435 STEVENS CENTER PLACE
RICHLAND, WA 99354

CONTRACT No: DE-AC27-01RV14136

P&ID - PTF PLANT WASH & DISPOSAL UTILITY SERVICES PSA RACK

SCALE: NONE
24590-PTF-M6-PWD-00021004
REV 0

SAFETY SCREEN IS REQUIRED FOR DRAWING TYPES IDENTIFIED IN 24590-WTP-GPP-SREG-002
'E' SIZE - 44x34
COMPUTER GENERATED - MANUAL CHANGES NOT PERMITTED

03/10/2008 07:50:57 AM
PLOTTED BY: mdritter
C:\Work\mdritter\cms03837\PT M6PWD00021004.dgn
R1C887411

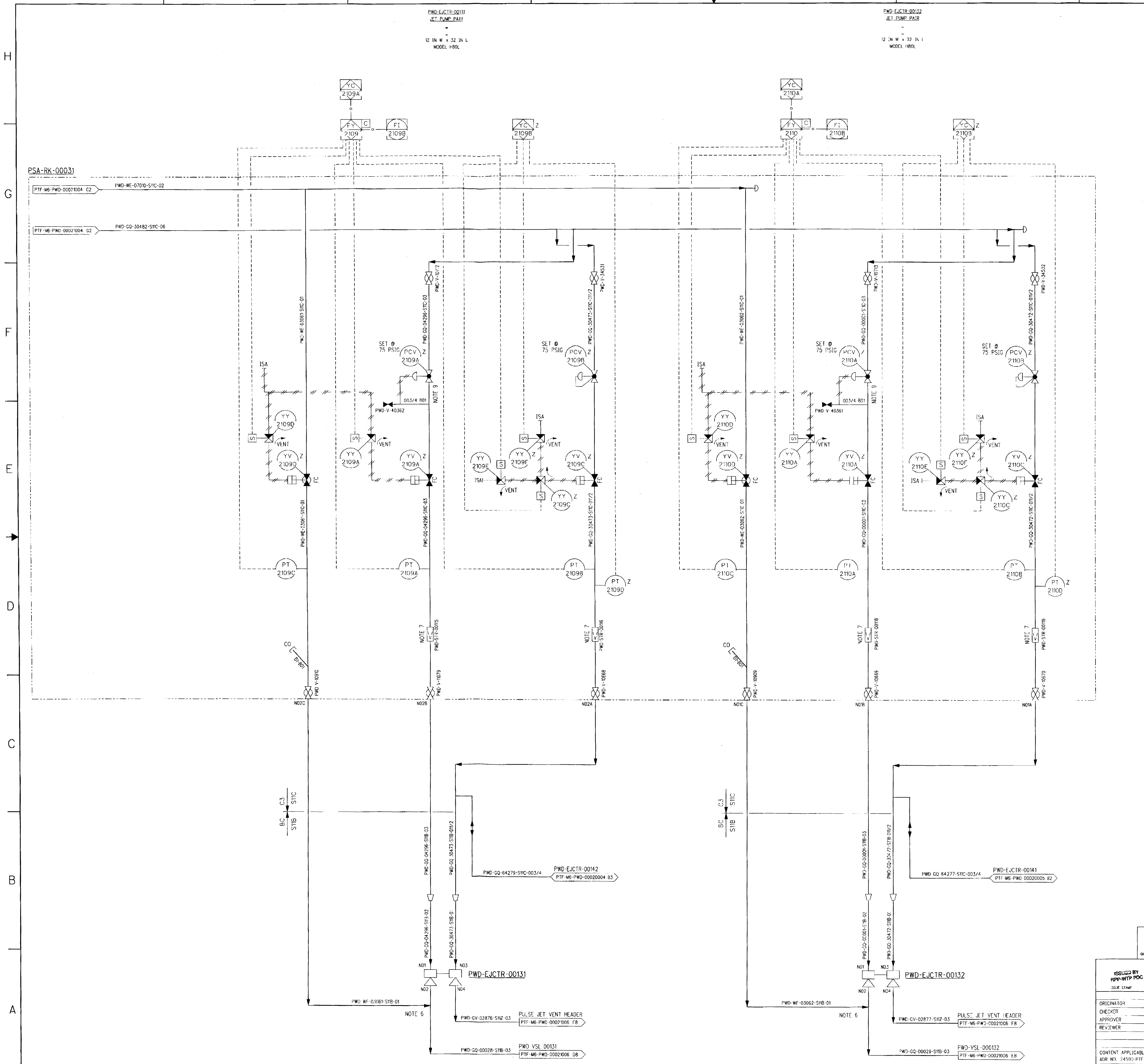

NOTES:

1. SEE DRAWINGS 24590-WTP-M6-50-00001 THROUGH 24590-WTP-M6-50-00008 FOR GENERAL NOTES, SYMBOLS AND LEGEND, AND GENERAL SLOPE REQUIREMENTS.
2. SEE JET PUMP PAIR CONTROL DETAILS 4 (RFD) AND 5 (PJM) ON LEGEND SHEET 24590-WTP-M6-50-00007.
3. FOR PROCESS INFORMATION REFER TO PIPING & INSTRUMENTATION DIAGRAM 24590-PTF-M6-PWD-00002.
4. THE PRESSURE BOUNDARY FOR ALL SYSTEMS, STRUCTURES AND COMPONENTS ON THIS DRAWING (INCLUDING PULSE JET VENT LINES) IS QUALITY LEVEL Q AND SEISMIC CATEGORY SC-I, UNLESS OTHERWISE NOTED.
5. CONTENTS OF THIS DOCUMENT ARE DANGEROUS WASTE PERMIT AFFECTING.
6. A 45° WYE PIPE FITTING SHALL BE USED AT THIS CONNECTION AND LOCATION.
7. STRAINER IS A CONICAL PILGRIM HAT TYPE STRAINER WITH PERFORATED 1/8 INCH DIAMETER STAGGERED HOLES ON 3/16 INCH CENTERS PERMANENTLY INSTALLED UPSTREAM OF FLANGED VALVE.
8. PLANT SERVICE AIR WILL BE SUPPLIED DURING NORMAL OPERATION, ITS AIR WILL BE SUPPLIED DURING A DESIGN BASIS ACCIDENT.
9. THE PCV CONTROL LINE TO BE CONNECTED TO A STRAIGHT RUN OF PIPE 3 TO 5 FEET DOWNSTREAM OF THE PCV. THE PCV TO HAVE 3 FEET OF STRAIGHT PIPE RUN ON BOTH SIDES OF THE VALVE.
10. THIS DRAWING IS CONVERTED FROM A SINGLE SHEET TO MULTI-SHEET DRAWINGS AND, IN PART, SUPERCEDES 24590-PTF-M6-PWD-00021 REV 3. THIS DRAWING INCLUDES INFORMATION FROM 24590-PTF-M6N-PWD-00241, 24590-PTF-M6N-M80T-00036, 00037, AND 00038. OTHER CHANGES FROM SUPERSEDED DRAWING INCLUDE: ADDED AUTOMATED VALVE ISOLATED IN FIRE AREA C; INTERCONNECTED SUCTION LEGS WITH CORRESPONDING LOOPS PER HPAV SOLUTION; ADDED PT/PI TO FLUSH LINE FOR EACH PJM, INSTRUMENTS DESIGNATED IN ALTERNATE FIRE AREA 'A' OR 'B'; ADDED REAGENT INTRODUCTION ON PSA HEADER; ADDED INDIVIDUAL SUCTION PSA DROP FROM THE HEADER; REMOVED ISOLATION VALVE FROM DIW SUPPLY LINE AND STRAINER ASSEMBLY FROM PSA HEADER; REPLACED WYE WITH CONICAL STRAINERS; CHANGED MANUAL BALL VALVE TO BUTTERFLY VALVE; REVISED LINE SIZES; REVISED FY-2109 AND FY-2110 DISCRETE SOFTWARE SYMBOL, NOT ACCESSIBLE TO OPERATOR; ADDED/DELETED/REVISED NOTES, HOLDS, AND REFERENCES.

HOLD/OPEN ITEMS:

NONE

REFERENCES:

1. THE REQUIRED BATCH SEQUENCES, PERMISSIVES, INTERLOCKS, ALARMS AND OPERATOR INTERFACE POINTS ARE FULLY DESCRIBED IN THE SOFTWARE FUNCTIONAL SPECIFICATION, FOR PLANT WASH AND DISPOSAL(PWD) SYSTEM, 24590-PTF-3PS-PWD-T0001.
2. FOR PERMISSIVES AND INTERLOCKS IMPORTANT TO SAFETY SYSTEM (IIS) REFER TO SOFTWARE REQUIREMENT SPECIFICATION 24590-PTF-3PS-PPJ-T0018 (FUTURE) -T0022 (FUTURE), AND -T0031 (FUTURE).

Please note that source, special nuclear, and byproduct materials, as defined in the Atomic Energy Act of 1954 (AEA) are regulated at the U. S. Department of Energy (DOE) facilities exclusively by DOE acting pursuant to its AEA authority. DOE asserts that pursuant to AEA, it has sole and exclusive responsibility and authority to regulate source, special nuclear, and byproduct materials at DOE-owned nuclear facilities. Information contained herein on radionuclides is provided for process description purposes only.

Q
QUALITY DESIGNATOR

REVISION HISTORY

REV	DESCRIPTION	ORG	CHKD	RVWD	APVD	DATE
0	ISSUED FOR CONSTRUCTION SEE NOTE 10					3/11/08

ISSUED BY RPP-WTP PDC
ISSUE STAMP

PROJECT No.	24590
SITE	HANFORD
AREA	200E
BUILDING No.	10

	BY	DATE
ORIGINATOR		3/10/08
CHECKER		3/10/08
APPROVER		3/11/08
REVIEWER		3/10/08
		3/10/08

CONTENT APPLICABLE TO ALARA? [X] YES [ ] NO
ADR NO. 24590-PTF-ADR-M-02-010 REV: 1
SAFETY SCREEN REQUIRED? [X] YES [ ] NO E&NS INITIAL IF YES GDH

BECHTEL
RIVER PROTECTION PROJECT
WASTE TREATMENT PLANT
2435 STEVENS CENTER PLACE
RICHLAND, WA 99354

CONTRACT No: DE-AC27-01RV14136

P&ID - PTF
PLANT WASH & DISPOSAL
UTILITY SERVICES
PSA RACK

SCALE: NONE
24590-PTF-M6-PWD-00021005
REV 0

SAFETY SCREEN IS REQUIRED FOR DRAWING TYPES IDENTIFIED IN 24590-WTP-GPP-SREG-002
'E' SIZE - 44x34
COMPUTER GENERATED - MANUAL CHANGES NOT PERMITTED
03/10/2008 07:49:55 AM
PLOTTED BY: mdritter
C:\Work\mdritter\cms03837\PTFM6PWD00021005.dgn
R10887412

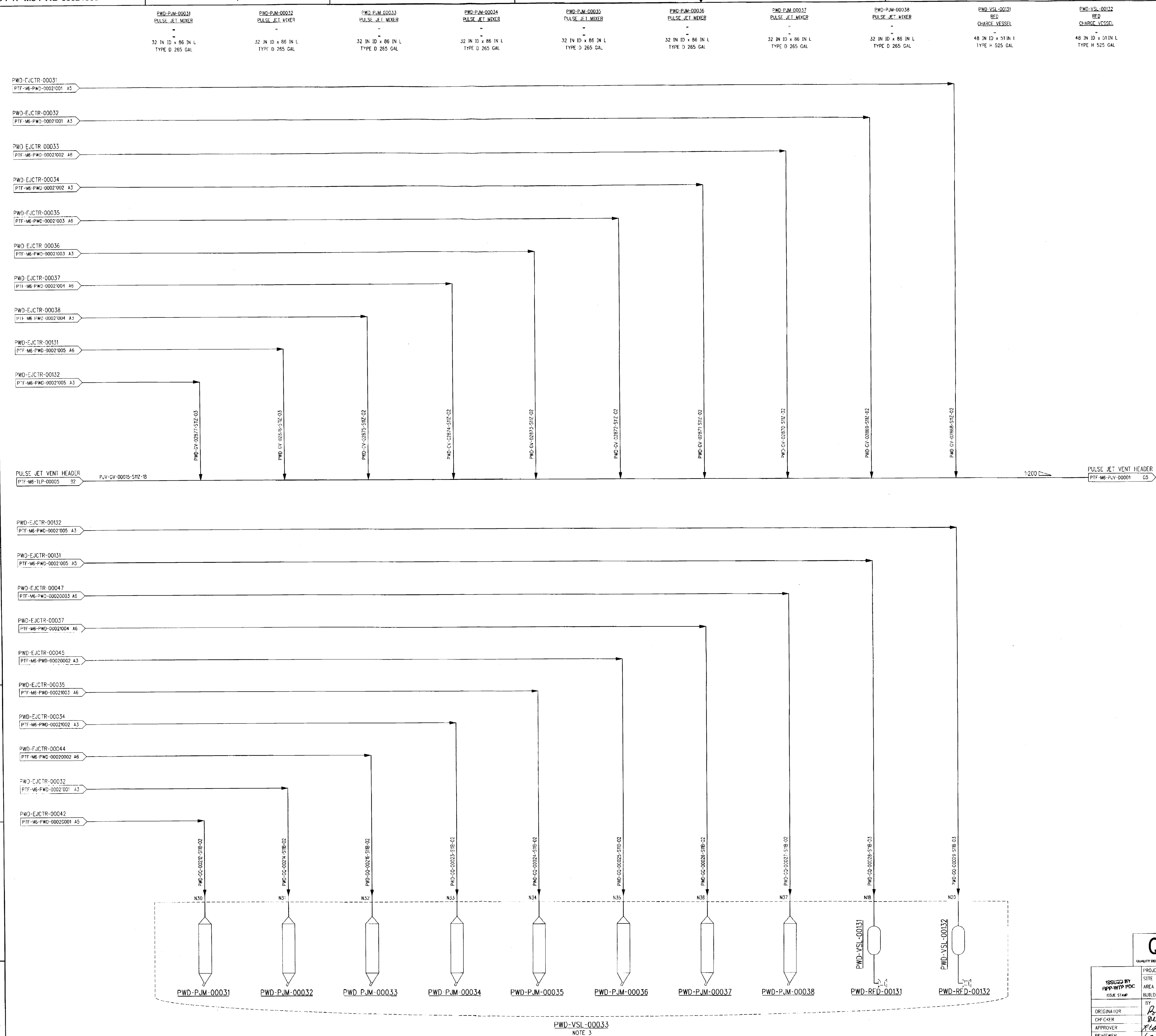

NOTES:

1. SEE DRAWINGS 24590-WTP-M6-50-00001 THROUGH 24590-WTP-M6-50-00008 FOR GENERAL NOTES, SYMBOLS AND LEGEND, AND GENERAL SLOPE REQUIREMENTS.
2. FOR PROCESS INFORMATION REFER TO PIPING & INSTRUMENTATION DIAGRAM 24590-PTF-M6-PWD-00002.
3. THE PRESSURE BOUNDARY FOR ALL SYSTEMS, STRUCTURES AND COMPONENTS ON THIS DRAWING (INCLUDING PULSE JET VENT LINES) IS QUALITY LEVEL Q AND SEISMIC CATEGORY SC-I, UNLESS OTHERWISE NOTED. CHARGE VESSELS ARE QUALITY LEVEL CM AND SEISMIC CATEGORY SC-III.
4. CONTENTS OF THIS DOCUMENT ARE DANGEROUS WASTE PERMIT AFFECTING.
5. THIS DRAWING IS CONVERTED FROM A SINGLE SHEET TO MULTI-SHEET DRAWINGS AND, IN PART, SUPERCEDES 24590-PTF-M6-PWD-00021 REV 3. THIS DRAWING INCLUDES INFORMATION FROM 24590-PTF-M6N-PWD-00241, 24590-PTF-M6N-M80T-00036, -00037, AND -00038. OTHER CHANGES FROM SUPERSEDED DRAWING INCLUDE: ADDED AUTOMATED VALVE ISOLATED IN FIRE AREA C; INTERCONNECTED SUCTION LEGS WITH CORRESPONDING LOOPS PER HPAV SOLUTION; ADDED PT/PI TO FLUSH LINE FOR EACH PJM, INSTRUMENTS DESIGNATED IN ALTERNATE FIRE AREA 'A' OR 'B'; ADDED REAGENT INTRODUCTION ON PSA HEADER; ADDED INDIVIDUAL SUCTION PSA DROP FROM THE HEADER; REMOVED ISOLATION VALVE FROM DIW SUPPLY LINE AND STRAINER ASSEMBLY FROM PSA HEADER; REPLACED WYE WITH CONICAL STRAINERS; CHANGED MANUAL BALL VALVE TO BUTTERFLY VALVE; REVISED LINE SIZES; REVISED FY-2109 AND FY-2110 DISCRETE SOFTWARE SYMBOL, NOT ACCESSIBLE TO OPERATOR; ADDED/DELETED/REVISED NOTES, HOLDS, AND REFERENCES.

HOLD/OPEN ITEMS:

NONE

REFERENCES:

NONE

Please note that source, special nuclear, and byproduct materials, as defined in the Atomic Energy Act of 1954 (AEA) are regulated at the U. S. Department of Energy (DOE) facilities exclusively by DOE acting pursuant to its AEA authority. DOE asserts that pursuant to AEA, it has sole and exclusive responsibility and authority to regulate source, special nuclear, and byproduct materials at DOE-owned nuclear facilities. Information contained herein on radionuclides is provided for process description purposes only.

Q
QUALITY DESIGNATOR

REV	DESCRIPTION	ORG	CHKD	RVWD	APVD	DATE
0	ISSUED FOR CONSTRUCTION SEE NOTE 5			ELS		3/11/08

REVISION HISTORY

ISSUED BY RPP-WTP PDC
ISSUE STAMP

PROJECT No.	24590
SITE	HANFORD
AREA	200F
BUILDING No.	10

	BY	DATE
ORIGINATOR		3/10/08
CHECKER		3/10/08
APPROVER		3/11/08
REVIEWER		3/10/08
		3/10/08

CONTENT APPLICABLE TO ALARA? [X] YES [ ] NO
ADR NO. 24590-PTF-ADR-M-02-010 REV: 1
SAFETY SCREEN REQUIRED? [X] YES [ ] NO E&NS INITIAL IF YES

BECHTEL
RIVER PROTECTION PROJECT
WASTE TREATMENT PLANT
2435 STEVENS CENTER PLACE
RICHLAND, WA 99354

CONTRACT No: DE-AC27-01RV14136

P&ID - PTF
PLANT WASH & DISPOSAL UTILITY SERVICES PSA RACK

SCALE: NONE
24590-PTF-M6-PWD-00021006
REV 0

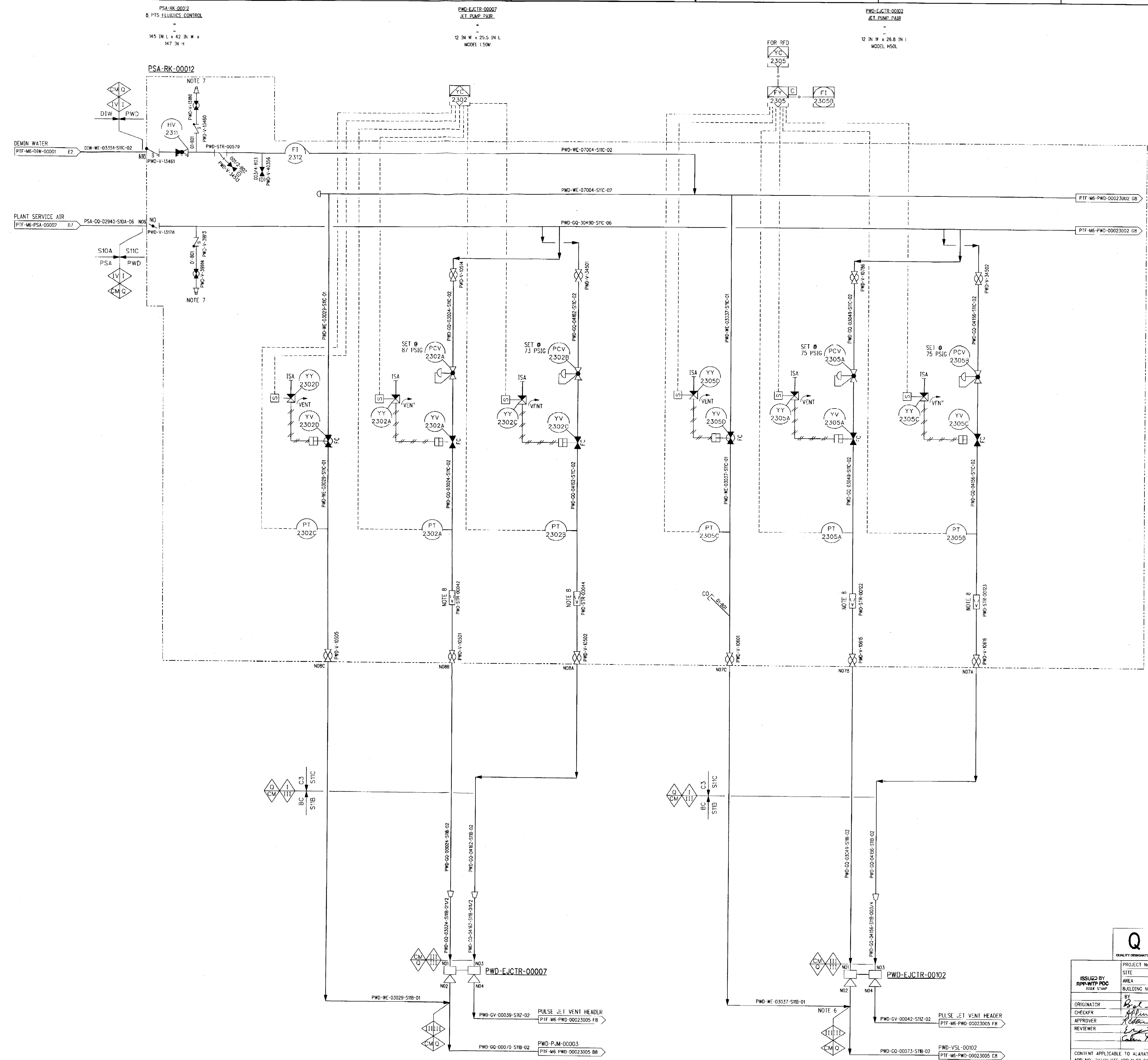

NOTES:

1. SEE DRAWINGS 24590-WTP-M6-50-00001 THROUGH 24590-WTP-M6-50-00008 FOR GENERAL NOTES, SYMBOLS AND LEGEND, AND GENERAL SLOPE REQUIREMENTS.
2. SEE JET PUMP PAIR CONTROL DETAIL 2 (RFD/PJM) ON LEGEND SHEET 24590-WTP-M6-50-00006.
3. FOR PROCESS INFORMATION REFER TO PIPING & INSTRUMENTATION DIAGRAM 24590-PTF-M6-PWD-00003.
4. THE PRESSURE BOUNDARY FOR ALL SYSTEMS, STRUCTURES AND COMPONENTS ON THIS DRAWING (INCLUDING PULSE JET VENT LINES) ARE QUALITY LEVEL Q AND SEISMIC CATEGORY SC-I, UNLESS OTHERWISE NOTED.
5. CONTENTS OF THIS DRAWING ARE DANGEROUS WASTE PERMIT AFFECTING.
6. A 45-DEGREE WYE PIPE FITTING SHALL BE USED AT THIS CONNECTION AND LOCATION.
7. REAGENT, PLANT WASH, AND AIR SERVICES PROVIDED AT A LOCAL UTILITY STATION.
8. STRAINER IS A CONICAL PILGRIM HAT TYPE STRAINER WITH PERFORATED 1/8 INCH DIAMETER STAGGERED HOLES ON 3/16 INCH CENTERS PERMANENTLY INSTALLED UPSTREAM OF FLANGED VALVE.
9. THIS DRAWING IS CONVERTED FROM A SINGLE SHEET TO MULTI-SHEET DRAWINGS AND, IN PART, SUPERCEDES 24590-PTF-M6-PWD-00023 REV 3. THIS DRAWING INCLUDES INFORMATION FROM 24590-PTF-M6N-PWD-00242, 24590-PTF-M6N-M80T-00026,-00036,-00037,-AND -00038. OTHER CHANGES FROM SUPERSEDED DRAWING INCLUDE: ADDED REAGENT INTRODUCTION ON PSA HEADER; ADDED INDIVIDUAL SUCTION PSA DROP FROM THE HEADER; REMOVED ISOLATION VALVE FROM DIW SUPPLY LINE AND STRAINER ASSEMBLY FROM PSA HEADER; REPLACED WYE WITH CONICAL STRAINERS; CHANGED MANUAL BALL VALVE TO BUTTERFLY VALVE; CHANGED QUALITY LEVEL AND SEISMIC CATEGORY IN C3 AND C5 AREA, REVISED FY-2304, FY-2305, FY-2306, FY-2307, AND FY-2308 DISCRETE SOFTWARE SYMBOL, NOT ACCESSIBLE TO OPERATOR, ADDED/DELETED/REVISED NOTES, HOLDS, AND REFERENCES.

HOLD/OPEN ITEMS:

NONE

REFERENCES:

1. THE REQUIRED BATCH SEQUENCES, PERMISSIVES, INTERLOCKS, ALARMS AND OPERATOR INTERFACE POINTS ARE FULLY DESCRIBED IN THE SOFTWARE FUNCTIONAL SPECIFICATION, FOR PLANT WASH AND DISPOSAL (PWD) SYSTEM, 24590-PTF-3PS-PWD-10001.

Please note that source, special nuclear, and byproduct materials, as defined in the Atomic Energy Act of 1954 (AEA) are regulated at the U. S. Department of Energy (DOE) facilities exclusively by DOE acting pursuant to its AEA authority. DOE asserts that pursuant to AEA, it has sole and exclusive responsibility and authority to regulate source, special nuclear, and byproduct materials at DOE-owned nuclear facilities. Information contained herein on radionuclides is provided for process description purposes only.

DRAWING INDEX

DWG NO	REV	TITLE
24590-PTF-M6-PWD-00023001	0	PLANT WASH & DISPOSAL UTILITY SERVICES
24590-PTF-M6-PWD-00023002	0	PLANT WASH & DISPOSAL UTILITY SERVICES
24590-PTF-M6-PWD-00023003	0	PLANT WASH & DISPOSAL UTILITY SERVICES
24590-PTF-M6-PWD-00023004	0	PLANT WASH & DISPOSAL UTILITY SERVICES
24590-PTF-M6-PWD-00023005	0	PLANT WASH & DISPOSAL UTILITY SERVICES

REVISION HISTORY

REV	DESCRIPTION	ORG	CHKD	RVWD	APVD	DATE
0	ISSUED FOR CONSTRUCTION SEE NOTE 9	PR	APP	CEK / ELS	JBm / RLL	3/11/08

Q
QUALITY DESIGNATOR

ISSUED BY RPP-WTP PDC
ISSUE STAMP

PROJECT No.	24590
SITE	HANFORD
AREA	200E
BUILDING No.	10

	BY	DATE
ORIGINATOR	[signature]	3/10/08
CHECKER	[signature]	3/10/08
APPROVER	[signature]	3/11/08
REVIEWER	[signature]	3/10/08
	[signature]	3/10/08

CONTENT APPLICABLE TO ALARA? [X] YES [ ] NO
ADR NO. 24590 PTF-ADR-M-02-010 REV: 1
SAFETY SCREEN REQUIRED? [X] YES [ ] NO E&NS INITIAL IF YES GOH

BECHTEL
RIVER PROTECTION PROJECT
WASTE TREATMENT PLANT
2435 STEVENS CENTER PLACE
RICHLAND, WA 99354

CONTRACT No: DE-AC27-01RV14136

P&ID - PTF
PLANT WASH & DISPOSAL UTILITY SERVICES PSA RACK

SCALE: NONE

24590-PTF-M6-PWD-00023001 REV 0

SAFETY SCREEN IS REQUIRED FOR DRAWING TYPES IDENTIFIED IN 24590-WTP-GPP-SREG-002

'E' SIZE - 44x34
COMPUTER GENERATED - MANUAL CHANGES NOT PERMITTED

03/10/2008 07:47:42 AM

PLOTTED BY: mdritter
C:\Work\mdritter\dms03837\PTFM6PWD00023001.dgn

R10887414

FORM F SDN.DGN 02/2003

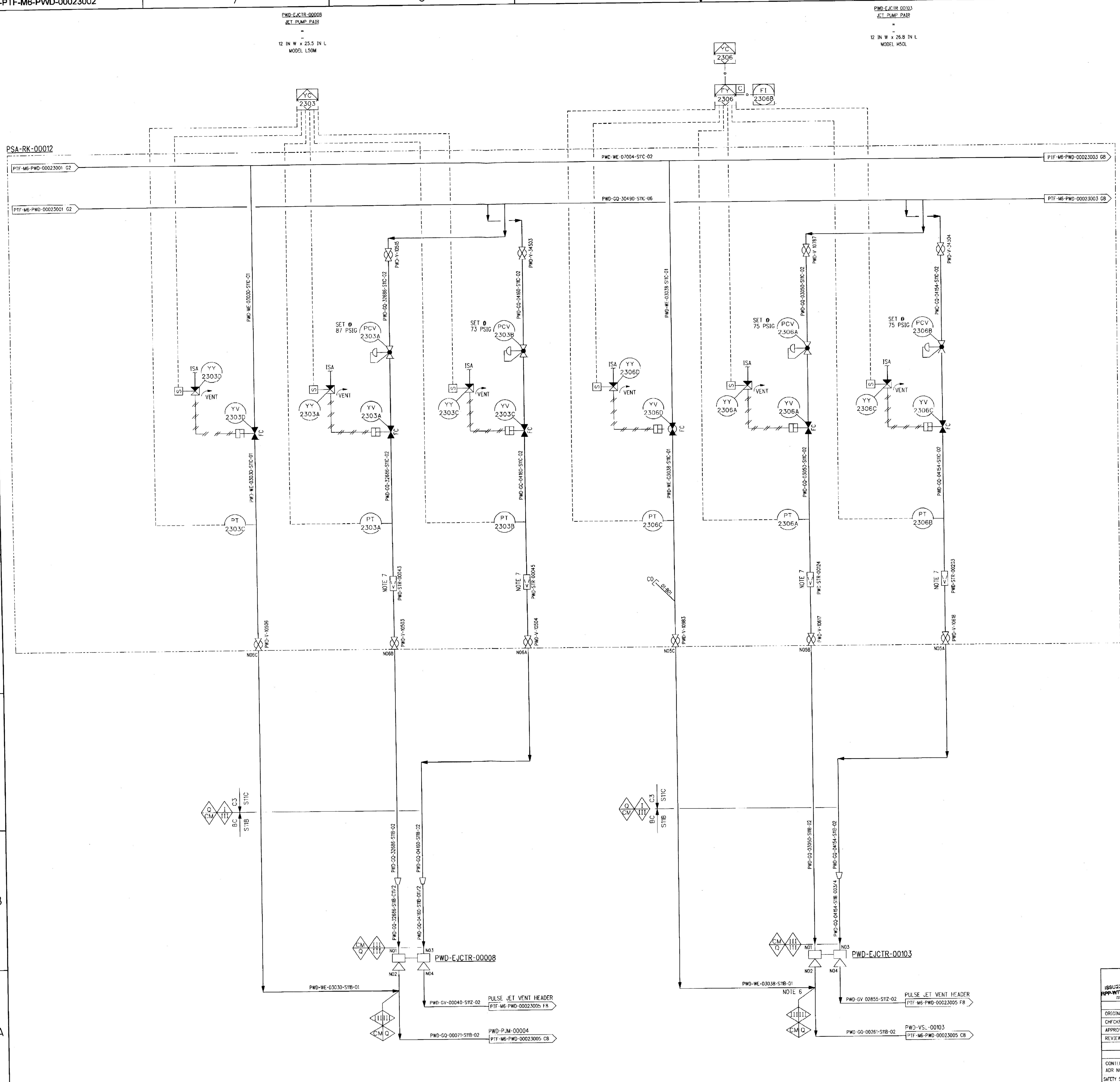

NOTES:

1. SEE DRAWINGS 24590-WTP-M6-50-00001 THROUGH 24590-WTP-M6-50-00008 FOR GENERAL NOTES, SYMBOLS AND LEGEND, AND GENERAL SLOPE REQUIREMENTS.
2. SEE JET PUMP PAIR CONTROL DETAIL 2 (RFD/PJM) ON LEGEND SHEET 24590-WTP-M6-50-00006.
3. FOR PROCESS INFORMATION REFER TO PIPING & INSTRUMENTATION DIAGRAM 24590-PTF-M6-PWD-00003.
4. THE PRESSURE BOUNDARY FOR ALL SYSTEMS, STRUCTURES AND COMPONENTS ON THIS DRAWING (INCLUDING PULSE JET VENT LINES) ARE QUALITY LEVEL Q AND SEISMIC CATEGORY SC-I, UNLESS OTHERWISE NOTED.
5. CONTENTS OF THIS DRAWING ARE DANGEROUS WASTE PERMIT AFFECTING.
6. A 45-DEGREE WYE PIPE FITTING SHALL BE USED AT THIS CONNECTION AND LOCATION.
7. STRAINER IS A CONICAL PILGRIM HAT TYPE STRAINER WITH PERFORATED 1/8 INCH DIAMETER STAGGERED HOLES ON 3/16 INCH CENTERS PERMANENTLY INSTALLED UPSTREAM OF FLANGED VALVE.
8. THIS DRAWING IS CONVERTED FROM A SINGLE SHEET TO MULTI-SHEET DRAWINGS AND, IN PART, SUPERCEDES 24590-PTF-M6-PWD-00023 REV 3. THIS DRAWING INCLUDES INFORMATION FROM 24590-PTF-M6N-PWD-00242, 24590-PTF-M6N-M80T-00026,-00036,-00037,-AND -00038. OTHER CHANGES FROM SUPERSEDED DRAWING INCLUDE: ADDED REAGENT INTRODUCTION ON PSA HEADER; ADDED INDIVIDUAL SUCTION PSA DROP FROM THE HEADER; REMOVED ISOLATION VALVE FROM DIW SUPPLY LINE AND STRAINER ASSEMBLY FROM PSA HEADER; REPLACED WYE WITH CONICAL STRAINERS; CHANGED MANUAL BALL VALVE TO BUTTERFLY VALVE; CHANGED QUALITY LEVEL AND SEISMIC CATEGORY IN C3 AND C5 AREA, REVISED FY-2304, FY-2305, FY-2306, FY-2307, AND FY-2308 DISCRETE SOFTWARE SYMBOL, NOT ACCESSIBLE TO OPERATOR, ADDED/DELETED/REVISED NOTES, HOLDS, AND REFERENCES.

HOLD/OPEN ITEMS:

NONE

REFERENCES:

1. THE REQUIRED BATCH SEQUENCES, PERMISSIVES, INTERLOCKS, ALARMS AND OPERATOR INTERFACE POINTS ARE FULLY DESCRIBED IN THE SOFTWARE FUNCTIONAL SPECIFICATION, FOR PWD-PLANT WASH AND DISPOSAL SYSTEM, 24590-PTF-3PS-PWD-T0001.

Please note that source, special nuclear, and byproduct materials, as defined in the Atomic Energy Act of 1954 (AEA) are regulated at the U. S. Department of Energy (DOE) facilities exclusively by DOE acting pursuant to its AEA authority. DOE asserts that pursuant to AEA, it has sole and exclusive responsibility and authority to regulate source, special nuclear, and byproduct materials at DOE-owned nuclear facilities. Information contained herein on radionuclides is provided for process description purposes only.

Q
QUALITY DESIGNATOR

REV	DESCRIPTION	ORG	CHKD	RVWD	APVD	DATE
0	ISSUED FOR CONSTRUCTION SEE NOTE 8	PL	APP	CEK ELS	JBM RCA	3/11/08

REVISION HISTORY

ISSUED BY RPP-WTP PDC
ISSUE STAMP

PROJECT No.	24590
SITE	HANFORD
AREA	200E
BUILDING No.	10

	BY	DATE
ORIGINATOR	Brad ...	3/10/08
CHECKER	APPinto	3/10/08
APPROVER	RE Stevens / JB M...	3/11/08
REVIEWER	E...	3/10/08
	Calvin Ready	3/10/08

CONTENT APPLICABLE TO ALARA? [X] YES [ ] NO
ADR NO. 24590-PTF-ADR-M-02-010 REV: 1
SAFETY SCREEN REQUIRED? [X] YES [ ] NO E&NS INITIAL IF YES GDA

BECHTEL
RIVER PROTECTION PROJECT
WASTE TREATMENT PLANT
2435 STEVENS CENTER PLACE
RICHLAND, WA 99354

CONTRACT No: DE-AC27-01RV14136

P&ID - PTF
PLANT WASH & DISPOSAL UTILITY SERVICES PSA RACK

SCALE: NONE
24590-PTF-M6-PWD-00023002
REV 0

SAFETY SCREEN IS REQUIRED FOR DRAWING TYPES IDENTIFIED IN 24590-WTP-GPP-SREG-002
'E' SIZE - 44x34
COMPUTER GENERATED - MANUAL CHANGES NOT PERMITTED

FORM E_SDN.DGN 02/2003
03/10/2008 07:46:25 AM
PLOTTED BY: mritter
R10857405

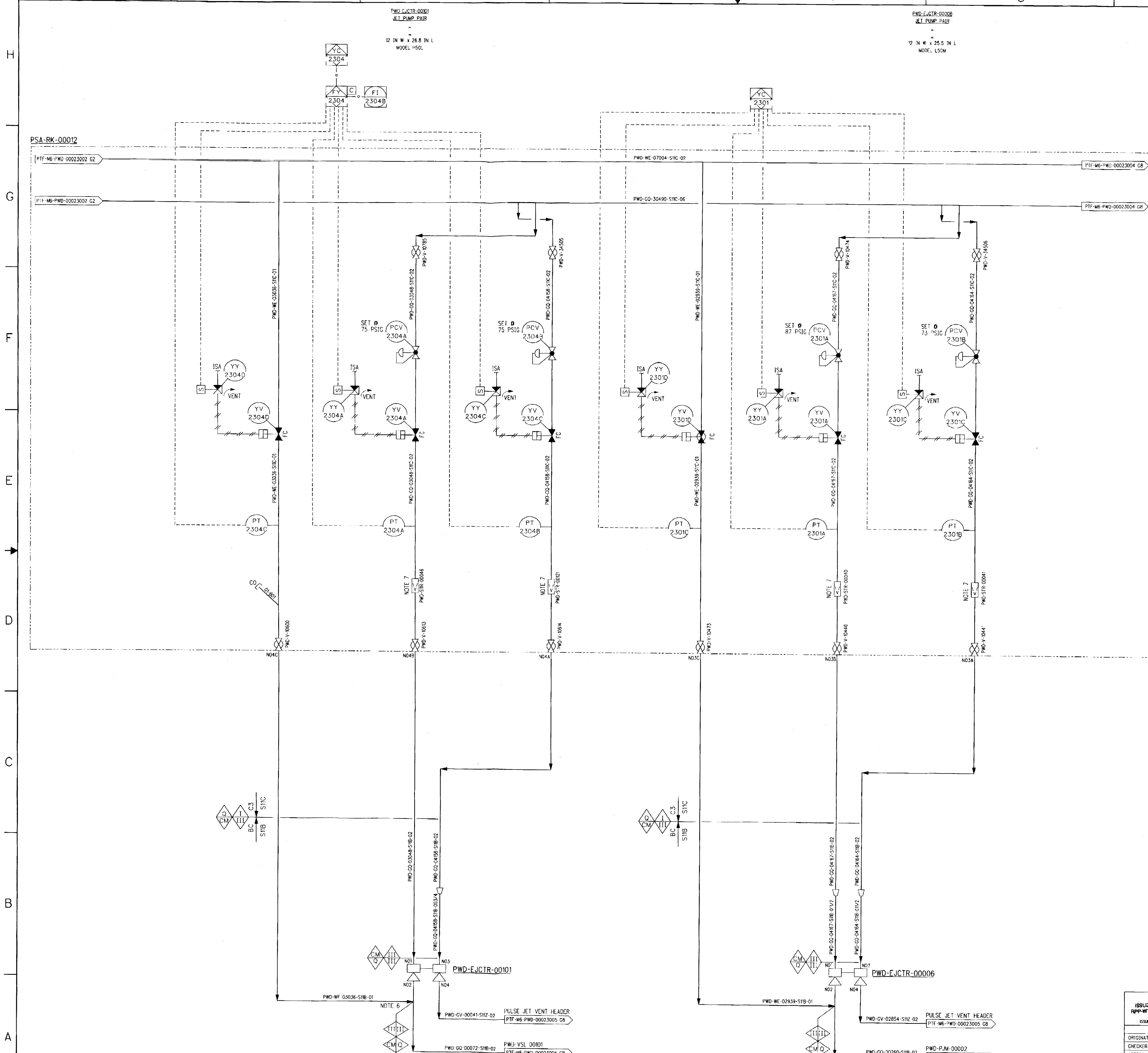

NOTES:

1. SEE DRAWINGS 24590-WTP-M6-50 00001 THROUGH 24590-WTP-M6-50-00008 FOR GENERAL NOTES, SYMBOLS AND LEGEND, AND GENERAL SLOPE REQUIREMENTS.
2. SEE JET PUMP PAIR CONTROL DETAIL 2 (RFD/PJM) ON LEGEND SHEET 24590-WTP-M6-50-00006.
3. FOR PROCESS INFORMATION REFER TO PIPING & INSTRUMENTATION DIAGRAM 24590-PTF-M6-PWD-00003.
4. THE PRESSURE BOUNDARY FOR ALL SYSTEMS, STRUCTURES AND COMPONENTS ON THIS DRAWING (INCLUDING PULSE JET VENT LINES) ARE QUALITY LEVEL Q AND SEISMIC CATEGORY SC-I, UNLESS OTHERWISE NOTED.
5. CONTENTS OF THIS DRAWING ARE DANGEROUS WASTE PERMIT AFFECTING.
6. A 45-DEGREE WYE PIPE FITTING SHALL BE USED AT THIS CONNECTION AND LOCATION.
7. STRAINER IS A CONICAL PILGRIM HAT TYPE STRAINER WITH PERFORATED 1/8 INCH DIAMETER STAGGERED HOLES ON 3/16 INCH CENTERS PERMANENTLY INSTALLED UPSTREAM OF FLANGED VALVE.
8. THIS DRAWING IS CONVERTED FROM A SINGLE SHEET TO MULTI-SHEET DRAWINGS AND, IN PART, SUPERCEDES 24590-PTF-M6-PWD-00023 REV 3. THIS DRAWING INCLUDES INFORMATION FROM 24590-PTF-M6N-PWD-00242, 24590-PTF M6N-M80T-00026,-00036,-00037,-AND -00038. OTHER CHANGES FROM SUPERSEDED DRAWING INCLUDE: ADDED REAGENT INTRODUCTION ON PSA HEADER; ADDED INDIVIDUAL SUCTION PSA DROP FROM THE HEADER; REMOVED ISOLATION VALVE FROM DIW SUPPLY LINE AND STRAINER ASSEMBLY FROM PSA HEADER; REPLACED WYE WITH CONICAL STRAINERS; CHANGED MANUAL BALL VALVE TO BUTTERFLY VALVE; CHANGED QUALITY LEVEL AND SEISMIC CATEGORY IN C3 AND C5 AREA, REVISED FY-2304, FY-2305, FY-2306, FY-2307, AND FY-2308 DISCRETE SOFTWARE SYMBOL, NOT ACCESSIBLE TO OPERATOR, ADDED/DELETED/REVISED NOTES, HOLDS, AND REFERENCES.

HOLD/OPEN ITEMS:

NONE

REFERENCES:

1. THE REQUIRED BATCH SEQUENCES, PERMISSIVES, INTERLOCKS, ALARMS AND OPERATOR INTERFACE POINTS ARE FULLY DESCRIBED IN THE SOFTWARE FUNCTIONAL SPECIFICATION, FOR PWD-PLANT WASH AND DISPOSAL SYSTEM, 24590-PTF-3PS-PWD-T0001.

Please note that source, special nuclear, and byproduct materials, as defined in the Atomic Energy Act of 1954 (AEA) are regulated at the U. S. Department of Energy (DOE) facilities exclusively by DOE acting pursuant to its AEA authority. DOE asserts that pursuant to AEA, it has sole and exclusive responsibility and authority to regulate source, special nuclear, and byproduct materials at DOE-owned nuclear facilities. Information contained herein on radionuclides is provided for process description purposes only.

Q
QUALITY DESIGNATOR

REV	DESCRIPTION	ORG	CHKD	RVWD	APVD	DATE
0	ISSUED FOR CONSTRUCTION SEE NOTE 8	PL	APP	CEX ELS	JBM RAt	3/11/08

REVISION HISTORY

ISSUED BY RPP-WTP PDC
ISSUE STAMP

PROJECT No.	24590
SITE	HANFORD
AREA	200E
BUILDING No.	'O

	BY	DATE
ORIGINATOR	[signature]	3/10/08
CHECKER	APPinto	3/10/08
APPROVER	[signature]	3/11/08
REVIEWER	[signature]	3/10/08
	Calvin [signature]	3/10/08

CONTENT APPLICABLE TO ALARA? [X] YES [ ] NO
ADR NO. 24590-PTF-ADR-M 02-010 REV: 1
SAFETY SCREEN REQUIRED? [X] YES [ ] NO E&NS INITIAL IF YES GOK

BECHTEL
RIVER PROTECTION PROJECT
WASTE TREATMENT PLANT
2435 STEVENS CENTER PLACE
RICHLAND, WA 99354

CONTRACT No: DE-AC27-01RV14136

P&ID - PTF PLANT WASH & DISPOSAL UTILITY SERVICES PSA RACK

SCALE: NONE

24590-PTF-M6-PWD-00023003 REV 0

SAFETY SCREEN IS REQUIRED FOR DRAWING TYPES IDENTIFIED IN 24590-WTP-GPP-SREG-002

'E' SIZE - 44x34
COMPUTER GENERATED - MANUAL CHANGES NOT PERMITTED

03/10/2008 07:45:21 AM

FORM E_S0VB004 02/2002

PLOTTED BY: maritter
C:\Work\mdritter\dms03837\PTFM6PWD00023003.dgn

R10887406

24590-PTF-M6-PWD-00023004

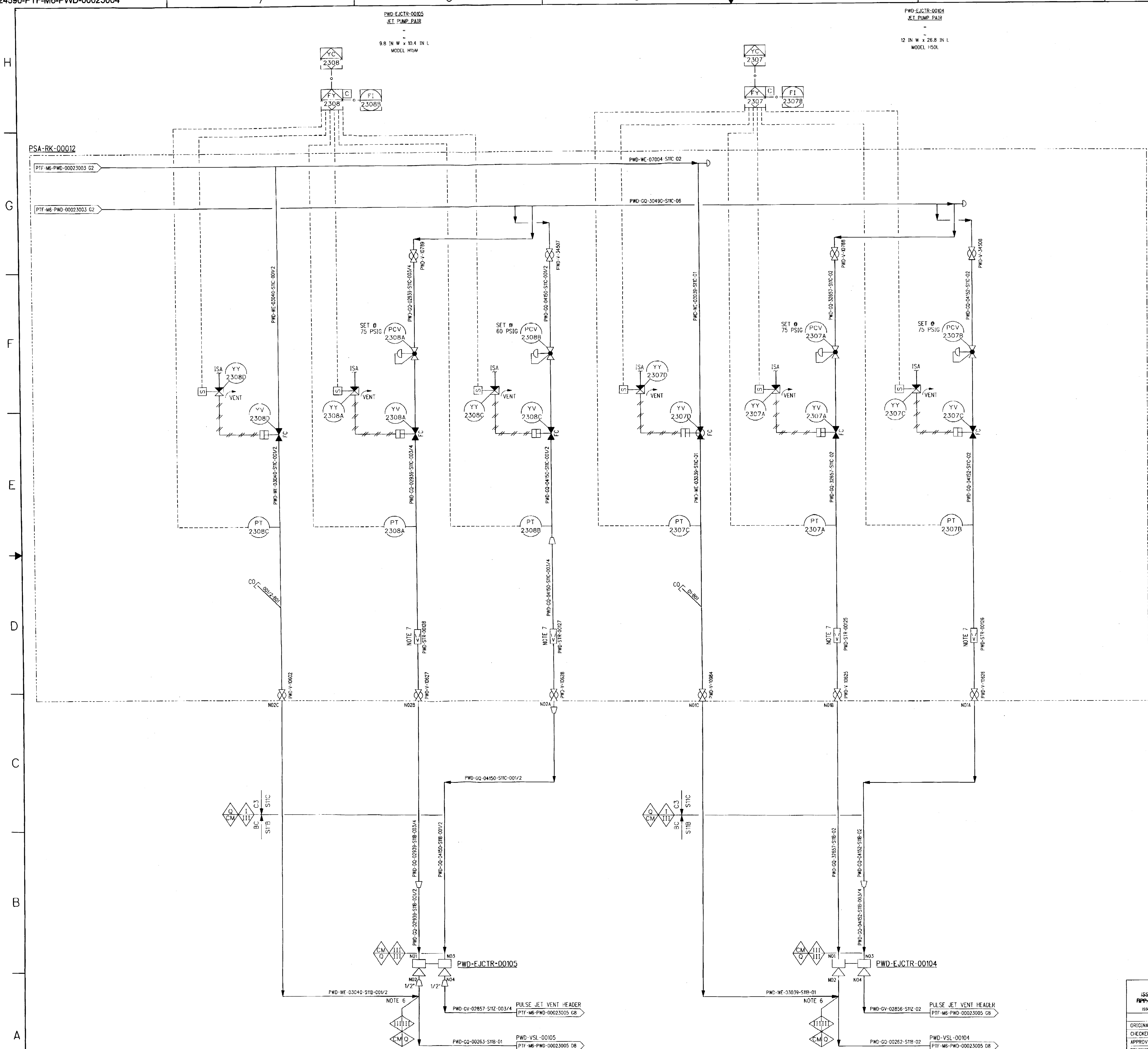

NOTES:

1. SEE DRAWINGS 24590-WTP-M6-50-00001 THROUGH 24590-WTP-M6-50-00008 FOR GENERAL NOTES, SYMBOLS AND LEGEND, AND GENERAL SLOPE REQUIREMENTS.
2. SEE JET PUMP PAIR CONTROL DETAIL 2 (RFD/PJM) ON LEGEND SHEET 24590-WTP-M6-50-00006.
3. FOR PROCESS INFORMATION REFER TO PIPING & INSTRUMENTATION DIAGRAM 24590-PTF-M6-PWD-00003.
4. THE PRESSURE BOUNDARY FOR ALL SYSTEMS, STRUCTURES AND COMPONENTS ON THIS DRAWING (INCLUDING PULSE JET VENT LINES) ARE QUALITY LEVEL Q AND SEISMIC CATEGORY SC-I, UNLESS OTHERWISE NOTED.
5. CONTENTS OF THIS DRAWING ARE DANGEROUS WASTE PERMIT AFFECTING.
6. A 45-DEGREE WYE PIPE FITTING SHALL BE USED AT THIS CONNECTION AND LOCATION.
7. STRAINER IS A CONICAL PILGRIM HAT TYPE STRAINER WITH PERFORATED 1/8 INCH DIAMETER STAGGERED HOLES ON 3/16 INCH CENTERS PERMANENTLY INSTALLED UPSTREAM OF FLANGED VALVE.
8. THIS DRAWING IS CONVERTED FROM A SINGLE SHEET TO MULTI-SHEET DRAWINGS AND, IN PART, SUPERCEDES 24590-PTF-M6-PWD-00023 REV 3. THIS DRAWING INCLUDES INFORMATION FROM 24590-PTF-M6N-PWD-00242, 24590-PTF-M6N-M80T-00026,-00036,-00037,-AND -00038. OTHER CHANGES FROM SUPERSEDED DRAWING INCLUDE: ADDED REAGENT INTRODUCTION ON PSA HEADER; ADDED INDIVIDUAL SUCTION PSA DROP FROM THE HEADER; REMOVED ISOLATION VALVE FROM DIW SUPPLY LINE AND STRAINER ASSEMBLY FROM PSA HEADER; REPLACED WYE WITH CONICAL STRAINERS; CHANGED MANUAL BALL VALVE TO BUTTERFLY VALVE; CHANGED QUALITY LEVEL AND SEISMIC CATEGORY IN C3 AND C5 AREA, REVISED FY-2304, FY-2305, FY-2306, FY-2307, AND FY-2308 DISCRETE SOFTWARE SYMBOL, NOT ACCESSIBLE TO OPERATOR, ADDED/DELETED/REVISED NOTES, HOLDS, AND REFERENCES.

HOLD/OPEN ITEMS:

NONE

REFERENCES:

1. THE REQUIRED BATCH SEQUENCES, PERMISSIVES, INTERLOCKS, ALARMS AND OPERATOR INTERFACE POINTS ARE FULLY DESCRIBED IN THE SOFTWARE FUNCTIONAL SPECIFICATION, FOR PWD-PLANT WASH AND DISPOSAL SYSTEM, 24590-PTF-3PS-PWD-T0001.

Please note that source, special nuclear, and byproduct materials, as defined in the Atomic Energy Act of 1954 (AEA) are regulated at the U. S. Department of Energy (DOE) facilities exclusively by DOE acting pursuant to its AEA authority. DOE asserts that pursuant to AEA, it has sole and exclusive responsibility and authority to regulate source, special nuclear, and byproduct materials at DOE-owned nuclear facilities. Information contained herein on radionuclides is provided for process description purposes only.

Q
QUALITY DESIGNATOR

REV	DESCRIPTION	ORG	CHKD	RVWD	APVD	DATE
0	ISSUED FOR CONSTRUCTION SEE NOTE 8		APP	CER ELS	JBM	3/11/08

REVISION HISTORY

ISSUED BY RPP-WTP PDC
ISSUE STAMP

PROJECT No.	24590
SITE	HANFORD
AREA	200E
BUILDING No.	10

	BY	DATE
ORIGINATOR		3/10/08
CHECKER		3/10/08
APPROVER	R E Stevens	3/11/08
REVIEWER		3/10/08
	Calvin	3/10/08

CONTENT APPLICABLE TO ALARA? [X] YES [ ] NO
ADR NO. 24590-PTF-ADR-M-02-010 REV: 1
SAFETY SCREEN REQUIRED? [X] YES [ ] NO E&NS INITIAL IF YES GDH

BECHTEL
RIVER PROTECTION PROJECT
WASTE TREATMENT PLANT
2435 STEVENS CENTER PLACE
RICHLAND, WA 99354

CONTRACT No: DE-AC27-01RV14136

P&ID - PTF PLANT WASH & DISPOSAL UTILITY SERVICES PSA RACK

SCALE: NONE

24590-PTF-M6-PWD-00023004

REV 0

SAFETY SCREEN IS REQUIRED FOR DRAWING TYPES IDENTIFIED IN 24590-WTP-GPP-SREG-002

'E' SIZE - 44x34
COMPUTER GENERATED - MANUAL CHANGES NOT PERMITTED

03/10/2008 07:44:02 AM

PLOTTED BY: mdritter
C:\Work\mdritte\dms03837\PTFM6PWD00023004.dgn

FORM E_SON 2CN 02/2003

24590-PTF-M6-PWD-00023005

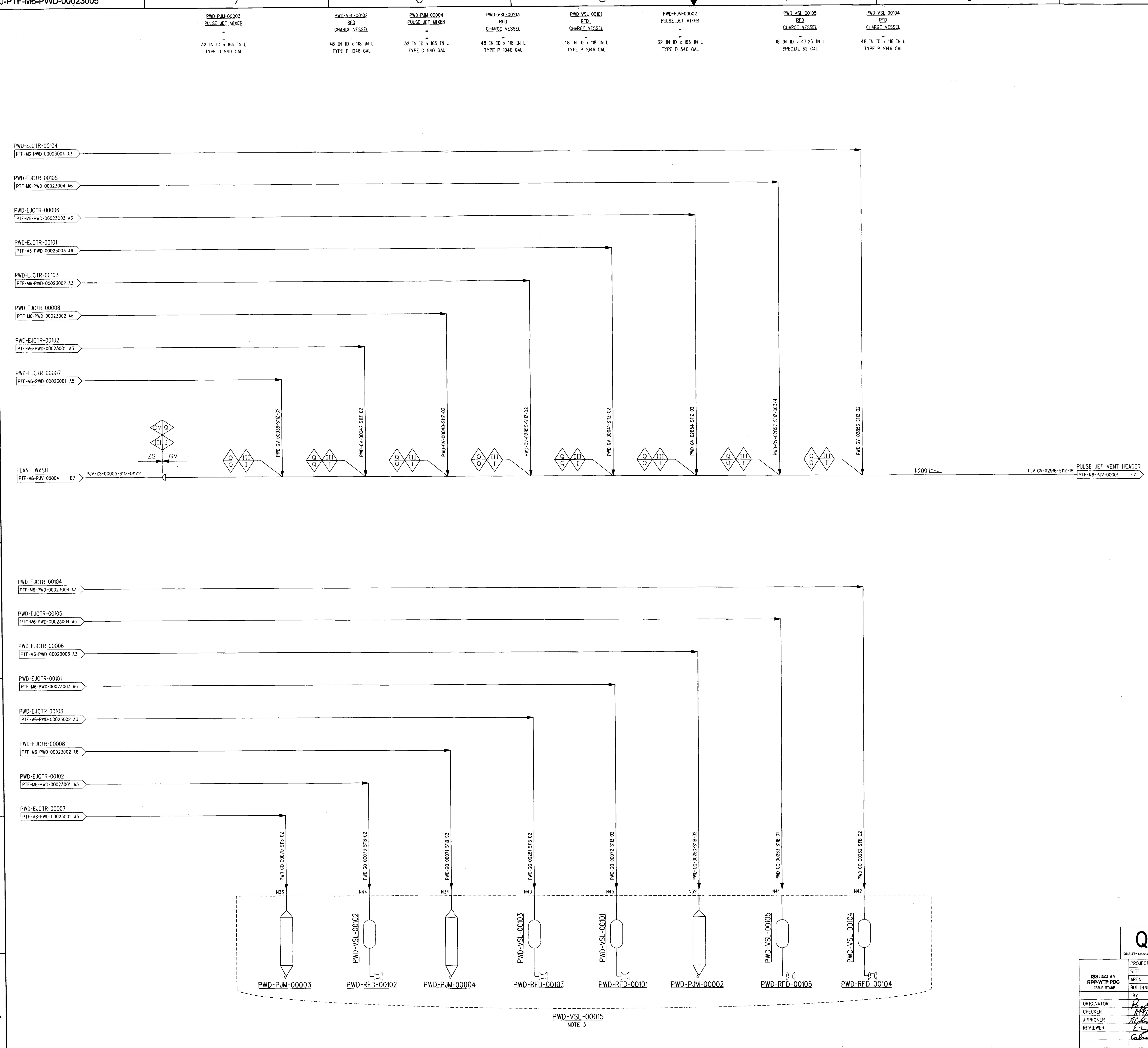

NOTES:

1. SEE DRAWING 24590-WTP-M6-50-00001 THROUGH 24590-WTP-M6-50 00008 FOR GENERAL NOTES, SYMBOLS AND LEGEND, AND GENERAL SLOPE REQUIREMENTS.
2. FOR PROCESS INFORMATION REFER TO PIPING & INSTRUMENTATION DIAGRAM 24590-PTF M6-PWD-00003.
3. THE PRESSURE BOUNDARY FOR ALL SYSTEMS, STRUCTURES AND COMPONENTS ON THIS DRAWING (INCLUDING PULSE JET VENT LINES) IS QUALITY LEVEL Q AND SEISMIC CATEGORY SC-III, UNLESS OTHERWISE NOTED. THE PJMS, CHARGE VESSEL AND RFDS ARE QUALITY LEVEL CM AND SEISMIC CATEGORY SC-III.
4. CONTENTS OF THIS DOCUMENT ARE DANGEROUS WASTE PERMIT AFFECTING.
5. THIS DRAWING IS CONVERTED FROM A SINGLE SHEET TO MULTI SHEET DRAWINGS AND, IN PART, SUPERCEDES 24590-PTF-M6-PWD-00023 REV 3. THIS DRAWING INCLUDES INFORMATION FROM 24590-PTF-M6N-PWD-00242, 24590-PTF-M6N-M80T-00026,-00036,-00037,-AND -00038. OTHER CHANGES FROM SUPERSEDED DRAWING INCLUDE: ADDED REAGENT INTRODUCTION ON PSA HEADER; ADDED INDIVIDUAL SUCTION PSA DROP FROM THE HEADER; REMOVED ISOLATION VALVE FROM DIW SUPPLY LINE AND STRAINER ASSEMBLY FROM PSA HEADER; REPLACED WYE WITH CONICAL STRAINERS; CHANGED MANUAL BALL VALVE TO BUTTERFLY VALVE; CHANGED QUALITY LEVEL AND SEISMIC CATEGORY IN C3 AND C5 AREA, REVISED FY-2304, FY-2305, FY-2306, FY-2307, AND FY-2308 DISCRETE SOFTWARE SYMBOL, NOT ACCESSIBLE TO OPERATOR, ADDED/DELETED/REVISED NOTES, HOLDS, AND REFERENCES.

HOLD/OPEN ITEMS:

NONE

REFERENCES:

NONE

Please note that source, special nuclear, and byproduct materials, as defined in the Atomic Energy Act of 1954 (AEA) are regulated at the U. S. Department of Energy (DOE) facilities exclusively by DOE acting pursuant to its AEA authority. DOE asserts that pursuant to AEA, it has sole and exclusive responsibility and authority to regulate source, special nuclear, and byproduct materials at DOE-owned nuclear facilities. Information contained herein on radionuclides is provided for process description purposes only.

Q
QUALITY DESIGNATOR

REV	DESCRIPTION	CRG	CHKD	RVWD	APVD	DATE
0	ISSUED FOR CONSTRUCTION SEE NOTE 5		APP	ECS		3/11/08

REVISION HISTORY

ISSUED BY RPP-WTP PDC
ISSUE STAMP

PROJECT No.	24590
SITE	HANFORD
AREA	200E
BUILDING No.	10

RIVER PROTECTION PROJECT
WASTE TREATMENT PLANT
2435 STEVENS CENTER PLACE
RICHLAND, WA 99354

CONTRACT No: DE-AC27-01RV14136

	BY	DATE
ORIGINATOR		3/10/08
CHECKER		3/10/08
APPROVER		3/11/08
REVIEWER		3/10/08
		3/10/08

P&ID - PTF
PLANT WASH & DISPOSAL
UTILITY SERVICES
PSA RACK

CONTENT APPLICABLE TO ALARA? [X] YES [ ] NO
ADR NO. 24590-PTF-ADR-M-02-010 REV: 1
SAFETY SCREEN REQUIRED? [X] YES [ ] NO E&NS INITIAL IF YES GDH

SCALE: NONE

24590-PTF-M6-PWD-00023005 REV 0

SAFETY SCREEN IS REQUIRED FOR DRAWING TYPES IDENTIFIED IN 24590-WTP-GPP-SREG-002

'E' SIZE - 44x34
COMPUTER GENERATED - MANUAL CHANGES NOT PERMITTED

03/10/2008 07:42:59 AM

PLOTTED BY: mdritter

FORM E_SIN0011 02/2003

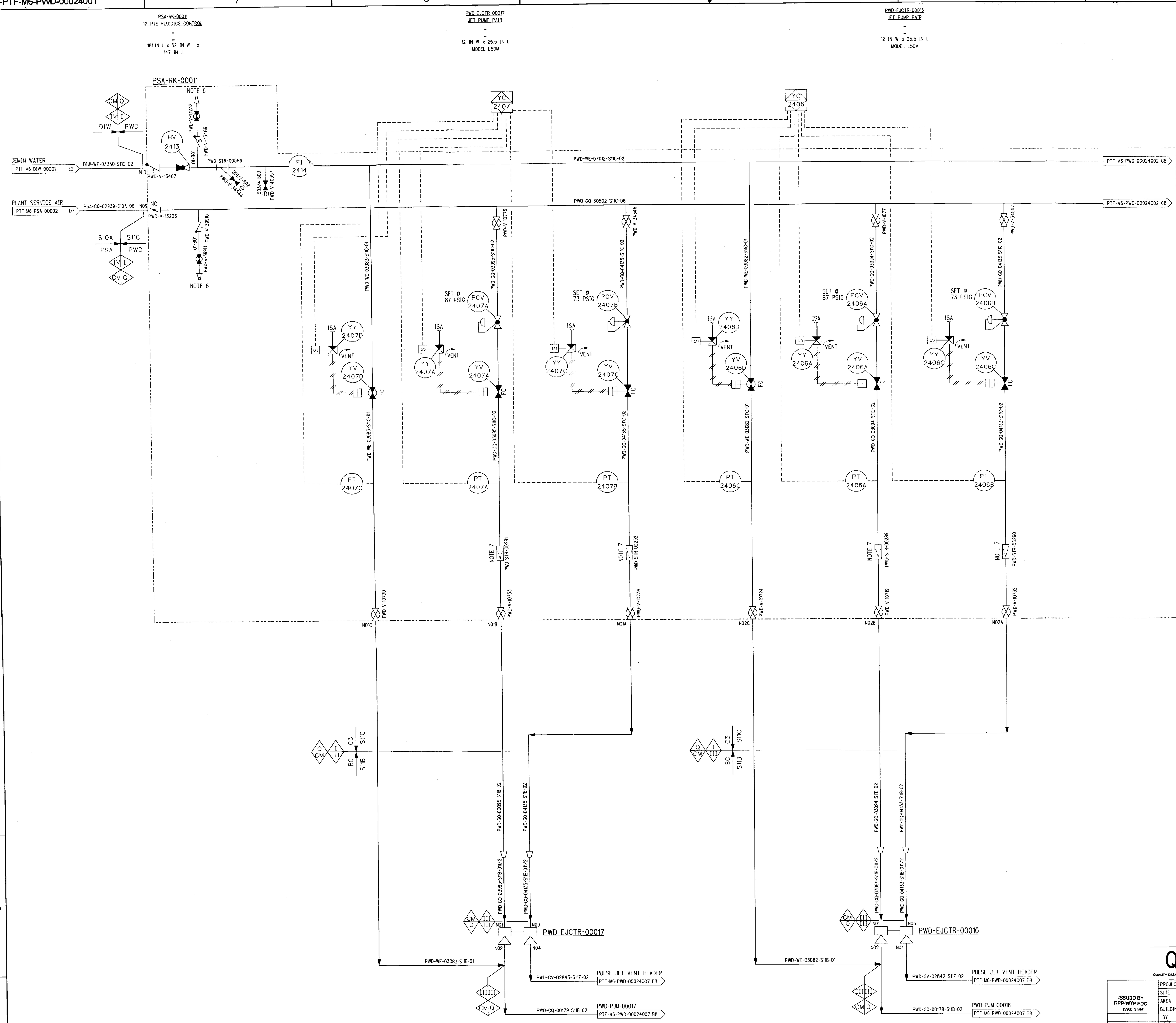

NOTES:

1. SEE DRAWINGS 24590-WTP-M6-50-00001 THROUGH 24590-WTP-M6-50-00008 FOR GENERAL NOTES, SYMBOLS AND LEGEND, AND GENERAL SLOPE REQUIREMENTS.
2. SEE JET PUMP PAIR CONTROL DETAIL 2 ON LEGEND SHEET 24590-WTP-M6-50-00006.
3. FOR PROCESS INFORMATION REFER TO PIPING AND INSTRUMENTATION DIAGRAM 24590-PTF-M6-PWD-00003.
4. THE PRESSURE BOUNDARY FOR ALL SYSTEMS, STRUCTURES, AND COMPONENTS ON THIS DRAWING (INCLUDING PULSE JET VENT LINES) IS QUALITY LEVEL Q, AND SEISMIC CATEGORY SC-I, UNLESS OTHERWISE NOTED.
5. CONTENTS OF THIS DRAWING ARE DANGEROUS WASTE PERMIT AFFECTING.
6. REAGENT, PLANT, WASH, AND AIR SERVICES PROVIDED AT A LOCAL UTILITY STATION.
7. STRAINER IS A CONICAL PILGRIM HAT TYPE STRAINER WITH PERFORATED 1/8 INCH DIAMETER STAGGERED HOLES ON 3/16 INCH CENTERS PERMANENTLY INSTALLED UPSTREAM OF FLANGED VALVE.
8. THIS DRAWING IS CONVERTED FROM A SINGLE SHEET TO MULTI-SHEET DRAWINGS AND, IN PART, SUPERCEDES 24590-PTF-M6-PWD-00024 REV 3. THIS DRAWING INCLUDES INFORMATION FROM 24590-PTF-M6N-PWD-00243, 24590-PTF-M6N-M801-00036, 00037,-AND -00038. OTHER CHANGES FROM SUPERSEDED DRAWING INCLUDE: ADDED REAGENT INTRODUCTION ON PSA HEADER; ADDED INDIVIDUAL SUCTION PSA DROP FROM THE HEADER; REMOVED ISOLATION VALVE FROM DIW SUPPLY LINE AND STRAINER ASSEMBLY FROM PSA HEADER; REPLACED WYE WITH CONICAL STRAINERS; CHANGED MANUAL BALL VALVE TO BUTTERFLY VALVE; CHANGED QUALITY LEVEL AND SEISMIC CATEGORY IN C3 AND C5 AREA; ADDED/DELETED/REVISED NOTES, HOLDS, AND REFERENCES.

HOLD/OPEN ITEMS:

NONE

REFERENCES:

1. THE REQUIRED BATCH SEQUENCES, PERMISSIVES, INTERLOCKS, ALARMS AND OPERATOR INTERFACE POINTS ARE FULLY DESCRIBED IN THE SOFTWARE FUNCTIONAL SPECIFICATION, FOR PLANT WASH AND DISPOSAL (PWD) SYSTEM, 24590-PTF-3PS-PWD-T0001.

Please note that source, special nuclear, and byproduct materials, as defined in the Atomic Energy Act of 1954 (AEA) are regulated at the U. S. Department of Energy (DOE) facilities exclusively by DOE acting pursuant to its AEA authority. DOE asserts that pursuant to AEA, it has sole and exclusive responsibility and authority to regulate source, special nuclear, and byproduct materials at DOE-owned nuclear facilities. Information contained herein on radionuclides is provided for process description purposes only.

DRAWING INDEX

DWG NO	REV	TITLE
24590-PTF-M6-PWD-00024001	0	PLANT WASH & DISPOSAL UTILITY SERVICES
24590-PTF-M6-PWD-00024002	0	PLANT WASH & DISPOSAL UTILITY SERVICES
24590-PTF-M6-PWD-00024003	0	PLANT WASH & DISPOSAL UTILITY SERVICES
24590-PTF-M6-PWD-00024004	0	PLANT WASH & DISPOSAL UTILITY SERVICES
24590-PTF-M6-PWD-00024005	0	PLANT WASH & DISPOSAL UTILITY SERVICES
24590-PTF-M6-PWD-00024006	0	PLANT WASH & DISPOSAL UTILITY SERVICES
24590-PTF-M6-PWD-00024007	0	PLANT WASH & DISPOSAL UTILITY SERVICES

Q
QUALITY DESIGNATOR

REVISION HISTORY

REV	DESCRIPTION	ORG	CHKD	RVWD	APVD	DATE
0	ISSUED FOR CONSTRUCTION SEE NOTE 8	AL	APP	CER ELS	JBM RCH	3/11/08

ISSUED BY RPP-WTP PDC
ISSUE STAMP

PROJECT No.	24590
SITE	HANFORD
AREA	200E
BUILDING No.	10

RIVER PROTECTION PROJECT
WASTE TREATMENT PLANT
2435 STEVENS CENTER PLACE
RICHLAND, WA 99354

CONTRACT No: DE-AC27-01RV14136

	BY	DATE
ORIGINATOR	[signature]	3/10/08
CHECKER	[signature]	3/10/08
APPROVER	[signature]	3/11/08
REVIEWER	[signature]	3/10/08
	[signature]	3/10/08

P&ID - PTF
PLANT WASH & DISPOSAL UTILITY SERVICES PSA RACK

CONTENT APPLICABLE TO ALARA? [X] YES [ ] NO
ADR NO. 24590-PTF-ADR-M-02-010 REV: 1
SAFETY SCREEN REQUIRED? [X] YES [ ] NO E&NS INITIAL IF YES GDH

SCALE: NONE

24590-PTF-M6-PWD-00024001 REV 0

SAFETY SCREEN IS REQUIRED FOR DRAWING TYPES IDENTIFIED IN 24590-WTP-GPP-SREG-002

'E' SIZE - 44x34
COMPUTER GENERATED - MANUAL CHANGES NOT PERMITTED

03/10/2008 07:35:03 AM

PLOTTED BY: mdritter
C:\Work\mdritter\dms03837\PTFv6PWD00024001.dgr

FORM E_50KDGN 02/2003

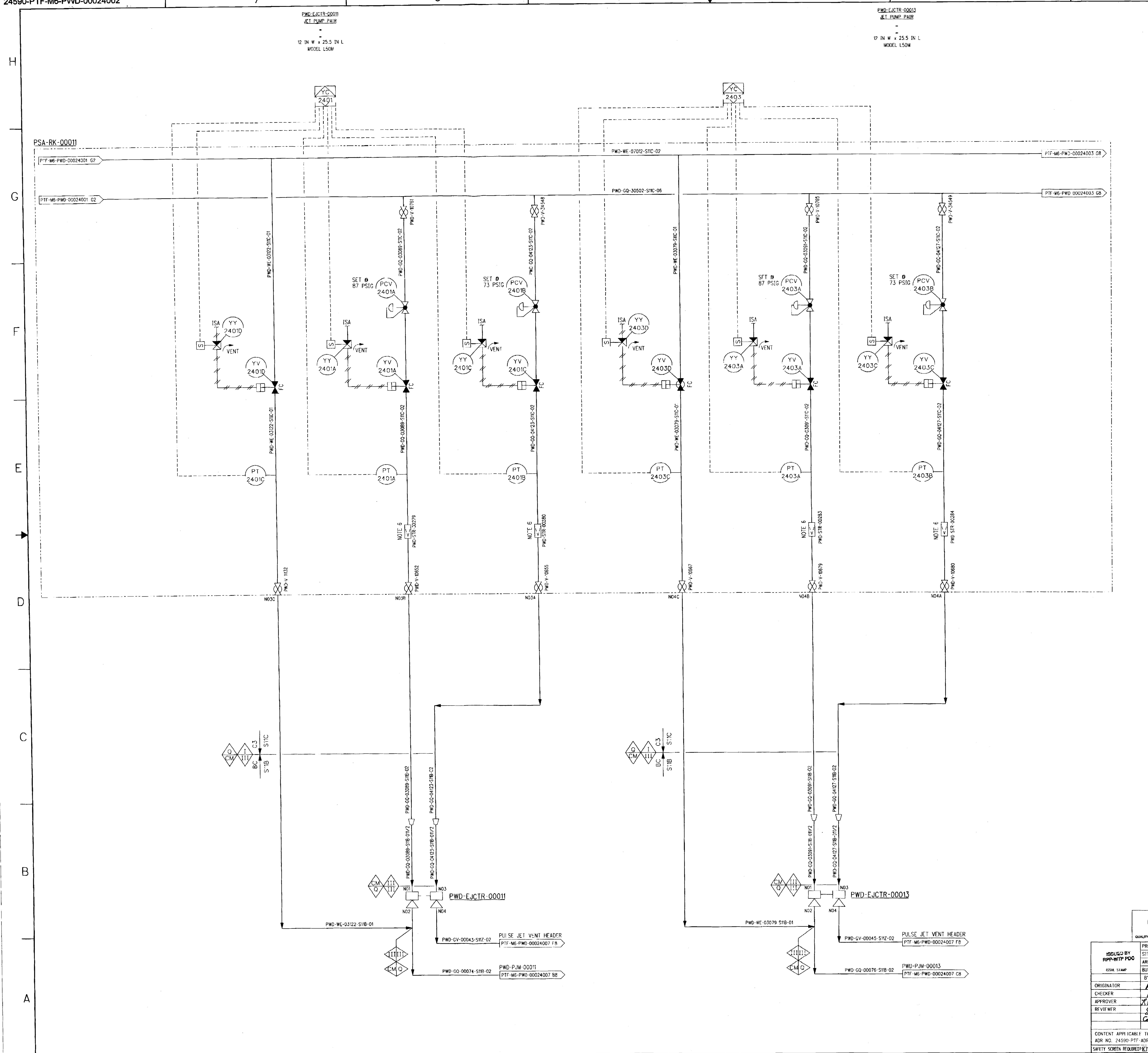

NOTES:

1. SEE DRAWINGS 24590-WTP-M6-50-00001 THROUGH 24590-WTP-M6-50-00008 FOR GENERAL NOTES, SYMBOLS AND LEGEND, AND GENERAL SLOPE REQUIREMENTS.
2. SEE JET PUMP PAIR CONTROL DETAIL 2 ON LEGEND SHEET 24590-WTP-M6-50-00006.
3. FOR PROCESS INFORMATION REFER TO PIPING AND INSTRUMENTATION DIAGRAM 24590-PTF-M6-PWD-00003.
4. THE PRESSURE BOUNDARY FOR ALL SYSTEMS, STRUCTURES, AND COMPONENTS ON THIS DRAWING (INCLUDING PULSE JET VENT LINES) IS QUALITY LEVEL Q, AND SEISMIC CATEGORY SC-I, UNLESS OTHERWISE NOTED.
5. CONTENTS OF THIS DRAWING ARE DANGEROUS WASTE PERMIT AFFECTING.
6. STRAINER IS A CONICAL PILGRIM HAT TYPE STRAINER WITH PERFORATED 1/8 INCH DIAMETER STAGGERED HOLES ON 3/16 INCH CENTERS PERMANENTLY INSTALLED UPSTREAM OF FLANGED VALVE.
7. THIS DRAWING IS CONVERTED FROM A SINGLE SHEET TO MULTI-SHEET DRAWINGS AND, IN PART, SUPERCEDES 24590-PTF-M6-PWD-00024 REV 3. THIS DRAWING INCLUDES INFORMATION FROM 24590-PTF-M6N-PWD-00243, 24590-PTF-M6N-M80T-00036,-00037,-AND -00038. OTHER CHANGES FROM SUPERSEDED DRAWING INCLUDE: ADDED REAGENT INTRODUCTION ON PSA HEADER; ADDED INDIVIDUAL SUCTION PSA DROP FROM THE HEADER; REMOVED ISOLATION VALVE FROM DIW SUPPLY LINE AND STRAINER ASSEMBLY FROM PSA HEADER; REPLACED WYE WITH CONICAL STRAINERS; CHANGED MANUAL BALL VALVE TO BUTTERFLY VALVE; CHANGED QUALITY LEVEL AND SEISMIC CATEGORY IN C3 AND C5 AREA; ADDED/DELETED/REVISED NOTES, HOLDS, AND REFERENCES.

HOLD/OPEN ITEMS:

NONE

REFERENCES:

1. THE REQUIRED BATCH SEQUENCES, PERMISSIVES, INTERLOCKS, ALARMS AND OPERATOR INTERFACE POINTS ARE FULLY DESCRIBED IN THE SOFTWARE FUNCTIONAL SPECIFICATION, FOR PLANT WASH AND DISPOSAL (PWD) SYSTEM, 24590-PTF-3PS-PWD-T0001.

Please note that source, special nuclear, and byproduct materials, as defined in the Atomic Energy Act of 1954 (AEA) are regulated at the U. S. Department of Energy (DOE) facilities exclusively by DOE acting pursuant to its AEA authority. DOE asserts that pursuant to AEA, it has sole and exclusive responsibility and authority to regulate source, special nuclear, and byproduct materials at DOE-owned nuclear facilities. Information contained herein on radionuclides is provided for process description purposes only.

Q
QUALITY DESIGNATOR

REV	DESCRIPTION	ORG	CHKD	RVWD	APVD	DATE
0	ISSUED FOR CONSTRUCTION SEE NOTE 7	BQ	APP	CEK ELS	[illegible]	3/11/08

REVISION HISTORY

ISSUED BY RPP-WTP PDC
ISSUE STAMP

PROJECT No.	24590
SITE	HANFORD
AREA	200E
BUILDING No.	10

	BY	DATE
ORIGINATOR	[signature]	3/10/08
CHECKER	[signature]	3/10/08
APPROVER	[signature]	3/11/08
REVIEWER	[signature]	3/10/08
	[signature]	3/10/08

CONTENT APPLICABLE TO ALARA? [X] YES [ ] NO
ADR NO. 24590-PTF-ADR-M-02-010 REV: 1
SAFETY SCREEN REQUIRED? [X] YES [ ] NO E&NS INITIAL IF YES GDH

BECHTEL
RIVER PROTECTION PROJECT
WASTE TREATMENT PLANT
2435 STEVENS CENTER PLACE
RICHLAND, WA 99354

CONTRACT No: DE-AC27-01RV14136

P&ID - PTF
PLANT WASH & DISPOSAL
UTILITY SERVICES
PSA RACK

SCALE: NONE
24590-PTF-M6-PWD-00024002
REV 0

SAFETY SCREEN IS REQUIRED FOR DRAWING TYPES IDENTIFIED IN 24590-WTP-GPP-SREG-002
'E' SIZE - 44x34
COMPUTER GENERATED - MANUAL CHANGES NOT PERMITTED
03/10/2008 07:34:06 AM
PLOTTED BY: mdritter
C:\Work\mdritter\dms03383\P FM6PWD00024002.dgn
R10887399

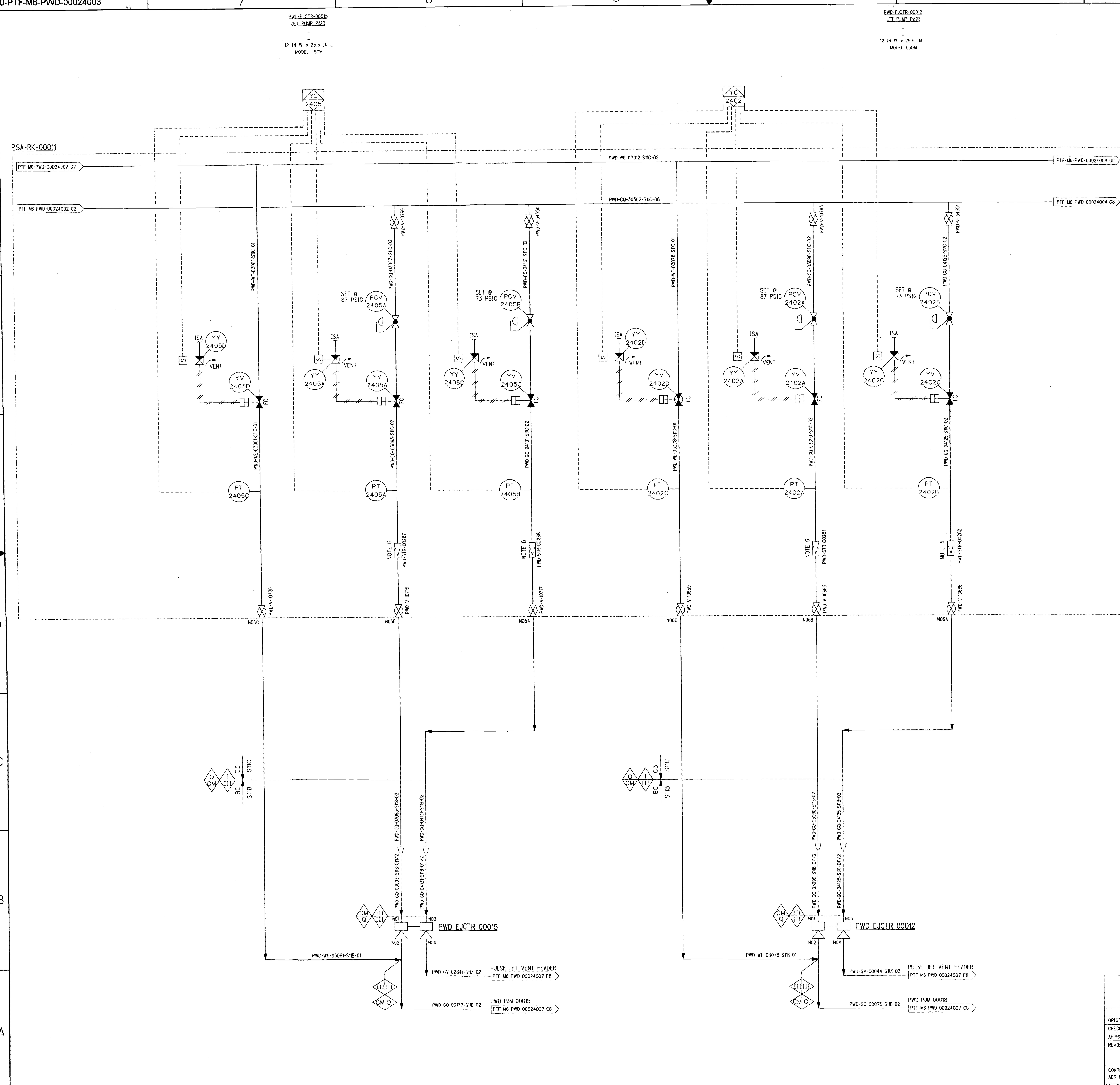

NOTES:

1. SEE DRAWINGS 24590-WTP-M6-50-00001 THROUGH 24590-WTP-M6-50-00008 FOR GENERAL NOTES, SYMBOLS AND LEGEND, AND GENERAL SLOPE REQUIREMENTS.
2. SEE JET PUMP PAIR CONTROL DETAIL 2 ON LEGEND SHEET 24590-WTP-M6-50-00006.
3. FOR PROCESS INFORMATION REFER TO PIPING AND INSTRUMENTATION DIAGRAM 24590-PTF-M6-PWD-00003.
4. THE PRESSURE BOUNDARY FOR ALL SYSTEMS, STRUCTURES, AND COMPONENTS ON THIS DRAWING (INCLUDING PULSE JET VENT LINES) IS QUALITY LEVEL Q, AND SEISMIC CATEGORY SC-I, UNLESS OTHERWISE NOTED.
5. CONTENTS OF THIS DRAWING ARE DANGEROUS WASTE PERMIT AFFECTING.
6. STRAINER IS A CONICAL PILGRIM HAT TYPE STRAINER WITH PERFORATED 1/8 INCH DIAMETER STAGGERED HOLES ON 3/16 INCH CENTERS PERMANENTLY INSTALLED UPSTREAM OF FLANGED VALVE.
7. THIS DRAWING IS CONVERTED FROM A SINGLE SHEET TO MULTI-SHEET DRAWINGS AND, IN PART, SUPERCEDES 24590-PTF-M6-PWD-00024 REV 3. THIS DRAWING INCLUDES INFORMATION FROM 24590-PTF-M6N-PWD-00243, 24590-PTF-M6N-M80T-00036,-00037,-AND -00038. OTHER CHANGES FROM SUPERSEDED DRAWING INCLUDE: ADDED REAGENT INTRODUCTION ON PSA HEADER; ADDED INDIVIDUAL SUCTION PSA DROP FROM THE HEADER; REMOVED ISOLATION VALVE FROM DIW SUPPLY LINE AND STRAINER ASSEMBLY FROM PSA HEADER; REPLACED WYE WITH CONICAL STRAINERS; CHANGED MANUAL BALL VALVE TO BUTTERFLY VALVE; CHANGED QUALITY LEVEL AND SEISMIC CATEGORY IN C3 AND C5 AREA; ADDED/DELETED/REVISED NOTES, HOLDS, AND REFERENCES.

HOLD/OPEN ITEMS:

NONE

REFERENCES:

1. THE REQUIRED BATCH SEQUENCES, PERMISSIVES, INTERLOCKS, ALARMS AND OPERATOR INTERFACE POINTS ARE FULLY DESCRIBED IN THE SOFTWARE FUNCTIONAL SPECIFICATION, FOR PLANT WASH AND DISPOSAL (PWD) SYSTEM, 24590-PTF-3PS-PWD-T0001.

Please note that source, special nuclear, and byproduct materials, as defined in the Atomic Energy Act of 1954 (AEA) are regulated at the U. S. Department of Energy (DOE) facilities exclusively by DOE acting pursuant to its AEA authority. DOE asserts that pursuant to AEA, it has sole and exclusive responsibility and authority to regulate source, special nuclear, and byproduct materials at DOE-owned nuclear facilities. Information contained herein on radionuclides is provided for process description purposes only.

Q
QUALITY DESIGNATOR

REV	DESCRIPTION	ORG	CHKD	RVWD	APVD	DATE
0	ISSUED FOR CONSTRUCTION SEE NOTE 7	RL	APP	CEK ELS	JBM RCL	3/11/08

REVISION HISTORY

ISSUED BY RPP-WTP PDC
ISSUE STAMP

PROJECT No.	24590
SITE	HANFORD
AREA	200E
BUILDING No.	10

BECHTEL
RIVER PROTECTION PROJECT
WASTE TREATMENT PLANT
2435 STEVENS CENTER PLACE
RICHLAND, WA 99354

	BY	DATE
ORIGINATOR	[signature]	3/10/08
CHECKER	[signature]	3/10/08
APPROVER	[signature]	3/11/08
REVIEWER	[signature]	3/10/08
	[signature]	3/10/08

CONTRACT No: DE-AC27-01RV14136

P&ID - PTF
PLANT WASH & DISPOSAL
UTILITY SERVICES
PSA RACK

CONTENT APPLICABLE TO ALARA? [X] YES [ ] NO
ADR NO. 24590-PTF ADR-M-02-010 REV: 1
SAFETY SCREEN REQUIRED? [X] YES [ ] NO E&NS INITIAL IF YES GDH

SCALE: NONE

24590-PTF-M6-PWD-00024003 REV 0

SAFETY SCREEN IS REQUIRED FOR DRAWING TYPES IDENTIFIED IN 24590-WTP-GPP-SREG-002

'E' SIZE - 44x34
COMPUTER GENERATED - MANUAL CHANGES NOT PERMITTED

03/10/2008 07:33:16 AM

PLOTTED BY: mdritter
C:\Work\mdritter\dms03837\PTFM6PWD00024003.dgn

R10887400

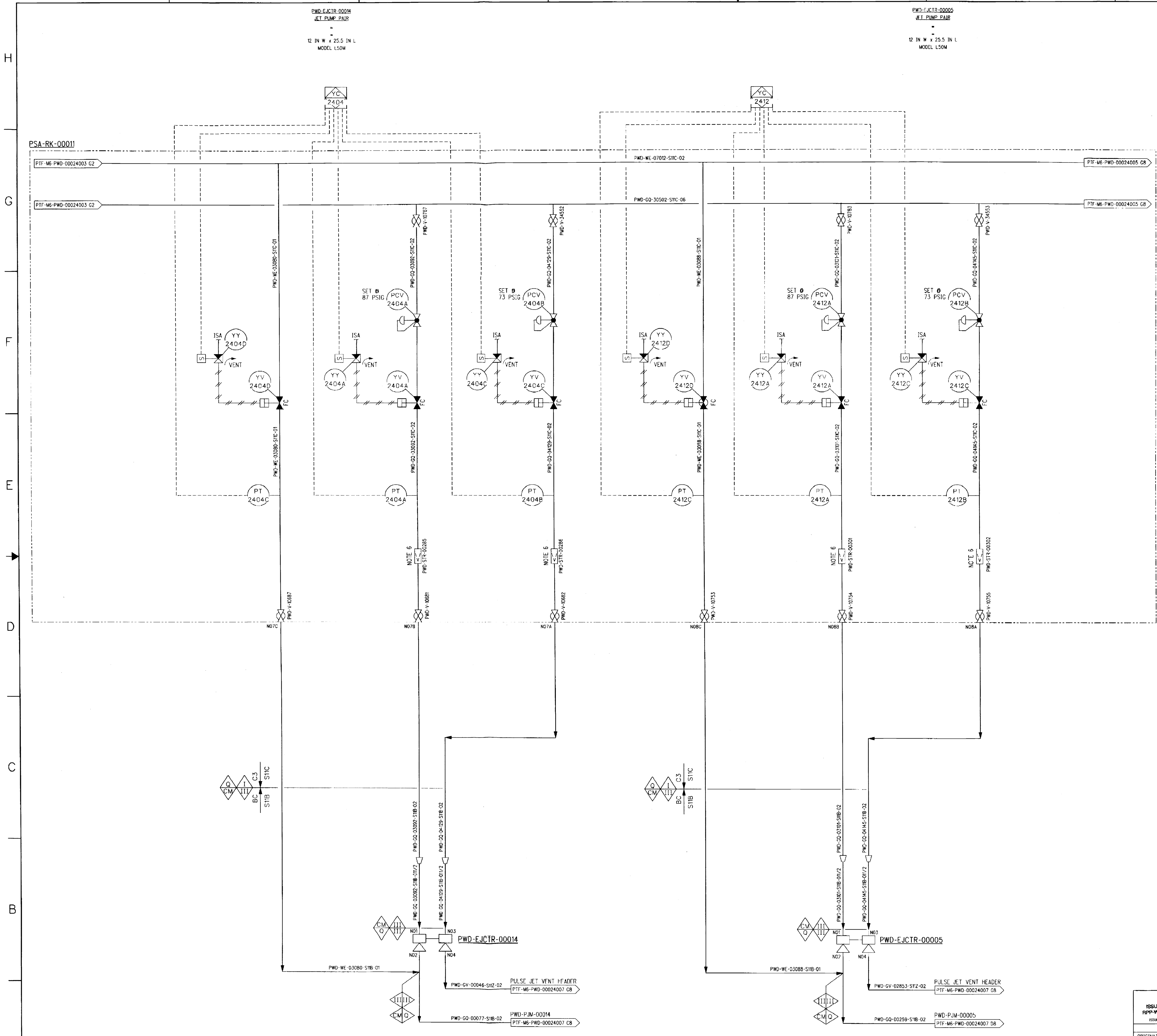

NOTES:

1. SEE DRAWINGS 24590-WTP-M6-50-00001 THROUGH 24590-WTP-M6 50-00008 FOR GENERAL NOTES, SYMBOLS AND LEGEND, AND GENERAL SLOPE REQUIREMENTS.
2. SEE JET PUMP PAIR CONTROL DETAIL 2 ON LEGEND SHEET 24590-WTP-M6-50 00006.
3. FOR PROCESS INFORMATION REFER TO PIPING AND INSTRUMENTATION DIAGRAM 24590-PTF-M6-PWD-00003.
4. THE PRESSURE BOUNDARY FOR ALL SYSTEMS, STRUCTURES, AND COMPONENTS ON THIS DRAWING (INCLUDING PULSE JET VENT LINES) IS QUALITY LEVEL Q, AND SEISMIC CATEGORY SC-I, UNLESS OTHERWISE NOTED.
5. CONTENTS OF THIS DRAWING ARE DANGEROUS WASTE PERMIT AFFECTING.
6. STRAINER IS A CONICAL PILGRIM HAT TYPE STRAINER WITH PERFORATED 1/8 INCH DIAMETER STAGGERED HOLES ON 3/16 INCH CENTERS PERMANENTLY INSTALLED UPSTREAM OF FLANGED VALVE.
7. THIS DRAWING IS CONVERTED FROM A SINGLE SHEET TO MULTI-SHEET DRAWINGS AND, IN PART, SUPERCEDES 24590-PTF-M6-PWD-00024 REV 3. THIS DRAWING INCLUDES INFORMATION FROM 24590-PTF-M6N-PWD-00243, 24590-PTF M6N-M80T-00036,-00037,-AND 00038. OTHER CHANGES FROM SUPERSEDED DRAWING INCLUDE: ADDED REAGENT INTRODUCTION ON PSA HEADER; ADDED INDIVIDUAL SUCTION PSA DROP FROM THE HEADER; REMOVED ISOLATION VALVE FROM DIW SUPPLY LINE AND STRAINER ASSEMBLY FROM PSA HEADER; REPLACED WYE WITH CONICAL STRAINERS; CHANGED MANUAL BALL VALVE TO BUTTERFLY VALVE; CHANGED QUALITY LEVEL AND SEISMIC CATEGORY IN C3 AND C5 AREA; ADDED/DELETED/REVISED NOTES, HOLDS, AND REFERENCES.

HOLD/OPEN ITEMS:

NONE

REFERENCES:

1. THE REQUIRED BATCH SEQUENCES, PERMISSIVES, INTERLOCKS, ALARMS AND OPERATOR INTERFACE POINTS ARE FULLY DESCRIBED IN THE SOFTWARE FUNCTIONAL SPECIFICATION, FOR PLANT WASH AND DISPOSAL (PWD) SYSTEM, 24590-PTF-3PS-PWD-10001.

Please note that source, special nuclear, and byproduct materials, as defined in the Atomic Energy Act of 1954 (AEA) are regulated at the U. S. Department of Energy (DOE) facilities exclusively by DOE acting pursuant to its AEA authority. DOE asserts that pursuant to AEA, it has sole and exclusive responsibility and authority to regulate source, special nuclear, and byproduct materials at DOE-owned nuclear facilities. Information contained herein on radionuclides is provided for process description purposes only.

REV	DESCRIPTION	ORG	CHKD	RVWD	APVD	DATE
0	ISSUED FOR CONSTRUCTION SEE NOTE 7					3/11/08

REVISION HISTORY

Q
QUALITY DESIGNATOR

ISSUED BY RPP-WTP PDC
ISSUE STAMP

PROJECT No.	24590
SITE	HANFORD
AREA	200E
BUILDING No.	10

	BY	DATE
ORIGINATOR		3/10/08
CHECKER		3/10/08
APPROVER		3/11/08
REVIEWER		3/10/08
		3/10/08

CONTENT APPLICABLE TO ALARA? [X] YES [ ] NO
ADR NO. 24590-PTF-ADR-M-02-010 REV: 1
SAFETY SCREEN REQUIRED? [X] YES [ ] NO E&NS INITIAL IF YES GDH

RIVER PROTECTION PROJECT
WASTE TREATMENT PLANT
2435 STEVENS CENTER PLACE
RICHLAND, WA 99354

CONTRACT No: DE-AC27 01RV14136

P&ID - PTF
PLANT WASH & DISPOSAL UTILITY SERVICES PSA RACK

SCALE: NONE
24590-PTF-M6-PWD-00024004
REV 0

SAFETY SCREEN IS REQUIRED FOR DRAWING TYPES IDENTIFIED IN 24590-WTP-GPP-SREG-002
'E' SIZE - 44x34
COMPUTER GENERATED - MANUAL CHANGES NOT PERMITTED
03/10/2008 08:10:11 AM
FORM E.SDN.DGN 02/2003

24590-PTF-M6-PWD-00024005

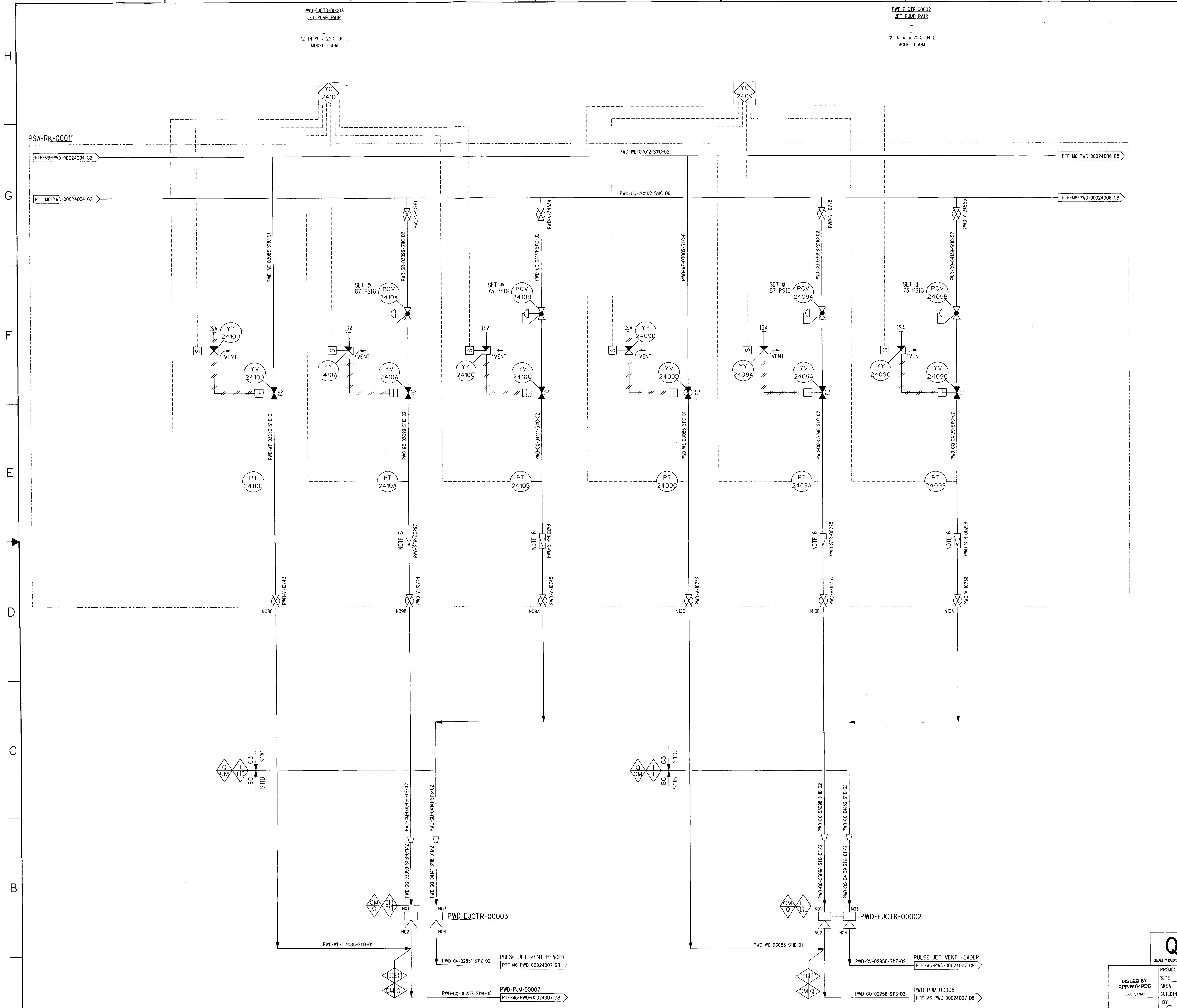

NOTES:

1. SEE DRAWINGS 24590-WTP-M6-50-00001 THROUGH 24590-WTP-M6-50-00008 FOR GENERAL NOTES, SYMBOLS AND LEGEND, AND GENERAL SLOPE REQUIREMENTS.
2. SEE JET PUMP PAIR CONTROL DETAIL 2 ON LEGEND SHEET 24590-WTP-M6-50-00006.
3. FOR PROCESS INFORMATION REFER TO PIPING AND INSTRUMENTATION DIAGRAM 24590-PTF-M6-PWD-00003.
4. THE PRESSURE BOUNDARY FOR ALL SYSTEMS, STRUCTURES, AND COMPONENTS ON THIS DRAWING (INCLUDING PULSE JET VENT LINES) IS QUALITY LEVEL Q, AND SEISMIC CATEGORY SC-I, UNLESS OTHERWISE NOTED.
5. CONTENTS OF THIS DRAWING ARE DANGEROUS WASTE PERMIT AFFECTING.
6. STRAINER IS A CONICAL PILGRIM HAT TYPE STRAINER WITH PERFORATED 1/8 INCH DIAMETER STAGGERED HOLES ON 3/16 INCH CENTERS PERMANENTLY INSTALLED UPSTREAM OF FLANGED VALVE.
7. THIS DRAWING IS CONVERTED FROM A SINGLE SHEET TO MULTI-SHEET DRAWINGS AND, IN PART, SUPERCEDES 24590-PTF-M6-PWD-00024 REV 3. THIS DRAWING INCLUDES INFORMATION FROM 24590-PTF-M6N-PWD-00243, 24590-PTF-M6N-M80T-00036,-00037,-AND -00038. OTHER CHANGES FROM SUPERSEDED DRAWING INCLUDE: ADDED REAGENT INTRODUCTION ON PSA HEADER; ADDED INDIVIDUAL SUCTION PSA DROP FROM THE HEADER; REMOVED ISOLATION VALVE FROM DIW SUPPLY LINE AND STRAINER ASSEMBLY FROM PSA HEADER; REPLACED WYE WITH CONICAL STRAINERS; CHANGED MANUAL BALL VALVE TO BUTTERFLY VALVE; CHANGED QUALITY LEVEL AND SEISMIC CATEGORY IN C3 AND C5 AREA; ADDED/DELETED/REVISED NOTES, HOLDS, AND REFERENCES.

HOLD/OPEN ITEMS:

NONE

REFERENCES:

1. THE REQUIRED BATCH SEQUENCES, PERMISSIVES, INTERLOCKS, ALARMS AND OPERATOR INTERFACE POINTS ARE FULLY DESCRIBED IN THE SOFTWARE FUNCTIONAL SPECIFICATION, FOR PLANT WASH AND DISPOSAL (PWD) SYSTEM, 24590-PTF-3PS-PWD-T0001.

Please note that source, special nuclear, and byproduct materials, as defined in the Atomic Energy Act of 1954 (AEA) are regulated at the U. S. Department of Energy (DOE) facilities exclusively by DOE acting pursuant to its AEA authority. DOE asserts that pursuant to AEA, it has sole and exclusive responsibility and authority to regulate source, special nuclear, and byproduct materials at DOE-owned nuclear facilities. Information contained herein on radionuclides is provided for process description purposes only.

Q
QUALITY DESIGNATOR

REV	DESCRIPTION	ORG	CHKD	RVWD	APVD	DATE
0	ISSUED FOR CONSTRUCTION SEE NOTE 7	R	APP	ELS / CEX	RCL / JDM	3/11/08

REVISION HISTORY

ISSUED BY RPP-WTP PDC
ISSUE STAMP

PROJECT No.	24590
SITE	HANFORD
AREA	200E
BUILDING No.	10

RIVER PROTECTION PROJECT
WASTE TREATMENT PLANT
2435 STEVENS CENTER PLACE
RICHLAND, WA 99354

CONTRACT No: DE-AC27-01RV14136

	BY	DATE
ORIGINATOR	[signature]	3/10/08
CHECKER	APPirita	3/10/08
APPROVER	R Stevens / JDM	3/11/08
REVIEWER	[signature]	3/10/08
	Calvin Rosaly	3/10/08

P&ID - PTF
PLANT WASH & DISPOSAL
UTILITY SERVICES
PSA RACK

CONTENT APPLICABLE TO ALARA? [X] YES [ ] NO
ADR NO. 24590-PTF-ADR-M-02-010 REV: 1
SAFETY SCREEN REQUIRED? [X] YES [ ] NO E&NS INITIAL IF YES GOH

SCALE: NONE

24590-PTF-M6-PWD-00024005 REV 0

SAFETY SCREEN IS REQUIRED FOR DRAWING TYPES IDENTIFIED IN 24590-WTP-GPP-SREG-002

'E' SIZE - 44x34
COMPUTER GENERATED - MANUAL CHANGES NOT PERMITTED

03/10/2008 07:31:40 AM

PLOTTED BY: mdritter
C:\Work\mdritter\cms C3837\PTFM6PWD00024005.cgn

R10887402

FORM E_SENGON 02/2003

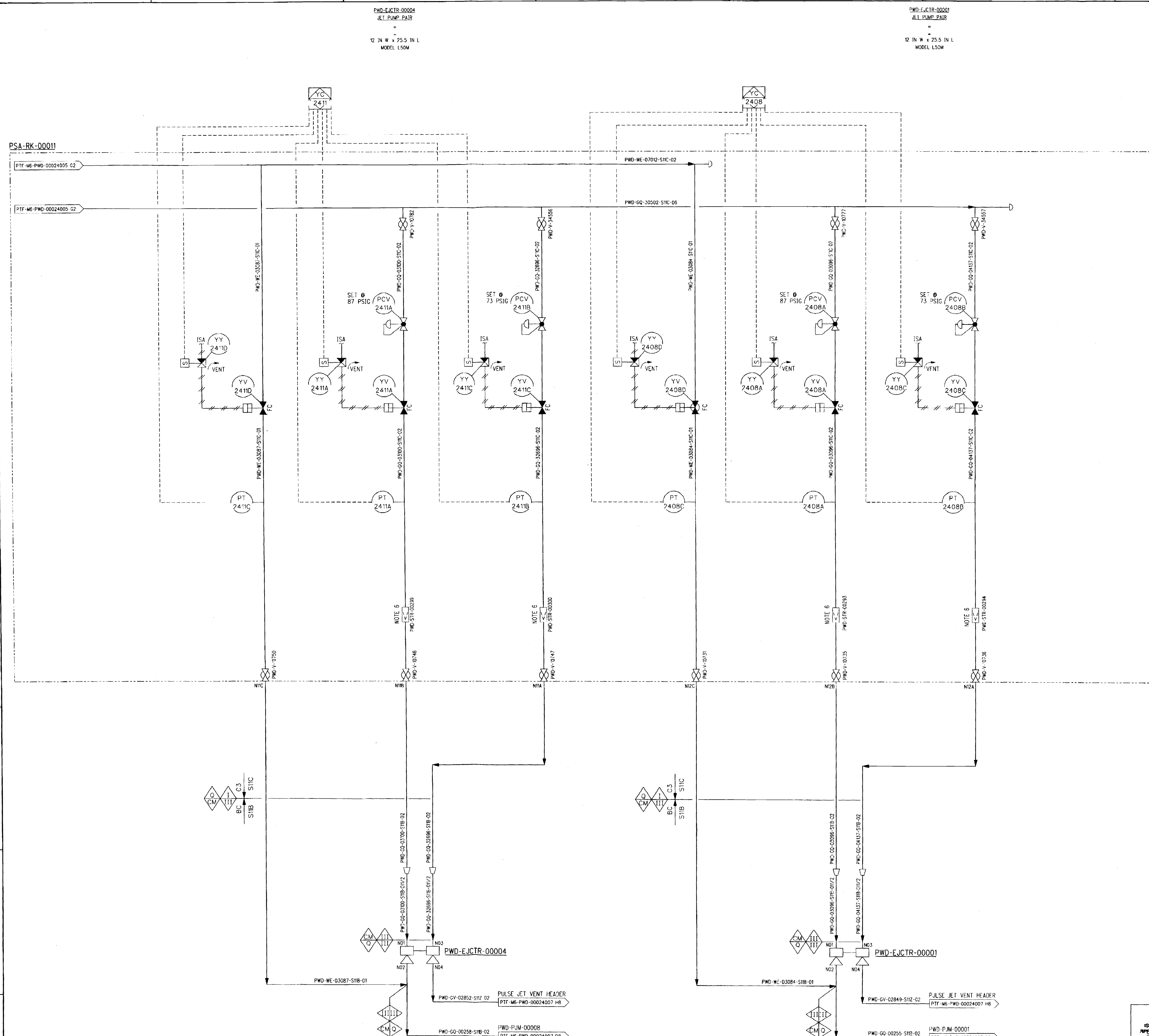

NOTES:

1. SEE DRAWINGS 24590-WTP-M6-50-00001 THROUGH 24590-WTP-M6-50-00008 FOR GENERAL NOTES, SYMBOLS AND LEGEND, AND GENERAL SLOPE REQUIREMENTS.
2. SEE JET PUMP PAIR CONTROL DETAIL 2 ON LEGEND SHEET 24590-WTP-M6-50-00006.
3. FOR PROCESS INFORMATION REFER TO PIPING AND INSTRUMENTATION DIAGRAM 24590-PTF-M6-PWD-00003.
4. THE PRESSURE BOUNDARY FOR ALL SYSTEMS, STRUCTURES, AND COMPONENTS ON THIS DRAWING (INCLUDING PULSE JET VENT LINES) IS QUALITY LEVEL Q, AND SEISMIC CATEGORY SC-I, UNLESS OTHERWISE NOTED.
5. CONTENTS OF THIS DRAWING ARE DANGEROUS WASTE PERMIT AFFECTING.
6. STRAINER IS A CONICAL PILGRIM HAT TYPE STRAINER WITH PERFORATED 1/8 INCH DIAMETER STAGGERED HOLES ON 3/16 INCH CENTERS PERMANENTLY INSTALLED UPSTREAM OF FLANGED VALVE.
7. THIS DRAWING IS CONVERTED FROM A SINGLE SHEET TO MULTI-SHEET DRAWINGS AND, IN PART, SUPERCEDES 24590-PTF-M6-PWD-00024 REV 3. THIS DRAWING INCLUDES INFORMATION FROM 24590-PTF-M6N-PWD-00243, 24590-PTF-M6N-M80T-00036,-00037,-AND -00038. OTHER CHANGES FROM SUPERSEDED DRAWING INCLUDE: ADDED REAGENT INTRODUCTION ON PSA HEADER; ADDED INDIVIDUAL SUCTION PSA DROP FROM THE HEADER; REMOVED ISOLATION VALVE FROM DIW SUPPLY LINE AND STRAINER ASSEMBLY FROM PSA HEADER; REPLACED WYE WITH CONICAL STRAINERS; CHANGED MANUAL BALL VALVE TO BUTTERFLY VALVE; CHANGED QUALITY LEVEL AND SEISMIC CATEGORY IN C3 AND C5 AREA; ADDED/DELETED/REVISED NOTES, HOLDS, AND REFERENCES.

HOLD/OPEN ITEMS:

NONE

REFERENCES:

1. THE REQUIRED BATCH SEQUENCES, PERMISSIVES, INTERLOCKS, ALARMS AND OPERATOR INTERFACE POINTS ARE FULLY DESCRIBED IN THE SOFTWARE FUNCTIONAL SPECIFICATION, FOR PLANT WASH AND DISPOSAL (PWD) SYSTEM, 24590-PTF-3PS-PWD-T0001.

Please note that source, special nuclear, and byproduct materials, as defined in the Atomic Energy Act of 1954 (AEA) are regulated at the U. S. Department of Energy (DOE) facilities exclusively by DOE acting pursuant to its AEA authority. DOE asserts that pursuant to AEA, it has sole and exclusive responsibility and authority to regulate source, special nuclear, and byproduct materials at DOE-owned nuclear facilities. Information contained herein on radionuclides is provided for process description purposes only.

Q
QUALITY DESIGNATOR

REVISION HISTORY

REV	DESCRIPTION	ORG	CHKD	RVWD	APVD	DATE
0	ISSUED FOR CONSTRUCTION SEE NOTE 7		APP	CEK / ELS	JDM / RCK	3/11/08

ISSUED BY RPP-WTP PDC
ISSUE STAMP

PROJECT No.	24590
SITE	HANFORD
AREA	200E
BUILDING No.	10

	BY	DATE
ORIGINATOR	[signature]	3/10/08
CHECKER	[signature]	3/10/08
APPROVER	[signature]	3/11/08
REVIEWER	[signature]	3/10/08
	[signature]	3/10/08

CONTENT APPLICABLE TO ALARA? [X] YES [ ] NO
ADR NO. 24590-PTF-ADR-M-02-010 REV: 1
SAFETY SCREEN REQUIRED? [X] YES [ ] NO E&NS INITIAL IF YES GDH

RIVER PROTECTION PROJECT
WASTE TREATMENT PLANT
2435 STEVENS CENTER PLACE
RICHLAND, WA 99354

CONTRACT No: DE-AC27-01RV14136

P&ID - PTF
PLANT WASH & DISPOSAL UTILITY SERVICES PSA RACK

SCALE: NONE

24590-PTF-M6-PWD-00024006 REV 0

SAFETY SCREEN IS REQUIRED FOR DRAWING TYPES IDENTIFIED IN 24590-WTP-GPP-SREG-002

'E' SIZE - 44x34
COMPUTER GENERATED - MANUAL CHANGES NOT PERMITTED

03/10/2008 07:30:06 AM

PLOTTED BY: mdritter
C:\Work\mdritte\dms03837\PTFM6PWD00024006.dgn

R10887403

FORM F_ESN.DOV 02/2003

24590-PTF-M6-PWD-00024007

PWD-PJM-00017	PWD-PJM-00016	PWD-PJM-00011	PWD-PJM-00013	PWD-PJM-00015	PWD-PJM-00018	PWD-PJM-00014	PWD-PJM-00005	PWD-PJM-00007	PWD-PJM-00006	PWD-PJM-00008	PWD-PJM-00001
PULSE JET MIXER	PULSE JET MIXER	PULSE JET MIXER	PULSE JET MIXER	PULSE JET MIXER	PULSE JET MIXER	PULSE JET MIXER	PULSE JET MIXER	PULSE JET MIXER	PULSE JET MIXER	PULSE JET MIXER	PULSE JET MIXER
32 IN ID x 165 IN L TYPE D 540 GAL	32 IN ID x 165 IN L TYPE D 540 GAL	32 IN ID x 165 IN L TYPE D 540 GAL	32 IN ID x 165 IN L TYPE D 540 GAL	32 IN ID x 165 IN L TYPE D 540 GAL	32 IN ID x 165 IN L TYPE D 540 GAL	32 IN ID x 165 IN L TYPE D 540 GAL	32 IN ID x 165 IN L TYPE D 540 GAL	32 IN ID x 165 IN L TYPE D 540 GAL	32 IN ID x 165 IN L TYPE D 540 GAL	32 IN ID x 165 IN L TYPE D 540 GAL	32 IN ID x 165 IN L TYPE D 540 GAL

PWD-EJCTR-00001 — PTF-M6-PWD-00024006 A3
PWD-EJCTR-00004 — PTF-M6-PWD-00024006 A6
PWD-EJCTR-00002 — PTF-M6-PWD-00024005 A3
PWD-EJCTR-00003 — PTF-M6-PWD-00024005 A6
PWD-EJCTR-00005 — PTF-M6-PWD-00024004 A3
PWD-EJCTR-00014 — PTF-M6-PWD-00024004 A6
PWD-EJCTR-00012 — PTF-M6-PWD-00024003 A3
PWD-EJCTR-00015 — PTF-M6-PWD-00024003 A6
PWD-EJCTR-00013 — PTF-M6-PWD-00024002 A3
PWD-EJCTR-00011 — PTF-M6-PWD-00024002 A6
PWD-EJCTR-00016 — PTF-M6-PWD-00024001 A3
PWD-EJCTR-00017 — PTF-M6-PWD-00024001 A5

PLANT WASH — PTF-M6-PWD-00029 A6 — PJV-75-00054-51T2-02 1-100 — 1-700 — PJV-GV-02517-51T2-1H

ZS GV

PWD-GV-02843-51T2-02 · PWD-GV-02842-51T2-02 · PWD-GV-00043-51T2-02 · PWD-GV-00045-51T2-02 · PWD-GV-02841-51T2-02 · PWD-GV-00044-51T2-02 · PWD-GV-00046-51T2-02 · PWD-GV-02853-51T2-02 · PWD-GV-0285-51T2-02 · PWD-GV-02850-51T2-02 · PWD-GV-02852-51T2-02 · PWD-GV-00049-51T2-02

PULSE JET VENT HEADER — PTF-M6-PJV-00001 F7

PWD-GQ-00179-51B-02

PWD-GQ-00016-51B-02 · PWD-GQ-00014-51B-02 · PWD-GQ-00076-51B-02 · PWD-GQ-00077-51B-02 · PWD-GQ-00075-51B-02 · PWD-GQ-00077-51B-02 · PWD-GQ-00256-51B-02 · PWD-GQ-00255-51B-02 · PWD-GQ-00254-51B-02 · PWD-GQ-00253-51B-02 · PWD-GQ-00256-51B-02 · PWD-GQ-00255-51B-02

N24 N23 N18 N20 N22 N25 N21 N35 N37 N36 N38 N31

PWD-PJM-00017 · PWD-PJM-00016 · PWD-PJM-00011 · PWD-PJM-00013 · PWD-PJM-00015 · PWD-PJM-00018 · PWD-PJM-00014 · PWD-PJM-00005 · PWD-PJM-00007 · PWD-PJM-00006 · PWD-PJM-00008 · PWD-PJM-00001

PWD-VSL-00016 NOTE 3 · PWD-VSL-00015 NOTE 3

NOTES:

1. SEE DRAWINGS 24590-WTP-M6-50-00001 THROUGH 24590-WTP-M6-50-00008 FOR GENERAL NOTES, SYMBOLS AND LEGEND, AND GENERAL SLOPE REQUIREMENTS.
2. FOR PROCESS INFORMATION REFER TO PIPING & INSTRUMENTATION DIAGRAM 24590-PTF-M6-PWD-00003.
3. THE PRESSURE BOUNDARY FOR ALL SYSTEMS, STRUCTURES AND COMPONENTS ON THIS DRAWING (INCLUDING PULSE JET VENT LINES) IS QUALITY LEVEL Q AND SEISMIC CATEGORY SC-III, UNLESS OTHERWISE NOTED. THE PJMS ARE QUALITY LEVEL QM AND SEISMIC CATEGORY SC-III.
4. CONTENTS OF THIS DOCUMENT ARE DANGEROUS WASTE PERMIT AFFECTING.
5. THIS DRAWING IS CONVERTED FROM A SINGLE SHEET TO MULTI-SHEET DRAWINGS AND, IN PART, SUPERCEDES 24590-PTF-M6-PWD-00024 REV. 5. THIS DRAWING INCLUDES INFORMATION FROM 24590-PTF-M6N-PWD-00024.3, 24590-PTF-M6N-M80T-00036, 00037, AND 00038. OTHER CHANGES FROM SUPERSEDED DRAWING INCLUDE: ADDED REAGENT INTRODUCTION ON PSA HEADER; ADDED INDIVIDUAL SUCTION PSA DROP FROM THE HEADER; REMOVED ISOLATION VALVE FROM DIW SUPPLY LINE AND STRAINER ASSEMBLY FROM PSA HEADER; REPLACED WYE WITH CONICAL STRAINERS; CHANGED MANUAL BALL VALVE TO BUTTERFLY VALVE; CHANGED QUALITY LEVEL AND SEISMIC CATEGORY IN C3 AND C5 AREA; ADDED/DELETED/REVISED NOTES, HOLDS, AND REFERENCES.

HOLD/OPEN ITEMS:

NONE

REFERENCES:

NONE

Please note that source, special nuclear, and byproduct materials, as defined in the Atomic Energy Act of 1954 (AEA) are regulated at the U. S. Department of Energy (DOE) facilities exclusively by DOE acting pursuant to its AEA authority. DOE asserts that pursuant to AEA, it has sole and exclusive responsibility and authority to regulate source, special nuclear, and byproduct materials at DOE-owned nuclear facilities. Information contained herein on radionuclides is provided for process description purposes only.

REVISION HISTORY

QUALITY DESIGNATOR	REV	DESCRIPTION	ORG	CHKD	RVWD	APVD	DATE
Q	0	ISSUED FOR CONSTRUCTION SEE NOTE 5	PE	APP	CES per ltr		3/6/08

ISSUED BY RPP-WTP PDC — ISSUE STAMP

	BY	DATE
ORIGINATOR		3/10/08
CHECKER		3/10/08
APPROVER		3/6/08
REVIEWER		3/11/08
		3/11/08

PROJECT No. 24590 · SITE HANFORD · AREA 200E · BUILDING No. 10

CONTENT APPLICABLE TO ALARA? [X] YES [ ] NO
ADR NO. 24590-PTF-ADR-M-02-010 REV. 1
SAFETY SCREEN REQUIRED? [ ] YES [ ] NO EWG INITIAL IF YES

SAFETY SCREEN IS REQUIRED FOR DRAWING TYPES IDENTIFIED IN 24590-WTP-GPP-SREG-002

BECHTEL

RIVER PROTECTION PROJECT
WASTE TREATMENT PLANT
2435 STEVENS CENTER PLACE
RICHLAND, WA 99354

CONTRACT No. DE-AC27-01RV14136

P&ID - PTF
PLANT WASH & DISPOSAL UTILITY SERVICES PSA RACK

SCALE: NONE
1" SIZE = 44x34
COMPUTER GENERATED - MANUAL CHANGES NOT PERMITTED

24590-PTF-M6-PWD-00024007 REV 0

03/10/2008 07:28:56 AM

PLOTTED BY: mcmillar
C:\Work\24590\PTF\M6\PWD\24590-PTF-M6-PWD-00024007.dgn

FORM: E_SDN.DGN 02/2003

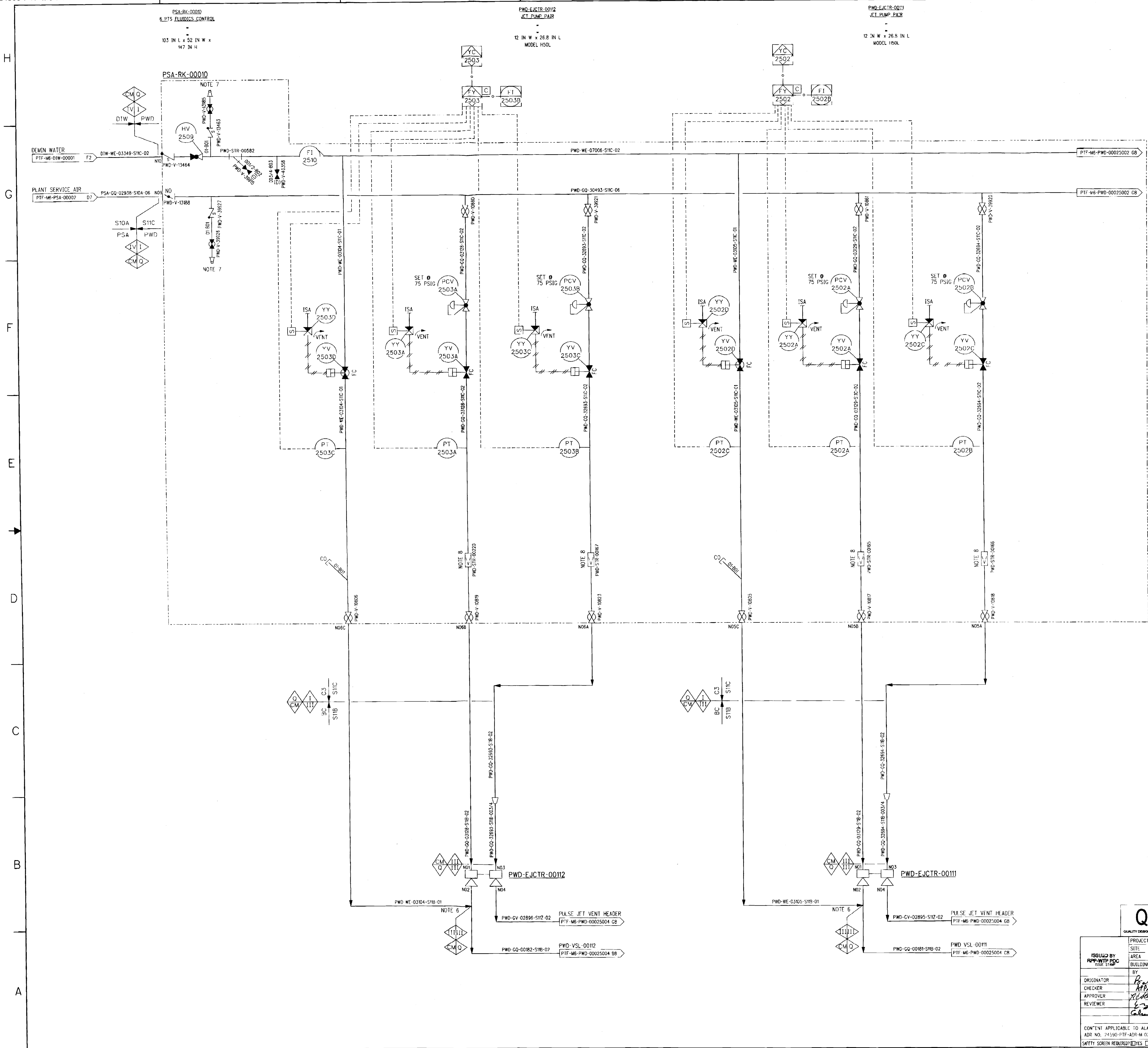

NOTES:

1. SEE DRAWINGS 24590-WTP-M6-50-00001 THROUGH 24590-WTP-M6-50-00008 FOR GENERAL NOTES, SYMBOLS AND LEGEND, AND GENERAL SLOPE REQUIREMENTS.
2. SEE JET PUMP PAIR CONTROL DETAIL 2 (RFD/PJM) ON LEGEND SHEET 24590-WTP-M6-50-00006.
3. FOR PROCESS INFORMATION REFER TO PIPING & INSTRUMENTATION DIAGRAM 24590-PTF-M6-PWD-00003.
4. THE PRESSURE BOUNDARY FOR ALL SYSTEMS, STRUCTURES AND COMPONENTS ON THIS DWG (INCLUDING PULSE JET VENT LINES) IS QUALITY LEVEL Q AND SEISMIC CATEGORY SC-I, UNLESS OTHERWISE NOTED.
5. CONTENTS OF THIS DRAWING ARE DANGEROUS WASTE PERMIT AFFECTING.
6. A 45-DEGREE WYE PIPE FITTING SHALL BE USED AT THIS CONNECTION AND LOCATION.
7. REAGENT/PLANT WASH/AIR SERVICES PROVIDED AT A LOCAL UTILITY STATION.
8. STRAINER IS A CONICAL PILGRIM HAT TYPE STRAINER WITH PERFORATED 1/8 INCH DIAMETER STAGGERED HOLES ON 3/16 INCH CENTERS PERMANENTLY INSTALLED UPSTREAM OF FLANGED VALVE.
9. THIS DRAWING IS CONVERTED FROM A SINGLE SHEET TO MULTI-SHEET DRAWINGS AND, IN PART, SUPERCEDES 24590-PTF-M6-PWD-00025 REV 3. THIS DRAWING INCLUDES INFORMATION FROM 24590-PTF-M6N-PWD 00244, 24590-PTF-M6N-M80T-00036, -00037, AND -00038. OTHER CHANGES FROM SUPERSEDED DRAWING INCLUDE: ADDED REAGENT INTRODUCTION ON PSA HEADER; ADDED INDIVIDUAL SUCTION PSA DROP FROM THE HEADER; REMOVED ISOLATION VALVE FROM DIW SUPPLY LINE AND STRAINER ASSEMBLY FROM PSA HEADER; REPLACED WYE WITH CONICAL STRAINERS; CHANGED MANUAL BALL VALVE TO BUTTERFLY VALVE; CHANGED QUALITY LEVEL AND SEISMIC CATEGORY IN C3 AND C5 AREA; REVISED FY-2502, FY-2503, FY-2504, FY-2505, AND FY-2506 DISCRETE SOFTWARE SYMBOL, NOT ACCESSIBLE TO OPERATOR; ADDED/DELETED/REVISED NOTES, HOLDS, AND REFERENCES.

HOLD/OPEN ITEMS:

NONE

REFERENCES:

1. THE REQUIRED BATCH SEQUENCES, PERMISSIVES, INTERLOCKS, ALARMS AND OPERATOR INTERFACE POINTS ARE FULLY DESCRIBED IN THE SOFTWARE FUNCTIONAL SPECIFICATION, FOR PWD-PLANT WASH AND DISPOSAL SYSTEM, 24590-PTF-3PS-PWD-T0001.

Please note that source, special nuclear, and byproduct materials, as defined in the Atomic Energy Act of 1954 (AEA) are regulated at the U. S. Department of Energy (DOE) facilities exclusively by DOE acting pursuant to its AEA authority. DOE asserts that pursuant to AEA, it has sole and exclusive responsibility and authority to regulate source, special nuclear, and byproduct materials at DOE-owned nuclear facilities. Information contained herein on radionuclides is provided for process description purposes only.

DRAWING INDEX

DWG NO	REV	TITLE
24590-PTF-M6-PWD-00025001	0	PLANT WASH & DISPOSAL UTILITY SERVICES
24590-PTF-M6-PWD-00025002	0	PLANT WASH & DISPOSAL UTILITY SERVICES
24590-PTF-M6-PWD-00025003	0	PLANT WASH & DISPOSAL UTILITY SERVICES
24590-PTF-M6-PWD-00025004	0	PLANT WASH & DISPOSAL UTILITY SERVICES

Q
QUALITY DESIGNATOR

REVISION HISTORY

REV	DESCRIPTION	ORG	CHKD	RVWD	APVD	DATE
0	ISSUED FOR CONSTRUCTION SEE NOTE 9		APP	CER ELS	JBH RCL	3/11/08

ISSUED BY RPP-WTP PDC
ISSUE STAMP

PROJECT No.	24590
SITE	HANFORD
AREA	200E
BUILDING No.	10

	BY	DATE
ORIGINATOR		3/10/08
CHECKER		3/10/08
APPROVER		3/11/08
REVIEWER		3/10/08
		3/10/08

CONTENT APPLICABLE TO ALARA? [X] YES [ ] NO
ADR NO. 24590-PTF-ADR-M-02-010 REV: 1
SAFETY SCREEN REQUIRED? [X] YES [ ] NO E&NS INITIAL IF YES

BECHTEL
RIVER PROTECTION PROJECT
WASTE TREATMENT PLANT
2435 STEVENS CENTER PLACE
RICHLAND, WA 99354

CONTRACT No: DE-AC27-01RV14136

P&ID - PTF PLANT WASH & DISPOSAL UTILITY SERVICES PSA RACK

SCALE: NONE

24590-PTF-M6-PWD-00025001 REV 0

SAFETY SCREEN IS REQUIRED FOR DRAWING TYPES IDENTIFIED IN 24590-WTP-GPP-SREG-002

'E' SIZE - 44x34
COMPUTER GENERATED - MANUAL CHANGES NOT PERMITTED

03/10/2008 07:25:32 AM

FORM E_SDKSKN 02/2003

PLOTTED BY: mdritter

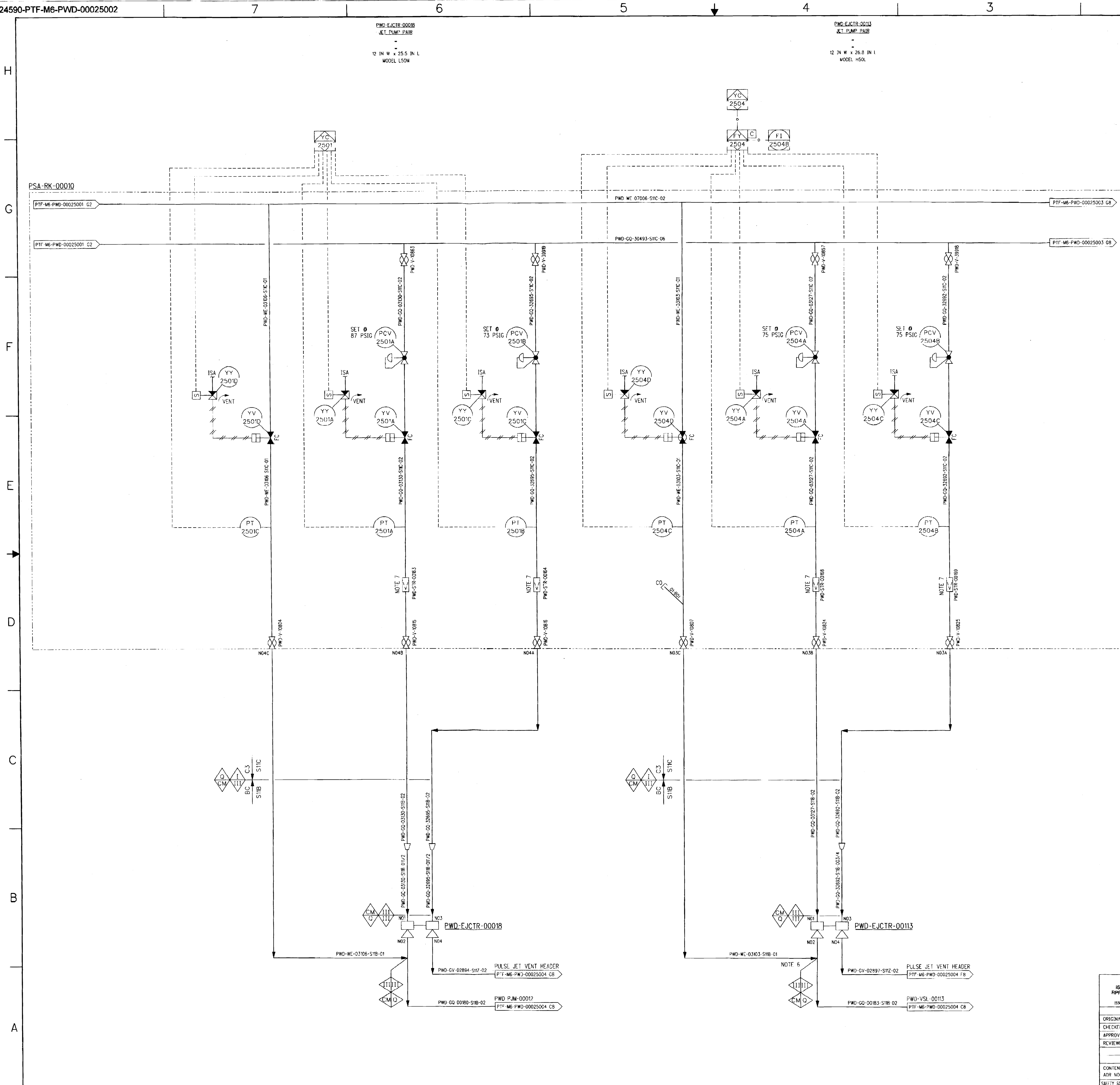

NOTES:

1. SEE DRAWINGS 24590-WTP-M6-50-00001 THROUGH 24590-WTP-M6-50-00008 FOR GENERAL NOTES, SYMBOLS AND LEGEND, AND GENERAL SLOPE REQUIREMENTS.
2. SEE JET PUMP PAIR CONTROL DETAIL 2 (RFD/PJM) ON LEGEND SHEET 24590-WTP-M6-50-00006.
3. FOR PROCESS INFORMATION REFER TO PIPING & INSTRUMENTATION DIAGRAM 24590-PTF-M6-PWD-00003.
4. THE PRESSURE BOUNDARY FOR ALL SYSTEMS, STRUCTURES AND COMPONENTS ON THIS DWG (INCLUDING PULSE JET VENT LINES) IS QUALITY LEVEL Q AND SEISMIC CATEGORY SC-I, UNLESS OTHERWISE NOTED.
5. CONTENTS OF THIS DRAWING ARE DANGEROUS WASTE PERMIT AFFECTING.
6. A 45-DEGREE WYE PIPE FITTING SHALL BE USED AT THIS CONNECTION AND LOCATION.
7. STRAINER IS A CONICAL PILGRIM HAT TYPE STRAINER WITH PERFORATED 1/8 INCH DIAMETER STAGGERED HOLES ON 3/16 INCH CENTERS PERMANENTLY INSTALLED UPSTREAM OF FLANGED VALVE.
8. THIS DRAWING IS CONVERTED FROM A SINGLE SHEET TO MULTI-SHEET DRAWINGS AND, IN PART, SUPERCEDES 24590-PTF-M6-PWD-00025 REV 3. THIS DRAWING INCLUDES INFORMATION FROM 24590-PTF-M6N-PWD 00244, 24590-PTF-M6N-M80T-00036, -00037, AND -00038. OTHER CHANGES FROM SUPERSEDED DRAWING INCLUDE: ADDED REAGENT INTRODUCTION ON PSA HEADER; ADDED INDIVIDUAL SUCTION PSA DROP FROM THE HEADER; REMOVED ISOLATION VALVE FROM DIW SUPPLY LINE AND STRAINER ASSEMBLY FROM PSA HEADER; REPLACED WYE WITH CONICAL STRAINERS; CHANGED MANUAL BALL VALVE TO BUTTERFLY VALVE; CHANGED QUALITY LEVEL AND SEISMIC CATEGORY IN C3 AND C5 AREA; REVISED FY-2502, FY-2503, FY-2504, FY-2505, AND FY-2506 DISCRETE SOFTWARE SYMBOL, NOT ACCESSIBLE TO OPERATOR; ADDED/DELETED/REVISED NOTES, HOLDS, AND REFERENCES.

HOLD/OPEN ITEMS:

NONE

REFERENCES:

1. THE REQUIRED BATCH SEQUENCES, PERMISSIVES, INTERLOCKS, ALARMS AND OPERATOR INTERFACE POINTS ARE FULLY DESCRIBED IN THE SOFTWARE FUNCTIONAL SPECIFICATION, FOR PWD-PLANT WASH AND DISPOSAL SYSTEM, 24590-PTF-3PS-PWD-T0001.

Please note that source, special nuclear, and byproduct materials, as defined in the Atomic Energy Act of 1954 (AEA) are regulated at the U. S. Department of Energy (DOE) facilities exclusively by DOE acting pursuant to its AEA authority. DOE asserts that pursuant to AEA, it has sole and exclusive responsibility and authority to regulate source, special nuclear, and byproduct materials at DOE-owned nuclear facilities. Information contained herein on radionuclides is provided for process description purposes only.

Q
QUALITY DESIGNATOR

REV	DESCRIPTION	ORG	CHKD	RVWD	APVD	DATE
0	ISSUED FOR CONSTRUCTION SEE NOTE 8					3/11/08

REVISION HISTORY

ISSUED BY RPP-WTP PDC
ISSUE STAMP

PROJECT No.	24590
SITE	HANFORD
AREA	200E
BUILDING No.	10

RIVER PROTECTION PROJECT
WASTE TREATMENT PLANT
2435 STEVENS CENTER PLACE
RICHLAND, WA 99354

CONTRACT No: DE-AC27-01RV14136

	BY	DATE
ORIGINATOR		3/10/08
CHECKER		3/10/08
APPROVER		3/11/08
REVIEWER		3/10/08
		3/10/08

CONTENT APPLICABLE TO ALARA? [X] YES [ ] NO
ADR NO. 24590-PTF-ADR-M-02-010 REV: 1
SAFETY SCREEN REQUIRED? [X] YES [ ] NO E&NS INITIAL IF YES GOH

P&ID - PTF PLANT WASH & DISPOSAL UTILITY SERVICES PSA RACK

SCALE: NONE

24590-PTF-M6-PWD-00025002 REV 0

SAFETY SCREEN IS REQUIRED FOR DRAWING TYPES IDENTIFIED IN 24590-WTP-GPP-SREG-002

'E' SIZE - 44x34
COMPUTER GENERATED - MANUAL CHANGES NOT PERMITTED

03/10/2008 07:22:37 AM

FORM K_SUN.DGN 02/2003
PLOTTED BY: mdritter C:\Work\mdritter\dms03837\PTFM6PWD00025002.cgr
R10887391

24590-PTF-M6-PWD-00025003

PWD-1 EJCTR-00115
JET PUMP PAIR
-
-
9.8 IN W x 10.4 IN L
MODEL H15M

PWD-EJCTR-00114
JET PUMP PAIR
-
-
12 IN W x 26.8 IN L
MODEL H50L

PSA-RK-00010

PTF-M6-PWD-00025002 G2

PTF-M6-PWD-00025002 G2

PWD-WE-03102-S1C-001/2

PWD-GQ-03103-S1C-00014

PWD-GQ-32690-S1C-00172

PWD-WE-03102-S1C-01

PWD-GQ-00046-S1B-001/2

PWD-GQ-32690-S1C-00174

PWD-GQ-32690-S1C-001/2

PWD-GQ-03103-S1B-00174

PWD-GQ-03103-S1B-001/2

PWD-GQ-32690-S1B-001/2

PWD-GQ-00046-S1B-01

PWD-WE-07006-S1C-02

PWD-GQ-30493-S1C-06

PWD-WE-03102-S1C-01

PWD-GQ-03206-S1C-02

PWD-GQ-32695-S1C-02

PWD-GQ-03206-S1B-02

PWD-GQ-32695-S1B-02

PWD-GQ-32695-S1B-00174

PWD-WE-03102-S1B-01

PWD-GV-02899-S1Z-003/4

PWD-GV-02898-S1Z-02

PWD-GQ-00184-S1B-02

PWD-VSL-00115
PTF-M6-PWD-00025004 D8

PWD-VSL-00114
PTF-M6-PWD-00025004 D8

PULSE JET VENT HEADER
PTF-M6-PWD-00025004 E8

PULSE JET VENT HEADER
PTF-M6-PWD-00025004 E8

PWD-EJCTR-00115

PWD-EJCTR-00114

SET @ 75 PSIG PCV 2506A

SET @ 60 PSIG PCV 2506B

SET @ 75 PSIG PCV 2505A

SET @ 75 PSIG PCV 2505B

PT 2506C

PT 2506A

PT 2506B

PT 2505C

PT 2505A

PT 2505B

NOTE 6

NOTE 7

NOTES:

1. SEE DRAWINGS 24590-WTP-M6-50-00001 THROUGH 24590-WTP-M6-50-00008 FOR GENERAL NOTES, SYMBOLS AND LEGEND, AND GENERAL SLOPE REQUIREMENTS.
2. SEE JET PUMP PAIR CONTROL DETAIL 2 (RFD/PJM) ON LEGEND SHEET 24590-WTP-M6-50-00006.
3. FOR PROCESS INFORMATION REFER TO PIPING & INSTRUMENTATION DIAGRAM 24590-PTF-M6-PWD-00003.
4. THE PRESSURE BOUNDARY FOR ALL SYSTEMS, STRUCTURES AND COMPONENTS ON THIS DWG (INCLUDING PULSE JET VENT LINES) IS QUALITY LEVEL Q AND SEISMIC CATEGORY SC-1, UNLESS OTHERWISE NOTED.
5. CONTENTS OF THIS DRAWING ARE DANGEROUS WASTE PERMIT AFFECTING.
6. A 45-DEGREE WYE PIPE FITTING SHALL BE USED AT THIS CONNECTION AND LOCATION.
7. STRAINER IS A CONICAL PILGRIM HAT TYPE STRAINER WITH PERFORATED 1/8 INCH DIAMETER STAGGERED HOLES ON 3/16 INCH CENTERS PERMANENTLY INSTALLED UPSTREAM OF FLANGED VALVE.
8. THIS DRAWING IS CONVERTED FROM A SINGLE SHEET TO MULTI-SHEET DRAWINGS AND, IN PART, SUPERCEDES 24590-PTF-M6-PWD-00025 REV 3. THIS DRAWING INCLUDES INFORMATION FROM 24590-PTF-M6N-PWD-00244, 24590-PTF-M6N-W80T-00036, 00037, AND 00038. OTHER CHANGES FROM SUPERSEDED DRAWING INCLUDE: ADDED REAGENT INTRODUCTION ON PSA HEADER; ADDED INDIVIDUAL SUCTION PSA DROP FROM THE HEADER; REMOVED ISOLATION VALVE FROM DIW SUPPLY LINE AND STRAINER ASSEMBLY FROM PSA HEADER; REPLACED WYE WITH CONICAL STRAINERS; CHANGED MANUAL BALL VALVE TO BUTTERFLY VALVE; CHANGED QUALITY LEVEL AND SEISMIC CATEGORY IN C3 AND C5 AREA; REVISED FY-2502, FY-2503, FY-2504, FY-2505, AND FY-2506 DISCRETE SOFTWARE SYMBOL; NOT ACCESSIBLE TO OPERATOR; ADDED/DELETED/REVISED NOTES, HOLDS, AND REFERENCES.

HOLD/OPEN ITEMS:

NONE

REFERENCES:

1. THE REQUIRED BATCH SEQUENCES, PERMISSIVES, INTERLOCKS, ALARMS AND OPERATOR INTERFACE POINTS ARE FULLY DESCRIBED IN THE SOFTWARE FUNCTIONAL SPECIFICATION, FOR PWD-PLANT WASH AND DISPOSAL SYSTEM, 24590-PTF-SPS-PWD-T0001.

Please note that source, special nuclear, and byproduct materials, as defined in the Atomic Energy Act of 1954 (AEA) are regulated at the U. S. Department of Energy (DOE) facilities exclusively by DOE acting pursuant to its AEA authority. DOE asserts that pursuant to AEA, it has sole and exclusive responsibility and authority to regulate source, special nuclear, and byproduct materials at DOE-owned nuclear facilities. Information contained herein on radionuclides is provided for process description purposes only.

REV	DESCRIPTION	ORG	CHKD	RVWD	APVD	DATE
Q	0 ISSUED FOR CONSTRUCTION SEE NOTE 8	R APP	CCK	JPM	JPM	3/11/08

REVISION HISTORY

ISSUED BY RPP-WTP PDC

PROJECT No.	24590
SITE	HANFORD
AREA	200E
BUILDING No.	10

	BY	DATE
ORIGINATOR		3/10/08
CHECKER		3/10/08
APPROVER		3/11/08
RLVEL/MLH		3/10/08
		3/10/08

CONTENT APPLICABLE TO ALARA? [X] YES [ ] NO
ADR NO. 24590-PTF-M2H-M-02-030 REV. 1

SAFETY SCREEN REQUIRED? [ ] YES [X] NO EWS INITIAL IF YES

SAFETY SCREEN IS REQUIRED FOR DRAWING TYPES IDENTIFIED IN 24590-WTP-GPP-SWC-00T

BECHTEL

RIVER PROTECTION PROJECT
WASTE TREATMENT PLANT
2435 STEVENS CENTER PLACE
RICHLAND, WA 99354

CONTRACT No: DE-AC27-01RV14136

P&ID - PTF
PLANT WASH & DISPOSAL UTILITY SERVICES PSA RACK

SCALE: NONE

24590-PTF-M6-PWD-00025003

REV 0

E-SIZE 44x34

COMPUTER GENERATED MANUAL CHANGES NOT PERMITTED

03/10/2008 07:20:56 AM

FORM E 10.24.04 02/2003

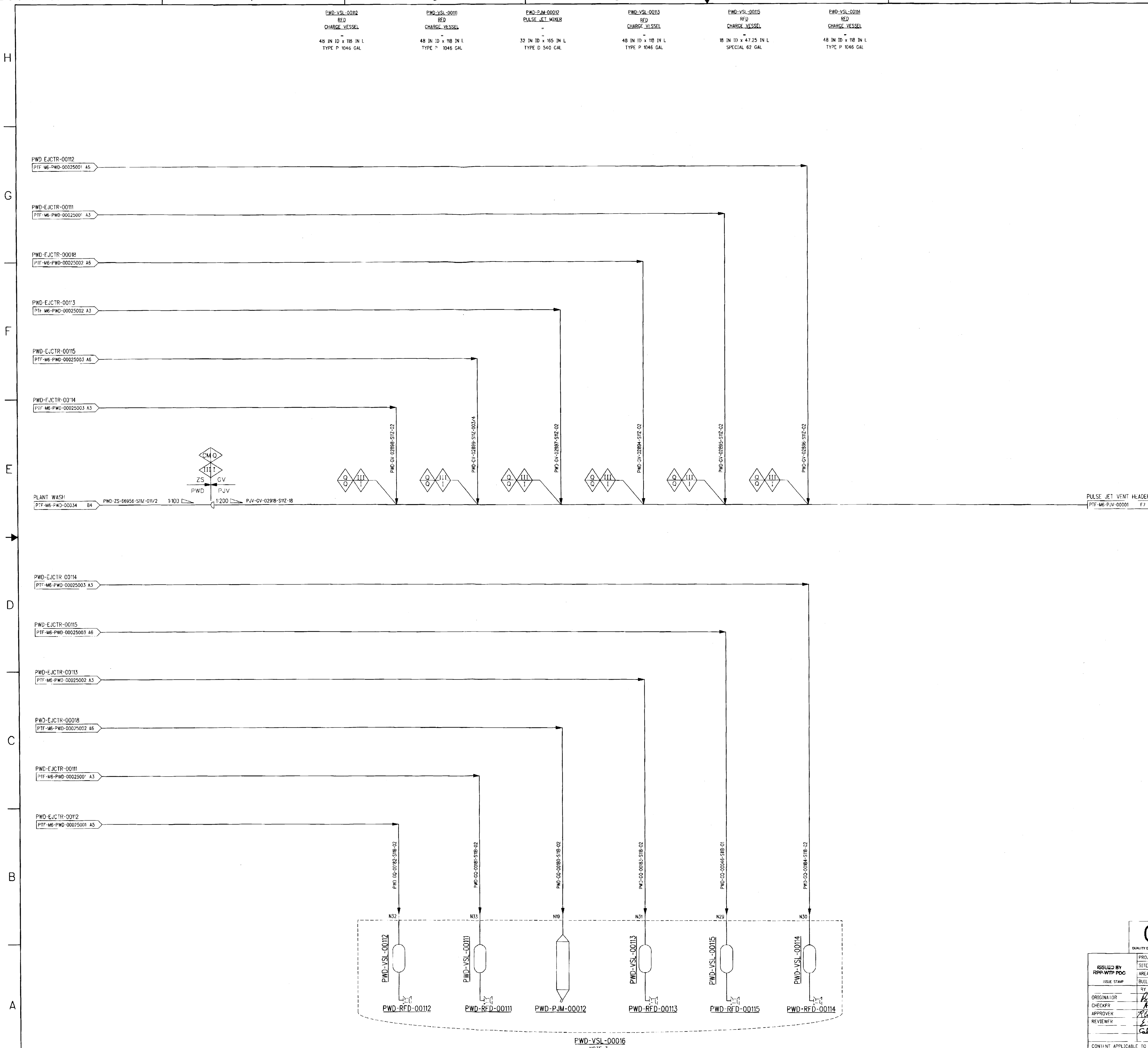

NOTES:

1. SEE DRAWINGS 24590-WTP-M6 50-00001 THROUGH 24590-WTP-M6-50 00008 FOR GENERAL NOTES, SYMBOLS AND LEGEND, AND GENERAL SLOPE REQUIREMENTS.
2. FOR PROCESS INFORMATION REFER TO PIPING & INSTRUMENTATION DIAGRAM 24590-PTF-M6-PWD-00003.
3. THE PRESSURE BOUNDARY FOR ALL SYSTEMS, STRUCTURES AND COMPONENTS ON THIS DRAWING (INCLUDING PULSE JET VENT LINES) IS QUALITY LEVEL Q AND SEISMIC CATEGORY SC-III, UNLESS OTHERWISE NOTED. THE PJM AND CHARGE VESSELS ARE QUALITY LEVEL CM AND SEIMIC CATEGORY SC III.
4. CONTENTS OF THIS DOCUMENT ARE DANGEROUS WASTE PERMIT AFFECTING.
5. THIS DRAWING IS CONVERTED FROM A SINGLE SHEET TO MULTI-SHEET DRAWINGS AND, IN PART, SUPERCEDES 24590-PTF-M6-PWD-00025 REV 3. THIS DRAWING INCLUDES INFORMATION FROM 24590-PTF-M6N-PWD-00244, 24590-PTF-M6N-M80T-00036, -00037, AND -00038. OTHER CHANGES FROM SUPERSEDED DRAWING INCLUDE: ADDED REAGENT INTRODUCTION ON PSA HEADER; ADDED INDIVIDUAL SUCTION PSA DROP FROM THE HEADER; REMOVED ISOLATION VALVE FROM DIW SUPPLY LINE AND STRAINER ASSEMBLY FROM PSA HEADER; REPLACED WYE WITH CONICAL STRAINERS; CHANGED MANUAL BALL VALVE TO BUTTERFLY VALVE; CHANGED QUALITY LEVEL AND SEISMIC CATEGORY IN C3 AND C5 AREA; REVISED FY-2502, FY-2503, FY 2504, FY 2505, AND FY-2506 DISCRETE SOFTWARE SYMBOL, NOT ACCESSIBLE TO OPERATOR; ADDED/DELETED/REVISED NOTES, HOLDS, AND REFERENCES.

HOLD/OPEN ITEMS:

NONE

REFERENCES:

NONE

Please note that source, special nuclear, and byproduct materials, as defined in the Atomic Energy Act of 1954 (AEA) are regulated at the U. S. Department of Energy (DOE) facilities exclusively by DOE acting pursuant to its AEA authority. DOE asserts that pursuant to AEA, it has sole and exclusive responsibility and authority to regulate source, special nuclear, and byproduct materials at DOE-owned nuclear facilities. Information contained herein on radionuclides is provided for process description purposes only.

Q
QUALITY DESIGNATOR

REV	DESCRIPTION	ORG	CHKD	RVWD	APVD	DATE
0	ISSUED FOR CONSTRUCTION SEE NOTE 5					3/11/08

REVISION HISTORY

ISSUED BY RPP-WTP PDC
ISSUE STAMP

PROJECT No.	24590
SITE	HANFORD
AREA	200E
BUILDING No.	10

RIVER PROTECTION PROJECT
WASTE TREATMENT PLANT
2435 STEVENS CENTER PLACE
RICHLAND, WA 99354

CONTRACT No: DE-AC27-01RV14136

	BY	DATE
ORIGINATOR		3/10/08
CHECKER		3/10/08
APPROVER		3/11/08
REVIEWER		3/10/08
		3/10/08

CONTENT APPLICABLE TO ALARA? [X] YES [ ] NO
ADR NO. 24590-PTF-ADR-M-02-010 REV: 1
SAFETY SCREEN REQUIRED? [X] YES [ ] NO E&NS INITIAL IF YES GDH

P&ID - PTF
PLANT WASH & DISPOSAL UTILITY SERVICES PSA RACK

SCALE: NONE

24590-PTF-M6-PWD-00025004 REV 0

SAFETY SCREEN IS REQUIRED FOR DRAWING TYPES IDENTIFIED IN 24590-WTP-GPP-SREG-002

'E' SIZE - 44x34
COMPUTER GENERATED - MANUAL CHANGES NOT PERMITTED

03/10/2008 07:18:49 AM

PLOTTED BY: mdritter
C:\Work\mdritter\cms03837\PTFM6PWD00025004.dgn

R10887393

FORM B_SON DON 02/2003

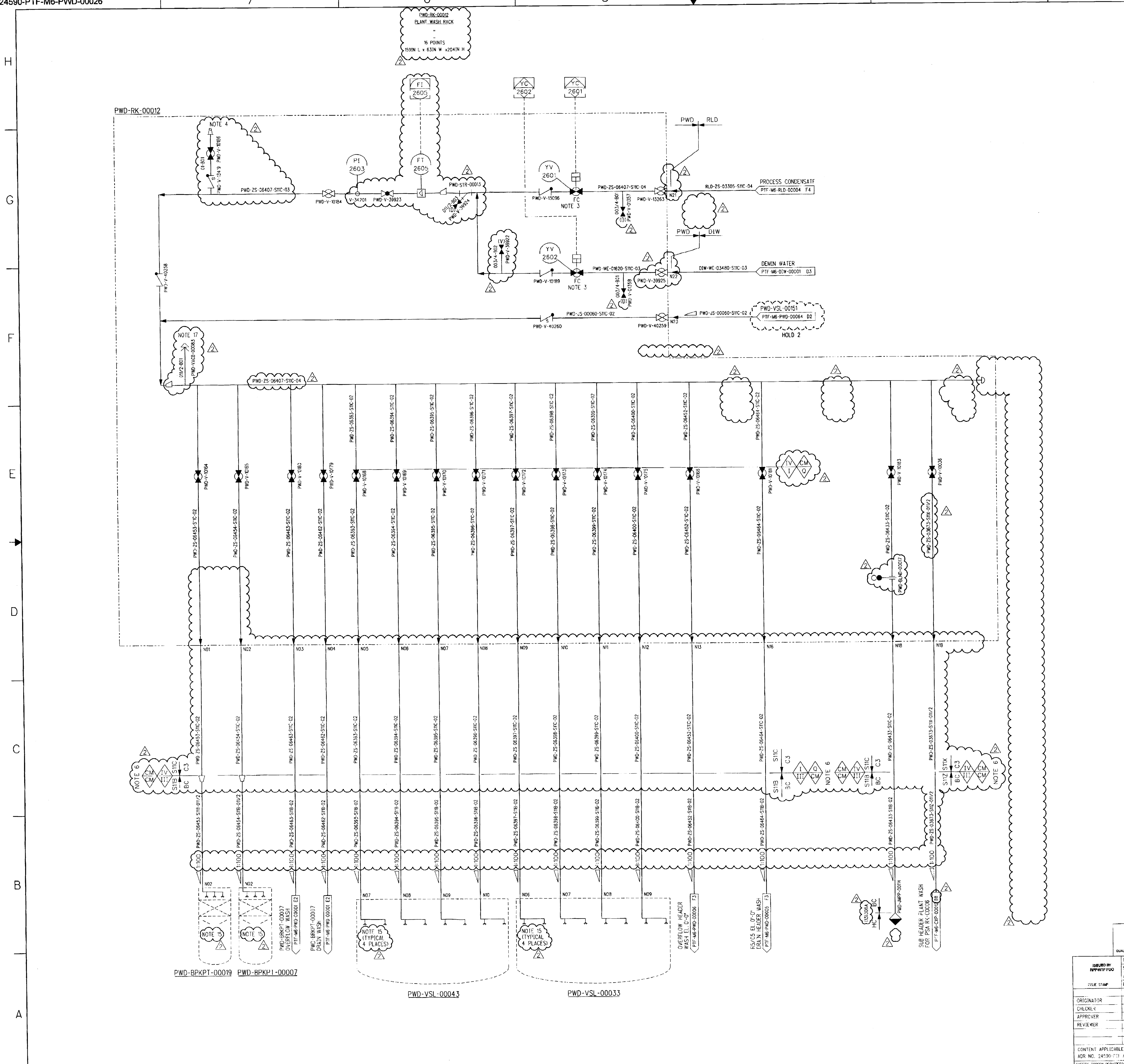

NOTES:

1. SEE DRAWINGS 24590-WTP-M6-50-00001 THROUGH 24590-WTP-M6-50-00008 FOR GENERAL NOTES, SYMBOLS AND LEGEND, AND GENERAL SLOPE REQUIREMENTS.
2. DELETED
3. VALVES INTERLOCKED TO PREVENT MULTIPLE VALVE OPERATION.
4. REAGENT/PLANT WASH/AIR PROVIDED AT LOCAL UTILITY STATION.
5. DELETED
6. PIPE SLEEVE PENETRATIONS BETWEEN OCCUPATIONAL AREAS AND INACCESSIBLE/REMOTE AREAS (R5) SHALL HAVE SHADOW SHIELDING TO MITIGATE DIRECT RADIATION SHINE OR BE JOGGLED, AS DETERMINED BY ENVIRONMENTAL AND NUCLEAR SAFETY. ALL PIPE/SLEEVE INTERFACES SHALL BE SEALED IN ACCORDANCE WITH APPLICABLE FIRE CODES TO MAINTAIN THE INTEGRITY OF THE FIRE WALL BETWEEN AREAS.
7. CONTENTS OF THIS DOCUMENT ARE DANGEROUS WASTE PERMIT AFFECTING.
8. THE PRESSURE BOUNDARY FOR ALL SYSTEMS, STRUCTURES, AND COMPONENTS ON THIS DRAWING IS IDENTIFIED AS QUALITY LEVEL CM AND SEISMIC CATEGORY SC-IV, UNLESS OTHERWISE NOTED.
9. DELETED
10. WASH RACKS THAT SUPPLY FLUID TO WASH RINGS IN VESSELS, SUMPS, AND LINERS ARE LOCATED AT A MINIMUM OF ONE BAROMETRIC HEIGHT ABOVE THE MAXIMUM PROCESS LIQUID LEVEL BETWEEN THE C3 AND C5 AREA.

11-14. DELETED

15. PIPE ROUTING LIMITED TO MAXIMUM OF AN 8 FOOT STRAIGHT VERTICAL DROP AT THE CONNECTION TO THE VESSEL OR BREAKPOT.
16. BLACK CELL PIPING TO BE SUPPORTED FOR MAXIMUM WATERFALL AND FOR THE EXPECTED DYNAMIC FORCES DURING THE TRANSITION FROM A DRY PIPE TO A LIQUID-FULL PIPE.
17. BRANCH TO BE CONNECTED TO HORIZONTAL RUN OF HEADER PIPE.
18. REVISION 1: INCORPORATED 24590-PTF-M6N-PWD-00019 AND 24590-PTF-DCA-M-03-018, REV. 0.
19. REVISION 2: REVISED TO INCORPORATE 24590-PTF-M6N-M80T-00007, -00026, -00037, 24590-PTF-M6N-PWD-00100, -00212, AND -00219. ADDED LINE SECTIONS, CHANGED LINE SIZES. ADDED VORTEX METER, REDUCER, VACUUM BREAKER, AND SPECTACLE BLIND. CHANGED QUALITY LEVEL, SEISMIC CATEGORY, AND SLOPES. DELETED SPARES AND NOZZLE NUMBERS. ADDED PIPING ISOMETRIC/JUMPER SUPPORT FRAME INTERFACE NOZZLE NUMBERS. ADDED/DELETED/REVISED NOTES, HOLDS, AND REFERENCES.

HOLD/OPEN ITEMS:

1. DELETED
2. PENDING ISSUE OF 24590-PTF-M6-PWD-00064.

REFERENCES:

1. THE REQUIRED BATCH SEQUENCES, PERMISSIVES, INTERLOCKS, ALARMS AND OPERATOR INTERFACE POINTS ARE FULLY DESCRIBED IN THE SOFTWARE FUNCTIONAL SPECIFICATION, FOR PWD-PLANT WASH AND DISPOSAL SYSTEM, 24590-PTF-3PS-PWD-T0001.

Please note that source, special nuclear, and byproduct materials, as defined in the Atomic Energy Act of 1954 (AEA) are regulated at the U. S. Department of Energy (DOE) facilities exclusively by DOE acting pursuant to its AEA authority. DOE asserts that pursuant to AEA, it has sole and exclusive responsibility and authority to regulate source, special nuclear, and byproduct materials at DOE-owned nuclear facilities. Information contained herein on radionuclides is provided for process description purposes only.

Q
QUALITY DESIGNATOR

REV	DESCRIPTION	ORG	CHKD	RVWD	APVD	DATE
2	REVISED PER NOTE 19	RW	[illegible]	ELS	RCL	02/05/08
1	REVISED PER NOTE 18	RM	AM	JJ	SG	09/11/03
0	ISSUED FOR CONSTRUCTION	R M	A L		R V	11/22/02

REVISION HISTORY

ISSUED BY RPP-WTP PDC
ISSUE STAMP

PROJECT No.	24590
SITE	HANFORD
AREA	200E
BUILDING No.	10

	BY	DATE
ORIGINATOR	RYAN MCCLAUGHRY	11/22/02
CHECKER	ALI ELKHADER	11/22/02
APPROVER	ROBERT VOKE	11/22/02
REVIEWER	N/A	N/A

CONTENT APPLICABLE TO ALARA? [X] YES [ ] NO
ADR NO. 24590-PTF ADR M-06-0001 REV: 0
SAFETY SCREEN REQUIRED? [X] YES [ ] NO E&NS INITIAL IF YES GDH

RIVER PROTECTION PROJECT
WASTE TREATMENT PLANT
2435 STEVENS CENTER PLACE
RICHLAND, WA 99354

CONTRACT No: DE-AC27-01RV14136

P&ID - PTF
PLANT WASH & DISPOSAL
UTILITY SERVICES
PLANT WASH RACK

SCALE: NONE
24590-PTF-M6-PWD-00026
REV 2

SAFETY SCREEN IS REQUIRED FOR DRAWING TYPES IDENTIFIED IN 24590-WTP-GPP-SREG-002
'E' SIZE 44x34
COMPUTER GENERATED - MANUAL CHANGES NOT PERMITTED
R10883480
01/30/2008 05:36:53 AM

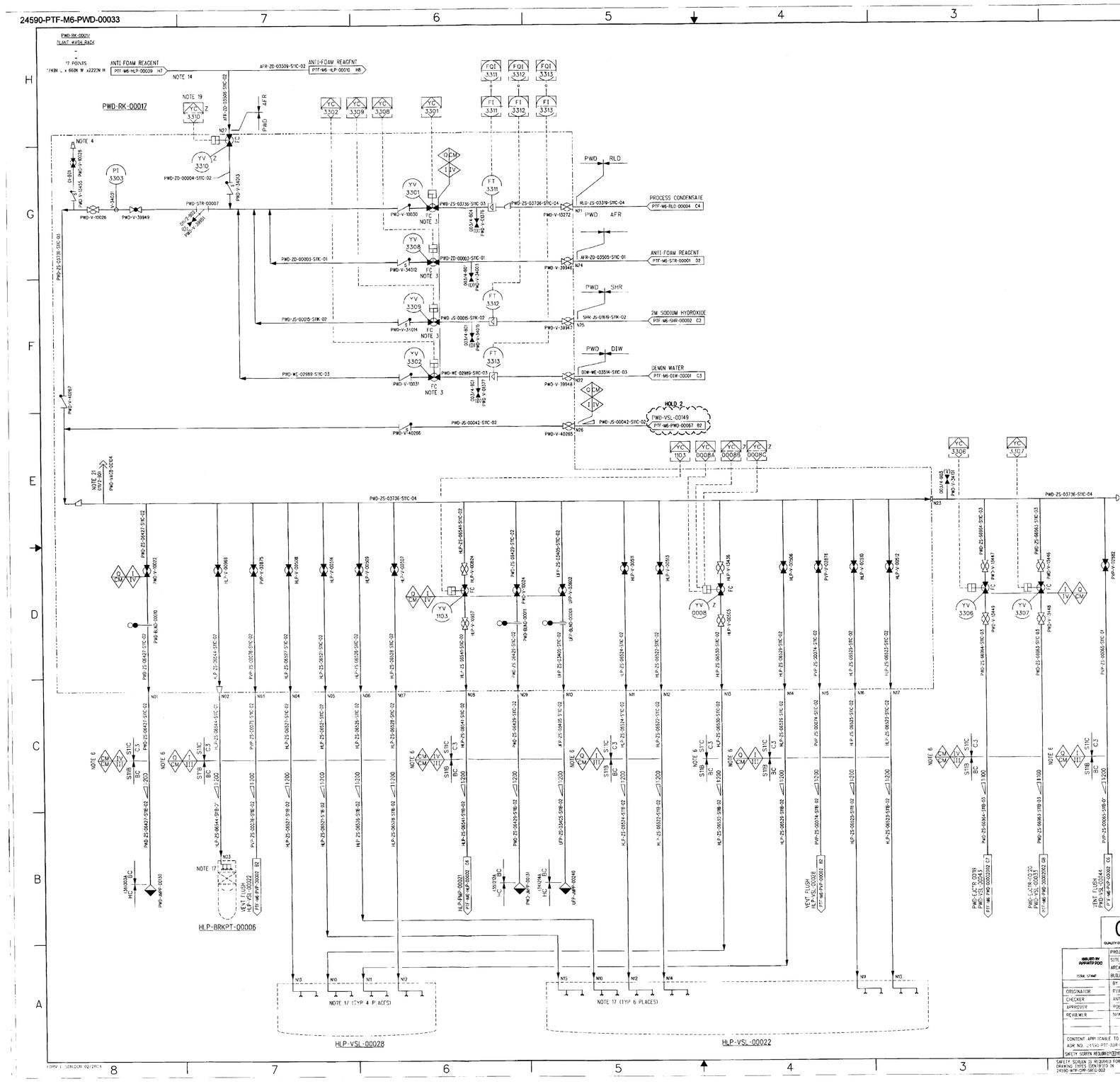

NOTES:

1. SEE DRAWINGS 24590-WTP-M6-50-00001 THROUGH 24590-WTP-M6-50-00008 FOR GENERAL NOTES, SYMBOLS AND LEGEND, AND GENERAL SLOPE REQUIREMENTS.
2. DELETED
3. VALVES INTERLOCKED TO PREVENT MULTIPLE VALVE OPERATION.
4. REAGENT/PLANT WASH/AIR PROVIDED AT LOCAL UTILITY STATION.
5. DELETED
6. PIPE SLEEVE PENETRATIONS BETWEEN OCCUPATIONAL AREAS AND INACCESSIBLE/REMOTE AREAS (RS) SHALL HAVE SHADOW SHIELDING TO MITIGATE DIRECT RADIATION SHINE OR BE JOGGLED, AS DETERMINED BY ENVIRONMENTAL AND NUCLEAR SAFETY. ALL PIPE/SLEEVE INTERFACES SHALL BE SEALED USING APPROVED FIRE RATED PENETRATION SEAL DESIGNS TO MAINTAIN THE INTEGRITY OF THE FIRE WALL BETWEEN AREAS.
7. THE CONTENTS OF THIS DOCUMENT ARE DANGEROUS WASTE PERMIT AFFECTING.

8-12. DELETED

13. REVISION 1: MAJOR REVISION: INCORPORATED 24590-PTF-M6N-PWD-00044 AND 24590-PTF-M6N-M8OT-00007, REMOVED HOLDS, REVISED NOTES WITH THE EXCEPTION OF THE CHANGING THE SEISMIC CLASS FROM SC-III TO SC-I AND QUALITY LEVEL FROM COMMERCIAL TO QL-1, ADDED ANTI-FOAM AND SODIUM HYDROXIDE TO QL-1, ADDED ANTI-FOAM AND SODIUM HYDROXIDE LINES PER RHEOLOGY AND PULSE JET MIXER CHANGES.
14. ANTI-FOAM REAGENT WILL BE PROVIDED ON AS NEEDED BASIS POST DESIGN BASIS EARTHQUAKE CONDITION.
15. DELETED
16. THE PRESSURE BOUNDARY FOR ALL SYSTEMS, STRUCTURES AND COMPONENTS ON THIS DRAWING IS QUALITY LEVEL OW AND SEISMIC CATEGORY SC-IV, UNLESS OTHERWISE NOTED.
17. PIPE ROUTING LIMITED TO MAXIMUM OF AN 8 FOOT STRAIGHT VERTICAL DROP AT THE CONNECTION TO THE VESSEL.
18. BLACK CELL PIPING TO BE SUPPORTED FOR WATERFALL AND FOR EXPECTED DYNAMIC FORCES DURING THE TRANSITION FROM A DRY PIPE TO A LIQUID FULL PIPE.
19. VALVE OPERATION REQUIRES ITS AIR.
20. WASH RACKS THAT SUPPLY FLUID TO WASH RINGS IN VESSELS, SUMPS, AND LINERS ARE LOCATED AT A MINIMUM OF ONE BAROMETRIC HEIGHT ABOVE THE MAXIMUM PROCESS LIQUID LEVEL BETWEEN THE C3 AND C5 AREA.
21. BRANCH TO BE CONNECTED TO HORIZONTAL RUN OF HEADER PIPE.
22. REVISION 2: MAJOR REVISION, NO REVISION CLOUDS REQUIRED. REVISED TO INCORPORATE 24590-PTF-M6N-M8OT-00025, -00026, -00037, -00038, 24590-PTF-M6N-PWD-00184, AND -00195, INCORPORATED AND FURTHER REVISED 24590-PTF-M6N-PWD-00220. ADDED VACUUM BREAKER AND VORTEX METERS. CHANGED/DELETED QUALITY LEVEL, SEISMIC CATEGORY, SLOPES, AND NOZZLE NUMBERS. ADDED PIPING ISOMETRIC/JUMPER SUPPORT FRAME INTERFACE NOZZLE NUMBERS. ADDED/DELETED/REVISED NOTES, HOLDS, AND REFERENCES.

HOLD/OPEN ITEMS:

1. DELETED
2. PENDING ISSUE OF 24590-PTF-M6-PWD-00067.

REFERENCES:

1. THE REQUIRED BATCH SEQUENCES, PERMISSIVES, INTERLOCKS, ALARMS, AND OPERATOR INTERFACE POINTS ARE FULLY DESCRIBED IN THE SOFTWARE FUNCTIONAL SPECIFICATION FOR "PWD-PLANT" WASH AND DISPOSAL SYSTEM, 24590-PTF-3PS-PWD-T0001.
2. THE REQUIRED BATCH SEQUENCES, PERMISSIVES, INTERLOCKS, ALARMS AND OPERATOR INTERFACE POINTS ARE FULLY DESCRIBED IN THE SOFTWARE FUNCTIONAL SPECIFICATION FOR HLP-HLW LAG STORAGE AND FEED BLENDING SYSTYEM, 24590-PTF-3PS-HLP-T0001.
3. FOR PERMISSIVES AND INTERLOCKS TO IMPORTANT TO SAFETY SYSTEM (ITS) REFER TO SAFETY SYSTEM REQUIREMENT SPECIFICATION FOR ANTI-FOAM ADDITION SYSTEM, 24590-PTF-3PS-FPJ-T0028 (FUTURE).

Please note that source, special nuclear, and byproduct materials, as defined in the Atomic Energy Act of 1954 (AEA) are regulated at the U. S. Department of Energy (DOE) facilities exclusively by DOE acting pursuant to its AEA authority. DOE asserts that pursuant to AEA, it has sole and exclusive responsibility and authority to regulate source, special nuclear, and byproduct materials at DOE-owned nuclear facilities. Information contained herein on radionuclides is provided for process description purposes only.

REV	DESCRIPTION	ORG	CHKD	RVWD	APVD	DATE
2	REVISED PER NOTE 22	RLW	AR	EGS	JSH	2/05/03
1	REVISED PER NOTE 13	SJ	SC	JJ	RES	06/10/04
0	ISSUED FOR CONSTRUCTION	PW	AM	N/A	RV	12/31/02

REVISION HISTORY

Q QUALITY DESIGNATION

ISSUED BY RPP-WTP PDC

ISSUE STAMP

	BY	DATE
ORIGINATOR	RYAN MCLAUGHMY	12/30/02
CHECKER	ANTONIO MOLINA	12/30/02
APPROVER	ROBERT WOKE	12/31/02
REVIEWER	N/A	

CONTENT APPLICABLE TO ALARA? [X] YES [ ] NO
ADM NO. 24590-PTF-ADM-M-06-0001 REV: 0
SAFETY SCREEN REQUIREMENTS [ ] NO ITEMS INITIAL IF YES

PROJECT No. 24590
SITE HANFORD
AREA 200E
BUILDING No. W1

BECHTEL NATIONAL, INC.
RIVER PROTECTION PROJECT
WASTE TREATMENT PLANT
2435 STEVENS CENTER PLACE
RICHLAND, WA 99354

CONTRACT No. DE-AC27-01RV14136

P&ID - PTF
PLANT WASH & DISPOSAL UTILITY SERVICES PLANT WASH RACK

SCALE NONE
24590-PTF-M6-PWD-00033
REV 2

SAFETY SCREEN IS REQUIRED FOR DRAWING TYPES IDENTIFIED IN 24590-WTP-DRR-GEN-002

E SIZE 44x34
COMPUTER GENERATED - MANUAL CHANGES NOT PERMITTED

COPYRIGHT 2003 BECHTEL NATIONAL, INC.

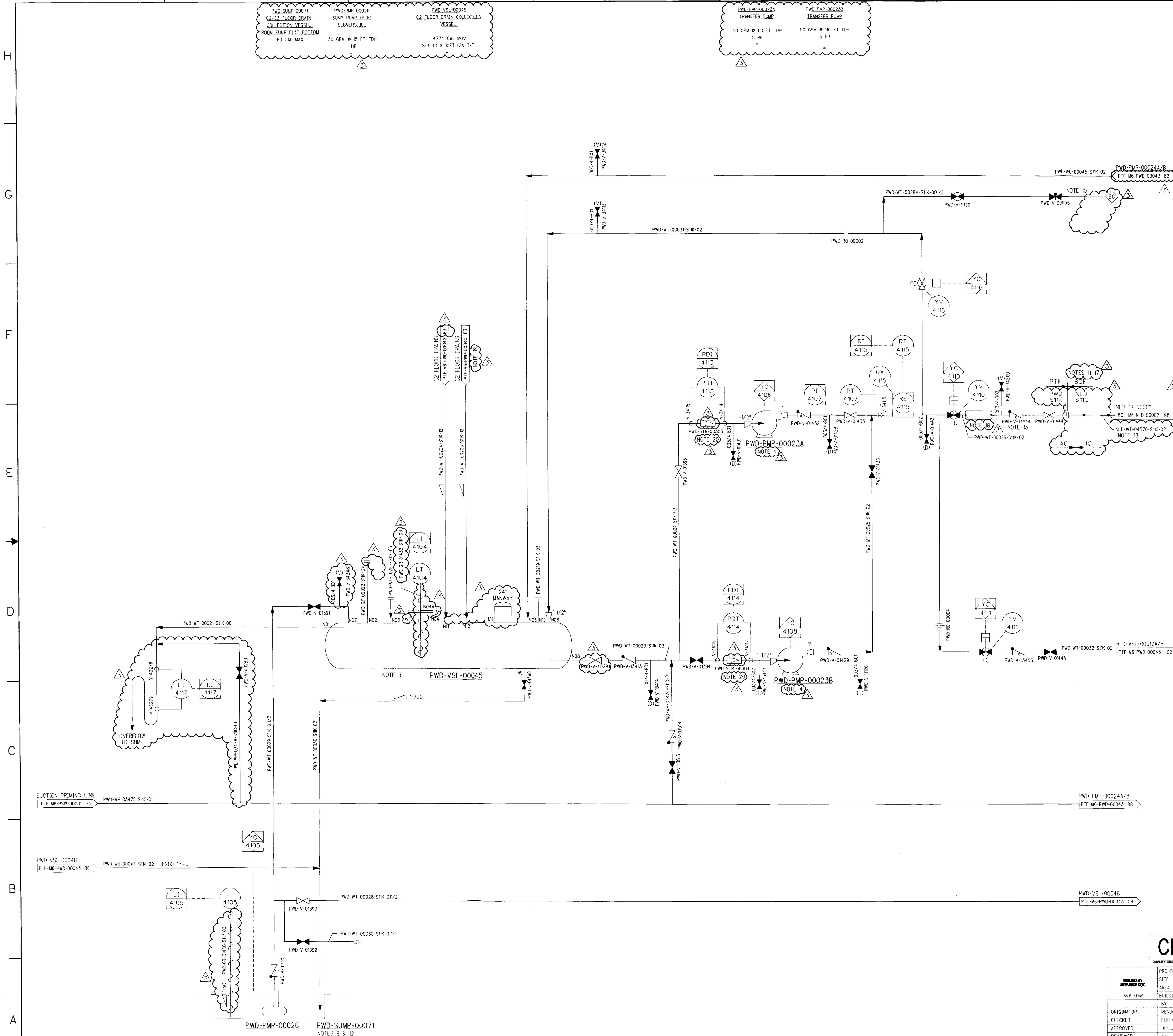

NOTES:

1. SEE DRAWINGS 24590-WTP-M6-50-00001 THROUGH 24590-WTP-M6-50-00008 FOR GENERAL NOTES, SYMBOLS AND LEGEND, AND GENERAL SLOPE REQUIREMENTS.
2. DELETED
3. VESSEL PWD-VSL-00045 IS LOCATED IN PIT AT ELEVATION (-)19'-0" (SEE DRAWING 24590-PTF-P1-P01T-00006. UNDER NORMAL OPERATING CONDITIONS PUMPS PWD-PMP-00023A/B EMPTY THE VESSEL. DURING ABNORMAL OPERATIONS, VESSEL PWD-VSL-00045 RECEIVES SPRINKLER WATER DISCHARGE FROM THE C2 AREA SPRINKLER SYSTEM. THIS EVENT MAY EXCEED THE CAPACITY OF THE VESSEL AND MAY RESULT IN WATER IN THE PIT. THE PIT IS SIZED TO CONTAIN ALL OF THIS WATER. PUMP CONTROLS, INSTRUMENTATION, VALVE ACTUATORS, AND SAMPLING POINT SHALL BE PLACED SUCH THAT THEY CANNOT BE SUBMERGED BY THIS EVENT.
4. PUMP ELEVATION, (EXCEPT PWD-PMP-00026), INSTRUMENTATION, VALVE ACTUATORS AND SAMPLE COLLECTION ARE ABOVE PIT HIGH WATER LEVEL RESULTING FROM FIRE WATER COLLECTION. LOCATE PUMP CONTROLS OUTSIDE PIT AREA.
5. DELETED
6. THE PRESSURE BOUNDARY FOR ALL SYSTEMS, STRUCTURES AND COMPONENTS ON THIS DRAWING IS QUALITY LEVEL CM AND SEISMIC CATEGORY SC-IV, UNLESS OTHERWISE NOTED.
7. DELETED
8. VALVES MUST BE ACCESSIBLE AND OPERABLE ABOVE HIGH WATER LEVEL BY POSITION OR REACH ROD.
9. SUMP SIZE IS 2'-6" IN DIAMETER BY 1'-6' DEEP.
10. CONTENTS OF THIS DOCUMENT ARE DANGEROUS WASTE PERMIT AFFECTING.
11. BALANCE OF FACILITY/PRETREATMENT FACILITY BATTERY LIMIT IS 5 FEET OUTSIDE OF PRETREATMENT BUILDING WALL.
12. PWD-SUMP-00071 WILL BE COVERED WITH STAINLESS STEEL REMOVABLE SCREEN PLATE TO PROTECT PIPING SYSTEM FROM DEBRIS. MAX SCREEN SIZE 1/4" DIAMETER HOLE.
13. PLACE CHECK VALVE AT THE PRETREATMENT/BALANCE OF FACILITIES INTERFACE.
14. DELETED
15. LOCATE THE SAMPLE CONNECTION IN AN ACCESSIBLE AREA AND IN A SAFE LOCATION TO FACILITATE SAMPLE COLLECTION. THE BALL VALVE, NEEDLE VALVE, AND SAMPLE CONNECTION POINT SHALL BE WITHIN OPERATOR'S IMMEDIATE REACH WHILE COLLECTING A SAMPLE. PROVIDE A NIPPLE DOWN STREAM OF THE NEEDLE VALVE WITH A MNPT TERMINUS CLOSED BY A FNPT CAP. DO NOT POCKET THE LINE. DOWN STREAM OF THE BALL VALVE, THE LINE SHALL BE FREE-DRAINING.
16. REVISION 2: REVISED PER LAYOUT AND INCORPORATED 24590-PTF-M6N-PWD-00145, 00147, 00186, AND .00198. PIPE LINE PWD-WT-00026-S11K-02 REQUIRES INSULATION AND HEAT TRACING FROM ROOM P-0139 THROUGH BALANCE OF FACILITIES INTERFACE, LINE NLD-ZA-04137-P10C-C2 FOR FREEZE PROTECTION.
17. REFER TO DETAIL 10 ON 24590-BOF-C0-NLD-00033 FOR BOF/PTF INTERFACE.
18. PIPE LINE PWD-WT-00026-S11K-02 REQUIRES INSULATION AND HEAT TRACING FROM ROOM P-0139 THROUGH BALANCE OF FACILITIES INTERFACE, LINE NLD-WT-04570-S11C-02 FOR FREEZE PROTECTION.
19. VESSEL VENTING IS ACCOMPLISHED THROUGH LINES PWD-WT-00204-S11K-12 AND PWD-WT-00205-S11K-12 WHICH PROVIDE AN OPEN PATH TO ATMOSPHERE IN C2 ROOMS.
20. START UP STRAINERS TO BE PERMANENTLY INSTALLED.
21. REVISION 3: REVISED TO INCORPORATE 24590-PTF-M6N-M80T-00029, -00037, AND 24590-WTP-FC-P-06-0071. REMOVED SEISMIC/QUALITY FLAGS. ADDED INSTRUMENTATION VALVE, AND INCLUDED REFERENCE. ADDED/DELETED/REVISED NOTES AND REFERENCES.

HOLD/OPEN ITEMS:

NONE

REFERENCES:

1. THE REQUIRED BATCH SEQUENCES, PERMISSIVES, INTERLOCKS, ALARMS AND OPERATOR INTERFACE POINTS ARE FULLY DESCRIBED IN THE SOFTWARE FUNCTIONAL SPECIFICATION, FOR PWD-PLANT WASH AND DISPOSAL SYSTEM, 24590-PTF-3PS-PWD-T0001.
2. SEE 24590-PTF-J8-10-00006 FOR RADAR INSTALLATION IN SUMPS.

Please note that source, special nuclear, and byproduct materials, as defined in the Atomic Energy Act of 1954 (AEA) are regulated at the U. S. Department of Energy (DOE) facilities exclusively by DOE acting pursuant to its AEA authority. DOE asserts that pursuant to AEA, it has sole and exclusive responsibility and authority to regulate source, special nuclear, and byproduct materials at DOE-owned nuclear facilities. Information contained herein on radionuclides is provided for process description purposes only.

CM
QUALITY DESIGNATOR

REVISION HISTORY

REV	DESCRIPTION	ORG	CHKD	RVWD	APVD	DATE
3	REVISED PER NOTE 21	SS		CER	JAM	12/19/07
2	REVISED PER NOTE 16	RM	WWH	JJ	RV	11/29/04
0	ISSUED FOR CONSTRUCTION	CM	AE	N/A	CD	09/19/02

ISSUED BY RPP-WTP PDC
ISSUE STAMP

PROJECT No.	24590
SITE	HANFORD
AREA	200E
BUILDING No.	10

RIVER PROTECTION PROJECT
WASTE TREATMENT PLANT
2435 STEVENS CENTER PLACE
RICHLAND, WA 99354

	BY	DATE
ORIGINATOR	MENDOZA, CONRADO	09/17/02
CHECKER	ELKHADER, ALI	09/17/02
APPROVER	DUNCAN, GARTH	09/19/02
REVIEWER	N/A	

CONTRACT No: DE-AC27-01RV14136

P&ID - PTF
PLANT WASH & DISPOSAL SYSTEM
C2 AREA FLOOR DRAINS
COLLECTION VESSEL

CONTENT APPLICABLE TO ALARA? [X] YES [ ] NO
ADR NO. 24590-PTF-ADR-M-02-003 REV: 4
SAFETY SCREEN REQUIRED? [X] YES [ ] NO E&NS INITIAL IF YES GVD

SCALE: NONE
24590-PTF-M6-PWD-00041
REV 3

SAFETY SCREEN IS REQUIRED FOR DRAWING TYPES IDENTIFIED IN 24590-WTP-GPP-SREG-002
'E' SIZE - 44x34
COMPUTER GENERATED - MANUAL CHANGES NOT PERMITTED
12/12/2007 02:47:23 PM

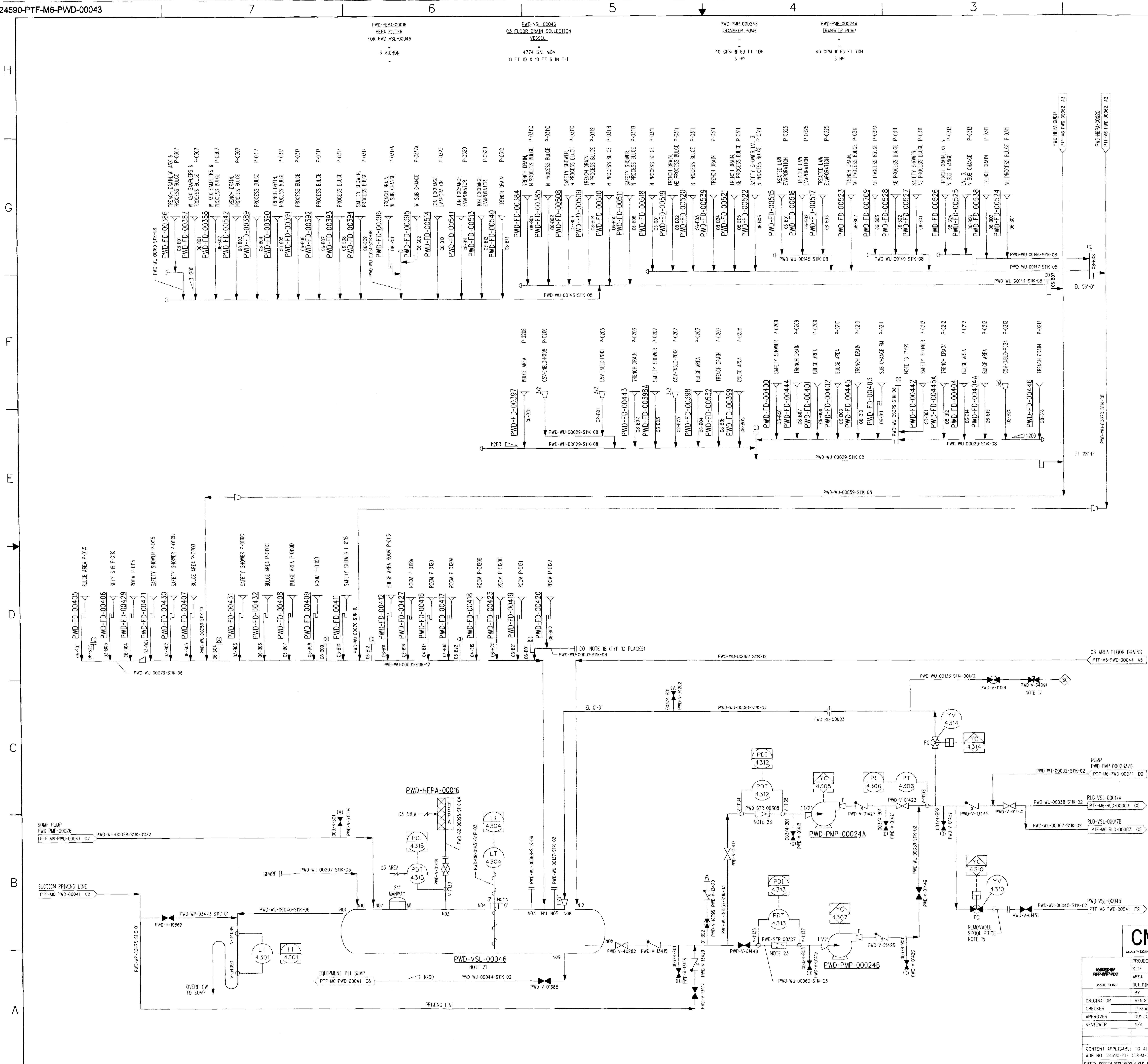

NOTES:

1. SEE DRAWINGS 24590-WTP-M6-50-00001 THROUGH 24590-WTP-M6-50-00008 FOR GENERAL NOTES, SYMBOLS, AND LEGEND, AND GENERAL SLOPE REQUIREMENTS.

2.-3. DELETED

4. DRAINS LESS THAN OR EQUAL TO 3" WILL HAVE A 1/4" PER FOOT MINIMUM SLOPE (EQUIVALENT TO 1:50). DRAINS 4" TO 6' WILL HAVE A 1/8" PER FOOT MINIMUM SLOPE (EQUIVALENT 1:100) UNLESS OTHERWISE NOTED. DRAINS GREATER THAN OR EQUAL TO 8" DO NOT POCKET, UNLESS OTHERWISE NOTED.

5. DELETED

6. DURING ABNORMAL OPERATIONS, VESSEL PWD-VSL-00046 RECEIVES SPRINKLER WATER DISCHARGE FROM THE C3 AREA SPRINKLER SYSTEM. THIS EVENT MAY EXCEED THE CAPACITY OF THE VESSEL AND MAY RESULT IN WATER IN THE PIT. THE PIT IS SIZED TO CONTAIN ALL OF THIS WATER. PUMP CONTROLS, INSTRUMENTATION, VALVE ACTUATORS, HEPA, AND SAMPLING POINT SHALL BE PLACED SUCH THAT THEY CANNOT BE SUBMERGED BY THIS EVENT.

7.-9. DELETED

10. THE PRESSURE BOUNDARY FOR ALL SYSTEMS, STRUCTURES AND COMPONENTS ON THIS DRAWING IS QUALITY LEVEL CM AND SEISMIC CATEGORY SC-IV, UNLESS OTHERWISE NOTED.

11.-13. DELETED

14. CONTENTS OF THIS DOCUMENT ARE DANGEROUS WASTE PERMIT AFFECTING.

15. THE SPOOL PIECE WILL BE INSTALLED DURING COLD COMMISSIONING AND WILL BE REMOVED PRIOR TO NORMAL OPERATION. OPERATIONAL REQUIREMENTS MAY ALSO DICTATE WHEN THE SPOOL PIECE IS RE-INSTALLED. TWO 2" 150-LB RF FLANGES WILL BE INSTALLED WHEN THE SPOOL PIECE IS REMOVED.

16. PROVIDE SCREEN ON TRENCH COVER OR GRATING TO PREVENT 1/4 INCH OR GREATER PARTICLES FROM ENTERING DRAIN.

17. LOCATE THE SAMPLE CONNECTION IN AN ACCESSIBLE AREA AND IN A SAFE LOCATION TO FACILITATE SAMPLE COLLECTION. THE BALL VALVE, NEEDLE VALVE AND SAMPLE CONNECTION POINT SHALL BE WITHIN OPERATOR'S IMMEDIATE REACH WHILE COLLECTING A SAMPLE. PROVIDE A NIPPLE DOWNSTREAM OF THE NEEDLE VALVE WITH A MNPT TERMINUS CLOSED BY A FNPT CAP. DO NOT POCKET THE LINE. DOWNSTREAM OF THE BALL VALVE, THE LINE SHALL BE FREE DRAINING.

18. THE BLIND FLANGE SYMBOL REFERS TO A PIPING FLOOR CLEAN OUT (CO), AS NOTED AND DESCRIBED IN "PIPE MATERIAL CLASSIFICATION PIPE CLASS S11K", DOCUMENT NUMBER 24590-WTP-3PB-P000-TS11K.

19. REVISION 2: MAJOR REVISION INCORPORATING 24590-PTF-M6N-PWD-00086, -00115, -00146, AND -00172. 24590-PTF-M6N-PWD-00160 WAS INCORPORATED FOR ELEVATION 77'-0". DUE TO SPACE LIMITATIONS FLOOR DRAINS AT 77'-0" ELEVATION AND ABOVE HAVE BEEN TRANSFERRED TO NEW DRAWING 24590-PTF-M6-PWD-00062.

20. MINIMUM C2/C3 DRAIN P-TRAP SEAL HEIGHT IS DETERMINED BY USING THREE (3) 90 DEGREE LONG RADIUM ELBOWS OF THE SAME PIPE DIAMETER IN A FITTING-TO-FITTING CONFIGURATION.

21. LINES TO AND FROM THE VESSEL SHALL BE FREE DRAINING UNLESS OTHERWISE NOTED. PROVIDE VENTS AND DRAINS AS NEEDED. GRAVITY FLOW LINES SHALL BE FREE DRAINING WITH NO POCKETING.

22. P-TRAPS ON THIS DRAWING MAY HAVE BEEN DESIGNED, FABRICATED, INSTALLED, AND/OR EMBEDDED WHERE THEY ARE NO LONGER REQUIRED DUE TO DESIGN EVOLUTION IN THE RADIOLOGICAL CLASSIFICATION OF SOME OF THE ROOMS.

23. STARTUP STRAINERS TO BE PERMANENTLY INSTALLED.

24. REVISION 3: MAJOR REVISION. NO REVISION CLOUDS REQUIRED. REVISED TO INCORPORATE 24590-PTF-M6N-M80T-00029, -00037, 24590-PTF-M6N-PWD-00205, -00217, 00229, -00237, -00302, AND 24590-WTP-CDR-CON-05-0125. REMOVED SEISMIC AND QUALITY BREAKS, ADDED REFERENCE CALL OUTS AND UPDATED P-TRAP SYMBOL. ADDED/REVISED NOTES.

HOLD/OPEN ITEMS:

1.-2. DELETED

REFERENCES:

1. THE REQUIRED BATCH SEQUENCES, PERMISSIVES, INTERLOCKS, ALARMS AND OPERATOR INTERFACE POINTS ARE FULLY DESCRIBED IN THE SOFTWARE FUNCTIONAL SPECIFICATION, FOR PWD-PLANT WASH AND DISPOSAL SYSTEM, 24590-PTF-3PS-PWD-T0001.

Please note that source, special nuclear, and byproduct materials, as defined in the Atomic Energy Act of 1954 (AEA) are regulated at the U. S. Department of Energy (DOE) facilities exclusively by DOE acting pursuant to its AEA authority. DOE asserts that pursuant to AEA, it has sole and exclusive responsibility and authority to regulate source, special nuclear, and byproduct materials at DOE-owned nuclear facilities. Information contained herein on radionuclides is provided for process description purposes only.

REVISION HISTORY

REV	DESCRIPTION	ORG	CHKD	RVWD	APVD	DATE
3	REVISED PER NOTE 24	SS		ELS		12/18/07
2	MAJOR REVISION, SEE NOTE 19	WR	RM	JJ	RV	07/27/04
0	ISSUED FOR CONSTRUCTION	CM	AB	N/A	GD	09/19/02

CM
QUALITY DESIGNATOR

ISSUED BY RPP-WTP PDC
ISSUE STAMP

PROJECT No.	24590
SITE	HANFORD
AREA	200E
BUILDING No.	10

	BY	DATE
ORIGINATOR	MENDOZA, CONRADO	09/17/02
CHECKER	ELKHADER, ALI	09/17/02
APPROVER	DUNCAN, GARTH	09/19/02
REVIEWER	N/A	

CONTENT APPLICABLE TO ALARA? [X] YES [ ] NO
ADR NO. 24590-PTF-ADR-M-02-003 REV: 4
SAFETY SCREEN REQUIRED? [X] YES [ ] NO E&NS INITIAL IF YES GDR

BECHTEL
RIVER PROTECTION PROJECT
WASTE TREATMENT PLANT
2435 STEVENS CENTER PLACE
RICHLAND, WA 99354

CONTRACT No: DE-AC27-01RV14136

P&ID - PTF
PLANT WASH & DISPOSAL SYSTEM
C3 AREA FLOOR DRAINS
(EL 0-0 THRU 56-0)

SCALE: NONE | 24590-PTF-M6-PWD-00043 | REV 3

SAFETY SCREEN IS REQUIRED FOR DRAWING TYPES IDENTIFIED IN 24590-WTP-GPP-SREG-002

'E' SIZE - 44x34
COMPUTER GENERATED - MANUAL CHANGES NOT PERMITTED

12/12/2007 02:41:20 PM

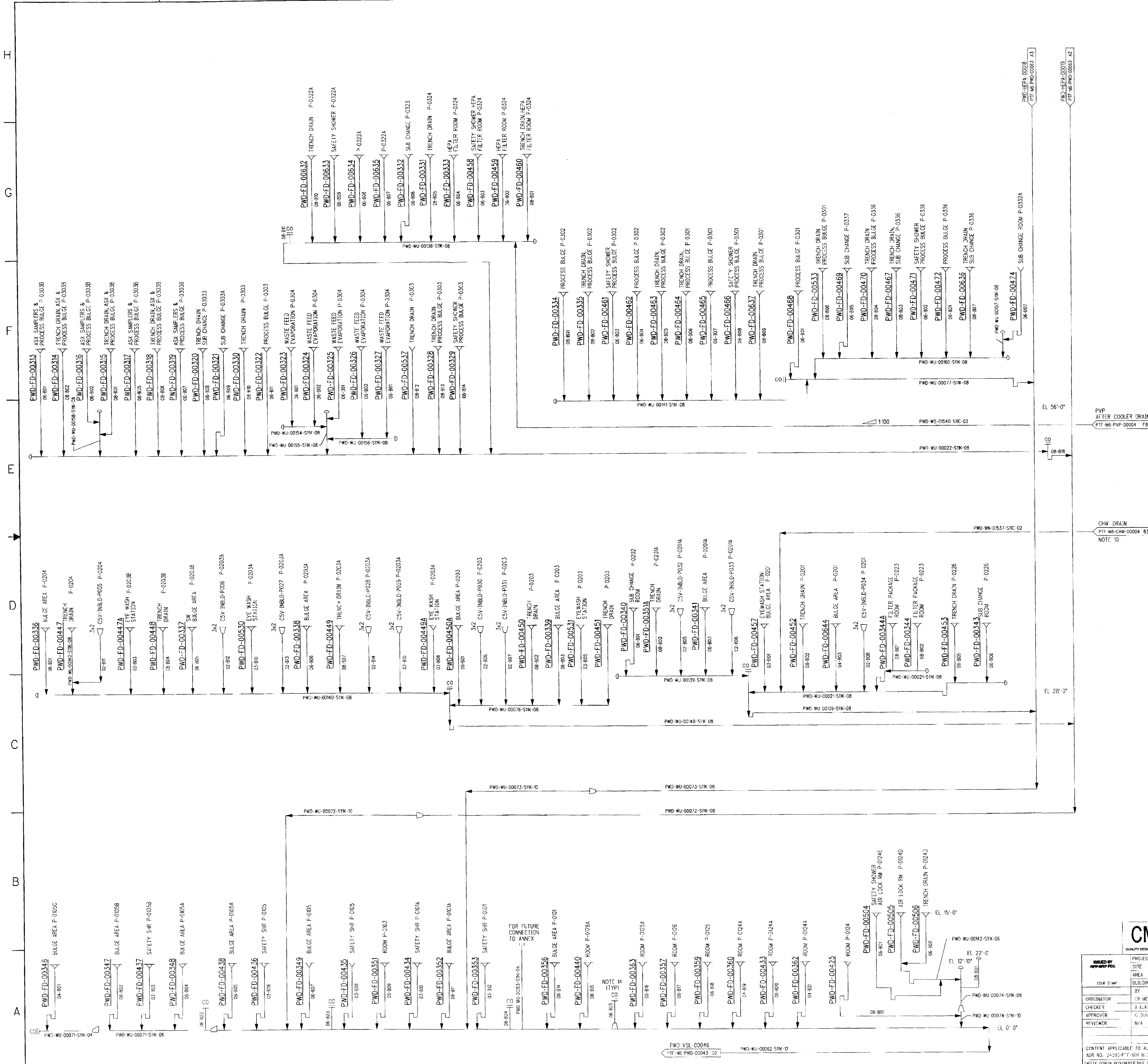

NOTES:

1. SEE DRAWINGS 24590-WTP-M6-50-00001 THROUGH 24590-WTP-M6-50-00008 FOR GENERAL NOTES, SYMBOLS AND LEGEND, AND GENERAL SLOPE REQUIREMENTS.

2.-3. DELETED

4. DRAINS LESS THAN OR EQUAL TO 3" WILL HAVE A 1/4" PER FOOT MINIMUM SLOPE (EQUIVALENT TO 1:50). DRAINS 4" TO 6" WILL HAVE A 1/8" PER FOOT MINIMUM SLOPE (EQUIVALENT TO 1:100). DRAINS GREATER THAN OR EQUAL TO 8" DO NOT POCKET, UNLESS OTHERWISE NOTED.

5.-9. DELETED

10. THIS DRAIN IS ISOLATED FROM THE RISER BY A NORMALLY CLOSED VALVE AT THE SOURCE.

11. CONTENTS OF THIS DOCUMENT ARE DANGEROUS WASTE PERMIT AFFECTING.

12. THE PRESSURE BOUNDARY FOR ALL SYSTEMS, STRUCTURES AND COMPONENTS ON THIS DRAWING IS QUALITY LEVEL CM AND SEISMIC CATEGORY SC-IV, UNLESS OTHERWISE NOTED.

13. DELETED

14. THE BLIND FLANGE SYMBOL REFERS TO A PIPING FLOOR CLEAN OUT (CO) AS NOTED AND DESCRIBED IN "PIPE MATERIAL CLASSIFICATION PIPE CLASS S11K," DOCUMENT NUMBER 24590-WTP-3PB-P000-TS11K.

15. REVISION 2: MAJOR REVISION, INCORPORATING 24590-PTF-M6N-PWD-00127, -00138, AND -00173. 24590-PTF-M6N-PWD-00161 WAS INCORPORATED FOR ELEVATION 77'-0". DUE TO SPACE LIMITATIONS FLOOR DRAINS AT 77'-0" ELEVATION AND ABOVE HAVE BEEN TRANSFERRED TO NEW DRAWING 24590-PTF-M6-PWD-00063.

16. MINIMUM C2/C3 DRAIN P-TRAP SEAL HEIGHT IS DETERMINED BY USING THREE (3) 90 DEGREE LONG RADIUS ELBOWS OF THE SAME PIPE DIAMETER, IN A FITTING-TO-FITTING CONFIGURATION.

17. P-TRAPS ON THIS DRAWING MAY HAVE BEEN DESIGNED, FABRICATED, INSTALLED, AND/OR EMBEDDED WHERE THEY ARE NO LONGER REQUIRED DUE TO DESIGN EVOLUTION IN THE RADIOLOGICAL CLASSIFICATION OF SOME OF THE ROOMS.

18. REVISION 3: MAJOR REVISION, NO REVISION CLOUDS REQUIRED. REVISED TO INCORPORATE 24590-PTF-M6N-M80T-00037, 24590-PTF-M6N-PWD-00206, -00224, -00238, AND -00252. REMOVED QUALITY/SEISMIC BREAKS, UPDATED ROOM NAMES AND NUMBERS, EQUIPMENT CALL OUTS, AND UPDATED P-TRAP SYMBOL. REMOVED REDUCER ON LINE PWD-WN-01537 S11C-02 THAT WAS ADDED ON DCN 24590-PTF-M6N-PWD-00206. ADDED/DELETED/REVISED NOTES.

HOLD/OPEN ITEMS:

1. DELETED

REFERENCES:

NONE

Please note that source, special nuclear, and byproduct materials, as defined in the Atomic Energy Act of 1954 (AEA) are regulated at the U. S. Department of Energy (DOE) facilities exclusively by DOE acting pursuant to its AEA authority. DOE asserts that pursuant to AEA, it has sole and exclusive responsibility and authority to regulate source, special nuclear, and byproduct materials at DOE-owned nuclear facilities. Information contained herein on radionuclides is provided for process description purposes only.

CM
QUALITY DESIGNATOR

REV	DESCRIPTION	ORG	CHKD	RVWD	APVD	DATE
3	REVISED PER NOTE 18	SS	[illegible]	CEA / ELS	JMM / RV	12/19/07
2	MAJOR REVISION, SEE NOTE 15 REVISED AS NOTED AND INCORPORATED	WR	RM	JJ	RV	07/27/04
0	ISSUED FOR CONSTRUCTION	CM	AE	N/A	GD	9/19/02

REVISION HISTORY

ISSUED BY RPP-WTP PDC
ISSUE STAMP

PROJECT No.	24590	
SITE	HANFORD	
AREA	200E	
BUILDING No.	10	
	BY	DATE
ORIGINATOR	CB MENDOZA	9/17/02
CHECKER	A ELKHARDER	9/17/02
APPROVER	G DUNCAN	9/19/02
REVIEWER	N/A	

CONTENT APPLICABLE TO ALARA? [X] YES [ ] NO
ADR NO. 24590-PTF-ADR-M-02-003 REV: 4
SAFETY SCREEN REQUIRED? [X] YES [ ] NO E&NS INITIAL IF YES GDH

BECHTEL
RIVER PROTECTION PROJECT
WASTE TREATMENT PLANT
2435 STEVENS CENTER PLACE
RICHLAND, WA 99354

CONTRACT No: DE-AC27-01RV14136

P&ID - PTF
PLANT WASH & DISPOSAL SYSTEM
C3 AREA FLOOR DRAINS
(EL 0-0 THRU 56-0)

SCALE: NONE | 24590-PTF-M6-PWD-00044 | REV 3

SAFETY SCREEN IS REQUIRED FOR DRAWING TYPES IDENTIFIED IN 24590-WTP-GPP-SREG-002

'E' SIZE - 44x34
COMPUTER GENERATED - MANUAL CHANGES NOT PERMITTED

R10860113

12/11/2007 02:41:48 PM

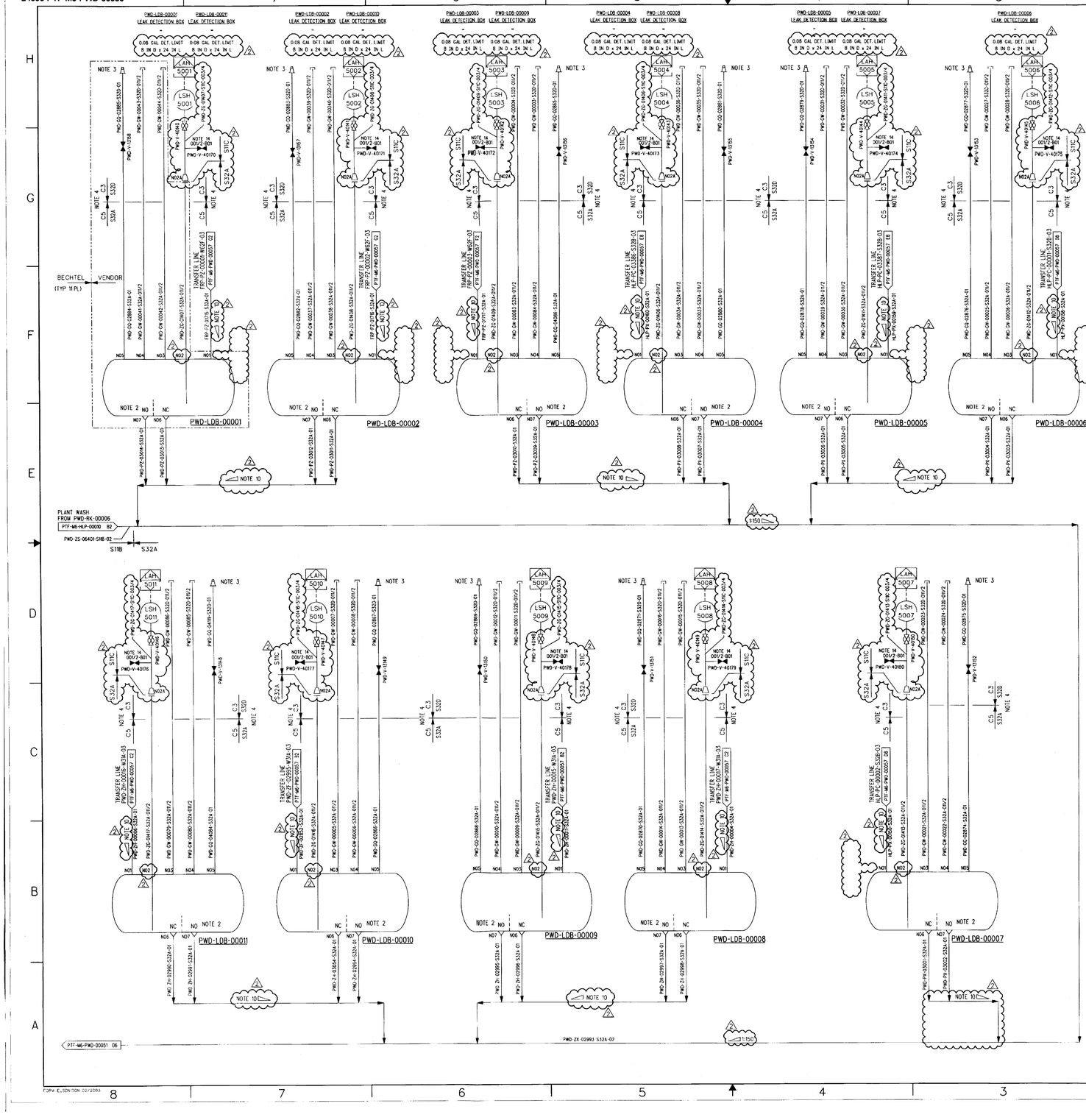

NOTES:

1. SEE DRAWINGS 24590-WTP-M6-50-00001 THROUGH 24590-WTP-M6-50-00008 FOR GENERAL NOTES, SYMBOLS AND LEGEND, AND GENERAL SLOPE REQUIREMENTS.
2. OVERFLOW AND DRAIN PLUGS ARE OPERATED REMOTELY VIA RODS WHICH EXTEND ABOVE ELEVATION 0'-0" THROUGH PIPE SLEEVES. THE DRAIN PLUG IS INSTALLED IN THE CLOSED POSITION TO CREATE A DETECTABLE LEVEL. UPON LEVEL DETECTION THE PLUG IS LIFTED TO DRAIN THE LEAK DETECTION BOX. THE OVERFLOW PLUG IS NORMALLY OPEN FOR OVERFLOW PROTECTION. BOTH PLUGS WILL BE CLOSED FOR PNEUMATIC TESTING.
3. QUICK CONNECTION IS PROVIDED FOR PNEUMATIC TESTING OF THE LEAK DETECTION BOX AND THE TRANSFER PIPE JACKET.
4. PIPE SLEEVE PENETRATIONS BETWEEN OCCUPATIONAL AREAS AND INACCESSIBLE/REMOTE AREAS (R5) SHALL HAVE SHADOW SHIELDING TO MITIGATE DIRECT RADIATION SHINE OR BE JOGGLED AS DETERMINED BY ENVIRONMENTAL AND NUCLEAR SAFETY. ALL PIPE/SLEEVE INTERFACES SHALL BE SEALED USING APPROVED FIRE-RATED PENETRATION SEAL TO MAINTAIN THE INTEGRITY OF THE FIRE WALL BETWEEN AREAS.
5. THE LEAK DETECTION BOXES WILL BE SUPPLIED WITH AN INTERNAL WEIR, WHICH WILL IMPOUND THE LEAKED LIQUIDS AROUND THE SENSORS, ASSURING AN EARLY DETECTION OF LEAKS.
6. THE PRESSURE BOUNDARY FOR ALL SYSTEMS, STRUCTURES, AND COMPONENTS SHOWN ON THIS DRAWING ARE IDENTIFIED AS QUALITY LEVEL QM AND SEISMIC CATEGORY SC-III, UNLESS OTHERWISE NOTED.
7. THE INTERLOCKS ASSOCIATED WITH EACH LEAK DETECTION BOX ARE GIVEN IN TABLE 1.
8. CONTENTS OF THIS DRAWING ARE DANGEROUS WASTE PERMIT AFFECTING.
9. DELETED
10. DRAIN LINES TO/FROM THE LEAK DETECTION BOXES SHALL BE SELF DRAINING.
11. 12. DELETED
13. REVISION 1: REVISED INCORPORATING 24590-PTF-M6N-M8OT-00007 AND 24590-PTF-M6N-PWD-00058. NOTE 1 DRAWING REFERENCE CHANGED FROM 24590-WTP-M5-50-00006 TO 24590-WTP-M6-50-00006. UPDATED CONTROLLED EQUIPMENT IN TABLE 1 AND MODIFIED NOTE 6.
14. BLOWDOWN CONNECTION PROVIDED BY C & I.
15. REVISION 2: REVISED TO INCORPORATE 24590-PTF-M6N-M8OT-00027, -00037, AND -00038. ADDED ROOT AND BLOWDOWN VALVES FOR LEVEL INSTRUMENTATION. REVISED/ADDED/DELETED NOTES AND REFERENCES.

HOLD/OPEN ITEMS:

NONE

REFERENCES:

1. THE REQUIRED BATCH SEQUENCES, PERMISSIVES, INTERLOCKS, ALARMS AND OPERATOR INTERFACE POINTS ARE FULLY DESCRIBED IN THE SOFTWARE FUNCTIONAL SPECIFICATION FOR PTF-PLANT WASH & DISPOSAL (PWD) SYSTEM, 24590-PTF-3PS-PWD-T0001.
2. DELETED
3. EQUIPMENT ASSEMBLY - PTF PLANT WASH AND DISPOSAL SYSTEM SECONDARY CONTAINMENT LEAK DETECTION BOX, 24590-PTF-MX-PWD-00004.
4. PTF INSTALLATION DETAILS LEAK DETECTION BOX THERMAL DISPERSION TYPE, 24590-PTF-JB-10-00002.

Please note that source, special nuclear, and byproduct materials, as defined in the Atomic Energy Act of 1954 (AEA) are regulated at the U. S. Department of Energy (DOE) facilities exclusively by DOE acting pursuant to its AEA authority. DOE asserts that pursuant to AEA, it has sole and exclusive responsibility and authority to regulate source, special nuclear, and byproduct materials at DOE-owned nuclear facilities. Information contained herein on radionuclides is provided for process description purposes only.

TABLE 1. OPERATING TRIPS, ALARMS AND INTERLOCKS

PLANT ITEM	INSTRUMENT	ALARMS AND ASSOCIATED TRIPS	CONTROLLED EQUIPMENT
PWD-LDB-00001	LSH-5001	HIGH-ALARM, THEN STOP FEED TRANSFER	DOE FEED PUMP AND FRP-PMP-00001
PWD-LDB-00002	LSH-5002	HIGH-ALARM, THEN STOP FEED TRANSFER	DOE FEED PUMP AND FRP-PMP-00001
PWD-LDB-00003	LSH-5003	HIGH-ALARM, THEN STOP FEED TRANSFER	DOE FEED PUMP AND FRP-PMP-00001
PWD-LDB-00004	LSH-5004	HIGH-ALARM, THEN STOP FEED TRANSFER	HLP-PMP 00019A/B AND HLP-PMP-00017B
PWD-LDB-00005	LSH-5005	HIGH-ALARM, THEN STOP FEED TRANSFER	HLP-PMP 00019A/B AND HLP-PMP-00017B
PWD-LDB-00006	LSH-5006	HIGH-ALARM, THEN STOP FEED TRANSFER	HLP-PMP 00019A/B AND HLP-PMP-00017B
PWD-LDB-00007	LSH-5007	HIGH-ALARM, THEN STOP FEED TRANSFER	HLP-PMP 00019A/B AND HLP-PMP-00017B
PWD-LDB-00008	LSH-5008	HIGH-ALARM, THEN STOP FEED TRANSFER	HLW-RLD-EJCTR-00007, HLW-RLD-EJCTR-00050
PWD-LDB-00009	LSH-5009	HIGH-ALARM, RECEIVES FROM AN INSTALLED SPARE LINE	SPARE
PWD-LDB-00010	LSH-5010	HIGH-ALARM, THEN STOP FEED TRANSFER	HLW-RLD-EJCTR-00018A/B
PWD-LDB-00011	LSH-5011	HIGH-ALARM, THEN STOP FEED TRANSFER	HLW-RLD-EJCTR-00038, HLW-RLD-EJCTR-00056

REV	DESCRIPTION	ORG	CHKD	RVWD	APVD	DATE
2	REVISED PER NOTE 15		JT	APP	BM	EAS	JBA	11/22/07
1	REVISED PER NOTE 13		KC	AM	JJ	RES	02/15/05
0	ISSUED FOR CONSTRUCTION		RM	SD	N/A	QD	10/30/02

CM QUALITY DESIGNATOR

REVISION HISTORY

ISSUED BY RPP-WTP PDC		
	PROJECT No.	24590
	SITE	HANFORD
	AREA	200E
ISSUE STAMP	BUILDING No.	10

	BY	DATE
ORIGINATOR	P MOLINA	10/22/02
CHECKER	SK DAS	10/22/02
APPROVER	GM DUNCAN	10/30/02
REVIEWER	N/A	

CONTENT APPLICABLE TO ALARA? [X] YES [ ] NO
ADR NO. 24590-PTF-ADR-M-02-004 REV: 0
SAFETY SCREEN REQUIRED? [ ] YES [X] NO EMS INITIAL IF YES
SAFETY SCREEN IS REQUIRED FOR DRAWING TYPES IDENTIFIED IN 24590-WTP-DPP-ENG-002

BECHTEL
RIVER PROTECTION PROJECT
WASTE TREATMENT PLANT
2435 STEVENS CENTER PLACE
RICHLAND, WA 99354

CONTRACT No: DE-AC27-01RV14136

P&ID-PTF
PLANT WASH & DISPOSAL SYSTEM
SECONDARY CONTAINMENT LEAK DETECTION SYSTEM

SCALE: NONE
24590-PTF-M6-PWD-00050
REV 2

E SIZE 44x34
COMPUTER GENERATED MANUAL CHANGES NOT PERMITTED

11/27/2007 09:04:57 AM

C:\Work\24590\M6\PWD\24590-PTF-M6-PWD-00050.dgn

FORM E_SCN1DGN 02/2003

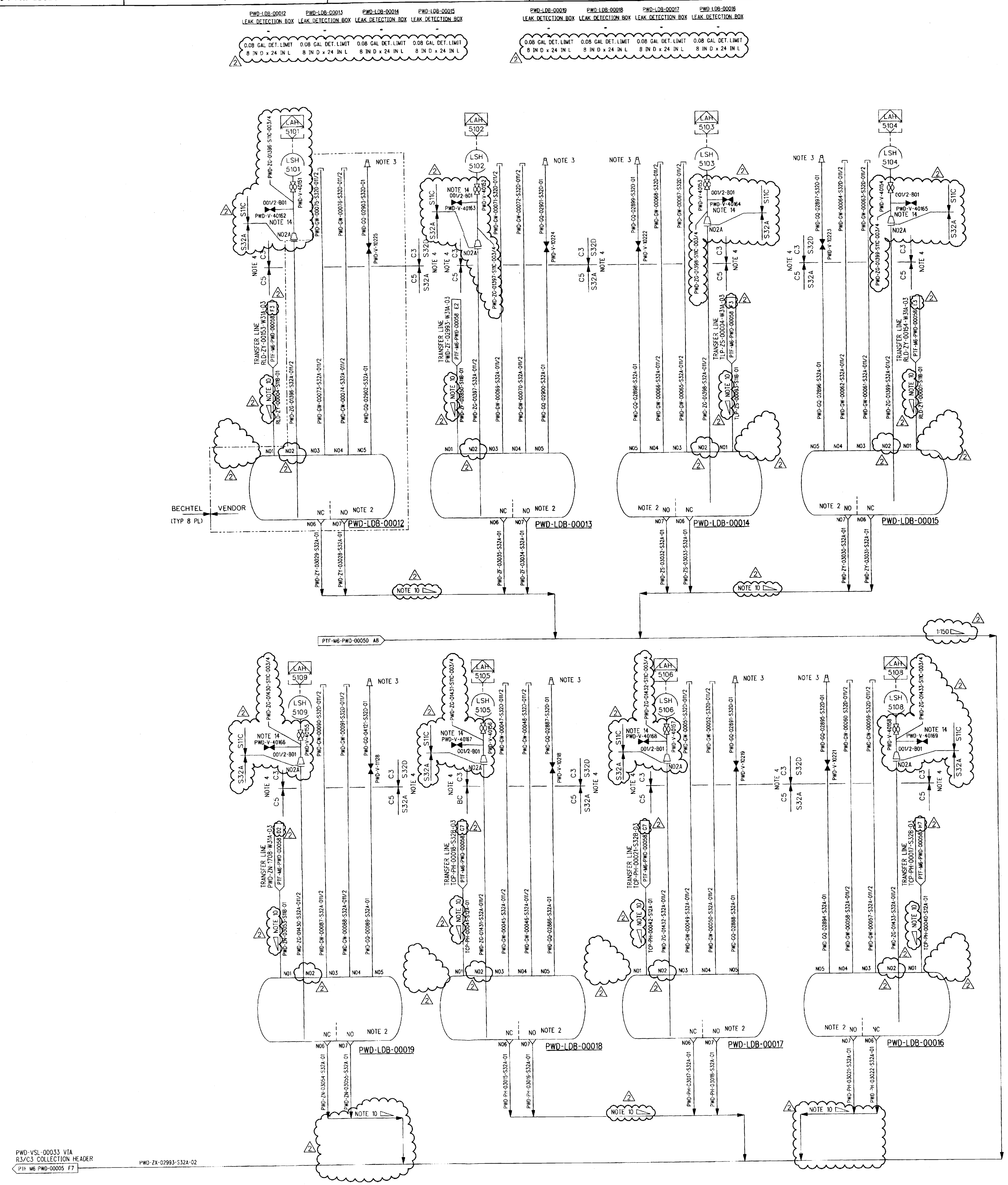

NOTES:

1. SEE DRAWINGS 24590-WTP-M6-50-00001 THROUGH 24590-WTP-M6-50-00008 FOR GENERAL NOTES, SYMBOLS, LEGENDS, AND GENERAL SLOPE REQUIREMENTS.
2. OVERFLOW AND DRAIN PLUGS ARE OPERATED REMOTELY VIA RODS WHICH EXTEND ABOVE ELEVATION 0'-0" THROUGH PIPE SLEEVES. THE DRAIN PLUG IS INSTALLED IN THE CLOSED POSITION TO CREATE A DETECTABLE LEVEL. UPON LEVEL DETECTION THE PLUG IS LIFTED TO DRAIN THE LEAK DETECTION BOX. THE OVERFLOW PLUG IS NORMALLY OPEN FOR OVERFLOW PROTECTION. BOTH PLUGS WILL BE CLOSED FOR PNEUMATIC TESTING.
3. QUICK CONNECTION IS PROVIDED FOR PNEUMATIC TESTING OF THE LEAK DETECTION BOX AND THE TRANSFER PIPE JACKET.
4. PIPE SLEEVE PENETRATIONS BETWEEN OCCUPATIONAL AREAS AND INACCESSIBLE/REMOTE AREAS (R5) SHALL HAVE SHADOW SHIELDING TO MITIGATE DIRECT RADIATION SHINE OR BE JOGGLED AS DETERMINED BY ENVIRONMENTAL AND NUCLEAR SAFETY. ALL PIPE/SLEEVE INTERFACES SHALL BE SEALED USING APPROVED FIRE-RATED PENETRATION SEAL DESIGNS TO MAINTAIN THE INTEGRITY OF THE FIRE WALL BETWEEN AREAS.
5. THE LEAK DETECTION BOXES WILL BE SUPPLIED WITH AN INTERNAL WEIR, WHICH WILL IMPOUND THE LEAKED LIQUIDS AROUND THE SENSORS, ASSURING AN EARLY DETECTION OF LEAKS.
6. THE PRESSURE BOUNDARY FOR ALL SYSTEMS, STRUCTURES, AND COMPONENTS SHOWN ON THIS DRAWING ARE IDENTIFIED AS QUALITY LEVEL CM AND SEISMIC CATEGORY SC-III, UNLESS OTHERWISE NOTED.
7. THE INTERLOCKS ASSOCIATED WITH EACH LEAK DETECTION BOX ARE GIVEN IN TABLE 1.
8. CONTENTS OF THIS DRAWING ARE DANGEROUS WASTE PERMIT AFFECTING.
9. DELETED
10. DRAIN LINES TO/FROM THE LEAK DETECTION BOXES SHALL BE SELF DRAINING.

11, 12. DELETED

13. REVISION 1: INCORPORATING 24590-PTF-M6N-M80T-00007, 24590-PTF-M6N-PWD-00059, AND 24590-PTF-M6N-PWD-00128. NOTE 1 DRAWING REFERENCE CHANGED FROM 24590-WTP-M5-50-00006 TO 24590-WTP-M6-50-00006. UPDATED OFF-SHEET CONNECTOR COORDINATES AND MODIFIED NOTE 6.
14. BLOWDOWN CONNECTION PROVIDED BY C & I.
15. REVISION 2: REVISED TO INCORPORATE 25490-PTF-M6N-M80T-00027, -00037. AND -00038. ADDED ROOT AND BLOWDOWN VALVES FOR LEVEL INSTRUMENTATION. REVISED/ADDED/DELETED NOTES AND REFERENCES.

HOLD/OPEN ITEMS:

NONE

REFERENCES:

1. THE REQUIRED BATCH SEQUENCES, PERMISSIVES, INTERLOCKS, ALARMS AND OPERATOR INTERFACE POINTS ARE FULLY DESCRIBED IN THE SOFTWARE FUNCTIONAL SPECIFICATION FOR PTF-PLANT WASH AND DISPOSAL (PWD) SYSTEM, 24590-PTF-3PS-PWD-T0001.
2. DELETED
3. EQUIPMENT ASSEMBLY - PTF PLANT WASH AND DISPOSAL SYSTEM SECONDARY CONTAINMENT LEAK DETECTION BOX: 24590-PTF-MX-PWD-00004.
4. PTF INSTALLATION DETAILS LEAK DETECTION BOX THERMAL DISPERSION TYPE: 24590-PTF-J8-10-00002.

Please note that source, special nuclear, and byproduct materials, as defined in the Atomic Energy Act of 1954 (AEA) are regulated at the U. S. Department of Energy (DOE) facilities exclusively by DOE acting pursuant to its AEA authority. DOE asserts that pursuant to AEA, it has sole and exclusive responsibility and authority to regulate source, special nuclear, and byproduct materials at DOE-owned nuclear facilities. Information contained herein on radionuclides is provided for process description purposes only.

TABLE 1: OPERATING TRIPS, ALARMS, AND INTERLOCKS

PLANT ITEM	INSTRUMENT	ALARMS AND ASSOCIATED TRIPS	CONTROLLED EQUIPMENT
PWD-LDB-00012	LSH-5101	HIGH-ALARM, THEN STOP FEED TRANSFER	LAW-LVP-PMP-00002A/B
PWD-LDB-00013	LSH-5102	HIGH-ALARM, THEN STOP FEED TRANSFER	LAW-RLD-PMP-00001A/B AND LAW-RLD-PMP-00003A/B
PWD-LDB-00014	LSH-5103	HIGH-ALARM, THEN STOP FEED TRANSFER	LAW-RLD-PMP-00003A/B AND LAW-RLD-PMP-00001A/B
PWD-LDB-00015	LSH-5104	HIGH-ALARM, THEN STOP FEED TRANSFER	LAW-LVP-PMP-00002A/B
PWD-LDB-00016	LSH-5108	HIGH-ALARM, THEN STOP FEED TRANSFER	TCP-PMP-00001A/B
PWD-LDB-00017	LSH-5106	HIGH-ALARM, THEN STOP FEED TRANSFER	TCP-PMP-00001A/B SPARE CAPPED IN LAW
PWD-LDB-00018	LSH-5105	HIGH-ALARM, THEN STOP FEED TRANSFER	TCP-PMP-00001A/B
PWD-LDB-00019	LSH-5109	HIGH-ALARM, THEN STOP FEED TRANSFER	LAB-RLD-PMP-00183A/B

REVISION HISTORY

REV	DESCRIPTION	ORG	CHKD	RVWD	APVD	DATE
2	REVISED PER NOTE 15	[illegible]	APP	ELS	[illegible]	11/28/07
1	REVISED PER NOTE 13	KE	RM	JJ	RES	02/16/05
0	ISSUED FOR CONSTRUCTION	RM	SD	N/A	GD	10/30/02

CM
QUALITY DESIGNATOR

ISSUED BY RPP-WTP PDC
ISSUE STAMP

PROJECT No.	24590
SITE	HANFORD
AREA	200E
BUILDING No.	10

	BY	DATE
ORIGINATOR	R MOLINA	10/22/02
CHECKER	SK DAS	10/22/02
APPROVER	GM DUNCAN	10/30/02
REVIEWER	N/A	

CONTENT APPLICABLE TO ALARA? [X] YES [ ] NO
ADR NO. 24590-PTF-ADR-M-02-004 REV: 0
SAFETY SCREEN REQUIRED? [X] YES [ ] NO E&NS INITIAL IF YES GD

BECHTEL
RIVER PROTECTION PROJECT
WASTE TREATMENT PLANT
2435 STEVENS CENTER PLACE
RICHLAND, WA 99354

CONTRACT No: DE-AC27-01RV14136

P&ID - PTF PLANT WASH & DISPOSAL SYSTEM SECONDARY CONTAINMENT LEAK DETECTION SYSTEM

SCALE: NONE

24590-PTF-M6-PWD-00051 REV 2

SAFETY SCREEN IS REQUIRED FOR DRAWING TYPES IDENTIFIED IN 24590-WTP-GPP-SREG-002

'E' SIZE - 44x34
COMPUTER GENERATED - MANUAL CHANGES NOT PERMITTED

R10853945

11/27/2007 09:07:28 AM

PLOTTED BY: eidorr
C:\Work\eidorr\dms03837\PTFM6PWD00051.dgn

24590-PTF-M6-PWD-00057

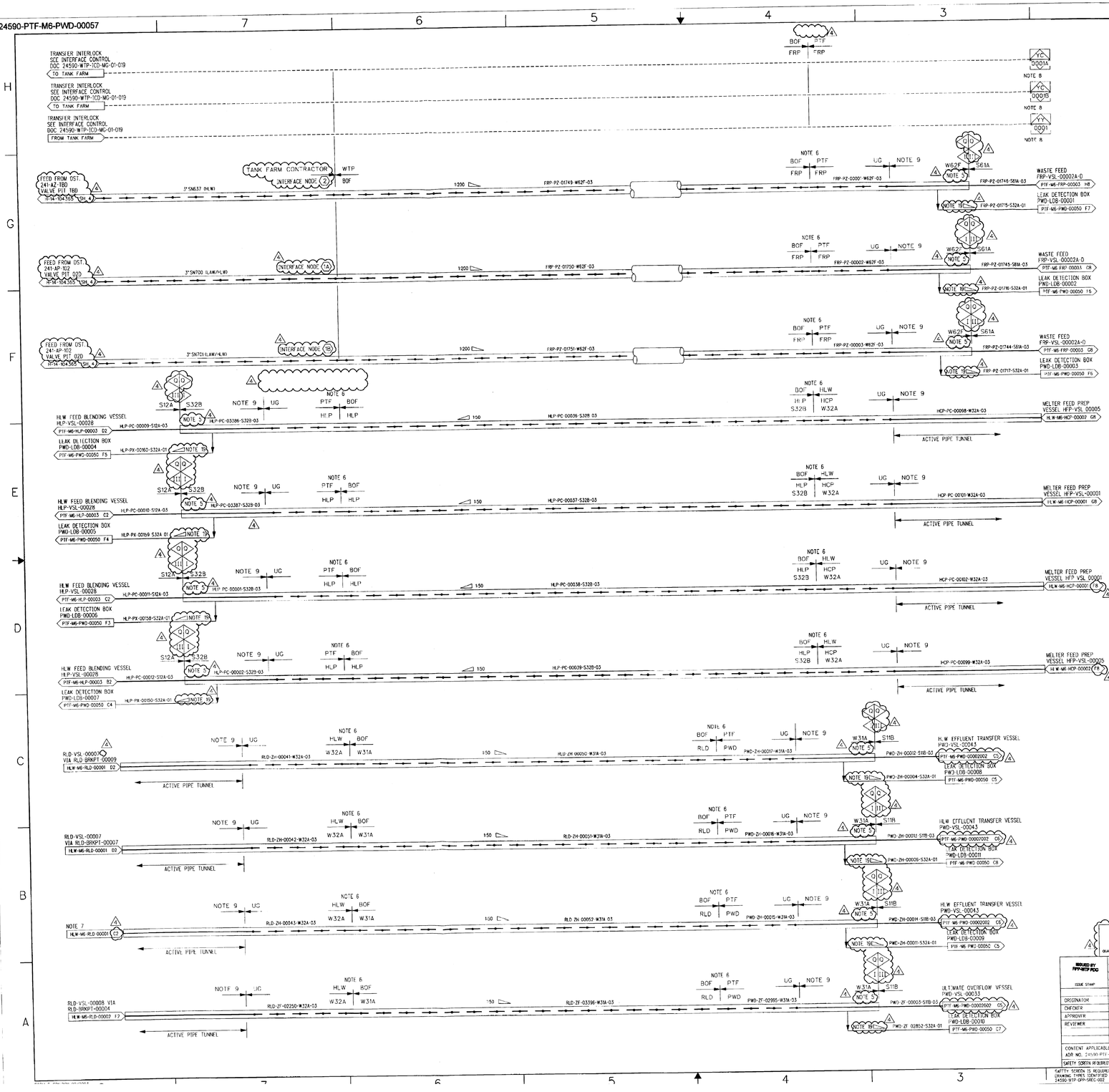

NOTES:

1. SEE DRAWING 24590-WTP-M6-50-00001 THROUGH 24590-WTP-M6-50-00008 FOR GENERAL NOTES, SYMBOLS, LEGEND, AND GENERAL SLOPE REQUIREMENTS.
2. THE UNDERGROUND TRANSFER PIPING ON THIS DRAWING ARE COAXIAL LINES, I.E. A PIPE WITHIN A PIPE. THE PRIMARY TRANSFER LINE IS 3 INCH STAINLESS STEEL PIPE WHICH IS ENCASED IN A 6 INCH DIAMETER CARBON STEEL OR STAINLESS STEEL PIPE.
3. FLUSHING CAPABILITIES FOR REMOVING LEAKS OR ACCUMULATED LIQUID FROM THE SECONDARY CONTAINMENT PIPE ARE PROVIDED AT THE HIGH END OF THE SECONDARY PIPING BY THE HIGH LEVEL WASTE FACILITY AND TANK FARM CONTRACTOR (TFC).
4. ALL TRANSFER LINES BETWEEN PRETREATMENT AND HIGH LEVEL WASTE FACILITIES SHALL BE CATHODICALLY PROTECTED.
5. THE PRESSURE BOUNDARY FOR THE INNER AND OUTER PIPE OF THE DOUBLE CONTAINMENT TRANSFER LINES IN THIS DRAWING ARE QUALITY LEVEL Q AND SEISMIC CATEGORY SC-I, AND QUALITY LEVEL Q AND SEISMIC CATEGORY SC-II RESPECTIVELY. ALL THE DRAINS TO THE LEAK DETECTION BOXES ARE QUALITY LEVEL QM AND SEISMIC CATEGORY SC-III.
6. BATTERY LIMITS FOR PIPING IS 5 FEET OUTSIDE THE FACILITIES. ENCASEMENT PIPING IS TO BE TERMINATED INSIDE THE PRETREATMENT BUILDING WITH SUFFICIENT LENGTH TO MEET FIELD CONDITIONS OR AS INDICATED IN CONNECTING P&IDS.
7. SPARE LINE IS PROVIDED TO ACCOMMODATE POTENTIAL MODIFICATIONS DURING COMMISSIONING.
8. WASTE TREATMENT PLANT OPERATOR WILL ACTIVATE TRANSFER INTERLOCK TO BEGIN. IF INTERLOCK IS REVOKED TRANSFER WILL STOP. TANK FARM OPERATOR WILL ACTIVATE TRANSFER INTERLOCK TO BEGIN. IF INTERLOCK IS REVOKED TRANSFER WILL STOP.
9. LINES ARE INSIDE THE BUILDING.
10. DELETED
11. THE LOCATION OF BURIED LINES WILL BE CLEARLY MARKED TO PREVENT INADVERTENT DAMAGE TO THE LINES DURING DIGGING OPERATIONS.
12. APPROPRIATE SOIL PREPARATION AND COMPACTION WILL BE COMPLETED DURING THE INSTALLATION OF BURIED LINES UNDER HIGH TRAFFIC AREAS TO MINIMIZE DIFFERENTIAL MOVEMENTS DUE TO HEAVY LOADS.
13. A PORTION OF THE PIPING SYSTEM FROM THE TANK FARM CONTRACTOR WILL HAVE A CONTINUOUS SLOPE, FROM A HIGH POINT DOWN TOWARD THE PRETREATMENT PLANT. THE INTER FACILITIES LINES (TO/FROM PRETREATMENT AND HIGH LEVEL WASTE) WILL SLOPE CONTINUOUSLY TOWARD THE PRETREATMENT FACILITY.
14. ALL PIPE BENDS FROM AND TO THE PRETREATMENT AND HIGH LEVEL WASTE FACILITIES SHALL BE A MINIMUM OF 5 DIAMETERS. LINES FROM THE TANK FARM CONTRACTOR TO THE PRETREATMENT FACILITY WILL HAVE 12 DIAMETER BENDS WHENEVER POSSIBLE.
15. DELETED
16. PRIMARY TRANSFER LINES WILL BE FLUSHED AFTER EACH USE TO MINIMIZE THE ACCUMULATION OF WASTE MATERIAL AND PREVENT CORROSION OF THE LINE.
17. DELETED
18. TRANSFER LINES SHALL BE DESIGNED TO ALLOW DIFFERENTIAL MOVEMENTS BETWEEN THE CARRIER PIPE AND ENCASEMENT SUB-ASSEMBLIES.
19. MINIMUM SLOPE FOR THE INTER-FACILITIES TRANSFER LINES IS 1:200 (0.5%) UNLESS OTHERWISE SPECIFIED, TO CONTINUOUSLY DRAIN THE PIPING. AN INCREASED GRADIENT MAY BE USED IN THE FIELD TO STANDARDIZE LINE ELEVATIONS ENTERING OR EXITING EACH FACILITY. ALL PIPING SHALL BE SELF DRAINING.
20. THE SECONDARY CONTAINMENT LINE IS PROVIDED WITH A DRAIN AND A LEAK DETECTION SYSTEM FOR DETECTION OF PRIMARY CONTAINMENT LEAKS.
21. CONTENTS OF THIS DOCUMENT ARE DANGEROUS WASTE PERMIT AFFECTING.
22-24. DELETED
25. REVISION 3 REVISED AS NOTED AND INCORPORATED 24590-PTF-M6N-PWD-00130.
26. REVISION 4 REVISED TO INCORPORATE 24590-PTF-MSN-M8OT-00037. REVISED QUALITY/SEISMIC FLAGS AND MINOR EDITORIAL CHANGES. ADDED/REVISED/DELETED NOTES AND REFERENCES.

HOLD/OPEN ITEMS:

1. DELETED

REFERENCES:

1. THE REQUIRED BATCH SEQUENCES, PERMISSIVES, INTERLOCKS, ALARMS AND OPERATOR INTERFACE POINTS ARE FULLY DESCRIBED IN THE SOFTWARE FUNCTIONAL SPECIFICATION FOR PTF WASTE FEED RECEIPT PROCESS (FRP) SYSTEM 24590-PTF-3PS-FRP-T0001.
2. TECHNICAL SPECIFICATIONS FOR MATERIAL, SPOOL FABRICATION, COATING, AND INSULATION FOR THE COAXIAL PIPE ARE GIVEN ON MATERIAL REQUISITION DOCUMENT 24590-QL-MRA-PS02-00008.

Please note that source, special nuclear, and byproduct materials, as defined in the Atomic Energy Act of 1954 (AEA) are regulated at the U. S. Department of Energy (DOE) facilities exclusively by DOE acting pursuant to its AEA authority. DOE asserts that pursuant to AEA, it has sole and exclusive responsibility and authority to regulate source, special nuclear, and byproduct materials at DOE-owned nuclear facilities. Information contained herein on radionuclides is provided for process description purposes only.

REV	DESCRIPTION	ORG	CHKD	RVWD	APVD	DATE
4	REVISED PER NOTE 26	TT	MP	GLS	RES	CER 1/03 1/31/02
3	REVISED PER NOTE 25	KE	JM	JJ	RES	3/8/05
0	ISSUED FOR CONSTRUCTION	JM	JJ	N/A	GD	09/04/02

Q — QUALITY DESIGNATOR

REVISION HISTORY

ISSUED BY RPP-WTP PDC	PROJECT No.	24590
	SITE	HANFORD
	AREA	200L
ISSUE STAMP	BUILDING No.	10

	BY	DATE
ORIGINATOR	ANTONIO MOLINA	08/29/02
CHECKER	JOHN JULYK	08/29/02
APPROVER	GARTH DUNCAN	09/04/02
REVIEWER	N/A	

CONTENT APPLICABLE TO ALARA? ☐ YES ☒ NO
ADP NO. 24590-PTF-ADP-M-03-004 REV: 6
SAFETY SCREEN INCORPORATIONS ☐ NONE INITIAL IF YES
SAFETY SCREEN IS REQUIRED FOR DRAWING TYPES IDENTIFIED IN 24590-WTP-GPP-SEC-002

RIVER PROTECTION PROJECT
WASTE TREATMENT PLANT
2435 STEVENS CENTER PLACE
RICHLAND, WA 99354

CONTRACT No: DE-AC27-01RV14136

PTF - P&ID
PLANT WASH & DISPOSAL SYSTEM UNDERGROUND TRANSFER LINES

SCALE: NONE

24590-PTF-M6-PWD-00057

REV 4

E-SIZE - 44x34
COMPUTER GENERATED - MANUAL CHANGES NOT PERMITTED

07/29/2008 04:03:29 PM

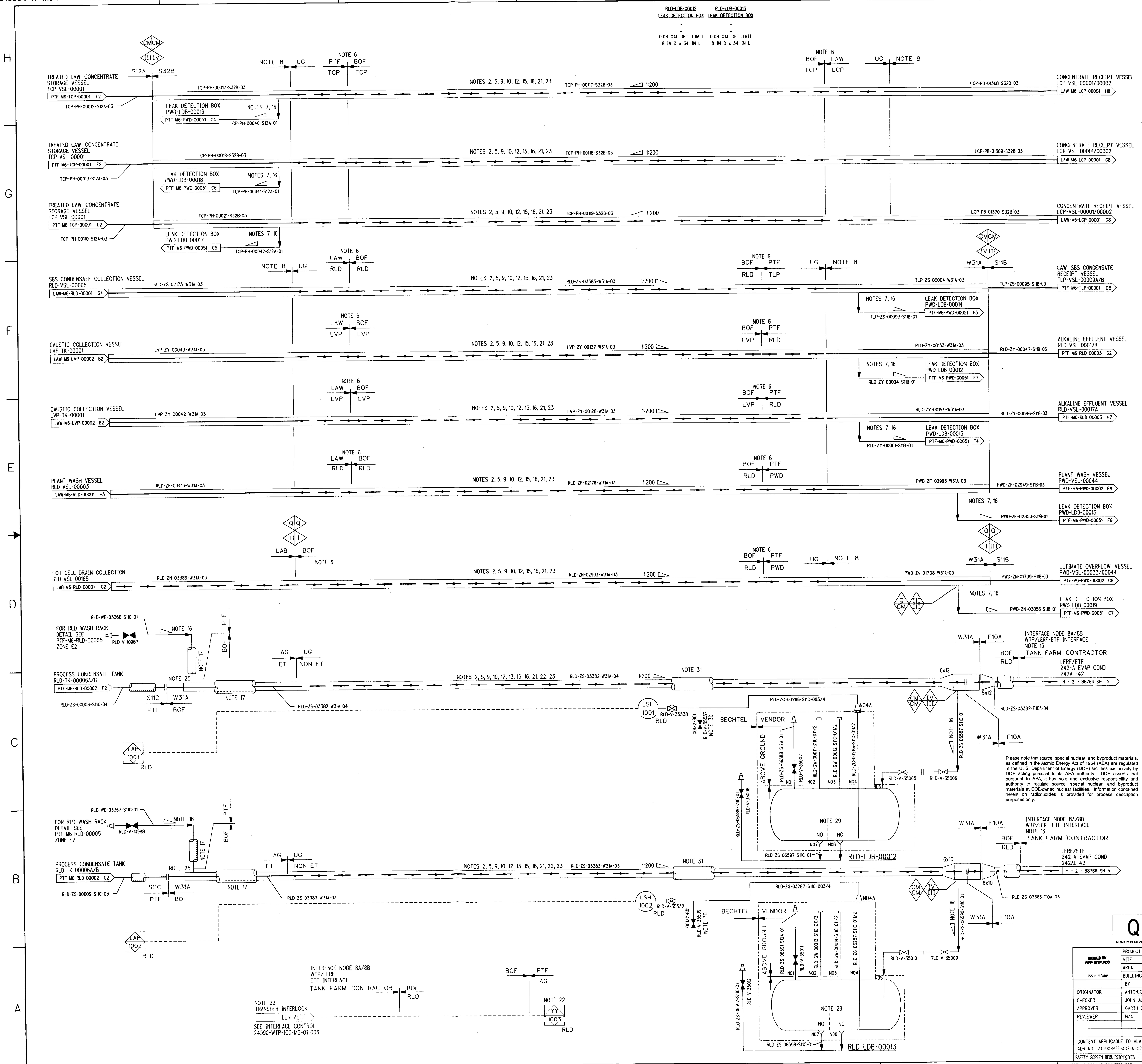

Please note that source, special nuclear, and byproduct materials, as defined in the Atomic Energy Act of 1954 (AEA) are regulated at the U. S. Department of Energy (DOE) facilities exclusively by DOE acting pursuant to its AEA authority. DOE asserts that pursuant to AEA, it has sole and exclusive responsibility and authority to regulate source, special nuclear, and byproduct materials at DOE-owned nuclear facilities. Information contained herein on radionuclides is provided for process description purposes only.

NOTES:

1. SEE DRAWING 24590-WTP-M6-50-00001 THROUGH 24590-WTP-M6-50-00008 FOR GENERAL NOTES, SYMBOLS LEGEND, AND GENERAL SLOPE REQUIREMENTS.
2. ALL TRANSFER LINES IDENTIFIED ON THIS DRAWING ARE COAXIAL LINES, I.E. PIPE WITHIN A PIPE
3. THE PRETREATMENT FACILITY IS RESPONSIBLE FOR THE LEAK DETECTION SYSTEM.
4. FLUSHING CAPABILITIES FOR REMOVING LEAKED MATERIAL OR ACCUMULATED LIQUID FROM WITHIN THE SECONDARY CONTAINMENT SYSTEM ARE PROVIDED BY THE LOW ACTIVITY WASTE, LABORATORY, AND THE PRETREATMENT FACILITIES.
5. ALL DOUBLE WALLED STEEL TRANSFER LINES IN THIS DRAWING SHALL BE CATHODICALLY PROTECTED, EXCEPT THE LIQUID EFFLUENT RETENTION FACILITY LINES WHICH ARE INSULATED.
6. BATTERY LIMITS FOR PIPING IS 5 FEET OUTSIDE THE FACILITIES. ENCASEMENT PIPING THAT IS TERMINATED INSIDE THE PRETREATMENT BUILDING WITH SUFFICIENT LENGTH TO MEET FIELD CONDITIONS OR AS INDICATED IN CONNECTING PIPING AND INSTRUMENTATION DIAGRAMS.
7. THE PRESSURE BOUNDARY FOR ALL SYSTEMS, STRUCTURES, AND COMPONENTS IN THIS DRAWING ARE IDENTIFIED AS QUALITY LEVEL CM AND SEISMIC CATEGORY SC-IV, UNLESS OTHERWISE NOTED. ALL DRAINS TO THE LEAK DETECTION BOXES ARE QUALITY LEVEL CM AND SEISMIC CATEGORY SC-III. THE ENCASEMENT PIPING FROM THE LAB AND INTO PTF IS QUALITY LEVEL Q AND SEISMIC CATEGORY SC-III.
8. LINES ARE INSIDE THE BUILDING.
9. THE LOCATION OF BURIED LINES WILL BE CLEARLY MARKED TO PREVENT INADVERTENT DAMAGE TO THE LINES DURING DIGGING OPERATIONS.
10. APPROPRIATE SOIL PREPARATION AND COMPACTION WILL BE COMPLETED DURING THE INSTALLATION OF BURIED LINES UNDER HIGH TRAFFIC AREAS TO MINIMIZE DIFFERENTIAL MOVEMENTS DUE TO HEAVY LOADS.
11. DELETED
12. ALL PIPE BENDS SHALL BE A MINIMUM OF 5 DIAMETERS FOR THE TRANSFER LINES, WITH THE EXCEPTION OF THE TWO LERF LINES.
13. PRIMARY LEAKS IN THE LIQUID EFFLUENT RETENTION FACILITY/ EFFLUENT TREATMENT FACILITY TRANSFER LINES ARE DETECTED BY A LEAK DETECTION BOX AT THE WTP/LERF-ETF INTERFACE.
14. DELETED
15. TRANSFER LINES SHALL BE DESIGNED TO ALLOW DIFFERENTIAL MOVEMENTS BETWEEN THE CARRIER PIPE AND ENCASEMENT SUB-ASSEMBLIES
16. MINIMUM SLOPE FOR TRANSFER LINES IS 1:200 TO DRAIN THE PIPING CONTINUOUSLY. AN INCREASED GRADIENT MAY BE USED IN THE FIELD TO STANDARDIZE LINE ELEVATIONS ENTERING OR EXITING EACH FACILITY. ALL PIPING SHALL BE SELF DRAINING.
17. INSULATION AND HEAT TRACING REQUIRED ABOVE GRADE LEVEL.
18. CONTENTS OF THIS DOCUMENT ARE DANGEROUS WASTE PERMIT AFFECTING.

19-21. DELETED

22. LERF/ETF OPERATOR WILL ACTIVATE TRANSFER INTERLOCK TO ALLOW TRANSFER. IF INTERLOCK IS REVOKED, TRANSFER WILL STOP.
23. THE TEST PRESSURE FOR THE ENCASEMENT (OUTER) PIPE IS 55 PSIG, EXCEPT THE LERF LINES WHICH ARE AT ATMOSPHERIC CONDITIONS AND SHALL BE TESTED TO 10 PSIG. THE TESTING MEDIUM SHALL BE AIR TO MAINTAIN THE ANNULUS SPACE BETWEEN THE INNER AND OUTER PIPE DRY.
24. DELETED
25. CONNECTION FROM FLUSH LINE TO ENCASEMENT LINE SHOULD BE LOCATED NEAR THE START OF THE ENCASEMENT LINE INSIDE OF BERM.
26. DELETED
27. SEE ARCHIVED REVISION 3 P&ID FOR REVISION 3 CHANGES.
28. DELETED
29. OVERFLOW AND DRAIN PLUGS ARE OPERATED REMOTELY VIA RODS WHICH EXTEND ABOVE GRADE THROUGH PIPE SLEEVES. THE DRAIN PLUG IS INSTALLED IN THE CLOSED POSITION TO CREATE A DETECTABLE LEVEL. UPON LEVEL DETECTION THE PLUG IS LIFTED TO DRAIN THE LEAK DETECTION BOX. THE OVERFLOW PLUG IS NORMALLY OPEN FOR OVERFLOW PROTECTION. BOTH PLUGS WILL BE CLOSED FOR PNEUMATIC TESTING.
30. BLOW DOWN CONNECTION PROVIDED BY C&I.
31. AN EPOXY COATING FOLLOWED BY A RIGID FOAM INSULATION SHALL BE APPLIED TO THE EXTERIOR SURFACE OF THE ENCASEMENT PIPING AND A NON-METALLIC JACKET ADDED TO PROVIDE A WATERPROOF BARRIER AT FINAL INSTALLATION.
32. REVISION 4: MAJOR REVISION, NO REVISION CLOUDS REQUIRED. RIVISED TO INCORPORATE 24590-PTF-M6N-M80T-00025,-00037, AND 24590-PTF-M6N-PWD-00291. ADDED/MODIFIED QUALITY/SEISMIC FLAGS, SLOPES, EQUIPMENT TAGS, LDB LINES, RLD LINE SECTIONS AND MINOR EDITORIAL CHANGES. ADDED/REVISED/DELETED NOTES AND REFERENCES.

HOLD/OPEN ITEMS:

NONE

REFERENCES:

1. THE REQUIRED BATCH SEQUENCES, PERMISSIVES, INTERLOCKS, ALARMS AND OPERATOR INTERFACE POINTS ARE FULLY DESCRIBED IN THE SOFTWARE FUNCTIONAL SPECIFICATION FOR PTF-RADIOACTIVE LIQUID WASTE DISPOSAL (RLD) SYSTEM 24590-PTF-3PS-RLD-T0001, AND FOR PTF-WASTEFEED RECEIPT PROCESS (FRP) SYSTEM 24590-PTF-3PS-FRP-T0001.
2. TECHNICAL SPECIFICATIONS FOR MATERIAL, SPOOL FABRICATION COATING AND INSULATION FOR THE COAXIAL PIPE ARE GIVEN ON MATERIAL REQUISITION DOCUMENT 24590-QL-MRA-PS02-00008.
3. EQUIPMENT ASSEMBLY - PTF-PWD SYSTEM SECONDARY CONTAINMENT LERF LEAK DETECTION BOX 24590-PTF-MX-PWD-00006001 & 2.
4. PTF INSTALLATION DETAILS LEAK DETECTION BOX THERMAL DISPERSION TYPE: 24590-PTF-J8-10-00002.

REV	DESCRIPTION	ORG	CHKD	RVWD	APVD	DATE
4	REVISED PER NOTE 32	TT	APP	ELS	JDM	11/28/07
3	REVISED PER NOTE 27	KE	RM	JJ	RV	3/8/05
0	ISSUED FOR CONSTRUCTION	AM	JJ	N/A	GD	09/04/02

REVISION HISTORY

Q
QUALITY DESIGNATOR

ISSUED BY RPP-WTP PDC
ISSUE STAMP

PROJECT No.	24590
SITE	HANFORD
AREA	200E
BUILDING No.	10

	BY	DATE
ORIGINATOR	ANTONIO MOLINA	08/29/02
CHECKER	JOHN JULYK	08/29/02
APPROVER	GARTH DUNCAN	09/04/02
REVIEWER	N/A	N/A

CONTENT APPLICABLE TO ALARA? [X] YES [ ] NO
ADR NO. 24590-PTF-ADR-M-02-004 REV: 0
SAFETY SCREEN REQUIRED? [X] YES [ ] NO E&NS INITIAL IF YES

BECHTEL
RIVER PROTECTION PROJECT
WASTE TREATMENT PLANT
2435 STEVENS CENTER PLACE
RICHLAND, WA 99354

CONTRACT No: DE-AC27-01RV14136

P&ID-PTF
PLANT WASH & DISPOSAL SYSTEM UNDERGROUND TRANSFER LINES

SCALE: NONE
24590-PTF-M6-PWD-00058
REV 4

SAFETY SCREEN IS REQUIRED FOR DRAWING TYPES IDENTIFIED IN 24590-WTP-GPP-SREG-002
'E' SIZE - 44x34
COMPUTER GENERATED - MANUAL CHANGES NOT PERMITTED

R10853946
11/27/2007 09:09:58 AM
PLOTTED BY: e'dorn
C:\Work\e'dorn\dms03837\PTFM6PWD00058.dgn

FORM F-SIMLDON 02/2003

24590-PTF-M6-RDP-00001

RDP-VSL-00002A SPENT RESIN SLURRY VESSEL — 11853 GAL MAX OPER VOL, 144 IN ID x 158 IN T-T

RDP-PMP-00008A SPENT RESIN SLURRY PUMP — 140 GPM TDH 153 FT, 15 HP

RDP-PMP-00008B SPENT RESIN SLURRY PUMP — 140 GPM TDH 153 FT, 15 HP

RDP-VSL-00002B SPENT RESIN SLURRY VESSEL — 11853 GAL MAX OPER VOL, 144 IN ID x 158 IN T-T

RDP-VSL-00002C SPENT RESIN SLURRY VESSEL — 11853 GAL MAX OPER VOL, 144 IN ID x 158 IN T-T

TRANSPORT FLUID/SPENT RESIN FROM CXP-IXC-00001/2/3/4 — PTF-M6-CXP-00002 B8

RDP-JMPP-00010 · RDP-JMPP-00004 · RDP-JMPP-00065 · RDP-JMPP-00066 · RDP-JMPP-00003

RDP-WE-00032-S11B-02 · RDP-WE-00033-S11B-02 · RDP-WE-00034-S11B-02

SPENT RESIN RECYCLE — PTF-M6-RDP-00002 I4

TRANSPORT FLUID RETURN — PTF-M6-CXP-00003 B2

PASSIVE PURGE AIR — PTF-M6-PVP-00019 D4

VESSEL VENT (TO PVP-SCB-00002) — PTF-M6-PVP-00002 E7

FORCED PURGE AIR FROM PSA-VSL-00137/00138 — PTF-M6-PVP-00004 A3

RDP-V-13414 · RDP-V-13413 · RDP-V-13412 · RDP-V-12459 · RDP-V-12460 · 003/4-B01 (V)

RDP-V-01809 · 003/4-B01 (D) · DIW-WE-04240-S11C-02 · RDP DIW S11B S11C

DEMINERALIZED WATER FROM DIW HEADER — PTF-M6-DIW-00001 A4

SAMPLE FROM ASX-SMPLR-00015 — PTF-M6-ASX-00001 C8 · RDP-ZL-00148-S12A-03 1:20

RDP-ZL-00161-S12A-03 · RDP-ZL-00132-S12A-03 · RDP-ZL-00201-S12A-03 · RDP-ZL-00164-S12A-03 · RDP-ZL-00188-S12A-03 · RDP-ZL-00170-S12A-03 · RDP-ZL-00203-S12A-03 · RDP-ZL-00135-S12A-03

RDP-PA-00024-S11B-02 · RDP-PA-00168-S11B-02 · RDP-PA-00025-S11B-02 · RDP-PA-00029-S12A-03 · RDP-PA-00030-S12A-03

PVP-GV-00007-S12-02 · PVP-GV-00066-S12-06 · PVP-GV-00128-S12-02 · PVP-GV-00095-S12-06 · PVP-GV-00129-S12-02 · PVP-GV-00087-S12-06

PVP-GQ-00240-S11B-01W · PVP-GQ-00239-S11B-01W2 · PVP-GQ-00238-S11B-01W2

RDP-QR-00020-S11P-03 · RDP-QR-00021-S11P-03 · RDP-QR-00022-S11P-03

RDP-WE-00033-S11B-02 · RDP-WE-00034-S11B-02 · RDP-WE-00003-S12A-04

RDP-JMPP-00077 · RDP-JMPP-00078 · RDP-JMPP-00079

OVERFLOW PWD-VSL-00033 VIA HEADER — PTF-M6-PWD-00006 C5 — RDP-ZL-00161-S12A-06 · RDP-ZL-00182-S12A-06 · RDP-ZL-00159-S12A-03 · RDP-ZL-00181-S12A-06 · RDP-ZL-00154-S12A-04

RDP-ZL-00193-S12A-04 · RDP-ZL-00152-S12A-04 · RDP-ZL-00139-S12A-03

RDP-JMPP-00012 · RDP-JMPP-00014 · RDP-JMPP-00076 · RDP-JMPP-00011

RDP-JMPP-00057 · RDP-JMPP-00013 · RDP-JMPP-00061 · RDP-JMPP-00059 · RDP-JMPP-00060 · RDP-JMPP-00058

RDP-JMPP-00015 · RDP-JMPP-00021 · RDP-JMPP-00085 · RDP-JMPP-00086 · RDP-JMPP-00026 · RDP-JMPP-00025 · RDP-JMPP-00017 · RDP-JMPP-00029

RDP-PMP-00008A NOTE 10 · RDP-PMP-00008B NOTE 10

RDP-JMPP-00019 · RDP-JMPP-00018 · RDP-JMPP-00022

RDP-JMPP-00043 · RDP-JMPP-00041 · RDP-JMPP-00040 · RDP-JMPP-00039 · RDP-JMPP-00056

RDP-ZL-00147-S12A-03 · RDP-ZL-00122-S12A-03 · RDP-PA-00029-S12A-03 · RDP-PA-00030-S12A-03 · RDP-ZM-00028-S12A-03

SAMPLE TO ASX-SMPLR-00015 — PTF-M6-ASX-00001 C8

RDP-CASK-00001 VIA PTF-M6-RDP-00002 — PTF-M6-RDP-00002 H8

ACCUMULATED CONTAMINANTS TO FEP-VSL-00017B — PTF-M6-FEP-00001 C5

ACCUMULATED CONTAMINANTS TO FEP-VSL-00017A — PTF-M6-FEP-00001 C6

OFF SPEC RESIN/TRANSPORT FLUID TO CXP-IXC-00001/2/3/4 VIA CRP-BULGE-00001 — PTF-M6-CRP-00003 A8

RDP-V-01832 · RDP-V-00066 · 003/4-B01 (D) RDP-V-00065 · DIW-WE-04144-S11C-04 · RDP-WE-00003-S12A-04

DEMINERALIZED WATER FROM DIW HEADER — PTF-M6-DIW-00001 C5

NOTES:

1. SEE DRAWINGS 24590-WTP-M6-50-00001 THROUGH 24590-WTP-M6-50-00008 FOR GENERAL NOTES, SYMBOLS AND LEGEND, AND GENERAL SLOPE REQUIREMENTS.
2. DELETED
3. ALL INTERNAL SUPPORTS AND WELDS THAT INTERACT WITH THE PRIMARY CONFINEMENT BARRIER (VESSEL) SHALL MAINTAIN EQUAL QUALITY AND SEISMIC CATEGORY AS THE PARENT.
4. PIPE SLEEVE PENETRATIONS BETWEEN OCCUPATIONAL AREAS AND INACCESSIBLE/REMOTE AREAS (RS) SHALL HAVE SHADOW SHIELDING TO MITIGATE DIRECT RADIATION SHINE OR BE JOGGLED, AS DETERMINED BY ENVIRONMENTAL AND NUCLEAR SAFETY. ALL PIPE/SLEEVE INTERFACES SHALL BE SEALED USING APPROVED FIRE-RATED PENETRATION SEAL DESIGNS TO MAINTAIN THE INTEGRITY OF THE FIRE WALL BETWEEN AREAS.
5. DELETED
6. CONTENTS OF THIS DRAWING ARE DANGEROUS WASTE PERMIT AFFECTING.
7. REFER TO 24590-PTF-M6-RDP-00006 FOR PULSE JET MIXER DETAILS.
8. DELETED
9. REFER TO 24590-PTF-M6-CNP-00005 FOR WASH RING DETAILS.
10. REFER TO 24590-PTF-M6-PSW-00006 FOR PUMP SEAL WATER DETAILS.
11-15. DELETED
16. REVISION 2: INCORPORATED 24590-PTF-M6N-RDP-00014, 24590-PTF-M6N-RDP-00016, 24590-PTF-M6N-RDP-00021, 24590-PTF-M6N-M8OT-00007, AND 24590-PTF-M6N-M8OT-00017. REVISED QUALITY LEVEL AND SEISMIC CATEGORY. ADDED HIGH POINT VENTS. MODIFIED REFERENCE 1.
17. THE PRESSURE BOUNDARY FOR ALL PIPING, STRUCTURES AND COMPONENTS ON THIS DRAWING ARE IDENTIFIED AS QUALITY LEVEL CM AND SEISMIC CATEGORY SC-III, UNLESS OTHERWISE NOTED.
18. NUMBER IN PARENTHESIS AT JUMPER BREAK IS THE HOT CELL AREA NUMBER AND ADJACENT NUMBER IS THE PIPING ISOMETRIC/JUMPER SUPPORT FRAME INTERFACE NOZZLE NUMBER.
19. REVISION 3:INCORPORATED 24590-PTF-M6N-M8OT-00037, -00038 AND 24590-PTF-M6N-RDP-00026. ADDED PIPING ISOMETRIC/JUMPER SUPPORT FRAME INTERFACE NOZZLE NUMBERS. ADDED/REVISED/ DELETED NOTES, HOLDS, AND REFERENCES.

HOLD/OPEN ITEMS:

1-9. DELETED

REFERENCES:

1. THE REQUIRED BATCH SEQUENCES, PERMISSIVES, INTERLOCKS, ALARMS, AND OPERATOR INTERFACE POINTS ARE FULLY DESCRIBED IN THE SOFTWARE FUNCTIONAL SPECIFICATION FOR PTF-SPENT RESIN COLLECTION AND DEWATERING PROCESS (RDP) SYSTEM, 24590-PTF-3PS-RDP-T0001.
2. DELETED

Please note that source, special nuclear, and byproduct materials, as defined in the Atomic Energy Act of 1954 (AEA) are regulated at the U. S. Department of Energy (DOE) facilities exclusively by DOE, acting pursuant to its AEA authority. DOE asserts that the AEA gives it sole and exclusive responsibility and authority to regulate source, special nuclear, and byproduct materials at DOE-owned nuclear facilities. Information contained herein on radionuclides is provided for process description purposes only.

REV	DESCRIPTION	ORG	CHKD	RVWD	APVD	DATE
3	REVISED PER NOTE 19	SC	CEA	RVS	KK	10/30/07
2	REVISED PER NOTE 16	JH	RV	JJ	KK	1/19/06
0	ISSUED FOR CONSTRUCTION	KKP	PA	RV	JJ	4/01/03

REVISION HISTORY

Q QUALITY DESIGNATOR

ISSUED BY RPP-WTP PDC — ISSUE STAMP

PROJECT No.	24590
SITE	HANFORD
AREA	200E
BUILDING No.	10

	BY	DATE
ORIGINATOR	KK PANDEY	4/01/03
CHECKER	P AVIGUETERO	4/01/03
APPROVER	R VOKE	4/01/03
REVIEWER	J JULYK	4/01/03

CONTENT APPLICABLE TO ALARA? [XX] YES [ ] NO
ADR NO. 24590-PTF-ADR-M-02-049 REV: 1
SAFETY SCREEN REQUIRED? [XX] YES [ ] NO | EMS INITIAL IF YES KK

BECHTEL — RIVER PROTECTION PROJECT WASTE TREATMENT PLANT, 2435 STEVENS CENTER PLACE, RICHLAND, WA 99354

CONTRACT No: DE-AC27-01RV14136

P&ID - PTF ION EXCHANGE SPENT RESIN COLLECTION & DEWATERING PROCESS

SCALE: NONE

24590-PTF-M6-RDP-00001 REV 3

SAFETY SCREEN IS REQUIRED FOR DRAWING TYPES IDENTIFIED IN 24590-WTP-GPP-SREG-002

E SIZE - 44x34 COMPUTER GENERATED - MANUAL CHANGES NOT PERMITTED

R10850353

10/26/2007 07:20:18 AM

PLOTTED BY: wmahoney
C:\Work\wmahoney\dms03837\PTFMRDP00001.dgn

FORM E_SDN.DGN 02/2003

RDP-FILT-00003 SPENT RESIN DEWATERING COALESCING FILTER 90 SCFM 0.03 MICRON

RDP-FILT-00001A SPENT RESIN DEWATERING COALESCING FILTER 765 SCFM 0.03 MICRON

RDP-FILT-00001B SPENT RESIN DEWATERING COALESCING FILTER 765 SCFM 0.03 MICRON

RDP-BLWR-00001 SPENT RESIN DEWATERING BLOWER 360 CFM @ 14.5 IN HG 30 HP

RDP-SMPLR-00001 SPENT RESIN DEWATERING SAMPLE CYLINDER 0-100 % DEW PT/HUMIDITY 40-120 F, 0-15 PSIG

RDP-VSL-00004 SPENT RESIN DEWATERING MOISTURE SEP. VESSEL 79.67 GAL. MOV 23.5 IN ID x 59.375 IN H

RDP-CCL-00001 SPENT RESIN DEWATERING MOISTURE SEPARATION COOLING COIL 60,000 BTU/HR -

RDP-SKID-00001 SPENT RESIN DEWATERING EQUIPMENT SKID - -

RDP-PMP-00011 SPENT RESIN DEWATERING PUMP 60 GPM MAX. AIR DRIVEN - -

RDP-CHU-00001 SPENT RESIN DEWATERING CHILLER EST 60,000 BTU/HR 5 HP

NOTES:

1. SEE DRAWINGS 24590-WTP-M6-50-00001 THROUGH 24590-WTP-M6-50-00008 FOR GENERAL NOTES, SYMBOLS AND LEGEND, AND GENERAL SLOPE REQUIREMENTS.
2. THE PRESSURE BOUNDARY FOR ALL SYSTEMS, STRUCTURES AND COMPONENTS SHOWN ON THIS DRAWING IS IDENTIFIED AS QUALITY LEVEL CM AND SEISMIC CATEGORY SC-IV, UNLESS OTHERWISE NOTED.
3. DELETED
4. CONTENTS OF THIS DRAWING ARE DANGEROUS WASTE PERMIT AFFECTING.
5. ALL INTERNAL SUPPORTS AND WELDS THAT INTERACT WITH THE PRIMARY CONFINEMENT BARRIER (VESSEL) SHALL MAINTAIN EQUAL QUALITY AND SEISMIC CATEGORY AS THE PARENT.
6. SHADOW SHIELDING IS NOT IN THE VENDOR SCOPE AND SHALL BE SUPPLIED BY BECHTEL.
7-9. DELETED
10. ROOM IS DESIGNATED R5/C5 WHILE DEWATERING SEQUENCE IS IN PROGRESS. FOR STAGING, CONNECTION AND DISCONNECTION OF THE DEWATERING CONTAINER, ROOM IS DESIGNATED R3/C3.
11. DELETED
12. PIPE SLEEVE PENETRATIONS BETWEEN OCCUPATIONAL AREAS AND INACCESSIBLE/REMOTE AREAS (R5) SHALL HAVE SHADOW SHIELDING TO MITIGATE DIRECT RADIATION SHINE OR BE JOGGLED, AS DETERMINED BY ENVIRONMENTAL AND NUCLEAR SAFETY. ALL PIPE/SLEEVE INTERFACES SHALL BE SEALED USING APPROVED FIRE-RATED PENETRATION SEAL DESIGNS TO MAINTAIN THE INTEGRITY OF THE FIRE WALL BETWEEN AREAS.
13-15. DELETED
16. THE SLOPE OF LINE RDP-ZL-00122-S12A-03 AT WALL PENETRATION MAY REDUCE TO NO LESS THAN 1:50. THE SPECIFIED SLOPE, 1:20 SHALL BE MAINTAINED WHEREVER POSSIBLE.
17. DUE TO PHYSICAL CONSTRAINTS THE SLOPE OF LINE RDP-ZL-00122-S12A-03 AND RDP-ZL-00196-S12A-02, IN SECTIONS, MAY BE REDUCED TO NO LESS THAN 1:40. THE SPECIFIED SLOPE 1:20 WILL BE MAINTAINED WHEREVER POSSIBLE.
18. FILTER MOUNTED INTEGRAL TO ADJACENT PRESSURE CONTROL VALVE.
19-21. DELETED
22. INSTRUMENT AIR FOR AIR OPERATED VALVES ON RDP-SKID-00001 AND THE INFLATABLE SEAL FOR THE QUICK DISCONNECT FOR THE RDP-SP-00001 ON 24590-PTF-M6-RDP-00007.
23-25. DELETED
26. MINIMIZE PIPE RUN LENGTH BETWEEN UPSTREAM TEE AND VALVE.
27. DELETED
28. REVISION 3 REVISED QUALITY LEVELS AND SEISMIC BREAKS. UPDATED VENDOR INFORMATION. INCORPORATED 24590-PTF-M6N-RDP-00018. REVISED NOTES 2, 17 AND 23. ADDED NOTES 27 AND 28.
29. 24590-CM-POA-MWDO-00005-02-49 REV.G WAS SUPERSEDED AND THE CONTENTS WERE INCORPORATED INTO THIS DRAWING AND 24590-PTF-M6-RDP-00007.
30. NUMBER IN PARENTHESIS IS THE HOT CELL AREA NUMBER AND ADJACENT NUMBER IS THE PIPING ISOMETRIC/JUMPER SUPPORT FRAME INTERFACE NOZZLE NUMBERS.
31. ITEMS NOTED ARE BECHTEL SCOPE.
32. REVISION 4: REVISED TO INCORPORATE 24590-PTF-M6N-M8OT-00037 AND -00038 AND SUPERSEDES 24590-CM-POA-MWDO-00005-02-49 REV. G. ADDED PIPING ISOMETRIC/JUMPER SUPPORT FRAME INTERFACE NOZZLE NUMBERS, LINE AND BRANCH NUMBERS, QUALITY/SEISMIC FLAGS, AND MINOR EDITORIAL CHANGES. ADDED/DELETED/REVISED NOTES AND REFERENCES.

HOLD/OPEN ITEMS:

1-8. DELETED

REFERENCES:

1. THE REQUIRED BATCH SEQUENCES, PERMISSIVES, INTERLOCKS, ALARMS, AND OPERATOR INTERFACE POINTS ARE FULLY DESCRIBED IN THE SOFTWARE FUNCTIONAL SPECIFICATION FOR PTF-SPENT RESIN COLLECTION AND DEWATERING PROCESS (RDP) SYSTEM, 24590-PTF-3PS-RDP-T0001.

Please note that source, special nuclear, and byproduct materials, as defined in the Atomic Energy Act of 1954 (AEA) are regulated at the U. S. Department of Energy (DOE) facilities exclusively by DOE acting pursuant to its AEA authority. DOE asserts that pursuant to AEA, it has sole and exclusive responsibility and authority for regulating source, special nuclear, and byproduct materials at DOE-owned nuclear facilities. Information contained herein on radionuclides is provided for process description purposes only.

REV	DESCRIPTION	ORG	CHKD	RVWD	APVD	DATE
4	REVISED PER NOTE 32	SC	APP	ECS	RVP WD	10/30/07
3	REVISED PER NOTE 28	JCH	RAV	JJ	KK	1/19/06
0	ISSUED FOR CONSTRUCTION	KKP	PA	JJ	RV	6/13/03

REVISION HISTORY

Q QUALITY DESIGNATOR

ISSUED BY RPP-WTP PDO

PROJECT No.	24590
SITE	HANFORD
AREA	200E
BUILDING No.	10

ISSUE STAMP

	BY	DATE
ORIGINATOR	KK PANDEY	6/13/03
CHECKER	P AVIGUETERO	6/13/03
APPROVER	R VOKE	6/13/03
REVIEWER	JL JULYK	6/13/03

CONTENT APPLICABLE TO ALARA? [X] YES [ ] NO
ADR NO. 24590-PTF-ADR-M-03-007 REV: 3
SAFETY SCREEN REQUIRED? [X] YES [ ] NO EMMS INITIAL IF YES

SAFETY SCREEN IS REQUIRED FOR DRAWING TYPES IDENTIFIED IN 24590-WTP-GPP-SREG-002

COMPUTER GENERATED - MANUAL CHANGES NOT PERMITTED

RIVER PROTECTION PROJECT
WASTE TREATMENT PLANT
2435 STEVENS CENTER PLACE
RICHLAND, WA 99354

CONTRACT No: DE-AC27-01RV14136

P&ID-PTF
ION EXCHANGE
SPENT RESIN COLLECTION AND DEWATERING

SCALE: NONE

24590-PTF-M6-RDP-00002 REV 4

E SIZE - 44x34

10/30/2007 09:15:45 AM

R10850352

PLOTTED BY: mmahoney
P:\Work\mmahoney\dwg\24590-PTF-M6-RDP-00002.dgn

FORM E_SDN.DGN 02/2003

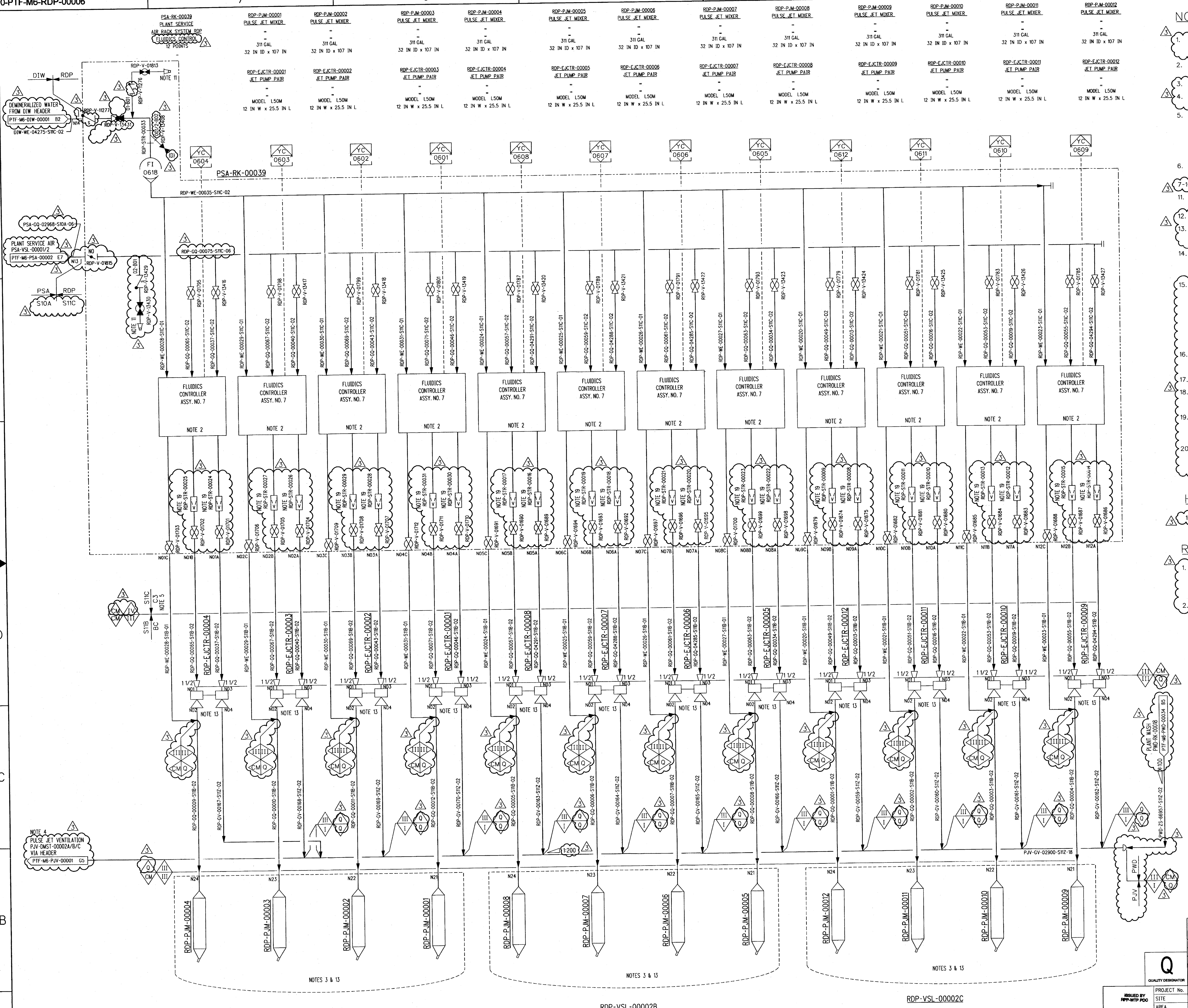

NOTES:

1. SEE DRAWING 24590-WTP-M6-50-00001 THROUGH 24590-WTP-M6-50-00008 FOR GENERAL NOTES, SYMBOLS AND LEGEND, AND GENERAL SLOPE REQUIREMENTS.
2. SEE JET PUMP PAIR CONTROL DETAIL ON LEGEND SHEET 24590-WTP-M6-50-00006.
3. REFER TO 24590-PTF-M6-RDP-00001 FOR PROCESS INFORMATION.
4. THE PULSE JET VENTILATION SYSTEM (PJV) HEADER IS QUALITY LEVEL Q AND SEISMIC CATEGORY SC-I.
5. PIPE SLEEVE PENETRATIONS BETWEEN OCCUPATIONAL AREAS AND INACCESSIBLE/REMOTE AREAS (R5) SHALL HAVE SHADOW SHIELDING TO MITIGATE DIRECT RADIATION SHINE OR BE JOGGLED, AS DETERMINED BY ENVIRONMENTAL AND NUCLEAR SAFETY. ALL PIPE/SLEEVE INTERFACES SHALL BE SEALED USING APPROVED FIRE-RATED PENETRATION SEAL DESIGNS TO MAINTAIN THE INTEGRITY OF THE FIRE WALL BETWEEN AREAS.
6. CONTENTS OF THIS DOCUMENT ARE DANGEROUS WASTE PERMIT AFFECTING.

7-10. DELETED

11. REAGENT PLANT WASH AIR SERVICES PROVIDED AT A LOCAL UTILITY STATION.
12. DELETED
13. ALL PULSE JET MIXERS ARE QUALITY LEVEL CM AND SEISMIC CATEGORY SC-III. JET PUMP PAIRS ARE QUALITY LEVEL Q AND SEISMIC CATEGORY SC-III.
14. ALL LINES ON THIS PIPING AND INSTRUMENTATION DIAGRAM SHALL BE FREE DRAINING UNLESS OTHERWISE NOTED. PROVIDE VENTS AND DRAINS AS NEEDED. VENTS AND DRAINS SHALL BE DESIGNED PER 24590-WTP-3PB-P000-T0001.
15. REVISION 2: INCORPORATED 24590-PTF-M6N-RDP-00010, 24590-PTF-M6N-RDP-00024, 24590-PTF-M6N-M80T-00007, 24590-PTF-M6N-M80T-00012, 24590-PTF-M6N-M80T-00015. DELETED QUICK CONNECT TAG AND CHECK VALVE, ADDED MATERIAL BREAK, REVISED QUALITY / SEISMIC CLASSIFICATIONS. REVISED NOTES 2, 4, 12, AND 13. ADDED NOTES 14, 15, 16 AND 17. DELETED NOTE 7. ADDED BLOW DOWN VALVE AND BRANCH NUMBERS TO STRAINERS. RELOCATED TIE-IN POINT OF DISCHARGE LINE ON RDP-EJCTR-00004. DELETED DEMIN WATER ISOLATION VALVES, REDUCED PROCESS SERVICE LINE SIZE.
16. THE PRESSURE BOUNDARY FOR ALL STRUCTURES, SYSTEMS AND COMPONENTS ARE QUALITY LEVEL CM AND SEISMIC CATEGORY SC-IV, UNLESS OTHERWISE NOTED.
17. DELETED
18. DRIVE AND SUCTION BRANCH CONNECTIONS TO BE LOCATED OFF BOTTOM OF PLANT SERVICE AIR HEADER AND MAY NOT BE POCKETED.
19. STRAINER SHALL BE A CONICAL PILGRIM HAT TYPE, PERFORATED WITH 1/8 INCH DIAMETER HOLES LOCATED ON 3/16 INCH CENTERS AND PERMANENTLY INSTALLED. MINIMUM OPEN FLOW AREA SHALL BE 150% OF PIPE CROSS SECTION AREA.
20. REVISION 3: INCORPORATED 24590-PTF-M6N-M80T-00037 AND 24590-PTF-M6N-M80T-00038. ADDED/DELETED/REVISED NOTES REFERENCES AND MINOR EDITORIAL CHANGES. REVISE SWING CHECK VALVES AND RE-ROUTE LINE FLUSH TO END CAP OF PJV HEADER.

HOLD/OPEN ITEMS:

1-5. DELETED

REFERENCES:

1. THE REQUIRED BATCH SEQUENCES, PERMISSIVES, INTERLOCKS, ALARMS AND OPERATOR INTERFACE POINTS ARE FULLY DESCRIBED IN THE SOFTWARE FUNCTIONAL SPECIFICATION, FOR PTF-SPENT RESIN DEWATERING PROCESS (RDP) SYSTEM, 24590-PTF-3PS-RDP-T0001.
2. DELETED

Please note that source, special nuclear, and byproduct materials, as defined in the Atomic Energy Act of 1954 (AEA) are regulated at the U. S. Department of Energy (DOE) facilities exclusively by DOE acting pursuant to its AEA authority. DOE asserts that pursuant to AEA, it has sole and exclusive responsibility and authority to regulate source, special nuclear, and byproduct materials at DOE-owned nuclear facilities. Information contained herein on radionuclides is provided for process description purposes only.

REV	DESCRIPTION	ORG	CHKD	RVWD	APVD	DATE
3	REVISED PER NOTE 20	SC	[illegible]	CER ELS	RCA RLG [illegible]	10/30/07
2	REVISED PER NOTE 15	JH	RV	JJ	KK	1/19/06
0	ISSUED FOR CONSTRUCTION	KKP	PA	JJ	RV	04-01-03

REVISION HISTORY

Q
QUALITY DESIGNATOR

ISSUED BY RPP-WTP PDC
ISSUE STAMP

PROJECT No.	24590
SITE	HANFORD
AREA	200E
BUILDING No.	10

	BY	DATE
ORIGINATOR	K. PANDEY	04-01-03
CHECKER	P. AVIGUETERO	04-01-03
APPROVER	R. VOKE	04-01-03
REVIEWER	J. JULYK	04-01-03

CONTENT APPLICABLE TO ALARA? [X] YES [ ] NO
ADR NO. 24590-PTF-ADR-M-02-049 REV: 1
SAFETY SCREEN REQUIRED? [X] YES [ ] NO E&NS INITIAL IF YES [illegible]

BECHTEL
RIVER PROTECTION PROJECT
WASTE TREATMENT PLANT
2435 STEVENS CENTER PLACE
RICHLAND, WA 99354

CONTRACT No: DE-AC27-01RV14136

P & ID - PTF
ION EXCHANGE SPENT RESIN COLLECTION AND DEWATERING UTILITY SYSTEMS - PSA RACK

SCALE: NONE
24590-PTF-M6-RDP-00006
REV 3

SAFETY SCREEN IS REQUIRED FOR DRAWING TYPES IDENTIFIED IN 24590-WTP-GPP-SREG-002

'E' SIZE - 44x34
COMPUTER GENERATED - MANUAL CHANGES NOT PERMITTED

R10850355

10/29/2007 04:35:05 PM

PLOTTED BY: lcsanvic
C:\Work\lcsanvic\dms03837\PTFM6RDP00006.dgn

FORM F_SDN.DGN 02/2003

Drawings and Documents

Operating Unit Group 10 – Appendix 8.4
Pretreatment Building
General Arrangement Drawings

The documents listed in the following table are incorporated by reference into this permit and are subject to the requirements set forth in Part I Standard Conditions, Part II General Facility Conditions, and Part III Operating Unit Group 10 Conditions. Upon request, copies of the documents can be viewed at the Nuclear Waste Program Resource Center located at 3100 Port of Benton Blvd. Richland, WA. Appointments for viewing can be scheduled by calling (509) 372-7950.

Drawing/Document Number	***Description***
24590-PTF-P1-P01T-P0001, Rev 5	General Arrangement Plan El. 0
24590-PTF-P1-P01T-P0002, Rev 3	General Arrangement Plan El. 28
24590-PTF-P1-P01T-00003, Rev 3	General Arrangement Plan El. 56
24590-PTF-P1-P01T-00004, Rev 3	General Arrangement Plan El. 77
24590-PTF-P1-P01T-P0006, Rev 2	General Arrangement Plan El. -45
24590-PTF-P1-P01T-P0007, Rev 6	General Arrangement Section A-A
RESERVED	RESERVED

Source documents (which do not include a "P" in the last set of numbers, e.g. "-P0001," or "-TP001") should be used in conjunction with any document change notices issued against them.

We are currently transitioning from permit documents (which do include a "P" in the last set of numbers) to source documents. At the end of the transition period, permit submittals will contain source documents and will be incorporated into the permit as described in Ecology Publication # 07-05-006 (www.ecy.wa.gov/biblio/nwp.html).

This page intentionally left blank.

24590-PTF-P1-P01T-00003

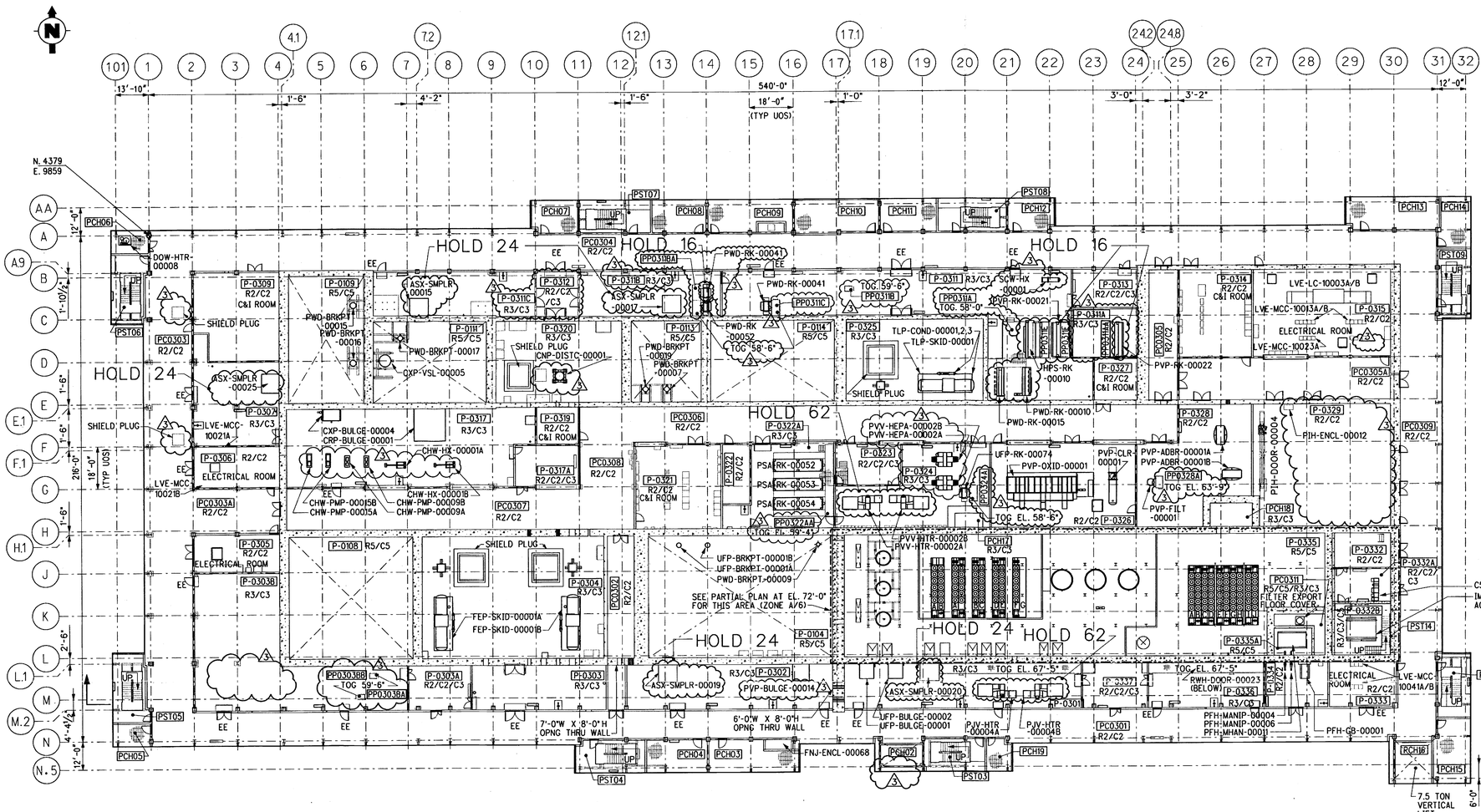

PLAN AT EL. 56'-0"

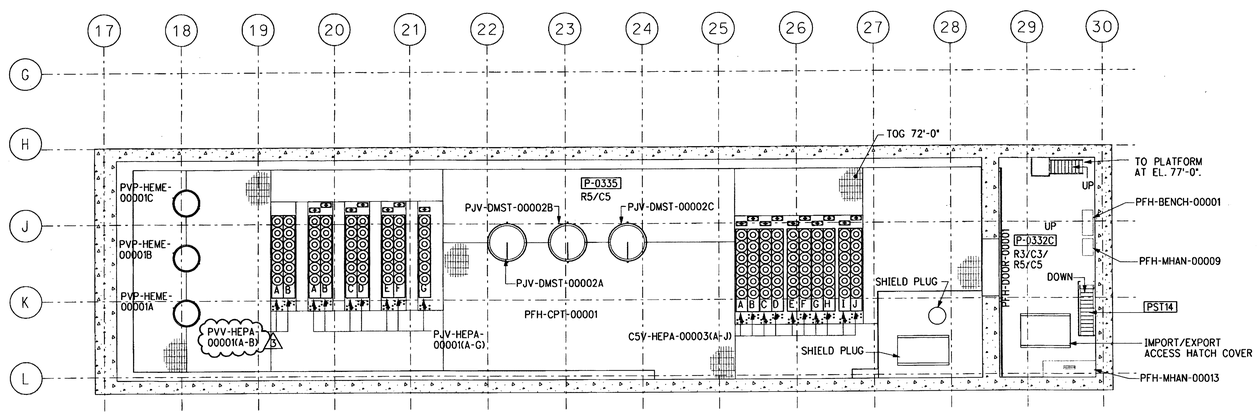

PARTIAL PLAN AT EL. 72'-0"

(NTS)

KEY PLAN

GENERAL NOTES:

1. FOR REFERENCE, SEE PLOT PLAN DRAWING No. 24590-BOF-P1-50-00001.
2. ALL OPERATING AREAS ARE DESIGNATED R2/C2 UNLESS NOTED OTHERWISE.
3. ALL SUB-CHANGE ROOMS ARE DESIGNATED R2/C2/C3 UNLESS NOTED OTHERWISE.
4. DELETED.
5. REFER TO DRAWING No. 24590-BOF-C2-C12T-00002 FOR CONVERSIONS FROM PTF FACILITY TO SITE ELEVATIONS. PTF FACILITY ELEVATION 0'-0" EQUALS SITE ELEVATION 687'-0", ABOVE SEA LEVEL.
6. FOR ELECTRICAL AND C&I EQUIPMENT TAG AND LOCATION, REFER TO INDEX KEY PLAN DRAWING No. 24590-PTF-(LATER).
7. FOR ROOM NUMBERS AND DESCRIPTIONS REFER TO DRAWING No. 24590-PTF-P1-P23T-01001.
8. CONTENTS OF THIS DOCUMENT ARE DANGEROUS WASTE PERMIT AFFECTING.
9. REFER TO PRETREATMENT FACILITY/ANNEX EQUIPMENT LOCATION INDEX KEY PLAN DRAWING No. 24590-PTF-P1-P23T-00001 LISTING AREA DRAWINGS THAT PROVIDE A MORE DETAILED IDENTIFICATION OF EQUIPMENT.
10. DELETED.
11. FOR RADIOLOGICAL CLASSIFICATION REFER TO DOCUMENT No. 24590-WTP-GPP-SRAD-002.

LEGEND:

CA	CONTROLLED ACCESS
EE	EMERGENCY EXIT
FD	FIRE DOOR
TOG	TOP OF GRATING
P-*	ROOMS/CELLS/TUNNELS
PA*	ANNEX NUMBERING
PC*	CORRIDORS & CONNECTING VESTIBULES
PCH*	CHASES
PM*	MEZZANINES
PST*	STAIRS
	EQUIPMENT REMOVAL/LAY DOWN AREA
	OPENING
	CONCRETE
	EMERGENCY SHOWER/EYEWASH (PLAN VIEW)
	EMERGENCY SHOWER/EYEWASH (ELEVATION VIEW)
	GRATING
	GYPSUM WALLBOARD

HOLDS:

4. DELETED
5. DELETED
16. PENDING FURTHER RACK DESIGN DEVELOPEMENT.
24. PENDING BOUNDING INFORMATION & MAINTENANCE DEVELOPMENT - ASX SAMPLER SYSTEM
62. PENDING DATASHEETS WITH VENDOR INFORMATION FOR HEATERS.

REVISION 3 NOTE:

1. INCORPORATED 24590-PTF-P2N-P63T-00018, 24590-PTF-P1N-P01T-00080, 24590-PTF-P1N-P01T-00082, 24590-PTF-P1N-P01T-00085, 24590-PTF-P1N-P01T-00089, 24590-PTF-P1N-P01T-00094, 24590-PTF-P1N-P01T-00096, UPDATED ADR. REVISION NUMBER AND ADDED SAFETY SCREENING REQUIREMENT.
2. RELOCATED PVV-HTR-00002A/B, PVV-HEPA-00002A/B, PVP-ADBR-00001A/B AND PVP-FILT-00001, ADJUSTED CHW-PMP-00009A/B, CHW-HX-00001A/B WITH IN ROOM P-0317, CNP-DISTC-00001 WITH IN P-0320 AND PIH-ENCL-00012 IN P-0329.
3. RELEASED HOLD 5 FOR PVP ABSOBERS.
4. DELETED FEP-DHTR-00001, FEP-DHTR-00002 FROM ROOM P-0303B ROOMS P-0330, P-0331 AND PC0310.
5. ADDED CHW-PMP-00015A/B TO ROOM P-0317, FEP-SKID-00001A/B TO P-0304, TLP-SKID-00001 TO P-0325 AND SHIELD PLUGS TO PC0303. PLATFORMS PP0303BA & B, PP0328A, PP0324A, PP0323A PP0322AA, PP0311AA, PP0311BA, PP0311A,B,C,D,E & F AND ROOMS P-0311A, P-0311B, P-0311C AND P-0312.

REV	DESCRIPTION	ORG	CHKD	RVWD	APVD	DATE
3	SEE REVISION NOTE 3 AT DWG ZONE C/2	RT	FA	DRC	RV,RL	08/31/06
2	SEE REVISION NOTE 2 AT DWG ZONE C/2	RT	FA	DRC	RV,RL	08/31/04
1	SEE REVISION NOTE 1 AT DWG ZONE C/2	FA	RW	JM	SG	11/18/03
0	ISSUED FOR DESIGN	FA	MC	SS	RV	5/5/03

REVISION HISTORY

Please note that source, special nuclear, and byproduct materials, as defined in the Atomic Energy Act of 1954 (AEA), are regulated at the U. S. Department of Energy (DOE) facilities, and the DOE acting pursuant to its AEA authority. DOE accepts that pursuant to AEA, it has sole and exclusive responsibility and authority to regulate the radiological nuclear and byproduct materials at DOE-owned nuclear facilities. Information contained herein on radionuclides is provided for process description purposes only.

issued by RPP/WTP PDC	PROJECT No.	24590
	SITE	HANFORD
	AREA	200E
ISSUE STAMP	BUILDING No.	10

	BY	DATE
ORIGINATOR	F. ALMEIDA	5/5/03
CHECKER	M. G. CARVER	5/5/03
APPROVER	S. SKILES	5/5/03
REVIEWER	R. VOKE	5/5/03

CONTENT APPLICABLE TO ALARA? [X] YES [ ] NO
ADR NO. 24590-PTF-ADR-RAD-04-0001 REV. 3
SAFETY SCREEN REQUIRED? [X] YES [ ] NO EMS INITIAL IF YES GDA
SAFETY SCREEN IS REQUIRED FOR DRAWING TYPES IDENTIFIED IN 24590-WTP-GPP-SRDG-002

BECHTEL

RIVER PROTECTION PROJECT
WASTE TREATMENT PLANT
2435 STEVENS CENTER PLACE
RICHLAND, WA 99354

CONTRACT No: DE-AC27-01RV14136

PRETREATMENT FACILITY GENERAL ARRANGEMENT PLAN AT EL. 56'-0"

SCALE: 1"=20'-0"

24590-PTF-P1-P01T-00003 REV 3

E-SIZE - 44x34
COMPUTER GENERATED - MANUAL CHANGES NOT PERMITTED

11/01/2006 02:00:45 PM

PLOTTED BY: calngers
C:\Work\dms6442\24TFPP01T00003.DGN

FORM E_SDN.DGN 02/2003

RLD-TK-00006A	RLD-MXR-00003	RLD-TK-00006B	RLD-MXR-00004	PVP-HEPA-00052	PVP-HEPA-00053	PVP-HEPA-00054	PVP-HEPA-00055
PROCESS CONDENSATE TANK	PROCESS CONDENSATE JET MIXER	PROCESS CONDENSATE TANK	PROCESS CONDENSATE JET MIXER	PROCESS CONDENSATE HEPA FILTER	PROCESS CONDENSATE MODERATE EFF FILTER	PROCESS CONDENSATE HEPA FILTER	PROCESS CONDENSATE MODERATE EFF. FILTER
-	-	-	-	-	-	-	-
313,500 GAL MAX OPER VOL	1000 GPM	313,500 GAL MAX OPER VOL	1000 GPM	20 SCFM	20 SCFM	20 SCFM	20 SCFM
42 FT ID x 32 FT (T-T)	-	42 FT ID x 32 FT (T-T)	-	5 IN WG	5 IN WG	5 IN WG	5 IN WG

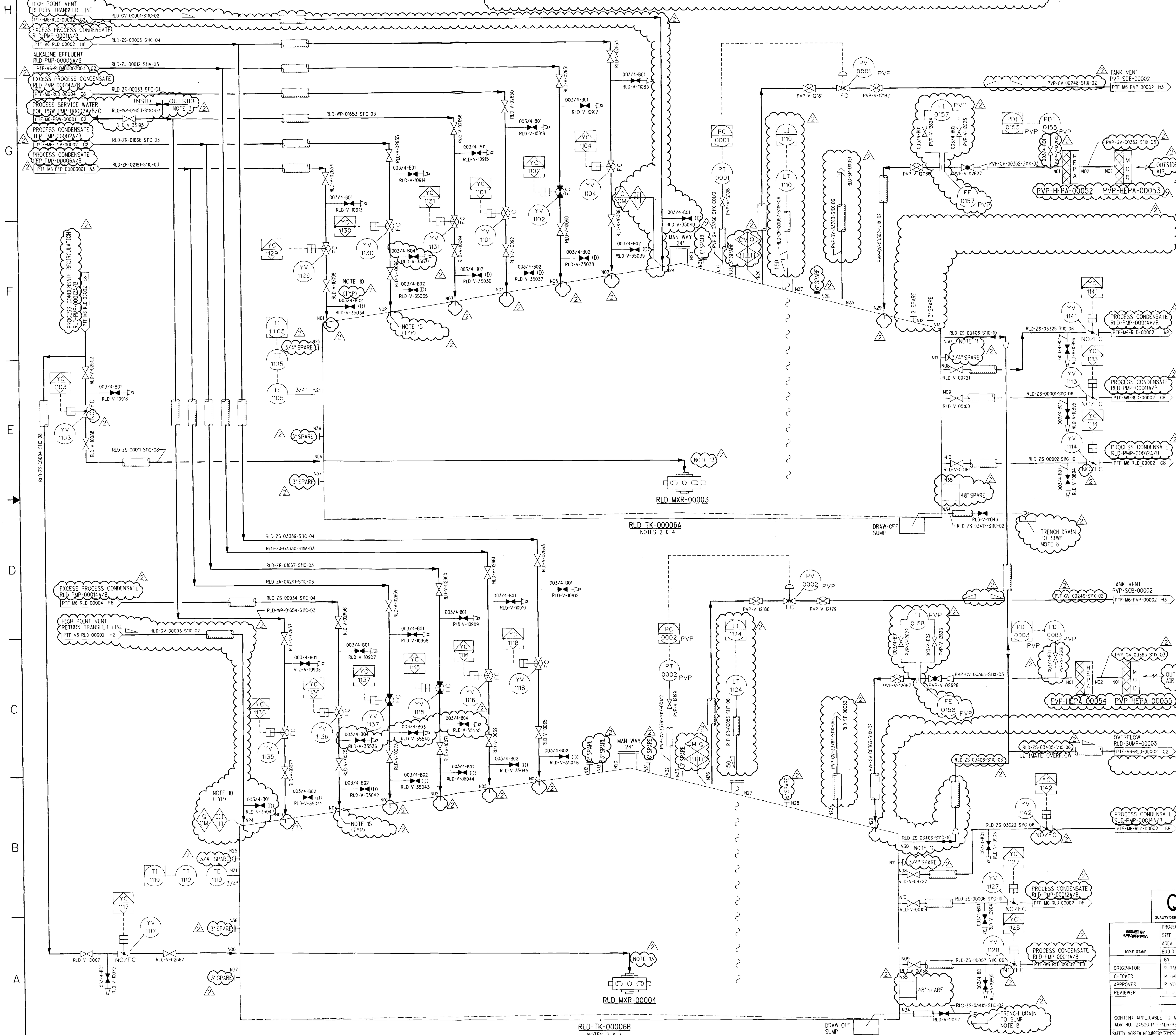

NOTES:

1. SEE DRAWINGS 24590-WTP-M6-50-00001 THROUGH 24590-WTP-M6-50-00008 FOR GENERAL NOTES, SYMBOLS AND LEGEND AND GENERAL SLOPE REQUIREMENTS.
2. ALL INTERNAL SUPPORTS AND WELDS THAT INTERACT WITH THE PRIMARY CONFINEMENT BARRIER (TANK) SHALL MAINTAIN EQUAL QUALITY LEVEL AND SEISMIC CATEGORY AS THE PARENT TANK.
3. ELECTRICAL FREEZE PROTECTION SHALL BE PROVIDED FOR LIQUID FILLED PIPING AND INSTRUMENT SENSING LINES THAT ARE SUBJECT TO FREEZING.
4. RLD-TK-00006A WILL BE DEDICATED TO EVAPORATOR OVERHEADS AND WILL SUPPLY THE PTF WITH PROCESS CONDENSATE FOR REUSE WITHIN THE BUILDING. EXCESS PROCESS CONDENSATE WILL BE TRANSFERRED TO RLD-TK-00006B. RLD-TK-00006B RECEIVES MATERIAL FROM RLD-VSL-00017A/B IN ADDITION TO THE EXCESS CONDENSATE.
5. DELETED
6. THE PRESSURE BOUNDARY FOR ALL COMPONENTS ON THIS DRAWING IS QUALITY LEVEL CM AND SEISMIC CATEGORY SC-III, UNLESS OTHERWISE NOTED.
7. CONTENTS OF THIS DOCUMENT ARE DANGEROUS WASTE PERMIT AFFECTING.
8. COVERED TRENCH SHALL BE LOCATED BETWEEN RLD-TK-00006A/B FOR DRAINING THE TANK CONTENTS TO RLD-SUMP-00003. PROVIDE A PLATE COVER FOR THE TRENCH PER 24590-WTP-DD-S13T-00002.
9. DELETED
10. INSTALL THREADED PLUG AFTER PIPELINES HAVE BEEN HYDROTESTED.
11. MAXIMUM OVERFLOW NOZZLE/PIPE ELEVATION SHALL BE LOWER THAN INTERIOR PERIMETER SPRAY RINGS TO PREVENT FLUID FROM CONTAMINATING SPRAY RINGS.
12. ALL LINES SHALL BE FREE DRAINING UNLESS OTHERWISE NOTED.
13. RLD JET MIXER PIPING TO BE SUPPORTED FOR THE EXPECTED DYNAMIC FORCES DURING THE TRANSITION FROM DRY STAGE TO MIXING STAGE.
14. REVISION 1: ISSUED TO REMOVE HOLDS 1, 2, 3, 4, AND 5. MODIFIED VESSEL VENT SYSTEM PER RHEOLOGY CHANGES AND 24590-PTF-M6N-M80T-00007.
15. EXTEND INLET LINES INTO THE TANK AND DIRECT THEM AWAY FROM THE WALL TO PREVENT LIQUID FROM FLOWING DOWN THE WALLS.
16. REVISION 2: REVISED TO INCORPORATE 24590-PTF-M6N-M80T-00017, -00025, -00037, -00038, 24590-PTF-M6N-RLD-00015, -00019, -00031, -00036, -00038, 24590-PTF-M6PN-RLD-00001, AND -00002. ADDED RADAR PIPE AT NOZZLE N27. ADDED SLOPE. REVISED TANK VENT AND OVERFLOW LINE SIZE. ADDED QUALITY/SEISMIC FLAGS. ADDED/DELETED/REVISED NOTES AND REFERENCES.

HOLD/OPEN ITEMS:

1-5. DELETED

REFERENCES:

1. DELETED
2. REFER TO 24590-PTF-M6-RLD-00005 FOR TANK SPRAY WASH INFORMATION. REFER TO 24590-PTF-MT-RLD-00001 FOR PROCESS CONDENSATE TANK ASSEMBLY DETAILS.

Please note that source, special nuclear, and byproduct materials, as defined in the Atomic Energy Act of 1954 (AEA) are regulated at the U. S. Department of Energy (DOE) facilities exclusively by DOE acting pursuant to its AEA authority. DOE asserts that pursuant to AEA, it has sole and exclusive responsibility and authority to regulate source, special nuclear, and byproduct materials at DOE-owned nuclear facilities. Information contained herein on radionuclides is provided for process description purposes only.

REVISION HISTORY

REV	DESCRIPTION	ORG	CHKD	RVWD	APVD	DATE
2	REVISED PER NOTE 16	SC	MY	CEK ELS	JBM RW	6/3/08
1	REVISED PER NOTE 14	SC	MH	JJ	RV	8/16/04
0	ISSUED FOR CONSTRUCTION AND INCORPORATED DCN 24590-PTF-M6N-RLD-00001	RKR	MH	JJ	RV	03/25/03

Q
QUALITY DESIGNATOR

ISSUED BY RPP-WTP PDC
ISSUE STAMP

PROJECT No.	24590
SITE	HANFORD
AREA	200E
BUILDING No.	10

	BY	DATE
ORIGINATOR	R. RAMOS	03/25/03
CHECKER	M. HALL	03/25/03
APPROVER	R. VOKE	03/25/03
REVIEWER	J. JULYK	03/25/03

CONTENT APPLICABLE TO ALARA? [X] YES [ ] NO
ADR NO. 24590-PTF-ADR-MS-07-0001 REV: 0
SAFETY SCREEN REQUIRED? [X] YES [ ] NO E&NS INITIAL IF YES GDH

BECHTEL
RIVER PROTECTION PROJECT
WASTE TREATMENT PLANT
2435 STEVENS CENTER PLACE
RICHLAND, WA 99354

CONTRACT No: DE-AC27-01RV14136

P&ID - PTF RADIOATIVE LIQUID WASTE DISPOSAL SYSTEM PROCESS CONDENSATE RLD-TK-00006A/B

SCALE: NONE
24590-PTF-M6-RLD-00001
REV 2

SAFETY SCREEN IS REQUIRED FOR DRAWING TYPES IDENTIFIED IN 24590-WTP-GPP-SREG-002
'E' SIZE - 44x34
COMPUTER GENERATED - MANUAL CHANGES NOT PERMITTED
R10929982
05/28/2008 02:02:38 PM

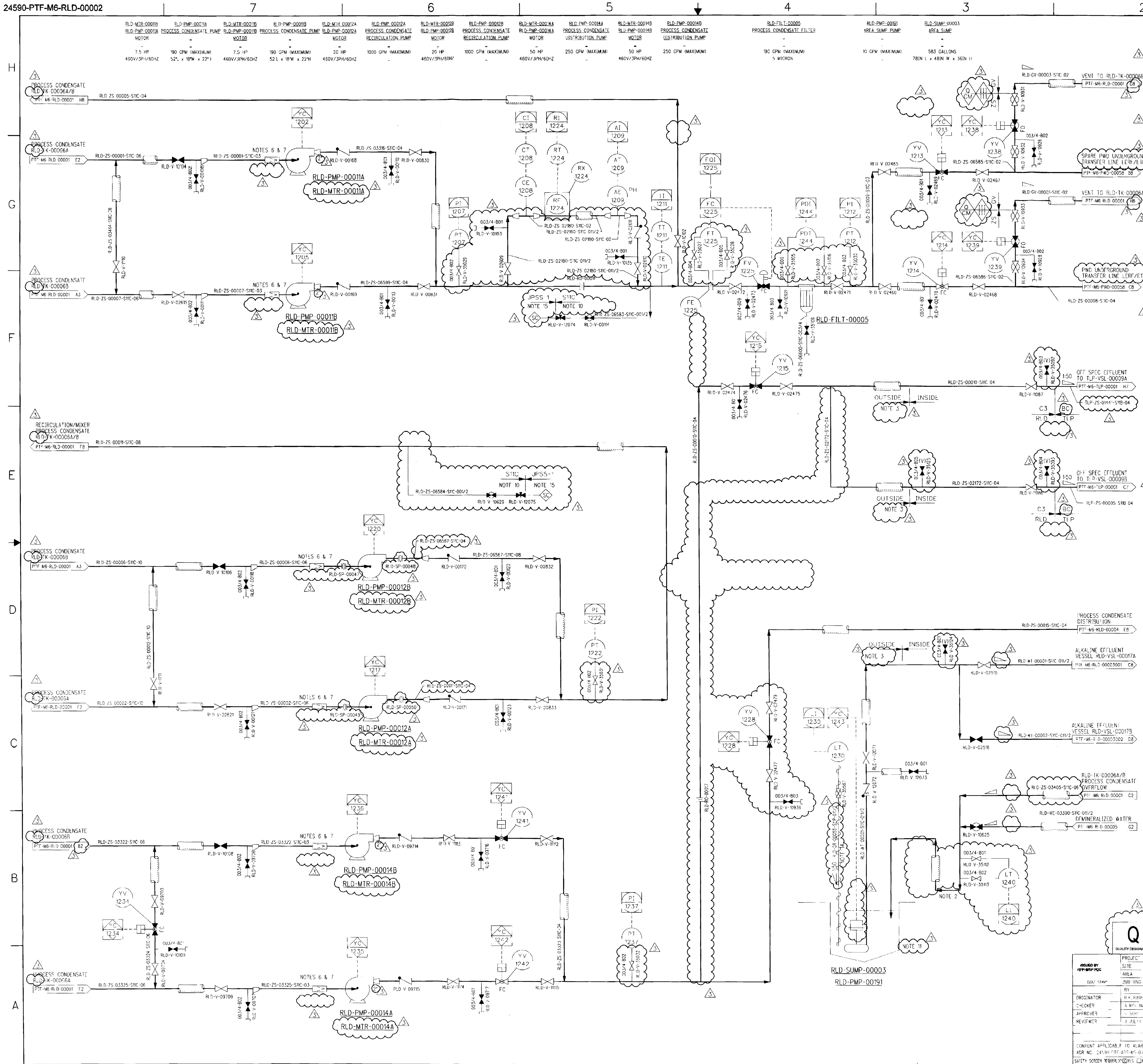

NOTES:

1. SEE DRAWINGS 24590-WTP-M6-50-00001 THROUGH 24590-WTP-M6-50-00008 FOR GENERAL NOTES, SYMBOLS AND LEGEND, AND GENERAL SLOPE REQUIREMENTS.
2. OVERFLOW LINE ACHIEVES A HYDRAULIC SEAL BY MEANS OF A LOOP SEAL, WHICH SHALL BE HEAT TRACED AND INSULATED. LOOP SEAL WATER LEVEL SHALL BE MAINTAINED.
3. ELECTRICAL FREEZE PROTECTION SHALL BE PROVIDED FOR LIQUID FILLED PIPING AND INSTRUMENT SENSING LINES THAT ARE SUBJECT TO FREEZING.
4. THE PRESSURE BOUNDARY FOR ALL COMPONENTS ON THIS DRAWING IS QUALITY LEVEL CM AND SEISMIC CATEGORY SC-III, UNLESS OTHERWISE NOTED.
5. CONTENTS OF THIS DOCUMENT ARE DANGEROUS WASTE PERMIT AFFECTING.
6. PROVIDE A REMOVABLE SPOOL PIECE FOR STARTUP STRAINER.
7. STARTUP STRAINER TO BE PROVIDED BY BECHTEL. STRAINER TYPE SHALL BE "PILGRIM'S HAT" AS PER PIPE SPECIFICATION S11C.
8, 9. DELETED
10. LOCATE THE SAMPLE CONNECTION IN AN ACCESSIBLE AREA IN A SAFE LOCATION TO FACILITATE SAMPLE COLLECTION. THE BALL VALVE, NEEDLE VALVE, AND SAMPLE CONNECTION POINT SHALL BE WITHIN OPERATOR'S IMMEDIATE REACH WHILE COLLECTING A SAMPLE. PROVIDE A NIPPLE DOWNSTREAM OF THE NEEDLE VALVE WITH A MNPT TERMINUS CLOSED BY A FNPT CAP.
11. COVERED TRENCH SHALL BE LOCATED BETWEEN RLD-TK 00006A/B FOR DRAINING THE TANK CONTENTS TO RLD-SUMP-00003. PROVIDE A PLATE COVER FOR RLD-SUMP-00003 PER 24590-WTP-DD-S13T-00002.
12. REVISION 2: REVISED TO INCORPORATE 24590-PTF-M6N-RLD-00013, ROOT VALVE ADDITION, REDUCERS AT PUMP SUCTION AND DISCHARGE, AND INLINE CONDENSATE FILTER PER INTERFACE CONTROL DOCUMENT 24590-WTP-ICD-MG-01-006 REQUIREMENTS.
13. ALL LINES SHALL BE FREE DRAINING, UNLESS OTHERWISE NOTED.
14. RADAR GUIDE TUBE IS TO BE ROUTED TO TRANSMITTER. A FULL PORT BALL VALVE IS REQUIRED FOR ISOLATION PURPOSE AT TRANSMITTER END OF GUIDE TUBE.
15. JPSS-1 SPECIFICATION AS DEFINED IN INSTRUMENT PIPING MATERIAL CLASS SPECIFICATION 24590-WTP-3PS-JXF0-T0002. SPECIFICATION CHANGE ALSO DEFINES AREA OF C&I RESPONSIBILITY.
16. REVISION 3: REVISED TO INCORPORATE 24590-PTF-M6N-RLD-00022, -00028, PTF-M6N-M80T-00029, -00037, AND -00038. FURTHER MODIFIED INFORMATION. INCORPORATED AND FURTHER REVISED 24590-PTF-M6N-RLD-00020 TO DELETE RLD-RO-00012. REROUTED OFF SPEC EFFLUENT TO TLP-VSL-00009A/B. DELETED RLD-RO-00010. ADDED RLD-RO-00017. ADDED QUALITY/SEISMIC FLAGS. REVISED/ADDED NOTES/DELETED NOTES.

HOLD/OPEN ITEMS:

1-3. DELETED

REFERENCES:

1. DELETED

Please note that source, special nuclear, and byproduct materials, as defined in the Atomic Energy Act of 1954 (AEA) are regulated at the U. S. Department of Energy (DOE) facilities exclusively by DOE acting pursuant to its AEA authority. DOE asserts that pursuant to AEA, it has sole and exclusive responsibility and authority to regulate source, special nuclear, and byproduct materials at DOE-owned nuclear facilities. Information contained herein on radionuclides is provided for process description purposes only.

Q
QUALITY DESIGNATOR

REV	DESCRIPTION	ORG	CHKD	RVWD	APVD	DATE
3	REVISED PER NOTE 16	SC	MO	CEK ELS	RH	6/9/08
2	SEE NOTE 12	SC	KJV	JJ	RV	1/8/04
0	ISSUED FOR CONSTRUCTION	RKR	AM	JJ	RV	03/21/03

REVISION HISTORY

ISSUED BY RPP-WTP PDC

ISSUE STAMP

PROJECT No.	24590
SITE	HANFORD
AREA	200E
BUILDING No.	10

	BY	DATE
ORIGINATOR	R.K. RAMOS	03/14/03
CHECKER	A. MOLINA	03/14/03
APPROVER	R. VOKI	03/21/03
REVIEWER	J. JULYK	03/20/03

CONTENT APPLICABLE TO ALARA? [X] YES [ ] NO
ADR NO. 24590-PTF-ADR-MS-07-0001 REV: 0
SAFETY SCREEN REQUIRED? [X] YES [ ] NO E&NS INITIAL IF YES GDM

RIVER PROTECTION PROJECT
WASTE TREATMENT PLANT
2435 STEVENS CENTER PLACE
RICHLAND, WA 99354

CONTRACT No: DE-AC27-01RV14136

P&ID - PTF RADIOACTIVE LIQUID WASTE DISPOSAL SYSTEM PROCESS CONDENSATE RLD-PMP-00011A/B, 12A/B & 14A/B

SCALE: NONE

24590-PTF-M6-RLD-00002

REV 3

SAFETY SCREEN IS REQUIRED FOR DRAWING TYPES IDENTIFIED IN 24590-WTP-GPP-SREG-002

'E' SIZE - 44x34
COMPUTER GENERATED MANUAL CHANGES NOT PERMITTED

R10929983

06/05/2008 09:28:57 PM

24590-PTF-M6-RLD-00003001

RLD-MXR-00001
ALKALINE EFFLUENT JET MIXER
270 GPM (MAXIMUM)

RLD-VSL-00017A
ALKALINE EFFLUENT VESSEL
25,742 GAL. MAX OPER VOL.
16 FT ID X 17.5 FT HT (1)

NON-RADIOACTIVE LIQUID EFFLUENT
BOF_NON_TK_0003
BOF-M6-RLD-00002 A5
RLD-ZA-04006-S11C-04
NOTES 7,13
OUTSIDE BOF
INSIDE PTF
RLD-ZA-04006-S11C-04
RLD-V-1077
RLD-ZA-04006-S11C-04
RLD-VSL-00017B
PTF-M6-RLD-00003002 C8

SAMPLE RETURN
ASX-SMPLR-00017
PTF-M6-ASX-00003 B8
RLD-ZJ-00002-S11M-03
RLD-RD-00003
RLD-ZJ-00003-S11M-01
RLD-VSL-00017B
PTF-M6-RLD-00003002 E8

SPENT REACTANTS
CRP-VSL-00001
PTF-M6-CRP-00001 D8
CRP-ZA-00039-S11K-02
RLD-ZA-04008-S11C-02
RLD-V-35576
RLD-V-35583
RLD-ZA-04009-S11C-02
RLD-VSL-00017B
PTF-M6-RLD-00003002 G8

NOTE 11

C2/C3 FLOOR DRAIN COLLECTION
PWD-VSL-00045/46
PTF-M6-PWD-00043 C2
PWD-PWD-00038-S11K-02

ACIDIC EFFLUENT
NAR-VSL-00007
PTF-M6-NAR-00001 F2
NAR-HN-00033-S11K-06

LAW FUTURE CONNECTION NOTE 5
RLD-V-17285
RLD-ZY-00059-S11C-03

ALKALINE EFFLUENT
LAW_LVP_TK_00001
PTF-M6-PWD-00008 L2
RLD-ZY-00046-S11B-03
RLD-ZY-00046-S11C-03
RLD-V-35577
01-801 150 RLD_JMPR_00001
BC P1T
(43) 209A

AREA SUMP EFFLUENT
RLD-SUMP-00003
PTF-M6-RLD-00002 J2
RLD-WT-00001-S11C-01/2

PASSIVE AIR PURGE
PVP-HEPA-00049
PTF-M6-PVP-00015 F2
PVP-DV-00117-S11K-02

ALKALINE EFFLUENT
RLD-PMP-00005A/B
PTF-M6-RLD-00003003 G2
RLD-ZJ-00093-S11M-04

NOTE 10

RLD MXR-00001
NOTE 12

RLD-VSL-00017A
NOTE 3

NOTE 14

OVERFLOW
RLD-VSL-00017B
PTF-M6-RLD-00003002 D8
NOTE 9

ULTIMATE OVERFLOW

38" MANWAY

ALKALINE EFFLUENT
RLD-PMP-00005A/B
PTF-M6-RLD-00003003 C8
RLD-ZJ-00008-S11M-06

VESSEL VENT
PVP-SCB-00002
PTF-M6-PVP-00002 F3
PVP-DV-00223-S11M-02

NOTES:

1. SEE DRAWINGS 24590-WTP-M6-50-00001 THROUGH 24590-WTP-M6-50-00008 FOR GENERAL NOTES, SYMBOLS AND LEGEND, AND GENERAL SLOPE REQUIREMENTS.
2. CONTENTS OF THIS DOCUMENT ARE DANGEROUS WASTE PERMIT AFFECTING.
3. THE PRESSURE BOUNDARY FOR ALL COMPONENTS ON THIS DRAWING IS QUALITY LEVEL CM AND SEISMIC CATEGORY SC-III, UNLESS OTHERWISE NOTED. ALL INTERNAL SUPPORTS AND WELDS THAT INTERACT WITH THE PRIMARY CONFINEMENT BARRIER (VESSEL) SHALL HAVE THE SAME QUALITY LEVEL AND SEISMIC CATEGORY AS THE PARENT VESSEL.
4. ALL LINES SHALL BE FREE DRAINING UNLESS OTHERWISE NOTED.
5. LINES TO/FROM ASX SHALL BE SELF-DRAINING.
6. TRANSFER LINE IS PROVIDED TO ACCOMMODATE CONTAMINATED ALKALINE EFFLUENT FROM FUTURE VESSEL WITHIN FUTURE LAW VITRIFICATION FACILITY.
7. ELECTRICAL FREEZE PROTECTION SHALL BE PROVIDED FOR LIQUID FILLED PIPING AND INSTRUMENT SENSING LINES THAT ARE SUBJECT TO FREEZING.
8. MINIMIZE BRANCH LENGTH TO REDUCE STAGNATION OF PROCESS FLUID.
9. MAXIMUM OVERFLOW NOZZLE/PIPE ELEVATION SHALL BE LOWER THAN INTERIOR PERIMETER SPRAY RINGS TO PREVENT FLUID FROM CONTAMINATING SPRAY RINGS.
10. LINE SHALL BE DIPPED INTO THE PROCESS FLUID TO ACHIEVE HYDRAULIC SEAL.
11. 3-WAY VALVE SHALL FAIL OPEN TO RLD-VSL-00017A AND FAIL CLOSED TO RLD-VSL-00017B.
12. RLD JET MIXER PIPING TO BE SUPPORTED FOR THE EXPECTED DYNAMIC FORCES DURING THE TRANSITION FROM DRY STAGE TO MIXING STAGE.
13. SYSTEM DESIGN & CONSTRUCTION RESPONSIBILITY LIES AT EACH FACILITY'S BATTERY LIMITS 5'-0" OUTSIDE BUILDING WALL.
14. LEVEL INSTRUMENT MOUNTED DIRECTLY ON VESSEL.
15. THIS DRAWING IS CONVERTED FROM SINGLE SHEET TO MULTI-SHEET DRAWINGS AND, IN PART, SUPERSEDES 24590-PTF-M6-RLD-00003 REV 3. THIS DRAWING INCLUDES INFORMATION FROM 24590-PTF-M6N-RLD-00021, 00029, -00030, AND FROM 24590-PTF-M6OT-00025, -00026, 00037, -00038. FURTHER MODIFIED INFORMATION, OTHER CHANGES FROM SUPERSEDED DRAWING INCLUDE THE ADDITION OF VACUUM BREAKER AND YV-1332 ON THE SPENT REAGENT LINE, AND THE REVISION OF SLOPE AND QUALITY LEVEL AND SEISMIC CATEGORY BREAKS.

HOLD/OPEN ITEMS:

NONE

REFERENCES:

1. REFER TO 24590-PTF-MV-RLD-00001 FOR ALKALINE EFFLUENT VESSEL ASSEMBLY DETAILS.
2. REFER TO 24590-PTF-M6-RLD-00006 FOR VESSEL WASH RING.

Please note that source, special nuclear, and byproduct materials, as defined in the Atomic Energy Act of 1954 (AEA) are regulated at the U. S. Department of Energy (DOE) facilities exclusively by DOE acting pursuant to its AEA authority. DOE asserts that pursuant to AEA, it has sole and exclusive responsibility and authority to regulate source, special nuclear, and byproduct materials at DOE-owned nuclear facilities. Information contained herein on radionuclides is provided for process description purposes only.

DRAWING INDEX

DWG NO	REV	TITLE
24590-PTF-RLD-00003001	0	RAD LIQ WASTE DISP SYS EFFL COLLECTION RLD-VSL-00017A
24590-PTF-RLD-00003002	0	RAD LIQ WASTE DISP SYS EFFL COLLECTION RLD-VSL-00017B
24590-PTF-RLD-00003003	0	RAD LIQ WASTE DISP SYS EFFL TRANSFER RLD PMP-00005A/B

REVISION HISTORY

QUALITY DESIGNATION	REV	DESCRIPTION	ORG	CHKD	RVWD	APVD	DATE
Q	0	ISSUED FOR CONSTRUCTION, SEE NOTE 15	SC	[illegible]	EVS	[illegible]	6/4/08

ISSUED BY WRPS/BNFL		
	PROJECT No.	24590
	SITE	HANFORD
	AREA	200E
RPP-WTP	BUILDING No.	10

	BY	DATE
ORIGINATOR	[signature]	6/3/08
CHECKER	[signature]	6/3/08
APPROVER	[signature]	6/4/08
REVIEWER	[signature]	6/4/08
	[signature]	6/3/08

CONTENT APPLICABLE TO ALARA? [X] YES [ ] NO
ADR NO. 24590-PTF-ADR-MS-07-0001 REV: 0
SAFETY SCREEN REQUIRED? [X] YES [ ] NO EMS INITIAL IF YES [illegible]

SAFETY SCREEN IS REQUIRED FOR DRAWING TYPES IDENTIFIED IN 24590-WTP-GPP-SWE-002

T SIZE - 44x34
COMPUTER GENERATED - MANUAL CHANGES NOT PERMITTED

BECHTEL
RIVER PROTECTION PROJECT
WASTE TREATMENT PLANT
2435 STEVENS CENTER PLACE
RICHLAND, WA 99354

CONTRACT No. DE-AC27-03RV14136

P&ID - PTF
RADIOACTIVE LIQUID WASTE DISPOSAL SYSTEM EFFLUENT COLLECTION RLD-VSL-00017A

SCALE: NONE
24590-PTF-M6-RLD-00003001
REV 0

08/03/2008 01:54:55 PM

PLOTTED BY: bonnerjf
C:\Documents and Settings\bonnerjf\Desktop\24590-PTF-M6-RLD-00003001.dgn

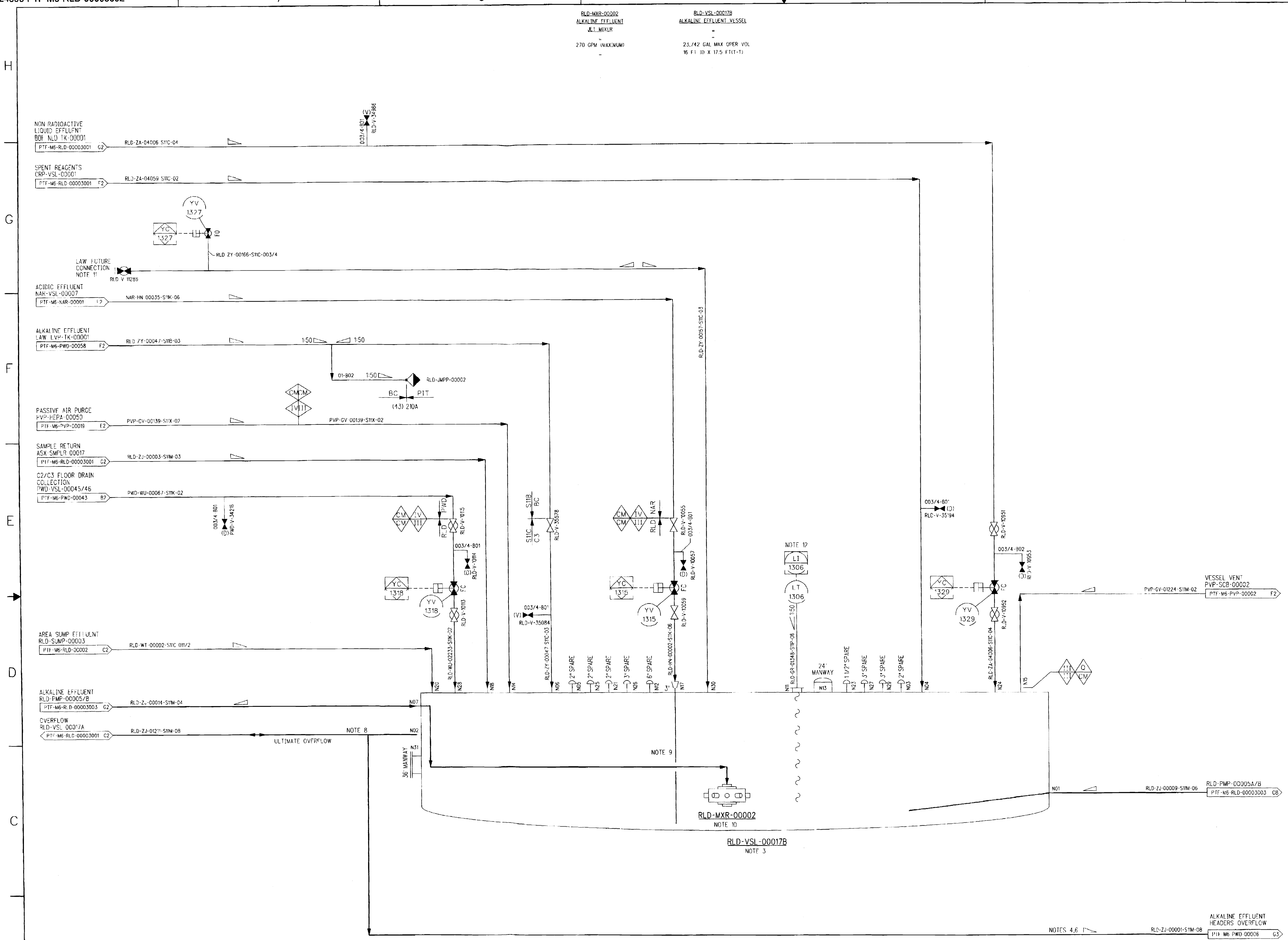

NOTES:

1. SEE DRAWINGS 24590-WTP-M6-50-00001 THROUGH 24590-WTP M6 50 00008 FOR GENERAL NOTES, SYMBOLS AND LEGEND, AND GENERAL SLOPE REQUIREMENTS.
2. CONTENTS OF THIS DOCUMENT ARE DANGEROUS WASTE PERMIT AFFECTING.
3. THE PRESSURE BOUNDARY FOR ALL COMPONENTS ON THIS DRAWING IS QUALITY LEVEL CM AND SEISMIC CATEGORY SC-III, UNLESS OTHERWISE NOTED. ALL INTERNAL SUPPORTS AND WELDS THAT INTERACT WITH THE PRIMARY CONFINEMENT BARRIER (VESSEL) SHALL HAVE THE SAME QUALITY LEVEL AND SEISMIC CATEGORY AS THE PARENT VESSEL.
4. ALL LINES SHALL BE FREE DRAINING, UNLESS OTHERWISE NOTED.
5. LINES TO/FROM ASX SHALL BE SELF DRAINING.
6. THE PIPE SLOPE IS ACHIEVED AS SOON AS PRACTICAL AFTER OVERFLOW CONNECTION BETWEEN RLD-VSL-00017A AND RLD-VSL-00017B.
7. MINIMIZE BRANCH LENGTH TO REDUCE STAGNATION OF PROCESS FLUID.
8. MAXIMUM OVERFLOW NOZZLE/PIPE ELEVATION SHALL BE LOWER THAN INTERIOR PERIMETER SPRAY RINGS TO PREVENT FLUID FROM CONTAMINATING SPRAY RINGS.
9. LINE SHALL BE DIPPED INTO THE PROCESS FLUID TO ACHIEVE HYDRAULIC SEAL.
10. RLD JET MIXER PIPING TO BE SUPPORTED FOR THE EXPECTED DYNAMIC FORCES DURING THE TRANSITION FROM DRY STAGE TO MIXING STAGE.
11. TRANSFER LINE IS PROVIDED TO ACCOMMODATE CONTAMINATED ALKALINE EFFLUENT FROM FUTURE VESSEL WITHIN FUTURE LAW VITRIFICATION FACILITY.
12. LEVEL INSTRUMENT MOUNTED DIRECTLY ON VESSEL.
13. THIS DRAWING IS CONVERTED FROM SINGLE SHEET TO MULTI-SHEET DRAWINGS AND, IN PART, SUPERSEDES 24590-PTF-M6 RLD-00003 REV 3. THIS DRAWING INCLUDES INFORMATION FROM 24590-PTF-M6N-RLD-00021, -00029, 00030, -00034 AND FROM 24590-PTF-M80T-00025, -00026, -00037, -00038. FURTHER MODIFIED INFORMATION. OTHER CHANGES FROM SUPERSEDED DRAWING INCLUDE THE REVISION OF SLOPE AND QUALITY LEVEL/SEISMIC CATEGORY BREAKS.

HOLD/OPEN ITEMS:

NONE

REFERENCES:

1. REFER TO 24590-PTF-MV-RLD-00002 FOR ALKALINE EFFLUENT VESSEL ASSEMBLY DETAILS
2. REFER TO 24590 PTF M6 RLD 00006 FOR VESSEL WASH RING

Please note that source, special nuclear, and byproduct materials, as defined in the Atomic Energy Act of 1954 (AEA) are regulated at the U. S. Department of Energy (DOE) facilities exclusively by DOE acting pursuant to its AEA authority. DOE asserts that pursuant to AEA, it has sole and exclusive responsibility and authority to regulate source, special nuclear, and byproduct materials at DOE-owned nuclear facilities. Information contained herein on radionuclides is provided for process description purposes only.

Q
QUALITY DESIGNATOR

REV	DESCRIPTION	ORG	CHKD	RVWD	APVD	DATE
0	ISSUED FOR CONSTRUCTION, SEE NOTE 13	SC	NTJ	CEK ESS	JBM RDH	6/4/08

REVISION HISTORY

ISSUED BY RPP-WTP PDC

ISSUE STAMP

PROJECT No.	24590
SITE	HANFORD
AREA	200E
BUILDING No.	10

RIVER PROTECTION PROJECT
WASTE TREATMENT PLANT
2435 STEVENS CENTER PLACE
RICHLAND, WA 99354

CONTRACT No: DE AC27-01RV14136

	BY	DATE
ORIGINATOR	[signature]	6/3/08
CHECKER	[signature]	6/3/08
APPROVER	[signature]	6/4/08
REVIEWER	[signature]	6/3/08
	[signature]	6/3/08

CONTENT APPLICABLE TO ALARA? [X] YES [ ] NO
ADR NO. 24590-PTF-ADR-MS-07-0001 REV: 0
SAFETY SCREEN REQUIRED? [X] YES [ ] NO F&NS INITIAL IF YES [initials]

P&ID - PTF RADIOACTIVE LIQUID WASTE DISPOSAL SYSTEM EFFLUENT COLLECTION RLD-VSL-00017 B

SCALE: NONE

24590-PTF-M6-RLD-00003002 REV 0

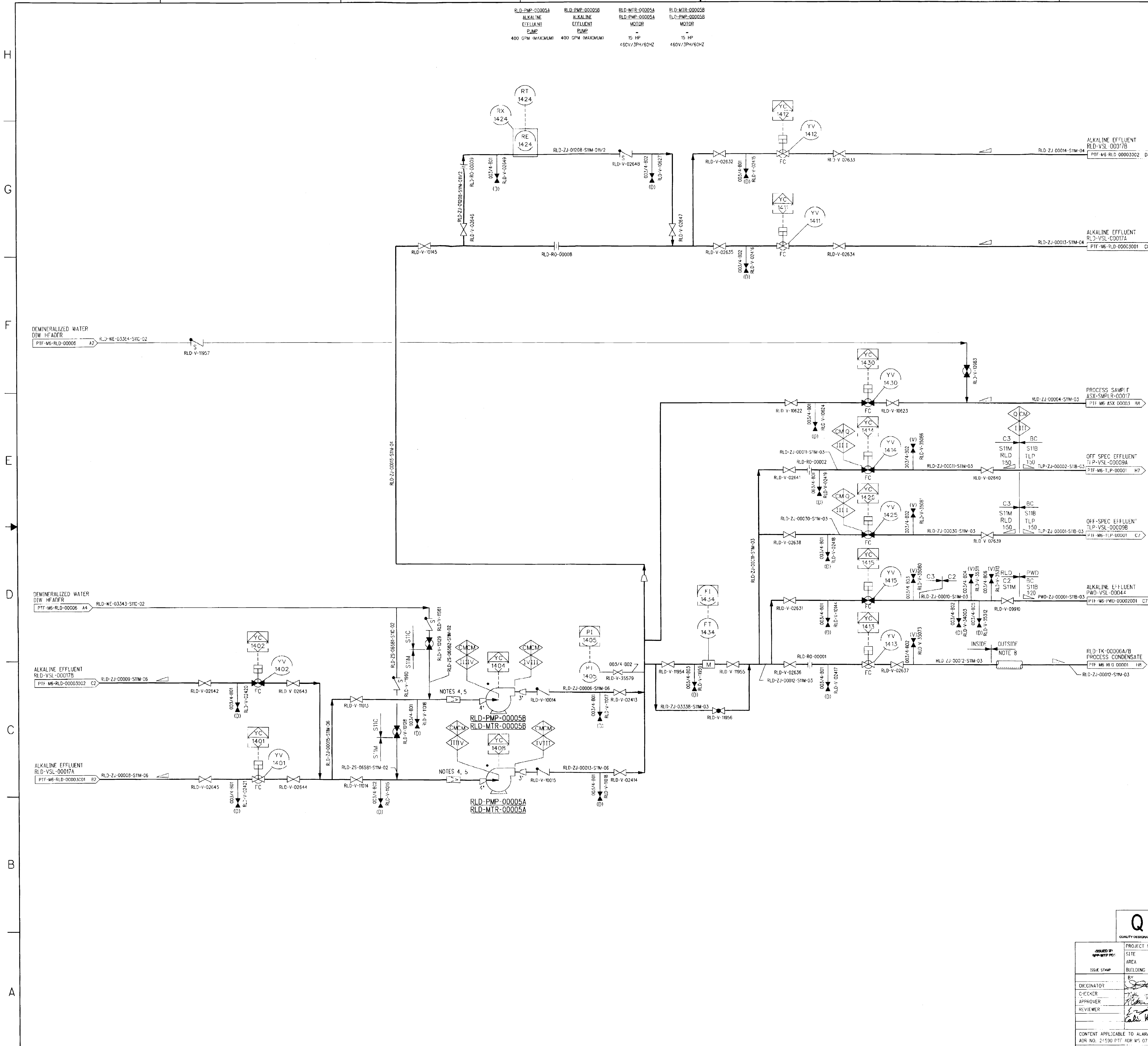

NOTES:

1. SEE DRAWINGS 24590-WTP-M6-50-00001 THROUGH 24590-WTP-M6-50-00008 FOR GENERAL NOTES, SYMBOLS AND LEGEND, AND GENERAL SLOPE REQUIREMENTS.
2. CONTENTS OF THIS DOCUMENT ARE DANGEROUS WASTE PERMIT AFFECTING.
3. THE PRESSURE BOUNDARY FOR ALL COMPONENTS ON THIS DRAWING IS QUALITY LEVEL CM AND SEISMIC CATEGORY SC-III, UNLESS OTHERWISE NOTED.
4. STARTUP STRAINER TO BE PROVIDED BY BECHTEL. STRAINER TYPE SHALL BE 'PILGRIM'S HAT" AS PER PIPE SPECIFICATION S11M.
5. PROVIDE A REMOVABLE SPOOL PIECE FOR STARTUP STRAINER.
6. ALL LINES SHALL BE FREE DRAINING, UNLESS OTHERWISE NOTED.
7. LINES TO/FROM ASX SHALL BE SELF-DRAINING.
8. ELECTRICAL FREEZE PROTECTION SHALL BE PROVIDED FOR LIQUID FILLED PIPING AND INSTRUMENT SENSING LINES THAT ARE SUBJECT TO FREEZING.
9. MINIMIZE BRANCH LENGTH TO REDUCE STAGNATION OF PROCESS FLUID.
10. THIS DRAWING IS CONVERTED FROM SINGLE SHEET TO MULTI-SHEET DRAWINGS AND, IN PART, SUPERSEDES 24590 PTF M6 RLD 00003 REV 3. THIS DRAWING INCLUDES INFORMATION FROM 24590-PTF-M6N-RLD-00021, -00039, AND FROM 24590-PTF-M801-00025, -00026, -00037, -00038. FURTHER MODIFIED INFORMATION. OTHER CHANGES FROM SUPERSEDED DRAWING INCLUDE THE REVISION OF QUALITY LEVEL/SEISMIC CATEGORY BREAKS AND THE REVISION OF THE ADDITION OF RLD-RO-00001/2. DELETED RLD-AE-1423.

HOLD/OPEN ITEMS:

NONE

REFERENCES:

NONE

Please note that source, special nuclear, and byproduct materials, as defined in the Atomic Energy Act of 1954 (AEA) are regulated at the U. S. Department of Energy (DOE) facilities exclusively by DOE acting pursuant to its AEA authority. DOE asserts that pursuant to AEA, it has sole and exclusive responsibility and authority to regulate source, special nuclear, and byproduct materials at DOE-owned nuclear facilities. Information contained herein on radionuclides is provided for process description purposes only.

Q
QUALITY DESIGNATOR

REV	DESCRIPTION	ORG	CHKD	RVWD	APVD	DATE
0	ISSUED FOR CONSTRUCTION, SEE NOTE 10	SC	TWO	CEK ELS	JDM RCH	6/03/08

REVISION HISTORY

ISSUED BY RPP-WTP PDC
ISSUE STAMP

PROJECT No.	24590
SITE	HANFORD
AREA	200E
BUILDING No.	10

RIVER PROTECTION PROJECT
WASTE TREATMENT PLANT
2435 STEVENS CENTER PLACE
RICHLAND, WA 99354

	BY	DATE
ORIGINATOR	[signature]	6/2/08
CHECKER	[signature]	6/2/08
APPROVER	[signature]	6/3/08
REVIEWER	[signature]	6/2/08
	[signature]	6/2/08

CONTRACT No: DE-AC27-01RV14136

P&ID - PTF RADIOACTIVE LIQUID WASTE DISPOSAL SYSTEM EFFLUENT TRANSFER RLD-PMP-00005A/B

CONTENT APPLICABLE TO ALARA? [X] YES [ ] NO
ADR NO. 24590-PTF-ADR-MS-07-0001 REV: 0
SAFETY SCREEN REQUIRED? [X] YES [ ] NO E&NS INITIAL IF YES

SCALE: NONE

24590-PTF-M6-RLD-00003003 REV 0

SAFETY SCREEN IS REQUIRED FOR DRAWING TYPES IDENTIFIED IN 24590-WTP-GPP-SREG-002

'E' SIZE - 44x34
COMPUTER GENERATED - MANUAL CHANGES NOT PERMITTED

R10929985

06/02/2008 03:40:27 PM

PLOTTED BY: bameyer
C:\Work\bameyer\...\24590-PTF-M6-RLD-00003003.dgn

FORM E_SD-EON 02/2003

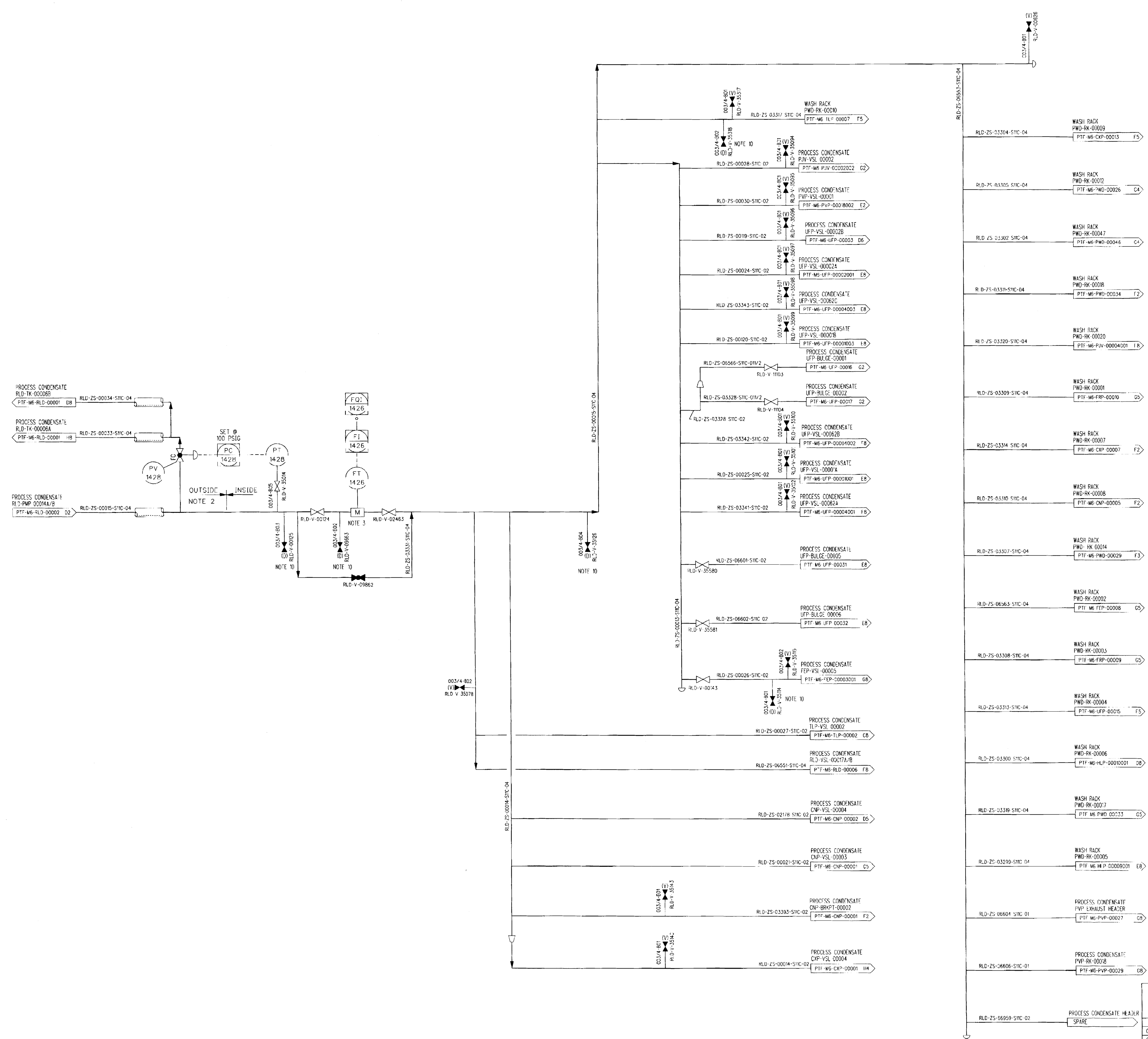

NOTES:

1. SEE DRAWINGS 24590-WTP-M6-50-00001 THROUGH 24590-WTP-M6-50-00008 FOR GENERAL NOTES, SYMBOLS AND LEGEND, AND GENERAL SLOPE REQUIREMENTS.
2. ELECTRICAL FREEZE PROTECTION SHALL BE PROVIDED FOR LIQUID FILLED PIPING AND INSTRUMENT SENSING LINES THAT ARE SUBJECT TO FREEZING.
3. MAINTAIN 10 DIAMETERS UPSTREAM AND 5 DIAMETERS DOWNSTREAM STRAIGHT PIPE FOR MAG METER.
4. THE PRESSURE BOUNDARY FOR ALL COMPONENTS ON THIS DRAWING IS QUALITY LEVEL CM AND SEISMIC CATEGORY SC-III, UNLESS OTHERWISE NOTED.
5. CONTENTS OF THIS DOCUMENT ARE DANGEROUS WASTE PERMIT AFFECTING.

6, 7. DELETED

8. REVISION 1: MAJOR REVISION, INCORPORATED WASH RACK OPTIMIZATION, 24590-PTF-M6N-M80T-00007, 24590-PTF-M6N-RLD-00010, REMOVED HOLD 1, MODIFIED NOTE 3 AND ADDED NOTE 7.
9. ALL LINES SHALL BE FREE DRAINING, UNLESS OTHERWISE NOTED.
10. LOCATE LOW POINT DRAINS AT HEIGHT TO ALLOW PLACEMENT OF 55 GALLON DRUM ON TROLLEY UNDERNEATH.
11. REVISION 2: MAJOR REVISION, NO REVISION CLOUDS REQUIRED. REVISED TO INCORPORATE 24590-PTF-M6N-M80T-00037, -00038, 24590-PTF-M6N-RLD-00018, -00024, -00037, AND -00040. ADDED PROCESS CONDENSATE LINE DITRIBUTION TO UFP-BULGE-00005/6 AND PVP EXHAUST HEADER/RACK. REVISED/ADDED/DELETED NOTES AND REFERENCES.

HOLD/OPEN ITEMS:

1. DELETED.

REFERENCES:

1. DELETED

Please note that source, special nuclear, and byproduct materials, as defined in the Atomic Energy Act of 1954 (AEA) are regulated at the U. S. Department of Energy (DOE) facilities exclusively by DOE acting pursuant to its AEA authority. DOE asserts that pursuant to AEA, it has sole and exclusive responsibility and authority to regulate source, special nuclear, and byproduct materials at DOE-owned nuclear facilities. Information contained herein on radionuclides is provided for process description purposes only.

CM
QUALITY DESIGNATOR

REV	DESCRIPTION	ORG	CHKD	RVWD	APVD	DATE
2	REVISED PER NOTE 11	SC	NTD	CER / ELS	JBM / RV	6/3/08
1	REVISED PER NOTE 8	SC	YH	JJ	RV	05/25/04
0	ISSUED FOR CONSTRUCTION	RR	MH	JJ	RV	03/21/03

REVISION HISTORY

ISSUED BY RPP-WTP PDC
ISSUE STAMP

PROJECT No.	24590
SITE	HANFORD
AREA	200E
BUILDING No.	10

	BY	DATE
ORIGINATOR	R. RAMOS	03/19/03
CHECKER	M. HALL	03/19/03
APPROVER	R. VOKE	03/21/03
REVIEWER	J. JULYK	03/20/03

CONTENT APPLICABLE TO ALARA? [X] YES [ ] NO
ADR NO. 24590-PTF-ADR-MS-07-0001 REV: 0
SAFETY SCREEN REQUIRED? [X] YES [ ] NO F&NS INITIAL IF YES GOH

BECHTEL
RIVER PROTECTION PROJECT
WASTE TREATMENT PLANT
2435 STEVENS CENTER PLACE
RICHLAND, WA 99354

CONTRACT No: DE-AC27-01RV14136

P&ID - PTF RADIOACTIVE LIQUID WASTE DISPOSAL SYSTEM PROCESS CONDENSATE DISTRIBUTION

SCALE: NONE

24590-PTF-M6-RLD-00004 REV 2

SAFETY SCREEN IS REQUIRED FOR DRAWING TYPES IDENTIFIED IN 24590-WTP-GPP-SREG-002

'E' SIZE - 44x34
COMPUTER GENERATED - MANUAL CHANGES NOT PERMITTED

R10929952

05/23/2008 02:31:02 PM

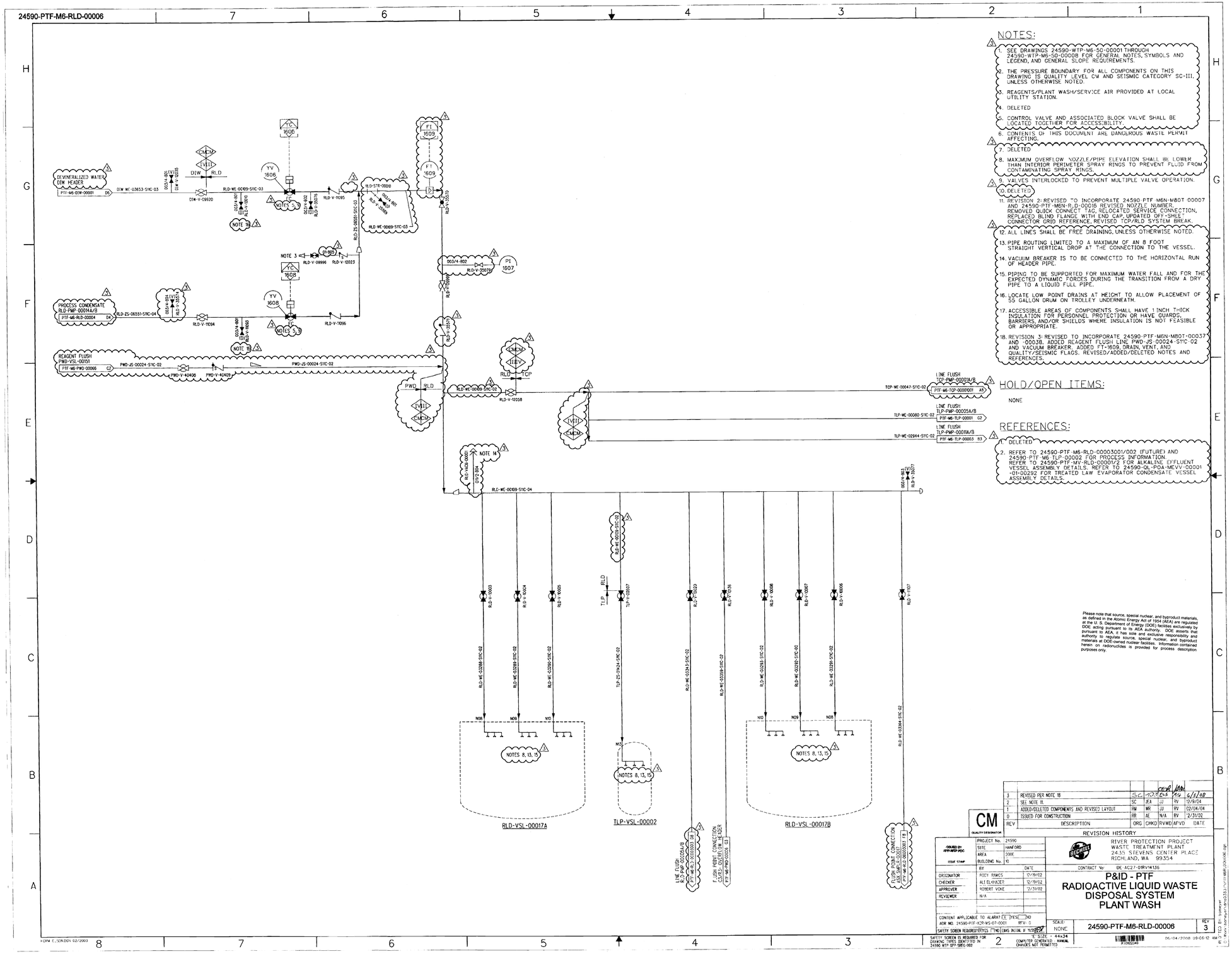

NOTES:

1. SEE DRAWINGS 24590-WTP-M6-SD-00001 THROUGH 24590-WTP-M6-SD-00008 FOR GENERAL NOTES, SYMBOLS AND LEGEND, AND GENERAL SLOPE REQUIREMENTS.
2. THE PRESSURE BOUNDARY FOR ALL COMPONENTS ON THIS DRAWING IS QUALITY LEVEL CM AND SEISMIC CATEGORY SC-III, UNLESS OTHERWISE NOTED.
3. REAGENTS/PLANT WASH/SERVICE AIR PROVIDED AT LOCAL UTILITY STATION.
4. DELETED
5. CONTROL VALVE AND ASSOCIATED BLOCK VALVE SHALL BE LOCATED TOGETHER FOR ACCESSIBILITY.
6. CONTENTS OF THIS DOCUMENT ARE DANGEROUS WASTE PERMIT AFFECTING.
7. DELETED
8. MAXIMUM OVERFLOW NOZZLE/PIPE ELEVATION SHALL BE LOWER THAN INTERIOR PERIMETER SPRAY RINGS TO PREVENT FLUID FROM CONTAMINATING SPRAY RINGS.
9. VALVES INTERLOCKED TO PREVENT MULTIPLE VALVE OPERATION.
10. DELETED
11. REVISION 2: REVISED TO INCORPORATE 24590-PTF-M6N-W80T 00007 AND 24590-PTF-M6N-R,D-00015 REVISED NOZZLE NUMBER, REMOVED QUICK CONNECT TAG, RELOCATED SERVICE CONNECTION, REPLACED BLIND FLANGE WITH END CAP, UPDATED OFF-SHEET CONNECTOR GRID REFERENCE, REVISED TCP/RLD SYSTEM BREAK.
12. ALL LINES SHALL BE FREE DRAINING, UNLESS OTHERWISE NOTED.
13. PIPE ROUTING LIMITED TO A MAXIMUM OF AN 8 FOOT STRAIGHT VERTICAL DROP AT THE CONNECTION TO THE VESSEL.
14. VACUUM BREAKER IS TO BE CONNECTED TO THE HORIZONTAL RUN OF HEADER PIPE.
15. PIPING TO BE SUPPORTED FOR MAXIMUM WATER FALL AND FOR THE EXPECTED DYNAMIC FORCES DURING THE TRANSITION FROM A DRY PIPE TO A LIQUID FULL PIPE.
16. LOCATE LOW POINT DRAINS AT HEIGHT TO ALLOW PLACEMENT OF 55 GALLON DRUM ON TROLLEY UNDERNEATH.
17. ACCESSIBLE AREAS OF COMPONENTS SHALL HAVE 1 INCH THICK INSULATION FOR PERSONNEL PROTECTION OR HAVE GUARDS, BARRIERS, AND/OR SHIELDS WHERE INSULATION IS NOT FEASIBLE OR APPROPRIATE.
18. REVISION 3: REVISED TO INCORPORATE 24590-PTF-M6N-W80T-00037 AND -00038. ADDED REAGENT FLUSH LINE PWD-JS-00024-S1C-02 AND VACUUM BREAKER. ADDED FT-1609, DRAIN, VENT, AND QUALITY/SEISMIC FLAGS. REVISED/ADDED/DELETED NOTES AND REFERENCES.

HOLD/OPEN ITEMS:

NONE

REFERENCES:

1. DELETED
2. REFER TO 24590-PTF-M6-RLD-00003001/002 (FUTURE) AND 24590-PTF-M6-TLP-00002 FOR PROCESS INFORMATION. REFER TO 24590-PTF-MV-RLD-00001/2 FOR ALKALINE EFFLUENT VESSEL ASSEMBLY DETAILS. REFER TO 24590-QL-POA-MEVV-00001-01-00292 FOR TREATED LAW EVAPORATOR CONDENSATE VESSEL ASSEMBLY DETAILS.

Please note that source, special nuclear, and byproduct materials, as defined in the Atomic Energy Act of 1954 (AEA) are regulated at the U. S. Department of Energy (DOE) facilities exclusively by DOE acting pursuant to its AEA authority. DOE asserts that pursuant to AEA, it has sole and exclusive responsibility and materials at DOE-owned nuclear facilities. Information contained herein on radionuclides is provided for process description purposes only.

REV	DESCRIPTION	ORG	CHKD	RVWD	APVD	DATE
3	REVISED PER NOTE 18	SC	JEA	RV	RV	6/5/08
2	SEE NOTE 11.	SC	JEA	JJ	RV	12/9/04
1	ADDED/DELETED COMPONENTS AND REVISED LAYOUT	RM	MR	JJ	RV	02/04/04
0	ISSUED FOR CONSTRUCTION	RR	AE	N/A	RV	12/31/02

REVISION HISTORY

CM — QUALITY DESIGNATOR

ISSUED BY RPP-WTP PDC

ISSUE STAMP

	BY	DATE
ORIGINATOR	RODY RAMOS	12/19/02
CHECKER	ALI ELHAJER	12/19/02
APPROVER	ROBERT VOKE	12/31/02
REVIEWER	N/A	

CONTENT APPLICABLE TO ALARA? (X) YES ( ) NO
AER NO. 24590-PTF-ACR-WS-07-0001 REV: 0
SAFETY SCREEN REQUIREMENTS (TYP) (CMS INITIAL IF N/S)
SAFETY SCREEN IS REQUIRED FOR DRAWING TYPES IDENTIFIED IN 24590 WTP QM-SREC-002

PROJECT No.	24590
SITE	HANFORD
AREA	200E
BUILDING No.	90

BECHTEL — RIVER PROTECTION PROJECT WASTE TREATMENT PLANT 2435 STEVENS CENTER PLACE RICHLAND, WA 99354

CONTRACT No: DE-AC27-01RV14136

P&ID - PTF RADIOACTIVE LIQUID WASTE DISPOSAL SYSTEM PLANT WASH

SCALE: NONE

24590-PTF-M6-RLD-00006

REV 3

E-SIZE - 44x34 COMPUTER GENERATED MANUAL CHANGES NOT PERMITTED

PT0002049

06/04/2008 09:06:12 AM

C:\Documents and Settings\rramos\Desktop\24590-PTF-M6-RLD-00006.dgn

CRM E_SIZE.DGN 02/2003

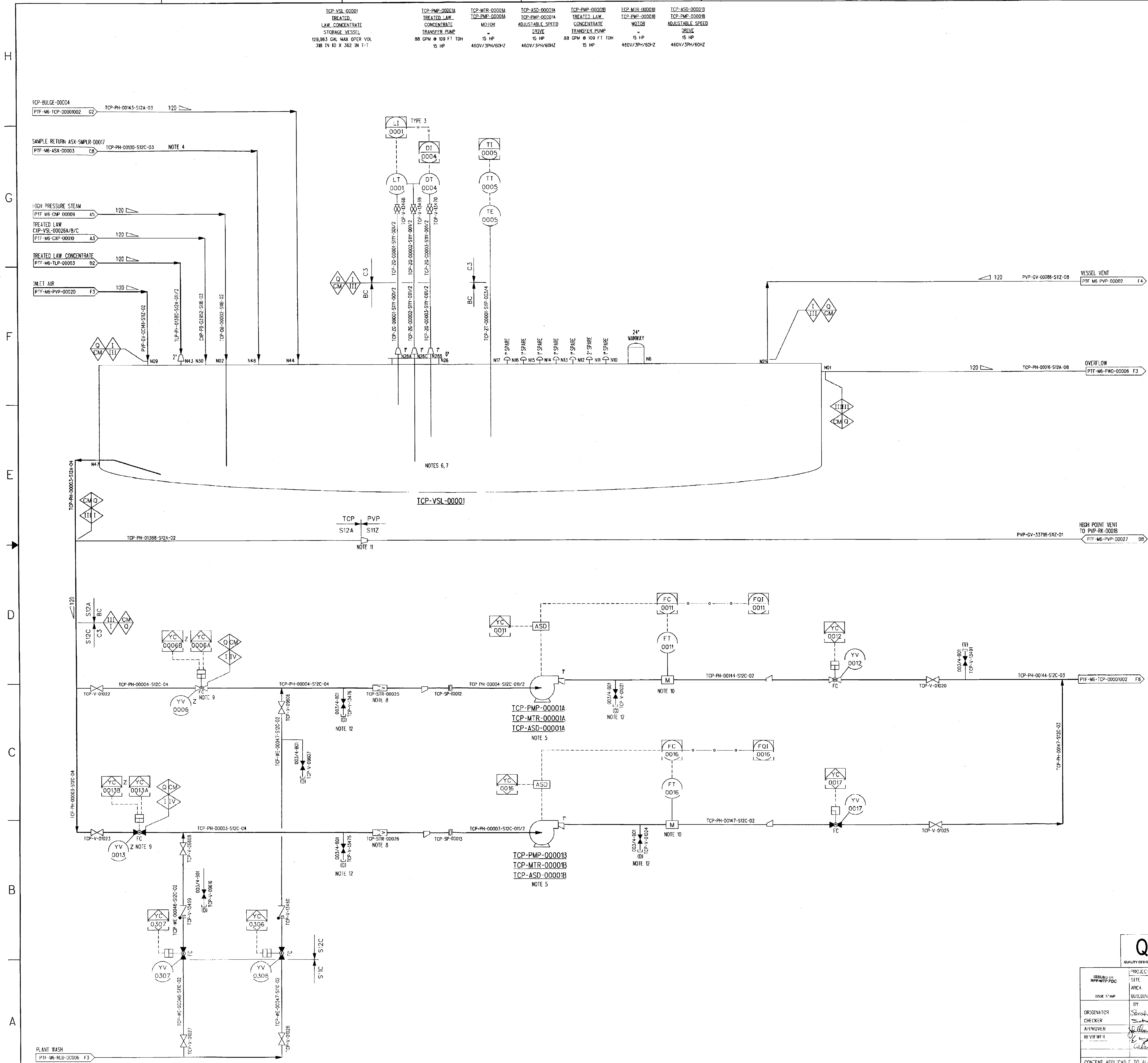

NOTES:

1. SEE DRAWINGS 24590-WTP-M6-50-00001 THROUGH 24590-WTP-M6-50-00008 FOR GENERAL NOTES, SYMBOLS AND LEGEND AND GENERAL SLOPE REQUIREMENTS.
2. CONTENTS OF THIS DOCUMENT ARE DANGEROUS WASTE PERMIT AFFECTING.
3. THE PRESSURE BOUNDARY FOR ALL COMPONENTS ON THIS DRAWING IS QUALITY LEVEL CM AND SEISMIC CATEGORY SC-III, UNLESS OTHERWISE NOTED. ALL INTERNAL SUPPORTS AND WELDS THAT INTERACT WITH THE PRIMARY CONTAINMENT BARRIER (VESSEL) SHALL MAINTAIN EQUAL QUALITY LEVEL AND SEISMIC CATEGORY AS THE PARENT VESSEL.
4. ALL LINES SHOWN ON THIS DRAWING SHALL BE FREE DRAINING, UNLESS OTHERWISE NOTED.
5. FOR PUMP SEAL WATER DISTRIBUTION DRAWING, REFER TO DRAWING 24590-PTF-M6-PSW-00006.
6. FOR PULSE JET MIXER REPRESENTATION AND NOZZLES, REFER TO DRAWING 24590-PTF-M6-TCP-00002001.
7. FOR PLANT WASH REPRESENTATION AND NOZZLES, REFER TO DRAWING 24590-PTF-M6-TLP-00007.
8. PROVIDE REMOVABLE PIPING SPOOL FOR START UP STRAINER. STRAINER WILL BE REMOVED AND REPLACED BY A SPOOL PIECE PRIOR TO START UP.
9. PROCESS LINES DOWNSTREAM OF THESE ACTUATED VALVES SHALL NOT SEE DESIGN TEMPERATURES HIGHER THAN 175° F.
10. MAINTAIN 5 DIAMETERS OF STRAIGHT PIPE UPSTREAM AND 2 DIAMETERS OF STRAIGHT PIPE DOWNSTREAM OF THE FLOW METER.
11. MINIMUM HEIGHT OF REDUCER GREATER THAN OVERFLOW HEIGHT.
12. MAINTAIN MAXIMUM DISTANCE BETWEEN VALVE AND FLOOR TO ALLOW FOR SYSTEM DRAINING.
13. THIS DRAWING IS CONVERTED FROM A SINGLE SHEET TO MULTI-SHEET DRAWINGS AND, IN PART, SUPERSEDES 24590-M6-TCP-00001 REV 4. THIS DRAWING INCLUDES INFORMATION FROM 24590-PTF-M6N-TCP-00017, 24590-PTF-M6N-M80T-00037, AND -00038. DELETED BACKFLOW PREVENTER TCP-BFP-00002. DIPPED LEGS FROM NOZZLES 10, 14, AND 16 HAVE BEEN REMOVED DUE TO HPAV CONCERNS.

HOLD/OPEN ITEMS:

NONE

REFERENCES:

1. THE REQUIRED BATCH SEQUENCES, PERMISSIVES, INTERLOCKS, ALARMS AND OPERATOR INTERFACE POINTS ARE FULLY DESCRIBED IN THE SOFTWARE FUNCTIONAL SPECIFICATION FOR TCP-TREATED LAW CONCENTRATE STORAGE PROCESS SYSTEM, 24590-PTF-3PS-TCP-T0001.
2. FOR PERMISSIVES AND INTERLOCKS FOR IMPORTANT TO SAFETY SYSTEMS (ITS), REFER TO SAFETY SYSTEM REQUIREMENT SPECIFICATION 24590-PTF-3PS-PPJ-T0008 (FUTURE).

Please note that source, special nuclear, and byproduct materials, as defined in the Atomic Energy Act of 1954 (AEA) are regulated at the U. S. Department of Energy (DOE) facilities exclusively by DOE acting pursuant to its AEA authority. DOE asserts that pursuant to AEA, it has sole and exclusive responsibility and authority to regulate source, special nuclear, and byproduct materials at DOE-owned nuclear facilities. Information contained herein on radionuclides is provided for process description purposes only.

DRAWING INDEX		
DWG NO	REV	TITLE
24590-PTF-M6-TCP-00001001	0	TREATED LAW CONCENTRATE STORAGE SYSTEM
24590-PTF-M6-TCP-00001002	0	TREATED LAW CONCENTRATE STORAGE SYSTEM

Q
QUALITY DESIGNATOR

REV	DESCRIPTION	ORG	CHKD	RVWD	APVD	DATE
0	ISSUED FOR CONSTRUCTION SEE NOTE 13	SL	SJ	ELS		4/14/08

REVISION HISTORY

ISSUED BY RPP-WTP PDC
ISSUE STAMP

PROJECT No.	24590
SITE	HANFORD
AREA	200E
BUILDING No.	10

RIVER PROTECTION PROJECT
WASTE TREATMENT PLANT
2435 STEVENS CENTER PLACE
RICHLAND, WA 99354

CONTRACT No: DE-AC27-01RV14136

	BY	DATE
ORIGINATOR	Sarah Lachmann	4-3-08
CHECKER	Satish Jain	4-3-08
APPROVER	[signature]	4-14-08
REVIEWER	[signature]	4/5/08
	Calvin Healy	4/5/08

CONTENT APPLICABLE TO ALARA? [X] YES [ ] NO
ADR NO. 24590-PTF-ADR-M-02-006 REV: 4
SAFETY SCREEN REQUIRED? [X] YES [ ] NO E&NS INITIAL IF YES

P&ID - PTF
TREATED LAW CONCENTRATE STORAGE SYSTEM
TCP-VSL-00001

SCALE: NONE
24590-PTF-M6-TCP-00001001
REV 0

SAFETY SCREEN IS REQUIRED FOR DRAWING TYPES IDENTIFIED IN 24590-WTP-GPP-SREG-002

'E' SIZE - 44x34
COMPUTER GENERATED - MANUAL CHANGES NOT PERMITTED

R10894976
04/03/2008 03:16:45 PM

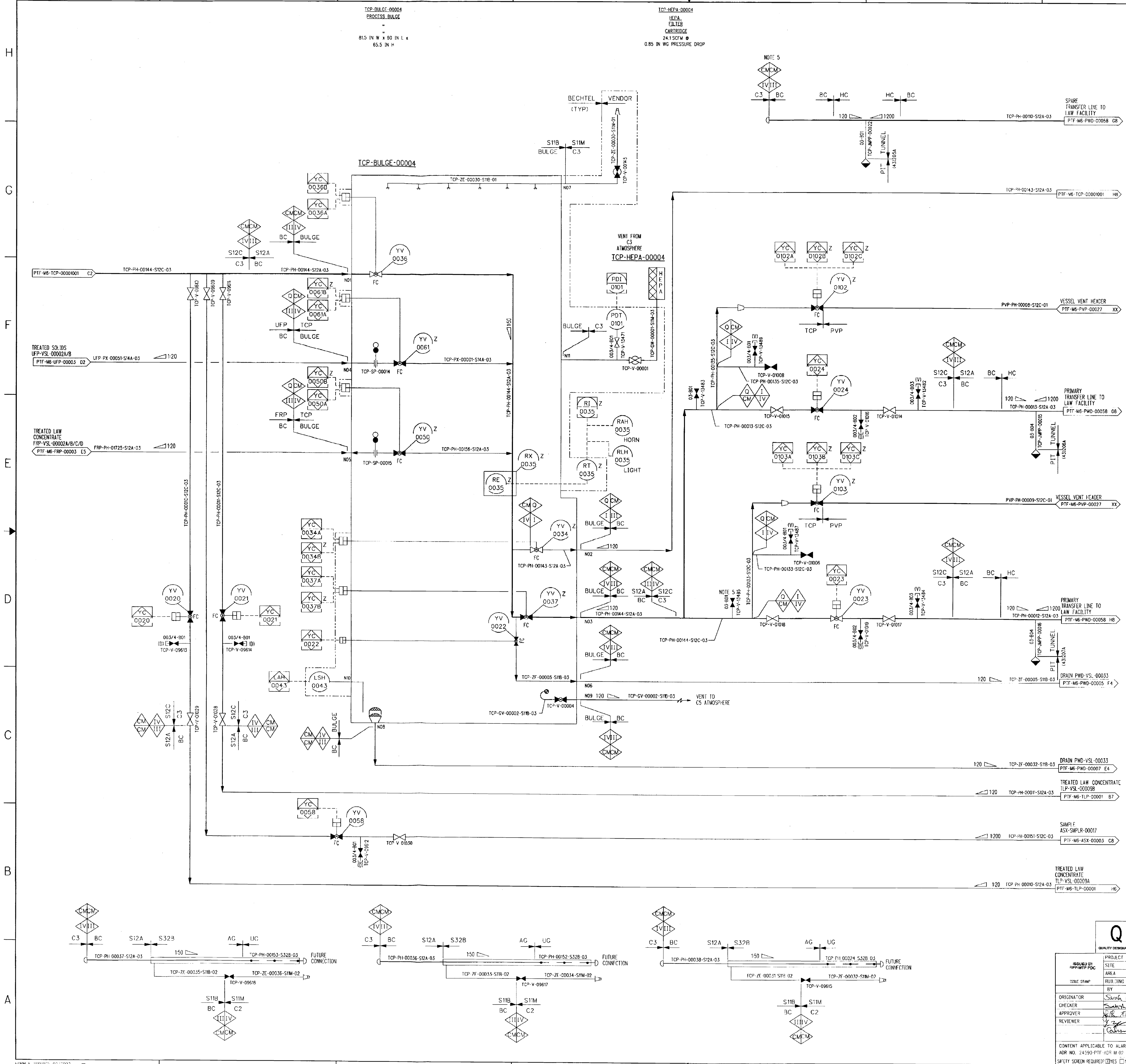

NOTES:

1. SEE DRAWINGS 24590-WTP-M6-50-00001 THROUGH 24590-WTP-M6-50-00008 FOR GENERAL NOTES, SYMBOLS AND LEGEND AND GENERAL SLOPE REQUIREMENTS.
2. CONTENTS OF THIS DOCUMENT ARE DANGEROUS WASTE PERMIT AFFECTING.
3. THE PRESSURE BOUNDARY FOR ALL COMPONENTS ON THIS DRAWING ARE QUALITY LEVEL CM AND SEISMIC CATEGORY SC-III, UNLESS OTHERWISE NOTED. TCP-BULGE-00004 HAS THE FOLLOWING QUALITY LEVEL AND SEISMIC CATEGORY: BULGE STRUCTURE IS QUALITY LEVEL CM AND SEISMIC CATEGORY SC-II, BULGE SHIELDING IS QUALITY LEVEL Q AND SEISMIC CATEGORY SC-II, VALVES AND ACTUATORS FOR YV-0037, YV-0050, YV-0061 AND GAMMA MONITOR:IS QUALITY LEVEL Q AND SEISMIC CATEGORY SC-II, IN-BLEED HEPA AND WASH RING PIPING ARE QUALITY LEVEL CM AND SEISMIC CATEGORY SC-II. ALL OTHER PIPING, VALVES AND ACTUATORS ARE QUALITY LEVEL CM AND SEISMIC CATEGORY SC-IV.
4. ALL LINES SHOWN ON THIS DRAWING SHALL BE FREE DRAINING, UNLESS OTHERWISE NOTED.
5. SPARE TRANSFER LINE IS TO BE CONNECTED UPON FAILURE OF PRIMARY TRANSFER LINES. CONNECT SECTION 6 TCP-PH-00144-S12C-03 B01 TO TCP-PH-00110 S12A-03.
6. THIS DRAWING IS CONVERTED FROM A SINGLE SHEET TO MULTI-SHEET DRAWINGS AND, IN PART, SUPERSEDES 24590-PTF-M6-TCP-00001 REV 4. THIS DRAWING INCLUDES INFORMATION FROM 24590-PTF-M6N-M80T-00037, -00038, -00045, 24590-PTF-M6N-TCP-00018, AND 24590-WTP-FC-P-06-0216. ADDED VENT LINES PVP-PH-00008/00009-S12C-01 WITH CONTROL VALVES.

HOLD/OPEN ITEMS:

NONE

REFERENCES:

1. THE REQUIRED BATCH SEQUENCES, PERMISSIVES, INTERLOCKS, ALARMS AND OPERATOR INTERFACE POINTS ARE FULLY DESCRIBED IN THE SOFTWARE FUNCTIONAL SPECIFICATION FOR TCP-TREATED LAW CONCENTRATE STORAGE PROCESS SYSTEM, 24590-PTF-3PS-TCP-T0001.
2. FOR PERMISSIVES AND INTERLOCKS FOR IMPORTANT TO SAFETY SYSTEMS (ITS), REFER TO SAFETY SYSTEM REQUIREMENT SPECIFICATION 24590-PTF-3PS-PPJ-T0008 (FUTURE).

Please note that source, special nuclear, and byproduct materials, as defined in the Atomic Energy Act of 1954 (AEA) are regulated at the U. S. Department of Energy (DOE) facilities exclusively by DOE acting pursuant to its AEA authority. DOE asserts that pursuant to AEA, it has sole and exclusive responsibility and authority to regulate source, special nuclear, and byproduct materials at DOE-owned nuclear facilities. Information contained herein on radionuclides is provided for process description purposes only.

Q
QUALITY DESIGNATOR

REV	DESCRIPTION	ORG	CHKD	RVWD	APVD	DATE
0	ISSUED FOR CONSTRUCTION SEE NOTE 6	SL	SJ	CER / ELS	JBM / JD / RCK	4-14-08

REVISION HISTORY

ISSUED BY RPP-WTP PDC
ISSUE STAMP

PROJECT No.	24590
SITE	HANFORD
AREA	200E
BUILDING No.	10

RIVER PROTECTION PROJECT
WASTE TREATMENT PLANT
2435 STEVENS CENTER PLACE
RICHLAND, WA 99354

CONTRACT No: DE-AC27-01RV14136

	BY	DATE
ORIGINATOR	Sarah Lachman	4-3-08
CHECKER	Satish Jain	4-3-08
APPROVER	[signature] / JBM	4-14-08
REVIEWER	[signature]	4/5/08
	Calvin Rosley	4/5/08

P&ID - PTF
TREATED LAW CONCENTRATE STORAGE SYSTEM
TCP-VSL-00001

CONTENT APPLICABLE TO ALARA? [X] YES [ ] NO
ADR NO. 24590-PTF-ADR-M-02-006 REV: 4
SAFETY SCREEN REQUIRED? [X] YES [ ] NO E&NS INITIAL IF YES

SCALE: NONE
24590-PTF-M6-TCP-00001002
REV 0

SAFETY SCREEN IS REQUIRED FOR DRAWING TYPES IDENTIFIED IN 24590-WTP-GPP-SREG-002

E SIZE 44x34
COMPUTER GENERATED - MANUAL CHANGES NOT PERMITTED

R10894977
04/03/2008 03:17:35 PM

24590-PTF-M6-TCP-00002001

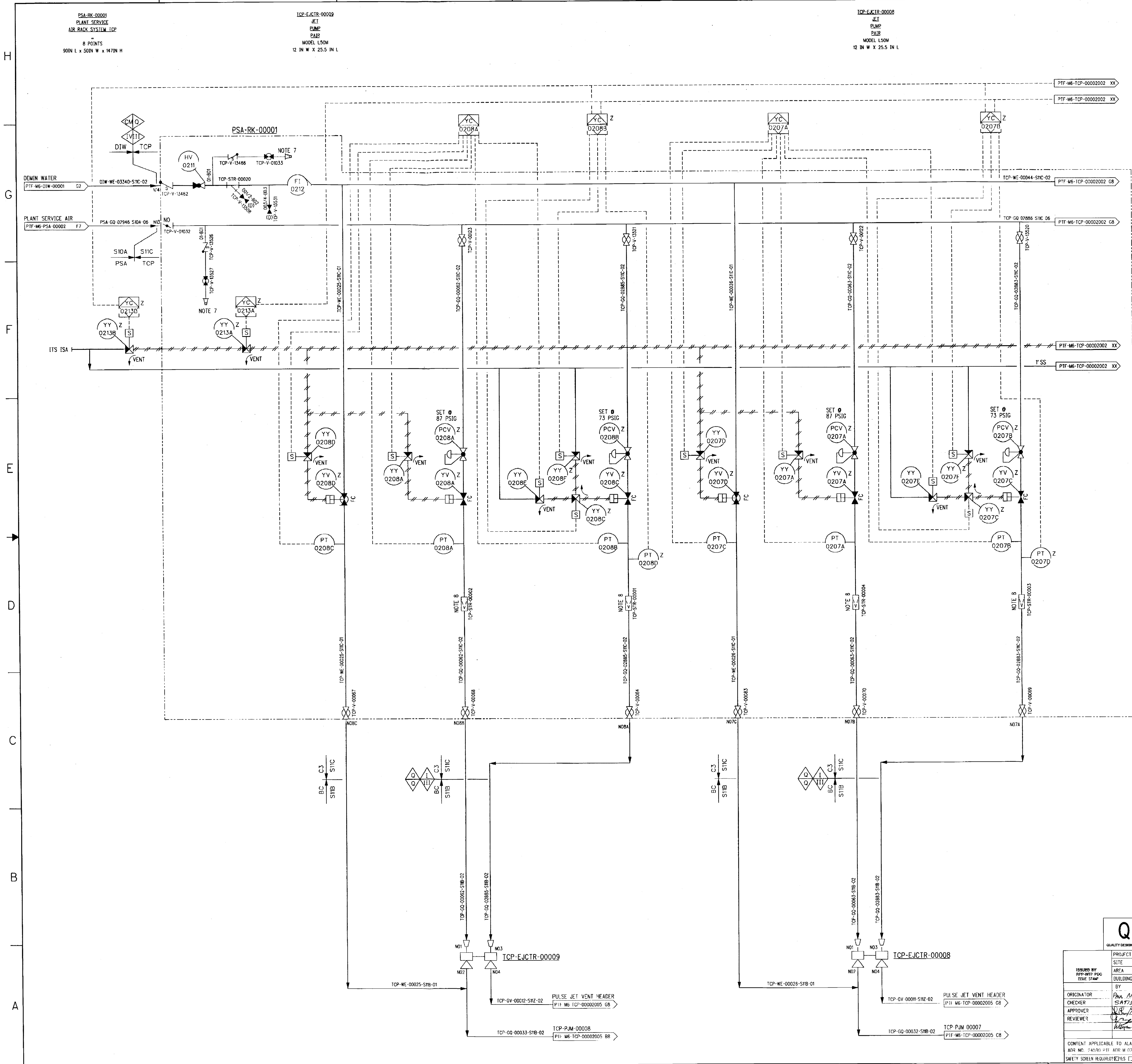

NOTES:

1. SEE DRAWINGS 24590-WTP-M6-50-00001 THROUGH 24590-WTP-M6-50-00008 FOR GENERAL NOTES, SYMBOLS AND LEGEND, AND GENERAL SLOPE REQUIREMENTS.
2. CONTENTS OF THIS DOCUMENT ARE DANGEROUS WASTE PERMIT AFFECTING.
3. THE PRESSURE BOUNDARY FOR ALL SYSTEMS, STRUCTURES, AND COMPONENTS ON THIS DRAWING, IS QUALITY LEVEL Q AND SEISMIC CATEGORY SC III, UNLESS OTHERWISE NOTED.
4. ALL LINES SHOWN ON THIS DRAWING SHALL BE FREE DRAINING, UNLESS OTHERWISE NOTED.
5. FOR PROCESS INFORMATION, REFER TO DRAWING 24590-PTF-M6-TCP-00001001 (TCP-VSL-00001).
6. SEE JET PUMP PAIR CONTROL DETAILS 4 ON LEGEND SHEET 24590-WTP-M6-50-00007.
7. CONNECTION PROVIDED FOR REAGENTS, PLANT WASH AND SERVICE AIR.
8. STRAINER IS A CONICAL PILGRIM HAT TYPE STRAINER WITH PERFORATED 1/8 INCH DIAMETER STAGGERED HOLES ON 3/16 INCH CENTERS PERMANENTLY INSTALLED.
9. THIS DRAWING IS CONVERTED FROM A SINGLE SHEET TO MULTI-SHEET DRAWINGS AND IN PART SUPERSEDES 24590-PTF-M6-TCP-00002 REV 3. THIS DRAWING INCLUDES INFORMATION FROM 24590-M6N-M80T-00037, -00038. ADD UTILITY STATION. PSA SUPPLY HEADER IS CHANGED FROM 4 IN TO 6 IN.

HOLD/OPEN ITEMS:

NONE

REFERENCES:

1. THE REQUIRED BATCH SEQUENCES, PERMISSIVES, INTERLOCKS, ALARMS AND OPERATOR INTERFACE POINTS ARE FULLY DESCRIBED IN THE SOFTWARE FUNCTIONAL SPECIFICATION, FOR TCP-TREATED LAW CONCENTRATE STORAGE PROCESS SYSTEM, 24590-PTF-3PS-TCP-T0001.

Please note that source, special nuclear, and byproduct materials, as defined in the Atomic Energy Act of 1954 (AEA) are regulated at the U. S. Department of Energy (DOE) facilities exclusively by DOE acting pursuant to its AEA authority. DOE asserts that pursuant to AEA, it has sole and exclusive responsibility and authority to regulate source, special nuclear, and byproduct materials at DOE-owned nuclear facilities. Information contained herein on radionuclides is provided for process description purposes only.

DRAWING INDEX

DWG NO	REV	TITLE
24590-PTF-M6-TCP-00002001	0	TREATED LAW CONCENTRATE STORAGE
24590-PTF-M6-TCP-00002002	0	TREATED LAW CONCENTRATE STORAGE
24590-PTF-M6-TCP-00002003	0	TREATED LAW CONCENTRATE STORAGE
24590-PTF-M6-TCP-00002004	0	TREATED LAW CONCENTRATE STORAGE
24590-PTF-M6-TCP 00002005	0	TREATED LAW CONCENTRATE STORAGE

REVISION HISTORY

REV	DESCRIPTION	ORG.	CHKD	RVWD	APVD	DATE
0	ISSUED FOR CONSTRUCTION SEE NOTE 9	PN	SJ	ELS	[illegible]	4-14-08

Q
QUALITY DESIGNATOR

ISSUED BY RPP-WTP PDC ISSUE STAMP

PROJECT No.	24590
SITE	HANFORD
AREA	200E
BUILDING No.	10

	BY	DATE
ORIGINATOR	PAUL NIELSEN	04/02/2008
CHECKER	SATISH JAIN	4-2-2008
APPROVER	[signature]	4-14-08
REVIEWER	[signature]	4-2-2008
	Wayne [signature]	4-9-08

CONTENT APPLICABLE TO ALARA? [X] YES [ ] NO
ADR NO. 24590-PTF-ADR-M-02-006 REV: 4
SAFETY SCREEN REQUIRED? [X] YES [ ] NO E&NS INITIAL IF YES [initials]

BECHTEL
RIVER PROTECTION PROJECT
WASTE TREATMENT PLANT
2435 STEVENS CENTER PLACE
RICHLAND, WA 99354

CONTRACT No: DE-AC27-01RV14136

P&ID - PTF TREATED LAW CONCENTRATE STORAGE PROCESS SYSTEM UTILITY RACK PSA-RK-00001

SCALE: NONE
24590-PTF-M6-TCP-00002001
REV 0

SAFETY SCREEN IS REQUIRED FOR DRAWING TYPES IDENTIFIED IN 24590-WTP-GPP-SREG-002

'E' SIZE - 44x34
COMPUTER GENERATED - MANUAL CHANGES NOT PERMITTED

R10894972
04/01/2008 04:07:07 PM

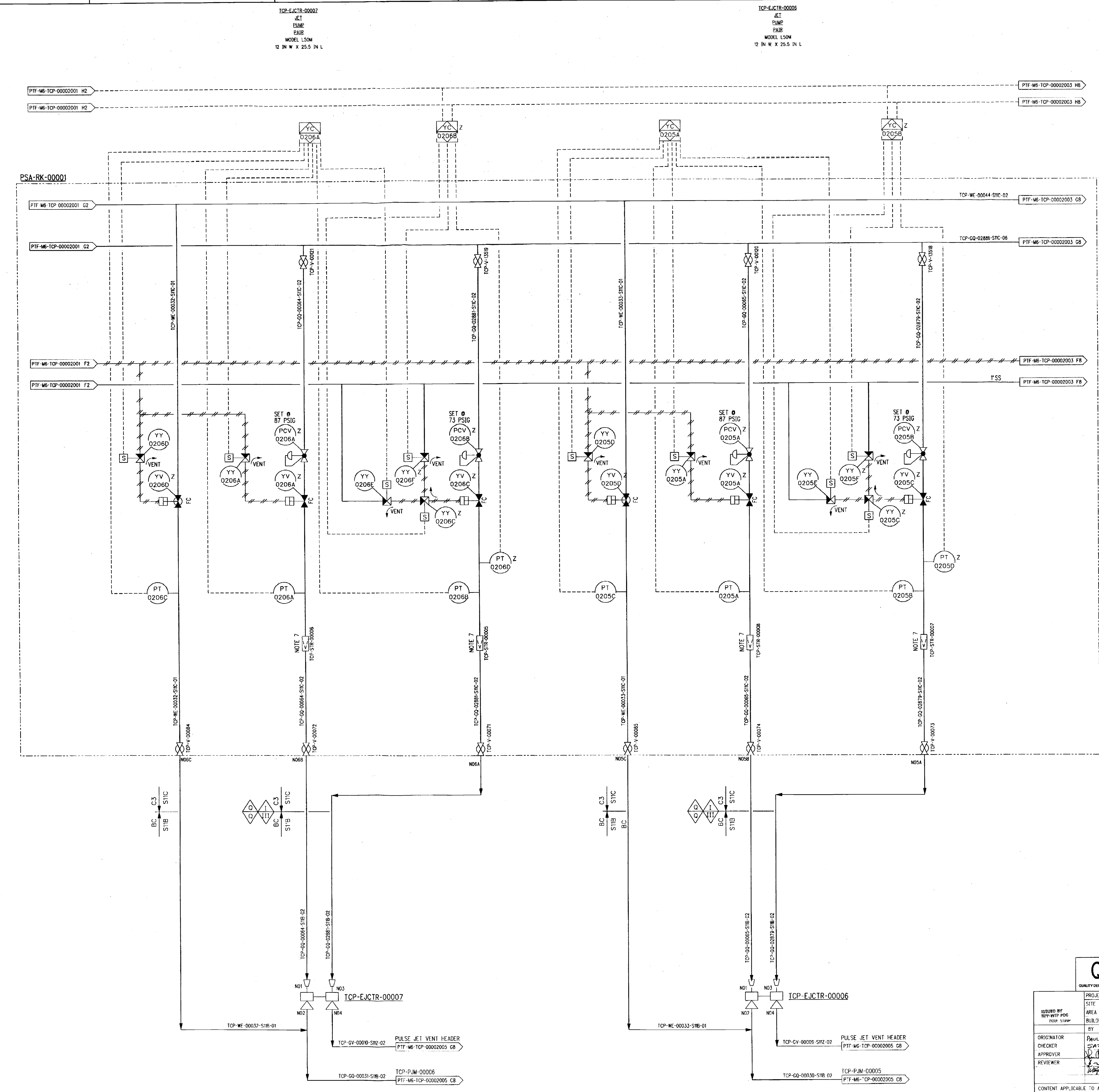

NOTES:

1. SEE DRAWINGS 24590-WTP-M6-50-00001 THROUGH 24590-WTP-M6-50-00008 FOR GENERAL NOTES, SYMBOLS AND LEGEND, AND GENERAL SLOPE REQUIREMENTS.
2. CONTENTS OF THIS DOCUMENT ARE DANGEROUS WASTE PERMIT AFFECTING.
3. THE PRESSURE BOUNDARY FOR ALL SYSTEMS, STRUCTURES, AND COMPONENTS ON THIS DRAWING, IS QUALITY LEVEL Q AND SEISMIC CATEGORY SC-III, UNLESS OTHERWISE NOTED.
4. ALL LINES SHOWN ON THIS DRAWING SHALL BE FREE DRAINING, UNLESS OTHERWISE NOTED.
5. FOR PROCESS INFORMATION, REFER TO DRAWING 24590-PTF-M6-TCP-00001001 (TCP-VSL-00001).
6. SEE JET PUMP PAIR CONTROL DETAIL 4 ON LEGEND SHEET 24590-WTP-M6-50-00007.
7. STRAINER IS A CONICAL PILGRIM HAT TYPE STRAINER WITH PERFORATED 1/8 INCH DIAMETER STAGGERED HOLES ON 3/16 INCH CENTERS PERMANENTLY INSTALLED.
8. THIS DRAWING IS CONVERTED FROM A SINGLE SHEET TO MULTI-SHEET DRAWINGS AND, IN PART, SUPERSEDES 24590-PTF-M6-TCP 00002 REV 3. THIS DRAWING INCLUDES INFORMATION FROM 24590-M6N-M80T-00037, AND -00038.

HOLD/OPEN ITEMS:

NONE

REFERENCES:

1. THE REQUIRED BATCH SEQUENCES, PERMISSIVES, INTERLOCKS, ALARMS AND OPERATOR INTERFACE POINTS ARE FULLY DESCRIBED IN THE SOFTWARE FUNCTIONAL SPECIFICATION, FOR TCP-TREATED LAW CONCENTRATE STORAGE PROCESS SYSTEM, 24590-PTF-3PS-TCP-T0001.

Please note that source, special nuclear, and byproduct materials, as defined in the Atomic Energy Act of 1954 (AEA) are regulated at the U. S. Department of Energy (DOE) facilities exclusively by DOE acting pursuant to its AEA authority. DOE asserts that pursuant to AEA, it has sole and exclusive responsibility and authority to regulate source, special nuclear, and byproduct materials at DOE-owned nuclear facilities. Information contained herein on radionuclides is provided for process description purposes only.

Q — QUALITY DESIGNATOR

REV	DESCRIPTION	ORG	CHKD	RVWD	APVD	DATE
0	ISSUED FOR CONSTRUCTION SEE NOTE 8	PN	SJ	ELS	JBa RCL	4-14-08

REVISION HISTORY

ISSUED BY RPP-WTP PDC ISSUE STAMP

PROJECT No.	24590
SITE	HANFORD
AREA	200E
BUILDING No.	10

	BY	DATE
ORIGINATOR	PAUL NIELSEN	04/02/2008
CHECKER	SATISH JAIN	4-2-2008
APPROVER	[signature]	4-14-08
REVIEWER	[signature]	4-2-2008
	[signature]	4-9-08

RIVER PROTECTION PROJECT
WASTE TREATMENT PLANT
2435 STEVENS CENTER PLACE
RICHLAND, WA 99354

CONTRACT No: DE-AC27-01RV14136

P&ID - PTF
TREATED LAW CONCENTRATE STORAGE PROCESS SYSTEM UTILITY RACK PSA-RK-00001

CONTENT APPLICABLE TO ALARA? [X] YES [ ] NO
ADR NO. 24590-PTF-ADR-M-02-006 REV: 4
SAFETY SCREEN REQUIRED? [X] YES [ ] NO ES&NS INITIAL IF YES [initials]

SCALE: NONE | 24590-PTF-M6-TCP-00002002 | REV 0

SAFETY SCREEN IS REQUIRED FOR DRAWING TYPES IDENTIFIED IN 24590-WTP-GPP-SREG-002

'E' SIZE - 44x34
COMPUTER GENERATED - MANUAL CHANGES NOT PERMITTED

R10894973

04/01/2008 04:12:43 PM

PLOTTED BY: eldarn
C:\Work\eldarn\dms03837\PTFM6TCP00002002.dgn

TCP-EJCTR-00005
JET PUMP PAIR
MODEL L50M
12 IN W X 25.5 IN L

TCP-EJCTR-00004
JET PUMP PAIR
MODEL L50M
12 IN W X 25.5 IN L

PSA-RK-00001

PTF-M6-TCP-00002002 H2
PTF-M6-TCP-00002001 H2
PTF-M6-TCP-00002004 H8
PTF-M6-TCP-00002002 G2
PTF-M6-TCP-00002004 G8
PTF-M6-TCP-00002002 F2
PTF-M6-TCP-00002004 F8
TSS

VC 0204A
VC 0204B Z
VC 0203A
VC 0203B Z

TCP-WE-00044-SMC-02
TCP-GQ-02886-STIC-06
TCP-WE-00028-SMC-01
TCP-GQ-00066-SMC-02
TCP-GQ-00877-SMC-02
TCP-WE-00029-SMC-01
TCP-GQ-00067-SMC-02
TCP-GQ-02875-SMC-02

TCP-V-00019
TCP-V-00017
TCP-V-00018
TCP-V-00016

SET @ 87 PSIG
SET @ 73 PSIG
PCV 0204A Z
PCV 0204B Z
PCV 0203A Z
PCV 0203B Z
YY 0204D
YY 0204A Z
YY 0204E
YY 0204F Z
YY 0204C Z
YY 0203D
YY 0203A Z
YY 0203E
YY 0203F Z
YY 0203C Z
VENT
FC

PT 0204C
PT 0204A
PT 0204B
PT 0204D Z
PT 0203C
PT 0203A
PT 0203B
PT 0203D Z

NOTE 7
TCP-STR-00010
TCP-STR-00009
TCP-STR-00012
TCP-STR-00011

TCP-WE-00028-SMC-01
TCP-GQ-00066-SMC-02
TCP-GQ-00877-SMC-02
TCP-WE-00029-SMC-01
TCP-GQ-00067-SMC-02
TCP-GQ-02875-SMC-02

TCP-V-00097
TCP-V-00076
TCP-V-00075
TCP-V-00096
TCP-V-00078
TCP-V-00077

NO4C
NO4B
NO4A
NO3C
NO3B
NO3A

BC C3 S1C S1B
Q Q I C3 S1C S1B

TCP-GQ-00066-SIB-02
TCP-GQ-00877-SIB-02
TCP-GQ-00067-SIB-02
TCP-GQ-02875-SIB-02

NO1 NO3 NO2 NO4
TCP-EJCTR-00005
TCP-EJCTR-00004

TCP-WE-00028-SIB-01
TCP-WE-00029-SIB-01

TCP-GV-00008-SIZ-02 — PULSE JET VENT HEADER — PTF-M6-TCP-00002005 F8
TCP-GQ-00029-SIB-02 — TCP-PJM-00004 — PTF-M6-TCP-00002005 C8
TCP-GV-00007-SIZ-02 — PULSE JET VENT HEADER — PTF-M6-TCP-00002005 F8
TCP-GQ-00028-SIB-02 — TCP-PJM-00003 — PTF-M6-TCP-00002005 D8

NOTES:

1. SEE DRAWINGS 24590-WTP-M6-50-00001 THROUGH 24590-WTP-M6-50-00008 FOR GENERAL NOTES, SYMBOLS AND LEGEND, AND GENERAL SLOPE REQUIREMENTS.
2. CONTENTS OF THIS DOCUMENT ARE DANGEROUS WASTE PERMIT AFFECTING.
3. THE PRESSURE BOUNDARY FOR ALL SYSTEMS, STRUCTURES, AND COMPONENTS ON THIS DRAWING, IS QUALITY LEVEL Q AND SEISMIC CATEGORY SC-III, UNLESS OTHERWISE NOTED.
4. ALL LINES SHOWN ON THIS DRAWING SHALL BE FREE DRAINING, UNLESS OTHERWISE NOTED.
5. FOR PROCESS INFORMATION, REFER TO DRAWING 24590-PTF-M6-TCP-00001001 (TCP-VSL-00001).
6. SEE JET PUMP PAIR CONTROL DETAIL 4 ON LEGEND SHEET 24590-WTP-M6-50-00007.
7. STRAINER IS A CONICAL PILGRIM HAT TYPE STRAINER WITH PERFORATED 1/8 INCH DIAMETER STAGGERED HOLES ON 3/16 INCH CENTERS PERMANENTLY INSTALLED.
8. THIS DRAWING IS CONVERTED FROM A SINGLE SHEET TO MULTI-SHEET DRAWINGS AND, IN PART, SUPERSEDES 24590-PTF-M6-TCP-00002 REV 3. THIS DRAWING INCLUDES INFORMATION FROM 24590-M6N-M80T-00037, AND -00038.

HOLD/OPEN ITEMS:

NONE

REFERENCES:

1. THE REQUIRED BATCH SEQUENCES, PERMISSIVES, INTERLOCKS, ALARMS AND OPERATOR INTERFACE POINTS ARE FULLY DESCRIBED IN THE SOFTWARE FUNCTIONAL SPECIFICATION, FOR TCP-TREATED LAW CONCENTRATE STORAGE PROCESS SYSTEM, 24590-PTF-3PS-TCP-T0001.

Please note that source, special nuclear, and byproduct materials, as defined in the Atomic Energy Act of 1954 (AEA) are regulated at the U. S. Department of Energy (DOE) facilities exclusively by DOE acting pursuant to its AEA authority. DOE asserts that pursuant to AEA, it has sole and exclusive responsibility and authority to regulate source, special nuclear, and byproduct materials at DOE-owned nuclear facilities. Information contained herein on radionuclides is provided for process description purposes only.

REVISION HISTORY							
REV	DESCRIPTION	BY	CHKD	RVWD	APVD	DATE
0	ISSUED FOR CONSTRUCTION SEE NOTE 8	PAV	SJT	EJS	MGS	4-14-08

Q — QUALITY DESIGNATION

ISSUED BY RPP-WTP PDO / ISSUE STAMP

	NAME	DATE
ORIGINATOR	Paul Melsen	4/1/2008
CHECKER	Satish Jain	4-1-2008
APPROVER	K Chu	4-1-2008
REVIEWER	Stephen Lambert	4-1-08

CONFIRM APPLICABLE TO ALARA? [X] YES [ ] NO
ADR NO. 24590-PTF-ADR-M-07-006 REV 1
SAFETY SCREEN REQUIREMENTS [N] MET [ ] NOT MET BY YES ###
SAFETY SCREEN IS REQUIRED FOR DRAWING TYPES IDENTIFIED IN 24590-WTP-GPP-SREQ-002

PROJECT No. 24590
SITE HANFORD
AREA 200E
BUILDING No. 10

CONTRACT No: DE-AC27-01RV14136

RIVER PROTECTION PROJECT
WASTE TREATMENT PLANT
2435 STEVENS CENTER PLACE
RICHLAND, WA 99354

P&ID - PTF
TREATED LAW CONCENTRATE STORAGE PROCESS SYSTEM UTILITY SERVICES PSA-RK-000001

SCALE: NONE
24590-PTF-M6-TCP-00002003
REV 0

E-SIZE - 44x34
COMPUTER GENERATED. MANUAL CHANGES NOT PERMITTED

04/01/2008 04:19:41 PM

FORM E_SIZE(24.22)553

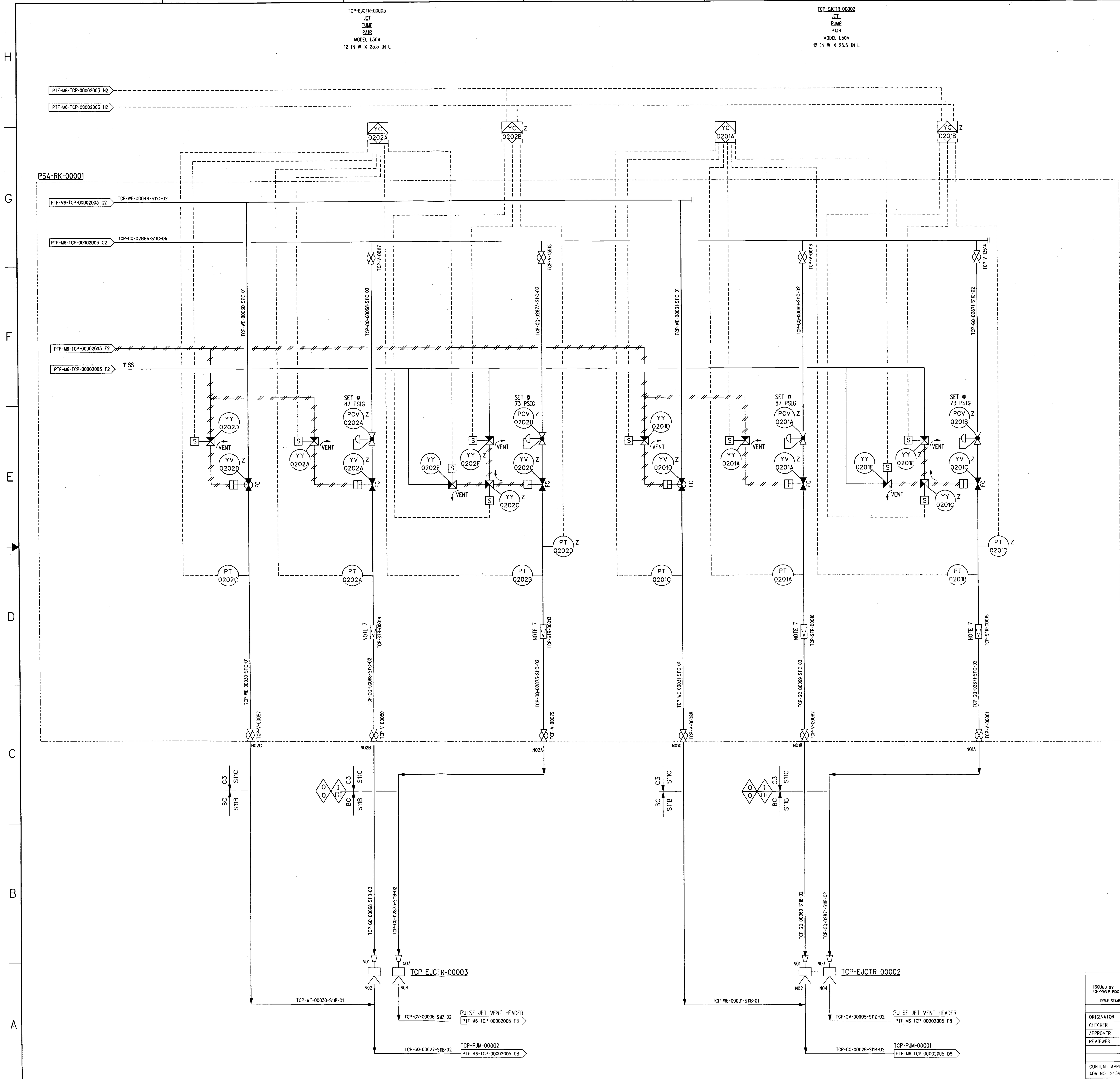

NOTES:

1. SEE DRAWINGS 24590-WTP-M6-50-00001 THROUGH 24590-WTP-M6-50-00008 FOR GENERAL NOTES, SYMBOLS AND LEGEND, AND GENERAL SLOPE REQUIREMENTS.
2. CONTENTS OF THIS DOCUMENT ARE DANGEROUS WASTE PERMIT AFFECTING.
3. THE PRESSURE BOUNDARY FOR ALL SYSTEMS, STRUCTURES, AND COMPONENTS ON THIS DRAWING IS QUALITY LEVEL Q AND SEISMIC CATEGORY SC-III, UNLESS OTHERWISE NOTED.
4. ALL LINES SHOWN ON THIS DRAWING SHALL BE FREE DRAINING, UNLESS OTHERWISE NOTED.
5. FOR PROCESS INFORMATION, REFER TO DRAWING 24590-PTF-M6-TCP-00001001 (TCP-VSL-00001).
6. SEE JET PUMP PAIR CONTROL DETAIL 4 ON LEGEND SHEET 24590-WTP-M6-50-00007.
7. STRAINER IS A CONICAL PILGRIM HAT TYPE STRAINER WITH PERFORATED 1/8 INCH DIAMETER STAGGERED HOLES ON 3/16 INCH CENTERS PERMANENTLY INSTALLED.
8. THIS DRAWING IS CONVERTED FROM A SINGLE SHEET TO MULTI-SHEET DRAWINGS AND, IN PART, SUPERSEDES 24590-PTF-M6-TCP-00002 REV 3. THIS DRAWING INCLUDES INFORMATION FROM 24590-M6N-M80T-00037, AND -00038.

HOLD/OPEN ITEMS:

NONE

REFERENCES:

1. THE REQUIRED BATCH SEQUENCES, PERMISSIVES, INTERLOCKS, ALARMS AND OPERATOR INTERFACE POINTS ARE FULLY DESCRIBED IN THE SOFTWARE FUNCTIONAL SPECIFICATION, FOR TCP-TREATED LAW CONCENTRATE STORAGE PROCESS SYSTEM, 24590-PTF-3PS-TCP-T0001.

Please note that source, special nuclear, and byproduct materials, as defined in the Atomic Energy Act of 1954 (AEA) are regulated at the U. S. Department of Energy (DOE) facilities exclusively by DOE acting pursuant to its AEA authority. DOE asserts that pursuant to AEA, it has sole and exclusive responsibility and authority to regulate source, special nuclear, and byproduct materials at DOE-owned nuclear facilities. Information contained herein on radionuclides is provided for process description purposes only.

Q
QUALITY DESIGNATOR

REV	DESCRIPTION	ORG	CHKD	RVWD	APVD	DATE
0	ISSUED FOR CONSTRUCTION SEE NOTE 8	PN	SJ	EW	JGA	4-14-08

REVISION HISTORY

ISSUED BY RPP-WTP PDC
ISSUE STAMP

PROJECT No.	24590
SITE	HANFORD
AREA	200E
BUILDING No.	10

	BY	DATE
ORIGINATOR	PAUL NIELSEN	04/02/2008
CHECKER	SATISH JAIN	4-2-2008
APPROVER	[signature]	4-14-08
REVIEWER	[signature]	4-2-2008
	Wayne Underhill	4-9-08

CONTENT APPLICABLE TO ALARA? [X] YES [ ] NO
ADR NO. 24590-PTF-ADR-M-02-006 REV: 4
SAFETY SCREEN REQUIRED? [X] YES [ ] NO E&NS INITIAL IF YES

BECHTEL
RIVER PROTECTION PROJECT
WASTE TREATMENT PLANT
2435 STEVENS CENTER PLACE
RICHLAND, WA 99354

CONTRACT No: DE-AC27-01RV14136

P&ID - PTF TREATED LAW CONCENTRATE STORAGE PROCESS SYSTEM UTILITY SERVICES PSA-RK-00001

SCALE: NONE

24590-PTF-M6-TCP-00002004 REV 0

SAFETY SCREEN IS REQUIRED FOR DRAWING TYPES IDENTIFIED IN 24590-WTP-GPP-SREG-002

'E' SIZE - 44x34
COMPUTER GENERATED - MANUAL CHANGES NOT PERMITTED

R10894975

04/01/2008 04:17:31 PM

PLOTTED BY: eidorn
C:\Work\eidorn\ams03837\PTFM6TCP00002004.dgn

FORM K-3ZN.DGN 02/2003

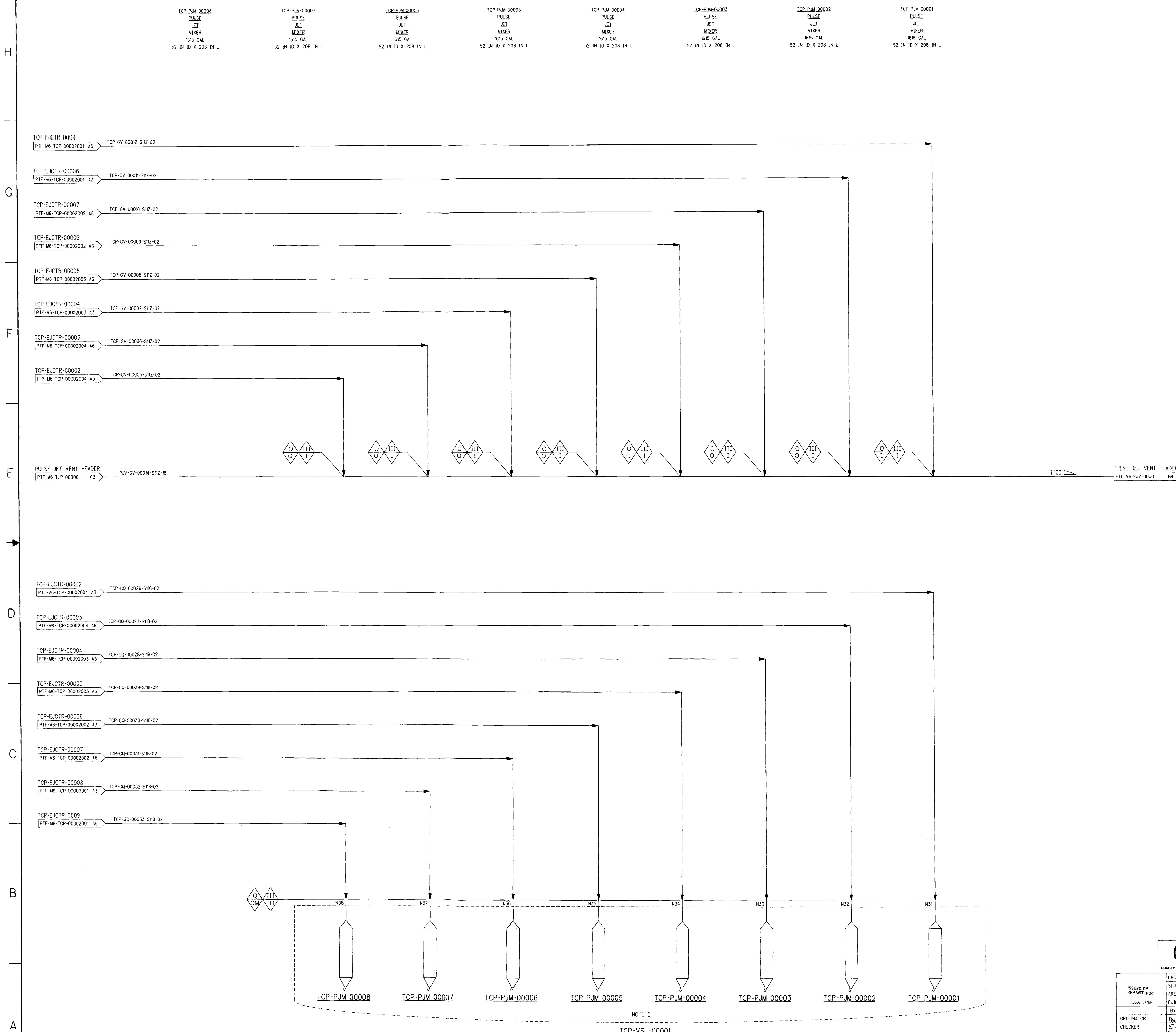

NOTES:

1. SEE DRAWINGS 24590-WTP-M6-50-00001 THROUGH 24590-WTP-M6-50-00008 FOR GENERAL NOTES, SYMBOLS AND LEGEND, AND GENERAL SLOPE REQUIREMENTS.
2. CONTENTS OF THIS DOCUMENT ARE DANGEROUS WASTE PERMIT AFFECTING.
3. THE PRESSURE BOUNDARY FOR ALL SYSTEMS, STRUCTURES, AND COMPONENTS (SSCS) ON THIS DRAWING, INCLUDING PULSE JET VENT LINES, IS QUALITY LEVEL Q AND SEISMIC CATEGORY SC-III, UNLESS OTHERWISE NOTED. ALL SSCS SHOWN ARE INSIDE THE BLACK CELL (BC).
4. ALL LINES SHOWN ON THIS DRAWING SHALL BE FREE DRAINING, UNLESS OTHERWISE NOTED.
5. FOR PROCESS INFORMATION, REFER TO DRAWING 24590-PTF-M6-TCP-00001001 (TCP-VSL-00001).
6. THIS DRAWING IS CONVERTED FROM A SINGLE SHEET TO MULTI-SHEET DRAWINGS AND, IN PART, SUPERSEDES 24590-PTF-M6-TCP-00002 REV 3. THIS DRAWING INCLUDES INFORMATION FROM 24590-M6N-M80T-00037, AND -00038.

HOLD/OPEN ITEMS:

NONE

REFERENCES:

NONE

Please note that source, special nuclear, and byproduct materials, as defined in the Atomic Energy Act of 1954 (AEA) are regulated at the U. S. Department of Energy (DOE) facilities exclusively by DOE acting pursuant to its AEA authority. DOE asserts that pursuant to AEA, it has sole and exclusive responsibility and authority to regulate source, special nuclear, and byproduct materials at DOE-owned nuclear facilities. Information contained herein on radionuclides is provided for process description purposes only.

Q
QUALITY DESIGNATOR

REV	DESCRIPTION	ORG	CHKD	RVWD	APVD	DATE
0	ISSUED FOR CONSTRUCTION SEE NOTE 6	PN	SJ	ELS		4-14-08

REVISION HISTORY

ISSUED BY RPP-WTP PDC
ISSUE STAMP

PROJECT No.	24590
SITE	HANFORD
AREA	200E
BUILDING No.	10

	BY	DATE
ORIGINATOR	Paul Melsen	04/02/2008
CHECKER	SATISH JAIN	4-2-2008
APPROVER		4-14-08
REVIEWER		4-2-2008
		4-9-08

CONTENT APPLICABLE TO ALARA? [X] YES [ ] NO
ADR NO. 24590-PTF-ADR-M-02-006 REV: 4
SAFETY SCREEN REQUIRED? [X] YES [ ] NO E&NS INITIAL IF YES

RIVER PROTECTION PROJECT
WASTE TREATMENT PLANT
2435 STEVENS CENTER PLACE
RICHLAND, WA 99354

CONTRACT No: DE-AC27-01RV14136

P&ID - PTF
TREATED LAW CONCENTRATE STORAGE PROCESS SYSTEM PJMS TCP-VSL-00001

SCALE: NONE

24590-PTF-M6-TCP-00002005

REV 0

SAFETY SCREEN IS REQUIRED FOR DRAWING TYPES IDENTIFIED IN 24590-WTP-GPP-SREG-002

'E' SIZE - 44x34
COMPUTER GENERATED - MANUAL CHANGES NOT PERMITTED

R10894978

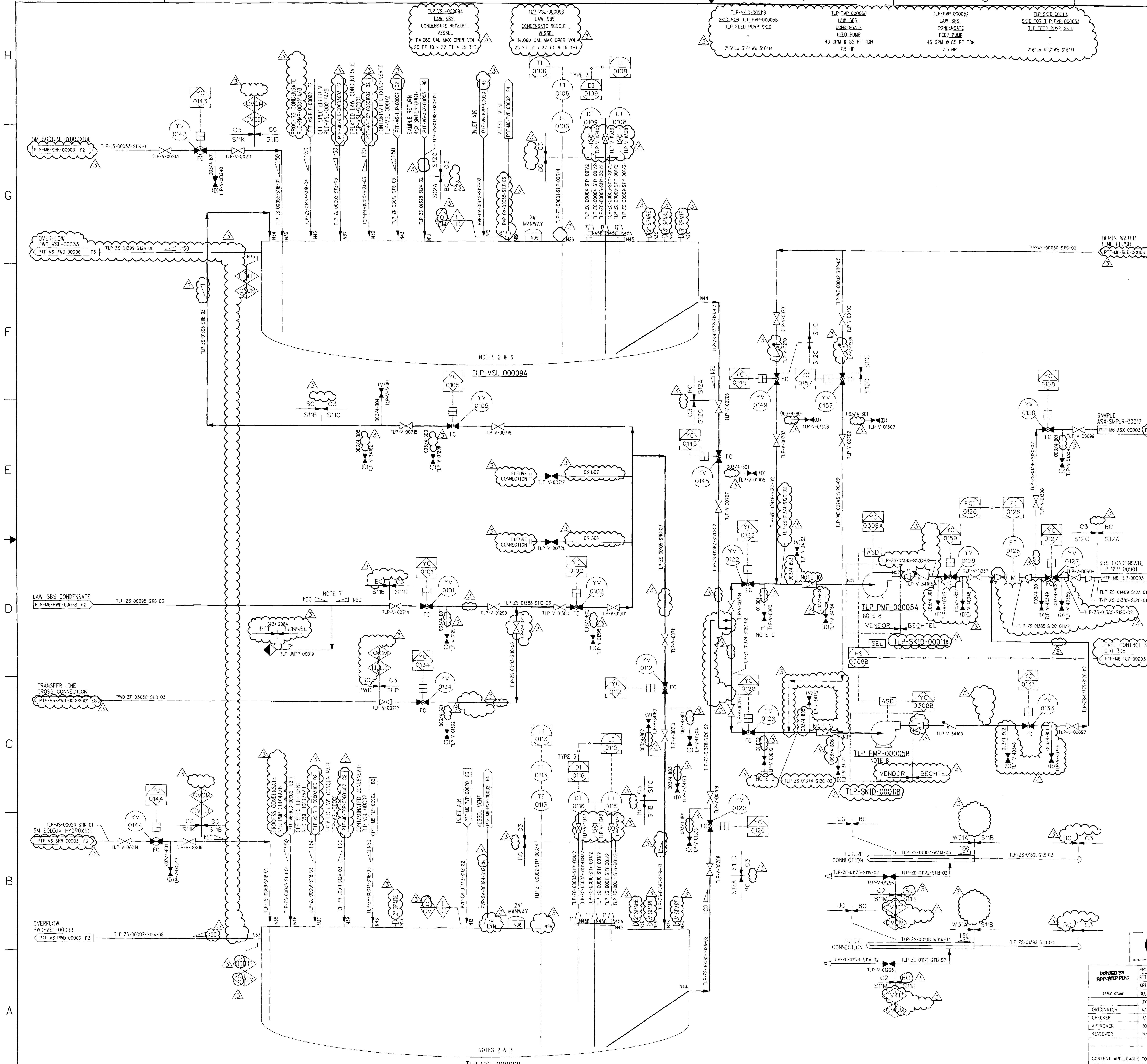

NOTES:

1. SEE 24590-WTP-M6-50-00001 THROUGH 24590-WTP-M6-50-00008 FOR GENERAL NOTES, SYMBOLS AND LEGEND, AND GENERAL SLOPE REQUIREMENTS.
2. SEE DRAWINGS 24590-PTF-M6-TLP-00005 AND 24590-PTF-M6-TLP-00006 FOR PULSE JET MIXER REPRESENTATION AND NOZZLES UTILIZED.
3. SEE DRAWING 24590-PTF-M6-TLP-00007 FOR PLANT WASH REPRESENTATION AND NOZZLES UTILIZED.
4. DELETED
5. THE PRESSURE BOUNDARY FOR ALL COMPONENTS ON THIS DRAWING IS QUALITY LEVEL CM AND SEISMIC CATEGORY SC-III, UNLESS OTHERWISE NOTED.
6. DELETED
7. WHERE 1:50 SLOPE IS NOT FEASIBLE ON TRANSFER LINE NUMBER TLP-ZS-00095-S11B-03 A MINIMUM SLOPE OF 1:100 SHALL BE MAINTAINED.
8. SEE DRAWING 24590-PTF-M6-PSW-00006001 FOR PUMP SEAL WATER CONNECTIONS.
9. DO NOT ROUTE OR SEND TO FLOOR DRAINS. DANGEROUS WASTE MUST BE COLLECTED AND PROPERLY MANAGED.
10. DELETED
11. CONTENTS OF THIS DOCUMENT ARE DANGEROUS WASTE PERMIT AFFECTING.
12. SEE DRAWING 24590-PTF-M6-ISA-00010 FOR BUBBLER RACKS AND SYSTEM CONNECTIONS.
13. DELETED
14. REVISION 2: INCORPORATED 24590-PTF-M6N-TLP-00012, -00013, 24590-PTF-M6N-M80T-00008. ADDITIONAL MINOR REVISIONS INCLUDE ADDITION OF ROOT VALVES AND DELETION OF HARD PIPING DRAIN TO PWD-VSL-00033 (C7 GRID AREA).
15. ALL LINES ON THIS DRAWING SHALL BE FREE DRAINING, EXCEPT BLACK CELL LINES WHICH ARE SELF-DRAINING, UNLESS OTHERWISE NOTED.
16. REMOVABLE TEMPORARY START-UP STRAINER, TO BE REPLACED WITH PIPING SPOOL AFTER START-UP.
17. REVISION 3: REVISED TO INCORPORATE 24590-PTF-M6N-TLP-00017, -00021, -00033, 24590-PTF-M6N-M80T-00026, -00037, -00038, AND 24590-WTP-FC-P-06-0216. ADDED PIPING ISOMETRIC/JUMPER SUPPORT FRAME INTERFACE NOZZLE NUMBERS. REVISED/ADDED/DELETED NOTES, INSULATION, OTHER CHANGES, AND MINOR EDITORIAL CHANGES.

HOLD/OPEN ITEMS:

1-7. DELETED

REFERENCES:

1. THE REQUIRED OPERATIONAL SEQUENCES, PERMISSIVES, INTERLOCKS, ALARMS AND OPERATOR INTERFACE POINTS ARE FULLY DESCRIBED IN THE TLP SYSTEM LOGIC DIAGRAMS (FUTURE) AND THE TLP SYSTEM DESCRIPTION (FUTURE REVISION).

Please note that source, special nuclear, and byproduct materials, as defined in the Atomic Energy Act of 1954 (AEA) are regulated at the U. S. Department of Energy (DOE) facilities exclusively by DOE acting pursuant to its AEA authority. DOE asserts that pursuant to AEA, it has sole and exclusive responsibility and authority to regulate source, special nuclear, and byproduct materials at DOE-owned nuclear facilities. Information contained herein on radionuclides is provided for process description purposes only.

Q
QUALITY DESIGNATOR

REV	DESCRIPTION	ORG	CHKD	RVWD	APVD	DATE
3	REVISED PER NOTE 17	[illegible]	SJ	CEK ELS	RG	9/25/08
2	REVISED PER NOTE 14	RN	JWD	RV	JJ	11/29/04
0	ISSUED FOR CONSTRUCTION	AD	RV	N/A	RV	12/03/2002

REVISION HISTORY

ISSUED BY RPP-WTP PDC
ISSUE STAMP

PROJECT No.	24590
SITE	HANFORD
AREA	200L
BUILDING No.	10

RIVER PROTECTION PROJECT
WASTE TREATMENT PLANT
2435 STEVENS CENTER PLACE
RICHLAND, WA 99354

CONTRACT No: DE-AC27-01RV14136

	BY	DATE
ORIGINATOR	AARON DONNELLY	12/03/2002
CHECKER	RAM VORIA	12/03/2002
APPROVER	ROBERT VOKE	12/03/2002
REVIEWER	N/A	

P&ID - PTF
TREATED LAW EVAPORATION PROCESS SYSTEM
LAW SBS CONDENSATE RECEIPT TLP-VSL-00009A & 9B

CONTENT APPLICABLE TO ALARA? [X] YES [ ] NO
ADR NO. 24590-PTF-ADR-M-03-008 REV: 1
SAFETY SCREEN REQUIRED? [X] YES [ ] NO E&NS INITIAL IF YES [illegible]

SCALE: NONE
24590-PTF-M6-TLP-00001
REV 3

SAFETY SCREEN IS REQUIRED FOR DRAWING TYPES IDENTIFIED IN 24590-WTP-GPP-SREG-002
'E' SIZE - 44x34
COMPUTER GENERATED MANUAL CHANGES NOT PERMITTED

R10959477
09/29/2008 07:56:01 AM

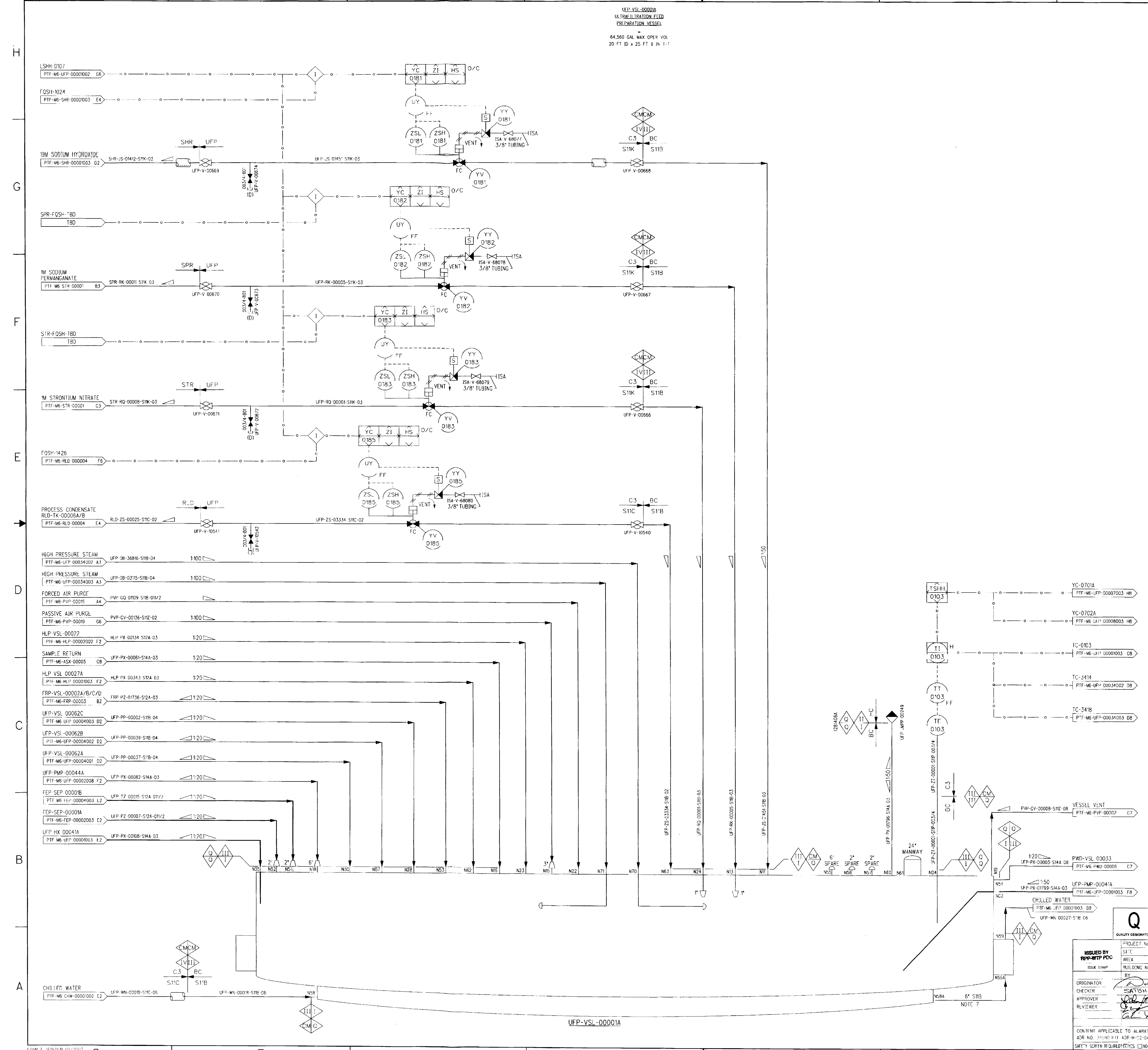

NOTES:

1. SEE DRAWINGS 24590-WTP-M6-50-00001 THROUGH 24590-WTP-M6-50-00008 FOR GENERAL NOTES, SYMBOLS AND LEGEND, AND GENERAL SLOPE REQUIREMENTS.
2. CONTENTS OF THIS DOCUMENT ARE DANGEROUS WASTE PERMIT AFFECTING.
3. THE PRESSURE BOUNDARY FOR ALL COMPONENTS ON THIS DRAWING IS QUALITY LEVEL Q AND SEISMIC CATEGORY SC-I, UNLESS OTHERWISE NOTED. TO PROTECT HOT CELL SC-I COMPONENTS, ALL PIPING, JUMPERS, AND EQUIPMENT LOCATED IN THE HOT CELL TO BE A MINIMUM OF SC-II, WHICH TAKES PRECEDENCE OVER FLAGS SHOWN ON THIS DRAWING.
4. ALL LINES SHOWN ON THIS DRAWING SHALL BE FREE DRAINING, EXCEPT BLACK CELL LINES WHICH ARE SELF-DRAINING, UNLESS OTHERWISE NOTED.
5. FOR VESSEL WASH REPRESENTATION SEE PLANT WASH DRAWING 24590-PTF-M6-UFP-00015002.
6. FOR REVERSE FLOW DIVERTER/PULSE JET MIXERS REPRESENTATION SEE DRAWINGS: 24590-PTF-M6-UFP-00007001 THRU -00007007 AND 24590-PTF-M6-UFP-00008001 THRU -00008007.
7. VENDOR SUPPLIED PIPING.
8. FOR BUBBLER RACK AND SYSTEM CONNECTION SEE DRAWING 24590-PTF-M6-ISA-00010 AND -00011.
9. THIS DRAWING IS CONVERTED FROM A SINGLE SHEET TO MULTI-SHEET DRAWINGS AND IN PART SUPERSEDES 24590-PTF-M6-UFP-00001 REV 2. THIS IS A MAJOR REVISION, NO REVISION CLOUDS ARE SHOWN. THIS DRAWING MAY INCLUDE INFORMATION FROM 24590-PTF-M6N-M80T-00017, -00037, 00038, 24590-PTF-M6N-UFP-00037, 00046, -00063, -00084, 00101, AND -00104.

HOLD/OPEN ITEMS:

NONE

REFERENCES:

1. THE REQUIRED OPERATIONAL SEQUENCES, PERMISSIVES, INTERLOCKS, ALARMS AND OPERATOR INTERFACE POINTS ARE FULLY DESCRIBED IN THE UFP SYSTEM LOGIC DIAGRAMS (FUTURE) AND THE UFP SYSTEM DESCRIPTION (FUTURE REVISION).

Please note that source, special nuclear, and byproduct materials, as defined in the Atomic Energy Act of 1954 (AEA) are regulated at the U. S. Department of Energy (DOE) facilities exclusively by DOE acting pursuant to its AEA authority. DOE asserts that pursuant to AEA, it has sole and exclusive responsibility and authority to regulate source, special nuclear, and byproduct materials at DOE-owned nuclear facilities. Information contained herein on radionuclides is provided for process description purposes only.

DRAWING INDEX

DWG NO	TITLE
24590-PTF-M6-UFP-00001001	ULTRAFILTRATION PROCESS SYSTEM UFP VSL-00001A
24590-PTF-M6-UFP-00001002	ULTRAFILTRATION PROCESS SYSTEM BUBBLERS
24590-PTF-M6-UFP-00001003	UFP-PMP-000041A AND UFP-HX-00041A
24590-PTF-M6-UFP-00001004	ULTRAFILTRATION PROCESS SYSTEM UFP VSL 00001B
24590-PTF-M6-UFP-00001005	ULTRAFILTRATION PROCESS SYSTEM BUBBLERS
24590-PTF-M6-UFP-00001006	UFP PMP-000041B AND UFP-HX-00041B
24590-PTF-M6-UFP-00001007	UFP FEED PREPARATION HEADER

REVISION HISTORY

REV	DESCRIPTION	ORG	CHKD	RVWD	APVD	DATE
0	ISSUED FOR CONSTRUCTION SEE NOTE 9	DWV	SJ	ELS		11/12/08

Q
QUALITY DESIGNATOR

ISSUED BY RPP-WTP PDC
ISSUE STAMP

PROJECT No.	24590
SITE	HANFORD
AREA	200E
BUILDING No.	10

BECHTEL
RIVER PROTECTION PROJECT
WASTE TREATMENT PLANT
2435 STEVENS CENTER PLACE
RICHLAND, WA 99354

CONTRACT No: DE-AC27-01RV14136

	BY	DATE
ORIGINATOR	[signature]	11/11/08
CHECKER	SATISH JAIN	11/11/08
APPROVER	[signature]	11/12/08
REVIEWER	[signature]	11/12/08
	[signature]	11/12/08

CONTENT APPLICABLE TO ALARA? [X] YES [ ] NO
ADR NO. 24590-PTF-ADR-M-02-046 REV: 4
SAFETY SCREEN REQUIRED? [X] YES [ ] NO E&NS INITIAL IF YES

P&ID - PTF ULTRAFILTRATION PROCESS SYSTEM FEED PREPARATION VESSEL UFP-VSL-00001A

SCALE: NONE
24590-PTF-M6-UFP-00001001
REV 0

SAFETY SCREEN IS REQUIRED FOR DRAWING TYPES IDENTIFIED IN 24590-WTP-GPP-SREG-002
'E' SIZE 44x34
COMPUTER GENERATED - MANUAL CHANGES NOT PERMITTED
R10986177
11/10/2008 10:07:13 PM

TABLE 1

INSTRUMENT TAG	DRAWING NUMBER	GRID
UFP-YC-0151	24590-PTF-M6-UFP-00001001	H8
UFP-YC-0182	24590-PTF-M6-UFP-00001001	G8
UFP-YC-0183	24590-PTF-M6-UFP-00001001	F8
UFP-YC-0185	24590-PTF-M6-UFP-00001001	E8
UFP-YC-3417A	24590-PTF-M6-UFP-00034002	G8
UFP-YC-3416A	24590-PTF-M6-UFP-00034003	G8
HLP-YC-0169A	24590-PTF-M6-HLP-00001003	F3
HLP-YC-0269A	24590-PTF-M6-HLP-00002002	C3
FRP-YC-0345	24590-PTF-M6-FRP-00003	B3
FEP-YC-0425	24590-PTF-M6-FEP-00004003	C4
FEP-YC-0225	24590-PTF-M6-FEP-00002003	C4
UFP-YC-0172A	24590-PTF-M6-UFP-00030001	D8
UFP-YC-0901A	24590-PTF-M6-UFP-00009003	H8
UFP-YC-0508A	24590-PTF-M6-UFP-00005004	G8
UFP-YC-0502A	24590-PTF-M6-UFP-00005003	H8

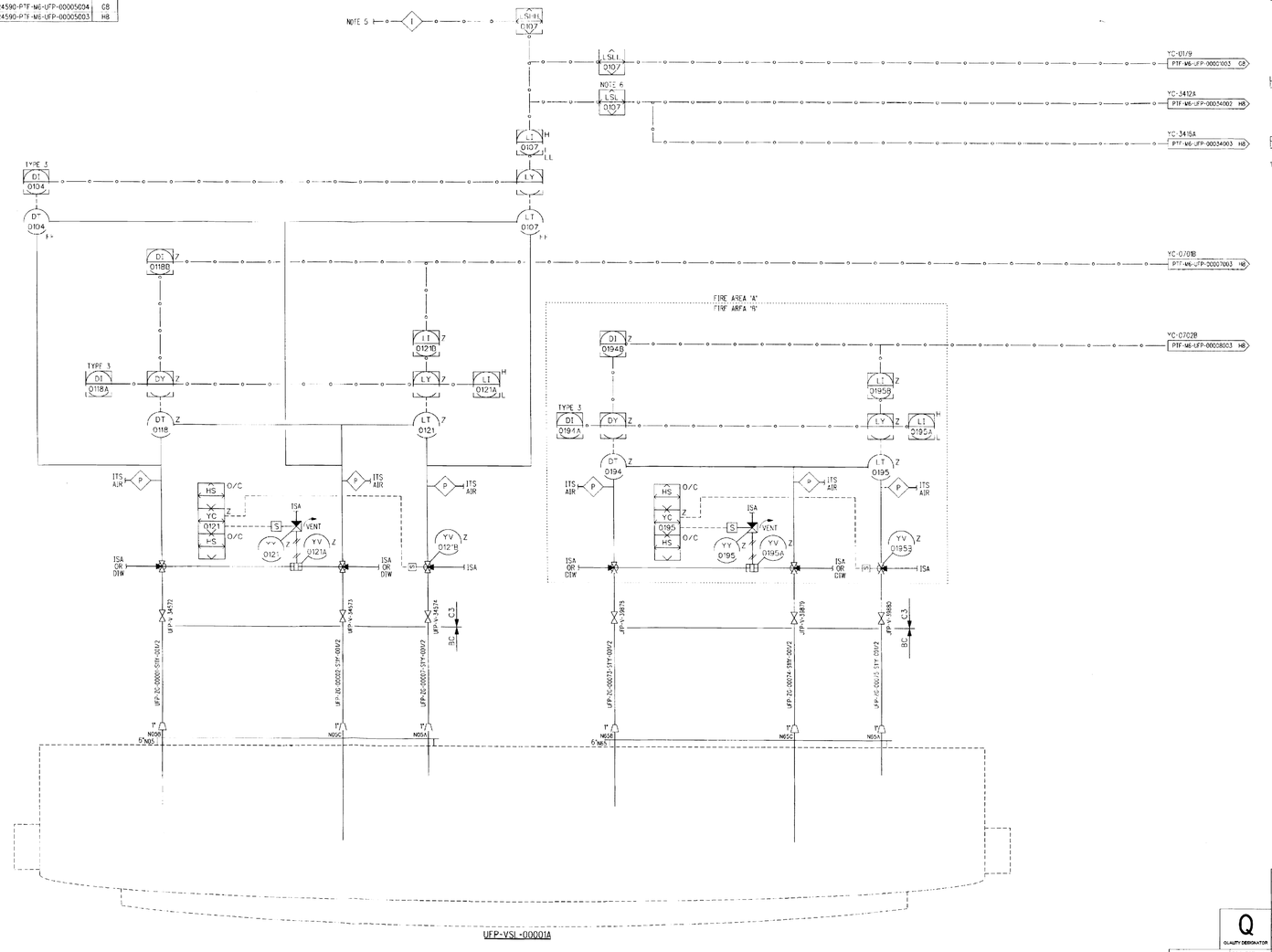

NOTES:

1. SEE DRAWINGS 24590-WTP-M6-50-00001 THROUGH 24590-WTP-M6-50-00008 FOR GENERAL NOTES, SYMBOLS AND LEGEND, AND GENERAL SLOPE REQUIREMENTS.
2. CONTENTS OF THIS DOCUMENT ARE DANGEROUS WASTE PERMIT AFFECTING.
3. THE PRESSURE BOUNDARY FOR ALL COMPONENTS ON THIS DRAWING IS QUALITY LEVEL Q AND SEISMIC CATEGORY SC-1, UNLESS OTHERWISE NOTED.
4. ALL LINES SHOWN ON THIS DRAWING SHALL BE TRUE DRAINING, EXCEPT BLACK CELL LINES WHICH ARE SELF-DRAINING, UNLESS OTHERWISE NOTED.
5. ON HIGH HIGH LEVEL DETECTION (UFP-LSHH-0107), VALVES LISTED IN TABLE 1 WILL CLOSE.
6. ON LOW LEVEL DETECTION (UFP-LSL-0107), STEAM VALVES YV-3412 AND YV-3416 WILL CLOSE.
7. SEE DRAWINGS 24590-PTF-M6-ISA-00010, -00011, 24590-PTF-M6-PSA-00046001, AND -00046002 FOR BUBBLER RACK AND SYSTEM CONNECTION.
8. THIS DRAWING IS CONVERTED FROM A SINGLE SHEET TO MULTI-SHEET DRAWINGS AND IN PART SUPERSEDES 24590-PTF-M6-UFP-00001 REV. 2. THIS IS A MAJOR REVISION, NO REVISION CLOUDS ARE SHOWN. THIS DRAWING MAY INCLUDE INFORMATION FROM 24590-PTF-M6N-M801-00017, -00037, -00038, 24590-PTF-M6N-UFP-00037, -00016, -00063, -00084, -00101, AND -00104.

HOLD/OPEN ITEMS:

NONE

REFERENCES:

1. THE REQUIRED OPERATIONAL SEQUENCES, PERMISSIVES, INTERLOCKS, ALARMS AND OPERATOR INTERFACE POINTS ARE FULLY DESCRIBED IN THE UFP SYSTEM LOGIC DIAGRAMS (FUTURE) AND THE UFP SYSTEM DESCRIPTION (FUTURE REVISION).

Please note that source, special nuclear, and byproduct materials, as defined in the Atomic Energy Act of 1954 (AEA) are regulated at the U. S. Department of Energy (DOE) facilities exclusively by DOE acting pursuant to its AEA authority. DOE asserts that pursuant to AEA, it has sole and exclusive responsibility and authority to regulate source, special nuclear, and byproduct materials at DOE-owned nuclear facilities. Information contained herein on radionuclides is provided for process description purposes only.

REV	DESCRIPTION	ORG	CHKD	RVWD	APVD	DATE
0	ISSUED FOR CONSTRUCTION SEE NOTE 8	DW	SJ	EAS	GER	11/14/08

REVISION HISTORY

Q QUALITY DESIGNATOR

ISSUED BY RPP-WTP PDC ISSUE STAMP

PROJECT No. 24590
SITE (HANFORD)
AREA 200
BUILDING No. 81

	BY	DATE
ORIGINATOR		11/14/08
CHECKER	SATISH SEMAN	11/14/08
APPROVER		11/14/08
REVIEWER		11/14/08

CONTENT APPLICABLE TO ALARA? [X] YES [ ] NO
ADR NO. 24590-PTF-ADR-M-00-240 REV. 4
SAFETY SCREEN REQUIRED? [X] YES [ ] NO EWS INITIAL IF YES
SAFETY SCREEN IS REQUIRED FOR DRAWING TYPES IDENTIFIED IN 24590-WTP-GPP-SREG-002

BECHTEL

RIVER PROTECTION PROJECT
WASTE TREATMENT PLANT
2435 STEVENS CENTER PLACE
RICHLAND, WA 99354

CONTRACT No DE-AC27-01RV14136

P&ID - PTF ULTRAFILTRATION PROCESS SYSTEM BUBBLERS UFP-VSL-00001A

SCALE: NONE

24590-PTF-M6-UFP-00001002

REV 0

E-SIZE 44x34 COMPUTER GENERATED MANUAL CHANGES NOT PERMITTED

R10986178

11/12/2008 09:59:44 AM

C:\Documents and Settings\...\24590-PTF-M6-UFP-00001002.dgn

REV. 4 10/DEC 02/2003

UFP-PMP-00041A
UFP-VSL-00001A
ULTRAFILTRATION FEED PUMP
140 GPM @ 142 FT TDH
25 HP

UFP-HX-00041A
SPIRAL PLATE HEAT EXCHANGER
9.2 MM BTU/HR
3'-0"L x 4'-9"OD

NOTES:

1. SEE DRAWINGS 24590-WTP-M6-SC-00001 THROUGH 24590-WTP-M6-SC-00008 FOR GENERAL NOTES, SYMBOLS AND LEGEND, AND GENERAL SLOPE REQUIREMENTS.
2. CONTENTS OF THIS DOCUMENT ARE DANGEROUS WASTE PERMIT AFFECTING.
3. THE PRESSURE BOUNDARY FOR ALL COMPONENTS ON THIS DRAWING IS QUALITY LEVEL Q AND SEISMIC CATEGORY SC-III, UNLESS OTHERWISE NOTED. TO PROTECT HOT CELL SEISMIC CATEGORY SC-I COMPONENTS, ALL PIPING, JUMPERS, AND EQUIPMENT LOCATED IN THE HOT CELL TO BE A MINIMUM OF SEISMIC CATEGORY SC-II, WHICH TAKES PRECEDENCE OVER FLAGS SHOWN ON THIS DRAWING. ALL ISA BLACK CELL LINES ARE QUALITY LEVEL Q AND SEISMIC CATEGORY SC-I.
4. ALL LINES SHOWN ON THIS DRAWING SHALL BE FREE DRAINING, EXCEPT BLACK CELL LINES WHICH ARE SELF-DRAINING, UNLESS OTHERWISE NOTED.
5. FOR PUMP SEAL WATER DISTRIBUTION DRAWING SEE 24590-PTF-M6-PCW-00009.
6. SP IS A VALVE THAT WILL SEAL FLUSH AGAINST PIPE.
7. DRAIN INCLUDES PLUG THAT WILL SEAL FLUSH AGAINST JUMPER. PLUG IS PHYSICALLY ATTACHED TO BLANK JUMPER. PLUG SHALL BE SAME MATERIAL AS JUMPER.
8. HEAT EXCHANGER OUTLET NOZZLE SHALL BE LOCATED VERTICALLY FOR PAV CONTROL.
9. ITS TIMER TO LIMIT PUMP RUN TIME.
10. VALVE YV-0108 MUST BE CLOSED BEFORE HIGH POINT VENT/FLUSH VALVE CONTROL YC-2905A AND/OR YC-2920A (PTF-M6-PVP-00029) OPEN TO PUMP SUCTION.
11. THIS DRAWING IS CONVERTED FROM A SINGLE SHEET TO MULTI-SHEET DRAWINGS AND IN PART SUPERSEDES 24590-PTF-M6-UFP-00001 REV. 2. THIS IS A MAJOR REVISION, NO REVISION CLOUDS ARE SHOWN. THIS DRAWING MAY INCLUDE INFORMATION FROM 24590-PTF-M6N-UFP-00037, -00046, -00063, -00084, -00101, AND -00104.

HOLD/OPEN ITEMS:

NONE

REFERENCES:

1. THE REQUIRED OPERATIONAL SEQUENCES, PERMISSIVES, INTERLOCKS, ALARMS AND OPERATOR INTERFACE POINTS ARE FULLY DESCRIBED IN THE UFP SYSTEM LOGIC DIAGRAMS (FUTURE) AND THE UFP SYSTEM DESCRIPTION (FUTURE REVISION).

Please note that source, special nuclear, and byproduct materials, as defined in the Atomic Energy Act of 1954 (AEA) are regulated at the U. S. Department of Energy (DOE) facilities exclusively by DOE acting pursuant to its AEA authority. DOE asserts that pursuant to AEA, it has sole and exclusive responsibility and authority to regulate source, special nuclear, and byproduct materials at DOE-owned nuclear facilities. Information contained herein on radionuclides is provided for process description purposes only.

REV	DESCRIPTION	ORG	CHKD	RVWD	APVD	DATE
0	ISSUED FOR CONSTRUCTION SEE NOTE 11	DW	SJ	EJ	RK	11/17/08

Q QUALITY DESIGNATOR

REVISION HISTORY

ISSUED BY RPP-WTP PDC

PROJECT No	24590
SITE	HANFORD
AREA	200E
BUILDING No	30

	BY	DATE
ORIGINATOR		8/11/08
CHECKER	SATISH JAIN	11/11/08
APPROVER		11/13/08
REVIEWER		11/14/08
		11/14/08

CONTENT APPLICABLE TO ALARAT [X] YES [ ] NO
ADM NO. 24590-PTF-ADM-02-046 REV. 1
SAFETY SCREEN REQUIREMENTS [ ] NO [ ] YES INITIAL IF YES
SAFETY SCREEN IS REQUIRED FOR DRAWING TYPES IDENTIFIED IN 24590-WTP-GPP-SREQ-002

BECHTEL

RIVER PROTECTION PROJECT
WASTE TREATMENT PLANT
2435 STEVENS CENTER PLACE
RICHLAND, WA 99354

CONTRACT No: DE-AC27-03RV14136

P&ID-PTF
ULTRAFILTRATION PROCESS SYSTEM
UFP-PMP-00041A AND UFP-HX-00041A

SCALE: NONE
24590-PTF-M6-UFP-00001003
REV 0

R1205179

44x34
COMPUTER GENERATED - MANUAL CHANGES NOT PERMITTED

11/13/2008 03:34:04 PM

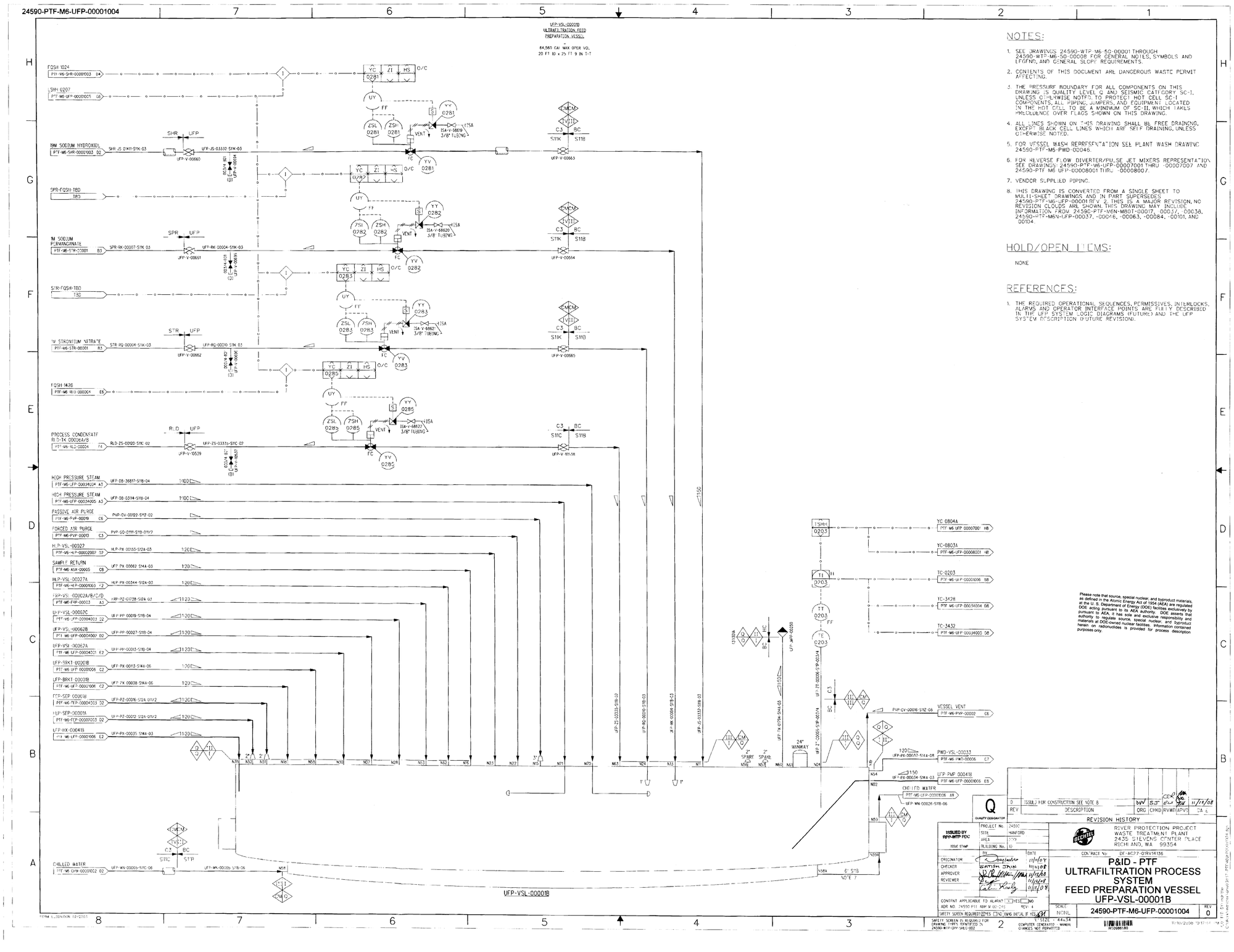

NOTES:

1. SEE DRAWINGS 24590-WTP-M6-50-00001 THROUGH 24590-WTP-M6-50-00008 FOR GENERAL NOTES, SYMBOLS AND LEGEND, AND GENERAL SLOPE REQUIREMENTS.
2. CONTENTS OF THIS DOCUMENT ARE DANGEROUS WASTE PERMIT AFFECTING.
3. THE PRESSURE BOUNDARY FOR ALL COMPONENTS ON THIS DRAWING IS QUALITY LEVEL Q AND SEISMIC CATEGORY SC-1, UNLESS OTHERWISE NOTED. TO PROTECT HOT CELL SC-1 COMPONENTS, ALL PIPING, JUMPERS, AND EQUIPMENT LOCATED IN THE HOT CELL TO BE A MINIMUM OF SC-II, WHICH TAKES PRECEDENCE OVER FLAGS SHOWN ON THIS DRAWING.
4. ALL LINES SHOWN ON THIS DRAWING SHALL BE FREE DRAINING, EXCEPT BLACK CELL LINES WHICH ARE SELF DRAINING, UNLESS OTHERWISE NOTED.
5. FOR VESSEL WASH REPRESENTATION SEE PLANT WASH DRAWING 24590-PTF-M6-PWD-00046.
6. FOR REVERSE FLOW DIVERTER/PULSE JET MIXERS REPRESENTATION SEE DRAWINGS 24590-PTF-M6-UFP-00007001 THRU -00007007 AND 24590-PTF-M6-UFP-00008001 THRU -00008007.
7. VENDOR SUPPLIED PIPING.
8. THIS DRAWING IS CONVERTED FROM A SINGLE SHEET TO MULTI-SHEET DRAWINGS AND IN PART SUPERSEDES 24590-PTF-M6-UFP-00001 REV 2. THIS IS A MAJOR REVISION, NO REVISION CLOUDS ARE SHOWN. THIS DRAWING MAY INCLUDE INFORMATION FROM 24590-PTF-M6N-M801-00017, -00037, -00038, 24590-WTP-M6N-UFP-00037, -00046, -00063, -00084, -00101, AND -00104.

HOLD/OPEN ITEMS:

NONE

REFERENCES:

1. THE REQUIRED OPERATIONAL SEQUENCES, PERMISSIVES, INTERLOCKS, ALARMS AND OPERATOR INTERFACE POINTS ARE FULLY DESCRIBED IN THE UFP SYSTEM LOGIC DIAGRAMS (FUTURE) AND THE UFP SYSTEM DESCRIPTION (FUTURE REVISION).

Please note that source, special nuclear, and byproduct materials, as defined in the Atomic Energy Act of 1954 (AEA) are regulated at the U.S. Department of Energy (DOE) facilities exclusively by DOE acting pursuant to its AEA authority. DOE asserts that pursuant to AEA, it has sole and exclusive responsibility and authority to regulate source, special nuclear, and byproduct materials at DOE-owned nuclear facilities. Information contained herein on radionuclides is provided for process description purposes only.

REV	DESCRIPTION	ORG	CHKD	RVWD	APVD	DATE
0	ISSUED FOR CONSTRUCTION SEE NOTE 8	DPW	SJT	CEH	[illegible]	11/12/08

REVISION HISTORY

Q — QUALITY DESIGNATOR

ISSUED BY RPP-WTP PDC — ISSUE STAMP

	BY	DATE
ORIGINATOR	[illegible]	11/10/08
CHECKER	STEPHEN JANIK	11/10/08
APPROVER	[illegible]	11/12/08
REVIEWER	[illegible]	11/12/08

CONTENT APPLICABLE TO ALARA? [X] YES [ ] NO
ADR NO. 24590 PTF ADR M 02-245 REV. 4
SAFETY SCREEN REQUIRED? [ ] YES [X] NO EVAL DETAIL IF YES, #

PROJECT No. 24590
SITE HANFORD
AREA 200
BUILDING No. 10

RIVER PROTECTION PROJECT
WASTE TREATMENT PLANT
2435 STEVENS CENTER PLACE
RICHLAND, WA 99354

CONTRACT NO DE-AC27-01RV14136

P&ID - PTF ULTRAFILTRATION PROCESS SYSTEM FEED PREPARATION VESSEL UFP-VSL-00001B

SCALE NONE

24590-PTF-M6-UFP-00001004 REV 0

SAFETY SCREEN IS REQUIRED FOR DRAWING TYPES IDENTIFIED IN 24590-WTP-GPP-SAFE-002

COMPUTER GENERATED - MANUAL CHANGES NOT PERMITTED

R1098180

11/10/2008 10:17:44 AM

C:\Documents and Settings\PTF\Desktop\PTF\24590PTFM6UFP00001004.dgn

FORM D_DENSITY 10/2003

TABLE 1

INSTRUMENT TAG	DRAWING NUMBER	GRID
UFP-YC-0281	24590 PTF M6-UFP-00001004	H8
UFP-YC-0282	24590 PTF M6-UFP-00001004	H8
UFP-YC-0283	24590-PTF-M6-UFP-00001004	H8
UFP-YC-0285	24590-PTF-M6-UFP-00001004	H8
UFP-YC-3426A	24590 PTF-M6-UFP-00034004	G8
UFP YC-3430A	24590 PTF M6-UFP-00034005	G8
HLP-YC-0188A	24590-PTF-M6-HLP-00001001	G3
HLP-YC-0270A	24590 PTF M6 HLP 00002002	E3
FRP-YC-0346	24590-PTF-M6-FRP-00003	B3
FEP-YC-0440	24590-PTF-M6-FEP-00004003	F4
FEP-YC-0240	24590-PTF-M6-FEP-00002003	F4
UFP YC 0272A	24590-PTF-M6-UFP-00033002	H8
UFP YC-0902A	24590-PTF M6 UFP-00009001	H8
UFP-YC-0501A	24590-PTF-M6-UFP-00005005	G8
UFP-YC-0504A	24590-PTF-M6-UFP-00005001	H8

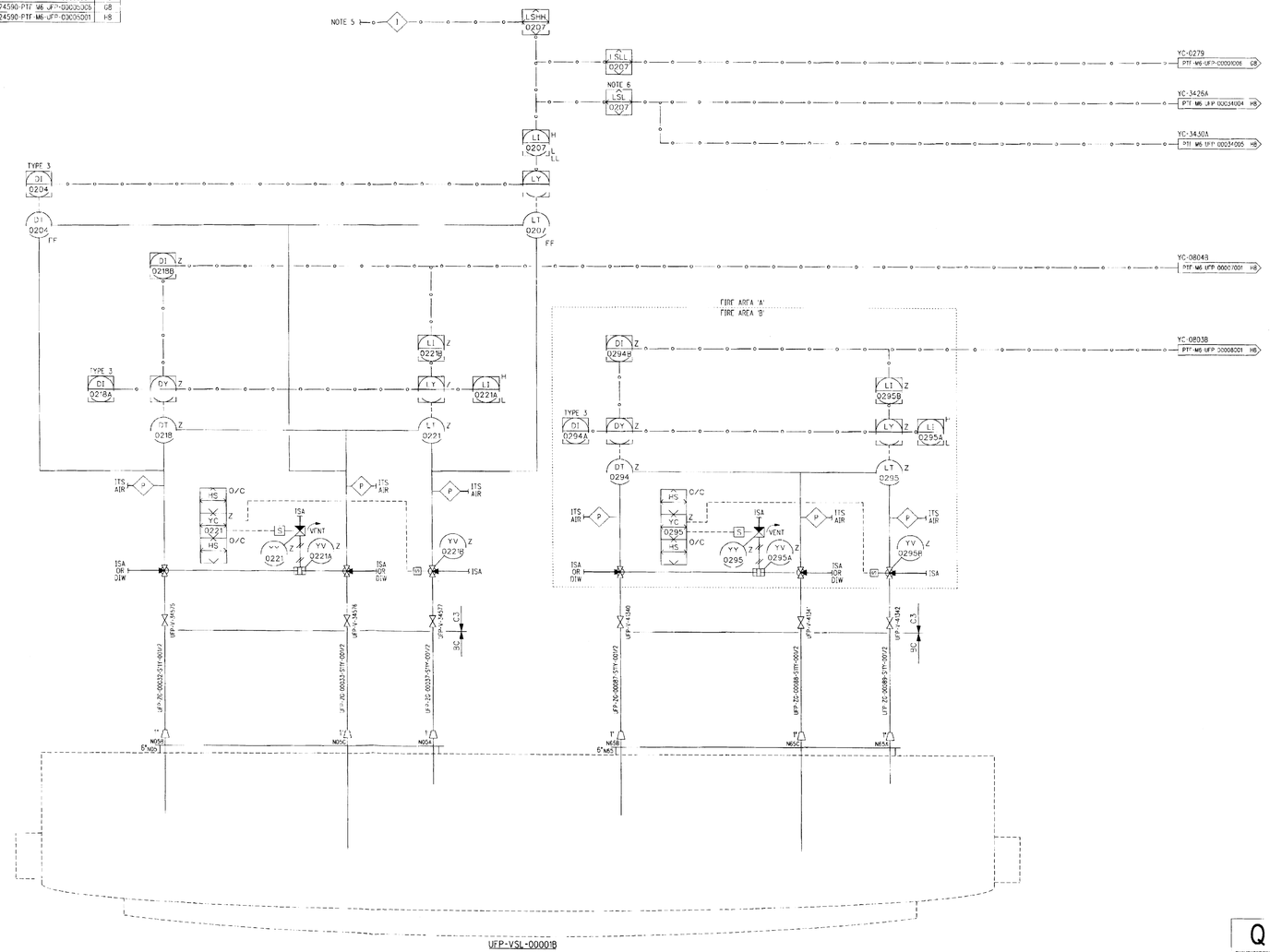

NOTES:

1. SEE DRAWINGS 24590-WTP-M6-50-00001 THROUGH 24590-WTP-M6-50-00008 FOR GENERAL NOTES, SYMBOLS AND LEGEND, AND GENERAL SLOPE REQUIREMENTS.
2. CONTENTS OF THIS DOCUMENT ARE DANGEROUS WASTE PERMIT AFFECTING.
3. THE PRESSURE BOUNDARY FOR ALL COMPONENTS ON THIS DRAWING IS QUALITY LEVEL Q AND SEISMIC CATEGORY SC 1, UNLESS OTHERWISE NOTED.
4. ALL LINES SHOWN ON THIS DRAWING SHALL BE FREE DRAINING, EXCEPT BLACK CELL LINES WHICH ARE SELF-DRAINING, UNLESS OTHERWISE NOTED.
5. ON HIGH HIGH LEVEL DETECTION (UFP-LSHH-0207), VALVES LISTED IN TABLE 1 WILL CLOSE.
6. ON LOW LEVEL DETECTION (UFP-LSL-0207), STEAM VALVES YV-3426 AND YV-3430 WILL CLOSE.
7. SEE DRAWINGS 24590-PTF-M6 ISA 00010, -00011, 24590-PTF-M6-PSA-00046001, AND -00046002 FOR BUBBLER RACK AND SYSTEM CONNECTION.
8. THIS DRAWING IS CONVERTED FROM A SINGLE SHEET TO MULTI-SHEET DRAWINGS AND IN PART SUPERSEDES 24590-PTF-M6-UFP-00001 REV 2. THIS IS A MAJOR REVISION, NO REVISION CLOUDS ARE SHOWN. THIS DRAWING MAY INCLUDE INFORMATION FROM 24590-PTF-M6N-MR0T-00017, -00037, -00038, 24590-PTF-M6N-UFP-00037, -00046, -00063, -00084, -00101, AND -00104.

HOLD/OPEN ITEMS:

NONE

REFERENCES:

1. THE REQUIRED OPERATIONAL SEQUENCES, PERMISSIVES, INTERLOCKS, ALARMS AND OPERATOR INTERFACE POINTS ARE FULLY DESCRIBED IN THE UFP SYSTEM LOGIC DIAGRAMS (FUTURE) AND THE UFP SYSTEM DESCRIPTION (FUTURE REVISION).

Please note that source, special nuclear, and byproduct materials, as defined in the Atomic Energy Act of 1954 (AEA) are regulated at the U. S. Department of Energy (DOE) facilities exclusively by DOE acting pursuant to its AEA authority. DOE asserts that pursuant to AEA, it has sole and exclusive responsibility and authority to regulate source, special nuclear, and byproduct materials at DOE-owned nuclear facilities. Information contained herein on radionuclides is provided for process description purposes only.

Q
QUALITY DESIGNATION

REVISION HISTORY

REV	DESCRIPTION	ORC	C-KD	RVWD	APVD	DATE
0	ISSUED FOR CONSTRUCTION SEE NOTE 8	DW	SJ	EKS	[illegible]	11/12/08

ISSUED BY WTP-WTP RPC
Issue Sheet

PROJECT No.	24590
SITE	HANFORD
AREA	200E
FILE ROMS No.	70
BY	DATE
ORIGINATOR	11/11/08
CHECKER	SAYISH JHAVERI 11/11/08
APPROVER	11/12/08
REVIEWER	11/12/08

CONTENT APPLICABLE TO ALARA? [X] YES [ ] NO
ADR NO. 24590 PTF ADR M-02-0140 REV. 4
SHIELDING SCREEN REQUIRED? [ ] YES [ ] NO EMS INITIAL IF YES

SAFETY SCREEN IS REQUIRED FOR DRAWING TYPES IDENTIFIED IN 24590-WTP-GPP-SREQ-002

RIVER PROTECTION PROJECT WASTE TREATMENT PLANT
2435 STEVENS CENTER PLACE
RICHLAND, WA 99354

CONTRACT No: DE-AC27-07RV14136

P&ID - PTF ULTRAFILTRATION PROCESS SYSTEM BUBBLERS UFP-VSL-00001B

SCALE: NONE
24590-PTF-M6-UFP-00001005
REV 0

D SIZE 44x34
COMPUTER GENERATED MANUAL CHANGES NOT PERMITTED

R10666181

11/20/2008 09:47:32 PM

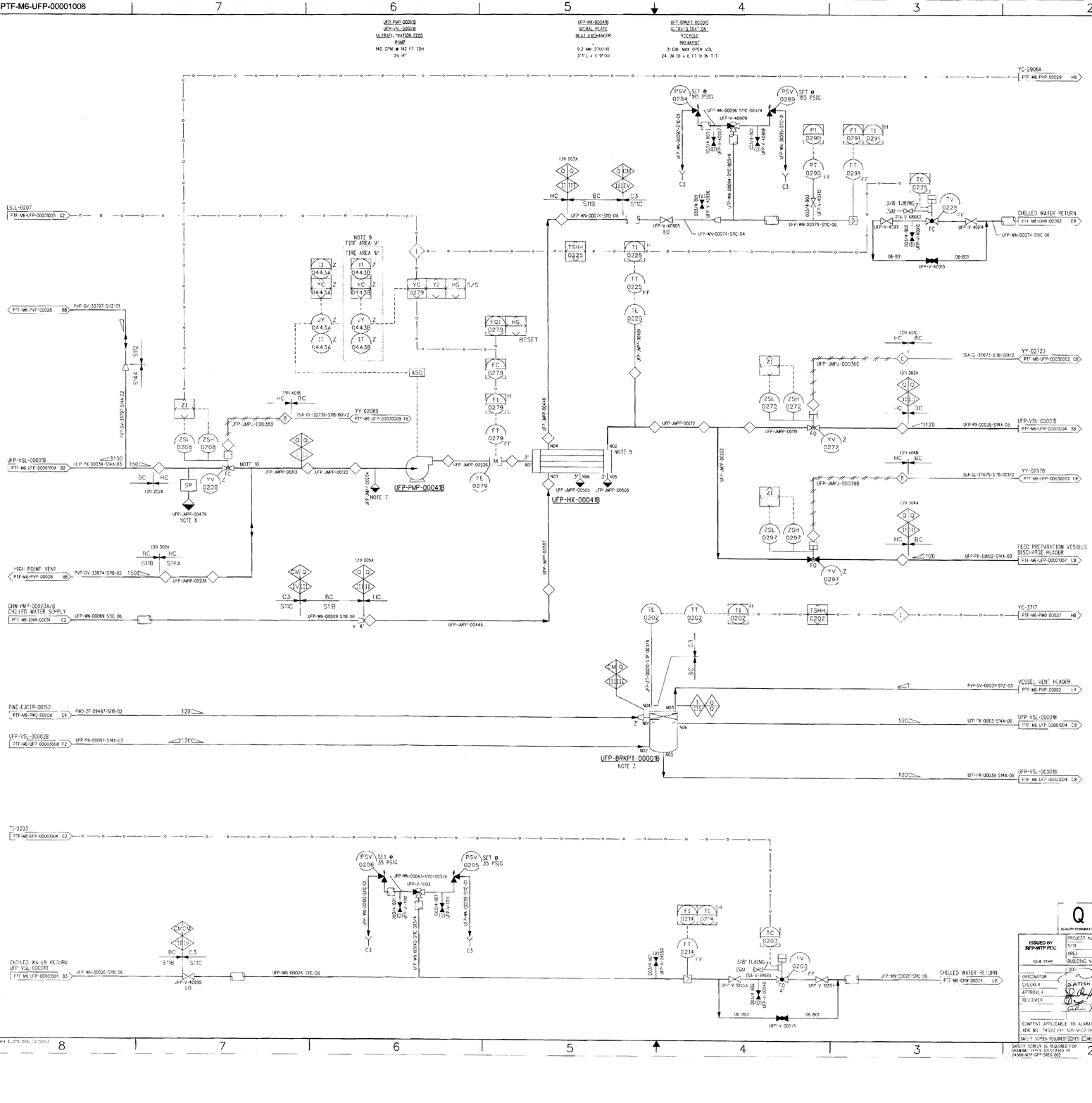

NOTES:

1. SEE DRAWINGS 24590-WTP-M6-50-00001 THROUGH 24590-WTP-M6-50-00008 FOR GENERAL NOTES, SYMBOLS AND LEGEND, AND GENERAL SLOPE REQUIREMENTS.
2. CONTENTS OF THIS DOCUMENT ARE DANGEROUS WASTE PERMIT AFFECTING.
3. THE PRESSURE BOUNDARY FOR ALL COMPONENTS ON THIS DRAWING IS QUALITY LEVEL Q AND SEISMIC CATEGORY SC-III EXCEPT BREAKPOT UFP-BRKPT-00001B WHICH IS SEISMIC CATEGORY SC-II, UNLESS OTHERWISE NOTED, TO PROTECT HOT CELL SEISMIC CATEGORY SC-I COMPONENTS. ALL PIPING, JUMPERS, AND EQUIPMENT LOCATED IN THE HOT CELL TO BE A MINIMUM OF SEISMIC CATEGORY SC-II, WHICH TAKES PRECEDENCE OVER FLAGS SHOWN ON THIS DRAWING. ALL ISA BLACK CELL LINES ARE QUALITY LEVEL Q AND SEISMIC CATEGORY SC-I.
4. ALL LINES SHOWN ON THIS DRAWING SHALL BE FREE DRAINING, EXCEPT BLACK CELL LINES WHICH ARE SELF-DRAINING, UNLESS OTHERWISE NOTED.
5. FOR PUMP SEAL WATER DISTRIBUTION DRAWING SEE 24590-PTF-M6-PCW-00009.
6. SP IS A VALVE THAT WILL SEAL FLUSH AGAINST PIPE.
7. DRAIN INCLUDES PLUG THAT WILL SEAL FLUSH AGAINST JUMPER. PLUG IS PHYSICALLY ATTACHED TO BLANK JUMPER. PLUG SHALL BE SAME MATERIAL AS JUMPER.
8. HEAT EXCHANGER OUTLET NOZZLE SHALL BE LOCATED VERTICALLY FOR HPAV CONTROL.
9. ITS TIMER TO LIMIT PUMP RUN TIME.
10. VALVE YV-0208 MUST BE CLOSED BEFORE HIGH POINT VENT/FLUSH VALVE OPEN CONTROL YC 2906A AND/OR YC-2914A (PTF-M6-PVP-00229) OPEN TO PUMP SUCTION.
11. THIS DRAWING IS CONVERTED FROM A SINGLE SHEET TO MULTI-SHEET DRAWINGS AND IN PART SUPERSEDES 24590 PTF-M6-UFP-00001 REV. 2. THIS IS A MAJOR REVISION, NO REVISION CLOUDS ARE SHOWN. THIS DRAWING MAY INCLUDE INFORMATION FROM 24590-PTF-M6N-M80T-00017, -00037, -00038, 24590-PTF-M8N-UFP-00037, -00046, -00063, -00084, 00101, AND -00104.

HOLD/OPEN ITEMS:

NONE

REFERENCES:

1. THE REQUIRED OPERATIONAL SEQUENCES, PERMISSIVES, INTERLOCKS, ALARMS AND OPERATOR INTERFACE POINTS ARE FULLY DESCRIBED IN THE UFP SYSTEM LOGIC DIAGRAMS (FUTURE) AND THE UFP SYSTEM DESCRIPTION (FUTURE REVISION).

Please note that source, special nuclear, and byproduct materials, as defined in the Atomic Energy Act of 1954 (AEA) are regulated at the U. S. Department of Energy (DOE) facilities exclusively by DOE acting pursuant to its AEA authority. DOE asserts that pursuant to AEA, it has sole and exclusive responsibility and authority to regulate source, special nuclear, and byproduct materials at DOE-owned nuclear facilities. Information contained herein on radionuclides is provided for process description purposes only.

QUALITY DESIGNATOR	REV	DESCRIPTION	ORG	CHKD	RVWD	APVD	DATE
Q	0	ISSUED FOR CONSTRUCTION SEE NOTE 11	DW	SJ	CER	CER	11/12/08

REVISION HISTORY

ISSUED BY RPP-WTP PDC

PROJECT No.	24590
SITE	HANFORD
AREA	200E
BUILDING No.	70

	INIT	DATE
ORIGINATOR	SATISH ZINJE	11/10/08
CALKIN		
APPROVER		11/12/08
REVIEWER		11/12/08

CONTENT APPLICABLE TO ALARA? [X] YES [ ] NO
ADR NO. 24590 PTF ADR-M-07-046 REV. 5
SAFETY SCREEN REQUIRED? [ ] YES [X] NO IF YES, INITIAL

SAFETY SCREEN IS REQUIRED FOR DRAWING TYPES IDENTIFIED IN 24590-WTP-GPP-SREQ-002

RIVER PROTECTION PROJECT
WASTE TREATMENT PLANT
2435 STEVENS CENTER PLACE
RICHLAND, WA 99354

CONTRACT No: DE-AC27-01RV14136

P&ID-PTF ULTRAFILTRATION PROCESS SYSTEM UFP-PMP-00041B AND UFP-HX-00041B

SCALE:	DRAWING NO.	REV.
NONE	24590-PTF-M6-UFP-00001006	0

R10086162

11/11/2008 3:32:45 PM

"C" SIZE 44x34
COMPUTER GENERATED - MANUAL CHANGES NOT PERMITTED

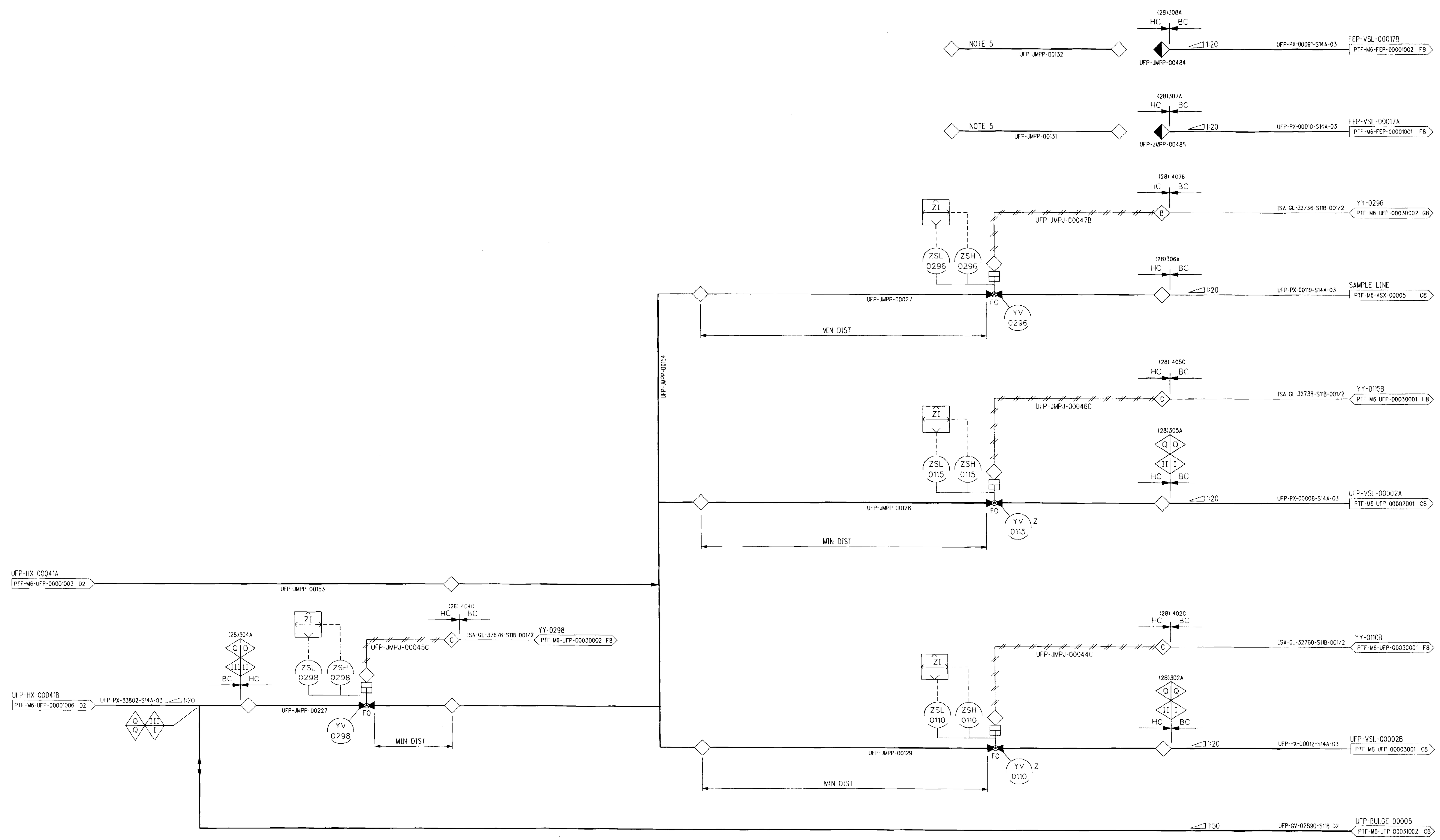

NOTES:

1. SEE DRAWINGS 24590-WTP-M6-50-00001 THROUGH 24590-WTP-M6-50-00008 FOR GENERAL NOTES, SYMBOLS AND LEGEND, AND GENERAL SLOPE REQUIREMENTS.
2. CONTENTS OF THIS DOCUMENT ARE DANGEROUS WASTE PERMIT AFFECTING.
3. THE PRESSURE BOUNDARY FOR ALL COMPONENTS ON THIS DRAWING IS QUALITY LEVEL Q AND SEISMIC CATEGORY SC-III, UNLESS OTHERWISE NOTED. TO PROTECT HOT CELL SEISMIC CATEGORY SC-I COMPONENTS, ALL PIPING, JUMPERS, AND EQUIPMENT LOCATED IN THE HOT CELL TO BE A MINIMUM OF SEISMIC CATEGORY SC-II, WHICH TAKES PRECEDENCE OVER FLAGS SHOWN ON THIS DRAWING. ALL ISA BLACK CELL LINES ARE QUALITY LEVEL Q AND SEIMIC CATEGORY SC-I.
4. ALL LINES SHOWN ON THIS DRAWING SHALL BE FREE DRAINING, EXCEPT BLACK CELL LINES WHICH ARE SELF-DRAINING, UNLESS OTHERWISE NOTED.
5. JUMPERS UFP-JMPP-00027, UFP-JMPP-00484 AND UFP-JMPP-00485 ARE NORMALLY INSTALLED. JUMPERS UFP-JMPP-00131 AND UFP-JMPP-00132 ARE TO BE FABRICATED BUT NOT NORMALLY INSTALLED DURING OFF NORMAL OPERATION, JUMPER UFP-JMPP-00027, UFP-JMPP-00484, OR UFP-JMPP-00485 ARE TO BE REMOVED AND REPLACED BY JUMPER UFP-JMPP-00131 OR UFP-JMPP-00132 ON AS NEEDED BASIS.
6. THIS DRAWING IS CONVERTED FROM A SINGLE SHEET TO MULTI-SHEET DRAWINGS AND IN PART SUPERSEDES 24590-PTF-M6-UFP-00001 REV 2. THIS IS A MAJOR REVISION, NO REVISION CLOUDS ARE SHOWN. THIS DRAWING MAY INCLUDE INFORMATION FROM 24590-PTF-M6N-M80T-00017, -00037, -00038, 24590-PTF-M6N-UFP-00037, -00046, -00063, -00084, -00101, AND -00104.

HOLD/OPEN ITEMS:

NONE

REFFRENCES:

1. THE REQUIRED OPERATIONAL SEQUENCES, PERMISSIVES, INTERLOCKS, ALARMS AND OPERATOR INTERFACE POINTS ARE FULLY DESCRIBED IN THE UFP SYSTEM LOGIC DIAGRAMS (FUTURE) AND THE UFP SYSTEM DESCRIPTION (FUTURE REVISION).

Please note that source, special nuclear, and byproduct materials, as defined in the Atomic Energy Act of 1954 (AEA) are regulated at the U. S. Department of Energy (DOE) facilities exclusively by DOE acting pursuant to its AEA authority. DOE asserts that pursuant to AEA, it has sole and exclusive responsibility and authority to regulate source, special nuclear, and byproduct materials at DOE-owned nuclear facilities. Information contained herein on radionuclides is provided for process description purposes only.

Q
QUALITY DESIGNATOR

REV	DESCRIPTION	ORG	CHKD	RVWD	APVD	DATE
0	ISSUED FOR CONSTRUCTION SEE NOTE 6	DVV	SJ	ELS		11/12/08

REVISION HISTORY

ISSUED BY RPP-WTP PDC
ISSUE STAMP

PROJECT No.	24590
SITE	HANFORD
AREA	200E
BUILDING No.	10

	BY	DATE
ORIGINATOR		11/11/08
CHECKER	SATISH JAIN	11/11/08
APPROVER		11/12/08
REVIEWER		11/12/08
		11/12/08

CONTENT APPLICABLE TO ALARA? [X] YES [ ] NO
ADR NO. 24590-PTF-ADR-M-02-046 REV: 4
SAFETY SCREEN REQUIRED? [X] YES [ ] NO E&NS INITIAL IF YES

RIVER PROTECTION PROJECT
WASTE TREATMENT PLANT
2435 STEVENS CENTER PLACE
RICHLAND, WA 99354

CONTRACT No: DE-AC27-01RV14136

P&ID - PTF ULTRAFILTRATION PROCESS SYSTEM FEED PREPARATION HEADER UFP-VSL-00001A/1B

SCALE: NONE
24590-PTF-M6-UFP-00001007
REV 0

SAFETY SCREEN IS REQUIRED FOR DRAWING TYPES IDENTIFIED IN 24590-WTP-GPP-SREG-002
'E' SIZE - 44x34
COMPUTER GENERATED - MANUAL CHANGES NOT PERMITTED
R10986183
11/12/2008 03:31:36 PM

Drawings and Documents

Operating Unit Group 10 – Appendix 8.5
Pretreatment Building
Civil, Structural, and Architectural Criteria and Typical Design Details

The documents listed in the following table are incorporated by reference into this permit and are subject to the requirements set forth in Part I Standard Conditions, Part II General Facility Conditions, and Part III Operating Unit Group 10 Conditions. Upon request, copies of the documents can be viewed at the Nuclear Waste Program Resource Center located at 3100 Port of Benton Blvd. Richland, WA. Appointments for viewing can be scheduled by calling (509) 372-7950.

Drawing/Document Number	***Description***
24590-PTF- PER-M-02-006, Rev 5	Sump Data for PT Facility
24590-PTF- PER-M-03-002, Rev 0	Sump & Drain Data at 28 Ft Level for PT Facility
24590-PTF-PER-M-04-002, Rev 0	Sump & Drain Data at 56 ft. Level for PT Facility
24590-PTF-PER-M-04-0004, Rev 0	Sump & Drain Data at 77 ft. Level for PT Facility
24590-PTF-PER-M-04-0009, Rev 0	Sump Data for PT Facility – Room P-0150
RESERVED	RESERVED

Source documents (which do not include a "P" in the last set of numbers, e.g. "-P0001," or "-TP001") should be used in conjunction with any document change notices issued against them.

We are currently transitioning from permit documents (which do include a "P" in the last set of numbers) to source documents. At the end of the transition period, permit submittals will contain source documents and will be incorporated into the permit as described in Ecology Publication # 07-05-006 (www.ecy.wa.gov/biblio/nwp.html).

1
2
3
4
5

This page intentionally left blank.

Drawing and Documents

Operating Unit Group 10 – Appendix 8.6
Pretreatment Building
Mechanical Drawings

The documents listed in the following table are incorporated by reference into this permit and are subject to the requirements set forth in Part I Standard Conditions, Part II General Facility Conditions, and Part III Operating Unit Group 10 Conditions. Upon request, copies of the documents can be viewed at the Nuclear Waste Program Resource Center located at 3100 Port of Benton Blvd. Richland, WA. Appointments for viewing can be scheduled by calling (509) 372-7950.

Drawing/Document Number	***Description***
24590-PTF-M0D-PIH-P0015, Rev 1	Mechanical Data Sheet for PIH-TK-00001
24590-PTF-M0-PIH-P0019001, Rev 0	PTF Vitrification System PIH Design Proposal Drawing Decon Tank Assembly
24590-PTF-M0-PIH-P0019002, Rev 0	PTF Vitrification System PIH Design Proposal Drawing Decon Tank Details
24590-PTF-M2-FRP-P0001 Rev 2	Equipment Assembly Drawing for FRP-VSL-00002A
24590-PTF-M2-FRP-P0002 Rev 2	Equipment Assembly Drawing for FRP-VSL-00002B
24590-PTF-M2-FRP-P0003 Rev 2	Equipment Assembly Drawing for FRP-VSL-00002C
24590-PTF-M2-FRP-P0004 Rev 2	Equipment Assembly Drawing for FRP-VSL-00002D
24590-PTF-MED-CNP-P0003, Rev 0	Mechanical Data Sheet for CNP-HX-00002
24590-PTF-MED-CNP-P0004, Rev 1	Mechanical Data Sheet for CNP-HX-00004
24590-PTF-MED-CNP-P0005, Rev 0	Mechanical Data Sheet for CNP-HX-00001
24590-PTF-MED-CNP-P0010, Rev 0	Mechanical Data Sheet for CNP-HX-00003
24590-PTF-MED-FEP-P0003, Rev 0	Mechanical Data Sheet for FEP-COND-00001A
24590-PTF-MED-FEP-P0004, Rev 0	Mechanical Data Sheet for FEP-COND-00001B
24590-PTF-MED-FEP-P0005, Rev 0	Mechanical Data Sheet for FEP-COND-00002A

24590-PTF-MED-FEP-P0006, Rev 0	Mechanical Data Sheet for FEP-COND-00002B
24590-PTF-MED-FEP-P0007, Rev 0	Mechanical Data Sheet for FEP-COND-00003A
24590-PTF-MED-FEP-P0008, Rev 0	Mechanical Data Sheet for FEP-COND-00003B
24590-PTF-MED-FEP-P0009, Rev 0	Mechanical Data Sheet for FEP-RBLR-00001A
24590-PTF-MED-FEP-P0010, Rev 0	Mechanical Data Sheet for FEP-RBLR-00001B
24590-PTF-MED-TLP-P0001, Rev 0	Mechanical Data Sheet for TLP-COND-00001
24590-PTF-MED-TLP-00002, Rev 4	Mechanical Data Sheet for TLP-COND-00002
24590-PTF-MED-TLP-00003, Rev 4	Mechanical Data Sheet for TLP-COND-00003
24590-PTF-MED-TLP-P0004, Rev 0	Mechanical Data Sheet for TLP-RBLR-00001
24590-PTF-MKD-PVP-P0002, Rev 2	Mechanical Data Sheet & Equipment Assembly Drawing for PVP-SCB-00002
24590-PTF-MLD-UFP-P0007, Rev 1	Mechanical Data Sheet for UFP-FILT-00001A/1B/2A/2B/3A/3B/S1-S6
24590-PTF-MV-CNP-P0001, Rev 0	Equipment Assembly Drawing for CNP-VSL-00003
24590-PTF-MV-CNP-P0002, Rev 1	Equipment Assembly Drawing for CNP-VSL-00004
24590-PTF-MV-CNP-P0005, Rev 0	Equipment Assembly Drawing for CNP-VSL-00001
24590-PTF-MV-CXP-P0001, Rev 0	Equipment Assembly Drawing for CXP-VSL-00001
24590-PTF-MV-CXP-P0002, Rev 0	Equipment Assembly Drawing for CXP-VSL-00004
24590-PTF-MV-CXP-P0003, Rev 0	Equipment Assembly Drawing for CXP-VSL-00005
24590-PTF-MV-CXP-P0008, Rev 0	Equipment Assembly Drawing for CXP-VSL-00026A
24590-PTF-MV-CXP-P0009, Rev 0	Equipment Assembly Drawing for CXP-VSL-00026B
24590-PTF-MV-CXP-P0010, Rev 0	Equipment Assembly Drawings for CXP-VSL-00026C
24590-PTF-MVD-CNP-P0003, Rev 1	Mechanical Data Sheet for CNP-VSL-00003

24590-PTF-MVD-CNP-P0006, Rev 0	Mechanical Data Sheet for CNP-EVAP-00001
24590-PTF-MVD-CNP-P0007, Rev 2	Mechanical Data Sheet for CNP-VSL-00004
24590-PTF-MVD-CNP-P0010, Rev 0	Mechanical Data Sheet for CNP-VSL-00001
24590-PTF-MVD-CXP-P0007, Rev 0	Mechanical Data Sheet for CXP-VSL-00001
24590-PTF-MVD-CXP-P0015, Rev 0	Mechanical Data Sheet for CXP-VSL-00004
24590-PTF-MVD-CXP-P0016, Rev 0	Mechanical Data Sheet for CXP-VSL-00005
24590-PTF-MVD-CXP-P0021, Rev 1	Mechanical Data Sheet for CXP-VSL-00026A
24590-PTF-MVD-CXP-P0022, Rev 1	Mechanical Data Sheet for CXP-VSL-00026B
24590-PTF-MVD-CXP-P0023, Rev 1	Mechanical Data Sheet for CXP-VSL-00026C
24590-PTF-MVD-FEP-P0001, Rev 2	Mechanical Data Sheet for FEP-VSL-00017A
24590-PTF-MVD-FEP-P0002, Rev 2	Mechanical Data Sheet for FEP-VSL-00017B
24590-PTF-MVD-FEP-P0003, Rev 1	Mechanical Data Sheet for FEP-VSL-00005
24590-PTF-MVD-FEP-P0006, Rev 3	Mechanical Data Sheet for FEP-SEP-00001A
24590-PTF-MVD-FEP-P0007, Rev 2	Mechanical Data Sheet for FEP-SEP-00001B
24590-PTF-MVD-FRP-00005, Rev 10	Mechanical Data Sheet for FRP-VSL-00002-A
24590-PTF-MVD-FRP-00006, Rev 10	Mechanical Data Sheet for FRP-VSL-00002-B
24590-PTF-MVD-FRP-00007, Rev 10	Mechanical Data Sheet for FRP-VSL-00002-C
24590-PTF-MVD-FRP-00008, Rev 10	Mechanical Data Sheet for FRP-VSL-00002-D
24590-PTF-MVD-HLP-P0006, Rev 1	Mechanical Data Sheet for HLP-VSL-00022
24590-PTF-MVD-HLP-P0007, Rev 1	Mechanical Data Sheet for HLP-VSL-00027A
24590-PTF-MVD-HLP-P0008, Rev 1	Mechanical Data Sheet for HLP-VSL-00027B
24590-PTF-MVD-HLP-P0009, Rev 1	Mechanical Data Sheet for HLP-VSL-00028
24590-PTF-MVD-PJV-P0003, Rev 0	Mechanical Data Sheet for PJV-VSL-00002
24590-PTF-MVD-PVP-P0001, Rev 0	Mechanical Data Sheet for PJV-VSL-00001
24590-PTF-MVD-PWD-P0001, Rev 3	Mechanical Data Sheet for PWD-VSL-00033
24590-PTF-MVD-PWD-P0002, Rev 3	Mechanical Data Sheet for PWD-VSL-00044
24590-PTF-MVD-PWD-P0003, Rev 2	Mechanical Data Sheet for PWD-VSL-00043
24590-PTF-MVD-PWD-P0010, Rev 1	Mechanical Data Sheet for PWD-VSL-00046
24590-PTF-MVD-PWD-P0011, Rev 3	Mechanical Data Sheet for PWD-VSL-00015
24590-PTF-MVD-PWD-P0012, Rev 3	Mechanical Data Sheet for PWD-VSL-00016

24590-PTF-MVD-RDP-P0005, Rev 1	Mechanical Data Sheet for RDP-VSL-00002A
24590-PTF-MVD-RDP-P0006, Rev 1	Mechanical Data Sheet for RDP-VSL-00002B
24590-PTF-MVD-RDP-P0007, Rev 3	Mechanical Data Sheet for RDP-VSL-00002C
24590-PTF-MVD-RDP-P0008, Rev 0	Mechanical Data Sheet for RDP-VSL-00004
24590-PTF-MVD-RLD-P0005, Rev 3	Mechanical Data Sheet for RLD-VSL-00017A
24590-PTF-MVD-RLD-P0006, Rev 3	Mechanical Data Sheet for RLD-VSL-00017B
24590-PTF-MVD-TCP-P0002, Rev 2	Mechanical Data Sheet for TCP-VSL-00001
24590-PTF-MVD-TLP-P0001, Rev 2	Mechanical Data Sheet for TLP-VSL-00009A
24590-PTF-MVD-TLP-P0002, Rev 2	Mechanical Data Sheet for TLP-VSL-00009B
24590-PTF-MVD-TLP-00004, Rev 1	Mechanical Data Sheet for TLP-VSL-00002
24590-PTF-MVD-TLP-P0005, Rev 2	Mechanical Data Sheet for TLP-SEP-00001
24590-PTF-MVD-UFP-P0001, Rev 1	Mechanical Data Sheet for UFP-VSL-00001A
24590-PTF-MVD-UFP-P0002, Rev 1	Mechanical Data Sheet for UFP-VSL-00001B
24590-PTF-MVD-UFP-P0005, Rev 1	Mechanical Data Sheet for UFP-VSL-00062A
24590-PTF-MVD-UFP-P0006, Rev 1	Mechanical Data Sheet for UFP-VSL-00062B
24590-PTF-MVD-UFP-P0007, Rev 1	Mechanical Data Sheet for UFP-VSL-00062C
24590-PTF-MVD-UFP-P0014, Rev 0	Mechanical Data Sheet for UFP-VSL-00002A
24590-PTF-MVD-UFP-P0015, Rev 0	Mechanical Data Sheet for UFP-VSL-00002B
24590-PTF-MV-FEP-P0001, Rev 0	Equipment Assembly Drawing for FEP-VSL-00017A
24590-PTF-MV-FEP-P0002, Rev 0	Equipment Assembly Drawing for FEP-VSL-00017B
24590-PTF-MV-HLP-P0003, Rev 0	Equipment Assembly Drawing for HLP-VSL-00022
24590-PTF-MV-HLP-P0004, Rev 0	Equipment Assembly Drawing for HLP-VSL-00028
24590-PTF-MV-HLP-P0005, Rev 0	Equipment Assembly Drawing for HLP-VSL-00027B
24590-PTF-MV-HLP-P0006, Rev 0	Equipment Assembly Drawing for HLP-VSL-00027A
24590-PTF-MV-PJV-P0001, Rev 0	Equipment Assembly Drawing for PJV-VSL-00002

24590-PTF-MV-PVP-P0002, Rev 0	Equipment Assembly Drawing for PVP-VSL-00001
24590-PTF-MV-PWD-P0010 Rev 1	Equipment Assembly Drawing for PWD-VSL-00044
24590-PTF-MV-PWD-P0001001, Rev 1	Equipment Assembly Drawing for PWD-VSL-00033 (Sheet 1)
24590-PTF-MV-PWD-P0001002, Rev 1	Equipment Assembly Drawing for PWD-VSL-00033 (Sheet 2)
24590-PTF-MV-PWD-P0003001, Rev 1	Equipment Assembly Drawing for PWD-VSL-00043 (Sheet 1)
24590-PTF-MV-PWD-P0003002, Rev 1	Equipment Assembly Drawing for PWD-VSL-00043 (Sheet 2)
24590-PTF-MV-PWD-P0005, Rev 1	Equipment Assembly Drawing for PWD-VSL-00043
24590-PTF-MV-PWD-P0006, Rev 1	Equipment Assembly Drawing for PWD-VSL-00016
24590-PTF-MV-PWD-P0007, Rev 1	Equipment Assembly Drawing for PWD-VSL-00015
24590-PTF-MV-RDP-P0001, Rev 0	Equipment Assembly Drawing for RDP-VSL-00002A
24590-PTF-MV-RDP-P0002, Rev 0	Equipment Assembly Drawing for RDP-VSL-00002B
24590-PTF-MV-RDP-P0003, Rev 0	Equipment Assembly Drawing for RDP-VSL-00002C
24590-PTF-MV-RLD-P0001, Rev 0	Equipment Assembly Drawing for RLD-VSL-00017A
24590-PTF-MV-RLD-P0002, Rev 0	Equipment Assembly Drawing for RLD-VSL-00017B
24590-PTF-MV-TCP-P0002, Rev 1	Equipment Assembly Drawing for TCP-VSL-00001
24590-PTF-MV-TLP-P0001, Rev 1	Equipment Assembly Drawing for TLP-VSL-00009A
24590-PTF-MV-TLP-P0002, Rev 1	Equipment Assembly Drawing for TLP-VSL-00009B
24590-PTF-MV-UFP-P0001, Rev 1	Equipment Assembly Drawing for UFP-VSL-00001A

24590-PTF-MV-UFP-P0002, Rev 2	Equipment Assembly Drawing for UFP-VSL-00001B
24590-PTF-MV-UFP-P0003, Rev 0	Equipment Assembly Drawing for UFP-VSL-00002A
24590-PTF-MV-UFP-P0004, Rev 0	Equipment Assembly Drawing for UFP-VSL-00002B
24590-PTF-MV-UFP-P0005, Rev 0	Equipment Assembly Drawing for UFP-VSL-00062A
24590-PTF-MV-UFP-P0006, Rev 0	Equipment Assembly Drawing for UFP-VSL-00062B
24590-PTF-MV-UFP-P0007, Rev 0	Equipment Assembly Drawing for UFP-VSL-00062C
24590-PTF-MWD-CNP-P0001, Rev 0	Mechanical Data Sheet for CNP-DISTC-00001
RESERVED	RESERVED

Source documents (which do not include a "P" in the last set of numbers, e.g. "-P0001," or "-TP001") should be used in conjunction with any document change notices issued against them.

We are currently transitioning from permit documents (which do include a "P" in the last set of numbers) to source documents. At the end of the transition period, permit submittals will contain source documents and will be incorporated into the permit as described in Ecology Publication # 07-05-006 (www.ecy.wa.gov/biblio/nwp.html).

MECHANICAL DATA SHEET
PRETREATMENT
DECONTAMINATION TANK

CM

Data Sheet No.	24590-PTF-M0D-PIH-P0015
Plant Item No.	24590-PTF-MT-PIH-TK-00001
Revision	1

R10706160

Project	RPP-WTP	Job No.	24590
Description	Pretreatment Facility Decontamination Tank	Building No.	10
Function	Provides a means of decontaminating various plant items for repair or disposal	System No.	PIH
Associated Drawing No.	~~24590-PTF-M0K-PIH-00011003~~ **DELETED**	Supporting Calc No.	CCN 054200
24590-PTF-M0-PIH-P0019001			
24590-PTF-M0-PIH-P0019002			
24590-WTP-3PS-HD00-TP001			

ISSUED BY
~~RPP-WTP PDC~~

Design Criteria

Quality Level	CM	Safety Class	Non ITS		Design Temp.	212°F see notes 1 & 2 ⚠1
Design Life	40 years	Seismic Criteria	SC-III		Design Press.	Atmospheric (0 psig) see note 1

Operating Environment

			In - Cell Rm. #	P-0123A	In Tank Rm. #	
			Min	Max	Min	Max
Temperature		deg F	59	113	59	212 ⚠1
Relative Humidity		%	5	85	10	100
Radiological Equip. Dose	gamma	mrad/hr	100	600,000	100	600,000
	neutron	mrad/hr	Negligible	Negligible	Negligible	Negligible
Radiological Classification			R5			
Contamination Classification			C5			

Equipment Data

Item									
Tank (dry)	Weight	lbf	3,140 (max, dry)	Outside Diam	in				102
Total Tank (wet)	Weight	lbf	17,164 (max, wet)	Inside Diameter	in				96
Immersed Component (max weight)	Weight	lbf	10,000	Depth	in				48-50
Total Footprint	Weight	lbf	**27,164 (max, wet)**	Overall Height	in				55

Parameters		Minimum	Maximum
	lbf		
Duty Cycle		N/A	Continuous
Cycle Time	min.	Various	N/A
Travel/Rotation		N/A	N/A
Speed	ft/min	N/A	N/A
Special Conditions			

MALCOLM SNIDER
STATE OF WASHINGTON
21700
REGISTERED PROFESSIONAL ENGINEER

EXPIRES: ~~01/13/06~~

Notes:

1. Primary design standard for tank is API 620, tenth edition, February, 2002. ⚠1
2. See 24590-PTF-M0-PIH-00019002 document for sizing heating system capacity for tank, liquid and contents. ⚠1

Date	REV	Revisions	By	Checked	Supervisor	Approved
8/21/06	1	Issued for permitting; 212°F was 200°F. note 1 clarifies design Temp. Added Note 2.	Alan Rathmacher	J.S LEAM.	Phil Snider	David J. Wilsey
05/22/06	0	ISSUED FOR PERMITTING PURPOSES	Alan Rathmacher	Paul Meeuwsen	Phil Snider	David J. Wilsey

BECHTEL	MECHANICAL DATA SHEET PRETREATMENT DECONTAMINATION TANK	CM	Data Sheet No.	24590-PTF-M0D-PIH-P0015
			Plant Item No.	24590-PTF-MT-PIH-TK-00001
			Revision	1

Project	RPP-WTP	Job No.	24590
Description	Pretreatment Facility Decontamination Tank	Building No.	10
Function	Provides a means of decontaminating various plant items for repair or disposal	System No.	PIH

Materials

Item	Material	Grade/Type
Tank	Stainless Steel	316L
Tank Pads and Baseplate	Stainless Steel	316L
Sparge and Jet Pump, By Mechanical Systems	Stainless Steel	316L
Sump Strainer	Stainless Steel	316L
Lid	Stainless Steel	316L
All other components	Stainless Steel	316L

Electrical Requirements

Item	Volts/Phase/Hertz

Maintenance Requirements

Retrieval	Screen, sparge and steam jet pump shall be attached and remotely removable as a unit using bail identical to lid bail.
	Steam supply hoses shall be flexible with Staubli quick connectors for operating using Master/Slave Manipulators.
	Plant Wash Supply and Drain connections shall be (flexible) jumpered by buyer.
Decontamination	A/R

Additional Requirements

Plant Wash Supply tie-in required (by Buyer)

Plant Steam supply required for sparge and jet pump (by Buyer)

Liquid Waste Disposal tie-in required (by Buyer)

This data sheet provides basic outlines and design objectives to contracted design or fabricated supplier(s) and shall not be used to confirm the "as built" WTP structure, system or component identified herein. See Vendor information for final configuration provided in conformance to purchase order.

CONTENTS OF THIS DOCUMENT ARE DANGEROUS WASTE PERMIT AFFECTING.

PARTS/MATERIAL LIST				
ITEM	QTY	DESCRIPTION	REFERENCE	MATL
1	1	PTF DECON TANK W/LIFTING LUGS		316L
2	1	TANK LID W/LIFTING LUGS		316L
3	1	MOUNTING BASE PLATE & 2-PIECE ROLLED ANGLE RING		316L
2 4	4	ø 15/16" x 4" ALIGNMENT PIN		316L
6	1	LIFTING SPIDER		316L
3	6	SHIM PACK		316L

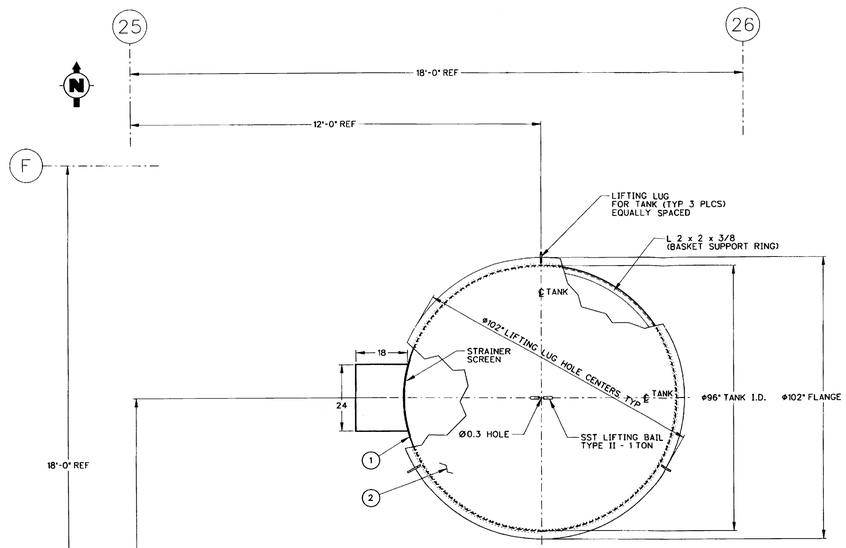

PARTIAL PLAN VIEW @ EL 0'-0"

SCALE: 3/4"= 1'-0"

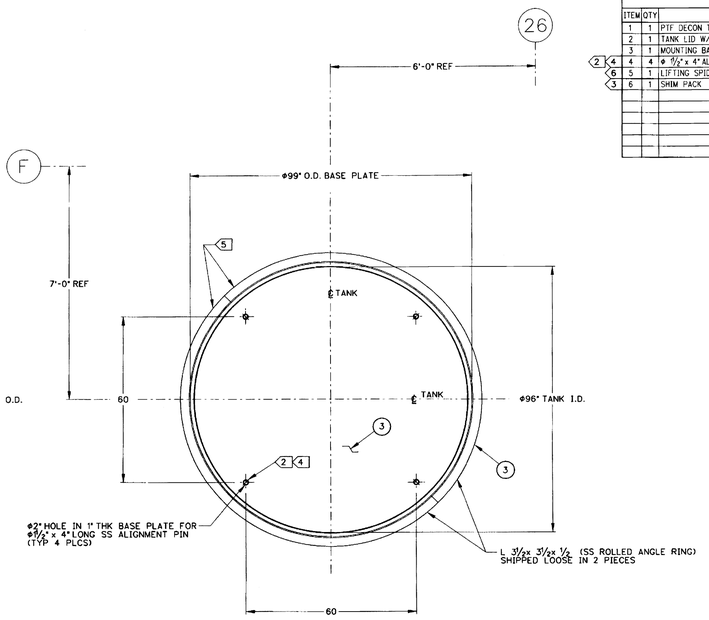

SECTION A-A

SCALE: 3/4"= 1'-0"

NOTES:

1. ALL DIMENSIONS ARE IN INCHES.
2. FIELD TO LOCATE AND WELD ALIGNMENT PIN TO TANK SUPPORT (TYP 4 PLCS).
3. FIELD TO INSTALL SS SHIM PACKS AS REQUIRED TO MAINTAIN LEVEL MOUNTING BASE PLATE AT INDICATED ELEVATION (TYP 4 PLCS).
4. AFTER MOUNTING BASE PLATE HAS BEEN INSTALLED AND LEVELED, FIELD WELD PIN TO PLATE AND GRIND PIN DOWN LEVEL WITH BASE PLATE (TYP 4 PLCS).
5. FIELD WELD 2 PIECE ROLLED ANGLE RING TO MOUNTING BASE PLATE TO PROVIDE CONTAINMENT BARRIER FOR DECONTAMINATION TANK PLACEMENT.
6. PROVIDE LIFTING SPIDER TO ALLOW FOR REMOTE INSTALLATION OF DECONTAMINATION TANK AND REMOVAL AND REPLACEMENT OF TANK LID AND BASKET ASSEMBLY.
7. FOR DECONTAMINATION EQUIPMENT SPECIFICATIONS SEE 24590-WTP-3PS-HD00-TP001.
8. SELECTION OF COMMERCIAL COMPONENTS ON THIS DRAWING IS BECHTEL ONLY. THE VENDOR SHALL BE RESPONSIBLE FOR FULL VALIDATION OF THE COMPONENTS SELECTED FOR THE CONTRACTED APPLICATION WHETHER IDENTICAL TO THE BECHTEL PROPOSAL OR OTHERWISE.
9. ALL PIPING IS TO BE CONFIGURED TO MINIMIZE TRAPS THAT WOULD COLLECT RADIOACTIVE CONTAMINATION.
10. THIS DRAWING PROVIDED BASIC OUTLINES AND DESIGN OBJECTIVES TO CONTRACTED DESIGN OR FABRICATION SUPPLIER(S) AND SHALL NOT BE USED TO CONFIRM THE AS-BUILT WTP STRUCTURE, SYSTEM OR COMPONENT IDENTIFIED HEREIN. SEE VENDOR INFORMATION FOR FINAL CONFIGURATION PROVIDED IN CONFORMANCE TO PURCHASE ORDER.
11. BOUNDING WEIGHT = 3,140 LBS DRY AND 17,164 LBS WET IS FOR BUYER USE ONLY. SEE NOTE 3 ON 24590-PTF-M0-PIH-P0019002.

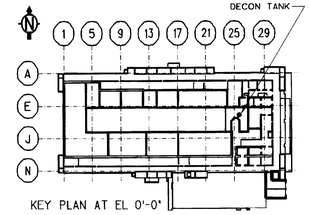

KEY PLAN AT EL 0'-0"

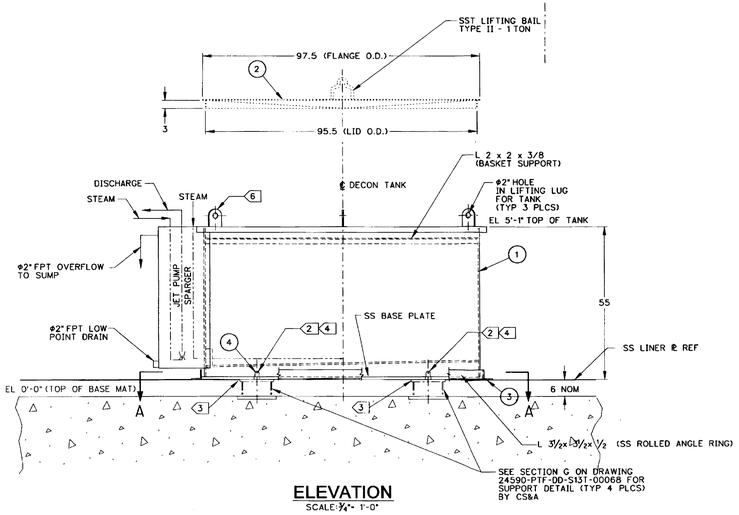

ELEVATION

SCALE: 3/4"= 1'-0"

SHIM PACK SCHEDULE

THICKNESS	QUANTITY
1/32	8
1/16	4
1/8	4
1/4	4

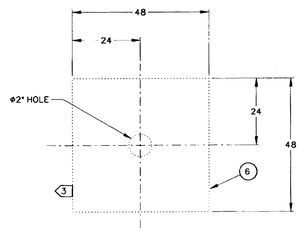

NOTE:
FOR SS SHIM THICKNESS AND QUANTITY SEE SCHEDULE ABOVE

SHIM STACK DETAIL

SCALE: 3"= 1'-0"

PLEASE NOTE THAT SOURCE, SPECIAL NUCLEAR AND BYPRODUCT MATERIALS, AS DEFINED IN THE ATOMIC ENERGY ACT OF 1954 (AEA), ARE REGULATED AT THE U.S. DEPARTMENT OF ENERGY (DOE) FACILITIES EXCLUSIVELY BY DOE ACTING PURSUANT TO ITS AEA AUTHORITY. DOE ASSERTS, THAT PURSUANT TO THE AEA, IT HAS SOLE AND EXCLUSIVE RESPONSIBILITY AND AUTHORITY TO REGULATE SOURCE, SPECIAL NUCLEAR, AND BYPRODUCT MATERIALS AT DOE-OWNED NUCLEAR FACILITIES. INFORMATION CONTAINED HEREIN ON RADIONUCLIDES IS PROVIDED FOR PROCESS DESCRIPTION PURPOSES ONLY.

PLANT ITEM No. 24590-PTF-MT-PIH-TK-00001

DRAWING INDEX		
DWG NO	REV	TITLE
24590-PTF-M0-PIH-P0019001	0	DPD - DECON TANK ASSEMBLY
24590-PTF-M0-PIH-P0019002	0	DPD - DECON TANK DETAILS
REFERENCE DRAWINGS		
DWG NO	REV	TITLE
24590-PTF-DD-S13T-00066		PTF STRUCT. LINERS-EL 0'-0" BASE MAT SH 2
24590-PTF-DD-S13T-00068		PTF STRUCTURAL LINERS - DETAILS

CM
QUALITY DESIGNATOR

REVISION HISTORY						
REV	DESCRIPTION	ORG	CHKD	RVWD	APVD	DATE
0	ISSUED FOR PERMITTING USE					6/13/06

TOLERANCES
NO TOLERANCES ARE APPLIED TO DIMENSIONS, UNLESS NOTED.

ISSUED BY RPP-WTP PDC

ISSUE STAMP

PROJECT No.	24590	
SITE	HANFORD	
AREA	200E	
BUILDING No.	10	
BY		DATE
ORIGINATOR		
CHECKER		
APPROVER		
REVIEWER		

CONTENT APPLICABLE TO ALARA? [X] YES [ ] NO
ADR NO. N/A REV:
SAFETY SCREEN REQUIRED? [ ] YES [X] NO EWS INITIAL IF YES

BECHTEL
RIVER PROTECTION PROJECT
WASTE TREATMENT PLANT
2435 STEVENS CENTER PLACE
RICHLAND, WA 99354

CONTRACT No: DE-AC27-01RV14136

PTF VITRIFICATION SYSTEM PIH DESIGN PROPOSAL DRAWING DECON TANK ASSEMBLY

SCALE: 3/4"=1'-0"

24590-PTF-M0-PIH-P0019001

REV 0

E-SIZE 44x34
COMPUTER GENERATED - MANUAL CHANGES NOT PERMITTED

Please note that source, special nuclear, and byproduct materials, as defined in the Atomic Energy Act of 1954 (AEA) are regulated at the U. S. Department of Energy (DOE) facilities exclusively by DOE acting pursuant to its AEA authority. DOE asserts that pursuant to AEA, it has sole and exclusive responsibility and authority to regulate source, special nuclear, and byproduct materials at DOE-owned nuclear facilities. Information contained herein on radionuclides is provided for process description purposes only.

SAFETY SCREEN IS REQUIRED FOR DRAWING TYPES IDENTIFIED IN 24590-WTP-GPP-SREQ-002

FORM E_SDNDGN 02/2003

PLOTTED BY: dgjones
C:\WINNT\Profiles\dgjones\Desktop\24590-PTF-M0-PIH-P0019001.dgn
06/12/2006 02:47:14 PM

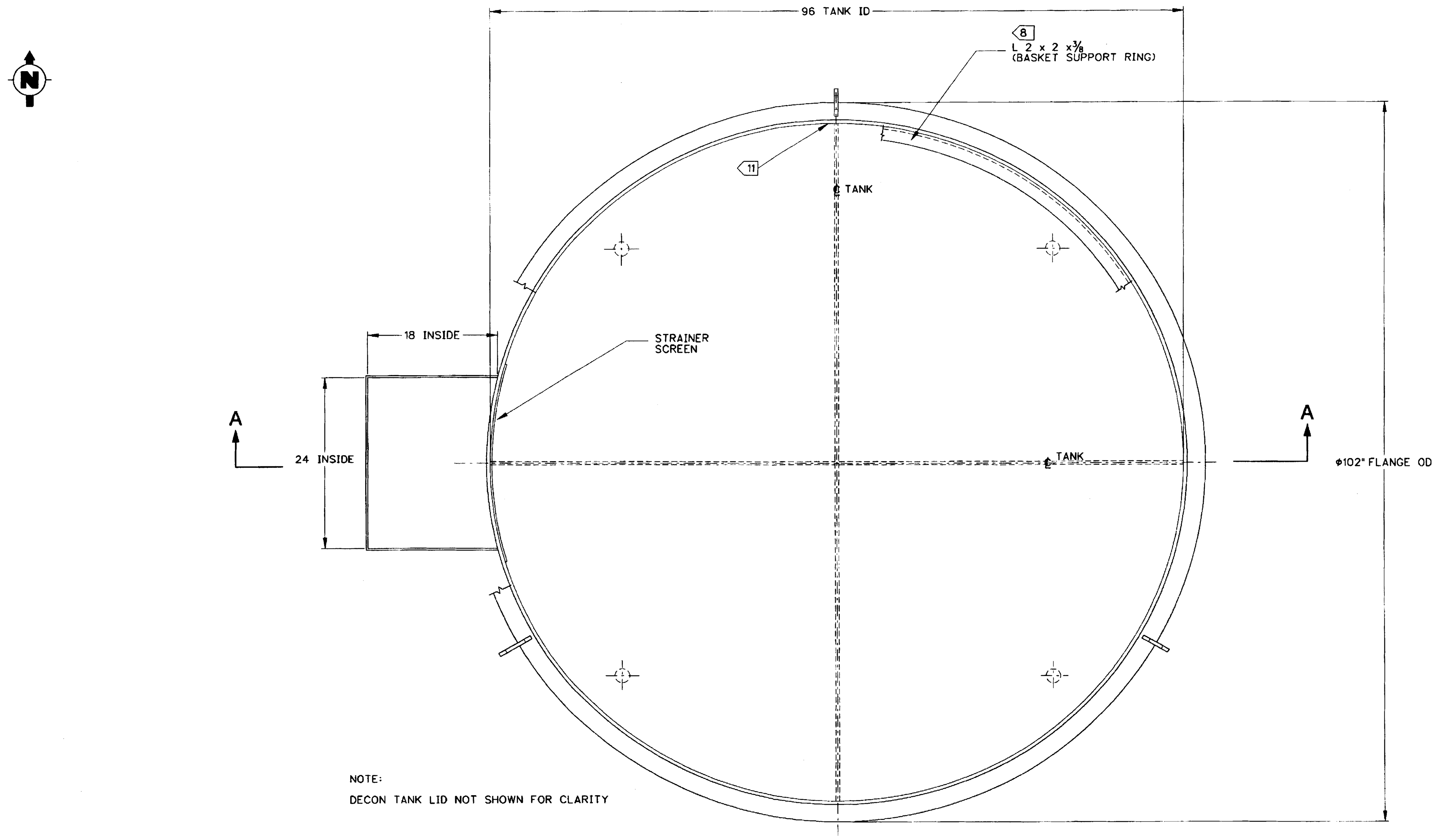

PLAN VIEW

SCALE: 1/2"- 1'-0"

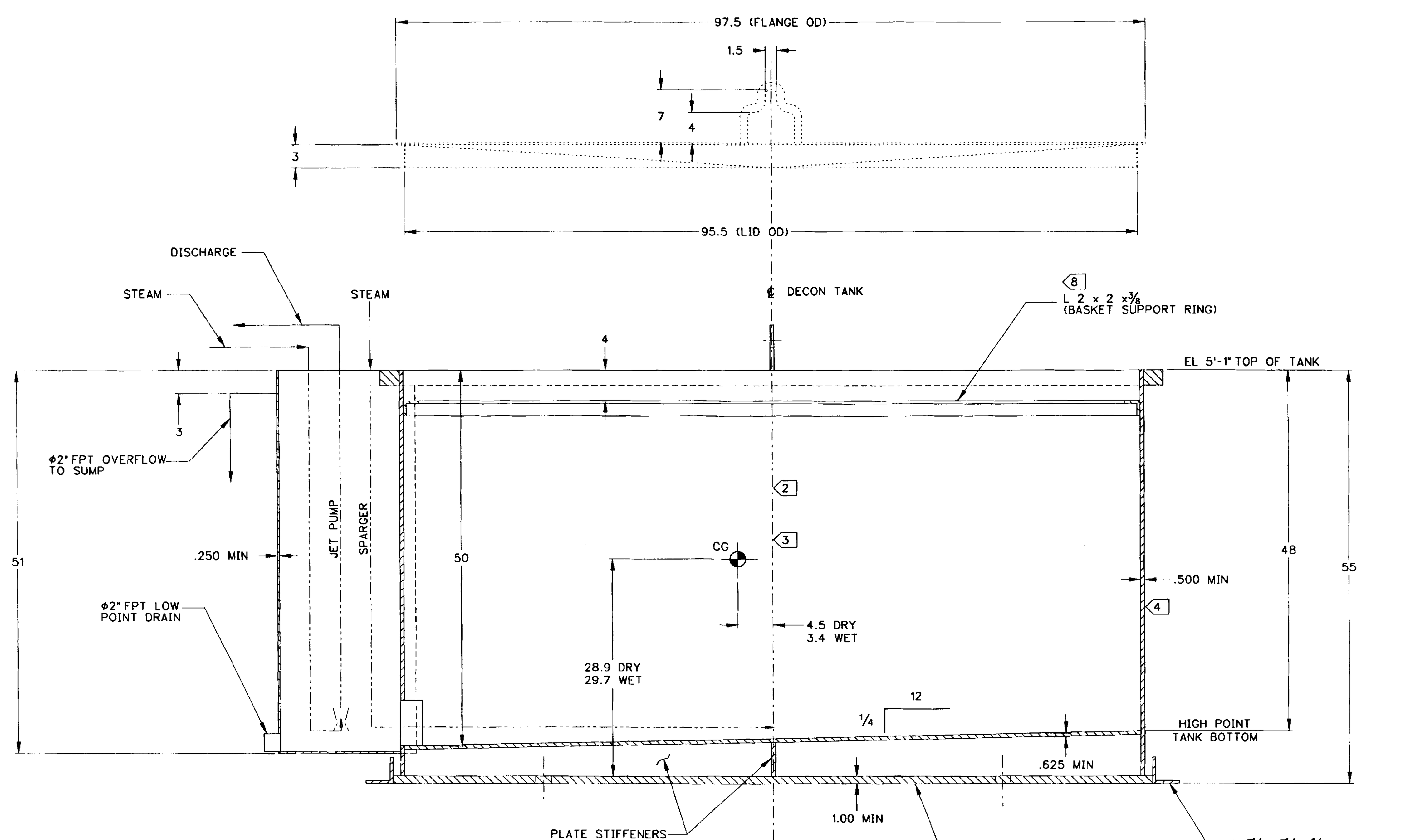

SECTION A-A

SCALE: 1/2"- 1'-0"

NOTES:

1. ALL DIMENSIONS ARE IN INCHES
2. MARK CG ON THE SIDE OF THE TANK
3. CALCULATE DRY AND WET CG'S.
   PROVIDE 12" x 12" NAMEPLATE WITH:
   PIN 24590-PTF-MT-PIH-TK-00001
   PRETREATMENT FACILITY DECONTAMINATION TANK
   ASSEMBLED DRY WEIGHT
4. TANK CORROSION ALLOWANCE IS 0.125
5. FABRICATED FINISHES ARE TO BE 63✓
6. SELECTION OF COMMERCIAL COMPONENTS ON THIS DRAWING IS BECHTEL ONLY. THE VENDOR SHALL BE RESPONSIBLE FOR FULL VALIDATION OF THE COMPONENTS SELECTED FOR THE CONTRACTED APPLICATION WHETHER IDENTICAL TO THE BECHTEL PROPOSAL OR OTHERWISE
7. FOR PIPING AND VALVE REQUIREMENTS SEE SPECIFICATION 24590-WTP-3PS-HD00-TP001
8. MAXIMUM LOAD SUPPORTED BY BASKET SUPPORT RING IS 10,000 LBS EVENLY DISTRIBUTED ALONG THE RING CIRCUMFERENCE
9. VALVES ARE TO BE FLOW SERVE MACH 1 MODIFIED WITH ELECTRIC MOTOR ACTUATORS
10. HEAT/SPARGE SYSTEM SHALL BE SIZED TO HEAT UP A FULL TANK FROM 50°F TO 200°F IN 2 HOURS
11. WELD LIQUID LEVEL MARKS IN 2" INCREMENTS ALONG WITH THEIR NUMERIC VALUE
12. PROVIDE GROUNDING CLIPS
13. THIS DRAWING PROVIDED BASIC OUTLINES AND DESIGN OBJECTIVES TO CONTRACTED DESIGN OR FABRICATION SUPPLIER(S) AND SHALL NOT BE USED TO CONFIRM THE AS-BUILT WTP STRUCTURE, SYSTEM OR COMPONENT IDENTIFIED HEREIN. SEE VENDOR INFORMATION FOR FINAL CONFIGURATION PROVIDED IN CONFORMANCE TO PURCHASE ORDER.

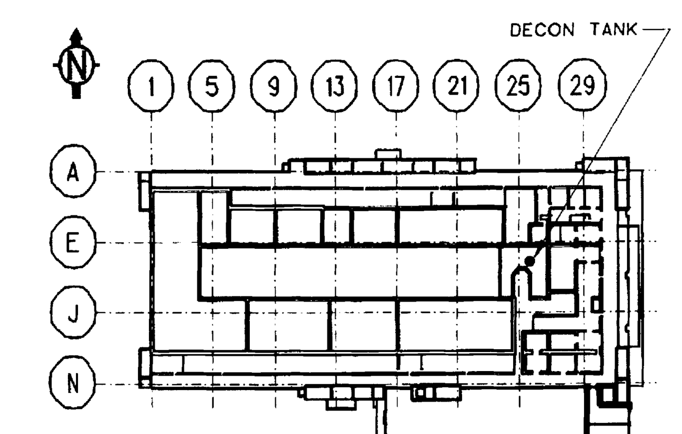

KEY PLAN AT EL 0'-0"

PLEASE NOTE THAT SOURCE, SPECIAL NUCLEAR AND BYPRODUCT MATERIALS, AS DEFINED IN THE ATOMIC ENERGY ACT OF 1954 (AEA), ARE REGULATED AT THE U.S. DEPARTMENT OF ENERGY (DOE) FACILITIES EXCLUSIVELY BY DOE ACTING PURSUANT TO ITS AEA AUTHORITY. DOE ASSERTS, THAT PURSUANT TO THE AEA, IT HAS SOLE AND EXCLUSIVE RESPONSIBILITY AND AUTHORITY TO REGULATE SOURCE, SPECIAL NUCLEAR, AND BYPRODUCT MATERIALS AT DOE-OWNED NUCLEAR FACILITIES. INFORMATION CONTAINED HEREIN ON RADIONUCLIDES IS PROVIDED FOR PROCESS DESCRIPTION PURPOSES ONLY.

PLANT ITEM No. 24590-PTF-MT-PIH-TK-00001

REFERENCE DRAWINGS

DWG NO	REV	TITLE
24590-PTF-DD-S13T-00066		PTF STRUCT. LINERS-EL 0'-0" BASE MAT SH 2
24590-PTF-DD-S13T-00068		PTF STRUCTURAL LINERS - DETAILS

Please note that source, special nuclear, and byproduct materials, as defined in the Atomic Energy Act of 1954 (AEA) are regulated at the U. S. Department of Energy (DOE) facilities exclusively by DOE acting pursuant to its AEA authority. DOE asserts that pursuant to AEA, it has sole and exclusive responsibility and authority to regulate source, special nuclear, and byproduct materials at DOE-owned nuclear facilities. Information contained herein on radionuclides is provided for process description purposes only.

EXPIRES: 01/13/08

CM
QUALITY DESIGNATOR

TOLERANCES
NO TOLERANCES ARE APPLIED TO DIMENSIONS, UNLESS NOTED.

REV	DESCRIPTION	ORG	CHKD	RVWD	APVD	DATE
0	ISSUED FOR PERMITTING USE					6/13/06

REVISION HISTORY

ISSUED BY RPP-WTP PDC
ISSUE STAMP

PROJECT No.	24590
SITE	HANFORD
AREA	200E
BUILDING No.	10

RIVER PROTECTION PROJECT
WASTE TREATMENT PLANT
2435 STEVENS CENTER PLACE
RICHLAND, WA 99354

CONTRACT No: DE-AC27-01RV14136

	BY	DATE
ORIGINATOR		6/12/06
CHECKER		6/12/06
APPROVER		6/13/06
REVIEWER		6-13-06

PTF VITRIFICATION SYSTEM PIH DESIGN PROPOSAL DRAWING DECON TANK DETAILS

CONTENT APPLICABLE TO ALARA? [X] YES [ ] NO
ADR NO. N/A REV:
SAFETY SCREEN REQUIRED? [ ] YES [X] NO EMS INITIAL IF YES

SCALE: 1/2"-1'-0"
24590-PTF-M0-PIH-P0019002
REV 0

SAFETY SCREEN IS REQUIRED FOR DRAWING TYPES IDENTIFIED IN 24590-WTP-GPP-SREG-002

'E' SIZE - 44x34
COMPUTER GENERATED - MANUAL CHANGES NOT PERMITTED

R10684817
06/12/2006 02:49:03 PM

PLOTTED BY: djjames
C:/Work/ams04136\PTFM0PIHP0019002.dgn

FORM E_SDN.DGN 02/2003

MECHANICAL DATA SHEET

SHELL AND TUBE HEAT EXCHANGER

PLANT ITEM No.
24590-PTF-ME-TLP-COND-00002
Data Sheet No.
24590-PTF-MED-TLP-00002

Project:	*RPP-WTP*	Description:	*Treated LAW Evaporator Inter-Condenser*
Project No:	*24590*	P&ID:	*24590-PTF-M6-TLP-00002*
Site:	*Hanford*	Process Data Sht:	*N/A*
Process flow diagram:	*24590-PTF-M5-V17T-00005*	Manufacturer Name	*Framatome ANP / Graham Manufacturing*

ALG 12/22/08

R11042838

General Data

Quality Level	*Q (9)*	TEMA (Class/Type)	*B*
Seismic Category	*SC-I*	Flow Type (Counter current, etc)	*8 PASS*
Design Code	*ASME VIII Div 1*	Heat Exchanger Duty Btu/hr	*436,064*
Code Stamp	ISSUED FOR	Heat Exchanger Area ft^2	*50.7*
NB Registration	RPP-WTP PDC	ΔT (LMTD/Corrected LMTD) °F	*59.8*

Thermal/Hydraulic Data

		Shell Side			Tube Side	
Fluid Name		*IN*	*STEAM*	*OUT*	*IN Cooling Water*	*OUT*
Fluid Quantities: Total	lbm/hr	*448.3*			*32,500*	
Condensable Vapor (In/Out)		*404.6*	*6.4*		*	*
Liquid		*N/A*	*398.2*		*32,500*	*32,500*
Noncondensable		*43.7*	*43.7*		*N/A*	*N/A*
Temperature (In/Out)	°F	4 *	*90* *	4	*75.0*	4 *
Specific Gravity		*N/A*	*N/A*		*1.000*	*0.998*
Viscosity	Cp	*N/A*	*N/A*		*2.209*	*1.875*
Molecular Weight		*18.02*	*18.02*		*N/A*	*N/A*
Molecular Weight, Noncondensable		*29*	*29*		*N/A*	*N/A*
Specific Heat	Btu/lbm-°F	*N/A*	*N/A*		*1.000*	*0.999*
Thermal Conductivity	Btu/hr-ft-°F	*N/A*	*N/A*		*0.350*	*0.357*
Latent Heat	Btu/lbm @ °F	*N/A*			*N/A*	
Inlet pressure		*200 Torr*			4 *	
Tube side Velocity	ft/s	*N/A*			*3.2*	
Pressure Drop (Allowed)		*10 mm Hg*			*1.2 psi*	
Fouling Resistance (Min)	$hr\text{-}ft^2\text{-}°F/Btu$	*0.002*				

Mechanical Design Data

		Shell Side		Tube Side	
Design Pressure (Max/Min)	psig	*50*	*Full Vacuum*	*100*	*Full Vacuum*
Design Temperature (Max/Min)	°F	*378*	*0*	*150*	*0*
Corrosion Allowance	inch	*0.04*		*0.04*	
Erosion Allowance	inch	*N/A*		*N/A*	
Shell OD / ID		*8 5/8"*		Overall Dimensions (HxWxL) inch	*20 x 13-1/2 x 95-1/8*
Total No. of Tubes		*43*		Tube OD inch	*0.750*

Material Data

Shell	*SA 240 316L SS*	Shell Cover	*SA 240 316L SS*
Channel/Bonnet	*SA 240 316L SS*	Channel Cover	*SA 240 316L SS*
Tube	*SA 213 316L SS*	Floating Head Cover	*N/A*
Stationary Tube Sheet	*316L SS*	Floating Tube Sheet	*N/A*
Shell Side Gaskets	*N/A*	Tube Side Gaskets	*316 SS Spiral Wound w/ PTFE Filler*
Partition Seals	*N/A*	Baffles/Supports	*SA 240 316L SS*
Insulation	*N/A*	Forgings (Shell side)	*SA 182 F316L*
Bolting	*SA 193 B8M & SA 194 2HM*	Forgings (Channel)	*SA 182 F316L*

MECHANICAL DATA SHEET

SHELL AND TUBE HEAT EXCHANGER

PLANT ITEM No.
24590-PTF-ME-TLP-COND-00002
Data Sheet No.
24590-PTF-MED-TLP-00002

Construction Data *(To be determined by the supplier when not specified by the buyer)*

Cross Baffle Type	***Up & Over***	% Baffle Cut (Dia.)	*- - -*	Spacing (c/c) inch	*- - -*
Bypass Seal Arrangement	***N/A***	Longitudinal Seal Type	***N/A***	Expansion Joint Type	***N/A***
Inlet Nozzle ρV^2	*- - -*	Bundle Entrance ρV^2	*- - -*	Bundle Exit ρV^2	*- - -*
Tube Support Type	***Vertical Cut***	U-bend Support Type	***N/A***	Weight of Bundle lbf	*
Operating Weight lbf	***600***	Full of Water lbf	***680***	Empty Wieght lbf	***540***

Notes

**** To be determined by Seller.***

Notes:

(1) All welds are continuous to avoid crevices, weld surface finish is descaled as laid.
(2) Tube to tubesheet joint shall be strength welded.
(3) Graham size 8x6 BEM.
(4) Deleted.
4 ***(5) For Nozzle loads, see 24590-PTF-3PS-MEVV-T0001.***
(6) Deleted.
(7) Deleted.
(8) Deleted. 4
(9) Component will be manufactured to Bechtel quality level Q, which corresponds with Vendor quality level QL-2.
(10) Vendor design information is from document 24590-QL-POA-MEVV-00001-02-00056.
(11) Equipment cyclic data is from document 24590-QL-POA-MEVV-00001-04-03.
(12) Contents of this drawing are dangerous waste permit affecting. 4
(13) The physical design parameters shall be determined by the seller based on TEMA and HEI standards.
4 ***(14) Please note that source, special nuclear and byproduct materials, as defined in the Atomic Energy Act of 1954 (AEA), are regulated at the U.S. Department of Energy (DOE) facilities exclusively by DOE acting pursuant to its AEA authority. DOE asserts, that pursuant to AEA, it has sole and exclusive responsibility and authority to regulate source, special nuclear, and byproduct materials at DOE-owned nuclear facilities. Information contained herein on radionuclides is provided for process description purposes only.***

(Safety screening/evaluation required? ☒Yes ☐No If yes per 24590-WTP-GPP-SREG-002, E&NS signature required below.)

Rev.	Description	By	Checked	E&NS	Approved	Date
4	Updated to reflect WSGM analysis, 24590-PTF-U0N-W16T-00003 and incorporate DOE AEA note (14). *ADDED TO SHOW VALUES TO BE UPDATED	D. Tate	R. Rickenbach	B. Hall	J. Julyk	2/19/09
3	Incorporated Vendor Design and Equipment Qualification Data	R. Rickenbach	E. Le	S. Woolfolk	J. Julyk	07/14/2008
2	Incorporated Vendor Design	E. Le	R. Nowak	N/A	J. Julyk	04/04/2005
1	Updated Descrition	G. Butt	D. Reinemann	N/A	J. Julyk	03/22/2004
0	Issued for Procurement	E. Le	S. Shah	N/A	J. Julyk	04/30/2003

EQUIPMENT QUALIFICATION DATASHEET (EQD)

4

Equipment Identification

Component Tag Number	24590-PTF-ME-TLP-COND-00002	Safety Classification	☒ SC ☐ SS ☐ APC ☐ SDC ☐ SDS ☐ RRC Note 10 4
Manufacturer / Supplier	UST&D / AREVA NP, INC.		
Requisition Number	24590-QL-POA-MEVV-00001		
Model	TBD	Seismic Category	☒ SC-I ☐ SC-II ☐ SC-III ☐ SC-IV Note 10 4
Description (Include descriptive text [e.g., location, elevation])	Treated LAW Evaporator Inter-Condensor, room P-0325, Elevation 56'-0"		
Safety Function(s)	Confinement (ref. 1) 4		

Seismic Safety Function	☒ Yes ☐ No	Room Number(s): P-0325	
Maintenance Accessible	☒ Yes ☐ No	Method of Maintenance Access:	☐ Remote ☒ Hands On ☐ None
Seismic Operability Requirements: 4	☐ During Seismic Event 4	☐ After Seismic Event	
ITS Equipment Type:	☒ Passive Mechanical	☐ Active Mechanical	☐ Electrical

4 Equipment Environmental Qualification (EEQ)

Environment ☐ Mild ☒ Harsh	Hi Rad Service ☐ Yes ☒ No	Design Life (yrs) ☒ 40 ☐ Other ____
Contamination Class: C3		
Radiation Class: R3		

Parameter Type/Units	Parameter Value	Time Duration (number)	Time Units	WTP Document Number (BUYER)	Submittal Number (SELLER)
Normal					
Normal High Temperature (°F)	95	40	yrs	24590-PTF-U0D-W16T-00001, Note 7	Note 1
Normal Low Temperature (°F)	59	40	yrs	24590-PTF-U0D-W16T-00001, Note 7	Note 1
Normal High Relative Humidity (%RH)	100	40	yrs	24590-PTF-U0D-W16T-00001	Note 1
Normal Low Relative Humidity (%RH)	10	40	yrs	24590-PTF-U0D-W16T-00001	Note 1
Normal High Pressure (in.-w.g.)	0	40	yrs	24590-PTF-U0D-W16T-00001	Note 1
Normal Low Pressure (in.-w.g.)	-0.4	40	yrs	24590-PTF-U0D-W16T-00001	Note 1
Normal Radiation Dose Rate (mR/hr)	10	40	yrs	24590-PTF-U0D-W16T-00001	Note 1
Vibration Magnitude (g)	N/A	N/A	N/A	N/A	Note 1
Vibration Frequency (Hz)	N/A	N/A	N/A	N/A	Note 1
Additional Normal Information:	See Note 2 for Pressure Units.				

Equipment Environmental Qualification (EEQ) *(continued)*

Parameter Type/Units	Parameter Value	Time Duration (number)	Time units	WTP Document Number (BUYER)	Submittal Number (SELLER)
Abnormal					
Abnormal High Temperature (°F)	126	8	hr/yr	24590-PTF-U0D-W16T-00001, Note 7 & 9 4	Note 1
Abnormal Low Temperature (°F)	59	8	hr/yr	24590-WTP-DB-01-001, Notes 7 & 8	Note 1
Abnormal High Relative Humidity (%RH)	100	24	hr/yr	24590-PTF-U0D-W16T-00001	Note 1
Abnormal Low Relative Humidity (%RH)	2	22	hr/yr	24590-PTF-U0D-W16T-00001, Note 9 4	Note 1
Abnormal High Pressure (in.-w.g.)	4	8	hr/yr	24590-PTF-U0D-W16T-00001	Note 1
Abnormal Low Pressure (in.-w.g.)	-7.3	8	hr/yr	24590-PTF-U0D-W16T-00001	Note 1
Abnormal Radiation Dose Rate (mR/hr)	10, Note 3	0	hr/yr	24590-PTF-U0D-W16T-00001	Note 1
Wet Sprinkler System Present	YES	2	hr 4	24590-PTF-U0D-W16T-00001	Note 1
Additional Abnormal Information	See Note 2 for Pressure Units				
Design Basis Events (DBE)					
DBE High Temperature (°F)	128	1000	hrs	24590-PTF-U0D-W16T-00001, Note 7 & 9 4	Note 1
DBE Low Temperature (°F)	40	1000	hrs	24590-PTF-U0D-W16T-00001, Note 7	Note 1
DBE High Relative Humidity (%RH)	100	482	hrs	24590-PTF-U0D-W16T-00001	Note 1
DBE Low Relative Humidity (%RH)	6	1000	hrs	24590-PTF-U0D-W16T-00001, Note 9 4	Note 1
DBE High Pressure (in.-w.g.)	4	1000	hrs	24590-PTF-U0D-W16T-00001	Note 1
DBE Low Pressure (in.-w.g.)	-7.3	1000	hrs	24590-PTF-U0D-W16T-00001	Note 1
DBE Radiation Dose Rate (mR/hr)	10 Note 3	0	hrs	24590-PTF-U0D-W16T-00001	Note 1
Flood Height (ft)	1.58	1000	hrs	24590-PTF-U0D-W16T-00001	Note 1
Submergence (ft)	0 Note 5	N/A	hrs	24590-PTF-U0D-W16T-00001 24590-QL-POA-MEVV-00001-01-00817 4	Note 1
Chemical/Spray Exposure	YES	12.5	hrs	24590-PTF-U0D-W16T-00001	Note 1
Additional DBE Information	See Note 2 for Pressure Units				

DBE Chemical Exposure Details	
DBE Chemical Types/Concentrations	Sodium Hydroxide, 5M

Interfaces (Electrical)	
Power Supply Voltage (VAC, VDC)	N/A
Power Supply Frequency (Hz)	N/A
Power Connection Method	N/A
I/O Signals to/from Equipment	N/A
I/O Connection Method	N/A

Interfaces (Mechanical)	
Mounting Configuration (orientation)	See dwg. 24590-QL-POA-MEVV-00001-01-00817
Mounting Method (bolts, welds, etc.)	Anchor Bolts, TLP-SKID-00001, 24590-PTF-DB-S13T-00056
Auxiliary Devices	N/A

Equipment Seismic Qualification (ESQ)

Parameter	Title	Reference/Document Number	Version / Revision	Remarks
WTP Seismic Design Specification (BUYER)	Engineering Specification for Seismic Qualification Criteria for Pressure Vessels	24590-WTP-3PS-MV00-T0002	002	N/A
Specified Seismic Load (BUYER)	Seismic Analysis of Pretreatment Building - WSGM In-Structure Response Spectre (ISRS) 4	24590-PTF-S0C-S15T-00057 4	00A 4	Calculation is not included in MR, see attached figures 37, 38, 40, 41 and 115 per CCN 185267. 4
Design Seismic Load (SELLER	Calculation - HEP 1 FEP and TLP Condenser Skids Seismic Qualification	24590-QL-POA-MEVV-00001-04-00027	00D	
Qualification Method (SELLER)	Calculation - HEP 1 FEP and TLP Condenser Skids Seismic Qualification	24590-QL-POA-MEVV-00001-04-00027	00D	
Qualification Report Number (SELLER)	Calculation - HEP 1 FEP and TLP Condenser Skids Seismic Qualification	24590-QL-POA-MEVV-00001-04-00027	00D	
Submittal Number (BUYER)	Calculation - HEP 1 FEP and TLP Condenser Skids Seismic Qualification	24590-QL-POA-MEVV-00001-04-00027	00D	

Notes and Additional Information

Notes:

1. Data to be provided by SELLER through the submittal process as required on the G-321-E form.
2. Where pressure is given in inches of water column (in.-w.c.) in the source document, it is generally assumed that this is in reference to atmospheric pressure and is therefore equivalent to inches of water gage (in.-w.g.).
3. Abnormal and DBE radiation dose rates are set equal to normal dose rate and do not contribute to the total integrated dose.
4. The equipment qualification will be documented in accordance with the requirements in Appendix D of Engineering Specification for Environmental Qualification of Mechanical Equipment, document number 24590-WTP-3PS-G000-T0015 for the passive and active safety functions.
5. Submergence is determined from the lowest point of the vessel in relation to the flood height above the floor.
6. Environmental data given document 24590-PTF-U0D-W16T-00001 is for room environment only.
7. For application of AISC N690, the normal temperatures are not used. Abnormal temperatures shall be applied as Normal Operation Temperature, T_O, with seismic effects, E_S. The Design basis event temperature shall be applied as a Thermal Load generated by a postulated accident, T_A, without seismic effects, E_s or E_o.
8. Abnormal low temperature, as calculated in reference 2, is based on a Loss of Heating Accident (LOHA) which occurs when steam supply to the building is lost. Since the evaporators are run on steam, this would cause the evaporators to go off-line. Abnormal low temperature will be based on reference 3 at 59°F.
9. Parameter value used on data sheet has been previously established and determined more conservative than values derived from the reference document noted. 4
10. For commercial reasons, safety and seismic classification may be higher than elsewhere documented, and therefore conservative. 4

References:

1. 24590-WTP-WTP-PSAR-ESH-01-002-02, Rev. 04A, Preliminary documented safety analysis to support construction authorization; PT facility specific information. 4
2. 24590-PTF-U0D-W16T-00001, Rev. 0, PTF Room Environment Datasheet.
3. 24590-WTP-DB-ENG-01-001, Rev. 1M, Basis of Design. 4
4. 24590-PTF-U0N-W16T-00001, Add data for room p-0427. Incorporate additional steam break analysis. 4
5. 24590-PTF-U0N-W16T-00003, Revised temperature & relative humidity data for PTF rooms. 4

RPP-WTP Pretreatment Facility ISRS

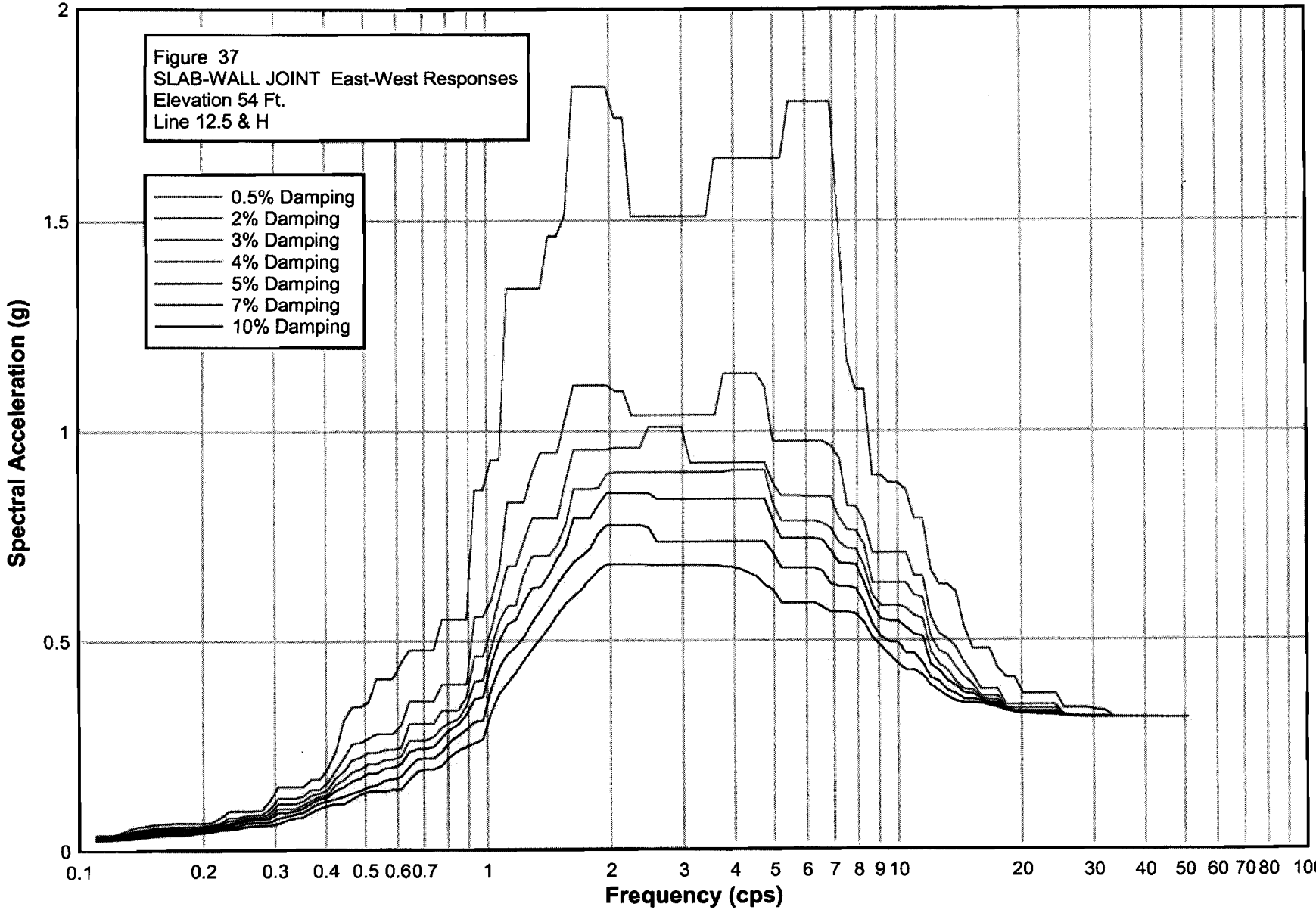

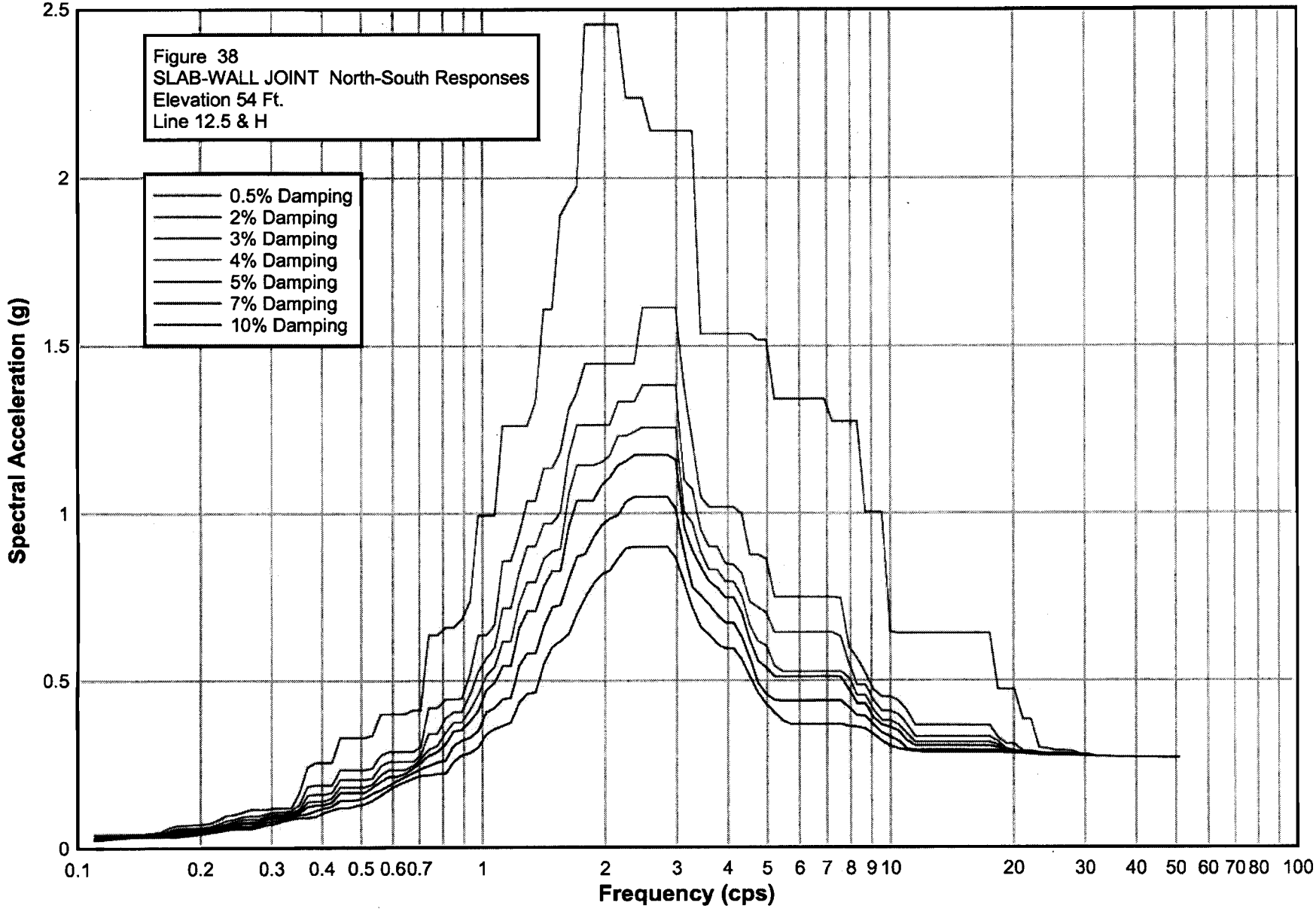
Figure 38
SLAB-WALL JOINT North-South Responses
Elevation 54 Ft.
Line 12.5 & H
0.5% Damping
2% Damping
3% Damping
4% Damping
5% Damping
7% Damping
10% Damping
Spectral Acceleration (g)
2.5
2
1.5
1
0.5
0
0.1
0.2
0.3
0.4
0.5
0.6
0.7
1
2
3
4
5
6
7
8
9
10
20
30
40
50
60
70
80
100
Frequency (cps)

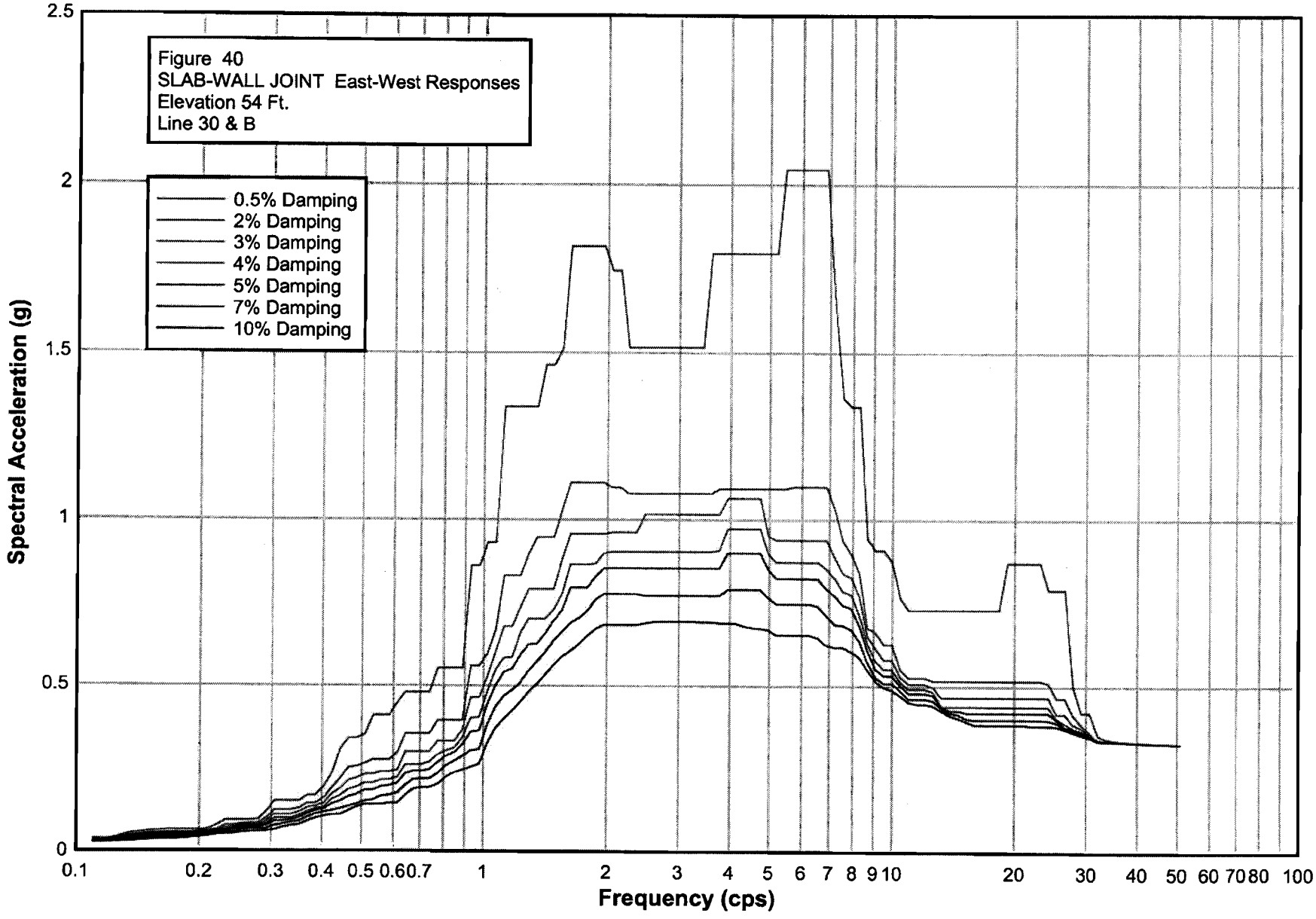
Figure 40
SLAB-WALL JOINT East-West Responses
Elevation 54 Ft.
Line 30 & B
0.5% Damping
2% Damping
3% Damping
4% Damping
5% Damping
7% Damping
10% Damping
Spectral Acceleration (g)
2.5
2
1.5
1
0.5
0
0.1
0.2
0.3
0.4
0.5
0.6
0.7
1
2
3
4
5
6
7
8
9
10
20
30
40
50
60
70
80
100
Frequency (cps)

RPP-WTP Pretreatment Facility ISRS

Calc No.: 24590-PTF-S0C-S15T-00057, Rev. A 4

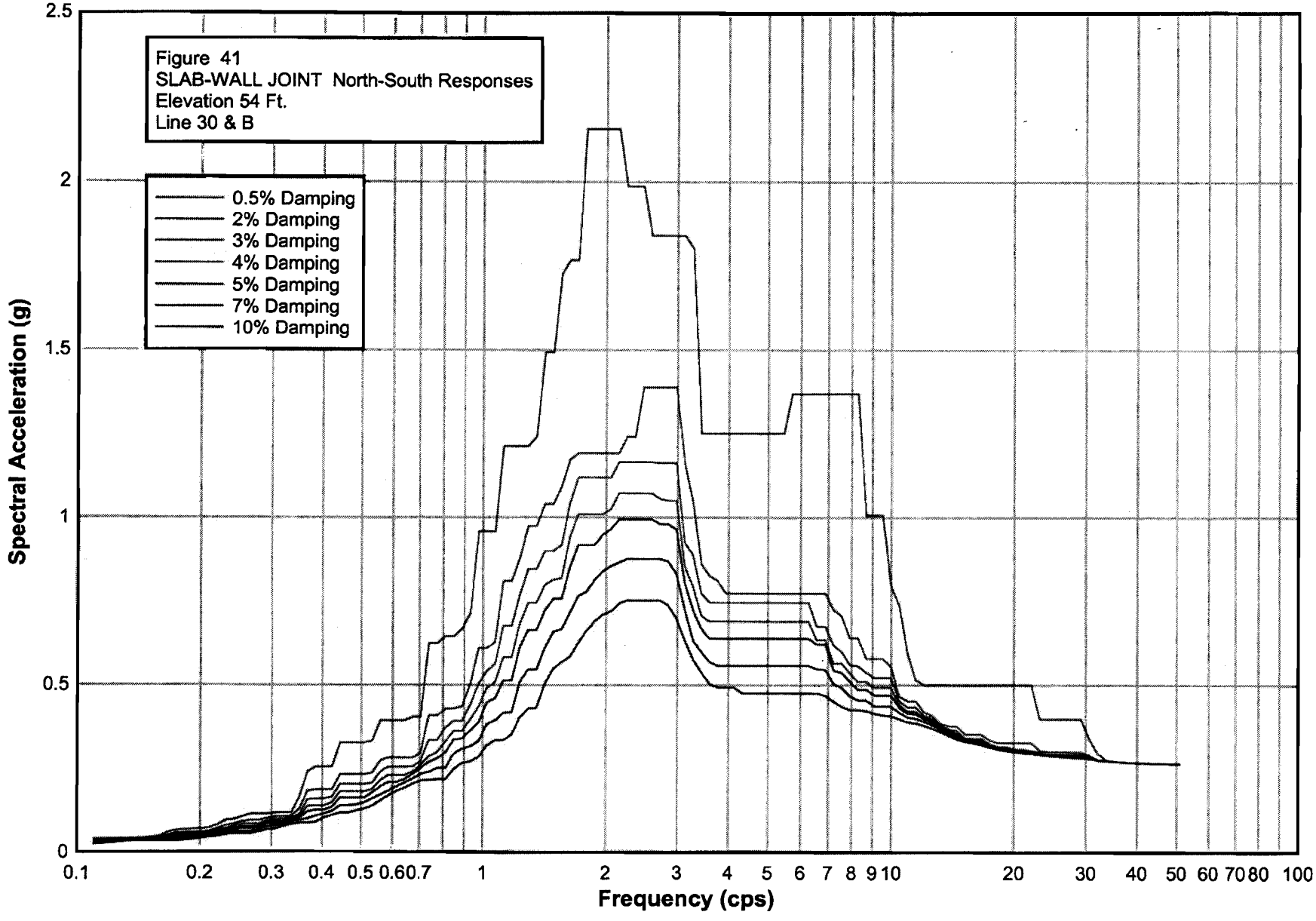

RPP-WTP Pretreatment Facility ISRS

Calc No.: 24590-PTF-S0C-S15T-00057, Rev. A

Figure 115
SLAB ONLY Vertical Responses
Elevation 56 ft.
EL56_C-E-17-20

- 0.5% Damping
- 2% Damping
- 3% Damping
- 4% Damping
- 5% Damping
- 7% Damping
- 10% Damping

Spectral Acceleration (g)

0 2 4 6 8

0.1 0.2 0.3 0.4 0.5 0.6 0.7 1 2 3 4 5 6 7 8 9 10 20 30 40 50 60 70 80 100

Frequency (cps)

PTWW037.grf ~ RPP-WTP Pretreatment Facility ISRS ~ Calc No.: 24590-PTF-S0C-S15T-00057, Rev. A ~ Frequency (cps) ~ Spectral Acceleration (g) ~ Figure 37 ~ SLAB-WALL JOINT East-West Responses ~ Elevation 54 Ft. ~ Line 12.5 H

Damping Freq.	0.50% Accel.	Freq.	2% Accel.	Freq.	3% Accel.	Freq.	4% Accel.	Freq.	5% Accel.	Freq.	7% Accel.	Freq.	10% Accel.
0.1098	0.0375	0.1098	0.0344	0.1098	0.0327	0.1098	0.0312	0.1098	0.0298	0.1098	0.0274	0.1098	0.0252
0.115	0.0375	0.115	0.0344	0.115	0.0327	0.115	0.0312	0.115	0.0299	0.115	0.0277	0.115	0.0258
0.1204	0.0375	0.1204	0.0344	0.1204	0.0331	0.1204	0.0322	0.1204	0.0312	0.1204	0.0294	0.1204	0.0269
0.1262	0.0431	0.1262	0.0397	0.1262	0.0378	0.1262	0.036	0.1262	0.0343	0.1262	0.0314	0.1262	0.0278
0.1322	0.0504	0.1322	0.045	0.1322	0.042	0.1322	0.0393	0.1322	0.0369	0.1322	0.0328	0.1322	0.0281
0.1385	0.056	0.1385	0.0489	0.1385	0.0449	0.1385	0.0414	0.1385	0.0384	0.1385	0.0344	0.1385	0.0303
0.1451	0.058	0.1451	0.0509	0.1451	0.0475	0.1451	0.0445	0.1451	0.0419	0.1451	0.0375	0.1451	0.0325
0.152	0.0616	0.152	0.0546	0.152	0.0506	0.152	0.0472	0.152	0.0442	0.152	0.0391	0.152	0.0338
0.1592	0.062	0.1592	0.0546	0.1592	0.0506	0.1592	0.0472	0.1592	0.0442	0.1592	0.0396	0.1592	0.0351
0.1668	0.064	0.1668	0.056	0.1668	0.0517	0.1668	0.0481	0.1668	0.0451	0.1668	0.0403	0.1668	0.0356
0.1748	0.064	0.1748	0.056	0.1748	0.0517	0.1748	0.0481	0.1748	0.0451	0.1748	0.0403	0.1748	0.0356
0.1831	0.064	0.1831	0.056	0.1831	0.0517	0.1831	0.0481	0.1831	0.0451	0.1831	0.0403	0.1831	0.0368
0.1918	0.0641	0.1918	0.0561	0.1918	0.0517	0.1918	0.0495	0.1918	0.0477	0.1918	0.0445	0.1918	0.0404
0.2009	0.0642	0.2009	0.0583	0.2009	0.0558	0.2009	0.0535	0.2009	0.0513	0.2009	0.0474	0.2009	0.0424
0.2105	0.0665	0.2105	0.0603	0.2105	0.0575	0.2105	0.0549	0.2105	0.0525	0.2105	0.049	0.2105	0.0448
0.2205	0.078	0.2205	0.0647	0.2205	0.062	0.2205	0.0595	0.2205	0.0573	0.2205	0.0533	0.2205	0.0484
0.231	0.0933	0.231	0.0774	0.231	0.0694	0.231	0.063	0.231	0.0598	0.231	0.0556	0.231	0.0503
0.242	0.0933	0.242	0.0774	0.242	0.0723	0.242	0.0678	0.242	0.0638	0.242	0.0567	0.242	0.0513
0.2535	0.0933	0.2535	0.0817	0.2535	0.0771	0.2535	0.0729	0.2535	0.0692	0.2535	0.0628	0.2535	0.0553
0.2656	0.0933	0.2656	0.0839	0.2656	0.0794	0.2656	0.0754	0.2656	0.0718	0.2656	0.0653	0.2656	0.0575
0.2783	0.0954	0.2783	0.0847	0.2783	0.0794	0.2783	0.0754	0.2783	0.0718	0.2783	0.0653	0.2783	0.058
0.2915	0.1187	0.2915	0.0987	0.2915	0.089	0.2915	0.0813	0.2915	0.0753	0.2915	0.0668	0.2915	0.0592
0.3054	0.1504	0.3054	0.1235	0.3054	0.1097	0.3054	0.0985	0.3054	0.0894	0.3054	0.0758	0.3054	0.0633
0.3199	0.1504	0.3199	0.1235	0.3199	0.1097	0.3199	0.0985	0.3199	0.0894	0.3199	0.0801	0.3199	0.0706
0.3352	0.1504	0.3352	0.1235	0.3352	0.1097	0.3352	0.0985	0.3352	0.0931	0.3352	0.0857	0.3352	0.0762
0.3511	0.1504	0.3511	0.1289	0.3511	0.1172	0.3511	0.107	0.3511	0.0997	0.3511	0.0894	0.3511	0.0786
0.3678	0.168	0.3678	0.1438	0.3678	0.1303	0.3678	0.1186	0.3678	0.1121	0.3678	0.1017	0.3678	0.0898
0.3853	0.168	0.3853	0.1438	0.3853	0.1346	0.3853	0.1279	0.3853	0.1219	0.3853	0.1115	0.3853	0.0992
0.4037	0.194	0.4037	0.1598	0.4037	0.1426	0.4037	0.1306	0.4037	0.1259	0.4037	0.117	0.4037	0.1054
0.4229	0.2368	0.4229	0.1906	0.4229	0.1721	0.4229	0.1558	0.4229	0.1416	0.4229	0.1217	0.4229	0.1092
0.4431	0.3088	0.4431	0.2193	0.4431	0.1881	0.4431	0.1671	0.4431	0.1496	0.4431	0.1273	0.4431	0.1097
0.4642	0.3417	0.4642	0.2524	0.4642	0.2138	0.4642	0.1852	0.4642	0.1637	0.4642	0.1345	0.4642	0.1211
0.4863	0.3417	0.4863	0.256	0.4863	0.2208	0.4863	0.1928	0.4863	0.1701	0.4863	0.1409	0.4863	0.1323
0.5094	0.3522	0.5094	0.2656	0.5094	0.2325	0.5094	0.2054	0.5094	0.1831	0.5094	0.1497	0.5094	0.1391

PTWW037.grf ~ RPP-WTP Pretreatment Facility ISRS ~ Calc No.: 24590-PTF-S0C-S15T-00057, Rev. A ~ Frequency (cps) ~ Spectral Acceleration (g) ~ Figure 37 ~ SLAB-WALL JOINT East-West Responses ~ Elevation 54 Ft. ~ Line 12.5 H

Damping Freq.	0.50% Accel.	Freq.	2% Accel.	Freq.	3% Accel.	Freq.	4% Accel.	Freq.	5% Accel.	Freq.	7% Accel.	Freq.	10% Accel.
0.5337	0.4096	0.5337	0.2771	0.5337	0.2325	0.5337	0.2054	0.5337	0.1831	0.5337	0.1539	0.5337	0.1396
0.5591	0.4096	0.5591	0.2771	0.5591	0.2398	0.5591	0.2148	0.5591	0.1949	0.5591	0.1654	0.5591	0.1396
0.5857	0.4096	0.5857	0.2771	0.5857	0.2404	0.5857	0.2159	0.5857	0.1975	0.5857	0.1686	0.5857	0.1441
0.6136	0.4475	0.6136	0.2969	0.6136	0.2444	0.6136	0.2234	0.6136	0.2051	0.6136	0.1751	0.6136	0.1441
0.6428	0.478	0.6428	0.3547	0.6428	0.3006	0.6428	0.2612	0.6428	0.2347	0.6428	0.1988	0.6428	0.168
0.6734	0.478	0.6734	0.3547	0.6734	0.3006	0.6734	0.2612	0.6734	0.2413	0.6734	0.2165	0.6734	0.1872
0.7055	0.478	0.7055	0.3547	0.7055	0.3006	0.7055	0.2612	0.7055	0.2413	0.7055	0.2186	0.7055	0.1922
0.7391	0.478	0.7391	0.3547	0.7391	0.3006	0.7391	0.2692	0.7391	0.2463	0.7391	0.2186	0.7391	0.1922
0.7743	0.5518	0.7743	0.3958	0.7743	0.3332	0.7743	0.2918	0.7743	0.268	0.7743	0.2351	0.7743	0.2018
0.8111	0.5518	0.8111	0.3958	0.8111	0.3332	0.8111	0.3035	0.8111	0.2874	0.8111	0.2587	0.8111	0.2236
0.8497	0.5518	0.8497	0.3958	0.8497	0.3332	0.8497	0.3117	0.8497	0.2984	0.8497	0.2723	0.8497	0.2373
0.8902	0.5518	0.8902	0.3958	0.8902	0.3656	0.8902	0.3431	0.8902	0.3226	0.8902	0.2873	0.8902	0.2462
0.9326	0.8605	0.9326	0.5585	0.9326	0.4629	0.9326	0.4023	0.9326	0.3602	0.9326	0.3049	0.9326	0.2549
0.977	0.8605	0.977	0.5585	0.977	0.4629	0.977	0.4045	0.977	0.3644	0.977	0.3083	0.977	0.2637
1.0235	0.9315	1.0235	0.5965	1.0235	0.5261	1.0235	0.4814	1.0235	0.4436	1.0235	0.3837	1.0235	0.3277
1.0723	0.9315	1.0723	0.6685	1.0723	0.603	1.0723	0.5467	1.0723	0.4995	1.0723	0.4355	1.0723	0.3729
1.1233	1.3398	1.1233	0.8315	1.1233	0.6788	1.1233	0.5837	1.1233	0.5408	1.1233	0.4681	1.1233	0.3987
1.1768	1.3398	1.1768	0.8315	1.1768	0.6788	1.1768	0.5855	1.1768	0.5505	1.1768	0.4858	1.1768	0.4238
1.2328	1.3398	1.2328	0.8315	1.2328	0.7369	1.2328	0.6596	1.2328	0.5925	1.2328	0.5105	1.2328	0.452
1.2916	1.3398	1.2916	0.9002	1.2916	0.7926	1.2916	0.7024	1.2916	0.6263	1.2916	0.5455	1.2916	0.4806
1.353	1.3398	1.353	0.9485	1.353	0.7926	1.353	0.7024	1.353	0.6282	1.353	0.574	1.353	0.5058
1.4175	1.4626	1.4175	0.9485	1.4175	0.7926	1.4175	0.7024	1.4175	0.6579	1.4175	0.6026	1.4175	0.5321
1.485	1.4626	1.485	0.9485	1.485	0.7926	1.485	0.7282	1.485	0.6958	1.485	0.636	1.485	0.5624
1.5557	1.5113	1.5557	1.0297	1.5557	0.8797	1.5557	0.7754	1.5557	0.726	1.5557	0.6634	1.5557	0.5886
1.6298	1.8158	1.6298	1.1086	1.6298	0.9552	1.6298	0.8627	1.6298	0.7931	1.6298	0.6875	1.6298	0.6064
1.7074	1.8158	1.7074	1.1086	1.7074	0.9552	1.7074	0.8627	1.7074	0.7931	1.7074	0.7024	1.7074	0.6246
1.7887	1.8158	1.7887	1.1086	1.7887	0.9552	1.7887	0.8627	1.7887	0.7931	1.7887	0.7213	1.7887	0.6476
1.8738	1.8158	1.8738	1.1086	1.8738	0.9552	1.8738	0.8651	1.8738	0.8263	1.8738	0.7567	1.8738	0.6698
1.963	1.8158	1.963	1.1086	1.963	0.9552	1.963	0.8972	1.963	0.8525	1.963	0.7755	1.963	0.683
2.0565	1.7414	2.0565	1.0948	2.0565	0.9593	2.0565	0.9017	2.0565	0.8525	2.0565	0.7755	2.0565	0.683
2.1544	1.7414	2.1544	1.0948	2.1544	0.9593	2.1544	0.9017	2.1544	0.8525	2.1544	0.7755	2.1544	0.683
2.257	1.5091	2.257	1.0367	2.257	0.9593	2.257	0.9017	2.257	0.8525	2.257	0.7755	2.257	0.683
2.3645	1.5091	2.3645	1.0367	2.3645	0.9593	2.3645	0.9017	2.3645	0.8525	2.3645	0.7755	2.3645	0.683
2.4771	1.5091	2.4771	1.0367	2.4771	1.009	2.4771	0.9017	2.4771	0.852	2.4771	0.7697	2.4771	0.6811
2.595	1.5091	2.595	1.0367	2.595	1.009	2.595	0.9017	2.595	0.8387	2.595	0.7357	2.595	0.6811

PTWW037.grf ~ RPP-WTP Pretreatment Facility ISRS ~ Calc No.: 24590-PTF-S0C-S15T-00057, Rev. A ~ Frequency (cps) ~ Spectral Acceleration (g) ~ Figure 37 ~ SLAB-WALL JOINT East-West Responses ~ Elevation 54 Ft. ~ Line 12.5 H

Damping	0.50%		2%		3%		4%		5%		7%		10%
Freq.	Accel.	Freq.	Accel.	Freq.	Accel.	Freq.	Accel.	Freq.	Accel.	Freq.	Accel.	Freq.	Accel.
2.7186	1.5091	2.7186	1.0367	2.7186	1.009	2.7186	0.9017	2.7186	0.8387	2.7186	0.7357	2.7186	0.6811
2.848	1.5091	2.848	1.0367	2.848	1.009	2.848	0.9017	2.848	0.8387	2.848	0.7357	2.848	0.6811
2.9836	1.5091	2.9836	1.0367	2.9836	1.009	2.9836	0.9017	2.9836	0.8387	2.9836	0.7357	2.9836	0.6811
3.1257	1.5091	3.1257	1.0367	3.1257	0.9237	3.1257	0.9017	3.1257	0.8387	3.1257	0.7357	3.1257	0.6811
3.2745	1.5091	3.2745	1.0367	3.2745	0.9237	3.2745	0.9017	3.2745	0.8387	3.2745	0.7357	3.2745	0.6811
3.4305	1.5091	3.4305	1.0367	3.4305	0.9237	3.4305	0.9017	3.4305	0.8387	3.4305	0.7357	3.4305	0.6801
3.5938	1.6472	3.5938	1.0367	3.5938	0.9237	3.5938	0.9017	3.5938	0.8387	3.5938	0.7357	3.5938	0.6801
3.7649	1.6472	3.7649	1.1356	3.7649	0.9237	3.7649	0.9017	3.7649	0.8387	3.7649	0.7357	3.7649	0.6766
3.9442	1.6472	3.9442	1.1356	3.9442	0.9237	3.9442	0.906	3.9442	0.8387	3.9442	0.7357	3.9442	0.6759
4.132	1.6472	4.132	1.1356	4.132	0.9237	4.132	0.906	4.132	0.8387	4.132	0.7357	4.132	0.6712
4.3288	1.6472	4.3288	1.1356	4.3288	0.9237	4.3288	0.906	4.3288	0.8387	4.3288	0.7357	4.3288	0.6626
4.5349	1.6472	4.5349	1.1356	4.5349	0.9237	4.5349	0.906	4.5349	0.8387	4.5349	0.7357	4.5349	0.6525
4.7508	1.6472	4.7508	1.1048	4.7508	0.9237	4.7508	0.906	4.7508	0.8387	4.7508	0.7357	4.7508	0.6316
4.977	1.6472	4.977	0.9746	4.977	0.8757	4.977	0.829	4.977	0.7851	4.977	0.7083	4.977	0.6206
5.214	1.6472	5.214	0.9746	5.214	0.8463	5.214	0.785	5.214	0.7434	5.214	0.6732	5.214	0.5898
5.4623	1.7798	5.4623	0.9746	5.4623	0.8463	5.4623	0.785	5.4623	0.7434	5.4623	0.6732	5.4623	0.5898
5.7224	1.7798	5.7224	0.9746	5.7224	0.8463	5.7224	0.785	5.7224	0.7434	5.7224	0.6732	5.7224	0.5898
5.9948	1.7798	5.9948	0.9746	5.9948	0.8438	5.9948	0.785	5.9948	0.7434	5.9948	0.6732	5.9948	0.5898
6.2803	1.7798	6.2803	0.9746	6.2803	0.8438	6.2803	0.785	6.2803	0.7434	6.2803	0.6732	6.2803	0.5898
6.5793	1.7798	6.5793	0.9746	6.5793	0.8438	6.5793	0.7804	6.5793	0.7393	6.5793	0.6657	6.5793	0.5795
6.8926	1.7798	6.8926	0.963	6.8926	0.8429	6.8926	0.7674	6.8926	0.7128	6.8926	0.6345	6.8926	0.5677
7.2208	1.4914	7.2208	0.935	7.2208	0.7922	7.2208	0.7331	7.2208	0.6844	7.2208	0.6283	7.2208	0.5677
7.5646	1.168	7.5646	0.822	7.5646	0.7632	7.5646	0.7188	7.5646	0.6833	7.5646	0.6283	7.5646	0.5677
7.9248	1.0987	7.9248	0.8201	7.9248	0.7623	7.9248	0.7176	7.9248	0.6811	7.9248	0.6237	7.9248	0.5627
8.3022	1.0987	8.3022	0.7845	8.3022	0.7283	8.3022	0.6777	8.3022	0.6364	8.3022	0.5884	8.3022	0.5417
8.6975	0.8935	8.6975	0.7092	8.6975	0.6368	8.6975	0.6061	8.6975	0.5819	8.6975	0.5373	8.6975	0.5059
9.1116	0.8935	9.1116	0.7092	9.1116	0.6368	9.1116	0.5827	9.1116	0.5505	9.1116	0.5085	9.1116	0.4846
9.5455	0.8763	9.5455	0.7092	9.5455	0.6368	9.5455	0.5827	9.5455	0.5459	9.5455	0.4951	9.5455	0.4643
10	0.8763	10	0.7092	10	0.6368	10	0.5827	10	0.5459	10	0.4934	10	0.4429
10.4762	0.8603	10.4762	0.7092	10.4762	0.6368	10.4762	0.5774	10.4762	0.5297	10.4762	0.4688	10.4762	0.4271
10.975	0.791	10.975	0.6543	10.975	0.6067	10.975	0.5582	10.975	0.5137	10.975	0.4674	10.975	0.4271
11.4976	0.791	11.4976	0.6543	11.4976	0.6014	11.4976	0.5519	11.4976	0.5094	11.4976	0.4435	11.4976	0.4142
12.045	0.6677	12.045	0.5543	12.045	0.5086	12.045	0.4716	12.045	0.4394	12.045	0.4081	12.045	0.3915
12.6186	0.6325	12.6186	0.5145	12.6186	0.4727	12.6186	0.4409	12.6186	0.4251	12.6186	0.4004	12.6186	0.3774
13.2194	0.6325	13.2194	0.5025	13.2194	0.4639	13.2194	0.4269	13.2194	0.4021	13.2194	0.379	13.2194	0.3634

PTWW037.grf ~ RPP-WTP Pretreatment Facility ISRS ~ Calc No.: 24590-PTF-S0C-S15T-00057, Rev. A ~ Frequency (cps) ~ Spectral Acceleration (g) ~ Figure 37 ~ SLAB-WALL JOINT East-West Responses ~ Elevation 54 Ft. ~ Line 12.5 H

Damping	0.50%		2%		3%		4%		5%		7%		10%
Freq.	Accel.	Freq.	Accel.	Freq.	Accel.	Freq.	Accel.	Freq.	Accel.	Freq.	Accel.	Freq.	Accel.
13.8489	0.6152	13.8489	0.4815	13.8489	0.433	13.8489	0.3995	13.8489	0.3896	13.8489	0.3705	13.8489	0.3527
14.5083	0.5318	14.5083	0.4455	14.5083	0.4096	14.5083	0.381	14.5083	0.3726	14.5083	0.3575	14.5083	0.3484
15.1991	0.4787	15.1991	0.4141	15.1991	0.3936	15.1991	0.3795	15.1991	0.3697	15.1991	0.3575	15.1991	0.3484
15.9228	0.4787	15.9228	0.3815	15.9228	0.3644	15.9228	0.3609	15.9228	0.358	15.9228	0.3528	15.9228	0.3467
16.681	0.4787	16.681	0.3815	16.681	0.3644	16.681	0.3544	16.681	0.3483	16.681	0.3439	16.681	0.3416
17.4753	0.4307	17.4753	0.3815	17.4753	0.3644	17.4753	0.3544	17.4753	0.3483	17.4753	0.3418	17.4753	0.337
18.3074	0.4095	18.3074	0.3431	18.3074	0.3367	18.3074	0.3354	18.3074	0.3336	18.3074	0.3315	18.3074	0.3305
19.1791	0.4095	19.1791	0.3431	19.1791	0.3349	19.1791	0.3293	19.1791	0.3262	19.1791	0.3251	19.1791	0.325
20.0923	0.3708	20.0923	0.3431	20.0923	0.3349	20.0923	0.3293	20.0923	0.3262	20.0923	0.3243	20.0923	0.323
21.049	0.3708	21.049	0.3431	21.049	0.3349	21.049	0.3293	21.049	0.3262	21.049	0.3236	21.049	0.3215
22.0513	0.3708	22.0513	0.3431	22.0513	0.3349	22.0513	0.3293	22.0513	0.3262	22.0513	0.323	22.0513	0.3199
23.1013	0.3708	23.1013	0.3431	23.1013	0.3349	23.1013	0.3293	23.1013	0.3262	23.1013	0.323	23.1013	0.3199
24.2013	0.3708	24.2013	0.3431	24.2013	0.3349	24.2013	0.3293	24.2013	0.3255	24.2013	0.3206	24.2013	0.3186
25.3536	0.3358	25.3536	0.3197	25.3536	0.3192	25.3536	0.3187	25.3536	0.3181	25.3536	0.317	25.3536	0.3164
26.5609	0.3358	26.5609	0.3169	26.5609	0.3159	26.5609	0.3158	26.5609	0.3158	26.5609	0.3155	26.5609	0.3148
27.8256	0.3358	27.8256	0.3169	27.8256	0.3159	27.8256	0.3153	27.8256	0.3149	27.8256	0.3143	27.8256	0.3137
29.1505	0.3358	29.1505	0.3165	29.1505	0.3153	29.1505	0.3142	29.1505	0.3137	29.1505	0.3132	29.1505	0.313
30.5386	0.3312	30.5386	0.3165	30.5386	0.3153	30.5386	0.3142	30.5386	0.3133	30.5386	0.3131	30.5386	0.313
31.9927	0.3297	31.9927	0.3163	31.9927	0.3146	31.9927	0.3138	31.9927	0.3132	31.9927	0.3131	31.9927	0.313
33.516	0.3144	33.516	0.3134	33.516	0.3133	33.516	0.3132	33.516	0.3132	33.516	0.3131	33.516	0.313
35.1119	0.3135	35.1119	0.3134	35.1119	0.3133	35.1119	0.3132	35.1119	0.3132	35.1119	0.3131	35.1119	0.313
36.7838	0.3134	36.7838	0.3133	36.7838	0.3132	36.7838	0.3132	36.7838	0.3132	36.7838	0.3131	36.7838	0.313
38.5353	0.3132	38.5353	0.3132	38.5353	0.3131	38.5353	0.3131	38.5353	0.3131	38.5353	0.3131	38.5353	0.313
40.3702	0.3131	40.3702	0.3131	40.3702	0.3131	40.3702	0.313	40.3702	0.313	40.3702	0.313	40.3702	0.3129
42.2924	0.313	42.2924	0.3129	42.2924	0.3129	42.2924	0.3129	42.2924	0.3129	42.2924	0.3129	42.2924	0.3129
44.3062	0.3128	44.3062	0.3128	44.3062	0.3128	44.3062	0.3128	44.3062	0.3128	44.3062	0.3128	44.3062	0.3128
46.4159	0.3127	46.4159	0.3127	46.4159	0.3127	46.4159	0.3127	46.4159	0.3127	46.4159	0.3127	46.4159	0.3127
48.626	0.3126	48.626	0.3126	48.626	0.3126	48.626	0.3126	48.626	0.3126	48.626	0.3126	48.626	0.3126
50.9414	0.3125	50.9414	0.3125	50.9414	0.3125	50.9414	0.3125	50.9414	0.3125	50.9414	0.3125	50.9414	0.3125

PTWW038.grf ~ RPP-WTP Pretreatment Facility ISRS ~ Calc No.: 24590-PTF-S0C-S15T-00057, Rev. A ~ Frequency (cps) ~ Spectral Acceleration (g) ~ Figure 38 ~ SLAB-WALL JOINT North-South Responses ~ Elevation 54 Ft. ~ Line 12.5 H

Damping	0.50%		2%		3%		4%		5%		7%		10%
Freq.	Accel.	Freq.	Accel.	Freq.	Accel.	Freq.	Accel.	Freq.	Accel.	Freq.	Accel.	Freq.	Accel.
0.1098	0.0405	0.1098	0.0365	0.1098	0.0342	0.1098	0.0322	0.1098	0.0303	0.1098	0.0272	0.1098	0.0235
0.115	0.0405	0.115	0.0365	0.115	0.0342	0.115	0.0322	0.115	0.0303	0.115	0.0272	0.115	0.0259
0.1204	0.0405	0.1204	0.0365	0.1204	0.0342	0.1204	0.0322	0.1204	0.031	0.1204	0.0297	0.1204	0.028
0.1262	0.0405	0.1262	0.0365	0.1262	0.0352	0.1262	0.0342	0.1262	0.0334	0.1262	0.0318	0.1262	0.0297
0.1322	0.0405	0.1322	0.0382	0.1322	0.037	0.1322	0.0359	0.1322	0.0349	0.1322	0.0333	0.1322	0.0316
0.1385	0.0411	0.1385	0.0392	0.1385	0.0382	0.1385	0.0372	0.1385	0.0363	0.1385	0.0348	0.1385	0.0328
0.1451	0.0417	0.1451	0.0398	0.1451	0.0387	0.1451	0.0377	0.1451	0.0368	0.1451	0.0352	0.1451	0.0332
0.152	0.0439	0.152	0.0401	0.152	0.0387	0.152	0.0377	0.152	0.0368	0.152	0.0352	0.152	0.0332
0.1592	0.0462	0.1592	0.0416	0.1592	0.0396	0.1592	0.0377	0.1592	0.0368	0.1592	0.0352	0.1592	0.0332
0.1668	0.0584	0.1668	0.0506	0.1668	0.0463	0.1668	0.0426	0.1668	0.0395	0.1668	0.0352	0.1668	0.0332
0.1748	0.0645	0.1748	0.0566	0.1748	0.0522	0.1748	0.0484	0.1748	0.045	0.1748	0.0394	0.1748	0.0332
0.1831	0.0668	0.1831	0.0583	0.1831	0.0541	0.1831	0.0504	0.1831	0.0471	0.1831	0.0415	0.1831	0.0354
0.1918	0.0678	0.1918	0.0586	0.1918	0.0543	0.1918	0.0507	0.1918	0.0474	0.1918	0.0418	0.1918	0.038
0.2009	0.0697	0.2009	0.0596	0.2009	0.0543	0.2009	0.0514	0.2009	0.0487	0.2009	0.0438	0.2009	0.0411
0.2105	0.0722	0.2105	0.062	0.2105	0.0582	0.2105	0.0547	0.2105	0.0516	0.2105	0.0482	0.2105	0.0446
0.2205	0.0819	0.2205	0.0709	0.2205	0.0651	0.2205	0.06	0.2205	0.0574	0.2205	0.0531	0.2205	0.0475
0.231	0.0959	0.231	0.0792	0.231	0.0703	0.231	0.0665	0.231	0.063	0.231	0.0578	0.231	0.0525
0.242	0.0984	0.242	0.0845	0.242	0.0774	0.242	0.0721	0.242	0.0681	0.242	0.0618	0.242	0.0551
0.2535	0.1059	0.2535	0.0913	0.2535	0.0833	0.2535	0.0763	0.2535	0.0702	0.2535	0.0618	0.2535	0.0551
0.2656	0.1138	0.2656	0.0944	0.2656	0.084	0.2656	0.0763	0.2656	0.0702	0.2656	0.0618	0.2656	0.0551
0.2783	0.1138	0.2783	0.0944	0.2783	0.084	0.2783	0.0779	0.2783	0.074	0.2783	0.0677	0.2783	0.0611
0.2915	0.1138	0.2915	0.1008	0.2915	0.0946	0.2915	0.0892	0.2915	0.0843	0.2915	0.0764	0.2915	0.0677
0.3054	0.1179	0.3054	0.1056	0.3054	0.0987	0.3054	0.0926	0.3054	0.0872	0.3054	0.0785	0.3054	0.0706
0.3199	0.1179	0.3199	0.1056	0.3199	0.0987	0.3199	0.0926	0.3199	0.0894	0.3199	0.0844	0.3199	0.0786
0.3352	0.1179	0.3352	0.1098	0.3352	0.1056	0.3352	0.1017	0.3352	0.0982	0.3352	0.0921	0.3352	0.0848
0.3511	0.1654	0.3511	0.129	0.3511	0.1133	0.3511	0.1075	0.3511	0.1035	0.3511	0.0964	0.3511	0.088
0.3678	0.2415	0.3678	0.1832	0.3678	0.1565	0.3678	0.1364	0.3678	0.1213	0.3678	0.1006	0.3678	0.088
0.3853	0.2549	0.3853	0.187	0.3853	0.1595	0.3853	0.1387	0.3853	0.1269	0.3853	0.1092	0.3853	0.091
0.4037	0.2549	0.4037	0.187	0.4037	0.1595	0.4037	0.1387	0.4037	0.1279	0.4037	0.1163	0.4037	0.1034
0.4229	0.2549	0.4229	0.187	0.4229	0.1651	0.4229	0.1485	0.4229	0.1344	0.4229	0.1233	0.4229	0.1111
0.4431	0.3288	0.4431	0.2339	0.4431	0.2038	0.4431	0.1813	0.4431	0.1641	0.4431	0.1399	0.4431	0.1181
0.4642	0.3288	0.4642	0.2339	0.4642	0.2038	0.4642	0.1813	0.4642	0.1641	0.4642	0.1399	0.4642	0.1181
0.4863	0.3288	0.4863	0.2339	0.4863	0.2038	0.4863	0.1813	0.4863	0.1641	0.4863	0.1421	0.4863	0.1246
0.5094	0.3288	0.5094	0.2339	0.5094	0.2038	0.5094	0.1813	0.5094	0.1641	0.5094	0.1472	0.5094	0.1295

PTWW038.grf ~ RPP-WTP Pretreatment Facility ISRS ~ Calc No.: 24590-PTF-S0C-S15T-00057, Rev. A ~ Frequency (cps) ~ Spectral Acceleration (g) ~ Figure 38 ~ SLAB-WALL JOINT North-South Responses ~ Elevation 54 Ft. ~ Line 12.5 H

Damping	0.50%		2%		3%		4%		5%		7%		10%
Freq.	Accel.	Freq.	Accel.	Freq.	Accel.	Freq.	Accel.	Freq.	Accel.	Freq.	Accel.	Freq.	Accel.
0.5337	0.3356	0.5337	0.2387	0.5337	0.2081	0.5337	0.19	0.5337	0.1796	0.5337	0.1614	0.5337	0.1401
0.5591	0.3997	0.5591	0.2762	0.5591	0.244	0.5591	0.2179	0.5591	0.1971	0.5591	0.1724	0.5591	0.1556
0.5857	0.3997	0.5857	0.2863	0.5857	0.2573	0.5857	0.2332	0.5857	0.2128	0.5857	0.1853	0.5857	0.1724
0.6136	0.3997	0.6136	0.2863	0.6136	0.2573	0.6136	0.2332	0.6136	0.2128	0.6136	0.1998	0.6136	0.1858
0.6428	0.3997	0.6428	0.2863	0.6428	0.2573	0.6428	0.2332	0.6428	0.2219	0.6428	0.2115	0.6428	0.1969
0.6734	0.411	0.6734	0.2863	0.6734	0.2574	0.6734	0.2449	0.6734	0.2378	0.6734	0.2244	0.6734	0.2072
0.7055	0.411	0.7055	0.301	0.7055	0.2757	0.7055	0.2638	0.7055	0.2534	0.7055	0.2357	0.7055	0.2156
0.7391	0.6367	0.7391	0.4169	0.7391	0.3404	0.7391	0.2927	0.7391	0.2746	0.7391	0.2445	0.7391	0.217
0.7743	0.6367	0.7743	0.4169	0.7743	0.3404	0.7743	0.3038	0.7743	0.2858	0.7743	0.2555	0.7743	0.2218
0.8111	0.6596	0.8111	0.4428	0.8111	0.386	0.8111	0.3422	0.8111	0.3081	0.8111	0.2598	0.8111	0.2218
0.8497	0.6596	0.8497	0.4428	0.8497	0.4051	0.8497	0.3738	0.8497	0.347	0.8497	0.3034	0.8497	0.256
0.8902	0.6828	0.8902	0.4451	0.8902	0.4051	0.8902	0.3738	0.8902	0.3511	0.8902	0.3194	0.8902	0.2761
0.9326	0.737	0.9326	0.5191	0.9326	0.4567	0.9326	0.411	0.9326	0.3766	0.9326	0.328	0.9326	0.2821
0.977	0.9914	0.977	0.6358	0.977	0.525	0.977	0.4553	0.977	0.408	0.977	0.3484	0.977	0.2994
1.0235	0.9914	1.0235	0.6358	1.0235	0.5662	1.0235	0.5139	1.0235	0.4702	1.0235	0.4041	1.0235	0.3384
1.0723	0.9914	1.0723	0.6668	1.0723	0.5976	1.0723	0.5399	1.0723	0.4914	1.0723	0.4166	1.0723	0.3541
1.1233	1.2606	1.1233	0.8561	1.1233	0.7168	1.1233	0.6174	1.1233	0.5433	1.1233	0.4431	1.1233	0.3633
1.1768	1.2606	1.1768	0.8561	1.1768	0.7168	1.1768	0.6174	1.1768	0.5433	1.1768	0.4467	1.1768	0.3729
1.2328	1.2606	1.2328	0.935	1.2328	0.8202	1.2328	0.7293	1.2328	0.6556	1.2328	0.5433	1.2328	0.4321
1.2916	1.2606	1.2916	1.0351	1.2916	0.8991	1.2916	0.793	1.2916	0.708	1.2916	0.5814	1.2916	0.4586
1.353	1.3319	1.353	1.0351	1.353	0.8991	1.353	0.793	1.353	0.708	1.353	0.5814	1.353	0.4631
1.4175	1.6092	1.4175	1.1325	1.4175	0.9683	1.4175	0.8621	1.4175	0.7817	1.4175	0.6627	1.4175	0.5486
1.485	1.6092	1.485	1.1325	1.485	0.9683	1.485	0.885	1.485	0.8264	1.485	0.7199	1.485	0.6006
1.5557	1.8872	1.5557	1.1818	1.5557	1.0008	1.5557	0.892	1.5557	0.8264	1.5557	0.7265	1.5557	0.6185
1.6298	1.9322	1.6298	1.3084	1.6298	1.1683	1.6298	1.0534	1.6298	0.9565	1.6298	0.8016	1.6298	0.6401
1.7074	1.9702	1.7074	1.3601	1.7074	1.2627	1.7074	1.1415	1.7074	1.0371	1.7074	0.8692	1.7074	0.7006
1.7887	2.4552	1.7887	1.4456	1.7887	1.2629	1.7887	1.1415	1.7887	1.0371	1.7887	0.8773	1.7887	0.7486
1.8738	2.4552	1.8738	1.4456	1.8738	1.2629	1.8738	1.1415	1.8738	1.0371	1.8738	0.9259	1.8738	0.788
1.963	2.4552	1.963	1.4456	1.963	1.2629	1.963	1.1498	1.963	1.0818	1.963	0.9626	1.963	0.8157
2.0565	2.4552	2.0565	1.4456	2.0565	1.2629	2.0565	1.1701	2.0565	1.1049	2.0565	0.9829	2.0565	0.8288
2.1544	2.4552	2.1544	1.4456	2.1544	1.3316	2.1544	1.2297	2.1544	1.1411	2.1544	0.9932	2.1544	0.8645
2.257	2.2367	2.257	1.4456	2.257	1.3316	2.257	1.2297	2.257	1.1534	2.257	1.0344	2.257	0.8939
2.3645	2.2367	2.3645	1.4456	2.3645	1.3316	2.3645	1.2422	2.3645	1.1724	2.3645	1.0471	2.3645	0.898
2.4771	2.2367	2.4771	1.6143	2.4771	1.3804	2.4771	1.2551	2.4771	1.1724	2.4771	1.0471	2.4771	0.898
2.595	2.138	2.595	1.6143	2.595	1.3804	2.595	1.2551	2.595	1.1724	2.595	1.0471	2.595	0.898

PTWW038.grf ~ RPP-WTP Pretreatment Facility ISRS ~ Calc No.: 24590-PTF-S0C-S15T-00057, Rev. A ~ Frequency (cps) ~ Spectral Acceleration (g) ~ Figure 38 ~ SLAB-WALL JOINT North-South Responses ~ Elevation 54 Ft. ~ Line 12.5 H

Damping Freq.	0.50% Accel.	Freq.	2% Accel.	Freq.	3% Accel.	Freq.	4% Accel.	Freq.	5% Accel.	Freq.	7% Accel.	Freq.	10% Accel.
2.7186	2.138	2.7186	1.6143	2.7186	1.3804	2.7186	1.2551	2.7186	1.1724	2.7186	1.0471	2.7186	0.898
2.848	2.138	2.848	1.6143	2.848	1.3804	2.848	1.2551	2.848	1.1724	2.848	1.0471	2.848	0.898
2.9836	2.138	2.9836	1.6143	2.9836	1.3804	2.9836	1.2551	2.9836	1.1568	2.9836	1.0114	2.9836	0.8645
3.1257	2.138	3.1257	1.3773	3.1257	1.0982	3.1257	1.0035	3.1257	0.9573	3.1257	0.8829	3.1257	0.7931
3.2745	2.138	3.2745	1.2119	3.2745	1.0686	3.2745	0.9673	3.2745	0.886	3.2745	0.778	3.2745	0.7168
3.4305	1.5368	3.4305	1.0471	3.4305	0.9495	3.4305	0.8824	3.4305	0.8379	3.4305	0.7547	3.4305	0.6598
3.5938	1.5368	3.5938	1.0165	3.5938	0.898	3.5938	0.8299	3.5938	0.7946	3.5938	0.7273	3.5938	0.6376
3.7649	1.5368	3.7649	1.0165	3.7649	0.898	3.7649	0.8299	3.7649	0.7769	3.7649	0.6958	3.7649	0.6089
3.9442	1.5368	3.9442	1.0165	3.9442	0.8472	3.9442	0.7941	3.9442	0.7477	3.9442	0.6723	3.9442	0.5955
4.132	1.5368	4.132	1.0165	4.132	0.845	4.132	0.7941	4.132	0.7477	4.132	0.6723	4.132	0.5955
4.3288	1.5368	4.3288	0.9973	4.3288	0.8194	4.3288	0.7522	4.3288	0.7017	4.3288	0.6303	4.3288	0.5622
4.5349	1.5368	4.5349	0.8745	4.5349	0.7347	4.5349	0.6652	4.5349	0.6197	4.5349	0.5656	4.5349	0.5097
4.7508	1.518	4.7508	0.8745	4.7508	0.7183	4.7508	0.6169	4.7508	0.5587	4.7508	0.4909	4.7508	0.4618
4.977	1.518	4.977	0.8614	4.977	0.7025	4.977	0.6052	4.977	0.5367	4.977	0.4572	4.977	0.4284
5.214	1.3404	5.214	0.7497	5.214	0.6443	5.214	0.5421	5.214	0.5109	5.214	0.4398	5.214	0.4021
5.4623	1.3404	5.4623	0.7497	5.4623	0.6443	5.4623	0.5254	5.4623	0.5109	5.4623	0.438	5.4623	0.3783
5.7224	1.3404	5.7224	0.7497	5.7224	0.6443	5.7224	0.5254	5.7224	0.5109	5.7224	0.438	5.7224	0.3681
5.9948	1.3404	5.9948	0.7497	5.9948	0.6443	5.9948	0.5254	5.9948	0.5109	5.9948	0.438	5.9948	0.3681
6.2803	1.3404	6.2803	0.7497	6.2803	0.6443	6.2803	0.5254	6.2803	0.5109	6.2803	0.438	6.2803	0.3681
6.5793	1.3404	6.5793	0.7497	6.5793	0.6443	6.5793	0.5254	6.5793	0.5109	6.5793	0.438	6.5793	0.3681
6.8926	1.3404	6.8926	0.7497	6.8926	0.6443	6.8926	0.5254	6.8926	0.5109	6.8926	0.438	6.8926	0.3681
7.2208	1.274	7.2208	0.7497	7.2208	0.6443	7.2208	0.5254	7.2208	0.5109	7.2208	0.438	7.2208	0.3681
7.5646	1.274	7.5646	0.7455	7.5646	0.6309	7.5646	0.5254	7.5646	0.5092	7.5646	0.438	7.5646	0.3681
7.9248	1.274	7.9248	0.6003	7.9248	0.5494	7.9248	0.5064	7.9248	0.471	7.9248	0.4168	7.9248	0.3609
8.3022	1.274	8.3022	0.5659	8.3022	0.4849	8.3022	0.454	8.3022	0.4288	8.3022	0.394	8.3022	0.3594
8.6975	1.0027	8.6975	0.521	8.6975	0.4849	8.6975	0.454	8.6975	0.4288	8.6975	0.3913	8.6975	0.3536
9.1116	1.0027	9.1116	0.4701	9.1116	0.4386	9.1116	0.4105	9.1116	0.3865	9.1116	0.3654	9.1116	0.3376
9.5455	1.0027	9.5455	0.4494	9.5455	0.4069	9.5455	0.3794	9.5455	0.3652	9.5455	0.3418	9.5455	0.3167
10	0.6463	10	0.4494	10	0.4069	10	0.3794	10	0.3585	10	0.3293	10	0.3015
10.4762	0.6411	10.4762	0.4371	10.4762	0.3959	10.4762	0.3648	10.4762	0.347	10.4762	0.3169	10.4762	0.2936
10.975	0.6411	10.975	0.4085	10.975	0.3668	10.975	0.3387	10.975	0.3179	10.975	0.2923	10.975	0.2891
11.4976	0.6411	11.4976	0.3647	11.4976	0.3304	11.4976	0.3133	11.4976	0.3024	11.4976	0.2893	11.4976	0.2857
12.045	0.6411	12.045	0.3647	12.045	0.3304	12.045	0.3133	12.045	0.3024	12.045	0.2893	12.045	0.2839
12.6186	0.6411	12.6186	0.3647	12.6186	0.3304	12.6186	0.3133	12.6186	0.3024	12.6186	0.2893	12.6186	0.2831
13.2194	0.6411	13.2194	0.3647	13.2194	0.3304	13.2194	0.3133	13.2194	0.3024	13.2194	0.2893	13.2194	0.2831

PTWW038.grf ~ RPP-WTP Pretreatment Facility ISRS ~ Calc No.: 24590-PTF-S0C-S15T-00057, Rev. A ~ Frequency (cps) ~ Spectral Acceleration (g) ~ Figure 38 ~ SLAB-WALL JOINT North-South Responses ~ Elevation 54 Ft. ~ Line 12.5 H

Damping	0.50%		2%		3%		4%		5%		7%		10%
Freq.	Accel.	Freq.	Accel.	Freq.	Accel.	Freq.	Accel.	Freq.	Accel.	Freq.	Accel.	Freq.	Accel.
13.8489	0.6411	13.8489	0.3647	13.8489	0.3304	13.8489	0.3133	13.8489	0.3024	13.8489	0.2893	13.8489	0.2831
14.5083	0.6411	14.5083	0.3647	14.5083	0.3304	14.5083	0.3133	14.5083	0.3024	14.5083	0.2893	14.5083	0.2831
15.1991	0.6411	15.1991	0.3647	15.1991	0.3304	15.1991	0.3133	15.1991	0.3024	15.1991	0.2893	15.1991	0.2831
15.9228	0.6411	15.9228	0.3647	15.9228	0.3304	15.9228	0.3133	15.9228	0.3024	15.9228	0.2893	15.9228	0.2831
16.681	0.6411	16.681	0.3647	16.681	0.3304	16.681	0.3133	16.681	0.3024	16.681	0.2893	16.681	0.2831
17.4753	0.6411	17.4753	0.3647	17.4753	0.3304	17.4753	0.3133	17.4753	0.3024	17.4753	0.2893	17.4753	0.2831
18.3074	0.4714	18.3074	0.3284	18.3074	0.3152	18.3074	0.3052	18.3074	0.298	18.3074	0.2893	18.3074	0.2831
19.1791	0.4714	19.1791	0.3088	19.1791	0.2936	19.1791	0.2872	19.1791	0.2851	19.1791	0.2842	19.1791	0.2825
20.0923	0.4714	20.0923	0.3088	20.0923	0.2886	20.0923	0.2865	20.0923	0.2851	20.0923	0.2833	20.0923	0.2814
21.049	0.3824	21.049	0.2877	21.049	0.2842	21.049	0.2843	21.049	0.2836	21.049	0.2819	21.049	0.2801
22.0513	0.3824	22.0513	0.2873	22.0513	0.2834	22.0513	0.2816	22.0513	0.2806	22.0513	0.2795	22.0513	0.2783
23.1013	0.2973	23.1013	0.2832	23.1013	0.2814	23.1013	0.2802	23.1013	0.2793	23.1013	0.2779	23.1013	0.2765
24.2013	0.2947	24.2013	0.2805	24.2013	0.2788	24.2013	0.2776	24.2013	0.2768	24.2013	0.2763	24.2013	0.2756
25.3536	0.288	25.3536	0.2805	25.3536	0.2788	25.3536	0.2776	25.3536	0.2768	25.3536	0.2757	25.3536	0.2749
26.5609	0.288	26.5609	0.2805	26.5609	0.2788	26.5609	0.2776	26.5609	0.2768	26.5609	0.2757	26.5609	0.2747
27.8256	0.2867	27.8256	0.28	27.8256	0.2782	27.8256	0.2771	27.8256	0.2762	27.8256	0.2751	27.8256	0.2741
29.1505	0.2773	29.1505	0.2753	29.1505	0.2749	29.1505	0.2745	29.1505	0.2742	29.1505	0.2738	29.1505	0.2732
30.5386	0.2773	30.5386	0.2727	30.5386	0.2726	30.5386	0.2725	30.5386	0.2724	30.5386	0.2723	30.5386	0.2721
31.9927	0.2707	31.9927	0.271	31.9927	0.271	31.9927	0.2711	31.9927	0.2711	31.9927	0.2712	31.9927	0.2712
33.516	0.2707	33.516	0.2707	33.516	0.2706	33.516	0.2706	33.516	0.2706	33.516	0.2706	33.516	0.2706
35.1119	0.27	35.1119	0.27	35.1119	0.27	35.1119	0.2701	35.1119	0.2701	35.1119	0.2701	35.1119	0.2701
36.7838	0.2695	36.7838	0.2696	36.7838	0.2696	36.7838	0.2696	36.7838	0.2697	36.7838	0.2697	36.7838	0.2697
38.5353	0.2693	38.5353	0.2693	38.5353	0.2693	38.5353	0.2693	38.5353	0.2693	38.5353	0.2693	38.5353	0.2693
40.3702	0.269	40.3702	0.269	40.3702	0.269	40.3702	0.269	40.3702	0.269	40.3702	0.269	40.3702	0.269
42.2924	0.2687	42.2924	0.2687	42.2924	0.2687	42.2924	0.2687	42.2924	0.2687	42.2924	0.2687	42.2924	0.2688
44.3062	0.2685	44.3062	0.2685	44.3062	0.2685	44.3062	0.2685	44.3062	0.2685	44.3062	0.2685	44.3062	0.2685
46.4159	0.2683	46.4159	0.2683	46.4159	0.2683	46.4159	0.2683	46.4159	0.2683	46.4159	0.2683	46.4159	0.2683
48.626	0.2681	48.626	0.2681	48.626	0.2681	48.626	0.2681	48.626	0.2681	48.626	0.2681	48.626	0.2681
50.9414	0.2679	50.9414	0.2679	50.9414	0.2679	50.9414	0.2679	50.9414	0.2679	50.9414	0.2679	50.9414	0.2679

PTWW040.grf ~ RPP-WTP Pretreatment Facility ISRS ~ Calc No.: 24590-PTF-S0C-S15T-00057, Rev. A ~ Frequency (cps) ~ Spectral Acceleration (g) ~ Figure 40 ~ SLAB-WALL JOINT East-West Responses ~ Elevation 54 Ft. ~ Line 30 B

Damping	0.50%		2%		3%		4%		5%		7%		10%
Freq.	Accel.	Freq.	Accel.	Freq.	Accel.	Freq.	Accel.	Freq.	Accel.	Freq.	Accel.	Freq.	Accel.
0.1098	0.0375	0.1098	0.0344	0.1098	0.0327	0.1098	0.0312	0.1098	0.0298	0.1098	0.0274	0.1098	0.0252
0.115	0.0375	0.115	0.0344	0.115	0.0327	0.115	0.0312	0.115	0.0299	0.115	0.0277	0.115	0.0258
0.1204	0.0375	0.1204	0.0344	0.1204	0.0331	0.1204	0.0322	0.1204	0.0312	0.1204	0.0294	0.1204	0.0269
0.1262	0.0431	0.1262	0.0397	0.1262	0.0378	0.1262	0.036	0.1262	0.0343	0.1262	0.0314	0.1262	0.0278
0.1322	0.0504	0.1322	0.045	0.1322	0.042	0.1322	0.0393	0.1322	0.0369	0.1322	0.0328	0.1322	0.0281
0.1385	0.056	0.1385	0.0489	0.1385	0.0449	0.1385	0.0414	0.1385	0.0384	0.1385	0.0345	0.1385	0.0303
0.1451	0.0581	0.1451	0.0509	0.1451	0.0475	0.1451	0.0445	0.1451	0.0419	0.1451	0.0375	0.1451	0.0326
0.152	0.0616	0.152	0.0546	0.152	0.0507	0.152	0.0472	0.152	0.0441	0.152	0.0391	0.152	0.0338
0.1592	0.062	0.1592	0.0546	0.1592	0.0507	0.1592	0.0472	0.1592	0.0442	0.1592	0.0397	0.1592	0.0351
0.1668	0.064	0.1668	0.0561	0.1668	0.0518	0.1668	0.0481	0.1668	0.0451	0.1668	0.0403	0.1668	0.0355
0.1748	0.064	0.1748	0.0561	0.1748	0.0518	0.1748	0.0481	0.1748	0.0451	0.1748	0.0403	0.1748	0.0355
0.1831	0.064	0.1831	0.0561	0.1831	0.0518	0.1831	0.0481	0.1831	0.0451	0.1831	0.0403	0.1831	0.0368
0.1918	0.0641	0.1918	0.0562	0.1918	0.0518	0.1918	0.0494	0.1918	0.0476	0.1918	0.0445	0.1918	0.0404
0.2009	0.0642	0.2009	0.0583	0.2009	0.0558	0.2009	0.0534	0.2009	0.0513	0.2009	0.0474	0.2009	0.0424
0.2105	0.0665	0.2105	0.0603	0.2105	0.0575	0.2105	0.0549	0.2105	0.0525	0.2105	0.049	0.2105	0.0449
0.2205	0.078	0.2205	0.0646	0.2205	0.0619	0.2205	0.0595	0.2205	0.0573	0.2205	0.0533	0.2205	0.0484
0.231	0.0933	0.231	0.0774	0.231	0.0694	0.231	0.063	0.231	0.0598	0.231	0.0556	0.231	0.0503
0.242	0.0933	0.242	0.0774	0.242	0.0722	0.242	0.0678	0.242	0.0637	0.242	0.0566	0.242	0.0512
0.2535	0.0933	0.2535	0.0817	0.2535	0.0771	0.2535	0.0729	0.2535	0.0692	0.2535	0.0628	0.2535	0.0552
0.2656	0.0933	0.2656	0.0839	0.2656	0.0794	0.2656	0.0754	0.2656	0.0717	0.2656	0.0653	0.2656	0.0575
0.2783	0.0953	0.2783	0.0846	0.2783	0.0794	0.2783	0.0754	0.2783	0.0717	0.2783	0.0653	0.2783	0.0581
0.2915	0.1186	0.2915	0.0985	0.2915	0.0889	0.2915	0.0814	0.2915	0.0754	0.2915	0.0668	0.2915	0.0594
0.3054	0.1503	0.3054	0.1233	0.3054	0.1096	0.3054	0.0984	0.3054	0.0894	0.3054	0.0758	0.3054	0.0632
0.3199	0.1503	0.3199	0.1233	0.3199	0.1096	0.3199	0.0984	0.3199	0.0894	0.3199	0.0802	0.3199	0.0706
0.3352	0.1503	0.3352	0.1233	0.3352	0.1096	0.3352	0.0984	0.3352	0.0932	0.3352	0.0857	0.3352	0.0762
0.3511	0.1503	0.3511	0.129	0.3511	0.1173	0.3511	0.107	0.3511	0.0997	0.3511	0.0894	0.3511	0.0786
0.3678	0.168	0.3678	0.1438	0.3678	0.1303	0.3678	0.1186	0.3678	0.1121	0.3678	0.1017	0.3678	0.0897
0.3853	0.168	0.3853	0.1438	0.3853	0.1345	0.3853	0.1278	0.3853	0.1218	0.3853	0.1114	0.3853	0.0992
0.4037	0.1939	0.4037	0.1599	0.4037	0.1426	0.4037	0.1306	0.4037	0.1259	0.4037	0.117	0.4037	0.1053
0.4229	0.2367	0.4229	0.1905	0.4229	0.172	0.4229	0.1557	0.4229	0.1416	0.4229	0.1217	0.4229	0.1092
0.4431	0.3089	0.4431	0.2194	0.4431	0.1882	0.4431	0.1671	0.4431	0.1496	0.4431	0.1274	0.4431	0.1099
0.4642	0.3417	0.4642	0.2524	0.4642	0.2138	0.4642	0.1852	0.4642	0.1637	0.4642	0.1345	0.4642	0.1215
0.4863	0.3417	0.4863	0.2561	0.4863	0.221	0.4863	0.1929	0.4863	0.1703	0.4863	0.1411	0.4863	0.1326
0.5094	0.3521	0.5094	0.2655	0.5094	0.2324	0.5094	0.2053	0.5094	0.1831	0.5094	0.15	0.5094	0.1394

PTWW040.grf ~ RPP-WTP Pretreatment Facility ISRS ~ Calc No.: 24590-PTF-S0C-S15T-00057, Rev. A ~ Frequency (cps) ~ Spectral Acceleration (g) ~ Figure 40 ~ SLAB-WALL JOINT East-West Responses ~ Elevation 54 Ft. ~ Line 30 B

Damping Freq.	0.50% Accel.	Freq.	2% Accel.	Freq.	3% Accel.	Freq.	4% Accel.	Freq.	5% Accel.	Freq.	7% Accel.	Freq.	10% Accel.
0.5337	0.4094	0.5337	0.277	0.5337	0.2324	0.5337	0.2053	0.5337	0.1831	0.5337	0.1539	0.5337	0.1399
0.5591	0.4094	0.5591	0.277	0.5591	0.2399	0.5591	0.2149	0.5591	0.195	0.5591	0.1656	0.5591	0.1399
0.5857	0.4094	0.5857	0.277	0.5857	0.2401	0.5857	0.2157	0.5857	0.1974	0.5857	0.1686	0.5857	0.144
0.6136	0.4473	0.6136	0.2968	0.6136	0.2443	0.6136	0.2233	0.6136	0.205	0.6136	0.175	0.6136	0.144
0.6428	0.478	0.6428	0.3546	0.6428	0.3004	0.6428	0.2612	0.6428	0.2347	0.6428	0.1989	0.6428	0.1683
0.6734	0.478	0.6734	0.3546	0.6734	0.3004	0.6734	0.2612	0.6734	0.2416	0.6734	0.2168	0.6734	0.1875
0.7055	0.478	0.7055	0.3546	0.7055	0.3004	0.7055	0.2612	0.7055	0.2416	0.7055	0.2187	0.7055	0.1922
0.7391	0.478	0.7391	0.3546	0.7391	0.3004	0.7391	0.2693	0.7391	0.2464	0.7391	0.2187	0.7391	0.1922
0.7743	0.5516	0.7743	0.3957	0.7743	0.3328	0.7743	0.2914	0.7743	0.2681	0.7743	0.2353	0.7743	0.2018
0.8111	0.5516	0.8111	0.3957	0.8111	0.3328	0.8111	0.3036	0.8111	0.2876	0.8111	0.2588	0.8111	0.2241
0.8497	0.5516	0.8497	0.3957	0.8497	0.3328	0.8497	0.312	0.8497	0.2986	0.8497	0.2726	0.8497	0.2377
0.8902	0.5516	0.8902	0.3957	0.8902	0.3658	0.8902	0.3432	0.8902	0.3226	0.8902	0.2872	0.8902	0.2459
0.9326	0.86	0.9326	0.5582	0.9326	0.4625	0.9326	0.4018	0.9326	0.3596	0.9326	0.3042	0.9326	0.2543
0.977	0.86	0.977	0.5582	0.977	0.4625	0.977	0.4042	0.977	0.3641	0.977	0.3081	0.977	0.2635
1.0235	0.9305	1.0235	0.596	1.0235	0.5259	1.0235	0.4813	1.0235	0.4435	1.0235	0.3836	1.0235	0.3273
1.0723	0.9305	1.0723	0.6681	1.0723	0.6026	1.0723	0.5463	1.0723	0.4991	1.0723	0.435	1.0723	0.3728
1.1233	1.3364	1.1233	0.8307	1.1233	0.678	1.1233	0.5832	1.1233	0.5403	1.1233	0.4675	1.1233	0.3994
1.1768	1.3364	1.1768	0.8307	1.1768	0.678	1.1768	0.5853	1.1768	0.5503	1.1768	0.486	1.1768	0.4233
1.2328	1.3364	1.2328	0.8307	1.2328	0.7352	1.2328	0.6585	1.2328	0.5916	1.2328	0.5089	1.2328	0.45
1.2916	1.3364	1.2916	0.8976	1.2916	0.7903	1.2916	0.7004	1.2916	0.6246	1.2916	0.5436	1.2916	0.479
1.353	1.3364	1.353	0.9456	1.353	0.7903	1.353	0.7004	1.353	0.6262	1.353	0.5719	1.353	0.5034
1.4175	1.4619	1.4175	0.9456	1.4175	0.7903	1.4175	0.7004	1.4175	0.6574	1.4175	0.6019	1.4175	0.5319
1.485	1.4619	1.485	0.9456	1.485	0.7903	1.485	0.7283	1.485	0.6958	1.485	0.6359	1.485	0.562
1.5557	1.5117	1.5557	1.0299	1.5557	0.8804	1.5557	0.7761	1.5557	0.7253	1.5557	0.6625	1.5557	0.5874
1.6298	1.815	1.6298	1.1102	1.6298	0.9568	1.6298	0.8641	1.6298	0.7943	1.6298	0.6883	1.6298	0.605
1.7074	1.815	1.7074	1.1102	1.7074	0.9568	1.7074	0.8641	1.7074	0.7943	1.7074	0.703	1.7074	0.6249
1.7887	1.815	1.7887	1.1102	1.7887	0.9568	1.7887	0.8641	1.7887	0.7943	1.7887	0.7234	1.7887	0.6496
1.8738	1.815	1.8738	1.1102	1.8738	0.9568	1.8738	0.8669	1.8738	0.8279	1.8738	0.7584	1.8738	0.6712
1.963	1.815	1.963	1.1102	1.963	0.9568	1.963	0.8979	1.963	0.8532	1.963	0.7761	1.963	0.6839
2.0565	1.7425	2.0565	1.0955	2.0565	0.961	2.0565	0.9033	2.0565	0.8536	2.0565	0.7761	2.0565	0.6839
2.1544	1.7425	2.1544	1.0955	2.1544	0.961	2.1544	0.9033	2.1544	0.8536	2.1544	0.7761	2.1544	0.6839
2.257	1.515	2.257	1.0774	2.257	0.961	2.257	0.9033	2.257	0.8536	2.257	0.7761	2.257	0.6839
2.3645	1.515	2.3645	1.0774	2.3645	0.961	2.3645	0.9033	2.3645	0.8536	2.3645	0.7761	2.3645	0.6839
2.4771	1.515	2.4771	1.0774	2.4771	1.0152	2.4771	0.9033	2.4771	0.8536	2.4771	0.7713	2.4771	0.6886
2.595	1.515	2.595	1.0774	2.595	1.0152	2.595	0.9033	2.595	0.8536	2.595	0.7713	2.595	0.6927

PTWW040.grf ~ RPP-WTP Pretreatment Facility ISRS ~ Calc No.: 24590-PTF-S0C-S15T-00057, Rev. A ~ Frequency (cps) ~ Spectral Acceleration (g) ~ Figure 40 ~ SLAB-WALL JOINT East-West Responses ~ Elevation 54 Ft. ~ Line 30 B

Damping	0.50%		2%		3%		4%		5%		7%		10%
Freq.	Accel.	Freq.	Accel.	Freq.	Accel.	Freq.	Accel.	Freq.	Accel.	Freq.	Accel.	Freq.	Accel.
2.7186	1.515	2.7186	1.0774	2.7186	1.0152	2.7186	0.9033	2.7186	0.8536	2.7186	0.7713	2.7186	0.6934
2.848	1.515	2.848	1.0774	2.848	1.0152	2.848	0.9033	2.848	0.8536	2.848	0.7713	2.848	0.6934
2.9836	1.515	2.9836	1.0774	2.9836	1.0152	2.9836	0.9033	2.9836	0.8536	2.9836	0.7713	2.9836	0.6934
3.1257	1.515	3.1257	1.0774	3.1257	1.0152	3.1257	0.9033	3.1257	0.8536	3.1257	0.7713	3.1257	0.6934
3.2745	1.515	3.2745	1.0774	3.2745	1.0152	3.2745	0.9033	3.2745	0.8536	3.2745	0.7713	3.2745	0.6934
3.4305	1.515	3.4305	1.0774	3.4305	1.0152	3.4305	0.9033	3.4305	0.8536	3.4305	0.7713	3.4305	0.692
3.5938	1.7924	3.5938	1.0774	3.5938	1.0152	3.5938	0.9033	3.5938	0.8536	3.5938	0.7713	3.5938	0.6916
3.7649	1.7924	3.7649	1.0921	3.7649	1.0152	3.7649	0.9076	3.7649	0.8536	3.7649	0.7713	3.7649	0.6893
3.9442	1.7924	3.9442	1.0921	3.9442	1.0628	3.9442	0.9721	3.9442	0.9001	3.9442	0.7901	3.9442	0.6893
4.132	1.7924	4.132	1.0921	4.132	1.0628	4.132	0.9721	4.132	0.9001	4.132	0.7901	4.132	0.6876
4.3288	1.7924	4.3288	1.0921	4.3288	1.0628	4.3288	0.9721	4.3288	0.9001	4.3288	0.7901	4.3288	0.6805
4.5349	1.7924	4.5349	1.0921	4.5349	1.0628	4.5349	0.9721	4.5349	0.9001	4.5349	0.7901	4.5349	0.676
4.7508	1.7924	4.7508	1.0921	4.7508	1.0628	4.7508	0.9721	4.7508	0.9001	4.7508	0.7901	4.7508	0.6736
4.977	1.7924	4.977	1.0921	4.977	0.9506	4.977	0.8979	4.977	0.8494	4.977	0.7652	4.977	0.6688
5.214	1.7924	5.214	1.0921	5.214	0.9383	5.214	0.8718	5.214	0.8233	5.214	0.7464	5.214	0.654
5.4623	2.0429	5.4623	1.0921	5.4623	0.9383	5.4623	0.8718	5.4623	0.8233	5.4623	0.7464	5.4623	0.654
5.7224	2.0429	5.7224	1.0974	5.7224	0.9383	5.7224	0.8718	5.7224	0.8233	5.7224	0.7464	5.7224	0.654
5.9948	2.0429	5.9948	1.0974	5.9948	0.9383	5.9948	0.8718	5.9948	0.8233	5.9948	0.7464	5.9948	0.654
6.2803	2.0429	6.2803	1.0974	6.2803	0.9383	6.2803	0.8718	6.2803	0.8233	6.2803	0.7464	6.2803	0.654
6.5793	2.0429	6.5793	1.0974	6.5793	0.9383	6.5793	0.8718	6.5793	0.8218	6.5793	0.7401	6.5793	0.6457
6.8926	2.0429	6.8926	1.0974	6.8926	0.9383	6.8926	0.852	6.8926	0.7921	6.8926	0.7107	6.8926	0.6236
7.2208	1.6443	7.2208	1.0312	7.2208	0.8872	7.2208	0.8236	7.2208	0.7712	7.2208	0.6856	7.2208	0.6178
7.5646	1.3629	7.5646	0.9367	7.5646	0.8389	7.5646	0.785	7.5646	0.7436	7.5646	0.6831	7.5646	0.6178
7.9248	1.3378	7.9248	0.8974	7.9248	0.827	7.9248	0.7757	7.9248	0.7347	7.9248	0.6707	7.9248	0.604
8.3022	1.3378	8.3022	0.8407	8.3022	0.7713	8.3022	0.7153	8.3022	0.6828	8.3022	0.6374	8.3022	0.5873
8.6975	0.9422	8.6975	0.6767	8.6975	0.6523	8.6975	0.6296	8.6975	0.6076	8.6975	0.5724	8.6975	0.5488
9.1116	0.9081	9.1116	0.6623	9.1116	0.6141	9.1116	0.5759	9.1116	0.551	9.1116	0.5261	9.1116	0.5145
9.5455	0.9081	9.5455	0.6266	9.5455	0.5795	9.5455	0.5505	9.5455	0.5315	9.5455	0.5085	9.5455	0.4961
10	0.8734	10	0.6266	10	0.5795	10	0.5505	10	0.5315	10	0.5083	10	0.4875
10.4762	0.7653	10.4762	0.5513	10.4762	0.528	10.4762	0.5125	10.4762	0.5017	10.4762	0.4862	10.4762	0.4714
10.975	0.7298	10.975	0.5252	10.975	0.5066	10.975	0.4911	10.975	0.479	10.975	0.4624	10.975	0.4529
11.4976	0.7298	11.4976	0.5252	11.4976	0.5066	11.4976	0.4911	11.4976	0.479	11.4976	0.4624	11.4976	0.4475
12.045	0.7298	12.045	0.5252	12.045	0.5066	12.045	0.4911	12.045	0.479	12.045	0.4624	12.045	0.4475
12.6186	0.7298	12.6186	0.516	12.6186	0.4966	12.6186	0.483	12.6186	0.4727	12.6186	0.4569	12.6186	0.4415
13.2194	0.7298	13.2194	0.516	13.2194	0.4659	13.2194	0.4393	13.2194	0.438	13.2194	0.4349	13.2194	0.4272

PTWW040.grf ~ RPP-WTP Pretreatment Facility ISRS ~ Calc No.: 24590-PTF-S0C-S15T-00057, Rev. A ~ Frequency (cps) ~ Spectral Acceleration (g) ~ Figure 40 ~ SLAB-WALL JOINT East-West Responses ~ Elevation 54 Ft. ~ Line 30 B

Damping Freq.	0.50% Accel.	Freq.	2% Accel.	Freq.	3% Accel.	Freq.	4% Accel.	Freq.	5% Accel.	Freq.	7% Accel.	Freq.	10% Accel.
13.8489	0.7298	13.8489	0.516	13.8489	0.4659	13.8489	0.4388	13.8489	0.4278	13.8489	0.4202	13.8489	0.4132
14.5083	0.7298	14.5083	0.516	14.5083	0.4659	14.5083	0.4388	14.5083	0.4278	14.5083	0.4164	14.5083	0.4056
15.1991	0.7298	15.1991	0.516	15.1991	0.4659	15.1991	0.4388	15.1991	0.4209	15.1991	0.4033	15.1991	0.3946
15.9228	0.7298	15.9228	0.516	15.9228	0.4659	15.9228	0.4388	15.9228	0.4209	15.9228	0.4007	15.9228	0.3861
16.681	0.7298	16.681	0.516	16.681	0.4659	16.681	0.4388	16.681	0.4209	16.681	0.4007	16.681	0.3861
17.4753	0.7298	17.4753	0.516	17.4753	0.4659	17.4753	0.4388	17.4753	0.4209	17.4753	0.4007	17.4753	0.3861
18.3074	0.7298	18.3074	0.516	18.3074	0.4659	18.3074	0.4388	18.3074	0.4209	18.3074	0.4007	18.3074	0.3861
19.1791	0.8702	19.1791	0.516	19.1791	0.4659	19.1791	0.4388	19.1791	0.4209	19.1791	0.4007	19.1791	0.3861
20.0923	0.8702	20.0923	0.516	20.0923	0.4659	20.0923	0.4388	20.0923	0.4209	20.0923	0.4007	20.0923	0.3861
21.049	0.8702	21.049	0.516	21.049	0.4659	21.049	0.4388	21.049	0.4209	21.049	0.4007	21.049	0.3861
22.0513	0.8702	22.0513	0.516	22.0513	0.4659	22.0513	0.4388	22.0513	0.4209	22.0513	0.4007	22.0513	0.3835
23.1013	0.8702	23.1013	0.516	23.1013	0.4659	23.1013	0.4388	23.1013	0.4209	23.1013	0.4007	23.1013	0.3835
24.2013	0.7893	24.2013	0.5103	24.2013	0.4659	24.2013	0.4388	24.2013	0.4209	24.2013	0.3995	24.2013	0.3835
25.3536	0.7893	25.3536	0.4648	25.3536	0.4175	25.3536	0.405	25.3536	0.4012	25.3536	0.3926	25.3536	0.3817
26.5609	0.7893	26.5609	0.4648	26.5609	0.4175	26.5609	0.3899	26.5609	0.38	26.5609	0.3779	26.5609	0.3729
27.8256	0.4998	27.8256	0.4141	27.8256	0.3879	27.8256	0.3762	27.8256	0.3726	27.8256	0.3682	27.8256	0.3643
29.1505	0.4217	29.1505	0.3866	29.1505	0.3763	29.1505	0.3678	29.1505	0.3612	29.1505	0.3558	29.1505	0.3554
30.5386	0.4217	30.5386	0.3633	30.5386	0.3554	30.5386	0.3517	30.5386	0.3499	30.5386	0.3485	30.5386	0.348
31.9927	0.3545	31.9927	0.3404	31.9927	0.3386	31.9927	0.3376	31.9927	0.3374	31.9927	0.3399	31.9927	0.3417
33.516	0.3442	33.516	0.3404	33.516	0.3386	33.516	0.3376	33.516	0.3371	33.516	0.3365	33.516	0.3379
35.1119	0.3392	35.1119	0.3385	35.1119	0.338	35.1119	0.3376	35.1119	0.3371	35.1119	0.3365	35.1119	0.3359
36.7838	0.3368	36.7838	0.3366	36.7838	0.3364	36.7838	0.3362	36.7838	0.336	36.7838	0.3356	36.7838	0.3352
38.5353	0.3351	38.5353	0.335	38.5353	0.3349	38.5353	0.3348	38.5353	0.3347	38.5353	0.3345	38.5353	0.3343
40.3702	0.3338	40.3702	0.3337	40.3702	0.3336	40.3702	0.3336	40.3702	0.3336	40.3702	0.3334	40.3702	0.3333
42.2924	0.3326	42.2924	0.3326	42.2924	0.3325	42.2924	0.3325	42.2924	0.3325	42.2924	0.3324	42.2924	0.3323
44.3062	0.3316	44.3062	0.3316	44.3062	0.3316	44.3062	0.3316	44.3062	0.3315	44.3062	0.3315	44.3062	0.3315
46.4159	0.3307	46.4159	0.3307	46.4159	0.3307	46.4159	0.3307	46.4159	0.3307	46.4159	0.3307	46.4159	0.3307
48.626	0.3299	48.626	0.3299	48.626	0.3299	48.626	0.3299	48.626	0.3299	48.626	0.3299	48.626	0.3299
50.9414	0.3291	50.9414	0.3291	50.9414	0.3291	50.9414	0.3291	50.9414	0.3291	50.9414	0.3291	50.9414	0.3292

PTWW041.grf ~ RPP-WTP Pretreatment Facility ISRS ~ Calc No.: 24590-PTF-S0C-S15T-00057, Rev. A ~ Frequency (cps) ~ Spectral Acceleration (g) ~ Figure 41 ~ SLAB-WALL JOINT North-South Responses ~ Elevation 54 Ft. ~ Line 30 B

Damping	0.50%		2%		3%		4%		5%		7%		10%	
Freq.	Accel.	Freq.	Accel.	Freq.	Accel.	Freq.	Accel.	Freq.	Accel.	Freq.	Accel.	Freq.	Accel.
0.1098	0.0404	0.1098	0.0365	0.1098	0.0342	0.1098	0.0321	0.1098	0.0303	0.1098	0.0271	0.1098	0.0235
0.115	0.0404	0.115	0.0365	0.115	0.0342	0.115	0.0321	0.115	0.0303	0.115	0.0271	0.115	0.0256
0.1204	0.0404	0.1204	0.0365	0.1204	0.0342	0.1204	0.0321	0.1204	0.0309	0.1204	0.0295	0.1204	0.0277
0.1262	0.0404	0.1262	0.0365	0.1262	0.0351	0.1262	0.0342	0.1262	0.0332	0.1262	0.0315	0.1262	0.0295
0.1322	0.0404	0.1322	0.0381	0.1322	0.0369	0.1322	0.0357	0.1322	0.0347	0.1322	0.0331	0.1322	0.0315
0.1385	0.0409	0.1385	0.039	0.1385	0.0379	0.1385	0.037	0.1385	0.0361	0.1385	0.0346	0.1385	0.0327
0.1451	0.0416	0.1451	0.0397	0.1451	0.0386	0.1451	0.0376	0.1451	0.0367	0.1451	0.0352	0.1451	0.0332
0.152	0.0439	0.152	0.0401	0.152	0.0386	0.152	0.0376	0.152	0.0367	0.152	0.0352	0.152	0.0332
0.1592	0.0462	0.1592	0.0416	0.1592	0.0395	0.1592	0.0376	0.1592	0.0367	0.1592	0.0352	0.1592	0.0332
0.1668	0.0584	0.1668	0.0505	0.1668	0.0462	0.1668	0.0426	0.1668	0.0394	0.1668	0.0352	0.1668	0.0332
0.1748	0.0644	0.1748	0.0566	0.1748	0.0521	0.1748	0.0483	0.1748	0.045	0.1748	0.0394	0.1748	0.0332
0.1831	0.0667	0.1831	0.0582	0.1831	0.0541	0.1831	0.0504	0.1831	0.047	0.1831	0.0414	0.1831	0.0353
0.1918	0.0678	0.1918	0.0585	0.1918	0.0542	0.1918	0.0506	0.1918	0.0473	0.1918	0.0417	0.1918	0.0379
0.2009	0.0697	0.2009	0.0595	0.2009	0.0542	0.2009	0.0511	0.2009	0.0484	0.2009	0.0434	0.2009	0.041
0.2105	0.0721	0.2105	0.0618	0.2105	0.0579	0.2105	0.0545	0.2105	0.0514	0.2105	0.0481	0.2105	0.0444
0.2205	0.0818	0.2205	0.0709	0.2205	0.0651	0.2205	0.0599	0.2205	0.0573	0.2205	0.053	0.2205	0.0474
0.231	0.0958	0.231	0.0791	0.231	0.0703	0.231	0.0666	0.231	0.0631	0.231	0.0572	0.231	0.0519
0.242	0.098	0.242	0.0843	0.242	0.0773	0.242	0.0714	0.242	0.0675	0.242	0.0613	0.242	0.0546
0.2535	0.1056	0.2535	0.091	0.2535	0.083	0.2535	0.0759	0.2535	0.0699	0.2535	0.0613	0.2535	0.0546
0.2656	0.1138	0.2656	0.0945	0.2656	0.0842	0.2656	0.0759	0.2656	0.0699	0.2656	0.0613	0.2656	0.0546
0.2783	0.1138	0.2783	0.0945	0.2783	0.0842	0.2783	0.0778	0.2783	0.0737	0.2783	0.067	0.2783	0.06
0.2915	0.1138	0.2915	0.1001	0.2915	0.0939	0.2915	0.0884	0.2915	0.0835	0.2915	0.0753	0.2915	0.0664
0.3054	0.1172	0.3054	0.1049	0.3054	0.0979	0.3054	0.0918	0.3054	0.0864	0.3054	0.0776	0.3054	0.0687
0.3199	0.1172	0.3199	0.1049	0.3199	0.0979	0.3199	0.0918	0.3199	0.0881	0.3199	0.0829	0.3199	0.0766
0.3352	0.1172	0.3352	0.1085	0.3352	0.1042	0.3352	0.1003	0.3352	0.0967	0.3352	0.0904	0.3352	0.083
0.3511	0.1645	0.3511	0.128	0.3511	0.1118	0.3511	0.1061	0.3511	0.102	0.3511	0.095	0.3511	0.0868
0.3678	0.2408	0.3678	0.1827	0.3678	0.1561	0.3678	0.1359	0.3678	0.1205	0.3678	0.0995	0.3678	0.0869
0.3853	0.2539	0.3853	0.1862	0.3853	0.1588	0.3853	0.138	0.3853	0.1255	0.3853	0.1079	0.3853	0.0897
0.4037	0.2539	0.4037	0.1862	0.4037	0.1588	0.4037	0.138	0.4037	0.1261	0.4037	0.1142	0.4037	0.102
0.4229	0.2539	0.4229	0.1862	0.4229	0.1641	0.4229	0.1478	0.4229	0.1338	0.4229	0.122	0.4229	0.1107
0.4431	0.3276	0.4431	0.2318	0.4431	0.2019	0.4431	0.1796	0.4431	0.1626	0.4431	0.1389	0.4431	0.1174
0.4642	0.3276	0.4642	0.2318	0.4642	0.2019	0.4642	0.1796	0.4642	0.1626	0.4642	0.1389	0.4642	0.1174
0.4863	0.3276	0.4863	0.2318	0.4863	0.2019	0.4863	0.1796	0.4863	0.1626	0.4863	0.1415	0.4863	0.1242
0.5094	0.3276	0.5094	0.2318	0.5094	0.2019	0.5094	0.1796	0.5094	0.1626	0.5094	0.1475	0.5094	0.1293
0.5337	0.3338	0.5337	0.2366	0.5337	0.2061	0.5337	0.1882	0.5337	0.1776	0.5337	0.1596	0.5337	0.1387
0.5591	0.3945	0.5591	0.2731	0.5591	0.2401	0.5591	0.2143	0.5591	0.1954	0.5591	0.171	0.5591	0.1533
0.5857	0.3945	0.5857	0.2819	0.5857	0.2531	0.5857	0.229	0.5857	0.2088	0.5857	0.1825	0.5857	0.1694

PTWW041.grf ~ RPP-WTP Pretreatment Facility ISRS ~ Calc No.: 24590-PTF-S0C-S15T-00057, Rev. A ~ Frequency (cps) ~ Spectral Acceleration (g) ~ Figure 41 ~ SLAB-WALL JOINT North-South Responses ~ Elevation 54 Ft. ~ Line 30 B

Damping	0.50%		2%		3%		4%		5%		7%		10%
Freq.	Accel.	Freq.	Accel.	Freq.	Accel.	Freq.	Accel.	Freq.	Accel.	Freq.	Accel.	Freq.	Accel.
0.6136	0.3945	0.6136	0.2819	0.6136	0.2531	0.6136	0.229	0.6136	0.2088	0.6136	0.1962	0.6136	0.1818
0.6428	0.3945	0.6428	0.2819	0.6428	0.2531	0.6428	0.229	0.6428	0.2176	0.6428	0.2071	0.6428	0.1923
0.6734	0.4051	0.6734	0.2819	0.6734	0.2545	0.6734	0.2401	0.6734	0.2329	0.6734	0.2199	0.6734	0.2038
0.7055	0.4051	0.7055	0.2964	0.7055	0.271	0.7055	0.2595	0.7055	0.2495	0.7055	0.2325	0.7055	0.2132
0.7391	0.6253	0.7391	0.4092	0.7391	0.3339	0.7391	0.2852	0.7391	0.2678	0.7391	0.2386	0.7391	0.2148
0.7743	0.6253	0.7743	0.4092	0.7743	0.3339	0.7743	0.2977	0.7743	0.2799	0.7743	0.2506	0.7743	0.2178
0.8111	0.6459	0.8111	0.4284	0.8111	0.373	0.8111	0.3304	0.8111	0.2973	0.8111	0.2507	0.8111	0.2178
0.8497	0.6459	0.8497	0.4295	0.8497	0.3929	0.8497	0.3623	0.8497	0.3363	0.8497	0.2936	0.8497	0.2475
0.8902	0.6685	0.8902	0.436	0.8902	0.3929	0.8902	0.3623	0.8902	0.3395	0.8902	0.3086	0.8902	0.2662
0.9326	0.715	0.9326	0.5019	0.9326	0.4411	0.9326	0.3968	0.9326	0.3633	0.9326	0.3158	0.9326	0.2706
0.977	0.9571	0.977	0.6109	0.977	0.5027	0.977	0.4349	0.977	0.3889	0.977	0.3313	0.977	0.2835
1.0235	0.9571	1.0235	0.6109	1.0235	0.5406	1.0235	0.4899	1.0235	0.4478	1.0235	0.3835	1.0235	0.3191
1.0723	0.9571	1.0723	0.629	1.0723	0.5623	1.0723	0.5069	1.0723	0.4603	1.0723	0.3954	1.0723	0.3351
1.1233	1.2112	1.1233	0.8095	1.1233	0.677	1.1233	0.5824	1.1233	0.5124	1.1233	0.4175	1.1233	0.3358
1.1768	1.2112	1.1768	0.8095	1.1768	0.677	1.1768	0.5824	1.1768	0.5124	1.1768	0.42	1.1768	0.3516
1.2328	1.2112	1.2328	0.8776	1.2328	0.7698	1.2328	0.6846	1.2328	0.6149	1.2328	0.5095	1.2328	0.4049
1.2916	1.2112	1.2916	0.9725	1.2916	0.8448	1.2916	0.7451	1.2916	0.6651	1.2916	0.5458	1.2916	0.4303
1.353	1.2406	1.353	0.9725	1.353	0.8448	1.353	0.7451	1.353	0.6651	1.353	0.5458	1.353	0.4328
1.4175	1.4927	1.4175	1.0398	1.4175	0.8977	1.4175	0.7987	1.4175	0.7236	1.4175	0.6126	1.4175	0.5041
1.485	1.4927	1.485	1.0398	1.485	0.8977	1.485	0.8136	1.485	0.7581	1.485	0.6601	1.485	0.5488
1.5557	1.7257	1.5557	1.093	1.5557	0.9164	1.5557	0.8185	1.5557	0.7581	1.5557	0.6679	1.5557	0.5679
1.6298	1.7649	1.6298	1.1715	1.6298	1.0429	1.6298	0.9398	1.6298	0.8509	1.6298	0.7168	1.6298	0.5845
1.7074	1.7649	1.7074	1.1911	1.7074	1.1181	1.7074	1.0082	1.7074	0.9156	1.7074	0.7654	1.7074	0.6266
1.7887	2.1543	1.7887	1.1911	1.7887	1.1181	1.7887	1.0082	1.7887	0.9156	1.7887	0.7791	1.7887	0.663
1.8738	2.1543	1.8738	1.1911	1.8738	1.1181	1.8738	1.0082	1.8738	0.9156	1.8738	0.8133	1.8738	0.691
1.963	2.1543	1.963	1.1911	1.963	1.1181	1.963	1.0086	1.963	0.9469	1.963	0.8387	1.963	0.7107
2.0565	2.1543	2.0565	1.1911	2.0565	1.1181	2.0565	1.0239	2.0565	0.9641	2.0565	0.8545	2.0565	0.7208
2.1544	2.1543	2.1544	1.1911	2.1544	1.1641	2.1544	1.0719	2.1544	0.993	2.1544	0.8646	2.1544	0.7434
2.257	1.9859	2.257	1.2401	2.257	1.1641	2.257	1.0719	2.257	0.993	2.257	0.8753	2.257	0.7534
2.3645	1.9859	2.3645	1.2401	2.3645	1.1641	2.3645	1.0719	2.3645	0.993	2.3645	0.8753	2.3645	0.7534
2.4771	1.9859	2.4771	1.3882	2.4771	1.1641	2.4771	1.0719	2.4771	0.993	2.4771	0.8753	2.4771	0.7534
2.595	1.838	2.595	1.3882	2.595	1.1641	2.595	1.0719	2.595	0.993	2.595	0.8753	2.595	0.7534
2.7186	1.838	2.7186	1.3882	2.7186	1.1614	2.7186	1.0549	2.7186	0.9795	2.7186	0.8753	2.7186	0.7534
2.848	1.838	2.848	1.3882	2.848	1.1614	2.848	1.0498	2.848	0.9795	2.848	0.8675	2.848	0.7385
2.9836	1.838	2.9836	1.3882	2.9836	1.1614	2.9836	1.0498	2.9836	0.9618	2.9836	0.8311	2.9836	0.6992
3.1257	1.838	3.1257	1.1633	3.1257	0.9244	3.1257	0.8554	3.1257	0.8062	3.1257	0.728	3.1257	0.6366
3.2745	1.7993	3.2745	1.0437	3.2745	0.8857	3.2745	0.7926	3.2745	0.7237	3.2745	0.6347	3.2745	0.5767
3.4305	1.2506	3.4305	0.8608	3.4305	0.774	3.4305	0.7077	3.4305	0.6696	3.4305	0.5994	3.4305	0.5377

PTWW041.grf ~ RPP-WTP Pretreatment Facility ISRS ~ Calc No.: 24590-PTF-S0C-S15T-00057, Rev. A ~ Frequency (cps) ~ Spectral Acceleration (g) ~ Figure 41 ~ SLAB-WALL JOINT North-South Responses ~ Elevation 54 Ft. ~ Line 30 B

Damping	0.50%		2%		3%		4%		5%		7%		10%
Freq.	Accel.	Freq.	Accel.	Freq.	Accel.	Freq.	Accel.	Freq.	Accel.	Freq.	Accel.	Freq.	Accel.
3.5938	1.2506	3.5938	0.826	3.5938	0.7467	3.5938	0.6903	3.5938	0.6397	3.5938	0.5691	3.5938	0.503
3.7649	1.2506	3.7649	0.8108	3.7649	0.7467	3.7649	0.6903	3.7649	0.6397	3.7649	0.5581	3.7649	0.4924
3.9442	1.2506	3.9442	0.7736	3.9442	0.7467	3.9442	0.6903	3.9442	0.6397	3.9442	0.5581	3.9442	0.4924
4.132	1.2506	4.132	0.7736	4.132	0.7467	4.132	0.6903	4.132	0.6397	4.132	0.5581	4.132	0.4924
4.3288	1.2506	4.3288	0.7736	4.3288	0.7467	4.3288	0.6903	4.3288	0.6397	4.3288	0.5581	4.3288	0.4759
4.5349	1.2506	4.5349	0.7736	4.5349	0.7467	4.5349	0.6903	4.5349	0.6397	4.5349	0.5581	4.5349	0.4759
4.7508	1.2506	4.7508	0.7736	4.7508	0.7467	4.7508	0.6903	4.7508	0.6397	4.7508	0.5581	4.7508	0.4759
4.977	1.2506	4.977	0.7736	4.977	0.7467	4.977	0.6903	4.977	0.6397	4.977	0.5581	4.977	0.4759
5.214	1.2506	5.214	0.7736	5.214	0.7467	5.214	0.6903	5.214	0.6397	5.214	0.5581	5.214	0.4759
5.4623	1.2506	5.4623	0.7736	5.4623	0.7467	5.4623	0.6903	5.4623	0.6397	5.4623	0.5581	5.4623	0.4759
5.7224	1.3691	5.7224	0.7736	5.7224	0.7467	5.7224	0.6903	5.7224	0.6397	5.7224	0.5581	5.7224	0.4759
5.9948	1.3691	5.9948	0.7736	5.9948	0.7467	5.9948	0.6903	5.9948	0.6397	5.9948	0.5581	5.9948	0.4759
6.2803	1.3691	6.2803	0.7736	6.2803	0.7467	6.2803	0.6903	6.2803	0.6397	6.2803	0.5581	6.2803	0.4759
6.5793	1.3691	6.5793	0.7736	6.5793	0.6755	6.5793	0.6357	6.5793	0.6231	6.5793	0.5476	6.5793	0.4759
6.8926	1.3691	6.8926	0.7736	6.8926	0.6755	6.8926	0.6357	6.8926	0.6231	6.8926	0.5452	6.8926	0.4683
7.2208	1.3691	7.2208	0.7253	7.2208	0.6201	7.2208	0.5644	7.2208	0.5427	7.2208	0.503	7.2208	0.4505
7.5646	1.3691	7.5646	0.7065	7.5646	0.6004	7.5646	0.5644	7.5646	0.5365	7.5646	0.4909	7.5646	0.436
7.9248	1.3691	7.9248	0.6416	7.9248	0.5598	7.9248	0.5335	7.9248	0.509	7.9248	0.4659	7.9248	0.4264
8.3022	1.3691	8.3022	0.6416	8.3022	0.556	8.3022	0.5083	8.3022	0.486	8.3022	0.454	8.3022	0.4264
8.6975	1.0067	8.6975	0.5785	8.6975	0.5365	8.6975	0.5083	8.6975	0.486	8.6975	0.454	8.6975	0.4229
9.1116	1.0067	9.1116	0.5785	9.1116	0.5203	9.1116	0.4913	9.1116	0.4686	9.1116	0.4364	9.1116	0.4147
9.5455	1.0067	9.5455	0.5785	9.5455	0.5203	9.5455	0.4913	9.5455	0.4686	9.5455	0.4364	9.5455	0.4101
10	0.7958	10	0.5553	10	0.5203	10	0.4913	10	0.4686	10	0.4364	10	0.4073
10.4762	0.7386	10.4762	0.4651	10.4762	0.4518	10.4762	0.4415	10.4762	0.4329	10.4762	0.4181	10.4762	0.3995
10.975	0.5938	10.975	0.4522	10.975	0.4338	10.975	0.4223	10.975	0.4154	10.975	0.4045	10.975	0.3897
11.4976	0.5139	11.4976	0.4522	11.4976	0.4338	11.4976	0.422	11.4976	0.4137	11.4976	0.4011	11.4976	0.3866
12.045	0.5	12.045	0.4195	12.045	0.4106	12.045	0.4049	12.045	0.4002	12.045	0.3914	12.045	0.3794
12.6186	0.5	12.6186	0.4087	12.6186	0.4008	12.6186	0.3948	12.6186	0.3897	12.6186	0.3812	12.6186	0.3706
13.2194	0.5	13.2194	0.3855	13.2194	0.3801	13.2194	0.3771	13.2194	0.3744	13.2194	0.3688	13.2194	0.3604
13.8489	0.5	13.8489	0.3777	13.8489	0.3691	13.8489	0.3663	13.8489	0.3634	13.8489	0.3575	13.8489	0.3497
14.5083	0.5	14.5083	0.3777	14.5083	0.3639	14.5083	0.3557	14.5083	0.3504	14.5083	0.3441	14.5083	0.3379
15.1991	0.5	15.1991	0.3523	15.1991	0.3413	15.1991	0.3407	15.1991	0.3396	15.1991	0.3366	15.1991	0.3315
15.9228	0.5	15.9228	0.3523	15.9228	0.3412	15.9228	0.3382	15.9228	0.3365	15.9228	0.3326	15.9228	0.3271
16.681	0.5	16.681	0.3523	16.681	0.3412	16.681	0.3355	16.681	0.3317	16.681	0.3266	16.681	0.3214
17.4753	0.5	17.4753	0.3351	17.4753	0.325	17.4753	0.321	17.4753	0.319	17.4753	0.3167	17.4753	0.3142
18.3074	0.5	18.3074	0.3274	18.3074	0.315	18.3074	0.3103	18.3074	0.3078	18.3074	0.3085	18.3074	0.3079
19.1791	0.5	19.1791	0.3274	19.1791	0.315	19.1791	0.3103	19.1791	0.3078	19.1791	0.3055	19.1791	0.3039
20.0923	0.5	20.0923	0.3274	20.0923	0.308	20.0923	0.3058	20.0923	0.3038	20.0923	0.302	20.0923	0.3007

PTWW041.grf ~ RPP-WTP Pretreatment Facility ISRS ~ Calc No.: 24590-PTF-S0C-S15T-00057, Rev. A ~ Frequency (cps) ~ Spectral Acceleration (g) ~ Figure 41 ~ SLAB-WALL JOINT North-South Responses ~ Elevation 54 Ft. ~ Line 30 B

Damping	0.50%		2%		3%		4%		5%		7%		10%	
Freq.	Accel.	Freq.	Accel.	Freq.	Accel.	Freq.	Accel.	Freq.	Accel.	Freq.	Accel.	Freq.	Accel.
21.049	0.5	21.049	0.3274	21.049	0.308	21.049	0.3058	21.049	0.3038	21.049	0.3009	21.049	0.2981
22.0513	0.5	22.0513	0.3274	22.0513	0.304	22.0513	0.3018	22.0513	0.3	22.0513	0.2973	22.0513	0.2949
23.1013	0.3991	23.1013	0.3036	23.1013	0.2994	23.1013	0.297	23.1013	0.2955	23.1013	0.2936	23.1013	0.2918
24.2013	0.3991	24.2013	0.3007	24.2013	0.294	24.2013	0.2912	24.2013	0.2902	24.2013	0.2896	24.2013	0.2887
25.3536	0.3991	25.3536	0.3007	25.3536	0.294	25.3536	0.2912	25.3536	0.2902	25.3536	0.2886	25.3536	0.2871
26.5609	0.3991	26.5609	0.3007	26.5609	0.294	26.5609	0.2907	26.5609	0.2888	26.5609	0.2868	26.5609	0.2852
27.8256	0.3991	27.8256	0.2989	27.8256	0.2931	27.8256	0.2896	27.8256	0.2872	27.8256	0.2843	27.8256	0.2831
29.1505	0.3991	29.1505	0.2989	29.1505	0.2931	29.1505	0.2896	29.1505	0.2872	29.1505	0.2843	29.1505	0.282
30.5386	0.3399	30.5386	0.2901	30.5386	0.2875	30.5386	0.2855	30.5386	0.284	30.5386	0.2817	30.5386	0.2796
31.9927	0.2956	31.9927	0.2753	31.9927	0.2743	31.9927	0.2755	31.9927	0.2761	31.9927	0.2765	31.9927	0.2762
33.516	0.2753	33.516	0.2729	33.516	0.2727	33.516	0.2728	33.516	0.2729	33.516	0.2732	33.516	0.2734
35.1119	0.2708	35.1119	0.2709	35.1119	0.271	35.1119	0.2711	35.1119	0.2711	35.1119	0.2712	35.1119	0.2714
36.7838	0.2688	36.7838	0.2691	36.7838	0.2692	36.7838	0.2693	36.7838	0.2694	36.7838	0.2696	36.7838	0.2697
38.5353	0.2675	38.5353	0.2677	38.5353	0.2679	38.5353	0.268	38.5353	0.268	38.5353	0.2682	38.5353	0.2684
40.3702	0.2666	40.3702	0.2668	40.3702	0.2669	40.3702	0.2669	40.3702	0.267	40.3702	0.2672	40.3702	0.2673
42.2924	0.2659	42.2924	0.266	42.2924	0.2661	42.2924	0.2661	42.2924	0.2662	42.2924	0.2663	42.2924	0.2664
44.3062	0.2653	44.3062	0.2654	44.3062	0.2654	44.3062	0.2654	44.3062	0.2655	44.3062	0.2655	44.3062	0.2657
46.4159	0.2648	46.4159	0.2648	46.4159	0.2648	46.4159	0.2648	46.4159	0.2648	46.4159	0.2649	46.4159	0.265
48.626	0.2643	48.626	0.2643	48.626	0.2643	48.626	0.2643	48.626	0.2643	48.626	0.2643	48.626	0.2644
50.9414	0.2638	50.9414	0.2638	50.9414	0.2638	50.9414	0.2638	50.9414	0.2638	50.9414	0.2638	50.9414	0.2638

PTWW115.grf ~ RPP-WTP Pretreatment Facility ISRS ~ Calc No.: 24590-PTF-S0C-S15T-00057, Rev. A ~ Frequency (cps) ~ Spectral Acceleration (g) ~ Figure 115 ~ SLAB ONLY Vertical Responses ~ Elevation 56 ft. ~ EL56_C-E-17-20

Damping	0.50%		2%		3%		4%		5%		7%		10%
Freq.	Accel.	Freq.	Accel.	Freq.	Accel.	Freq.	Accel.	Freq.	Accel.	Freq.	Accel.	Freq.	Accel.
0.1098	0.0291	0.1098	0.026	0.1098	0.0244	0.1098	0.023	0.1098	0.0221	0.1098	0.0214	0.1098	0.0205
0.115	0.0309	0.115	0.026	0.115	0.0244	0.115	0.0234	0.115	0.023	0.115	0.0222	0.115	0.0212
0.1204	0.0313	0.1204	0.0263	0.1204	0.0246	0.1204	0.0241	0.1204	0.0236	0.1204	0.0228	0.1204	0.0218
0.1262	0.0313	0.1262	0.0269	0.1262	0.0257	0.1262	0.0245	0.1262	0.024	0.1262	0.0233	0.1262	0.0224
0.1322	0.0313	0.1322	0.0271	0.1322	0.0258	0.1322	0.0248	0.1322	0.0244	0.1322	0.0236	0.1322	0.0226
0.1385	0.0313	0.1385	0.0277	0.1385	0.0265	0.1385	0.0255	0.1385	0.0246	0.1385	0.0236	0.1385	0.0226
0.1451	0.0316	0.1451	0.0295	0.1451	0.0283	0.1451	0.0271	0.1451	0.0261	0.1451	0.0241	0.1451	0.0226
0.152	0.032	0.152	0.0299	0.152	0.0286	0.152	0.0274	0.152	0.0262	0.152	0.0241	0.152	0.0226
0.1592	0.033	0.1592	0.0311	0.1592	0.0299	0.1592	0.0288	0.1592	0.0278	0.1592	0.0261	0.1592	0.0243
0.1668	0.0367	0.1668	0.0323	0.1668	0.0312	0.1668	0.0302	0.1668	0.0293	0.1668	0.0277	0.1668	0.0257
0.1748	0.0507	0.1748	0.0427	0.1748	0.0385	0.1748	0.035	0.1748	0.0321	0.1748	0.0285	0.1748	0.0265
0.1831	0.0586	0.1831	0.0493	0.1831	0.0442	0.1831	0.0399	0.1831	0.0362	0.1831	0.0305	0.1831	0.0266
0.1918	0.0586	0.1918	0.0493	0.1918	0.0442	0.1918	0.0399	0.1918	0.0362	0.1918	0.0305	0.1918	0.0269
0.2009	0.0586	0.2009	0.0493	0.2009	0.0442	0.2009	0.0399	0.2009	0.0362	0.2009	0.0326	0.2009	0.0299
0.2105	0.0586	0.2105	0.0493	0.2105	0.0442	0.2105	0.0401	0.2105	0.0386	0.2105	0.0361	0.2105	0.0327
0.2205	0.0586	0.2205	0.0493	0.2205	0.0454	0.2205	0.0427	0.2205	0.0409	0.2205	0.038	0.2205	0.0341
0.231	0.0586	0.231	0.0493	0.231	0.0457	0.231	0.0438	0.231	0.042	0.231	0.0388	0.231	0.0354
0.242	0.0586	0.242	0.0509	0.242	0.0486	0.242	0.0465	0.242	0.0445	0.242	0.041	0.242	0.0368
0.2535	0.0649	0.2535	0.0574	0.2535	0.0531	0.2535	0.0491	0.2535	0.0457	0.2535	0.041	0.2535	0.0371
0.2656	0.0731	0.2656	0.0586	0.2656	0.0536	0.2656	0.0491	0.2656	0.0457	0.2656	0.0424	0.2656	0.0401
0.2783	0.0817	0.2783	0.0599	0.2783	0.0536	0.2783	0.05	0.2783	0.0484	0.2783	0.0458	0.2783	0.0425
0.2915	0.0817	0.2915	0.0618	0.2915	0.0581	0.2915	0.0547	0.2915	0.0516	0.2915	0.0479	0.2915	0.0436
0.3054	0.0817	0.3054	0.0663	0.3054	0.0622	0.3054	0.0585	0.3054	0.0551	0.3054	0.0492	0.3054	0.045
0.3199	0.0817	0.3199	0.0701	0.3199	0.0659	0.3199	0.0623	0.3199	0.0589	0.3199	0.0536	0.3199	0.0474
0.3352	0.0873	0.3352	0.0767	0.3352	0.0709	0.3352	0.0662	0.3352	0.0629	0.3352	0.0571	0.3352	0.0501
0.3511	0.0906	0.3511	0.0806	0.3511	0.0749	0.3511	0.0698	0.3511	0.0653	0.3511	0.0577	0.3511	0.0502
0.3678	0.1215	0.3678	0.095	0.3678	0.0823	0.3678	0.0722	0.3678	0.0653	0.3678	0.0577	0.3678	0.0502
0.3853	0.1361	0.3853	0.1057	0.3853	0.0919	0.3853	0.0808	0.3853	0.0718	0.3853	0.0587	0.3853	0.0505
0.4037	0.1361	0.4037	0.1057	0.4037	0.0919	0.4037	0.0821	0.4037	0.0762	0.4037	0.0664	0.4037	0.0568
0.4229	0.1361	0.4229	0.1057	0.4229	0.0919	0.4229	0.0852	0.4229	0.0801	0.4229	0.0711	0.4229	0.0615
0.4431	0.1361	0.4431	0.1057	0.4431	0.0935	0.4431	0.0889	0.4431	0.0843	0.4431	0.0761	0.4431	0.0657
0.4642	0.1373	0.4642	0.1057	0.4642	0.0976	0.4642	0.0916	0.4642	0.086	0.4642	0.0763	0.4642	0.0674
0.4863	0.1479	0.4863	0.1238	0.4863	0.1108	0.4863	0.0997	0.4863	0.0904	0.4863	0.0827	0.4863	0.0733
0.5094	0.1814	0.5094	0.1384	0.5094	0.1218	0.5094	0.1085	0.5094	0.0977	0.5094	0.0867	0.5094	0.0754

PTWW115.grf ~ RPP-WTP Pretreatment Facility ISRS ~ Calc No.: 24590-PTF-S0C-S15T-00057, Rev. A ~ Frequency (cps) ~ Spectral Acceleration (g) ~ Figure 115 ~ SLAB ONLY Vertical Responses ~ Elevation 56 ft. ~ EL56_C-E-17-20

Damping	0.50%		2%		3%		4%		5%		7%		10%
Freq.	Accel.	Freq.	Accel.	Freq.	Accel.	Freq.	Accel.	Freq.	Accel.	Freq.	Accel.	Freq.	Accel.
0.5337	0.2216	0.5337	0.1605	0.5337	0.1343	0.5337	0.1149	0.5337	0.1023	0.5337	0.0867	0.5337	0.0754
0.5591	0.2216	0.5591	0.1605	0.5591	0.1343	0.5591	0.1149	0.5591	0.1023	0.5591	0.088	0.5591	0.0754
0.5857	0.2216	0.5857	0.1605	0.5857	0.1343	0.5857	0.1149	0.5857	0.1023	0.5857	0.0937	0.5857	0.0821
0.6136	0.2216	0.6136	0.1605	0.6136	0.1343	0.6136	0.1178	0.6136	0.1111	0.6136	0.1003	0.6136	0.0874
0.6428	0.2257	0.6428	0.1621	0.6428	0.1356	0.6428	0.1179	0.6428	0.1131	0.6428	0.103	0.6428	0.0901
0.6734	0.2257	0.6734	0.1621	0.6734	0.1389	0.6734	0.1291	0.6734	0.1211	0.6734	0.1084	0.6734	0.0936
0.7055	0.2257	0.7055	0.1621	0.7055	0.1389	0.7055	0.1291	0.7055	0.1211	0.7055	0.1095	0.7055	0.0952
0.7391	0.2257	0.7391	0.1621	0.7391	0.1413	0.7391	0.1328	0.7391	0.1244	0.7391	0.1097	0.7391	0.0952
0.7743	0.3175	0.7743	0.2132	0.7743	0.1805	0.7743	0.1581	0.7743	0.1421	0.7743	0.1211	0.7743	0.1032
0.8111	0.3175	0.8111	0.2132	0.8111	0.1805	0.8111	0.1581	0.8111	0.1421	0.8111	0.1211	0.8111	0.1065
0.8497	0.3175	0.8497	0.2132	0.8497	0.1805	0.8497	0.166	0.8497	0.1535	0.8497	0.134	0.8497	0.1129
0.8902	0.3175	0.8902	0.2132	0.8902	0.1869	0.8902	0.1713	0.8902	0.1583	0.8902	0.1378	0.8902	0.1175
0.9326	0.4866	0.9326	0.2993	0.9326	0.2464	0.9326	0.215	0.9326	0.1926	0.9326	0.1632	0.9326	0.1377
0.977	0.4866	0.977	0.2993	0.977	0.2464	0.977	0.215	0.977	0.1926	0.977	0.1712	0.977	0.1493
1.0235	0.4866	1.0235	0.2993	1.0235	0.2464	1.0235	0.215	1.0235	0.1926	1.0235	0.1775	1.0235	0.1586
1.0723	0.4866	1.0723	0.2993	1.0723	0.2574	1.0723	0.2363	1.0723	0.2193	1.0723	0.1933	1.0723	0.1665
1.1233	0.5744	1.1233	0.3387	1.1233	0.2663	1.1233	0.2363	1.1233	0.2193	1.1233	0.1933	1.1233	0.1665
1.1768	0.5744	1.1768	0.3781	1.1768	0.3127	1.1768	0.2762	1.1768	0.247	1.1768	0.2076	1.1768	0.1828
1.2328	0.5744	1.2328	0.3801	1.2328	0.3429	1.2328	0.3128	1.2328	0.2874	1.2328	0.2483	1.2328	0.2091
1.2916	0.5744	1.2916	0.4124	1.2916	0.3638	1.2916	0.3237	1.2916	0.295	1.2916	0.2539	1.2916	0.2139
1.353	0.6253	1.353	0.4124	1.353	0.3638	1.353	0.3237	1.353	0.3026	1.353	0.2724	1.353	0.2369
1.4175	0.6253	1.4175	0.4124	1.4175	0.3638	1.4175	0.3419	1.4175	0.3245	1.4175	0.2933	1.4175	0.2571
1.485	0.6253	1.485	0.4371	1.485	0.3975	1.485	0.3717	1.485	0.3478	1.485	0.3068	1.485	0.2662
1.5557	0.6253	1.5557	0.456	1.5557	0.426	1.5557	0.3995	1.5557	0.376	1.5557	0.3358	1.5557	0.2887
1.6298	0.7362	1.6298	0.4726	1.6298	0.4349	1.6298	0.4101	1.6298	0.3877	1.6298	0.3499	1.6298	0.3051
1.7074	0.7659	1.7074	0.5983	1.7074	0.5291	1.7074	0.4732	1.7074	0.428	1.7074	0.3634	1.7074	0.3086
1.7887	0.8581	1.7887	0.7092	1.7887	0.635	1.7887	0.5721	1.7887	0.5184	1.7887	0.4408	1.7887	0.3653
1.8738	0.9071	1.8738	0.7382	1.8738	0.6675	1.8738	0.6084	1.8738	0.5648	1.8738	0.4905	1.8738	0.4072
1.963	1.0464	1.963	0.7997	1.963	0.7215	1.963	0.6607	1.963	0.6081	1.963	0.5225	1.963	0.4276
2.0565	1.1387	2.0565	0.8196	2.0565	0.732	2.0565	0.661	2.0565	0.6081	2.0565	0.5225	2.0565	0.4276
2.1544	1.1387	2.1544	0.8196	2.1544	0.732	2.1544	0.661	2.1544	0.6081	2.1544	0.5225	2.1544	0.4276
2.257	1.1387	2.257	0.8196	2.257	0.732	2.257	0.6622	2.257	0.6085	2.257	0.5225	2.257	0.439
2.3645	1.8015	2.3645	0.9555	2.3645	0.7668	2.3645	0.6987	2.3645	0.6389	2.3645	0.5434	2.3645	0.4598
2.4771	2.0921	2.4771	1.1123	2.4771	0.8901	2.4771	0.7484	2.4771	0.6503	2.4771	0.5434	2.4771	0.4618
2.595	2.6286	2.595	1.3049	2.595	0.9786	2.595	0.8001	2.595	0.6919	2.595	0.5515	2.595	0.4636

PTWW115.grf ~ RPP-WTP Pretreatment Facility ISRS ~ Calc No.: 24590-PTF-S0C-S15T-00057, Rev. A ~ Frequency (cps) ~ Spectral Acceleration (g) ~ Figure 115 ~ SLAB ONLY Vertical Responses ~ Elevation 56 ft. ~ EL56_C-E-17-20

Damping	0.50%		2%		3%		4%		5%		7%		10%
Freq.	Accel.	Freq.	Accel.	Freq.	Accel.	Freq.	Accel.	Freq.	Accel.	Freq.	Accel.	Freq.	Accel.
2.7186	2.6286	2.7186	1.3049	2.7186	0.9786	2.7186	0.8001	2.7186	0.6919	2.7186	0.5515	2.7186	0.4669
2.848	2.6286	2.848	1.3049	2.848	0.9786	2.848	0.8001	2.848	0.6919	2.848	0.5515	2.848	0.4669
2.9836	2.6286	2.9836	1.3049	2.9836	0.9786	2.9836	0.8001	2.9836	0.6919	2.9836	0.5515	2.9836	0.4669
3.1257	2.6286	3.1257	1.3049	3.1257	0.9786	3.1257	0.8001	3.1257	0.6919	3.1257	0.5515	3.1257	0.4669
3.2745	1.4875	3.2745	0.9429	3.2745	0.7973	3.2745	0.6916	3.2745	0.6178	3.2745	0.5384	3.2745	0.4669
3.4305	1.1706	3.4305	0.7986	3.4305	0.7066	3.4305	0.6392	3.4305	0.589	3.4305	0.5099	3.4305	0.4525
3.5938	1.1706	3.5938	0.7986	3.5938	0.7066	3.5938	0.6392	3.5938	0.589	3.5938	0.5097	3.5938	0.4525
3.7649	1.1706	3.7649	0.7986	3.7649	0.7066	3.7649	0.6392	3.7649	0.589	3.7649	0.5097	3.7649	0.4525
3.9442	1.1706	3.9442	0.7986	3.9442	0.7066	3.9442	0.6392	3.9442	0.589	3.9442	0.5097	3.9442	0.4525
4.132	1.1706	4.132	0.7986	4.132	0.7066	4.132	0.6392	4.132	0.589	4.132	0.5097	4.132	0.4525
4.3288	1.1706	4.3288	0.7986	4.3288	0.7066	4.3288	0.6392	4.3288	0.589	4.3288	0.5097	4.3288	0.4525
4.5349	1.1706	4.5349	0.7986	4.5349	0.7066	4.5349	0.6392	4.5349	0.589	4.5349	0.5097	4.5349	0.4525
4.7508	1.1706	4.7508	0.7986	4.7508	0.7066	4.7508	0.6392	4.7508	0.589	4.7508	0.5097	4.7508	0.4525
4.977	1.1706	4.977	0.7986	4.977	0.7066	4.977	0.6392	4.977	0.589	4.977	0.5097	4.977	0.4525
5.214	1.1706	5.214	0.7986	5.214	0.7066	5.214	0.6392	5.214	0.589	5.214	0.5097	5.214	0.4525
5.4623	1.3551	5.4623	0.7986	5.4623	0.7066	5.4623	0.6392	5.4623	0.589	5.4623	0.5097	5.4623	0.4599
5.7224	1.6638	5.7224	0.9095	5.7224	0.7723	5.7224	0.6766	5.7224	0.6048	5.7224	0.5097	5.7224	0.4637
5.9948	1.6638	5.9948	0.9095	5.9948	0.7723	5.9948	0.6766	5.9948	0.6048	5.9948	0.5097	5.9948	0.4734
6.2803	1.6638	6.2803	0.9095	6.2803	0.7723	6.2803	0.6766	6.2803	0.6048	6.2803	0.5097	6.2803	0.4734
6.5793	1.6638	6.5793	0.9095	6.5793	0.7723	6.5793	0.6766	6.5793	0.6048	6.5793	0.5097	6.5793	0.4734
6.8926	1.6638	6.8926	0.9095	6.8926	0.7723	6.8926	0.6766	6.8926	0.6048	6.8926	0.5097	6.8926	0.4734
7.2208	1.6308	7.2208	0.9095	7.2208	0.7723	7.2208	0.6766	7.2208	0.6048	7.2208	0.5097	7.2208	0.4734
7.5646	1.6308	7.5646	0.9095	7.5646	0.7723	7.5646	0.6766	7.5646	0.6048	7.5646	0.5097	7.5646	0.4734
7.9248	1.6308	7.9248	0.9095	7.9248	0.7723	7.9248	0.6766	7.9248	0.6048	7.9248	0.5097	7.9248	0.4734
8.3022	1.6308	8.3022	0.9095	8.3022	0.7723	8.3022	0.6766	8.3022	0.6048	8.3022	0.5116	8.3022	0.4743
8.6975	1.6308	8.6975	0.9095	8.6975	0.7723	8.6975	0.6766	8.6975	0.6048	8.6975	0.5631	8.6975	0.528
9.1116	1.6308	9.1116	0.9095	9.1116	0.7723	9.1116	0.6822	9.1116	0.665	9.1116	0.6322	9.1116	0.5799
9.5455	1.6308	9.5455	0.9835	9.5455	0.9073	9.5455	0.848	9.5455	0.7987	9.5455	0.7177	9.5455	0.625
10	1.6308	10	1.0819	10	0.9829	10	0.9016	10	0.8346	10	0.7301	10	0.625
10.4762	1.6308	10.4762	1.0819	10.4762	0.9829	10.4762	0.9016	10.4762	0.8346	10.4762	0.7301	10.4762	0.625
10.975	1.6308	10.975	1.0819	10.975	0.9829	10.975	0.9016	10.975	0.8346	10.975	0.7301	10.975	0.6298
11.4976	1.6308	11.4976	1.0819	11.4976	0.9829	11.4976	0.9016	11.4976	0.8378	11.4976	0.7712	11.4976	0.6955
12.045	1.6308	12.045	1.0819	12.045	0.9829	12.045	0.9016	12.045	0.8378	12.045	0.7828	12.045	0.7206
12.6186	1.7655	12.6186	1.0819	12.6186	0.9829	12.6186	0.9016	12.6186	0.8378	12.6186	0.7828	12.6186	0.7274
13.2194	1.7655	13.2194	1.0819	13.2194	0.9829	13.2194	0.9016	13.2194	0.8748	13.2194	0.823	13.2194	0.7439

PTWW115.grf ~ RPP-WTP Pretreatment Facility ISRS ~ Calc No.: 24590-PTF-S0C-S15T-00057, Rev. A ~ Frequency (cps) ~ Spectral Acceleration (g) ~ Figure 115 ~ SLAB ONLY Vertical Responses ~ Elevation 56 ft. ~ EL56_C-E-17-20

Damping	0.50%		2%		3%		4%		5%		7%		10%
Freq.	Accel.	Freq.	Accel.	Freq.	Accel.	Freq.	Accel.	Freq.	Accel.	Freq.	Accel.	Freq.	Accel.
13.8489	2.1962	13.8489	1.3794	13.8489	1.2634	13.8489	1.1839	13.8489	1.1151	13.8489	0.9858	13.8489	0.8419
14.5083	3.099	14.5083	1.7518	14.5083	1.6507	14.5083	1.5281	14.5083	1.3976	14.5083	1.2195	14.5083	1.0605
15.1991	5.721	15.1991	3.1594	15.1991	2.5932	15.1991	2.2035	15.1991	1.9756	15.1991	1.5418	15.1991	1.3364
15.9228	7.6802	15.9228	3.9908	15.9228	2.9281	15.9228	2.3497	15.9228	1.998	15.9228	1.5418	15.9228	1.3585
16.681	7.6802	16.681	3.9908	16.681	2.9281	16.681	2.3497	16.681	1.998	16.681	1.5418	16.681	1.3585
17.4753	7.6802	17.4753	3.9908	17.4753	2.9281	17.4753	2.3497	17.4753	1.998	17.4753	1.5418	17.4753	1.3585
18.3074	7.6802	18.3074	3.9908	18.3074	2.9281	18.3074	2.3497	18.3074	1.998	18.3074	1.5418	18.3074	1.3585
19.1791	7.6802	19.1791	3.9908	19.1791	2.9281	19.1791	2.3497	19.1791	1.998	19.1791	1.5418	19.1791	1.3585
20.0923	5.0233	20.0923	2.5698	20.0923	2.2318	20.0923	2.0531	20.0923	1.8683	20.0923	1.5418	20.0923	1.2323
21.049	5.0233	21.049	2.5698	21.049	1.9224	21.049	1.5699	21.049	1.4464	21.049	1.3294	21.049	1.1577
22.0513	5.0233	22.0513	2.5698	22.0513	1.9224	22.0513	1.5699	22.0513	1.3278	22.0513	1.1117	22.0513	1.0269
23.1013	2.3419	23.1013	1.5377	23.1013	1.433	23.1013	1.3325	23.1013	1.2262	23.1013	1.0197	23.1013	0.9065
24.2013	1.5293	24.2013	1.0859	24.2013	1.0006	24.2013	0.9426	24.2013	0.9155	24.2013	0.8472	24.2013	0.7881
25.3536	1.2574	25.3536	0.8767	25.3536	0.8421	25.3536	0.8119	25.3536	0.7853	25.3536	0.7362	25.3536	0.6758
26.5609	1.2574	26.5609	0.8155	26.5609	0.7384	26.5609	0.6923	26.5609	0.6671	26.5609	0.6573	26.5609	0.6403
27.8256	1.2574	27.8256	0.8155	27.8256	0.7384	27.8256	0.6884	27.8256	0.6534	27.8256	0.6229	27.8256	0.6093
29.1505	0.6647	29.1505	0.618	29.1505	0.6094	29.1505	0.5972	29.1505	0.5935	29.1505	0.5904	29.1505	0.5816
30.5386	0.6591	30.5386	0.6039	30.5386	0.5896	30.5386	0.581	30.5386	0.5752	30.5386	0.5671	30.5386	0.5581
31.9927	0.5376	31.9927	0.5492	31.9927	0.5493	31.9927	0.5479	31.9927	0.546	31.9927	0.5418	31.9927	0.5355
33.516	0.5125	33.516	0.5181	33.516	0.5192	33.516	0.5192	33.516	0.5188	33.516	0.5173	33.516	0.5142
35.1119	0.4954	35.1119	0.4964	35.1119	0.4969	35.1119	0.4972	35.1119	0.4973	35.1119	0.4971	35.1119	0.4958
36.7838	0.4806	36.7838	0.481	36.7838	0.4812	36.7838	0.4813	36.7838	0.4814	36.7838	0.4813	36.7838	0.4807
38.5353	0.468	38.5353	0.4683	38.5353	0.4684	38.5353	0.4684	38.5353	0.4685	38.5353	0.4684	38.5353	0.4681
40.3702	0.4573	40.3702	0.4574	40.3702	0.4575	40.3702	0.4575	40.3702	0.4576	40.3702	0.4575	40.3702	0.4574
42.2924	0.4479	42.2924	0.448	42.2924	0.448	42.2924	0.4481	42.2924	0.4481	42.2924	0.4481	42.2924	0.4481
44.3062	0.4396	44.3062	0.4396	44.3062	0.4397	44.3062	0.4397	44.3062	0.4397	44.3062	0.4398	44.3062	0.4398
46.4159	0.4321	46.4159	0.4321	46.4159	0.4322	46.4159	0.4322	46.4159	0.4322	46.4159	0.4323	46.4159	0.4325
48.626	0.4252	48.626	0.4252	48.626	0.4253	48.626	0.4253	48.626	0.4254	48.626	0.4255	48.626	0.4258
50.9414	0.4188	50.9414	0.4188	50.9414	0.4188	50.9414	0.4189	50.9414	0.4189	50.9414	0.4191	50.9414	0.4195

MECHANICAL DATA SHEET

SHELL AND TUBE HEAT EXCHANGER

PLANT ITEM No.
24590-PTF-ME-TLP-COND-00002
Data Sheet No.
24590-PTF-MED-TLP-00002

Project:	*RPP-WTP*	Description:	*Treated LAW Evaporator Inter-Condenser*
Project No:	*24590*	P&ID:	*24590-PTF-M6-TLP-00002*
Site:	*Hanford*	Process Data Sht:	*N/A*
Process flow diagram:	*24590-PTF-M5-V17T-00005*	Manufacturer Name	*Framatome ANP / Graham Manufacturing*

ALG 12/22/09

ISSUED FOR RPP-WTP P&C

R11042838

General Data

Quality Level	*Q (9)*	TEMA (Class/Type)		*B*
Seismic Category	*SC-I*	Flow Type (Counter current, etc)		*8 PASS*
Design Code	*ASME VIII Div 1*	Heat Exchanger Duty	Btu/hr	*436,064*
Code Stamp		Heat Exchanger Area	ft^2	*50.7*
NB Registration		ΔT (LMTD/Corrected LMTD)	°F	*59.8*

Thermal/Hydraulic Data

		Shell Side			Tube Side	
Fluid Name		*IN*	*STEAM*	*OUT*	*IN Cooling Water*	*OUT*
Fluid Quantities: Total	lbm/hr	*448.3*			*32,500*	
Condensable Vapor (In/Out)		*404.6*	*6.4*		*	*
Liquid		*N/A*	*398.2*		*32,500*	*32,500*
Noncondensable		*43.7*	*43.7*		*N/A*	*N/A*
Temperature (In/Out)	°F	4 *	*90* *	4	*75.0*	4 *
Specific Gravity		*N/A*	*N/A*		*1.000*	*0.998*
Viscosity	Cp	*N/A*	*N/A*		*2.209*	*1.875*
Molecular Weight		*18.02*	*18.02*		*N/A*	*N/A*
Molecular Weight, Noncondensable		*29*	*29*		*N/A*	*N/A*
Specific Heat	Btu/lbm-°F	*N/A*	*N/A*		*1.000*	*0.999*
Thermal Conductivity	Btu/hr-ft-°F	*N/A*	*N/A*		*0.350*	*0.357*
Latent Heat	Btu/lbm @ °F	*N/A*			*N/A*	
Inlet pressure		*200 Torr*			4 *	
Tube side Velocity	ft/s	*N/A*			*3.2*	
Pressure Drop (Allowed)		*10 mm Hg*			*1.2 psi*	
Fouling Resistance (Min)	$hr\text{-}ft^2\text{-}°F/Btu$	*0.002*				

Mechanical Design Data

		Shell Side		Tube Side	
Design Pressure (Max/Min)	psig	*50*	*Full Vacuum*	*100*	*Full Vacuum*
Design Temperature (Max/Min)	°F	*378*	*0*	*150*	*0*
Corrosion Allowance	inch	*0.04*		*0.04*	
Erosion Allowance	inch	*N/A*		*N/A*	
Shell OD / ID		*8 5/8"*		Overall Dimensions (HxWxL) inch	*20 x 13-1/2 x 95-1/8*
Total No. of Tubes		*43*		Tube OD inch	*0.750*

Material Data

Shell	*SA 240 316L SS*	Shell Cover	*SA 240 316L SS*
Channel/Bonnet	*SA 240 316L SS*	Channel Cover	*SA 240 316L SS*
Tube	*SA 213 316L SS*	Floating Head Cover	*N/A*
Stationary Tube Sheet	*316L SS*	Floating Tube Sheet	*N/A*
Shell Side Gaskets	*N/A*	Tube Side Gaskets	*316 SS Spiral Wound w/ PTFE Filler*
Partition Seals	*N/A*	Baffles/Supports	*SA 240 316L SS*
Insulation	*N/A*	Forgings (Shell side)	*SA 182 F316L*
Bolting	*SA 193 B8M & SA 194 2HM*	Forgings (Channel)	*SA 182 F316L*

MECHANICAL DATA SHEET

SHELL AND TUBE HEAT EXCHANGER

PLANT ITEM No.
24590-PTF-ME-TLP-COND-00002
Data Sheet No.
24590-PTF-MED-TLP-00002

Construction Data *(To be determined by the supplier when not specified by the buyer)*

Cross Baffle Type	***Up & Over***	% Baffle Cut (Dia.)	---	Spacing (c/c) inch	---
Bypass Seal Arrangement	***N/A***	Longitudinal Seal Type	***N/A***	Expansion Joint Type	***N/A***
Inlet Nozzle ρV^2	---	Bundle Entrance ρV^2	---	Bundle Exit ρV^2	---
Tube Support Type	***Vertical Cut***	U-bend Support Type	***N/A***	Weight of Bundle lbf	*
Operating Weight lbf	***600***	Full of Water lbf	***680***	Empty Wieght lbf	***540***

Notes

**** To be determined by Seller.***

Notes:

(1) All welds are continuous to avoid crevices, weld surface finish is descaled as laid.
(2) Tube to tubesheet joint shall be strength welded.
(3) Graham size 8x6 BEM.
(4) Deleted.
4 ***(5) For Nozzle loads, see 24590-PTF-3PS-MEVV-T0001.***
(6) Deleted.
(7) Deleted.
(8) Deleted. 4
(9) Component will be manufactured to Bechtel quality level Q, which corresponds with Vendor quality level QL-2.
(10) Vendor design information is from document 24590-QL-POA-MEVV-00001-02-00056.
(11) Equipment cyclic data is from document 24590-QL-POA-MEVV-00001-04-03.
(12) Contents of this drawing are dangerous waste permit affecting. 4
(13) The physical design parameters shall be determined by the seller based on TEMA and HEI standards.
4 ***(14) Please note that source, special nuclear and byproduct materials, as defined in the Atomic Energy Act of 1954 (AEA), are regulated at the U.S. Department of Energy (DOE) facilities exclusively by DOE acting pursuant to its AEA authority. DOE asserts, that pursuant to AEA, it has sole and exclusive responsibility and authority to regulate source, special nuclear, and byproduct materials at DOE-owned nuclear facilities. Information contained herein on radionuclides is provided for process description purposes only.***

(Safety screening/evaluation required? ☒Yes ☐No If yes per 24590-WTP-GPP-SREG-002, E&NS signature required below.)

Rev.	Description	By	Checked	E&NS	Approved	Date
4	Updated to reflect WSGM analysis, 24590-PTF-U0N-W16T-00003 and incorporate DOE AEA note (14). * ADDED TO SHOW VALUES TO BE UPDATED	D. Tate	R. Rickenbach	B. Hall	J. Julyk	2/19/09
3	Incorporated Vendor Design and Equipment Qualification Data	R. Rickenbach	E. Le	S. Woolfolk	J. Julyk	07/14/2008
2	Incorporated Vendor Design	E. Le	R. Nowak	N/A	J. Julyk	04/04/2005
1	Updated Descrition	G. Butt	D. Reinemann	N/A	J. Julyk	03/22/2004
0	Issued for Procurement	E. Le	S. Shah	N/A	J. Julyk	04/30/2003

MECHANICAL DATA SHEET

SHELL AND TUBE HEAT EXCHANGER

PLANT ITEM No.
24590-PTF-ME-TLP-COND-00003
Data Sheet No.
24590-PTF-MED-TLP-00003

Project:	*RPP-WTP*	Description:	*Treated LAW Evaporator After-Condenser*
Project No:	*24590*	P&ID:	*24590-PTF-M6-TLP-00002*
Site:	*Hanford*	Process Data Sht:	*N/A*
Process flow diagram:	*24590-PTF-M5-V17T-00005*	Manufacturer Name	*Framatome ANP / Graham Manufacturing*

ΔLG 18Feb09

R11042837

ISSUED BY RPP-WTP PDC

General Data

Quality Level	*Q (9)*	TEMA (Class/Type)		*B*
Seismic Category	*SC-I*	Flow Type (Counter current, etc)		*8 PASS*
Design Code	*ASME VIII Div 1*	Heat Exchanger Duty	Btu/hr	*167,838*
Code Stamp	*Yes*	Heat Exchanger Area	ft^2	*14.9*
NB Registration	*Yes*	ΔT (LMTD/Corrected LMTD)	°F	*111.0*

Thermal/Hydraulic Data

		Shell Side		Tube Side	
Fluid Name		*IN STEAM*	*OUT*	*IN Cooling Water*	*OUT*
Fluid Quantities: Total	lbm/hr	*200.4*		*15,000*	
Condensable Vapor (In/Out)		*156.7*	*3.4*	*N/A*	*N/A*
Liquid		*N/A*	*153.3*	*15,000*	*15,000*
Noncondensable		*43.7*	*43.7*	*N/A*	*N/A*
Temperature (In/Out)	°F	4 *	*120.0*	*75.0*	4 *
Specific Gravity		*N/A*	*N/A*	*1.000*	*0.999*
Viscosity	Cp	*N/A*	*N/A*	*2.209*	*1.924*
Molecular Weight		*18.02*	*18.02*	*N/A*	*N/A*
Molecular Weight, Noncondensable		*29*	*29*	*N/A*	*N/A*
Specific Heat	Btu/lbm-°F	*N/A*	*N/A*	*1.000*	*0.999*
Thermal Conductivity	Btu/hr-ft-°F	*N/A*	*	*0.350*	*0.356*
Latent Heat	Btu/lbm @ °F	*N/A*		*N/A*	
Inlet pressure		*810.0 Torr*		4 *	
Tube side Velocity	ft/s	*N/A*		*3.4*	
Pressure Drop (Allowed)		*25 mm Hg*		*0.8 psi*	
Fouling Resistance (Min)	$hr\text{-}ft^2\text{-}°F/Btu$	*0.0020*			

Mechanical Design Data

		Shell Side		Tube Side	
Design Pressure (Max/Min)	psig	*50*	*Full Vacuum*	*100*	*Full Vacuum*
Design Temperature (Max/Min)	°F	*378*	*0*	*150*	*0*
Corrosion Allowance	inch	*0.04*		*0.04*	
Erosion Allowance	inch	*N/A*		*N/A*	
Shell OD / ID		*6 5/8"*		Overall Dimensions (HxWxL) inch	*18 x 11 x 69*
Total No. of Tubes		*19*		Tube OD inch	*0.750*

Material Data

Shell	*SA 312, SA 182 316L SS*	Shell Cover	*N/A*
Channel/Bonnet	*SA 312, SA 182, SA 403 316L SS*	Channel Cover	*316L SS*
Tube	*SA 213 316L SS (SMLS)*	Floating Head Cover	*N/A*
Stationary Tube Sheet	*SA 240 316L SS*	Floating Tube Sheet	*N/A*
Shell Side Gaskets	*N/A*	Tube Side Gaskets	*316 SS Spiral Wound w/ PTFE Filler*
Partition Seals	*N/A*	Baffles/Supports	*SA 240 316L SS*
Insulation	*N/A*	Forgings (Shell side)	*SA 182 F316L*
Bolting	*SA 193 B8M & SA 194 2HM*	Forgings (Channel)	*SA 182 F316L*

MECHANICAL DATA SHEET

SHELL AND TUBE HEAT EXCHANGER

PLANT ITEM No.
24590-PTF-ME-TLP-COND-00003

Data Sheet No.
24590-PTF-MED-TLP-00003

Construction Data *(To be determined by the supplier when not specified by the buyer)*

Cross Baffle Type	***Up & Over***	% Baffle Cut (Dia.)	*- - -*	Spacing (c/c) inch	*- - -*
Bypass Seal Arrangement	***N/A***	Longitudinal Seal Type	***N/A***	Expansion Joint Type	***N/A***
Inlet Nozzle ρV^2	*- - -*	Bundle Entrance ρV^2	*- - -*	Bundle Exit ρV^2	*- - -*
Tube Support Type	***Vertical Cut***	U-bend Support Type	***N/A***	Weight of Bundle lbf	*
Operating Weight lbf	***330***	Full of Water lbf	***360***	Empty Wieght lbf	***300***

Notes

**** To be determined by Seller.***

Notes:

(1) All welds are continuous to avoid crevices, weld surface finish is descaled as laid.
(2) Tube to tubesheet joint shall be strength welded.
(3) Graham size 6x4 BEM. △4
(4) Deleted.
△4 ***(5) For Nozzle loads, see 24590-PTF-3PS-MEVV-T0001.***
(6) Deleted.
(7) Deleted.
(8) Deleted. △4
(9) Component will be manufactured to Bechtel quality level Q, which corresponds with Vendor quality level QL-2.
(10) Vendor design information is from document 24590-QL-POA-MEVV-00001-02-00056.
(11) Equipment cyclic data is from document 24590-QL-POA-MEVV-00001-04-03.
(12) Contents of this drawing are dangerous waste permit affecting.
(13) The physical design parameters shall be determined by the seller based on TEMA and HEI standards.
△4 ***(14) Please note that source, special nuclear and byproduct materials, as defined in the Atomic Energy Act of 1954 (AEA), are regulated at the U.S. Department of Energy (DOE) facilities exclusively by DOE acting pursuant to its AEA authority. DOE asserts, that pursuant to the AEA, it has sole responsibility and authority to regulate source, special nuclear, and byproduct materials at DOE-owned nuclear facilities. Information contained herein on radionuclides is provided for process description purposes only.***

(Safety screening/evaluation required? ☒Yes ☐No If yes per 24590-WTP-GPP-SREG-002, E&NS signature required below.)

Rev.	Description	By	Checked	E&NS	Approved	Date
4	Updated to reflect WSGM analysis, 24590-PTF-U0N-W16T-00003 and incorporate DOE AEA note (14). * ADDED TO SHOW VALUES TO BE UPDATED	D. Tate	R. Rickenbach	B. Hall	J. Julyk	2/19/09
3	Updated Quality Level and Incorporated Equipment Qualification Data	R. Rickenbach	E. Le	S. Woolfolk	J. Julyk	07/14/2008
2	Incorporated Vendor Design	E. Le	R. Nowak	N/A	J. Julyk	04/04/2005
1	Updated Descrition	G. Butt	D. Reinemann	N/A	J. Julyk	03/22/2004
0	Issued for Procurement	E. Le	S. Shah	N/A	J. Julyk	04/30/2003

EQUIPMENT QUALIFICATION DATASHEET (EQD)

Equipment Identification

Component Tag Number	24590-PTF-ME-TLP-COND-00003	Safety Classification	☒ SC ☐ SS ☐ APC ☐ SDC ☐ SDS ☐ RRC Note 10 4
Manufacturer / Supplier	UST&D / AREVA NP, INC.		
Requisition Number	24590-QL-POA-MEVV-00001		
Model	N/A	Seismic Category	☒ SC-I ☐ SC-II ☐ SC-III ☐ SC-IV Note 10 4
Description (Include descriptive text [e.g., location, elevation])	Treated LAW Evaporator After-Condensor, room P-0325, Elevation 56'-0"		
Safety Function(s)	Confinement (ref. 1) 4		

Seismic Safety Function	☒ Yes ☐ No	Room Number(s):	P-0325
Maintenance Accessible	☒ Yes ☐ No	Method of Maintenance Access:	☐ Remote ☒ Hands On ☐ None
Seismic Operability Requirements: 4	☐ During Seismic Event 4 ☐ After Seismic Event		
ITS Equipment Type:	☒ Passive Mechanical	☐ Active Mechanical	☐ Electrical

Equipment Environmental Qualification (EEQ) 4

Environment ☐ Mild ☒ Harsh	Hi Rad Service ☐ Yes ☒ No	Design Life (yrs) ☒ 40 ☒ Other 4
Contamination Class: C3		Design life to include 7,001,950 normal process expansion cycles.
Radiation Class: R3		

Parameter Type/Units	Parameter Value	Time Duration (number)	Time Units	WTP Document Number (BUYER)	Submittal Number (SELLER)
Normal					
Normal High Temperature (°F)	95	40	yrs	24590-PTF-U0D-W16T-00001, Note 7	Note 1
Normal Low Temperature (°F)	59	40	yrs	24590-PTF-U0D-W16T-00001, Note 7	Note 1
Normal High Relative Humidity (%RH)	100	40	yrs	24590-PTF-U0D-W16T-00001	Note 1
Normal Low Relative Humidity (%RH)	10	40	yrs	24590-PTF-U0D-W16T-00001	Note 1
Normal High Pressure (in.-w.g.)	0	40	yrs	24590-PTF-U0D-W16T-00001	Note 1
Normal Low Pressure (in.-w.g.)	-0.4	40	yrs	24590-PTF-U0D-W16T-00001	Note 1
Normal Radiation Dose Rate (mR/hr)	10	40	yrs	24590-PTF-U0D-W16T-00001	Note 1
Vibration Magnitude (g)	N/A	N/A	N/A	N/A	Note 1
Vibration Frequency (Hz)	N/A	N/A	N/A	N/A	Note 1
Additional Normal Information:	See Note 2 for Pressure Units.				

Equipment Environmental Qualification (EEQ) *(continued)*

Parameter Type/Units	Parameter Value	Time Duration (number)	Time units	WTP Document Number (BUYER)	Submittal Number (SELLER)
Abnormal					
Abnormal High Temperature (°F)	126	8	hr/yr	24590-PTF-U0D-W16T-00001, Note 7 & 9 4	Note 1
Abnormal Low Temperature (°F)	59	8	hr/yr	24590-WTP-DB-01-001, Notes 7 & 8	Note 1
Abnormal High Relative Humidity (%RH)	100	24	hr/yr	24590-PTF-U0D-W16T-00001	Note 1
Abnormal Low Relative Humidity (%RH)	2	22	hr/yr	24590-PTF-U0D-W16T-00001, Note 9 4	Note 1
Abnormal High Pressure (in.-w.g.)	4	8	hr/yr	24590-PTF-U0D-W16T-00001	Note 1
Abnormal Low Pressure (in.-w.g.)	-7.3	8	hr/yr	24590-PTF-U0D-W16T-00001	Note 1
Abnormal Radiation Dose Rate (mR/hr)	10 Note 3	0	hr/yr	24590-PTF-U0D-W16T-00001	Note 1
Wet Sprinkler System Present	YES	2	hr. 4	24590-PTF-U0D-W16T-00001	Note 1
Additional Abnormal Information	See Note 2 for Pressure Units				
Design Basis Events (DBE)					
DBE High Temperature (°F)	128	1000	hrs	24590-PTF-U0D-W16T-00001, Note 7 & 9 4	Note 1
DBE Low Temperature (°F)	40	1000	hrs	24590-PTF-U0D-W16T-00001, Note 7	Note 1
DBE High Relative Humidity (%RH)	100	482	hrs	24590-PTF-U0D-W16T-00001	Note 1
DBE Low Relative Humidity (%RH)	6	1000	hrs	24590-PTF-U0D-W16T-00001, Note 9 4	Note 1
DBE High Pressure (in.-w.g.)	4	1000	hrs	24590-PTF-U0D-W16T-00001	Note 1
DBE Low Pressure (in.-w.g.)	-7.3	1000	hrs	24590-PTF-U0D-W16T-00001	Note 1
DBE Radiation Dose Rate (mR/hr)	10 Note 3	0	hrs	24590-PTF-U0D-W16T-00001	Note 1
Flood Height (ft)	1.58	1000	hrs	24590-PTF-U0D-W16T-00001	Note 1
Submergence (ft)	0 Note 5	N/A	hrs	24590-PTF-U0D-W16T-00001 24590-QL-POA-MEVV-00001-01-00817 4	Note 1
Chemical/Spray Exposure	YES	12.5	hrs	24590-PTF-U0D-W16T-00001	Note 1
Additional DBE Information	See Note 2 for Pressure Units				

DBE Chemical Exposure Details	
DBE Chemical Types/Concentrations	Sodium Hydroxide, 5M

Interfaces (Electrical)	
Power Supply Voltage (VAC, VDC)	N/A
Power Supply Frequency (Hz)	N/A
Power Connection Method	N/A
I/O Signals to/from Equipment	N/A
I/O Connection Method	N/A

Interfaces (Mechanical)	
Mounting Configuration (orientation)	See dwg. 24590-QL-POA-MEVV-00001-01-00817
Mounting Method (bolts, welds, etc.)	Anchor Bolts, TLP-SKID-00001, 24590-PTF-DB-S13T-00056
Auxiliary Devices	N/A

Equipment Seismic Qualification (ESQ)

Parameter	Title	Reference/Document Number	Version / Revision	Remarks
WTP Seismic Design Specification (BUYER)	Engineering Specification for Seismic Qualification Criteria for Pressure Vessels	24590-WTP-3PS-MV00-T0002	002	N/A
Specified Seismic Load (BUYER)	Seismic Analysis of Pretreatment Building - WSGM In-Structure Response Spectre (ISRS) 4	24590-PTF-S0C-S15T-00057 4	00A 4	Calculation is not included in MR, see attached figures 37, 38, 40, 41 and 115 per CCN 185267. 4
Design Seismic Load (SELLER	Calculation - HEP 1 FEP and TLP Condenser Skids Seismic Qualification	24590-QL-POA-MEVV-00001-04-00027	00D	N/A
Qualification Method (SELLER)	Calculation - HEP 1 FEP and TLP Condenser Skids Seismic Qualification	24590-QL-POA-MEVV-00001-04-00027	00D	N/A
Qualification Report Number (SELLER)	Calculation - HEP 1 FEP and TLP Condenser Skids Seismic Qualification	24590-QL-POA-MEVV-00001-04-00027	00D	N/A
Submittal Number (BUYER)	Calculation - HEP 1 FEP and TLP Condenser Skids Seismic Qualification	24590-QL-POA-MEVV-00001-04-00027	00D	N/A

4

Notes and Additional Information

Notes:

1. Data to be provided by SELLER through the submittal process as required on the G-321-E form.
2. Where pressure is given in inches of water column (in.-w.c.) in the source document, it is generally assumed that this is in reference to atmospheric pressure and is therefore equivalent to inches of water gage (in.-w.g.).
3. Abnormal and DBE radiation dose rates are set equal to normal dose rate and do not contribute to the total integrated dose.
4. The equipment qualification will be documented in accordance with the requirements in Appendix D of Engineering Specification for Environmental Qualification of Mechanical Equipment, document number 24590-WTP-3PS-G000-T0015 for the passive and active safety functions.
5. Submergence is determined from the lowest point of the vessel in relation to the flood height above the floor.
6. Environmental data given document 24590-PTF-U0D-W16T-00001 is for room environment only.
7. For application of AISC N690, the normal temperatures are not used. Abnormal temperatures shall be applied as Normal Operation Temperature, T_O, with seismic effects, E_S. The Design basis event temperature shall be applied as a Thermal Load generated by a postulated accident, T_A, without seismic effects, E_s or E_o.
8. Abnormal low temperature, as calculated in reference 2, is based on a Loss of Heating Accident (LOHA) which occurs when steam supply to the building is lost. Since the evaporators are run on steam, this would cause the evaporators to go off-line. Abnormal low temperature will be based on reference 3 at 59°F.
9. Parameter value used on data sheet has been previously established and determined more conservative than values 4 derived from the reference document noted.
10. For commercial reasons, safety and seismic classification may be higher than elsewhere documented, and therefore 4 conservative.

References:

1. 24590-WTP-PSAR-ESH-01-002-02, Rev. 04A, Preliminary documented safety analysis to support construction 4 authorization; PT facility specific information.
2. 24590-PTF-U0D-W16T-00001, Rev. 0, PTF Room Environment Datasheet.
3. 24590-WTP-DB-ENG-01-001, Rev. 1M, Basis of Design. 4
4. 24590-PTF-U0N-W16T-00001, Add data for room p-0427. Incorporate additional steam break analysis. 4
5. 24590-PTF-U0N-W16T-00003, Revised temperature & relative humidity data for PTF rooms. 4

RPP-WTP Pretreatment Facility ISRS

Calc No.: 24590-PTF-S0C-S15T-00057, Rev. A 4

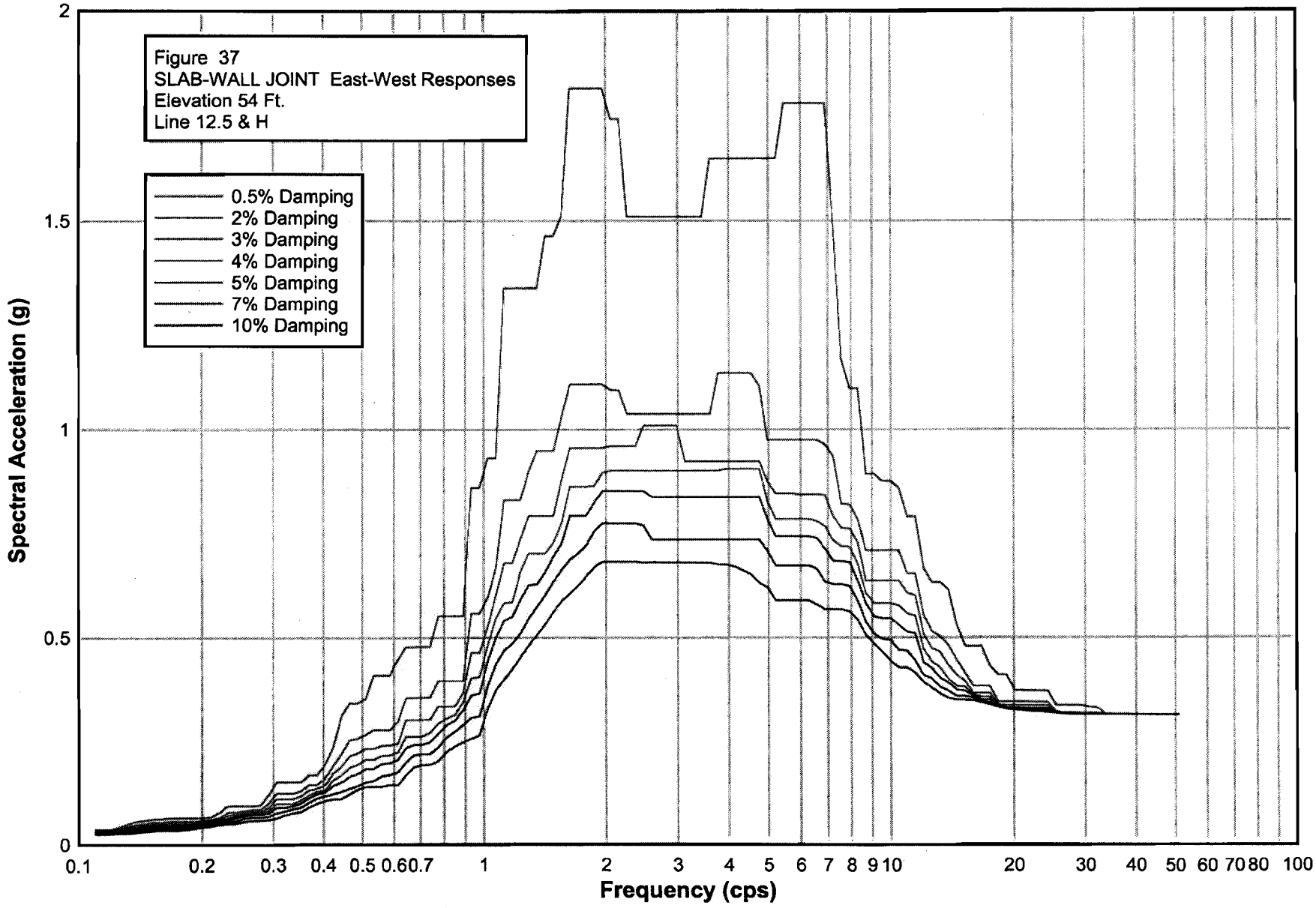

RPP-WTP Pretreatment Facility ISRS

Calc No.: 24590-PTF-S0C-S15T-00057, Rev. A 4

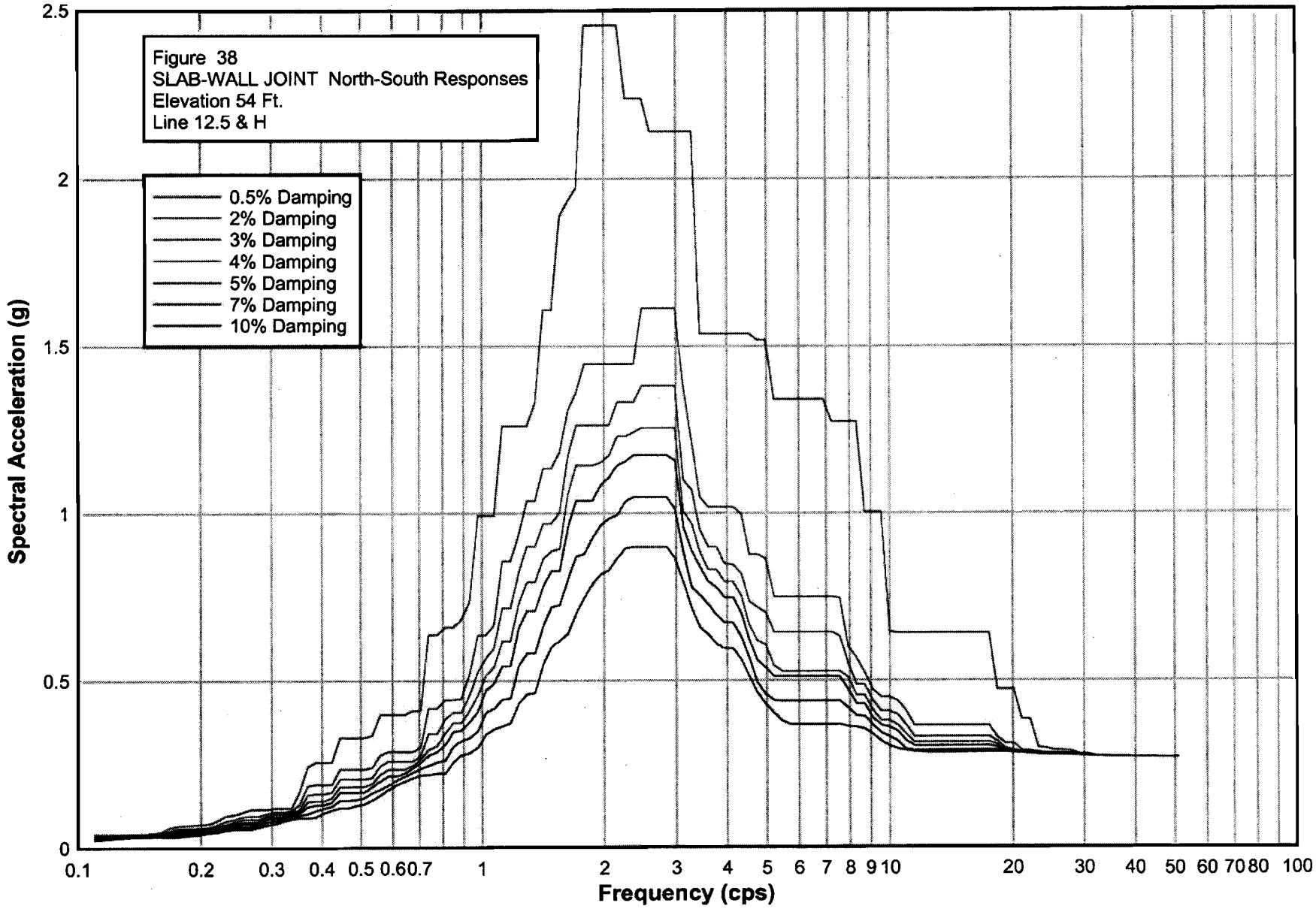

RPP-WTP Pretreatment Facility ISRS

Calc No.: 24590-PTF-S0C-S15T-00057, Rev. A

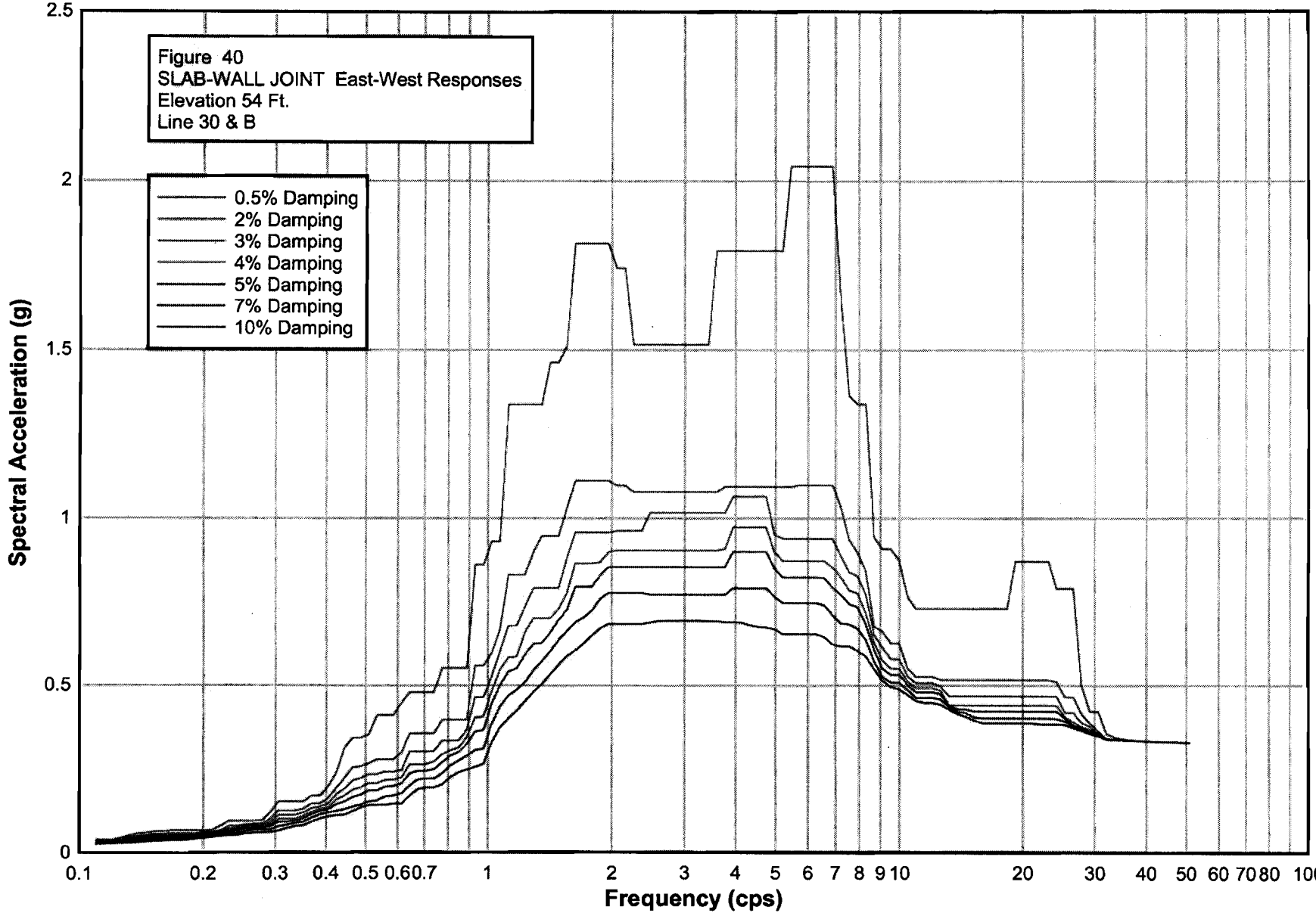

RPP-WTP Pretreatment Facility ISRS

Calc No.: 24590-PTF-S0C-S15T-00057, Rev. A

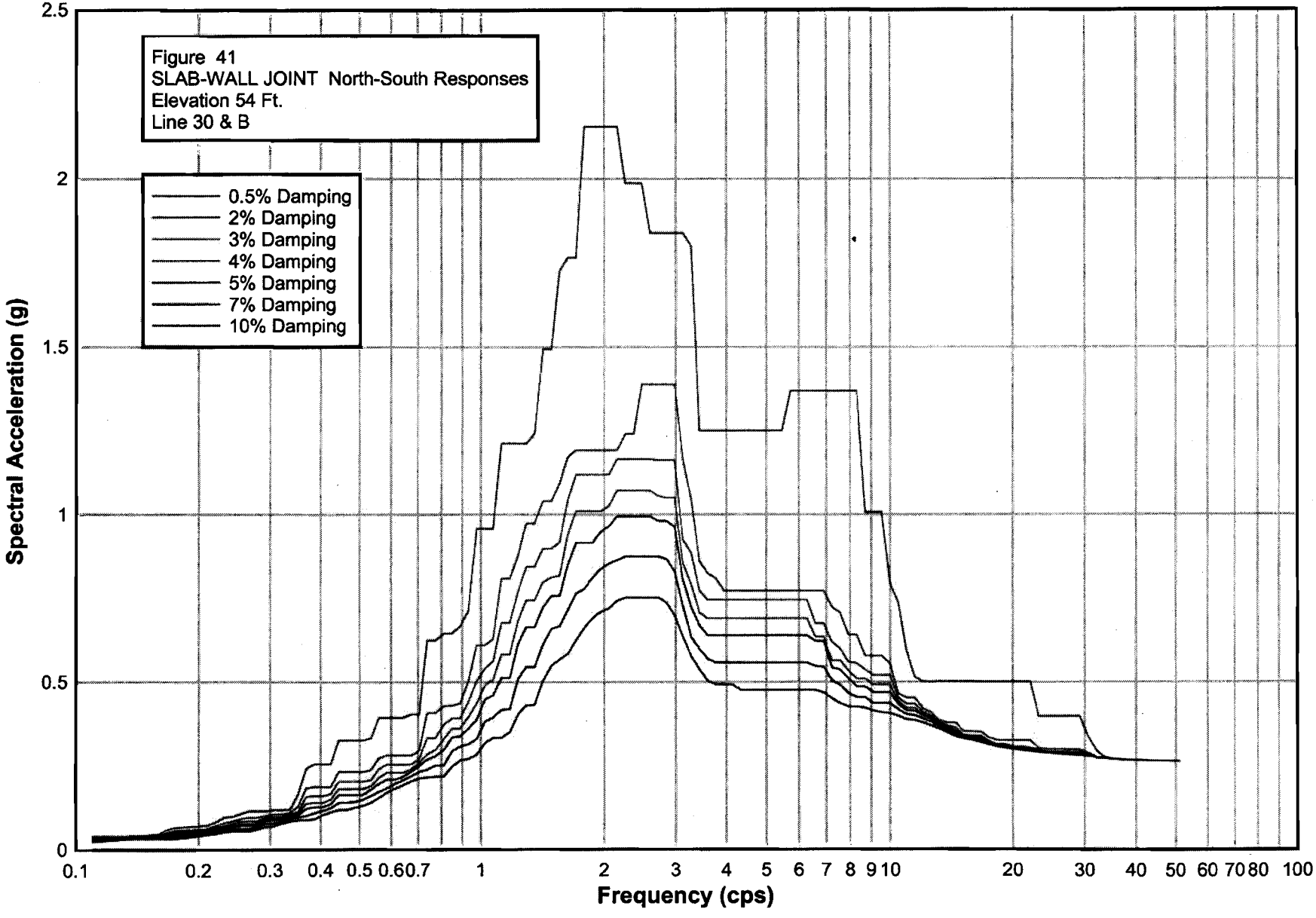

RPP-WTP Pretreatment Facility ISRS

Calc No.: 24590-PTF-S0C-S15T-00057, Rev. A

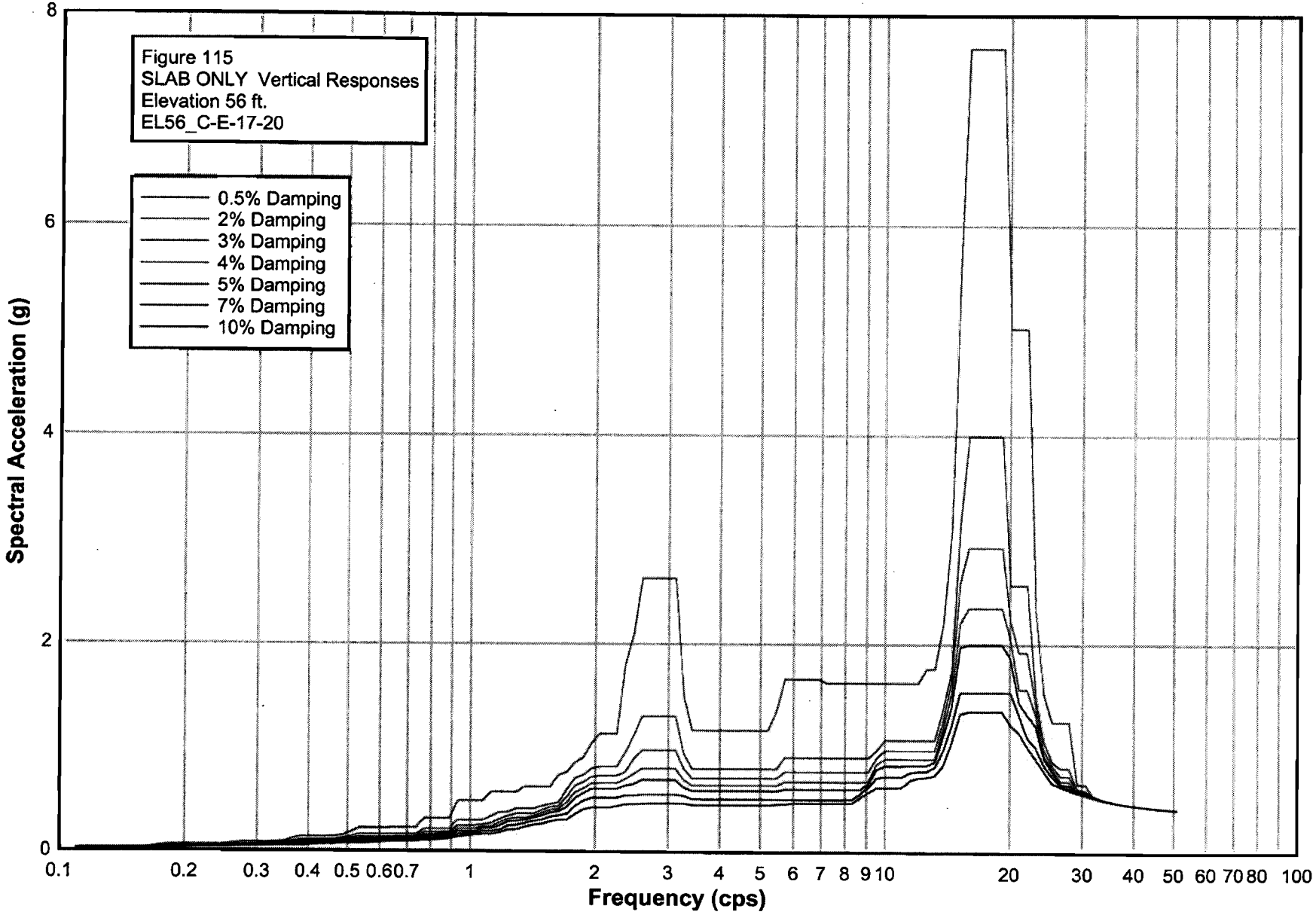

PTWW037.grf ~ RPP-WTP Pretreatment Facility ISRS ~ Calc No.: 24590-PTF-S0C-S15T-00057, Rev. A ~ Frequency (cps) ~ Spectral Acceleration (g) ~ Figure 37 ~ SLAB-WALL JOINT East-West Responses ~ Elevation 54 Ft. ~ Line 12.5 H

Damping	0.50%		2%		3%		4%		5%		7%		10%
Freq.	Accel.	Freq.	Accel.	Freq.	Accel.	Freq.	Accel.	Freq.	Accel.	Freq.	Accel.	Freq.	Accel.
0.1098	0.0375	0.1098	0.0344	0.1098	0.0327	0.1098	0.0312	0.1098	0.0298	0.1098	0.0274	0.1098	0.0252
0.115	0.0375	0.115	0.0344	0.115	0.0327	0.115	0.0312	0.115	0.0299	0.115	0.0277	0.115	0.0258
0.1204	0.0375	0.1204	0.0344	0.1204	0.0331	0.1204	0.0322	0.1204	0.0312	0.1204	0.0294	0.1204	0.0269
0.1262	0.0431	0.1262	0.0397	0.1262	0.0378	0.1262	0.036	0.1262	0.0343	0.1262	0.0314	0.1262	0.0278
0.1322	0.0504	0.1322	0.045	0.1322	0.042	0.1322	0.0393	0.1322	0.0369	0.1322	0.0328	0.1322	0.0281
0.1385	0.056	0.1385	0.0489	0.1385	0.0449	0.1385	0.0414	0.1385	0.0384	0.1385	0.0344	0.1385	0.0303
0.1451	0.058	0.1451	0.0509	0.1451	0.0475	0.1451	0.0445	0.1451	0.0419	0.1451	0.0375	0.1451	0.0325
0.152	0.0616	0.152	0.0546	0.152	0.0506	0.152	0.0472	0.152	0.0442	0.152	0.0391	0.152	0.0338
0.1592	0.062	0.1592	0.0546	0.1592	0.0506	0.1592	0.0472	0.1592	0.0442	0.1592	0.0396	0.1592	0.0351
0.1668	0.064	0.1668	0.056	0.1668	0.0517	0.1668	0.0481	0.1668	0.0451	0.1668	0.0403	0.1668	0.0356
0.1748	0.064	0.1748	0.056	0.1748	0.0517	0.1748	0.0481	0.1748	0.0451	0.1748	0.0403	0.1748	0.0356
0.1831	0.064	0.1831	0.056	0.1831	0.0517	0.1831	0.0481	0.1831	0.0451	0.1831	0.0403	0.1831	0.0368
0.1918	0.0641	0.1918	0.0561	0.1918	0.0517	0.1918	0.0495	0.1918	0.0477	0.1918	0.0445	0.1918	0.0404
0.2009	0.0642	0.2009	0.0583	0.2009	0.0558	0.2009	0.0535	0.2009	0.0513	0.2009	0.0474	0.2009	0.0424
0.2105	0.0665	0.2105	0.0603	0.2105	0.0575	0.2105	0.0549	0.2105	0.0525	0.2105	0.049	0.2105	0.0448
0.2205	0.078	0.2205	0.0647	0.2205	0.062	0.2205	0.0595	0.2205	0.0573	0.2205	0.0533	0.2205	0.0484
0.231	0.0933	0.231	0.0774	0.231	0.0694	0.231	0.063	0.231	0.0598	0.231	0.0556	0.231	0.0503
0.242	0.0933	0.242	0.0774	0.242	0.0723	0.242	0.0678	0.242	0.0638	0.242	0.0567	0.242	0.0513
0.2535	0.0933	0.2535	0.0817	0.2535	0.0771	0.2535	0.0729	0.2535	0.0692	0.2535	0.0628	0.2535	0.0553
0.2656	0.0933	0.2656	0.0839	0.2656	0.0794	0.2656	0.0754	0.2656	0.0718	0.2656	0.0653	0.2656	0.0575
0.2783	0.0954	0.2783	0.0847	0.2783	0.0794	0.2783	0.0754	0.2783	0.0718	0.2783	0.0653	0.2783	0.058
0.2915	0.1187	0.2915	0.0987	0.2915	0.089	0.2915	0.0813	0.2915	0.0753	0.2915	0.0668	0.2915	0.0592
0.3054	0.1504	0.3054	0.1235	0.3054	0.1097	0.3054	0.0985	0.3054	0.0894	0.3054	0.0758	0.3054	0.0633
0.3199	0.1504	0.3199	0.1235	0.3199	0.1097	0.3199	0.0985	0.3199	0.0894	0.3199	0.0801	0.3199	0.0706
0.3352	0.1504	0.3352	0.1235	0.3352	0.1097	0.3352	0.0985	0.3352	0.0931	0.3352	0.0857	0.3352	0.0762
0.3511	0.1504	0.3511	0.1289	0.3511	0.1172	0.3511	0.107	0.3511	0.0997	0.3511	0.0894	0.3511	0.0786
0.3678	0.168	0.3678	0.1438	0.3678	0.1303	0.3678	0.1186	0.3678	0.1121	0.3678	0.1017	0.3678	0.0898
0.3853	0.168	0.3853	0.1438	0.3853	0.1346	0.3853	0.1279	0.3853	0.1219	0.3853	0.1115	0.3853	0.0992
0.4037	0.194	0.4037	0.1598	0.4037	0.1426	0.4037	0.1306	0.4037	0.1259	0.4037	0.117	0.4037	0.1054
0.4229	0.2368	0.4229	0.1906	0.4229	0.1721	0.4229	0.1558	0.4229	0.1416	0.4229	0.1217	0.4229	0.1092
0.4431	0.3088	0.4431	0.2193	0.4431	0.1881	0.4431	0.1671	0.4431	0.1496	0.4431	0.1273	0.4431	0.1097
0.4642	0.3417	0.4642	0.2524	0.4642	0.2138	0.4642	0.1852	0.4642	0.1637	0.4642	0.1345	0.4642	0.1211
0.4863	0.3417	0.4863	0.256	0.4863	0.2208	0.4863	0.1928	0.4863	0.1701	0.4863	0.1409	0.4863	0.1323
0.5094	0.3522	0.5094	0.2656	0.5094	0.2325	0.5094	0.2054	0.5094	0.1831	0.5094	0.1497	0.5094	0.1391

PTWW037.grf ~ RPP-WTP Pretreatment Facility ISRS ~ Calc No.: 24590-PTF-S0C-S15T-00057, Rev. A ~ Frequency (cps) ~ Spectral Acceleration (g) ~ Figure 37 ~ SLAB-WALL JOINT East-West Responses ~ Elevation 54 Ft. ~ Line 12.5 H

Damping Freq.	0.50% Accel.	Freq.	2% Accel.	Freq.	3% Accel.	Freq.	4% Accel.	Freq.	5% Accel.	Freq.	7% Accel.	Freq.	10% Accel.
0.5337	0.4096	0.5337	0.2771	0.5337	0.2325	0.5337	0.2054	0.5337	0.1831	0.5337	0.1539	0.5337	0.1396
0.5591	0.4096	0.5591	0.2771	0.5591	0.2398	0.5591	0.2148	0.5591	0.1949	0.5591	0.1654	0.5591	0.1396
0.5857	0.4096	0.5857	0.2771	0.5857	0.2404	0.5857	0.2159	0.5857	0.1975	0.5857	0.1686	0.5857	0.1441
0.6136	0.4475	0.6136	0.2969	0.6136	0.2444	0.6136	0.2234	0.6136	0.2051	0.6136	0.1751	0.6136	0.1441
0.6428	0.478	0.6428	0.3547	0.6428	0.3006	0.6428	0.2612	0.6428	0.2347	0.6428	0.1988	0.6428	0.168
0.6734	0.478	0.6734	0.3547	0.6734	0.3006	0.6734	0.2612	0.6734	0.2413	0.6734	0.2165	0.6734	0.1872
0.7055	0.478	0.7055	0.3547	0.7055	0.3006	0.7055	0.2612	0.7055	0.2413	0.7055	0.2186	0.7055	0.1922
0.7391	0.478	0.7391	0.3547	0.7391	0.3006	0.7391	0.2692	0.7391	0.2463	0.7391	0.2186	0.7391	0.1922
0.7743	0.5518	0.7743	0.3958	0.7743	0.3332	0.7743	0.2918	0.7743	0.268	0.7743	0.2351	0.7743	0.2018
0.8111	0.5518	0.8111	0.3958	0.8111	0.3332	0.8111	0.3035	0.8111	0.2874	0.8111	0.2587	0.8111	0.2236
0.8497	0.5518	0.8497	0.3958	0.8497	0.3332	0.8497	0.3117	0.8497	0.2984	0.8497	0.2723	0.8497	0.2373
0.8902	0.5518	0.8902	0.3958	0.8902	0.3656	0.8902	0.3431	0.8902	0.3226	0.8902	0.2873	0.8902	0.2462
0.9326	0.8605	0.9326	0.5585	0.9326	0.4629	0.9326	0.4023	0.9326	0.3602	0.9326	0.3049	0.9326	0.2549
0.977	0.8605	0.977	0.5585	0.977	0.4629	0.977	0.4045	0.977	0.3644	0.977	0.3083	0.977	0.2637
1.0235	0.9315	1.0235	0.5965	1.0235	0.5261	1.0235	0.4814	1.0235	0.4436	1.0235	0.3837	1.0235	0.3277
1.0723	0.9315	1.0723	0.6685	1.0723	0.603	1.0723	0.5467	1.0723	0.4995	1.0723	0.4355	1.0723	0.3729
1.1233	1.3398	1.1233	0.8315	1.1233	0.6788	1.1233	0.5837	1.1233	0.5408	1.1233	0.4681	1.1233	0.3987
1.1768	1.3398	1.1768	0.8315	1.1768	0.6788	1.1768	0.5855	1.1768	0.5505	1.1768	0.4858	1.1768	0.4238
1.2328	1.3398	1.2328	0.8315	1.2328	0.7369	1.2328	0.6596	1.2328	0.5925	1.2328	0.5105	1.2328	0.452
1.2916	1.3398	1.2916	0.9002	1.2916	0.7926	1.2916	0.7024	1.2916	0.6263	1.2916	0.5455	1.2916	0.4806
1.353	1.3398	1.353	0.9485	1.353	0.7926	1.353	0.7024	1.353	0.6282	1.353	0.574	1.353	0.5058
1.4175	1.4626	1.4175	0.9485	1.4175	0.7926	1.4175	0.7024	1.4175	0.6579	1.4175	0.6026	1.4175	0.5321
1.485	1.4626	1.485	0.9485	1.485	0.7926	1.485	0.7282	1.485	0.6958	1.485	0.636	1.485	0.5624
1.5557	1.5113	1.5557	1.0297	1.5557	0.8797	1.5557	0.7754	1.5557	0.726	1.5557	0.6634	1.5557	0.5886
1.6298	1.8158	1.6298	1.1086	1.6298	0.9552	1.6298	0.8627	1.6298	0.7931	1.6298	0.6875	1.6298	0.6064
1.7074	1.8158	1.7074	1.1086	1.7074	0.9552	1.7074	0.8627	1.7074	0.7931	1.7074	0.7024	1.7074	0.6246
1.7887	1.8158	1.7887	1.1086	1.7887	0.9552	1.7887	0.8627	1.7887	0.7931	1.7887	0.7213	1.7887	0.6476
1.8738	1.8158	1.8738	1.1086	1.8738	0.9552	1.8738	0.8651	1.8738	0.8263	1.8738	0.7567	1.8738	0.6698
1.963	1.8158	1.963	1.1086	1.963	0.9552	1.963	0.8972	1.963	0.8525	1.963	0.7755	1.963	0.683
2.0565	1.7414	2.0565	1.0948	2.0565	0.9593	2.0565	0.9017	2.0565	0.8525	2.0565	0.7755	2.0565	0.683
2.1544	1.7414	2.1544	1.0948	2.1544	0.9593	2.1544	0.9017	2.1544	0.8525	2.1544	0.7755	2.1544	0.683
2.257	1.5091	2.257	1.0367	2.257	0.9593	2.257	0.9017	2.257	0.8525	2.257	0.7755	2.257	0.683
2.3645	1.5091	2.3645	1.0367	2.3645	0.9593	2.3645	0.9017	2.3645	0.8525	2.3645	0.7755	2.3645	0.683
2.4771	1.5091	2.4771	1.0367	2.4771	1.009	2.4771	0.9017	2.4771	0.852	2.4771	0.7697	2.4771	0.6811
2.595	1.5091	2.595	1.0367	2.595	1.009	2.595	0.9017	2.595	0.8387	2.595	0.7357	2.595	0.6811

PTWW037.grf ~ RPP-WTP Pretreatment Facility ISRS ~ Calc No.: 24590-PTF-S0C-S15T-00057, Rev. A ~ Frequency (cps) ~ Spectral Acceleration (g) ~ Figure 37 ~ SLAB-WALL JOINT East-West Responses ~ Elevation 54 Ft. ~ Line 12.5 H

Damping	0.50%		2%		3%		4%		5%		7%		10%	
Freq.	Accel.	Freq.	Accel.	Freq.	Accel.	Freq.	Accel.	Freq.	Accel.	Freq.	Accel.	Freq.	Accel.
2.7186	1.5091	2.7186	1.0367	2.7186	1.009	2.7186	0.9017	2.7186	0.8387	2.7186	0.7357	2.7186	0.6811
2.848	1.5091	2.848	1.0367	2.848	1.009	2.848	0.9017	2.848	0.8387	2.848	0.7357	2.848	0.6811
2.9836	1.5091	2.9836	1.0367	2.9836	1.009	2.9836	0.9017	2.9836	0.8387	2.9836	0.7357	2.9836	0.6811
3.1257	1.5091	3.1257	1.0367	3.1257	0.9237	3.1257	0.9017	3.1257	0.8387	3.1257	0.7357	3.1257	0.6811
3.2745	1.5091	3.2745	1.0367	3.2745	0.9237	3.2745	0.9017	3.2745	0.8387	3.2745	0.7357	3.2745	0.6811
3.4305	1.5091	3.4305	1.0367	3.4305	0.9237	3.4305	0.9017	3.4305	0.8387	3.4305	0.7357	3.4305	0.6801
3.5938	1.6472	3.5938	1.0367	3.5938	0.9237	3.5938	0.9017	3.5938	0.8387	3.5938	0.7357	3.5938	0.6801
3.7649	1.6472	3.7649	1.1356	3.7649	0.9237	3.7649	0.9017	3.7649	0.8387	3.7649	0.7357	3.7649	0.6766
3.9442	1.6472	3.9442	1.1356	3.9442	0.9237	3.9442	0.906	3.9442	0.8387	3.9442	0.7357	3.9442	0.6759
4.132	1.6472	4.132	1.1356	4.132	0.9237	4.132	0.906	4.132	0.8387	4.132	0.7357	4.132	0.6712
4.3288	1.6472	4.3288	1.1356	4.3288	0.9237	4.3288	0.906	4.3288	0.8387	4.3288	0.7357	4.3288	0.6626
4.5349	1.6472	4.5349	1.1356	4.5349	0.9237	4.5349	0.906	4.5349	0.8387	4.5349	0.7357	4.5349	0.6525
4.7508	1.6472	4.7508	1.1048	4.7508	0.9237	4.7508	0.906	4.7508	0.8387	4.7508	0.7357	4.7508	0.6316
4.977	1.6472	4.977	0.9746	4.977	0.8757	4.977	0.829	4.977	0.7851	4.977	0.7083	4.977	0.6206
5.214	1.6472	5.214	0.9746	5.214	0.8463	5.214	0.785	5.214	0.7434	5.214	0.6732	5.214	0.5898
5.4623	1.7798	5.4623	0.9746	5.4623	0.8463	5.4623	0.785	5.4623	0.7434	5.4623	0.6732	5.4623	0.5898
5.7224	1.7798	5.7224	0.9746	5.7224	0.8463	5.7224	0.785	5.7224	0.7434	5.7224	0.6732	5.7224	0.5898
5.9948	1.7798	5.9948	0.9746	5.9948	0.8438	5.9948	0.785	5.9948	0.7434	5.9948	0.6732	5.9948	0.5898
6.2803	1.7798	6.2803	0.9746	6.2803	0.8438	6.2803	0.785	6.2803	0.7434	6.2803	0.6732	6.2803	0.5898
6.5793	1.7798	6.5793	0.9746	6.5793	0.8438	6.5793	0.7804	6.5793	0.7393	6.5793	0.6657	6.5793	0.5795
6.8926	1.7798	6.8926	0.963	6.8926	0.8429	6.8926	0.7674	6.8926	0.7128	6.8926	0.6345	6.8926	0.5677
7.2208	1.4914	7.2208	0.935	7.2208	0.7922	7.2208	0.7331	7.2208	0.6844	7.2208	0.6283	7.2208	0.5677
7.5646	1.168	7.5646	0.822	7.5646	0.7632	7.5646	0.7188	7.5646	0.6833	7.5646	0.6283	7.5646	0.5677
7.9248	1.0987	7.9248	0.8201	7.9248	0.7623	7.9248	0.7176	7.9248	0.6811	7.9248	0.6237	7.9248	0.5627
8.3022	1.0987	8.3022	0.7845	8.3022	0.7283	8.3022	0.6777	8.3022	0.6364	8.3022	0.5884	8.3022	0.5417
8.6975	0.8935	8.6975	0.7092	8.6975	0.6368	8.6975	0.6061	8.6975	0.5819	8.6975	0.5373	8.6975	0.5059
9.1116	0.8935	9.1116	0.7092	9.1116	0.6368	9.1116	0.5827	9.1116	0.5505	9.1116	0.5085	9.1116	0.4846
9.5455	0.8763	9.5455	0.7092	9.5455	0.6368	9.5455	0.5827	9.5455	0.5459	9.5455	0.4951	9.5455	0.4643
10	0.8763	10	0.7092	10	0.6368	10	0.5827	10	0.5459	10	0.4934	10	0.4429
10.4762	0.8603	10.4762	0.7092	10.4762	0.6368	10.4762	0.5774	10.4762	0.5297	10.4762	0.4688	10.4762	0.4271
10.975	0.791	10.975	0.6543	10.975	0.6067	10.975	0.5582	10.975	0.5137	10.975	0.4674	10.975	0.4271
11.4976	0.791	11.4976	0.6543	11.4976	0.6014	11.4976	0.5519	11.4976	0.5094	11.4976	0.4435	11.4976	0.4142
12.045	0.6677	12.045	0.5543	12.045	0.5086	12.045	0.4716	12.045	0.4394	12.045	0.4081	12.045	0.3915
12.6186	0.6325	12.6186	0.5145	12.6186	0.4727	12.6186	0.4409	12.6186	0.4251	12.6186	0.4004	12.6186	0.3774
13.2194	0.6325	13.2194	0.5025	13.2194	0.4639	13.2194	0.4269	13.2194	0.4021	13.2194	0.379	13.2194	0.3634

PTWW037.grf ~ RPP-WTP Pretreatment Facility ISRS ~ Calc No.: 24590-PTF-S0C-S15T-00057, Rev. A ~ Frequency (cps) ~ Spectral Acceleration (g) ~ Figure 37 ~ SLAB-WALL JOINT East-West Responses ~ Elevation 54 Ft. ~ Line 12.5 H

Damping	0.50%		2%		3%		4%		5%		7%		10%
Freq.	Accel.	Freq.	Accel.	Freq.	Accel.	Freq.	Accel.	Freq.	Accel.	Freq.	Accel.	Freq.	Accel.
13.8489	0.6152	13.8489	0.4815	13.8489	0.433	13.8489	0.3995	13.8489	0.3896	13.8489	0.3705	13.8489	0.3527
14.5083	0.5318	14.5083	0.4455	14.5083	0.4096	14.5083	0.381	14.5083	0.3726	14.5083	0.3575	14.5083	0.3484
15.1991	0.4787	15.1991	0.4141	15.1991	0.3936	15.1991	0.3795	15.1991	0.3697	15.1991	0.3575	15.1991	0.3484
15.9228	0.4787	15.9228	0.3815	15.9228	0.3644	15.9228	0.3609	15.9228	0.358	15.9228	0.3528	15.9228	0.3467
16.681	0.4787	16.681	0.3815	16.681	0.3644	16.681	0.3544	16.681	0.3483	16.681	0.3439	16.681	0.3416
17.4753	0.4307	17.4753	0.3815	17.4753	0.3644	17.4753	0.3544	17.4753	0.3483	17.4753	0.3418	17.4753	0.337
18.3074	0.4095	18.3074	0.3431	18.3074	0.3367	18.3074	0.3354	18.3074	0.3336	18.3074	0.3315	18.3074	0.3305
19.1791	0.4095	19.1791	0.3431	19.1791	0.3349	19.1791	0.3293	19.1791	0.3262	19.1791	0.3251	19.1791	0.325
20.0923	0.3708	20.0923	0.3431	20.0923	0.3349	20.0923	0.3293	20.0923	0.3262	20.0923	0.3243	20.0923	0.323
21.049	0.3708	21.049	0.3431	21.049	0.3349	21.049	0.3293	21.049	0.3262	21.049	0.3236	21.049	0.3215
22.0513	0.3708	22.0513	0.3431	22.0513	0.3349	22.0513	0.3293	22.0513	0.3262	22.0513	0.323	22.0513	0.3199
23.1013	0.3708	23.1013	0.3431	23.1013	0.3349	23.1013	0.3293	23.1013	0.3262	23.1013	0.323	23.1013	0.3199
24.2013	0.3708	24.2013	0.3431	24.2013	0.3349	24.2013	0.3293	24.2013	0.3255	24.2013	0.3206	24.2013	0.3186
25.3536	0.3358	25.3536	0.3197	25.3536	0.3192	25.3536	0.3187	25.3536	0.3181	25.3536	0.317	25.3536	0.3164
26.5609	0.3358	26.5609	0.3169	26.5609	0.3159	26.5609	0.3158	26.5609	0.3158	26.5609	0.3155	26.5609	0.3148
27.8256	0.3358	27.8256	0.3169	27.8256	0.3159	27.8256	0.3153	27.8256	0.3149	27.8256	0.3143	27.8256	0.3137
29.1505	0.3358	29.1505	0.3165	29.1505	0.3153	29.1505	0.3142	29.1505	0.3137	29.1505	0.3132	29.1505	0.313
30.5386	0.3312	30.5386	0.3165	30.5386	0.3153	30.5386	0.3142	30.5386	0.3133	30.5386	0.3131	30.5386	0.313
31.9927	0.3297	31.9927	0.3163	31.9927	0.3146	31.9927	0.3138	31.9927	0.3132	31.9927	0.3131	31.9927	0.313
33.516	0.3144	33.516	0.3134	33.516	0.3133	33.516	0.3132	33.516	0.3132	33.516	0.3131	33.516	0.313
35.1119	0.3135	35.1119	0.3134	35.1119	0.3133	35.1119	0.3132	35.1119	0.3132	35.1119	0.3131	35.1119	0.313
36.7838	0.3134	36.7838	0.3133	36.7838	0.3132	36.7838	0.3132	36.7838	0.3132	36.7838	0.3131	36.7838	0.313
38.5353	0.3132	38.5353	0.3132	38.5353	0.3131	38.5353	0.3131	38.5353	0.3131	38.5353	0.3131	38.5353	0.313
40.3702	0.3131	40.3702	0.3131	40.3702	0.3131	40.3702	0.313	40.3702	0.313	40.3702	0.313	40.3702	0.3129
42.2924	0.313	42.2924	0.3129	42.2924	0.3129	42.2924	0.3129	42.2924	0.3129	42.2924	0.3129	42.2924	0.3129
44.3062	0.3128	44.3062	0.3128	44.3062	0.3128	44.3062	0.3128	44.3062	0.3128	44.3062	0.3128	44.3062	0.3128
46.4159	0.3127	46.4159	0.3127	46.4159	0.3127	46.4159	0.3127	46.4159	0.3127	46.4159	0.3127	46.4159	0.3127
48.626	0.3126	48.626	0.3126	48.626	0.3126	48.626	0.3126	48.626	0.3126	48.626	0.3126	48.626	0.3126
50.9414	0.3125	50.9414	0.3125	50.9414	0.3125	50.9414	0.3125	50.9414	0.3125	50.9414	0.3125	50.9414	0.3125

PTWW038.grf ~ RPP-WTP Pretreatment Facility ISRS ~ Calc No.: 24590-PTF-S0C-S15T-00057, Rev. A ~ Frequency (cps) ~ Spectral Acceleration (g) ~ Figure 38 ~ SLAB-WALL JOINT North-South Responses ~ Elevation 54 Ft. ~ Line 12.5 H

Damping	0.50%		2%		3%		4%		5%		7%		10%
Freq.	Accel.	Freq.	Accel.	Freq.	Accel.	Freq.	Accel.	Freq.	Accel.	Freq.	Accel.	Freq.	Accel.
0.1098	0.0405	0.1098	0.0365	0.1098	0.0342	0.1098	0.0322	0.1098	0.0303	0.1098	0.0272	0.1098	0.0235
0.115	0.0405	0.115	0.0365	0.115	0.0342	0.115	0.0322	0.115	0.0303	0.115	0.0272	0.115	0.0259
0.1204	0.0405	0.1204	0.0365	0.1204	0.0342	0.1204	0.0322	0.1204	0.031	0.1204	0.0297	0.1204	0.028
0.1262	0.0405	0.1262	0.0365	0.1262	0.0352	0.1262	0.0342	0.1262	0.0334	0.1262	0.0318	0.1262	0.0297
0.1322	0.0405	0.1322	0.0382	0.1322	0.037	0.1322	0.0359	0.1322	0.0349	0.1322	0.0333	0.1322	0.0316
0.1385	0.0411	0.1385	0.0392	0.1385	0.0382	0.1385	0.0372	0.1385	0.0363	0.1385	0.0348	0.1385	0.0328
0.1451	0.0417	0.1451	0.0398	0.1451	0.0387	0.1451	0.0377	0.1451	0.0368	0.1451	0.0352	0.1451	0.0332
0.152	0.0439	0.152	0.0401	0.152	0.0387	0.152	0.0377	0.152	0.0368	0.152	0.0352	0.152	0.0332
0.1592	0.0462	0.1592	0.0416	0.1592	0.0396	0.1592	0.0377	0.1592	0.0368	0.1592	0.0352	0.1592	0.0332
0.1668	0.0584	0.1668	0.0506	0.1668	0.0463	0.1668	0.0426	0.1668	0.0395	0.1668	0.0352	0.1668	0.0332
0.1748	0.0645	0.1748	0.0566	0.1748	0.0522	0.1748	0.0484	0.1748	0.045	0.1748	0.0394	0.1748	0.0332
0.1831	0.0668	0.1831	0.0583	0.1831	0.0541	0.1831	0.0504	0.1831	0.0471	0.1831	0.0415	0.1831	0.0354
0.1918	0.0678	0.1918	0.0586	0.1918	0.0543	0.1918	0.0507	0.1918	0.0474	0.1918	0.0418	0.1918	0.038
0.2009	0.0697	0.2009	0.0596	0.2009	0.0543	0.2009	0.0514	0.2009	0.0487	0.2009	0.0438	0.2009	0.0411
0.2105	0.0722	0.2105	0.062	0.2105	0.0582	0.2105	0.0547	0.2105	0.0516	0.2105	0.0482	0.2105	0.0446
0.2205	0.0819	0.2205	0.0709	0.2205	0.0651	0.2205	0.06	0.2205	0.0574	0.2205	0.0531	0.2205	0.0475
0.231	0.0959	0.231	0.0792	0.231	0.0703	0.231	0.0665	0.231	0.063	0.231	0.0578	0.231	0.0525
0.242	0.0984	0.242	0.0845	0.242	0.0774	0.242	0.0721	0.242	0.0681	0.242	0.0618	0.242	0.0551
0.2535	0.1059	0.2535	0.0913	0.2535	0.0833	0.2535	0.0763	0.2535	0.0702	0.2535	0.0618	0.2535	0.0551
0.2656	0.1138	0.2656	0.0944	0.2656	0.084	0.2656	0.0763	0.2656	0.0702	0.2656	0.0618	0.2656	0.0551
0.2783	0.1138	0.2783	0.0944	0.2783	0.084	0.2783	0.0779	0.2783	0.074	0.2783	0.0677	0.2783	0.0611
0.2915	0.1138	0.2915	0.1008	0.2915	0.0946	0.2915	0.0892	0.2915	0.0843	0.2915	0.0764	0.2915	0.0677
0.3054	0.1179	0.3054	0.1056	0.3054	0.0987	0.3054	0.0926	0.3054	0.0872	0.3054	0.0785	0.3054	0.0706
0.3199	0.1179	0.3199	0.1056	0.3199	0.0987	0.3199	0.0926	0.3199	0.0894	0.3199	0.0844	0.3199	0.0786
0.3352	0.1179	0.3352	0.1098	0.3352	0.1056	0.3352	0.1017	0.3352	0.0982	0.3352	0.0921	0.3352	0.0848
0.3511	0.1654	0.3511	0.129	0.3511	0.1133	0.3511	0.1075	0.3511	0.1035	0.3511	0.0964	0.3511	0.088
0.3678	0.2415	0.3678	0.1832	0.3678	0.1565	0.3678	0.1364	0.3678	0.1213	0.3678	0.1006	0.3678	0.088
0.3853	0.2549	0.3853	0.187	0.3853	0.1595	0.3853	0.1387	0.3853	0.1269	0.3853	0.1092	0.3853	0.091
0.4037	0.2549	0.4037	0.187	0.4037	0.1595	0.4037	0.1387	0.4037	0.1279	0.4037	0.1163	0.4037	0.1034
0.4229	0.2549	0.4229	0.187	0.4229	0.1651	0.4229	0.1485	0.4229	0.1344	0.4229	0.1233	0.4229	0.1111
0.4431	0.3288	0.4431	0.2339	0.4431	0.2038	0.4431	0.1813	0.4431	0.1641	0.4431	0.1399	0.4431	0.1181
0.4642	0.3288	0.4642	0.2339	0.4642	0.2038	0.4642	0.1813	0.4642	0.1641	0.4642	0.1399	0.4642	0.1181
0.4863	0.3288	0.4863	0.2339	0.4863	0.2038	0.4863	0.1813	0.4863	0.1641	0.4863	0.1421	0.4863	0.1246
0.5094	0.3288	0.5094	0.2339	0.5094	0.2038	0.5094	0.1813	0.5094	0.1641	0.5094	0.1472	0.5094	0.1295

PTWW038.grf ~ RPP-WTP Pretreatment Facility ISRS ~ Calc No.: 24590-PTF-S0C-S15T-00057, Rev. A ~ Frequency (cps) ~ Spectral Acceleration (g) ~ Figure 38 ~ SLAB-WALL JOINT North-South Responses ~ Elevation 54 Ft. ~ Line 12.5 H

Damping Freq.	0.50% Accel.	Freq.	2% Accel.	Freq.	3% Accel.	Freq.	4% Accel.	Freq.	5% Accel.	Freq.	7% Accel.	Freq.	10% Accel.
0.5337	0.3356	0.5337	0.2387	0.5337	0.2081	0.5337	0.19	0.5337	0.1796	0.5337	0.1614	0.5337	0.1401
0.5591	0.3997	0.5591	0.2762	0.5591	0.244	0.5591	0.2179	0.5591	0.1971	0.5591	0.1724	0.5591	0.1556
0.5857	0.3997	0.5857	0.2863	0.5857	0.2573	0.5857	0.2332	0.5857	0.2128	0.5857	0.1853	0.5857	0.1724
0.6136	0.3997	0.6136	0.2863	0.6136	0.2573	0.6136	0.2332	0.6136	0.2128	0.6136	0.1998	0.6136	0.1858
0.6428	0.3997	0.6428	0.2863	0.6428	0.2573	0.6428	0.2332	0.6428	0.2219	0.6428	0.2115	0.6428	0.1969
0.6734	0.411	0.6734	0.2863	0.6734	0.2574	0.6734	0.2449	0.6734	0.2378	0.6734	0.2244	0.6734	0.2072
0.7055	0.411	0.7055	0.301	0.7055	0.2757	0.7055	0.2638	0.7055	0.2534	0.7055	0.2357	0.7055	0.2156
0.7391	0.6367	0.7391	0.4169	0.7391	0.3404	0.7391	0.2927	0.7391	0.2746	0.7391	0.2445	0.7391	0.217
0.7743	0.6367	0.7743	0.4169	0.7743	0.3404	0.7743	0.3038	0.7743	0.2858	0.7743	0.2555	0.7743	0.2218
0.8111	0.6596	0.8111	0.4428	0.8111	0.386	0.8111	0.3422	0.8111	0.3081	0.8111	0.2598	0.8111	0.2218
0.8497	0.6596	0.8497	0.4428	0.8497	0.4051	0.8497	0.3738	0.8497	0.347	0.8497	0.3034	0.8497	0.256
0.8902	0.6828	0.8902	0.4451	0.8902	0.4051	0.8902	0.3738	0.8902	0.3511	0.8902	0.3194	0.8902	0.2761
0.9326	0.737	0.9326	0.5191	0.9326	0.4567	0.9326	0.411	0.9326	0.3766	0.9326	0.328	0.9326	0.2821
0.977	0.9914	0.977	0.6358	0.977	0.525	0.977	0.4553	0.977	0.408	0.977	0.3484	0.977	0.2994
1.0235	0.9914	1.0235	0.6358	1.0235	0.5662	1.0235	0.5139	1.0235	0.4702	1.0235	0.4041	1.0235	0.3384
1.0723	0.9914	1.0723	0.6668	1.0723	0.5976	1.0723	0.5399	1.0723	0.4914	1.0723	0.4166	1.0723	0.3541
1.1233	1.2606	1.1233	0.8561	1.1233	0.7168	1.1233	0.6174	1.1233	0.5433	1.1233	0.4431	1.1233	0.3633
1.1768	1.2606	1.1768	0.8561	1.1768	0.7168	1.1768	0.6174	1.1768	0.5433	1.1768	0.4467	1.1768	0.3729
1.2328	1.2606	1.2328	0.935	1.2328	0.8202	1.2328	0.7293	1.2328	0.6556	1.2328	0.5433	1.2328	0.4321
1.2916	1.2606	1.2916	1.0351	1.2916	0.8991	1.2916	0.793	1.2916	0.708	1.2916	0.5814	1.2916	0.4586
1.353	1.3319	1.353	1.0351	1.353	0.8991	1.353	0.793	1.353	0.708	1.353	0.5814	1.353	0.4631
1.4175	1.6092	1.4175	1.1325	1.4175	0.9683	1.4175	0.8621	1.4175	0.7817	1.4175	0.6627	1.4175	0.5486
1.485	1.6092	1.485	1.1325	1.485	0.9683	1.485	0.885	1.485	0.8264	1.485	0.7199	1.485	0.6006
1.5557	1.8872	1.5557	1.1818	1.5557	1.0008	1.5557	0.892	1.5557	0.8264	1.5557	0.7265	1.5557	0.6185
1.6298	1.9322	1.6298	1.3084	1.6298	1.1683	1.6298	1.0534	1.6298	0.9565	1.6298	0.8016	1.6298	0.6401
1.7074	1.9702	1.7074	1.3601	1.7074	1.2627	1.7074	1.1415	1.7074	1.0371	1.7074	0.8692	1.7074	0.7006
1.7887	2.4552	1.7887	1.4456	1.7887	1.2629	1.7887	1.1415	1.7887	1.0371	1.7887	0.8773	1.7887	0.7486
1.8738	2.4552	1.8738	1.4456	1.8738	1.2629	1.8738	1.1415	1.8738	1.0371	1.8738	0.9259	1.8738	0.788
1.963	2.4552	1.963	1.4456	1.963	1.2629	1.963	1.1498	1.963	1.0818	1.963	0.9626	1.963	0.8157
2.0565	2.4552	2.0565	1.4456	2.0565	1.2629	2.0565	1.1701	2.0565	1.1049	2.0565	0.9829	2.0565	0.8288
2.1544	2.4552	2.1544	1.4456	2.1544	1.3316	2.1544	1.2297	2.1544	1.1411	2.1544	0.9932	2.1544	0.8645
2.257	2.2367	2.257	1.4456	2.257	1.3316	2.257	1.2297	2.257	1.1534	2.257	1.0344	2.257	0.8939
2.3645	2.2367	2.3645	1.4456	2.3645	1.3316	2.3645	1.2422	2.3645	1.1724	2.3645	1.0471	2.3645	0.898
2.4771	2.2367	2.4771	1.6143	2.4771	1.3804	2.4771	1.2551	2.4771	1.1724	2.4771	1.0471	2.4771	0.898
2.595	2.138	2.595	1.6143	2.595	1.3804	2.595	1.2551	2.595	1.1724	2.595	1.0471	2.595	0.898

PTWW038.grf ~ RPP-WTP Pretreatment Facility ISRS ~ Calc No.: 24590-PTF-S0C-S15T-00057, Rev. A ~ Frequency (cps) ~ Spectral Acceleration (g) ~ Figure 38 ~ SLAB-WALL JOINT North-South Responses ~ Elevation 54 Ft. ~ Line 12.5 H

Damping	0.50%		2%		3%		4%		5%		7%		10%
Freq.	Accel.	Freq.	Accel.	Freq.	Accel.	Freq.	Accel.	Freq.	Accel.	Freq.	Accel.	Freq.	Accel.
2.7186	2.138	2.7186	1.6143	2.7186	1.3804	2.7186	1.2551	2.7186	1.1724	2.7186	1.0471	2.7186	0.898
2.848	2.138	2.848	1.6143	2.848	1.3804	2.848	1.2551	2.848	1.1724	2.848	1.0471	2.848	0.898
2.9836	2.138	2.9836	1.6143	2.9836	1.3804	2.9836	1.2551	2.9836	1.1568	2.9836	1.0114	2.9836	0.8645
3.1257	2.138	3.1257	1.3773	3.1257	1.0982	3.1257	1.0035	3.1257	0.9573	3.1257	0.8829	3.1257	0.7931
3.2745	2.138	3.2745	1.2119	3.2745	1.0686	3.2745	0.9673	3.2745	0.886	3.2745	0.778	3.2745	0.7168
3.4305	1.5368	3.4305	1.0471	3.4305	0.9495	3.4305	0.8824	3.4305	0.8379	3.4305	0.7547	3.4305	0.6598
3.5938	1.5368	3.5938	1.0165	3.5938	0.898	3.5938	0.8299	3.5938	0.7946	3.5938	0.7273	3.5938	0.6376
3.7649	1.5368	3.7649	1.0165	3.7649	0.898	3.7649	0.8299	3.7649	0.7769	3.7649	0.6958	3.7649	0.6089
3.9442	1.5368	3.9442	1.0165	3.9442	0.8472	3.9442	0.7941	3.9442	0.7477	3.9442	0.6723	3.9442	0.5955
4.132	1.5368	4.132	1.0165	4.132	0.845	4.132	0.7941	4.132	0.7477	4.132	0.6723	4.132	0.5955
4.3288	1.5368	4.3288	0.9973	4.3288	0.8194	4.3288	0.7522	4.3288	0.7017	4.3288	0.6303	4.3288	0.5622
4.5349	1.5368	4.5349	0.8745	4.5349	0.7347	4.5349	0.6652	4.5349	0.6197	4.5349	0.5656	4.5349	0.5097
4.7508	1.518	4.7508	0.8745	4.7508	0.7183	4.7508	0.6169	4.7508	0.5587	4.7508	0.4909	4.7508	0.4618
4.977	1.518	4.977	0.8614	4.977	0.7025	4.977	0.6052	4.977	0.5367	4.977	0.4572	4.977	0.4284
5.214	1.3404	5.214	0.7497	5.214	0.6443	5.214	0.5421	5.214	0.5109	5.214	0.4398	5.214	0.4021
5.4623	1.3404	5.4623	0.7497	5.4623	0.6443	5.4623	0.5254	5.4623	0.5109	5.4623	0.438	5.4623	0.3783
5.7224	1.3404	5.7224	0.7497	5.7224	0.6443	5.7224	0.5254	5.7224	0.5109	5.7224	0.438	5.7224	0.3681
5.9948	1.3404	5.9948	0.7497	5.9948	0.6443	5.9948	0.5254	5.9948	0.5109	5.9948	0.438	5.9948	0.3681
6.2803	1.3404	6.2803	0.7497	6.2803	0.6443	6.2803	0.5254	6.2803	0.5109	6.2803	0.438	6.2803	0.3681
6.5793	1.3404	6.5793	0.7497	6.5793	0.6443	6.5793	0.5254	6.5793	0.5109	6.5793	0.438	6.5793	0.3681
6.8926	1.3404	6.8926	0.7497	6.8926	0.6443	6.8926	0.5254	6.8926	0.5109	6.8926	0.438	6.8926	0.3681
7.2208	1.274	7.2208	0.7497	7.2208	0.6443	7.2208	0.5254	7.2208	0.5109	7.2208	0.438	7.2208	0.3681
7.5646	1.274	7.5646	0.7455	7.5646	0.6309	7.5646	0.5254	7.5646	0.5092	7.5646	0.438	7.5646	0.3681
7.9248	1.274	7.9248	0.6003	7.9248	0.5494	7.9248	0.5064	7.9248	0.471	7.9248	0.4168	7.9248	0.3609
8.3022	1.274	8.3022	0.5659	8.3022	0.4849	8.3022	0.454	8.3022	0.4288	8.3022	0.394	8.3022	0.3594
8.6975	1.0027	8.6975	0.521	8.6975	0.4849	8.6975	0.454	8.6975	0.4288	8.6975	0.3913	8.6975	0.3536
9.1116	1.0027	9.1116	0.4701	9.1116	0.4386	9.1116	0.4105	9.1116	0.3865	9.1116	0.3654	9.1116	0.3376
9.5455	1.0027	9.5455	0.4494	9.5455	0.4069	9.5455	0.3794	9.5455	0.3652	9.5455	0.3418	9.5455	0.3167
10	0.6463	10	0.4494	10	0.4069	10	0.3794	10	0.3585	10	0.3293	10	0.3015
10.4762	0.6411	10.4762	0.4371	10.4762	0.3959	10.4762	0.3648	10.4762	0.347	10.4762	0.3169	10.4762	0.2936
10.975	0.6411	10.975	0.4085	10.975	0.3668	10.975	0.3387	10.975	0.3179	10.975	0.2923	10.975	0.2891
11.4976	0.6411	11.4976	0.3647	11.4976	0.3304	11.4976	0.3133	11.4976	0.3024	11.4976	0.2893	11.4976	0.2857
12.045	0.6411	12.045	0.3647	12.045	0.3304	12.045	0.3133	12.045	0.3024	12.045	0.2893	12.045	0.2839
12.6186	0.6411	12.6186	0.3647	12.6186	0.3304	12.6186	0.3133	12.6186	0.3024	12.6186	0.2893	12.6186	0.2831
13.2194	0.6411	13.2194	0.3647	13.2194	0.3304	13.2194	0.3133	13.2194	0.3024	13.2194	0.2893	13.2194	0.2831

PTWW038.grf ~ RPP-WTP Pretreatment Facility ISRS ~ Calc No.: 24590-PTF-S0C-S15T-00057, Rev. A ~ Frequency (cps) ~ Spectral Acceleration (g) ~ Figure 38 ~ SLAB-WALL JOINT North-South Responses ~ Elevation 54 Ft. ~ Line 12.5 H

Damping	0.50%		2%		3%		4%		5%		7%		10%
Freq.	Accel.	Freq.	Accel.	Freq.	Accel.	Freq.	Accel.	Freq.	Accel.	Freq.	Accel.	Freq.	Accel.
13.8489	0.6411	13.8489	0.3647	13.8489	0.3304	13.8489	0.3133	13.8489	0.3024	13.8489	0.2893	13.8489	0.2831
14.5083	0.6411	14.5083	0.3647	14.5083	0.3304	14.5083	0.3133	14.5083	0.3024	14.5083	0.2893	14.5083	0.2831
15.1991	0.6411	15.1991	0.3647	15.1991	0.3304	15.1991	0.3133	15.1991	0.3024	15.1991	0.2893	15.1991	0.2831
15.9228	0.6411	15.9228	0.3647	15.9228	0.3304	15.9228	0.3133	15.9228	0.3024	15.9228	0.2893	15.9228	0.2831
16.681	0.6411	16.681	0.3647	16.681	0.3304	16.681	0.3133	16.681	0.3024	16.681	0.2893	16.681	0.2831
17.4753	0.6411	17.4753	0.3647	17.4753	0.3304	17.4753	0.3133	17.4753	0.3024	17.4753	0.2893	17.4753	0.2831
18.3074	0.4714	18.3074	0.3284	18.3074	0.3152	18.3074	0.3052	18.3074	0.298	18.3074	0.2893	18.3074	0.2831
19.1791	0.4714	19.1791	0.3088	19.1791	0.2936	19.1791	0.2872	19.1791	0.2851	19.1791	0.2842	19.1791	0.2825
20.0923	0.4714	20.0923	0.3088	20.0923	0.2886	20.0923	0.2865	20.0923	0.2851	20.0923	0.2833	20.0923	0.2814
21.049	0.3824	21.049	0.2877	21.049	0.2842	21.049	0.2843	21.049	0.2836	21.049	0.2819	21.049	0.2801
22.0513	0.3824	22.0513	0.2873	22.0513	0.2834	22.0513	0.2816	22.0513	0.2806	22.0513	0.2795	22.0513	0.2783
23.1013	0.2973	23.1013	0.2832	23.1013	0.2814	23.1013	0.2802	23.1013	0.2793	23.1013	0.2779	23.1013	0.2765
24.2013	0.2947	24.2013	0.2805	24.2013	0.2788	24.2013	0.2776	24.2013	0.2768	24.2013	0.2763	24.2013	0.2756
25.3536	0.288	25.3536	0.2805	25.3536	0.2788	25.3536	0.2776	25.3536	0.2768	25.3536	0.2757	25.3536	0.2749
26.5609	0.288	26.5609	0.2805	26.5609	0.2788	26.5609	0.2776	26.5609	0.2768	26.5609	0.2757	26.5609	0.2747
27.8256	0.2867	27.8256	0.28	27.8256	0.2782	27.8256	0.2771	27.8256	0.2762	27.8256	0.2751	27.8256	0.2741
29.1505	0.2773	29.1505	0.2753	29.1505	0.2749	29.1505	0.2745	29.1505	0.2742	29.1505	0.2738	29.1505	0.2732
30.5386	0.2773	30.5386	0.2727	30.5386	0.2726	30.5386	0.2725	30.5386	0.2724	30.5386	0.2723	30.5386	0.2721
31.9927	0.2707	31.9927	0.271	31.9927	0.271	31.9927	0.2711	31.9927	0.2711	31.9927	0.2712	31.9927	0.2712
33.516	0.2707	33.516	0.2707	33.516	0.2706	33.516	0.2706	33.516	0.2706	33.516	0.2706	33.516	0.2706
35.1119	0.27	35.1119	0.27	35.1119	0.27	35.1119	0.2701	35.1119	0.2701	35.1119	0.2701	35.1119	0.2701
36.7838	0.2695	36.7838	0.2696	36.7838	0.2696	36.7838	0.2696	36.7838	0.2697	36.7838	0.2697	36.7838	0.2697
38.5353	0.2693	38.5353	0.2693	38.5353	0.2693	38.5353	0.2693	38.5353	0.2693	38.5353	0.2693	38.5353	0.2693
40.3702	0.269	40.3702	0.269	40.3702	0.269	40.3702	0.269	40.3702	0.269	40.3702	0.269	40.3702	0.269
42.2924	0.2687	42.2924	0.2687	42.2924	0.2687	42.2924	0.2687	42.2924	0.2687	42.2924	0.2687	42.2924	0.2688
44.3062	0.2685	44.3062	0.2685	44.3062	0.2685	44.3062	0.2685	44.3062	0.2685	44.3062	0.2685	44.3062	0.2685
46.4159	0.2683	46.4159	0.2683	46.4159	0.2683	46.4159	0.2683	46.4159	0.2683	46.4159	0.2683	46.4159	0.2683
48.626	0.2681	48.626	0.2681	48.626	0.2681	48.626	0.2681	48.626	0.2681	48.626	0.2681	48.626	0.2681
50.9414	0.2679	50.9414	0.2679	50.9414	0.2679	50.9414	0.2679	50.9414	0.2679	50.9414	0.2679	50.9414	0.2679

PTWW040.grf ~ RPP-WTP Pretreatment Facility ISRS ~ Calc No.: 24590-PTF-S0C-S15T-00057, Rev. A ~ Frequency (cps) ~ Spectral Acceleration (g) ~ Figure 40 ~ SLAB-WALL JOINT East-West Responses ~ Elevation 54 Ft. ~ Line 30 B

Damping Freq.	0.50% Accel.	Freq.	2% Accel.	Freq.	3% Accel.	Freq.	4% Accel.	Freq.	5% Accel.	Freq.	7% Accel.	Freq.	10% Accel.
0.1098	0.0375	0.1098	0.0344	0.1098	0.0327	0.1098	0.0312	0.1098	0.0298	0.1098	0.0274	0.1098	0.0252
0.115	0.0375	0.115	0.0344	0.115	0.0327	0.115	0.0312	0.115	0.0299	0.115	0.0277	0.115	0.0258
0.1204	0.0375	0.1204	0.0344	0.1204	0.0331	0.1204	0.0322	0.1204	0.0312	0.1204	0.0294	0.1204	0.0269
0.1262	0.0431	0.1262	0.0397	0.1262	0.0378	0.1262	0.036	0.1262	0.0343	0.1262	0.0314	0.1262	0.0278
0.1322	0.0504	0.1322	0.045	0.1322	0.042	0.1322	0.0393	0.1322	0.0369	0.1322	0.0328	0.1322	0.0281
0.1385	0.056	0.1385	0.0489	0.1385	0.0449	0.1385	0.0414	0.1385	0.0384	0.1385	0.0345	0.1385	0.0303
0.1451	0.0581	0.1451	0.0509	0.1451	0.0475	0.1451	0.0445	0.1451	0.0419	0.1451	0.0375	0.1451	0.0326
0.152	0.0616	0.152	0.0546	0.152	0.0507	0.152	0.0472	0.152	0.0441	0.152	0.0391	0.152	0.0338
0.1592	0.062	0.1592	0.0546	0.1592	0.0507	0.1592	0.0472	0.1592	0.0442	0.1592	0.0397	0.1592	0.0351
0.1668	0.064	0.1668	0.0561	0.1668	0.0518	0.1668	0.0481	0.1668	0.0451	0.1668	0.0403	0.1668	0.0355
0.1748	0.064	0.1748	0.0561	0.1748	0.0518	0.1748	0.0481	0.1748	0.0451	0.1748	0.0403	0.1748	0.0355
0.1831	0.064	0.1831	0.0561	0.1831	0.0518	0.1831	0.0481	0.1831	0.0451	0.1831	0.0403	0.1831	0.0368
0.1918	0.0641	0.1918	0.0562	0.1918	0.0518	0.1918	0.0494	0.1918	0.0476	0.1918	0.0445	0.1918	0.0404
0.2009	0.0642	0.2009	0.0583	0.2009	0.0558	0.2009	0.0534	0.2009	0.0513	0.2009	0.0474	0.2009	0.0424
0.2105	0.0665	0.2105	0.0603	0.2105	0.0575	0.2105	0.0549	0.2105	0.0525	0.2105	0.049	0.2105	0.0449
0.2205	0.078	0.2205	0.0646	0.2205	0.0619	0.2205	0.0595	0.2205	0.0573	0.2205	0.0533	0.2205	0.0484
0.231	0.0933	0.231	0.0774	0.231	0.0694	0.231	0.063	0.231	0.0598	0.231	0.0556	0.231	0.0503
0.242	0.0933	0.242	0.0774	0.242	0.0722	0.242	0.0678	0.242	0.0637	0.242	0.0566	0.242	0.0512
0.2535	0.0933	0.2535	0.0817	0.2535	0.0771	0.2535	0.0729	0.2535	0.0692	0.2535	0.0628	0.2535	0.0552
0.2656	0.0933	0.2656	0.0839	0.2656	0.0794	0.2656	0.0754	0.2656	0.0717	0.2656	0.0653	0.2656	0.0575
0.2783	0.0953	0.2783	0.0846	0.2783	0.0794	0.2783	0.0754	0.2783	0.0717	0.2783	0.0653	0.2783	0.0581
0.2915	0.1186	0.2915	0.0985	0.2915	0.0889	0.2915	0.0814	0.2915	0.0754	0.2915	0.0668	0.2915	0.0594
0.3054	0.1503	0.3054	0.1233	0.3054	0.1096	0.3054	0.0984	0.3054	0.0894	0.3054	0.0758	0.3054	0.0632
0.3199	0.1503	0.3199	0.1233	0.3199	0.1096	0.3199	0.0984	0.3199	0.0894	0.3199	0.0802	0.3199	0.0706
0.3352	0.1503	0.3352	0.1233	0.3352	0.1096	0.3352	0.0984	0.3352	0.0932	0.3352	0.0857	0.3352	0.0762
0.3511	0.1503	0.3511	0.129	0.3511	0.1173	0.3511	0.107	0.3511	0.0997	0.3511	0.0894	0.3511	0.0786
0.3678	0.168	0.3678	0.1438	0.3678	0.1303	0.3678	0.1186	0.3678	0.1121	0.3678	0.1017	0.3678	0.0897
0.3853	0.168	0.3853	0.1438	0.3853	0.1345	0.3853	0.1278	0.3853	0.1218	0.3853	0.1114	0.3853	0.0992
0.4037	0.1939	0.4037	0.1599	0.4037	0.1426	0.4037	0.1306	0.4037	0.1259	0.4037	0.117	0.4037	0.1053
0.4229	0.2367	0.4229	0.1905	0.4229	0.172	0.4229	0.1557	0.4229	0.1416	0.4229	0.1217	0.4229	0.1092
0.4431	0.3089	0.4431	0.2194	0.4431	0.1882	0.4431	0.1671	0.4431	0.1496	0.4431	0.1274	0.4431	0.1099
0.4642	0.3417	0.4642	0.2524	0.4642	0.2138	0.4642	0.1852	0.4642	0.1637	0.4642	0.1345	0.4642	0.1215
0.4863	0.3417	0.4863	0.2561	0.4863	0.221	0.4863	0.1929	0.4863	0.1703	0.4863	0.1411	0.4863	0.1326
0.5094	0.3521	0.5094	0.2655	0.5094	0.2324	0.5094	0.2053	0.5094	0.1831	0.5094	0.15	0.5094	0.1394

PTWW040.grf ~ RPP-WTP Pretreatment Facility ISRS ~ Calc No.: 24590-PTF-S0C-S15T-00057, Rev. A ~ Frequency (cps) ~ Spectral Acceleration (g) ~ Figure 40 ~ SLAB-WALL JOINT East-West Responses ~ Elevation 54 Ft. ~ Line 30 B

Damping	0.50%		2%		3%		4%		5%		7%		10%
Freq.	Accel.	Freq.	Accel.	Freq.	Accel.	Freq.	Accel.	Freq.	Accel.	Freq.	Accel.	Freq.	Accel.
0.5337	0.4094	0.5337	0.277	0.5337	0.2324	0.5337	0.2053	0.5337	0.1831	0.5337	0.1539	0.5337	0.1399
0.5591	0.4094	0.5591	0.277	0.5591	0.2399	0.5591	0.2149	0.5591	0.195	0.5591	0.1656	0.5591	0.1399
0.5857	0.4094	0.5857	0.277	0.5857	0.2401	0.5857	0.2157	0.5857	0.1974	0.5857	0.1686	0.5857	0.144
0.6136	0.4473	0.6136	0.2968	0.6136	0.2443	0.6136	0.2233	0.6136	0.205	0.6136	0.175	0.6136	0.144
0.6428	0.478	0.6428	0.3546	0.6428	0.3004	0.6428	0.2612	0.6428	0.2347	0.6428	0.1989	0.6428	0.1683
0.6734	0.478	0.6734	0.3546	0.6734	0.3004	0.6734	0.2612	0.6734	0.2416	0.6734	0.2168	0.6734	0.1875
0.7055	0.478	0.7055	0.3546	0.7055	0.3004	0.7055	0.2612	0.7055	0.2416	0.7055	0.2187	0.7055	0.1922
0.7391	0.478	0.7391	0.3546	0.7391	0.3004	0.7391	0.2693	0.7391	0.2464	0.7391	0.2187	0.7391	0.1922
0.7743	0.5516	0.7743	0.3957	0.7743	0.3328	0.7743	0.2914	0.7743	0.2681	0.7743	0.2353	0.7743	0.2018
0.8111	0.5516	0.8111	0.3957	0.8111	0.3328	0.8111	0.3036	0.8111	0.2876	0.8111	0.2588	0.8111	0.2241
0.8497	0.5516	0.8497	0.3957	0.8497	0.3328	0.8497	0.312	0.8497	0.2986	0.8497	0.2726	0.8497	0.2377
0.8902	0.5516	0.8902	0.3957	0.8902	0.3658	0.8902	0.3432	0.8902	0.3226	0.8902	0.2872	0.8902	0.2459
0.9326	0.86	0.9326	0.5582	0.9326	0.4625	0.9326	0.4018	0.9326	0.3596	0.9326	0.3042	0.9326	0.2543
0.977	0.86	0.977	0.5582	0.977	0.4625	0.977	0.4042	0.977	0.3641	0.977	0.3081	0.977	0.2635
1.0235	0.9305	1.0235	0.596	1.0235	0.5259	1.0235	0.4813	1.0235	0.4435	1.0235	0.3836	1.0235	0.3273
1.0723	0.9305	1.0723	0.6681	1.0723	0.6026	1.0723	0.5463	1.0723	0.4991	1.0723	0.435	1.0723	0.3728
1.1233	1.3364	1.1233	0.8307	1.1233	0.678	1.1233	0.5832	1.1233	0.5403	1.1233	0.4675	1.1233	0.3994
1.1768	1.3364	1.1768	0.8307	1.1768	0.678	1.1768	0.5853	1.1768	0.5503	1.1768	0.486	1.1768	0.4233
1.2328	1.3364	1.2328	0.8307	1.2328	0.7352	1.2328	0.6585	1.2328	0.5916	1.2328	0.5089	1.2328	0.45
1.2916	1.3364	1.2916	0.8976	1.2916	0.7903	1.2916	0.7004	1.2916	0.6246	1.2916	0.5436	1.2916	0.479
1.353	1.3364	1.353	0.9456	1.353	0.7903	1.353	0.7004	1.353	0.6262	1.353	0.5719	1.353	0.5034
1.4175	1.4619	1.4175	0.9456	1.4175	0.7903	1.4175	0.7004	1.4175	0.6574	1.4175	0.6019	1.4175	0.5319
1.485	1.4619	1.485	0.9456	1.485	0.7903	1.485	0.7283	1.485	0.6958	1.485	0.6359	1.485	0.562
1.5557	1.5117	1.5557	1.0299	1.5557	0.8804	1.5557	0.7761	1.5557	0.7253	1.5557	0.6625	1.5557	0.5874
1.6298	1.815	1.6298	1.1102	1.6298	0.9568	1.6298	0.8641	1.6298	0.7943	1.6298	0.6883	1.6298	0.605
1.7074	1.815	1.7074	1.1102	1.7074	0.9568	1.7074	0.8641	1.7074	0.7943	1.7074	0.703	1.7074	0.6249
1.7887	1.815	1.7887	1.1102	1.7887	0.9568	1.7887	0.8641	1.7887	0.7943	1.7887	0.7234	1.7887	0.6496
1.8738	1.815	1.8738	1.1102	1.8738	0.9568	1.8738	0.8669	1.8738	0.8279	1.8738	0.7584	1.8738	0.6712
1.963	1.815	1.963	1.1102	1.963	0.9568	1.963	0.8979	1.963	0.8532	1.963	0.7761	1.963	0.6839
2.0565	1.7425	2.0565	1.0955	2.0565	0.961	2.0565	0.9033	2.0565	0.8536	2.0565	0.7761	2.0565	0.6839
2.1544	1.7425	2.1544	1.0955	2.1544	0.961	2.1544	0.9033	2.1544	0.8536	2.1544	0.7761	2.1544	0.6839
2.257	1.515	2.257	1.0774	2.257	0.961	2.257	0.9033	2.257	0.8536	2.257	0.7761	2.257	0.6839
2.3645	1.515	2.3645	1.0774	2.3645	0.961	2.3645	0.9033	2.3645	0.8536	2.3645	0.7761	2.3645	0.6839
2.4771	1.515	2.4771	1.0774	2.4771	1.0152	2.4771	0.9033	2.4771	0.8536	2.4771	0.7713	2.4771	0.6886
2.595	1.515	2.595	1.0774	2.595	1.0152	2.595	0.9033	2.595	0.8536	2.595	0.7713	2.595	0.6927

PTWW040.grf ~ RPP-WTP Pretreatment Facility ISRS ~ Calc No.: 24590-PTF-S0C-S15T-00057, Rev. A ~ Frequency (cps) ~ Spectral Acceleration (g) ~ Figure 40 ~ SLAB-WALL JOINT East-West Responses ~ Elevation 54 Ft. ~ Line 30 B

Damping	0.50%		2%		3%		4%		5%		7%		10%
Freq.	Accel.	Freq.	Accel.	Freq.	Accel.	Freq.	Accel.	Freq.	Accel.	Freq.	Accel.	Freq.	Accel.
2.7186	1.515	2.7186	1.0774	2.7186	1.0152	2.7186	0.9033	2.7186	0.8536	2.7186	0.7713	2.7186	0.6934
2.848	1.515	2.848	1.0774	2.848	1.0152	2.848	0.9033	2.848	0.8536	2.848	0.7713	2.848	0.6934
2.9836	1.515	2.9836	1.0774	2.9836	1.0152	2.9836	0.9033	2.9836	0.8536	2.9836	0.7713	2.9836	0.6934
3.1257	1.515	3.1257	1.0774	3.1257	1.0152	3.1257	0.9033	3.1257	0.8536	3.1257	0.7713	3.1257	0.6934
3.2745	1.515	3.2745	1.0774	3.2745	1.0152	3.2745	0.9033	3.2745	0.8536	3.2745	0.7713	3.2745	0.6934
3.4305	1.515	3.4305	1.0774	3.4305	1.0152	3.4305	0.9033	3.4305	0.8536	3.4305	0.7713	3.4305	0.692
3.5938	1.7924	3.5938	1.0774	3.5938	1.0152	3.5938	0.9033	3.5938	0.8536	3.5938	0.7713	3.5938	0.6916
3.7649	1.7924	3.7649	1.0921	3.7649	1.0152	3.7649	0.9076	3.7649	0.8536	3.7649	0.7713	3.7649	0.6893
3.9442	1.7924	3.9442	1.0921	3.9442	1.0628	3.9442	0.9721	3.9442	0.9001	3.9442	0.7901	3.9442	0.6893
4.132	1.7924	4.132	1.0921	4.132	1.0628	4.132	0.9721	4.132	0.9001	4.132	0.7901	4.132	0.6876
4.3288	1.7924	4.3288	1.0921	4.3288	1.0628	4.3288	0.9721	4.3288	0.9001	4.3288	0.7901	4.3288	0.6805
4.5349	1.7924	4.5349	1.0921	4.5349	1.0628	4.5349	0.9721	4.5349	0.9001	4.5349	0.7901	4.5349	0.676
4.7508	1.7924	4.7508	1.0921	4.7508	1.0628	4.7508	0.9721	4.7508	0.9001	4.7508	0.7901	4.7508	0.6736
4.977	1.7924	4.977	1.0921	4.977	0.9506	4.977	0.8979	4.977	0.8494	4.977	0.7652	4.977	0.6688
5.214	1.7924	5.214	1.0921	5.214	0.9383	5.214	0.8718	5.214	0.8233	5.214	0.7464	5.214	0.654
5.4623	2.0429	5.4623	1.0921	5.4623	0.9383	5.4623	0.8718	5.4623	0.8233	5.4623	0.7464	5.4623	0.654
5.7224	2.0429	5.7224	1.0974	5.7224	0.9383	5.7224	0.8718	5.7224	0.8233	5.7224	0.7464	5.7224	0.654
5.9948	2.0429	5.9948	1.0974	5.9948	0.9383	5.9948	0.8718	5.9948	0.8233	5.9948	0.7464	5.9948	0.654
6.2803	2.0429	6.2803	1.0974	6.2803	0.9383	6.2803	0.8718	6.2803	0.8233	6.2803	0.7464	6.2803	0.654
6.5793	2.0429	6.5793	1.0974	6.5793	0.9383	6.5793	0.8718	6.5793	0.8218	6.5793	0.7401	6.5793	0.6457
6.8926	2.0429	6.8926	1.0974	6.8926	0.9383	6.8926	0.852	6.8926	0.7921	6.8926	0.7107	6.8926	0.6236
7.2208	1.6443	7.2208	1.0312	7.2208	0.8872	7.2208	0.8236	7.2208	0.7712	7.2208	0.6856	7.2208	0.6178
7.5646	1.3629	7.5646	0.9367	7.5646	0.8389	7.5646	0.785	7.5646	0.7436	7.5646	0.6831	7.5646	0.6178
7.9248	1.3378	7.9248	0.8974	7.9248	0.827	7.9248	0.7757	7.9248	0.7347	7.9248	0.6707	7.9248	0.604
8.3022	1.3378	8.3022	0.8407	8.3022	0.7713	8.3022	0.7153	8.3022	0.6828	8.3022	0.6374	8.3022	0.5873
8.6975	0.9422	8.6975	0.6767	8.6975	0.6523	8.6975	0.6296	8.6975	0.6076	8.6975	0.5724	8.6975	0.5488
9.1116	0.9081	9.1116	0.6623	9.1116	0.6141	9.1116	0.5759	9.1116	0.551	9.1116	0.5261	9.1116	0.5145
9.5455	0.9081	9.5455	0.6266	9.5455	0.5795	9.5455	0.5505	9.5455	0.5315	9.5455	0.5085	9.5455	0.4961
10	0.8734	10	0.6266	10	0.5795	10	0.5505	10	0.5315	10	0.5083	10	0.4875
10.4762	0.7653	10.4762	0.5513	10.4762	0.528	10.4762	0.5125	10.4762	0.5017	10.4762	0.4862	10.4762	0.4714
10.975	0.7298	10.975	0.5252	10.975	0.5066	10.975	0.4911	10.975	0.479	10.975	0.4624	10.975	0.4529
11.4976	0.7298	11.4976	0.5252	11.4976	0.5066	11.4976	0.4911	11.4976	0.479	11.4976	0.4624	11.4976	0.4475
12.045	0.7298	12.045	0.5252	12.045	0.5066	12.045	0.4911	12.045	0.479	12.045	0.4624	12.045	0.4475
12.6186	0.7298	12.6186	0.516	12.6186	0.4966	12.6186	0.483	12.6186	0.4727	12.6186	0.4569	12.6186	0.4415
13.2194	0.7298	13.2194	0.516	13.2194	0.4659	13.2194	0.4393	13.2194	0.438	13.2194	0.4349	13.2194	0.4272

PTWW040.grf ~ RPP-WTP Pretreatment Facility ISRS ~ Calc No.: 24590-PTF-S0C-S15T-00057, Rev. A ~ Frequency (cps) ~ Spectral Acceleration (g) ~ Figure 40 ~ SLAB-WALL JOINT East-West Responses ~ Elevation 54 Ft. ~ Line 30 B

Damping Freq.	0.50% Accel.	Freq.	2% Accel.	Freq.	3% Accel.	Freq.	4% Accel.	Freq.	5% Accel.	Freq.	7% Accel.	Freq.	10% Accel.
13.8489	0.7298	13.8489	0.516	13.8489	0.4659	13.8489	0.4388	13.8489	0.4278	13.8489	0.4202	13.8489	0.4132
14.5083	0.7298	14.5083	0.516	14.5083	0.4659	14.5083	0.4388	14.5083	0.4278	14.5083	0.4164	14.5083	0.4056
15.1991	0.7298	15.1991	0.516	15.1991	0.4659	15.1991	0.4388	15.1991	0.4209	15.1991	0.4033	15.1991	0.3946
15.9228	0.7298	15.9228	0.516	15.9228	0.4659	15.9228	0.4388	15.9228	0.4209	15.9228	0.4007	15.9228	0.3861
16.681	0.7298	16.681	0.516	16.681	0.4659	16.681	0.4388	16.681	0.4209	16.681	0.4007	16.681	0.3861
17.4753	0.7298	17.4753	0.516	17.4753	0.4659	17.4753	0.4388	17.4753	0.4209	17.4753	0.4007	17.4753	0.3861
18.3074	0.7298	18.3074	0.516	18.3074	0.4659	18.3074	0.4388	18.3074	0.4209	18.3074	0.4007	18.3074	0.3861
19.1791	0.8702	19.1791	0.516	19.1791	0.4659	19.1791	0.4388	19.1791	0.4209	19.1791	0.4007	19.1791	0.3861
20.0923	0.8702	20.0923	0.516	20.0923	0.4659	20.0923	0.4388	20.0923	0.4209	20.0923	0.4007	20.0923	0.3861
21.049	0.8702	21.049	0.516	21.049	0.4659	21.049	0.4388	21.049	0.4209	21.049	0.4007	21.049	0.3861
22.0513	0.8702	22.0513	0.516	22.0513	0.4659	22.0513	0.4388	22.0513	0.4209	22.0513	0.4007	22.0513	0.3835
23.1013	0.8702	23.1013	0.516	23.1013	0.4659	23.1013	0.4388	23.1013	0.4209	23.1013	0.4007	23.1013	0.3835
24.2013	0.7893	24.2013	0.5103	24.2013	0.4659	24.2013	0.4388	24.2013	0.4209	24.2013	0.3995	24.2013	0.3835
25.3536	0.7893	25.3536	0.4648	25.3536	0.4175	25.3536	0.405	25.3536	0.4012	25.3536	0.3926	25.3536	0.3817
26.5609	0.7893	26.5609	0.4648	26.5609	0.4175	26.5609	0.3899	26.5609	0.38	26.5609	0.3779	26.5609	0.3729
27.8256	0.4998	27.8256	0.4141	27.8256	0.3879	27.8256	0.3762	27.8256	0.3726	27.8256	0.3682	27.8256	0.3643
29.1505	0.4217	29.1505	0.3866	29.1505	0.3763	29.1505	0.3678	29.1505	0.3612	29.1505	0.3558	29.1505	0.3554
30.5386	0.4217	30.5386	0.3633	30.5386	0.3554	30.5386	0.3517	30.5386	0.3499	30.5386	0.3485	30.5386	0.348
31.9927	0.3545	31.9927	0.3404	31.9927	0.3386	31.9927	0.3376	31.9927	0.3374	31.9927	0.3399	31.9927	0.3417
33.516	0.3442	33.516	0.3404	33.516	0.3386	33.516	0.3376	33.516	0.3371	33.516	0.3365	33.516	0.3379
35.1119	0.3392	35.1119	0.3385	35.1119	0.338	35.1119	0.3376	35.1119	0.3371	35.1119	0.3365	35.1119	0.3359
36.7838	0.3368	36.7838	0.3366	36.7838	0.3364	36.7838	0.3362	36.7838	0.336	36.7838	0.3356	36.7838	0.3352
38.5353	0.3351	38.5353	0.335	38.5353	0.3349	38.5353	0.3348	38.5353	0.3347	38.5353	0.3345	38.5353	0.3343
40.3702	0.3338	40.3702	0.3337	40.3702	0.3336	40.3702	0.3336	40.3702	0.3336	40.3702	0.3334	40.3702	0.3333
42.2924	0.3326	42.2924	0.3326	42.2924	0.3325	42.2924	0.3325	42.2924	0.3325	42.2924	0.3324	42.2924	0.3323
44.3062	0.3316	44.3062	0.3316	44.3062	0.3316	44.3062	0.3316	44.3062	0.3315	44.3062	0.3315	44.3062	0.3315
46.4159	0.3307	46.4159	0.3307	46.4159	0.3307	46.4159	0.3307	46.4159	0.3307	46.4159	0.3307	46.4159	0.3307
48.626	0.3299	48.626	0.3299	48.626	0.3299	48.626	0.3299	48.626	0.3299	48.626	0.3299	48.626	0.3299
50.9414	0.3291	50.9414	0.3291	50.9414	0.3291	50.9414	0.3291	50.9414	0.3291	50.9414	0.3291	50.9414	0.3292

PTWW041.grf ~ RPP-WTP Pretreatment Facility ISRS ~ Calc No.: 24590-PTF-S0C-S15T-00057, Rev. A ~ Frequency (cps) ~ Spectral Acceleration (g) ~ Figure 41 ~ SLAB-WALL JOINT North-South Responses ~ Elevation 54 Ft. ~ Line 30 B

Damping	0.50%		2%		3%		4%		5%		7%		10%
Freq.	Accel.	Freq.	Accel.	Freq.	Accel.	Freq.	Accel.	Freq.	Accel.	Freq.	Accel.	Freq.	Accel.
0.1098	0.0404	0.1098	0.0365	0.1098	0.0342	0.1098	0.0321	0.1098	0.0303	0.1098	0.0271	0.1098	0.0235
0.115	0.0404	0.115	0.0365	0.115	0.0342	0.115	0.0321	0.115	0.0303	0.115	0.0271	0.115	0.0256
0.1204	0.0404	0.1204	0.0365	0.1204	0.0342	0.1204	0.0321	0.1204	0.0309	0.1204	0.0295	0.1204	0.0277
0.1262	0.0404	0.1262	0.0365	0.1262	0.0351	0.1262	0.0342	0.1262	0.0332	0.1262	0.0315	0.1262	0.0295
0.1322	0.0404	0.1322	0.0381	0.1322	0.0369	0.1322	0.0357	0.1322	0.0347	0.1322	0.0331	0.1322	0.0315
0.1385	0.0409	0.1385	0.039	0.1385	0.0379	0.1385	0.037	0.1385	0.0361	0.1385	0.0346	0.1385	0.0327
0.1451	0.0416	0.1451	0.0397	0.1451	0.0386	0.1451	0.0376	0.1451	0.0367	0.1451	0.0352	0.1451	0.0332
0.152	0.0439	0.152	0.0401	0.152	0.0386	0.152	0.0376	0.152	0.0367	0.152	0.0352	0.152	0.0332
0.1592	0.0462	0.1592	0.0416	0.1592	0.0395	0.1592	0.0376	0.1592	0.0367	0.1592	0.0352	0.1592	0.0332
0.1668	0.0584	0.1668	0.0505	0.1668	0.0462	0.1668	0.0426	0.1668	0.0394	0.1668	0.0352	0.1668	0.0332
0.1748	0.0644	0.1748	0.0566	0.1748	0.0521	0.1748	0.0483	0.1748	0.045	0.1748	0.0394	0.1748	0.0332
0.1831	0.0667	0.1831	0.0582	0.1831	0.0541	0.1831	0.0504	0.1831	0.047	0.1831	0.0414	0.1831	0.0353
0.1918	0.0678	0.1918	0.0585	0.1918	0.0542	0.1918	0.0506	0.1918	0.0473	0.1918	0.0417	0.1918	0.0379
0.2009	0.0697	0.2009	0.0595	0.2009	0.0542	0.2009	0.0511	0.2009	0.0484	0.2009	0.0434	0.2009	0.041
0.2105	0.0721	0.2105	0.0618	0.2105	0.0579	0.2105	0.0545	0.2105	0.0514	0.2105	0.0481	0.2105	0.0444
0.2205	0.0818	0.2205	0.0709	0.2205	0.0651	0.2205	0.0599	0.2205	0.0573	0.2205	0.053	0.2205	0.0474
0.231	0.0958	0.231	0.0791	0.231	0.0703	0.231	0.0666	0.231	0.0631	0.231	0.0572	0.231	0.0519
0.242	0.098	0.242	0.0843	0.242	0.0773	0.242	0.0714	0.242	0.0675	0.242	0.0613	0.242	0.0546
0.2535	0.1056	0.2535	0.091	0.2535	0.083	0.2535	0.0759	0.2535	0.0699	0.2535	0.0613	0.2535	0.0546
0.2656	0.1138	0.2656	0.0945	0.2656	0.0842	0.2656	0.0759	0.2656	0.0699	0.2656	0.0613	0.2656	0.0546
0.2783	0.1138	0.2783	0.0945	0.2783	0.0842	0.2783	0.0778	0.2783	0.0737	0.2783	0.067	0.2783	0.06
0.2915	0.1138	0.2915	0.1001	0.2915	0.0939	0.2915	0.0884	0.2915	0.0835	0.2915	0.0753	0.2915	0.0664
0.3054	0.1172	0.3054	0.1049	0.3054	0.0979	0.3054	0.0918	0.3054	0.0864	0.3054	0.0776	0.3054	0.0687
0.3199	0.1172	0.3199	0.1049	0.3199	0.0979	0.3199	0.0918	0.3199	0.0881	0.3199	0.0829	0.3199	0.0766
0.3352	0.1172	0.3352	0.1085	0.3352	0.1042	0.3352	0.1003	0.3352	0.0967	0.3352	0.0904	0.3352	0.083
0.3511	0.1645	0.3511	0.128	0.3511	0.1118	0.3511	0.1061	0.3511	0.102	0.3511	0.095	0.3511	0.0868
0.3678	0.2408	0.3678	0.1827	0.3678	0.1561	0.3678	0.1359	0.3678	0.1205	0.3678	0.0995	0.3678	0.0869
0.3853	0.2539	0.3853	0.1862	0.3853	0.1588	0.3853	0.138	0.3853	0.1255	0.3853	0.1079	0.3853	0.0897
0.4037	0.2539	0.4037	0.1862	0.4037	0.1588	0.4037	0.138	0.4037	0.1261	0.4037	0.1142	0.4037	0.102
0.4229	0.2539	0.4229	0.1862	0.4229	0.1641	0.4229	0.1478	0.4229	0.1338	0.4229	0.122	0.4229	0.1107
0.4431	0.3276	0.4431	0.2318	0.4431	0.2019	0.4431	0.1796	0.4431	0.1626	0.4431	0.1389	0.4431	0.1174
0.4642	0.3276	0.4642	0.2318	0.4642	0.2019	0.4642	0.1796	0.4642	0.1626	0.4642	0.1389	0.4642	0.1174
0.4863	0.3276	0.4863	0.2318	0.4863	0.2019	0.4863	0.1796	0.4863	0.1626	0.4863	0.1415	0.4863	0.1242
0.5094	0.3276	0.5094	0.2318	0.5094	0.2019	0.5094	0.1796	0.5094	0.1626	0.5094	0.1475	0.5094	0.1293
0.5337	0.3338	0.5337	0.2366	0.5337	0.2061	0.5337	0.1882	0.5337	0.1776	0.5337	0.1596	0.5337	0.1387
0.5591	0.3945	0.5591	0.2731	0.5591	0.2401	0.5591	0.2143	0.5591	0.1954	0.5591	0.171	0.5591	0.1533
0.5857	0.3945	0.5857	0.2819	0.5857	0.2531	0.5857	0.229	0.5857	0.2088	0.5857	0.1825	0.5857	0.1694

PTWW041.grf ~ RPP-WTP Pretreatment Facility ISRS ~ Calc No.: 24590-PTF-S0C-S15T-00057, Rev. A ~ Frequency (cps) ~ Spectral Acceleration (g) ~ Figure 41 ~ SLAB-WALL JOINT North-South Responses ~ Elevation 54 Ft. ~ Line 30 B

Damping	0.50%		2%		3%		4%		5%		7%		10%
Freq.	Accel.	Freq.	Accel.	Freq.	Accel.	Freq.	Accel.	Freq.	Accel.	Freq.	Accel.	Freq.	Accel.
0.6136	0.3945	0.6136	0.2819	0.6136	0.2531	0.6136	0.229	0.6136	0.2088	0.6136	0.1962	0.6136	0.1818
0.6428	0.3945	0.6428	0.2819	0.6428	0.2531	0.6428	0.229	0.6428	0.2176	0.6428	0.2071	0.6428	0.1923
0.6734	0.4051	0.6734	0.2819	0.6734	0.2545	0.6734	0.2401	0.6734	0.2329	0.6734	0.2199	0.6734	0.2038
0.7055	0.4051	0.7055	0.2964	0.7055	0.271	0.7055	0.2595	0.7055	0.2495	0.7055	0.2325	0.7055	0.2132
0.7391	0.6253	0.7391	0.4092	0.7391	0.3339	0.7391	0.2852	0.7391	0.2678	0.7391	0.2386	0.7391	0.2148
0.7743	0.6253	0.7743	0.4092	0.7743	0.3339	0.7743	0.2977	0.7743	0.2799	0.7743	0.2506	0.7743	0.2178
0.8111	0.6459	0.8111	0.4284	0.8111	0.373	0.8111	0.3304	0.8111	0.2973	0.8111	0.2507	0.8111	0.2178
0.8497	0.6459	0.8497	0.4295	0.8497	0.3929	0.8497	0.3623	0.8497	0.3363	0.8497	0.2936	0.8497	0.2475
0.8902	0.6685	0.8902	0.436	0.8902	0.3929	0.8902	0.3623	0.8902	0.3395	0.8902	0.3086	0.8902	0.2662
0.9326	0.715	0.9326	0.5019	0.9326	0.4411	0.9326	0.3968	0.9326	0.3633	0.9326	0.3158	0.9326	0.2706
0.977	0.9571	0.977	0.6109	0.977	0.5027	0.977	0.4349	0.977	0.3889	0.977	0.3313	0.977	0.2835
1.0235	0.9571	1.0235	0.6109	1.0235	0.5406	1.0235	0.4899	1.0235	0.4478	1.0235	0.3835	1.0235	0.3191
1.0723	0.9571	1.0723	0.629	1.0723	0.5623	1.0723	0.5069	1.0723	0.4603	1.0723	0.3954	1.0723	0.3351
1.1233	1.2112	1.1233	0.8095	1.1233	0.677	1.1233	0.5824	1.1233	0.5124	1.1233	0.4175	1.1233	0.3358
1.1768	1.2112	1.1768	0.8095	1.1768	0.677	1.1768	0.5824	1.1768	0.5124	1.1768	0.42	1.1768	0.3516
1.2328	1.2112	1.2328	0.8776	1.2328	0.7698	1.2328	0.6846	1.2328	0.6149	1.2328	0.5095	1.2328	0.4049
1.2916	1.2112	1.2916	0.9725	1.2916	0.8448	1.2916	0.7451	1.2916	0.6651	1.2916	0.5458	1.2916	0.4303
1.353	1.2406	1.353	0.9725	1.353	0.8448	1.353	0.7451	1.353	0.6651	1.353	0.5458	1.353	0.4328
1.4175	1.4927	1.4175	1.0398	1.4175	0.8977	1.4175	0.7987	1.4175	0.7236	1.4175	0.6126	1.4175	0.5041
1.485	1.4927	1.485	1.0398	1.485	0.8977	1.485	0.8136	1.485	0.7581	1.485	0.6601	1.485	0.5488
1.5557	1.7257	1.5557	1.093	1.5557	0.9164	1.5557	0.8185	1.5557	0.7581	1.5557	0.6679	1.5557	0.5679
1.6298	1.7649	1.6298	1.1715	1.6298	1.0429	1.6298	0.9398	1.6298	0.8509	1.6298	0.7168	1.6298	0.5845
1.7074	1.7649	1.7074	1.1911	1.7074	1.1181	1.7074	1.0082	1.7074	0.9156	1.7074	0.7654	1.7074	0.6266
1.7887	2.1543	1.7887	1.1911	1.7887	1.1181	1.7887	1.0082	1.7887	0.9156	1.7887	0.7791	1.7887	0.663
1.8738	2.1543	1.8738	1.1911	1.8738	1.1181	1.8738	1.0082	1.8738	0.9156	1.8738	0.8133	1.8738	0.691
1.963	2.1543	1.963	1.1911	1.963	1.1181	1.963	1.0086	1.963	0.9469	1.963	0.8387	1.963	0.7107
2.0565	2.1543	2.0565	1.1911	2.0565	1.1181	2.0565	1.0239	2.0565	0.9641	2.0565	0.8545	2.0565	0.7208
2.1544	2.1543	2.1544	1.1911	2.1544	1.1641	2.1544	1.0719	2.1544	0.993	2.1544	0.8646	2.1544	0.7434
2.257	1.9859	2.257	1.2401	2.257	1.1641	2.257	1.0719	2.257	0.993	2.257	0.8753	2.257	0.7534
2.3645	1.9859	2.3645	1.2401	2.3645	1.1641	2.3645	1.0719	2.3645	0.993	2.3645	0.8753	2.3645	0.7534
2.4771	1.9859	2.4771	1.3882	2.4771	1.1641	2.4771	1.0719	2.4771	0.993	2.4771	0.8753	2.4771	0.7534
2.595	1.838	2.595	1.3882	2.595	1.1641	2.595	1.0719	2.595	0.993	2.595	0.8753	2.595	0.7534
2.7186	1.838	2.7186	1.3882	2.7186	1.1614	2.7186	1.0549	2.7186	0.9795	2.7186	0.8753	2.7186	0.7534
2.848	1.838	2.848	1.3882	2.848	1.1614	2.848	1.0498	2.848	0.9795	2.848	0.8675	2.848	0.7385
2.9836	1.838	2.9836	1.3882	2.9836	1.1614	2.9836	1.0498	2.9836	0.9618	2.9836	0.8311	2.9836	0.6992
3.1257	1.838	3.1257	1.1633	3.1257	0.9244	3.1257	0.8554	3.1257	0.8062	3.1257	0.728	3.1257	0.6366
3.2745	1.7993	3.2745	1.0437	3.2745	0.8857	3.2745	0.7926	3.2745	0.7237	3.2745	0.6347	3.2745	0.5767
3.4305	1.2506	3.4305	0.8608	3.4305	0.774	3.4305	0.7077	3.4305	0.6696	3.4305	0.5994	3.4305	0.5377

PTWW041.grf ~ RPP-WTP Pretreatment Facility ISRS ~ Calc No.: 24590-PTF-S0C-S15T-00057, Rev. A ~ Frequency (cps) ~ Spectral Acceleration (g) ~ Figure 41 ~ SLAB-WALL JOINT North-South Responses ~ Elevation 54 Ft. ~ Line 30 B

Damping	0.50%		2%		3%		4%		5%		7%		10%
Freq.	Accel.	Freq.	Accel.	Freq.	Accel.	Freq.	Accel.	Freq.	Accel.	Freq.	Accel.	Freq.	Accel.
3.5938	1.2506	3.5938	0.826	3.5938	0.7467	3.5938	0.6903	3.5938	0.6397	3.5938	0.5691	3.5938	0.503
3.7649	1.2506	3.7649	0.8108	3.7649	0.7467	3.7649	0.6903	3.7649	0.6397	3.7649	0.5581	3.7649	0.4924
3.9442	1.2506	3.9442	0.7736	3.9442	0.7467	3.9442	0.6903	3.9442	0.6397	3.9442	0.5581	3.9442	0.4924
4.132	1.2506	4.132	0.7736	4.132	0.7467	4.132	0.6903	4.132	0.6397	4.132	0.5581	4.132	0.4924
4.3288	1.2506	4.3288	0.7736	4.3288	0.7467	4.3288	0.6903	4.3288	0.6397	4.3288	0.5581	4.3288	0.4759
4.5349	1.2506	4.5349	0.7736	4.5349	0.7467	4.5349	0.6903	4.5349	0.6397	4.5349	0.5581	4.5349	0.4759
4.7508	1.2506	4.7508	0.7736	4.7508	0.7467	4.7508	0.6903	4.7508	0.6397	4.7508	0.5581	4.7508	0.4759
4.977	1.2506	4.977	0.7736	4.977	0.7467	4.977	0.6903	4.977	0.6397	4.977	0.5581	4.977	0.4759
5.214	1.2506	5.214	0.7736	5.214	0.7467	5.214	0.6903	5.214	0.6397	5.214	0.5581	5.214	0.4759
5.4623	1.2506	5.4623	0.7736	5.4623	0.7467	5.4623	0.6903	5.4623	0.6397	5.4623	0.5581	5.4623	0.4759
5.7224	1.3691	5.7224	0.7736	5.7224	0.7467	5.7224	0.6903	5.7224	0.6397	5.7224	0.5581	5.7224	0.4759
5.9948	1.3691	5.9948	0.7736	5.9948	0.7467	5.9948	0.6903	5.9948	0.6397	5.9948	0.5581	5.9948	0.4759
6.2803	1.3691	6.2803	0.7736	6.2803	0.7467	6.2803	0.6903	6.2803	0.6397	6.2803	0.5581	6.2803	0.4759
6.5793	1.3691	6.5793	0.7736	6.5793	0.6755	6.5793	0.6357	6.5793	0.6231	6.5793	0.5476	6.5793	0.4759
6.8926	1.3691	6.8926	0.7736	6.8926	0.6755	6.8926	0.6357	6.8926	0.6231	6.8926	0.5452	6.8926	0.4683
7.2208	1.3691	7.2208	0.7253	7.2208	0.6201	7.2208	0.5644	7.2208	0.5427	7.2208	0.503	7.2208	0.4505
7.5646	1.3691	7.5646	0.7065	7.5646	0.6004	7.5646	0.5644	7.5646	0.5365	7.5646	0.4909	7.5646	0.436
7.9248	1.3691	7.9248	0.6416	7.9248	0.5598	7.9248	0.5335	7.9248	0.509	7.9248	0.4659	7.9248	0.4264
8.3022	1.3691	8.3022	0.6416	8.3022	0.556	8.3022	0.5083	8.3022	0.486	8.3022	0.454	8.3022	0.4264
8.6975	1.0067	8.6975	0.5785	8.6975	0.5365	8.6975	0.5083	8.6975	0.486	8.6975	0.454	8.6975	0.4229
9.1116	1.0067	9.1116	0.5785	9.1116	0.5203	9.1116	0.4913	9.1116	0.4686	9.1116	0.4364	9.1116	0.4147
9.5455	1.0067	9.5455	0.5785	9.5455	0.5203	9.5455	0.4913	9.5455	0.4686	9.5455	0.4364	9.5455	0.4101
10	0.7958	10	0.5553	10	0.5203	10	0.4913	10	0.4686	10	0.4364	10	0.4073
10.4762	0.7386	10.4762	0.4651	10.4762	0.4518	10.4762	0.4415	10.4762	0.4329	10.4762	0.4181	10.4762	0.3995
10.975	0.5938	10.975	0.4522	10.975	0.4338	10.975	0.4223	10.975	0.4154	10.975	0.4045	10.975	0.3897
11.4976	0.5139	11.4976	0.4522	11.4976	0.4338	11.4976	0.422	11.4976	0.4137	11.4976	0.4011	11.4976	0.3866
12.045	0.5	12.045	0.4195	12.045	0.4106	12.045	0.4049	12.045	0.4002	12.045	0.3914	12.045	0.3794
12.6186	0.5	12.6186	0.4087	12.6186	0.4008	12.6186	0.3948	12.6186	0.3897	12.6186	0.3812	12.6186	0.3706
13.2194	0.5	13.2194	0.3855	13.2194	0.3801	13.2194	0.3771	13.2194	0.3744	13.2194	0.3688	13.2194	0.3604
13.8489	0.5	13.8489	0.3777	13.8489	0.3691	13.8489	0.3663	13.8489	0.3634	13.8489	0.3575	13.8489	0.3497
14.5083	0.5	14.5083	0.3777	14.5083	0.3639	14.5083	0.3557	14.5083	0.3504	14.5083	0.3441	14.5083	0.3379
15.1991	0.5	15.1991	0.3523	15.1991	0.3413	15.1991	0.3407	15.1991	0.3396	15.1991	0.3366	15.1991	0.3315
15.9228	0.5	15.9228	0.3523	15.9228	0.3412	15.9228	0.3382	15.9228	0.3365	15.9228	0.3326	15.9228	0.3271
16.681	0.5	16.681	0.3523	16.681	0.3412	16.681	0.3355	16.681	0.3317	16.681	0.3266	16.681	0.3214
17.4753	0.5	17.4753	0.3351	17.4753	0.325	17.4753	0.321	17.4753	0.319	17.4753	0.3167	17.4753	0.3142
18.3074	0.5	18.3074	0.3274	18.3074	0.315	18.3074	0.3103	18.3074	0.3078	18.3074	0.3085	18.3074	0.3079
19.1791	0.5	19.1791	0.3274	19.1791	0.315	19.1791	0.3103	19.1791	0.3078	19.1791	0.3055	19.1791	0.3039
20.0923	0.5	20.0923	0.3274	20.0923	0.308	20.0923	0.3058	20.0923	0.3038	20.0923	0.302	20.0923	0.3007

PTWW041.grf ~ RPP-WTP Pretreatment Facility ISRS ~ Calc No.: 24590-PTF-S0C-S15T-00057, Rev. A ~ Frequency (cps) ~ Spectral Acceleration (g) ~ Figure 41 ~ SLAB-WALL JOINT North-South Responses ~ Elevation 54 Ft. ~ Line 30 B

Damping	0.50%		2%		3%		4%		5%		7%		10%
Freq.	Accel.	Freq.	Accel.	Freq.	Accel.	Freq.	Accel.	Freq.	Accel.	Freq.	Accel.	Freq.	Accel.
21.049	0.5	21.049	0.3274	21.049	0.308	21.049	0.3058	21.049	0.3038	21.049	0.3009	21.049	0.2981
22.0513	0.5	22.0513	0.3274	22.0513	0.304	22.0513	0.3018	22.0513	0.3	22.0513	0.2973	22.0513	0.2949
23.1013	0.3991	23.1013	0.3036	23.1013	0.2994	23.1013	0.297	23.1013	0.2955	23.1013	0.2936	23.1013	0.2918
24.2013	0.3991	24.2013	0.3007	24.2013	0.294	24.2013	0.2912	24.2013	0.2902	24.2013	0.2896	24.2013	0.2887
25.3536	0.3991	25.3536	0.3007	25.3536	0.294	25.3536	0.2912	25.3536	0.2902	25.3536	0.2886	25.3536	0.2871
26.5609	0.3991	26.5609	0.3007	26.5609	0.294	26.5609	0.2907	26.5609	0.2888	26.5609	0.2868	26.5609	0.2852
27.8256	0.3991	27.8256	0.2989	27.8256	0.2931	27.8256	0.2896	27.8256	0.2872	27.8256	0.2843	27.8256	0.2831
29.1505	0.3991	29.1505	0.2989	29.1505	0.2931	29.1505	0.2896	29.1505	0.2872	29.1505	0.2843	29.1505	0.282
30.5386	0.3399	30.5386	0.2901	30.5386	0.2875	30.5386	0.2855	30.5386	0.284	30.5386	0.2817	30.5386	0.2796
31.9927	0.2956	31.9927	0.2753	31.9927	0.2743	31.9927	0.2755	31.9927	0.2761	31.9927	0.2765	31.9927	0.2762
33.516	0.2753	33.516	0.2729	33.516	0.2727	33.516	0.2728	33.516	0.2729	33.516	0.2732	33.516	0.2734
35.1119	0.2708	35.1119	0.2709	35.1119	0.271	35.1119	0.2711	35.1119	0.2711	35.1119	0.2712	35.1119	0.2714
36.7838	0.2688	36.7838	0.2691	36.7838	0.2692	36.7838	0.2693	36.7838	0.2694	36.7838	0.2696	36.7838	0.2697
38.5353	0.2675	38.5353	0.2677	38.5353	0.2679	38.5353	0.268	38.5353	0.268	38.5353	0.2682	38.5353	0.2684
40.3702	0.2666	40.3702	0.2668	40.3702	0.2669	40.3702	0.2669	40.3702	0.267	40.3702	0.2672	40.3702	0.2673
42.2924	0.2659	42.2924	0.266	42.2924	0.2661	42.2924	0.2661	42.2924	0.2662	42.2924	0.2663	42.2924	0.2664
44.3062	0.2653	44.3062	0.2654	44.3062	0.2654	44.3062	0.2654	44.3062	0.2655	44.3062	0.2655	44.3062	0.2657
46.4159	0.2648	46.4159	0.2648	46.4159	0.2648	46.4159	0.2648	46.4159	0.2648	46.4159	0.2649	46.4159	0.265
48.626	0.2643	48.626	0.2643	48.626	0.2643	48.626	0.2643	48.626	0.2643	48.626	0.2643	48.626	0.2644
50.9414	0.2638	50.9414	0.2638	50.9414	0.2638	50.9414	0.2638	50.9414	0.2638	50.9414	0.2638	50.9414	0.2638

PTWW115.grf ~ RPP-WTP Pretreatment Facility ISRS ~ Calc No.: 24590-PTF-S0C-S15T-00057, Rev. A ~ Frequency (cps) ~ Spectral Acceleration (g) ~ Figure 115 ~ SLAB ONLY Vertical Responses ~ Elevation 56 ft. ~ EL56_C-E-17-20

Damping	0.50%		2%		3%		4%		5%		7%		10%
Freq.	Accel.	Freq.	Accel.	Freq.	Accel.	Freq.	Accel.	Freq.	Accel.	Freq.	Accel.	Freq.	Accel.
0.1098	0.0291	0.1098	0.026	0.1098	0.0244	0.1098	0.023	0.1098	0.0221	0.1098	0.0214	0.1098	0.0205
0.115	0.0309	0.115	0.026	0.115	0.0244	0.115	0.0234	0.115	0.023	0.115	0.0222	0.115	0.0212
0.1204	0.0313	0.1204	0.0263	0.1204	0.0246	0.1204	0.0241	0.1204	0.0236	0.1204	0.0228	0.1204	0.0218
0.1262	0.0313	0.1262	0.0269	0.1262	0.0257	0.1262	0.0245	0.1262	0.024	0.1262	0.0233	0.1262	0.0224
0.1322	0.0313	0.1322	0.0271	0.1322	0.0258	0.1322	0.0248	0.1322	0.0244	0.1322	0.0236	0.1322	0.0226
0.1385	0.0313	0.1385	0.0277	0.1385	0.0265	0.1385	0.0255	0.1385	0.0246	0.1385	0.0236	0.1385	0.0226
0.1451	0.0316	0.1451	0.0295	0.1451	0.0283	0.1451	0.0271	0.1451	0.0261	0.1451	0.0241	0.1451	0.0226
0.152	0.032	0.152	0.0299	0.152	0.0286	0.152	0.0274	0.152	0.0262	0.152	0.0241	0.152	0.0226
0.1592	0.033	0.1592	0.0311	0.1592	0.0299	0.1592	0.0288	0.1592	0.0278	0.1592	0.0261	0.1592	0.0243
0.1668	0.0367	0.1668	0.0323	0.1668	0.0312	0.1668	0.0302	0.1668	0.0293	0.1668	0.0277	0.1668	0.0257
0.1748	0.0507	0.1748	0.0427	0.1748	0.0385	0.1748	0.035	0.1748	0.0321	0.1748	0.0285	0.1748	0.0265
0.1831	0.0586	0.1831	0.0493	0.1831	0.0442	0.1831	0.0399	0.1831	0.0362	0.1831	0.0305	0.1831	0.0266
0.1918	0.0586	0.1918	0.0493	0.1918	0.0442	0.1918	0.0399	0.1918	0.0362	0.1918	0.0305	0.1918	0.0269
0.2009	0.0586	0.2009	0.0493	0.2009	0.0442	0.2009	0.0399	0.2009	0.0362	0.2009	0.0326	0.2009	0.0299
0.2105	0.0586	0.2105	0.0493	0.2105	0.0442	0.2105	0.0401	0.2105	0.0386	0.2105	0.0361	0.2105	0.0327
0.2205	0.0586	0.2205	0.0493	0.2205	0.0454	0.2205	0.0427	0.2205	0.0409	0.2205	0.038	0.2205	0.0341
0.231	0.0586	0.231	0.0493	0.231	0.0457	0.231	0.0438	0.231	0.042	0.231	0.0388	0.231	0.0354
0.242	0.0586	0.242	0.0509	0.242	0.0486	0.242	0.0465	0.242	0.0445	0.242	0.041	0.242	0.0368
0.2535	0.0649	0.2535	0.0574	0.2535	0.0531	0.2535	0.0491	0.2535	0.0457	0.2535	0.041	0.2535	0.0371
0.2656	0.0731	0.2656	0.0586	0.2656	0.0536	0.2656	0.0491	0.2656	0.0457	0.2656	0.0424	0.2656	0.0401
0.2783	0.0817	0.2783	0.0599	0.2783	0.0536	0.2783	0.05	0.2783	0.0484	0.2783	0.0458	0.2783	0.0425
0.2915	0.0817	0.2915	0.0618	0.2915	0.0581	0.2915	0.0547	0.2915	0.0516	0.2915	0.0479	0.2915	0.0436
0.3054	0.0817	0.3054	0.0663	0.3054	0.0622	0.3054	0.0585	0.3054	0.0551	0.3054	0.0492	0.3054	0.045
0.3199	0.0817	0.3199	0.0701	0.3199	0.0659	0.3199	0.0623	0.3199	0.0589	0.3199	0.0536	0.3199	0.0474
0.3352	0.0873	0.3352	0.0767	0.3352	0.0709	0.3352	0.0662	0.3352	0.0629	0.3352	0.0571	0.3352	0.0501
0.3511	0.0906	0.3511	0.0806	0.3511	0.0749	0.3511	0.0698	0.3511	0.0653	0.3511	0.0577	0.3511	0.0502
0.3678	0.1215	0.3678	0.095	0.3678	0.0823	0.3678	0.0722	0.3678	0.0653	0.3678	0.0577	0.3678	0.0502
0.3853	0.1361	0.3853	0.1057	0.3853	0.0919	0.3853	0.0808	0.3853	0.0718	0.3853	0.0587	0.3853	0.0505
0.4037	0.1361	0.4037	0.1057	0.4037	0.0919	0.4037	0.0821	0.4037	0.0762	0.4037	0.0664	0.4037	0.0568
0.4229	0.1361	0.4229	0.1057	0.4229	0.0919	0.4229	0.0852	0.4229	0.0801	0.4229	0.0711	0.4229	0.0615
0.4431	0.1361	0.4431	0.1057	0.4431	0.0935	0.4431	0.0889	0.4431	0.0843	0.4431	0.0761	0.4431	0.0657
0.4642	0.1373	0.4642	0.1057	0.4642	0.0976	0.4642	0.0916	0.4642	0.086	0.4642	0.0763	0.4642	0.0674
0.4863	0.1479	0.4863	0.1238	0.4863	0.1108	0.4863	0.0997	0.4863	0.0904	0.4863	0.0827	0.4863	0.0733
0.5094	0.1814	0.5094	0.1384	0.5094	0.1218	0.5094	0.1085	0.5094	0.0977	0.5094	0.0867	0.5094	0.0754

PTWW115.grf ~ RPP-WTP Pretreatment Facility ISRS ~ Calc No.: 24590-PTF-S0C-S15T-00057, Rev. A ~ Frequency (cps) ~ Spectral Acceleration (g) ~ Figure 115 ~ SLAB ONLY Vertical Responses ~ Elevation 56 ft. ~ EL56_C-E-17-20

Damping	0.50%		2%		3%		4%		5%		7%		10%
Freq.	Accel.	Freq.	Accel.	Freq.	Accel.	Freq.	Accel.	Freq.	Accel.	Freq.	Accel.	Freq.	Accel.
0.5337	0.2216	0.5337	0.1605	0.5337	0.1343	0.5337	0.1149	0.5337	0.1023	0.5337	0.0867	0.5337	0.0754
0.5591	0.2216	0.5591	0.1605	0.5591	0.1343	0.5591	0.1149	0.5591	0.1023	0.5591	0.088	0.5591	0.0754
0.5857	0.2216	0.5857	0.1605	0.5857	0.1343	0.5857	0.1149	0.5857	0.1023	0.5857	0.0937	0.5857	0.0821
0.6136	0.2216	0.6136	0.1605	0.6136	0.1343	0.6136	0.1178	0.6136	0.1111	0.6136	0.1003	0.6136	0.0874
0.6428	0.2257	0.6428	0.1621	0.6428	0.1356	0.6428	0.1179	0.6428	0.1131	0.6428	0.103	0.6428	0.0901
0.6734	0.2257	0.6734	0.1621	0.6734	0.1389	0.6734	0.1291	0.6734	0.1211	0.6734	0.1084	0.6734	0.0936
0.7055	0.2257	0.7055	0.1621	0.7055	0.1389	0.7055	0.1291	0.7055	0.1211	0.7055	0.1095	0.7055	0.0952
0.7391	0.2257	0.7391	0.1621	0.7391	0.1413	0.7391	0.1328	0.7391	0.1244	0.7391	0.1097	0.7391	0.0952
0.7743	0.3175	0.7743	0.2132	0.7743	0.1805	0.7743	0.1581	0.7743	0.1421	0.7743	0.1211	0.7743	0.1032
0.8111	0.3175	0.8111	0.2132	0.8111	0.1805	0.8111	0.1581	0.8111	0.1421	0.8111	0.1211	0.8111	0.1065
0.8497	0.3175	0.8497	0.2132	0.8497	0.1805	0.8497	0.166	0.8497	0.1535	0.8497	0.134	0.8497	0.1129
0.8902	0.3175	0.8902	0.2132	0.8902	0.1869	0.8902	0.1713	0.8902	0.1583	0.8902	0.1378	0.8902	0.1175
0.9326	0.4866	0.9326	0.2993	0.9326	0.2464	0.9326	0.215	0.9326	0.1926	0.9326	0.1632	0.9326	0.1377
0.977	0.4866	0.977	0.2993	0.977	0.2464	0.977	0.215	0.977	0.1926	0.977	0.1712	0.977	0.1493
1.0235	0.4866	1.0235	0.2993	1.0235	0.2464	1.0235	0.215	1.0235	0.1926	1.0235	0.1775	1.0235	0.1586
1.0723	0.4866	1.0723	0.2993	1.0723	0.2574	1.0723	0.2363	1.0723	0.2193	1.0723	0.1933	1.0723	0.1665
1.1233	0.5744	1.1233	0.3387	1.1233	0.2663	1.1233	0.2363	1.1233	0.2193	1.1233	0.1933	1.1233	0.1665
1.1768	0.5744	1.1768	0.3781	1.1768	0.3127	1.1768	0.2762	1.1768	0.247	1.1768	0.2076	1.1768	0.1828
1.2328	0.5744	1.2328	0.3801	1.2328	0.3429	1.2328	0.3128	1.2328	0.2874	1.2328	0.2483	1.2328	0.2091
1.2916	0.5744	1.2916	0.4124	1.2916	0.3638	1.2916	0.3237	1.2916	0.295	1.2916	0.2539	1.2916	0.2139
1.353	0.6253	1.353	0.4124	1.353	0.3638	1.353	0.3237	1.353	0.3026	1.353	0.2724	1.353	0.2369
1.4175	0.6253	1.4175	0.4124	1.4175	0.3638	1.4175	0.3419	1.4175	0.3245	1.4175	0.2933	1.4175	0.2571
1.485	0.6253	1.485	0.4371	1.485	0.3975	1.485	0.3717	1.485	0.3478	1.485	0.3068	1.485	0.2662
1.5557	0.6253	1.5557	0.456	1.5557	0.426	1.5557	0.3995	1.5557	0.376	1.5557	0.3358	1.5557	0.2887
1.6298	0.7362	1.6298	0.4726	1.6298	0.4349	1.6298	0.4101	1.6298	0.3877	1.6298	0.3499	1.6298	0.3051
1.7074	0.7659	1.7074	0.5983	1.7074	0.5291	1.7074	0.4732	1.7074	0.428	1.7074	0.3634	1.7074	0.3086
1.7887	0.8581	1.7887	0.7092	1.7887	0.635	1.7887	0.5721	1.7887	0.5184	1.7887	0.4408	1.7887	0.3653
1.8738	0.9071	1.8738	0.7382	1.8738	0.6675	1.8738	0.6084	1.8738	0.5648	1.8738	0.4905	1.8738	0.4072
1.963	1.0464	1.963	0.7997	1.963	0.7215	1.963	0.6607	1.963	0.6081	1.963	0.5225	1.963	0.4276
2.0565	1.1387	2.0565	0.8196	2.0565	0.732	2.0565	0.661	2.0565	0.6081	2.0565	0.5225	2.0565	0.4276
2.1544	1.1387	2.1544	0.8196	2.1544	0.732	2.1544	0.661	2.1544	0.6081	2.1544	0.5225	2.1544	0.4276
2.257	1.1387	2.257	0.8196	2.257	0.732	2.257	0.6622	2.257	0.6085	2.257	0.5225	2.257	0.439
2.3645	1.8015	2.3645	0.9555	2.3645	0.7668	2.3645	0.6987	2.3645	0.6389	2.3645	0.5434	2.3645	0.4598
2.4771	2.0921	2.4771	1.1123	2.4771	0.8901	2.4771	0.7484	2.4771	0.6503	2.4771	0.5434	2.4771	0.4618
2.595	2.6286	2.595	1.3049	2.595	0.9786	2.595	0.8001	2.595	0.6919	2.595	0.5515	2.595	0.4636

PTWW115.grf ~ RPP-WTP Pretreatment Facility ISRS ~ Calc No.: 24590-PTF-S0C-S15T-00057, Rev. A ~ Frequency (cps) ~ Spectral Acceleration (g) ~ Figure 115 ~ SLAB ONLY Vertical Responses ~ Elevation 56 ft. ~ EL56_C-E-17-20

Damping Freq.	0.50% Accel.	Freq.	2% Accel.	Freq.	3% Accel.	Freq.	4% Accel.	Freq.	5% Accel.	Freq.	7% Accel.	Freq.	10% Accel.
2.7186	2.6286	2.7186	1.3049	2.7186	0.9786	2.7186	0.8001	2.7186	0.6919	2.7186	0.5515	2.7186	0.4669
2.848	2.6286	2.848	1.3049	2.848	0.9786	2.848	0.8001	2.848	0.6919	2.848	0.5515	2.848	0.4669
2.9836	2.6286	2.9836	1.3049	2.9836	0.9786	2.9836	0.8001	2.9836	0.6919	2.9836	0.5515	2.9836	0.4669
3.1257	2.6286	3.1257	1.3049	3.1257	0.9786	3.1257	0.8001	3.1257	0.6919	3.1257	0.5515	3.1257	0.4669
3.2745	1.4875	3.2745	0.9429	3.2745	0.7973	3.2745	0.6916	3.2745	0.6178	3.2745	0.5384	3.2745	0.4669
3.4305	1.1706	3.4305	0.7986	3.4305	0.7066	3.4305	0.6392	3.4305	0.589	3.4305	0.5099	3.4305	0.4525
3.5938	1.1706	3.5938	0.7986	3.5938	0.7066	3.5938	0.6392	3.5938	0.589	3.5938	0.5097	3.5938	0.4525
3.7649	1.1706	3.7649	0.7986	3.7649	0.7066	3.7649	0.6392	3.7649	0.589	3.7649	0.5097	3.7649	0.4525
3.9442	1.1706	3.9442	0.7986	3.9442	0.7066	3.9442	0.6392	3.9442	0.589	3.9442	0.5097	3.9442	0.4525
4.132	1.1706	4.132	0.7986	4.132	0.7066	4.132	0.6392	4.132	0.589	4.132	0.5097	4.132	0.4525
4.3288	1.1706	4.3288	0.7986	4.3288	0.7066	4.3288	0.6392	4.3288	0.589	4.3288	0.5097	4.3288	0.4525
4.5349	1.1706	4.5349	0.7986	4.5349	0.7066	4.5349	0.6392	4.5349	0.589	4.5349	0.5097	4.5349	0.4525
4.7508	1.1706	4.7508	0.7986	4.7508	0.7066	4.7508	0.6392	4.7508	0.589	4.7508	0.5097	4.7508	0.4525
4.977	1.1706	4.977	0.7986	4.977	0.7066	4.977	0.6392	4.977	0.589	4.977	0.5097	4.977	0.4525
5.214	1.1706	5.214	0.7986	5.214	0.7066	5.214	0.6392	5.214	0.589	5.214	0.5097	5.214	0.4525
5.4623	1.3551	5.4623	0.7986	5.4623	0.7066	5.4623	0.6392	5.4623	0.589	5.4623	0.5097	5.4623	0.4599
5.7224	1.6638	5.7224	0.9095	5.7224	0.7723	5.7224	0.6766	5.7224	0.6048	5.7224	0.5097	5.7224	0.4637
5.9948	1.6638	5.9948	0.9095	5.9948	0.7723	5.9948	0.6766	5.9948	0.6048	5.9948	0.5097	5.9948	0.4734
6.2803	1.6638	6.2803	0.9095	6.2803	0.7723	6.2803	0.6766	6.2803	0.6048	6.2803	0.5097	6.2803	0.4734
6.5793	1.6638	6.5793	0.9095	6.5793	0.7723	6.5793	0.6766	6.5793	0.6048	6.5793	0.5097	6.5793	0.4734
6.8926	1.6638	6.8926	0.9095	6.8926	0.7723	6.8926	0.6766	6.8926	0.6048	6.8926	0.5097	6.8926	0.4734
7.2208	1.6308	7.2208	0.9095	7.2208	0.7723	7.2208	0.6766	7.2208	0.6048	7.2208	0.5097	7.2208	0.4734
7.5646	1.6308	7.5646	0.9095	7.5646	0.7723	7.5646	0.6766	7.5646	0.6048	7.5646	0.5097	7.5646	0.4734
7.9248	1.6308	7.9248	0.9095	7.9248	0.7723	7.9248	0.6766	7.9248	0.6048	7.9248	0.5097	7.9248	0.4734
8.3022	1.6308	8.3022	0.9095	8.3022	0.7723	8.3022	0.6766	8.3022	0.6048	8.3022	0.5116	8.3022	0.4743
8.6975	1.6308	8.6975	0.9095	8.6975	0.7723	8.6975	0.6766	8.6975	0.6048	8.6975	0.5631	8.6975	0.528
9.1116	1.6308	9.1116	0.9095	9.1116	0.7723	9.1116	0.6822	9.1116	0.665	9.1116	0.6322	9.1116	0.5799
9.5455	1.6308	9.5455	0.9835	9.5455	0.9073	9.5455	0.848	9.5455	0.7987	9.5455	0.7177	9.5455	0.625
10	1.6308	10	1.0819	10	0.9829	10	0.9016	10	0.8346	10	0.7301	10	0.625
10.4762	1.6308	10.4762	1.0819	10.4762	0.9829	10.4762	0.9016	10.4762	0.8346	10.4762	0.7301	10.4762	0.625
10.975	1.6308	10.975	1.0819	10.975	0.9829	10.975	0.9016	10.975	0.8346	10.975	0.7301	10.975	0.6298
11.4976	1.6308	11.4976	1.0819	11.4976	0.9829	11.4976	0.9016	11.4976	0.8378	11.4976	0.7712	11.4976	0.6955
12.045	1.6308	12.045	1.0819	12.045	0.9829	12.045	0.9016	12.045	0.8378	12.045	0.7828	12.045	0.7206
12.6186	1.7655	12.6186	1.0819	12.6186	0.9829	12.6186	0.9016	12.6186	0.8378	12.6186	0.7828	12.6186	0.7274
13.2194	1.7655	13.2194	1.0819	13.2194	0.9829	13.2194	0.9016	13.2194	0.8748	13.2194	0.823	13.2194	0.7439

PTWW115.grf ~ RPP-WTP Pretreatment Facility ISRS ~ Calc No.: 24590-PTF-S0C-S15T-00057, Rev. A ~ Frequency (cps) ~ Spectral Acceleration (g) ~ Figure 115 ~ SLAB ONLY Vertical Responses ~ Elevation 56 ft. ~ EL56_C-E-17-20

Damping	0.50%		2%		3%		4%		5%		7%		10%
Freq.	Accel.	Freq.	Accel.	Freq.	Accel.	Freq.	Accel.	Freq.	Accel.	Freq.	Accel.	Freq.	Accel.
13.8489	2.1962	13.8489	1.3794	13.8489	1.2634	13.8489	1.1839	13.8489	1.1151	13.8489	0.9858	13.8489	0.8419
14.5083	3.099	14.5083	1.7518	14.5083	1.6507	14.5083	1.5281	14.5083	1.3976	14.5083	1.2195	14.5083	1.0605
15.1991	5.721	15.1991	3.1594	15.1991	2.5932	15.1991	2.2035	15.1991	1.9756	15.1991	1.5418	15.1991	1.3364
15.9228	7.6802	15.9228	3.9908	15.9228	2.9281	15.9228	2.3497	15.9228	1.998	15.9228	1.5418	15.9228	1.3585
16.681	7.6802	16.681	3.9908	16.681	2.9281	16.681	2.3497	16.681	1.998	16.681	1.5418	16.681	1.3585
17.4753	7.6802	17.4753	3.9908	17.4753	2.9281	17.4753	2.3497	17.4753	1.998	17.4753	1.5418	17.4753	1.3585
18.3074	7.6802	18.3074	3.9908	18.3074	2.9281	18.3074	2.3497	18.3074	1.998	18.3074	1.5418	18.3074	1.3585
19.1791	7.6802	19.1791	3.9908	19.1791	2.9281	19.1791	2.3497	19.1791	1.998	19.1791	1.5418	19.1791	1.3585
20.0923	5.0233	20.0923	2.5698	20.0923	2.2318	20.0923	2.0531	20.0923	1.8683	20.0923	1.5418	20.0923	1.2323
21.049	5.0233	21.049	2.5698	21.049	1.9224	21.049	1.5699	21.049	1.4464	21.049	1.3294	21.049	1.1577
22.0513	5.0233	22.0513	2.5698	22.0513	1.9224	22.0513	1.5699	22.0513	1.3278	22.0513	1.1117	22.0513	1.0269
23.1013	2.3419	23.1013	1.5377	23.1013	1.433	23.1013	1.3325	23.1013	1.2262	23.1013	1.0197	23.1013	0.9065
24.2013	1.5293	24.2013	1.0859	24.2013	1.0006	24.2013	0.9426	24.2013	0.9155	24.2013	0.8472	24.2013	0.7881
25.3536	1.2574	25.3536	0.8767	25.3536	0.8421	25.3536	0.8119	25.3536	0.7853	25.3536	0.7362	25.3536	0.6758
26.5609	1.2574	26.5609	0.8155	26.5609	0.7384	26.5609	0.6923	26.5609	0.6671	26.5609	0.6573	26.5609	0.6403
27.8256	1.2574	27.8256	0.8155	27.8256	0.7384	27.8256	0.6884	27.8256	0.6534	27.8256	0.6229	27.8256	0.6093
29.1505	0.6647	29.1505	0.618	29.1505	0.6094	29.1505	0.5972	29.1505	0.5935	29.1505	0.5904	29.1505	0.5816
30.5386	0.6591	30.5386	0.6039	30.5386	0.5896	30.5386	0.581	30.5386	0.5752	30.5386	0.5671	30.5386	0.5581
31.9927	0.5376	31.9927	0.5492	31.9927	0.5493	31.9927	0.5479	31.9927	0.546	31.9927	0.5418	31.9927	0.5355
33.516	0.5125	33.516	0.5181	33.516	0.5192	33.516	0.5192	33.516	0.5188	33.516	0.5173	33.516	0.5142
35.1119	0.4954	35.1119	0.4964	35.1119	0.4969	35.1119	0.4972	35.1119	0.4973	35.1119	0.4971	35.1119	0.4958
36.7838	0.4806	36.7838	0.481	36.7838	0.4812	36.7838	0.4813	36.7838	0.4814	36.7838	0.4813	36.7838	0.4807
38.5353	0.468	38.5353	0.4683	38.5353	0.4684	38.5353	0.4684	38.5353	0.4685	38.5353	0.4684	38.5353	0.4681
40.3702	0.4573	40.3702	0.4574	40.3702	0.4575	40.3702	0.4575	40.3702	0.4576	40.3702	0.4575	40.3702	0.4574
42.2924	0.4479	42.2924	0.448	42.2924	0.448	42.2924	0.4481	42.2924	0.4481	42.2924	0.4481	42.2924	0.4481
44.3062	0.4396	44.3062	0.4396	44.3062	0.4397	44.3062	0.4397	44.3062	0.4397	44.3062	0.4398	44.3062	0.4398
46.4159	0.4321	46.4159	0.4321	46.4159	0.4322	46.4159	0.4322	46.4159	0.4322	46.4159	0.4323	46.4159	0.4325
48.626	0.4252	48.626	0.4252	48.626	0.4253	48.626	0.4253	48.626	0.4254	48.626	0.4255	48.626	0.4258
50.9414	0.4188	50.9414	0.4188	50.9414	0.4188	50.9414	0.4189	50.9414	0.4189	50.9414	0.4191	50.9414	0.4195

Mechanical Data Sheet: Vessel

Plant Item No.
24590-PTF-MV-TLP-VSL-00002
Data Sheet No.
24590-PTF-MVD-TLP-00004

R10315852

Project	RPP-WTP	P&IDs	24590-PTF-M6-TLP-00002
Project No	24590	Process Calculation 1	24590-PTF-MVC-TLP-00002
Project Site	DOE Hanford		
System No	TLP	Vessel Drawings	24590-QL-POA-MEVV-00001-01-204
Building	PTF		
Description	Treated LAW Evaporator Condensate Vessel TLP-VSL-00002		

ISSUED BY RPP-WTP PDC INIT DATE

Reference Data

Charge Vessels (Tag Numbers)	N/A
Pulse Jet Mixers / Agitators (Tag Numbers)	N/A
RFDs/Pumps (Tag Numbers)	N/A

Service Data

Quality Level	CM	Fabrication Specification	24590-WTP-3PS-MV00-T0001
Seismic Category	SC-III	Design Code	ASME Section VIII Division 1
Service/Contents	Process Condensate	Code Stamp	Yes
Design Specific Gravity	1.0	NB Registration	Yes
Max Operating Volume gal	1,916	Wind Design	None
Total Volume gal	2,227 1	Snow/Ash Design	None
Postweld Heat Treat	Not Required	Seismic Design	24590-WTP-3PS-MV00-T0002 24590-WTP-3PS-FB01-T0001 1
Seismic Base Moment* ft*lb	N/A 1		

Design Data

Inside Diameter	inch	72		Corrosion Allowance inch	0.04
Length/Height (TL-TL)	inch	110.69 1			
		Vessel Operating	Vessel Design	Coil/Jacket Design	Notes
Internal Pressure	PSIG	-0.07	15	N/A	
External Pressure	PSIG	0	14.7	N/A	
Temperature	°F	100	150	N/A	
Min Design Metal Temp	°F	49		Hydrostatic Test Pressure PSIG	19.5 1

Materials of Construction

Component	Material	Containment	Notes
Top Head	SA-240 304 1	Auxiliary	5/8" thickness; maximum carbon content of 0.030% for welded components 1
Shell	SA-240 304 1	Primary	5/8" (Upper), 3/8" (Lower) thickness; maximum carbon content of 0.030% for welded components 1
Bottom Head	SA-240 304 1	Primary	1/2" thickness; maximum carbon content of 0.030% for welded components 1
Vessel Support	SA-240 304 1	N/A	Maximum carbon content of 0.030% for welded components
Jacket/Coils/Half-Pipe Jacket	N/A	N/A	
Internals	N/A	N/A	
Pipe	SA-312 TP304 1	Note 1	Maximum carbon content of 0.030% for welded components
Forgings/ Bar stock	SA-182 F316 1	N/A 1	Maximum carbon content of 0.030% for welded components
Gaskets	N/A 1	N/A 1	
Bolting	N/A 1	N/A 1	
Wash Ring 1	SA-312 TP304 1	N/A 1	Maximum carbon content of 0.030% for welded components 1

Miscellaneous Data

Orientation	Vertical	
Support Type	Stainless steel legs 304 SS (max. carbon content 0.030%) 1	
Insulation Function	None	
Insulation Thickness	inch	None
Insulation Material	None	
External Finish	Welds descaled as laid	
Internal Finish	Welds ground smooth	

Notes

Notes: (1) Nozzles located below the top of the overflow nozzle are primary containment. See 24590-WTP-3PS-MV00-T0001 for NDE requirements.
(2) Nozzle tolerance +/- 1/4"
(3) 40 years design life
(4) NDE for this vessel must meet requirements per para. 6.1, 6.4, and 7.2 of specification 24590-WTP-3PS-MV00-T0001

Revision History

Rev	Description	By	Checked	Reviewed	Approved	Date
1	Changed as noted	E. Le	R. Nowak	G. Butt	J. Julyk	5/27/04
0	Issued for Procurement	E. Le	A. Donnelly	J. Julyk	M. Hoffman	4/30/2003

Drawings and Documents

Operating Unit Group 10 – Appendix 8.7
Pretreatment Building
Specifications

The documents listed in the following table are incorporated by reference into this permit and are subject to the requirements set forth in Part I Standard Conditions, Part II General Facility Conditions, and Part III Operating Unit Group 10 Conditions. Upon request, copies of the documents can be viewed at the Nuclear Waste Program Resource Center located at 3100 Port of Benton Blvd. Richland, WA. Appointments for viewing can be scheduled by calling (509) 372-7950.

Drawing/Document Number	***Description***
24590-PTF-3PS-MEVV-T0001, Rev 2	Engineering Specification for Forced Circulation Vacuum Evaporator System
24590-PTF-3PS-MEVV-T0002, Rev 4	Engineering Specification for Cesium Nitric Acid Recovery Forced Circulation Vacuum Evaporator System
24590-PTF-3PS-MKAS-T0001, Rev 1	Engineering Specification for PTF Vessel Vent Caustic Scrubber
24590-PTF-3PS-MLFP-TP001, Rev 1	Engineering Specification for Ultrafilters
24590-PTF-3PS-MPC0-T0001, Rev 1	Engineering Specification for PTF Hot Cell Slurry Pumps to Meet Requirements of API Standard 610, Eighth Edition – Export Controlled Information
24590-PTF-3PS-MWD0-TP003, Rev 1	Engineering Specification for RDP Spent Resin Dewatering Equipment Package
RESERVED	RESERVED

Source documents (which do not include a "P" in the last set of numbers, e.g. "-P0001," or "-TP001") should be used in conjunction with any document change notices issued against them.

We are currently transitioning from permit documents (which do include a "P" in the last set of numbers) to source documents. At the end of the transition period, permit submittals will contain source documents and will be incorporated into the permit as described in Ecology Publication # 07-05-006 (www.ecy.wa.gov/biblio/nwp.html).

This page intentionally left blank.

R10757015

ISSUED BY
RPP-WTP PDC

RIVER PROTECTION PROJECT – WASTE TREATMENT PLANT

ENGINEERING SPECIFICATION

FOR

Forced Circulation Vacuum Evaporator System

Content applicable to ALARA? ☒ Yes ☐ No

ADR No.
24590-PTF-ADR-M-03-003

Rev
0

NOTE: Contents of this document are Dangerous Waste Permit affecting.

Quality Level
Q
DOE Contract No. DE-AC27-01RV14136

REV	DATE	BY	CHECK	REVIEW	E&NS	QA	DPEM
2	2/21/07	E. Le	L. Donovan	B. Makadia/ J. Julyk	M.O. Gibson	M. Ehlinger	R. Voke
1	03/24/05	E. Le	S. Crow	J. Julyk	N/A	G. Warner	R. Smith
0	04/24/03	E. Le	G. Butt	J. Julyk	N/A	G. Warner	S. Grabowski

SPECIFICATION No.
24590-PTF-3PS-MEVV-T0001

Rev
2

Best Available Copy

Revision History

Revision	Reason for Revision
0	Issued for Procurement
1	Incorporated Design Changes: 24590-PTF-3PN-MEVV-00001 24590-PTF-3PN-MEVV-00004 (which incorporated 24590-WTP-SDDR-PROC-04-00104) 24590-PTF-3PN-MEVV-00005 24590-PTF-3PN-MEVV-00006 with the following revisions: 1. Revised section 1.2.1 to delete duplicate information regarding internal deentrainment separation system for FEP & TLP separator vessels. 2. Revised section 1.2.1 to group support structure with their associated separator vessels. 3. Revised section 1.2.1 to provide more descriptive steam conditioning assembly of FEP & TLP evaporators for clarification. 4. Revised section 1.2.1 to add reboiler steam condensate transfer stations for FEP & TLP evaporators for Seller's additional scope of supply. 5. Revised section 1.2.1 to change "mechanical seal" to "pump seal" 6. Revised section 3.19.5 to delete "following by vertical up-ending" at the end of the 1st sentence 7. Revised section 3.20.3.5 to delete "assemblies" in the 1st sentence 24590-PTF-3PN-MEVV-00007 24590-PTF-3PN-MEVV-00009 1. Incorporated 24590-WTP-SDDR-PROC-04-00994, 24590-WTP-SDDR-PROC-04-00995, 24590-WTP-SDDR-PROC-04-01193, 24590-WTP-SDDR-PROC-04-01194, 24590-WTP-SDDR-PROC-04-01270, 24590-WTP-SDDR-PROC-04-01271, 24590-WTP-SDDR-PROC-04-01272, 24590-WTP-SDDR-PROC-04-01278 and 24590-WTP-SDDR-PROC-05-00181 2. Revised section 2.1.2 for clarifications 3. Revised wording in section 4.2.12 for clarification 4. Revised section 8.18 to delete "for off-gas piping pieces" from the 1st sentence 24590-WTP-SDDR-PROC-05-00208. Revised Appendix E to include reboiler steam condensate transfer stations. Revised Appendix P to add drawings for reboiler nozzle locations. Added Appendix T to provide design evaluation inputs
2	Incorporated Design Changes: 24590-PTF-3PN-MEVV-00012 with revision of section 3.4.3.3 for clarification 24590-PTF-3PN-MEVV-00014 with the following revisions 1. Revised section V8b of appendix V to remove digitized data verification requirement that is no longer applicable 2. Revised section V5.2 of appendix V to add "or greater" at the end of the sentence for clarification. 24590-PTF-3PN-MEVV-00019

Revision	Reason for Revision
	24590-WTP-SDDR-M-05-00438
	24590-WTP-SDDR-MS-07-00029
	Deleted Appendix R – outdated In-Structure Response Spectra (ISRS) curves
	Revised section 3.19.15 to add "following by vertical up-ending" from 24590-PTF-3PN-MEVV-00006 which was erroneously deleted in revision 1 of this specification
	Revised section 3.20.3.5 to add "assemblies" to the 1st sentence from 24590-PTF-3PN-MEVV-00006 which was erroneously deleted in revision 1 of this specification
	Revised section 4.2.12 to correct typos
	Revised section 8.1.8 to add "off-gas piping pieces" from 4590-PTF-3PN-MEVV-00009 which was erroneously deleted in revision 1 of this specification
	Revised sections 1.2.6, 3.4.3.2, and 3.9.13 to remove low-pressure steam information which is no longer applicable
	Revised section 1.2.12 to indicate that seismic information is provided in Appendix V.
	Revised section 1.2.14 to correct steam supply information
	Deleted section 1.3.29 to correct Buyer's scope of work
	Revised section 1.4.9 to delete outdated acceleration values
	Revised sections 1.4.11, 1.4.13, 1.4.15, 1.4.16, 1.4.18, 1.4.25, 1.4.26, 1.4.29, 1.4.30, and 1.4.32 to correct definitions
	Revised sections 2.2.6, 2.2.15, and 2.2.16 to be consistent with SRD
	Add sections 2.2.34, 2.2.35, and 2.2.36 for references.
	Revised section 3.1.17 to add "gpm" at the end of 2nd bullet.
	Added section 3.14.20 to incorporate 2" drain nozzle inlet to reboiler steam condensate vessel from desuperheater.
	Revised Appendix L to provide the location of 2" inlet drain nozzle.
	Revised section 3.16.3 to provide seismic analysis requirements in the Appendix V.
	Revised section 4.2.8 to clarify that threaded flanges and fittings are not allowed only in the balck cells.
	Revised section 6.6.3 to clarify the weld acceptance criteria
	Revised section 7.2 to clarify the stimulant test using non-radioactive cesium is not required.
	Revised section 11.2 to clarify design stress/seismic report submittal requirements.
	Revised sections 3.1.9, 3.9.2, 3.10.2, 3.11.4, 3.12.3 to clarify nozzle loading requirements
	Revised sections 2.4.60 and 2.4.61 to correct typos
	Revised Appendices A, B, and C to remove outdated references.
	Revised Appendix D to correct steam supply conditions.
	Revised Appendix E to add a note for clarification regarding QL-1 and QL-2 used by Seller.

Contents

1 Scope 5
1.1 Project Description and Location 5
1.2 Equipment, Material, and Services Required 5
1.3 Work by Others 12
1.4 Definitions 14
1.5 Mechanical Data Sheets 18
1.6 Safety/Quality/Seismic Classifications 18
2 Applicable Documents 18
2.1 General 18
2.2 Codes and Industry Standards 19
2.3 Reference Documents 21
2.4 Reference Drawings / Data Sheets 22
3 Design Requirements 27
3.1 General 27
3.2 Basic Function 30
3.3 Performance 31
3.4 Design Conditions 32
3.5 Environmental Conditions 33
3.6 Feed Pumps 34
3.7 Recirculation Pumps 36
3.8 Concentrate Pumps 37
3.9 Reboilers 38
3.10 Evaporator Separator Vessels 39
3.11 Primary Condensers 40
3.12 Secondary Condenser System 41
3.13 Evaporator Process Condensate Vessels & Pumps 42
3.14 Antifoam Skid and FEP/TLP Reboiler Condensate Transfer Stations 44
3.15 Mechanical Handling Requirements 45
3.16 Loadings 46
3.17 Electrical Requirements 47
3.18 Instrumentation and Control Requirements 47
3.19 Lifting Requirements 48
3.20 Accessibility and Maintenance 49

Contents

4 Materials 51
4.1 Positive Material Identification 51
4.2 Construction 51
4.3 Vessels 52
4.4 Pipework 53
4.5 Prohibited Materials 53
4.6 Storage of Special Materials (e.g., stainless steel) prior to work 53
5 Fabrication 53
5.1 General 53
5.2 Welding 54
6 Inspections and Examinations 54
6.1 Nondestructive Examinations 54
6.2 Dimensional Inspections 55
6.3 Visual Weld Inspections 55
6.4 Liquid Penetrant Test 56
6.5 Radiography 56
6.6 Magnetic Particle Examination 57
6.7 Final Inspection 57
6.8 Inspection and Test Status 57
6.9 Control of Nonconforming Items 57
7 Testing 57
7.1 Shop Tests 57
7.2 Integrated Acceptance Tests 58
8 Preparation for Shipment 59
8.1 General Requirements 59
8.2 Painting 60
8.3 Tagging 62
9 Quality Assurance 63
9.1 General Commercial Designation (CM) Requirements 63
9.2 Quality Level (QL) Requirements 63
10 Configuration Management 64
11 Documentation and Submittals 64
11.1 General 64

Contents

11.2 Calculations 65
11.2.1 ANSI/AISC N690 Steel Frame / Support Designs 65
11.2.2 ASME VIII, Div 2, Appendix 4, Vessel including internal supports/components 65
11.2.3 ASME B31.3 Piping Design 65
11.3 As-Built Drawings 66
11.4 Dimensional Record Drawings 66
11.5 Project Start 66
11.6 30 % Design Review 66
11.7 60 % Design Review 67
11.8 90 % Design Review 68
11.9 Final Design Review 73

Appendices

A	Waste Feed Evaporator Stream Data	A-1
B	Treated LAW Evaporator Stream Data	B-1
C	Predicted Maximum Radionuclide	C-1
D	Evaporator Process Data	D-1
E	Quality Level and Seismic Category for Evaporator Equipment	E-1
F	Separator Vessel Skid Support Layout	F-1
G	Hot Cell Remote Impact Wrench	G-1
H	Deleted	H-1
I	FEP Evaporator Equipment Skids Location and Layout Sketches	I-1
J	TLP Evaporator Equipment Skids Location and Layout Sketches	J-1
K	Antifoam Equipment Skid Location and Layout Sketches	K-1
L	Reboiler Steam Condensate Transfer Station Location and Layout Sketches	L-1
M	Deleted	M-1
N	Deleted	N-1
O	Nondestructive Examination (NDE) of Fabricated Pipe Welds	O-1
P	Reboiler Skids and Preliminary Nozzle Loads at Grayloc Connections	P-1
Q	Reboilers and Recirculation Pumps Layout	Q-1
R	Deleted	R-1
S	Manufacturers Standard Coating Data Sheet	S-1
T	Design Evolution Inputs	T-1
U	Deleted	U-1
V	FEP/TLP Evaporator Systems Composite Analyses	V-1

1 Scope

1.1 Project Description and Location

The Hanford Tank Waste Treatment and Immobilization Plant (WTP) is a complex of waste treatment facilities where the US Department of Energy (DOE) Hanford Site tank waste will be pretreated and immobilized into stable glass form via vitrification. The WTP Contractor will design, build, and startup the WTP pretreatment and vitrification facilities for the DOE Office of River Protection (ORP). The waste treatment facilities will pretreat and immobilize the low-activity waste (LAW) and high-level waste (HLW) currently stored in underground storage tanks at the Hanford Site.

The Hanford Site occupies an area of about 560 square miles and is located along the Columbia River, north of Richland, WA in the U.S.A. The WTP Facility will be constructed at the east end of the 200 East Area of the Hanford Site. The counties of Benton, Franklin, and Grant surround the Hanford Site.

1.2 Equipment, Material, and Services Required

This specification provides the requirements for the design, analysis, fabrication, quality assurance, inspection, testing, qualification, and labeling of three (3) forced circulation vacuum evaporator systems for use in the WTP Pretreatment Facility. This specification also provides the requirements for the supply of services, manuals, instructions, procedures, and other associated documentation.

The scope of work for the Seller includes all work defined in this specification and its addenda and attachments. Work shall include, but is not limited to, the following:

1.2.1 Provide fully detailed designs, drawings, diagrams, supporting calculations, supporting analyses, procedures, installation instructions, and all labor, materials, equipment, and services necessary to manufacture, test, inspect, label and package for shipment three (3) sets of the forced circulation vacuum evaporator system hardware, including handling and servicing equipment, all fabricated to appropriate NQA-1 requirements in accordance with all specification requirements, with the deliverables being reports, calculations, procedures, data sheets, drawings and diagrams as outlined in this specification and the Material Requisition (MR). Refer to tables below for what shall be included as part of evaporator systems to be provided.

Waste Feed Evaporator (FEP) Systems

Equipment	Tag
Two (2) FEP Separator Vessels. Each vessel with support structure, three layers of de-entrainment trays, two layers of mesh pads and sprays.	FEP-SEP-00001A FEP-SEP-00001B
Two (2) FEP Reboilers with Graylocs and PUREX nozzles installed in accordance with this specification and stainless steel structural support frames.	FEP-RBLR-00001A FEP-RBLR-00001B
Two (2) FEP Recirculation Pumps. Each pump includes motor, pump seals, and adjustable speed drive. The pump inlet and outlet pipe ends prepared for butt welding.	FEP-PMP-00009A FEP-PMP-00009B
Two (2) FEP Condenser skid. Each skid consisting of Primary Condenser, 1st stage steam ejector, Intercondenser, 2nd stage steam ejector, Aftercondenser and interconnecting piping.	FEP-COND-00001A FEP-COND-00002A FEP-COND-00003A FEP-EJCTR-00040 FEP-EJCTR-00041 FEP-COND-00001B FEP-COND-00002B FEP-COND-00003B FEP-EJCTR-00042 FEP-EJCTR-00043
One (1) FEP Condensate Vessel for both FEP systems. Vessel includes skirt and support ring.	FEP-VSL-00005
Two (2) FEP Condensate Pumps include base plate, motor, variable speed drive, and mechanical seal mounted on common skid.	FEP-PMP-00006A FEP-PMP-00006B
One (1) Antifoam Vessel serves the FEP and TLP separators. Vessel includes skirt.	AFR-TK-00001
Three (3) Antifoam Pumps (common for FEP and TLP systems) with base plate and motor mounted on common skid.	AFR-PMP-00006 AFR-PMP-00007 AFR-PMP-00008
Two (2) sets of FEP offgas piping 30" diameter from separator to Primary condenser. Piping includes pipe hangers.	"Note 1"
Two (2) FEP Steam Conditioning Assembly consisting of a steam supply flow control valve, desuperheater and flow element.	FEP-SKID-00006A FEP-SKID-00006B
Four (4) lifting yokes. One lifting yoke for three (3) separator vessels, two lifting yokes for three (3) reboiler and support frame assemblies, and one lifting yoke for three (3) recirculation pumps	"Note 1"
Two (2) FEP Reboiler Steam Condensate Transfer Stations including level tank, transfer pump and condensate recycle pump.	FEP-VSL-00021 FEP-PMP-00010A FEP-PMP-00010B FEP-VSL-00022 FEP-PMP-00011A FEP-PMP-00011B

Note 1: Stainless steel or plastic tags (foil strip is not acceptable) shall be firmly attached by stainless steel wire or stainless steel screws to each separate item. Each tag shall be stamped with, as a minimum: (1) Purchase Order Number, (2) Purchase Order item number, and (3) Equipment/Instrument Tag number.

Treated LAW Evaporator (TLP) System

Equipment	Tag
One (1) TLP Separator Vessel with support structure, three layers of de-entrainment trays, two layers of mesh pads and sprays.	TLP-SEP-00001
One (1) TLP Reboiler with Graylocs and PUREX nozzles installed in accordance with this specification and stainless steel structural support frame.	TLP-RBLR-00001
One (1) TLP Recirculation Pump including motor, pump seals, and adjustable speed drive. The pump inlet and outlet pipe ends prepared for butt welding.	TLP-PMP-00001
Two (2) LAW SBS Feed Pumps with base plate, motor, pump seals, and adustable speed drive.	TLP-PMP-00005A TLP-PMP-00005B
Two (2) TLP Concentrate Pumps with base plate, motor, pump seals, and adjustable speed drive.	TLP-PMP-00011A TLP-PMP-00011B
One (1) TLP Condenser skid consisting of Primary Condenser, 1st stage steam ejector, Intercondenser, 2nd stage steam ejector, Aftercondenser and interconnecting piping.	TLP-COND-00001 TLP-COND-00002 TLP-COND-00003 TLP-EJCTR-00064 TLP-EJCTR-00067
One (1) TLP Condensate Vessel with support.	TLP-VSL-00002
Two (2) Condensate Pumps include base plate, motor, variable speed drive, and mechanical seal mounted on common skid.	TLP-PMP-00002A TLP-PMP-00002B
One (1) set of offgas piping 30" diameter from Separator to Primary Condenser with pipe hangers.	"Note 1"
One (1) TLP steam conditioning Assembly consisting of a steam supply flow control valve, a desuperheater and flow element..	TLP-SKID-00008
One (1) TLP Reboiler Steam Condensate Transfer Station including level tank, transfer pump and condensate recycle pump.	TLP-VSL-00047 TLP-PMP-00012A TLP-PMP-00012B

Note 1: Stainless steel or plastic tags (foil strip is not acceptable) shall be firmly attached by stainless steel wire or stainless steel screws to each separate item. Each tag shall be stamped with, as a minimum: (1) Purchase Order Number, (2) Purchase Order item number, and (3) Equipment/Instrument Tag number.

1.2.2 Provide a guarantee that all equipment listed in section 1.2.1 will perform in accordance with the requirements of this specification and all referenced codes, standards, and documentation in section 2 of this specification. Process warranty shall include demonstration of compliance of the Seller's provided evaporator system during testing per section 7.2 of this specification with the boil-off and decontamination factor requirements. The process warranty is provided with the following conditions: (1) the evaporator systems are operated per Seller's instructions within mutually agreed parameters and chemical analytes that are representative of waste and process conditions, and (2) mutual agreement that foaming within the Separator Vessel is adequately controlled by the Buyer-supplied antifoaming reagent.

1.2.3 Perform sizing calculations and process performance modeling to ensure that each component of the evaporator systems is properly specified to ensure desired performance.

1.2.4 Provide the following nonreplaceable components/equipment which shall attain a 40-year life:

- Separator vessels and all their internal parts (exception made for demister pad life).
- Section of separator offgas pipework located inside the R5/C5 black cells.

1.2.5 Deleted.

1.2.6 Provide three (3) steam conditioning equipment necessary to reduce plant pressure steam to Seller's provided optimal saturated steam condition for reboiler operation. Provide specifications (i.e pipe diameter, associated equipment and layout) for reboiler shell vacuum/vent line.

1.2.7 Provide specifications and data sheets during contract performance for Buyer to procure the following equipment/components.

- FEP feed pumps (FEP-PMP-00007A/B)
- FEP concentrate pumps (FEP-PMP-00008A/B)

1.2.8 Provide evaporator skids, equipment, components, and structural supports with the materials of construction as specified per this specification and on the attached data sheets in section 2 of the MR. The structural supports for evaporator equipment shall match with Buyer's provided embed layout.

1.2.9 Provide evaporator systems that accommodate the wall penetrations, piping layout, equipment dimension envelopes, and equipment locations as specified in Appendices H, I, and J.

1.2.10 Provide stainless steel skid framing to match Buyer embed plates for all three separator vessels. The vessel skid shall conform to the proposed skid layout dimensions shown in the Appendix F.

1.2.11 Provide below-the-hook lifting devices for installation, commissioning, and operation/maintenance of the demister pads assembly, reboiler, and recirculation pump. These will include lifting yokes, beams, fixtures, etc., according to Buyer design constraints for remote handling, which will be provided in 30 % design review stage. Seller is also to provide all special lifting equipment required for installation and maintenance of the evaporator systems.

1.2.12 Provide seismic analysis for evaporator structures, systems, and components. Seismic analysis shall also be performed for reboiler and support frame assemblies. Seismic model shall include: (1) vessel/equipment, (2) skid frames, and (3) supporting posts. For post/embeds locations and details, see drawings 24590-PTF-DD-S13T-00023 thru -0030, 24590-PTF-DD-S13T-00049, 24590-PTF-SS-S15T-00311 thru -00318, 24590-PTF-SS-S15T-00352, and 24590-PTF-SS-S15T-00354. The seismic response spectra and damping values for the performance of the seismic analysis **are provided in the Appendix V.**

1.2.13 Provide the thermal and static stress analyses for the evaporator structures, systems, and components. Seller shall also provide fatigue analysis to support a

40 year design life for the evaporator system. The fatigue analysis shall include all calculations and all supporting data. Buyer will provide the necessary cyclic data for Seller to perform an assessment regarding the fatigue life of the equipment. However, Seller will be responsible for confirmation that the cyclic data has been accurately interpreted before proceeding with the component fatigue analysis.

1.2.14 Identify all interfaces and requirements for external connections with equipment and services supplied by the Buyer. The interface system data parameters for use in each of the evaporator systems shall include, as a minimum, the following:

Inlet Conditions:

- Feed (flow rate @ 77 °F)
- High pressure steam **(see section 3.4.3.3)**
- Service Water (flow rate)
- Antifoam (flow rate)
- Instrument air (flow rate @ pressure)
- Cooling water (flow rate @ 75 °F)
- Operating electrical (kW)
- Installed electrical (kW)

Outlet Conditions:

- Steam Condensate (volumetric flow rate & temperature)
- Process Condensate (volumetric flow rate & temperature)
- Vent System (mass flow rate & temperature)
- Concentrate waste (volumetric flow rate & temperature)

1.2.15 Provide completed Instrument and Mechanical data sheets for all instruments and equipment in the 60 % design review package, utilizing Buyer's supplied instrument data sheet samples attached in the section 2 of the MR as templates. Buyer will procure the required instruments as detailed by the Seller's control philosophy documents (data sheets) for installation by others. Instrumentation shall conform to 24590-WTP-3PS-JQ07-T0001.

1.2.16 Provide the following for instrumentation and controls of Seller's supplied evaporator systems, equipment, and components to support Seller's software development. Any effect that the evaporator control strategy has on equipment operating parameters (i.e., pump flow rates, line flushes, feed and concentrate takeoff strategies, temperature, or pressure) will be mutually agreed upon prior to being implemented into the design.

- P&IDs
- Instrument data sheets
- Instrument loop diagrams
- Instrument location diagrams
- Control philosophies
- Functional descriptions
- Installation details
- Instrument index which includes functional test and operational set points
- Control and sequencing requirements

- Instrumentation and controls for the FEP evaporator feed and concentrate systems.

1.2.17 Provide a reliability analysis and documentation for each of the three (3) evaporator systems in accordance with the following:

1.2.17.1 A complete Failure Modes and Effects Analysis (FMEA) shall be performed on all the equipment that falls within Seller's scope of supply. This shall include associated components such as vessels, remote handling equipment, pumps have associated valves, (for isolation, for maintenance, for cross-ties, etc.) that have electronic control system which are used for process variability (e.g., flow rate). All support systems (e.g., power, air, water, steam, etc.) will be assumed to be 100 % reliable and will not be considered in the FMEA. Structural failure modes will be limited to seismic events, based on whatever seismic analyses have been performed to support the design. The FMEA shall follow in MIL-STD-1629A as close as possible. The equivalent standard actually used to perform the FMEA shall be provided as a reference (including version and year) at the 60 % design review. Also, an explanation shall be included to demonstrate how the standard has been applied. Failure modes for a reboiler are at least as follows: (1) pin hole, (2) crack, and (3) tube rupture. In addition, Seller shall indicate the possibility of the reboiler tube rupture without precursor of pin hole or crack. Determination of the possibility of reboiler tube rupture without a precursor of a pin hole or crack can be made with a qualitative argument based on fracture mechanics. No stress analysis or fracture mechanics calculations will be required to support the qualitative assessment. Failure modes for the remaining components covered by the FMEA shall be as determined by the Seller; however, the basis for the failure mode shall be specified.

1.2.17.2 Failure rate data for the purposes of an availability assessment (performed by Seller) will be derived using the following hierarchy:

- Supplier In-Service Data
- In-Service Data of similar equipment, preferably in similar applications
- Generic Documented Failure Rate Data – data taken from recognized data sources, e.g., Dexter & Perkins, NPRD 1995, etc.

The specific data source shall be provided at the 60 % design review

1.2.17.3 A maintainability analysis will be undertaken in concert with the Buyer. The analysis will address preventative and corrective maintenance activities and estimate the required maintenance for the reboiler and appurtenances.

1.2.17.4 A recommended spare parts list, operations manuals, and maintenance manuals shall be provided.

1.2.17.5 Assume operations are 8,760 operating hours per year.

1.2.18 Provide an analysis of operating life for separator vessel, including its internal demister pads, separation trays, and feed distribution, reboiler, and recirculation pump. Justify all assumptions and references.

1.2.19 Provide structural support requirements and recommended support locations for recirculation pumps (i.e., load points, weight distribution, and maximum weight, geometry of equipment, and location of center gravity). In addition, identify areas that cannot be used as load points. Equipment support locations shall be mutually agreed with the Buyer due to remote handling requirements in the hot cell.

1.2.20 Provide design and fabrication of three support frames for reboilers. The support frame shall be welded to the reboiler and designed to force the thermal expansion of all nozzles (PUREX and remote clamp connectors) upward. Upper support points can be maintained for a lateral guide support. The structural supports for reboiler shall meet BNI remoteability requirements such as weight, remotely removable, airlock sizing, crane and impact wrench specified in this document.

1.2.21 Nozzles shall be located to ± 1/4 inch diametric tolerance by the hole in support frame as relative to the master dowel of the reboiler and support frame assembly. Nozzles shall be perpendicular / parallel within 0.5 degree or 1/4 inch whichever is smaller relative to the datum formed by the lower base plate of the reboiler and support frame assembly.

1.2.22 For reboiler nozzle locations, see Appendix P. Nozzles shall be located in accordance with 1.2.21.

1.2.23 Provide demonstration and recorded VHS format video tape for demister pad removal and replacement in Seller shop test. Buyer shall be notified prior to demonstration.

1.2.24 Provide radiographic film with technique and reader sheets. Exposed film must be sent, along with a copy of the technique and reader sheets in accordance with section 3 of the MR. Film must be suitably packaged to preclude moisture and handling damage.

1.2.25 Provide any necessary special remote repair tools for the reboiler and support frame assemblies and recirculation pumps. Special tools shall not include tools readily available in the commercial market. Also, provide a list of commercially available tools needed.

1.2.26 Provide final inspection of completed vessels. Buyer will not be designating a representative to carry out final inspections of the vessels as described per Buyer specification 24590-WTP-3PS-MV00-T0001, *Pressure Vessel Design and Fabrication.*

1.2.27 Provide personnel to perform dimensional measurements for reboiler and support frame assembly, and recirculation pumps at the Seller's shop.

1.2.28 Provide certified reports for all components subject to any heat treatment during manufacture.

1.2.29 Provide procedures suggesting how the integrated testing of evaporator system functionality be conducted by Buyer at the Hanford jobsite per section 7.2 of this specification. Technical support for installation, testing and commissioning will be under a separate contract.

1.2.30 Provide design documents in progressively complete package form. Design reviews at 30 %, 60 %, 90 % and Final Design to resolve all outstanding issues are planned to include face-to-face discussions between Buyer's personnel and Seller's personnel at Buyer's location. Future meetings will be arranged after Design Review Package Materials have been reviewed and meeting agenda have been established. The discussions are intended to help establish/clarify interface points in system requirements, review design/design progress, design documents, exchange ideas/information, provide design direction. See G-321-E Form for document submittal requirements.

1.2.31 Perform a coupled seismic response spectra dynamic analysis that will qualify the recirculation piping, offgas piping, and provide vessel nozzle loads & nozzle loads at the Grayloc connection on each jumper. See Appendix V for requirement details on coupled dynamic analysis.

1.2.32 Perform detailed FEA uncoupled seismic response spectra dynamic analysis of all SC-I/SC-II evaporator components (including the individual components' internals and frames). See Appendix V for requirement details on FEA uncoupled analysis. Equipment static method is not permitted.

1.3 Work by Others

Any item not specifically listed as being supplied by the Buyer shall be provided by the Seller.

1.3.1 Provide installation labor.

1.3.2 Provide equipment shipment, unloading and storage at Buyer's site.

1.3.3 Provide Instrumentation and controls (including installation). Provide Buyer internal standards for digital control system equipment and will specify and procure the control system equipment based on the necessary I/O requirements detailed by Seller.

1.3.4 Instrument location information for instrument location drawings.

1.3.5 Generate control logic in Buyer standard format using the final control loop definitions, system interlocks and alarms, system control philosophies, and control and sequencing requirements provided by Seller.

1.3.6 Procure the digital control system components. Buyer will provide the "Device" and "I/O" address of the serial communications link for each instrument for inclusion in the Instrument Index.

1.3.7 Perform the inspection of dimensional measurement activities for separator vessels, reboilers, and recirculation pumps.

1.3.8 Perform remote handling verification test for reboilers and support frame assemblies, recirculation pumps, and recirculation pipework jumper functionality at Buyer site. Lift tests shall be performed per section 3.19.8 by Seller prior to shipment.

1.3.9 Provide the appropriate seismic response spectra and damping values for Seller to perform the evaporator equipment skid (including reboiler and support frame assemblies) seismic analyses.

1.3.10 Provide video/camera systems for the Seller's provided demister pad removal systems.

1.3.11 Provide heat tracing, seismic review, and any necessary uninterruptible power supplies.

1.3.12 Provide all the piping, instrumentation and controls for the antifoam systems per Seller design and specification.

1.3.13 Provide all valves (including control valves) located in the jumpers for remote maintenance in the R5/C5 hot cell.

1.3.14 Provide design and fabrication for all piping, jumpers, and connectors for the recirculation pipework. This includes the piping connecting the separator vessel to the recirculation pump, the recirculation pump to the reboiler nozzle, and the reboiler nozzle to the separator vessel for two FEP evaporator systems and the TLP evaporator system.

1.3.15 Provide structural supports per Seller's structural support requirements for three recirculation pumps (FEP-PMP-00009A/B and TLP-PMP-00001) and recirculation piping/jumpers.

1.3.16 Provide hot cell process equipment platform (PEP) for all reboiler and support frame assemblies and recirculation pumps.

1.3.17 Provide the necessary cyclic data for Seller to perform an assessment regarding the fatigue life of the equipment. However, Seller will be responsible for confirmation that the cyclic data has been accurately interpreted before proceeding with the component fatigue analysis.

1.3.18 Provide remote handling verification test for reboiler and support frame assemblies, recirculation pumps, and recirculation pipework jumper functionality.

1.3.19 Provide all jumpers, jumper mounted equipment, and pipework connections to the separator vessel (excluding the separator offgas pipework) within the black cell.

1.3.20 Provide all pipework between Seller's provided skids (excluding the evaporator separator offgas pipework and piping connecting condenser skids and steam ejectors).

1.3.21 Provide specification of process and utility piping jumper interfaces and their locations.

1.3.22 Provide Jumper stack-up tolerance study.

1.3.23 Provide shielding for penetrations through the walls and floors.

1.3.24 Provide hot cell remote handling equipment (including impact wrenches and standard lifting equipment).

1.3.25 Provide specification for antifoam reagents.

1.3.26 Provide feed vessels (FEP-VSL-00017A/B and TLP-VSL-00009A/B).

1.3.27 Provide concentrate receipt vessels (UFP-VSL-00001A/B and TCP-VSL-00001).

1.3.28 Provide Vessel Vent system.

1.3.29 **Deleted**

1.3.30 Provide FEP feed pumps (FEP-PMP-00007A/B) and concentrate pumps (FEP-PMP-00008A/B) (refer to 1.2.7).

1.3.31 Provide utility (i.e., air, steam, cooling water) supply systems. However, Seller is responsible to provide steam condition skids for reboiler operation.

1.3.32 Interface drawings for evaporator equipment skids.

1.4 Definitions

1.4.1 *Skid:* A skid is a group of components that can be manufactured and installed as a unit. These skid units are structurally self-supporting, allowing the skid to be handled by crane. Whenever practical, skids will contain all the equipment associated with the process, including vessels, piping, and supports.

1.4.2 *ALARA:* As Low As Reasonably Achievable (ALARA) documentation requirements apply to systems, structures, and components (SSCs) that have the potential to affect radiation doses, contamination levels, or releases to the environment.

1.4.3 *Buyer's Representative(s)*: The Buyer's designee(s), who shall witness onsite operations at the Seller and sub-seller sites and perform onsite inspections and surveillances.

1.4.4 *Black Cell (R5/C5)*: is a sealed concrete structure containing very high radiation and contamination where human access is prohibited during the normal operating lifetime of the cell and maintenance is not performed in the cell.

1.4.5 *C1:* Uncontrolled Area.

1.4.6 C2: Controlled area. Personnel must be verified free of contamination prior to exit.

1.4.7 *C3:* Contamination classification for plant areas that are ordinarily free of contamination, but have the potential of being contaminated.

1.4.8 *C5:* Contamination classification for plant areas that are considered high contamination areas. Access to C5 areas is not permitted.

1.4.9 *Design Basis Earthquake (DBE):* A specification of the ground motion at the site.

1.4.10 *Hot Cell (R5/C5):* A room that is restricted from personnel due to high radiation. A hot cell is constructed with thick concrete walls usually lined internally with stainless steel sheet. Process equipment located in the hot cell is connected to wall nozzles using jumpers. Process equipment in the hot cell is skid mounted and designed for either remote maintenance using crane-mounted services or, preferably, no maintenance over the 40 year design life of the WTP.

1.4.11 *Important to Safety (ITS):* SSCs that serve to provide reasonable assurance that the facility can be operated without undue risk to the health and safety of the workers and the public. ITS encompasses the broad class of facility features addressed (not necessarily explicitly) in the top-level radiological, nuclear, and process safety standards and principles that contribute to the safe operation and protection of workers and the public during all phases and aspects of facility operations (i.e., normal operation as well as accident mitigation). ITS includes SSCs designated as Safety Class (SC), Safety Significant (SS), and **additional protection class (APC)**

1.4.12 *Jumper:* A remotely removable section of pipework usually incorporating connector heads and some items of process equipment (i.e., valves, instruments, etc.).

1.4.13 *Commercial Material (CM)*: SC items and associated services (those that are not designated as SC or SS) that are manufactured using standard commercial practices.

1.4.14 *Paragraph*: When a paragraph of this specification, referenced documents, referenced codes, or referenced standards is referenced in this specification, the paragraph referenced and all subparagraphs and sub-subparagraphs of the paragraph referenced shall be considered inclusive.

1.4.15 *Quality (Q):* SC **and SS** items. NQA-1 (1989) compliance is required. **QL-1 and QL-2 designations are used by the Seller to comply with other referenced specification requirements (i.e weld, design). These designations meet NQA-1 (Q) requirements and are not necessarily reflected in their associated Buyer's P&IDs.**

1.4.16 ***Deleted***

1.4.17 *Rad*: A unit of energy absorbed from ionizing radiation, equal to 100 ergs per gram or 0.01 joules per kilogram of irradiated material.

1.4.18 ***Additional Protection Class***: **APC** are ITS SSCs that are neither SC nor SS.

1.4.19 *R1*: Unrestricted area.

1.4.20 *R2*: Radiation controlled area.

1.4.21 *R3:* Radiation classification for plant areas considered average. Contamination area requiring anti-contamination clothing for entry. At early design stages, when insufficient information is available regarding worker occupancy, an initial target radiation level of 2.5 mRad/hr is to be used for the R3 classification.

1.4.22 *R4:* Radiation area (maximum).

1.4.23 *R5:* Radiation classification for areas considered to be high or very high radiation areas.

1.4.24 Reboiler and support frame assembly: Reboiler and pipe work up to and including PUREX nozzles, remote clamp connector hubs, and all permanently attached frame work.

1.4.25 *Safety Class (SC):* SSCs that, by performing their specified safety function, prevent workers or the maximally exposed member of the public from receiving a radiological exposure that exceeds the accident exposure standards defined in the Safety Requirements Document (SRD). SC also applies to those features that, by functioning, prevent the worker or maximally exposed member of the public from receiving a chemical exposure that exceeds the ERPG-2 (AIHA 1988) chemical release standard. Those features credited for the prevention of a criticality event are also designated as SC.

1.4.26 *Safety Significant (SS)*: SSCs needed to achieve compliance with the radiological or chemical exposure standards for the public and workers during normal operation; and SCs that can, if they fail or malfunction, place frequent demands on or adversely affect the function of SC SSCs.

1.4.27 *Seismic Category I (SC-I):* Equipment/tanks important to safety, which have a seismic safety function. For the design of Seismic Category I equipment/tanks, no credit for inelastic energy absorption is allowed. Seismic Category I equipment/tanks shall be functional during and after a Design Basis Earthquake (DBE).

1.4.28 *Seismic Category II (SC-II):* Equipment/tanks important to safety whose failure during a seismic event could prevent a Seismic Category I structure, system, or component (SSC) from performing its seismic safety function. For the design of Seismic Category II equipment/tanks, credit for inelastic energy absorption is allowed. Seismic Category II equipment/tanks shall maintain control and confinement of hazardous materials during and after a Design Basis Earthquake (DBE), but do not need to be functional.

1.4.29 *Seismic Category III Equipment (SC-III):* (a) SC and SS SSCs that do not have a natural phenomena hazard (NPH) safety function. (b) SCs that have a seismic safety function solely because they protect workers and members of the public from exposure to chemical hazards. (c) **APC** SSCs that provide primary

confinement of significant inventories of radioactive materials, but in amounts less than quantities that require an SC or SS designation.

1.4.30 *Seismic Category IV (SC-IV)*: **APC** SSCs that have been designated as **APC** do not provide primary confinement of significant inventories of radioactive materials.

1.4.31 Special Tools: Any tooling which is not commercially available required to perform maintenance on the evaporator system.

1.4.32 Acronyms

- ALARA As Low As Reasonably Achievable
- AISC American Institute of Steel Construction
- ANSI American National Standards Institute
- **APC** **Additional Protection Class**
- ASD Adjustable Speed Drive
- ASD Manual of Steel Construction (Allowable Stress Design)
- ASME American Society of Mechanical Engineers
- ASNT American Society of Nondestructive Testing
- ASTM American Society for Testing and Materials
- AWS American Welding Society
- CFR Code of Federal Regulations
- CM Commercial grade
- DBE Design Basis Earthquake
- DOE US Department of Energy
- DOT Department of Transportation
- **FEA** **Finite Element Analysis**
- FEP Waste Feed Evaporator Process System
- GPM Gallons per minute
- ITS Important to Safety
- LAW Low-Activity Waste
- M Molarity
- MDS Material Data Sheet
- MR Material Requisition
- MSDS Material Safety Data Sheet
- NDE Nondestructive Evaluation/Examination
- NPS Nominal Pipe Size
- NQA Nuclear Quality Assurance
- OBE Operating Basis Earthquake
- ORP DOE Office of River Protection
- PEP Process Equipment Platform
- PMI Positive Material Identification
- P&ID Piping and Instrumentation Diagram
- PTF Pretreatment Facility
- QA Quality Assurance
- QAP Quality Assurance Program
- QAM Quality Assurance Manual
- QL Quality Level

- SBS Submerged Bed Scrubber
- SC Safety Class
- SS Safety Significant
- SC Seismic Category
- SSCs Structures, Systems, and Components
- SSPC The Society for Protective Coating
- RPP-WTP River Protection Project-Waste Treatment Plant
- TID Total Integrated Dose
- TLP Treated LAW Evaporator Process System
- SC Seismic Categor
- SDDR Supplier Deviation Disposition Request
- SG Specific Gravity
- UBC Uniform Building Code
- WT % Weight percent
- WTP Hanford Tank Waste Treatment and Immobilization Plant

1.5 Mechanical Data Sheets

Specific design parameters and requirements for evaporator components will be shown on the individual Mechanical Data Sheet (MDS) in section 2 of the MR. The data shall be considered as preliminary. Seller shall verify thermal, hydraulic, mechanical and process designs. Where necessary, the Seller shall change the data in order to furnish complete thermal, hydraulic, mechanical, and process guarantees. Any difference between Seller's final design and Buyer's preliminary data shall be brought to Buyer's attention for resolution and approval. Seller shall supply evaporator components that meet specified materials of construction, quality level, and seismic category as described on the MDS. The nominal feed chemistries used for the design should be based on Appendix A and B of this specification. Process design of the evaporator system is given in Appendix D of this specification.

1.6 Safety/Quality/Seismic Classifications

1.6.1 The quality level (QL) and seismic category (SC) of the major components of the evaporator system are specified on the data sheets in section 2 of the MR and Appendix E of this specification.

1.6.2 Seismic category (SC) classification requirements are specified in 24590-WTP-3PS-SS90-T0001, Specification for Seismic Qualification of Seismic Category I/II Equipment and Tanks and 24590-WTP-3PS-FB01-T0001, Specification for Seismic Qualification for Seismic Category III/IV Equipment and Tanks.

2 Applicable Documents

2.1 General

2.1.1 Work shall be done in accordance with the referenced codes, standards, and documents listed below, which are an integral part of this specification.

2.1.2 When specific chapters, sections, parts, or paragraphs are listed following a code, industry standard, or reference document, only those chapters, sections, parts, or paragraphs of the document are applicable and shall be applied. If a date or revision is not listed, the latest issue, including addenda, at the time of award shall apply. Pre-approved acceptable alternate editions are listed in section 4.2.12. For codes and standards listed below, the specific revision or effective date of codes and standards that they incorporate by reference (daughter codes and standards), shall be followed. When more than one code, standard, or referenced document covers the same topic, the requirements for all must be met with the most stringent governing. For commercial grade quality items, Seller may use any year of the ASME or ASTM standards for materials.

2.2 Codes and Industry Standards

2.2.1 ASME B31.3-1996, Process Piping

2.2.2 ASME B16.5-1988, Pipe Flanges and Flanged Fittings NPS 1/2 Through NPS 24 Addend A

2.2.3 ASME B16.47-1990, Large Diameter Steel Flanges NPS 26 through NPS 60 Addenda A

2.2.4 ASME B18.15-1985, Forged Eye Bolts

2.2.5 ASME Boiler and Pressure Vessel Code, Section VIII, Div. 1, Rules for Construction of Pressure Vessel

2.2.6 ASME Boiler and Pressure Vessel Code, Section IX-**1995 or later**, Welding and Brazing Qualifications

2.2.7 ASME NQA-1-1989, Quality Assurance Program Requirements for Nuclear Facility Applications

2.2.8 ASME Y14.100, Engineering Drawing Practices

2.2.9 AISC ASD, 9th Edition, Manual of Steel Construction, Allowable Stress Design

2.2.10 AISC N690-1994, Specification for the Design, Fabrication, and Erection of Steel Safety-Related Structures for Nuclear Facilities

2.2.11 ANSI N14.6, For Radioactive Materials-Special Lifting Devices for Shipping Containers Weighing 10,000 Pounds (4500 kg) or More

2.2.12 ASTM F593, Standard Specification for Stainless Steel Bolts, Hex Cap Screws, and Studs

2.2.13 ASTM F594, Standard Specification for Stainless Steel Nuts

2.2.14 AWS D1.6, Structural Welding Code-Stainless Steel

2.2.15 AWS D9.1-**1984 or later**, Sheet Metal Welding Code

2.2.16 IEEE Std 1023-**1988**, IEEE Guide for the Application of Human Factors Engineering to Systems, Equipment, and Facilities of Nuclear Power Generating Stations

2.2.17 MIL-STD-1629A, Military Standard, Procedures for Performing A Failure Mode, Effects and Criticality Analysis

2.2.18 UBC-1997, Uniform Building Code

2.2.19 10 CFR 835, Occupational Radiation Protection

2.2.20 49 CFR 173, General Requirements for Shipments and Packaging. Code of Federal Regulations. U.S. Department of Transportation, Washington, D.C.

2.2.21 29 CFR 1910, Occupational Safety and Health Standards

2.2.22 NFPA 101, Code for Safety to Life from Fire in Buildings and Structures

2.2.23 NFPA 70 -1999, National Electric Code

2.2.24 SSPC-SP10, Near White Metal Blast Cleaning

2.2.25 SSPC-SP11, Power Tool Cleaning to Bare Metal

2.2.26 WAC 296-24, General Safety and Health Standards

2.2.27 595, Colors Used in Government Procurement

2.2.28 E 709, Standard Test Method for Magnetic Particle Examination

2.2.29 ASCE 4-98, Seismic Analysis of Safety-Related Nuclear Structures and Commentary.

2.2.30 ASTM A193 Editions 1991 through 2005 Standard Specification for Alloy-Steel and Stainless Steel Bolting Materials for High-Temperature Service

2.2.31 ASTM A194 Edition 1991 through 2005a, Standard Specification for Carbon and Alloy Steel Nuts for Bolts for High Pressure or High Temperature Service

2.2.32 ASTM A582, Any Year, Standard Specification for Free-Machining Stainless and Heat-Resisting Steel Bars, Hot-Rolled and Cold Finished.

2.2.33 ASTM A564 Editions 1988b, 1989, 1991, 1992, 1992a, 1994, 1995, 1997, 1999, 2001, 2002, 2002a, 2004, Standard Specification for Hot Rolled and Cold-Finished Age-Hardening Stainless Steel Bars and Shapes

2.2.34 SSPC-SP10, Near White Metal Blast Cleaning

2.2.35 SSPC-SP11, Power Tool Cleaning to Bare Metal

2.2.36 API 610-1995 Centrifugal Pumps for General Refinery Service

2.3 Reference Documents

2.3.1 Interfacing References

2.3.1.1 24590-WTP-3PS-G000-T0001,General Specification for Supplier Quality Assurance Program Requirements

2.3.1.2 24590-WTP-3PS-G000-T0002, Specification for Positive Material Identification (PMI)

2.3.1.3 24590-WTP-3PS-G000-T0003, General Specification for Packaging, Shipping, Handling, and Storage Requirements

2.3.1.4 24590-WTP-3PS-NWP0-T0001, Engineering Specification for General Welding and NDE Requirements for Supplier Fabricated Piping

2.3.1.5 24590-WTP-3PS-P000-T0001, Engineering Specification for Piping Material Classes General Description and Summary

2.3.1.6 24590-WTP-3PS-SS00-T0002, Engineering Specification for Welding of Structural Stainless Steel and Welding of Structural Carbon Steel to Structural Stainless Steel

2.3.1.7 24590-WTP-3PS-SS90-T0001, Specification for Seismic Qualification of Seismic Category I/II Equipment and Tanks

2.3.1.8 24590-WTP-3PS-FB01-T0001, Engineering Specification for Structural Design Loads for Seismic Category III & IV Equipment and Tanks

2.3.1.9 24590-WTP-3PS-EVV1-T0001, Specification for Low Voltage Adjustable Speed Drives

2.3.1.10 24590-WTP-3PS-MUMI-T0002, Specification for Low Voltage Induction Motors

2.3.1.11 24590-WTP-3PS-MPC0-T0002, Engineering Specification for General Centrifugal Pumps to Meet Requirements of ASME B73.1M-1991 and ASME B73.2M-1991 for Commercial (CM) Components

2.3.1.12 24590-WTP-3PS-M000-T0002, General Specification for Mechanical Handling Equipment Design and Manufacture

2.3.1.13 24590-WTP-3PS-MJJ0-T0001, Engineering Specification for Lifting Beams for Mechanical Handling Equipment Important to Safety Quality Level II

2.3.1.14 24590-WTP-3PS-MV00-T0001, Engineering Specification for Pressure Vessel Design and Fabrication

2.3.1.15 24590-WTP-3PS-MV00-T0002, Engineering Specification for Seismic Qualification Criteria for Pressure Vessels

2.3.1.16 24590-WTP-3PS-MES0-T0001, Engineering Specification for Shell and Tube Heat Exchangers

2.3.1.17 24590-WTP-3PS-MVB2-T0001, Engineering Specification for Welding of Pressure Vessels, Heat Exchangers, and Boilers

2.3.1.18 24590-WTP-3PS-JQ07-T0001, Engineering Specification for Instrumentation for Package Systems

2.3.1.19 24590-WTP-3PS-PS02-T0001, Engineering Specification for Shop Fabrication of Piping

2.3.1.20 24590-WTP-3PS-SS00-T0001, Engineering Specification for Welding of Carbon Structural Steel.

2.3.1.21 24590-WTP-3PS-EKP0-T0001, Engineering Specification for Electrical Requirements for Packaged Equipment

2.3.1.22 24590-WTP-3PS-PP00-T0002, Engineering Specification for Dimensional Record Program.

2.3.2 Developmental References

2.3.2.1 24590-PTF-3YD-FEP-00001, System Description for Waste Feed Evaporation Process (FEP)

2.3.2.2 24590-PTF-3YD-TLP-00001, System Description for Treated LAW Evaporation Process (TLP)

2.3.2.3 24590-WTP-3PS-MV00-T0003, Engineering Specification for Pressure Vessel Fatigue Analysis

2.4 Reference Drawings / Data Sheets

2.4.1 24590-WTP-MV-M59T-00001, Pressure Vessel Tolerances Standard Details

2.4.2 24590-WTP-MV-M59T-00007, Thermowell Connection Standard Details

2.4.3 24590-WTP-MV-M59T-00009, Lifting Lugs Standard Details

2.4.4 24590-WTP-MV-M59T-00010, Tailing Lug Standard Details

2.4.5 24590-WTP-MV-M59T-00011, Wash Rings Standard Details

2.4.6 24590-WTP-MV-M59T-00012, Grounding Lug Standard Details

2.4.7 24590-WTP-MV-M59T-00016001, Vessel Connections Standard Details Sheet 1 of 3

2.4.8 24590-WTP-MV-M59T-00016002, Vessel Connections Standard Details Sheet 2 of 3

2.4.9 24590-WTP-MV-M59T-00016003, Vessel Connections Standard Details Sheet 3 of 3

2.4.10 24590-WTP-MV-M59T-00017, Vessel Inspection Manway Standard Details

2.4.11 24590-WTP-MV-M59T-00018, Vessel Name Plate Standard Details

2.4.12 24590-WTP-MV-M59T-00026, Anchor Bolt Chair Details for Vertical Vessels

2.4.13 24590-WTP-M0-M10T-00004, HLW & PTF Vitrification Systems HSH, RWH, PFH, PIH Design Proposal Drawing 3 Ton Capacity Lifting Hook

2.4.14 24590-WTP-M6-50-00001, P&ID Symbol and Legend Sheet 1 of 6

2.4.15 24590-WTP -M6-50-00002, P&ID Symbol and Legend Sheet 2 of 6

2.4.16 24590-WTP -M6-50-00003, P&ID Symbol and Legend Sheet 3 of 6

2.4.17 24590-WTP -M6-50-00004, P&ID Symbol and Legend Sheet 4 of 6

2.4.18 24590-WTP -M6-50-00005, P&ID Symbol and Legend Sheet 5 of 6

2.4.19 24590-WTP -M6-50-00006, P&ID Symbol and Legend Sheet 6 of 6

2.4.20 24590-PTF-P1-P01T-00001, Pretreatment Building General Arrangement Plan at El. 0'-0"

2.4.21 24590-PTF-P1-P01T-00002, Pretreatment Building General Arrangement Plan at El. 28'-0"

2.4.22 24590-PTF-P1-P01T-00007, Pretreatment Building General Arrangement Section A-A

2.4.23 24590-PTF-P1-P01T-00008, Pretreatment Building General Arrangement Section B-B

2.4.24 24590-PTF-P1-P01T-00009, Pretreatment Building General Arrangement Section C-C

2.4.25 24590-PTF-P1-P01T-00010, Pretreatment Building General Arrangement Section D-D

2.4.26 24590-PTF-P1-P01T-00011, Pretreatment Building General Arrangement Section E-E

2.4.27 24590-PTF-P1-P01T-00012, Pretreatment Building General Arrangement Sect. F-F and Sect. G-G

2.4.28 24590-PTF-P1-P01T-00013, Pretreatment Building General Arrangement Sect. H-H and Sect. J-J

2.4.29 24590-PTF-P1-P01T-00014, Pretreatment Building General Arrangement Sect. K-K and Sect. L-L

2.4.30 24590-PTF-P1-P01T-00015, Pretreatment Building General Arrangement Sect. M-M and Sect. N-N

2.4.31 24590-PTF-P1-P01T-00016, Pretreatment Building General Arrangement Sect. P-P and Sect. Q-Q

2.4.32 24590-PTF-P1-P01T-00017, Pretreatment Building General Arrangement Sect. R-R

2.4.33 24590-PTF-DD-S13T-00022, Pretreatment Facility Structural Concrete Embedments Key Plan Elevation 0 ft – 0 in

2.4.34 24590-PTF-DD-S13T-00023, Pretreatment Facility Structural Concrete Embedments Key Plan Elevation 0 ft – 0 in Sh 1

2.4.35 24590-PTF-DD-S13T-00025, Pretreatment Facility Structural Concrete Embedments Plan El 0 ft – 0 in Sh 3

2.4.36 24590-PTF-DD-S13T-00026, Pretreatment Facility Structural Concrete Embedments Plan El 0 ft – 0 in Sh 4

2.4.37 24590-PTF-DD-S13T-00027, Pretreatment Facility Structural Concrete Embedments Plan Elevation 0 ft – 0 in Sh 5

2.4.38 24590-PTF-DD-S13T-00028, Pretreatment Facility Structural Concrete Embedments Plan Elevation 0 ft – 0 in Sh 6

2.4.39 224590-PTF-DD-S13T-00029, Pretreatment Facility Structural Concrete Embedments Plan El. 0'-0" Sh 7

2.4.40 24590-PTF-DD-S13T-00030, Pretreatment Facility Structural Concrete Embedments Plan El. 0'-0" Sh 8

2.4.41 24590-PTF-DD-S13T-00031, Pretreatment Facility Structural Concrete Embedments Plan El. 0'-0" Sh 9

2.4.42 24590-PTF-DD-S13T-00036, Pretreatment Facility Structural Concrete Embedments EL 0 ft – 0 in Vessels Sh 1

2.4.43 24590-PTF-DD-S13T-00039, Pretreatment Facility Structural Concrete Embedments EL 0 ft – 0 in Vessels Sh 2

2.4.44 24590-PTF-DD-S13T-00042, Pretreatment Facility Structural Concrete Embedment Details EL 0 ft – 0 in Vessels Sh 1

2.4.45 24590-PTF-DD-S13T-00043, Pretreatment Facility Structural Concrete Embedment Details EL 0 ft – 0 in Vessels Sh 2

2.4.46 24590-PTF-DD-S13T-00044, Pretreatment Facility Structural Concrete Embedment Details EL 0 ft – 0 in Vessels Sh 3

2.4.47 24590-PTF-DD-S13T-00047, Pretreatment Facility Structural Concrete Embedment EL 0 ft – 0 in Misc Sh1

2.4.48 24590-PTF-DD-S13T-00049, Pretreatment Facility Structural Concrete Embedment EL 0 ft – 0 in Misc Sh 3

2.4.49 24590-PTF-MJD-PIH-00001, Mechanical Handling Data Sheet for Overhead Mast Power Manipulator

2.4.50 24590-PTF-M0-PIH-00008, Pretreatment System PIH Design Proposal Drawing 30 Ton Capacity Lifting Hook

2.4.51 24590-WTP-M61-P23T-00056, WTP Details Lower Holder Bottom Outlet Electrical Connector 2"

2.4.52 24590-PTF-SS-S15T-00311, Pretreatment Facility Structural Misc Support Steel El. 0'-0" Plan Sh 1

2.4.53 24590-PTF-SS-S15T-00312, Pretreatment Facility Structural Misc Support Steel El. 0'-0" Plan Sh 2

2.4.54 24590-PTF-SS-S15T-00313, Pretreatment Facility Structural Misc Support Steel El. 0'-0" Plan Sh 3

2.4.55 24590-PTF-SS-S15T-00314, Pretreatment Facility Structural Misc Support Steel El. 0'-0" Plan Sh 4

2.4.56 24590-PTF-SS-S15T-00315, Pretreatment Facility Structural Misc Support Steel El. 0'-0" Plan Sh 5

2.4.57 24590-PTF-SS-S15T-00316, Pretreatment Facility Structural Misc Support Steel El. 0'-0" Plan Sh 6

2.4.58 24590-PTF-SS-S15T-00317, Pretreatment Facility Structural Misc Support Steel El. 0'-0" Plan Sh 7

2.4.59 24590-PTF-SS-S15T-00318, Pretreatment Facility Structural Misc Support Steel El. 0'-0" Plan Sh 8

2.4.60 24590-PTF-SS-S15T-00352, Pretreatment Facility Structural Misc Support Steel Details Sh 3

2.4.61 24590-PTF-SS-S15T-00354, Pretreatment Facility Structural Misc Support Steel Details Sh 5

2.4.62 24590-WTP-M61-P23T-00056, WTP Details Lower Holder Bottom Outlet Electrical Connector 2".

2.4.63 24590-WTP-M61-P23T-00057, WTP Assembly Lower Holder Electrical Connector 2 Inch.

2.4.64 24590-WTP-M61-P23T-00005, WTP Details - Nozzles PUREX Male Connector 1", 2", 3", 4"

2.4.65 24590-WTP-M61N-P23T-00006, Nozzles PUREX Connector 1", 2", 3", 4"

2.4.66 24590-WTP-M61-P23T-00040, WTP Details - Kickoff Plates PUREX Connector 1", 2", 3", 4"

2.4.67 24590-WTP-M61-P23T-00057, WTP Assembly Lower Holder Electrical Connector 2 Inch.

2.4.68 24590-WTP-P61-P27T-00001, WTP Standard Jumper Details

2.4.69 24590-PTF-M6-FEP-00001, P&ID - PTF Waste Feed Evaporation Process System Evaporator Feed Vessels FEP-VSL-00017A/B.

2.4.70 24590-PTF-M6-FEP-00002, P&ID - PTF Waste Feed Evaporation Process System Separator FEP-SEP-00001A.

2.4.71 24590-PTF-M6-FEP-00003, P&ID - PTF Waste Feed Evaporation Process System Condensers & Condensate Collection FEP-VSL-00005.

2.4.72 24590-PTF-M6-FEP-00004, P&ID - PTF Waste Feed Evaporation Process System Separator FEP-SEP-00001B.

2.4.73 24590-PTF-M6-FEP-00005, P&ID - PTF Waste Feed Evaporation Process System Condensers.

2.4.74 24590-PTF-M6-TLP-00001, P&ID - PTF Treated LAW Evaporation Process System LAW SBS Condensate Receipt TLP-VSL-00009A & 9B.

2.4.75 24590-PTF-M6-TLP-00002, P&ID - PTF Treated LAW Evaporation Process System Condensate Collection TLP-VSL-00002.

2.4.76 24590-PTF-M6-TLP-00003, P&ID - PTF Treated LAW Evaporation Process System Separator TLP-SEP-00001.

2.4.77 24590-PTF-M6-STR-00001, P&ID - PTF Strontium Nitrate, Sodium Permanganate, and Anti-foam Reagent Distribution (CM).

3 Design Requirements

3.1 General

3.1.1 As Low As Reasonably Achievable (ALARA) principles shall be factored into the design and maintenance of the evaporator systems per 10 CFR 835, *Occupational Radiation Protection.*

3.1.2 Unless otherwise specified, the evaporator systems shall be designed and fabricated per applicable documents listed in section 2.0 of this specification, and the data sheets in section 2 of the MR. No changes, substitutions, or deviations shall be made without Buyer's concurrence.

3.1.3 The evaporator system design shall comply with the requirements stipulated in this specification. Seller shall conform with Buyer's requirements for hot cell wall penetrations, recirculation piping/jumper configuration, layout, dimension, location as shown in the Appendices I, J, and K. Seller shall confirm locations for all evaporator equipment are adequate for system functionality. Seller shall submit any variances to these requirements during design review stage for concurrence.

3.1.4 The evaporator piping and instrumentation sketches provided in the Appendix L of this specification illustrate the conceptual piping and instrument control of the evaporator systems. All evaporator systems or components shall have adequate control features to bring evaporator operations to a safe and stable 'shutdown' condition during an abnormal event. Seller's control design philosophy can differ from Buyer's conceptual control; however, the Seller's control system design shall conform to Buyer's specification 24590-WTP-3PS-JQ07-T0001.

3.1.5 General Arrangement drawings should be used to convey approximate equipment locations for skids. Equipment locations shown in the Appendices I, J, and K shall be maintained unless the design dictates an alternate location.

3.1.6 The Seller shall be responsible for the evaporator system design including component specification such as design parameters, sizing, pipe support loads, pipe hangers, anchors, pipe slopes and environmental protection (temperature, humidity, etc.) as required.

3.1.7 A means shall be provided to avoid accumulation of settled solids (e.g., sparging or removal of separator contents) in event of recirculation pump failure.

3.1.8 All heat exchangers including reboilers and condensers shall comply with ASME section VIII and TEMA standard, Class B. "Code Stamp" shall be provided for all Seller's provided heat exchangers.

3.1.9 Seller shall comply with nozzle loading requirements specified in **Appendix V for SC-I and SC-II vessels/equipment.**

3.1.10 Gusset plates cannot be utilized to accommodate the required nozzle loading on safety class vessels and heat exchangers.

3.1.11 The equipment shall be designed such that personnel sound level exposure outside of R5/C5 area shall not exceed 85 dBA. Seller shall clearly state how the specified sound level limit will be met.

3.1.12 All calculations, modeling, analyses, drawings, and documentation shall utilize U.S. customary units.

3.1.13 Design of the evaporator systems shall incorporate the latest and best proven technology, components, and materials for the required service conditions and performance.

3.1.14 The evaporator system model analysis, thermal analysis, design analysis, and seismic analysis shall be verified such that the final system, equipment and component design meet the requirements of this specification as well as its addenda and attachments.

3.1.15 Evaporator system equipment shall be furnished as discrete skid mounted units that are ready to integrate with the Buyer's structures, systems, and components.

3.1.16 The evaporator systems shall be identical in component count, capacity, and mode of operation and shall utilize common component types and equipment manufacturers.

3.1.17 The FEP and TLP Evaporator systems shall be designed in accordance with following feed conditions:

- Design FEP feed flow of 50 gpm
- Design TLP feed flow of 38 **gpm**
- Design feed temperature of 77 °F
- Waste feed pH of 11 – 14
- LAW SBS pH of 6.8

3.1.18 Normal design cooling water temperature of 75 °F with a peak summer maximum of 83 °F shall be used for designing/sizing all condensers. The cooling water temperature of 75 °F is valid for 85 % of the time through a year. During 15 % of the time when cooling water temperature is above 75 °F, the TLP evaporator system can be operated at a higher temperatures (i.e., 1.2 psia, 127 °F – 131 °F). This operating strategy is for short term operation and is to minimize cooling water flow.

3.1.19 Evaporator systems and components should be designed to prevent the migration of contamination into the utility / reagent systems.

3.1.20 Human factors and ergonomics shall be designed into all evaporator equipment requiring manual operations per IEEE Std 1023, *IEEE Guide for the Application of Human Factors Engineering to Systems, Equipment, and Facilities of Nuclear Power Generating Stations*.

3.1.21 Quality level, seismic category, materials of construction, design pressure, and design temperature shall be in accordance with the data sheets in section 2 of the MR and Appendix E of this specification. If a change to the requirements for

materials and/or the equipment types to be used during the execution of the contract is dictated because of design analyses, then the Seller is required to provide Buyer its recommendation for review and concurrence prior to incorporation into the design of the evaporator systems.

3.1.22 All equipment in evaporator systems requiring maintenance or removal shall have flushing and draining capability to facilitate decontamination. Design features shall minimize the need for decontamination by including sloping features, replacing sharp bends with gradual bends, etc. where practical, consistent with ALARA practices.

3.1.23 Provision for temperature instrumentation shall be jumper nozzles incorporating the required thermowell details.

3.1.24 Nozzle and flange alignment shall be within ± 0.5 degrees of design specifications.

3.1.25 Jumper nozzle connections shall be included in the evaporator systems to interface with the Buyer supplied jumpers. Location and details of the connections shall be per Appendix P.

3.1.26 The reboiler support frame detail sketches provided in the Appendix P of this specification illustrate the conceptual design to support remoteability.

3.1.27 Seller's reboiler frame design shall not protrude into the crane path as specified in Appendix P.

3.1.28 The hub type (remote clamp) connectors and PUREX nozzles are the only government-furnished equipment, which will be sent to Seller for installation. Buyer will provide Seller hydro test blanks for the remote clamp connectors (Grayloc) and the remote PUREX and other connectors for installation on the axial flow pumps and reboilers.

3.1.29 Nozzles for reboiler and support frame assemblies are to be designed to maintain positional tolerance during operational loading conditions and maintain structural integrity during and after a DBE. Preliminary loading information for the nozzle loads at Grayloc connections on the reboilers are provided in Appendix P.

3.1.30 All adjustable speed drives for pumps can be designed for non-radiation environment.

3.1.31 Seller's fabrication drawings shall be used as the document of record for fabrication of the components. Seller's specification drawings are not required to be revised and maintained in total agreement with approved fabrication drawings.

3.1.32 Regarding Buyer's specification 24590-WTP-3PS-G000-T0003, *Engineering Specification for Packing, Handling, and Storage requirements,* the center of gravity and sling points are not needed for off-gas piping pieces and separator vessel support towers because they are awkward hollow parts that do not allow a meaningful center of gravity to be determined or designed. Multiple sling

configurations are possible to affect a successful lift and should be at the discretion of site construction supervisor.

3.1.33 Seller shall provide evaporator systems in the skids for ease of transportation, installation, and replacement. Seller is responsible for equipment skid sizing and layout to fit Buyer's facility. For the baseline design, each evaporator system will comprise the following skids:

- Separator vessel skids
- Reboiler and support frame assemblies.
- TLP feed pumps skid
- TLP concentrate pumps skid
- Primary condenser skids
- Secondary condenser skids which includes inter-condenser, after-condenser, and steam ejector
- Process condensate skids which includes vessel and pump
- Steam conditioning system which includes a pressure reducing valve and control and a desuperheater
- Antifoam skids which include vessel and pumps

3.2 Basic Function

The evaporator systems employ forced circulation and vacuum evaporation. The Waste Feed Process (FEP) evaporator system consists of two (2) identical evaporators which will be installed at the west end of the pretreatment facility (PTF). The Treated Low Activity Waste Process (TLP) evaporator system will be installed at the east end of the PTF.

Each evaporator will be designed to process 100 % of the design feed flow (50 gpm for each FEP system and 39 gpm for TLP system) with an evaporation feed rate of 30 gpm and to operate independent of each other. Normal operation of the FEP evaporator system consists of one evaporator operating at a time but simultaneous operation is possible. The FEP evaporators partially evaporate Waste Feed from the Department of Energy (DOE) and various recycle streams from within the pretreatment process. The Waste Feed is evaporated in order to optimize the operation of downstream unit operations. The Waste Feed flow is varied in order to control the level in the FEP separator. The FEP evaporator shall be designed to achieve a sodium concentration of 5 to 6M.

The LAW Submerged Bed Scrubber (SBS) condensate and treated LAW are fed to the TLP evaporator simultaneously. The treated LAW feed is fed continuously and at a constant rate while the flow of SBS condensate is varied in order to control the level in the TLP separator vessel. The TLP evaporator shall be designed to achieve a sodium concentration of 8 to 10M.

The feed stream is introduced into the recirculation loop on the suction side of the recirculation pump. The recirculation pump circulates the liquor at a rate of approximately 11,000 gpm. The pump discharges liquor through evaporator reboiler, which raises the temperature of the liquor by approximately 2 to 4 °F using 2.5 psig steam throttled from 40 psig low pressure steam supply to the building. This small temperature rise is necessary to prevent the liquor from boiling (fouling) in the tubes before it reaches the separator vessel. Sufficient hydrostatic head is maintained to suppress boiling inside the reboiler. When the

recirculating liquor reaches the separator vessel, flash evaporation occurs due to the reduced pressure in the vessel. The vapor flows through a series of separation trays and a removable demister pad section which are internal parts of the separator vessel. The vapor then flows to the primary condenser where the majority of the vapor is condensed. The noncondensables and a small amount of moisture are vented to the ejector/condenser vacuum system. The secondary condenser system consists of primary ejector, secondary ejector, inter-condenser, and after-condenser. The humid noncondensables from the primary condenser flow to the suction side of the primary ejector which discharges to the inter-condenser. The vent from the inter-condenser flows to the suction side of the secondary ejector which discharges into the after-condenser. The vent from the after-condenser flows to the facility vessel vent system. The secondary condenser system is designed to achieve a pressure of 1.0 to 1.3 psia in the separator vessel during normal operating conditions. The operating pressure is automatically controlled by an air in-bleed into the suction line of the primary ejector. This operating pressure lowers the boiling point of the liquor to approximately 122 °F which reduces potential corrosion of the evaporator by chlorides. Condensate from the condensers flows by gravity to the condensate vessel. Some of the condensate is drawn off and used to wash the demister pads in the separator vessel. Because of the foaming tendencies of evaporator feed chemistry, when foaming is anticipated in the separator vessel, antifoam will be continuously added.

3.3 Performance

3.3.1 All three (3) evaporator systems shall be capable of continuous operation while achieving a feed evaporation rate ranging from 10 to 30 gpm. The design feed evaporator rate shall exclude all water/fluid addition to demister pads spray, separation trays, and antifoam injection.

3.3.2 Each evaporator system shall operate independently.

3.3.3 Each evaporator system shall have the ability to be placed on "total reflux" mode.

3.3.4 A minimum decontamination factor of 8.0E+06 shall be achieved as defined in section 7.2.1, function test requirements, with consideration to achieving the evaporator stream operating conditions described in subsection 3.4 and the ALARA general design condition in subsection 3.1.

3.3.5 Evaporator system operating parameters shall minimize reboiler fouling by using low differential temperature and high tube velocity to the extent practical in the design.

3.3.6 The FEP evaporator systems shall produce waste concentration of 5 to 6M sodium (1.23 to 1.50 SG).

3.3.7 The TLP evaporator system shall produce waste concentration of 8 to 10M sodium (1.33 to 1.57 SG).

3.3.8 All evaporator system components within the R5/C5 black cell (except the demister pads) shall be nonreplaceable components with a design life of 40 years. Reboilers and recirculation pumps in the R5/C5 hot cell shall be remotely replaceable.

3.4 Design Conditions

3.4.1 General

3.4.1.1 For nominal conditions refer to Appendix A and Appendix B for the FEP evaporator and TLP evaporator stream data, respectively. The data defines the system performance operating conditions and requirements. For predicted maximum radionuclides, refer to Appendix C.

3.4.1.2 All equipment skids shall meet applicable Department of Transportation (DOT) requirements for road transportation per 49 CFR 173.

3.4.2 Physical Constraints/Interfaces

3.4.2.1 The FEP evaporator separator vessels (FEP-SEP-00001A/B) with demister pads shall be located in the R5/C5 black cell, room P-0106 on the 0-ft floor elevation. The TLP evaporator separator vessel (TLP-SEP-00001) shall be located in the R5/C5 black cell, room P-0117 on the 0-ft floor elevation. Demister pad assemblies shall be accessed through a sealed, shielded aperture in the 56 ft floor (10-ft diameter maximum). Refer to Appendices I and J for their locations and layout.

3.4.2.2 All Reboiler and support frame assemblies and recirculation pumps shall be located in the R5/C5 hot cell, room P-0123 on the 0-ft floor elevation. Each reboiler and support frame assemblies shall not weigh more than 27.5 tons including all lifting fixtures and lifting beams. The available space for each reboiler (excluding nozzles) has dimensions of 6 ft diameter by 15 ft high. All equipment assembly must fit through a 13 ft by 13 ft air lock door and shall not exceed 21 ft length. Assume air lock transportation cart is 3 ft high. The space envelope limitation of 6 feet diameter shall be used for mounting of remote connectors and seal flush reservoir on the recirculation pump assembly. Refer to Appendix P for location of reboiler and recirculation pump.

3.4.2.3 FEP evaporator primary condensers (FEP-COND-00001A/B) and secondary condenser system (FEP-COND-00002A/B, -00003A/B, and FEP-EJCTR-00040, -00041, -00042, -00043) shall be designed to fit in room P-0304 on the 56-ft floor elevation. TLP evaporator primary condenser (TLP-COND-00001) and secondary condenser system (TLP-COND-00002, -00003, and TLP-EJCTR-00064, -00067) shall be designed to fit in room P-0311 on the 56-ft floor elevation. Refer to Appendices I and J for locations and layout.

3.4.2.4 FEP evaporator condensate vessel and pump system (FEP-VSL-00005 and FEP-PMP-00006A/B) shall be designed to fit in room P-0105B (R2/C3) on the 0-ft floor elevation. TLP evaporator

condensate vessel and pump system (TLP-VSL-00002 and TLP-PMP-00002A/B) shall be designed to fit in room P-0118 (R2/C3) on the 0-ft floor elevation. Refer to Appendices I and J for locations and layout.

3.4.2.5 Antifoam vessel and pump system (AFR-TK-00001 and AFR-PMP-00006, -00007, -00008) shall be designed to fit in room P-0429 on the 77-ft floor elevation (R2/C2). Refer to Appendix K for locations and layout.

3.4.3 Buyer Supplied Utilities

Values for all utility supply pressures and temperatures are nominal values.

3.4.3.1 Plant service air and instrument air will be supplied at approximately 100 psig and 65 °F.

3.4.3.2 **Deleted**

3.4.3.3 **High pressure steam supply conditions:**

3.4.3.3.1 Minimum operating condition: 110 psig @ 344°F

3.4.3.3.2 Normal operating condition: 118 psig @ 349°F

3.4.3.3.3 Maximum operating condition: 135 psig @ 358°F

3.4.3.3.4 Design condition: 163 psig @ 372°F

3.4.3.4 Cooling water will be supplied at approximately 45 psig and 75 °F with a peak summer maximum of 83 °F. The cooling water temperature of 75 °F is valid for 85 % of the time through a year.

3.4.3.5 Demineralized water will be supplied at approximately 72.5 psig and 75 °F for demister pad and separation tray spray in the event that sufficient process condensate is unavailable.

3.4.3.6 Water, 5 M nitric acid at approximately 75 psig and 77 °F, or 50 % wt caustic at approximately 75 psig and 77 °F can be supplied for the Seller's flushing system.

3.5 Environmental Conditions

Environmental qualification is not applicable per Buyer's equipment qualification design guide.

3.5.1 Storage

Prior to installation, the evaporator systems may be stored outdoors at ambient temperature extremes ranging from –30 °F dry-bulb to 117 °F dry-bulb and with a relative humidity of 0-100 %.

3.5.2 Evaporator Separator Vessels

The separator vessels (FEP-SEP-00001A/B and TLP-SEP-00001) will be installed indoors in an R5/C5 black cell maintained between 59 to 113 °F dry-bulb temperature during normal operation. Radiation exposure for the FEP separator vessels (FEP-SEP-00001A/B) will be 1,000 – 1,800 Rad/hr. Radiation exposure for the TLP separator vessel (TLP-SEP-00001) will be 0.5 Rad/hr.

3.5.3 Reboilers and Recirculation Pumps

The reboilers (FEP-RBLR-00001A/B and TLP-RBLR-00001) and recirculation pumps (FEP-PMP-00009A/B and TLP-PMP-00001) will be installed indoors in an R5/C5 hot cell maintained between 59 to 113 °F dry-bulb temperature during normal operation. Radiation exposure will be 1,000 Rad/hr.

3.5.4 Primary and secondary condensers

The FEP primary condensers (FEP-COND-00001A/B) and FEP secondary condensers (FEP-COND-00002A/B, -00003A/B, and FEP-EJCTR-00040, -00041, -00042, -00043) will be installed indoors in an R5/R3/C3 area maintained between 59 to 113 °F dry-bulb temperature during normal operation. The TLP primary condenser (TLP-COND-00001) and TLP secondary condensers (TLP-COND-00002, -0003, and TLP-EJCTR-00064, -00067) will be installed indoors in an R3/C3 area maintained between 59 to 113 °F dry-bulb temperature. Radiation exposure will be 10 mRad/hr during normal operation.

3.5.5 Condensate Vessels, Antifoam Vessel, Condensate Pumps, Antifoam Pumps, FEP Feed Pumps, FEP Concentrate pumps, and FEP/TLP Reboiler Steam Condensate Transfer Stations

The condensate vessels (FEP-VSL-00005 and TLP-VSL-00002), condensate pumps (FEP-PMP-00006A/B and TLP-PMP-00002A/B), and FEP/TLP reboiler steam condensate transfer stations (FEP-VSL-00021, FEP-PMP-00010A/B, FEP-VSL-00022, FEP-PMP-00011A/B, TLP-VSL-00047, TLP-PMP-00012A/B) will be installed indoors in an R2/C3 area. The antifoam vessel (AFR-TK-00001) and antifoam pumps (AFR-PMP-00006, -00007, and -00008) will be installed indoors in an R2/C2 area. The R2/C3 and R2/C2 areas are maintained between 59 to 113 °F dry-bulb temperature during normal operation. Radiation exposure will be 0.5 mRad/hr.

3.6 Feed Pumps

3.6.1 For feed pump requirements, refer to individual MDS in section 2 of the MR and equipment sketches in Appendices I and J of this specification.

3.6.2 Two TLP feed pumps (TLP-PMP-00005A/B) shall be supplied by the Seller in accordance with Buyer's specification *24590-WTP-3PS-MPC0-T0002, Engineering Specification for General Centrifugal Pumps to Meet Requirements of ASME B73.1M-1991 and ASME B73.2M-1991 for Commercial (CM) Components.*

3.6.3 The TLP feed pumps shall be centrifugal type. Each pump shall be provided with a pump motor mounted on a common base plate for contact maintenance. The pumps are plumbed together for operational flexibility. Seal flush plan to API 7353.

3.6.4 Each TLP feed pump shall be provided with an adjustable speed drive (ASD). The ASD shall be compliant with specification *24590-WTP-3PS-EVV1-T0001, Engineering Specification for Low Voltage Adjustable Speed Drives* and specification *24590-WTP-3PS-MUMI-T0002, Engineering Specification for Low Voltage Induction Motors.*

3.6.5 LAW SBS Condensate feed pumps (TLP-PMP-00005A/B) for the TLP evaporator system shall be supplied by the Seller. These pumps shall be designed for contact maintenance and designed for the following operating conditions. All fluid properties are referenced at 77 °F.

- 10 to 38 gpm
- 1.0 to 16.3 cP
- 1.0 to 1.41 SG
- 68 to 167 °F
- less than 3 wt % feed solids.

3.6.6 For FEP feed pumps (FEP-PMP-00007A/B), the sections for liquid property and operating conditions on the Mechanical Data Sheets (section 2 of the MR) shall be specified by the Seller. The Buyer will procure pumps which meet these criteria unless otherwise directed by the Seller as described in section 1.2.16. The following operating conditions shall apply. All fluid properties are referenced at 77 °F.

- 20 to 50 gpm
- 4.2 to 12 cP
- 1.0 to 1.29 SG
- 59 to 122 °F
- 0 to 10 wt % suspended solids

3.6.7 Treated LAW Collection vessel feed pump (CXP-PMP-00002A/B) for the Treated LAW evaporator system will be specified and provided by the Buyer for the following operating conditions. All fluid properties are referenced at 77 °F.

- 22 to 34 gpm
- 0.6 to 5.0 cP
- 1.0 to 1.26 SG
- 59 to 113 °F
- 0 wt % suspended solids

3.6.8 The feed pump flow rate shall be controlled by the separator vessel liquid level.

3.6.9 All waste feeds shall be transferred by the feed pump into the recirculation line on the suction side of the recirculation pump.

3.6.10 Deleted

3.7 Recirculation Pumps

3.7.1 For recirculation pump requirements, refer to individual MDS in section 2 of the MR and equipment sketches in Appendices I and J of this specification.

3.7.2 The recirculation pumps shall be axial-flow type mounted vertically in an elbow of the recirculation loop. Structural support requirements for the recirculation pump shall be provided by the Seller with provision to transfer loads from the pump to the structural base rather than the pump nozzles or pump shaft/impeller.

3.7.3 Each recirculation pump shall be provided with a pump motor and an adjustable speed drive (ASD). Motors shall be provided with radiation resistant insulation, rated for 10^9 TID rad (gamma). The ASD shall be compliant with specification *24590-WTP-3PS-EVV1-T0001, Engineering Specification for Low Voltage Adjustable Speed Drives* and specification *24590-WTP-3PS-MUMI-T0002, Engineering Specification for Low Voltage Induction Motors.*

3.7.4 The recirculating pumps shall have dual mechanical seals that will be lubricated/flushed with water. Flush piping will be based on API Plan 53. Seller shall coordinate with Buyer for details.

3.7.5 Inlet and outlet pipe ends of the recirculation pumps shall be prepared for butt welding.

3.7.6 Seller shall comply with API 610 nozzle loading requirements .

3.7.7 The recirculation pump nozzle locations shall be within (±) 1/4 inch tolerance. However, the tolerance measurement device shall have a minimum of 1/1000 inch accuracy.

3.7.8 The recirculation pump remote flange mating surface shall be approximately at 12 ft-11 inches plant elevation. The pump and motor withdrawal length shall not be greater than 6 ft-1 inch. The dowel pins shall be 2 in diameter with the master being 1 ft-3 3/4 inches and the secondary being 1ft-3/4 inch. The bolts shall be 1-1/4 inch ACME studs with 2 inches nuts.

3.7.9 The recirculation pumps shall be designed with the following features to ensure ease of process operating with a long expected mechanical lifetime:

- Low operating speed, high flow, and low head process conditions.
- Low casing fluid velocity to minimize wear on the casing.
- Top mounted motor and vertical removal design for easy crane access.
- The recirculation pump motor, impeller, shafting, and seals shall be remotely removable as one unit by using a single crane hook and crane mounted impact wrench with CCTV cameras.

3.7.10 FEP recirculation pumps (FEP-PMP-00009A/B) shall be designed for the following operating conditions. All fluid properties are referenced at 77 °F.

- 11,000 gpm
- 5.5 to 12 cP
- 1.23 to 1.50 SG
- 59 to 140 °F
- 1 to 20 wt % suspended solids

3.7.11 TLP recirculation pump (TLP-PMP-00001) shall be designed for the following operating conditions. All fluid properties are referenced at 77 °F.

- 11,000 gpm
- 0.68 to 30 cP
- 1.33 to 1.57 SG
- 77 to 145 °F
- less than 4 wt % suspended solids

3.8 Concentrate Pumps

3.8.1 For concentrate pump requirements, refer to individual MDS in section 2 of the MR and equipment sketches in Appendices I and J of this specification.

3.8.2 Two TLP concentrate pumps (TLP-PMP-00011A/B) shall be supplied by the Seller in accordance with Buyer's specification *24590-WTP-3PS-MPC0-T0002, Engineering Specification for General Centrifugal Pumps to Meet Requirements of ASME B73.1M-1991 and ASME B73.2M-1991 for Commercial (CM) Components.*

3.8.3 Deleted

3.8.4 The TLP concentrate pumps shall be centrifugal type. Each pump shall be provided with a pump motor mounted on a common base plate for contact maintenance. The pumps are plumbed together for operational flexibility. Seal flush plan to API 7353.

3.8.5 Each TLP concentrate pump shall be provided with an adjustable speed drive (ASD). The ASD shall be compliant with specification *24590-WTP-3PS-EVV1-T0001, Engineering Specification for LAW Voltage Adjustable Speed Drives* and specification *24590-WTP-3PS-MUMI-T0002, Engineering Specification for Low Voltage Induction Motors.*

3.8.6 The concentrate pump flow rate shall be controlled by the specific gravity of the waste concentrate in the evaporator separator vessel.

3.8.7 For FEP concentrate pumps (FEP-PMP-00008A/B), the sections for liquid property and operating conditions on the Mechanical Data Sheets (section 2 of the MR) shall be specified by the Seller. The Buyer will procure pumps which meet these criteria unless otherwise directed by the Seller as described in section

1.2.16. The following operating conditions shall apply. All fluid properties are referenced at 77 °F.

- 3 to 34 gpm
- 5.5 to 12 cP
- 1.23 to 1.50 SG
- 59 to 140 °F
- 1 to 20 wt % suspended solids

3.8.8 The TLP concentrate pumps (TLP-PMP-00011A/B) shall be supplied by the Seller. The pumps shall be designed for contact maintenance and designed for the following operating conditions. All fluid properties are referenced at 77 °F.

- 5 to 14 gpm
- 0.68 to 30 cP
- 1.4 to 1.57 SG
- 68 to 145 °F
- less than 4 wt % suspended solids

3.9 Reboilers

3.9.1 For reboiler requirements, refer to individual MDS in section 2 of the MR and equipment sketches in Appendices I and J of this specification.

3.9.2 The reboilers shall be designed in accordance with Buyer's specification 24590-WTP-3PS-MES0-T0001, *Specification for Shell and Tube Heat Exchangers*. **Seller shall comply with nozzle loading requirements specified in Appendix V of this specification.**

3.9.3 The reboilers (FEP-RBLR-00001A/B and TLP-RBLR-00001) shall be of all welded construction on both tube and shell sides.

3.9.4 Reboiler tubes shall be seamless and welded to the tubesheet(s) with full strength welds. The tubes shall include a corrosion allowance of 0.04 inch for the process side.

3.9.5 The reboilers shall be capable of sustaining a water evaporation rate of 10 to 30 gpm based on a final SG of 1.50 for the FEP evaporator systems and 1.57 for the TLP evaporator system.

3.9.6 Reboiler process fluid velocity shall be greater than 4.0 ft/sec for solid suspension and not exceed 10 ft/sec velocities for minimal erosion effects.

3.9.7 The reboiler and support frame assemblies shall be designed for remote installation and replacement as one unit.

3.9.8 The reboiler and support frame assemblies shall be designed for horizontal transportation as one unit within the hot cell but for vertical installation with integral tailing features.

3.9.9 The maximum dimensions for a reboiler shall be 6 ft diameter and 15 ft height. The reboiler design shall be either multi-pass or U-tube heat exchanger with side bottom process fluid inlet and outlet.

3.9.10 The reboiler process fluid inlet and outlet nozzles shall be sized not greater than 24 inch diameter. Inlet and outlet pipe ends of the reboiler shall be prepared for butt welding.

3.9.11 Seller shall supply as-built dimensions for the nozzle locations upon completion of fabrication. Measurements shall be taken to the nearest 0.001 inch measuring equipment accuracy shall be within ± 0.006 inch.

3.9.12 Deleted

3.9.13 Pressure steam will be provided by Buyer. The Seller is responsible for providing steam conditioning skids. Each skid will include a pressure reducing valve and control and a desuperheater to produce Seller's specified saturated pressure steam for reboiler operation.

3.9.14 Seller shall provide specifications for steam condensate removal system. The steam condensate will travel from the reboiler through approximately 100 lateral feet and 2 vertical feet of pipe to the steam condensate vessel.

3.9.15 The reboiler shall be designed such that the static pressure of the process fluid above the reboiler is sufficient to suppress the boiling in the reboiler tubes. Boiling shall occur only near or at the liquid surface in the evaporator separator vessel.

3.9.16 The temperature rise of the process fluid as it passes through the reboiler shall be approximately 2 – 4 °F design basis to minimize the potential for tube fouling.

3.9.17 Reboiler will be installed without insulation. Reboiler duty and steam demand calculations shall include heat loss from all reboiler surfaces without insulation.

3.10 Evaporator Separator Vessels

3.10.1 For separator vessel requirements, refer to individual MDS in section 2 of the MR and equipment sketches in Appendices I and J of this specification.

3.10.2 The separator vessels shall be designed in accordance with Buyer's specification 24590-WTP-3PS-MV00-T0001, *Specification for Pressure Vessel Design and Fabrication.* **Seller shall comply with nozzle loading requirements specified in Appendix V of this specification.**

3.10.3 The separator vessels shall be designed to maximize liquid – vapor separation and to achieve a 30 gpm feed evaporation rate.

3.10.4 The separator vessels shall incorporate nozzle connections for temperature (including thermowells), pressure, level, and density instrumentation as required. The Seller shall propose reliable measurement instrumentation for Buyer to review.

3.10.5 Deleted.

3.10.6 The top section of the separator vessel shall incorporate lateral guides to the 56 ft floor to minimize horizontal forces and base overturning moments during a seismic event.

3.10.7 The centerline elevation of the separator vessel offgas nozzles shall be no higher than 47 ft-0 inch plant elevation.

3.10.8 The separator vessel heads shall be removable for access to the demister pads section, which contains two layers of 12 inch thick Inconel 625 fine mesh.

3.10.9 The separator vessel shall incorporate a 2 inch inlet nozzle to supply sufficient dilution air to negate hydrogen buildup.

3.10.10 The separator vessel shall incorporate a series of three internal separation trays and an internal two-layer demister pads section to deentrain the steam droplets and remove solids from the vapor.

3.10.11 Spray nozzles shall be provided to allow nitric acid cleaning of the demister mesh and separation trays. The placement of spray nozzles shall accommodate demister section removal and not hinder maintenance operations.

3.10.12 A spray pipe with nozzles located below the lower demister pad shall be provided to spray demin water or recycled condensate into the steam flow to assist in mesh performance.

3.10.13 To improve demister efficiency and facilitate decontamination, the demister pads shall be sprayed from above and below with recycled condensate or 5 M nitric acid from a spray control system located at the 56 ft elevation. Sections of the demister pads shall be able to be sprayed either individually or collectively.

3.10.14 Differential pressure across a series of separation trays and the demisters pad section shall not significantly elevate boiling point.

3.10.15 All nozzle connection points shall be provided clear and below any surrounding floor structural steel at 56 ft plant elevation.

3.10.16 The antifoam nozzles of the evaporator separator vessel shall be located above the uppermost liquid level.

3.11 Primary Condensers

3.11.1 For primary condenser requirements, refer to individual MDS in section 2 of the MR and equipment sketches in Appendices I and J of this specification

3.11.2 Primary condensers shall be designed in accordance with Buyer's specification 24590-WTP-3PS-MES0-T0001, *Specification for Shell and Tube Heat Exchangers*.

3.11.3 The primary condensers (FEP-COND-00001A/B and TLP-COND-00001) shall be of all welded construction on the process fluid side. Tubes shall be welded to the tubesheets(s) with full strength welds.

3.11.4 Seller shall comply with nozzle loading requirements specified in **Appendix V of this specification.**

3.11.5 Condensers shall be designed with hinged bonnets to allow isolation of leaking tubes utilizing contact maintenance techniques.

3.11.6 Condensers shall be designed for retubing as part of the maintenance strategy.

3.11.7 Condensers shall be designed to maximize vapor condensation from the offgas streams at a nominal rate of 30 gpm.

3.11.8 Average cooling water temperature rise of 18 °F shall be used for condenser design.

3.11.9 Cooling water (tube side) pressure must exceed the process vapor (shell side) pressure.

3.11.10 The primary condensers shall be compatible with process condensate that has a pH of 7 to10, a temperature of 122 °F, and a 0 to 300 ppm ammonium ion concentration. They shall also be compatible with 5M nitric acid used for separator vessel decontamination.

3.11.11 Primary condenser will be installed without insulation. Primary condenser duty and cooling water demand calculations shall include heat loss from all primary condenser surfaces without insulation.

3.12 Secondary Condenser System

3.12.1 The secondary condenser system shall consist of inter-condenser, after-condenser, and two steam ejectors. For secondary condenser system requirements, refer to individual MDS in section 2 of the MR and equipment sketches in Appendices I and J of this specification.

3.12.2 Inter-condensers and after-condensers shall be designed in accordance with Buyer's specification 24590-WTP-3PS-MES0-T0001, *Specification for Shell and Tube Heat Exchangers*.

3.12.3 Seller shall comply with nozzle loading requirements specified in **Appendix V of this specification.**

3.12.4 Inter-condensers and after-condensers shall be of all welded construction on the process fluid side. Tubes shall be welded to the tubesheets(s) with full strength welds.

3.12.5 The boiling point elevation range of the evaporator concentrate for the FEP evaporator system is approximately 11 to 18 °F and for TLP evaporator system is approximately 17 to 24 °F.

3.12.6 The evaporator separator vessel pressure shall be maintained by a two-stage vacuum ejector system. The first stage shall maintain a vacuum on the primary condenser and consists of a steam ejector, air in-bleed control valve, and an inter-condenser. The vapor discharged from the inter-condenser enters the second stage of the vacuum system. The second stage shall consist of a second steam ejector and an after-condenser.

3.12.7 The secondary condenser systems shall provide capability for operating at a vacuum as low as practicably achievable.

3.12.8 The two-stage vacuum ejector system shall be designed to control the separator vessel pressures at between 1.0 and 1.3 psia.

3.12.9 The desired vacuum within the separator vessel shall be obtained by automatically controlling the air in-bleed into the suction side of the first-stage vacuum ejectors.

3.12.10 Process condensate from each condenser shall be individually routed to the process condensate vessel.

3.12.11 All components of secondary condenser skid will be installed without insulation. The duty, cooling water demand, and steam demand calculations shall include heat loss from all surfaces without insulation.

3.12.12 Cooling water pressure must exceed the process vapor pressure.

3.13 Evaporator Process Condensate Vessels & Pumps

3.13.1 For process condensate vessel and pump requirements, refer to individual MDS in section 2 of the MR and equipment sketches in Appendices I and J of this specification

3.13.2 The evaporator process condensate vessels shall be designed in accordance with Buyer's specification 24590-WTP-3PS-MV00-T0001, *Specification for Pressure Vessel Design and Fabrication.*

3.13.3 Seller shall comply with nozzle loading requirements for vessels specified in Buyer's specification 24590-WTP-3PS-MV00-T0001, *Specification for Pressure Vessel Design and Fabrication.*

3.13.4 The FEP evaporator process condensate vessel (FEP-VSL-00005) shall be designed for an operating volume of 4144 gallons (911-gallon batch).

3.13.5 The support frame shall be made such that the overflow nozzle centerline for the FEP evaporator process condensate vessel shall be at or above 15 ft-5 3/8 inches plant elevation.

3.13.6 The TLP evaporator process condensate vessel (TLP-VSL-00002) shall be designed for an operating volume of 2304 gallons (375-gallon batch).

3.13.7 The support frame shall be made such that the overflow nozzle centerline for the TLP evaporator process condensate vessel shall be at or above 17 ft-5 7/8 inches in plant elevation.

3.13.8 The evaporator process condensate vessels shall be equipped with interior wash rings to facilitate decontamination per standard drawing 24590-WTP-MV-M59T-00011.

3.13.9 Evaporator process condensate vessels and pumps shall be designed for contact maintenance.

3.13.10 Process condensate pumps shall be in accordance with Buyer's specification 24590-WTP-3PS-MPC0-T0002, *Engineering Specification for General Centrifugal Pumps to Meet Requirements of ASME B73.1M-1991 and ASME B73.2M-1991 for Commercial (CM) Components.*

3.13.11 Each process condensate pump shall be provided with an adjustable speed drive (ASD). The ASD shall be compliant with specification *24590-WTP-3PS-EVV1-T0001, Engineering Specification for Low Voltage Adjustable Speed Drives* and specification *24590-WTP-3PS-MUMI-T0002, Engineering Specification for Low Voltage Induction Motors.*

3.13.12 The process condensate pumps (FEP-PMP-00006A/B and TLP-MPM-00002A/B) shall be centrifugal type. Each pump shall be provided with a pump motor mounted on a common base plate for contact maintenance. The pumps are plumbed together for operational flexibility.

3.13.13 The FEP evaporator process condensate pumps (FEP-PMP-00006A/B) shall be designed for the maximum feed evaporation rate of 60 gpm (30 gpm per FEP evaporator) and maximum steam ejector demands. The TLP Evaporator condensate pumps (TLP-PMP-00002A/B) shall be designed for the maximum feed evaporation rate of 30 gpm and maximum steam ejector demands.

3.13.14 The process condensate vessels and pumps shall be compatible with process condensate that has a pH of 7 to10, a temperature of 68 to 145 °F, and a 0 to 300 ppm ammonium ion concentration. They shall also be compatible with 5M nitric acid used for separator vessel decontamination.

3.13.15 The process condensate pumps shall have the ability to supply adequate condensate to the separation trays and demister pad sprays in the separator vessels.

3.13.16 Single mechanical seals shall be incorporated in each process condensate pump in accordance with American Petroleum Institute (API) Plan 11.

3.13.17 The process condensate pumps shall be designed to comply with pump nozzle loading requirements specified in API 610.

3.14 Antifoam Skid and FEP/TLP Reboiler Condensate Transfer Stations

3.14.1 For antifoam vessel and pump requirements, refer to individual MDS in section 2 of the MR and equipment sketches in Appendix K of this specification.

3.14.2 The antifoam vessel and reboiler condensate vessels shall be designed in accordance with Specification 24590-WTP-3PS-MV00-T0001, *Specification for Pressure Vessel Design and Fabrication.*

3.14.3 Seller shall comply with nozzle loading requirements specified Buyer's specification 24590-WTP-3PS-MV00-T0001, *Specification for Pressure Vessel Design and Fabrication.*

3.14.4 One (1) antifoam system composed of a vessel (AFR-TK-00001) with three metering pumps (AFR-PMP-00006, -00007, -00008) shall supply antifoam reagent to both FEP and TLP evaporator systems.

3.14.5 The antifoam vessel (AFR-TK-00001) shall be designed for a maximum operating volume of 1500 gallons.

3.14.6 Deleted.

3.14.7 Each antifoam vessel shall be equipped with the following:

- Reagent inlet nozzle
- Demineralized water inlet nozzle
- Level instrumentation nozzle
- Agitator to provide homogeneous antifoam solutions

3.14.8 The antifoam pumps shall be positive displacement metering types. The metering pump design shall include an internal relief valve or an internal bypass valve that automatically stops the pumping action when the line pressure gets above a setpoint.

3.14.9 Antifoam vessels and pumps shall be designed for contact maintenance.

3.14.10 Seller shall supply three (3) identical transfer stations, which collect steam condensate drained from the reboilers.

3.14.11 The transfer stations shall be designed to support continuous steady state operation in maintaining nominal operating level while receiving and supplying steam condensate to steam conditioning desuperheater and to a general condensate receiver.

3.14.12 The condensate transfer vessel design and configuration shall support installation of pressure-differential level instrumentation and associated flanged "direct connect diaphragm seal pressure transmitters.

3.14.13 The condensate transfer vessel shall be a vertical oriented vessel constructed of 304L stainless steel with a capacity of 225 gallons.

3.14.14 Each condensate transfer vessel shall be designed to be attached to a mounting ring which will be installed using anchor bolts.

3.14.15 The condensate transfer vessel shall be designed to support a minimum operating volume of 80 gallons.

3.14.16 The condensate transfer pumps shall be vertical turbine pumps with a by-pass valve to limit the pump discharge pressure preventing the motor to become overloaded. The pumps along with their motors shall be mounted on the transfer stations.

3.14.17 Single mechanical seals shall be incorporated in each condensate transfer pump in accordance with American Petroleum Institute (API) Plan 11.

3.14.18 The condensate transfer pumps shall be designed to comply with pump nozzle loading requirements specified in API 610.

3.14.19 The condensate transfer pumps and accessories shall be made of 300 series stainless steel. The pump materials of construction for wetted arts shall be cast high alloy steel 316 SS.

3.14.20 A 2-inch nozzle on the side of each reboiler steam condensate vessel shall be provided for an additional condensate drain from the reboiler steam conditioning system desuperheater to function. Location of the 2-inch inlet drain nozzle is provided in Appendix L.

3.15 Mechanical Handling Requirements

3.15.1 Equipment located in the R5/C5 hot cell shall be designed in accordance with Buyer's specification 24590-WTP-3PS-M000-T0002, *General Specification for Mechanical Handling Equipment Design & Manufacture.*

3.15.2 Seller designed equipment shall incorporate jumper connector nozzles to facilitate process, utility, instrument, and power connections to the Buyer supplied jumpers and systems.

3.15.3 Equipment skids shall incorporate jumper nozzles for process pipework (e.g., pump suction and discharge connections, utilities, instrumentation, and power, as required).

3.15.4 Seller shall identify all interface points for systems requiring connection to the Buyer's process piping, jumpers, and utility systems.

3.15.5 The nozzle tolerance requirements for reboiler and recirculation pumps in the R5/C5 hot cell shall be ±1/4 inch. The nozzle tolerance measurement device shall have a minimum of ±1/1000 inch accuracy. Jumpers shall be built to as-built dimensions and replaced with equipment as necessary.

3.15.6 Deleted

3.15.7 Deleted

3.16 Loadings

3.16.1 The evaporator equipment assemblies shall be self-supporting, capable of carrying the static loads of components, and capable of handling stresses imposed during shipment, installation, operation and an earthquake.

3.16.2 Loads to be considered for the structural design of evaporator vessel, equipment, and components shall be in accordance with applicable codes, standards, and reference documents listed in section 2 of this specification.

3.16.3 All vessels or equipment with SC-I and SC-II designation shall be seismically analyzed and qualified in accordance with AISC N690 **and requirements specified in the Appendix V.**

3.16.4 All vessels or equipment with SC-III and SC-IV designation shall be seismically analyzed and qualified in accordance with the AISC ASD and UBC zone 2B.

3.16.5 Seller shall complete a seismic analysis of the evaporator package designs, including skids, and skid anchorage, equipment and pressure vessel anchorage, piping anchorage. Loadings shall be calculated in accordance with the appropriate requirements of Buyer's specifications 24590-WTP-3PS-SS90-T0001, Engineering Specification for Seismic Qualification of Seismic Category I/II Equipment and Tanks, and 24590-WTP-3PS-FB01-T0001, Structural Design Loads for Seismic Category III & IV Equipment and Tanks. Analysis shall show that the evaporator system and components are capable of withstanding seismic loadings.

3.16.6 All vessels, heat exchangers, and any other pressure containing vessels or equipment shall be seismically analyzed and qualified by the Seller per Buyer's specification 24590-WTP-3PS-MV00-T0002, *Engineering Specification for Seismic Qualification Criteria for Pressure Vessels,* Buyer's specification 24590-WTP-3PS-MV00-T0001, *Specification for Pressure Vessel Design and Fabrication.*

3.16.7 The Seller shall perform thermal and static stress analyses for all evaporator structures, systems, and components.

3.16.8 Except for reboiler and recirculation pump skids, all equipment skids shall be designed for a maximum floor loading of 160 lbs/ft^2. Refer to drawings 24590-PTF-DD-S13T-00022, 24590-PTF-DD-S13T-00025, 24590-PTF-DD-S13T-00028, 24590-PTF-DD-S13T-00027, 24590-PTF-DD-S13T-00036, 24590-PTF-DD-S13T-00042, 24590-PTF-DD-S13T-00043, and 24590-PTF-DD-S13T-00044 for structural concrete embed details.

3.16.9 The embed location for reboilers are detailed on drawings 24590-PTF-DD-S13T-00025, 24590-PTF-DD-S13T-00027, 24590-PTF-DD-S13T-00028, AND 24590-PTF-DD-S13T-00049. Each embed has a support post which connects to the PEP. To avoid displacement in skid under the heavy reboiler weight, reboiler frame shall rest upon support posts with the embeds underneath. These embeds are type "D" which have been designed for ultimate compressive strength of 100 kips.

The flow meter unit of the steam conditioning skids for the FEP and TLP evaporator systems are SC-III items and may not be qualified at the accelerations defined in the Buyer's specification for Seismic Qualification of Seismic Category I/II Equipment and Tanks, and 24590-WTP-3PS-FB01-T0001. Equivalent test can be performed and considered successful if there is no physical damage to the instrument. For the equivalent test, the flow meter units will undergo a frequency sweep (0 to 500 Hz) to determine their resonant frequency. Once the resonant frequency is determined, the units are tested at 1 g vertical and then 1 g horizontal for a period of twenty minutes each, all while being excited at the resonant frequency.

3.17 Electrical Requirements

3.17.1 The electric motor drive shall conform to the requirements set forth in Buyer's specification 24590-WTP-3PS-EVV1-T0001, *Engineering Specification for Low Voltage Adjustable Speed Drives*.

3.17.2 The pump motor and all other motors in this evaporator package shall conform to the requirements set forth in Buyer's specification 24590-WTP-3PS-MUMI-T0002, *Engineering Specification for Low Voltage Induction Motors*.

3.17.3 Seller shall comply with the requirements set forth in Buyer's specification 24590-WTP-3PS-EKP0-T0001, *Engineering Specification for Electrical Requirements for Packaged Equipment.*

3.18 Instrumentation and Control Requirements

3.18.1 General

3.18.1.1 All controls, control systems, control panels, alarm systems, analyzers, instrumentation, and their installation into the evaporator system shall conform to the requirements set forth in Buyer's specification 24590-WTP-3PS-JQ07-T0001, *Engineering Specification for Instrumentation for Package Systems*.

3.18.1.2 The Seller shall provide instrument data sheets and installation details. The Buyer will use this information for procurement and installation of required instrumentation.

3.18.1.3 The Seller shall provide functional test set points and recommended operating set points with the packaged systems.

3.18.1.4 The Seller shall supply the control requirements, which shall consist of the control loop definitions, system interlocks, alarms, and control philosophy.

3.18.1.5 The Buyer will use the Seller's control requirements to provide the software requirement specification for logic programming and DCS hardware, which will integrate the Seller's control requirements into the Buyer's overall control system.

3.18.1.6 Seller shall comply with NQA-1 1989, 11S-2, for computer program testing.

3.18.1.7 The following table describes the work processes and the division of the responsibilities:

	Buyer's Responsibility	Seller's Responsibility
Blank Instrument Data Sheet	•	
Complete Instrument Data Sheet		•
Instrument Installation Details		•
Instrumentation Procurement	•	
Instrumentation Installation	•	
Functional Test Set Points		•
Operating Set Points		•
Control Requirements		•
Software Requirements Specification	•	
Logic Programming	•	
DCS Hardware	•	

3.18.2 Other

The Seller shall select level, specific gravity, temperature, and pressure instrumentation that shall provide accuracy of the measured range as specified in Buyer's specification 24590-WTP-3PS-JQ07-T0001, *Engineering Specification for Instrumentation for Package Systems*.

3.19 Lifting Requirements

3.19.1 Seller shall identify the weight and center of gravity of each equipment skid.

3.19.2 Seller shall provide yokes for separator vessels, reboiler and support assemblies, and recirculation pumps for installation and remote maintenance. Each part will be made of 304SS. The yokes shall be designed for balanced lifting and handling by a single hook crane. The yokes shall be designed in accordance with ANSI N14.6 and Buyer's specification 24590-WTP-3PS-MJJ0-T0001, *Specification for Lifting Beams for Mechanical Handling Equipment*.

3.19.3 All evaporator equipment and skids shall have lift points and attachment mechanism. Lifting bail design shall comply with proposal hook design shown in Appendix G.

3.19.4 All lifting attachments shall have either a safety factor of three (3), based on the material yield strength, or five (5), based on the material ultimate strength, whichever is more conservative. The lifting points shall have a label clearly identifying its safe working load. If forged bolts are used, they shall be used in accordance with ASME B18.15.

3.19.5 The reboiler and support assemblies shall be designed for horizontal transportation in the hot cell **following by vertical up-ending**. The reboiler and

support assemblies shall have tailing lug and tilt-up features for vertical installation with a 2-ton hoist for tailing operation.

3.19.6 The lifting lugs shall be designed to permit lifting the equipment skid without distortion or damage to the components of the equipment skid.

3.19.7 All lifting points shall be proof tested in situ. Test and examination certificates shall be provided to the Buyer review.

3.19.8 Each reboiler and support frame assembly shall be lift tested by the Seller to demonstrate proper vertical orientation using the Seller-supplied lifting fixture. This testing includes verification of all tilt up features. Each reboiler shall be balanced after fabrication. Actual vertical lift (with vessel empty) shall not more than 1/4 inch from true verticality. Permanent deflection or a change in the assembly alignment is unacceptable. The Seller shall notify the Buyer a minimum of 15 working days in advance of reboiler and support frame assembly lift test. The Buyer may send representatives to witness the inspections or perform an independent inspection.

3.20 Accessibility and Maintenance

3.20.1 General Maintenance Requirements

Accessibility and maintenance requirements shall be per this specification and its addenda and attachments.

3.20.2 R5/C5 Black Cell Equipment Maintenance Requirements

3.20.2.1 No equipment requiring maintenance, with the exception of demister pads, shall be located inside the R5/C5 black cells (rooms P-0106 and P-0117). The nonreplaceable 40-year life components shall include offgas piping, separator vessels and all its internal parts (except demister pads) and their supporting structures/anchorage.

3.20.2.2 Demister pad assembly shall be remotely removable and replaceable through a 10-foot diameter opening from the 56-foot elevation floor, rooms P-0304 and P-0311, which are directly above the black cells P-0106 and P-0117. If the water connections for the spray connections for the spray down mechanism are incorporated into the pad assembly, the connections shall utilize a quick disconnect type connection for the water source. Due to potential radiation and contamination concerns, viewing and removal of the of the demister pad will be accomplished with the top demister pads submerged approximately 6-inch below the water during the maintenance duration. Seller shall demonstrate and record on VHS format video tape demister pad removal and replacement in their shop test.

3.20.3 R5/C5 Hot Cell Equipment Maintenance Requirements

3.20.3.1 Reboiler and support frame assemblies and recirculation pumps in the R5/C5 hot cell shall be designed to be remotely removable and replaceable in accordance with specification 24590-WTP-3PS-M000-T0002, *General Specification for Mechanical Handling Equipment Design and Manufacture.* No components shall require special tools.

3.20.3.2 Reboiler and support frame assemblies and recirculation pumps in R5/C5 hot cell shall be designed in accordance with the requirements stated within this specification.

3.20.3.3 Each reboiler and support frame assembly shall not weigh more than 27.5 tons, including all required lifting fixtures.

3.20.3.4 All fittings, pipe connections, electrical power, and control connections for equipment in R5/C5 hot cell shall be engineered on jumpers suitable for remote operation using a crane hook and crane mounted impact wrench with CCTV cameras.

3.20.3.5 Reboiler and support frame **assemblies** and recirculation pumps shall be made suitable for remote operation utilizing features such as trunnions, guide pins, location dowels, captive bolts, and lead-ins on bolts, and be able to be removed using a crane hook and crane mounted impact wrench with CCTV cameras. Refer to Appendix G for remote impact wrench and drawings nos. 24590-WTP-M0-M10T-00004 and 24590-PTF-M0-PIH-00008 for crane details.

3.20.3.6 The use of shims to position reboiler and support frame assemblies or recirculation pumps in the R5/C5 hot cell is not allowed. All surfaces shall be machined to locate equipment and support remote handling and replaceability.

3.20.3.7 Due to the requirement of a 12-foot reserved path for equipment removal in the hot cell, Seller shall comply with the location requirements for reboiler and support frame assemblies and recirculation pumps as shown in sketches in Appendices I and Q.

3.20.3.8 All services to or from the recirculation pumps shall be provided using jumper connections.

3.20.3.9 The maximum height of any 2-inch hex nut (jumper connector), oriented vertically, is 24 ft-6 inches in plant elevation.

3.20.3.10 The maximum height of any 2-inch hex nut (jumper connector), oriented horizontally, is 25 ft-6 inches in plant elevation.

3.20.3.11 The maximum height of the 2 ton slewing hoist is 28 ft-6 inches.

3.20.3.12 The maximum height and hook approach of the 30 ton hook is distinctly different than the 2 ton hoist. Refer to the crane data sheet, 24590-PTF-MJD-PIH-00001 for details.

3.20.4 Deleted.

4 Materials

4.1 Positive Material Identification

Refer to Buyer's specification 24590-WTP-3PS-G000-T0002, *Specification for Positive Material Identification (PMI)* for PMI requirements. Seller shall submit documentation of all PMI test results which show chemical properties and material classification.

4.2 Construction

4.2.1 Seller shall specify surface finish for all materials and submit to Buyer for review.

4.2.2 Seller shall maintain a record of ASTM numbers, material test reports, and manufacturer material certifications for all materials used for construction of evaporator equipment/skids. Seller shall provide copies to the Buyer.

4.2.3 All stainless steel bolts and studs shall conform to ASTM F593.

4.2.4 All stainless steel nuts shall conform to ASTM F594.

4.2.5 Seller shall provide Material Safety Data Sheets (MSDSs) for all materials installed or used.

4.2.6 Process fluids may contain caustic solutions (50 wt % caustic), however 5 M nitric acid solutions may also be used for decontamination of the pipework, pumps, valves, and instruments/instrument tubing both inside and outside of the pipework assembly.

4.2.7 All flanges and pipe fittings shall conform to ASME B31.3 1996 and be weld-neck and long radius type, respectively, unless otherwise specified. Flanges shall also be in accordance with ASME B16.5, and B16.47 Series A, as applicable.

4.2.8 No threaded flanges or fittings shall be used **in the black cells.**

4.2.9 Certified material test reports shall be supplied for all stainless steel pipe, plate, sheet, and sections.

4.2.10 Selection of materials for threaded components shall minimize galling. Where the Seller determines that potential for galling is present assuming proper removal and reinstallation, designs shall be considered that favor components that are difficult to replace remotely. The Seller shall also consider different material selection, sleeving, etc. where practical.

4.2.11 All materials used in the construction of the evaporator equipment shall be new and unused. Where specific criteria are not provided, material section shall be determined by the Seller and have properties and composition suitable for the specific service conditions and consistent with this specification and its addenda and attachments.

4.2.12 The alternate ASTM and **alternate ASME** standard editions listed below can be used in lieu of the **specified** editions in effect.

Alternate Materials	Specified Materials
ASTM A182-98, A182-01	ASTM A182/A182M-99
ASTM A312-04	ASTM A312/A312M-00c
ASTM A403-95	ASTM A403/A403M-99
ASTM A403-99	ASME Section II Part A, 2001 Edition 2002 Addenda, SA-403 / ASTM A403-95
ASTM A182-98	ASME Section II Part A, 2001 Edition 2002 Addenda, SA-182 / ASTM A182-99
ASME 2001 Edition SA-312, 2003 Addenda SA-312 ASME 1995 Edition SA-312, 1995 Addenda SA-312	ASME Section II Part A, 2001 Edition 2002 Addenda, SA-312 / ASTM A312-00c
ASME 1998 Edition SA-240, 2003 Addenda SA-240 ASME 1997 Addenda SA-240	ASME Section II Part A, 2001 Edition 2002 Addenda, SA-240 / ASTM A240-97a
ASTM A240-00, -02, -03, -03c, - 04a	ASTM A240/A240M-03b
ASME SFA 5.22 Part C - 1995 Edition 1996 Addenda	ASME SFA 5.22, Section II, Part C 2001 Edition 2002 Addenda
ASTM A480-03c	ATM A480-03b
ASTM 554-98, -03	ASTM 554-98el
ASME SFA-5.9, SFA5.22 Sec III, Subsec NB, 1995 Edition, 1996 Addenda	ASME Code, Section II, 2001 Edition with 2002 Addenda (weld wire)
ASME A240-00, -03 /A240-01	ASME A240/A240M-03b

4.3 Vessels

Vessel materials shall conform to individual MDS in section 2 of the MR.

4.4 Pipework

Pipework material shall meet the piping material requirements in Buyer's specification 24590-WTP-3PS-P000-T0001, *Specification for Piping Material Classes*.

4.5 Prohibited Materials

4.5.1 Mercury and other low melting point metals, their alloys, or materials containing such metals as their basic constituents shall not be used in the construction of any components of the evaporator systems.

4.5.2 Molybdenum and halides shall not be used in direct contact with stainless steel.

4.5.3 Asbestos shall not be included in any component of the evaporator systems.

4.5.4 Halide containing materials shall not be used in any component of the evaporator systems.

4.5.5 "Teflon" or compounds thereof must be qualified for use with the radiation levels specified in this specification.

4.6 Storage of Special Materials (e.g., stainless steel) prior to work

4.6.1 The Seller shall meet the storage requirements in Buyer's specification 24590-WTP-3PS-G000-T0003, *General Specification for Packaging, Shipping, Handling, and Storage Requirements*.

4.6.2 Stainless steel is susceptible to corrosion caused by the contact and interaction with incompatible materials. All stainless steel material shall be stored in separate areas away from other materials.

5 Fabrication

The Seller shall obtain written Final Design Review from the Buyer prior to the start of fabrication activities.

5.1 General

5.1.1 Fabrication of vessels shall be performed in accordance with Buyer's specification 24590-WTP-3PS-MV00-T0001, *Specification for Pressure Vessel Design and Fabrication.*

5.1.2 Fabrication of pipework shall be performed in accordance with Buyer's specification 24590WTP-3PS-PS02-T0001, *Specification for Shop Fabrication of Piping.*

5.1.3 Fabrication of mechanical handling equipment shall be performed in accordance with Buyer's specification 24590WTP-3PS-M000-T0002, *General Specification for Mechanical Handling Equipment Design and Manufacture.*

5.1.4 All fabrication shall be performed by personnel qualified in accordance with this specification and applicable documents in section 2 of this specification.

5.2 Welding

5.2.1 Seller shall develop detailed welding, weld inspection, NDE, and weld repair procedures for fabrication of the evaporator vessel, equipment, and structural supports. Seller shall submit them to the Buyer for review prior to fabrication. Procedures shall include acceptance criteria. The procedures shall conform to the following, as applicable:

- Buyer's Specification 24590-WTP-3PS-SS00-T0002
- Buyer's Specification 24590-WTP-3PS-NWP0-T0001
- Buyer's Specification 24590-WTP-3PS-MVB2-T0001
- ASME Boiler and Press Vessel Code, section VIII, Div. 1
- ASME B31.3-1996
- AWS D1.6
- AWS D9.1

5.2.2 Welding, weld inspection, NDE, and weld repair shall be carried out in accordance with the applicable procedures developed per section 5.2.1 above.

5.2.3 Each procedure shall be prepared and qualified in accordance with the requirements of the listed specification and standards in 5.2.1 above or ASME section IX, whichever is more stringent.

5.2.4 Welder qualifications shall be performed in accordance with ASME section IX or AWS as required.

5.2.5 Personnel performing weld inspection shall be qualified in accordance with ASME Boiler and Pressure Vessel Code, section VIII, Div. 1 and Buyer's specification 24590-WTP-3PS-SS00-T0002, *Specification for Welding of Structural Stainless Steel and Welding of Structural Carbon Steel to Structural Stainless Steel.*

5.2.6 Repairs required as a result of weld rejection by either the Buyer's or Seller's final inspection shall be fully documented in accordance with Seller's Quality Assurance Program (QAP). Weld repairs shall be performed in accordance with ASME Boiler and Pressure Vessel Code, section VIII. Weld repair records shall be included with Seller's quality verification document package to be submitted to Buyer.

6 Inspections and Examinations

6.1 Nondestructive Examinations

6.1.1 Unless otherwise specified, all vessel welds shall be inspected in accordance with the requirements outlined in the Buyer's specification 24590-WTP-3PS-MV00-T0001, *Specification for Pressure Vessel Design and Fabrication.*

6.1.2 Unless otherwise specified all pipework welds shall be inspected in accordance with the requirements outlined in Buyer's specification 24590-WTP-3PS-PS02-T0001, *Specification for Shop Fabrication of Piping*. For nondestructive examination (NDE) of fabricated pipe welds. Appendix O of this evaporator specification, 24590-PTF-3PS-MEVV-T0001, shall be used in replacement of Appendix A of specification for Shop Fabrication of Piping, 24590-WTP-3PS-PS02-T0001.

6.2 Dimensional Inspections

6.2.1 Refer to Buyer's specification 24590-WTP-3PS-PP00-T0002, *Specification for Dimensional Record Program*, for final dimensional measurement requirements. Third party validation of special dimensional inspection is not required.

6.2.2 Buyer's specification 24590-WTP-3PS-PP00-T0002, *Specification for Dimensional Record Program*, is applicable only to recirculation pumps and reboiler and support frame assemblies and does not apply to any other components.

6.2.3 For recirculation pumps, a dimensional record is required for remotable pump features that are not part of the process jumper. The process portion of the recirculation pump will be installed in a jumper, and the jumper dimensional record will be performed by the Buyer.

6.2.4 For reboilers, all remote connector nozzles shall be measured to precise as-built dimensions.

6.2.5 Seller shall furnish personnel to perform measurement activities.

6.3 Visual Weld Inspections

6.3.1 The Seller shall develop and implement a procedure to perform visual weld inspections (visual tests, VT) to inspect each weld. The inspection procedure shall be developed in accordance with Buyer's specification 24590-WTP-3PS-MVB2-T0001, *Specification for Welding Pressure Vessels, Heat Exchangers and Boilers* and ASME B31.3 1996, and shall include inspection materials and acceptance criteria.

6.3.2 Acceptance criteria for visual weld inspections for vessels shall be in accordance with Buyer's specification 24590-WTP-3PS-MVB2-T0001, *Specification for Welding Pressure Vessels, Heat Exchangers and Boilers* and for pipework shall be in accordance with ASME B31.3 1996.

6.3.3 The Seller shall prepare a visual weld inspection report for each fabricated item.

6.3.4 Deleted.

6.3.5 Deleted.

6.3.6 The Seller shall notify the Buyer in advance of inspections. The Buyer may send representatives to witness inspections or perform independent inspections.

6.4 Liquid Penetrant Test

6.4.1 The Seller shall develop and implement a procedure to perform a liquid penetrant test (PT) to inspect each weld. The procedure shall be developed in accordance with Buyer's specification 24590-WTP-3PS-MVB2-T0001, *Specification for Welding Pressure Vessels, Heat Exchangers and Boilers* and ASME B31.3 1996, and shall include inspection materials, dwell time for dye and developer, and acceptance criteria.

6.4.2 Acceptance criteria for PT inspection shall be in accordance with Buyer's specification 24590-WTP-3PS-MVB2-T0001, *Specification for Welding Pressure Vessels, Heat Exchangers and Boilers* and for pipework shall be in accordance with ASME B31.3 1996.

6.4.3 The Seller shall prepare a liquid penetrant test report for each weld connection on each fabricated item.

6.4.4 Deleted.

6.4.5 Deleted.

6.4.6 The Seller shall notify the Buyer in advance of testing. The Buyer may send representatives to witness testing or perform independent tests.

6.5 Radiography

6.5.1 Radiographic examinations shall be carried out on all primary containment pipework butt-welds using 100 % radiography for QL components. For all other quality levels, refer to Appendix O of this specification for radiographic examination requirements.

6.5.2 The Seller shall develop and implement a procedure to perform radiographic weld examinations of piping butt-welds. The procedure shall be developed in accordance with ASME B31.3 1996, and shall include examination materials and acceptance criteria.

6.5.3 Deleted.

6.5.4 Deleted.

6.5.5 The Seller shall provide radiographic film with technique and reader sheets. Exposed film must be sent, along with a copy of the technique and reader sheets in accordance with section 3 of the MR. Film must be suitably packaged to preclude moisture and handling damage.

6.5.6 The Seller shall notify the Buyer in advance of examinations. The Buyer may send representatives to witness or perform independent examinations.

6.6 Magnetic Particle Examination

6.6.1 The Seller shall develop and implement a procedure to perform magnetic particle examination. The procedure shall be submitted to the Buyer for review prior to fabrication.

6.6.2 Magnetic particle examination (MT) shall be in accordance with ASTM Specification E709.

6.6.3 **Welds specified under AWS D1.1 will be evaluated and accepted under** criteria **of** AWS **D1.1 Table 6.1**.

6.7 Final Inspection

6.7.1 The Seller shall develop and implement a procedure for final inspection of each fabricated item. The inspections shall be performed after completion of all fabrication, cleaning, and testing, and just prior to final packaging. The inspections shall include inspection of all surfaces for contamination. Visible evidence of contamination is not acceptable.

6.7.2 The Seller shall prepare a final inspection report for each item, which documents the results of the final inspection. The Seller shall include the final inspection report in the documentation package for each piece.

6.8 Inspection and Test Status

The Seller shall maintain a positive system for identifying inspection and testing status of items and systems.

6.9 Control of Nonconforming Items

The Seller shall use the Supplier Deviation Disposition Request per MR section 2 to notify the Buyer of fabricated items and fabrication activities not conforming to the requirements. Any nonconforming work shall be redone by the Seller at Seller's cost.

7 Testing

7.1 Shop Tests

7.1.1 The Buyer reserves the right to witness all shop tests and shall be given a minimum of 10 working days written notice prior to each test date.

7.1.2 All pipework shall be hydrostatically tested in accordance with ASME B31.3 1996. Test water used for hydrostatic testing shall be tested for chlorides. The chloride content of the test water shall not exceed 50 ppm and the water temperature shall not exceed 120 °F. Buyer shall review all test pressures prior to commencement of any testing. The testing results shall be documented and provided to Buyer.

7.1.3 Testing of vessels shall be performed in accordance with Buyer's specification 24590-WTP-3PS-MV00-T0001, *Specification for Pressure Vessel Design and Fabrication.*

7.1.4 Functional tests of evaporator equipment/skids shall be performed by the Seller. **If the antifoam agitator is tested by the fabricator prior to shipment to the vessel shop, then functional test of the antifoam tank/agitator assembly as a unit is not required.**

7.1.5 Seller shall demonstrate and record on VHS format video tape demister pad removal. Test shall be done with equipment representative of what will actually be installed and utilized in the Buyer's facility.

7.1.6 Seller will furnish lifting yokes details for separator vessels, reboiler and support frame assemblies, and recirculation pumps. All Seller supplied lifting yokes shall be load tested to 1.5 times the design load.

7.1.7 Each evaporator equipment skid shall be lift tested by the Seller to demonstrate proper vertical orientation using the Seller-supplied tooling and fixtures. This testing includes verification of all tilt up features. During the lift test the deflection at the midpoint of each skid shall be monitored and recorded to ensure that proper alignment is maintained. The centerline of the evaporator skid shall be within ±1 inch of true vertical when measured from the lift point. Permanent deflection or a change in the evaporator skid alignment is unacceptable.

7.1.8 Seller shall furnish blind flanges or other acceptable closures for the nozzles, as required for hydrotesting. Closures shall be removed after testing, unless they are required for shipment.

7.1.9 Deleted.

7.1.10 All test results shall be documented, certified, and submitted to the Buyer for review.

7.2 Integrated Acceptance Tests

An Integrated Acceptance Test **(stimulant test) using stable (non-radioactive) cesium is not required. The specified requirements provided in this section shall be used only for determining minimum separator decontamination factor.**

7.2.1 Performance

7.2.1.1 Limiting the entrainment of radionuclides from the evaporator to the primary condenser is an important safety function. During cold commissioning, the performance of the evaporator system will be measured using surrogate chemicals to determine the degree of entrainment from the evaporator to the primary condenser. Stable (nonradioactive) cesium will be the surrogate of choice for simulating radionuclide carryover to the condensing system.

7.2.1.2 Steady state operation is defined as:

- Liquid density of the concentrate ranges from 1.22 to 1.25 g/ml at operating temperature.
- Sodium cation and nitrate, hydroxide, chloride anions are the predominate soluble chemical analytes in the concentrate.
- The soluble concentration of stable (nonradioactive) cesium in the evaporator bottoms (concentrate) is no greater than 41.5 milligrams per liter.

7.2.1.3 The following criteria must be met prior to final acceptance of the evaporator system design:

- At steady state operation, the time-average mass rate of stable (nonradioactive) cesium carry-over from the evaporator to the condensing system shall not exceed 1.0 E-04 gram during any 24 hour period.
- At steady state operation, the instantaneous mass rate of stable (nonradioactive) cesium carry-over from the evaporator to the condensing system shall not exceed 1.0 E-03 gram in any one (1) hour period.

7.2.1.4 The performance testing and acceptance criteria shall apply over a boil-off range from 10 gpm to 30 gpm of total condensate, as measured in the condensate receiver vessel.

7.2.1.5 Performance testing shall be corrected for uncertainty in instrument and analytical measurements.

7.2.1.6 Relative performance indicators include:

- The estimated mass distribution ratio (mass rate of cesium removed with the overhead/mass rate of cesium in the feed) at steady state is approximately 1.0E-07.
- The estimated decontamination factor (concentration of cesium in the feed / concentration of cesium in the overheads) at steady state is approximately 8.0E+06.
- The estimated concentration of cesium in the condensate from the condensing system ranges from 6.0E-04 to 1.8E-03 microgram per liter.

7.2.2 A full simulation of abnormal shutdown conditions.

8 Preparation for Shipment

8.1 General Requirements

8.1.1 The evaporator equipment/skids shall be packaged/prepared for shipment, handled, and stored in accordance with the following requirements in

- Section 7 of the MR.
- Buyer's Specification 24590-WTP-3PS-G000-T0003, *General Specification for Packaging, Shipping, Handling, and Storage Requirements.*
- Buyer's Specification 24590-WTP-3PS-PS02-T0001, *Specification for Shop Fabrication of Piping.*
- Buyer's Specification 24590-WTP-MV00-T0001, *Pressure Vessel Design and Fabrication.*

8.1.2 Seller shall ensure that appropriate documentation is prepared and, if required, signed by the appropriate person(s). The shipping documentation shall accurately reflect specific traceability to the items being shipped.

8.1.3 Seller shall ensure that appropriate documentation is prepared for the evaporator equipment/skids. At a minimum, documentation shall include the following information, as applicable:

- Manufacturer name, model number, and serial number.
- Skid number.
- Plant item number.

8.1.4 Solvents and cleaning solutions used on stainless steel shall have a halogen content of less than 200 ppm.

8.1.5 Recirculation pumps will be shipped only in temporary shipping skids not meant for installation. The reboiler and support frame assemblies shall be transported from the Seller site to the Buyer site in the horizontal orientation due to air lock size limits.

8.1.6 Separator vessels will be shipped on temporary shipping skids. The installation skids are shipped separately, each in two pieces because of their height.

8.1.7 Lifting weight shall be clearly marked on both the equipment skid and its shipping documentation.

8.1.8 Regarding Buyer's Specification 24590-WTP-3PS-PS02-T0001, *Specification for Shop Fabrication of Piping,* polyethylene wrap can be used **for off-gas piping pieces** and subsequent blocking using Styrofoam cushioning and equivalent backed by plywood/wood to provide protection against damage or access by elements. Special end caps are not required.

8.2 Painting

8.2.1 Stainless steel shall not have coating applied.

8.2.2 Seller shall submit the information requested on Form H (see appendix S) along with technical data sheet and MSDS. Supplier shall provide Certificate of Conformance verifying application of coating in compliance with coating manufacturer's Technical Product Data Sheet.

8.2.3 All painting and coating shall be applied in accordance with the manufacturer's directions for application.

8.2.4 Exposed carbon steel surface shall be primed and painted with enamel base coating in accordance with the coating manufactures surface and application requirements. All visible oil, grease, dust, dirt, mill scale, rust, coating, oxides, corrosion products and other foreign matter shall be removed prior to application of primer. See section 8.2.14 and 8.2.15 for custom fabricated equipment.

8.2.5 In the absence of standard manufacturer's colors, the finish coat of all carbon steel items and equipment shall be ANSI 70 Gray. Contrasting colors shall be used for fasteners and bails.

8.2.6 Repainting by the Seller, or custom finishing by the manufacturer shall not be required when commercially available components and equipment which are normally mass produced, inventoried, supplied from stock, and have been coated with the manufacturer's standard coating system.

8.2.7 Surfaces exposed to the environment, but inaccessible after assembly, shall be coated prior to assembly.

8.2.8 Painting of interior and enclosed surfaces of the equipment, such as inside a welded box section, is not required.

8.2.9 Machined carbon steel mating surfaces and other surfaces not protected by coating system (such as seal surfaces, threaded surfaces, lifting hooks, hook nuts, wheel treads, gears, shafts, pinions, and couplings), shall be protected with a solvent cutback asphalt temporary preservative (Dauber Chemical Tectyl 891, EF Houghton Chemical Rust Veto 342 or Buyer's accepted equivalent) for shipment and storage. The Seller shall specify which preservatives must be removed and how the preservatives are removed by the Buyer before operation of the equipment.

8.2.10 Welds shall be coated only after completion of the required tests. Required tests include leak tightness, hydrostatic testing or other NDE of the welds.

8.2.11 Filler, sealant, and caulking compounds shall be compatible with the coating system.

8.2.12 The lifting fixtures for separator vessel shall be safety yellow # 13655 in accordance with FEP-STD 595B, *Colors Used in Government Procurement*. The lifting fixtures can be coated with the manufacturer's standard coating systems.

8.2.13 Items covered by 8.2.14 and 8.2.15, shall be surface prepared in accordance with SSPC SP10. For repair, the surfaces shall be prepared in accordance with SPPC SP11.

8.2.14 For support frames for steam conditioning skids and reboiler transporter, Seller shall use two coats (P04) of Epoxy with 4-6 mils per coat. Acceptable coating products for P04 are as follows:

8.2.14.1 Amercoat 385 from Ameron

8.2.14.2 Carboguard 890 from Carbonline

8.2.14.3 224HS from Devoe

8.2.14.4 Protecto-Coat 330 or 300 from Dudick

8.2.14.5 Intergard 475HS from International

8.2.14.6 Macropoxy 646 from Sherwin Williams

8.2.15 For reboiler and recirculation pump lifting beams, Seller shall use three coats with 1st coat (P02) of Epoxy Primer with 3-5 mils and (P06) Epoxy Novolac with 5 - 10 mils for 2nd and 3rd coats. Acceptable coating products for P02 are as follows:

8.2.15.1 Amercoat 68HS from Ameron

8.2.15.2 Carbozinc 859 from Carbonline

8.2.15.3 313 from Devoe

8.2.15.4 Interzinc 52 from International

8.2.15.5 Zinc Clad IV from Sherwin Williams

Acceptable coating products for P06 are as follows:

8.2.15.6 Amercoat 91 from Ameron

8.2.15.7 Phenoline 1205 FR from Carbonline

8.2.15.8 253 from Devoe

8.2.15.9 Protecto-Coat 100XT or EN from Dudick

8.2.15.10 Intertherm 875 HS from International

8.2.15.11 Macropoxy 646 from Sherwin Williams

8.3 Tagging

8.3.1 Tagging of the evaporator component, equipment, and skids shall be per this specification and the applicable documents listed in section 2 of this specification. Plant item numbers for evaporator component/equipment shall be per the data sheets that are in section 2 of the MR.

8.3.2 Instruments shall have nameplates installed per section 8 of Buyer's specification 24590-WTP-3PS-JQ07-T0001, *Engineering Specification for Instrumentation for Package Systems.*

8.3.3 Motors shall have nameplates per section 3 of Buyer's specification 24590-WTP-3PS-MUMI-T0002, *Engineering Specification for Low Voltage Induction Motors.*

8.3.4 Packages shall be suitably marked on the outside to facilitate identification of the purchase order, the procurement specification, the package contents, and any special handling instructions.

8.3.5 Slinging points and orientation for storage shall be clearly marked.

8.3.6 Temporary material such as bolting and shipping material shall have clear identification per sections 3.13 and 3.13.12 of Buyer's specification 24590-WTP-GPP-GCB-00100, *Field Materials Management.*

8.3.7 A stainless steel nameplate shall be rigidly attached to the evaporator equipment skid packages in a prominent position for ease of visibility, and shall include the following:

- Manufacturer's name.
- Shop location.
- Date of manufacture.
- Serial number.
- Skid number.
- Weight of assembly.
- Purchase order number.

9 Quality Assurance

9.1 General Commercial Designation (CM) Requirements

9.1.1 The Seller's Quality Assurance Program (QAP) Requirements are included in 24590-WTP-3PS-G000-T0001, *Supplier Quality Assurance Program.*

9.1.2 Seller's QAP Manual shall be submitted to buyer for review in accordance with 24590-WTP-3PS-G000-T0001, *Supplier Quality Assurance Program.*

9.1.3 Seller's QAP, as a minimum, shall contain the requirements of DOE Order 414.1A as detailed in the Supplier Quality Assurance Program Requirements Data Sheets listed in section 2 of the MR. The very same requirements shall be passed down to any lower tier subcontractor.

9.2 Quality Level (QL) Requirements

9.2.1 Seller shall have in place a QA program meeting the requirements marked as applicable in Supplier Quality Assurance Program Requirements Data Sheet attached to the MR, and Buyer's specification 24590-WTP-3PS-G000-T0001.

9.2.2 Seller shall demonstrate that its quality program is in compliance with the procurement quality requirements listed in the Supplier Quality Assurance Program Requirements Data Sheet. The Supplier shall allow the Buyer, its agent, and DOE access to their facilities and records pertaining to this purchase order for the purpose of QA Audits and Surveillance at mutually agreed times.

9.2.3 All items shall be manufactured in accordance with the Supplier's Quality Assurance Program that has been previously evaluated and accepted by the RPP-WTP Quality Organization. The very same requirements shall be passed down to any lower tier subcontractor.

9.2.4 Seller shall submit their QA program and work plan to Buyer for review prior to commencement of work. The plan shall include documents and procedures to implement the work and include a matrix of essential Quality Assurance elements cross referenced with the documents/procedures.

10 Configuration Management

Equipment and/or components covered by this specification are identified with Plant Item Numbers shown in the attached data sheets in section 2 of the MR. Each item shall be identified in accordance with section 8.3 of this specification.

11 Documentation and Submittals

11.1 General

11.1.1 Seller shall submit to Buyer all detailed designs, drawings, documentation, procedures, instructions, calculations, analyses, manufacturer documentation, manufacturer data, inspection reports, test reports, certifications, certificates, manuals, MSDSs, video tapes, and drawings required per this specification, the applicable codes, standards, and reference documents in section 2 of this specification, and the MR.

11.1.2 All detailed designs, drawings, assembly drawings, shop drawings, final P&IDs, MDSs, supporting calculation, supporting analyses, and all other requirements in the 60 % design stage shall be issued to the Buyer for review prior to fabrication of evaporator vessels and equipment.

11.1.3 Seller shall submit to Buyer Engineering and Quality Verification documents in the forms and quantities shown in Form G-321-E, *Engineering Document Requirements*, and Form G-321-V, *Quality Verification Document Requirements* attached to the MR, section 3.

11.1.4 Seller shall submit a report identifying any deviations and/or conflicts per section 2 of the MR to the Buyer for review.

11.1.5 Each documentation transmittal package shall have a documentation inventory sheet attached listing all documents and the number of pages each.

11.1.6 All documents submitted for review (e.g., General Arrangement, Shop Details, Calculations must contain their own unique NAME AND IDENTIFICATION NUMBER) Example:

Calculations for Item:
Document No: Calc TLP-PMP-00001-0001

11.1.7 Data sheets in section 2 of the MR shall be marked up by the Seller and submitted to the Buyer for review with the detailed design. Seller shall fill in all information that is marked as asterisk or TBD and markup actual overall dimensions for each evaporator component, equipment, and skid based on the detailed design.

11.1.8 All drawings shall be produced per the drawing practices set forth in ASME Y14.100, Engineering Drawing Practices.

11.2 Calculations

All calculations to be provided shall be orderly, complete, and sufficiently clear to permit verification. The body of the calculations shall include:

- A concise statement of the purpose of the calculation.
- Input data, applicable criteria, and stated assumptions.
- A list of references used, including drawings, codes, standards, and computer programs (indicate the version or issue date).
- A discussion of rationale used for design assumption basis.
- Equations used for all computations.
- Numerical calculation including identification of units used.
- A concise statement addressing the calculation results and/or recommendations.
- A table of contents for complex calculations.

Design Stress/Seismic Reports shall provided, as a minimum, the following information

11.2.1 ANSI/AISC N690 Steel Frame / Support Designs

For Finite Element Analysis (FEA) by Computer Program, submit the bases or reference to the bases that supports applicability of the computer program to the specific physical problem being solved. (i.e; application /validation to steel code formulas and allowable stresses)

11.2.2 ASME VIII, Div 2, Appendix 4, Vessel including internal supports/components

For FEA Computer Program analysis, submittal for the bases or reference to the bases supporting application of the computer program to the specific physical problem being solved. (i.e; application/validation to the ASME VIII, Div 2, Appendix 4, Maximum Shear Stress Theory.)

11.2.3 ASME B31.3 Piping Design

For FEA Computer Program analysis, submittal for the bases or reference to the bases supporting application of the computer program to the specific physical problem being solved. [i.e; application/validity to the ASME B31.3 design requirements in accordance with B31.3-96, section 300(c)(3)]

11.3 As-Built Drawings

11.3.1 Progress As-Builts

During construction, the Seller shall keep an updated marked-up set of progress as-built drawings on the jobsite as an accurate record of all deviations between the work, as shown on the Buyer reviewed drawings, and work as fabricated. These drawings shall be available to the Buyer for inspection at any time during regular business hours.

11.3.2 Final As-Builts

Seller shall furnish to Buyer final as-built drawings with AS-BUILT clearly printed on each sheet for all final work left in place. Seller shall accurately and neatly transfer all deviations from progress as-builts to final as-builts.

11.4 Dimensional Record Drawings

See 24590-WTP-3PS-PP00-T0002 for final dimensional measurement requirements. Third party validation of special dimensional inspection is not required. Seller shall furnish to Buyer dimensional record drawings for reboiler and support frame assemblies, and recirculation pumps with all their associated lifting yokes and/or lifting lugs.

11.5 Project Start

Seller shall submit drawing index and detailed schedule of engineering document submittals, material purchases, fabrication, shop test, and ready for shipment. Include bar charts or critical path method diagrams, which detail the chronological sequence of activities.

11.6 30 % Design Review

11.6.1 Provide drawings with outline dimensions, services, foundations, and mounting details of all three (3) evaporator systems. Drawings shall show external envelope, including lugs, centerline(s), location and size for electrical cable, conduit, fluid, other service connections, isometrics, and details related to foundations and mountings.

11.6.2 Provide preliminary dimension, location, and layout for all evaporator component, equipment, and skids.

11.6.3 Provide preliminary design of the demister pads replacement methodology.

11.6.4 Provide preliminary system description. Describe general system functions and basis of design. It shall include a systematic process flow diagram for system operation.

11.6.5 Provide preliminary Piping and Instrumentation Diagrams (P&IDs).

11.6.6 Provide preliminary instrument control requirements. Include system interlocks and control philosophy. Provide flow charts, schematics, logic diagrams, or function diagrams showing the equipment functional controls.

11.6.7 Provide document that describes the proposed equipment skids, including sketches of typical skids indicating skid-to-skid and skid-to-building interfaces, as well as the components included.

11.6.8 Identify all large and heavy items of equipment to ensure lifting capability during construction, maintenance, and decommissioning.

11.6.9 Provide preliminary electrical drawings, schematics, wiring drawings, and motor data sheets per Buyer's specifications 24590-WTP-3PS-MUMI-T0002 and 24590-WTP-3PS-EKP0-T0001.

11.7 60 % Design Review

11.7.1 Provide final P&IDs.

11.7.2 Provide final skid constructability study.

11.7.3 Provide final evaporator component, equipment, skid size, and layout.

11.7.4 Provide assembly drawings.

11.7.5 Provide shop detail drawings with sufficient detail to facilitate fabrication, manufacture, or installation. This includes a complete Bill of Materials (BOM), pipe spool drawings, internal piping and wiring details, cross-section details, and structural details.

11.7.6 Provide wiring diagrams including schematic diagrams, equipment internal wiring diagrams, and interconnection wiring diagrams for electrical items.

11.7.7 Submit completed Instrument and Mechanical data sheets for all instruments and equipment, utilizing Buyer's supplied instrument data sheet samples attached in section 2 of the MR as templates.

11.7.8 Provide functional test setpoints and recommended operating set points for the instrumentation and control packaged systems.

11.7.9 Provide final instrument control requirements including control loop definitions, system interlocks, alarms, and control philosophies. Control and sequencing requirements of the system and its components shall be detailed as described in section 3.5 of 24590-WTP-3PS-JQ07-T0001, *Engineering Specification for Instrumentation for Package Systems*.

11.7.10 Submit all final detailed drawings, calculations, analyses, and information necessary for evaporator vessels and equipment fabrication.

11.7.11 Submit all FMEA documentation.

11.7.12 Provide final electrical drawings, schematics, wiring drawings, motor data sheets, nameplates per Buyer's specifications 24590-WTP-3PS-MUMI-T0002 and 24590-WTP-3PS-EKP0-T0001.

11.8 90 % Design Review

11.8.1 Provide detailed written procedures, instructions, and drawings (including all lifting requirements) for evaporator system erection/installation.

11.8.2 Provide complete remote installation instructions for the utilization of the hot cell existing cranes for the needed reorientation, installation, and extraction of the reboiler.

11.8.3 Provide instrument installation details.

11.8.4 Provide list of required spares.

11.8.5 Provide startup and commissioning spares list, including all components or equipment that may be needed during startup and commissioning.

11.8.6 Provide operation manuals with detailed written instructions describing how the evaporator systems and components should be operated. Manuals shall include specific instructions, procedures, and illustrations for the following:

11.8.6.1 Safety Precautions – List personnel hazards and equipment or product safety precautions for all operating conditions.

11.8.6.2 Operator Prestart – Include requirements to set up and prepare each system for use.

11.8.6.3 Start-up, Shutdown, and Post-shutdown Procedures – Include a control sequence for each of these operations.

11.8.6.4 Normal Operations – Include control diagrams with data to explain operation and control of systems and specific equipment.

11.8.6.5 Emergency Operations – Include emergency procedures for equipment malfunctions to permit a short period of continued operation or to shut down the equipment to prevent further damage to systems and equipment. Include emergency shutdown instructions for fire, over-pressure, spills, or other foreseeable contingencies. Provide guidance on emergency operations of all utility systems including valve locations and portions of systems controlled.

11.8.6.6 Operator Service Requirements – Include instructions for services to be performed by the operator, such as lubrication, adjustments, and inspections.

11.8.6.7 Environmental Conditions – Include a list of environmental conditions (temperature, humidity, and other relevant data) which

are best suited for each product or piece of equipment and describe conditions under which equipment should not be allowed to run.

11.8.6.8 Lay-up Instructions – Include step-by-step instructions for lay-up.

11.8.7 Provide maintenance manuals with detailed written instructions to disassemble, reassemble, and maintain systems or components in an operating condition. Manuals shall include specific instructions, procedures, and illustrations for the following phases of maintenance:

11.8.7.1 Preventive Maintenance - Include the following information for preventive and scheduled maintenance to minimize corrective maintenance and repair:

11.8.7.1.1 Lubrication Data – Include lubrication data, other than instructions for lubrication, in accordance with operator service requirements to be included in operation manuals.

11.8.7.1.2 Preventive Maintenance Plan and Schedule – Include manufacturer's schedule for routine preventive maintenance, inspections, testing, and adjustments required to ensure proper and economical operation and to minimize corrective maintenance and repair. Provide manufacturer's projection of preventive maintenance frequency of work, and hours to complete the task. Provide surveillance and in-service inspection recommendations.

11.8.7.2 Corrective Maintenance – Include manufacturer's schedule for procedures and instructions for correcting problems and making repairs. Include the following information for performing corrective maintenance:

11.8.7.2.1 Troubleshooting Guide and Diagnostic Techniques – Include step-by-step procedures to promptly isolate the cause of typical malfunctions. Describe clearly why the checkout is performed and what conditions are to be sought. Identify tests or inspections and test equipment required to determine whether parts and equipment may be reused or require replacement.

11.8.7.2.2 Wiring Diagrams and Control Diagrams – Wiring diagrams and control diagrams shall be point-to-point drawings of wiring and control circuits including factor-field interfaces. Provide a complete and accurate depiction of the actual job specific wiring and control work. On diagrams, number electrical and electronic wiring and pneumatic control tubing, as well as the terminals for each type, identical to actual installation numbering.

11.8.7.2.3 Maintenance and Repair Procedures – Include instructions and list tools required to restore product or equipment to proper condition or operating standards.

11.8.7.2.4 Removal and Replacement Instructions – Include step-by-step procedures and list required tools and supplies for removal, replacement, disassembly, and assembly of components, assemblies, subassemblies, accessories, and attachments. Provide all tolerances, dimensions, settings, and adjustments required. Instructions shall include a combination of text and illustrations.

11.8.7.2.5 Recommended Spare Parts and Supply Lists – Include list of spare parts and supplies required for maintenance and repair to ensure continued service or operation without unreasonable delays. Include the cost of each item.

11.8.7.2.6 MSDSs – Include MSDSs for all chemicals and hazardous materials supplied as part of the product, system, or equipment. In addition, include MSDSs for all chemicals and hazardous materials required to be added (lubricants, antifreeze, etc.).

11.8.7.2.7 Parts Identification – Provide identification and coverage for all parts of each component, assembly, subassembly, and accessory of the end items subject to replacement. Include special hardware requirements, such as requirement to use high-strength bolts and nuts. Identify parts by make, model, serial number, and source of supply to allow reordering without further identification. Provide clear and legible illustrations, drawings, and exploded views to enable easy identification of the items. When illustrations omit the part numbers and description, both the illustration and separate listing shall show the index, reference, or key number which will cross-reference the illustrated part to the listed part. Parts shown in the listings shall be grouped by components, assemblies, and subassemblies.

11.8.7.2.8 Other than Seller's Commercial Practice – End item manufacturer may add a cross-reference to implement component assemblies and parts requirements when implementation in manual form varies significantly from the style, format, and method of Seller's standard commercial practice.

11.8.7.2.9 Warranty Information – List and explain the various warranties and include the servicing and technical precautions prescribed by the Seller or contract documents to keep warranties in force.

11.8.7.2.10 Personnel Training Requirements – Provide information available from the Seller to use for training designated personnel to operate and maintain the equipment and systems properly.

11.8.7.3 Calibration Testing Equipment and Special Tool Information – Include information on test equipment required to perform specific tests and on special tools needed for the operation, maintenance, and repair of components.

11.8.8 Provide system, component, and instrumentation descriptions as identified below:

11.8.8.1 System Descriptions - Include comprehensive system description describing, in detail, how the overall system functions, and the basic design basis. Include component interfaces and interactions. Provide a systematic process flow diagram for system operation.

11.8.8.2 Component Descriptions – Include comprehensive component descriptions describing, in detail, how each individual process component functions and the basic design basis. Include other component interfaces and interactions. Provide a systematic process flow diagram for component operation.

11.8.8.3 Instrument Descriptions – Include a list or table describing instrument ID number, ID name, location, and basic operating function. Include separately, in systematic descriptive detail, instrument controls and logic that correspond to instrumentation and logic diagrams.

11.8.9 Provide design and operational requirements per the following:

11.8.9.1 Design requirements – Include a list or table describing the maximum design limits and conditions required to safely operate the equipment (i.e., temperatures, pressures, etc.).

11.8.9.2 Operational requirements – Include a list or table describing the normal operating ranges for equipment (i.e., temperatures, pressures, etc.).

11.8.10 Provide analysis and design reports, including analytical data (stress, electrical loading, fluid dynamics, etc.) which demonstrates that an item satisfies all specified requirements.

11.8.11 Provide seismic analysis or test data reports providing data and demonstrating suitability of materials, components, or systems in relation to the conditions imposed by the stated seismic criteria.

11.8.12 Provide thermal stress analysis or test data reports providing data and demonstrating suitability of materials, components, or systems in relation to the conditions imposed by thermal stresses.

11.8.13 Provide site storage and handling manuals including the requirements and time period for lubrication, rotation, heating, lifting, or other handling requirements to prevent damage or deterioration during storage and handling at job site. Include return shipping instructions.

11.8.14 Provide inspection and test plan including detailed descriptions of the inspections and tests planned during the receipt, manufacturing, and conformance verification activities. Include identification of witness and hold points.

11.8.15 Provide welding procedures, specifications, and supporting qualification records required for welding, hard facing, overlaying, brazing, and soldering.

11.8.16 Provide material control procedures including controlling issuance, handling, storage, and traceability of materials such as weld rod.

11.8.17 Provide PMI procedures for performing PMI testing of materials.

11.8.18 Provide repair procedures including controlling material removal and replacement by welding, brazing, etc., subsequent thermal treatments, and final acceptance inspection.

11.8.19 Provide pressure testing procedures including hydro, air, leak, separation, or vacuum test procedures for performing hydrostatic or pneumatic structural integrity and leakage tests.

11.8.20 Provide inspection procedures for the purpose of determining that specified requirements (i.e., dimensions, properties, performance results, etc.) are met.

11.8.21 Provide radiographic testing procedures for identifying the presence and certain characteristics of discontinuities and inclusions in materials by x-ray or gamma ray exposure of photographic film.

11.8.22 Provide liquid penetrant testing procedures for detection of surface discontinuities in materials by application of a penetrating liquid in conjunction with suitable developing techniques.

11.8.23 Provide functional shop test procedures to demonstrate that design function and operational parameters are met (e.g., pump performance data, valve stroking, load, temperature rise, calibration, environment, etc.).

11.8.24 Provide integrated acceptance test requirements document per engineering specifications to demonstrate design function and operational parameters for the complete assembled evaporator systems.

11.8.25 Provide electrical test procedures to demonstrate that design function and operational parameters are met (e.g., impulse, overload, continuity, voltage, temperature rise, calibration, saturation loss, etc.).

11.8.26 Provide shipping preparation procedures for cleaning, packaging, and handling.

11.9 Final Design Review

Provide final design report including all design documents, manuals, and drawings that are specified in this specification. All procedures and instructions shall be completed and submitted to the Buyer a minimum of eight (8) weeks prior to evaporator components, equipment, and skid shipment.

APPENDIX A

WASTE FEED EVAPORATOR STREAM DATA

Stream Description	Evaporator Feed	Evaporator Concentrate	Process Condensate
Specific Gravity	1.050882E+00	1.197295E+00	1.000072E+00
pH	1.227066E+01	1.305375E+01	9.325531E+00
Total Volume (gpm)	1.962454E+01	3.234591E+00	1.710009E+01
Total Mass (lb/hr)	1.030370E+04	1.934908E+03	8.544156E+03
Na Molarity	8.231085E-01	5.000000E+00	3.116202E-05
Activity (Ci/gallon)			
129-I	1.070549E-07	6.456333E-07	7.335298E-10
134-Cs	6.794152E-06	4.120906E-05	2.202542E-09
137-Cs	1.531654E-01	9.292679E-01	1.866905E-09
14-C	4.343208E-06	2.632459E-05	4.923495E-09
126-Sn	3.687065E-07	2.235285E-06	3.195409E-10
233-U	7.147865E-07	4.333113E-06	6.729994E-10
235-U	5.308471E-09	3.218466E-08	4.216552E-12
152-Eu	1.787821E-06	1.083834E-05	1.612622E-09
154-Eu	1.047067E-04	6.347777E-04	9.210747E-08
155-Eu	2.783818E-05	1.688275E-04	1.307200E-08
237-Np	1.743947E-07	1.057294E-06	1.462592E-10
238-Pu	1.558783E-06	9.457271E-06	1.600678E-13
239-Pu	2.427044E-05	1.472509E-04	1.683651E-12
240-Pu	6.791157E-06	4.120253E-05	7.334047E-13
241-Am	1.539731E-04	9.341677E-04	4.075735E-11
243-Am	5.791005E-05	3.513452E-04	7.425120E-12
242-Cm	2.927004E-07	1.774511E-06	2.511805E-10
241-Pu	5.791005E-05	3.513452E-04	7.425120E-12
243-Cm	4.125221E-08	2.501032E-07	3.356803E-11
244-Cm	8.401929E-07	5.093914E-06	6.825013E-10
3-H	1.025165E-05	2.637668E-05	6.775766E-06
60-Co	1.897588E-06	1.150925E-05	6.773841E-10
90-Sr	2.251101E-02	1.365762E-01	1.437153E-09
99-Tc	5.315124E-04	3.223320E-03	2.669563E-07
125-Sb	6.485595E-05	3.931850E-04	1.619373E-07
Specific Mass (wt%)			
Ag+	0.0000851	0.0004528	0.0000000
Al+3	0.1407107	0.7486167	0.0001564
B+3	0.0002618	0.0013935	0.0000002
Ba+2	0.0001225	0.0006518	0.0000001
Bi+3	0.0001670	0.0008883	0.0000002
Ca+2	0.0023604	0.0125596	0.0000022
Cd+2	0.0006340	0.0033758	0.0000000
Cl-	0.0256441	0.1362996	0.0000587
CO3-2	0.3966942	2.1103727	0.0004730
Cr(TOTAL)	0.0140436	0.0747823	0.0000005
Cs+	0.0001128	0.0006007	0.0000000

F-	0.0209444	0.1115277	0.0000010
Fe+3	0.0111118	0.0591522	0.0000045
Hg+2	0.0001399	0.0007446	0.0000001
K+	0.0677068	0.3604479	0.0000230
La+3	0.0004065	0.0021647	0.0000000
Li+	0.0002899	0.0015438	0.0000000
Mg+2	0.0002586	0.0013766	0.0000001
Mn+4	0.0012678	0.0067511	0.0000001
Mo+6	0.0002105	0.0011200	0.0000002
Na+	1.8061286	9.6176128	0.0000717
NH3	0.0163755	0.0051900	0.0185725
Ni+2	0.0023278	0.0023372	0.0022779
NO2-	0.4747226	2.5269331	0.0002360
NO3-	3.5169979	18.6961248	0.0073514
OH(BOUND)	0.1876967	0.9986652	0.0001926
OH-	0.0301822	0.1605662	0.0000360
Pb+2	0.0007719	0.0040181	0.0000209
Phosphor containing components	0.0646907	0.3441493	0.0000768
Se+6	0.0010836	0.0057700	0.0000001
Si+4	0.0121852	0.0648277	0.0000137
SO4-2	0.0669264	0.3561423	0.0000570
Sr+2	0.0000854	0.0004544	0.0000001
Ti+4	0.0000312	0.0001660	0.0000000
TOC	0.0494322	0.2459911	0.0039049
U(TOTAL)	0.0002514	0.0013377	0.0000003
Zn+2	0.0001314	0.0006996	0.0000000
Zr+4	0.0115379	0.0613963	0.0000102
H2O	92.3882691	63.2687429	99.9664571
H+	0.0000000	0.0000000	0.0000000
CO2	0.0000000	0.0000000	0.0000000
Total Dissolved Solids (Na Excluded) (wt%)	5.0601243	26.7981844	0.0334712
Total Suspended Solids (wt%)	0.7454780	0.3154599	0.0000000

APPENDIX B

TREATED LAW EVAPORATOR STREAM DATA

Stream Description	Feed Treated LAW	Feed Neutralized Effluent	Concentrated LAW	Condensate from LAW Evap
Specific Gravity	1.201279E+00	9.960371E-01	1.354830E+00	1.000211E+00
pH	1.400000E+01	1.199980E+01	1.400000E+01	1.108047E+01
Total Volume (gpm)	1.398842E+01	9.800359E+00	8.316158E+00	1.574299E+01
Total Mass (lb/hr)	8.395616E+03	4.877051E+03	5.629209E+03	7.867172E+03
Na Molarity	4.654928E+00	9.564147E-02	8.001080E+00	1.384081E-04
Activity (Ci/gallon)				
129-I	4.749081E-07	0.000000E+00	7.940393E-07	2.531875E-09
134-Cs	1.575297E-08	4.663790E-10	2.703969E-08	4.038980E-12
137-Cs	3.359384E-04	9.978015E-06	5.768332E-04	3.256697E-12
14-C	3.582432E-05	0.000000E+00	6.019971E-05	3.147259E-08
126-Sn	1.430030E-06	0.000000E+00	2.403044E-06	1.256318E-09
233-U	8.109593E-07	0.000000E+00	1.362748E-06	7.124486E-10
235-U	7.044819E-09	0.000000E+00	1.183822E-08	6.189054E-12
152-Eu	1.012468E-05	0.000000E+00	1.701366E-05	8.894794E-09
154-Eu	1.453164E-04	0.000000E+00	2.441918E-04	1.276642E-07
155-Eu	3.750157E-05	0.000000E+00	6.301818E-05	3.294609E-08
237-Np	6.467932E-07	0.000000E+00	1.086881E-06	5.682244E-10
238-Pu	1.128371E-06	0.000000E+00	1.898007E-06	2.681847E-13
239-Pu	2.250086E-05	0.000000E+00	3.784818E-05	5.347876E-12
240-Pu	6.141525E-06	0.000000E+00	1.033052E-05	1.459683E-12
241-Am	1.046161E-04	0.000000E+00	1.759723E-04	6.571346E-11
243-Am	4.604254E-05	0.000000E+00	7.744709E-05	1.094313E-11
242-Cm	3.178432E-07	0.000000E+00	5.341082E-07	2.792334E-10
241-Pu	4.604254E-05	0.000000E+00	7.744709E-05	1.094313E-11
243-Cm	4.969903E-08	0.000000E+00	8.351496E-08	4.366187E-11
244-Cm	9.701220E-07	0.000000E+00	1.630207E-06	8.522771E-10
3-H	4.475971E-05	0.000000E+00	3.012124E-05	2.385981E-05
60-Co	5.350007E-06	0.000000E+00	8.990228E-06	4.700118E-09
90-Sr	1.768254E-02	0.000000E+00	2.974328E-02	6.760816E-08
99-Tc	1.119640E-04	0.000000E+00	1.881459E-04	9.836324E-08
125-Sb	2.554858E-04	0.000000E+00	4.293221E-04	2.244509E-07
Specific Mass (wt%)				
Ag+	0.0001789	0.0000000	0.0002666	0.0000002
Al+3	0.8781368	0.0000000	1.3083917	0.0009266
B+3	0.0011040	0.0000000	0.0016449	0.0000012
Ba+2	0.0003972	0.0000000	0.0005919	0.0000004
Bi+3	0.0009166	0.0000000	0.0013656	0.0000010
Ca+2	0.0036401	0.0000000	0.0054235	0.0000039
Cd+2	0.0001758	0.0000000	0.0002620	0.0000002
Cl-	0.1927241	0.3081970	0.5533995	0.0007536
CO3-2	1.8709695	0.0000000	2.7876764	0.0019741
Cr(TOTAL)	0.0436851	0.0000000	0.0651518	0.0000013

Cs+	0.0000002	0.0000000	0.0000003	0.0000000
F-	0.1369480	0.0311205	0.2312023	0.0000068
Fe+3	0.0051922	0.0000000	0.0077362	0.0000055
Hg+2	0.0002119	0.0017125	0.0002775	0.0000002
K+	0.4371071	0.0000000	0.6517338	0.0001319
La+3	0.0000717	0.0000000	0.0001068	0.0000001
Li+	0.0001031	0.0000000	0.0001537	0.0000001
Mg+2	0.0007039	0.0000000	0.0010487	0.0000007
Mn+4	0.0003630	0.0000000	0.0005408	0.0000004
Mo+6	0.0014914	0.0000000	0.0022221	0.0000016
Na+	8.9124915	0.2205096	13.4830308	0.0003183
NH3	0.0556091	0.0000000	0.0046946	0.0559853
Ni+2	0.0010718	0.0000000	0.0000905	0.0010791
NO2-	3.6214624	0.0000000	5.3989608	0.0015931
NO3-	8.2610982	0.1691503	12.4458561	0.0154626
OH(BOUND)	1.2709676	0.0000000	1.8936954	0.0013410
OH-	1.9297357	0.0170413	2.8899856	0.0020466
Pb+2	0.0022422	0.0000000	0.0032374	0.0000764
Phosphor containing components	0.2305136	0.0000000	0.3434569	0.0002432
Se+6	0.0007265	0.0000000	0.0010825	0.0000008
Si+4	0.0190601	0.0000000	0.0283989	0.0000201
SO4-2	0.4242482	0.0000000	0.6322928	0.0003199
Sr+2	0.0002059	0.0000000	0.0003067	0.0000002
Ti+4	0.0000875	0.0000000	0.0001303	0.0000001
TOC	0.1782369	0.0000016	0.2481087	0.0126807
U(TOTAL)	0.0014123	0.0000000	0.0021042	0.0000015
Zn+2	0.0001606	0.0000000	0.0002393	0.0000002
Zr+4	0.0092074	0.0000000	0.0137187	0.0000097
H2O	71.5070307	98.7871894	55.3633120	99.9050111
H+	0.0000000	0.0000000	0.0000000	0.0000000
CO2	0.0000000	0.0000000	0.0000000	0.0000000
Total Dissolved Solids (Na Excluded) (wt%)	19.5804777	0.5272233	29.5260185	0.0946707
Total Suspended Solids (wt%)	0.0000000	0.4650777	1.6276387	0.0000000

APPENDIX C

Predicted Maximum Radionuclide

Stream Number	Waste Feed Evaporators			Treated LAW Evaporator		
Stream Description	**FEP Feed**	**FEP Concentrate**	**FEP Overhead**	**TLP Feed**	**TLP Concentrate**	**TLP overhead**
Specific Gravity	1.108297E+00	1.291591E+00	1.000111E+00	1.105304E+00	1.278000E+00	1.000163E+00
pH	1.312459E+01	1.389913E+01	1.017151E+01	1.321351E+01	1.386570E+01	1.029492E+01
Total Volume (gpm)	1.921589E+01	3.462492E+00	2.248903E+00	1.074593E+01	2.391253E+00	1.179073E+00
Total Mass (lb/hr)	1.066579E+04	2.239702E+03	8.426084E+03	5.948428E+03	1.530498E+03	4.417929E+03
Na Molarity	1.678973E+00	1.000000E+01	6.235205E-05	2.217504E+00	9.964802E+00	8.915611E-05
Activity (Ci/gallon)						
129-I	1.118972E-06	5.133318E-06	1.657679E-06	6.388461E-07	2.124451E-06	1.513816E-06
134-Cs	1.129467E-04	6.250516E-04	2.728177E-06	2.084563E-08	9.341234E-08	5.370692E-10
137-Cs	4.359059E+00	2.419159E+01	2.232506E-06	4.525083E-04	2.033504E-03	4.407797E-10
14-C	1.530790E-05	8.491637E-05	5.895986E-08	8.056168E-06	3.616737E-05	7.268873E-08
126-Sn	1.923017E-04	1.067222E-03	1.486077E-10	2.043400E-08	9.173655E-08	1.841322E-10
233-U	1.150416E-06	6.384484E-06	1.248818E-11	1.717230E-09	7.709344E-09	1.547408E-11
235-U	6.946466E-07	3.853045E-06	3.162332E-09	4.348219E-07	1.952093E-06	3.918211E-09
152-Eu	6.188336E-04	3.434357E-03	6.581440E-10	9.049626E-08	4.062746E-07	8.154683E-10
154-Eu	6.562753E-02	3.642143E-01	8.345943E-07	1.147543E-04	5.151790E-04	1.034060E-06
155-Eu	3.737761E-02	2.074354E-01	2.034016E-07	2.796783E-05	1.255590E-04	2.520201E-07
237-Np	9.537993E-05	5.293324E-04	2.536272E-10	3.487470E-08	1.565667E-07	3.142584E-1
238-Pu	4.520421E-04	2.508710E-03	2.573295E-11	1.309172E-06	5.883206E-06	3.191544E-11
239-Pu	3.985830E-03	2.212027E-02	5.228669E-11	2.660106E-06	1.195409E-05	6.484898E-11
240-Pu	2.153818E-04	1.195310E-03	4.564062E-11	2.321981E-06	1.043461E-05	5.660605E-11
241-Am	4.833846E-02	2.682652E-01	3.172753E-09	6.111128E-05	2.746230E-04	3.937305E-09
241-Pu	2.838034E-02	1.575032E-01	8.472452E-10	4.310391E-05	1.937020E-04	1.050802E-09
242-Cm	4.706917E-15	2.611634E-14	8.863463E-18	1.212658E-15	5.444115E-15	1.092735E-17
243-Am	1.646951E-06	9.139638E-06	7.551321E-10	1.033137E-07	4.638171E-07	9.309668E-10
243-Cm	1.726031E-04	9.578996E-04	7.809701E-10	1.073837E-07	4.820890E-07	9.676419E-10
244-Cm	3.700041E-03	2.053421E-02	1.637305E-08	2.251301E-06	1.010701E-05	2.028663E-08
3-H	2.663313E-04	8.683912E-04	9.386773E-04	1.255884E-04	2.257503E-04	6.867589E-04
60-Co	1.287961E-02	7.147826E-02	6.882351E-08	9.462625E-06	4.248158E-05	8.526838E-08
90-Sr	1.320134E+01	7.326381E+01	2.292527E-06	7.286412E-03	3.274264E-02	2.857525E-06
99-Tc	3.006068E-02	1.668241E-01	6.876193E-06	2.174950E-04	9.764235E-04	1.959863E-06
125-Sb	4.141097E-02	2.298192E-01	6.367954E-09	8.755757E-07	3.930816E-06	7.889875E-09
Specific Mass (wt%)						
Ag+	0.000000	0.000000	0.000000	0.000000	0.000000	0.000000
Al+3	0.635506	3.025530	0.000224	0.266638	1.035288	0.000355
B+3	0.000135	0.000642	0.000000	0.080263	0.311642	0.000107
Ba+2	0.000074	0.000352	0.000000	0.000044	0.000172	0.000000
Bi+3	0.000068	0.000325	0.000000	0.000001	0.000004	0.000000
Ca+2	0.024647	0.117371	0.000000	0.050340	0.195456	0.000068
Cd+2	0.000067	0.000320	0.000000	0.000159	0.000619	0.00000
Cl-	0.003163	0.015034	0.000008	0.005424	0.021042	0.000014

CO3-2	1.242770	5.913663	0.001220	1.128055	4.379954	0.001504
Cr(TOTAL)	0.035967	0.171277	0.000001	0.030544	0.118710	0.000001
Cs+	0.001630	0.007759	0.000001	0.000000	0.000001	0.000000
F-	0.044968	0.214134	0.000002	0.067028	0.260499	0.000004
Fe+3	0.482484	2.297630	0.000007	0.019977	0.077566	0.000027
Hg+2	0.000456	0.002170	0.000000	0.000000	0.000000	0.000000
K+	1.096415	5.219836	0.000385	1.327461	5.157862	0.000500
La+3	0.010410	0.049572	0.000000	0.000119	0.000464	0.000000
Li+	0.000448	0.002130	0.000001	0.018270	0.070937	0.000024
Mg+2	0.000003	0.000016	0.000000	0.009913	0.038490	0.000013
Mn+4	0.047130	0.224438	0.000000	0.000360	0.001397	0.000000
Mo+6	0.000000	0.000000	0.000000	0.000000	0.000000	0.000000
Na+	3.931713	18.722852	0.000143	4.614350	17.933525	0.000205
NH3	0.011529	0.032152	0.006048	0.000354	0.000000	0.000448
Ni+2	0.021794	0.101921	0.000495	0.000086	0.000020	0.000108
NO2-	1.354414	6.447289	0.000698	1.559829	6.059939	0.000861
NO3-	4.344527	20.654158	0.009333	6.329382	24.557934	0.014488
OH(BOUND)	1.748240	8.324258	0.000297	0.274711	1.066633	0.000366
OH-	0.201424	0.958261	0.000252	0.251582	0.976831	0.000335
Pb+2	0.011534	0.054916	0.000003	0.000091	0.000342	0.000004
Phosphor components	0.040853	0.194443	0.000028	0.026038	0.101099	0.000035
Se+6	0.001869	0.008898	0.000001	0.001729	0.006714	0.000002
Si+4	0.074861	0.356440	0.000016	0.083117	0.322721	0.000111
SO4-2	0.494661	2.353991	0.000441	0.869199	3.375827	0.000831
Sr+2	0.001500	0.007143	0.000000	0.000039	0.000151	0.000000
Ti+4	0.000406	0.001934	0.000000	0.000638	0.002479	0.000001
TOC	2.874880	13.677296	0.003535	3.269664	12.695283	0.004358
U(TOTAL)	0.121728	0.579682	0.000001	0.000868	0.003370	0.000001
Zn+2	0.000235	0.001118	0.000000	0.030679	0.119120	0.000041
Zr+4	0.266983	1.271405	0.000001	0.008245	0.032015	0.000011
H2O	80.763931	8.482255	99.976817	79.669593	21.055761	99.975139
H+	0.000000	0.000000	0.000000	0.000000	0.000000	0.000000
CO2	0.000000	0.000000	0.000000	0.000000	0.000000	0.000000
Total Dissolved Solids (Na Excluded) (wt%)	11.304045	53.744832	0.023039	15.716052	61.010697	0.024656
Total Suspended Solids (wt%)	4.000310	19.050061	0.000000	0.000004	0.000016	0.000000

APPENDIX D

EVAPORATOR PROCESS DATA

PROCESS DATA SHEET: Mechanical Pump

PLANT ITEM No.
24590-PTF-FEP-PMP-00007A

Project:	RPP-WTP		System:		FEP			
Project No:	24590		Description:		Waste Feed Evaporator Feed Pump			
Site:	Hanford		Supporting Calcs No.		24590-PTF-MEC-FEP-00001, Rev. A			
Building No.:	10		Associated Drawings:		24590-PTF-M5-V17T-00004001, Rev. B			
PROCESS DATA	Units	Mode 1 (Note 1)	Mode 2 (Note2)	Mode 3 (Note 3)	Mode 4	ETC.		
Capacity Normal (Note 4)	gpm	50	39	36				
Capacity Rated	gpm	60	N/A	N/A				
Minimum Pumping Temperature	°F	59	59	59				
Normal Pumping Temperature	°F	77	77	77				
Maximum Pumping Temperature	°F	122	122	122				
Density at Normal Pumping Temperature (Note 7)	lb/ft^3	75.9	67.6	68.9				
Sp Gravity at Normal Pumping Temperature (Note 7)		1.23	1.08	1.10				
Viscosity at Normal Pumping Temperature	cP	11.8	11.8	11.8				
Vapor Press at Normal Pumping Temp	psia	0.43	0.44	0.44				
Origin Pressure	psia	14.61	14.61	14.61				
Delivery Pressure	psia	(Note 5)	(Note 5)	(Note 5)				
FLUID COMPOSITION								
Content Code (e.g., Type/Name of Liquid)								
Solids Content	% wt/wt	4	7	2				
Solids Size Range	microns	(Note 6)	(Note 6)	(Note 6)				
Solids Characteristics		(Note 6)	(Note 6)	(Note 6)				

Notes:
1. Mode 1 represents Envelope A waste feed and recycles required to meet production rate of 60 Mt/d LAW glass.
2. Mode 1 represents Envelope B waste feed and recycles required to meet production rate of 60 Mt/d LAW glass.
3. Mode 1 represents Envelope C waste feed and recycles required to meet production rate of 30 Mt/d LAW glass.
4. Minimum flowrate is 20 gpm for Envelope A, 25 gpm for Envelope B, and 23 gpm for Envelope C.
5. Delivery pressure to be determined by waste feed evaporator vendor.
6. Solids size range and characteristics to be determined by R&T.
7. Density and Specific Gravity based on pretreated AW-101 of same molarity. Does not include weight percent solids.

PROCESS DATA SHEET: Mechanical Pump

PLANT ITEM No.
24590-PTF-FEP-PMP-00007B

Project:	RPP-WTP		System:		FEP			
Project No:	24590		Description:		Waste Feed Evaporator Feed Pump			
Site:	Hanford		Supporting Calcs No.		24590-PTF-MEC-FEP-00001, Rev. A			
Building No.:	10		Associated Drawings:		24590-PTF-M5-V17T-00004001, Rev. B			
PROCESS DATA	Units	Mode 1 (Note 1)	Mode 2 (Note2)	Mode 3 (Note 3)	Mode 4	ETC.		
Capacity Normal (Note 4)	gpm	50	39	36				
Capacity Rated	gpm	60	N/A	N/A				
Minimum Pumping Temperature	°F	59	59	59				
Normal Pumping Temperature	°F	77	77	77				
Maximum Pumping Temperature	°F	122	122	122				
Density at Normal Pumping Temperature (Note 7)	lb/ft^3	75.9	67.6	68.9				
Sp Gravity at Normal Pumping Temperature (Note 7)	———	1.23	1.08	1.10				
Viscosity at Normal Pumping Temperature	cP	11.8	11.8	11.8				
Vapor Press at Normal Pumping Temp	psia	0.43	0.44	0.44				
Origin Pressure	psia	14.61	14.61	14.61				
Delivery Pressure	psia	(Note 5)	(Note 5)	(Note 5)				
FLUID COMPOSITION								
Content Code (e.g., Type/Name of Liquid)								
Solids Content	% wt/wt	4	7	2				
Solids Size Range	microns	(Note 6)	(Note 6)	(Note 6)				
Solids Characteristics	———	(Note 6)	(Note 6)	(Note 6)				

Notes:
1. Mode 1 represents Envelope A waste feed and recycles required to meet production rate of 60 Mt/d LAW glass.
2. Mode 1 represents Envelope B waste feed and recycles required to meet production rate of 60 Mt/d LAW glass.
3. Mode 1 represents Envelope C waste feed and recycles required to meet production rate of 30 Mt/d LAW glass.
4. Minimum flowrate is 20 gpm for Envelope A, 25 gpm for Envelope B, and 23 gpm for Envelope C.
5. Delivery pressure to be determined by waste feed evaporator vendor.
6. Solids size range and characteristics to be determined by R&T.
7. Density and Specific Gravity pretreated AW-101 of same molarity. Does not include weight percent solids.

PROCESS DATA SHEET: Mechanical Pump

PLANT ITEM No.
24590-PTF-FEP-PMP-00008A

Project:	RPP-WTP		System:		FEP			
Project No:	24590		Description:		Waste Feed Evaporator Concentrate Pump			
Site:	DOE Hanford		Supporting Calcs No.		24590-PTF-MEC-FEP-00001, Rev. A			
Building No.:	10		Associated Drawings:		24590-PTF-M5-V17T-00004002, Rev. B			
PROCESS DATA	Units	Mode 1 (Note 1)	Mode 2 (Note2)	Mode 3(Note 3)	Mode 4	ETC.		
Capacity Normal (Note 4)	gpm	28	14	14				
Capacity Rated	gpm	34	N/A	N/A				
Minimum Pumping Temperature	°F	59	59	59				
Normal Pumping Temperature	°F	122	122	122				
Maximum Pumping Temperature	°F	122	122	122				
Density at Normal Pumping Temperature (Note 7)	lb/ft^3	75.9	75.9	76.6				
Sp Gravity at Normal Pumping Temperature (Note 7)	———	1.23	1.23	1.25				
Viscosity at Normal Pumping Temperature	cP	5.5	5.5	5.5				
Vapor Press at Normal Pumping Temp	psia	1.3	1.3	1.2				
Origin Pressure	psia	Note 5	Note 5	Note 5				
Delivery Pressure	psia	14.6	14.6	14.6				
FLUID COMPOSITION								
Content Code (e.g., Type/Name of Liquid)								
Solids Content	% wt/wt	5	15	3				
Solids Size Range	microns	Note 6	Note 6	Note 6				
Solids Characteristics	———	Note 6	Note 6	Note 6				

Notes:
1. Mode 1 represents Envelope A concentrate required to meet production rate of 60 Mt/d LAW glass.
2. Mode 2 represents Envelope B concentrate required to meet production rate of 60 Mt/d LAW glass.
3. Mode 3 represents Envelope C concentrate required to meet production rate of 30 Mt/d LAW glass.
4. Minimum flowrate is 12 gpm for Envelope A, 4 gpm for Envelope B, and 3 gpm for Envelope C.
5. Origin pressure to be determined by treated LAW evaporator vendor.
6. Solids size range and characteristics to be determined by R&T.
7. Density and Specific Gravity based on pretreated AW-101 solutions of same molarity. Does not include weight percent solids.

PROCESS DATA SHEET: Mechanical Pump

PLANT ITEM No.
24590-PTF-FEP-PMP-00008B

Project:	RPP-WTP		System:		FEP			
Project No:	24590		Description:		Waste Feed Evaporator Concentrate Pump			
Site:	Hanford		Supporting Calcs No.		24590-PTF-MEC-FEP-00001, Rev. A			
Building No.:	10		Associated Drawings:		24590-PTF-M5-V17T-00004002, Rev. B			
PROCESS DATA	Units	Mode 1 (Note 1)	Mode 2 (Note2)	Mode 3(Note 3)	Mode 4	ETC.		
Capacity Normal (Note 4)	gpm	28	14	14				
Capacity Rated	gpm	34	N/A	N/A				
Minimum Pumping Temperature	°F	59	59	59				
Normal Pumping Temperature	°F	122	122	122				
Maximum Pumping Temperature	°F	122	122	122				
Density at Normal Pumping Temperature (Note 7)	lb/ft^3	75.9	75.9	76.6				
Sp Gravity at Normal Pumping Temperature (Note 7)		1.23	1.23	1.25				
Viscosity at Normal Pumping Temperature	cP	5.5	5.5	5.5				
Vapor Press at Normal Pumping Temp	psia	1.3	1.3	1.2				
Origin Pressure	psia	Note 5	Note 5	Note 5				
Delivery Pressure	psia	14.6	14.6	14.6				
FLUID COMPOSITION								
Content Code (e.g. Type/Name of Liquid)								
Solids Content	% wt/wt	5	15	3				
Solids Size Range	microns	Note 6	Note 6	Note 6				
Solids Characteristics		Note 6	Note 6	Note 6				

Notes:
1. Mode 1 represents Envelope A concentrate required to meet production rate of 60 Mt/d LAW glass.
2. Mode 2 represents Envelope B concentrate required to meet production rate of 60 Mt/d LAW glass.
3. Mode 3 represents Envelope C concentrate required to meet production rate of 30 Mt/d LAW glass.
4. Minimum flowrate is 12 gpm for Envelope A, 4 gpm for Envelope B, and 3 gpm for Envelope C.
5. Origin pressure to be determined by treated LAW evaporator vendor.
6. Solids size range and characteristics to be determined by R&T.
7. Density and Specific Gravity based on pretreated AW-101 solutions of same molarity. Does not include weight percent solids.

PROCESS DATA SHEET: Evaporator

PLANT ITEM No.
24590-PTF-FEP-EVAP-00001A

Project:	RPP-WTP	System:	FEP
Project No:	24590	Description:	Waste Feed Evaporator
Site:	Hanford	Supporting Calcs No.	24590-PTF-MEC-FEP-00001, Rev. B
Building No.:	10	Associated Drawings:	24590-PTF-M5-V17T-00004002, Rev. 0

UTILITIES DATA	Units	Cooling Water		High Pressure Steam	Instrument Air
		Note 1			
Temperature	°F	83			60
Pressure	psig	65			100

		Envelope A					Evaporator Bypass (Envelop A)		
		Feed					Feed (Recycles)		
PROCESS DATA	Units	Minimum Na	Maximum Na	Concentrate	Overheads	Condensate	Minimum Na (Note 14)	Maximum Na (Note 14)	Concentrate (Note 14)
					Notes 5,9				
Liquid Flow (Note 4)	lb_m/hr	11,000	27,000	7,000 (Note 7)	N/A	14,900 (Note 8)	14,200	16,300 (Note 13)	14,200
Vapor Flow	lb_m/hr	N/A	N/A	N/A	14,900	N/A	N/A	N/A	N/A
Noncondensables Flow	lb_m/hr	N/A	N/A	N/A	42.7	N/A	N/A	N/A	N/A
Temperature (Note 6)	°F	77	77	122	111	111	77	77	122
Na Molarity		1.4	4	5	N/A	0	0.2	1	5
Density	lb_m/ft^3	67.8	75.9	74.0	0.0039	61.9	63.4	66.8	75.8
Specific Gravity		1.09	1.22	1.23	N/A	1	1.02	1.07	1.23
Viscosity	Cp	11.8	11.8	5.5	0.01	0.7	11.8	11.8	5.5
Specific Heat	BTU/lb_m°F	0.93	0.88	0.68	0.45	1	0.99	0.94	0.68
Thermal Conductivity	BTU/hr ft °F	0.36	0.39	0.39	0.01	0.37	0.353	0.369	0.39

		Envelope B			Envelope C		
		Feed			Feed		
	Units	Minimum Na	Maximum Na	Concentrate	Minimum Na	Maximum Na	Concentrate
Liquid Flow (Note 4)	lb_m/hr	13,000	21,100	8,490 (Note10)	11,900	19,800	8780 (Note 11)
Vapor Flow	lb_m/hr	N/A	N/A	N/A	N/A	N/A	N/A
Non-Condensables Flow	lb_m/hr	N/A	N/A	N/A	N/A	N/A	N/A
Temperature (Note 6)	°F	77	77	122	77	77	122
Na Molarity		0.78	1.81	5	0.77	2.30	6
Density (Note 12)	lbm /ft3	64.9	67.6	74.0	64.9	68.9	76.6
Specific Gravity (Note 12)		1.04	1.08	1.21	1.04	1.10	1.25
Viscosity	cP	11.8	11.8	5.5	11.8	11.8	5.5
Specific Heat	BTU/lbm°F	0.94	0.91	0.68	0.94	0.91	0.68
Thermal Conductivity	BTU/hr ft °F	0.377	0.385	0.39	0.377	0.385	0.39

Notes:
1. Maximum temperature and pressure of cooling water supply.
2. Temperature and pressure of steam supply.
3. Delete.
4. Evaporator to require 50% turndown capability.
5. Evaporator overheads prior to condensate removal.
6. Vacuum system to enable concentration of feed at reduced temperature
7. Maximum transfer rate. Minimum Transfer rate is 7,300 lbs/hr
8. Maxmum evaporator overhead condensate production capacity. Envelope A average conditions require 11,800 lbs/hr.
9. Maximum overhead vapor and noncondensable flow. Average vapor flow is 11,800 lbs/hr. Noncondensable flow also applies to average conditions.
10. Maximum transfer rate. Minimum transfer rate is 2430 lbs/hr
11. Maximum transfer rate. Minimum transfer rate is 1880 lbs/hr.
12. Density and Specific Gravity based on sodium hydroxide solutions of same molarity. Does not include weight percent solids.
13. Maximum transfer rate. Minimum transfer rate is 7,300 lbs/hr.
14. Based on evaporator semibatch operation.
15. See section 3.4.3.3 for high pressure steam supply conditions.

PROCESS DATA SHEET: Evaporator

PLANT ITEM No.
24590-PTF-FEP-EVAP-00001B

Project:	RPP-WTP	System:	FEP
Project No:	24590	Description:	Waste Feed Evaporator
Site:	Hanford	Supporting Calcs No.	24590-PTF-MEC-FEP-00001, Rev. B
Building No.:	10	Associated Drawings:	24590-PTF-M5-V17T-00004002, Rev. 0

UTILITIES DATA	Units	Cooling Water		High Pressure Steam	Instrument Air
		Note 1			
Temperature	°F	83			60
Pressure	psig	65			100

		Envelope A					Evaporator Bypass (Envelop A)		
		Feed					Feed (Recycles)		
PROCESS DATA	Units	Minimum Na	Maximum Na	Concentrate	Overheads	Condensate	Minimum Na (Note 14)	Maximum Na (Note 14)	Concentrate (Note 14)
					Notes 5,9				
Liquid Flow (Note 4)	lb_m/hr	11,000	27,000	7,000 (Note 7)	N/A	14,900 (Note 8)	14,200	16,300 (Note 13)	14,200
Vapor Flow	lb_m/hr	N/A	N/A	N/A	14,900	N/A	N/A	N/A	N/A
Noncondensables Flow	lb_m/hr	N/A	N/A	N/A	42.7	N/A	N/A	N/A	N/A
Temperature (Note 6)	°F	77	77	122	111	111	77	77	122
Na Molarity		1.4	4	5	N/A	0	0.2	1	5
Density	lb_m/ft^3	67.8	75.9	74.0	0.0039	61.9	63.4	66.6	75.9
Specific Gravity		1.09	1.22	1.23	N/A	1	1.02	1.07	1.23
Viscosity	Cp	11.8	11.8	5.5	0.01	0.7	11.8	11.8	5.5
Specific Heat	BTU/lb_m°F	0.93	0.88	0.68	0.45	1	0.99	0.94	0.68
Thermal Conductivity	BTU/hr ft °F	0.36	0.39	0.39	0.01	0.37	0.353	0.369	0.39

		Envelope B			Envelope C		
		Feed			Feed		
	Units	Minimum Na	Maximum Na	Concentrate	Minimum Na	Maximum Na	Concentrate
Liquid Flow (Note 4)	lb_m/hr	13,000	21,100	8,490 (Note10)	11,900	19,800	8780 (Note 11)
Vapor Flow	lb_m/hr	N/A	N/A	N/A	N/A	N/A	N/A
Non-Condensables Flow	lb_m/hr	N/A	N/A	N/A	N/A	N/A	N/A
Temperature (Note 6)	°F	77	77	122	77	77	122
Na Molarity		0.76	1.81	5	0.77	2.30	6
Density (Note 12)	lbm /ft3	64.9	67.6	74.0	64.9	68.9	76.6
Specific Gravity (Note 12)		1.04	1.08	1.21	1.04	1.10	1.25
Viscosity	cP	11.8	11.8	5.5	11.8	11.8	5.5
Specific Heat	BTU/lbm°F	0.94	0.91	0.68	0.94	0.91	0.68
Thermal Conductivity	BTU/hr ft °F	0.377	0.385	0.39	0.377	0.385	0.39

Notes:
1. Maximum temperature and pressure of cooling water supply.
2. Temperature and pressure of steam supply.
3. Delete.
4. Evaporator to require 50% turndown capability.
5. Evaporator overheads prior to condensate removal.
6. Vacuum system to enable concentration of feed at reduced temperature.
7. Maximum transfer rate. Minimum Transfer rate is 7,300 lbs/hr.
8. Maximum evaporator overhead condensate production capacity. Envelope A average conditions require 11,800 lbs/hr.
9. Maximum overhead vapor and noncondensable flow. Average vapor flow is 11,800 lbs/hr. Noncondensable flow also applies to average conditions.
10. Maximum transfer rate. Minimum transfer rate is 2430 lbs/hr.
11. Maximum transfer rate. Minimum transfer rate is 1860 lbs/hr.
12. Density and Specific Gravity based on sodium hydroxide solutions of same molarity. Does not include weight percent solids.
13. Maximum transfer rate. Minimum transfer rate is 7,300 lbs/hr.
14. Based on evaporator semibatch operation.

15. See section 3.4.3.3 for high pressure steam supply conditions.

PROCESS DATA SHEET: VESSEL & PUMPS	**Plant Item No.** 24590-PTF-MV-TLP-VSL-00009A 24590-PTF-MV-TLP-VSL-00009B 24590-PTF-MV-TLP-PMP-00005A 24590-PTF-MV-TLP-PMP-00005B

Project: RPP-WTP				
Project No: 24590	Description: Treated LAW SBS Condensate Receipt Vessels and Pumps			
Site: Hanford				
Building No.: 10	Associated Drawing: 24590-PTF-M5-V17T-00005			
SUMMARY DATA	Units	Minimum	Nominal	Maximum
Batch Volume	Gal	N/A	80,000	N/A
Transfer Rate	gpm	10	13	38
Receipt Rate	gpm	N/A	175	N/A
Fluid Temperature	°F	68	113	167
Specific Gravity	N/A	1.02	1.02	1.02
Viscosity	cP	1	1	1
Internal Pressure	psig	-0.22	-0.14	0
Solids Content	wt %	0.30	0.34	0.41

PROCESS DATA SHEET: SYSTEM TLP				
Project: RPP-WTP				
Project No: 24590		Description: Treated LAW Evaporation - System TLP		
Site: Hanford				
Building No.: 10		Associated Drawing: 24590-PTF-M5-V17T-00005		
SUMMARY DATA	Units	Minimum	Nominal	Maximum
Treated LAW (TXP14)				
Transfer Rate	gpm	11.4	14.3	17.9
Fluid Temperature	°F	59	77	113
Specific Gravity	N/A	1.15	1.20	1.22
Viscosity	cP	2.0	3.3	4.0
LAW SBS Condensate (RLD21)				
Batch Volume	Gal	N/A	80,000	N/A
Transfer Rate	gpm	10	13	38
Receipt Rate	gpm	N/A	175	N/A
Fluid Temperature	°F	68	113	167
Specific Gravity	N/A	1.02	1.02	1.02
Viscosity	cP	1	1	1
Thermal Conductivity	BTU/(hr*ft-°F)	N/A	0.372	N/A
Treated LAW Concentrate (TLP02)				
Transfer Rate	gpm	5.6	9.2	13.7
Fluid Temperature	°F	77	122	150
Specific Gravity	N/A	1.33	1.40	1.57
Viscosity	cP	12.8	12.8	30.0
Vapor Pressure	torr	55	67	77
Thermal Conductivity	BTU/(hr*ft-°F)	N/A	0.397	0.399

APPENDIX E

Quality Level and Seismic Category for Evaporator Equipment

SSC	Description	QL	SC
FEP Separator Vessels	FEP-SEP-00001A/B	**QL-1**	**SC-I**
• Demister Pads	Pad Materials	**CM**	**SC-II**
• Upper Demister Pad Supports	Structural supports	**CM**	**SC-II**
• Lower Demister Pad Supports	Structural supports	**QL-2**	**SC-II**
• Internal Piping/Misc.	Bubble trays, spray rings, dip legs, etc.	**QL-2**	**SC-II**
TLP Separator Vessel	TLP-SEP-00001	**QL-1***	**SC-I***
• Demister Pads	Pad Materials	**CM**	**SC-II**
• Upper Demister Pad Supports	Structural supports	**CM**	**SC-II**
• Lower Demister Pad Supports	Structural supports	**QL-2**	**SC-II**
• Internal Piping/Misc.	Bubble trays, spray rings, dip legs, etc.	**QL-2**	**SC-II**
Reboilers	FEP-RBLR-00001A/B	**QL-1**	**SC-I**
	TLP-RBLR-00001	**QL-1***	**SC-I***
Recirculation Pumps, Motors, Speed Adjustable Drives, and Seal Barrier Systems	FEP-PMP-00009A/B, FEP-MTR-00009A/B	**QL-1**	**SC-I**
	TLP-PMP-00001, TLP-MTR-00001	**QL-1***	**SC-I***
	FEP-ASD-00009A/B, TLP-ASD-00001, and Pump Seal Barrier Systems	**CM**	**SC-III**
Feed Pumps, Motors, and Speed Adjustable Drives	TLP-PMP-00005A/B, TLP-MTR-00005A/B, TLP-ASD-00005A/B	**CM**	**SC-III**
Concentrate Pumps, Motors, and Speed Adjustable Drives	TLP-PMP-00011A/B, TLP-MTR-00011A/B, TLP-ASD-00011A/B	**CM**	**SC-III**
Black Cell Separator Vessel Offgas Pipework	Piping from the top section of the FEP Evaporator separator vessels to the 56' Elev. floor (ceiling of black cell).	**QL-1**	**SC-I***
	Piping from the top section of the TLP Evaporator separator vessel to the 56' Elev. floor (ceiling of black cell).	**QL-1***	**SC-I***
Out-Cell Separator Vessel Offgas Pipework	Piping from 56' Elev. floor to the FEP Evaporator primary condenser in C3 room.	**QL-1**	**SC-I***
	Piping from 56' Elev. floor to the TLP Evaporator primary condenser in C3 room.	**QL-1***	**SC-I***
	FEP-COND-00001A/B FEP-COND-00002A/B FEP-COND-00003A/B FEP-EJCTR-00040, -00041, -00042,and -00043	**QL-1**	**SC-I***
	TLP-COND-00001 TLP-COND-00002 TLP-COND-00003 TLP-EJCTR-000064 and -00067	**QL-1***	**SC-I***
Condensate Collection Vessels	FEP-VSL-00005	**CM**	**SC-III**
	TLP-VSL-00002	**CM**	**SC-III**
Condensate Pumps, Motors, and Speed Adjustable Drives	FEP-PMP-00006A/B, FEP-MTR-00006A/B, FEP-ASD-00006A/B	**CM**	**SC-III**
	TLP-PMP-00002A/B, TLP-MTR-00002A/B, FEP-ASD-00002A/B	**CM**	**SC-III**
Antifoam Vessel	AFR-TK-00001	**CM**	**SC-IV**
Antifoam Pumps	AFR-PMP-00006, -00007, and –00008	**CM**	**SC-IV**

Steam Conditioning Skids	FEP Steam Conditioning Skids	**CM**	**SC-III**
	TLP Steam Conditioning Skid	**CM**	**SC-III**
Reboiler Steam Condensate Transfer Stations	FEP-VSL-00021, FEP-PMP-00010A/B FEP-VSL-00022, FEP-PMP-00011A/B	**CM**	**SC-III**
	TLP-VSL-00047, TLP-PMP-00012A/B	**CM**	**SC-III**

*These quality level and seismic category designations are higher than those required for safety as deemed necessary for commercial reasons. They are consistent with the Buyer's Authorization Basis document because they meet and exceed the minimum safety requirements. These designations are not necessarily reflected in their associated Buyer's P&IDs.

For CM material to the ASME or ASTM standards, any year of the standard is acceptable.

Note: QL-1 and QL-2 designations are used by the Seller to comply with other referenced specification requirements (i.e weld, design). These designations meet NQA-1 (QL) requirements and are not necessarily reflected in their associated Buyer's P&IDs.

APPENDIX F

SEPARATOR VESSEL SKID SUPPORT LAYOUT

SEPARATOR VESSEL, EMBEDDED PLATES & SKID

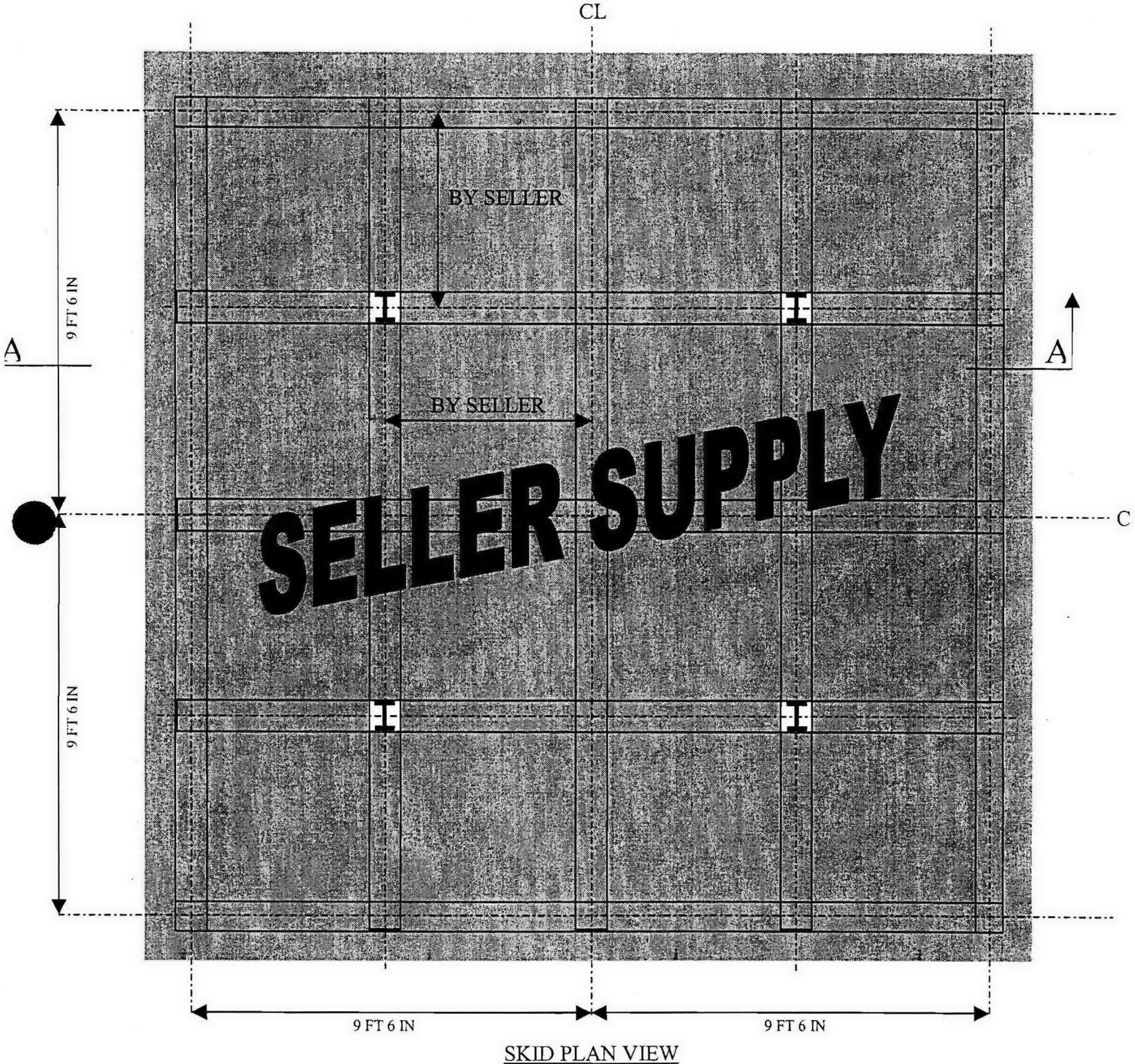

SKID PLAN VIEW

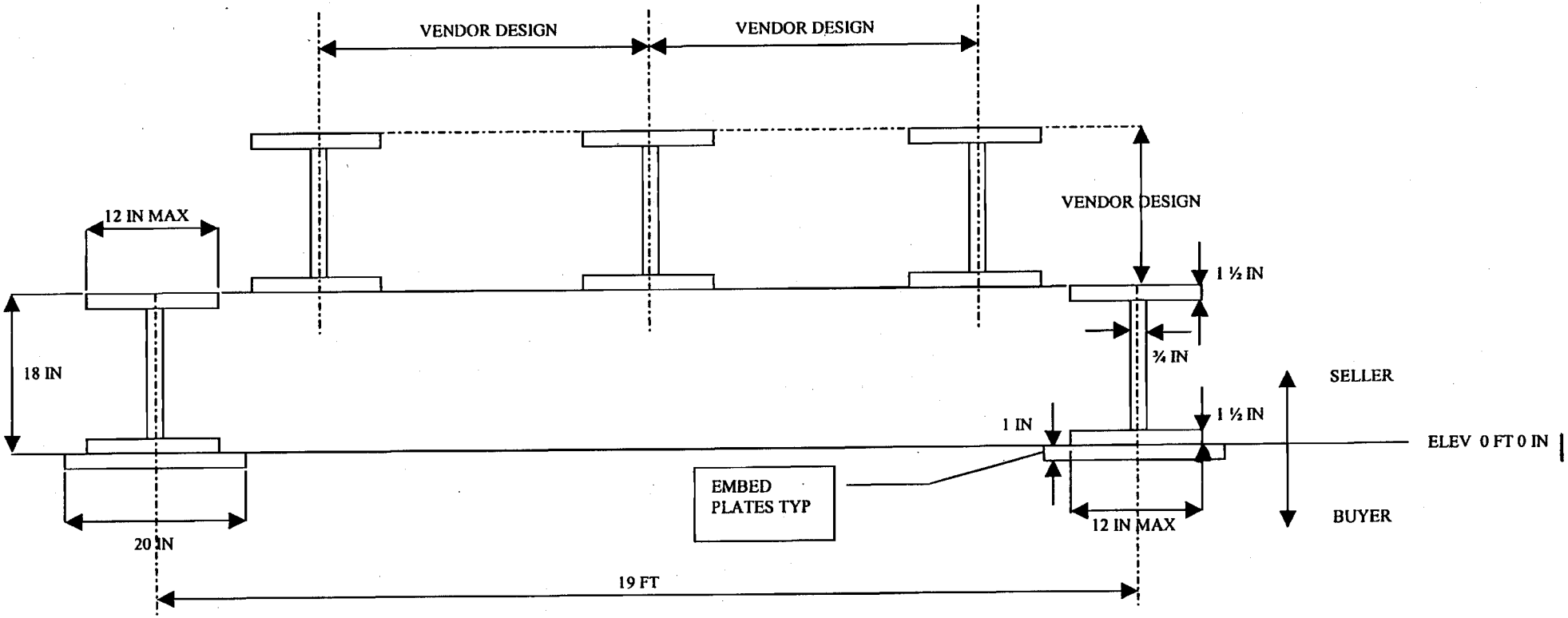
VENDOR DESIGN
VENDOR DESIGN
12 IN MAX
VENDOR DESIGN
1 ½ IN
¾ IN
18 IN
SELLER
1 IN
1 ½ IN
ELEV 0 FT 0 IN
EMBED
PLATES TYP
12 IN MAX
BUYER
20 IN
19 FT

SECTION A

APPENDIX G

HOT CELL REMOTE IMPACT WRENCH

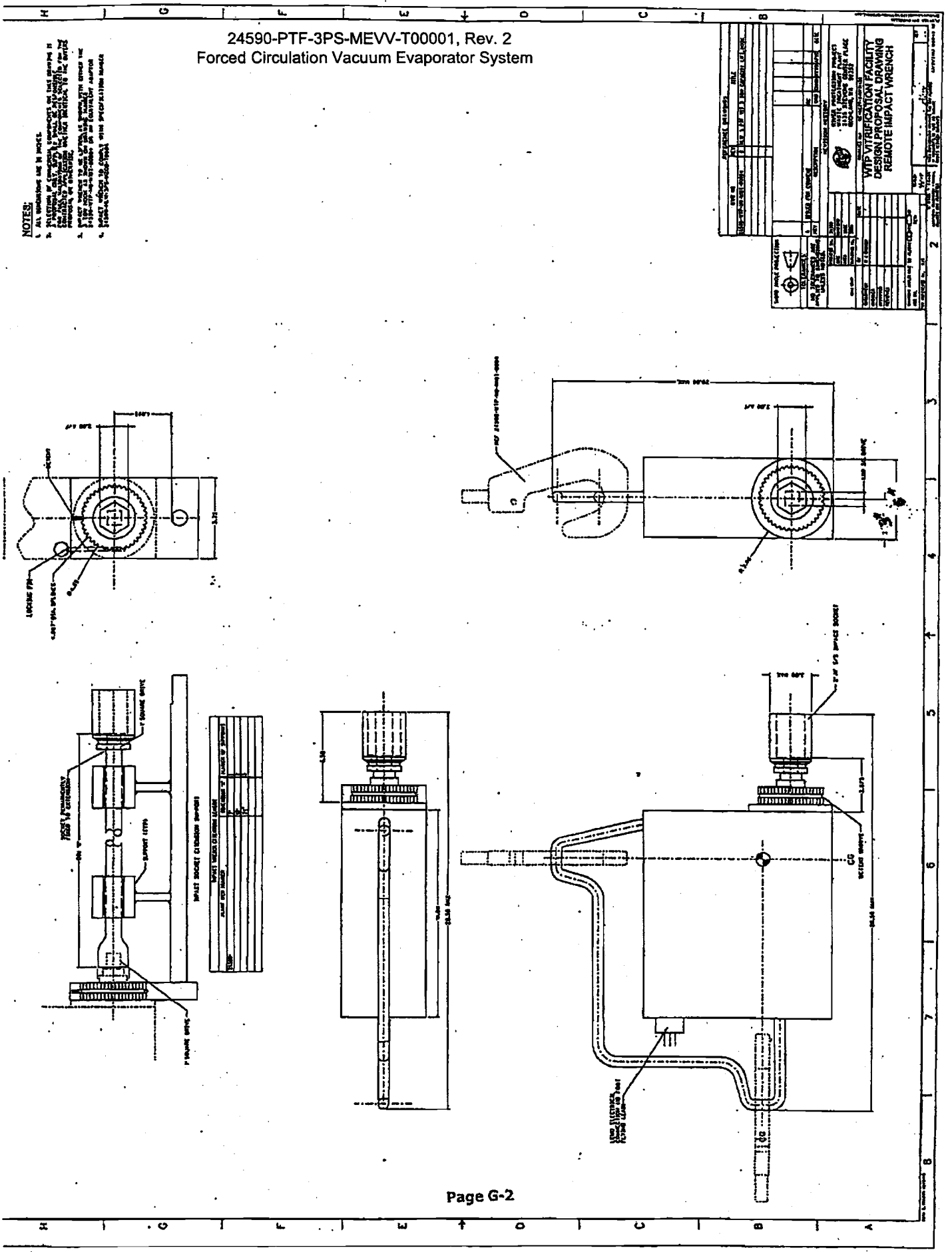
NOTES:
WTP VITRIFICATION FACILITY
DESIGN PROPOSAL DRAWING
REMOTE IMPACT WRENCH

APPENDIX H

Deleted

APPENDIX I

FEP EVAPORATOR EQUIPMENT SKIDS LOCATION AND LAYOUT SKETCHES

SKETCH I-1
FEP EVAPORATOR EQUIPMENT LOCATIONS
PLANT VIEW ON THE 0-FT ELEVATION FLOOR

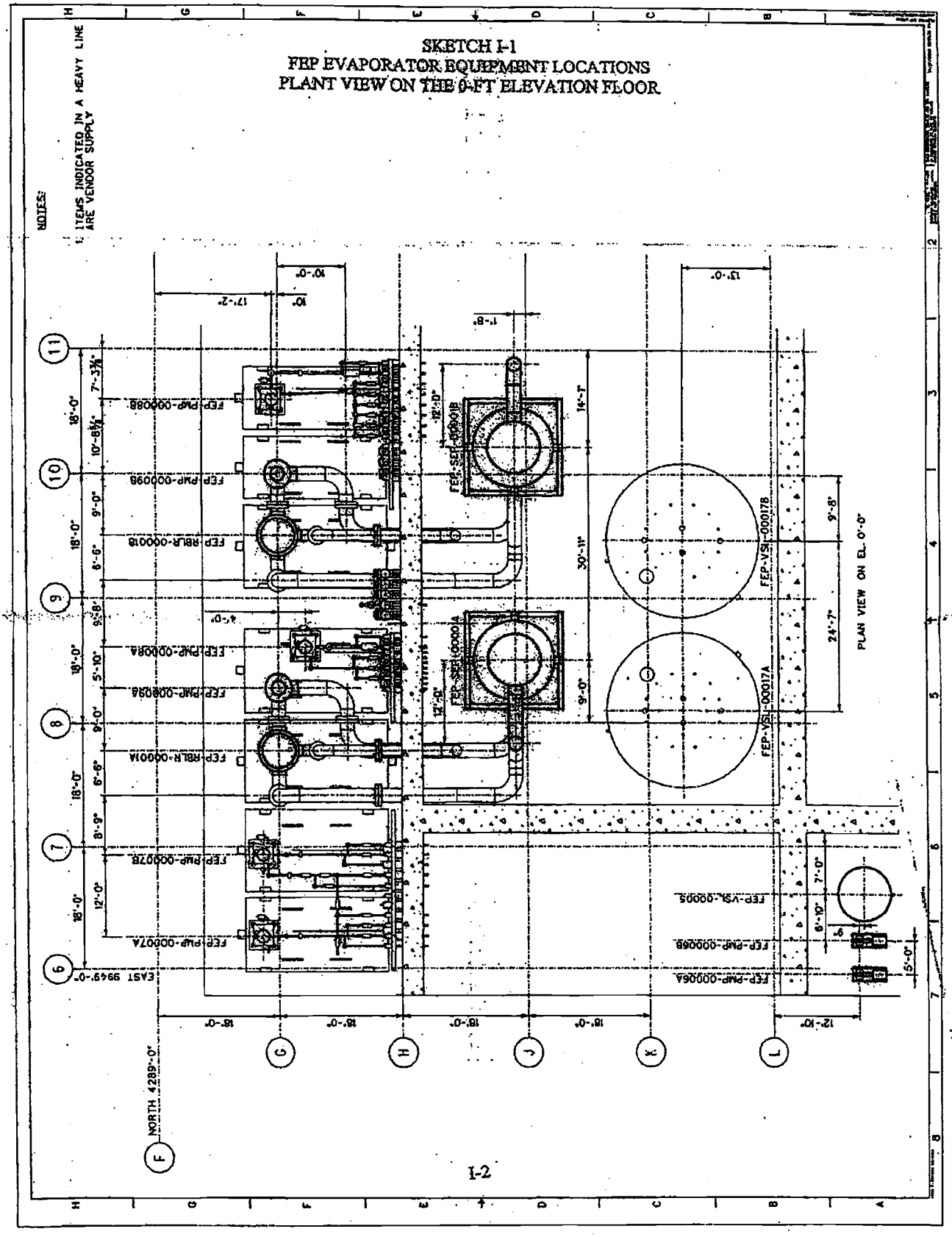

I-2

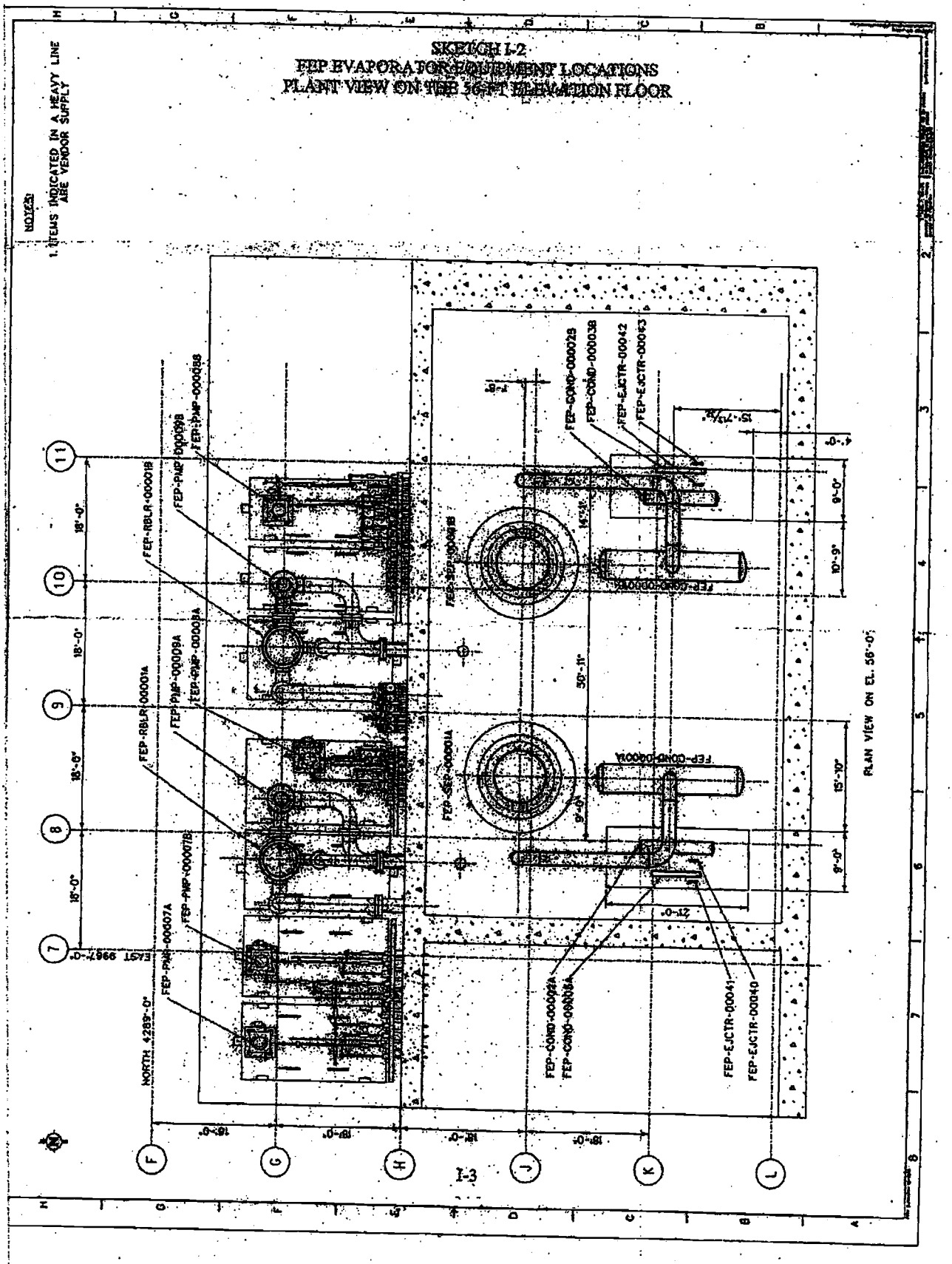
SKETCH I-2
FEP EVAPORATOR EQUIPMENT LOCATIONS
PLANT VIEW ON THE 56 FT ELEVATION FLOOR
NOTES:
1. ITEMS INDICATED IN A HEAVY LINE ARE VENDOR SUPPLY
PLAN VIEW ON EL. 56'-0"
NORTH 4289'-0"
EAST 9966
I-3

SKETCH I-3
ELEVATION VIEW LOOKING WEST
OF FEP EVAPORATOR EQUIPMENT LOCATIONS

NOTES:
1. ITEMS INDICATED IN A HEAVY LINE ARE VENDOR SUPPLY

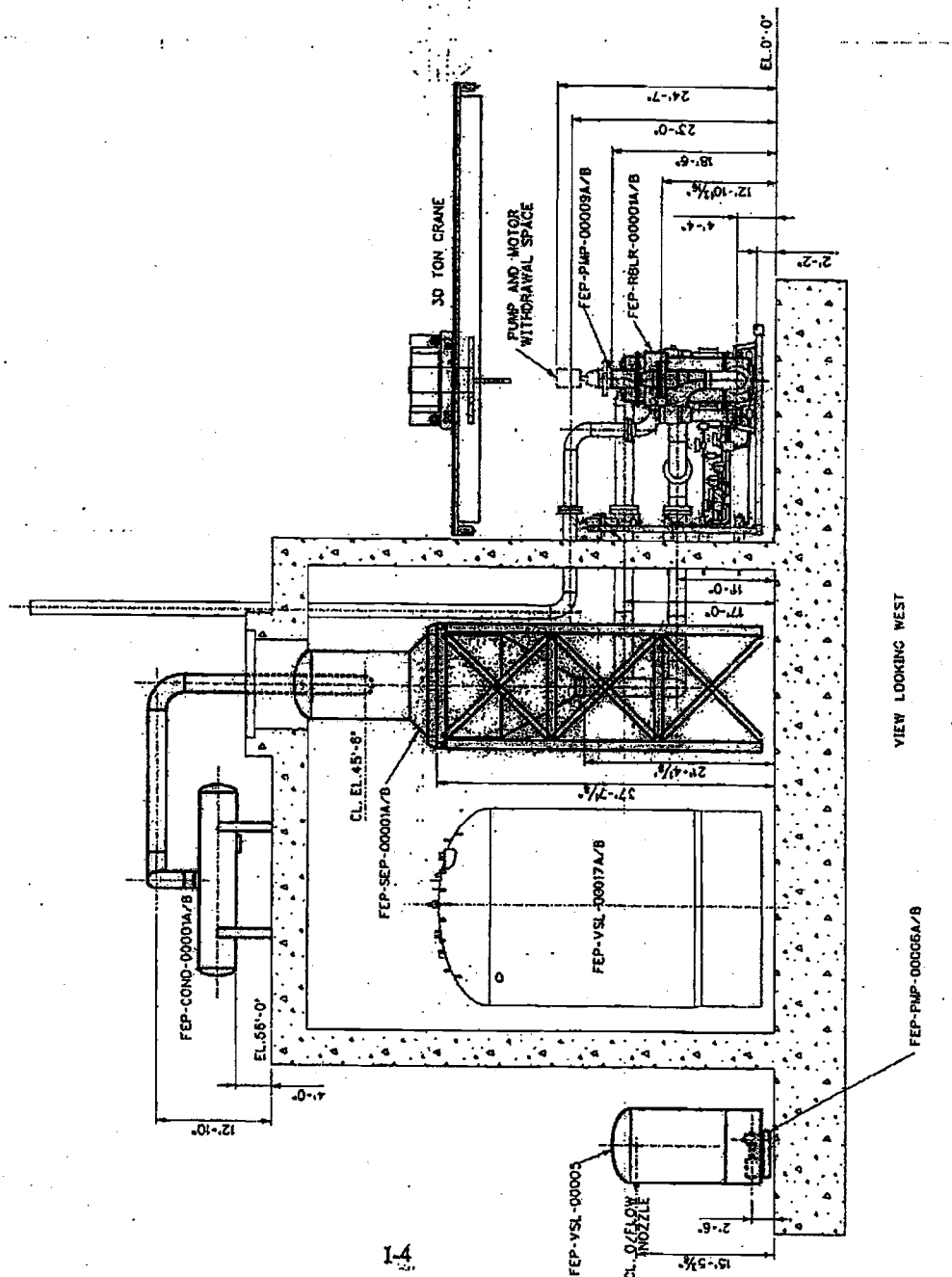

SKETCH I-4
ELEVATION VIEW LOOKING NORTH
OF FEP EVAPORATOR EQUIPMENT LOCATIONS

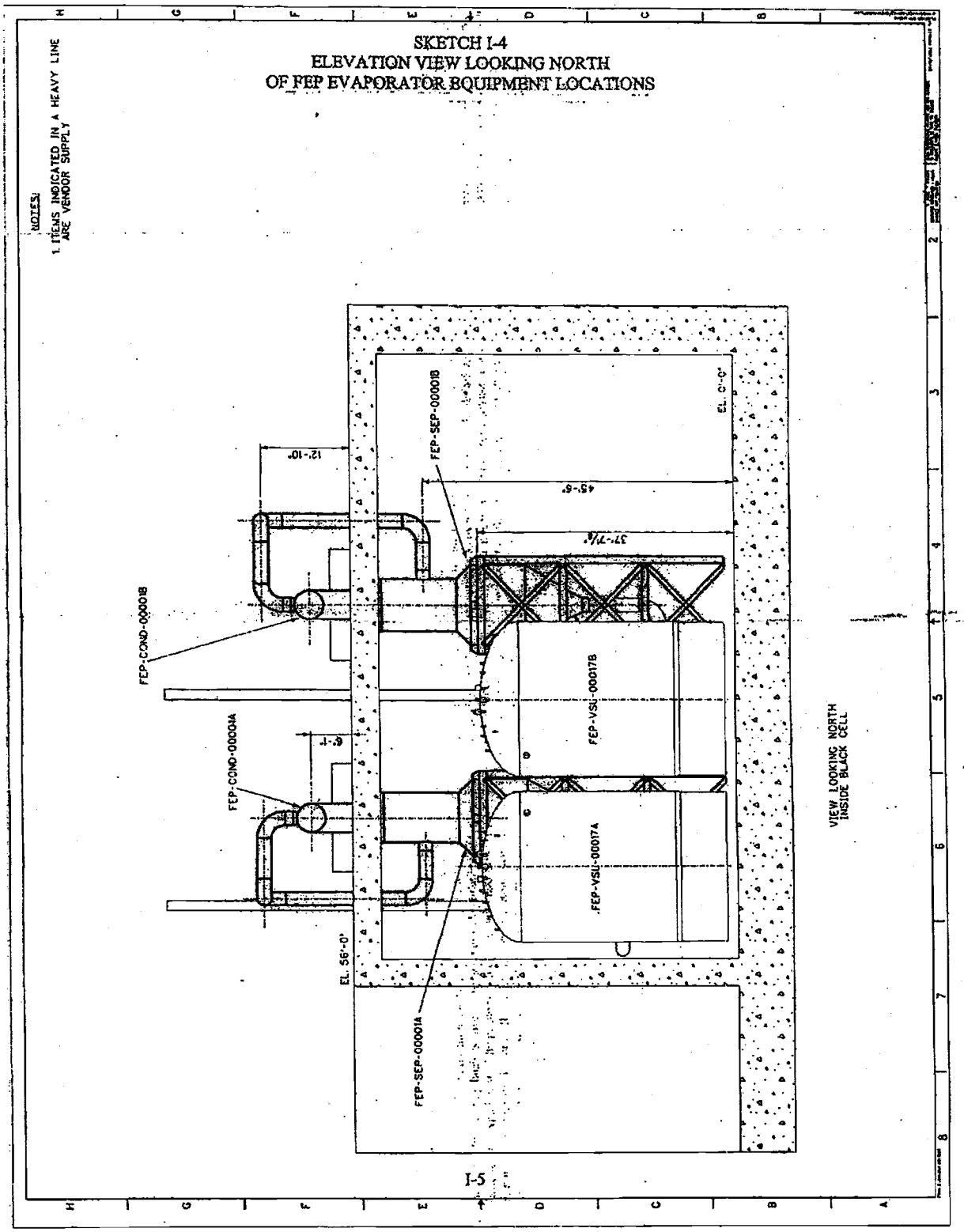

I-5

SKETCH I-5
ELEVATION VIEW LOOKING SOUTH
OF FEP EVAPORATOR EQUIPMENT LOCATIONS

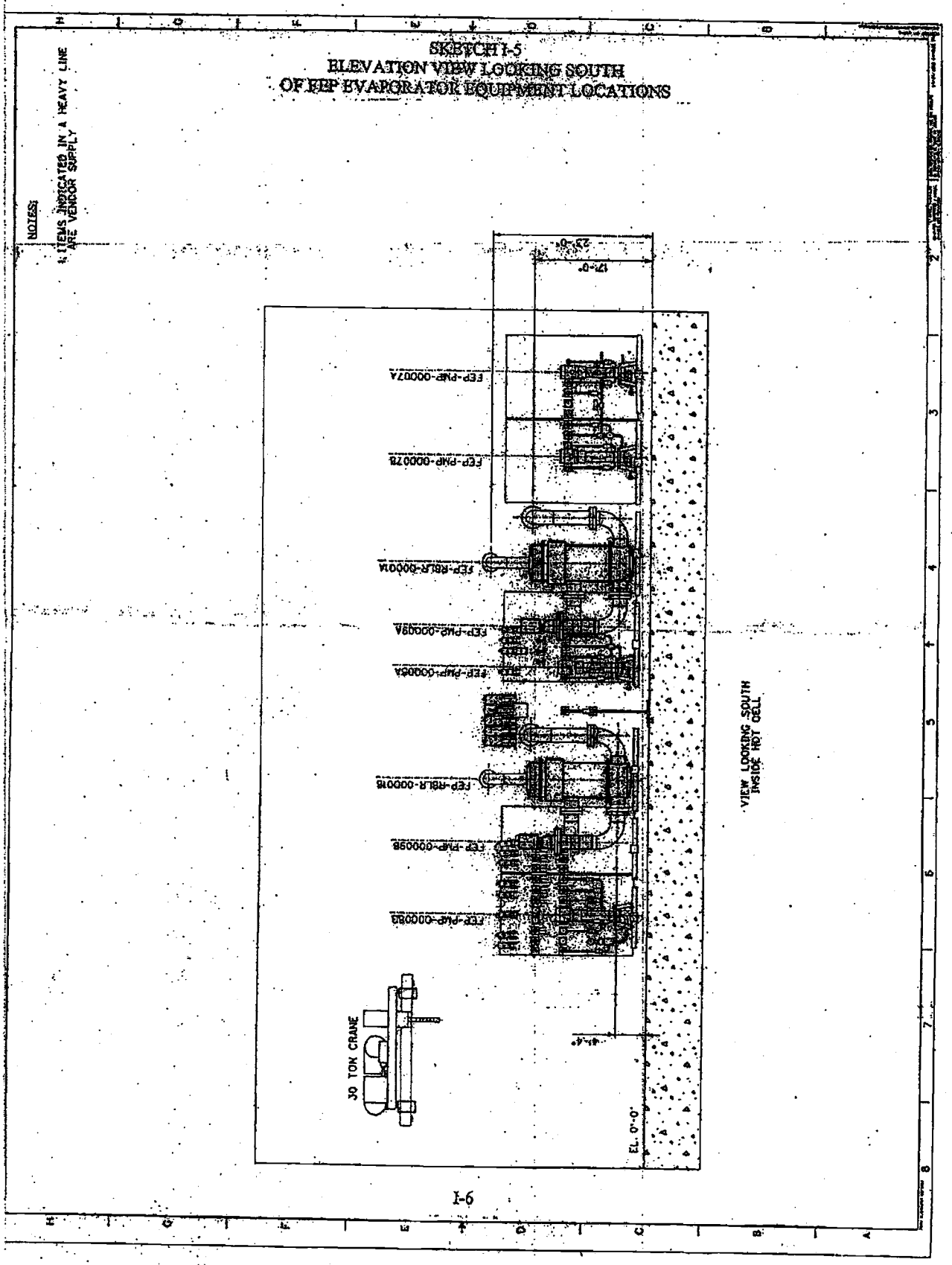

I-6

N

SKETCH 1-6
ISOMETRIC SERVICE FOR FEP EVAPORATOR FEED
FROM FEED VESSEL TO FEEP PUMP

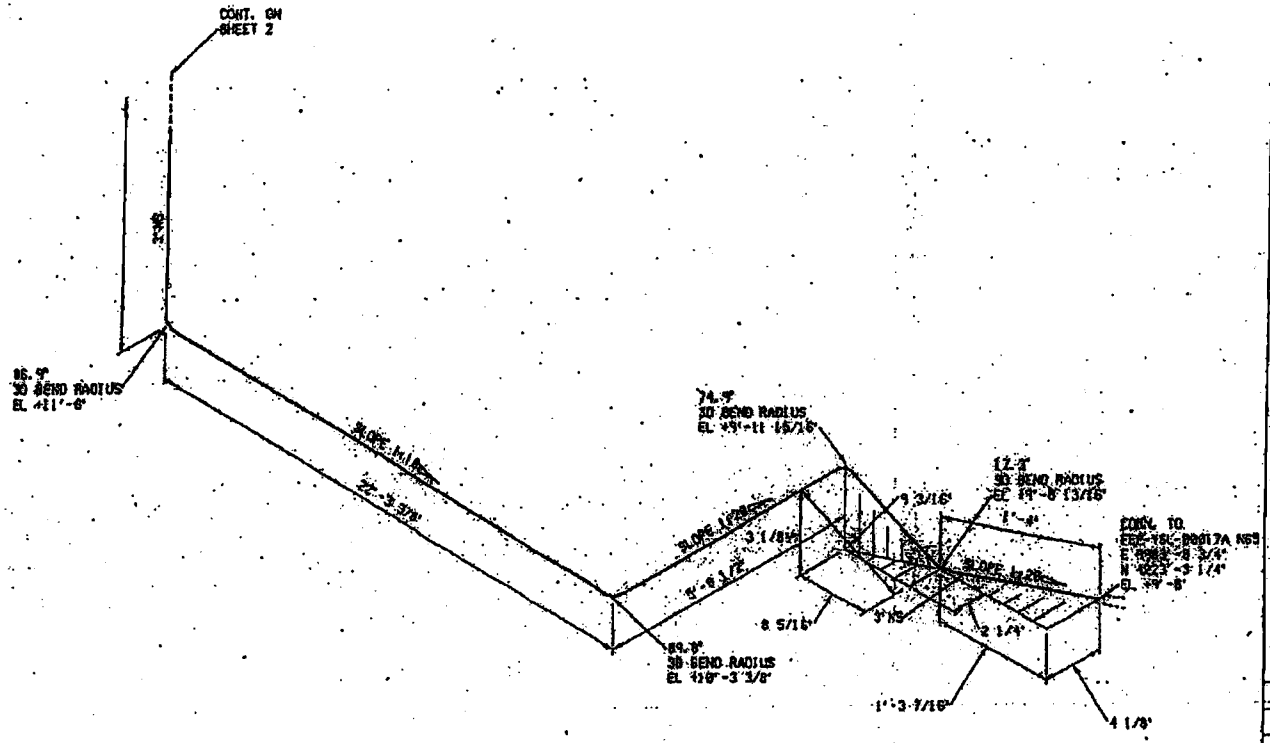

NOTES:
1. FOR GENERAL NOTES AND LEGEND SEE DWG. 24590-PTF-P3-P00T-00001.
2. SEE DWG. 24590-WTP-G2-C10T-00002 FOR CONVERSION FROM PTF FACILITY ELEVATIONS TO SITE ELEVATIONS. PTF FACILITY ELEVATION 0'-0" EQUALS SITE ELEVATION 678'-0" MSL.

SHOP MATERIALS

PART NO	COMPONENT DESCRIPTION	N.S. (INCHES)	QTY	BECHTEL STK CODE
	PIPE			
1	PIPE, A312TP316/316L, SMLS, SCH10S, BBE	3	28'-6"	PPFCSHG0012
2	PIPE, A312TP316/316L, SMLS, SCH10S, BBE	3	3'-7"	PPFCSHG0102

Forced Circulation Vacuum Evaporator System

24590-PTF-3PS-MEVV-T0001, Rev. 2

PRELIMINARY

REV	DATE	DESCRIPTION	DRN	CHKD	STRESS	RVWD	APVD

REVISION HISTORY

RIVER PROTECTION PROJECT
WASTE TREATMENT PLANT
2435 STEVENS CENTER PLACE
RICHLAND, WA 99352

CONTRACT No: DE-AC27-01RV14136

P&ID: NO DATA | CONST. WORK AREA:

PRETREATMENT FACILITY
ISOMETRIC

LINE No. FEP-PZ-00289-S12A-3 | PIPE SPEC: S12A

DWG No. | REV

CONTENT APPLICABLE TO ALARA? ☐ YES ☐ NO
ADR NO. REV.
QUALITY LEVEL 4 | SEISMIC CAT. 4

I-7

FORM: ISOBORDR.DGN 02/2003 | COMPUTER GENERATED - MANUAL CHANGES NOT PERMITTED | PGF File: FEPP289239 | PLOTTED BY: gridley | PLOT DATE: 03/22/2003 10:47:22 AM

SKETCH I-7
ISOMETRIC SKETCH FOR FEP EVAPORATOR FEED
FROM FEED VESSEL TO FEEP PUMP (Cont.)

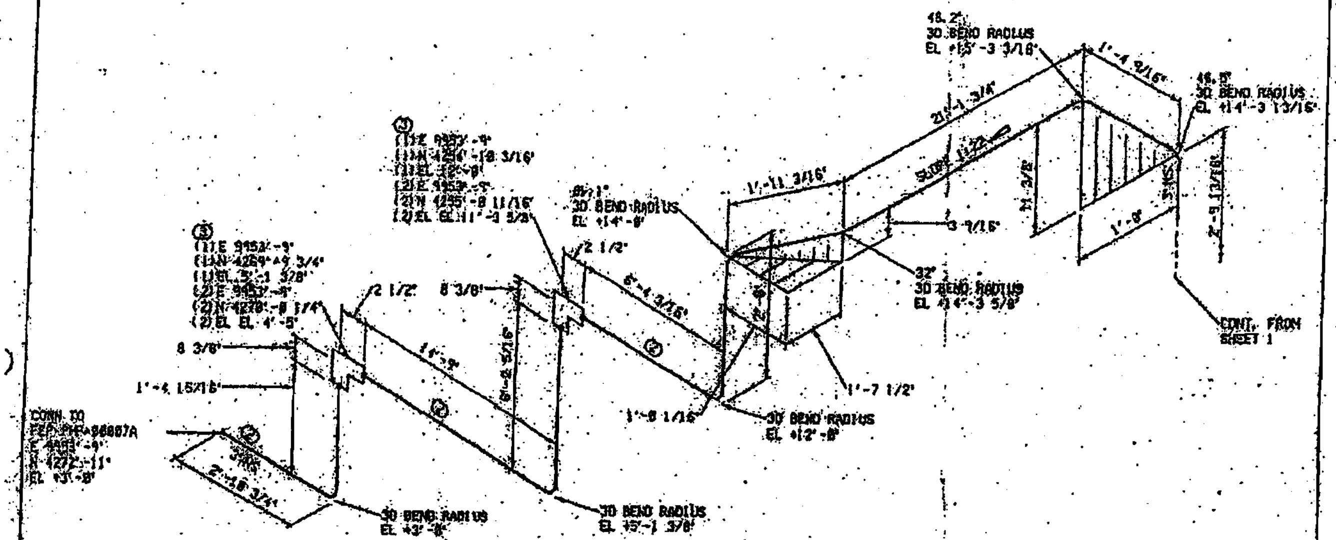

PART NO	COMPONENT DESCRIPTION	N.S. (INCHES)	QTY	BECHTEL STK CODE
	SHOP MATERIALS			
	PIPE			
1	PIPE, A312TP316/316L, SMLS, SCH40S, BBE	3	6' 3"	
2	PIPE, A312TP316/316L, SMLS, SCH40S, BBE	3	58' 11"	
	INSTRUMENTS			
3	PUREX	3	2	

NOTES:
1. FOR GENERAL NOTES AND LEGEND SEE DWG. 24590-PTF-P3-P35T-01000.
2. SEE DWG. 24590-BOF-C2-C12T-00002 FOR CONVERSION FROM PTF FACILITY ELEVATIONS TO SITE ELEVATIONS. PTF FACILITY ELEVATION 0'-0" EQUALS SITE ELEVATION 678'-0" MSL.

PRELIMINARY

REV	DATE	DESCRIPTION	DRN	CHKD	STRESS	RVWD	APVD
		REVISION HISTORY					

RIVER PROTECTION PROJECT
WASTE TREATMENT PLANT
2435 STEVENS CENTER PLACE
RICHLAND, WA 99352

CONTRACT NO: DE-AC27-01RV14136
P&ID: NO DATA
CONST. WORK AREA:

PRETREATMENT FACILITY
ISOMETRIC

CONTENT APPLICABLE TO ALARA? YES NO
ADR NO. REV.
QUALITY LEVEL • SEISMIC CAT. •

LINE No. FEP-PZ-00239-S12A-3 PIPE SPEC: S12A
DWG No. 2 REV

I-8

FORM ISOBRDR.DGN 02/2003 COMPUTER GENERATED - MANUAL CHANGES NOT PERMITTED PCF File: FEPP00239 PLOTTED BY: gdding PLOT DATE: 03/22/2003 10:50:55 AM

SKETCH I-8
ISOMETRIC SKETCH FOR FEP EVAPORATOR FEED
FROM FEED VESSEL TO FEEP PUMP (Cont.)

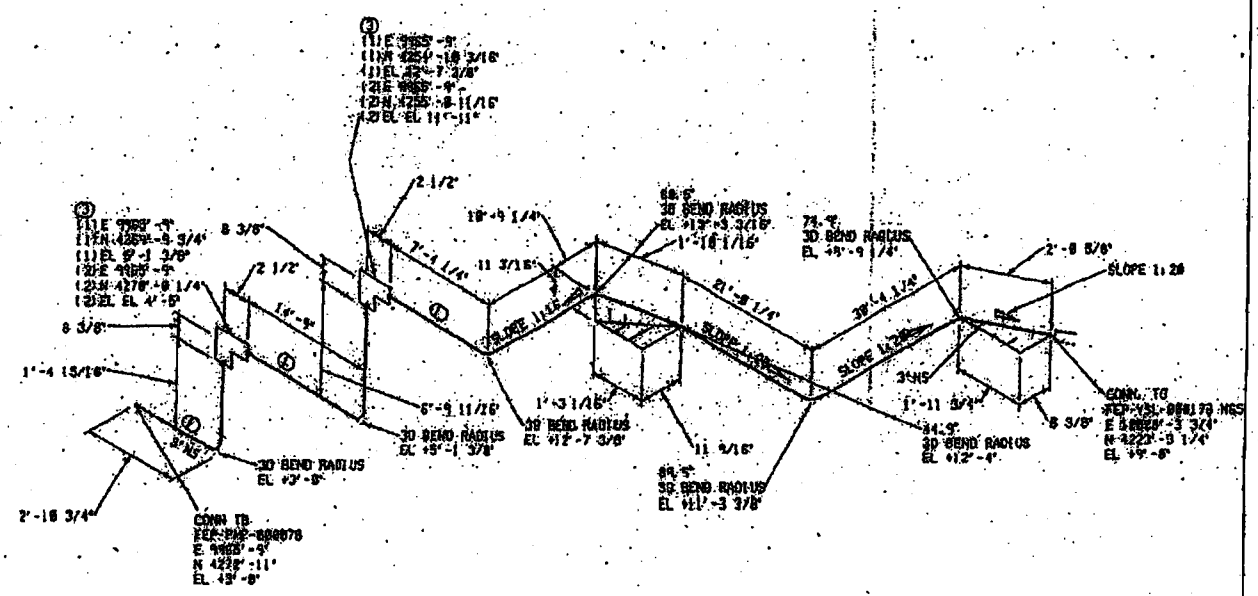

NOTES:
1. FOR GENERAL NOTES AND LEGEND SEE DWG. 24590-PTF-M3-P56T-01000.
2. SEE DWG. 24590-BOF-C2-C27T-00002 FOR CONVERSION FROM PTF FACILITY ELEVATIONS TO SITE ELEVATIONS. PTF FACILITY ELEVATION 0'-0" EQUALS SITE ELEVATION 678'-0" MSL.

SHOP MATERIALS

PART NO	COMPONENT DESCRIPTION	U.S. (INCHES)	QTY	BECHTEL SPEC CODE
	PIPE			
1	PIPE, A312TP316/316L, SMLS, SCH10S, BBE	3	18'-8"	FEPCH08GBE02
2	PIPE, A312TP316/316L, SMLS, SCH10S, BBE	3	7'-1"	FEPCH08GBE02
	INSTRUMENTS			
3	FUREX	3	2	

24590-PTF-3PS-MEV-T0001, Rev. 2
Forced Circulation Vacuum Evaporator System

PRELIMINARY

REV.	DATE	DESCRIPTION	DRN	CHKD	STRESS	RVWD	APVD

REVISION HISTORY

RIVER PROTECTION PROJECT
WASTE TREATMENT PLANT
2435 STEVENS CENTER PLACE
RICHLAND, WA 99352

CONTRACT No: DE-AC27-01RV14136

PLID: NO DATA | CONST. WORK AREA:

PRETREATMENT FACILITY
ISOMETRIC

LINE No. FEP-PZ-00009-S12A-3 | PIPE SPEC: S12A

DWG No. | REV: 1

CONTENT APPLICABLE TO ALARA? YES NO
ADR NO. REV.
QUALITY LEVEL | SEISMIC CAT.

PLOTTED BY: grieng | PLOT DATE: 03/22/2003 10:53:46 AM

FORM: ISOBORD.DGN 02/2003 | COMPUTER GENERATED - MANUAL CHANGES NOT PERMITTED | PCF File: FEPPZ00009

I-9

SKETCH 1-9
HOT CELL WALL PENETRATION LOCATION
SKETCH FOR FEP EVAPORATOR FEED

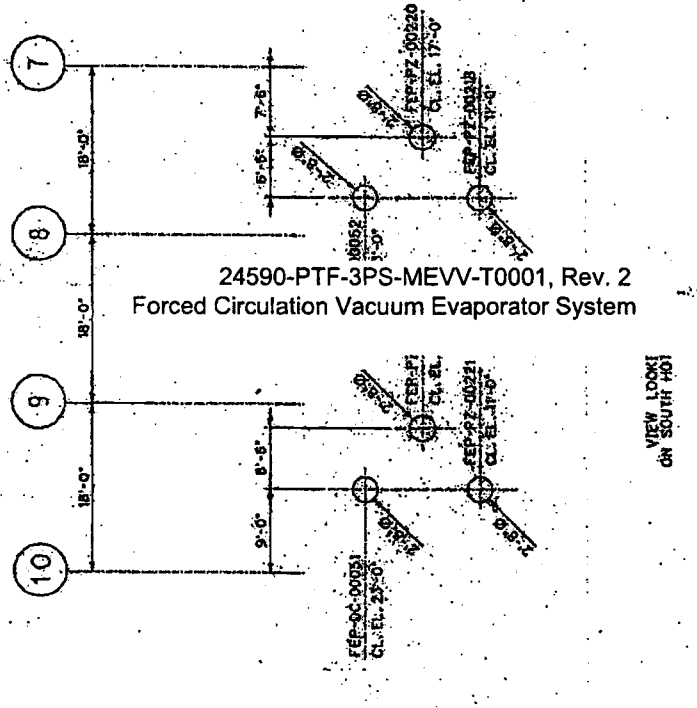

24590-PTF-3PS-MEVV-T0001, Rev. 2
Forced Circulation Vacuum Evaporator System

APPENDIX J

TLP EVAPORATOR EQUIPMENT SKIDS LOCATION AND LAYOUT SKETCHES

SKETCH J-1
TLP EVAPORATOR EQUIPMENT LOCATIONS
PLANT VIEW ON THE 0-FT ELEVATION FLOOR

NOTES:
1. ITEMS INDICATED IN A HEAVY LINE ARE VENDOR SUPPLY

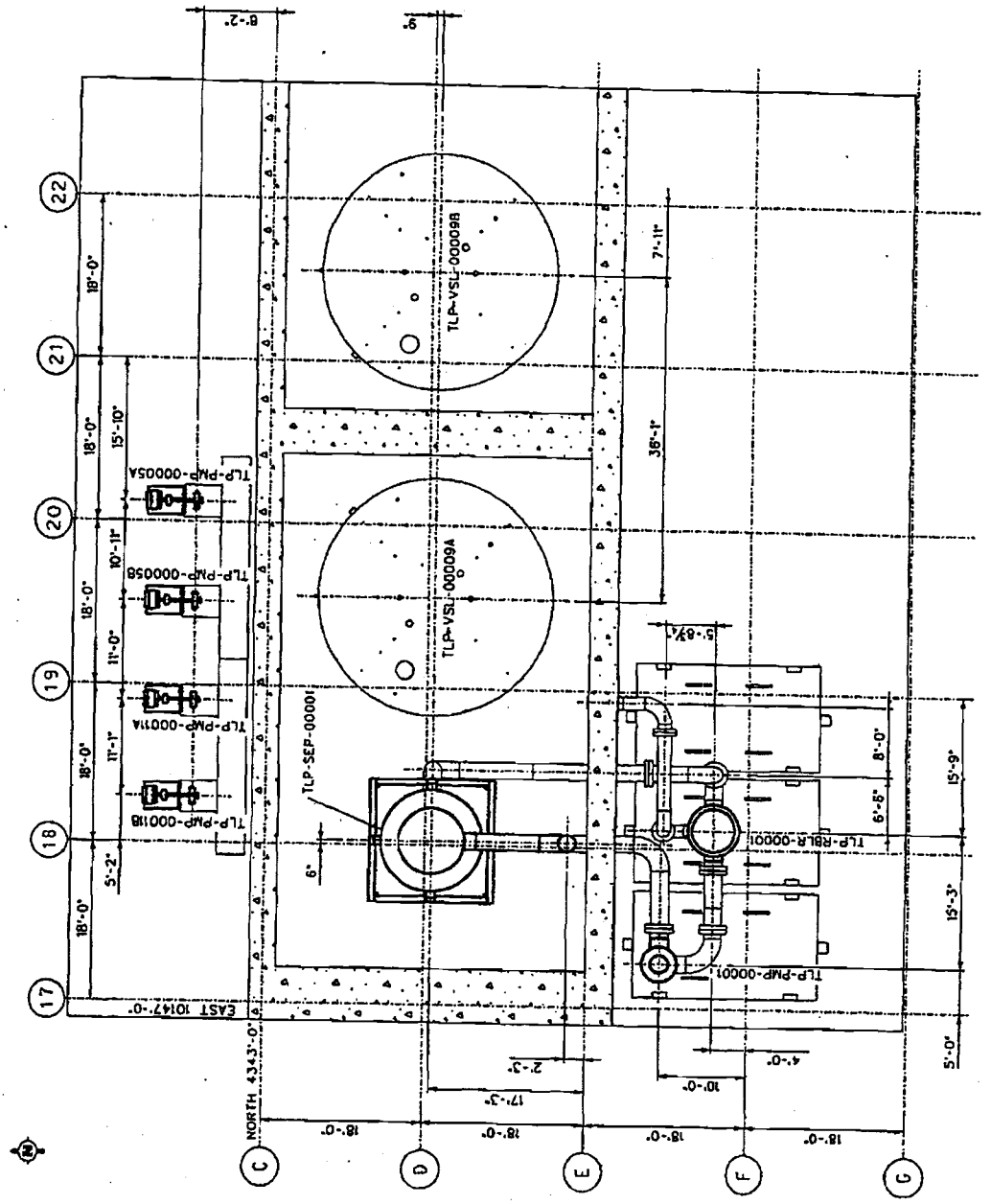

J-2

SKETCH J-2
TLP EVAPORATOR EQUIPMENT LOCATIONS
PLANT VIEW ON THE 56-FT ELEVATION FLOOR

NOTES:
1. ITEMS INDICATED IN A HEAVY LINE ARE VENDOR SUPPLY

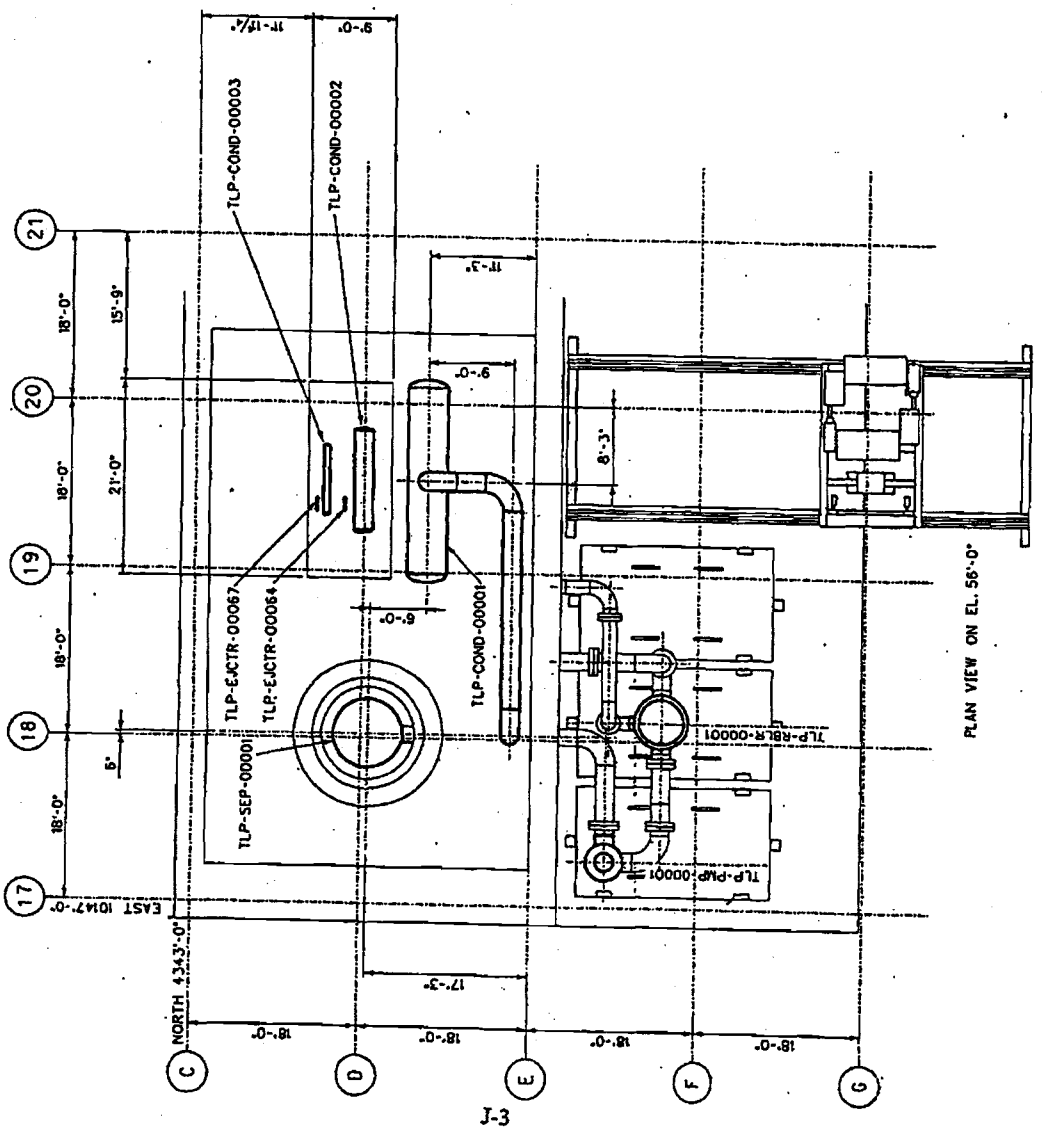

J-3

SKETCH J-3
ELEVATION VIEW LOOKING EAST
OF TLP EVAPORATOR EQUIPMENT LOCATIONS

NOTES:
1. ITEMS INDICATED IN A HEAVY LINE ARE VENDOR SUPPLY

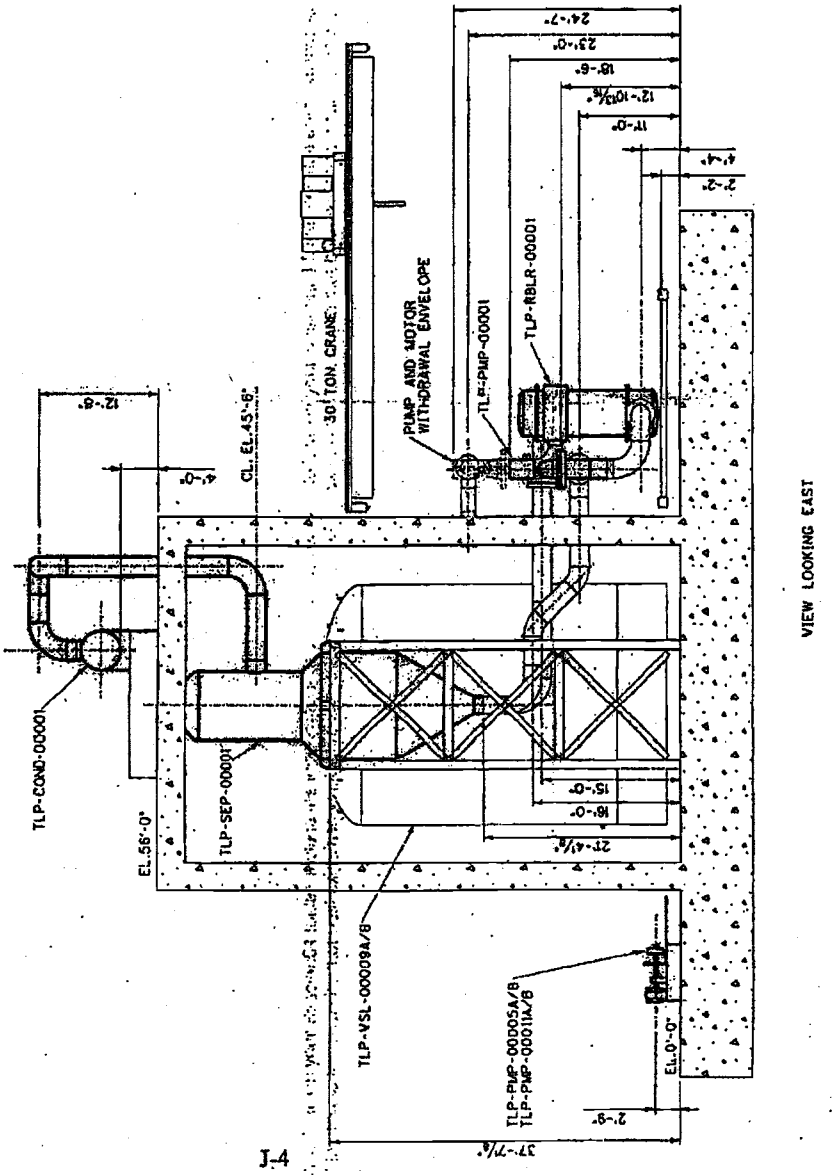

SKETCH J-4
ELEVATION VIEW LOOKING NORTH
OF TLP EVAPORATOR EQUIPMENT LOCATIONS

NOTES:
1. ITEMS INDICATED IN A HEAVY LINE ARE VENDOR SUPPLY.

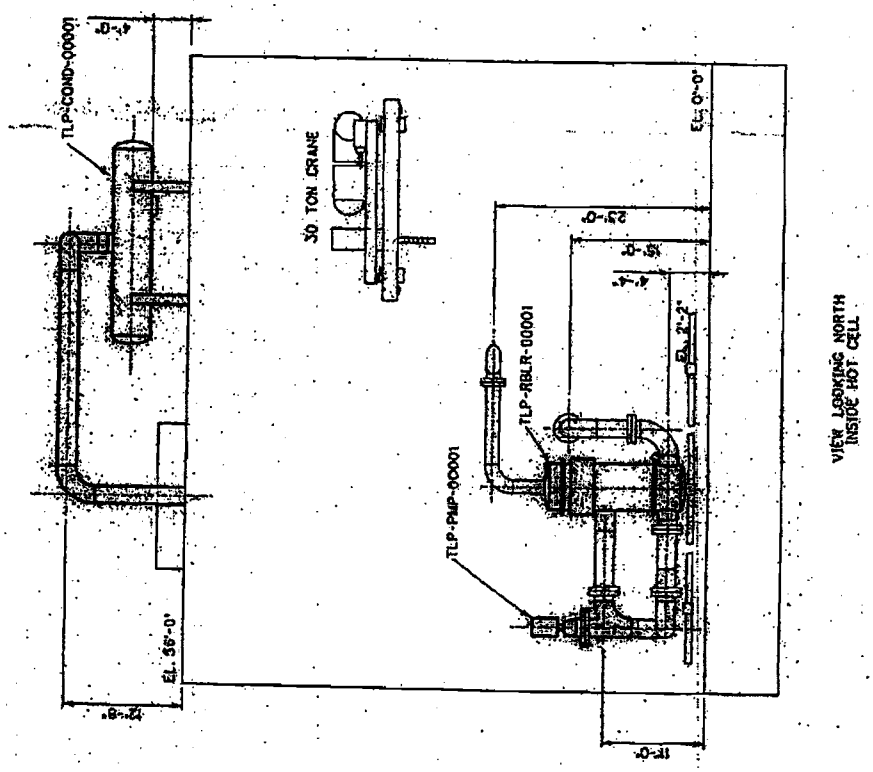

J-5

SKETCH J-5
ELEVATION VIEW LOOKING SOUTH OF TLP EVAPORATOR EQUIPMENT LOCATIONS

NOTES:
1. ITEMS INDICATED IN A HEAVY LINE ARE VENDOR SUPPLY

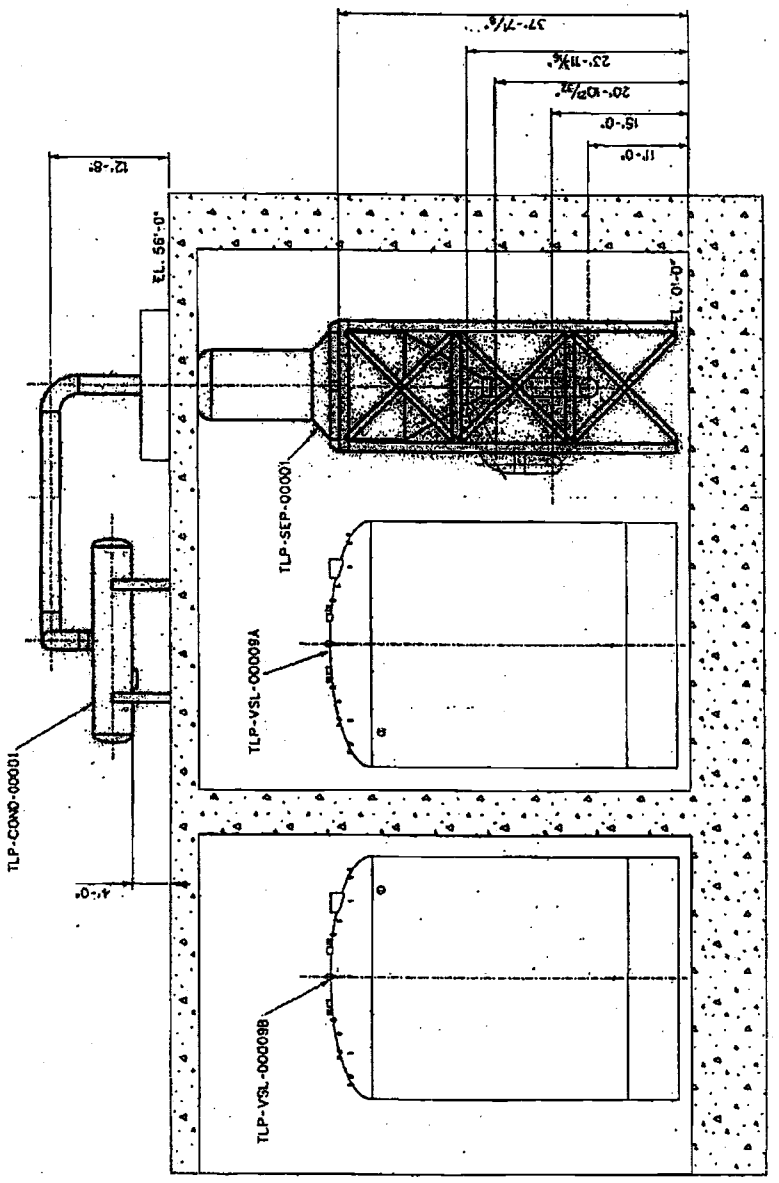

SKETCH J-6
PLANT VIEW ON THE 0-FT ELEVATION
OF TLP CONDENSATE EQUIPMENT LOCATIONS

NOTES:
1. ITEMS INDICATED IN A HEAVY LINE ARE VENDOR SUPPLY

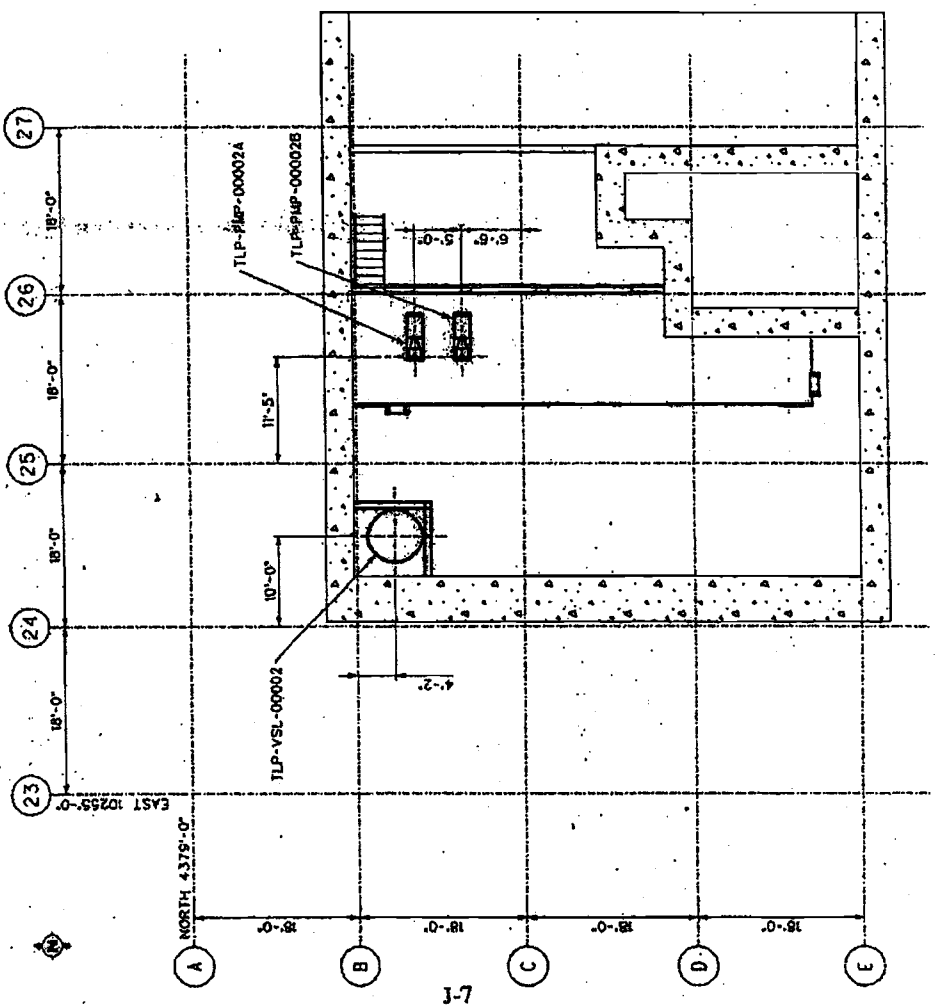

J-7

SKETCH J-7
ELEVATION VIEW LOOKING NORTH
OF TLP CONDENSATE EQUIPMENT LOCATIONS

NOTES:
1. ITEMS INDICATED IN A HEAVY LINE ARE VENDOR SUPPLY

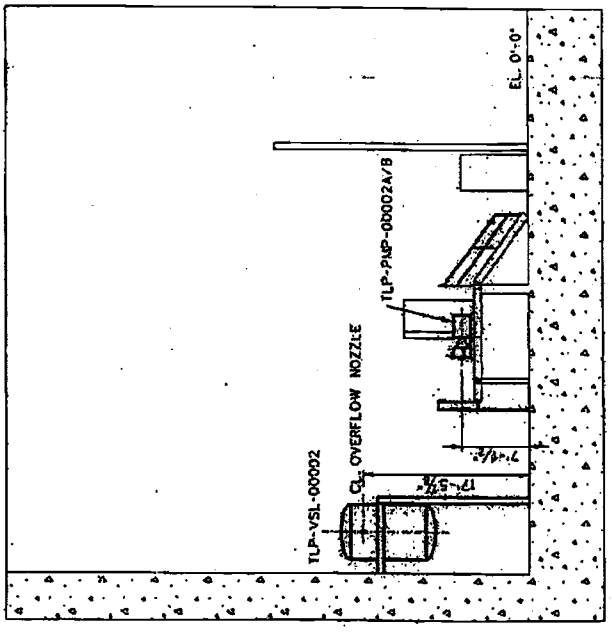

SHEET CHECK
ISOMETRIC SYSTEM FOR TFP EVAPORATOR FEED
FROM FEED VESSEL TO FEED PUMP

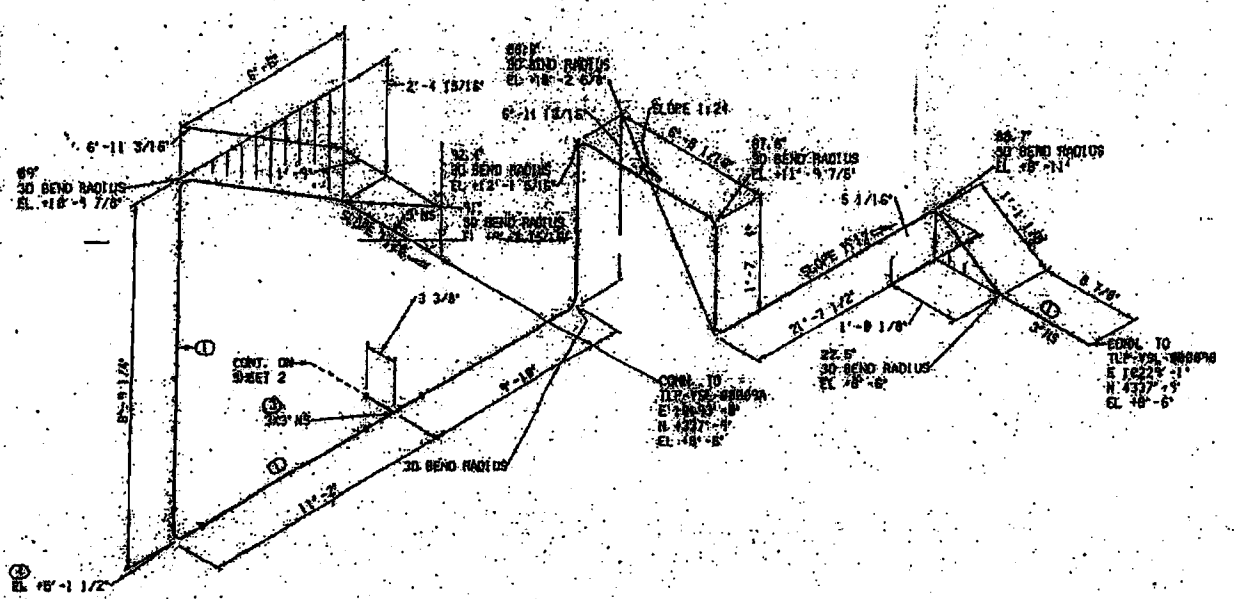

NOTES:
1. FOR GENERAL NOTES AND LEGEND SEE DWG. 24590-PTF-3PS-G04B-00002.
2. SEE DWG. 24590-BOP-GS-GHT-00002 FOR CONVERSION FROM PTF FACILITY ELEVATIONS TO SITE ELEVATIONS. PTF FACILITY ELEVATION 0'-0" EQUALS SITE ELEVATION 678'-6" MSL.

SHOP MATERIALS

PART NO	COMPONENT DESCRIPTION	N.S. (INCHES)	QTY	RECEIVE STK. CODE
	PIPE			
1	PIPE, A312 TP316/316L, SMLS, SCH10S, BBE	3	69'-1"	PRECONDITIONED
2	PIPE, A312 TP316/316L, SMLS, SCH10S, BBE	3	8'-0"	PRECONDITIONED
	FITTINGS			
3	TE, BW, A403 WP316, SCH10S	3X3	1	PRECONDITIONED
4	EL - 90, LR, BW, A403 WP316/316L-S, SCH10S	3	1	PRECONDITIONED

24590-PTF-3PS-MEVV-T0001, Rev. 2
Forced Circulation Vacuum Evaporator System

PRELIMINARY

REV	DATE	DESCRIPTION	DSN	CONST	STRESS	PIPING	APVD
		REVISION HISTORY					

RIVER PROTECTION PROJECT
WASTE TREATMENT PLANT
2435 STEVENS CENTER PLACE
RICHLAND, WA 99352

CONTRACT No: DE-AC27-01RV14136

P&ID: 24590-PTF-PIC-TLP-00001 | CONST. WORK AREA:

PRETREATMENT FACILITY
ISOMETRIC

LINE No. | PIPE SPEC: S12C

DWG No. | REV

CONTENT APPLICABLE TO ALARA? ☐ YES ☐ NO
ADR NO. | REV.
QUALITY LEVEL: QL-2 | SEISMIC CAT.: SC-II

J-9

FORM: ISOBORDR.DGN 02/2003 | COMPUTER GENERATED - MANUAL CHANGES NOT PERMITTED | PCF File: TLPSUCTION | PLOTTED BY: grieling | PLOT DATE: 03/24/2003 11:41:27 AM

SKETCH 1-9
ISOMETRIC SKETCH FOR TLP EVAPORATOR FEED
FROM FEED VESSEL TO FEED PUMP (Cont.)

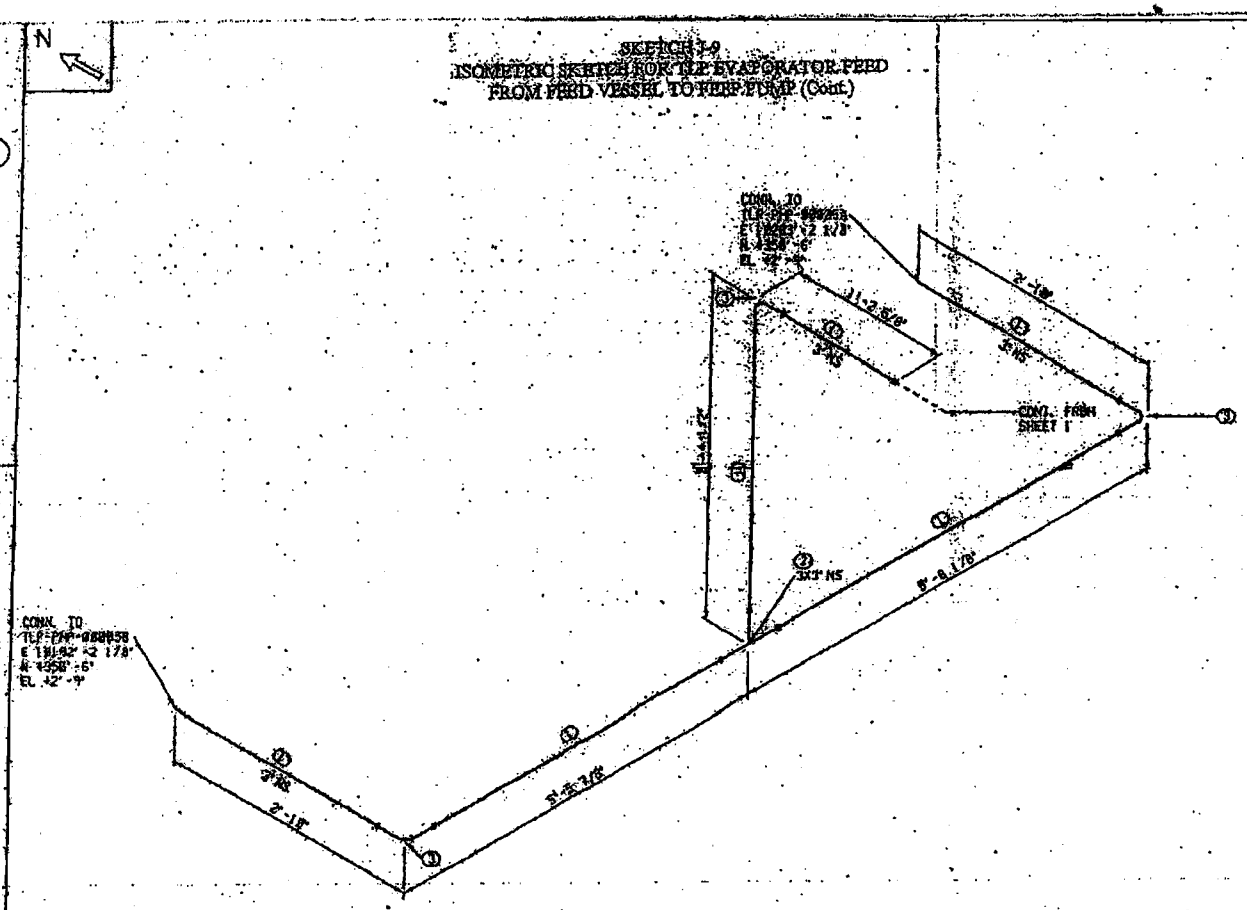

NOTES:

1. FOR GENERAL NOTES AND LEGEND SEE DWG. 24590-PTF-PEF-P36T-00002.
2. SEE DWG. 24590-WTP-H3T-H01T-00003 FOR CONVERSION FROM PTF FACILITY ELEVATIONS TO SITE ELEVATIONS. PTF FACILITY ELEVATION 0'-0" EQUALS SITE ELEVATION 678'-0" MSL.

J-10

SKID MATERIALS

PART NO	COMPONENT DESCRIPTION	N.S. (INCHES)	QTY	MATERIAL SPEC CODE
	PIPE			
1	PIPE, A312TP316/316L, SMLS, SCH40S, BBE	3	17'-2"	PPPC88D8X92
	FITTINGS			
2	TE, BW, A403WP316, SCH40S	3X3	1	PECTV88D8CXD
3	EL - 90, LR, BW, A403WP316/316L-S, SCH40S	3	3	PEWTV88D8SXD

24590-PTF-3PS-MEVV-T0001, Rev. 2
Forced Circulation Vacuum Evaporator System

PRELIMINARY

REV	DATE	DESCRIPTION	DRN	CHKD	STRESS	RYRD	APVD
		REVISION HISTORY					

WASTE TREATMENT PROJECT
RICHLAND, WASHINGTON

CONTRACT No: DE-AC27-01RV14136

PROJ: 24590-PTF-G-TLP-00001 CONST. WORK AREA:

PRETREATMENT FACILITY
ISOMETRIC

LINE No. PIPE SPEC: S12C

DWG No. 2 REV

CONTENT APPLICABLE TO ALARA? YES NO
ADR NO. REV.
QUALITY LEVEL QL-2 SEISMIC CAT. SC-II

FORM: ISOBRDR.DGN 02/2003 COMPUTER GENERATED - MANUAL CHANGES NOT PERMITTED PDF File: TLPSUCTION

PLOTTED BY: gridley PLOT DATE: 03/24/2003, 11:37:20 AM

NOT FOR CONSTRUCTION

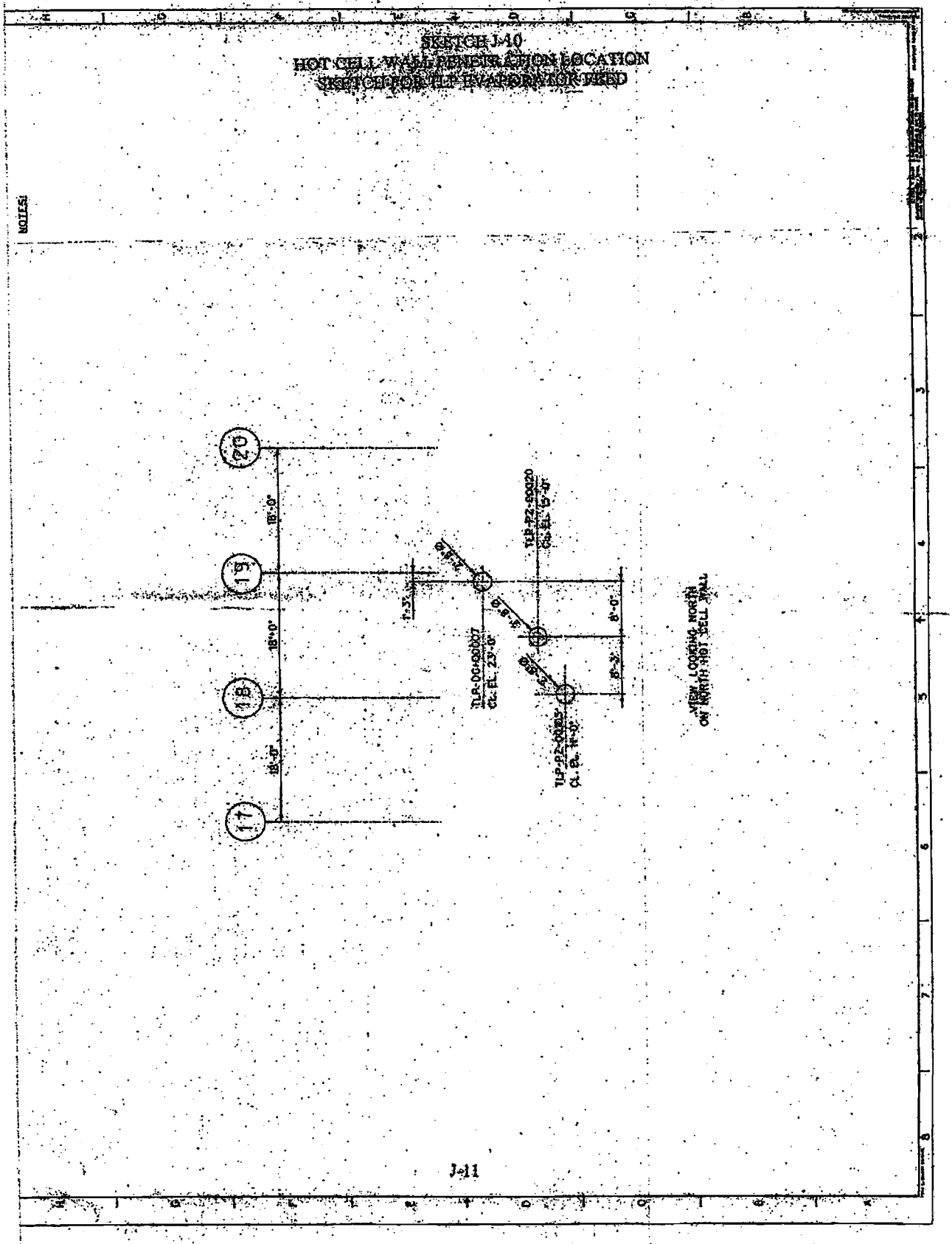
SKETCH J-10
HOT CELL WALL PENETRATION LOCATION
SKETCH FOR TLP EVAPORATOR FEED
NOTES:
20
19
18
17
18'-0"
18'-0"
18'-0"
TLP-PZ-00020
TLP-00-00007
TLP-PZ-00022
8'-0"
8'-3"
1'-3"
J-11

APPENDIX K

ANTIFOAM EQUIPMENT SKIDS LOCATION AND LAYOUT SKETCHES

SKETCH K-1
ANTIFOAM EQUIPMENT LOCATIONS
PLANT VIEW ON THE 77-FT ELEVATION FLOOR

NOTES:
1. ITEMS INDICATED IN A HEAVY LINE ARE VENDOR SUPPLY.

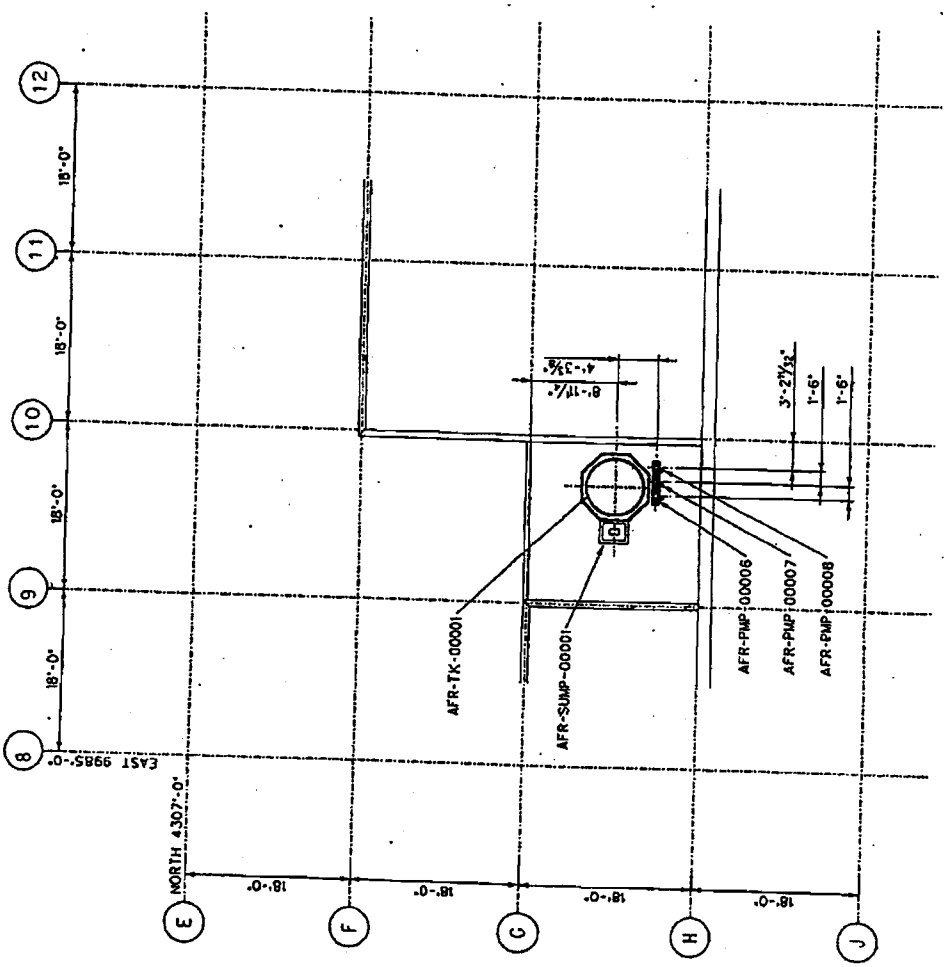

K-2

SKETCH K-2
ELEVATION VIEW LOOKING EAST
OF ANTIFOAM EQUIPMENT LOCATIONS

NOTES:
1. ITEMS INDICATED IN A HEAVY LINE ARE VENDOR SUPPLY.

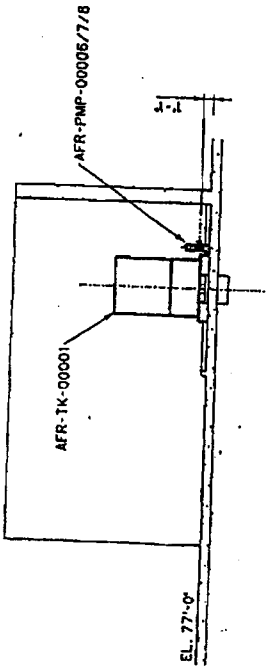

VIEW LOOKING EAST

K-3

APPENDIX L

Reboiler Steam Condensate Transfer Stations Location and Layout Sketches

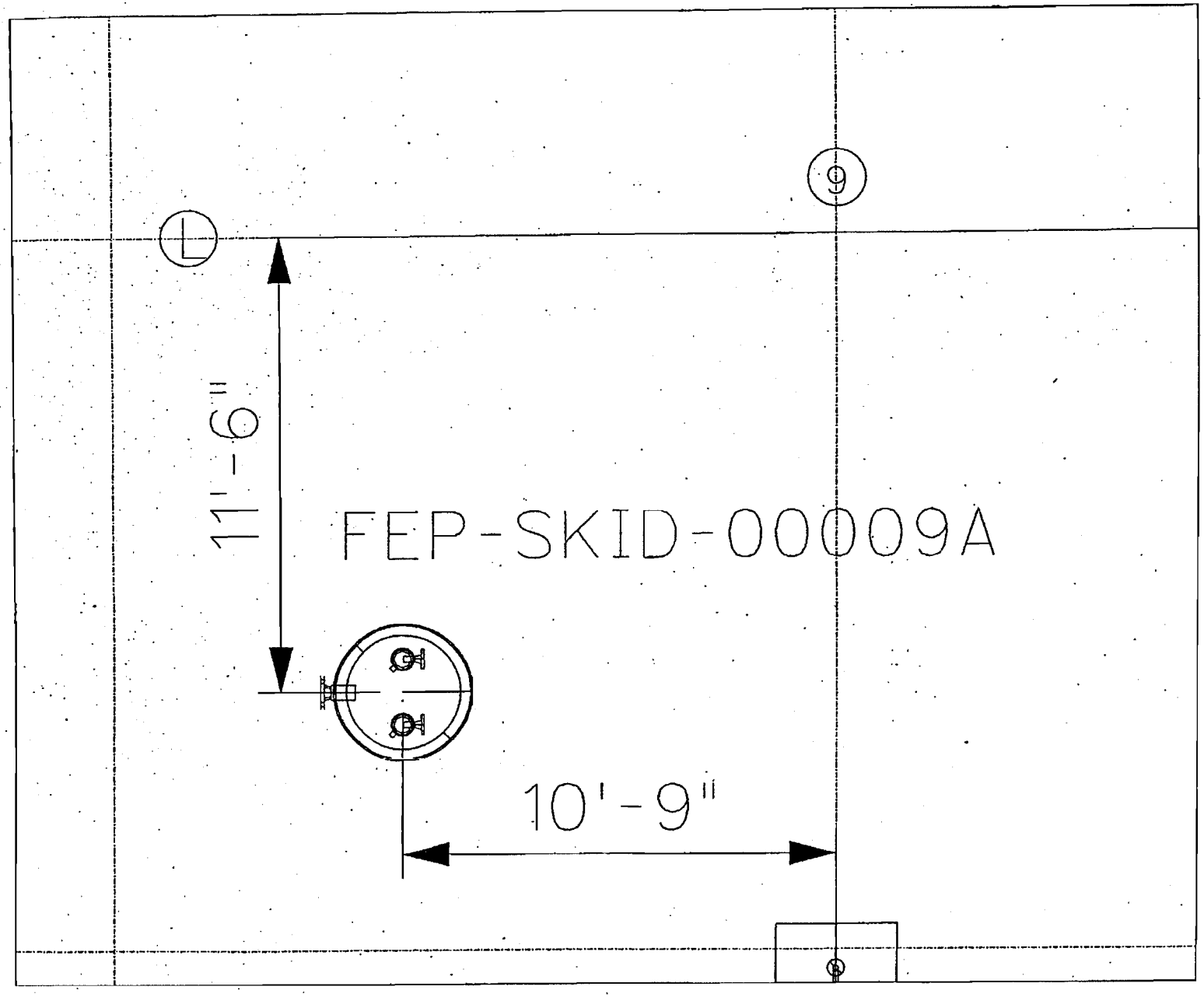

PLAN VIEW
@ 0'-0" Elevation

SKETCH L-2

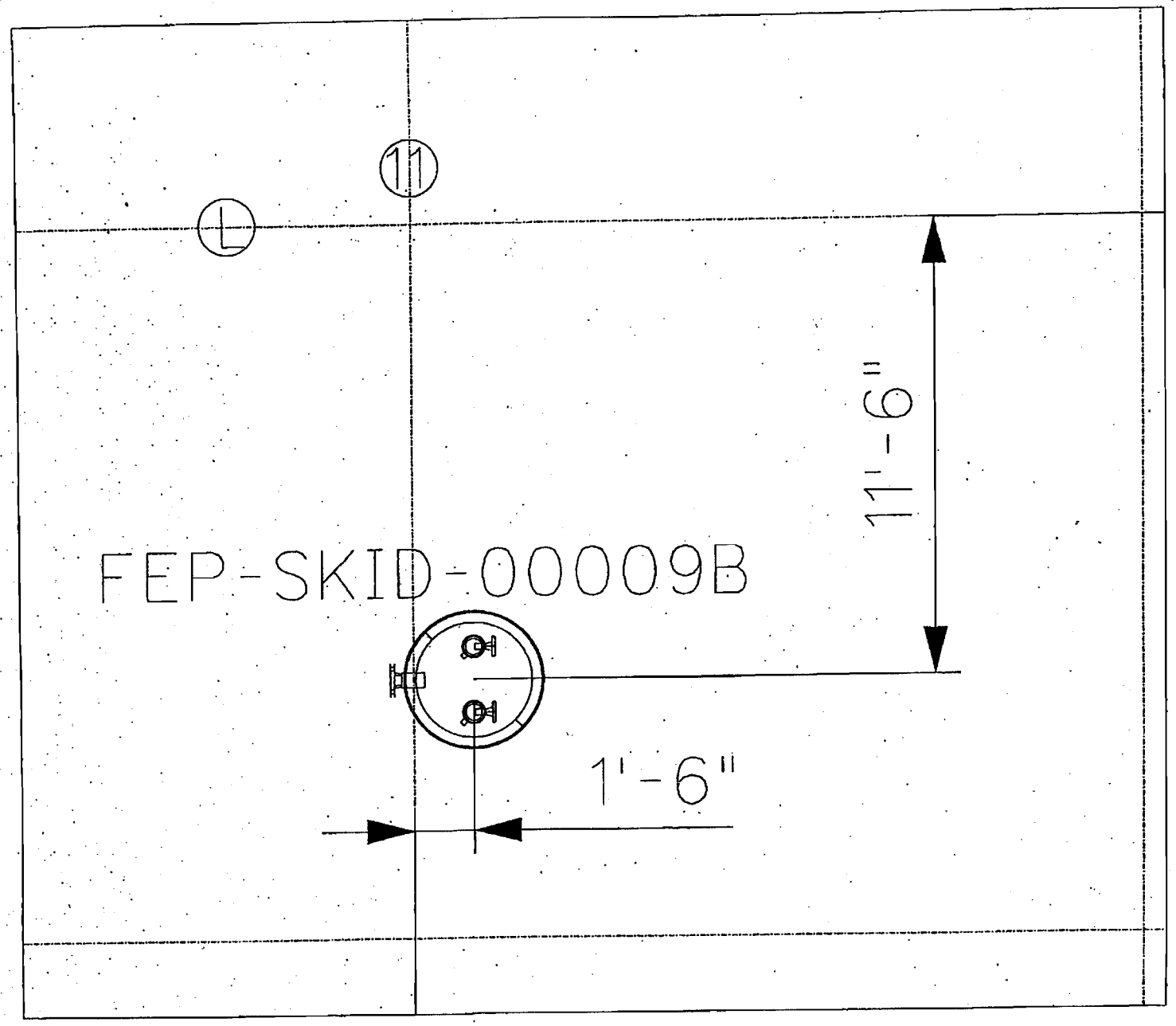

PLAN VIEW
@ 0'-0" Elevation

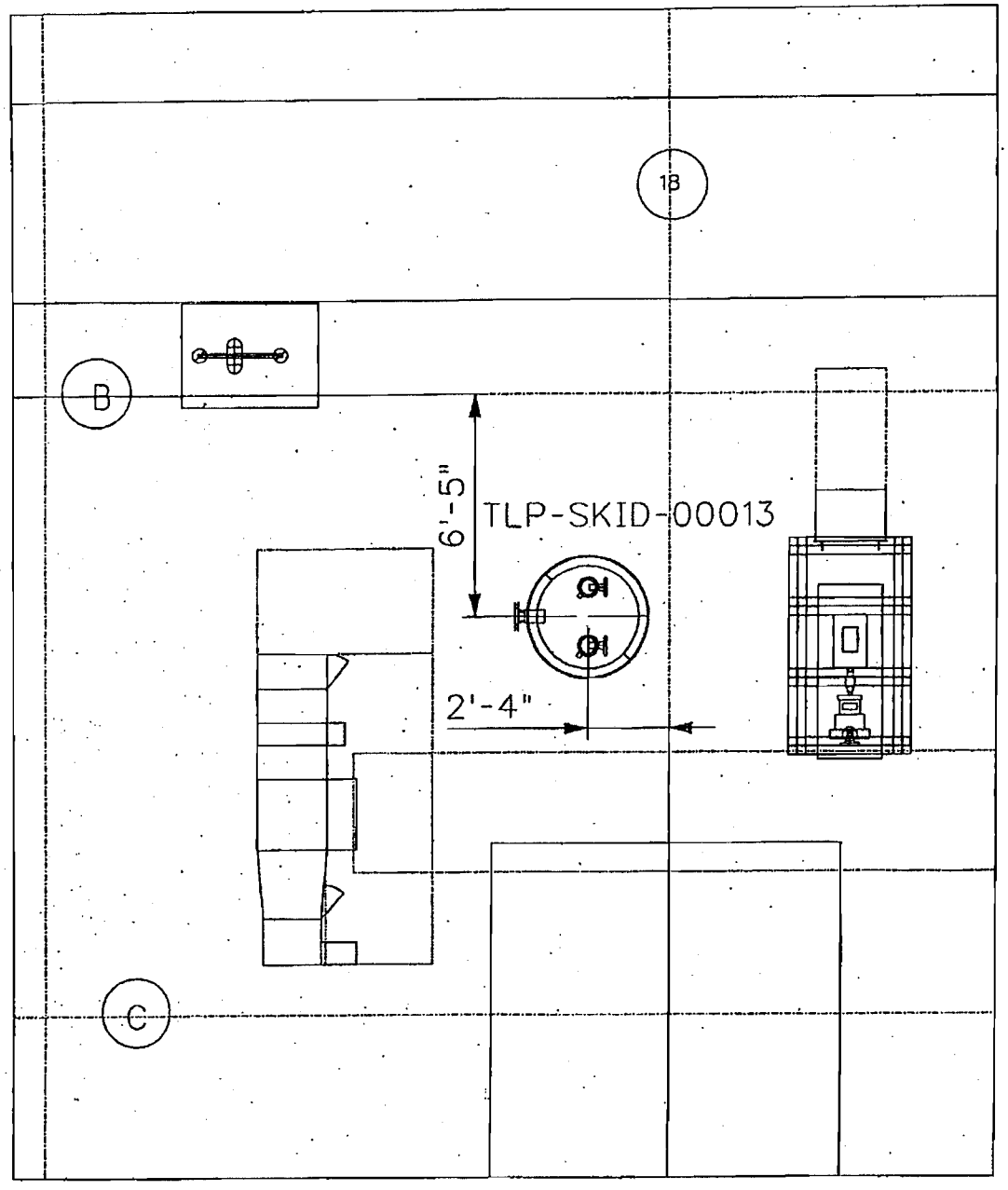

PLAN VIEW
@ 0'-0" Elevation

Sketch L-4
Location of 2"-150# R.F FLG inlet nozzle
on Roth Vessel FEP-VSL-00021 for DSH drain

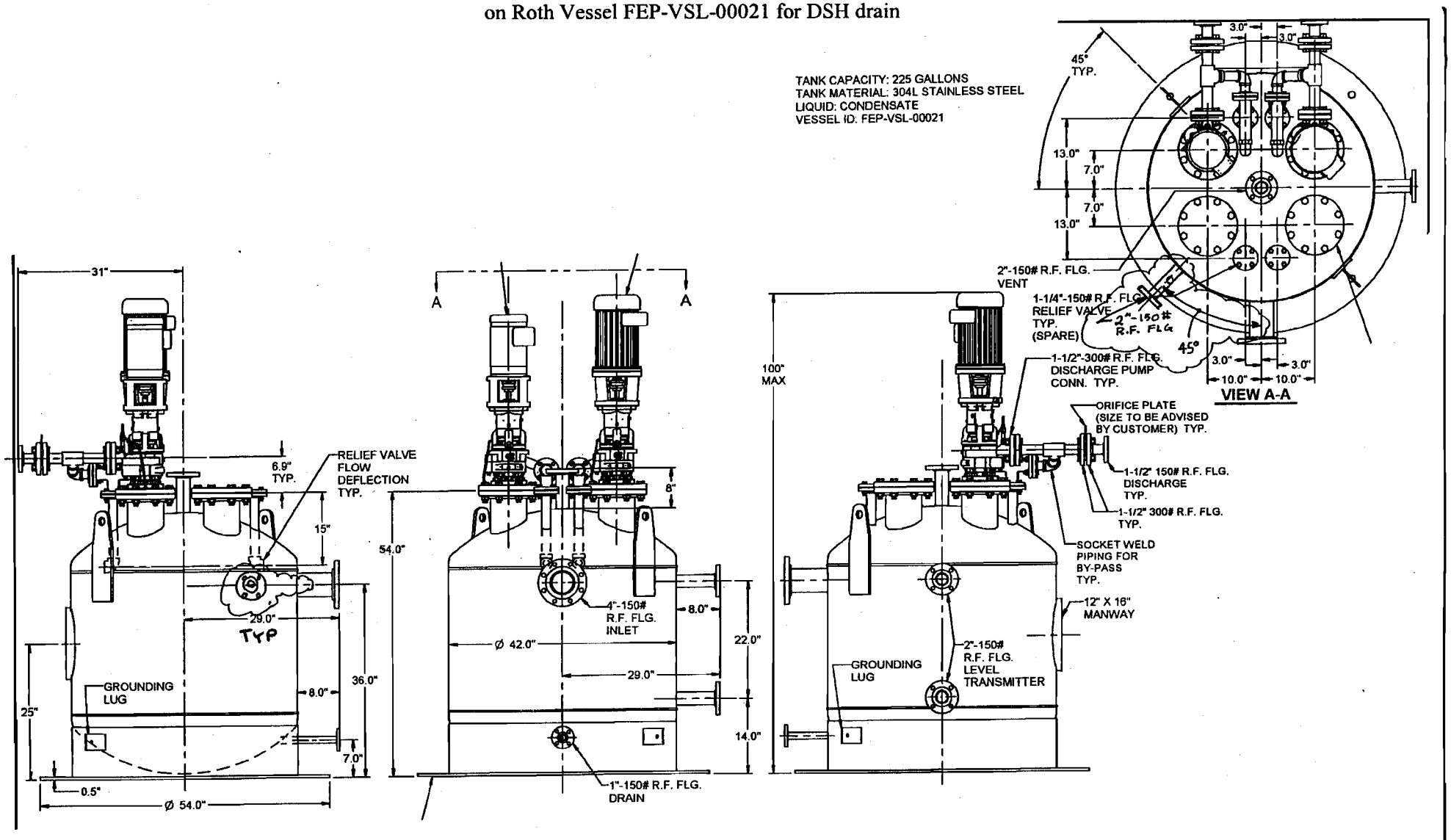

Sketch L-5
Location of 2"-150# R.F FLG inlet nozzle
on Roth Vessel FEP-VSL-00022 for DSH drain

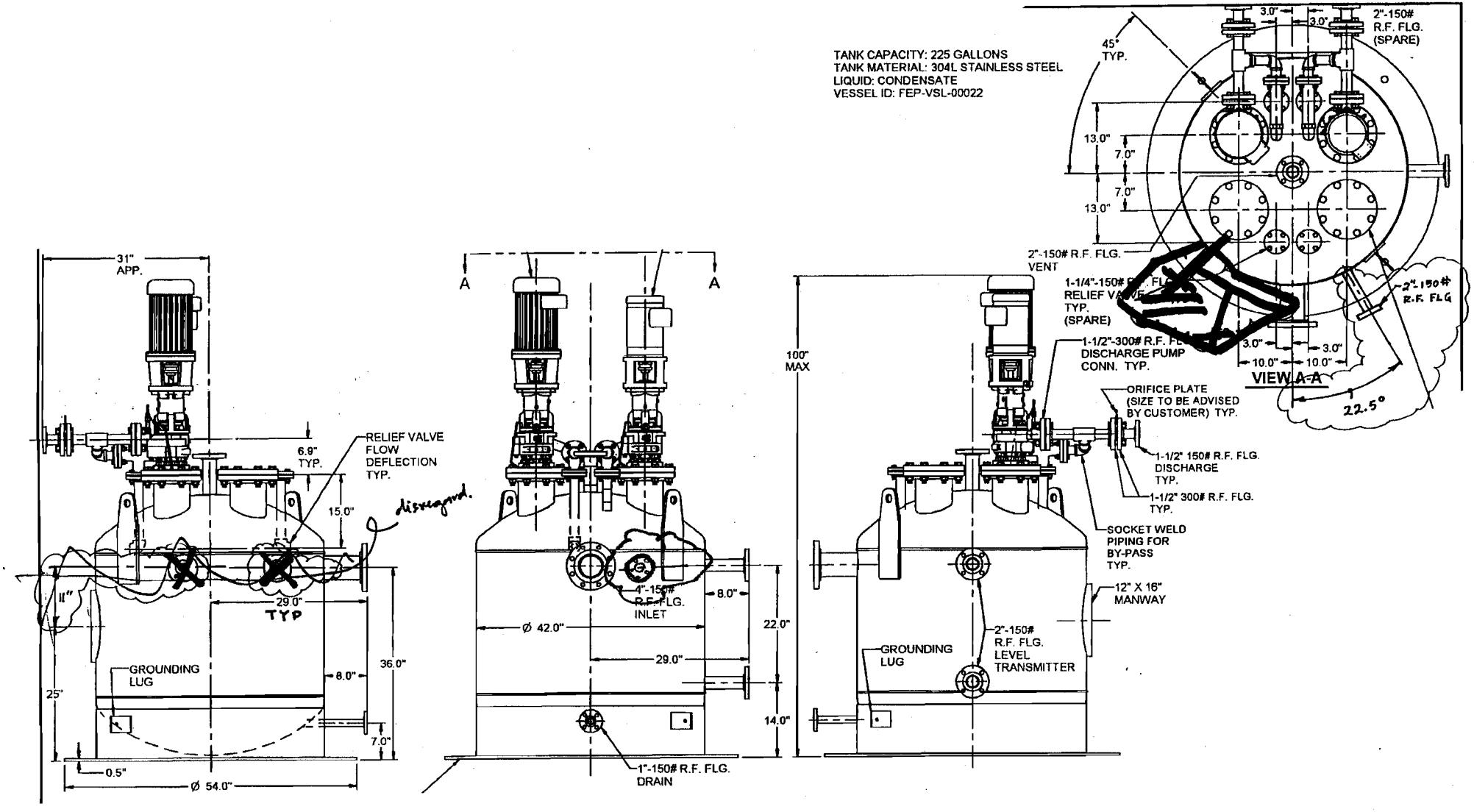

Sketch L-6
Location of 2"-150# R.F FLG inlet nozzle
on Roth Vessel TLP-VSL-00047 for DSH drain

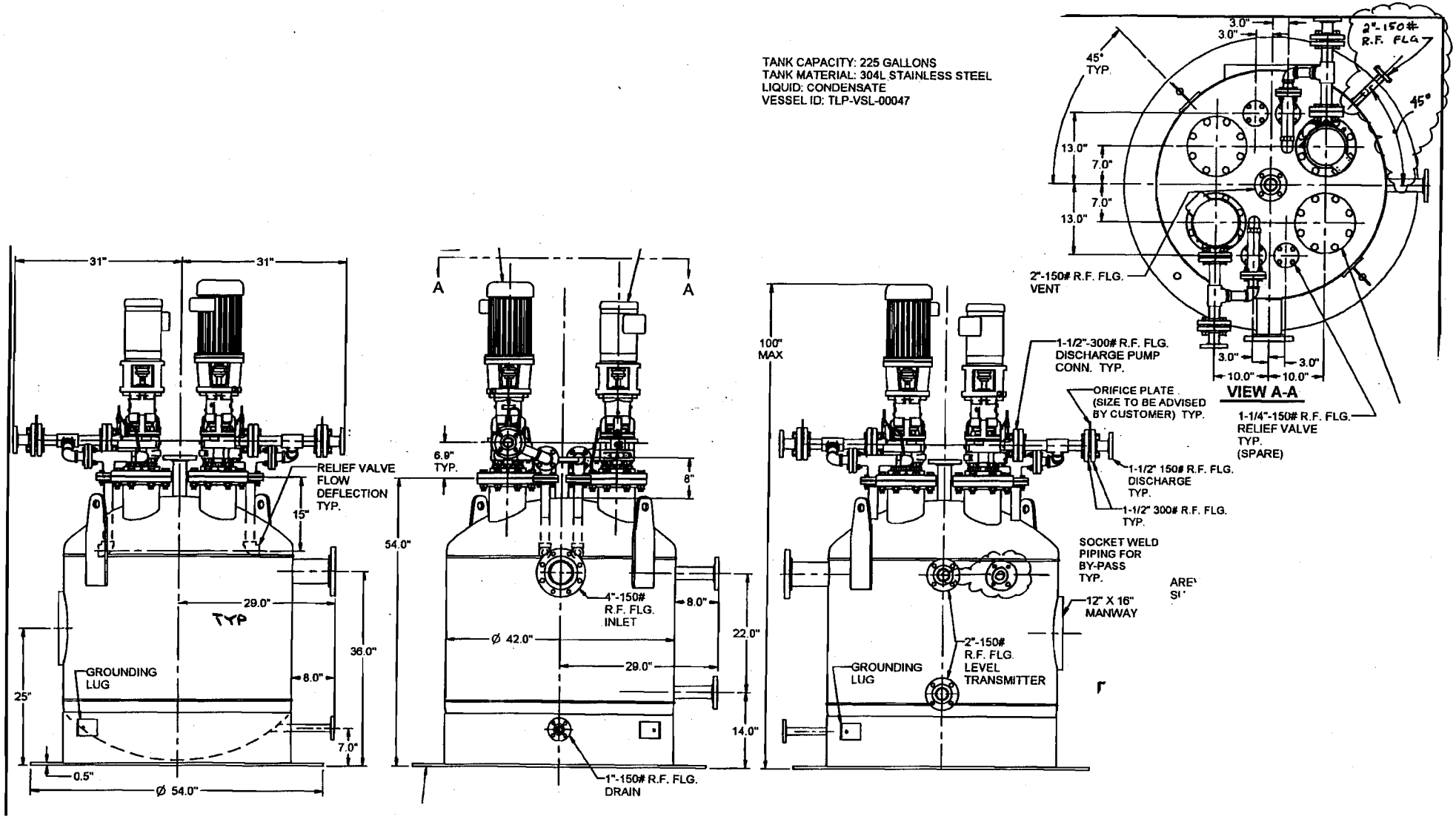

APPENDIX M

DELETED

APPENDIX N

DELETED

APPENDIX O

Nondestructive Examination (NDE) of Fabricated Pipe Welds

Non-Destructive Examination (NDE) of Fabricated Pipe Welds

ASME B31.3 Process Piping							
Type of Weld	Cat. D	Normal Fluid Service Less than Class 1500	Normal Fluid Service Class 1500 and Greater	Cat. M Black Cells	Cat. M Dual Containment Pipe		Cat. M All Others
					Inner Pipe	Jacket	
Girth and Miter Welds	100 % VT	100 % VT 5 % RT	100 % VT 100 % RT	100 % VT & RT (1)	100 % VT & RT (1)	100 % VT 5 % RT (3)	100 % VT 20 % PT/MT
Branch Connection Welds and Fillet Welds including Socket and Attachment Welds for Branch Reinforcement and Support Welds	100 % VT	100 % VT	100 % VT	100 % PT/MT (2)	100 % PT/MT (2)	100 % VT	100 % VT 20 % PT/MT

NOTES:

1. The radiographic acceptance criteria for normal fluid service applies except that incomplete penetration and undercut are not permitted.
2. The penetrant and magnetic particle test acceptance criteria shall be in accordance with B31.3 para. 344.4, except that no cracks are permitted.
3. A 5 % random in-process examination shall be performed in lieu of RT in accordance with ASME B31.3, Para. 341.4.1 & 344.7.
4. Black cells include Rm. No's. P-102, 104, 106, 108, 109, 111, 112, 113, 114 & 116 in the PT Building and Rm. No's. H-B005A, B032, B014, B021, B0005, B005A, B015, H-302 & H-308 in the HLW Building.

LEGEND:

RT – Radiographic Examination, PT/MT – Liquid Penetrant or Magnetic Particle Examination, VT – Visual Examination

APPENDIX P

Reboiler Skids and Preliminary Nozzle Loads At Grayloc Connections

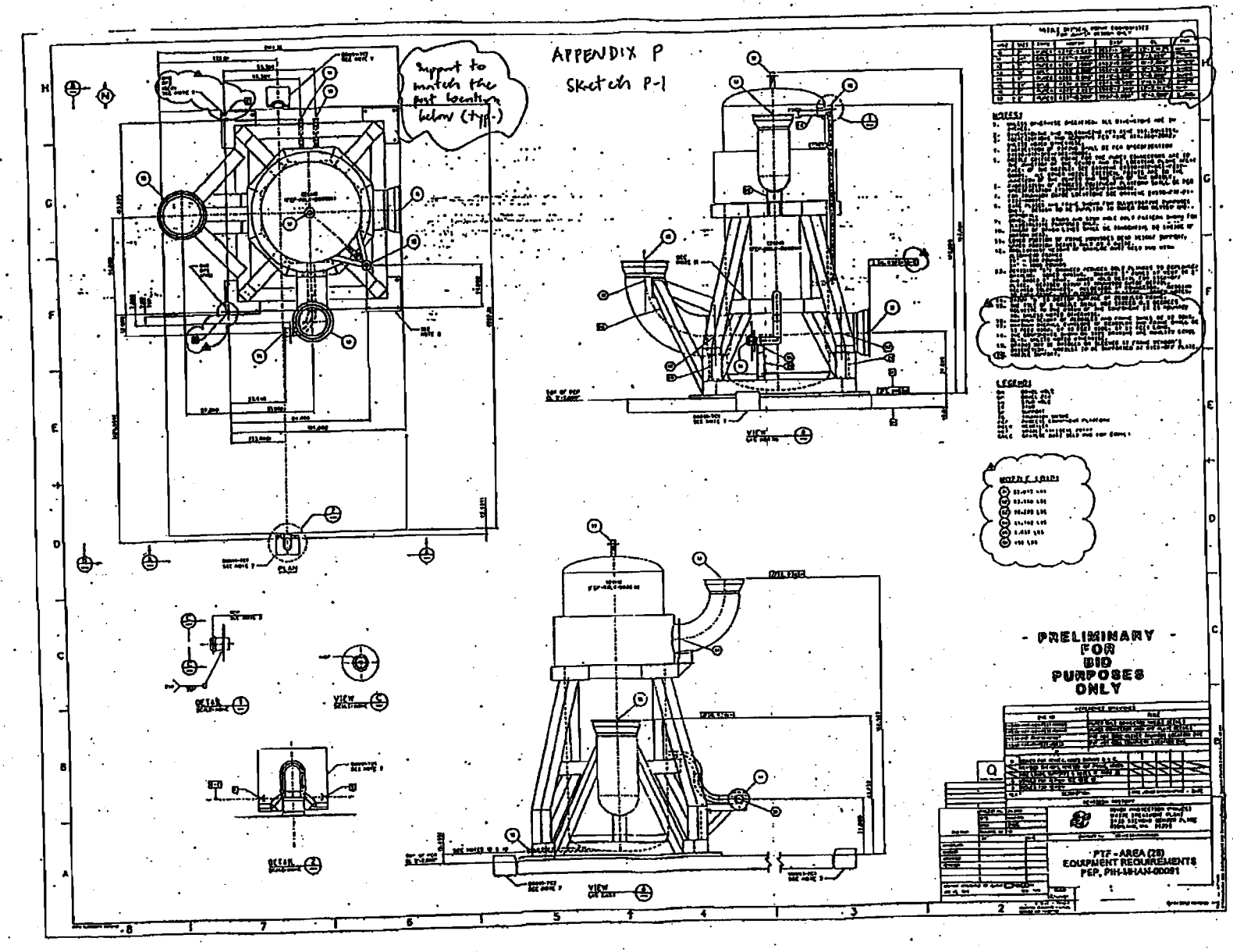
APPENDIX P
Sketch P-1
Support to match the post location below (typ.)
- PRELIMINARY -
FOR
BID
PURPOSES
ONLY
PTF - AREA (28)
EQUIPMENT REQUIREMENTS
PEP, PIH-MHAN-00091

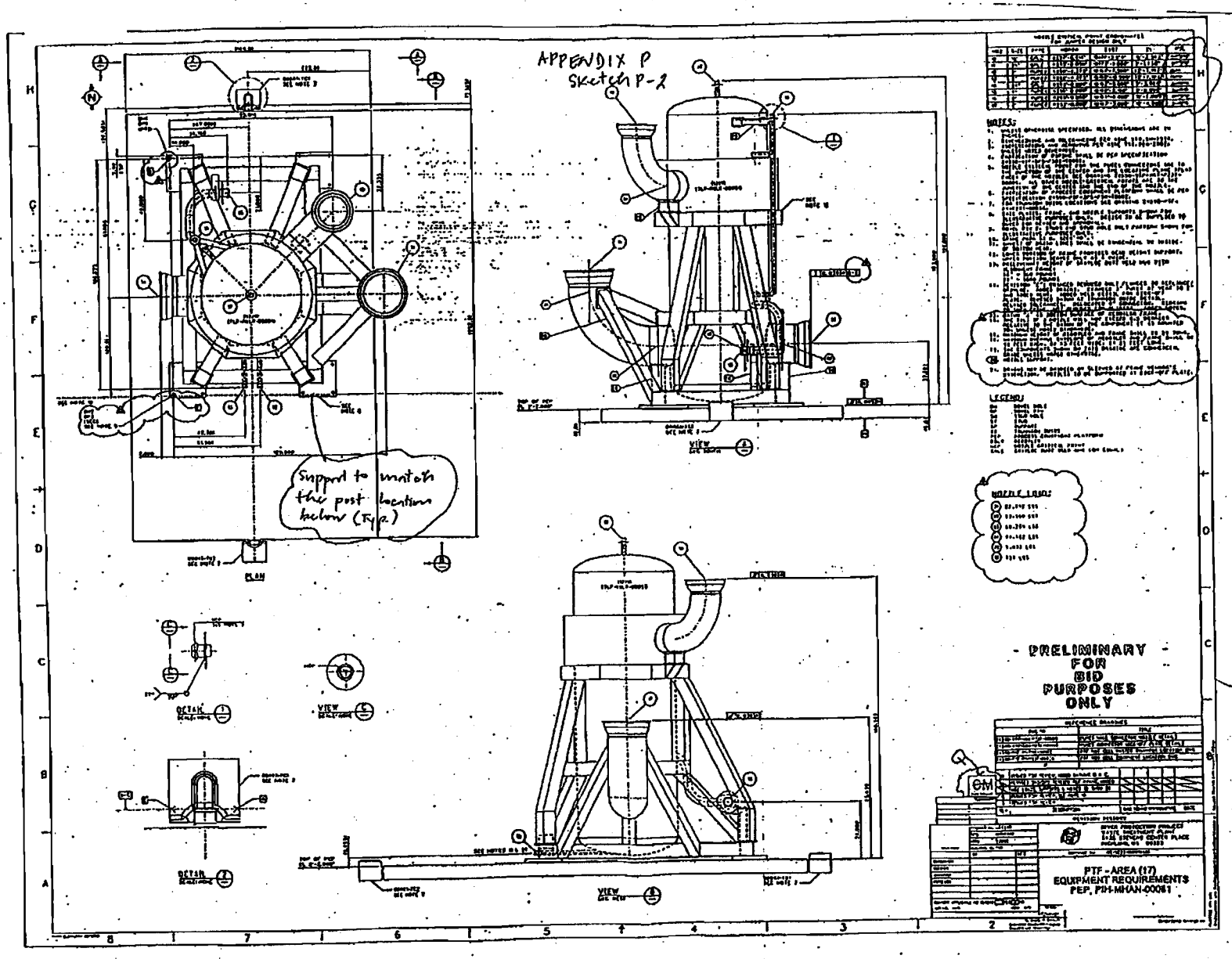
APPENDIX P
Sketch P-2
Support to match the post locations below (Typ.)
- PRELIMINARY -
FOR
BID
PURPOSES
ONLY
PTF - AREA (17)
EQUIPMENT REQUIREMENTS
PEP, P2I-MHAN-00061

APPENDIX P

FEP / TLP Large Bore Reboiler Connector Loads

	System	Force		Moment	
		Axial	Resultant Shear	Torsion	Resultant Bending
		lbf	lbf	ft-lbf	ft-lbf
24-Inch					
AREA_17S	TLP	6400	15400	4300	33900
AREA_17D	TLP	11600	13900	31400	24000
AREA_26S	FEP	2100	8200	17100	30800
AREA_26D	FEP	14600	9900	19100	29300
AREA_27S	FEP	2100	8200	17100	30800
AREA_27D	FEP	14600	9900	19100	29300
18-Inch					
AREA_17ST	TLP	7600	3700	9000	6900
AREA_26ST	FEP	6700	4900	4600	11000
AREA_27ST	FEP	6700	4900	4600	11000

S - Suction D - Discharge ST - Steam

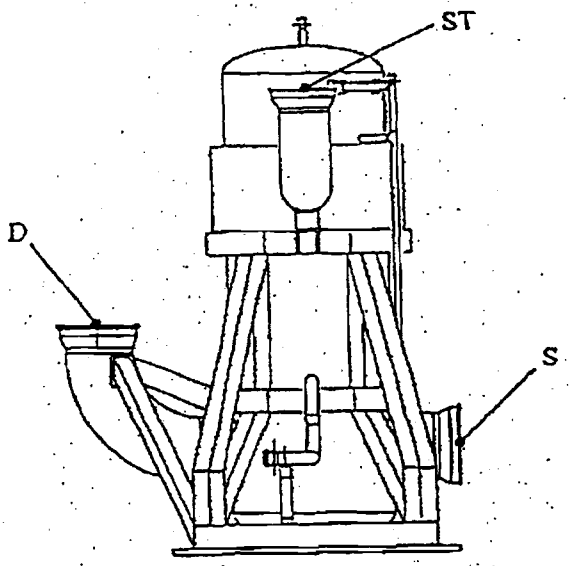

* The loads displayed in the table above are taken from unchecked / preliminary calculations. Loads occur at hub interface as shown in figure above.

APPENDIX P

NOZZLE ORIENTATION, ELEVATION, AND DISTANCE FROM CENTERLINE FEP-RBLR-00001A

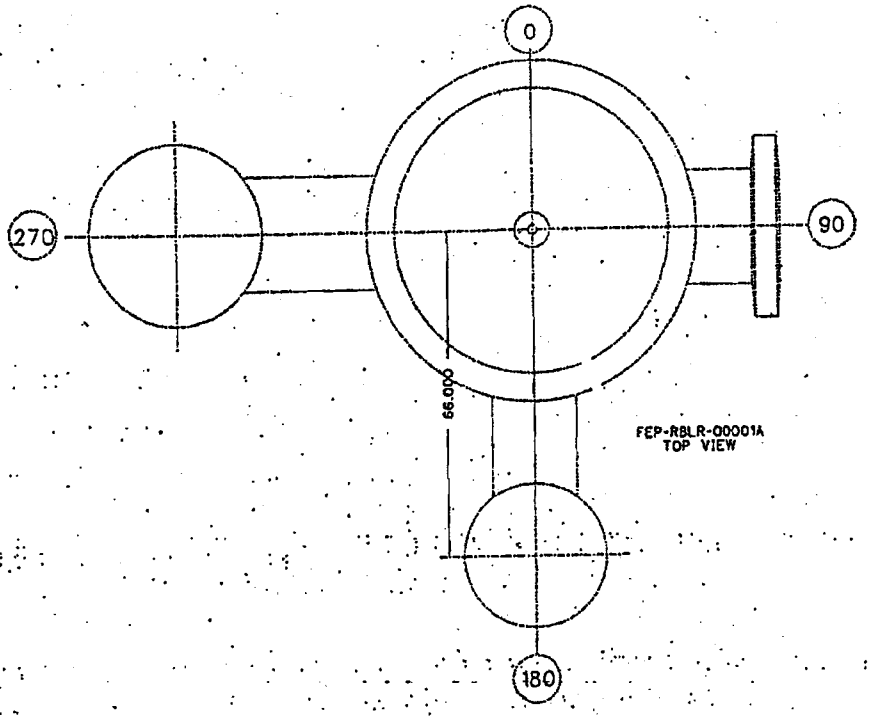

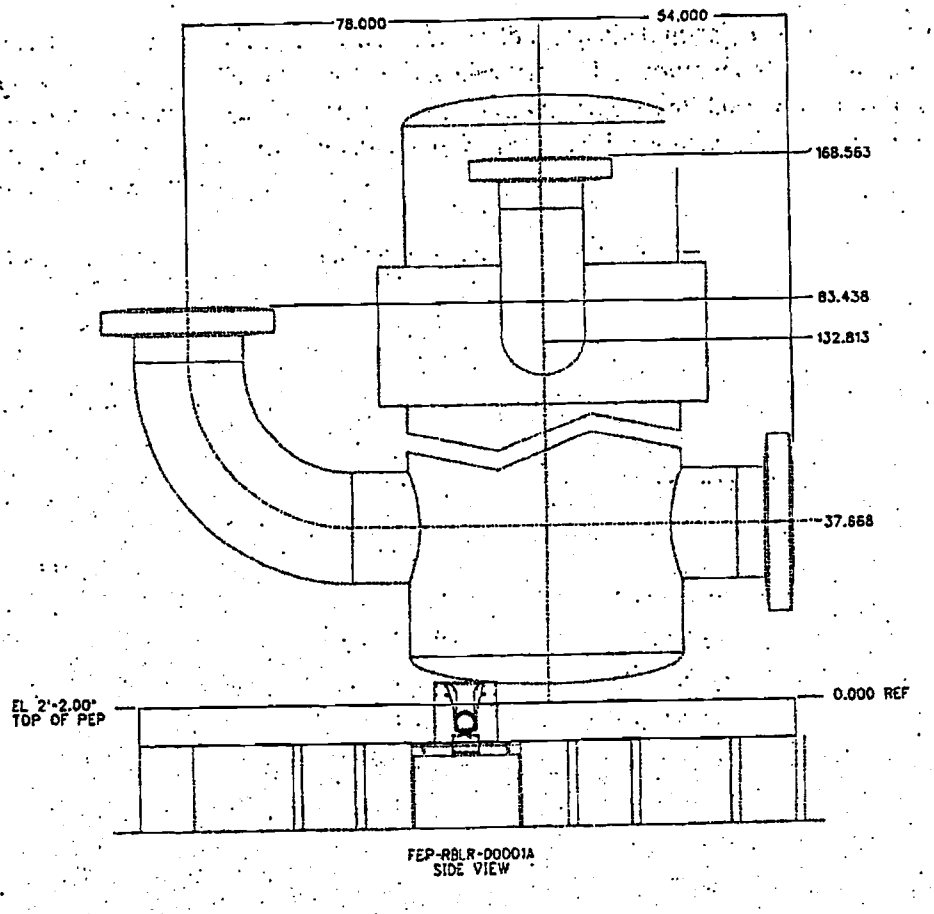

NOZZLE ORIENTATION, ELEVATION AND DISTANCE FROM CENTERLINE FEP-RBLR-00001B

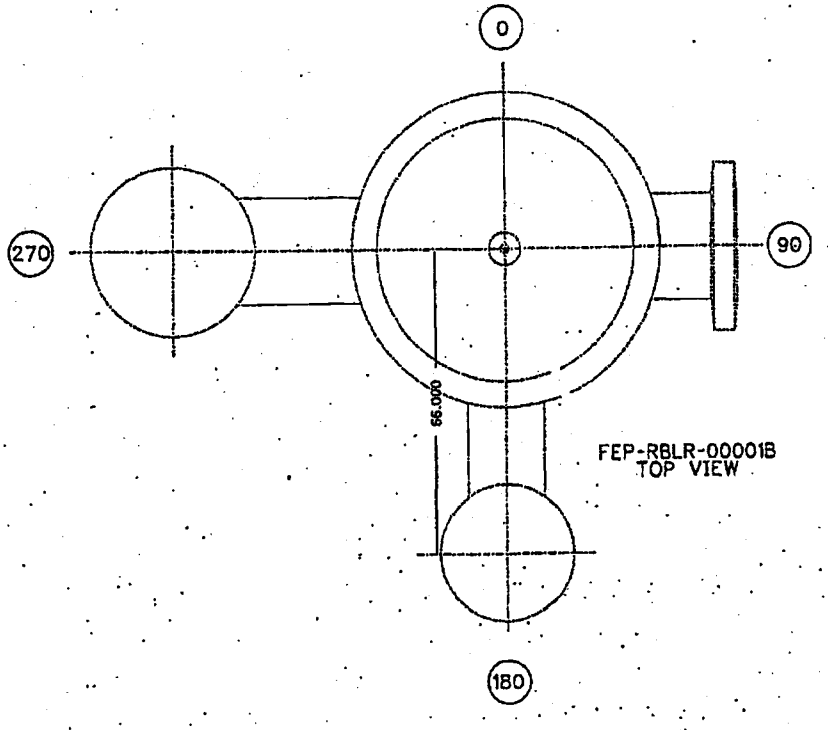

FEP-RBLR-00001B
TOP VIEW

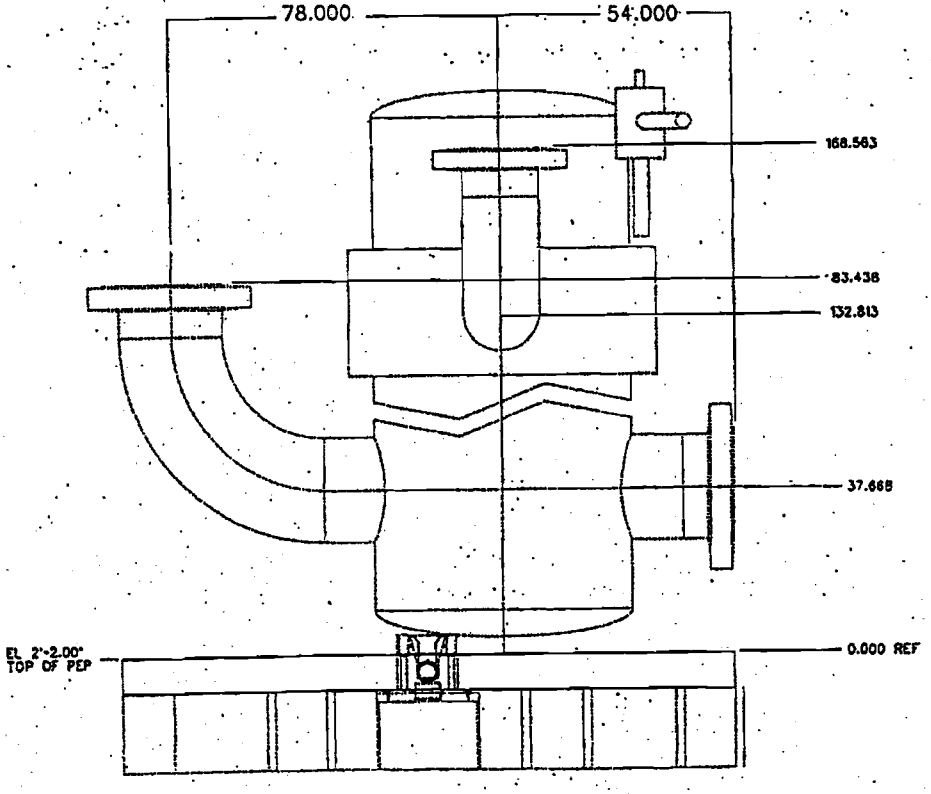

FEP-RBLR-00001B
SIDE VIEW

APPENDIX P

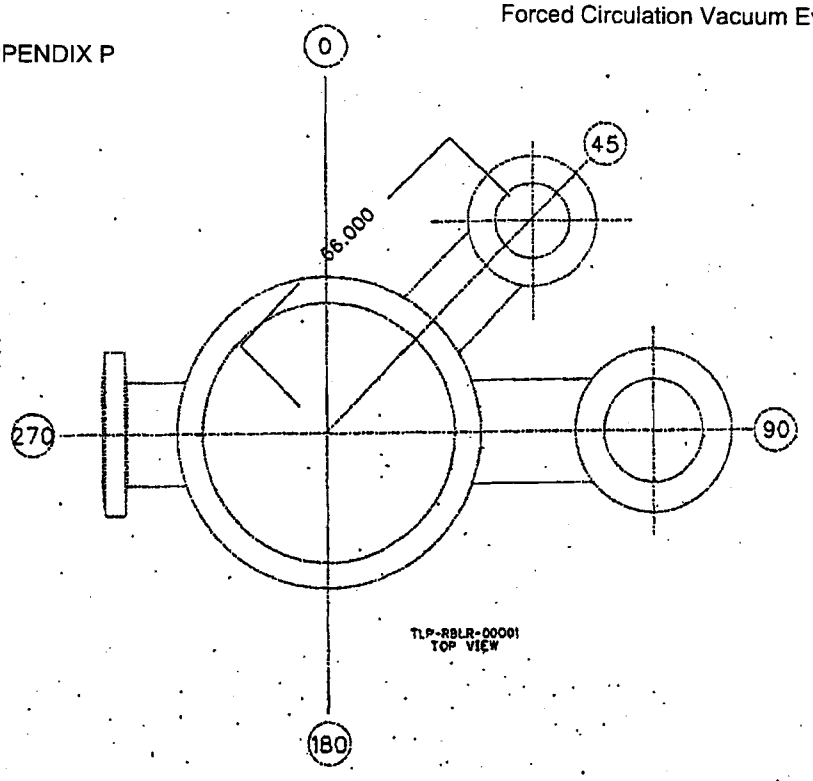

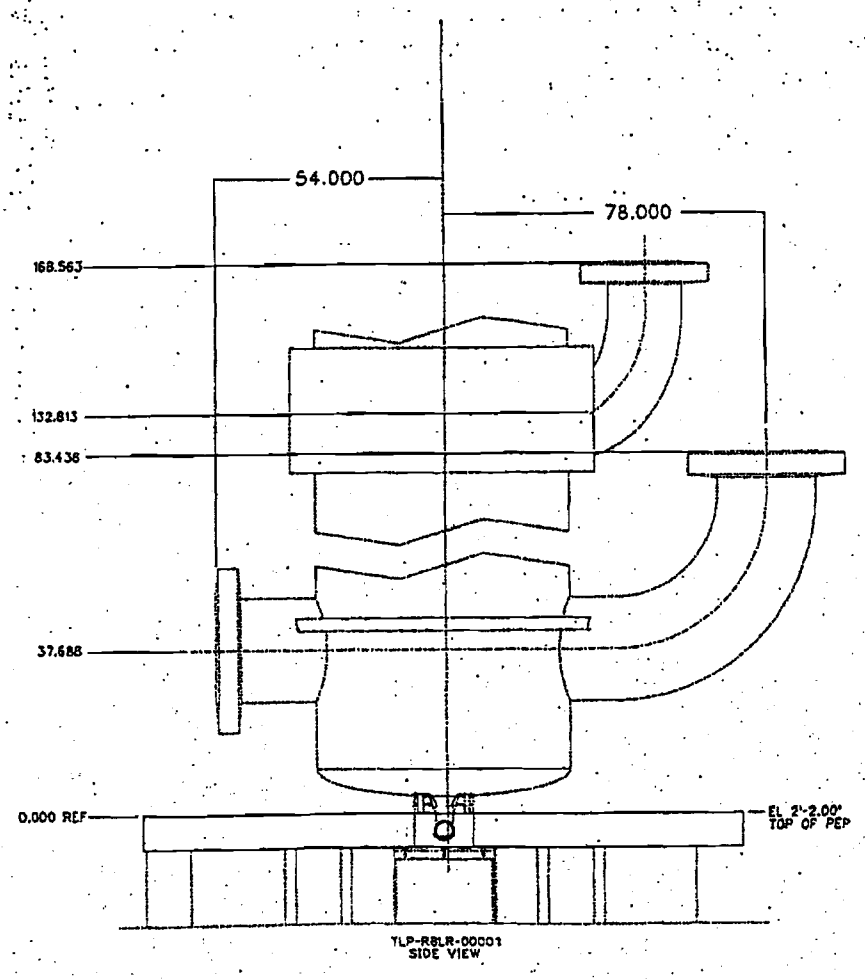

NOZZLE ORIENTATION, ELEVATION, AND DISTANCE FROM CENTERLINE
TLP-RBLR-00001

APPENDIX Q

Reboilers and Recirculation Pumps Layout

APPENDIX Q
SKETCH Q-1

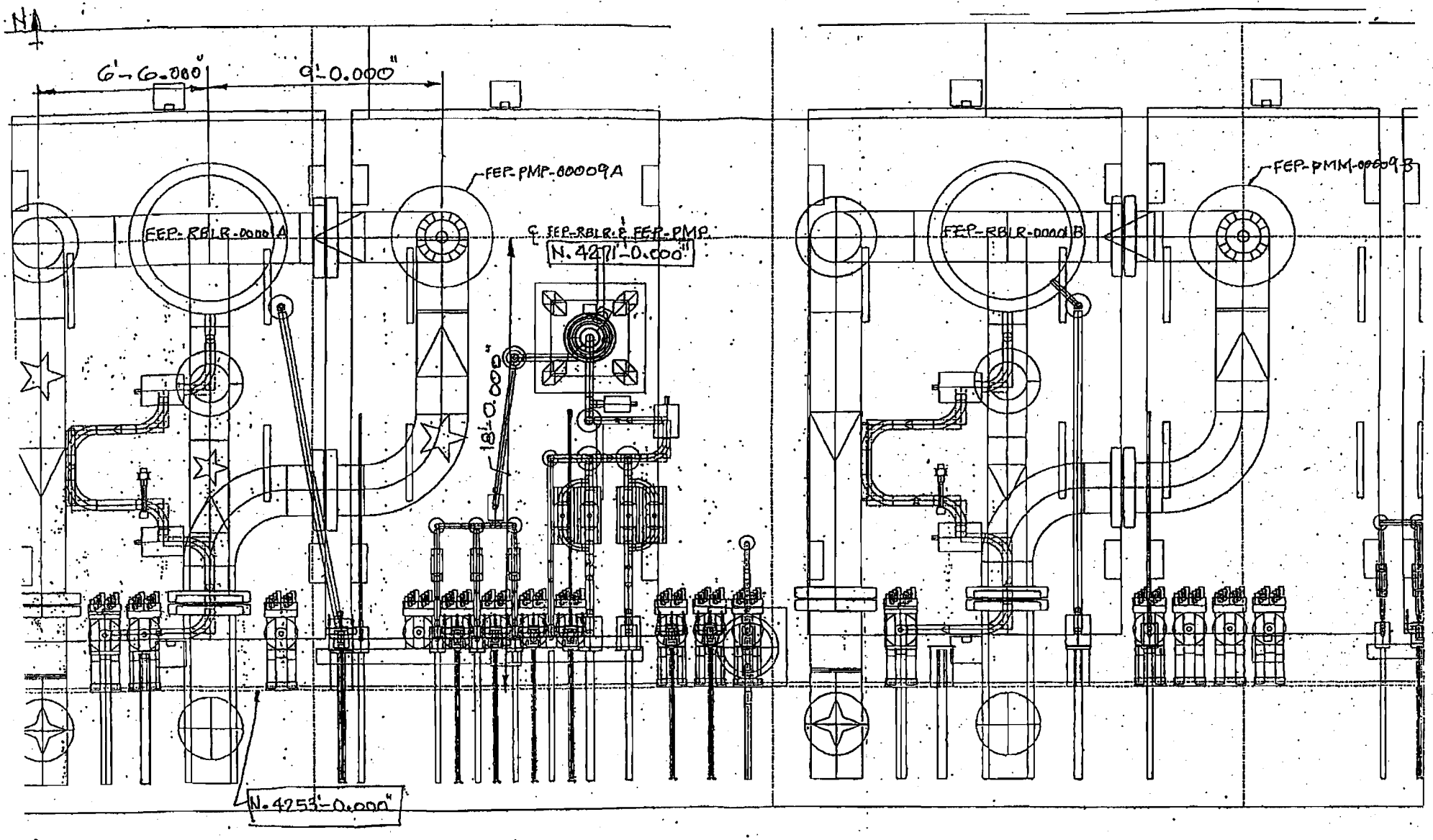

APPENDIX Q
Sketch Q-2

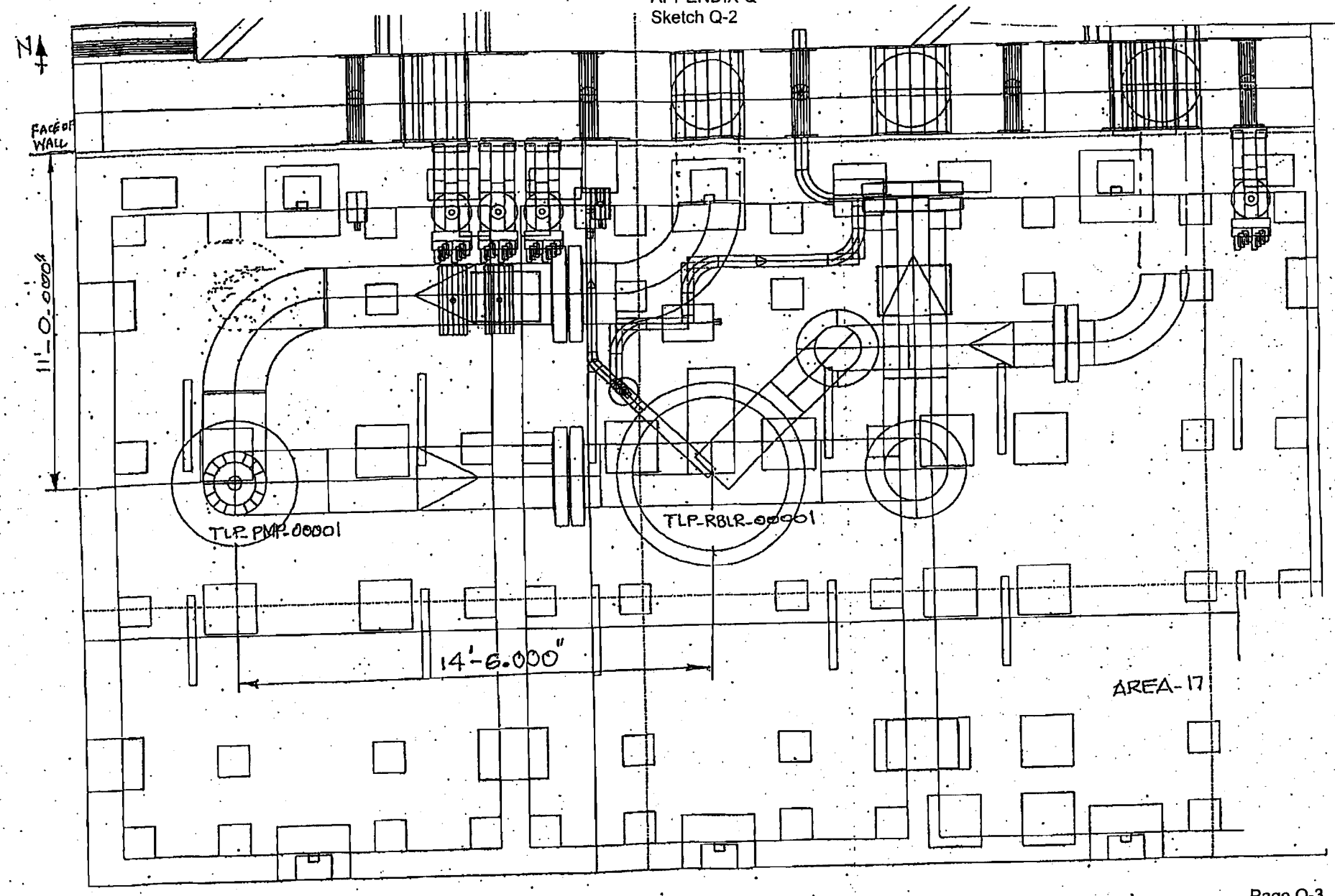

APPENDIX R

Deleted

APPENDIX S

Manufacturers Standard Coating Data Sheet

Manufacturers Standard Coating Data Sheet

The SELLER proposes the following Manufacturers Standard (Mfg. Std.) or alternate coating system that is suitable for the exposure conditions of steel items and equipment in radiation and non-radiation areas.

1. **Equipment Description:** _____
   A. Tag Number _____
   B. Part(s) i.e. skirt, shell, channels, lugs, etc.* _____
   C. Design/Operating Temperatures, designate °F or °C..... _____ °F _____ °C
   D. Does Equipment Receive Steam out (Yes/No), Temperature _____ °F _____ °C
   E. Insulated/Uninsulated _____
   F. Fireproofing (Yes/No) _____
   G. Carbon Steel (CS), Stainless Steel (SS), other (List) _____
2. **Seller:** _____
3. **Surface Preparation:** SSPC No./Profile _____ / _____
4. **Coating System Designation:** (Code)

	First Coat	Second Coat	Third Coat
A. Type of Coating.....			
B. Coating Mfg./No.**			
C. Dry Film Thickness (Min/Max in mils)/(µm) ...			
D. Wet/Film Thickness (Min/Max in mils)/(µm)			
E. Curing Method.....			
F. Color.....			
G. Dry to Recoat			
H. Pot Life.....			
L. Thinner / %			

5. **Total DFT of System:** (Mils/µm)(Min/Max)..... _____ / Min. _____ /Max.
6. **Material Storage:** Temperature Requirements (Min/Max) _____ / _____
7. **Shelf Life:** _____ Months
8. **Application Environmental Limits:**
   A. Temperature Ambient and Surface (Min/Max) ..... _____ / _____ _____ / _____
   B. Humidity (Min/Max)..... _____ / _____
   C. Dew Point ≥5°F above surface temp. (Yes/No)..... _____
9. **Protection of surfaces that will be inaccessible after equipment installation (such as underside of base plates, interior of fans, vessels or equipment housings)** _____
10. **Rust Preventative for machined faces:** (**Mfg./No.) _____
11. **Quantity of touch-up coating supplied:** _____
12. **Additional information:** (attach extra page as necessary) _____

* Use additional copies of this form for each part described in 1 above that requires a different coating system. A completed copy of this data sheet shall be submitted to CONTRACTOR/BUYER with the initial vendor data submittal.

** Include manufacturers technical data sheets and MSDS' for each proposed coating, preservative & solvent

APPENDIX T

Design Evolution Inputs

T.1 Recirculation Pump Remote Connector Design Inputs

Design Input #1: The Hanford connector loads are 2000 lbs resultant force and 2900 ft-lbs resultant moment.

Design Input #2: See attached reference # 2 for Staubli connector drawings. It is recommended to use connector types as shown on drawings S-01162803-A and S-01142503-A for power and signal. Also see sketches provided in this section T.1 for additional design inputs. The Staubli connector force requirement is 400 lbf in any direction.

Design Input #3: For seal water and grease connections, the male plug located on the pump seals which has been called out as a Staubli part number RBE 19.6204/IC will change to Staubli part number N 011 612 04. See sketches # S-01249904-F, # S-00122805-A, # S-00119705-B, and S-111610-04-D provided in this section. The Staubli Fluids Connector shall use Keying #35 for for the seal water and grease connnection.

Design Input #4: Remote impact wrench specification on studs

a) Loosen 750 ft-lbs
b) Tighten 400 ± 25 ft-lbs
c) Range 100 - 400 ft-lbs

Design Input #5: Recirculation pump shall be designed to incorporate remote grease application to thrust bearing.

For power cable (prefer)

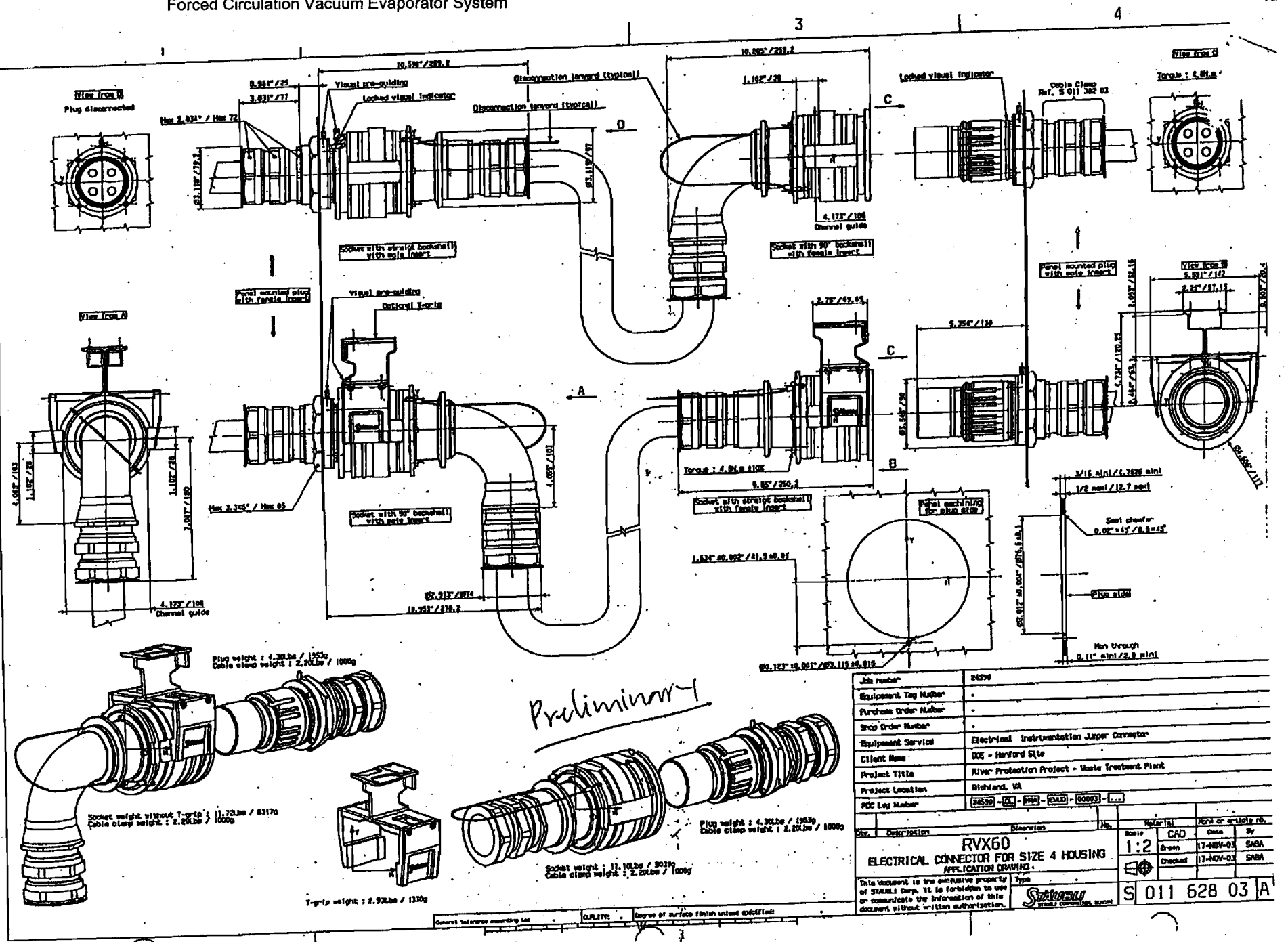

a. For signal cable (prefer)

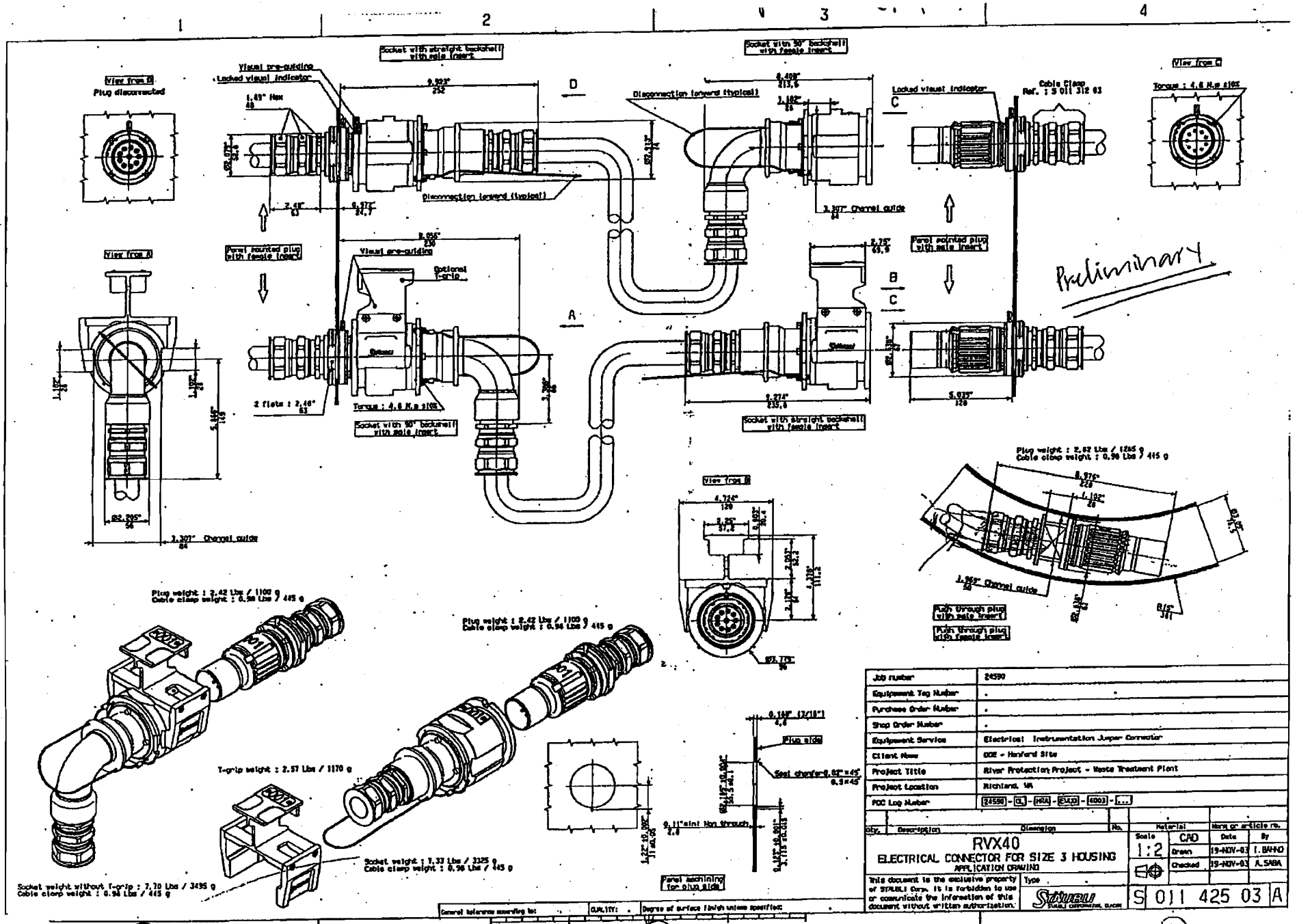

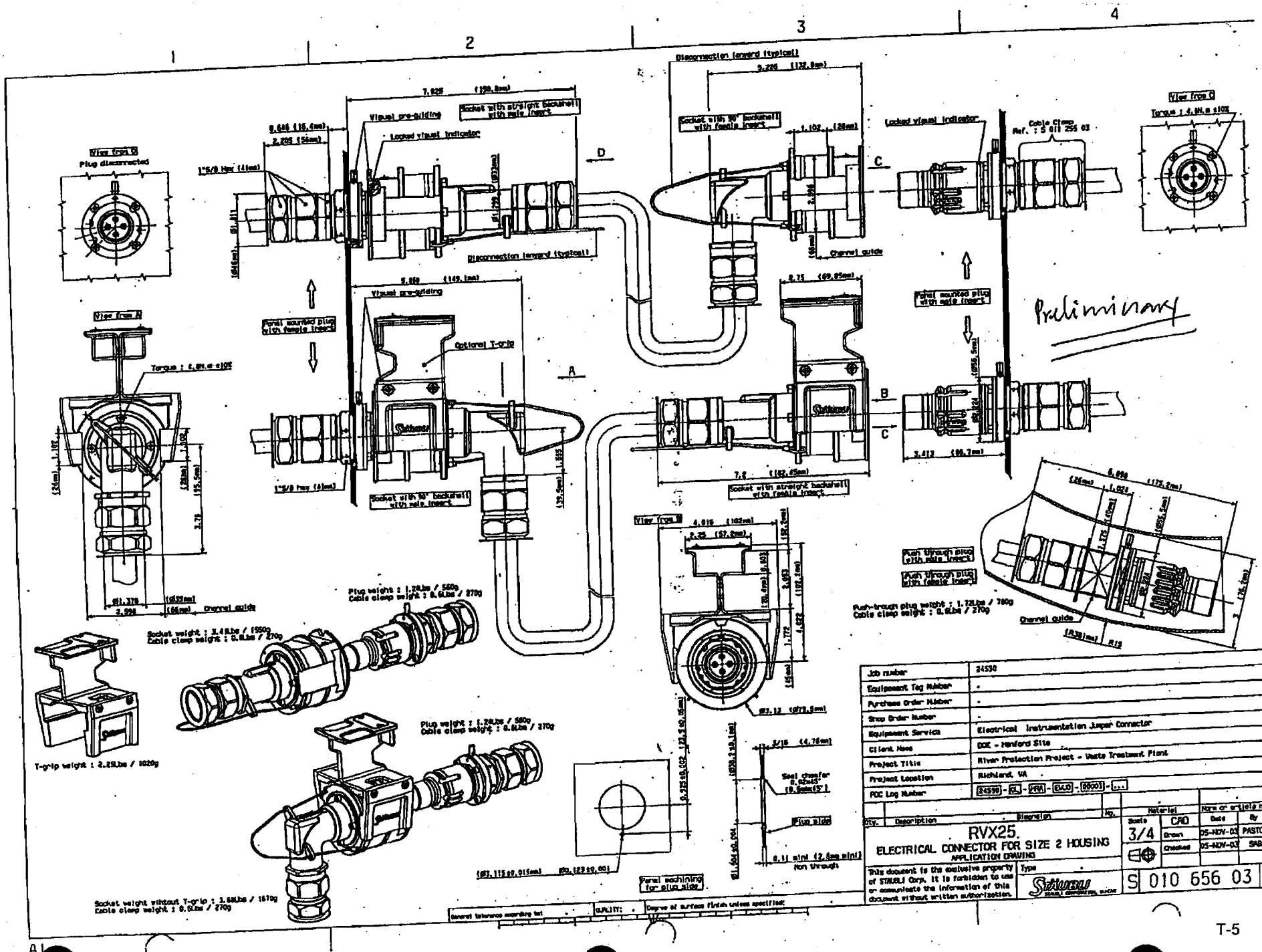
Preliminary
RVX25.
ELECTRICAL CONNECTOR FOR SIZE 2 HOUSING
APPLICATION DRAWINGS
Job number 24590
Equipement Tag Number -
Purchase Order Number -
Shop Order Number -
Equipement Service Electrical Instrumentation Jumper Connector
Client Name DOE - Hanford Site
Project Title River Protection Project - Waste Treatment Plant
Project Location Richland, WA
PDC Log Number 24590 - QL - 0498 - 0640 - 00003 - ...
Scale 3/4
CAD
Drawn 05-NOV-03 PASTORE
Checked 05-NOV-03 SABA
S 010 656 03 A
This document is the exclusive property of STAUBLI Corp. It is forbidden to use or communicate the information of this document without written authorization.
Socket weight without T-grip : 3.68Lbs / 1670g
Cable clamp weight : 0.6Lbs / 270g
T-grip weight : 2.25Lbs / 1020g
Socket weight : 3.48Lbs / 1580g
Cable clamp weight : 0.6Lbs / 270g
Plug weight : 1.28Lbs / 580g
Cable clamp weight : 0.6Lbs / 270g
Plug weight : 1.28Lbs / 580g
Cable clamp weight : 0.6Lbs / 270g
Push-through plug weight : 1.72Lbs / 780g
Cable clamp weight : 0.6Lbs / 270g

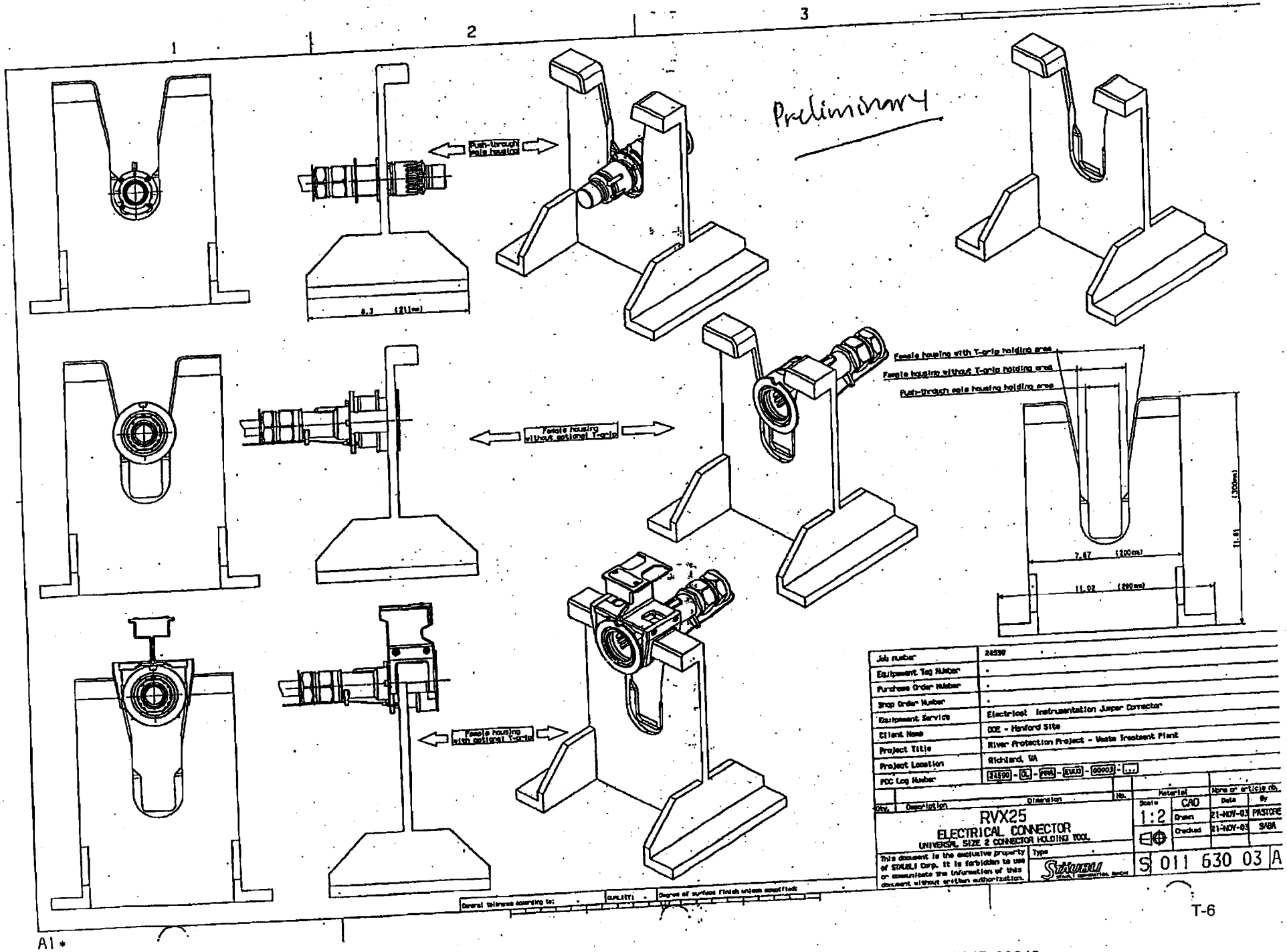
Preliminary
Push-through male housing
Female housing without optional T-grip
Female housing with optional T-grip
Female housing with T-grip holding area
Female housing without T-grip holding area
Push-through male housing holding area
7.87 (200mm)
11.02 (280mm)
11.81 (300mm)
RVX25
ELECTRICAL CONNECTOR
UNIVERSAL SIZE 2 CONNECTOR HOLDING TOOL
Job number 24590
Equipment Tag Number
Purchase Order Number
Shop Order Number
Equipment Service Electrical Instrumentation Jumper Connector
Client Name DOE - Hanford Site
Project Title River Protection Project - Waste Treatment Plant
Project Location Richland, WA
PDC Log Number 24590 - QL - PRN - EVAP - 00003 - ...
Scale 1:2
CAD
Drawn 21-NOV-03 PASTORE
Checked 21-NOV-03 SABA
S 011 630 03 A
This document is the exclusive property of STAUBLI Corp. It is forbidden to use or communicate the information of this document without written authorization.
T-6

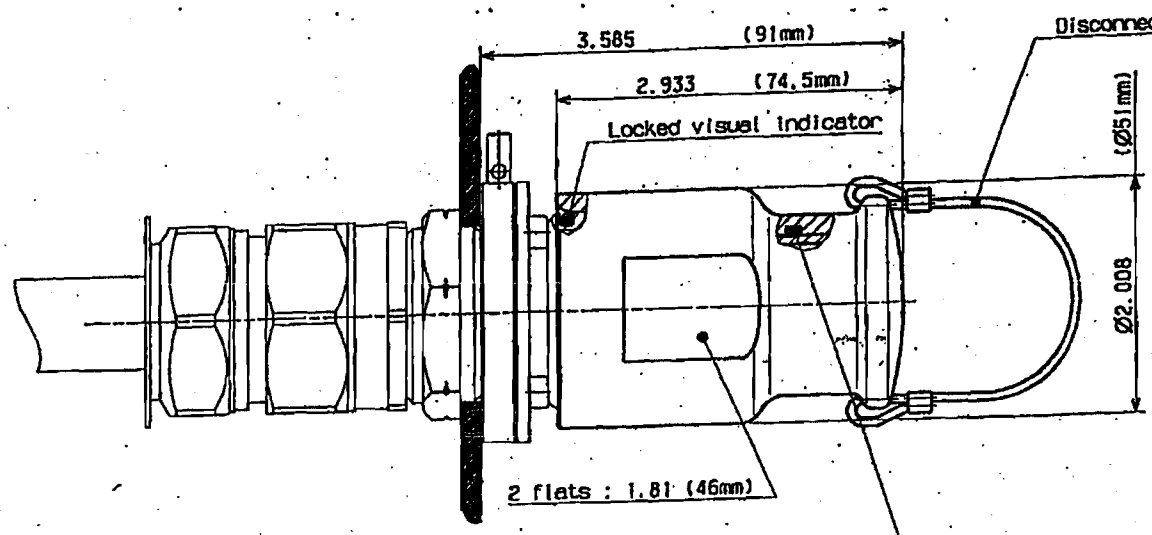

Preliminary

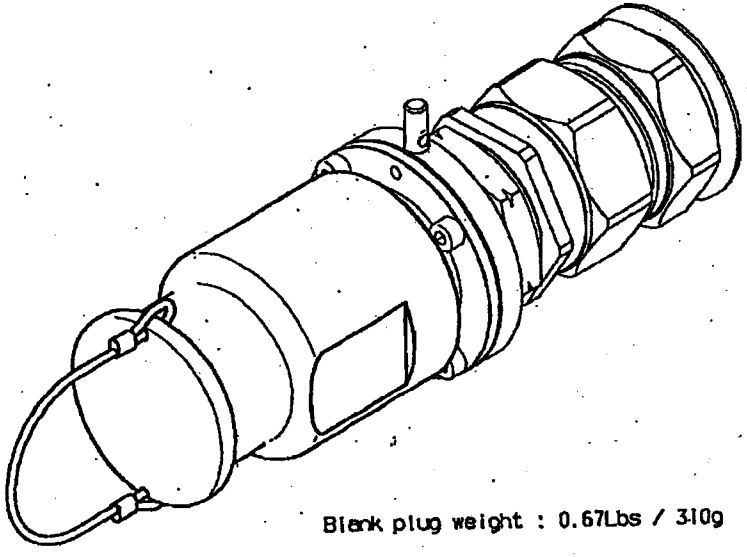

Blank plug weight : 0.67Lbs / 310g

Job number	24590
Equipement Tag Number	.
Purchase Order Number	.
Shop Order Number	.
Equipement Service	Electrical Instrumentation Jumper Connector
Client Name	DOE - Hanford Site
Project Title	River Protection Project - Waste Treatment Plant
Project Location	Richland, WA
PDC Log Number	24590 - QL - MRA - EWU0 - 00003 - ...

Qty.	Description	Dimension	No.	Material	Norm or article nb.
	RVX25			Scale 1	CAD
	ELECTRICAL CONNECTOR BLANK PLUG FOR SIZE 2 HOUSING			Drawn	Date 19-NOV-03 By PASTORE
	APPLICATION DRAWING			Checked	Date 19-NOV-03 By SABA

This document is the exclusive property of STAUBLI Corp. It is forbidden to use or communicate the information of this document without written authorization.

Type

STÄUBLI
STAUBLI CORPORATION, DUNCAN

S 011 494 03 A

General tolerance according to: . QUALITY: . Degree of surface finish unless specified :

A3

T-7

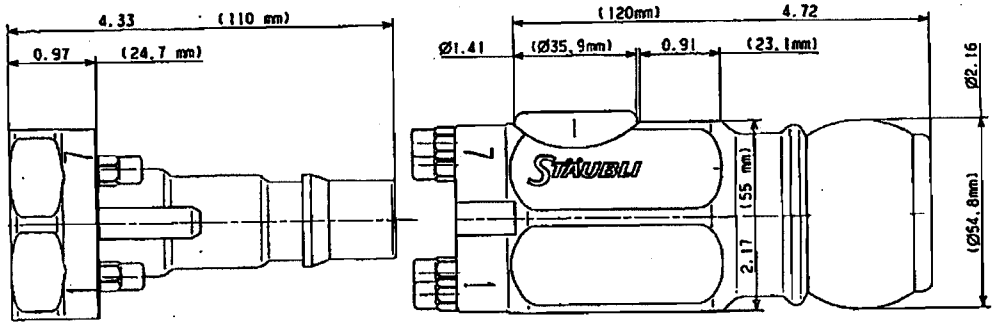

Male connector N 011 612 04

Female connector N 011 611 04

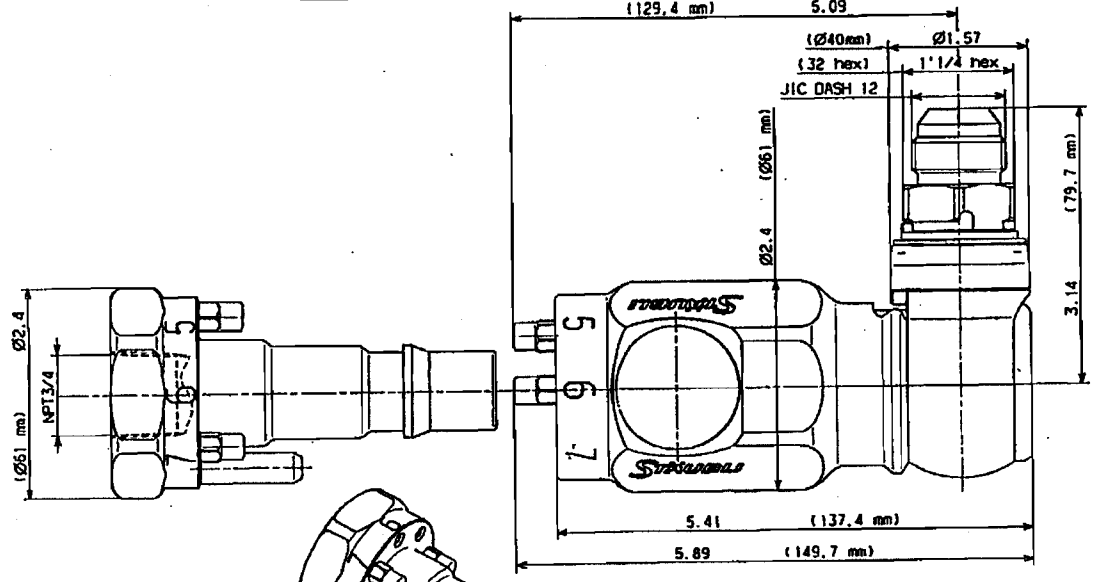

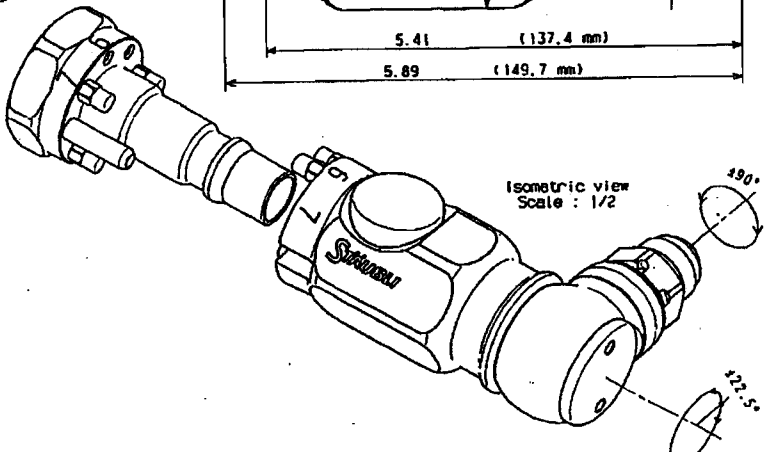

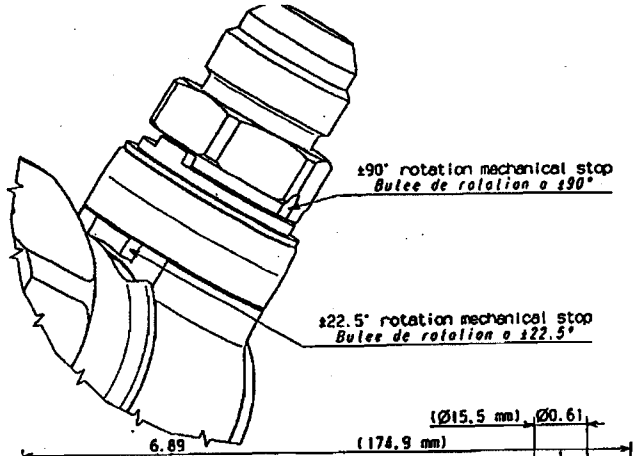

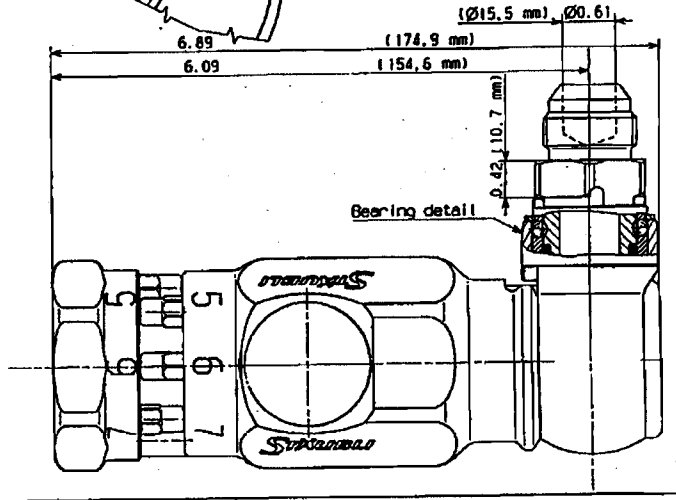

Job number	24590
Equipement Tag Number	.
Purchase Order Number	.
Shop Order Number	.
Equipement Service	Flexible pneumatic / Process Jumper Fabrication
Client Name	DOE - Hanford Site
Project Title	River Protection Project - Waste Treatment Plant
Project Location	Richland, WA
PDC Log Number	24590 - CM - MRA - PF00 - 00003 - ...

Qty.	Description	Dimension	No.	Material	Norm or article no.
	RBE19CM PNEUMATIC CONNECTOR APPLICATION DRAWING			Scale 1	CAD
				Drawn	28-JAN-05 PASTORE
				Checked	28-JAN-05 CHAPPAZ

This document is the exclusive property of STAUBLI Corp. It is forbidden to use or communicate the information of this document without written authorization.

Type STÄUBLI

S 012 499 04 F

General tolerance according to: . QUALITY: . Degree of surface finish unless specified :

A2

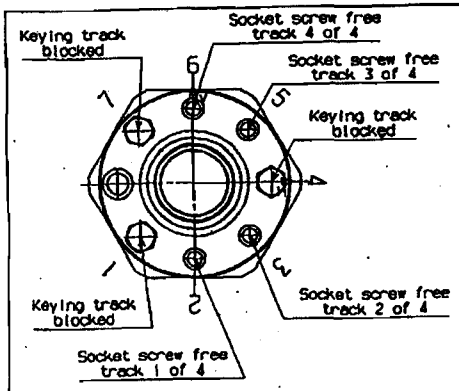

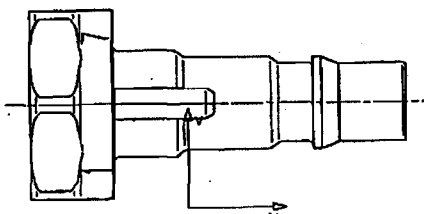

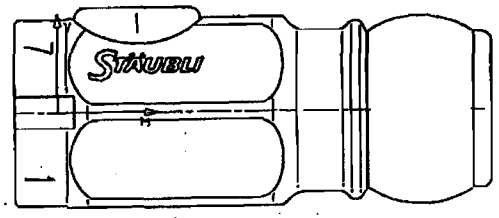

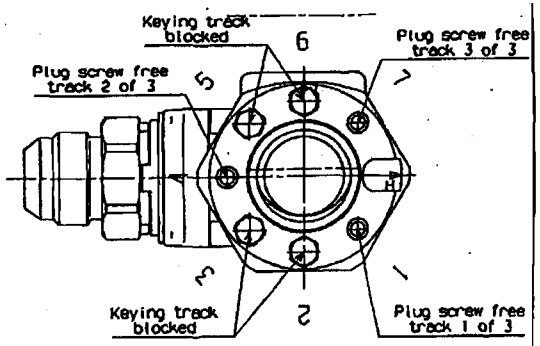

Comb.	Screw 1	Screw 2	Screw 3
01	Track 1	Track 2	Track 3
02	Track 1	Track 2	Track 4
03	Track 1	Track 2	Track 5
04	Track 1	Track 2	Track 6
05	Track 1	Track 2	Track 7
06	Track 1	Track 3	Track 4
07	Track 1	Track 3	Track 5
08	Track 1	Track 3	Track 6
09	Track 1	Track 3	Track 7
10	Track 1	Track 4	Track 5
11	Track 1	Track 4	Track 6
12	Track 1	Track 4	Track 7
13	Track 1	Track 5	Track 6
14	Track 1	Track 5	Track 7
15	Track 1	Track 6	Track 7
16	Track 2	Track 3	Track 4
17	Track 2	Track 3	Track 5
18	Track 2	Track 3	Track 6
19	Track 2	Track 3	Track 7
20	Track 2	Track 4	Track 5
21	Track 2	Track 4	Track 6
22	Track 2	Track 4	Track 7
23	Track 2	Track 5	Track 6
24	Track 2	Track 5	Track 7
25	Track 2	Track 6	Track 7
26	Track 3	Track 4	Track 5
27	Track 3	Track 4	Track 6
28	Track 3	Track 4	Track 7
29	Track 3	Track 5	Track 6
30	Track 3	Track 5	Track 7
31	Track 3	Track 6	Track 7
32	Track 4	Track 5	Track 6
33	Track 4	Track 5	Track 7
34	Track 4	Track 6	Track 7
35	Track 5	Track 6	Track 7

Comb.	Screw 1	Screw 2	Screw 3	Screw 4
01	Track 4	Track 5	Track 6	Track 7
02	Track 3	Track 5	Track 6	Track 7
03	Track 3	Track 4	Track 6	Track 7
04	Track 3	Track 4	Track 5	Track 7
05	Track 3	Track 4	Track 5	Track 6
06	Track 2	Track 5	Track 6	Track 7
07	Track 2	Track 4	Track 6	Track 7
08	Track 2	Track 4	Track 5	Track 7
09	Track 2	Track 4	Track 5	Track 6
10	Track 2	Track 3	Track 6	Track 7
11	Track 2	Track 3	Track 5	Track 7
12	Track 2	Track 3	Track 5	Track 6
13	Track 2	Track 3	Track 4	Track 7
14	Track 2	Track 3	Track 4	Track 6
15	Track 2	Track 3	Track 4	Track 5
16	Track 1	Track 5	Track 6	Track 7
17	Track 1	Track 4	Track 6	Track 7
18	Track 1	Track 4	Track 5	Track 7
19	Track 1	Track 4	Track 5	Track 6
20	Track 1	Track 3	Track 6	Track 7
21	Track 1	Track 3	Track 5	Track 7
22	Track 1	Track 3	Track 5	Track 6
23	Track 1	Track 3	Track 4	Track 7
24	Track 1	Track 3	Track 4	Track 6
25	Track 1	Track 3	Track 4	Track 5
26	Track 1	Track 2	Track 6	Track 7
27	Track 1	Track 2	Track 5	Track 7
28	Track 1	Track 2	Track 5	Track 6
29	Track 1	Track 2	Track 4	Track 7
30	Track 1	Track 2	Track 4	Track 6
31	Track 1	Track 2	Track 4	Track 5
32	Track 1	Track 2	Track 3	Track 7
33	Track 1	Track 2	Track 3	Track 6
34	Track 1	Track 2	Track 3	Track 5
35	Track 1	Track 2	Track 3	Track 4

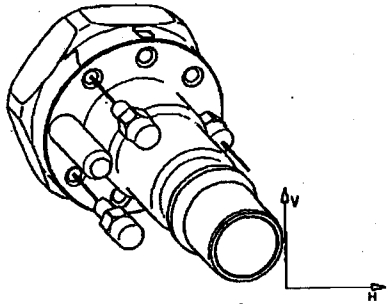

Example : combination 12

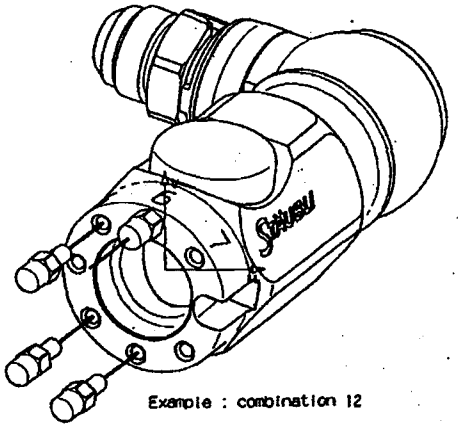

Example : combination 12

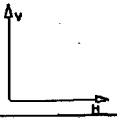

* For each combination the 7 screws must be installed.
* Screws thread lock : Loctite F2432
* Torque : 9.5 N.m

Job number	24590
Equipement Tag Number	.
Purchase Order Number	.
Shop Order Number	.
Equipement Service	Flexible pneumatic / Process Jumper Fabrication
Client Name	DOE - Hanford Site
Project Title	River Protection Project - Waste Treatment Plant
Project Location	Richland, WA
POC Log Number	24590 - CM - MRA - PF00 - 00003 - ...

N.Brd | Designation | Dimension | Rep. | Notions | Marque ou N° d'article

RBE19CM

Key combination sheet and assembly instructions

Echelle		Date	Visa
1	CAD		
	Dessiné	10-JAN-05	PASTORE
	Contrôlé	10-JAN-05	CHAPPAZ

Ce document est la propriété exclusive de STAUBLI FAVERGES. Il est interdit d'en faire usage ou de le communiquer sans son autorisation écrite.

Type

S 001 228 05 A

Tolérances générales selon : | Qualité Critères : | Degré de façonnage aux indications spéciales :

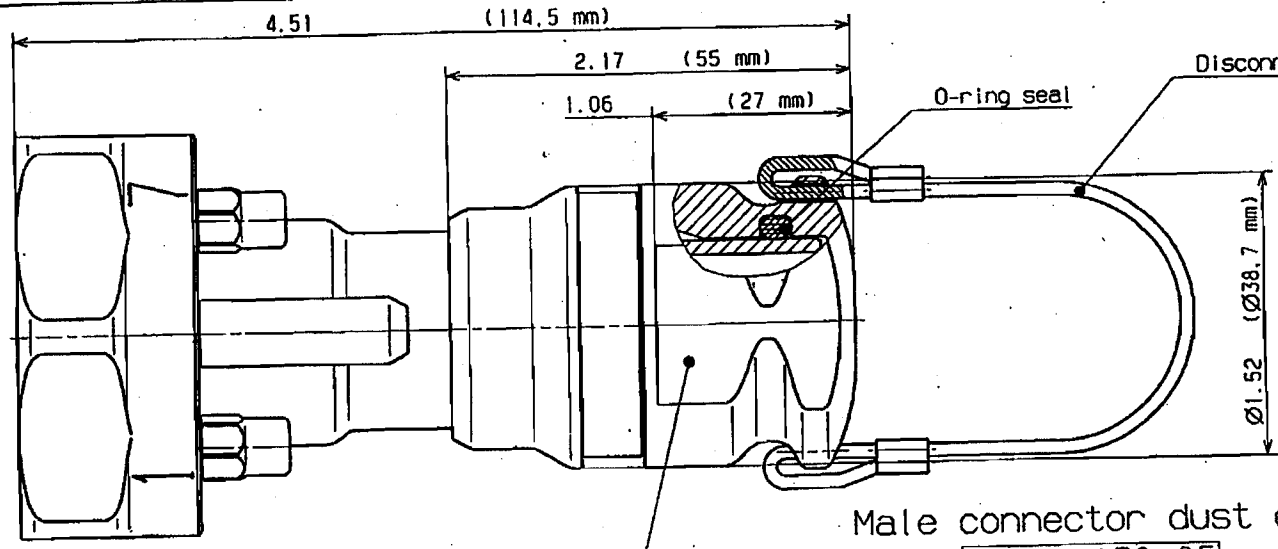

Male connector dust cap
N 001 130 05

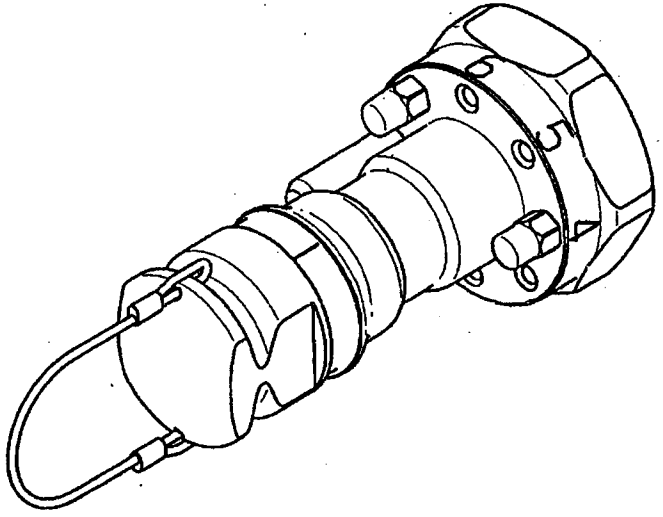

Job number	24590
Equipement Tag Number	.
Purchase Order Number	.
Shop Order Number	.
Equipement Service	Flexible pneumatic / Process Jumper Fabrication
Client Name	DOE - Hanford Site
Project Title	River Protection Project - Waste Treatment Plant
Project Location	Richland, WA
PDC Log Number	24590 - CM - MRA - PF00 - 00003 - ...

Qty.	Description	Dimension	No.	Material	Norm or article nb.

RBE19CM
PNEUMATIC CONNECTOR DUST CAP
APPLICATION DRAWING

Scale	CAD	Date	By
1	Drawn	28-JAN-05	PASTORE
	Checked	28-JAN-05	CHAPPAZ

This document is the exclusive property of STAUBLI Corp. It is forbidden to use or communicate the information of this document without written authorization.

Type

STÄUBLI
STAUBLI CORPORATION, DUNCAN

S 001 197 05 B

General tolerance according to: . QUALITY: . Degree of surface finish unless specified :

A3 *

PRODUCT APPLICATION SHEET
RBE 19 CM

APPLICATION

Remotely operated fluid connector for radioactive environment designed to allow a high number of keying possibilities set on site.

CONNECTION:

1. The three sets of opposed flats on the female housing allow the manipulator jaws to grab and index the connector during operation.
2. The staged guiding helps in addressing the misalignment between the male and female connector.
3. The visual pre-guiding helps the operator to position the indexation.
4. The indexation operates before the safety keys.
5. The safety keying will then allow connection only if the female connector configuration matches the male one. (***picture 2*** : safety keying, ***picture 3*** : purple screw unmatches the gray one)
6. The connection can now be completed by the automatic locking mechanism (no need to operate the locking mechanism during connection). Once the indexing is made the connectors can be pushed using the flat area located on the elbow.

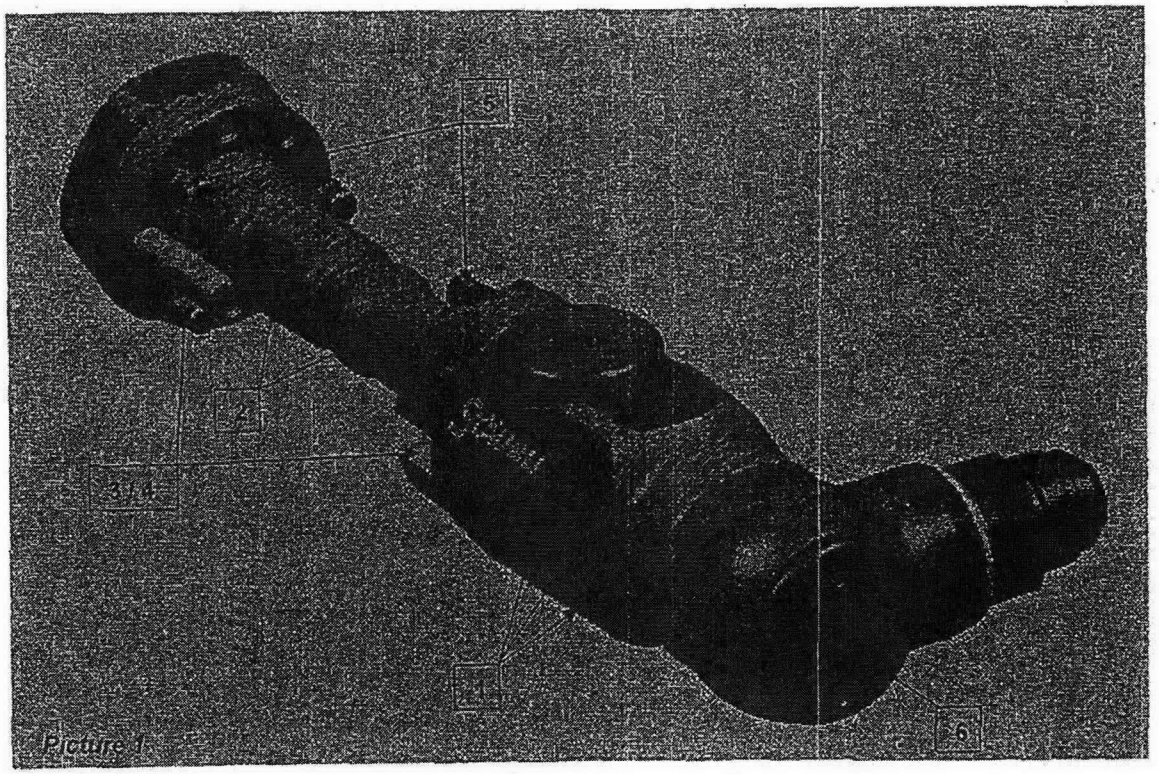

Picture 1

This document is the exclusive property of STAUBLI Corp. It is forbidden to use or comunicate the information of this document without written authorization.

Written : Pastore	Le : 28/01/05	Checked : Chappaz	Le : 28/01/05

STÄUBLI S 111 610 04 D

DISCONNECTION:

Directly push the release button for disconnection.

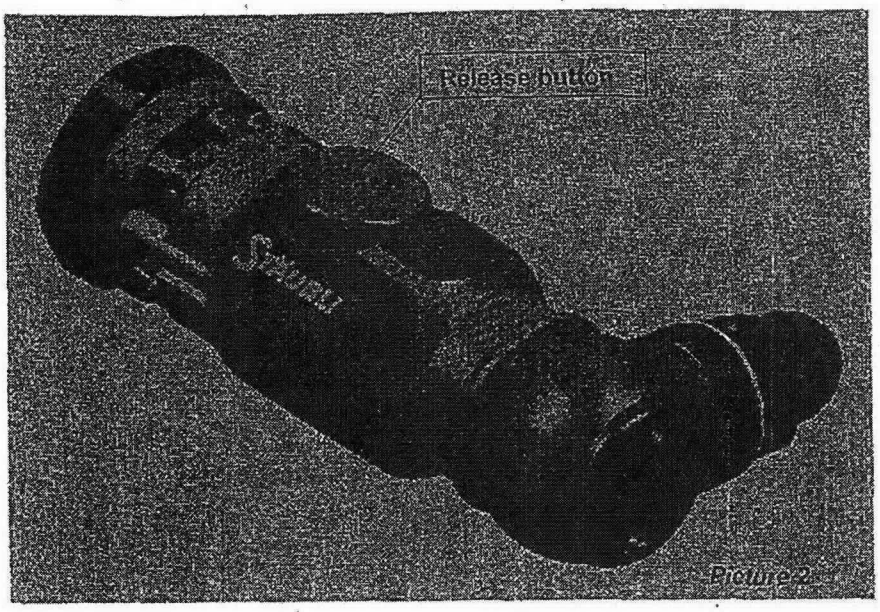

Picture 2

KEYING:

The connector will supply a total number of 35 non-interchangeable keys. The operator assembling the male and female connector sets all keys on site.

- **Male connector** (plug) setting is described on ***picture 1 and 3***. 3 screws take place among 7 possible locations (location number engraved on the body).
- **Female connector** (socket) setting works the opposite way using screws taking place in the remaining locations (location number engraved on the body).

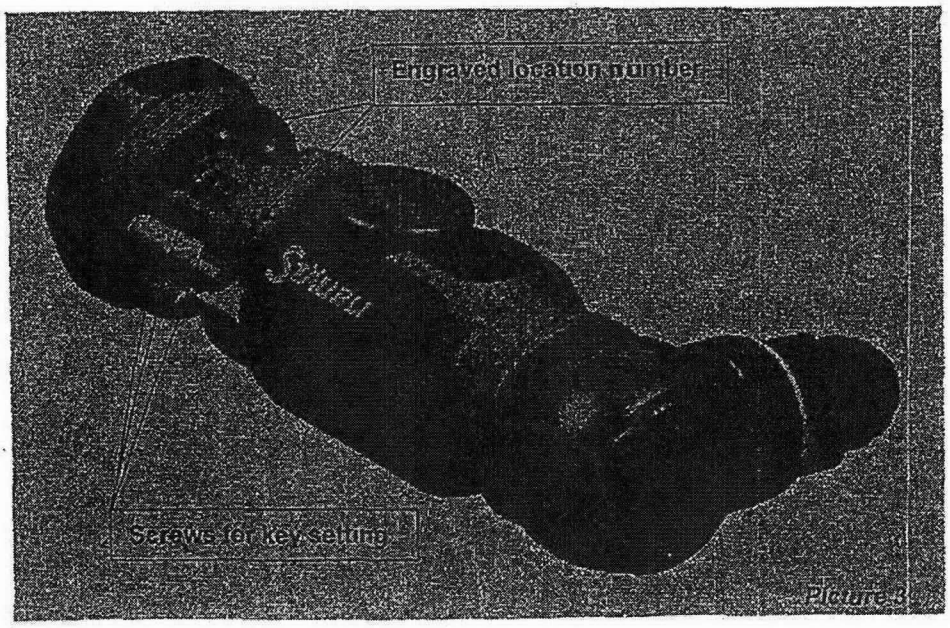

Picture 3

This document is the exclusive property of STAUBLI Corp. It is forbidden to use or comunicate the information of this document without written authorization.

Written : Pastore	Le : 28/01/05	Checked : Chappaz	Le : 28/01/05

STÄUBLI | S | 111 610 04 | D

FITTINGS AND MOUNTING:

- **Female connector** (socket) has a male JIC DASH12 threaded end fitting. A rotating 90° backshell assembly allows a free angular positionning according to the 2 rotations axis ***(See picture 4)***
- **Male connector** (plug) has a female threaded connection with a 3/4" NPT.

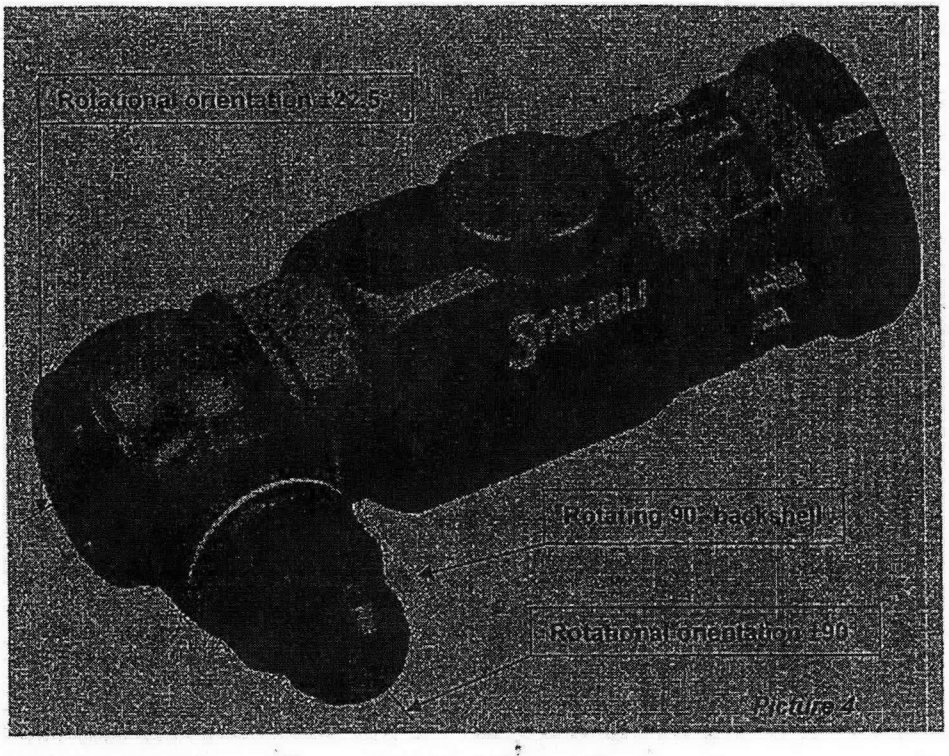

Picture 4

DUST CAP:

Disconnected plug will be protected with a dust cap.

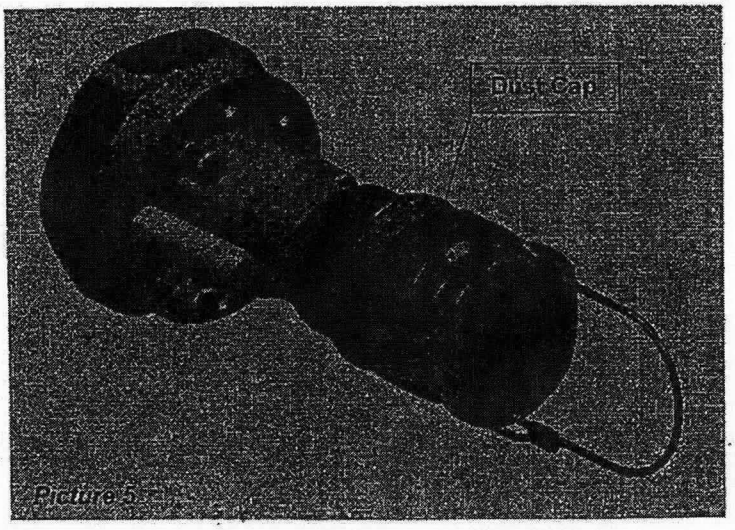

Picture 5

This document is the exclusive property of STAUBLI Corp. It is forbidden to use or comunicate the information of this document without written authorization.

Written : Pastore	Le : 28/01/05	Checked : Chappaz	Le : 28/01/05

STÄUBLI S 111 610 04 D

MATERIALS:

Mechanical connector is 316L stainless steel with ethylene propylene soft O-ring seals.

TECHNICAL FEATURES

• Working temperature	-25°C + 150°C (-4°F up to 302°F)
• Socket valving	unvalved
• Plug valving	unvalved (straight through bore)
• Seals lubrication	STÄUBLI G 0 lubricant (validated for use in nuclear environment by E.D.F)
• Plug weight	0.550 Kg (1.25 Lb)
• Socket weight	1.800Kg (3.97 Lb)
• Dust cap weight	0.300 Kg (0.66 Lb)
• Connection strength	80N (without pressure)
• Disconnection strength	90N (without pressure)
• Identification	Manufacturer's name, part number and week and year of manufacturing engraved on male and female connectors
• Packaging	Single unit in sealed plastic bag.

PARTNUMBERS

Part number	Description
N 011 611 04	Female connector
N 011 612 04	Male connector
N 001 130 05	Male connector dust cap

Stäubli reserves the right to modify product without prior notice.
This technical data sheet has been issue for a given job; therefore this document cannot be reproduced nor disclosed without Stäubli's written authorization.

This document is the exclusive property of STAUBLI Corp. It is forbidden to use or comunicate the information of this document without written authorization.

Written : Pastore	Le : 28/01/05	Checked : Chappaz	Le : 28/01/05

STÄUBLI S 111 610 04 D

T.2 Reboiler Grayloc Backing Plate

Design Input: It is acceptable design that the Grayloc backing plates for the 24" diameter process inlet of the reboilers FEP-RBLR-00001A/1B and TLP-RBLR-00001 can be installed after reboiler has after reboiler has been transported through airlock (inside hotcell). Furthermore, the Grayloc backing plate for the 18" diameter steam inlet of the reboiler TLP-RBLR-00001 can also be installed after the TLP reboiler has been through airlock.

T.3 Floor loading

Design Input: The uniform load is defined as floor loading transmitted by the skid to the floor without spreading of the load out through the supporting concrete slab. The floor loadings listed in the table below has been determined to be acceptable.

Allowable Uniform Floor Loading Directly Under Skid Footprint

Equipment	Location	Weight (Operating + Skid) (lbs)	Skid Foot Print Floor Area (ft^2)	Uniform Load (Operating) (lbs/ft^2)
FEP-SEP-00001A	J : 8-9 (0'-0")	134,500	400	**336**
FEP-SEP-00001B	J : 10-11 (0'-0")	134,500	400	**336**
TLP-SEP-00001	D : 18 (0'-0")	134,500	400	**336**
FEP Condenser Skid A	K-L : 8 (56'-0")	70,000	179	**391**
FEP Condenser Skid B	K-L : 10-11 (56'-0")	70,000	179	**391**
TLP Condenser Skid	D-E : 19-20 (56'-0")	70,000	179	**391**
FEP-VSL-00005	M : 7-8 (0'-0")	45,100	66	**683**
TLP-VSL-00002	B : 24-25 (0'-0")	24,000/4	1	**6000**
AFR-TK-00001	G-H : 9-10 (77'-0")	24,000	40	**600**
AFR Pump Skid	G-H : 9-10 (77'-0")	415	12	**35**

Note: Uniform load (lbs/ft^2) = Total Equipment Weight (lbs) / Foot Print Area (ft^2)

T.4 Surface Finish for Equipment in the Hot Cell

Design Input #1: A surface finish of 125 micro-inches is required for non-rotating parts such as reboiler, support stands, recirculation pump, recirculation piping, and lifting yokes. The surface finish of 125 micro inches shall be applied to machined surfaces not all surfaces

Design Input #2: A surface finish of 63 micro-inches is required for rotating parts such as pump shaft and impeller.

T.5 Manipulator Capability for Separator Vessel Head Crane

Design Input: There will be no manipulator capability for the crane on the 56-ft elevation for separator vessel head removal. The current plan is to install a monorail and hoist when there is a need to replace separator demister pads.

T.6 Axial Flow Pump ASDs

Design Input: The ASDs for FEP-PMP-00009A/9B will be installed in the MCC room P-417 on the 77'-0" elevation and the ASD for TLP-PMP-00009 will be installed in the MCC room P-0315 on the 56'-0" elevation. These MCC rooms are designed as R2/C2 as shown on the drawings 24590-PTF-P01T-00003 and 24590-PTF-P01T-00004. The temperature range for these MCC rooms is between 59-113 °F and the humidity range of 5 - 85 %.

T.7 Instrumentation

Design Input #1 - Final Instrument Location Drawings:

Seller is no longer required to provide instrument location and mounting information on the datasheet. Instrument location and mounting information will be completed by Buyer as required on the data sheets.

Design Input #2 - BNI Instrument Details:

Seller is no longer required to provide loop drawings that include schematic and wiring information. BNI will use Set Route and Intools for wiring information. For the 60% design stage, Seller is not required to provide environmental criteria, manufacturer or manufacturer's model number since they will be addressed at the 90% design milestone. Seller shall provide the following I&C information at 60% design:

1) An Instrument Index that includes the type of instrument, service description, calibration range, tag number, signal type, P&ID number and data sheet number.

2) Data Sheets as supplied with the contract package completed with as much information as is available, including tag numbers, calibration range, instrument range and specific process parameters, etc.

3) Logic diagrams which complement the system description.

T.8 Off-gas piping Condenser Intra-Skid Piping

Design Input: No insulation is required for off-gas piping and condenser intra-skid piping. These pipes are in restrictive rooms where no personnel enter during evaporator system operations.

T.9 Separator Vessels

Design Input #1: Separator Vessel Lower Frame:

No internal components are allowed except the use of Nelson studs on the lower ten inches of the inside surface. Seller shall provide minimum amount of grouting requirements to provide adequate stiffness for the lower frame of solid ring of 18-inches high and 19-feet square

Design Input #2: External Ring for Spray Nozzles:

Seller shall design and provide external rings for both the upper and lower demister pad spray nozzles. These external rings shall be connected together to provide an accessible connection at approximately 48'-0" plant elevation.

T.10 FEP Condensate vessel

Design Input: Seller shall provide a separate FEP condensate vessel support ring plate to interface properly with floor embeds. The ring plate will be field welded to embedded plates on both sides. Vessel skirt will be filed welded to ring plate at exterior face only with partial penetration and fillet welds.

T.11 Equivalent Lengths for Centrifugal Pumps

The piping equivalent length is provided on the table below for pump sizing calculation. Please be advised that the bounding values have incorporated the line size changes. However, the flow resistance due to flow restriction orifice, backpressure control valve, discharge spray nozzle has not incorporated into the bounding values because they are to be sized by Seller. Seller shall include these flow resistance in their pump sizing calculation.

For discharge lines from pumps TLP-PMP-00002A/B to separator vessel (TLP-SEP-00001) and from pumps FEP-PMP-00006A/B, FANP shall also add a flow resistance of 5 psi due to Millipore filter in the calculation. For discharge line from TLP-PMP-00005A/B to sampler, Seller shall also include sample delivery pressure of 5 psig.

	Description	From	To	Straight Runs	Elevation Change	Elbows (LR 90)	Eq. Length	Tees	Eq. Length	Valves	Eq. Length	Exits	Eq. Length	Entrances	Eq. Length	Other	Totals (ft) (EQ.L.)	Totals (ft) (ΔEL.)	Bounding Values (ft) (EQ.L.)	Bounding Values (ft) (ΔEL.)	Notes
TLP-PMP-00002A/B	Suction	TLP-VSL-00002	*Pump*	30	2	*5*	33	*1*	20	*4*	20	*0*	0	*1*	9	0	112	2	150	2	
	Discharge	*Pump*	TLP-VSL-00002	40	15	*5*	25	*2*	30	*4*	15	*1*	13	*0*	0	50	173	15	250	20	*1*
			RLD-TK-00006A/B	250	60	*25*	125	*4*	60	*8*	30	*1*	13	*0*	0	50	528	60	625	65	*2*
			TLP-VSL-00009A/B	250	60	*25*	125	*4*	60	*8*	30	*1*	13	*0*	0	50	528	60	625	65	*2*
			TLP-SEP-00001	250	60	*25*	125	3	45	*10*	38	*0*	0	*0*	0	50	508	60	600	65	*3, 4*
TLP-PMP-00011A/B	Suction	TLP-SEP-00001	*Pump*	100	5	*5*	25	*1*	15	3	11	*0*	0	*1*	7	0	158	5	250	5	
	Discharge	*Pump*	TCP-VSL-00002	300	60	*15*	50	*1*	10	3	8	*1*	9	*0*	0	0	376	60	450	65	
TLP-PMP-00005A/B	Suction	TLP-VSL-00009A/B	*Pump*	80	-4	*8*	40	2	30	*5*	13	*0*	0	*1*	7	0	168	4	200	4	
	Discharge	*Pump*	TLP-SEP-00001	125	15	*15*	38	*3*	22.5	2	4	*1*	7	*0*	0	0	195	10	250	15	
			SAMPLER	180	70	*15*	50	2	20	3	8	*0*	0	*0*	0	0	258	70	360	70	*5*
FEP-PMP-00006A/B	Suction	FEP-VSL-00005	*Pump*	15	2	*5*	33	*1*	20	3	15	*0*	0	*1*	9	0	92	2	125	2	
	Discharge	*Pump*	FEP-VSL-00005	25	20	*7*	35	*2*	30	5	19	*1*	13	*0*	0	50	172	20	250	25	*1*
			RLD-TK-00006A/B	1100	60	*50*	250	*6*	90	*8*	30	*1*	13	*0*	0	50	1533	60	1750	65	*2*
			FEP-VSL-00017A/B	550	60	*35*	175	*4*	60	*6*	23	*1*	13	*0*	0	50	871	60	1000	65	*2*
			FEP-SEP-00001A/B	600	60	*35*	175	3	45	*10*	38	0	0	*0*	0	50	908	60	1100	65	*3, 4*

Notes: Framatome Needs to also consider flow resistances due to...

1. Flow Restriction Orifice (sized by FANP)
2. Back Pressure Control valve (sized by FANP)
3. Milli-pore filter (max dP = 5 psi)
4. Discharge spray nozzle pressure (specified by FANP)
5. Sample Delivery pressure of 5 psig.

T.12 Equivalent Lengths for Roth Transfer Station Pump

The equivalent length is provided in the table below:

Description	From	To	Bounding values (ft)	
			EQ. L	ΔEL
Discharge	FEP A SKID 9A Pump	SCW Storage Tank	2200	60
Discharge	FEP A SKID 9A Pump	Steam Cond. Skid 6A	600	80
Discharge	FEP B SKID 9B Pump	SCW Storage Tank	2000	60
Discharge	FEP B SKID 9A Pump	Steam Cond. Skid 6B	700	80
Discharge	TLP SKID Pump	SCW Storage Tank	720	60
Discharge	FEP B SKID 9A Pump	Steam Cond. Skid 8	1130	100

T.13 Standard Kick-Off Plate

Design Input: Buyer will provide Seller 2" and 4" PUREX nozzle with square standard kick-off plate per drawing 24590-WTP-M61-P23T-00040 for FEP/TLP reboilers.

APPENDIX U

Deleted

APPENDIX V

FEP/TLP EVAPORATOR SYSTEM COMPOSITE ANALYSES

V1. Seller shall perform a coupled dynamic analysis of each evaporator system (using stick models to represent all components, including the piping/process jumper, vessels, frames and pumps) to qualify the recirculation piping/process jumper, and offgas piping. Seller shall provide vessel nozzle loads, Grayloc loads, and all piping/jumper support interface loads. The evaporator system model shall include the separator vessel on its frames, reboiler in its frame, recirculation pump on its frame, all interconnecting large bore piping/jumpers but excluding branch piping, offgas piping, primary condenser and condenser frame (not including the vacuum system and other attachments).

V2. The coupled dynamic analysis shall be performed using the revised ISRS curves (provided in this appendix) and shall account for the seismic differential movement between 0' floor, 56' floor, and 77' floor (provided in this appendix). Requirements for determining the percent critical damping for the couple dynamic analysis is provided in ASCE Std 4 Section 3.1.5 "Modeling of Damping".

V3. All piping dimensions, weights (including grayloc/guide assemblies), and support locations (including fixity) for each evaporator system are provided on the Isometric drawings included in this appendix shall be used as the design inputs for the coupled dynamic analysis.

V4. Although Seller has provided estimated process temperatures for various system condition and components, Seller shall define and use the maximum operating temperature in lieu of design temperature for each evaporator system.

V5. See attachment #5 for FEP/TLP recirculation pump frame conceptual designs. Seller is responsible for qualifying all support structures above 1'-4" in elevation, including all interface plates, bolts, nuts, and dowel pins for reboiler support frame and pump support frame. Seller is responsible for providing all final frame member sizes and configuration, all weld and joint designs, dowel / bolting configuration, quantity of bolts /nuts, and frame calculations to be submitted to Buyer for review. Location of dowels and location / quantity of bolts shall be provided to Buyer for review and permission to proceed.

V5.1 Top of concrete filled steel frame elevation will be 1'-4"

V5.2 Concrete filled steel frame will be rigid, e.g. 33 hz or greater

V5.3 Top of sole plate shall be 2'-2" in plant elevation for pump support. Top of sole plate for reboiler shall be 2'-2 5/16". Bottom of pump support and reboiler support frame shall be designed to interface with the corresponding sole plate without the use of shims.

V5.4 Seller shall qualify structural steel between 1'-4" and 2'-2" or 2'-2 5/16". Seller must design all weld joints and provide all weld details to Buyer. Buyer will be responsible for remotability interface and fabrication drawings.

V5.5 There will be two 4" diameter Dowel Pins per frame (opposing corners) as shown on drawings which will take the shear loads. The 4" diameter dowel pin is an assumption. Seller is responsible to verify and size the dowel pin diameter with actual loads. All Dowel pin material shall be ASTM A582 Type 416.

V5.6 Seller shall qualify all plates, structural steel, dowel pins, the bolting interface, and all weld joint designs.

V5.7 Initial assumption, there are two bolts per plate. Bolts shall be 1 1/4" - 8 ACME - 2G. Stud material shall be ASTM A564 Type 630 condition H1150 and Nut material shall be ASTM A194 Grade GR 8S. Seller is to determine quantity and configuration for studs. Stud location shall be submitted to Buyer for review and permission to proceed. Note: Tightening torque from impact wrench is 400 ft-lbs ± 25%. Loosening torque from impact wrench is 700 ft-lbs ± 25%. Tightening and loosening torques are not adjustable, or variable over time.

V5.8 Seller shall qualify recirculation pump frame. Seller must design all weld joints and provide all weld details to Buyer. Seller shall provide detail design of the frame in the form of a drawing that includes member sizes, configuration and weld design. The drawing shall be sufficient for Buyer to solicit a fabricator who can generate fabrication drawings. Buyer will be responsible for remotability interface for pump frame.

V6. Seller shall perform detailed Finite Element Analysis uncoupled dynamic analysis using revised ISRS curves (provided in this appendix) of individual SC-I/SC-II vessel/equipment (including recirculation pumps) of each evaporator system. Internal components, supports, and piping systems shall be analyzed the same as the parent vessel/equipment.

V7. The report(s) shall be officially submitted to Bechtel for review per G321-E Category 8.0. The report(s) shall include pipe/jumper stress, nozzle loads, Grayloc loads, all piping/jumper support interface loads, pipe support design recommendations, and results of the coupled dynamic analysis of each evaporator system and FEA dynamic analyses for individual SC-I/SC-II components. Seller shall use the "SC-I/II Seismic Analysis Qualification and FEA Report Check List" provided in attachment #6 to document required data in their reports.

V8. Listed below are design inputs to be used

V8a. See Attachment #3 for 24" grayloc/guide assemblies design inputs provided on the isometric sketches.

V8b. Revised In-Structure Response Spectra curves (see Attachment #1)

- **RGM ISRS Figures 37, 38, 67, 68, and 24E for separator vessel (FEP-SEP-00001A/B &TLP-SEP-00001)**
- **RGM ISRS Figures 37, 38, and 121 for FEP condenser skids (FEP-SKID-00001A/B)**
- **RGM ISRS Figures 37, 38, 40, 41, and 115 for TLP condenser skid (TLP-SKID-00001)**
- **RGM ISRS Figures 21E, 22E, and 24E for reboilers (FEP-RBL-00001A/B & TLP-RBLR-00001). If the equipment support is not rigid, it shall be simulated or duplicated in the equipment seismic analysis model.**
- **RGM ISRS Figures 21E, 22E, and 24E for recirculation pumps (FEP-PMP-00009A/B & TLP-PMP-00001). If the equipment support is not rigid, it shall be simulated or duplicated in the equipment seismic analysis model.**

- RGM ISRS Figures 6E, 7E, and 149 for off-gas piping FEP-PU-00001 and FEP-PU-00005 support hangers.
- RGM ISRS Figures 6E, 7E, and 137 for off-gas piping TLP-PU-00002 support hangers

V8c. BNI TLP Coupled Structural Analysis Draft Report (See Attachment #2)

V8d. FEP/TLP Evaporator recirculation Isometrics and Mid Roller details (see Attachment #3)

V8e. Nozzle loading for separator vessels shall be based on actual values as listed in tables 1, 2, and 3 of Attachment #4. The Seller shall use the actual nozzle load values instead of the values shown in the table in Appendix A of the Pressure Vessel Design and Fabrication Specification, 24590-WTP-3PS-MV00-T0001. The thermal reduction factor found in 24590-WTP-3PS-MV00-T0001, Section 3.7.4, shall not be applied. The nozzle load for separator vessel offgas outlet nozzle (N04), discharge nozzle (N10) and inlet nozzle (N11) shall be per Seller's design & qualification using the results of the coupled FEA. Nozzle loads for separator vessel bubblers (N01, N02, N03, N08, N09, N21, N27, and N28) due to hydrogen accumulation are not available and will be provided later.

V8f. Nozzle loading for condenser vessels (FEP-COND-00001A/1B/2A/2B/3A/3B and TLP-COND-00001/2/3) shall be based on nozzle design loads for non-black cell vessels provided in table 4 of Attachment #4. The Seller shall use these nozzle load values instead of the values shown in the table in Appendix A of the Pressure Vessel Design and Fabrication Specification, 24590-WTP-3PS-MV00-T0001. The thermal reduction factor found in 24590-WTP-3PS-MV00-T0001, Section 3.7.4, shall not be applied. The primary condenser offgas inlet nozzle (N01) shall be per Seller's design and qualification using the results of the coupled FEA.

V8g. Nozzle loading for reboiler vessels (FEP-RBLR-00001A/1B and TLP-RBLR-00001) shall be based on nozzle design loads for non-black cell vessels provided in Table 4 and Table 5 (for steam nozzle NO3) of Attachment #4. The Seller shall use these nozzle load values instead of the values shown in the table in Appendix A of the Pressure Vessel Design and Fabrication Specification, 24590-WTP-3PS-MV00-T0001. The thermal reduction factor found in 24590-WTP-3PS-MV00-T0001, Section 3.7.4, shall not be applied. The reboiler process inlet nozzle (N01) and outlet nozzle (N02) shall be per Seller's design and qualification using the results of the coupled FEA.

V8h. Nozzle loads for recirculation pumps shall be per Seller's design & qualification using the results of the coupled FEA.

V8i. For TLP-SEP-00001,

a. The relative floor movement at location Row D/Column 18 at elevation 0' to location Row D/Column 18 at elevation 56' is: 0.06" EW; 0.23" NS, and 0.03" vertical

b. The relative floor movement at location Row D/Column 18 at elevation 77' to location Row D/Column 18 at elevation 56' is: 0.04" EW; 0.12" NS, and 0.12" vertical

V8j. For FEP-SEP-00001A,

a. The relative floor movement at location Row J/Column 8.8 at elevation 0' to location Row J/Column 8.8 at elevation 56' is: 0.06" EW; 0.20" NS, and 0.08" vertical

b. The relative floor movement at location Row J/Column 8.8 at elevation 77' to location Row J/Column 8.8 at elevation 56' is: 0.04" EW; 0.08" NS, and 0.12" vertical

V8k. For FEP-SEP-00001B

a. The relative floor movement at location Row J/Column 10.5 at elevation 0' to location Row J/Column 10.5 at elevation 56' is: 0.06" EW; 0.21" NS, and 0.05" vertical

b. The relative floor movement at location Row J/Column 10.5 at elevation 77' to location Row J/Column 10.5 at elevation 56' is: 0.05" EW; 0.09" NS, and 0.11" vertical

V8L. FEP/TLP recirculation pump frame conceptual design (See attachment #5).

ATTACHMENT #1

Revised ISRS Curves
(Ref. CCN 128490 and CCN 138088)

RPP-WTP Pretreatment Facility ISRS
Calc No.: 24590-PTF-S0C-S15T-00005, Rev. 0B

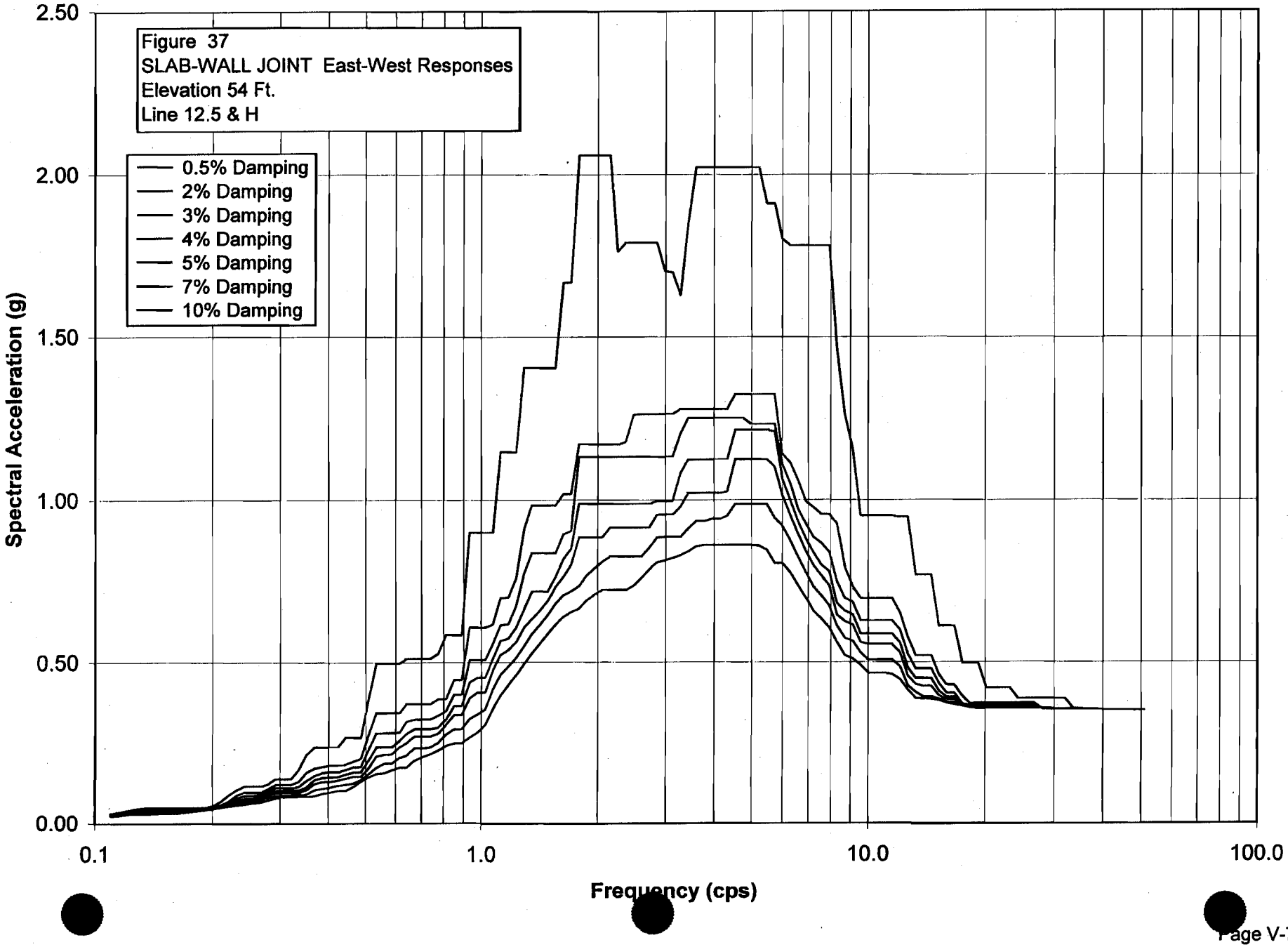

S_PTWW037.grf
RPP-WTP Pretreatment Facility ISRS
Calc No.: 24590-PTF-S0C-S15T-00005, Rev. 0B
Frequency (cps)
Spectral Acceleration (g)
Figure 37
SLAB-WALL JOINT East-West Responses
Elevation 54 Ft.
Line 12.5 & H

Damping	0.50%	Damping	2%	Damping	3%	Damping	4%	Damping	5%	Damping	7%	Damping	10%
Freq.	Accel.	Freq.	Accel.	Freq.	Accel.	Freq.	Accel.	Freq.	Accel.	Freq.	Accel.	Freq.	Accel.
0.1098	0.0314	0.1098	0.0288	0.1098	0.0276	0.1098	0.0268	0.1098	0.0261	0.1098	0.0248	0.1098	0.0232
0.115	0.0359	0.115	0.0331	0.115	0.0315	0.115	0.0301	0.115	0.029	0.115	0.0275	0.115	0.0254
0.1204	0.041	0.1204	0.0383	0.1204	0.0367	0.1204	0.0353	0.1204	0.034	0.1204	0.0316	0.1204	0.0288
0.1262	0.046	0.1262	0.0427	0.1262	0.0408	0.1262	0.0389	0.1262	0.0373	0.1262	0.0344	0.1262	0.0312
0.1322	0.0489	0.1322	0.0443	0.1322	0.0422	0.1322	0.0403	0.1322	0.0386	0.1322	0.0356	0.1322	0.0321
0.1385	0.0518	0.1385	0.0463	0.1385	0.0431	0.1385	0.0403	0.1385	0.0386	0.1385	0.0356	0.1385	0.0321
0.1451	0.0518	0.1451	0.0463	0.1451	0.0431	0.1451	0.0403	0.1451	0.0386	0.1451	0.0356	0.1451	0.0321
0.152	0.0518	0.152	0.0463	0.152	0.0431	0.152	0.0403	0.152	0.0386	0.152	0.0356	0.152	0.0321
0.1592	0.0518	0.1592	0.0463	0.1592	0.0431	0.1592	0.0403	0.1592	0.0386	0.1592	0.0356	0.1592	0.0324
0.1668	0.0518	0.1668	0.0463	0.1668	0.0431	0.1668	0.0403	0.1668	0.0384	0.1668	0.0362	0.1668	0.0351
0.1748	0.0518	0.1748	0.0463	0.1748	0.0431	0.1748	0.0409	0.1748	0.0404	0.1748	0.0394	0.1748	0.0379
0.1831	0.0518	0.1831	0.0463	0.1831	0.0454	0.1831	0.0447	0.1831	0.044	0.1831	0.0426	0.1831	0.0405
0.1918	0.0521	0.1918	0.0505	0.1918	0.0495	0.1918	0.0485	0.1918	0.0476	0.1918	0.0458	0.1918	0.0437
0.2009	0.0569	0.2009	0.0549	0.2009	0.0536	0.2009	0.0525	0.2009	0.0514	0.2009	0.0497	0.2009	0.0474
0.2105	0.0708	0.2105	0.0601	0.2105	0.0587	0.2105	0.0574	0.2105	0.0562	0.2105	0.054	0.2105	0.0517
0.2205	0.091	0.2205	0.0714	0.2205	0.0643	0.2205	0.0624	0.2205	0.061	0.2205	0.0586	0.2205	0.0558
0.231	0.1079	0.231	0.0908	0.231	0.0814	0.231	0.0735	0.231	0.0672	0.231	0.0631	0.231	0.0594
0.242	0.1195	0.242	0.0993	0.242	0.0884	0.242	0.0793	0.242	0.0716	0.242	0.0666	0.242	0.062
0.2535	0.1204	0.2535	0.0993	0.2535	0.0884	0.2535	0.0797	0.2535	0.0755	0.2535	0.0695	0.2535	0.0658
0.2656	0.1204	0.2656	0.0993	0.2656	0.0923	0.2656	0.088	0.2656	0.084	0.2656	0.0769	0.2656	0.0687
0.2783	0.1255	0.2783	0.1097	0.2783	0.1008	0.2783	0.095	0.2783	0.0907	0.2783	0.0836	0.2783	0.0755
0.2915	0.1424	0.2915	0.1248	0.2915	0.1148	0.2915	0.106	0.2915	0.0982	0.2915	0.0888	0.2915	0.0813
0.3054	0.1424	0.3054	0.1248	0.3054	0.1152	0.3054	0.1069	0.3054	0.0996	0.3054	0.091	0.3054	0.0842
0.3199	0.1424	0.3199	0.1248	0.3199	0.1152	0.3199	0.1069	0.3199	0.0996	0.3199	0.091	0.3199	0.0847
0.3352	0.1711	0.3352	0.1346	0.3352	0.1186	0.3352	0.1069	0.3352	0.0996	0.3352	0.091	0.3352	0.0847
0.3511	0.2174	0.3511	0.1631	0.3511	0.137	0.3511	0.1169	0.3511	0.1078	0.3511	0.0932	0.3511	0.0847
0.3678	0.2401	0.3678	0.1757	0.3678	0.1532	0.3678	0.1396	0.3678	0.1277	0.3678	0.108	0.3678	0.0887

S_PTWW037.grf

0.3853	0.2401	0.3853	0.1802	0.3853	0.1621	0.3853	0.1466	0.3853	0.1334	0.3853	0.1123	0.3853	0.0951
0.4037	0.2401	0.4037	0.1853	0.4037	0.165	0.4037	0.1482	0.4037	0.1342	0.4037	0.1165	0.4037	0.0995
0.4229	0.2401	0.4229	0.1853	0.4229	0.165	0.4229	0.1498	0.4229	0.1383	0.4229	0.122	0.4229	0.1052
0.4431	0.2697	0.4431	0.1872	0.4431	0.1712	0.4431	0.1571	0.4431	0.1446	0.4431	0.1243	0.4431	0.1052
0.4642	0.2697	0.4642	0.1964	0.4642	0.1791	0.4642	0.1638	0.4642	0.1504	0.4642	0.128	0.4642	0.1176
0.4863	0.2697	0.4863	0.2048	0.4863	0.1795	0.4863	0.1638	0.4863	0.1504	0.4863	0.1397	0.4863	0.1335
0.5094	0.3933	0.5094	0.2804	0.5094	0.2338	0.5094	0.2006	0.5094	0.1758	0.5094	0.1597	0.5094	0.1485
0.5337	0.498	0.5337	0.3467	0.5337	0.2831	0.5337	0.2392	0.5337	0.2125	0.5337	0.1765	0.5337	0.159
0.5591	0.498	0.5591	0.3467	0.5591	0.2831	0.5591	0.2392	0.5591	0.2173	0.5591	0.1897	0.5591	0.1607
0.5857	0.498	0.5857	0.3467	0.5857	0.2831	0.5857	0.2392	0.5857	0.2173	0.5857	0.1897	0.5857	0.1683
0.6136	0.498	0.6136	0.3467	0.6136	0.2856	0.6136	0.2598	0.6136	0.2393	0.6136	0.2082	0.6136	0.1768
0.6428	0.5114	0.6428	0.3731	0.6428	0.3181	0.6428	0.2803	0.6428	0.2522	0.6428	0.2127	0.6428	0.1768
0.6734	0.5114	0.6734	0.3731	0.6734	0.3249	0.6734	0.296	0.6734	0.2724	0.6734	0.236	0.6734	0.1983
0.7055	0.5114	0.7055	0.3731	0.7055	0.3249	0.7055	0.296	0.7055	0.2724	0.7055	0.236	0.7055	0.2086
0.7391	0.5114	0.7391	0.3731	0.7391	0.3249	0.7391	0.296	0.7391	0.2724	0.7391	0.239	0.7391	0.2174
0.7743	0.528	0.7743	0.3894	0.7743	0.3374	0.7743	0.3002	0.7743	0.2812	0.7743	0.2527	0.7743	0.2293
0.8111	0.5842	0.8111	0.3894	0.8111	0.3513	0.8111	0.3253	0.8111	0.3078	0.8111	0.2783	0.8111	0.2431
0.8497	0.5842	0.8497	0.4479	0.8497	0.4022	0.8497	0.367	0.8497	0.3388	0.8497	0.2955	0.8497	0.2503
0.8902	0.5842	0.8902	0.4479	0.8902	0.4022	0.8902	0.367	0.8902	0.3388	0.8902	0.2955	0.8902	0.2503
0.9326	0.8989	0.9326	0.6071	0.9326	0.5073	0.9326	0.4398	0.9326	0.3912	0.9326	0.3262	0.9326	0.2684
0.977	0.8989	0.977	0.6071	0.977	0.5073	0.977	0.4541	0.977	0.4086	0.977	0.3405	0.977	0.2839
1.0235	0.8989	1.0235	0.6071	1.0235	0.5073	1.0235	0.4541	1.0235	0.4086	1.0235	0.3559	1.0235	0.3074
1.0723	0.8989	1.0723	0.6169	1.0723	0.5578	1.0723	0.512	1.0723	0.4768	1.0723	0.4199	1.0723	0.3581
1.1233	1.1502	1.1233	0.6991	1.1233	0.614	1.1233	0.5663	1.1233	0.5238	1.1233	0.4629	1.1233	0.4004
1.1768	1.1502	1.1768	0.7013	1.1768	0.6178	1.1768	0.574	1.1768	0.5383	1.1768	0.4888	1.1768	0.4326
1.2328	1.1502	1.2328	0.7596	1.2328	0.6754	1.2328	0.6064	1.2328	0.5615	1.2328	0.5147	1.2328	0.4624
1.2916	1.4068	1.2916	0.9098	1.2916	0.7736	1.2916	0.6645	1.2916	0.6073	1.2916	0.5502	1.2916	0.4952
1.353	1.4068	1.353	0.9837	1.353	0.8352	1.353	0.7185	1.353	0.6331	1.353	0.5866	1.353	0.5279
1.4175	1.4068	1.4175	0.9837	1.4175	0.8352	1.4175	0.7185	1.4175	0.6595	1.4175	0.6157	1.4175	0.5573
1.485	1.4068	1.485	0.9837	1.485	0.8352	1.485	0.7185	1.485	0.6887	1.485	0.6451	1.485	0.5868
1.5557	1.4068	1.5557	0.9837	1.5557	0.8352	1.5557	0.7621	1.5557	0.7323	1.5557	0.6811	1.5557	0.6154
1.6298	1.6671	1.6298	1.0185	1.6298	0.8939	1.6298	0.8172	1.6298	0.764	1.6298	0.7078	1.6298	0.6397
1.7074	1.6671	1.7074	1.0185	1.7074	0.9033	1.7074	0.8484	1.7074	0.8	1.7074	0.7196	1.7074	0.6548
1.7887	2.06	1.7887	1.175	1.7887	1.1351	1.7887	0.9877	1.7887	0.8836	1.7887	0.7359	1.7887	0.6657
1.8738	2.06	1.8738	1.175	1.8738	1.1351	1.8738	0.9877	1.8738	0.8836	1.8738	0.767	1.8738	0.691
1.963	2.06	1.963	1.175	1.963	1.1351	1.963	0.9877	1.963	0.8836	1.963	0.7893	1.963	0.7111
2.0565	2.06	2.0565	1.175	2.0565	1.1351	2.0565	0.9877	2.0565	0.8836	2.0565	0.809	2.0565	0.7233
2.1544	2.06	2.1544	1.175	2.1544	1.1351	2.1544	0.9877	2.1544	0.9145	2.1544	0.8248	2.1544	0.7233
2.257	1.7633	2.257	1.175	2.257	1.1351	2.257	0.9877	2.257	0.9145	2.257	0.8248	2.257	0.7233

S_PTWW037.grf

2.3645	1.7905	2.3645	1.1812	2.3645	1.1351	2.3645	0.9877	2.3645	0.9145	2.3645	0.8248	2.3645	0.7233
2.4771	1.7905	2.4771	1.2641	2.4771	1.1351	2.4771	0.9877	2.4771	0.9145	2.4771	0.8248	2.4771	0.7363
2.595	1.7905	2.595	1.2669	2.595	1.1351	2.595	0.9877	2.595	0.9145	2.595	0.8248	2.595	0.7588
2.7186	1.7905	2.7186	1.2669	2.7186	1.1351	2.7186	0.9877	2.7186	0.9145	2.7186	0.8512	2.7186	0.7851
2.848	1.7905	2.848	1.2669	2.848	1.1351	2.848	0.9964	2.848	0.9535	2.848	0.8827	2.848	0.8066
2.9836	1.7027	2.9836	1.2669	2.9836	1.1351	2.9836	0.9964	2.9836	0.9535	2.9836	0.8849	2.9836	0.8127
3.1257	1.6996	3.1257	1.2669	3.1257	1.1351	3.1257	0.9964	3.1257	0.9535	3.1257	0.8849	3.1257	0.8201
3.2745	1.6283	3.2745	1.2808	3.2745	1.2073	3.2745	1.0843	3.2745	0.9787	3.2745	0.885	3.2745	0.8282
3.4305	1.8505	3.4305	1.2808	3.4305	1.2545	3.4305	1.1266	3.4305	1.0213	3.4305	0.9111	3.4305	0.8401
3.5938	2.0228	3.5938	1.2808	3.5938	1.2545	3.5938	1.1266	3.5938	1.0213	3.5938	0.9346	3.5938	0.8563
3.7649	2.0228	3.7649	1.2808	3.7649	1.2545	3.7649	1.1266	3.7649	1.0213	3.7649	0.9346	3.7649	0.8595
3.9442	2.0228	3.9442	1.2808	3.9442	1.2545	3.9442	1.1266	3.9442	1.0213	3.9442	0.9409	3.9442	0.8595
4.132	2.0228	4.132	1.2808	4.132	1.2545	4.132	1.1266	4.132	1.0213	4.132	0.9409	4.132	0.8598
4.3288	2.0228	4.3288	1.2808	4.3288	1.2545	4.3288	1.1266	4.3288	1.0265	4.3288	0.9503	4.3288	0.8598
4.5349	2.0228	4.5349	1.3256	4.5349	1.2545	4.5349	1.2184	4.5349	1.1271	4.5349	0.987	4.5349	0.8598
4.7508	2.0228	4.7508	1.3256	4.7508	1.2545	4.7508	1.2184	4.7508	1.1271	4.7508	0.987	4.7508	0.8598
4.977	2.0228	4.977	1.3256	4.977	1.2365	4.977	1.2184	4.977	1.1271	4.977	0.987	4.977	0.8598
5.214	2.0228	5.214	1.3256	5.214	1.2365	5.214	1.2184	5.214	1.1271	5.214	0.987	5.214	0.8574
5.4623	1.9118	5.4623	1.3256	5.4623	1.2365	5.4623	1.2184	5.4623	1.1271	5.4623	0.987	5.4623	0.8452
5.7224	1.9118	5.7224	1.3256	5.7224	1.2365	5.7224	1.2141	5.7224	1.103	5.7224	0.944	5.7224	0.8044
5.9948	1.8019	5.9948	1.1437	5.9948	1.1117	5.9948	1.0649	5.9948	1.0143	5.9948	0.919	5.9948	0.8044
6.2803	1.7825	6.2803	1.1158	6.2803	1.0505	6.2803	0.9983	6.2803	0.9528	6.2803	0.8733	6.2803	0.7753
6.5793	1.7825	6.5793	1.0616	6.5793	0.9721	6.5793	0.9326	6.5793	0.8937	6.5793	0.8232	6.5793	0.7371
6.8926	1.7825	6.8926	0.9948	6.8926	0.9254	6.8926	0.8781	6.8926	0.8395	6.8926	0.7757	6.8926	0.6988
7.2208	1.7825	7.2208	0.9766	7.2208	0.8836	7.2208	0.8362	7.2208	0.7973	7.2208	0.7333	7.2208	0.6574
7.5646	1.7825	7.5646	0.9553	7.5646	0.8653	7.5646	0.7978	7.5646	0.7657	7.5646	0.7059	7.5646	0.6333
7.9248	1.7825	7.9248	0.9553	7.9248	0.8374	7.9248	0.7789	7.9248	0.7357	7.9248	0.6724	7.9248	0.6047
8.3022	1.467	8.3022	0.9256	8.3022	0.7482	8.3022	0.6811	8.3022	0.6451	8.3022	0.6114	8.3022	0.5606
8.6975	1.2634	8.6975	0.7906	8.6975	0.6976	8.6975	0.6577	8.6975	0.6254	8.6975	0.5739	8.6975	0.5206
9.1116	1.1614	9.1116	0.734	9.1116	0.6851	9.1116	0.6466	9.1116	0.6147	9.1116	0.5644	9.1116	0.5109
9.5455	0.9513	9.5455	0.6972	9.5455	0.6272	9.5455	0.5869	9.5455	0.5603	9.5455	0.5292	9.5455	0.4915
10	0.9513	10	0.6972	10	0.6272	10	0.5869	10	0.5545	10	0.5075	10	0.4672
10.4762	0.9513	10.4762	0.6972	10.4762	0.6272	10.4762	0.5869	10.4762	0.5545	10.4762	0.5075	10.4762	0.4672
10.975	0.9513	10.975	0.6972	10.975	0.6272	10.975	0.5869	10.975	0.5545	10.975	0.5075	10.975	0.4672
11.4976	0.9513	11.4976	0.6972	11.4976	0.6272	11.4976	0.5869	11.4976	0.5545	11.4976	0.5075	11.4976	0.4637
12.045	0.9476	12.045	0.6512	12.045	0.5986	12.045	0.559	12.045	0.529	12.045	0.4872	12.045	0.4481
12.6186	0.9476	12.6186	0.5757	12.6186	0.5238	12.6186	0.4831	12.6186	0.4585	12.6186	0.4288	12.6186	0.4166
13.2194	0.7684	13.2194	0.5197	13.2194	0.4807	13.2194	0.452	13.2194	0.4333	13.2194	0.4097	13.2194	0.3907
13.8489	0.7684	13.8489	0.5197	13.8489	0.4807	13.8489	0.4508	13.8489	0.4275	13.8489	0.3956	13.8489	0.39

S_PTWW037.grf

14.5083	0.7684	14.5083	0.5197	14.5083	0.4807	14.5083	0.4508	14.5083	0.4275	14.5083	0.3953	14.5083	0.3877
15.1991	0.6109	15.1991	0.462	15.1991	0.4357	15.1991	0.4127	15.1991	0.3986	15.1991	0.389	15.1991	0.3834
15.9228	0.6109	15.9228	0.4312	15.9228	0.4068	15.9228	0.3944	15.9228	0.3869	15.9228	0.3787	15.9228	0.3756
16.681	0.6109	16.681	0.4312	16.681	0.4068	16.681	0.3944	16.681	0.3869	16.681	0.3781	16.681	0.371
17.4753	0.4963	17.4753	0.3971	17.4753	0.3731	17.4753	0.3731	17.4753	0.3729	17.4753	0.3709	17.4753	0.367
18.3074	0.4963	18.3074	0.3731	18.3074	0.3686	18.3074	0.3667	18.3074	0.3656	18.3074	0.3639	18.3074	0.3615
19.1791	0.4963	19.1791	0.3752	19.1791	0.3678	19.1791	0.3639	19.1791	0.3615	19.1791	0.3592	19.1791	0.3588
20.0923	0.4216	20.0923	0.3752	20.0923	0.3678	20.0923	0.3639	20.0923	0.3615	20.0923	0.3593	20.0923	0.3585
21.049	0.4216	21.049	0.3752	21.049	0.3678	21.049	0.3639	21.049	0.362	21.049	0.3611	21.049	0.3597
22.0513	0.4216	22.0513	0.3757	22.0513	0.3701	22.0513	0.3666	22.0513	0.3643	22.0513	0.3616	22.0513	0.3597
23.1013	0.4216	23.1013	0.3757	23.1013	0.3701	23.1013	0.3666	23.1013	0.3643	23.1013	0.3616	23.1013	0.3597
24.2013	0.3898	24.2013	0.3757	24.2013	0.3701	24.2013	0.3666	24.2013	0.3643	24.2013	0.3616	24.2013	0.3597
25.3536	0.3898	25.3536	0.3757	25.3536	0.3701	25.3536	0.3666	25.3536	0.3643	25.3536	0.3616	25.3536	0.3597
26.5609	0.3898	26.5609	0.3757	26.5609	0.3701	26.5609	0.3666	26.5609	0.3643	26.5609	0.3616	26.5609	0.3596
27.8256	0.3898	27.8256	0.3593	27.8256	0.357	27.8256	0.358	27.8256	0.3585	27.8256	0.3585	27.8256	0.3579
29.1505	0.3898	29.1505	0.3593	29.1505	0.357	29.1505	0.3561	29.1505	0.3559	29.1505	0.3559	29.1505	0.3561
30.5386	0.3898	30.5386	0.3564	30.5386	0.356	30.5386	0.3557	30.5386	0.3555	30.5386	0.3552	30.5386	0.3549
31.9927	0.3898	31.9927	0.3564	31.9927	0.356	31.9927	0.3557	31.9927	0.3555	31.9927	0.3552	31.9927	0.3549
33.516	0.3588	33.516	0.3564	33.516	0.356	33.516	0.3557	33.516	0.3555	33.516	0.3552	33.516	0.3549
35.1119	0.3567	35.1119	0.3563	35.1119	0.356	35.1119	0.3557	35.1119	0.3555	35.1119	0.3552	35.1119	0.3549
36.7838	0.3557	36.7838	0.3556	36.7838	0.3555	36.7838	0.3553	36.7838	0.3552	36.7838	0.355	36.7838	0.3548
38.5353	0.3551	38.5353	0.355	38.5353	0.3549	38.5353	0.3549	38.5353	0.3548	38.5353	0.3547	38.5353	0.3546
40.3702	0.3546	40.3702	0.3545	40.3702	0.3545	40.3702	0.3544	40.3702	0.3544	40.3702	0.3543	40.3702	0.3543
42.2924	0.3541	42.2924	0.3541	42.2924	0.3541	42.2924	0.354	42.2924	0.354	42.2924	0.354	42.2924	0.3539
44.3062	0.3537	44.3062	0.3537	44.3062	0.3537	44.3062	0.3537	44.3062	0.3537	44.3062	0.3537	44.3062	0.3536
46.4159	0.3534	46.4159	0.3534	46.4159	0.3534	46.4159	0.3534	46.4159	0.3534	46.4159	0.3534	46.4159	0.3533
48.626	0.3531	48.626	0.3531	48.626	0.3531	48.626	0.353	48.626	0.353	48.626	0.353	48.626	0.3531
50.9414	0.3528	50.9414	0.3528	50.9414	0.3528	50.9414	0.3528	50.9414	0.3528	50.9414	0.3528	50.9414	0.3528

RPP-WTP Pretreatment Facility ISRS
Calc No.: 24590-PTF-S0C-S15T-00005, Rev. 0B

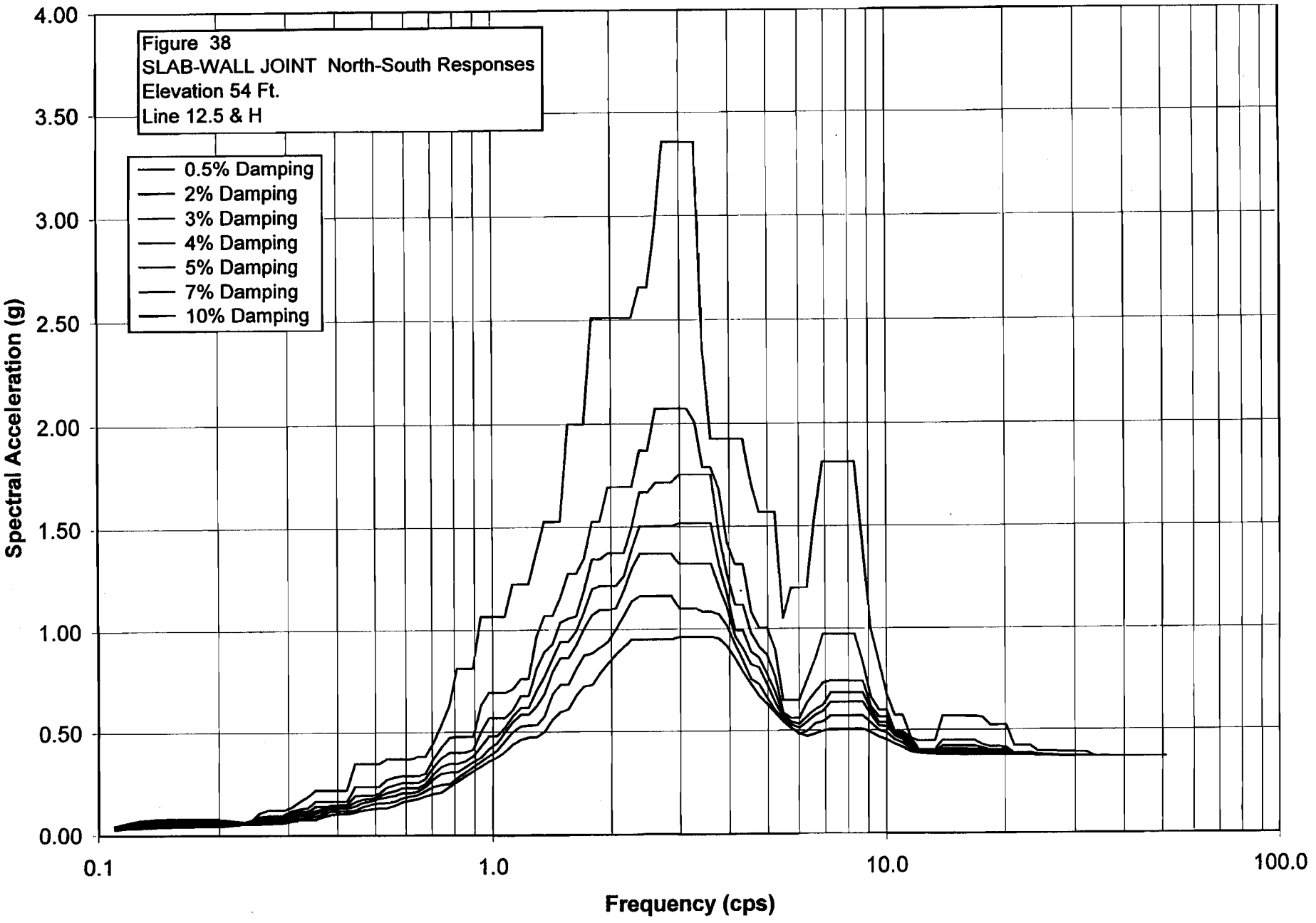

S_PTWW038.grf
RPP-WTP Pretreatment Facility ISRS
Calc No.: 24590-PTF-S0C-S15T-00005, Rev. 0B
Frequency (cps)
Spectral Acceleration (g)
Figure 38
SLAB-WALL JOINT North-South Responses
Elevation 54 Ft.
Line 12.5 & H

Damping	0.50%	Damping	2%	Damping	3%	Damping	4%	Damping	5%	Damping	7%	Damping	10%
Freq.	Accel.	Freq.	Accel.	Freq.	Accel.	Freq.	Accel.	Freq.	Accel.	Freq.	Accel.	Freq.	Accel.
0.1098	0.0457	0.1098	0.0394	0.1098	0.0365	0.1098	0.0345	0.1098	0.0331	0.1098	0.0312	0.1098	0.0286
0.115	0.0556	0.115	0.0494	0.115	0.0467	0.115	0.0443	0.115	0.0422	0.115	0.0384	0.115	0.0338
0.1204	0.0648	0.1204	0.0583	0.1204	0.0546	0.1204	0.0512	0.1204	0.0481	0.1204	0.0428	0.1204	0.0365
0.1262	0.072	0.1262	0.0618	0.1262	0.0572	0.1262	0.0533	0.1262	0.0498	0.1262	0.0438	0.1262	0.0384
0.1322	0.0763	0.1322	0.0653	0.1322	0.0604	0.1322	0.0565	0.1322	0.053	0.1322	0.0471	0.1322	0.0404
0.1385	0.0786	0.1385	0.0673	0.1385	0.0609	0.1385	0.0565	0.1385	0.053	0.1385	0.0471	0.1385	0.0404
0.1451	0.0789	0.1451	0.0675	0.1451	0.0612	0.1451	0.0565	0.1451	0.053	0.1451	0.0471	0.1451	0.0412
0.152	0.0789	0.152	0.0675	0.152	0.0612	0.152	0.0568	0.152	0.0538	0.152	0.0487	0.152	0.0434
0.1592	0.0789	0.1592	0.0675	0.1592	0.0612	0.1592	0.0568	0.1592	0.0538	0.1592	0.049	0.1592	0.0442
0.1668	0.0789	0.1668	0.0675	0.1668	0.0612	0.1668	0.0568	0.1668	0.0538	0.1668	0.049	0.1668	0.0442
0.1748	0.0789	0.1748	0.0675	0.1748	0.0612	0.1748	0.0568	0.1748	0.0538	0.1748	0.049	0.1748	0.0442
0.1831	0.0789	0.1831	0.0675	0.1831	0.0612	0.1831	0.0568	0.1831	0.0538	0.1831	0.049	0.1831	0.0442
0.1918	0.0789	0.1918	0.0675	0.1918	0.0612	0.1918	0.0564	0.1918	0.0535	0.1918	0.049	0.1918	0.0442
0.2009	0.0789	0.2009	0.0675	0.2009	0.0612	0.2009	0.0564	0.2009	0.0534	0.2009	0.0483	0.2009	0.0442
0.2105	0.0737	0.2105	0.0634	0.2105	0.0597	0.2105	0.0564	0.2105	0.0534	0.2105	0.0495	0.2105	0.0481
0.2205	0.0686	0.2205	0.0626	0.2205	0.0591	0.2205	0.0563	0.2205	0.0553	0.2205	0.0536	0.2205	0.0518
0.231	0.0653	0.231	0.063	0.231	0.0616	0.231	0.0604	0.231	0.0592	0.231	0.0573	0.231	0.0552
0.242	0.0765	0.242	0.0692	0.242	0.0652	0.242	0.0639	0.242	0.0627	0.242	0.0606	0.242	0.0581
0.2535	0.1105	0.2535	0.092	0.2535	0.0827	0.2535	0.0753	0.2535	0.0694	0.2535	0.0632	0.2535	0.0604
0.2656	0.1221	0.2656	0.0955	0.2656	0.083	0.2656	0.0753	0.2656	0.0694	0.2656	0.0652	0.2656	0.0619
0.2783	0.1221	0.2783	0.0955	0.2783	0.0836	0.2783	0.0789	0.2783	0.0748	0.2783	0.0679	0.2783	0.0626
0.2915	0.1221	0.2915	0.1011	0.2915	0.0941	0.2915	0.0879	0.2915	0.0824	0.2915	0.0732	0.2915	0.0631
0.3054	0.1371	0.3054	0.1191	0.3054	0.1092	0.3054	0.1006	0.3054	0.0931	0.3054	0.0811	0.3054	0.0706
0.3199	0.1652	0.3199	0.1286	0.3199	0.1172	0.3199	0.1073	0.3199	0.0989	0.3199	0.0856	0.3199	0.0757
0.3352	0.1878	0.3352	0.1337	0.3352	0.1172	0.3352	0.1073	0.3352	0.0989	0.3352	0.0865	0.3352	0.0771
0.3511	0.2181	0.3511	0.1647	0.3511	0.1395	0.3511	0.12	0.3511	0.1078	0.3511	0.0935	0.3511	0.0785
0.3678	0.2181	0.3678	0.1647	0.3678	0.1397	0.3678	0.1283	0.3678	0.1183	0.3678	0.1047	0.3678	0.0915

0.3853	0.2181	0.3853	0.1647	0.3853	0.147	0.3853	0.138	0.3853	0.13	0.3853	0.1166	0.3853	0.1017
0.4037	0.2181	0.4037	0.1647	0.4037	0.1478	0.4037	0.1391	0.4037	0.1314	0.4037	0.1186	0.4037	0.1044
0.4229	0.2189	0.4229	0.1647	0.4229	0.1478	0.4229	0.1391	0.4229	0.1314	0.4229	0.1186	0.4229	0.1044
0.4431	0.3472	0.4431	0.2355	0.4431	0.1923	0.4431	0.1615	0.4431	0.1413	0.4431	0.1213	0.4431	0.1119
0.4642	0.3472	0.4642	0.2355	0.4642	0.1951	0.4642	0.1751	0.4642	0.1594	0.4642	0.1384	0.4642	0.1214
0.4863	0.3472	0.4863	0.2355	0.4863	0.1951	0.4863	0.1781	0.4863	0.1665	0.4863	0.1492	0.4863	0.1273
0.5094	0.3472	0.5094	0.2355	0.5094	0.2018	0.5094	0.1893	0.5094	0.178	0.5094	0.1574	0.5094	0.133
0.5337	0.3695	0.5337	0.2689	0.5337	0.232	0.5337	0.2061	0.5337	0.1852	0.5337	0.1574	0.5337	0.133
0.5591	0.3695	0.5591	0.281	0.5591	0.2442	0.5591	0.2148	0.5591	0.193	0.5591	0.1633	0.5591	0.1435
0.5857	0.3695	0.5857	0.2873	0.5857	0.2546	0.5857	0.228	0.5857	0.2062	0.5857	0.1801	0.5857	0.1608
0.6136	0.3695	0.6136	0.2873	0.6136	0.2546	0.6136	0.228	0.6136	0.2069	0.6136	0.1894	0.6136	0.1692
0.6428	0.3817	0.6428	0.2873	0.6428	0.2546	0.6428	0.2298	0.6428	0.2121	0.6428	0.1961	0.6428	0.1762
0.6734	0.3817	0.6734	0.2976	0.6734	0.2715	0.6734	0.2487	0.6734	0.2338	0.6734	0.2138	0.6734	0.1889
0.7055	0.4491	0.7055	0.37	0.7055	0.3283	0.7055	0.2935	0.7055	0.2706	0.7055	0.2341	0.7055	0.2005
0.7391	0.5365	0.7391	0.4265	0.7391	0.3742	0.7391	0.3318	0.7391	0.2971	0.7391	0.2451	0.7391	0.2071
0.7743	0.628	0.7743	0.4729	0.7743	0.4012	0.7743	0.3465	0.7743	0.3042	0.7743	0.2469	0.7743	0.2325
0.8111	0.813	0.8111	0.4774	0.8111	0.4012	0.8111	0.3465	0.8111	0.3042	0.8111	0.2755	0.8111	0.2586
0.8497	0.813	0.8497	0.4774	0.8497	0.4012	0.8497	0.3574	0.8497	0.3295	0.8497	0.3025	0.8497	0.2836
0.8902	0.813	0.8902	0.4774	0.8902	0.4159	0.8902	0.3821	0.8902	0.3545	0.8902	0.3296	0.8902	0.3085
0.9326	1.0682	0.9326	0.63	0.9326	0.502	0.9326	0.4299	0.9326	0.3762	0.9326	0.3568	0.9326	0.3336
0.977	1.0682	0.977	0.6921	0.977	0.5678	0.977	0.4802	0.977	0.4166	0.977	0.3823	0.977	0.3564
1.0235	1.0682	1.0235	0.6921	1.0235	0.5678	1.0235	0.4802	1.0235	0.4461	1.0235	0.4083	1.0235	0.3759
1.0723	1.0682	1.0723	0.6921	1.0723	0.5678	1.0723	0.5223	1.0723	0.499	1.0723	0.457	1.0723	0.4039
1.1233	1.2235	1.1233	0.7093	1.1233	0.6072	1.1233	0.5774	1.1233	0.5491	1.1233	0.5	1.1233	0.4397
1.1768	1.2235	1.1768	0.7609	1.1768	0.6761	1.1768	0.6181	1.1768	0.5844	1.1768	0.5279	1.1768	0.4629
1.2328	1.2235	1.2328	0.7609	1.2328	0.6761	1.2328	0.6181	1.2328	0.5848	1.2328	0.5319	1.2328	0.4733
1.2916	1.38	1.2916	0.9702	1.2916	0.8115	1.2916	0.7038	1.2916	0.6261	1.2916	0.5319	1.2916	0.4757
1.353	1.5277	1.353	1.0704	1.353	0.893	1.353	0.7708	1.353	0.6847	1.353	0.5767	1.353	0.5012
1.4175	1.5277	1.4175	1.0704	1.4175	0.9317	1.4175	0.8594	1.4175	0.7938	1.4175	0.6823	1.4175	0.5606
1.485	1.5277	1.485	1.1558	1.485	1.036	1.485	0.9419	1.485	0.8621	1.485	0.7311	1.485	0.5961
1.5557	1.9994	1.5557	1.2739	1.5557	1.0575	1.5557	0.9419	1.5557	0.8621	1.5557	0.7311	1.5557	0.6097
1.6298	1.9994	1.6298	1.2739	1.6298	1.0685	1.6298	0.9942	1.6298	0.9258	1.6298	0.8095	1.6298	0.6757
1.7074	1.9994	1.7074	1.3467	1.7074	1.1921	1.7074	1.0891	1.7074	1.0073	1.7074	0.8754	1.7074	0.7234
1.7887	2.5094	1.7887	1.5259	1.7887	1.3435	1.7887	1.198	1.7887	1.0737	1.7887	0.8849	1.7887	0.7284
1.8738	2.5094	1.8738	1.5259	1.8738	1.3435	1.8738	1.2126	1.8738	1.0986	1.8738	0.9122	1.8738	0.7848
1.963	2.5094	1.963	1.6919	1.963	1.3738	1.963	1.2126	1.963	1.0986	1.963	0.9419	1.963	0.8346
2.0565	2.5094	2.0565	1.6919	2.0565	1.3738	2.0565	1.2126	2.0565	1.1043	2.0565	1.0014	2.0565	0.8791
2.1544	2.5094	2.1544	1.6919	2.1544	1.3738	2.1544	1.2586	2.1544	1.1906	2.1544	1.0705	2.1544	0.9161
2.257	2.5118	2.257	1.6919	2.257	1.4972	2.257	1.3913	2.257	1.2957	2.257	1.1384	2.257	0.9527

2.3645	2.6594	2.3645	1.8721	2.3645	1.6678	2.3645	1.5032	2.3645	1.3686	2.3645	1.1626	2.3645	0.9527
2.4771	2.6594	2.4771	1.8721	2.4771	1.6678	2.4771	1.5032	2.4771	1.3686	2.4771	1.1626	2.4771	0.9527
2.595	2.9473	2.595	2.0725	2.595	1.7153	2.595	1.5032	2.595	1.3686	2.595	1.1626	2.595	0.9527
2.7186	3.3563	2.7186	2.0725	2.7186	1.7153	2.7186	1.5032	2.7186	1.3686	2.7186	1.1626	2.7186	0.9527
2.848	3.3563	2.848	2.0725	2.848	1.7153	2.848	1.5032	2.848	1.3686	2.848	1.1626	2.848	0.9527
2.9836	3.3563	2.9836	2.0725	2.9836	1.7536	2.9836	1.5166	2.9836	1.3191	2.9836	1.1021	2.9836	0.9624
3.1257	3.3563	3.1257	2.0725	3.1257	1.7536	3.1257	1.5166	3.1257	1.3191	3.1257	1.1021	3.1257	0.9624
3.2745	3.3563	3.2745	2.0076	3.2745	1.7536	3.2745	1.5166	3.2745	1.3191	3.2745	1.1021	3.2745	0.9624
3.4305	2.3492	3.4305	1.7893	3.4305	1.7536	3.4305	1.5166	3.4305	1.3191	3.4305	1.0863	3.4305	0.9624
3.5938	1.9258	3.5938	1.7893	3.5938	1.7536	3.5938	1.5166	3.5938	1.3191	3.5938	1.0863	3.5938	0.9624
3.7649	1.9258	3.7649	1.6814	3.7649	1.4648	3.7649	1.3142	3.7649	1.2046	3.7649	1.0723	3.7649	0.9532
3.9442	1.9258	3.9442	1.4249	3.9442	1.266	3.9442	1.1716	3.9442	1.1062	3.9442	1.0158	3.9442	0.9161
4.132	1.9258	4.132	1.3151	4.132	1.1186	4.132	0.9925	4.132	0.9639	4.132	0.9241	4.132	0.8565
4.3288	1.9258	4.3288	1.3151	4.3288	1.1186	4.3288	0.9925	4.3288	0.9036	4.3288	0.8451	4.3288	0.7892
4.5349	1.7138	4.5349	1.0833	4.5349	0.9804	4.5349	0.8879	4.5349	0.8266	4.5349	0.7534	4.5349	0.726
4.7508	1.5698	4.7508	1.006	4.7508	0.9133	4.7508	0.8601	4.7508	0.8104	4.7508	0.727	4.7508	0.671
4.977	1.5698	4.977	1.006	4.977	0.8727	4.977	0.7769	4.977	0.7266	4.977	0.659	4.977	0.6299
5.214	1.5698	5.214	0.8976	5.214	0.7649	5.214	0.6877	5.214	0.636	5.214	0.5985	5.214	0.5865
5.4623	1.0521	5.4623	0.6474	5.4623	0.5881	5.4623	0.5734	5.4623	0.5654	5.4623	0.5556	5.4623	0.546
5.7224	1.2	5.7224	0.6474	5.7224	0.5602	5.7224	0.5421	5.7224	0.5301	5.7224	0.5147	5.7224	0.5117
5.9948	1.2	5.9948	0.6474	5.9948	0.5599	5.9948	0.5327	5.9948	0.512	5.9948	0.4821	5.9948	0.4861
6.2803	1.2	6.2803	0.7482	6.2803	0.6357	6.2803	0.5707	6.2803	0.5436	6.2803	0.4982	6.2803	0.4735
6.5793	1.5424	6.5793	0.8479	6.5793	0.6847	6.5793	0.6018	6.5793	0.5757	6.5793	0.5344	6.5793	0.4848
6.8926	1.8136	6.8926	0.974	6.8926	0.7343	6.8926	0.6233	6.8926	0.5933	6.8926	0.5446	6.8926	0.4987
7.2208	1.8136	7.2208	0.974	7.2208	0.7423	7.2208	0.684	7.2208	0.6378	7.2208	0.5711	7.2208	0.5069
7.5646	1.8136	7.5646	0.974	7.5646	0.7423	7.5646	0.684	7.5646	0.6378	7.5646	0.5711	7.5646	0.5069
7.9248	1.8136	7.9248	0.974	7.9248	0.7423	7.9248	0.684	7.9248	0.6378	7.9248	0.5711	7.9248	0.5069
8.3022	1.8136	8.3022	0.974	8.3022	0.7423	8.3022	0.684	8.3022	0.6378	8.3022	0.5711	8.3022	0.5069
8.6975	1.4099	8.6975	0.8352	8.6975	0.7423	8.6975	0.684	8.6975	0.6378	8.6975	0.5711	8.6975	0.5069
9.1116	1.001	9.1116	0.6622	9.1116	0.6162	9.1116	0.5977	9.1116	0.5769	9.1116	0.5373	9.1116	0.4896
9.5455	0.8404	9.5455	0.5998	9.5455	0.5657	9.5455	0.5394	9.5455	0.5225	9.5455	0.5005	9.5455	0.4689
10	0.6745	10	0.5998	10	0.5657	10	0.5394	10	0.5187	10	0.4877	10	0.4553
10.4762	0.572	10.4762	0.4915	10.4762	0.487	10.4762	0.4816	10.4762	0.4736	10.4762	0.4556	10.4762	0.433
10.975	0.572	10.975	0.4915	10.975	0.4781	10.975	0.4658	10.975	0.4552	10.975	0.4378	10.975	0.4175
11.4976	0.4636	11.4976	0.4648	11.4976	0.4484	11.4976	0.4337	11.4976	0.4218	11.4976	0.4094	11.4976	0.3962
12.045	0.4491	12.045	0.4045	12.045	0.3965	12.045	0.3945	12.045	0.393	12.045	0.3913	12.045	0.3895
12.6186	0.4491	12.6186	0.4045	12.6186	0.3957	12.6186	0.392	12.6186	0.3903	12.6186	0.3885	12.6186	0.3869
13.2194	0.4491	13.2194	0.4045	13.2194	0.3957	13.2194	0.3907	13.2194	0.3882	13.2194	0.3853	13.2194	0.3846
13.8489	0.5669	13.8489	0.4508	13.8489	0.4226	13.8489	0.4077	13.8489	0.3984	13.8489	0.3876	13.8489	0.3834

14.5083	0.5669	14.5083	0.4508	14.5083	0.4226	14.5083	0.4077	14.5083	0.3984	14.5083	0.3876	14.5083	0.3822
15.1991	0.5669	15.1991	0.4508	15.1991	0.4226	15.1991	0.4077	15.1991	0.3984	15.1991	0.3876	15.1991	0.3805
15.9228	0.5669	15.9228	0.4508	15.9228	0.4226	15.9228	0.4077	15.9228	0.3984	15.9228	0.3876	15.9228	0.3804
16.681	0.5669	16.681	0.4508	16.681	0.4226	16.681	0.4077	16.681	0.3984	16.681	0.3876	16.681	0.3793
17.4753	0.5622	17.4753	0.4284	17.4753	0.4129	17.4753	0.4035	17.4753	0.3964	17.4753	0.3864	17.4753	0.3788
18.3074	0.5236	18.3074	0.4191	18.3074	0.4041	18.3074	0.397	18.3074	0.3916	18.3074	0.3843	18.3074	0.3788
19.1791	0.5236	19.1791	0.4191	19.1791	0.4041	19.1791	0.397	19.1791	0.3916	19.1791	0.3843	19.1791	0.3788
20.0923	0.5236	20.0923	0.4128	20.0923	0.4041	20.0923	0.397	20.0923	0.3916	20.0923	0.3843	20.0923	0.3788
21.049	0.4235	21.049	0.3889	21.049	0.3847	21.049	0.3848	21.049	0.3841	21.049	0.382	21.049	0.3788
22.0513	0.4235	22.0513	0.3889	22.0513	0.384	22.0513	0.3822	22.0513	0.3809	22.0513	0.3798	22.0513	0.3777
23.1013	0.4235	23.1013	0.3889	23.1013	0.384	23.1013	0.3822	23.1013	0.3807	23.1013	0.3785	23.1013	0.3762
24.2013	0.396	24.2013	0.3804	24.2013	0.3791	24.2013	0.3781	24.2013	0.3771	24.2013	0.3754	24.2013	0.3738
25.3536	0.396	25.3536	0.3788	25.3536	0.3776	25.3536	0.3766	25.3536	0.3757	25.3536	0.3743	25.3536	0.3729
26.5609	0.396	26.5609	0.3769	26.5609	0.3743	26.5609	0.3732	26.5609	0.3726	26.5609	0.372	26.5609	0.3715
27.8256	0.3933	27.8256	0.3748	27.8256	0.3724	27.8256	0.3717	27.8256	0.3711	27.8256	0.3703	27.8256	0.3703
29.1505	0.3933	29.1505	0.3735	29.1505	0.3724	29.1505	0.3717	29.1505	0.3711	29.1505	0.3703	29.1505	0.3699
30.5386	0.3933	30.5386	0.3735	30.5386	0.3724	30.5386	0.3717	30.5386	0.3711	30.5386	0.3702	30.5386	0.3695
31.9927	0.3933	31.9927	0.3729	31.9927	0.3707	31.9927	0.3699	31.9927	0.3693	31.9927	0.3687	31.9927	0.3687
33.516	0.3733	33.516	0.3719	33.516	0.3707	33.516	0.3699	33.516	0.3693	33.516	0.3685	33.516	0.3684
35.1119	0.3694	35.1119	0.3692	35.1119	0.3689	35.1119	0.3687	35.1119	0.3685	35.1119	0.3685	35.1119	0.3684
36.7838	0.3686	36.7838	0.3686	36.7838	0.3685	36.7838	0.3685	36.7838	0.3685	36.7838	0.3685	36.7838	0.3684
38.5353	0.3686	38.5353	0.3686	38.5353	0.3685	38.5353	0.3685	38.5353	0.3685	38.5353	0.3685	38.5353	0.3684
40.3702	0.3686	40.3702	0.3686	40.3702	0.3685	40.3702	0.3685	40.3702	0.3685	40.3702	0.3685	40.3702	0.3684
42.2924	0.3685	42.2924	0.3685	42.2924	0.3685	42.2924	0.3685	42.2924	0.3685	42.2924	0.3684	42.2924	0.3684
44.3062	0.3685	44.3062	0.3684	44.3062	0.3684	44.3062	0.3684	44.3062	0.3684	44.3062	0.3684	44.3062	0.3684
46.4159	0.3684	46.4159	0.3684	46.4159	0.3684	46.4159	0.3683	46.4159	0.3683	46.4159	0.3683	46.4159	0.3683
48.626	0.3683	48.626	0.3683	48.626	0.3683	48.626	0.3683	48.626	0.3683	48.626	0.3683	48.626	0.3683
50.9414	0.3682	50.9414	0.3682	50.9414	0.3682	50.9414	0.3682	50.9414	0.3682	50.9414	0.3682	50.9414	0.3682

RPP-WTP Pretreatment Facility ISRS
Calc No.: 24590-PTF-S0C-S15T-00005, Rev. 0B

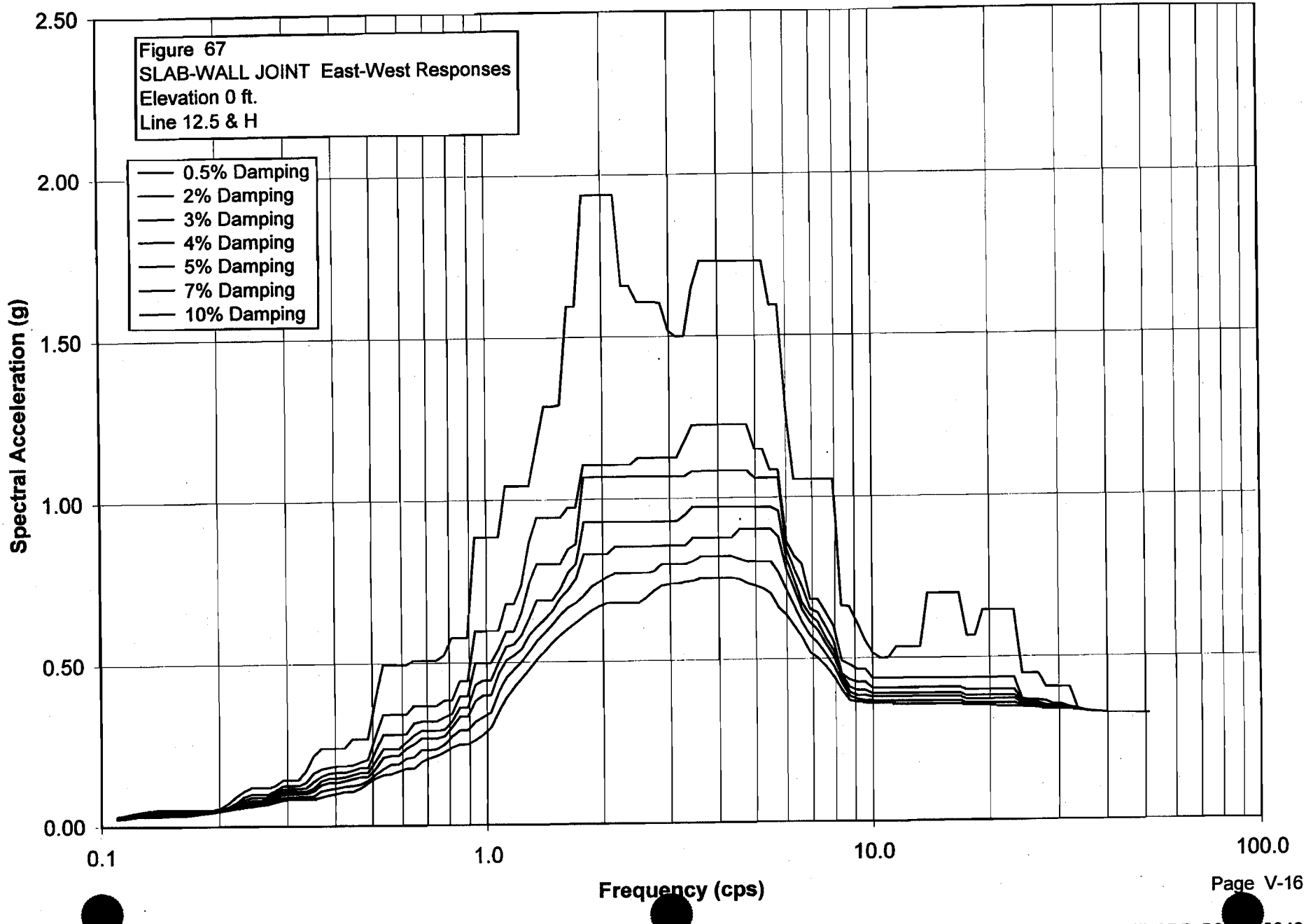

S_PTWW067.grf
RPP-WTP Pretreatment Facility ISRS
Calc No.: 24590-PTF-S0C-S15T-00005, Rev. 0B
Frequency (cps)
Spectral Acceleration (g)
Figure 67
SLAB-WALL JOINT East-West Responses
Elevation 0 ft.
Line 12.5 & H

Damping	0.50%	Damping	2%	Damping	3%	Damping	4%	Damping	5%	Damping	7%	Damping	10%
Freq.	Accel.	Freq.	Accel.	Freq.	Accel.	Freq.	Accel.	Freq.	Accel.	Freq.	Accel.	Freq.	Accel.
0.1098	0.0314	0.1098	0.0288	0.1098	0.0275	0.1098	0.0267	0.1098	0.026	0.1098	0.0247	0.1098	0.0231
0.115	0.0358	0.115	0.033	0.115	0.0314	0.115	0.03	0.115	0.0289	0.115	0.0273	0.115	0.0253
0.1204	0.041	0.1204	0.0382	0.1204	0.0366	0.1204	0.0352	0.1204	0.0339	0.1204	0.0316	0.1204	0.0287
0.1262	0.0459	0.1262	0.0426	0.1262	0.0406	0.1262	0.0389	0.1262	0.0372	0.1262	0.0344	0.1262	0.0311
0.1322	0.0488	0.1322	0.0442	0.1322	0.0421	0.1322	0.0402	0.1322	0.0385	0.1322	0.0355	0.1322	0.032
0.1385	0.0518	0.1385	0.0463	0.1385	0.0431	0.1385	0.0402	0.1385	0.0385	0.1385	0.0355	0.1385	0.032
0.1451	0.0518	0.1451	0.0463	0.1451	0.0431	0.1451	0.0402	0.1451	0.0385	0.1451	0.0355	0.1451	0.032
0.152	0.0518	0.152	0.0463	0.152	0.0431	0.152	0.0402	0.152	0.0385	0.152	0.0355	0.152	0.032
0.1592	0.0518	0.1592	0.0463	0.1592	0.0431	0.1592	0.0402	0.1592	0.0385	0.1592	0.0355	0.1592	0.0322
0.1668	0.0518	0.1668	0.0463	0.1668	0.0431	0.1668	0.0402	0.1668	0.0385	0.1668	0.0361	0.1668	0.0348
0.1748	0.0518	0.1748	0.0463	0.1748	0.0431	0.1748	0.041	0.1748	0.0403	0.1748	0.0392	0.1748	0.0375
0.1831	0.0518	0.1831	0.0463	0.1831	0.0454	0.1831	0.0446	0.1831	0.0438	0.1831	0.0424	0.1831	0.0402
0.1918	0.0521	0.1918	0.0504	0.1918	0.0494	0.1918	0.0484	0.1918	0.0474	0.1918	0.0455	0.1918	0.0433
0.2009	0.0569	0.2009	0.0549	0.2009	0.0536	0.2009	0.0524	0.2009	0.0513	0.2009	0.0494	0.2009	0.0471
0.2105	0.0707	0.2105	0.06	0.2105	0.0585	0.2105	0.0572	0.2105	0.056	0.2105	0.0538	0.2105	0.0513
0.2205	0.0909	0.2205	0.0714	0.2205	0.0642	0.2205	0.0623	0.2205	0.0608	0.2205	0.0584	0.2205	0.0554
0.231	0.1078	0.231	0.0906	0.231	0.0813	0.231	0.0735	0.231	0.0671	0.231	0.0628	0.231	0.0589
0.242	0.1194	0.242	0.0991	0.242	0.0883	0.242	0.0791	0.242	0.0714	0.242	0.0663	0.242	0.0617
0.2535	0.12	0.2535	0.0991	0.2535	0.0883	0.2535	0.0796	0.2535	0.0755	0.2535	0.069	0.2535	0.0654
0.2656	0.12	0.2656	0.0991	0.2656	0.0922	0.2656	0.0879	0.2656	0.0839	0.2656	0.0769	0.2656	0.0684
0.2783	0.1252	0.2783	0.1094	0.2783	0.1006	0.2783	0.0949	0.2783	0.0907	0.2783	0.0832	0.2783	0.0751
0.2915	0.1421	0.2915	0.1244	0.2915	0.1145	0.2915	0.1057	0.2915	0.0979	0.2915	0.0883	0.2915	0.0805
0.3054	0.1421	0.3054	0.1244	0.3054	0.115	0.3054	0.1067	0.3054	0.0994	0.3054	0.0903	0.3054	0.0832
0.3199	0.1421	0.3199	0.1244	0.3199	0.115	0.3199	0.1067	0.3199	0.0994	0.3199	0.0903	0.3199	0.0837
0.3352	0.1707	0.3352	0.1342	0.3352	0.1178	0.3352	0.1067	0.3352	0.0994	0.3352	0.0903	0.3352	0.0837
0.3511	0.2169	0.3511	0.1627	0.3511	0.1366	0.3511	0.1164	0.3511	0.107	0.3511	0.0922	0.3511	0.0837
0.3678	0.2396	0.3678	0.1754	0.3678	0.1523	0.3678	0.1387	0.3678	0.1269	0.3678	0.1073	0.3678	0.0882

0.3853	0.2396	0.3853	0.1799	0.3853	0.1618	0.3853	0.1463	0.3853	0.1331	0.3853	0.112	0.3853	0.0944
0.4037	0.2396	0.4037	0.1842	0.4037	0.164	0.4037	0.1472	0.4037	0.1332	0.4037	0.1155	0.4037	0.0992
0.4229	0.2396	0.4229	0.1842	0.4229	0.164	0.4229	0.1495	0.4229	0.1381	0.4229	0.1214	0.4229	0.1046
0.4431	0.2688	0.4431	0.1868	0.4431	0.1709	0.4431	0.1568	0.4431	0.1442	0.4431	0.1234	0.4431	0.1046
0.4642	0.2688	0.4642	0.1954	0.4642	0.1781	0.4642	0.1629	0.4642	0.1495	0.4642	0.1272	0.4642	0.1151
0.4863	0.2688	0.4863	0.2037	0.4863	0.1784	0.4863	0.1629	0.4863	0.1495	0.4863	0.1378	0.4863	0.1308
0.5094	0.3911	0.5094	0.2791	0.5094	0.2331	0.5094	0.2001	0.5094	0.1754	0.5094	0.1572	0.5094	0.1456
0.5337	0.4951	0.5337	0.3445	0.5337	0.2811	0.5337	0.237	0.5337	0.2102	0.5337	0.174	0.5337	0.1562
0.5591	0.4951	0.5591	0.3445	0.5591	0.2811	0.5591	0.237	0.5591	0.2161	0.5591	0.1886	0.5591	0.1586
0.5857	0.4951	0.5857	0.3445	0.5857	0.2811	0.5857	0.237	0.5857	0.2161	0.5857	0.1886	0.5857	0.1672
0.6136	0.4951	0.6136	0.3445	0.6136	0.2835	0.6136	0.2579	0.6136	0.2376	0.6136	0.2068	0.6136	0.1755
0.6428	0.5081	0.6428	0.3704	0.6428	0.3158	0.6428	0.2788	0.6428	0.2506	0.6428	0.2109	0.6428	0.1755
0.6734	0.5081	0.6734	0.3704	0.6734	0.3214	0.6734	0.2929	0.6734	0.2694	0.6734	0.2332	0.6734	0.1957
0.7055	0.5081	0.7055	0.3704	0.7055	0.3214	0.7055	0.2929	0.7055	0.2694	0.7055	0.2332	0.7055	0.2068
0.7391	0.5081	0.7391	0.3704	0.7391	0.3214	0.7391	0.2929	0.7391	0.2694	0.7391	0.2359	0.7391	0.2145
0.7743	0.5246	0.7743	0.3867	0.7743	0.3352	0.7743	0.2967	0.7743	0.2757	0.7743	0.2494	0.7743	0.2264
0.8111	0.5776	0.8111	0.3867	0.8111	0.3456	0.8111	0.3215	0.8111	0.3045	0.8111	0.2755	0.8111	0.2408
0.8497	0.5776	0.8497	0.444	0.8497	0.3988	0.8497	0.3642	0.8497	0.3363	0.8497	0.2936	0.8497	0.2491
0.8902	0.5776	0.8902	0.444	0.8902	0.3988	0.8902	0.3642	0.8902	0.3363	0.8902	0.2936	0.8902	0.2491
0.9326	0.8877	0.9326	0.5975	0.9326	0.4991	0.9326	0.4325	0.9326	0.3845	0.9326	0.3203	0.9326	0.2634
0.977	0.8877	0.977	0.5975	0.977	0.4991	0.977	0.4459	0.977	0.4011	0.977	0.3342	0.977	0.2792
1.0235	0.8877	1.0235	0.5975	1.0235	0.4991	1.0235	0.4459	1.0235	0.4011	1.0235	0.3491	1.0235	0.3012
1.0723	0.8877	1.0723	0.6	1.0723	0.5421	1.0723	0.5019	1.0723	0.4672	1.0723	0.4115	1.0723	0.3515
1.1233	1.0436	1.1233	0.6796	1.1233	0.5961	1.1233	0.5493	1.1233	0.5076	1.1233	0.454	1.1233	0.393
1.1768	1.0436	1.1768	0.6796	1.1768	0.5966	1.1768	0.5564	1.1768	0.5218	1.1768	0.4787	1.1768	0.424
1.2328	1.0436	1.2328	0.7363	1.2328	0.6543	1.2328	0.5857	1.2328	0.5418	1.2328	0.503	1.2328	0.452
1.2916	1.0436	1.2916	0.8733	1.2916	0.7423	1.2916	0.6374	1.2916	0.5853	1.2916	0.5346	1.2916	0.4807
1.353	1.1657	1.353	0.9454	1.353	0.8025	1.353	0.6903	1.353	0.6111	1.353	0.5663	1.353	0.5097
1.4175	1.2899	1.4175	0.9454	1.4175	0.8025	1.4175	0.6903	1.4175	0.6337	1.4175	0.5919	1.4175	0.5357
1.485	1.2899	1.485	0.9454	1.485	0.8025	1.485	0.6903	1.485	0.6584	1.485	0.617	1.485	0.5609
1.5557	1.2945	1.5557	0.9454	1.5557	0.8025	1.5557	0.7243	1.5557	0.696	1.5557	0.6469	1.5557	0.584
1.6298	1.5963	1.6298	0.9746	1.6298	0.8489	1.6298	0.7751	1.6298	0.7218	1.6298	0.6683	1.6298	0.604
1.7074	1.5963	1.7074	0.9746	1.7074	0.8647	1.7074	0.8015	1.7074	0.7551	1.7074	0.6813	1.7074	0.6226
1.7887	1.939	1.7887	1.1073	1.7887	1.0689	1.7887	0.93	1.7887	0.8319	1.7887	0.7035	1.7887	0.6419
1.8738	1.939	1.8738	1.1073	1.8738	1.0689	1.8738	0.93	1.8738	0.8319	1.8738	0.7304	1.8738	0.6589
1.963	1.939	1.963	1.1073	1.963	1.0689	1.963	0.93	1.963	0.8319	1.963	0.7451	1.963	0.671
2.0565	1.939	2.0565	1.1073	2.0565	1.0689	2.0565	0.93	2.0565	0.8319	2.0565	0.7593	2.0565	0.6798
2.1544	1.939	2.1544	1.1073	2.1544	1.0689	2.1544	0.93	2.1544	0.8543	2.1544	0.771	2.1544	0.6798
2.257	1.6562	2.257	1.1073	2.257	1.0689	2.257	0.93	2.257	0.8543	2.257	0.771	2.257	0.6798

2.3645	1.6562	2.3645	1.1073	2.3645	1.0689	2.3645	0.93	2.3645	0.8543	2.3645	0.771	2.3645	0.6798
2.4771	1.6073	2.4771	1.127	2.4771	1.0689	2.4771	0.93	2.4771	0.8543	2.4771	0.771	2.4771	0.6798
2.595	1.6073	2.595	1.127	2.595	1.0689	2.595	0.93	2.595	0.8543	2.595	0.771	2.595	0.6948
2.7186	1.6073	2.7186	1.127	2.7186	1.0689	2.7186	0.93	2.7186	0.8543	2.7186	0.775	2.7186	0.7152
2.848	1.6038	2.848	1.127	2.848	1.0689	2.848	0.93	2.848	0.8559	2.848	0.7972	2.848	0.7309
2.9836	1.5188	2.9836	1.127	2.9836	1.0689	2.9836	0.93	2.9836	0.8559	2.9836	0.7972	2.9836	0.7343
3.1257	1.4997	3.1257	1.127	3.1257	1.0689	3.1257	0.93	3.1257	0.8559	3.1257	0.7972	3.1257	0.7358
3.2745	1.4997	3.2745	1.1771	3.2745	1.0689	3.2745	0.9489	3.2745	0.8559	3.2745	0.7972	3.2745	0.7415
3.4305	1.6477	3.4305	1.2287	3.4305	1.0843	3.4305	0.9715	3.4305	0.8786	3.4305	0.8056	3.4305	0.7439
3.5938	1.729	3.5938	1.2287	3.5938	1.0843	3.5938	0.9715	3.5938	0.8786	3.5938	0.8201	3.5938	0.7521
3.7649	1.729	3.7649	1.2287	3.7649	1.0843	3.7649	0.9715	3.7649	0.8786	3.7649	0.8201	3.7649	0.7521
3.9442	1.729	3.9442	1.2287	3.9442	1.0843	3.9442	0.9715	3.9442	0.8786	3.9442	0.8201	3.9442	0.7521
4.132	1.729	4.132	1.2287	4.132	1.0843	4.132	0.9715	4.132	0.8786	4.132	0.8201	4.132	0.7521
4.3288	1.729	4.3288	1.2287	4.3288	1.0843	4.3288	0.9715	4.3288	0.8786	4.3288	0.8201	4.3288	0.7521
4.5349	1.729	4.5349	1.2287	4.5349	1.0843	4.5349	0.9715	4.5349	0.9034	4.5349	0.8114	4.5349	0.7477
4.7508	1.729	4.7508	1.2287	4.7508	1.0843	4.7508	0.9715	4.7508	0.9034	4.7508	0.8028	4.7508	0.7348
4.977	1.729	4.977	1.1517	4.977	1.0607	4.977	0.9698	4.977	0.9034	4.977	0.8028	4.977	0.7272
5.214	1.729	5.214	1.1517	5.214	1.0607	5.214	0.9698	5.214	0.9034	5.214	0.8028	5.214	0.7183
5.4623	1.5947	5.4623	1.0863	5.4623	1.0607	5.4623	0.9698	5.4623	0.9034	5.4623	0.8028	5.4623	0.7033
5.7224	1.5947	5.7224	1.0863	5.7224	1.0607	5.7224	0.9582	5.7224	0.8798	5.7224	0.767	5.7224	0.6597
5.9948	1.2803	5.9948	0.866	5.9948	0.8444	5.9948	0.8127	5.9948	0.7784	5.9948	0.714	5.9948	0.6374
6.2803	1.0548	6.2803	0.8195	6.2803	0.7776	6.2803	0.744	6.2803	0.7149	6.2803	0.6643	6.2803	0.6028
6.5793	1.0548	6.5793	0.7923	6.5793	0.7225	6.5793	0.6735	6.5793	0.6523	6.5793	0.6139	6.5793	0.5669
6.8926	1.0548	6.8926	0.6827	6.8926	0.6543	6.8926	0.635	6.8926	0.6133	6.8926	0.5713	6.8926	0.5194
7.2208	1.0548	7.2208	0.6827	7.2208	0.6434	7.2208	0.6137	7.2208	0.5893	7.2208	0.5492	7.2208	0.5024
7.5646	1.0548	7.5646	0.643	7.5646	0.5993	7.5646	0.5643	7.5646	0.5464	7.5646	0.5145	7.5646	0.476
7.9248	1.0548	7.9248	0.6	7.9248	0.5525	7.9248	0.5251	7.9248	0.5059	7.9248	0.4766	7.9248	0.444
8.3022	0.6638	8.3022	0.4935	8.3022	0.453	8.3022	0.4489	8.3022	0.4419	8.3022	0.4251	8.3022	0.4054
8.6975	0.6605	8.6975	0.4805	8.6975	0.4345	8.6975	0.413	8.6975	0.3975	8.6975	0.3855	8.6975	0.3723
9.1116	0.6123	9.1116	0.4662	9.1116	0.4277	9.1116	0.403	9.1116	0.3873	9.1116	0.3764	9.1116	0.3684
9.5455	0.5564	9.5455	0.4662	9.5455	0.4277	9.5455	0.403	9.5455	0.3873	9.5455	0.3716	9.5455	0.3649
10	0.5166	10	0.4371	10	0.4088	10	0.3922	10	0.3815	10	0.3716	10	0.3633
10.4762	0.4998	10.4762	0.4371	10.4762	0.4088	10.4762	0.3922	10.4762	0.3812	10.4762	0.37	10.4762	0.3633
10.975	0.5011	10.975	0.4371	10.975	0.4088	10.975	0.3922	10.975	0.3812	10.975	0.37	10.975	0.3633
11.4976	0.5346	11.4976	0.4371	11.4976	0.4088	11.4976	0.3922	11.4976	0.3812	11.4976	0.3678	11.4976	0.3593
12.045	0.5346	12.045	0.4371	12.045	0.4088	12.045	0.3922	12.045	0.3812	12.045	0.3678	12.045	0.3575
12.6186	0.5346	12.6186	0.4371	12.6186	0.4088	12.6186	0.3922	12.6186	0.3812	12.6186	0.3678	12.6186	0.3575
13.2194	0.5346	13.2194	0.4371	13.2194	0.4088	13.2194	0.3922	13.2194	0.3812	13.2194	0.3678	13.2194	0.3575
13.8489	0.6983	13.8489	0.4371	13.8489	0.4088	13.8489	0.3922	13.8489	0.3812	13.8489	0.3678	13.8489	0.3575

14.5083	0.6983	14.5083	0.4371	14.5083	0.4088	14.5083	0.3922	14.5083	0.3812	14.5083	0.3678	14.5083	0.3575
15.1991	0.6983	15.1991	0.4371	15.1991	0.4088	15.1991	0.3922	15.1991	0.3812	15.1991	0.3678	15.1991	0.3575
15.9228	0.6983	15.9228	0.4371	15.9228	0.4088	15.9228	0.3922	15.9228	0.3812	15.9228	0.3678	15.9228	0.3575
16.681	0.6983	16.681	0.4371	16.681	0.4088	16.681	0.3922	16.681	0.3812	16.681	0.3678	16.681	0.3575
17.4753	0.5675	17.4753	0.4359	17.4753	0.4009	17.4753	0.3832	17.4753	0.3725	17.4753	0.3623	17.4753	0.3546
18.3074	0.5675	18.3074	0.4359	18.3074	0.4009	18.3074	0.3832	18.3074	0.3725	18.3074	0.3623	18.3074	0.3546
19.1791	0.6461	19.1791	0.4359	19.1791	0.4009	19.1791	0.3832	19.1791	0.3725	19.1791	0.3623	19.1791	0.3546
20.0923	0.6461	20.0923	0.4359	20.0923	0.4009	20.0923	0.3832	20.0923	0.3725	20.0923	0.3623	20.0923	0.3546
21.049	0.6461	21.049	0.4359	21.049	0.4009	21.049	0.3832	21.049	0.3725	21.049	0.3601	21.049	0.3508
22.0513	0.6461	22.0513	0.4359	22.0513	0.4009	22.0513	0.3832	22.0513	0.3725	22.0513	0.3601	22.0513	0.3504
23.1013	0.6461	23.1013	0.4359	23.1013	0.4009	23.1013	0.3832	23.1013	0.3725	23.1013	0.3601	23.1013	0.3504
24.2013	0.4489	24.2013	0.3721	24.2013	0.3669	24.2013	0.3636	24.2013	0.3605	24.2013	0.3546	24.2013	0.3479
25.3536	0.4489	25.3536	0.3675	25.3536	0.3609	25.3536	0.3581	25.3536	0.3561	25.3536	0.3522	25.3536	0.3477
26.5609	0.4489	26.5609	0.3675	26.5609	0.3609	26.5609	0.3565	26.5609	0.3534	26.5609	0.3491	26.5609	0.3452
27.8256	0.4073	27.8256	0.3647	27.8256	0.3523	27.8256	0.3488	27.8256	0.3467	27.8256	0.3435	27.8256	0.3406
29.1505	0.4073	29.1505	0.3548	29.1505	0.3516	29.1505	0.3488	29.1505	0.3467	29.1505	0.3435	29.1505	0.3402
30.5386	0.4073	30.5386	0.3548	30.5386	0.3516	30.5386	0.3488	30.5386	0.3467	30.5386	0.3435	30.5386	0.3402
31.9927	0.4073	31.9927	0.3465	31.9927	0.345	31.9927	0.3447	31.9927	0.3438	31.9927	0.3417	31.9927	0.3392
33.516	0.3423	33.516	0.3426	33.516	0.3419	33.516	0.341	33.516	0.3401	33.516	0.3386	33.516	0.3369
35.1119	0.3337	35.1119	0.3344	35.1119	0.3347	35.1119	0.3349	35.1119	0.3349	35.1119	0.3348	35.1119	0.3343
36.7838	0.3313	36.7838	0.3316	36.7838	0.3318	36.7838	0.3319	36.7838	0.332	36.7838	0.3321	36.7838	0.332
38.5353	0.3298	38.5353	0.3299	38.5353	0.33	38.5353	0.3301	38.5353	0.3302	38.5353	0.3303	38.5353	0.3303
40.3702	0.3286	40.3702	0.3287	40.3702	0.3288	40.3702	0.3289	40.3702	0.3289	40.3702	0.329	40.3702	0.3291
42.2924	0.3277	42.2924	0.3278	42.2924	0.3278	42.2924	0.3279	42.2924	0.3279	42.2924	0.328	42.2924	0.328
44.3062	0.327	44.3062	0.327	44.3062	0.3271	44.3062	0.3271	44.3062	0.3271	44.3062	0.3271	44.3062	0.3272
46.4159	0.3263	46.4159	0.3264	46.4159	0.3264	46.4159	0.3264	46.4159	0.3264	46.4159	0.3264	46.4159	0.3265
48.626	0.3257	48.626	0.3257	48.626	0.3257	48.626	0.3257	48.626	0.3258	48.626	0.3258	48.626	0.3258
50.9414	0.3252	50.9414	0.3252	50.9414	0.3252	50.9414	0.3252	50.9414	0.3252	50.9414	0.3252	50.9414	0.3252

RPP-WTP Pretreatment Facility ISRS
Calc No.: 24590-PTF-S0C-S15T-00005, Rev. 0B

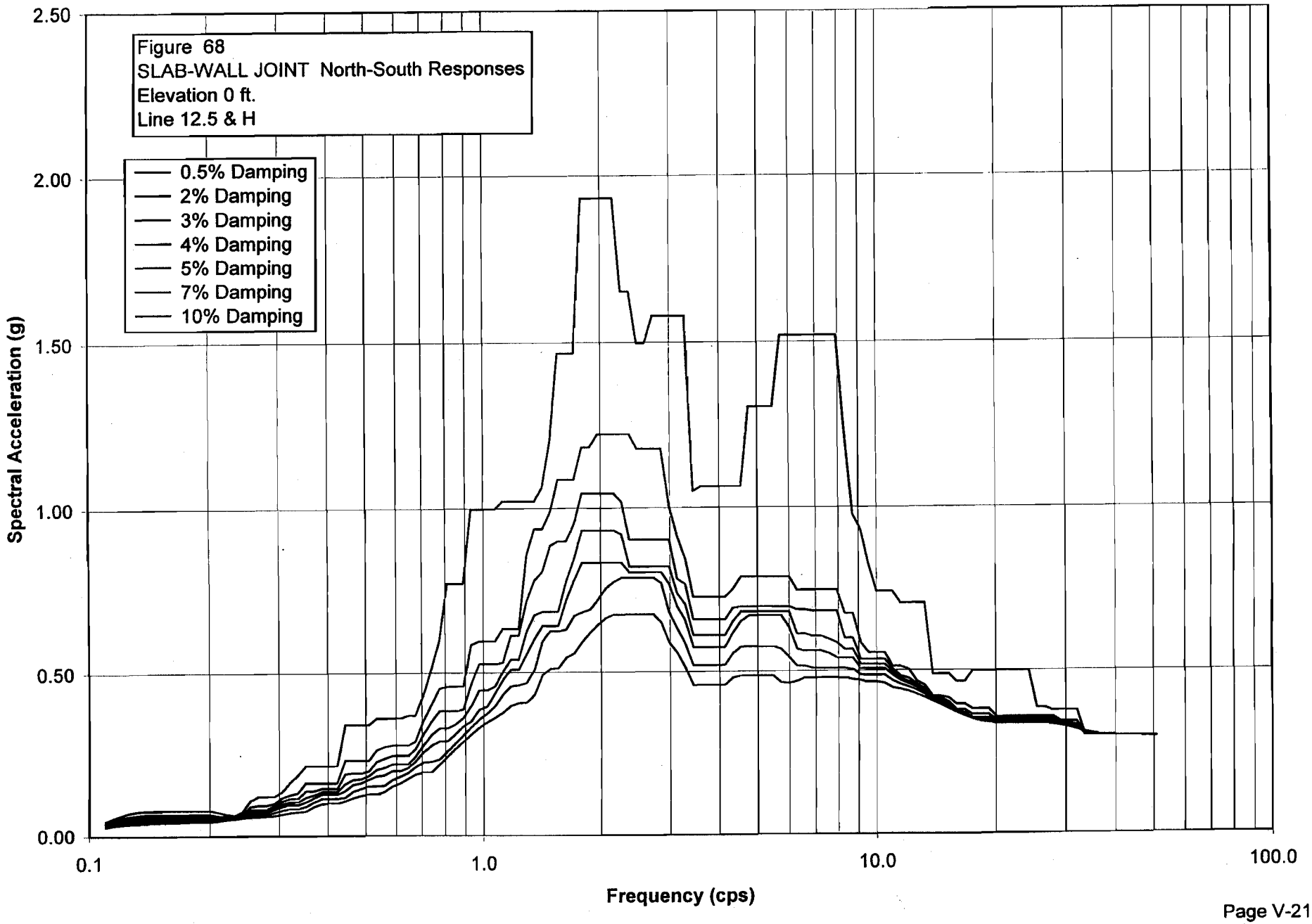

S_PTWW068.grf
RPP-WTP Pretreatment Facility ISRS
Calc No.: 24590-PTF-S0C-S15T-00005, Rev. 0B
Frequency (cps)
Spectral Acceleration (g)
Figure 68
SLAB-WALL JOINT North-South Responses
Elevation 0 ft.
Line 12.5 & H

Damping	0.50%	Damping	2%	Damping	3%	Damping	4%	Damping	5%	Damping	7%	Damping	10%
Freq.	Accel.	Freq.	Accel.	Freq.	Accel.	Freq.	Accel.	Freq.	Accel.	Freq.	Accel.	Freq.	Accel.
0.1098	0.0456	0.1098	0.0394	0.1098	0.0365	0.1098	0.0343	0.1098	0.0327	0.1098	0.0305	0.1098	0.028
0.115	0.0555	0.115	0.0492	0.115	0.0464	0.115	0.0438	0.115	0.0416	0.115	0.0378	0.115	0.0332
0.1204	0.0647	0.1204	0.058	0.1204	0.0542	0.1204	0.0508	0.1204	0.0478	0.1204	0.0424	0.1204	0.036
0.1262	0.0719	0.1262	0.0617	0.1262	0.0571	0.1262	0.0532	0.1262	0.0497	0.1262	0.0437	0.1262	0.0378
0.1322	0.0761	0.1322	0.0652	0.1322	0.06	0.1322	0.0561	0.1322	0.0525	0.1322	0.0466	0.1322	0.0398
0.1385	0.0785	0.1385	0.0671	0.1385	0.0608	0.1385	0.0561	0.1385	0.0525	0.1385	0.0466	0.1385	0.0398
0.1451	0.0789	0.1451	0.0676	0.1451	0.0612	0.1451	0.0561	0.1451	0.0525	0.1451	0.0466	0.1451	0.0407
0.152	0.0789	0.152	0.0676	0.152	0.0612	0.152	0.0564	0.152	0.0534	0.152	0.0482	0.152	0.0426
0.1592	0.0789	0.1592	0.0676	0.1592	0.0612	0.1592	0.0564	0.1592	0.0534	0.1592	0.0482	0.1592	0.0435
0.1668	0.0789	0.1668	0.0676	0.1668	0.0612	0.1668	0.0564	0.1668	0.0534	0.1668	0.0482	0.1668	0.0435
0.1748	0.0789	0.1748	0.0676	0.1748	0.0612	0.1748	0.0564	0.1748	0.0534	0.1748	0.0482	0.1748	0.0435
0.1831	0.0789	0.1831	0.0676	0.1831	0.0612	0.1831	0.0564	0.1831	0.0534	0.1831	0.0482	0.1831	0.0435
0.1918	0.0789	0.1918	0.0676	0.1918	0.0612	0.1918	0.0562	0.1918	0.0532	0.1918	0.048	0.1918	0.0435
0.2009	0.0789	0.2009	0.0676	0.2009	0.0612	0.2009	0.0562	0.2009	0.0532	0.2009	0.0478	0.2009	0.0435
0.2105	0.0734	0.2105	0.0632	0.2105	0.0596	0.2105	0.0562	0.2105	0.0532	0.2105	0.049	0.2105	0.0468
0.2205	0.0683	0.2205	0.0622	0.2205	0.0587	0.2205	0.0559	0.2205	0.0547	0.2205	0.0527	0.2205	0.0501
0.231	0.0647	0.231	0.0623	0.231	0.0609	0.231	0.0595	0.231	0.0583	0.231	0.056	0.231	0.0532
0.242	0.0759	0.242	0.0684	0.242	0.0646	0.242	0.0627	0.242	0.0614	0.242	0.0589	0.242	0.0561
0.2535	0.1097	0.2535	0.0914	0.2535	0.0822	0.2535	0.0748	0.2535	0.069	0.2535	0.0615	0.2535	0.0585
0.2656	0.1215	0.2656	0.0949	0.2656	0.0825	0.2656	0.0748	0.2656	0.069	0.2656	0.0636	0.2656	0.0602
0.2783	0.1215	0.2783	0.0949	0.2783	0.0825	0.2783	0.0776	0.2783	0.0734	0.2783	0.0664	0.2783	0.0612
0.2915	0.1215	0.2915	0.1001	0.2915	0.0932	0.2915	0.0871	0.2915	0.0817	0.2915	0.0726	0.2915	0.0624
0.3054	0.1358	0.3054	0.1179	0.3054	0.1078	0.3054	0.099	0.3054	0.0914	0.3054	0.0795	0.3054	0.0671
0.3199	0.164	0.3199	0.1266	0.3199	0.1152	0.3199	0.1054	0.3199	0.097	0.3199	0.0837	0.3199	0.0716
0.3352	0.1864	0.3352	0.1319	0.3352	0.1152	0.3352	0.1054	0.3352	0.097	0.3352	0.0843	0.3352	0.0745
0.3511	0.2149	0.3511	0.1624	0.3511	0.1375	0.3511	0.1182	0.3511	0.1047	0.3511	0.0907	0.3511	0.0762
0.3678	0.2149	0.3678	0.1624	0.3678	0.1375	0.3678	0.1252	0.3678	0.1164	0.3678	0.104	0.3678	0.09

0.3853	0.2149	0.3853	0.1624	0.3853	0.1446	0.3853	0.1356	0.3853	0.1276	0.3853	0.1141	0.3853	0.0986
0.4037	0.2149	0.4037	0.1624	0.4037	0.1446	0.4037	0.1356	0.4037	0.1276	0.4037	0.1144	0.4037	0.1004
0.4229	0.2162	0.4229	0.1627	0.4229	0.1446	0.4229	0.1356	0.4229	0.1276	0.4229	0.1144	0.4229	0.1004
0.4431	0.3426	0.4431	0.2319	0.4431	0.1895	0.4431	0.1592	0.4431	0.1381	0.4431	0.1184	0.4431	0.1069
0.4642	0.3426	0.4642	0.2319	0.4642	0.1921	0.4642	0.1724	0.4642	0.1573	0.4642	0.1361	0.4642	0.116
0.4863	0.3426	0.4863	0.2319	0.4863	0.1921	0.4863	0.1742	0.4863	0.1618	0.4863	0.1445	0.4863	0.1231
0.5094	0.3426	0.5094	0.2319	0.5094	0.1986	0.5094	0.1844	0.5094	0.1729	0.5094	0.1523	0.5094	0.1276
0.5337	0.3621	0.5337	0.2644	0.5337	0.2284	0.5337	0.2033	0.5337	0.1829	0.5337	0.1523	0.5337	0.1276
0.5591	0.3621	0.5591	0.2742	0.5591	0.238	0.5591	0.2093	0.5591	0.1863	0.5591	0.1548	0.5591	0.1353
0.5857	0.3621	0.5857	0.2791	0.5857	0.2469	0.5857	0.2206	0.5857	0.1991	0.5857	0.1715	0.5857	0.1521
0.6136	0.3621	0.6136	0.2791	0.6136	0.2469	0.6136	0.2206	0.6136	0.1993	0.6136	0.1818	0.6136	0.1615
0.6428	0.3694	0.6428	0.2791	0.6428	0.2469	0.6428	0.2213	0.6428	0.2086	0.6428	0.1933	0.6428	0.1748
0.6734	0.3694	0.6734	0.2906	0.6734	0.2657	0.6734	0.2429	0.6734	0.2288	0.6734	0.2108	0.6734	0.1877
0.7055	0.4317	0.7055	0.3543	0.7055	0.3133	0.7055	0.279	0.7055	0.2569	0.7055	0.2257	0.7055	0.1944
0.7391	0.5134	0.7391	0.4029	0.7391	0.3524	0.7391	0.3115	0.7391	0.278	0.7391	0.2281	0.7391	0.1944
0.7743	0.5998	0.7743	0.4518	0.7743	0.3831	0.7743	0.331	0.7743	0.2909	0.7743	0.2351	0.7743	0.2186
0.8111	0.7728	0.8111	0.458	0.8111	0.3831	0.8111	0.331	0.8111	0.2909	0.8111	0.2586	0.8111	0.2434
0.8497	0.7728	0.8497	0.458	0.8497	0.3831	0.8497	0.3436	0.8497	0.3138	0.8497	0.2842	0.8497	0.2671
0.8902	0.7728	0.8902	0.458	0.8902	0.388	0.8902	0.3627	0.8902	0.3375	0.8902	0.3097	0.8902	0.2901
0.9326	0.9974	0.9326	0.5856	0.9326	0.4664	0.9326	0.3986	0.9326	0.3523	0.9326	0.3345	0.9326	0.3123
0.977	0.9974	0.977	0.5962	0.977	0.5269	0.977	0.4456	0.977	0.3864	0.977	0.3568	0.977	0.3322
1.0235	0.9974	1.0235	0.5962	1.0235	0.5269	1.0235	0.4456	1.0235	0.3963	1.0235	0.375	1.0235	0.3489
1.0723	0.9974	1.0723	0.5962	1.0723	0.5269	1.0723	0.4578	1.0723	0.4362	1.0723	0.3969	1.0723	0.362
1.1233	1.022	1.1233	0.6338	1.1233	0.5306	1.1233	0.5028	1.1233	0.4775	1.1233	0.432	1.1233	0.3768
1.1768	1.022	1.1768	0.6338	1.1768	0.6129	1.1768	0.5399	1.1768	0.5088	1.1768	0.4574	1.1768	0.3977
1.2328	1.022	1.2328	0.6338	1.2328	0.6129	1.2328	0.5399	1.2328	0.5088	1.2328	0.4606	1.2328	0.4062
1.2916	1.022	1.2916	0.8562	1.2916	0.7174	1.2916	0.624	1.2916	0.5564	1.2916	0.4677	1.2916	0.4071
1.353	1.022	1.353	0.9365	1.353	0.781	1.353	0.6757	1.353	0.6023	1.353	0.5084	1.353	0.4311
1.4175	1.0636	1.4175	0.9365	1.4175	0.8087	1.4175	0.6853	1.4175	0.6424	1.4175	0.5953	1.4175	0.4919
1.485	1.2052	1.485	0.988	1.485	0.8866	1.485	0.6853	1.485	0.6424	1.485	0.6264	1.485	0.511
1.5557	1.4673	1.5557	1.0882	1.5557	0.8988	1.5557	0.6853	1.5557	0.6427	1.5557	0.6264	1.5557	0.5133
1.6298	1.4673	1.6298	1.0882	1.6298	0.8988	1.6298	0.7781	1.6298	0.7205	1.6298	0.6315	1.6298	0.5443
1.7074	1.4673	1.7074	1.0882	1.7074	0.9509	1.7074	0.8465	1.7074	0.7818	1.7074	0.6721	1.7074	0.5582
1.7887	1.9337	1.7887	1.1866	1.7887	1.0454	1.7887	0.9314	1.7887	0.8343	1.7887	0.6827	1.7887	0.5914
1.8738	1.9337	1.8738	1.1866	1.8738	1.0454	1.8738	0.9314	1.8738	0.8343	1.8738	0.6909	1.8738	0.6195
1.963	1.9337	1.963	1.2264	1.963	1.0454	1.963	0.9314	1.963	0.8343	1.963	0.7213	1.963	0.6444
2.0565	1.9337	2.0565	1.2264	2.0565	1.0454	2.0565	0.9314	2.0565	0.8343	2.0565	0.7554	2.0565	0.6649
2.1544	1.9337	2.1544	1.2264	2.1544	1.0454	2.1544	0.9314	2.1544	0.8343	2.1544	0.7745	2.1544	0.6753
2.257	1.6526	2.257	1.2264	2.257	1.0189	2.257	0.9197	2.257	0.8328	2.257	0.7876	2.257	0.6753

2.3645	1.6526	2.3645	1.2264	2.3645	0.9027	2.3645	0.8216	2.3645	0.8042	2.3645	0.7876	2.3645	0.6753
2.4771	1.4968	2.4771	1.1813	2.4771	0.9027	2.4771	0.8216	2.4771	0.8042	2.4771	0.7876	2.4771	0.6753
2.595	1.4968	2.595	1.1813	2.595	0.9027	2.595	0.8216	2.595	0.8042	2.595	0.7876	2.595	0.6753
2.7186	1.5785	2.7186	1.1813	2.7186	0.9027	2.7186	0.8216	2.7186	0.8042	2.7186	0.7876	2.7186	0.6751
2.848	1.5785	2.848	1.1813	2.848	0.9027	2.848	0.8216	2.848	0.8042	2.848	0.771	2.848	0.6514
2.9836	1.5785	2.9836	1.0072	2.9836	0.9027	2.9836	0.8216	2.9836	0.7681	2.9836	0.6806	2.9836	0.5889
3.1257	1.5785	3.1257	0.9135	3.1257	0.7834	3.1257	0.7396	3.1257	0.7002	3.1257	0.6334	3.1257	0.5581
3.2745	1.5785	3.2745	0.8453	3.2745	0.7676	3.2745	0.706	3.2745	0.6569	3.2745	0.5846	3.2745	0.5121
3.4305	1.0503	3.4305	0.7273	3.4305	0.6584	3.4305	0.6105	3.4305	0.5739	3.4305	0.5184	3.4305	0.4584
3.5938	1.0648	3.5938	0.7273	3.5938	0.6584	3.5938	0.6105	3.5938	0.5739	3.5938	0.5184	3.5938	0.4584
3.7649	1.0648	3.7649	0.7273	3.7649	0.6584	3.7649	0.6105	3.7649	0.5739	3.7649	0.5184	3.7649	0.4584
3.9442	1.0648	3.9442	0.7273	3.9442	0.6584	3.9442	0.6105	3.9442	0.5739	3.9442	0.5184	3.9442	0.4584
4.132	1.0648	4.132	0.7273	4.132	0.6584	4.132	0.6105	4.132	0.5739	4.132	0.5204	4.132	0.4587
4.3288	1.0648	4.3288	0.7521	4.3288	0.6945	4.3288	0.6539	4.3288	0.6178	4.3288	0.5556	4.3288	0.4808
4.5349	1.0648	4.5349	0.7892	4.5349	0.6979	4.5349	0.6817	4.5349	0.6537	4.5349	0.5747	4.5349	0.4858
4.7508	1.3052	4.7508	0.7892	4.7508	0.6979	4.7508	0.6817	4.7508	0.6702	4.7508	0.5747	4.7508	0.4858
4.977	1.3052	4.977	0.7892	4.977	0.6979	4.977	0.6817	4.977	0.6702	4.977	0.5747	4.977	0.4858
5.214	1.3052	5.214	0.7892	5.214	0.6979	5.214	0.6817	5.214	0.6702	5.214	0.5747	5.214	0.4858
5.4623	1.3052	5.4623	0.7892	5.4623	0.6979	5.4623	0.6817	5.4623	0.6702	5.4623	0.5747	5.4623	0.4858
5.7224	1.5193	5.7224	0.7892	5.7224	0.6979	5.7224	0.6817	5.7224	0.6702	5.7224	0.568	5.7224	0.4651
5.9948	1.5193	5.9948	0.7892	5.9948	0.6979	5.9948	0.6817	5.9948	0.6343	5.9948	0.5423	5.9948	0.4627
6.2803	1.5193	6.2803	0.7477	6.2803	0.6873	6.2803	0.6133	6.2803	0.5671	6.2803	0.5154	6.2803	0.4687
6.5793	1.5193	6.5793	0.7477	6.5793	0.6873	6.5793	0.6133	6.5793	0.5619	6.5793	0.5154	6.5793	0.4777
6.8926	1.5193	6.8926	0.7477	6.8926	0.6832	6.8926	0.6059	6.8926	0.5619	6.8926	0.5081	6.8926	0.4777
7.2208	1.5193	7.2208	0.7477	7.2208	0.6832	7.2208	0.6059	7.2208	0.5619	7.2208	0.5081	7.2208	0.4777
7.5646	1.5193	7.5646	0.7477	7.5646	0.6832	7.5646	0.5969	7.5646	0.5534	7.5646	0.5081	7.5646	0.4777
7.9248	1.5193	7.9248	0.7477	7.9248	0.6832	7.9248	0.5857	7.9248	0.5403	7.9248	0.5081	7.9248	0.4777
8.3022	1.2327	8.3022	0.6751	8.3022	0.5995	8.3022	0.5656	8.3022	0.5394	8.3022	0.508	8.3022	0.4774
8.6975	0.9775	8.6975	0.6751	8.6975	0.5995	8.6975	0.5656	8.6975	0.5394	8.6975	0.5041	8.6975	0.4735
9.1116	0.9295	9.1116	0.5846	9.1116	0.5348	9.1116	0.5193	9.1116	0.5065	9.1116	0.4867	9.1116	0.4695
9.5455	0.823	9.5455	0.5551	9.5455	0.5348	9.5455	0.5193	9.5455	0.5065	9.5455	0.4859	9.5455	0.4651
10	0.742	10	0.5551	10	0.5348	10	0.5193	10	0.5065	10	0.4859	10	0.4651
10.4762	0.742	10.4762	0.5551	10.4762	0.5348	10.4762	0.5193	10.4762	0.5065	10.4762	0.4855	10.4762	0.4609
10.975	0.742	10.975	0.5121	10.975	0.5044	10.975	0.4954	10.975	0.4859	10.975	0.4687	10.975	0.4468
11.4976	0.7067	11.4976	0.5121	11.4976	0.4824	11.4976	0.4755	11.4976	0.4693	11.4976	0.4577	11.4976	0.4423
12.045	0.7067	12.045	0.5026	12.045	0.4753	12.045	0.4651	12.045	0.4586	12.045	0.4489	12.045	0.436
12.6186	0.7067	12.6186	0.4664	12.6186	0.4572	12.6186	0.4527	12.6186	0.4481	12.6186	0.4393	12.6186	0.4274
13.2194	0.7067	13.2194	0.4531	13.2194	0.4433	13.2194	0.4378	13.2194	0.4336	13.2194	0.4263	13.2194	0.4166
13.8489	0.4879	13.8489	0.4205	13.8489	0.4173	13.8489	0.4169	13.8489	0.4158	13.8489	0.412	13.8489	0.4049

14.5083	0.4879	14.5083	0.4205	14.5083	0.4147	14.5083	0.4103	14.5083	0.4068	14.5083	0.4011	14.5083	0.394
15.1991	0.4879	15.1991	0.4145	15.1991	0.4024	15.1991	0.3966	15.1991	0.393	15.1991	0.3882	15.1991	0.3825
15.9228	0.464	15.9228	0.3946	15.9228	0.3783	15.9228	0.3773	15.9228	0.3774	15.9228	0.3753	15.9228	0.3712
16.681	0.464	16.681	0.3946	16.681	0.3783	16.681	0.3694	16.681	0.366	16.681	0.3635	16.681	0.3605
17.4753	0.497	17.4753	0.3813	17.4753	0.3644	17.4753	0.3552	17.4753	0.3513	17.4753	0.352	17.4753	0.3511
18.3074	0.497	18.3074	0.3813	18.3074	0.3644	18.3074	0.3552	18.3074	0.35	18.3074	0.3471	18.3074	0.3445
19.1791	0.497	19.1791	0.3813	19.1791	0.3644	19.1791	0.3552	19.1791	0.35	19.1791	0.3449	19.1791	0.3419
20.0923	0.497	20.0923	0.3574	20.0923	0.3499	20.0923	0.347	20.0923	0.3445	20.0923	0.3407	20.0923	0.3381
21.049	0.497	21.049	0.3574	21.049	0.3499	21.049	0.347	21.049	0.3445	21.049	0.3407	21.049	0.3371
22.0513	0.497	22.0513	0.3574	22.0513	0.3499	22.0513	0.347	22.0513	0.3445	22.0513	0.3407	22.0513	0.3371
23.1013	0.497	23.1013	0.3574	23.1013	0.3521	23.1013	0.3479	23.1013	0.3445	23.1013	0.3407	23.1013	0.3371
24.2013	0.497	24.2013	0.3574	24.2013	0.3521	24.2013	0.3479	24.2013	0.3445	24.2013	0.3407	24.2013	0.3371
25.3536	0.3847	25.3536	0.3574	25.3536	0.3521	25.3536	0.3479	25.3536	0.3445	25.3536	0.3396	25.3536	0.3356
26.5609	0.3847	26.5609	0.3574	26.5609	0.3521	26.5609	0.3479	26.5609	0.3445	26.5609	0.3396	26.5609	0.3356
27.8256	0.3766	27.8256	0.3574	27.8256	0.3521	27.8256	0.3479	27.8256	0.3445	27.8256	0.3393	27.8256	0.334
29.1505	0.3766	29.1505	0.3422	29.1505	0.3374	29.1505	0.335	29.1505	0.3348	29.1505	0.3331	29.1505	0.3297
30.5386	0.3766	30.5386	0.3422	30.5386	0.3374	30.5386	0.3349	30.5386	0.3325	30.5386	0.3287	30.5386	0.3247
31.9927	0.3766	31.9927	0.3422	31.9927	0.3313	31.9927	0.326	31.9927	0.323	31.9927	0.3199	31.9927	0.3178
33.516	0.3014	33.516	0.3015	33.516	0.3016	33.516	0.3036	33.516	0.306	33.516	0.3088	33.516	0.3105
35.1119	0.3014	35.1119	0.3015	35.1119	0.3016	35.1119	0.3019	35.1119	0.3025	35.1119	0.3043	35.1119	0.3061
36.7838	0.3014	36.7838	0.3015	36.7838	0.3016	36.7838	0.3019	36.7838	0.3022	36.7838	0.3029	36.7838	0.3039
38.5353	0.3014	38.5353	0.3015	38.5353	0.3016	38.5353	0.3017	38.5353	0.3018	38.5353	0.3021	38.5353	0.3027
40.3702	0.301	40.3702	0.301	40.3702	0.3011	40.3702	0.3011	40.3702	0.3012	40.3702	0.3014	40.3702	0.3016
42.2924	0.3004	42.2924	0.3004	42.2924	0.3004	42.2924	0.3004	42.2924	0.3005	42.2924	0.3006	42.2924	0.3007
44.3062	0.2996	44.3062	0.2997	44.3062	0.2997	44.3062	0.2997	44.3062	0.2997	44.3062	0.2998	44.3062	0.2999
46.4159	0.2989	46.4159	0.2989	46.4159	0.2989	46.4159	0.2989	46.4159	0.2989	46.4159	0.299	46.4159	0.2991
48.626	0.2982	48.626	0.2982	48.626	0.2982	48.626	0.2982	48.626	0.2982	48.626	0.2982	48.626	0.2983
50.9414	0.2975	50.9414	0.2975	50.9414	0.2975	50.9414	0.2975	50.9414	0.2975	50.9414	0.2975	50.9414	0.2975

RPP-WTP Pretreatment Facility ISRS
Calc No.: 24590-PTF-S0C-S15T-00005, Rev. 0B

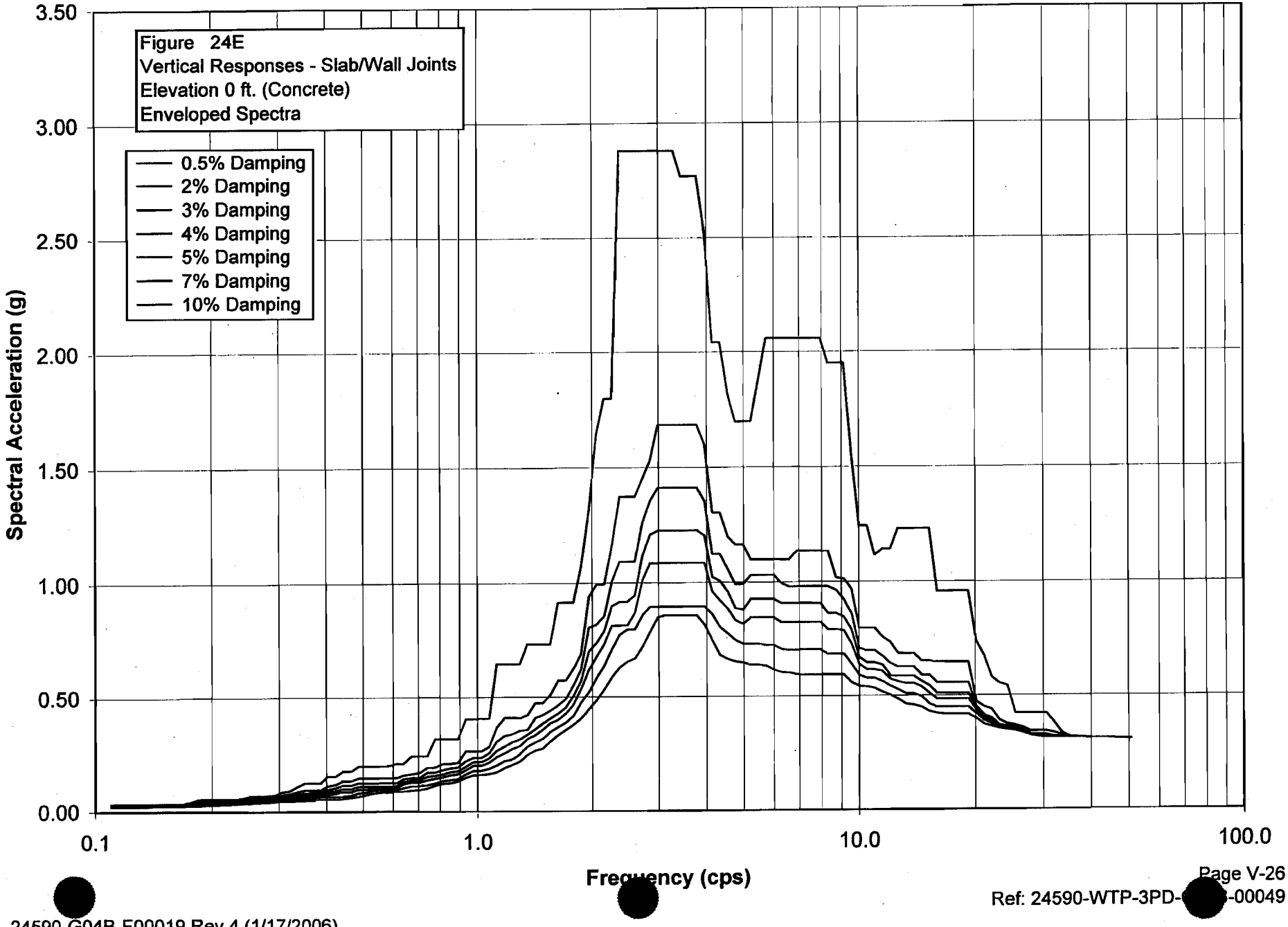

S_PTEE024.grf
RPP-WTP Pretreatment Facility ISRS
Calc No.: 24590-PTF-S0C-S15T-00005, Rev. 0B
Frequency (cps)
Spectral Acceleration (g)
Figure 24E
Vertical Responses - Slab/Wall Joints
Elevation 0 ft. (Concrete)
Enveloped Spectra

Damping	0.50%	Damping	2%	Damping	3%	Damping	4%	Damping	5%	Damping	7%	Damping	10%
Freq.	Accel.	Freq.	Accel.	Freq.	Accel.	Freq.	Accel.	Freq.	Accel.	Freq.	Accel.	Freq.	Accel.
0.1098	0.0329	0.1098	0.0294	0.1098	0.0275	0.1098	0.0263	0.1098	0.0254	0.1098	0.0236	0.1098	0.0217
0.115	0.0347	0.115	0.0311	0.115	0.029	0.115	0.0271	0.115	0.0257	0.115	0.024	0.115	0.022
0.1204	0.0347	0.1204	0.0312	0.1204	0.0291	0.1204	0.0272	0.1204	0.0257	0.1204	0.024	0.1204	0.022
0.1262	0.0349	0.1262	0.0312	0.1262	0.0291	0.1262	0.0272	0.1262	0.0257	0.1262	0.024	0.1262	0.022
0.1322	0.0349	0.1322	0.0312	0.1322	0.0291	0.1322	0.0272	0.1322	0.0257	0.1322	0.024	0.1322	0.0221
0.1385	0.035	0.1385	0.0313	0.1385	0.0292	0.1385	0.0272	0.1385	0.0261	0.1385	0.0243	0.1385	0.0223
0.1451	0.035	0.1451	0.0313	0.1451	0.0292	0.1451	0.0273	0.1451	0.0261	0.1451	0.0243	0.1451	0.0223
0.152	0.0351	0.152	0.0313	0.152	0.0292	0.152	0.0273	0.152	0.0262	0.152	0.0249	0.152	0.0235
0.1592	0.0351	0.1592	0.0313	0.1592	0.0292	0.1592	0.0282	0.1592	0.0275	0.1592	0.0262	0.1592	0.0246
0.1668	0.0351	0.1668	0.0313	0.1668	0.0297	0.1668	0.0289	0.1668	0.0282	0.1668	0.0269	0.1668	0.0252
0.1748	0.0422	0.1748	0.0358	0.1748	0.0323	0.1748	0.0296	0.1748	0.0282	0.1748	0.0269	0.1748	0.0257
0.1831	0.0535	0.1831	0.0445	0.1831	0.0398	0.1831	0.0358	0.1831	0.0324	0.1831	0.0272	0.1831	0.026
0.1918	0.0577	0.1918	0.0478	0.1918	0.0425	0.1918	0.038	0.1918	0.0347	0.1918	0.0319	0.1918	0.0287
0.2009	0.0577	0.2009	0.0478	0.2009	0.0425	0.2009	0.0392	0.2009	0.0373	0.2009	0.034	0.2009	0.0302
0.2105	0.0577	0.2105	0.0478	0.2105	0.0425	0.2105	0.0392	0.2105	0.0374	0.2105	0.0347	0.2105	0.0322
0.2205	0.0577	0.2205	0.0478	0.2205	0.0432	0.2205	0.0416	0.2205	0.0402	0.2205	0.0377	0.2205	0.0346
0.231	0.058	0.231	0.0493	0.231	0.0463	0.231	0.0438	0.231	0.0422	0.231	0.0392	0.231	0.0355
0.242	0.0624	0.242	0.0554	0.242	0.0513	0.242	0.0476	0.242	0.0442	0.242	0.0392	0.242	0.0355
0.2535	0.0713	0.2535	0.0623	0.2535	0.0574	0.2535	0.0532	0.2535	0.0496	0.2535	0.044	0.2535	0.0384
0.2656	0.0713	0.2656	0.0623	0.2656	0.0574	0.2656	0.0532	0.2656	0.0496	0.2656	0.044	0.2656	0.0384
0.2783	0.0713	0.2783	0.0623	0.2783	0.0574	0.2783	0.0532	0.2783	0.0496	0.2783	0.044	0.2783	0.0396
0.2915	0.0743	0.2915	0.0666	0.2915	0.0624	0.2915	0.0587	0.2915	0.0554	0.2915	0.0502	0.2915	0.0442
0.3054	0.0875	0.3054	0.0758	0.3054	0.0693	0.3054	0.0641	0.3054	0.0603	0.3054	0.0539	0.3054	0.0468
0.3199	0.0921	0.3199	0.0797	0.3199	0.0728	0.3199	0.067	0.3199	0.0619	0.3199	0.0539	0.3199	0.0469
0.3352	0.1105	0.3352	0.0889	0.3352	0.0786	0.3352	0.0705	0.3352	0.0642	0.3352	0.0553	0.3352	0.0475
0.3511	0.1251	0.3511	0.0953	0.3511	0.0825	0.3511	0.0725	0.3511	0.0663	0.3511	0.0577	0.3511	0.0492
0.3678	0.1251	0.3678	0.0953	0.3678	0.0848	0.3678	0.0775	0.3678	0.0712	0.3678	0.0613	0.3678	0.0512

0.3853	0.1251	0.3853	0.0957	0.3853	0.0881	0.3853	0.0808	0.3853	0.0753	0.3853	0.0657	0.3853	0.0549
0.4037	0.1549	0.4037	0.1124	0.4037	0.0974	0.4037	0.0858	0.4037	0.0767	0.4037	0.0657	0.4037	0.0549
0.4229	0.1549	0.4229	0.1189	0.4229	0.1035	0.4229	0.0912	0.4229	0.0813	0.4229	0.0671	0.4229	0.0549
0.4431	0.1769	0.4431	0.1354	0.4431	0.1155	0.4431	0.0999	0.4431	0.0876	0.4431	0.0699	0.4431	0.0582
0.4642	0.1769	0.4642	0.1354	0.4642	0.1155	0.4642	0.0999	0.4642	0.0876	0.4642	0.0733	0.4642	0.063
0.4863	0.1981	0.4863	0.1469	0.4863	0.1252	0.4863	0.1094	0.4863	0.0976	0.4863	0.0813	0.4863	0.0674
0.5094	0.1981	0.5094	0.1469	0.5094	0.1252	0.5094	0.1094	0.5094	0.0976	0.5094	0.0854	0.5094	0.0741
0.5337	0.1981	0.5337	0.1469	0.5337	0.1252	0.5337	0.111	0.5337	0.1042	0.5337	0.0936	0.5337	0.0818
0.5591	0.1981	0.5591	0.1469	0.5591	0.1252	0.5591	0.111	0.5591	0.1047	0.5591	0.0963	0.5591	0.0856
0.5857	0.2017	0.5857	0.1489	0.5857	0.1267	0.5857	0.111	0.5857	0.1056	0.5857	0.0968	0.5857	0.086
0.6136	0.2095	0.6136	0.1489	0.6136	0.1267	0.6136	0.1134	0.6136	0.1056	0.6136	0.0968	0.6136	0.086
0.6428	0.2095	0.6428	0.1592	0.6428	0.144	0.6428	0.1315	0.6428	0.1212	0.6428	0.1051	0.6428	0.0888
0.6734	0.2431	0.6734	0.1645	0.6734	0.1488	0.6734	0.1378	0.6734	0.1281	0.6734	0.112	0.6734	0.0942
0.7055	0.2431	0.7055	0.1697	0.7055	0.1488	0.7055	0.1378	0.7055	0.1281	0.7055	0.1134	0.7055	0.0964
0.7391	0.2431	0.7391	0.1929	0.7391	0.1715	0.7391	0.1536	0.7391	0.1387	0.7391	0.1162	0.7391	0.102
0.7743	0.3175	0.7743	0.1939	0.7743	0.1721	0.7743	0.1574	0.7743	0.145	0.7743	0.1247	0.7743	0.1138
0.8111	0.3175	0.8111	0.209	0.8111	0.1824	0.8111	0.1628	0.8111	0.1507	0.8111	0.1354	0.8111	0.1227
0.8497	0.3175	0.8497	0.2096	0.8497	0.1901	0.8497	0.1739	0.8497	0.1602	0.8497	0.1387	0.8497	0.1251
0.8902	0.3175	0.8902	0.2137	0.8902	0.1942	0.8902	0.1779	0.8902	0.1643	0.8902	0.143	0.8902	0.1326
0.9326	0.4048	0.9326	0.2629	0.9326	0.221	0.9326	0.1969	0.9326	0.1816	0.9326	0.1635	0.9326	0.1486
0.977	0.4048	0.977	0.2629	0.977	0.2351	0.977	0.2163	0.977	0.2009	0.977	0.1792	0.977	0.1594
1.0235	0.4048	1.0235	0.2629	1.0235	0.2351	1.0235	0.2163	1.0235	0.2009	1.0235	0.1799	1.0235	0.1605
1.0723	0.4048	1.0723	0.284	1.0723	0.2556	1.0723	0.2329	1.0723	0.2147	1.0723	0.1885	1.0723	0.1656
1.1233	0.6478	1.1233	0.3694	1.1233	0.3066	1.1233	0.2666	1.1233	0.2389	1.1233	0.2034	1.1233	0.1728
1.1768	0.6478	1.1768	0.4092	1.1768	0.3316	1.1768	0.2847	1.1768	0.2551	1.1768	0.2216	1.1768	0.1912
1.2328	0.6478	1.2328	0.4092	1.2328	0.338	1.2328	0.3029	1.2328	0.2737	1.2328	0.2287	1.2328	0.2053
1.2916	0.6478	1.2916	0.4092	1.2916	0.354	1.2916	0.3162	1.2916	0.2852	1.2916	0.251	1.2916	0.2185
1.353	0.7347	1.353	0.4213	1.353	0.3577	1.353	0.336	1.353	0.3164	1.353	0.2841	1.353	0.2475
1.4175	0.7347	1.4175	0.4733	1.4175	0.4091	1.4175	0.3602	1.4175	0.3347	1.4175	0.3026	1.4175	0.2665
1.485	0.7347	1.485	0.4733	1.485	0.4217	1.485	0.3846	1.485	0.3589	1.485	0.318	1.485	0.2749
1.5557	0.7347	1.5557	0.5093	1.5557	0.4416	1.5557	0.4075	1.5557	0.3855	1.5557	0.3483	1.5557	0.3069
1.6298	0.9163	1.6298	0.5735	1.6298	0.4647	1.6298	0.4283	1.6298	0.4013	1.6298	0.3692	1.6298	0.3333
1.7074	0.9163	1.7074	0.5735	1.7074	0.4912	1.7074	0.4549	1.7074	0.4281	1.7074	0.3889	1.7074	0.3565
1.7887	0.9163	1.7887	0.6252	1.7887	0.5523	1.7887	0.5056	1.7887	0.4672	1.7887	0.4188	1.7887	0.3802
1.8738	1.0657	1.8738	0.6899	1.8738	0.6207	1.8738	0.5714	1.8738	0.5353	1.8738	0.4752	1.8738	0.4067
1.963	1.309	1.963	0.9405	1.963	0.8061	1.963	0.7024	1.963	0.6201	1.963	0.5214	1.963	0.447
2.0565	1.6456	2.0565	0.9926	2.0565	0.8189	2.0565	0.7387	2.0565	0.6771	2.0565	0.5832	2.0565	0.4847
2.1544	1.8009	2.1544	0.9926	2.1544	0.8564	2.1544	0.7912	2.1544	0.735	2.1544	0.6387	2.1544	0.5339
2.257	1.8009	2.257	1.1559	2.257	1.0045	2.257	0.9012	2.257	0.8146	2.257	0.7109	2.257	0.5868

2.3645	2.8799	2.3645	1.3727	2.3645	1.0904	2.3645	0.9196	2.3645	0.8166	2.3645	0.7747	2.3645	0.6314
2.4771	2.8799	2.4771	1.3727	2.4771	1.0904	2.4771	0.9196	2.4771	0.8166	2.4771	0.7973	2.4771	0.6564
2.595	2.8799	2.595	1.3727	2.595	1.0904	2.595	0.9452	2.595	0.8693	2.595	0.7973	2.595	0.6706
2.7186	2.8799	2.7186	1.4539	2.7186	1.2603	2.7186	1.1174	2.7186	1.0126	2.7186	0.8596	2.7186	0.723
2.848	2.8799	2.848	1.5317	2.848	1.354	2.848	1.2068	2.848	1.0834	2.848	0.8973	2.848	0.7882
2.9836	2.8799	2.9836	1.6869	2.9836	1.4122	2.9836	1.2244	2.9836	1.0848	2.9836	0.8973	2.9836	0.8498
3.1257	2.8799	3.1257	1.6869	3.1257	1.4122	3.1257	1.2244	3.1257	1.0848	3.1257	0.8973	3.1257	0.8582
3.2745	2.8799	3.2745	1.6869	3.2745	1.4122	3.2745	1.2244	3.2745	1.0848	3.2745	0.8973	3.2745	0.8582
3.4305	2.7652	3.4305	1.6869	3.4305	1.4122	3.4305	1.2244	3.4305	1.0848	3.4305	0.8973	3.4305	0.8582
3.5938	2.7652	3.5938	1.6869	3.5938	1.4122	3.5938	1.2244	3.5938	1.0848	3.5938	0.8973	3.5938	0.8582
3.7649	2.7652	3.7649	1.6869	3.7649	1.4122	3.7649	1.2244	3.7649	1.0848	3.7649	0.8973	3.7649	0.8582
3.9442	2.5281	3.9442	1.5986	3.9442	1.3527	3.9442	1.2028	3.9442	1.0834	3.9442	0.8973	3.9442	0.817
4.132	2.0437	4.132	1.301	4.132	1.1226	4.132	1.0243	4.132	0.9633	4.132	0.8631	4.132	0.7478
4.3288	2.0437	4.3288	1.301	4.3288	1.1226	4.3288	1.0061	4.3288	0.9227	4.3288	0.8061	4.3288	0.6837
4.5349	1.8207	4.5349	1.1967	4.5349	1.0554	4.5349	0.9611	4.5349	0.8876	4.5349	0.7772	4.5349	0.6655
4.7508	1.7008	4.7508	1.1624	4.7508	0.9915	4.7508	0.8891	4.7508	0.8354	4.7508	0.7494	4.7508	0.6545
4.977	1.7008	4.977	1.1624	4.977	0.9915	4.977	0.8809	4.977	0.8192	4.977	0.7321	4.977	0.65
5.214	1.7008	5.214	1.0975	5.214	1.0304	5.214	0.9266	5.214	0.846	5.214	0.7319	5.214	0.6389
5.4623	1.8735	5.4623	1.0975	5.4623	1.0304	5.4623	0.9266	5.4623	0.846	5.4623	0.7319	5.4623	0.6389
5.7224	2.0602	5.7224	1.0975	5.7224	1.0304	5.7224	0.9266	5.7224	0.846	5.7224	0.726	5.7224	0.6355
5.9948	2.0602	5.9948	1.0975	5.9948	1.0304	5.9948	0.9266	5.9948	0.846	5.9948	0.726	5.9948	0.6171
6.2803	2.0602	6.2803	1.0975	6.2803	0.9936	6.2803	0.9089	6.2803	0.8253	6.2803	0.7087	6.2803	0.6055
6.5793	2.0602	6.5793	1.0975	6.5793	0.9797	6.5793	0.9089	6.5793	0.8253	6.5793	0.7045	6.5793	0.6033
6.8926	2.0602	6.8926	1.1327	6.8926	0.9797	6.8926	0.9089	6.8926	0.8253	6.8926	0.7045	6.8926	0.596
7.2208	2.0602	7.2208	1.1327	7.2208	0.9797	7.2208	0.9089	7.2208	0.8253	7.2208	0.7045	7.2208	0.5928
7.5646	2.0602	7.5646	1.1327	7.5646	0.9797	7.5646	0.9089	7.5646	0.8253	7.5646	0.7045	7.5646	0.5938
7.9248	2.0602	7.9248	1.1327	7.9248	0.9797	7.9248	0.9089	7.9248	0.8253	7.9248	0.7045	7.9248	0.5938
8.3022	1.9504	8.3022	1.1327	8.3022	0.9797	8.3022	0.8643	8.3022	0.7929	8.3022	0.6856	8.3022	0.5938
8.6975	1.9504	8.6975	1.0187	8.6975	0.9639	8.6975	0.8643	8.6975	0.7929	8.6975	0.6856	8.6975	0.5938
9.1116	1.9504	9.1116	1.0121	9.1116	0.9236	9.1116	0.8486	9.1116	0.788	9.1116	0.6856	9.1116	0.5938
9.5455	1.5548	9.5455	0.9674	9.5455	0.8614	9.5455	0.7897	9.5455	0.7297	9.5455	0.641	9.5455	0.5601
10	1.2412	10	0.7976	10	0.711	10	0.6704	10	0.6403	10	0.5913	10	0.5423
10.4762	1.2412	10.4762	0.7976	10.4762	0.7005	10.4762	0.6467	10.4762	0.616	10.4762	0.5777	10.4762	0.5402
10.975	1.1134	10.975	0.7976	10.975	0.7005	10.975	0.6467	10.975	0.616	10.975	0.5777	10.975	0.5337
11.4976	1.1405	11.4976	0.7588	11.4976	0.6751	11.4976	0.6377	11.4976	0.6083	11.4976	0.5631	11.4976	0.5155
12.045	1.1405	12.045	0.7357	12.045	0.6444	12.045	0.589	12.045	0.5732	12.045	0.5422	12.045	0.5023
12.6186	1.2275	12.6186	0.6893	12.6186	0.6274	12.6186	0.5862	12.6186	0.5625	12.6186	0.5262	12.6186	0.4844
13.2194	1.2275	13.2194	0.6871	13.2194	0.6274	13.2194	0.5862	13.2194	0.5538	13.2194	0.5083	13.2194	0.4638
13.8489	1.2275	13.8489	0.6871	13.8489	0.6274	13.8489	0.5862	13.8489	0.5538	13.8489	0.5083	13.8489	0.4598

14.5083	1.2275	14.5083	0.6536	14.5083	0.5901	14.5083	0.5632	14.5083	0.5383	14.5083	0.4957	14.5083	0.4501
15.1991	1.2275	15.1991	0.6536	15.1991	0.5893	15.1991	0.5436	15.1991	0.5098	15.1991	0.4637	15.1991	0.431
15.9228	0.9578	15.9228	0.648	15.9228	0.557	15.9228	0.5105	15.9228	0.4847	15.9228	0.45	15.9228	0.4229
16.681	0.9578	16.681	0.648	16.681	0.557	16.681	0.5105	16.681	0.4847	16.681	0.45	16.681	0.4185
17.4753	0.9578	17.4753	0.648	17.4753	0.557	17.4753	0.5105	17.4753	0.4847	17.4753	0.45	17.4753	0.4181
18.3074	0.9578	18.3074	0.648	18.3074	0.557	18.3074	0.5105	18.3074	0.4847	18.3074	0.45	18.3074	0.4181
19.1791	0.9578	19.1791	0.648	19.1791	0.557	19.1791	0.5105	19.1791	0.4847	19.1791	0.45	19.1791	0.4181
20.0923	0.7395	20.0923	0.4726	20.0923	0.4506	20.0923	0.4448	20.0923	0.4372	20.0923	0.4208	20.0923	0.3993
21.049	0.6778	21.049	0.4505	21.049	0.4139	21.049	0.4083	21.049	0.4023	21.049	0.3903	21.049	0.3744
22.0513	0.5811	22.0513	0.4381	22.0513	0.4001	22.0513	0.3907	22.0513	0.3854	22.0513	0.376	22.0513	0.3641
23.1013	0.5542	23.1013	0.392	23.1013	0.3693	23.1013	0.3648	23.1013	0.3627	23.1013	0.3583	23.1013	0.3544
24.2013	0.5425	24.2013	0.3749	24.2013	0.3654	24.2013	0.3619	24.2013	0.3593	24.2013	0.355	24.2013	0.3497
25.3536	0.4219	25.3536	0.3696	25.3536	0.3651	25.3536	0.3607	25.3536	0.3568	25.3536	0.3507	25.3536	0.3446
26.5609	0.4219	26.5609	0.36	26.5609	0.3524	26.5609	0.3478	26.5609	0.3444	26.5609	0.3397	26.5609	0.3359
27.8256	0.4219	27.8256	0.3433	27.8256	0.3297	27.8256	0.3277	27.8256	0.3262	27.8256	0.3247	27.8256	0.3258
29.1505	0.4219	29.1505	0.3433	29.1505	0.3274	29.1505	0.3214	29.1505	0.3202	29.1505	0.3186	29.1505	0.3186
30.5386	0.4219	30.5386	0.3433	30.5386	0.3274	30.5386	0.3214	30.5386	0.3167	30.5386	0.316	30.5386	0.3153
31.9927	0.3814	31.9927	0.3366	31.9927	0.3197	31.9927	0.3172	31.9927	0.3167	31.9927	0.316	31.9927	0.3153
33.516	0.3355	33.516	0.3269	33.516	0.3197	33.516	0.3172	33.516	0.3167	33.516	0.316	33.516	0.3153
35.1119	0.319	35.1119	0.3183	35.1119	0.3177	35.1119	0.3172	35.1119	0.3167	35.1119	0.316	35.1119	0.3153
36.7838	0.3163	36.7838	0.316	36.7838	0.3158	36.7838	0.3157	36.7838	0.3155	36.7838	0.3151	36.7838	0.3146
38.5353	0.3145	38.5353	0.3144	38.5353	0.3143	38.5353	0.3142	38.5353	0.3141	38.5353	0.3139	38.5353	0.3136
40.3702	0.3131	40.3702	0.313	40.3702	0.3129	40.3702	0.3129	40.3702	0.3128	40.3702	0.3128	40.3702	0.3126
42.2924	0.3119	42.2924	0.3118	42.2924	0.3118	42.2924	0.3118	42.2924	0.3117	42.2924	0.3117	42.2924	0.3116
44.3062	0.3108	44.3062	0.3108	44.3062	0.3108	44.3062	0.3108	44.3062	0.3108	44.3062	0.3107	44.3062	0.3107
46.4159	0.3099	46.4159	0.3099	46.4159	0.3099	46.4159	0.3098	46.4159	0.3098	46.4159	0.3098	46.4159	0.3098
48.626	0.309	48.626	0.309	48.626	0.309	48.626	0.309	48.626	0.309	48.626	0.309	48.626	0.309
50.9414	0.3083	50.9414	0.3083	50.9414	0.3083	50.9414	0.3084	50.9414	0.3084	50.9414	0.3084	50.9414	0.3084

RPP-WTP Pretreatment Facility ISRS
Calc No.: 24590-PTF-S0C-S15T-00005, Rev. 0B

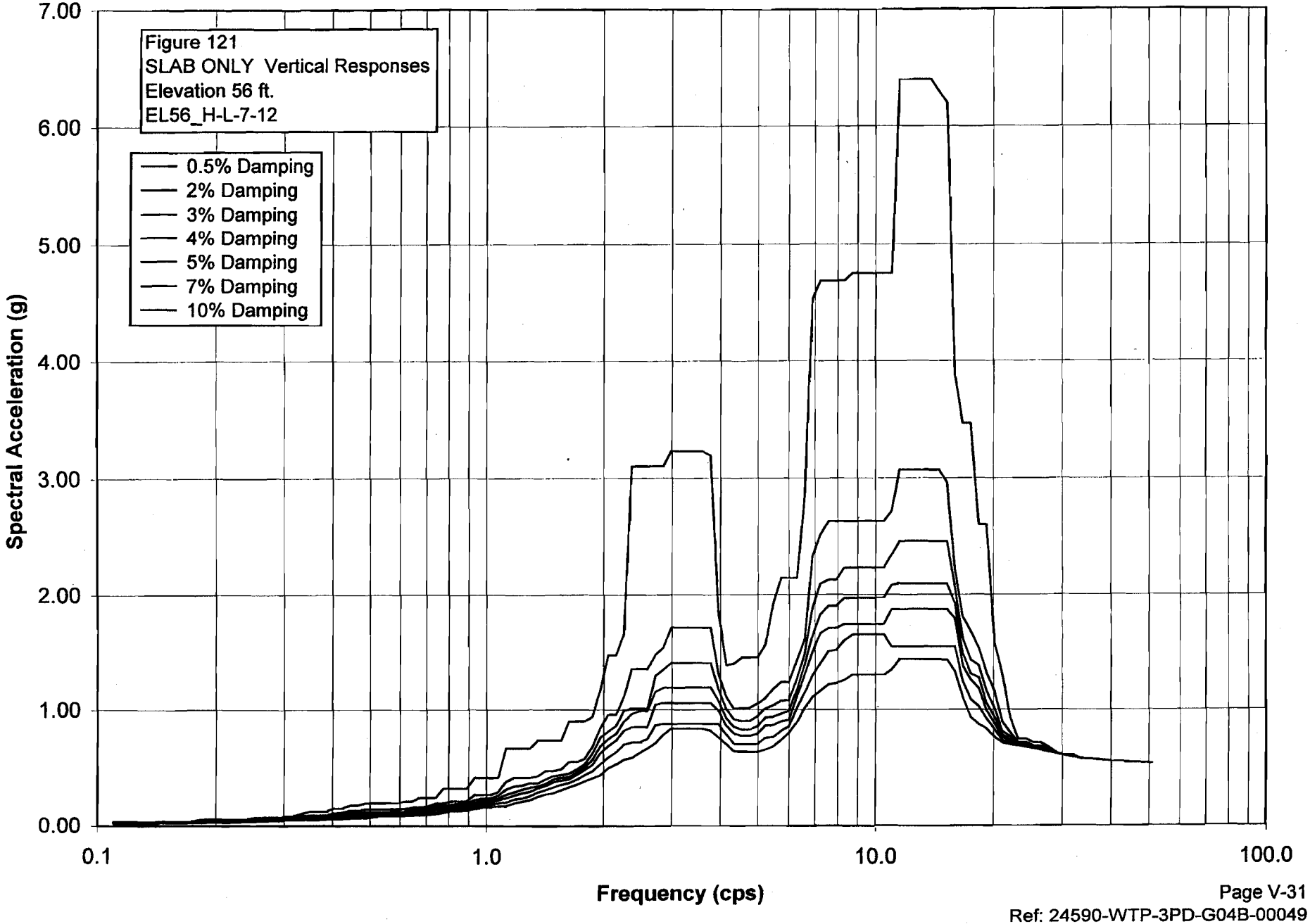

S_PTWW121.grf
RPP-WTP Pretreatment Facility ISRS
Calc No.: 24590-PTF-S0C-S15T-00005, Rev. 0B
Frequency (cps)
Spectral Acceleration (g)
Figure 121
SLAB ONLY Vertical Responses
Elevation 56 ft.
EL56_H-L-7-12

Damping	0.50%	Damping	2%	Damping	3%	Damping	4%	Damping	5%	Damping	7%	Damping	10%
Freq.	Accel.	Freq.	Accel.	Freq.	Accel.	Freq.	Accel.	Freq.	Accel.	Freq.	Accel.	Freq.	Accel.
0.1098	0.033	0.1098	0.0295	0.1098	0.0276	0.1098	0.0264	0.1098	0.0255	0.1098	0.0238	0.1098	0.0219
0.115	0.0348	0.115	0.0311	0.115	0.0291	0.115	0.0272	0.115	0.0258	0.115	0.0241	0.115	0.0223
0.1204	0.0348	0.1204	0.0312	0.1204	0.0291	0.1204	0.0272	0.1204	0.0258	0.1204	0.0241	0.1204	0.0223
0.1262	0.0349	0.1262	0.0312	0.1262	0.0291	0.1262	0.0272	0.1262	0.0258	0.1262	0.0241	0.1262	0.0223
0.1322	0.0349	0.1322	0.0312	0.1322	0.0291	0.1322	0.0272	0.1322	0.0258	0.1322	0.0241	0.1322	0.0223
0.1385	0.0349	0.1385	0.0312	0.1385	0.0291	0.1385	0.0272	0.1385	0.0259	0.1385	0.0242	0.1385	0.0223
0.1451	0.0349	0.1451	0.0312	0.1451	0.0291	0.1451	0.0272	0.1451	0.0259	0.1451	0.0242	0.1451	0.0225
0.152	0.0349	0.152	0.0312	0.152	0.0291	0.152	0.0272	0.152	0.0265	0.152	0.0252	0.152	0.0241
0.1592	0.0349	0.1592	0.0312	0.1592	0.0291	0.1592	0.0284	0.1592	0.0277	0.1592	0.0267	0.1592	0.0254
0.1668	0.0349	0.1668	0.0312	0.1668	0.0298	0.1668	0.0291	0.1668	0.0285	0.1668	0.0274	0.1668	0.0261
0.1748	0.0423	0.1748	0.0358	0.1748	0.0324	0.1748	0.0297	0.1748	0.0285	0.1748	0.0274	0.1748	0.0265
0.1831	0.0536	0.1831	0.0446	0.1831	0.0398	0.1831	0.0358	0.1831	0.0325	0.1831	0.0275	0.1831	0.0268
0.1918	0.0577	0.1918	0.0478	0.1918	0.0425	0.1918	0.0381	0.1918	0.0349	0.1918	0.0321	0.1918	0.0291
0.2009	0.0577	0.2009	0.0478	0.2009	0.0425	0.2009	0.0393	0.2009	0.0375	0.2009	0.0344	0.2009	0.0306
0.2105	0.0577	0.2105	0.0478	0.2105	0.0425	0.2105	0.0397	0.2105	0.038	0.2105	0.0352	0.2105	0.0328
0.2205	0.0577	0.2205	0.0478	0.2205	0.0434	0.2205	0.0419	0.2205	0.0406	0.2205	0.0383	0.2205	0.0353
0.231	0.0581	0.231	0.0495	0.231	0.0465	0.231	0.0443	0.231	0.0427	0.231	0.0397	0.231	0.0362
0.242	0.0625	0.242	0.0555	0.242	0.0514	0.242	0.0477	0.242	0.0444	0.242	0.0397	0.242	0.0362
0.2535	0.0716	0.2535	0.0626	0.2535	0.0577	0.2535	0.0534	0.2535	0.0499	0.2535	0.0445	0.2535	0.0389
0.2656	0.0716	0.2656	0.0626	0.2656	0.0577	0.2656	0.0534	0.2656	0.0499	0.2656	0.0445	0.2656	0.0389
0.2783	0.0716	0.2783	0.0626	0.2783	0.0577	0.2783	0.0534	0.2783	0.0499	0.2783	0.0445	0.2783	0.0401
0.2915	0.0747	0.2915	0.0669	0.2915	0.0624	0.2915	0.0588	0.2915	0.0558	0.2915	0.0508	0.2915	0.0451
0.3054	0.0877	0.3054	0.076	0.3054	0.0697	0.3054	0.0646	0.3054	0.0609	0.3054	0.0546	0.3054	0.0477
0.3199	0.0922	0.3199	0.0798	0.3199	0.073	0.3199	0.0671	0.3199	0.062	0.3199	0.0546	0.3199	0.0477
0.3352	0.111	0.3352	0.0894	0.3352	0.079	0.3352	0.0711	0.3352	0.0649	0.3352	0.0562	0.3352	0.0484
0.3511	0.1257	0.3511	0.0957	0.3511	0.0829	0.3511	0.0729	0.3511	0.067	0.3511	0.0585	0.3511	0.0501
0.3678	0.1257	0.3678	0.0957	0.3678	0.0851	0.3678	0.078	0.3678	0.0719	0.3678	0.062	0.3678	0.0521

0.3853	0.1257	0.3853	0.0961	0.3853	0.0884	0.3853	0.0817	0.3853	0.0762	0.3853	0.0667	0.3853	0.0559
0.4037	0.1552	0.4037	0.113	0.4037	0.0981	0.4037	0.0865	0.4037	0.0773	0.4037	0.0667	0.4037	0.0559
0.4229	0.1552	0.4229	0.1191	0.4229	0.1039	0.4229	0.0918	0.4229	0.082	0.4229	0.0675	0.4229	0.0559
0.4431	0.1777	0.4431	0.1362	0.4431	0.1163	0.4431	0.1007	0.4431	0.0885	0.4431	0.0709	0.4431	0.0607
0.4642	0.1777	0.4642	0.1362	0.4642	0.1163	0.4642	0.1007	0.4642	0.0885	0.4642	0.0743	0.4642	0.0645
0.4863	0.1985	0.4863	0.1471	0.4863	0.1253	0.4863	0.1094	0.4863	0.0974	0.4863	0.0814	0.4863	0.0687
0.5094	0.1985	0.5094	0.1471	0.5094	0.1253	0.5094	0.1094	0.5094	0.0989	0.5094	0.087	0.5094	0.076
0.5337	0.1985	0.5337	0.1471	0.5337	0.1253	0.5337	0.1121	0.5337	0.1057	0.5337	0.0953	0.5337	0.0834
0.5591	0.1985	0.5591	0.1471	0.5591	0.1253	0.5591	0.1121	0.5591	0.1057	0.5591	0.0974	0.5591	0.0867
0.5857	0.2005	0.5857	0.1488	0.5857	0.1268	0.5857	0.1121	0.5857	0.1057	0.5857	0.0974	0.5857	0.0867
0.6136	0.2118	0.6136	0.1488	0.6136	0.1268	0.6136	0.113	0.6136	0.1057	0.6136	0.0974	0.6136	0.0867
0.6428	0.2118	0.6428	0.161	0.6428	0.1458	0.6428	0.1335	0.6428	0.1231	0.6428	0.1073	0.6428	0.0909
0.6734	0.2446	0.6734	0.1647	0.6734	0.1502	0.6734	0.1391	0.6734	0.1296	0.6734	0.1141	0.6734	0.0975
0.7055	0.2446	0.7055	0.1702	0.7055	0.1502	0.7055	0.1391	0.7055	0.1297	0.7055	0.1156	0.7055	0.0986
0.7391	0.2446	0.7391	0.1967	0.7391	0.175	0.7391	0.1569	0.7391	0.1417	0.7391	0.1186	0.7391	0.1045
0.7743	0.3214	0.7743	0.1967	0.7743	0.1771	0.7743	0.1625	0.7743	0.1502	0.7743	0.1301	0.7743	0.1169
0.8111	0.3214	0.8111	0.213	0.8111	0.1859	0.8111	0.1665	0.8111	0.1543	0.8111	0.1391	0.8111	0.1261
0.8497	0.3214	0.8497	0.2135	0.8497	0.1935	0.8497	0.1767	0.8497	0.1633	0.8497	0.1432	0.8497	0.1288
0.8902	0.3214	0.8902	0.2172	0.8902	0.1977	0.8902	0.1814	0.8902	0.1678	0.8902	0.1464	0.8902	0.1364
0.9326	0.4138	0.9326	0.2697	0.9326	0.2279	0.9326	0.2035	0.9326	0.1879	0.9326	0.1688	0.9326	0.1524
0.977	0.4138	0.977	0.2697	0.977	0.2419	0.977	0.2225	0.977	0.2066	0.977	0.1839	0.977	0.1636
1.0235	0.4138	1.0235	0.2697	1.0235	0.2419	1.0235	0.2225	1.0235	0.2066	1.0235	0.1863	1.0235	0.1646
1.0723	0.4138	1.0723	0.2936	1.0723	0.265	1.0723	0.2418	1.0723	0.2238	1.0723	0.1974	1.0723	0.1722
1.1233	0.6656	1.1233	0.3815	1.1233	0.3148	1.1233	0.2725	1.1233	0.2434	1.1233	0.2056	1.1233	0.1743
1.1768	0.6656	1.1768	0.4149	1.1768	0.3396	1.1768	0.292	1.1768	0.2651	1.1768	0.2307	1.1768	0.1986
1.2328	0.6656	1.2328	0.4149	1.2328	0.3472	1.2328	0.3122	1.2328	0.2829	1.2328	0.2384	1.2328	0.2121
1.2916	0.6656	1.2916	0.4154	1.2916	0.3673	1.2916	0.3281	1.2916	0.2961	1.2916	0.258	1.2916	0.2233
1.353	0.7352	1.353	0.4269	1.353	0.3673	1.353	0.3448	1.353	0.3251	1.353	0.2922	1.353	0.2546
1.4175	0.7352	1.4175	0.4722	1.4175	0.4009	1.4175	0.3625	1.4175	0.3436	1.4175	0.3109	1.4175	0.2743
1.485	0.7352	1.485	0.4722	1.485	0.4287	1.485	0.3999	1.485	0.3751	1.485	0.3332	1.485	0.2839
1.5557	0.7352	1.5557	0.4852	1.5557	0.4395	1.5557	0.415	1.5557	0.3934	1.5557	0.3559	1.5557	0.3097
1.6298	0.9015	1.6298	0.5521	1.6298	0.4513	1.6298	0.4238	1.6298	0.4018	1.6298	0.3721	1.6298	0.3337
1.7074	0.9015	1.7074	0.5521	1.7074	0.4862	1.7074	0.4612	1.7074	0.4392	1.7074	0.3978	1.7074	0.3566
1.7887	0.9015	1.7887	0.5762	1.7887	0.5303	1.7887	0.5052	1.7887	0.4812	1.7887	0.4371	1.7887	0.3827
1.8738	0.9435	1.8738	0.683	1.8738	0.6193	1.8738	0.5672	1.8738	0.5244	1.8738	0.4712	1.8738	0.4109
1.963	1.1781	1.963	0.8458	1.963	0.7609	1.963	0.6885	1.963	0.6261	1.963	0.53	1.963	0.4366
2.0565	1.4722	2.0565	0.9587	2.0565	0.8148	2.0565	0.7472	2.0565	0.6869	2.0565	0.5856	2.0565	0.4943
2.1544	1.4722	2.1544	0.9587	2.1544	0.8589	2.1544	0.7934	2.1544	0.7347	2.1544	0.6319	2.1544	0.5285
2.257	1.6581	2.257	1.1094	2.257	0.9923	2.257	0.8986	2.257	0.8226	2.257	0.7018	2.257	0.5689

2.3645	3.1044	2.3645	1.3561	2.3645	1.0122	2.3645	0.9664	2.3645	0.8503	2.3645	0.719	2.3645	0.5849
2.4771	3.1044	2.4771	1.3561	2.4771	1.0122	2.4771	0.9901	2.4771	0.8519	2.4771	0.719	2.4771	0.6283
2.595	3.1044	2.595	1.3561	2.595	1.0122	2.595	0.9901	2.595	0.8519	2.595	0.7497	2.595	0.6688
2.7186	3.1044	2.7186	1.4793	2.7186	1.2977	2.7186	1.1587	2.7186	1.0446	2.7186	0.8675	2.7186	0.7137
2.848	3.1044	2.848	1.5392	2.848	1.349	2.848	1.1927	2.848	1.0583	2.848	0.8783	2.848	0.7856
2.9836	3.2341	2.9836	1.714	2.9836	1.407	2.9836	1.1927	2.9836	1.0583	2.9836	0.8783	2.9836	0.8371
3.1257	3.2341	3.1257	1.714	3.1257	1.407	3.1257	1.1927	3.1257	1.0583	3.1257	0.8783	3.1257	0.8371
3.2745	3.2341	3.2745	1.714	3.2745	1.407	3.2745	1.1927	3.2745	1.0583	3.2745	0.8783	3.2745	0.8371
3.4305	3.2341	3.4305	1.714	3.4305	1.407	3.4305	1.1927	3.4305	1.0583	3.4305	0.8783	3.4305	0.8371
3.5938	3.2341	3.5938	1.714	3.5938	1.407	3.5938	1.1927	3.5938	1.0583	3.5938	0.8783	3.5938	0.8371
3.7649	3.1962	3.7649	1.714	3.7649	1.407	3.7649	1.1927	3.7649	1.0583	3.7649	0.8783	3.7649	0.823
3.9442	1.8572	3.9442	1.3131	3.9442	1.1798	3.9442	1.0801	3.9442	0.9935	3.9442	0.8783	3.9442	0.7625
4.132	1.3859	4.132	1.1101	4.132	1.0059	4.132	0.9267	4.132	0.8638	4.132	0.7879	4.132	0.7016
4.3288	1.4004	4.3288	1.01	4.3288	0.9193	4.3288	0.8523	4.3288	0.7981	4.3288	0.7074	4.3288	0.644
4.5349	1.453	4.5349	1.0165	4.5349	0.9043	4.5349	0.8298	4.5349	0.7728	4.5349	0.702	4.5349	0.6353
4.7508	1.453	4.7508	1.0165	4.7508	0.9043	4.7508	0.8298	4.7508	0.7728	4.7508	0.702	4.7508	0.6353
4.977	1.453	4.977	1.0527	4.977	0.9446	4.977	0.8574	4.977	0.7946	4.977	0.7059	4.977	0.6353
5.214	1.5622	5.214	1.1002	5.214	1.013	5.214	0.934	5.214	0.8657	5.214	0.7586	5.214	0.6576
5.4623	1.9198	5.4623	1.1825	5.4623	1.0375	5.4623	0.9404	5.4623	0.8658	5.4623	0.7636	5.4623	0.6822
5.7224	2.1413	5.7224	1.2391	5.7224	1.0781	5.7224	0.9658	5.7224	0.9004	5.7224	0.8178	5.7224	0.7373
5.9948	2.1413	5.9948	1.2391	5.9948	1.0821	5.9948	0.9888	5.9948	0.9125	5.9948	0.8549	5.9948	0.8006
6.2803	2.1413	6.2803	1.4291	6.2803	1.2694	6.2803	1.1734	6.2803	1.1115	6.2803	1.0135	6.2803	0.8904
6.5793	2.8254	6.5793	1.6044	6.5793	1.4817	6.5793	1.3887	6.5793	1.3019	6.5793	1.1439	6.5793	1.0139
6.8926	4.5401	6.8926	2.3318	6.8926	1.8873	6.8926	1.6445	6.8926	1.502	6.8926	1.2963	6.8926	1.1085
7.2208	4.6887	7.2208	2.5167	7.2208	2.0952	7.2208	1.8287	7.2208	1.663	7.2208	1.4026	7.2208	1.1658
7.5646	4.6887	7.5646	2.633	7.5646	2.1261	7.5646	1.9026	7.5646	1.7092	7.5646	1.5057	7.5646	1.2197
7.9248	4.6887	7.9248	2.633	7.9248	2.1261	7.9248	1.9026	7.9248	1.7092	7.9248	1.5186	7.9248	1.2293
8.3022	4.6887	8.3022	2.633	8.3022	2.2308	8.3022	1.9713	8.3022	1.7431	8.3022	1.5994	8.3022	1.2573
8.6975	4.7522	8.6975	2.633	8.6975	2.2308	8.6975	1.9713	8.6975	1.7431	8.6975	1.6517	8.6975	1.3022
9.1116	4.7522	9.1116	2.633	9.1116	2.2308	9.1116	1.9713	9.1116	1.7431	9.1116	1.6517	9.1116	1.3022
9.5455	4.7522	9.5455	2.633	9.5455	2.2308	9.5455	1.9713	9.5455	1.7431	9.5455	1.6517	9.5455	1.3022
10	4.7522	10	2.633	10	2.2308	10	1.9713	10	1.7431	10	1.6517	10	1.3022
10.4762	4.7522	10.4762	2.633	10.4762	2.2308	10.4762	1.9713	10.4762	1.7431	10.4762	1.6517	10.4762	1.3022
10.975	4.7522	10.975	2.7198	10.975	2.3406	10.975	2.0833	10.975	1.8722	10.975	1.5448	10.975	1.3465
11.4976	6.3932	11.4976	3.0713	11.4976	2.4592	11.4976	2.0954	11.4976	1.8722	11.4976	1.5448	11.4976	1.436
12.045	6.3932	12.045	3.0713	12.045	2.4592	12.045	2.0954	12.045	1.8722	12.045	1.5448	12.045	1.436
12.6186	6.3932	12.6186	3.0713	12.6186	2.4592	12.6186	2.0954	12.6186	1.8722	12.6186	1.5448	12.6186	1.436
13.2194	6.3932	13.2194	3.0713	13.2194	2.4592	13.2194	2.0954	13.2194	1.8722	13.2194	1.5448	13.2194	1.436
13.8489	6.3932	13.8489	3.0713	13.8489	2.4592	13.8489	2.0954	13.8489	1.8722	13.8489	1.5448	13.8489	1.436

14.5083	6.2879	14.5083	3.0713	14.5083	2.4592	14.5083	2.0954	14.5083	1.8722	14.5083	1.5448	14.5083	1.4308
15.1991	6.1979	15.1991	2.9655	15.1991	2.4592	15.1991	2.0954	15.1991	1.8722	15.1991	1.5448	15.1991	1.4308
15.9228	3.8738	15.9228	2.2164	15.9228	2.0644	15.9228	1.922	15.9228	1.7933	15.9228	1.5448	15.9228	1.3311
16.681	3.4691	16.681	1.8084	16.681	1.6216	16.681	1.4892	16.681	1.3822	16.681	1.2458	16.681	1.1088
17.4753	3.4691	17.4753	1.6784	17.4753	1.4303	17.4753	1.3119	17.4753	1.2584	17.4753	1.0884	17.4753	0.932
18.3074	2.6063	18.3074	1.5361	18.3074	1.3831	18.3074	1.2784	18.3074	1.1859	18.3074	1.0285	18.3074	0.874
19.1791	2.6063	19.1791	1.3209	19.1791	1.1588	19.1791	1.0576	19.1791	0.9944	19.1791	0.9231	19.1791	0.8367
20.0923	1.5805	20.0923	1.1546	20.0923	1.0136	20.0923	0.9361	20.0923	0.8832	20.0923	0.8312	20.0923	0.7647
21.049	1.3004	21.049	0.8944	21.049	0.8148	21.049	0.7857	21.049	0.758	21.049	0.7323	21.049	0.7132
22.0513	0.9281	22.0513	0.8029	22.0513	0.7675	22.0513	0.7403	22.0513	0.7306	22.0513	0.7155	22.0513	0.6984
23.1013	0.7455	23.1013	0.7175	23.1013	0.7113	23.1013	0.7103	23.1013	0.7074	23.1013	0.6997	23.1013	0.687
24.2013	0.7455	24.2013	0.7175	24.2013	0.7063	24.2013	0.6988	24.2013	0.6932	24.2013	0.6846	24.2013	0.6737
25.3536	0.7105	25.3536	0.6836	25.3536	0.6748	25.3536	0.6729	25.3536	0.6722	25.3536	0.6681	25.3536	0.6599
26.5609	0.7105	26.5609	0.6836	26.5609	0.6748	26.5609	0.6686	26.5609	0.6637	26.5609	0.656	26.5609	0.6468
27.8256	0.6713	27.8256	0.6593	27.8256	0.654	27.8256	0.6496	27.8256	0.6459	27.8256	0.6395	27.8256	0.632
29.1505	0.6193	29.1505	0.6233	29.1505	0.6233	29.1505	0.6227	29.1505	0.6218	29.1505	0.6196	29.1505	0.6158
30.5386	0.6069	30.5386	0.5987	30.5386	0.601	30.5386	0.602	30.5386	0.6025	30.5386	0.6024	30.5386	0.6011
31.9927	0.6069	31.9927	0.5931	31.9927	0.5907	31.9927	0.5898	31.9927	0.5896	31.9927	0.5894	31.9927	0.589
33.516	0.5732	33.516	0.5757	33.516	0.5772	33.516	0.5781	33.516	0.5787	33.516	0.5792	33.516	0.5793
35.1119	0.5711	35.1119	0.5711	35.1119	0.5711	35.1119	0.5712	35.1119	0.5713	35.1119	0.5715	35.1119	0.5715
36.7838	0.5654	36.7838	0.5653	36.7838	0.5653	36.7838	0.5653	36.7838	0.5652	36.7838	0.5652	36.7838	0.565
38.5353	0.5598	38.5353	0.5598	38.5353	0.5598	38.5353	0.5597	38.5353	0.5597	38.5353	0.5596	38.5353	0.5594
40.3702	0.5548	40.3702	0.5547	40.3702	0.5547	40.3702	0.5546	40.3702	0.5546	40.3702	0.5545	40.3702	0.5544
42.2924	0.5501	42.2924	0.5501	42.2924	0.55	42.2924	0.55	42.2924	0.55	42.2924	0.5499	42.2924	0.5498
44.3062	0.5458	44.3062	0.5458	44.3062	0.5458	44.3062	0.5458	44.3062	0.5458	44.3062	0.5457	44.3062	0.5457
46.4159	0.5419	46.4159	0.5419	46.4159	0.5419	46.4159	0.5419	46.4159	0.5419	46.4159	0.5419	46.4159	0.5419
48.626	0.5382	48.626	0.5382	48.626	0.5382	48.626	0.5382	48.626	0.5383	48.626	0.5383	48.626	0.5384
50.9414	0.5347	50.9414	0.5347	50.9414	0.5348	50.9414	0.5348	50.9414	0.5348	50.9414	0.5349	50.9414	0.5351

RPP-WTP Pretreatment Facility ISRS
Calc No.: 24590-PTF-S0C-S15T-00005, Rev. 0B

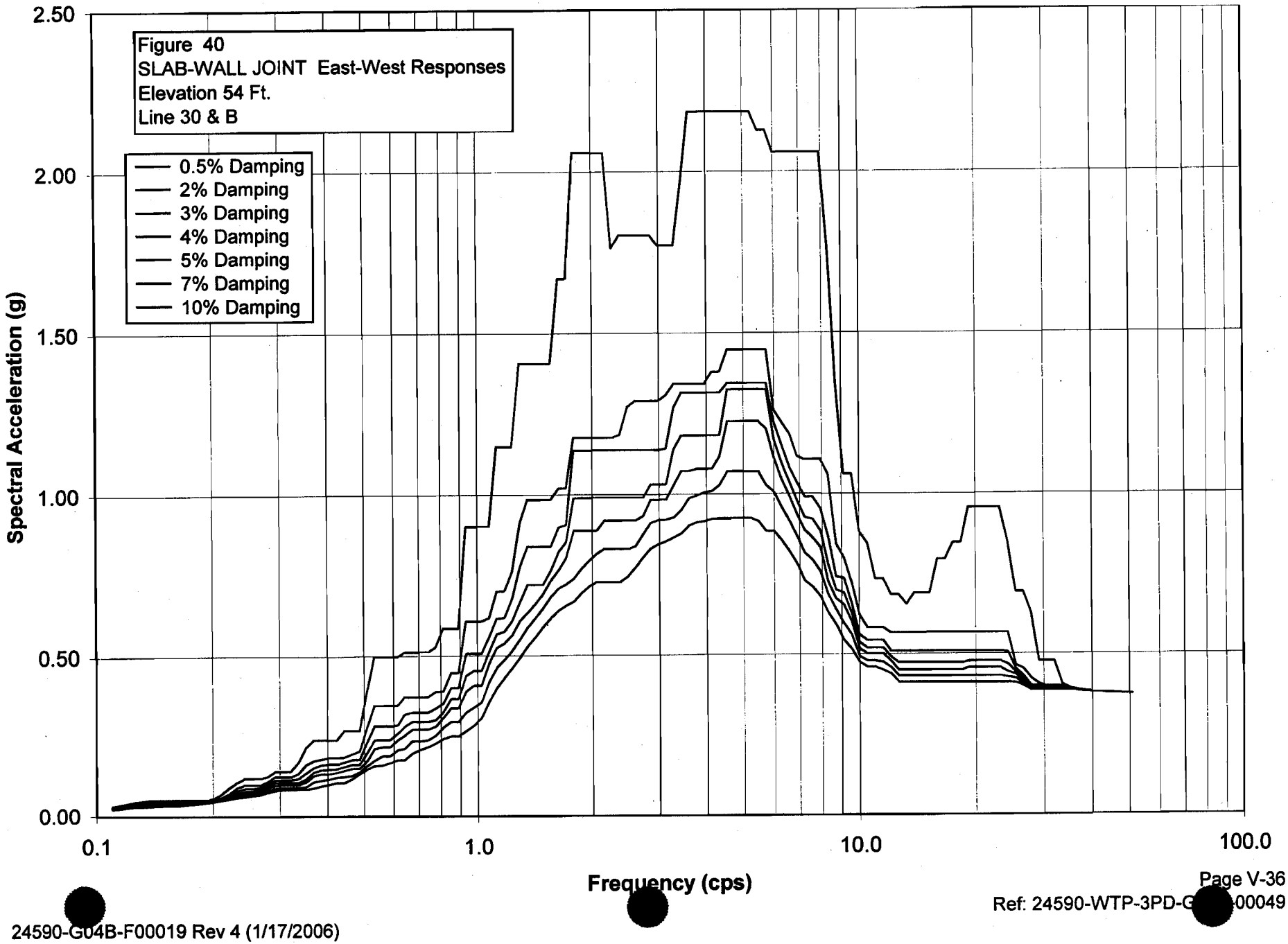

S_PTWW040.grf
RPP-WTP Pretreatment Facility ISRS
Calc No.: 24590-PTF-S0C-S15T-00005, Rev. 0B
Frequency (cps)
Spectral Acceleration (g)
Figure 40
SLAB-WALL JOINT East-West Responses
Elevation 54 Ft.
Line 30 & B

Damping	0.50%	Damping	2%	Damping	3%	Damping	4%	Damping	5%	Damping	7%	Damping	10%
Freq.	Accel.	Freq.	Accel.	Freq.	Accel.	Freq.	Accel.	Freq.	Accel.	Freq.	Accel.	Freq.	Accel.
0.1098	0.0314	0.1098	0.0288	0.1098	0.0276	0.1098	0.0268	0.1098	0.0261	0.1098	0.0248	0.1098	0.0232
0.115	0.0359	0.115	0.033	0.115	0.0315	0.115	0.0301	0.115	0.029	0.115	0.0275	0.115	0.0253
0.1204	0.041	0.1204	0.0383	0.1204	0.0367	0.1204	0.0353	0.1204	0.034	0.1204	0.0316	0.1204	0.0287
0.1262	0.046	0.1262	0.0427	0.1262	0.0407	0.1262	0.0389	0.1262	0.0372	0.1262	0.0344	0.1262	0.0312
0.1322	0.0489	0.1322	0.0442	0.1322	0.0421	0.1322	0.0403	0.1322	0.0385	0.1322	0.0356	0.1322	0.0321
0.1385	0.0518	0.1385	0.0463	0.1385	0.0431	0.1385	0.0403	0.1385	0.0385	0.1385	0.0356	0.1385	0.0321
0.1451	0.0518	0.1451	0.0463	0.1451	0.0431	0.1451	0.0403	0.1451	0.0385	0.1451	0.0356	0.1451	0.0321
0.152	0.0518	0.152	0.0463	0.152	0.0431	0.152	0.0403	0.152	0.0385	0.152	0.0356	0.152	0.0321
0.1592	0.0518	0.1592	0.0463	0.1592	0.0431	0.1592	0.0403	0.1592	0.0385	0.1592	0.0356	0.1592	0.0325
0.1668	0.0518	0.1668	0.0463	0.1668	0.0431	0.1668	0.0403	0.1668	0.0384	0.1668	0.0362	0.1668	0.0352
0.1748	0.0518	0.1748	0.0463	0.1748	0.0431	0.1748	0.041	0.1748	0.0404	0.1748	0.0394	0.1748	0.0379
0.1831	0.0518	0.1831	0.0463	0.1831	0.0455	0.1831	0.0447	0.1831	0.044	0.1831	0.0426	0.1831	0.0406
0.1918	0.0522	0.1918	0.0505	0.1918	0.0496	0.1918	0.0486	0.1918	0.0476	0.1918	0.0458	0.1918	0.0437
0.2009	0.057	0.2009	0.0549	0.2009	0.0536	0.2009	0.0525	0.2009	0.0514	0.2009	0.0497	0.2009	0.0474
0.2105	0.0707	0.2105	0.06	0.2105	0.0586	0.2105	0.0574	0.2105	0.0562	0.2105	0.054	0.2105	0.0516
0.2205	0.0909	0.2205	0.0714	0.2205	0.0643	0.2205	0.0624	0.2205	0.061	0.2205	0.0586	0.2205	0.0558
0.231	0.1079	0.231	0.0907	0.231	0.0814	0.231	0.0735	0.231	0.0674	0.231	0.0631	0.231	0.0595
0.242	0.1196	0.242	0.0993	0.242	0.0884	0.242	0.0793	0.242	0.0715	0.242	0.0667	0.242	0.0622
0.2535	0.1204	0.2535	0.0993	0.2535	0.0884	0.2535	0.0797	0.2535	0.0755	0.2535	0.0695	0.2535	0.0659
0.2656	0.1204	0.2656	0.0993	0.2656	0.0924	0.2656	0.0881	0.2656	0.0841	0.2656	0.0771	0.2656	0.0687
0.2783	0.1255	0.2783	0.1097	0.2783	0.1009	0.2783	0.095	0.2783	0.0907	0.2783	0.0835	0.2783	0.0755
0.2915	0.1425	0.2915	0.1248	0.2915	0.1148	0.2915	0.106	0.2915	0.0982	0.2915	0.0888	0.2915	0.0813
0.3054	0.1425	0.3054	0.1248	0.3054	0.1152	0.3054	0.1069	0.3054	0.0996	0.3054	0.0909	0.3054	0.0841
0.3199	0.1425	0.3199	0.1248	0.3199	0.1152	0.3199	0.1069	0.3199	0.0996	0.3199	0.0909	0.3199	0.0846
0.3352	0.1711	0.3352	0.1346	0.3352	0.1186	0.3352	0.1069	0.3352	0.0996	0.3352	0.0909	0.3352	0.0846
0.3511	0.2173	0.3511	0.163	0.3511	0.137	0.3511	0.117	0.3511	0.1079	0.3511	0.0933	0.3511	0.0846
0.3678	0.2401	0.3678	0.1757	0.3678	0.1531	0.3678	0.1395	0.3678	0.1276	0.3678	0.108	0.3678	0.0887

0.3853	0.2401	0.3853	0.1803	0.3853	0.1622	0.3853	0.1467	0.3853	0.1335	0.3853	0.1124	0.3853	0.0952
0.4037	0.2401	0.4037	0.1853	0.4037	0.1651	0.4037	0.1483	0.4037	0.1343	0.4037	0.1165	0.4037	0.0996
0.4229	0.2401	0.4229	0.1853	0.4229	0.1651	0.4229	0.1497	0.4229	0.1382	0.4229	0.1221	0.4229	0.1054
0.4431	0.2696	0.4431	0.1872	0.4431	0.1712	0.4431	0.1571	0.4431	0.1447	0.4431	0.1242	0.4431	0.1054
0.4642	0.2696	0.4642	0.1963	0.4642	0.179	0.4642	0.1637	0.4642	0.1503	0.4642	0.1279	0.4642	0.1174
0.4863	0.2696	0.4863	0.2048	0.4863	0.1795	0.4863	0.1637	0.4863	0.1503	0.4863	0.1396	0.4863	0.1334
0.5094	0.3933	0.5094	0.2804	0.5094	0.2339	0.5094	0.2007	0.5094	0.1759	0.5094	0.1597	0.5094	0.1486
0.5337	0.498	0.5337	0.3467	0.5337	0.2831	0.5337	0.2394	0.5337	0.2126	0.5337	0.1766	0.5337	0.1593
0.5591	0.498	0.5591	0.3467	0.5591	0.2831	0.5591	0.2394	0.5591	0.2172	0.5591	0.1895	0.5591	0.1611
0.5857	0.498	0.5857	0.3467	0.5857	0.2831	0.5857	0.2394	0.5857	0.2172	0.5857	0.1895	0.5857	0.168
0.6136	0.498	0.6136	0.3467	0.6136	0.2855	0.6136	0.2597	0.6136	0.2392	0.6136	0.2082	0.6136	0.177
0.6428	0.5118	0.6428	0.3731	0.6428	0.3183	0.6428	0.2805	0.6428	0.2523	0.6428	0.2127	0.6428	0.177
0.6734	0.5118	0.6734	0.3731	0.6734	0.3247	0.6734	0.2958	0.6734	0.2722	0.6734	0.2359	0.6734	0.198
0.7055	0.5118	0.7055	0.3731	0.7055	0.3247	0.7055	0.2958	0.7055	0.2722	0.7055	0.2359	0.7055	0.2086
0.7391	0.5118	0.7391	0.3731	0.7391	0.3247	0.7391	0.2958	0.7391	0.2722	0.7391	0.2389	0.7391	0.2175
0.7743	0.5271	0.7743	0.3892	0.7743	0.3374	0.7743	0.3002	0.7743	0.2812	0.7743	0.2528	0.7743	0.2292
0.8111	0.5842	0.8111	0.3905	0.8111	0.3524	0.8111	0.3253	0.8111	0.3077	0.8111	0.2782	0.8111	0.2429
0.8497	0.5842	0.8497	0.4479	0.8497	0.4022	0.8497	0.367	0.8497	0.3388	0.8497	0.2955	0.8497	0.2503
0.8902	0.5842	0.8902	0.4479	0.8902	0.4022	0.8902	0.367	0.8902	0.3388	0.8902	0.2955	0.8902	0.2503
0.9326	0.8993	0.9326	0.6068	0.9326	0.5069	0.9326	0.4394	0.9326	0.3909	0.9326	0.3258	0.9326	0.2677
0.977	0.8993	0.977	0.6068	0.977	0.507	0.977	0.4543	0.977	0.4088	0.977	0.3406	0.977	0.2841
1.0235	0.8993	1.0235	0.6068	1.0235	0.507	1.0235	0.4543	1.0235	0.4088	1.0235	0.3566	1.0235	0.3084
1.0723	0.8993	1.0723	0.6169	1.0723	0.5581	1.0723	0.5126	1.0723	0.4775	1.0723	0.4206	1.0723	0.3593
1.1233	1.1503	1.1233	0.6989	1.1233	0.6146	1.1233	0.567	1.1233	0.5246	1.1233	0.4637	1.1233	0.4009
1.1768	1.1503	1.1768	0.7013	1.1768	0.6177	1.1768	0.5745	1.1768	0.5387	1.1768	0.4887	1.1768	0.4328
1.2328	1.1503	1.2328	0.7602	1.2328	0.676	1.2328	0.6069	1.2328	0.5619	1.2328	0.5151	1.2328	0.4624
1.2916	1.4069	1.2916	0.9112	1.2916	0.7748	1.2916	0.6655	1.2916	0.6075	1.2916	0.5495	1.2916	0.4943
1.353	1.4069	1.353	0.9854	1.353	0.8366	1.353	0.7197	1.353	0.6331	1.353	0.5865	1.353	0.5282
1.4175	1.4069	1.4175	0.9854	1.4175	0.8366	1.4175	0.7197	1.4175	0.6602	1.4175	0.6163	1.4175	0.5576
1.485	1.4069	1.485	0.9854	1.485	0.8366	1.485	0.7197	1.485	0.6898	1.485	0.6458	1.485	0.5873
1.5557	1.4069	1.5557	0.9854	1.5557	0.8366	1.5557	0.7629	1.5557	0.7329	1.5557	0.6815	1.5557	0.6151
1.6298	1.6681	1.6298	1.0205	1.6298	0.8966	1.6298	0.82	1.6298	0.7642	1.6298	0.7076	1.6298	0.6389
1.7074	1.6681	1.7074	1.0205	1.7074	0.9046	1.7074	0.8499	1.7074	0.8016	1.7074	0.7204	1.7074	0.6548
1.7887	2.0604	1.7887	1.1768	1.7887	1.1373	1.7887	0.99	1.7887	0.8859	1.7887	0.7382	1.7887	0.6673
1.8738	2.0604	1.8738	1.1768	1.8738	1.1373	1.8738	0.99	1.8738	0.8859	1.8738	0.7686	1.8738	0.6934
1.963	2.0604	1.963	1.1768	1.963	1.1373	1.963	0.99	1.963	0.8859	1.963	0.7926	1.963	0.7145
2.0565	2.0604	2.0565	1.1768	2.0565	1.1373	2.0565	0.99	2.0565	0.8859	2.0565	0.8132	2.0565	0.7272
2.1544	2.0604	2.1544	1.1768	2.1544	1.1373	2.1544	0.99	2.1544	0.9184	2.1544	0.829	2.1544	0.7272
2.257	1.7622	2.257	1.1768	2.257	1.1373	2.257	0.99	2.257	0.9184	2.257	0.829	2.257	0.7272

2.3645	1.801	2.3645	1.1855	2.3645	1.1373	2.3645	0.99	2.3645	0.9184	2.3645	0.829	2.3645	0.7272
2.4771	1.801	2.4771	1.2722	2.4771	1.1373	2.4771	0.99	2.4771	0.9184	2.4771	0.829	2.4771	0.7436
2.595	1.801	2.595	1.291	2.595	1.1373	2.595	0.99	2.595	0.9184	2.595	0.8354	2.595	0.7711
2.7186	1.801	2.7186	1.291	2.7186	1.1373	2.7186	0.99	2.7186	0.9314	2.7186	0.8739	2.7186	0.802
2.848	1.801	2.848	1.291	2.848	1.1373	2.848	1.0306	2.848	0.9834	2.848	0.9097	2.848	0.8289
2.9836	1.7695	2.9836	1.291	2.9836	1.1373	2.9836	1.0306	2.9836	0.9834	2.9836	0.919	2.9836	0.8422
3.1257	1.7695	3.1257	1.3084	3.1257	1.1422	3.1257	1.0306	3.1257	0.9834	3.1257	0.9212	3.1257	0.8511
3.2745	1.7695	3.2745	1.3427	3.2745	1.2702	3.2745	1.1405	3.2745	1.0295	3.2745	0.9272	3.2745	0.8631
3.4305	1.9605	3.4305	1.3427	3.4305	1.315	3.4305	1.1822	3.4305	1.0726	3.4305	0.9512	3.4305	0.8756
3.5938	2.186	3.5938	1.3427	3.5938	1.315	3.5938	1.1822	3.5938	1.0726	3.5938	0.9875	3.5938	0.9006
3.7649	2.186	3.7649	1.3427	3.7649	1.315	3.7649	1.1822	3.7649	1.0784	3.7649	0.9958	3.7649	0.9115
3.9442	2.186	3.9442	1.3427	3.9442	1.315	3.9442	1.1822	3.9442	1.0784	3.9442	1.0054	3.9442	0.9143
4.132	2.186	4.132	1.3797	4.132	1.315	4.132	1.1822	4.132	1.0784	4.132	1.0098	4.132	0.9215
4.3288	2.186	4.3288	1.3797	4.3288	1.315	4.3288	1.1822	4.3288	1.117	4.3288	1.0287	4.3288	0.9239
4.5349	2.186	4.5349	1.4477	4.5349	1.3442	4.5349	1.3252	4.5349	1.2251	4.5349	1.0703	4.5349	0.9239
4.7508	2.186	4.7508	1.4477	4.7508	1.3442	4.7508	1.3252	4.7508	1.2251	4.7508	1.0703	4.7508	0.9239
4.977	2.186	4.977	1.4477	4.977	1.3442	4.977	1.3252	4.977	1.2251	4.977	1.0703	4.977	0.9239
5.214	2.186	5.214	1.4477	5.214	1.3442	5.214	1.3252	5.214	1.2251	5.214	1.0703	5.214	0.9239
5.4623	2.129	5.4623	1.4477	5.4623	1.3442	5.4623	1.3252	5.4623	1.2251	5.4623	1.0703	5.4623	0.9141
5.7224	2.129	5.7224	1.4477	5.7224	1.3442	5.7224	1.3243	5.7224	1.2019	5.7224	1.0271	5.7224	0.8812
5.9948	2.0602	5.9948	1.2614	5.9948	1.2227	5.9948	1.1692	5.9948	1.1126	5.9948	1.0071	5.9948	0.8812
6.2803	2.0602	6.2803	1.2213	6.2803	1.1509	6.2803	1.0945	6.2803	1.0449	6.2803	0.9577	6.2803	0.8515
6.5793	2.0602	6.5793	1.1878	6.5793	1.0824	6.5793	1.0377	6.5793	0.9937	6.5793	0.9148	6.5793	0.818
6.8926	2.0602	6.8926	1.1162	6.8926	1.0351	6.8926	0.9782	6.8926	0.9346	6.8926	0.8642	6.8926	0.7799
7.2208	2.0602	7.2208	1.107	7.2208	0.9906	7.2208	0.9262	7.2208	0.8836	7.2208	0.813	7.2208	0.7283
7.5646	2.0602	7.5646	1.107	7.5646	0.9906	7.5646	0.9195	7.5646	0.8594	7.5646	0.7912	7.5646	0.7084
7.9248	2.0602	7.9248	1.107	7.9248	0.9536	7.9248	0.8812	7.9248	0.8301	7.9248	0.756	7.9248	0.6785
8.3022	1.7636	8.3022	1.0601	8.3022	0.8626	8.3022	0.7767	8.3022	0.7243	8.3022	0.6848	8.3022	0.6279
8.6975	1.3385	8.6975	0.8395	8.6975	0.7398	8.6975	0.6985	8.6975	0.6715	8.6975	0.6369	8.6975	0.5912
9.1116	1.0611	9.1116	0.798	9.1116	0.7367	9.1116	0.6899	9.1116	0.6522	9.1116	0.5945	9.1116	0.5436
9.5455	1.0611	9.5455	0.7201	9.5455	0.655	9.5455	0.6244	9.5455	0.5998	9.5455	0.5597	9.5455	0.5149
10	0.8759	10	0.6206	10	0.5593	10	0.5358	10	0.516	10	0.493	10	0.4751
10.4762	0.841	10.4762	0.5804	10.4762	0.542	10.4762	0.5187	10.4762	0.5008	10.4762	0.4787	10.4762	0.4612
10.975	0.7327	10.975	0.5804	10.975	0.542	10.975	0.5187	10.975	0.5008	10.975	0.4787	10.975	0.4612
11.4976	0.7327	11.4976	0.5804	11.4976	0.542	11.4976	0.5187	11.4976	0.5008	11.4976	0.4753	11.4976	0.4513
12.045	0.6827	12.045	0.5648	12.045	0.5078	12.045	0.4909	12.045	0.4782	12.045	0.4588	12.045	0.4391
12.6186	0.6827	12.6186	0.5648	12.6186	0.5078	12.6186	0.4736	12.6186	0.4502	12.6186	0.4326	12.6186	0.4147
13.2194	0.6534	13.2194	0.5648	13.2194	0.5078	13.2194	0.4736	13.2194	0.4502	13.2194	0.4326	13.2194	0.414
13.8489	0.6877	13.8489	0.5648	13.8489	0.5078	13.8489	0.4736	13.8489	0.4502	13.8489	0.4326	13.8489	0.414

14.5083	0.6877	14.5083	0.5648	14.5083	0.5078	14.5083	0.4736	14.5083	0.4502	14.5083	0.4326	14.5083	0.414
15.1991	0.6877	15.1991	0.5648	15.1991	0.5078	15.1991	0.4736	15.1991	0.4502	15.1991	0.4326	15.1991	0.414
15.9228	0.7918	15.9228	0.5648	15.9228	0.5078	15.9228	0.4736	15.9228	0.4502	15.9228	0.4326	15.9228	0.414
16.681	0.7918	16.681	0.5648	16.681	0.5078	16.681	0.4736	16.681	0.4502	16.681	0.4326	16.681	0.414
17.4753	0.8433	17.4753	0.5648	17.4753	0.5078	17.4753	0.4736	17.4753	0.4502	17.4753	0.4326	17.4753	0.414
18.3074	0.8433	18.3074	0.5648	18.3074	0.5078	18.3074	0.4736	18.3074	0.4502	18.3074	0.4326	18.3074	0.414
19.1791	0.9548	19.1791	0.5648	19.1791	0.5078	19.1791	0.4778	19.1791	0.4579	19.1791	0.4326	19.1791	0.414
20.0923	0.9548	20.0923	0.5648	20.0923	0.5078	20.0923	0.4778	20.0923	0.4579	20.0923	0.4326	20.0923	0.414
21.049	0.9548	21.049	0.5648	21.049	0.5078	21.049	0.4778	21.049	0.4579	21.049	0.4326	21.049	0.414
22.0513	0.9548	22.0513	0.5648	22.0513	0.5078	22.0513	0.4778	22.0513	0.4579	22.0513	0.4326	22.0513	0.414
23.1013	0.9548	23.1013	0.5648	23.1013	0.5078	23.1013	0.4778	23.1013	0.4579	23.1013	0.4326	23.1013	0.4127
24.2013	0.8433	24.2013	0.5648	24.2013	0.5052	24.2013	0.468	24.2013	0.444	24.2013	0.4282	24.2013	0.4127
25.3536	0.6913	25.3536	0.4652	25.3536	0.4529	25.3536	0.4436	25.3536	0.4358	25.3536	0.4238	25.3536	0.4112
26.5609	0.6913	26.5609	0.4542	26.5609	0.4319	26.5609	0.42	26.5609	0.4138	26.5609	0.4069	26.5609	0.401
27.8256	0.6242	27.8256	0.4234	27.8256	0.4002	27.8256	0.3941	27.8256	0.3925	27.8256	0.3903	27.8256	0.389
29.1505	0.4776	29.1505	0.4074	29.1505	0.4002	29.1505	0.3941	29.1505	0.3925	29.1505	0.3903	29.1505	0.3881
30.5386	0.4776	30.5386	0.3989	30.5386	0.3961	30.5386	0.3941	30.5386	0.3925	30.5386	0.3903	30.5386	0.3881
31.9927	0.4776	31.9927	0.3989	31.9927	0.3961	31.9927	0.3941	31.9927	0.3925	31.9927	0.3903	31.9927	0.3881
33.516	0.4046	33.516	0.3989	33.516	0.3961	33.516	0.3941	33.516	0.3925	33.516	0.3903	33.516	0.3881
35.1119	0.3927	35.1119	0.392	35.1119	0.3914	35.1119	0.3907	35.1119	0.39	35.1119	0.3887	35.1119	0.3871
36.7838	0.3877	36.7838	0.3875	36.7838	0.3873	36.7838	0.3871	36.7838	0.3868	36.7838	0.3862	36.7838	0.3852
38.5353	0.3846	38.5353	0.3845	38.5353	0.3844	38.5353	0.3843	38.5353	0.3842	38.5353	0.3839	38.5353	0.3834
40.3702	0.3824	40.3702	0.3823	40.3702	0.3823	40.3702	0.3822	40.3702	0.3821	40.3702	0.382	40.3702	0.3817
42.2924	0.3807	42.2924	0.3807	42.2924	0.3807	42.2924	0.3806	42.2924	0.3806	42.2924	0.3805	42.2924	0.3803
44.3062	0.3794	44.3062	0.3794	44.3062	0.3793	44.3062	0.3793	44.3062	0.3793	44.3062	0.3792	44.3062	0.3791
46.4159	0.3782	46.4159	0.3782	46.4159	0.3782	46.4159	0.3782	46.4159	0.3782	46.4159	0.3781	46.4159	0.3781
48.626	0.3772	48.626	0.3772	48.626	0.3772	48.626	0.3772	48.626	0.3772	48.626	0.3772	48.626	0.3772
50.9414	0.3762	50.9414	0.3762	50.9414	0.3762	50.9414	0.3762	50.9414	0.3762	50.9414	0.3763	50.9414	0.3763

RPP-WTP Pretreatment Facility ISRS
Calc No.: 24590-PTF-S0C-S15T-00005, Rev. 0B

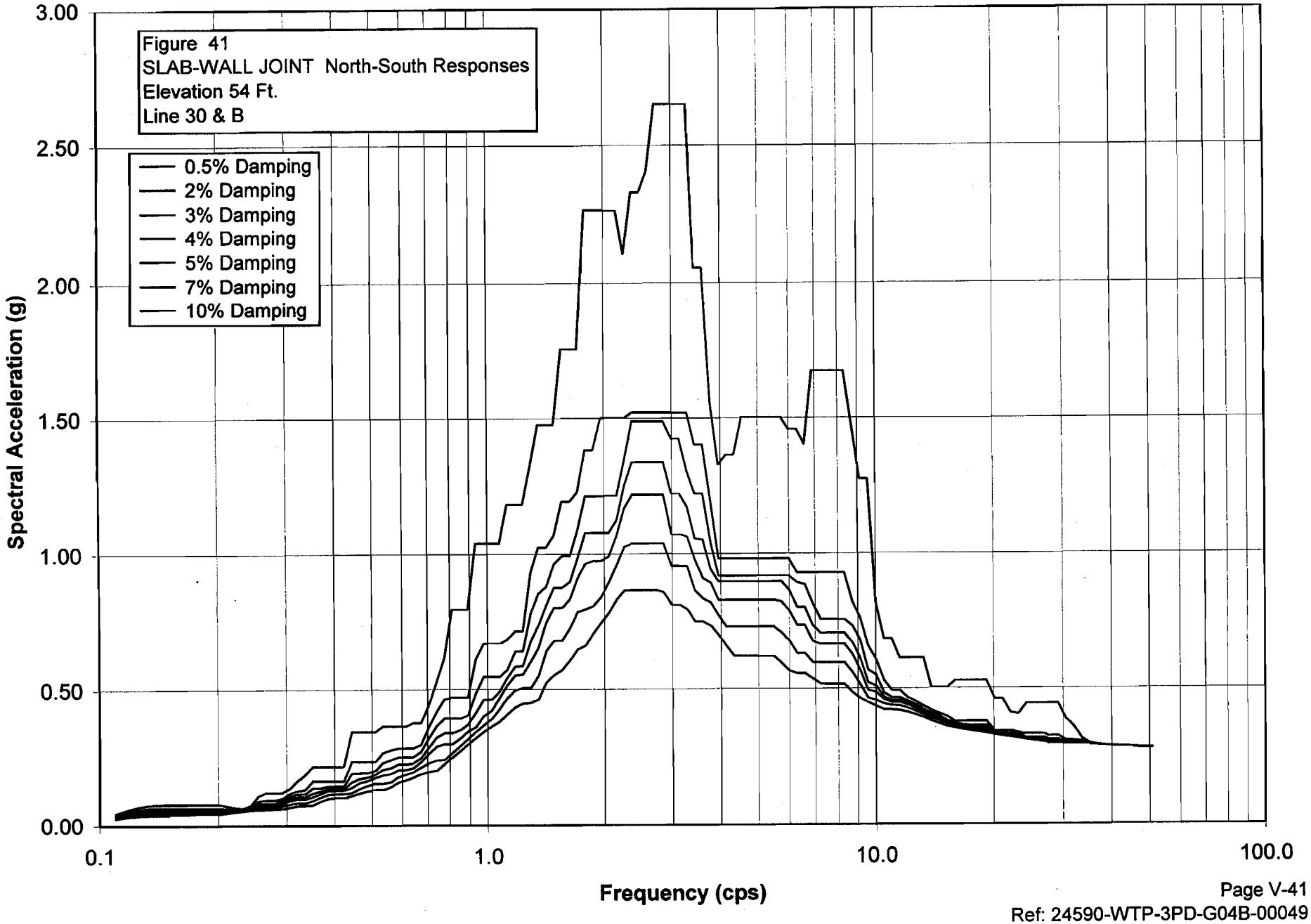

S_PTWW041.grf
RPP-WTP Pretreatment Facility ISRS
Calc No.: 24590-PTF-S0C-S15T-00005, Rev. 0B
Frequency (cps)
Spectral Acceleration (g)
Figure 41
SLAB-WALL JOINT North-South Responses
Elevation 54 Ft.
Line 30 & B

Damping	0.50%	Damping	2%	Damping	3%	Damping	4%	Damping	5%	Damping	7%	Damping	10%
Freq.	Accel.	Freq.	Accel.	Freq.	Accel.	Freq.	Accel.	Freq.	Accel.	Freq.	Accel.	Freq.	Accel.
0.1098	0.0457	0.1098	0.0394	0.1098	0.0365	0.1098	0.0344	0.1098	0.0329	0.1098	0.031	0.1098	0.0285
0.115	0.0556	0.115	0.0493	0.115	0.0465	0.115	0.0441	0.115	0.042	0.115	0.0383	0.115	0.0337
0.1204	0.0648	0.1204	0.0582	0.1204	0.0545	0.1204	0.0512	0.1204	0.0481	0.1204	0.0428	0.1204	0.0364
0.1262	0.0719	0.1262	0.0618	0.1262	0.0572	0.1262	0.0533	0.1262	0.0498	0.1262	0.0438	0.1262	0.0381
0.1322	0.0763	0.1322	0.0654	0.1322	0.0603	0.1322	0.0564	0.1322	0.0528	0.1322	0.0469	0.1322	0.0402
0.1385	0.0787	0.1385	0.0673	0.1385	0.0608	0.1385	0.0564	0.1385	0.0528	0.1385	0.0469	0.1385	0.0402
0.1451	0.079	0.1451	0.0676	0.1451	0.0613	0.1451	0.0564	0.1451	0.0528	0.1451	0.0469	0.1451	0.041
0.152	0.079	0.152	0.0676	0.152	0.0613	0.152	0.0568	0.152	0.0538	0.152	0.0486	0.152	0.043
0.1592	0.079	0.1592	0.0676	0.1592	0.0613	0.1592	0.0568	0.1592	0.0538	0.1592	0.0489	0.1592	0.0439
0.1668	0.079	0.1668	0.0676	0.1668	0.0613	0.1668	0.0568	0.1668	0.0538	0.1668	0.0489	0.1668	0.0439
0.1748	0.079	0.1748	0.0676	0.1748	0.0613	0.1748	0.0568	0.1748	0.0538	0.1748	0.0489	0.1748	0.0439
0.1831	0.0788	0.1831	0.0675	0.1831	0.0612	0.1831	0.0568	0.1831	0.0538	0.1831	0.0489	0.1831	0.0439
0.1918	0.0788	0.1918	0.0675	0.1918	0.0612	0.1918	0.0564	0.1918	0.0533	0.1918	0.0489	0.1918	0.0439
0.2009	0.0788	0.2009	0.0675	0.2009	0.0612	0.2009	0.0564	0.2009	0.0533	0.2009	0.0481	0.2009	0.0439
0.2105	0.0736	0.2105	0.0633	0.2105	0.0597	0.2105	0.0564	0.2105	0.0533	0.2105	0.0493	0.2105	0.0476
0.2205	0.0686	0.2205	0.0625	0.2205	0.0589	0.2205	0.0562	0.2205	0.0551	0.2205	0.053	0.2205	0.0514
0.231	0.065	0.231	0.0626	0.231	0.0612	0.231	0.0599	0.231	0.0587	0.231	0.0568	0.231	0.0549
0.242	0.0761	0.242	0.069	0.242	0.0652	0.242	0.0634	0.242	0.0622	0.242	0.0602	0.242	0.0579
0.2535	0.1102	0.2535	0.0918	0.2535	0.0826	0.2535	0.0754	0.2535	0.0696	0.2535	0.063	0.2535	0.0602
0.2656	0.122	0.2656	0.0953	0.2656	0.0828	0.2656	0.0754	0.2656	0.0696	0.2656	0.0651	0.2656	0.0619
0.2783	0.122	0.2783	0.0953	0.2783	0.083	0.2783	0.0782	0.2783	0.0741	0.2783	0.0673	0.2783	0.0627
0.2915	0.122	0.2915	0.1008	0.2915	0.0938	0.2915	0.0877	0.2915	0.0822	0.2915	0.073	0.2915	0.0628
0.3054	0.1365	0.3054	0.1184	0.3054	0.1084	0.3054	0.0997	0.3054	0.0924	0.3054	0.0806	0.3054	0.0685
0.3199	0.1648	0.3199	0.128	0.3199	0.1165	0.3199	0.1067	0.3199	0.0983	0.3199	0.085	0.3199	0.0741
0.3352	0.1873	0.3352	0.1328	0.3352	0.1165	0.3352	0.1067	0.3352	0.0983	0.3352	0.086	0.3352	0.0763
0.3511	0.2172	0.3511	0.164	0.3511	0.1388	0.3511	0.1193	0.3511	0.1066	0.3511	0.0923	0.3511	0.0773
0.3678	0.2172	0.3678	0.164	0.3678	0.1388	0.3678	0.1271	0.3678	0.1171	0.3678	0.1047	0.3678	0.0905

0.3853	0.2172	0.3853	0.164	0.3853	0.1459	0.3853	0.1368	0.3853	0.1287	0.3853	0.115	0.3853	0.0996
0.4037	0.2172	0.4037	0.164	0.4037	0.1463	0.4037	0.1375	0.4037	0.1298	0.4037	0.117	0.4037	0.1029
0.4229	0.2182	0.4229	0.1641	0.4229	0.1463	0.4229	0.1375	0.4229	0.1298	0.4229	0.117	0.4229	0.1029
0.4431	0.3455	0.4431	0.2344	0.4431	0.1916	0.4431	0.1609	0.4431	0.1405	0.4431	0.1208	0.4431	0.1103
0.4642	0.3455	0.4642	0.2344	0.4642	0.1934	0.4642	0.1736	0.4642	0.1584	0.4642	0.1369	0.4642	0.1193
0.4863	0.3455	0.4863	0.2344	0.4863	0.1934	0.4863	0.177	0.4863	0.1649	0.4863	0.1477	0.4863	0.1262
0.5094	0.3455	0.5094	0.2344	0.5094	0.2012	0.5094	0.1877	0.5094	0.1764	0.5094	0.1559	0.5094	0.1315
0.5337	0.3666	0.5337	0.2671	0.5337	0.2308	0.5337	0.2055	0.5337	0.1848	0.5337	0.1559	0.5337	0.1315
0.5591	0.3666	0.5591	0.2772	0.5591	0.2405	0.5591	0.2113	0.5591	0.1897	0.5591	0.1599	0.5591	0.1423
0.5857	0.3666	0.5857	0.2841	0.5857	0.2515	0.5857	0.225	0.5857	0.2033	0.5857	0.1786	0.5857	0.1594
0.6136	0.3666	0.6136	0.2841	0.6136	0.2515	0.6136	0.225	0.6136	0.2046	0.6136	0.1877	0.6136	0.1676
0.6428	0.3774	0.6428	0.2841	0.6428	0.2515	0.6428	0.2274	0.6428	0.2104	0.6428	0.1953	0.6428	0.176
0.6734	0.3774	0.6734	0.2961	0.6734	0.2703	0.6734	0.247	0.6734	0.2315	0.6734	0.2128	0.6734	0.1884
0.7055	0.4413	0.7055	0.3627	0.7055	0.3214	0.7055	0.2868	0.7055	0.2641	0.7055	0.2285	0.7055	0.1969
0.7391	0.5276	0.7391	0.4178	0.7391	0.3661	0.7391	0.3241	0.7391	0.2898	0.7391	0.2385	0.7391	0.2005
0.7743	0.6173	0.7743	0.4646	0.7743	0.394	0.7743	0.3401	0.7743	0.2988	0.7743	0.2409	0.7743	0.2247
0.8111	0.7973	0.8111	0.4704	0.8111	0.394	0.8111	0.3401	0.8111	0.2988	0.8111	0.2664	0.8111	0.2497
0.8497	0.7973	0.8497	0.4704	0.8497	0.394	0.8497	0.3512	0.8497	0.3205	0.8497	0.2921	0.8497	0.2739
0.8902	0.7973	0.8902	0.4704	0.8902	0.4056	0.8902	0.3726	0.8902	0.3463	0.8902	0.3184	0.8902	0.2984
0.9326	1.0399	0.9326	0.6123	0.9326	0.4865	0.9326	0.4159	0.9326	0.3635	0.9326	0.3454	0.9326	0.323
0.977	1.0399	0.977	0.6684	0.977	0.5476	0.977	0.4627	0.977	0.4028	0.977	0.3702	0.977	0.3455
1.0235	1.0399	1.0235	0.6684	1.0235	0.5476	1.0235	0.4627	1.0235	0.4229	1.0235	0.392	1.0235	0.3654
1.0723	1.0399	1.0723	0.6684	1.0723	0.5476	1.0723	0.4928	1.0723	0.4701	1.0723	0.4292	1.0723	0.3824
1.1233	1.1837	1.1233	0.6849	1.1233	0.5729	1.1233	0.5438	1.1233	0.5167	1.1233	0.4691	1.1233	0.4109
1.1768	1.1837	1.1768	0.7158	1.1768	0.6407	1.1768	0.5849	1.1768	0.5523	1.1768	0.4973	1.1768	0.4345
1.2328	1.1837	1.2328	0.7158	1.2328	0.6407	1.2328	0.5873	1.2328	0.5559	1.2328	0.5047	1.2328	0.4483
1.2916	1.3266	1.2916	0.9325	1.2916	0.7812	1.2916	0.6768	1.2916	0.6028	1.2916	0.5047	1.2916	0.4505
1.353	1.4769	1.353	1.0249	1.353	0.8548	1.353	0.7373	1.353	0.6541	1.353	0.5499	1.353	0.4641
1.4175	1.4769	1.4175	1.0249	1.4175	0.8809	1.4175	0.812	1.4175	0.7486	1.4175	0.6428	1.4175	0.5261
1.485	1.4769	1.485	1.0686	1.485	0.9633	1.485	0.8764	1.485	0.8018	1.485	0.6797	1.485	0.552
1.5557	1.7563	1.5557	1.1934	1.5557	0.9931	1.5557	0.8764	1.5557	0.8018	1.5557	0.6797	1.5557	0.5711
1.6298	1.7563	1.6298	1.1934	1.6298	0.9931	1.6298	0.8977	1.6298	0.8327	1.6298	0.7258	1.6298	0.6071
1.7074	1.7563	1.7074	1.2286	1.7074	1.0877	1.7074	0.9847	1.7074	0.9112	1.7074	0.7864	1.7074	0.6473
1.7887	2.2656	1.7887	1.3832	1.7887	1.2124	1.7887	1.0788	1.7887	0.9652	1.7887	0.7963	1.7887	0.6615
1.8738	2.2656	1.8738	1.3832	1.8738	1.2124	1.8738	1.0788	1.8738	0.9755	1.8738	0.808	1.8738	0.7066
1.963	2.2656	1.963	1.5008	1.963	1.214	1.963	1.0788	1.963	0.9755	1.963	0.841	1.963	0.747
2.0565	2.2656	2.0565	1.5008	2.0565	1.214	2.0565	1.0788	2.0565	0.9919	2.0565	0.8969	2.0565	0.7833
2.1544	2.2656	2.1544	1.5008	2.1544	1.214	2.1544	1.1255	2.1544	1.069	2.1544	0.9614	2.1544	0.8327
2.257	2.1036	2.257	1.5008	2.257	1.3434	2.257	1.2512	2.257	1.1692	2.257	1.0266	2.257	0.866

2.3645	2.329	2.3645	1.5215	2.3645	1.4885	2.3645	1.3388	2.3645	1.2186	2.3645	1.0385	2.3645	0.866
2.4771	2.329	2.4771	1.5215	2.4771	1.4885	2.4771	1.3388	2.4771	1.2186	2.4771	1.0385	2.4771	0.866
2.595	2.4067	2.595	1.5215	2.595	1.4885	2.595	1.3388	2.595	1.2186	2.595	1.0385	2.595	0.866
2.7186	2.6498	2.7186	1.5215	2.7186	1.4885	2.7186	1.3388	2.7186	1.2186	2.7186	1.0385	2.7186	0.866
2.848	2.6498	2.848	1.5215	2.848	1.4885	2.848	1.3388	2.848	1.2186	2.848	1.0385	2.848	0.859
2.9836	2.6498	2.9836	1.5215	2.9836	1.4261	2.9836	1.2238	2.9836	1.0738	2.9836	0.9557	2.9836	0.8126
3.1257	2.6498	3.1257	1.5215	3.1257	1.4261	3.1257	1.2238	3.1257	1.0738	3.1257	0.9557	3.1257	0.8126
3.2745	2.6498	3.2745	1.5215	3.2745	1.3039	3.2745	1.1725	3.2745	1.0646	3.2745	0.9547	3.2745	0.7955
3.4305	2.0528	3.4305	1.4038	3.4305	1.2222	3.4305	1.0569	3.4305	0.9788	3.4305	0.8637	3.4305	0.7503
3.5938	2.0528	3.5938	1.4038	3.5938	1.2222	3.5938	1.0518	3.5938	0.9105	3.5938	0.8342	3.5938	0.75
3.7649	1.5608	3.7649	1.1932	3.7649	1.0412	3.7649	0.9413	3.7649	0.8931	3.7649	0.8185	3.7649	0.734
3.9442	1.3287	3.9442	0.9812	3.9442	0.9181	3.9442	0.8966	3.9442	0.8279	3.9442	0.7711	3.9442	0.6991
4.132	1.3641	4.132	0.9812	4.132	0.9181	4.132	0.8966	4.132	0.8279	4.132	0.7296	4.132	0.6579
4.3288	1.3641	4.3288	0.9812	4.3288	0.9181	4.3288	0.8966	4.3288	0.8279	4.3288	0.7296	4.3288	0.6204
4.5349	1.5022	4.5349	0.9812	4.5349	0.9181	4.5349	0.8966	4.5349	0.8279	4.5349	0.7296	4.5349	0.6209
4.7508	1.5022	4.7508	0.9812	4.7508	0.9181	4.7508	0.8966	4.7508	0.8279	4.7508	0.7296	4.7508	0.6209
4.977	1.5022	4.977	0.9812	4.977	0.9181	4.977	0.8966	4.977	0.8279	4.977	0.7296	4.977	0.6209
5.214	1.5022	5.214	0.9812	5.214	0.9181	5.214	0.8966	5.214	0.8279	5.214	0.7296	5.214	0.6209
5.4623	1.5022	5.4623	0.9812	5.4623	0.9181	5.4623	0.8966	5.4623	0.8279	5.4623	0.7296	5.4623	0.6209
5.7224	1.5022	5.7224	0.9812	5.7224	0.9181	5.7224	0.8966	5.7224	0.8219	5.7224	0.708	5.7224	0.5957
5.9948	1.4583	5.9948	0.9812	5.9948	0.9181	5.9948	0.8652	5.9948	0.7895	5.9948	0.6777	5.9948	0.5667
6.2803	1.4583	6.2803	0.9287	6.2803	0.8928	6.2803	0.8015	6.2803	0.735	6.2803	0.6301	6.2803	0.5563
6.5793	1.4036	6.5793	0.9287	6.5793	0.8853	6.5793	0.8015	6.5793	0.735	6.5793	0.6301	6.5793	0.5563
6.8926	1.6746	6.8926	0.9287	6.8926	0.8143	6.8926	0.7332	6.8926	0.6749	6.8926	0.596	6.8926	0.5361
7.2208	1.6746	7.2208	0.9287	7.2208	0.7566	7.2208	0.7053	7.2208	0.664	7.2208	0.5957	7.2208	0.5178
7.5646	1.6746	7.5646	0.9287	7.5646	0.7566	7.5646	0.7053	7.5646	0.664	7.5646	0.5957	7.5646	0.5164
7.9248	1.6746	7.9248	0.9287	7.9248	0.7566	7.9248	0.7053	7.9248	0.664	7.9248	0.5957	7.9248	0.5164
8.3022	1.6746	8.3022	0.9287	8.3022	0.7566	8.3022	0.7053	8.3022	0.664	8.3022	0.5957	8.3022	0.5164
8.6975	1.4729	8.6975	0.821	8.6975	0.7324	8.6975	0.6697	8.6975	0.6267	8.6975	0.5594	8.6975	0.4859
9.1116	1.274	9.1116	0.7622	9.1116	0.6797	9.1116	0.6114	9.1116	0.568	9.1116	0.5151	9.1116	0.4639
9.5455	1.274	9.5455	0.6572	9.5455	0.5678	9.5455	0.5223	9.5455	0.4931	9.5455	0.4644	9.5455	0.4479
10	0.8156	10	0.6076	10	0.55	10	0.5087	10	0.4868	10	0.4561	10	0.4359
10.4762	0.6827	10.4762	0.5301	10.4762	0.4834	10.4762	0.468	10.4762	0.459	10.4762	0.443	10.4762	0.4225
10.975	0.6827	10.975	0.4925	10.975	0.4664	10.975	0.4557	10.975	0.4481	10.975	0.4376	10.975	0.4225
11.4976	0.6119	11.4976	0.4925	11.4976	0.4664	11.4976	0.4557	11.4976	0.4481	11.4976	0.4355	11.4976	0.4198
12.045	0.6119	12.045	0.4659	12.045	0.4529	12.045	0.4449	12.045	0.4385	12.045	0.4273	12.045	0.413
12.6186	0.6119	12.6186	0.451	12.6186	0.44	12.6186	0.4324	12.6186	0.4264	12.6186	0.4167	12.6186	0.404
13.2194	0.6119	13.2194	0.434	13.2194	0.4222	13.2194	0.4153	13.2194	0.4113	13.2194	0.4038	13.2194	0.393
13.8489	0.5034	13.8489	0.4195	13.8489	0.41	13.8489	0.4038	13.8489	0.3987	13.8489	0.3908	13.8489	0.3809

14.5083	0.5034	14.5083	0.4084	14.5083	0.3993	14.5083	0.3934	14.5083	0.3886	14.5083	0.3804	14.5083	0.3698
15.1991	0.5034	15.1991	0.3967	15.1991	0.3816	15.1991	0.3781	15.1991	0.3753	15.1991	0.3694	15.1991	0.3607
15.9228	0.5283	15.9228	0.3784	15.9228	0.3722	15.9228	0.3691	15.9228	0.3658	15.9228	0.3609	15.9228	0.3552
16.681	0.5283	16.681	0.3784	16.681	0.3648	16.681	0.3604	16.681	0.3576	16.681	0.3537	16.681	0.3491
17.4753	0.5283	17.4753	0.3784	17.4753	0.3631	17.4753	0.354	17.4753	0.3481	17.4753	0.3465	17.4753	0.3438
18.3074	0.5283	18.3074	0.3784	18.3074	0.3631	18.3074	0.354	18.3074	0.3481	18.3074	0.3441	18.3074	0.3401
19.1791	0.5283	19.1791	0.3784	19.1791	0.3631	19.1791	0.354	19.1791	0.3481	19.1791	0.3413	19.1791	0.3359
20.0923	0.4604	20.0923	0.3424	20.0923	0.335	20.0923	0.3322	20.0923	0.3302	20.0923	0.3311	20.0923	0.3297
21.049	0.4604	21.049	0.3424	21.049	0.335	21.049	0.3322	21.049	0.3302	21.049	0.3273	21.049	0.3249
22.0513	0.4108	22.0513	0.3424	22.0513	0.3327	22.0513	0.3298	22.0513	0.3273	22.0513	0.3236	22.0513	0.3204
23.1013	0.4056	23.1013	0.3361	23.1013	0.3298	23.1013	0.3258	23.1013	0.3231	23.1013	0.3195	23.1013	0.3161
24.2013	0.4419	24.2013	0.3316	24.2013	0.317	24.2013	0.3156	24.2013	0.3151	24.2013	0.3135	24.2013	0.3113
25.3536	0.4419	25.3536	0.3316	25.3536	0.317	25.3536	0.3143	25.3536	0.3125	25.3536	0.3096	25.3536	0.3071
26.5609	0.4419	26.5609	0.3316	26.5609	0.317	26.5609	0.31	26.5609	0.3069	26.5609	0.3043	26.5609	0.3027
27.8256	0.4419	27.8256	0.3238	27.8256	0.3108	27.8256	0.3024	27.8256	0.2977	27.8256	0.2969	27.8256	0.298
29.1505	0.4419	29.1505	0.3238	29.1505	0.3108	29.1505	0.3024	29.1505	0.2977	29.1505	0.2963	29.1505	0.2958
30.5386	0.3862	30.5386	0.3077	30.5386	0.3004	30.5386	0.298	30.5386	0.2963	30.5386	0.2943	30.5386	0.2939
31.9927	0.3588	31.9927	0.3077	31.9927	0.3004	31.9927	0.298	31.9927	0.2963	31.9927	0.2943	31.9927	0.2928
33.516	0.3151	33.516	0.3045	33.516	0.3004	33.516	0.298	33.516	0.2963	33.516	0.2943	33.516	0.2928
35.1119	0.2975	35.1119	0.2967	35.1119	0.296	35.1119	0.2953	35.1119	0.2945	35.1119	0.2932	35.1119	0.2918
36.7838	0.2918	36.7838	0.2916	36.7838	0.2915	36.7838	0.2913	36.7838	0.2911	36.7838	0.2906	36.7838	0.2898
38.5353	0.2884	38.5353	0.2884	38.5353	0.2884	38.5353	0.2884	38.5353	0.2883	38.5353	0.2881	38.5353	0.2878
40.3702	0.286	40.3702	0.2861	40.3702	0.2862	40.3702	0.2862	40.3702	0.2861	40.3702	0.2861	40.3702	0.286
42.2924	0.2843	42.2924	0.2843	42.2924	0.2844	42.2924	0.2844	42.2924	0.2844	42.2924	0.2844	42.2924	0.2843
44.3062	0.2828	44.3062	0.2828	44.3062	0.2829	44.3062	0.2829	44.3062	0.2829	44.3062	0.2829	44.3062	0.2829
46.4159	0.2816	46.4159	0.2816	46.4159	0.2816	46.4159	0.2816	46.4159	0.2816	46.4159	0.2816	46.4159	0.2817
48.626	0.2804	48.626	0.2804	48.626	0.2804	48.626	0.2804	48.626	0.2804	48.626	0.2805	48.626	0.2805
50.9414	0.2794	50.9414	0.2794	50.9414	0.2794	50.9414	0.2794	50.9414	0.2794	50.9414	0.2794	50.9414	0.2795

RPP-WTP Pretreatment Facility ISRS
Calc No.: 24590-PTF-S0C-S15T-00005, Rev. 0B

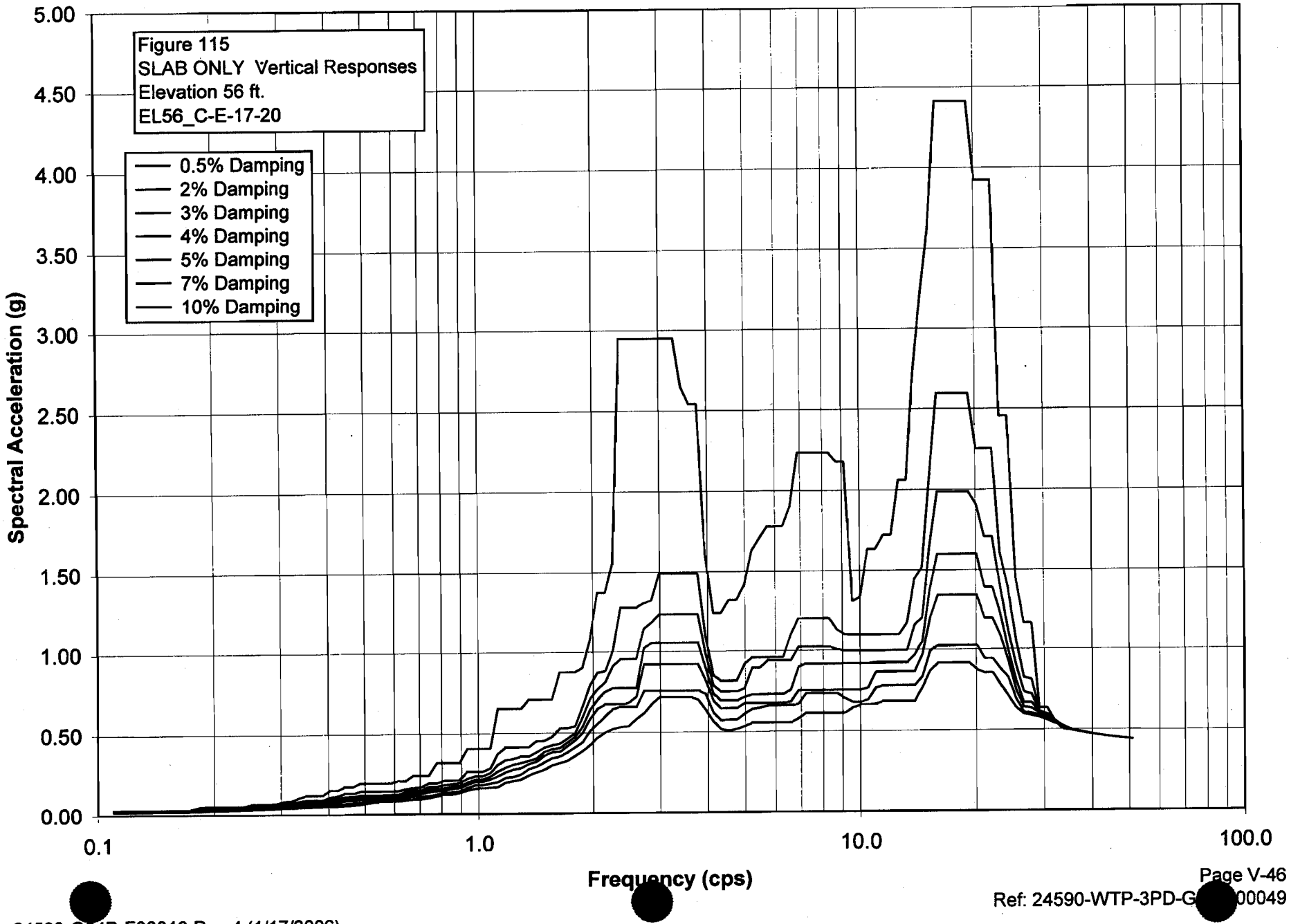

S_PTWW115.grf
RPP-WTP Pretreatment Facility ISRS
Calc No.: 24590-PTF-S0C-S15T-00005, Rev. 0B
Frequency (cps)
Spectral Acceleration (g)
Figure 115
SLAB ONLY Vertical Responses
Elevation 56 ft.
EL56_C-E-17-20

Damping	0.50%	Damping	2%	Damping	3%	Damping	4%	Damping	5%	Damping	7%	Damping	10%
Freq.	Accel.	Freq.	Accel.	Freq.	Accel.	Freq.	Accel.	Freq.	Accel.	Freq.	Accel.	Freq.	Accel.
0.1098	0.0329	0.1098	0.0295	0.1098	0.0275	0.1098	0.0264	0.1098	0.0255	0.1098	0.0237	0.1098	0.0217
0.115	0.0347	0.115	0.0311	0.115	0.029	0.115	0.0271	0.115	0.0257	0.115	0.0239	0.115	0.022
0.1204	0.0348	0.1204	0.0312	0.1204	0.0291	0.1204	0.0273	0.1204	0.0257	0.1204	0.0239	0.1204	0.022
0.1262	0.0349	0.1262	0.0312	0.1262	0.0291	0.1262	0.0273	0.1262	0.0257	0.1262	0.0239	0.1262	0.022
0.1322	0.0349	0.1322	0.0312	0.1322	0.0291	0.1322	0.0273	0.1322	0.0257	0.1322	0.0239	0.1322	0.022
0.1385	0.0349	0.1385	0.0312	0.1385	0.0291	0.1385	0.0273	0.1385	0.0259	0.1385	0.0242	0.1385	0.0222
0.1451	0.0349	0.1451	0.0312	0.1451	0.0291	0.1451	0.0273	0.1451	0.0259	0.1451	0.0242	0.1451	0.0222
0.152	0.0349	0.152	0.0312	0.152	0.0291	0.152	0.0273	0.152	0.0263	0.152	0.025	0.152	0.0236
0.1592	0.0349	0.1592	0.0312	0.1592	0.0291	0.1592	0.0283	0.1592	0.0276	0.1592	0.0264	0.1592	0.0248
0.1668	0.0349	0.1668	0.0312	0.1668	0.0298	0.1668	0.029	0.1668	0.0283	0.1668	0.027	0.1668	0.0253
0.1748	0.0423	0.1748	0.0358	0.1748	0.0324	0.1748	0.0296	0.1748	0.0283	0.1748	0.027	0.1748	0.0258
0.1831	0.0535	0.1831	0.0445	0.1831	0.0398	0.1831	0.0358	0.1831	0.0324	0.1831	0.0273	0.1831	0.0261
0.1918	0.0577	0.1918	0.0478	0.1918	0.0424	0.1918	0.038	0.1918	0.0347	0.1918	0.0317	0.1918	0.0285
0.2009	0.0577	0.2009	0.0478	0.2009	0.0424	0.2009	0.0391	0.2009	0.0372	0.2009	0.034	0.2009	0.0301
0.2105	0.0577	0.2105	0.0478	0.2105	0.0424	0.2105	0.0393	0.2105	0.0376	0.2105	0.0347	0.2105	0.0325
0.2205	0.0577	0.2205	0.0478	0.2205	0.0432	0.2205	0.0417	0.2205	0.0402	0.2205	0.0379	0.2205	0.0351
0.231	0.0579	0.231	0.0494	0.231	0.0465	0.231	0.044	0.231	0.0424	0.231	0.0396	0.231	0.036
0.242	0.0625	0.242	0.0555	0.242	0.0514	0.242	0.0476	0.242	0.0443	0.242	0.0396	0.242	0.036
0.2535	0.0713	0.2535	0.0623	0.2535	0.0573	0.2535	0.0531	0.2535	0.0496	0.2535	0.044	0.2535	0.0386
0.2656	0.0713	0.2656	0.0623	0.2656	0.0573	0.2656	0.0531	0.2656	0.0496	0.2656	0.044	0.2656	0.0386
0.2783	0.0713	0.2783	0.0623	0.2783	0.0573	0.2783	0.0531	0.2783	0.0496	0.2783	0.044	0.2783	0.0395
0.2915	0.0743	0.2915	0.0666	0.2915	0.0623	0.2915	0.0586	0.2915	0.0556	0.2915	0.0504	0.2915	0.0443
0.3054	0.0876	0.3054	0.0757	0.3054	0.0694	0.3054	0.0643	0.3054	0.0605	0.3054	0.0541	0.3054	0.0472
0.3199	0.0921	0.3199	0.0797	0.3199	0.0728	0.3199	0.067	0.3199	0.0619	0.3199	0.0541	0.3199	0.0472
0.3352	0.1104	0.3352	0.0888	0.3352	0.0785	0.3352	0.0706	0.3352	0.0644	0.3352	0.0557	0.3352	0.0481
0.3511	0.1253	0.3511	0.0955	0.3511	0.0827	0.3511	0.0727	0.3511	0.0669	0.3511	0.0584	0.3511	0.05
0.3678	0.1253	0.3678	0.0955	0.3678	0.085	0.3678	0.0776	0.3678	0.0713	0.3678	0.0613	0.3678	0.051

0.3853	0.1253	0.3853	0.0958	0.3853	0.0881	0.3853	0.081	0.3853	0.0755	0.3853	0.0658	0.3853	0.055
0.4037	0.155	0.4037	0.1125	0.4037	0.0976	0.4037	0.086	0.4037	0.0768	0.4037	0.0658	0.4037	0.055
0.4229	0.155	0.4229	0.1189	0.4229	0.1036	0.4229	0.0914	0.4229	0.0814	0.4229	0.0672	0.4229	0.055
0.4431	0.1769	0.4431	0.1356	0.4431	0.1158	0.4431	0.1003	0.4431	0.0882	0.4431	0.0706	0.4431	0.059
0.4642	0.1769	0.4642	0.1356	0.4642	0.1158	0.4642	0.1003	0.4642	0.0882	0.4642	0.0737	0.4642	0.0628
0.4863	0.1983	0.4863	0.1471	0.4863	0.1254	0.4863	0.1095	0.4863	0.0976	0.4863	0.0812	0.4863	0.0672
0.5094	0.1983	0.5094	0.1471	0.5094	0.1254	0.5094	0.1095	0.5094	0.0976	0.5094	0.0855	0.5094	0.0744
0.5337	0.1983	0.5337	0.1471	0.5337	0.1254	0.5337	0.1112	0.5337	0.1045	0.5337	0.0939	0.5337	0.082
0.5591	0.1983	0.5591	0.1471	0.5591	0.1254	0.5591	0.1112	0.5591	0.1045	0.5591	0.0956	0.5591	0.0843
0.5857	0.1998	0.5857	0.1485	0.5857	0.1267	0.5857	0.1112	0.5857	0.1048	0.5857	0.0957	0.5857	0.0843
0.6136	0.2101	0.6136	0.1485	0.6136	0.1267	0.6136	0.1136	0.6136	0.1052	0.6136	0.0957	0.6136	0.0843
0.6428	0.2101	0.6428	0.1594	0.6428	0.1441	0.6428	0.1316	0.6428	0.1212	0.6428	0.1053	0.6428	0.089
0.6734	0.2434	0.6734	0.1649	0.6734	0.1494	0.6734	0.1384	0.6734	0.1287	0.6734	0.1125	0.6734	0.0946
0.7055	0.2434	0.7055	0.17	0.7055	0.1494	0.7055	0.1384	0.7055	0.1287	0.7055	0.1128	0.7055	0.0953
0.7391	0.2434	0.7391	0.1945	0.7391	0.1728	0.7391	0.1548	0.7391	0.1398	0.7391	0.1172	0.7391	0.1021
0.7743	0.3189	0.7743	0.1945	0.7743	0.173	0.7743	0.1583	0.7743	0.1458	0.7743	0.1255	0.7743	0.1139
0.8111	0.3189	0.8111	0.2109	0.8111	0.1831	0.8111	0.1637	0.8111	0.1515	0.8111	0.1361	0.8111	0.1235
0.8497	0.3189	0.8497	0.2109	0.8497	0.1901	0.8497	0.1736	0.8497	0.1596	0.8497	0.1394	0.8497	0.1267
0.8902	0.3189	0.8902	0.2149	0.8902	0.1954	0.8902	0.1792	0.8902	0.1656	0.8902	0.1442	0.8902	0.1342
0.9326	0.4062	0.9326	0.2639	0.9326	0.2222	0.9326	0.1981	0.9326	0.183	0.9326	0.1653	0.9326	0.1501
0.977	0.4062	0.977	0.2639	0.977	0.2359	0.977	0.2171	0.977	0.2018	0.977	0.1798	0.977	0.1597
1.0235	0.4062	1.0235	0.2639	1.0235	0.2359	1.0235	0.2171	1.0235	0.2018	1.0235	0.1805	1.0235	0.1597
1.0723	0.4062	1.0723	0.2856	1.0723	0.2573	1.0723	0.2344	1.0723	0.2163	1.0723	0.1897	1.0723	0.1641
1.1233	0.6546	1.1233	0.3729	1.1233	0.3062	1.1233	0.2648	1.1233	0.2359	1.1233	0.1983	1.1233	0.1679
1.1768	0.6546	1.1768	0.4139	1.1768	0.3354	1.1768	0.2882	1.1768	0.2598	1.1768	0.2262	1.1768	0.1952
1.2328	0.6546	1.2328	0.4139	1.2328	0.342	1.2328	0.3066	1.2328	0.2769	1.2328	0.2314	1.2328	0.2051
1.2916	0.6546	1.2916	0.4139	1.2916	0.3557	1.2916	0.3169	1.2916	0.2849	1.2916	0.2463	1.2916	0.2148
1.353	0.7114	1.353	0.4139	1.353	0.3557	1.353	0.3288	1.353	0.3096	1.353	0.2772	1.353	0.2397
1.4175	0.7114	1.4175	0.451	1.4175	0.3821	1.4175	0.3434	1.4175	0.3251	1.4175	0.2931	1.4175	0.2567
1.485	0.7114	1.485	0.451	1.485	0.409	1.485	0.3828	1.485	0.3591	1.485	0.3192	1.485	0.2738
1.5557	0.7114	1.5557	0.4768	1.5557	0.4231	1.5557	0.4003	1.5557	0.3802	1.5557	0.3446	1.5557	0.3
1.6298	0.8771	1.6298	0.5303	1.6298	0.433	1.6298	0.407	1.6298	0.3829	1.6298	0.3538	1.6298	0.3149
1.7074	0.8771	1.7074	0.5303	1.7074	0.4631	1.7074	0.4398	1.7074	0.4182	1.7074	0.3794	1.7074	0.3287
1.7887	0.8771	1.7887	0.5415	1.7887	0.5002	1.7887	0.4765	1.7887	0.4537	1.7887	0.4108	1.7887	0.3573
1.8738	0.9037	1.8738	0.663	1.8738	0.5967	1.8738	0.5392	1.8738	0.4998	1.8738	0.4412	1.8738	0.3872
1.963	1.0756	1.963	0.7961	1.963	0.7133	1.963	0.6453	1.963	0.589	1.963	0.5131	1.963	0.4247
2.0565	1.3711	2.0565	0.8733	2.0565	0.772	2.0565	0.7084	2.0565	0.6513	2.0565	0.5578	2.0565	0.4693
2.1544	1.3711	2.1544	0.8811	2.1544	0.8161	2.1544	0.7568	2.1544	0.6775	2.1544	0.6051	2.1544	0.503
2.257	1.5546	2.257	1.0086	2.257	0.9138	2.257	0.7768	2.257	0.6775	2.257	0.6481	2.257	0.524

2.3645	2.9466	2.3645	1.2778	2.3645	0.9571	2.3645	0.7768	2.3645	0.6775	2.3645	0.6607	2.3645	0.5351
2.4771	2.9466	2.4771	1.2778	2.4771	0.9571	2.4771	0.7768	2.4771	0.6869	2.4771	0.6607	2.4771	0.5397
2.595	2.9466	2.595	1.2778	2.595	0.9571	2.595	0.7792	2.595	0.7236	2.595	0.6607	2.595	0.5851
2.7186	2.9466	2.7186	1.3059	2.7186	1.1457	2.7186	1.0217	2.7186	0.9201	2.7186	0.7599	2.7186	0.6218
2.848	2.9466	2.848	1.323	2.848	1.1833	2.848	1.0545	2.848	0.9207	2.848	0.7599	2.848	0.6777
2.9836	2.9466	2.9836	1.489	2.9836	1.2361	2.9836	1.0545	2.9836	0.9207	2.9836	0.7599	2.9836	0.7194
3.1257	2.9466	3.1257	1.489	3.1257	1.2361	3.1257	1.0545	3.1257	0.9207	3.1257	0.7599	3.1257	0.7194
3.2745	2.9466	3.2745	1.489	3.2745	1.2361	3.2745	1.0545	3.2745	0.9207	3.2745	0.7599	3.2745	0.7194
3.4305	2.6509	3.4305	1.489	3.4305	1.2361	3.4305	1.0545	3.4305	0.9207	3.4305	0.7599	3.4305	0.7194
3.5938	2.5408	3.5938	1.489	3.5938	1.2361	3.5938	1.0545	3.5938	0.9207	3.5938	0.7599	3.5938	0.7194
3.7649	2.5408	3.7649	1.489	3.7649	1.2361	3.7649	1.0545	3.7649	0.9207	3.7649	0.7599	3.7649	0.704
3.9442	1.6105	3.9442	1.0958	3.9442	0.9858	3.9442	0.8969	3.9442	0.8216	3.9442	0.7368	3.9442	0.6389
4.132	1.2409	4.132	0.8499	4.132	0.7883	4.132	0.7373	4.132	0.6921	4.132	0.6195	4.132	0.5637
4.3288	1.2409	4.3288	0.8174	4.3288	0.7508	4.3288	0.6953	4.3288	0.6474	4.3288	0.5705	4.3288	0.5162
4.5349	1.322	4.5349	0.8174	4.5349	0.7508	4.5349	0.6953	4.5349	0.6474	4.5349	0.5762	4.5349	0.5063
4.7508	1.322	4.7508	0.8174	4.7508	0.7508	4.7508	0.6953	4.7508	0.6474	4.7508	0.5763	4.7508	0.5172
4.977	1.4164	4.977	0.9195	4.977	0.7709	4.977	0.7175	4.977	0.6786	4.977	0.6141	4.977	0.5348
5.214	1.6309	5.214	0.9611	5.214	0.8966	5.214	0.7317	5.214	0.6786	5.214	0.6427	5.214	0.555
5.4623	1.7077	5.4623	0.9611	5.4623	0.8966	5.4623	0.7317	5.4623	0.6786	5.4623	0.6491	5.4623	0.555
5.7224	1.7802	5.7224	0.9611	5.7224	0.9394	5.7224	0.7317	5.7224	0.6786	5.7224	0.6618	5.7224	0.555
5.9948	1.7802	5.9948	0.9611	5.9948	0.9394	5.9948	0.7317	5.9948	0.6786	5.9948	0.6618	5.9948	0.555
6.2803	1.7802	6.2803	0.9611	6.2803	0.9394	6.2803	0.7317	6.2803	0.6786	6.2803	0.6618	6.2803	0.555
6.5793	1.9049	6.5793	1.0978	6.5793	0.9394	6.5793	0.7588	6.5793	0.6857	6.5793	0.6618	6.5793	0.555
6.8926	2.2369	6.8926	1.2019	6.8926	1.0214	6.8926	0.9	6.8926	0.7551	6.8926	0.6724	6.8926	0.581
7.2208	2.2369	7.2208	1.2019	7.2208	1.0214	7.2208	0.9172	7.2208	0.7551	7.2208	0.7362	7.2208	0.6129
7.5646	2.2369	7.5646	1.2019	7.5646	1.0214	7.5646	0.9172	7.5646	0.7551	7.5646	0.7362	7.5646	0.6129
7.9248	2.2369	7.9248	1.2019	7.9248	1.0214	7.9248	0.9172	7.9248	0.7551	7.9248	0.7362	7.9248	0.6129
8.3022	2.2369	8.3022	1.2019	8.3022	1.0214	8.3022	0.9172	8.3022	0.7551	8.3022	0.7362	8.3022	0.6129
8.6975	2.1808	8.6975	1.1297	8.6975	1.0044	8.6975	0.9172	8.6975	0.7551	8.6975	0.7362	8.6975	0.6129
9.1116	2.1808	9.1116	1.0994	9.1116	0.9961	9.1116	0.9172	9.1116	0.7551	9.1116	0.7046	9.1116	0.6129
9.5455	1.3081	9.5455	1.097	9.5455	0.9961	9.5455	0.9172	9.5455	0.7551	9.5455	0.68	9.5455	0.6459
10	1.3354	10	1.097	10	0.9961	10	0.9172	10	0.7551	10	0.68	10	0.6626
10.4762	1.6346	10.4762	1.097	10.4762	0.9961	10.4762	0.9172	10.4762	0.7686	10.4762	0.6957	10.4762	0.6626
10.975	1.6346	10.975	1.097	10.975	0.9961	10.975	0.9233	10.975	0.863	10.975	0.768	10.975	0.6671
11.4976	1.7214	11.4976	1.097	11.4976	0.9961	11.4976	0.9233	11.4976	0.8666	11.4976	0.7814	11.4976	0.6841
12.045	1.7214	12.045	1.097	12.045	0.9961	12.045	0.9233	12.045	0.8666	12.045	0.7814	12.045	0.6841
12.6186	2.0632	12.6186	1.097	12.6186	0.9961	12.6186	0.9233	12.6186	0.8666	12.6186	0.7814	12.6186	0.6841
13.2194	2.0632	13.2194	1.1707	13.2194	0.9961	13.2194	0.9233	13.2194	0.8666	13.2194	0.7814	13.2194	0.6841
13.8489	2.7414	13.8489	1.4457	13.8489	1.1557	13.8489	0.9683	13.8489	0.8666	13.8489	0.7814	13.8489	0.6841

14.5083	3.2128	14.5083	1.5157	14.5083	1.2027	14.5083	1.053	14.5083	0.9721	14.5083	0.8336	14.5083	0.7686
15.1991	3.6191	15.1991	2.0698	15.1991	1.6478	15.1991	1.3781	15.1991	1.196	15.1991	0.9925	15.1991	0.8703
15.9228	4.4132	15.9228	2.5964	15.9228	1.9869	15.9228	1.6011	15.9228	1.342	15.9228	1.0241	15.9228	0.9156
16.681	4.4132	16.681	2.5964	16.681	1.9869	16.681	1.6011	16.681	1.342	16.681	1.0241	16.681	0.9156
17.4753	4.4132	17.4753	2.5964	17.4753	1.9869	17.4753	1.6011	17.4753	1.342	17.4753	1.0241	17.4753	0.9156
18.3074	4.4132	18.3074	2.5964	18.3074	1.9869	18.3074	1.6011	18.3074	1.342	18.3074	1.0241	18.3074	0.9156
19.1791	4.4132	19.1791	2.5964	19.1791	1.9869	19.1791	1.6011	19.1791	1.342	19.1791	1.0241	19.1791	0.9156
20.0923	3.9224	20.0923	2.2551	20.0923	1.905	20.0923	1.6011	20.0923	1.342	20.0923	1.0241	20.0923	0.8746
21.049	3.9224	21.049	2.2551	21.049	1.7069	21.049	1.3911	21.049	1.196	21.049	0.9421	21.049	0.8556
22.0513	3.9224	22.0513	2.2551	22.0513	1.7069	22.0513	1.3911	22.0513	1.196	22.0513	0.9421	22.0513	0.8556
23.1013	2.4554	23.1013	1.6083	23.1013	1.3984	23.1013	1.2275	23.1013	1.0867	23.1013	0.8799	23.1013	0.7832
24.2013	2.4554	24.2013	1.3868	24.2013	1.1176	24.2013	0.9951	24.2013	0.9307	24.2013	0.826	24.2013	0.7129
25.3536	1.443	25.3536	1.0506	25.3536	0.8967	25.3536	0.8057	25.3536	0.7474	25.3536	0.6926	25.3536	0.6385
26.5609	1.1643	26.5609	0.8247	26.5609	0.7362	26.5609	0.6696	26.5609	0.6425	26.5609	0.6098	26.5609	0.5997
27.8256	1.1643	27.8256	0.8126	27.8256	0.7222	27.8256	0.6696	27.8256	0.6345	27.8256	0.6043	27.8256	0.5905
29.1505	0.6352	29.1505	0.6165	29.1505	0.6144	29.1505	0.6094	29.1505	0.6035	29.1505	0.5919	29.1505	0.5777
30.5386	0.6352	30.5386	0.5981	30.5386	0.5888	30.5386	0.5826	30.5386	0.5777	30.5386	0.5696	30.5386	0.5593
31.9927	0.5514	31.9927	0.556	31.9927	0.5544	31.9927	0.5521	31.9927	0.5498	31.9927	0.5454	31.9927	0.539
33.516	0.5022	33.516	0.5192	33.516	0.5227	33.516	0.5236	33.516	0.5235	33.516	0.5222	33.516	0.5194
35.1119	0.4958	35.1119	0.4981	35.1119	0.4996	35.1119	0.5007	35.1119	0.5016	35.1119	0.5026	35.1119	0.5024
36.7838	0.4859	36.7838	0.4867	36.7838	0.4873	36.7838	0.4878	36.7838	0.4882	36.7838	0.4888	36.7838	0.4891
38.5353	0.4766	38.5353	0.4771	38.5353	0.4774	38.5353	0.4777	38.5353	0.4779	38.5353	0.4783	38.5353	0.4785
40.3702	0.4685	40.3702	0.4688	40.3702	0.469	40.3702	0.4691	40.3702	0.4693	40.3702	0.4695	40.3702	0.4697
42.2924	0.4613	42.2924	0.4615	42.2924	0.4616	42.2924	0.4617	42.2924	0.4618	42.2924	0.462	42.2924	0.4622
44.3062	0.4548	44.3062	0.455	44.3062	0.455	44.3062	0.4551	44.3062	0.4552	44.3062	0.4554	44.3062	0.4555
46.4159	0.449	46.4159	0.4491	46.4159	0.4491	46.4159	0.4492	46.4159	0.4493	46.4159	0.4494	46.4159	0.4496
48.626	0.4436	48.626	0.4437	48.626	0.4437	48.626	0.4438	48.626	0.4438	48.626	0.4439	48.626	0.4442
50.9414	0.4386	50.9414	0.4386	50.9414	0.4386	50.9414	0.4387	50.9414	0.4387	50.9414	0.4388	50.9414	0.4391

RPP-WTP Pretreatment Facility ISRS
Calc No.: 24590-PTF-S0C-S15T-00005, Rev. 0B

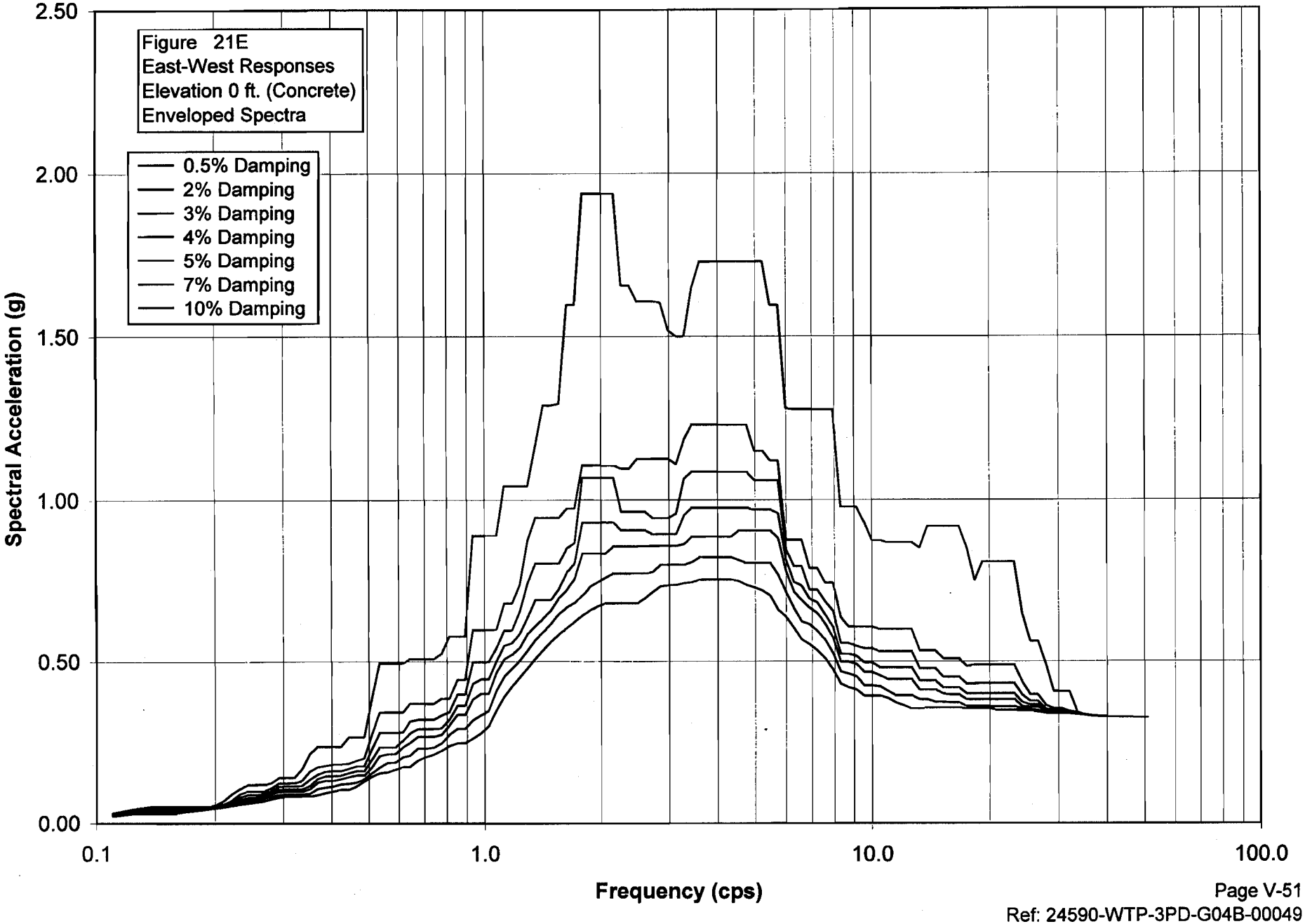

S_PTEE021.grf
RPP-WTP Pretreatment Facility ISRS
Calc No.: 24590-PTF-S0C-S15T-00005, Rev. 0B
Frequency (cps)
Spectral Acceleration (g)
Figure 21E
East-West Responses
Elevation 0 ft. (Concrete)
Enveloped Spectra

Damping	0.50%	Damping	2%	Damping	3%	Damping	4%	Damping	5%	Damping	7%	Damping	10%
Freq.	Accel.	Freq.	Accel.	Freq.	Accel.	Freq.	Accel.	Freq.	Accel.	Freq.	Accel.	Freq.	Accel.
0.1098	0.0314	0.1098	0.0288	0.1098	0.0275	0.1098	0.0267	0.1098	0.026	0.1098	0.0247	0.1098	0.0231
0.115	0.0358	0.115	0.033	0.115	0.0314	0.115	0.03	0.115	0.0289	0.115	0.0274	0.115	0.0254
0.1204	0.041	0.1204	0.0382	0.1204	0.0366	0.1204	0.0352	0.1204	0.0339	0.1204	0.0316	0.1204	0.0287
0.1262	0.0459	0.1262	0.0426	0.1262	0.0407	0.1262	0.0389	0.1262	0.0373	0.1262	0.0344	0.1262	0.0311
0.1322	0.0488	0.1322	0.0442	0.1322	0.0421	0.1322	0.0402	0.1322	0.0385	0.1322	0.0355	0.1322	0.032
0.1385	0.0518	0.1385	0.0463	0.1385	0.0431	0.1385	0.0402	0.1385	0.0385	0.1385	0.0355	0.1385	0.032
0.1451	0.0518	0.1451	0.0463	0.1451	0.0431	0.1451	0.0402	0.1451	0.0385	0.1451	0.0355	0.1451	0.032
0.152	0.0518	0.152	0.0463	0.152	0.0431	0.152	0.0402	0.152	0.0385	0.152	0.0355	0.152	0.032
0.1592	0.0518	0.1592	0.0463	0.1592	0.0431	0.1592	0.0402	0.1592	0.0385	0.1592	0.0355	0.1592	0.0322
0.1668	0.0518	0.1668	0.0463	0.1668	0.0431	0.1668	0.0402	0.1668	0.0385	0.1668	0.0361	0.1668	0.0348
0.1748	0.0518	0.1748	0.0463	0.1748	0.0431	0.1748	0.041	0.1748	0.0403	0.1748	0.0392	0.1748	0.0375
0.1831	0.0518	0.1831	0.0463	0.1831	0.0454	0.1831	0.0446	0.1831	0.0438	0.1831	0.0424	0.1831	0.0402
0.1918	0.0521	0.1918	0.0504	0.1918	0.0494	0.1918	0.0484	0.1918	0.0474	0.1918	0.0455	0.1918	0.0434
0.2009	0.0569	0.2009	0.0549	0.2009	0.0536	0.2009	0.0524	0.2009	0.0513	0.2009	0.0494	0.2009	0.0471
0.2105	0.0707	0.2105	0.06	0.2105	0.0585	0.2105	0.0572	0.2105	0.056	0.2105	0.0538	0.2105	0.0513
0.2205	0.0909	0.2205	0.0714	0.2205	0.0642	0.2205	0.0623	0.2205	0.0608	0.2205	0.0584	0.2205	0.0554
0.231	0.1078	0.231	0.0906	0.231	0.0813	0.231	0.0735	0.231	0.0671	0.231	0.0628	0.231	0.0589
0.242	0.1194	0.242	0.0991	0.242	0.0883	0.242	0.0792	0.242	0.0715	0.242	0.0663	0.242	0.0617
0.2535	0.12	0.2535	0.0991	0.2535	0.0883	0.2535	0.0796	0.2535	0.0755	0.2535	0.069	0.2535	0.0654
0.2656	0.12	0.2656	0.0991	0.2656	0.0922	0.2656	0.0879	0.2656	0.084	0.2656	0.077	0.2656	0.0686
0.2783	0.1252	0.2783	0.1094	0.2783	0.1006	0.2783	0.095	0.2783	0.0907	0.2783	0.0832	0.2783	0.0751
0.2915	0.1421	0.2915	0.1244	0.2915	0.1145	0.2915	0.1057	0.2915	0.0979	0.2915	0.0883	0.2915	0.0805
0.3054	0.1421	0.3054	0.1244	0.3054	0.115	0.3054	0.1067	0.3054	0.0994	0.3054	0.0903	0.3054	0.0832
0.3199	0.1421	0.3199	0.1244	0.3199	0.115	0.3199	0.1067	0.3199	0.0994	0.3199	0.0903	0.3199	0.0837
0.3352	0.1707	0.3352	0.1342	0.3352	0.1178	0.3352	0.1067	0.3352	0.0994	0.3352	0.0903	0.3352	0.0837
0.3511	0.2169	0.3511	0.1627	0.3511	0.1366	0.3511	0.1165	0.3511	0.107	0.3511	0.0923	0.3511	0.0837
0.3678	0.2396	0.3678	0.1754	0.3678	0.1523	0.3678	0.1388	0.3678	0.1269	0.3678	0.1074	0.3678	0.0882

0.3853	0.2396	0.3853	0.1799	0.3853	0.1618	0.3853	0.1463	0.3853	0.1331	0.3853	0.112	0.3853	0.0944
0.4037	0.2396	0.4037	0.1842	0.4037	0.164	0.4037	0.1472	0.4037	0.1332	0.4037	0.1155	0.4037	0.0992
0.4229	0.2396	0.4229	0.1842	0.4229	0.164	0.4229	0.1495	0.4229	0.1381	0.4229	0.1214	0.4229	0.1046
0.4431	0.2688	0.4431	0.1868	0.4431	0.1709	0.4431	0.1568	0.4431	0.1442	0.4431	0.1234	0.4431	0.1046
0.4642	0.2688	0.4642	0.1954	0.4642	0.1781	0.4642	0.1629	0.4642	0.1495	0.4642	0.1272	0.4642	0.1151
0.4863	0.2688	0.4863	0.2037	0.4863	0.1784	0.4863	0.1629	0.4863	0.1495	0.4863	0.1378	0.4863	0.1308
0.5094	0.3911	0.5094	0.2791	0.5094	0.2331	0.5094	0.2001	0.5094	0.1754	0.5094	0.1572	0.5094	0.1456
0.5337	0.4951	0.5337	0.3445	0.5337	0.2811	0.5337	0.237	0.5337	0.2102	0.5337	0.174	0.5337	0.1562
0.5591	0.4951	0.5591	0.3445	0.5591	0.2811	0.5591	0.237	0.5591	0.2161	0.5591	0.1886	0.5591	0.1586
0.5857	0.4951	0.5857	0.3445	0.5857	0.2811	0.5857	0.237	0.5857	0.2161	0.5857	0.1886	0.5857	0.1672
0.6136	0.4951	0.6136	0.3445	0.6136	0.2835	0.6136	0.2579	0.6136	0.2376	0.6136	0.2068	0.6136	0.1755
0.6428	0.5081	0.6428	0.3704	0.6428	0.3158	0.6428	0.2788	0.6428	0.2506	0.6428	0.2109	0.6428	0.1755
0.6734	0.5081	0.6734	0.3704	0.6734	0.3214	0.6734	0.2929	0.6734	0.2694	0.6734	0.2332	0.6734	0.1958
0.7055	0.5081	0.7055	0.3704	0.7055	0.3214	0.7055	0.2929	0.7055	0.2694	0.7055	0.2332	0.7055	0.2068
0.7391	0.5081	0.7391	0.3704	0.7391	0.3214	0.7391	0.2929	0.7391	0.2694	0.7391	0.2359	0.7391	0.2145
0.7743	0.5246	0.7743	0.3867	0.7743	0.3352	0.7743	0.2967	0.7743	0.2757	0.7743	0.2494	0.7743	0.2264
0.8111	0.5776	0.8111	0.3867	0.8111	0.3456	0.8111	0.3215	0.8111	0.3045	0.8111	0.2755	0.8111	0.2408
0.8497	0.5776	0.8497	0.444	0.8497	0.3988	0.8497	0.3642	0.8497	0.3363	0.8497	0.2936	0.8497	0.2491
0.8902	0.5776	0.8902	0.444	0.8902	0.3988	0.8902	0.3642	0.8902	0.3363	0.8902	0.2936	0.8902	0.2491
0.9326	0.8877	0.9326	0.5975	0.9326	0.4991	0.9326	0.4325	0.9326	0.3845	0.9326	0.3203	0.9326	0.2634
0.977	0.8877	0.977	0.5975	0.977	0.4991	0.977	0.4459	0.977	0.4011	0.977	0.3342	0.977	0.2792
1.0235	0.8877	1.0235	0.5975	1.0235	0.4991	1.0235	0.4459	1.0235	0.4011	1.0235	0.3491	1.0235	0.3012
1.0723	0.8877	1.0723	0.6	1.0723	0.5421	1.0723	0.5019	1.0723	0.4672	1.0723	0.4115	1.0723	0.3515
1.1233	1.0439	1.1233	0.6796	1.1233	0.5961	1.1233	0.5493	1.1233	0.5076	1.1233	0.454	1.1233	0.393
1.1768	1.0439	1.1768	0.6796	1.1768	0.5966	1.1768	0.5564	1.1768	0.5218	1.1768	0.4787	1.1768	0.424
1.2328	1.0439	1.2328	0.7363	1.2328	0.6543	1.2328	0.5857	1.2328	0.5418	1.2328	0.503	1.2328	0.452
1.2916	1.0439	1.2916	0.8733	1.2916	0.7423	1.2916	0.6374	1.2916	0.5853	1.2916	0.5346	1.2916	0.4807
1.353	1.1657	1.353	0.9454	1.353	0.8025	1.353	0.6903	1.353	0.6111	1.353	0.5663	1.353	0.5097
1.4175	1.2899	1.4175	0.9454	1.4175	0.8025	1.4175	0.6903	1.4175	0.6337	1.4175	0.5919	1.4175	0.5357
1.485	1.2899	1.485	0.9454	1.485	0.8025	1.485	0.6903	1.485	0.6584	1.485	0.617	1.485	0.5609
1.5557	1.2945	1.5557	0.9454	1.5557	0.8025	1.5557	0.7243	1.5557	0.696	1.5557	0.6469	1.5557	0.584
1.6298	1.5963	1.6298	0.9746	1.6298	0.8489	1.6298	0.7751	1.6298	0.7218	1.6298	0.6683	1.6298	0.604
1.7074	1.5963	1.7074	0.9746	1.7074	0.8647	1.7074	0.8015	1.7074	0.7551	1.7074	0.6813	1.7074	0.6226
1.7887	1.939	1.7887	1.1073	1.7887	1.0689	1.7887	0.93	1.7887	0.8319	1.7887	0.7035	1.7887	0.6419
1.8738	1.939	1.8738	1.1073	1.8738	1.0689	1.8738	0.93	1.8738	0.8319	1.8738	0.7304	1.8738	0.6589
1.963	1.939	1.963	1.1073	1.963	1.0689	1.963	0.93	1.963	0.8319	1.963	0.7451	1.963	0.671
2.0565	1.939	2.0565	1.1073	2.0565	1.0689	2.0565	0.93	2.0565	0.8319	2.0565	0.7593	2.0565	0.6798
2.1544	1.939	2.1544	1.1073	2.1544	1.0689	2.1544	0.93	2.1544	0.8543	2.1544	0.771	2.1544	0.6798
2.257	1.6562	2.257	1.0974	2.257	0.9634	2.257	0.9048	2.257	0.8543	2.257	0.771	2.257	0.6798

2.3645	1.6562	2.3645	1.0974	2.3645	0.9634	2.3645	0.9048	2.3645	0.8543	2.3645	0.771	2.3645	0.6798
2.4771	1.6073	2.4771	1.127	2.4771	0.9634	2.4771	0.9048	2.4771	0.8543	2.4771	0.771	2.4771	0.6798
2.595	1.6073	2.595	1.127	2.595	0.9634	2.595	0.9048	2.595	0.8543	2.595	0.771	2.595	0.6948
2.7186	1.6073	2.7186	1.127	2.7186	0.944	2.7186	0.8929	2.7186	0.8559	2.7186	0.775	2.7186	0.7152
2.848	1.6038	2.848	1.127	2.848	0.944	2.848	0.8929	2.848	0.8559	2.848	0.7972	2.848	0.7309
2.9836	1.5188	2.9836	1.127	2.9836	0.944	2.9836	0.8929	2.9836	0.8559	2.9836	0.7972	2.9836	0.7343
3.1257	1.4997	3.1257	1.1106	3.1257	0.9584	3.1257	0.8929	3.1257	0.8559	3.1257	0.7972	3.1257	0.7358
3.2745	1.4997	3.2745	1.1862	3.2745	1.0659	3.2745	0.9529	3.2745	0.8616	3.2745	0.7972	3.2745	0.7415
3.4305	1.6477	3.4305	1.2303	3.4305	1.0871	3.4305	0.9756	3.4305	0.8845	3.4305	0.8056	3.4305	0.7439
3.5938	1.729	3.5938	1.2303	3.5938	1.0871	3.5938	0.9756	3.5938	0.8845	3.5938	0.8201	3.5938	0.7521
3.7649	1.729	3.7649	1.2303	3.7649	1.0871	3.7649	0.9756	3.7649	0.8845	3.7649	0.8201	3.7649	0.7521
3.9442	1.729	3.9442	1.2303	3.9442	1.0871	3.9442	0.9756	3.9442	0.8845	3.9442	0.8201	3.9442	0.7521
4.132	1.729	4.132	1.2303	4.132	1.0871	4.132	0.9756	4.132	0.8845	4.132	0.8201	4.132	0.7521
4.3288	1.729	4.3288	1.2303	4.3288	1.0871	4.3288	0.9756	4.3288	0.8845	4.3288	0.8201	4.3288	0.7521
4.5349	1.729	4.5349	1.2303	4.5349	1.0871	4.5349	0.9756	4.5349	0.9034	4.5349	0.8114	4.5349	0.7477
4.7508	1.729	4.7508	1.2303	4.7508	1.0871	4.7508	0.9756	4.7508	0.9034	4.7508	0.8028	4.7508	0.7348
4.977	1.729	4.977	1.1517	4.977	1.0607	4.977	0.9698	4.977	0.9034	4.977	0.8028	4.977	0.7272
5.214	1.729	5.214	1.1517	5.214	1.0607	5.214	0.9698	5.214	0.9034	5.214	0.8028	5.214	0.7183
5.4623	1.5947	5.4623	1.1214	5.4623	1.0607	5.4623	0.9698	5.4623	0.9034	5.4623	0.8028	5.4623	0.7033
5.7224	1.5947	5.7224	1.1214	5.7224	1.0607	5.7224	0.9582	5.7224	0.8798	5.7224	0.767	5.7224	0.6597
5.9948	1.2803	5.9948	0.8736	5.9948	0.8444	5.9948	0.8127	5.9948	0.7784	5.9948	0.714	5.9948	0.6374
6.2803	1.2768	6.2803	0.8736	6.2803	0.7928	6.2803	0.744	6.2803	0.7149	6.2803	0.6643	6.2803	0.6028
6.5793	1.2768	6.5793	0.8736	6.5793	0.7928	6.5793	0.7329	6.5793	0.6884	6.5793	0.6225	6.5793	0.5669
6.8926	1.2768	6.8926	0.7867	6.8926	0.7205	6.8926	0.6929	6.8926	0.6658	6.8926	0.6141	6.8926	0.5521
7.2208	1.2768	7.2208	0.7867	7.2208	0.7205	7.2208	0.6813	7.2208	0.6481	7.2208	0.5934	7.2208	0.5329
7.5646	1.2768	7.5646	0.7419	7.5646	0.6843	7.5646	0.6433	7.5646	0.6156	7.5646	0.566	7.5646	0.5094
7.9248	1.2768	7.9248	0.7419	7.9248	0.6556	7.9248	0.6053	7.9248	0.5726	7.9248	0.5246	7.9248	0.474
8.3022	0.9787	8.3022	0.6352	8.3022	0.5554	8.3022	0.5224	8.3022	0.4986	8.3022	0.4686	8.3022	0.4312
8.6975	0.9787	8.6975	0.6069	8.6975	0.5554	8.6975	0.5224	8.6975	0.4986	8.6975	0.4615	8.6975	0.4198
9.1116	0.9787	9.1116	0.6069	9.1116	0.5468	9.1116	0.5167	9.1116	0.4921	9.1116	0.4537	9.1116	0.4127
9.5455	0.9302	9.5455	0.6061	9.5455	0.5391	9.5455	0.4962	9.5455	0.4665	9.5455	0.4253	9.5455	0.3942
10	0.8724	10	0.6061	10	0.5391	10	0.4962	10	0.4665	10	0.4253	10	0.3942
10.4762	0.8724	10.4762	0.5988	10.4762	0.5299	10.4762	0.481	10.4762	0.4557	10.4762	0.4227	10.4762	0.3942
10.975	0.8656	10.975	0.5988	10.975	0.5299	10.975	0.481	10.975	0.4447	10.975	0.4087	10.975	0.3874
11.4976	0.8656	11.4976	0.5988	11.4976	0.5299	11.4976	0.481	11.4976	0.4447	11.4976	0.3958	11.4976	0.3726
12.045	0.8656	12.045	0.5988	12.045	0.5299	12.045	0.481	12.045	0.4447	12.045	0.3958	12.045	0.3646
12.6186	0.8656	12.6186	0.5988	12.6186	0.5299	12.6186	0.481	12.6186	0.4447	12.6186	0.3958	12.6186	0.3544
13.2194	0.849	13.2194	0.5326	13.2194	0.4782	13.2194	0.4405	13.2194	0.4121	13.2194	0.3831	13.2194	0.3547
13.8489	0.917	13.8489	0.5326	13.8489	0.4782	13.8489	0.4405	13.8489	0.4121	13.8489	0.3831	13.8489	0.3575

14.5083	0.917	14.5083	0.5326	14.5083	0.4782	14.5083	0.4405	14.5083	0.4121	14.5083	0.3745	14.5083	0.3575
15.1991	0.917	15.1991	0.5078	15.1991	0.4515	15.1991	0.4192	15.1991	0.401	15.1991	0.3745	15.1991	0.3575
15.9228	0.917	15.9228	0.5078	15.9228	0.4515	15.9228	0.4192	15.9228	0.3981	15.9228	0.3729	15.9228	0.3575
16.681	0.917	16.681	0.5078	16.681	0.4515	16.681	0.4192	16.681	0.3981	16.681	0.3729	16.681	0.3575
17.4753	0.849	17.4753	0.4854	17.4753	0.4308	17.4753	0.4015	17.4753	0.3828	17.4753	0.3623	17.4753	0.3546
18.3074	0.7497	18.3074	0.489	18.3074	0.4321	18.3074	0.4015	18.3074	0.3828	18.3074	0.3623	18.3074	0.3546
19.1791	0.8055	19.1791	0.489	19.1791	0.4321	19.1791	0.4015	19.1791	0.3828	19.1791	0.3623	19.1791	0.3546
20.0923	0.8055	20.0923	0.489	20.0923	0.4321	20.0923	0.4015	20.0923	0.3828	20.0923	0.3623	20.0923	0.3546
21.049	0.8055	21.049	0.489	21.049	0.4321	21.049	0.4015	21.049	0.3828	21.049	0.3607	21.049	0.3508
22.0513	0.8055	22.0513	0.489	22.0513	0.4321	22.0513	0.4015	22.0513	0.3828	22.0513	0.3607	22.0513	0.3504
23.1013	0.8055	23.1013	0.489	23.1013	0.4321	23.1013	0.4015	23.1013	0.3828	23.1013	0.3607	23.1013	0.3504
24.2013	0.6472	24.2013	0.4363	24.2013	0.3973	24.2013	0.3743	24.2013	0.3617	24.2013	0.3546	24.2013	0.3479
25.3536	0.5613	25.3536	0.3979	25.3536	0.3777	25.3536	0.3663	25.3536	0.3586	25.3536	0.3522	25.3536	0.3477
26.5609	0.5613	26.5609	0.3979	26.5609	0.3777	26.5609	0.3663	26.5609	0.3586	26.5609	0.3491	26.5609	0.3452
27.8256	0.4901	27.8256	0.3647	27.8256	0.3523	27.8256	0.3488	27.8256	0.3467	27.8256	0.3435	27.8256	0.3406
29.1505	0.4073	29.1505	0.3548	29.1505	0.3516	29.1505	0.3488	29.1505	0.3467	29.1505	0.3435	29.1505	0.3402
30.5386	0.4073	30.5386	0.3548	30.5386	0.3516	30.5386	0.3488	30.5386	0.3467	30.5386	0.3435	30.5386	0.3402
31.9927	0.4073	31.9927	0.3465	31.9927	0.345	31.9927	0.3447	31.9927	0.3438	31.9927	0.3417	31.9927	0.3392
33.516	0.3423	33.516	0.3426	33.516	0.3419	33.516	0.341	33.516	0.3401	33.516	0.3386	33.516	0.3369
35.1119	0.3337	35.1119	0.3344	35.1119	0.3347	35.1119	0.3349	35.1119	0.3349	35.1119	0.3348	35.1119	0.3343
36.7838	0.3313	36.7838	0.3316	36.7838	0.3318	36.7838	0.3319	36.7838	0.332	36.7838	0.3321	36.7838	0.332
38.5353	0.3298	38.5353	0.3299	38.5353	0.33	38.5353	0.3301	38.5353	0.3302	38.5353	0.3303	38.5353	0.3303
40.3702	0.3286	40.3702	0.3287	40.3702	0.3288	40.3702	0.3289	40.3702	0.3289	40.3702	0.329	40.3702	0.3291
42.2924	0.3277	42.2924	0.3278	42.2924	0.3278	42.2924	0.3279	42.2924	0.3279	42.2924	0.328	42.2924	0.328
44.3062	0.327	44.3062	0.327	44.3062	0.3271	44.3062	0.3271	44.3062	0.3271	44.3062	0.3271	44.3062	0.3272
46.4159	0.3263	46.4159	0.3264	46.4159	0.3264	46.4159	0.3264	46.4159	0.3264	46.4159	0.3264	46.4159	0.3265
48.626	0.3257	48.626	0.3257	48.626	0.3257	48.626	0.3257	48.626	0.3258	48.626	0.3258	48.626	0.3258
50.9414	0.3252	50.9414	0.3252	50.9414	0.3252	50.9414	0.3252	50.9414	0.3252	50.9414	0.3252	50.9414	0.3252

RPP-WTP Pretreatment Facility ISRS
Calc No.: 24590-PTF-S0C-S15T-00005, Rev. 0B

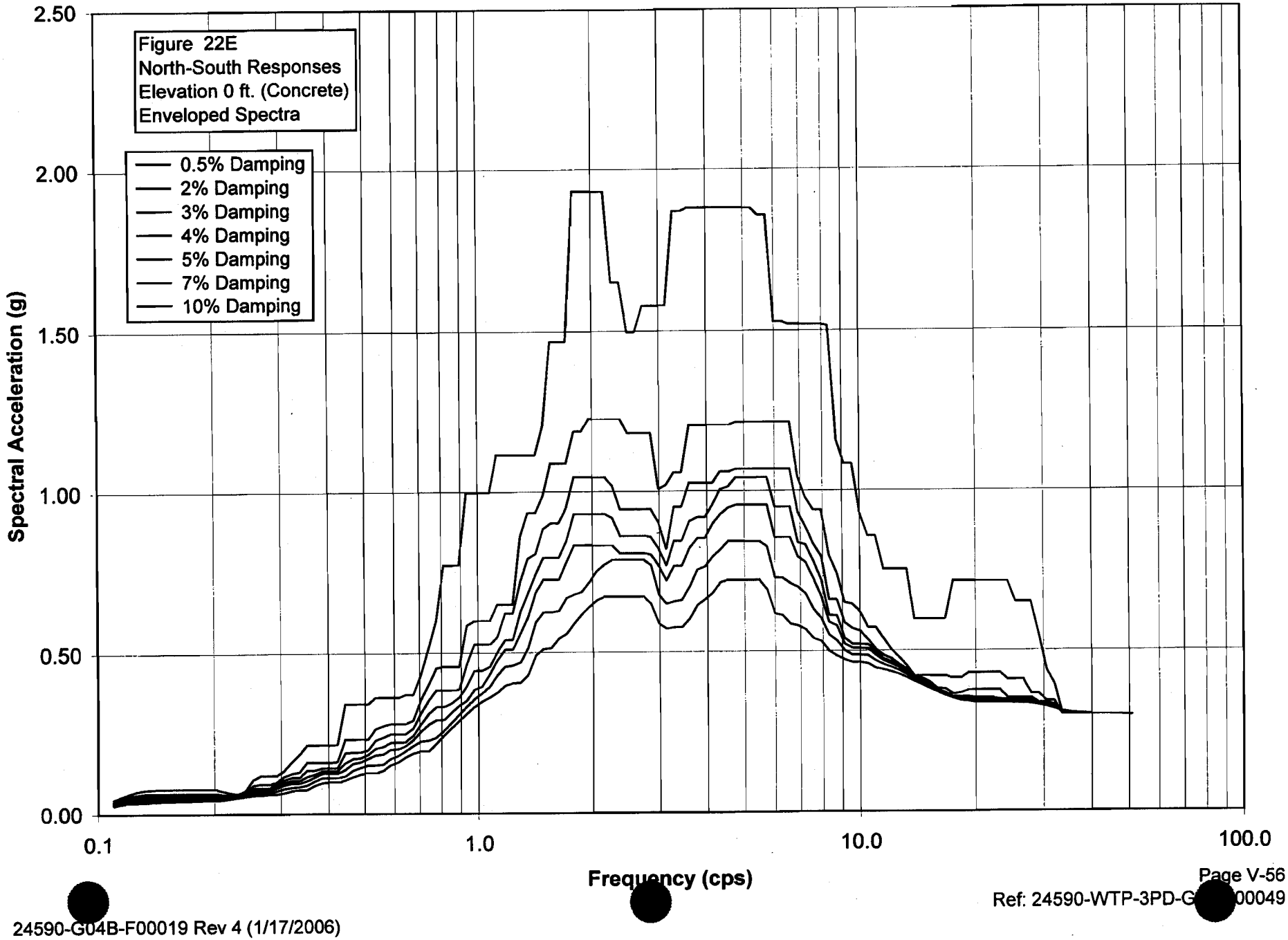

S_PTEE022.grf
RPP-WTP Pretreatment Facility ISRS
Calc No.: 24590-PTF-S0C-S15T-00005, Rev. 0B
Frequency (cps)
Spectral Acceleration (g)
Figure 22E
North-South Responses
Elevation 0 ft. (Concrete)
Enveloped Spectra

Damping	0.50%	Damping	2%	Damping	3%	Damping	4%	Damping	5%	Damping	7%	Damping	10%
Freq.	Accel.	Freq.	Accel.	Freq.	Accel.	Freq.	Accel.	Freq.	Accel.	Freq.	Accel.	Freq.	Accel.
0.1098	0.0456	0.1098	0.0394	0.1098	0.0365	0.1098	0.0343	0.1098	0.0327	0.1098	0.0306	0.1098	0.0281
0.115	0.0555	0.115	0.0492	0.115	0.0464	0.115	0.0438	0.115	0.0417	0.115	0.038	0.115	0.0333
0.1204	0.0647	0.1204	0.058	0.1204	0.0543	0.1204	0.0509	0.1204	0.0479	0.1204	0.0425	0.1204	0.0361
0.1262	0.0719	0.1262	0.0618	0.1262	0.0571	0.1262	0.0533	0.1262	0.0498	0.1262	0.0438	0.1262	0.0378
0.1322	0.0762	0.1322	0.0652	0.1322	0.06	0.1322	0.0561	0.1322	0.0525	0.1322	0.0466	0.1322	0.0398
0.1385	0.0785	0.1385	0.0671	0.1385	0.0608	0.1385	0.0561	0.1385	0.0525	0.1385	0.0466	0.1385	0.0398
0.1451	0.0789	0.1451	0.0676	0.1451	0.0613	0.1451	0.0561	0.1451	0.0525	0.1451	0.0468	0.1451	0.0407
0.152	0.0789	0.152	0.0676	0.152	0.0613	0.152	0.0564	0.152	0.0534	0.152	0.0482	0.152	0.0428
0.1592	0.0789	0.1592	0.0676	0.1592	0.0613	0.1592	0.0564	0.1592	0.0534	0.1592	0.0482	0.1592	0.0438
0.1668	0.0789	0.1668	0.0676	0.1668	0.0613	0.1668	0.0564	0.1668	0.0534	0.1668	0.0482	0.1668	0.0438
0.1748	0.0789	0.1748	0.0676	0.1748	0.0613	0.1748	0.0564	0.1748	0.0534	0.1748	0.0482	0.1748	0.0438
0.1831	0.0789	0.1831	0.0676	0.1831	0.0613	0.1831	0.0564	0.1831	0.0534	0.1831	0.0482	0.1831	0.0438
0.1918	0.0789	0.1918	0.0676	0.1918	0.0613	0.1918	0.0562	0.1918	0.0532	0.1918	0.0482	0.1918	0.0438
0.2009	0.0789	0.2009	0.0676	0.2009	0.0613	0.2009	0.0562	0.2009	0.0532	0.2009	0.0482	0.2009	0.0438
0.2105	0.0735	0.2105	0.0632	0.2105	0.0596	0.2105	0.0562	0.2105	0.0532	0.2105	0.049	0.2105	0.0468
0.2205	0.0683	0.2205	0.0622	0.2205	0.0587	0.2205	0.0559	0.2205	0.0547	0.2205	0.0527	0.2205	0.0501
0.231	0.0647	0.231	0.0623	0.231	0.0609	0.231	0.0595	0.231	0.0583	0.231	0.056	0.231	0.0536
0.242	0.0759	0.242	0.0685	0.242	0.0647	0.242	0.0627	0.242	0.0614	0.242	0.0591	0.242	0.0565
0.2535	0.1097	0.2535	0.0915	0.2535	0.0824	0.2535	0.075	0.2535	0.0693	0.2535	0.0619	0.2535	0.059
0.2656	0.1215	0.2656	0.0949	0.2656	0.0825	0.2656	0.075	0.2656	0.0693	0.2656	0.0641	0.2656	0.0608
0.2783	0.1215	0.2783	0.0949	0.2783	0.0825	0.2783	0.0776	0.2783	0.0734	0.2783	0.0668	0.2783	0.0617
0.2915	0.1215	0.2915	0.1003	0.2915	0.0935	0.2915	0.0874	0.2915	0.0821	0.2915	0.073	0.2915	0.063
0.3054	0.1359	0.3054	0.1179	0.3054	0.1078	0.3054	0.099	0.3054	0.0914	0.3054	0.0795	0.3054	0.0673
0.3199	0.1641	0.3199	0.1267	0.3199	0.1153	0.3199	0.1055	0.3199	0.0971	0.3199	0.0837	0.3199	0.0734
0.3352	0.1864	0.3352	0.1319	0.3352	0.1153	0.3352	0.1055	0.3352	0.0971	0.3352	0.0859	0.3352	0.0764
0.3511	0.2152	0.3511	0.1625	0.3511	0.1375	0.3511	0.1183	0.3511	0.1047	0.3511	0.0907	0.3511	0.0767
0.3678	0.2152	0.3678	0.1625	0.3678	0.1375	0.3678	0.1252	0.3678	0.1165	0.3678	0.1042	0.3678	0.09

0.3853	0.2152	0.3853	0.1625	0.3853	0.1446	0.3853	0.1356	0.3853	0.1276	0.3853	0.1141	0.3853	0.0986
0.4037	0.2152	0.4037	0.1625	0.4037	0.1446	0.4037	0.1356	0.4037	0.1276	0.4037	0.1144	0.4037	0.1004
0.4229	0.2173	0.4229	0.1637	0.4229	0.1446	0.4229	0.1356	0.4229	0.1276	0.4229	0.1144	0.4229	0.1004
0.4431	0.3427	0.4431	0.2324	0.4431	0.1901	0.4431	0.1598	0.4431	0.1385	0.4431	0.119	0.4431	0.1069
0.4642	0.3427	0.4642	0.2324	0.4642	0.1921	0.4642	0.1724	0.4642	0.1573	0.4642	0.1361	0.4642	0.116
0.4863	0.3427	0.4863	0.2324	0.4863	0.1921	0.4863	0.1743	0.4863	0.1618	0.4863	0.1447	0.4863	0.1236
0.5094	0.3427	0.5094	0.2324	0.5094	0.1991	0.5094	0.1846	0.5094	0.1731	0.5094	0.1523	0.5094	0.1276
0.5337	0.3621	0.5337	0.2651	0.5337	0.229	0.5337	0.204	0.5337	0.1835	0.5337	0.1525	0.5337	0.1276
0.5591	0.3621	0.5591	0.2742	0.5591	0.238	0.5591	0.2093	0.5591	0.1863	0.5591	0.1551	0.5591	0.1354
0.5857	0.3621	0.5857	0.2805	0.5857	0.2483	0.5857	0.222	0.5857	0.2005	0.5857	0.1718	0.5857	0.1526
0.6136	0.3621	0.6136	0.2805	0.6136	0.2483	0.6136	0.222	0.6136	0.2017	0.6136	0.1821	0.6136	0.1622
0.6428	0.3715	0.6428	0.2805	0.6428	0.2483	0.6428	0.2235	0.6428	0.2108	0.6428	0.195	0.6428	0.1766
0.6734	0.3715	0.6734	0.2916	0.6734	0.2663	0.6734	0.2436	0.6734	0.2299	0.6734	0.2117	0.6734	0.1883
0.7055	0.4317	0.7055	0.3543	0.7055	0.3133	0.7055	0.279	0.7055	0.2569	0.7055	0.2257	0.7055	0.1944
0.7391	0.5134	0.7391	0.4029	0.7391	0.3524	0.7391	0.3115	0.7391	0.278	0.7391	0.2284	0.7391	0.1944
0.7743	0.6023	0.7743	0.4541	0.7743	0.3853	0.7743	0.3333	0.7743	0.2932	0.7743	0.2375	0.7743	0.2186
0.8111	0.7736	0.8111	0.4591	0.8111	0.3853	0.8111	0.3333	0.8111	0.2932	0.8111	0.2586	0.8111	0.2434
0.8497	0.7736	0.8497	0.4591	0.8497	0.3853	0.8497	0.3451	0.8497	0.3155	0.8497	0.2842	0.8497	0.2671
0.8902	0.7736	0.8902	0.4591	0.8902	0.388	0.8902	0.3627	0.8902	0.3375	0.8902	0.3097	0.8902	0.2901
0.9326	0.9974	0.9326	0.5856	0.9326	0.4664	0.9326	0.3986	0.9326	0.3523	0.9326	0.3345	0.9326	0.3123
0.977	0.9974	0.977	0.6002	0.977	0.5269	0.977	0.4456	0.977	0.3864	0.977	0.3568	0.977	0.3322
1.0235	0.9974	1.0235	0.6002	1.0235	0.5269	1.0235	0.4456	1.0235	0.3963	1.0235	0.375	1.0235	0.3489
1.0723	0.9974	1.0723	0.6002	1.0723	0.5269	1.0723	0.4578	1.0723	0.4362	1.0723	0.3969	1.0723	0.362
1.1233	1.1138	1.1233	0.6522	1.1233	0.5496	1.1233	0.5028	1.1233	0.4775	1.1233	0.432	1.1233	0.3768
1.1768	1.1138	1.1768	0.6522	1.1768	0.6238	1.1768	0.5399	1.1768	0.5091	1.1768	0.4574	1.1768	0.3984
1.2328	1.1138	1.2328	0.6522	1.2328	0.6238	1.2328	0.5399	1.2328	0.5091	1.2328	0.4606	1.2328	0.4063
1.2916	1.1138	1.2916	0.8628	1.2916	0.7232	1.2916	0.6287	1.2916	0.5604	1.2916	0.4712	1.2916	0.4074
1.353	1.1138	1.353	0.9365	1.353	0.794	1.353	0.6869	1.353	0.6112	1.353	0.5144	1.353	0.4326
1.4175	1.1138	1.4175	0.9365	1.4175	0.8087	1.4175	0.7456	1.4175	0.6895	1.4175	0.5953	1.4175	0.4919
1.485	1.2052	1.485	0.988	1.485	0.8866	1.485	0.7958	1.485	0.7285	1.485	0.6264	1.485	0.511
1.5557	1.4673	1.5557	1.0882	1.5557	0.9041	1.5557	0.7958	1.5557	0.7285	1.5557	0.6264	1.5557	0.5133
1.6298	1.4673	1.6298	1.0882	1.6298	0.9041	1.6298	0.7958	1.6298	0.7285	1.6298	0.6315	1.6298	0.5443
1.7074	1.4673	1.7074	1.0882	1.7074	0.9509	1.7074	0.8465	1.7074	0.7818	1.7074	0.6721	1.7074	0.5582
1.7887	1.9337	1.7887	1.1866	1.7887	1.0454	1.7887	0.9314	1.7887	0.8343	1.7887	0.6827	1.7887	0.5914
1.8738	1.9337	1.8738	1.1866	1.8738	1.0454	1.8738	0.9314	1.8738	0.8343	1.8738	0.6909	1.8738	0.6195
1.963	1.9337	1.963	1.2264	1.963	1.0454	1.963	0.9314	1.963	0.8343	1.963	0.7213	1.963	0.6444
2.0565	1.9337	2.0565	1.2264	2.0565	1.0454	2.0565	0.9314	2.0565	0.8343	2.0565	0.7554	2.0565	0.6649
2.1544	1.9337	2.1544	1.2264	2.1544	1.0454	2.1544	0.9314	2.1544	0.8343	2.1544	0.7745	2.1544	0.6753
2.257	1.6526	2.257	1.2264	2.257	1.0189	2.257	0.9197	2.257	0.8328	2.257	0.7876	2.257	0.6753

2.3645	1.6526	2.3645	1.2264	2.3645	0.946	2.3645	0.8625	2.3645	0.8087	2.3645	0.7876	2.3645	0.6753
2.4771	1.4968	2.4771	1.1813	2.4771	0.946	2.4771	0.8625	2.4771	0.8087	2.4771	0.7876	2.4771	0.6753
2.595	1.4968	2.595	1.1813	2.595	0.946	2.595	0.8625	2.595	0.8087	2.595	0.7876	2.595	0.6753
2.7186	1.5785	2.7186	1.1813	2.7186	0.946	2.7186	0.8625	2.7186	0.8087	2.7186	0.7876	2.7186	0.6751
2.848	1.5785	2.848	1.1813	2.848	0.946	2.848	0.859	2.848	0.8042	2.848	0.771	2.848	0.6514
2.9836	1.5785	2.9836	1.0072	2.9836	0.9027	2.9836	0.8216	2.9836	0.7681	2.9836	0.6806	2.9836	0.5889
3.1257	1.5785	3.1257	1.0196	3.1257	0.8195	3.1257	0.7692	3.1257	0.7236	3.1257	0.652	3.1257	0.5735
3.2745	1.8712	3.2745	1.0587	3.2745	0.9525	3.2745	0.8466	3.2745	0.7681	3.2745	0.6591	3.2745	0.5771
3.4305	1.8712	3.4305	1.0587	3.4305	0.9525	3.4305	0.8466	3.4305	0.7681	3.4305	0.6638	3.4305	0.5771
3.5938	1.8819	3.5938	1.2042	3.5938	1.0249	3.5938	0.908	3.5938	0.8231	3.5938	0.7044	3.5938	0.6039
3.7649	1.8819	3.7649	1.2042	3.7649	1.0249	3.7649	0.9193	3.7649	0.8542	3.7649	0.7564	3.7649	0.6471
3.9442	1.8819	3.9442	1.2042	3.9442	1.0249	3.9442	0.9193	3.9442	0.8542	3.9442	0.765	3.9442	0.665
4.132	1.8819	4.132	1.2042	4.132	1.0249	4.132	0.9584	4.132	0.8998	4.132	0.7958	4.132	0.6849
4.3288	1.8819	4.3288	1.2042	4.3288	1.0595	4.3288	1.0049	4.3288	0.9286	4.3288	0.8184	4.3288	0.7174
4.5349	1.8819	4.5349	1.2042	4.5349	1.0595	4.5349	1.013	4.5349	0.9482	4.5349	0.8437	4.5349	0.7242
4.7508	1.8819	4.7508	1.2133	4.7508	1.0676	4.7508	1.0414	4.7508	0.9565	4.7508	0.8437	4.7508	0.7242
4.977	1.8819	4.977	1.2133	4.977	1.0676	4.977	1.0414	4.977	0.9565	4.977	0.8437	4.977	0.7242
5.214	1.8819	5.214	1.2133	5.214	1.0676	5.214	1.0414	5.214	0.9565	5.214	0.8437	5.214	0.7242
5.4623	1.8588	5.4623	1.2133	5.4623	1.0676	5.4623	1.0414	5.4623	0.9565	5.4623	0.8437	5.4623	0.7242
5.7224	1.8588	5.7224	1.2133	5.7224	1.0676	5.7224	1.0414	5.7224	0.9565	5.7224	0.8263	5.7224	0.6943
5.9948	1.5279	5.9948	1.2133	5.9948	1.0676	5.9948	0.9501	5.9948	0.856	5.9948	0.731	5.9948	0.6191
6.2803	1.5279	6.2803	1.2133	6.2803	1.0676	6.2803	0.9501	6.2803	0.856	6.2803	0.7293	6.2803	0.6134
6.5793	1.5193	6.5793	1.2133	6.5793	1.0676	6.5793	0.9501	6.5793	0.856	6.5793	0.7136	6.5793	0.5858
6.8926	1.5193	6.8926	1.0422	6.8926	0.9338	6.8926	0.8392	6.8926	0.7938	6.8926	0.7012	6.8926	0.5804
7.2208	1.5193	7.2208	0.9784	7.2208	0.8888	7.2208	0.8319	7.2208	0.7768	7.2208	0.6808	7.2208	0.5679
7.5646	1.5193	7.5646	0.9407	7.5646	0.834	7.5646	0.7806	7.5646	0.727	7.5646	0.6328	7.5646	0.5403
7.9248	1.5193	7.9248	0.9407	7.9248	0.7957	7.9248	0.7221	7.9248	0.672	7.9248	0.6025	7.9248	0.5313
8.3022	1.5143	8.3022	0.7983	8.3022	0.662	8.3022	0.6131	8.3022	0.5906	8.3022	0.5511	8.3022	0.5
8.6975	1.1566	8.6975	0.7425	8.6975	0.662	8.6975	0.6116	8.6975	0.5792	8.6975	0.5323	8.6975	0.4853
9.1116	1.082	9.1116	0.6528	9.1116	0.5886	9.1116	0.5397	9.1116	0.5209	9.1116	0.5008	9.1116	0.4735
9.5455	1.082	9.5455	0.6477	9.5455	0.5702	9.5455	0.5208	9.5455	0.5082	9.5455	0.4873	9.5455	0.4651
10	0.9286	10	0.6224	10	0.5625	10	0.5208	10	0.5082	10	0.4873	10	0.4651
10.4762	0.8591	10.4762	0.5732	10.4762	0.5348	10.4762	0.5193	10.4762	0.5065	10.4762	0.4855	10.4762	0.4609
10.975	0.8591	10.975	0.5732	10.975	0.5049	10.975	0.496	10.975	0.4867	10.975	0.4693	10.975	0.4468
11.4976	0.7544	11.4976	0.5377	11.4976	0.4857	11.4976	0.4755	11.4976	0.4693	11.4976	0.4577	11.4976	0.4423
12.045	0.7544	12.045	0.5026	12.045	0.4753	12.045	0.4651	12.045	0.4586	12.045	0.4489	12.045	0.436
12.6186	0.7544	12.6186	0.4796	12.6186	0.4572	12.6186	0.4527	12.6186	0.4481	12.6186	0.4393	12.6186	0.4274
13.2194	0.7544	13.2194	0.4531	13.2194	0.4433	13.2194	0.4378	13.2194	0.4336	13.2194	0.4263	13.2194	0.4166
13.8489	0.5993	13.8489	0.4219	13.8489	0.4173	13.8489	0.4169	13.8489	0.4158	13.8489	0.412	13.8489	0.4049

14.5083	0.5993	14.5083	0.4219	14.5083	0.4147	14.5083	0.4103	14.5083	0.4068	14.5083	0.4011	14.5083	0.394
15.1991	0.5993	15.1991	0.4219	15.1991	0.4024	15.1991	0.3966	15.1991	0.393	15.1991	0.3882	15.1991	0.3825
15.9228	0.5993	15.9228	0.4213	15.9228	0.3823	15.9228	0.3773	15.9228	0.3774	15.9228	0.3753	15.9228	0.3712
16.681	0.5993	16.681	0.4213	16.681	0.3807	16.681	0.3694	16.681	0.366	16.681	0.3635	16.681	0.3605
17.4753	0.7174	17.4753	0.416	17.4753	0.3644	17.4753	0.3552	17.4753	0.3513	17.4753	0.352	17.4753	0.3511
18.3074	0.7174	18.3074	0.416	18.3074	0.3686	18.3074	0.3552	18.3074	0.35	18.3074	0.3471	18.3074	0.3445
19.1791	0.7174	19.1791	0.4309	19.1791	0.3767	19.1791	0.3552	19.1791	0.35	19.1791	0.3449	19.1791	0.3419
20.0923	0.7174	20.0923	0.4309	20.0923	0.3767	20.0923	0.3517	20.0923	0.3445	20.0923	0.3407	20.0923	0.3381
21.049	0.7174	21.049	0.4309	21.049	0.3767	21.049	0.3517	21.049	0.3445	21.049	0.3407	21.049	0.3371
22.0513	0.7174	22.0513	0.4309	22.0513	0.3767	22.0513	0.3517	22.0513	0.3445	22.0513	0.3407	22.0513	0.3371
23.1013	0.7174	23.1013	0.4309	23.1013	0.3767	23.1013	0.3479	23.1013	0.3445	23.1013	0.3407	23.1013	0.3371
24.2013	0.7174	24.2013	0.4105	24.2013	0.3521	24.2013	0.3479	24.2013	0.3445	24.2013	0.3407	24.2013	0.3371
25.3536	0.6529	25.3536	0.4105	25.3536	0.3521	25.3536	0.3479	25.3536	0.3445	25.3536	0.3396	25.3536	0.3356
26.5609	0.6529	26.5609	0.4105	26.5609	0.3521	26.5609	0.3479	26.5609	0.3445	26.5609	0.3396	26.5609	0.3356
27.8256	0.6529	27.8256	0.3657	27.8256	0.3521	27.8256	0.3479	27.8256	0.3445	27.8256	0.3393	27.8256	0.334
29.1505	0.5526	29.1505	0.3657	29.1505	0.3374	29.1505	0.335	29.1505	0.3348	29.1505	0.3331	29.1505	0.3297
30.5386	0.4393	30.5386	0.3422	30.5386	0.3374	30.5386	0.3349	30.5386	0.3325	30.5386	0.3287	30.5386	0.3247
31.9927	0.3966	31.9927	0.3422	31.9927	0.3313	31.9927	0.326	31.9927	0.323	31.9927	0.3199	31.9927	0.3178
33.516	0.3014	33.516	0.3015	33.516	0.3016	33.516	0.3036	33.516	0.306	33.516	0.3088	33.516	0.3105
35.1119	0.3014	35.1119	0.3015	35.1119	0.3016	35.1119	0.3019	35.1119	0.3025	35.1119	0.3043	35.1119	0.3061
36.7838	0.3014	36.7838	0.3015	36.7838	0.3016	36.7838	0.3019	36.7838	0.3022	36.7838	0.3029	36.7838	0.3039
38.5353	0.3014	38.5353	0.3015	38.5353	0.3016	38.5353	0.3017	38.5353	0.3018	38.5353	0.3021	38.5353	0.3027
40.3702	0.301	40.3702	0.301	40.3702	0.3011	40.3702	0.3011	40.3702	0.3012	40.3702	0.3014	40.3702	0.3016
42.2924	0.3004	42.2924	0.3004	42.2924	0.3004	42.2924	0.3004	42.2924	0.3005	42.2924	0.3006	42.2924	0.3007
44.3062	0.2996	44.3062	0.2997	44.3062	0.2997	44.3062	0.2997	44.3062	0.2997	44.3062	0.2998	44.3062	0.2999
46.4159	0.2989	46.4159	0.2989	46.4159	0.2989	46.4159	0.2989	46.4159	0.2989	46.4159	0.299	46.4159	0.2991
48.626	0.2982	48.626	0.2982	48.626	0.2982	48.626	0.2982	48.626	0.2982	48.626	0.2982	48.626	0.2983
50.9414	0.2975	50.9414	0.2975	50.9414	0.2975	50.9414	0.2975	50.9414	0.2975	50.9414	0.2975	50.9414	0.2975

RPP-WTP Pretreatment Facility ISRS

Calc No.: 24590-PTF-S0C-S15T-00005, Rev. 0B

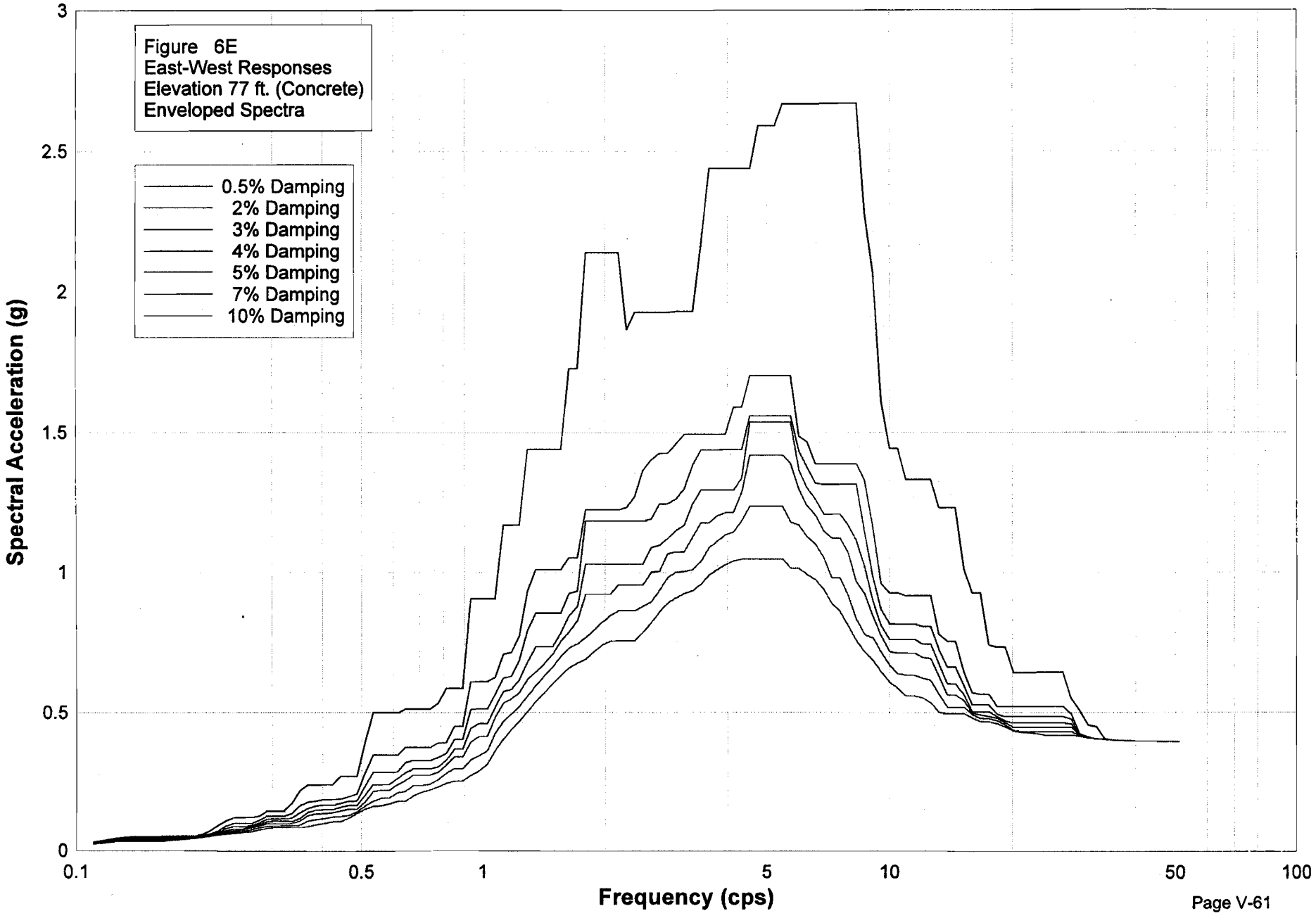

S_PTEE006.grf
RPP-WTP Pretreatment Facility ISRS
Calc No.: 24590-PTF-S0C-S15T-00005, Rev. 0B
Frequency (cps)
Spectral Acceleration (g)
Figure 6E
East-West Responses
Elevation 77 ft. (Concrete)
Enveloped Spectra

Damping	0.50%	Damping	2%	Damping	3%	Damping	4%	Damping	5%	Damping	7%	Damping	10%
Freq.	Accel.	Freq.	Accel.	Freq.	Accel.	Freq.	Accel.	Freq.	Accel.	Freq.	Accel.	Freq.	Accel.
0.1098	0.0314	0.1098	0.0289	0.1098	0.0276	0.1098	0.0269	0.1098	0.0262	0.1098	0.0249	0.1098	0.0233
0.115	0.0359	0.115	0.0331	0.115	0.0316	0.115	0.0302	0.115	0.0291	0.115	0.0276	0.115	0.0255
0.1204	0.0411	0.1204	0.0383	0.1204	0.0368	0.1204	0.0354	0.1204	0.0341	0.1204	0.0317	0.1204	0.0288
0.1262	0.046	0.1262	0.0427	0.1262	0.0408	0.1262	0.039	0.1262	0.0373	0.1262	0.0344	0.1262	0.0313
0.1322	0.0489	0.1322	0.0443	0.1322	0.0422	0.1322	0.0403	0.1322	0.0386	0.1322	0.0357	0.1322	0.0323
0.1385	0.0518	0.1385	0.0463	0.1385	0.0431	0.1385	0.0403	0.1385	0.0386	0.1385	0.0357	0.1385	0.0323
0.1451	0.0518	0.1451	0.0463	0.1451	0.0431	0.1451	0.0403	0.1451	0.0386	0.1451	0.0357	0.1451	0.0323
0.152	0.0518	0.152	0.0463	0.152	0.0431	0.152	0.0403	0.152	0.0386	0.152	0.0357	0.152	0.0323
0.1592	0.0518	0.1592	0.0463	0.1592	0.0431	0.1592	0.0403	0.1592	0.0386	0.1592	0.0357	0.1592	0.0326
0.1668	0.0519	0.1668	0.0463	0.1668	0.0431	0.1668	0.0403	0.1668	0.0386	0.1668	0.0364	0.1668	0.0354
0.1748	0.0519	0.1748	0.0463	0.1748	0.0431	0.1748	0.041	0.1748	0.0405	0.1748	0.0396	0.1748	0.0381
0.1831	0.0519	0.1831	0.0463	0.1831	0.0455	0.1831	0.0448	0.1831	0.0441	0.1831	0.0428	0.1831	0.0408
0.1918	0.0522	0.1918	0.0506	0.1918	0.0496	0.1918	0.0487	0.1918	0.0478	0.1918	0.046	0.1918	0.0439
0.2009	0.057	0.2009	0.055	0.2009	0.0537	0.2009	0.0526	0.2009	0.0515	0.2009	0.0498	0.2009	0.0476
0.2105	0.0708	0.2105	0.0602	0.2105	0.0587	0.2105	0.0575	0.2105	0.0563	0.2105	0.0542	0.2105	0.052
0.2205	0.091	0.2205	0.0715	0.2205	0.0644	0.2205	0.0626	0.2205	0.0612	0.2205	0.0588	0.2205	0.0562
0.231	0.1081	0.231	0.0909	0.231	0.0815	0.231	0.0736	0.231	0.0676	0.231	0.0634	0.231	0.0598
0.242	0.1197	0.242	0.0994	0.242	0.0885	0.242	0.0794	0.242	0.0717	0.242	0.0669	0.242	0.0625
0.2535	0.1207	0.2535	0.0995	0.2535	0.0885	0.2535	0.0797	0.2535	0.0756	0.2535	0.0698	0.2535	0.0663
0.2656	0.1207	0.2656	0.0995	0.2656	0.0925	0.2656	0.0882	0.2656	0.0843	0.2656	0.0772	0.2656	0.0689
0.2783	0.1257	0.2783	0.1098	0.2783	0.101	0.2783	0.095	0.2783	0.0907	0.2783	0.0838	0.2783	0.0759
0.2915	0.1427	0.2915	0.125	0.2915	0.115	0.2915	0.1062	0.2915	0.0983	0.2915	0.0891	0.2915	0.0818
0.3054	0.1427	0.3054	0.125	0.3054	0.1154	0.3054	0.1071	0.3054	0.0997	0.3054	0.0914	0.3054	0.0848
0.3199	0.1427	0.3199	0.125	0.3199	0.1154	0.3199	0.1071	0.3199	0.0997	0.3199	0.0914	0.3199	0.0852
0.3352	0.1714	0.3352	0.1351	0.3352	0.1191	0.3352	0.1071	0.3352	0.0997	0.3352	0.0914	0.3352	0.0852
0.3511	0.2176	0.3511	0.1633	0.3511	0.1372	0.3511	0.1174	0.3511	0.1084	0.3511	0.0938	0.3511	0.0852
0.3678	0.2403	0.3678	0.176	0.3678	0.1535	0.3678	0.1399	0.3678	0.128	0.3678	0.1083	0.3678	0.0892

0.3853	0.2403	0.3853	0.1806	0.3853	0.1625	0.3853	0.147	0.3853	0.1338	0.3853	0.1128	0.3853	0.0957
0.4037	0.2403	0.4037	0.1859	0.4037	0.1657	0.4037	0.149	0.4037	0.135	0.4037	0.1171	0.4037	0.0998
0.4229	0.2403	0.4229	0.1859	0.4229	0.1657	0.4229	0.1499	0.4229	0.1384	0.4229	0.1225	0.4229	0.1059
0.4431	0.2701	0.4431	0.1875	0.4431	0.1716	0.4431	0.1575	0.4431	0.145	0.4431	0.1247	0.4431	0.1059
0.4642	0.2701	0.4642	0.1968	0.4642	0.1795	0.4642	0.1641	0.4642	0.1507	0.4642	0.1283	0.4642	0.1192
0.4863	0.2701	0.4863	0.2056	0.4863	0.1804	0.4863	0.1641	0.4863	0.1507	0.4863	0.1412	0.4863	0.1353
0.5094	0.3947	0.5094	0.2813	0.5094	0.2346	0.5094	0.2012	0.5094	0.1765	0.5094	0.1614	0.5094	0.1505
0.5337	0.4997	0.5337	0.3481	0.5337	0.2843	0.5337	0.2411	0.5337	0.2145	0.5337	0.1783	0.5337	0.161
0.5591	0.4997	0.5591	0.3481	0.5591	0.2843	0.5591	0.2411	0.5591	0.2181	0.5591	0.1904	0.5591	0.1626
0.5857	0.4997	0.5857	0.3481	0.5857	0.2843	0.5857	0.2411	0.5857	0.2181	0.5857	0.1904	0.5857	0.1691
0.6136	0.4997	0.6136	0.3481	0.6136	0.287	0.6136	0.2611	0.6136	0.2405	0.6136	0.2095	0.6136	0.1783
0.6428	0.5129	0.6428	0.3748	0.6428	0.3198	0.6428	0.2818	0.6428	0.2536	0.6428	0.214	0.6428	0.1783
0.6734	0.5129	0.6734	0.3748	0.6734	0.3264	0.6734	0.2974	0.6734	0.2737	0.6734	0.2372	0.6734	0.1992
0.7055	0.5129	0.7055	0.3748	0.7055	0.3264	0.7055	0.2974	0.7055	0.2737	0.7055	0.2372	0.7055	0.2098
0.7391	0.5129	0.7391	0.3748	0.7391	0.3264	0.7391	0.2974	0.7391	0.2737	0.7391	0.2407	0.7391	0.2193
0.7743	0.5335	0.7743	0.3916	0.7743	0.3391	0.7743	0.3039	0.7743	0.2849	0.7743	0.2555	0.7743	0.2308
0.8111	0.5884	0.8111	0.3927	0.8111	0.3541	0.8111	0.3276	0.8111	0.3099	0.8111	0.2801	0.8111	0.2444
0.8497	0.5884	0.8497	0.4507	0.8497	0.4046	0.8497	0.3692	0.8497	0.3408	0.8497	0.2971	0.8497	0.2516
0.8902	0.5884	0.8902	0.4507	0.8902	0.4046	0.8902	0.3692	0.8902	0.3408	0.8902	0.2971	0.8902	0.2516
0.9326	0.907	0.9326	0.6127	0.9326	0.5121	0.9326	0.4441	0.9326	0.3953	0.9326	0.3297	0.9326	0.2714
0.977	0.907	0.977	0.6127	0.977	0.5136	0.977	0.4604	0.977	0.4144	0.977	0.3455	0.977	0.2883
1.0235	0.907	1.0235	0.6127	1.0235	0.5136	1.0235	0.4604	1.0235	0.4144	1.0235	0.3621	1.0235	0.3137
1.0723	0.907	1.0723	0.6274	1.0723	0.5678	1.0723	0.5191	1.0723	0.4836	1.0723	0.4261	1.0723	0.3634
1.1233	1.168	1.1233	0.7103	1.1233	0.6256	1.1233	0.5775	1.1233	0.5347	1.1233	0.4691	1.1233	0.4056
1.1768	1.168	1.1768	0.7159	1.1768	0.6311	1.1768	0.5847	1.1768	0.5488	1.1768	0.4951	1.1768	0.4381
1.2328	1.168	1.2328	0.7742	1.2328	0.6888	1.2328	0.6188	1.2328	0.5733	1.2328	0.5223	1.2328	0.4691
1.2916	1.4394	1.2916	0.933	1.2916	0.7935	1.2916	0.6819	1.2916	0.6203	1.2916	0.5595	1.2916	0.5037
1.353	1.4394	1.353	1.0107	1.353	0.8561	1.353	0.7366	1.353	0.6465	1.353	0.5986	1.353	0.539
1.4175	1.4394	1.4175	1.0107	1.4175	0.8561	1.4175	0.7366	1.4175	0.676	1.4175	0.6312	1.4175	0.5715
1.485	1.4394	1.485	1.0107	1.485	0.8561	1.485	0.7366	1.485	0.7092	1.485	0.664	1.485	0.6039
1.5557	1.4394	1.5557	1.0107	1.5557	0.8561	1.5557	0.7866	1.5557	0.7557	1.5557	0.7023	1.5557	0.634
1.6298	1.7292	1.6298	1.0521	1.6298	0.9256	1.6298	0.8473	1.6298	0.7898	1.6298	0.7315	1.6298	0.6605
1.7074	1.7292	1.7074	1.0521	1.7074	0.9348	1.7074	0.879	1.7074	0.8295	1.7074	0.746	1.7074	0.6783
1.7887	2.1395	1.7887	1.2235	1.7887	1.1827	1.7887	1.0302	1.7887	0.9224	1.7887	0.7696	1.7887	0.6918
1.8738	2.1395	1.8738	1.2235	1.8738	1.1827	1.8738	1.0302	1.8738	0.9224	1.8738	0.7958	1.8738	0.7181
1.963	2.1395	1.963	1.2235	1.963	1.1827	1.963	1.0302	1.963	0.9224	1.963	0.8233	1.963	0.7412
2.0565	2.1395	2.0565	1.2235	2.0565	1.1827	2.0565	1.0302	2.0565	0.9224	2.0565	0.8464	2.0565	0.7562
2.1544	2.1395	2.1544	1.2235	2.1544	1.1827	2.1544	1.0302	2.1544	0.956	2.1544	0.8634	2.1544	0.7566
2.257	1.8655	2.257	1.2311	2.257	1.1827	2.257	1.0302	2.257	0.956	2.257	0.8634	2.257	0.7566

2.3645	1.9283	2.3645	1.2725	2.3645	1.1827	2.3645	1.0302	2.3645	0.956	2.3645	0.8634	2.3645	0.7574
2.4771	1.9283	2.4771	1.3663	2.4771	1.1827	2.4771	1.0302	2.4771	0.9561	2.4771	0.8798	2.4771	0.7883
2.595	1.9283	2.595	1.4031	2.595	1.1893	2.595	1.0882	2.595	1.002	2.595	0.8969	2.595	0.8218
2.7186	1.9283	2.7186	1.426	2.7186	1.244	2.7186	1.0965	2.7186	1.003	2.7186	0.9367	2.7186	0.8593
2.848	1.9283	2.848	1.426	2.848	1.244	2.848	1.12	2.848	1.0657	2.848	0.9822	2.848	0.8917
2.9836	1.9305	2.9836	1.4595	2.9836	1.2631	2.9836	1.1486	2.9836	1.0724	2.9836	1.0006	2.9836	0.9093
3.1257	1.9305	3.1257	1.4936	3.1257	1.2982	3.1257	1.1662	3.1257	1.0724	3.1257	1.0031	3.1257	0.9247
3.2745	1.9305	3.2745	1.4936	3.2745	1.3839	3.2745	1.2443	3.2745	1.1253	3.2745	1.0094	3.2745	0.9364
3.4305	2.1639	3.4305	1.4936	3.4305	1.438	3.4305	1.2942	3.4305	1.1756	3.4305	1.0379	3.4305	0.9574
3.5938	2.4397	3.5938	1.4936	3.5938	1.438	3.5938	1.2942	3.5938	1.1756	3.5938	1.0872	3.5938	0.9915
3.7649	2.4397	3.7649	1.4936	3.7649	1.438	3.7649	1.2942	3.7649	1.2011	3.7649	1.1103	3.7649	1.01
3.9442	2.4397	3.9442	1.4936	3.9442	1.438	3.9442	1.2942	3.9442	1.2125	3.9442	1.1322	3.9442	1.027
4.132	2.4397	4.132	1.5905	4.132	1.438	4.132	1.2942	4.132	1.2129	4.132	1.1433	4.132	1.0403
4.3288	2.4397	4.3288	1.5905	4.3288	1.438	4.3288	1.3377	4.3288	1.2864	4.3288	1.1828	4.3288	1.0466
4.5349	2.4397	4.5349	1.7034	4.5349	1.5596	4.5349	1.5366	4.5349	1.4195	4.5349	1.2359	4.5349	1.0471
4.7508	2.5935	4.7508	1.7034	4.7508	1.5596	4.7508	1.5369	4.7508	1.4195	4.7508	1.2359	4.7508	1.0471
4.977	2.5935	4.977	1.7034	4.977	1.5596	4.977	1.5369	4.977	1.4195	4.977	1.2359	4.977	1.0471
5.214	2.5935	5.214	1.7034	5.214	1.5596	5.214	1.5369	5.214	1.4195	5.214	1.2359	5.214	1.0471
5.4623	2.6705	5.4623	1.7034	5.4623	1.5596	5.4623	1.5369	5.4623	1.4195	5.4623	1.2359	5.4623	1.0471
5.7224	2.6705	5.7224	1.7034	5.7224	1.5596	5.7224	1.5369	5.7224	1.3894	5.7224	1.1786	5.7224	1.0148
5.9948	2.6705	5.9948	1.4863	5.9948	1.4339	5.9948	1.3671	5.9948	1.298	5.9948	1.1683	5.9948	1.0148
6.2803	2.6705	6.2803	1.4665	6.2803	1.3756	6.2803	1.3021	6.2803	1.2378	6.2803	1.1263	6.2803	0.9924
6.5793	2.6705	6.5793	1.3892	6.5793	1.3198	6.5793	1.2621	6.5793	1.2047	6.5793	1.1014	6.5793	0.9743
6.8926	2.6721	6.8926	1.3892	6.8926	1.3154	6.8926	1.2076	6.8926	1.1475	6.8926	1.0524	6.8926	0.9402
7.2208	2.6721	7.2208	1.3892	7.2208	1.3154	7.2208	1.2076	7.2208	1.1212	7.2208	0.9816	7.2208	0.8881
7.5646	2.6721	7.5646	1.3892	7.5646	1.3154	7.5646	1.2076	7.5646	1.1212	7.5646	0.9805	7.5646	0.8604
7.9248	2.6721	7.9248	1.3892	7.9248	1.3154	7.9248	1.1669	7.9248	1.0689	7.9248	0.9186	7.9248	0.8095
8.3022	2.6721	8.3022	1.3892	8.3022	1.3154	8.3022	1.1119	8.3022	0.965	8.3022	0.8323	8.3022	0.7561
8.6975	2.2773	8.6975	1.329	8.6975	1.1414	8.6975	1.0201	8.6975	0.9238	8.6975	0.7781	8.6975	0.7165
9.1116	2.0653	9.1116	1.1587	9.1116	0.9831	9.1116	0.8993	9.1116	0.8446	9.1116	0.7675	9.1116	0.6862
9.5455	1.6085	9.5455	0.9584	9.5455	0.8663	9.5455	0.8096	9.5455	0.7738	9.5455	0.7154	9.5455	0.6462
10	1.4427	10	0.927	10	0.817	10	0.7614	10	0.7184	10	0.6701	10	0.6104
10.4762	1.4427	10.4762	0.927	10.4762	0.8156	10.4762	0.7614	10.4762	0.7132	10.4762	0.6399	10.4762	0.5871
10.975	1.3323	10.975	0.9176	10.975	0.8156	10.975	0.7614	10.975	0.7132	10.975	0.6348	10.975	0.5606
11.4976	1.3323	11.4976	0.9176	11.4976	0.8156	11.4976	0.7614	11.4976	0.7132	11.4976	0.6348	11.4976	0.5606
12.045	1.3323	12.045	0.9176	12.045	0.8073	12.045	0.7448	12.045	0.6972	12.045	0.6244	12.045	0.5528
12.6186	1.3323	12.6186	0.9176	12.6186	0.8073	12.6186	0.7441	12.6186	0.6935	12.6186	0.6159	12.6186	0.5346
13.2194	1.2305	13.2194	0.7787	13.2194	0.7246	13.2194	0.6739	13.2194	0.6308	13.2194	0.5648	13.2194	0.5011
13.8489	1.2305	13.8489	0.7544	13.8489	0.6632	13.8489	0.604	13.8489	0.5635	13.8489	0.5187	13.8489	0.4957

14.5083	1.2305	14.5083	0.7544	14.5083	0.6629	14.5083	0.6028	14.5083	0.5635	14.5083	0.5187	14.5083	0.4957
15.1991	1.012	15.1991	0.6452	15.1991	0.5972	15.1991	0.5643	15.1991	0.5417	15.1991	0.5187	15.1991	0.4952
15.9228	0.9276	15.9228	0.5712	15.9228	0.5274	15.9228	0.5028	15.9228	0.4971	15.9228	0.492	15.9228	0.4805
16.681	0.9276	16.681	0.5663	16.681	0.5274	16.681	0.5028	16.681	0.4912	16.681	0.4789	16.681	0.4675
17.4753	0.741	17.4753	0.5663	17.4753	0.5274	17.4753	0.5028	17.4753	0.4855	17.4753	0.4775	17.4753	0.4665
18.3074	0.7343	18.3074	0.5209	18.3074	0.4936	18.3074	0.4851	18.3074	0.4791	18.3074	0.4702	18.3074	0.4597
19.1791	0.7343	19.1791	0.5209	19.1791	0.4849	19.1791	0.4691	19.1791	0.4628	19.1791	0.4548	19.1791	0.4475
20.0923	0.6437	20.0923	0.5209	20.0923	0.4849	20.0923	0.4624	20.0923	0.4471	20.0923	0.4361	20.0923	0.433
21.049	0.6437	21.049	0.5209	21.049	0.4849	21.049	0.4624	21.049	0.4471	21.049	0.4307	21.049	0.429
22.0513	0.6443	22.0513	0.5209	22.0513	0.4849	22.0513	0.4624	22.0513	0.4471	22.0513	0.4304	22.0513	0.4267
23.1013	0.6443	23.1013	0.5209	23.1013	0.4849	23.1013	0.4624	23.1013	0.4471	23.1013	0.4311	23.1013	0.424
24.2013	0.6443	24.2013	0.5209	24.2013	0.4849	24.2013	0.4624	24.2013	0.4471	24.2013	0.4311	24.2013	0.4187
25.3536	0.6443	25.3536	0.5209	25.3536	0.4849	25.3536	0.4624	25.3536	0.4471	25.3536	0.4311	25.3536	0.4187
26.5609	0.6443	26.5609	0.5209	26.5609	0.4849	26.5609	0.4624	26.5609	0.4471	26.5609	0.4311	26.5609	0.4187
27.8256	0.55	27.8256	0.495	27.8256	0.4759	27.8256	0.4595	27.8256	0.4471	27.8256	0.4311	27.8256	0.4187
29.1505	0.5074	29.1505	0.4252	29.1505	0.4162	29.1505	0.4191	29.1505	0.4198	29.1505	0.4188	29.1505	0.4152
30.5386	0.4557	30.5386	0.4135	30.5386	0.4124	30.5386	0.412	30.5386	0.4115	30.5386	0.4105	30.5386	0.4099
31.9927	0.4496	31.9927	0.4062	31.9927	0.4055	31.9927	0.4055	31.9927	0.4061	31.9927	0.4066	31.9927	0.4065
33.516	0.407	33.516	0.4062	33.516	0.4055	33.516	0.4051	33.516	0.4048	33.516	0.4045	33.516	0.4043
35.1119	0.4017	35.1119	0.4021	35.1119	0.4022	35.1119	0.4024	35.1119	0.4024	35.1119	0.4025	35.1119	0.4024
36.7838	0.4001	36.7838	0.4003	36.7838	0.4005	36.7838	0.4006	36.7838	0.4007	36.7838	0.4008	36.7838	0.401
38.5353	0.3991	38.5353	0.3993	38.5353	0.3994	38.5353	0.3995	38.5353	0.3995	38.5353	0.3997	38.5353	0.3998
40.3702	0.3984	40.3702	0.3985	40.3702	0.3986	40.3702	0.3987	40.3702	0.3987	40.3702	0.3988	40.3702	0.3989
42.2924	0.3979	42.2924	0.3979	42.2924	0.398	42.2924	0.398	42.2924	0.3981	42.2924	0.3981	42.2924	0.3982
44.3062	0.3974	44.3062	0.3974	44.3062	0.3975	44.3062	0.3975	44.3062	0.3975	44.3062	0.3976	44.3062	0.3976
46.4159	0.397	46.4159	0.397	46.4159	0.397	46.4159	0.397	46.4159	0.397	46.4159	0.3971	46.4159	0.3971
48.626	0.3966	48.626	0.3966	48.626	0.3966	48.626	0.3966	48.626	0.3966	48.626	0.3966	48.626	0.3967
50.9414	0.3962	50.9414	0.3962	50.9414	0.3962	50.9414	0.3962	50.9414	0.3962	50.9414	0.3962	50.9414	0.3963

RPP-WTP Pretreatment Facility ISRS

Calc No.: 24590-PTF-S0C-S15T-00005, Rev. 0B

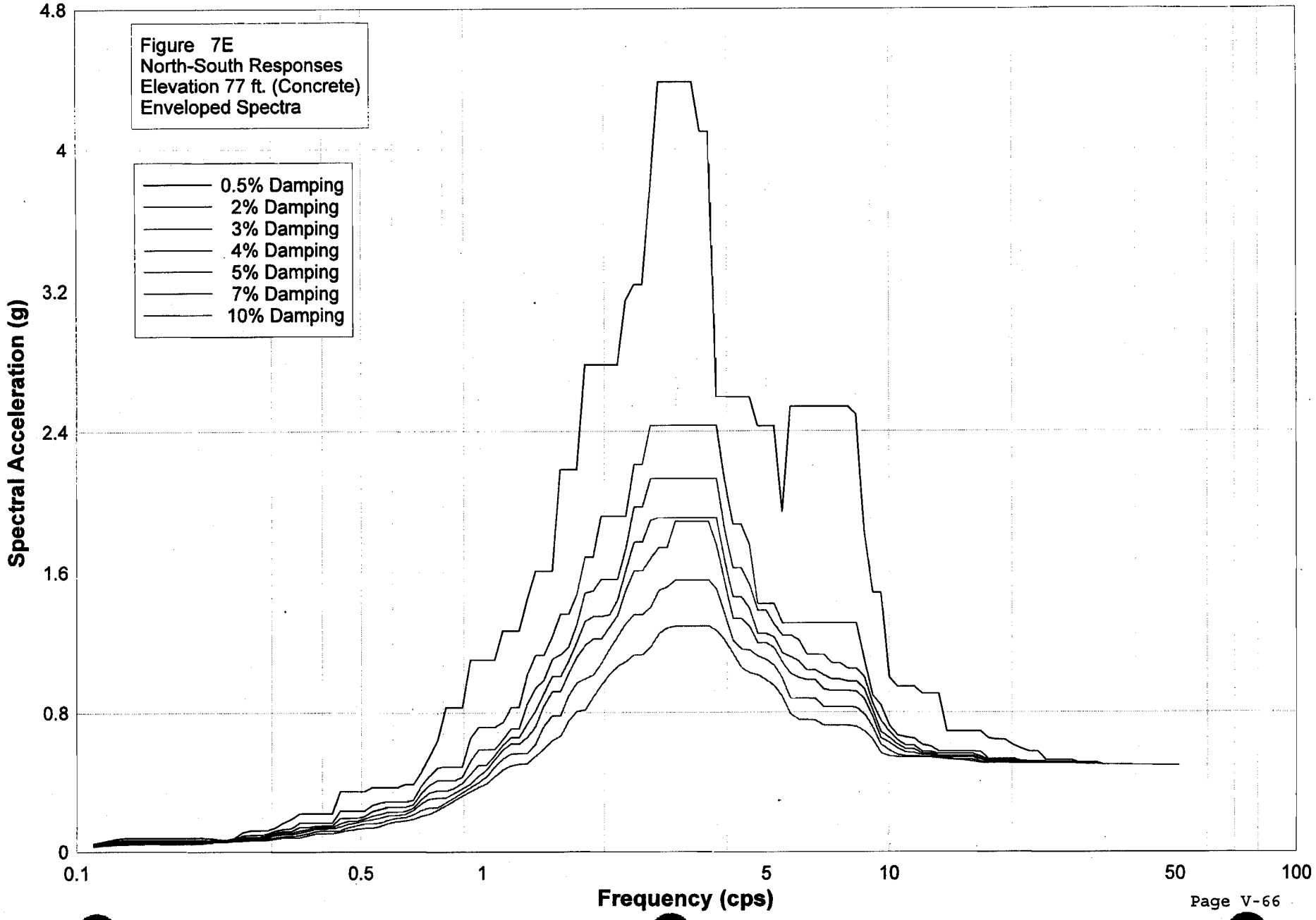

S_PTEE007.grf
RPP-WTP Pretreatment Facility ISRS
Calc No.: 24590-PTF-S0C-S15T-00005, Rev. 0B
Frequency (cps)
Spectral Acceleration (g)
Figure 7E
North-South Responses
Elevation 77 ft. (Concrete)
Enveloped Spectra

Damping	0.50%	Damping	2%	Damping	3%	Damping	4%	Damping	5%	Damping	7%	Damping	10%
Freq.	Accel.	Freq.	Accel.	Freq.	Accel.	Freq.	Accel.	Freq.	Accel.	Freq.	Accel.	Freq.	Accel.
0.1098	0.0457	0.1098	0.0394	0.1098	0.0366	0.1098	0.0346	0.1098	0.0333	0.1098	0.0314	0.1098	0.029
0.115	0.0556	0.115	0.0495	0.115	0.0468	0.115	0.0445	0.115	0.0424	0.115	0.0387	0.115	0.0341
0.1204	0.065	0.1204	0.0585	0.1204	0.0548	0.1204	0.0514	0.1204	0.0484	0.1204	0.0431	0.1204	0.0368
0.1262	0.072	0.1262	0.0619	0.1262	0.0573	0.1262	0.0534	0.1262	0.0499	0.1262	0.044	0.1262	0.0387
0.1322	0.0763	0.1322	0.0654	0.1322	0.0606	0.1322	0.0566	0.1322	0.0532	0.1322	0.0474	0.1322	0.0408
0.1385	0.0787	0.1385	0.0673	0.1385	0.0609	0.1385	0.0566	0.1385	0.0532	0.1385	0.0474	0.1385	0.0408
0.1451	0.0789	0.1451	0.0676	0.1451	0.0613	0.1451	0.0566	0.1451	0.0532	0.1451	0.0474	0.1451	0.0414
0.152	0.0789	0.152	0.0676	0.152	0.0613	0.152	0.0569	0.152	0.054	0.152	0.049	0.152	0.0438
0.1592	0.0789	0.1592	0.0676	0.1592	0.0613	0.1592	0.0569	0.1592	0.054	0.1592	0.0495	0.1592	0.0446
0.1668	0.0792	0.1668	0.0677	0.1668	0.0613	0.1668	0.0569	0.1668	0.054	0.1668	0.0495	0.1668	0.0446
0.1748	0.0794	0.1748	0.068	0.1748	0.0616	0.1748	0.0569	0.1748	0.054	0.1748	0.0495	0.1748	0.0446
0.1831	0.0794	0.1831	0.068	0.1831	0.0616	0.1831	0.0569	0.1831	0.054	0.1831	0.0495	0.1831	0.0446
0.1918	0.0794	0.1918	0.068	0.1918	0.0616	0.1918	0.0568	0.1918	0.0539	0.1918	0.0495	0.1918	0.0446
0.2009	0.0794	0.2009	0.068	0.2009	0.0616	0.2009	0.0568	0.2009	0.0537	0.2009	0.0487	0.2009	0.0448
0.2105	0.0744	0.2105	0.0638	0.2105	0.0601	0.2105	0.0568	0.2105	0.0537	0.2105	0.0501	0.2105	0.0489
0.2205	0.0694	0.2205	0.0633	0.2205	0.0597	0.2205	0.0567	0.2205	0.0557	0.2205	0.0543	0.2205	0.0527
0.231	0.0656	0.231	0.0633	0.231	0.062	0.231	0.0608	0.231	0.0598	0.231	0.0581	0.231	0.0561
0.242	0.0768	0.242	0.0695	0.242	0.0657	0.242	0.0645	0.242	0.0633	0.242	0.0614	0.242	0.059
0.2535	0.1108	0.2535	0.0924	0.2535	0.0831	0.2535	0.0756	0.2535	0.0697	0.2535	0.064	0.2535	0.0613
0.2656	0.1224	0.2656	0.0958	0.2656	0.0833	0.2656	0.0756	0.2656	0.0697	0.2656	0.066	0.2656	0.0628
0.2783	0.1224	0.2783	0.0958	0.2783	0.0843	0.2783	0.0796	0.2783	0.0755	0.2783	0.0686	0.2783	0.0634
0.2915	0.1224	0.2915	0.1016	0.2915	0.0946	0.2915	0.0884	0.2915	0.0829	0.2915	0.0737	0.2915	0.0659
0.3054	0.1376	0.3054	0.1198	0.3054	0.1099	0.3054	0.1013	0.3054	0.0938	0.3054	0.0818	0.3054	0.0736
0.3199	0.1656	0.3199	0.1295	0.3199	0.118	0.3199	0.1082	0.3199	0.0997	0.3199	0.0864	0.3199	0.0786
0.3352	0.1885	0.3352	0.1345	0.3352	0.118	0.3352	0.1082	0.3352	0.0997	0.3352	0.0888	0.3352	0.0799
0.3511	0.2195	0.3511	0.1658	0.3511	0.1404	0.3511	0.121	0.3511	0.1094	0.3511	0.0947	0.3511	0.0799
0.3678	0.2195	0.3678	0.1658	0.3678	0.1411	0.3678	0.1297	0.3678	0.1197	0.3678	0.1054	0.3678	0.0927

0.3853	0.2195	0.3853	0.1658	0.3853	0.1482	0.3853	0.1392	0.3853	0.1313	0.3853	0.1182	0.3853	0.1037
0.4037	0.2195	0.4037	0.1658	0.4037	0.1497	0.4037	0.141	0.4037	0.1333	0.4037	0.1207	0.4037	0.1067
0.4229	0.2197	0.4229	0.1658	0.4229	0.1497	0.4229	0.141	0.4229	0.1333	0.4229	0.1207	0.4229	0.1067
0.4431	0.3492	0.4431	0.237	0.4431	0.1936	0.4431	0.1625	0.4431	0.1433	0.4431	0.123	0.4431	0.1141
0.4642	0.3492	0.4642	0.237	0.4642	0.1965	0.4642	0.1766	0.4642	0.1607	0.4642	0.14	0.4642	0.1239
0.4863	0.3492	0.4863	0.237	0.4863	0.1965	0.4863	0.1797	0.4863	0.1687	0.4863	0.1514	0.4863	0.1297
0.5094	0.3492	0.5094	0.237	0.5094	0.2038	0.5094	0.1919	0.5094	0.1804	0.5094	0.1599	0.5094	0.1356
0.5337	0.3728	0.5337	0.2709	0.5337	0.2336	0.5337	0.2071	0.5337	0.1861	0.5337	0.1599	0.5337	0.1356
0.5591	0.3728	0.5591	0.2844	0.5591	0.2472	0.5591	0.2178	0.5591	0.1969	0.5591	0.1672	0.5591	0.1469
0.5857	0.3728	0.5857	0.291	0.5857	0.2581	0.5857	0.2314	0.5857	0.2095	0.5857	0.1839	0.5857	0.1647
0.6136	0.3728	0.6136	0.291	0.6136	0.2581	0.6136	0.2314	0.6136	0.211	0.6136	0.1935	0.6136	0.1734
0.6428	0.3892	0.6428	0.291	0.6428	0.2581	0.6428	0.2341	0.6428	0.2164	0.6428	0.198	0.6428	0.1784
0.6734	0.3892	0.6734	0.3002	0.6734	0.2736	0.6734	0.253	0.6734	0.2391	0.6734	0.2147	0.6734	0.1893
0.7055	0.4568	0.7055	0.3773	0.7055	0.3354	0.7055	0.3005	0.7055	0.2769	0.7055	0.2399	0.7055	0.2062
0.7391	0.5468	0.7391	0.437	0.7391	0.3838	0.7391	0.3407	0.7391	0.3056	0.7391	0.2529	0.7391	0.2172
0.7743	0.6403	0.7743	0.4827	0.7743	0.4094	0.7743	0.3537	0.7743	0.3106	0.7743	0.254	0.7743	0.239
0.8111	0.831	0.8111	0.4886	0.8111	0.4094	0.8111	0.3537	0.8111	0.3106	0.8111	0.2831	0.8111	0.2657
0.8497	0.831	0.8497	0.4886	0.8497	0.4094	0.8497	0.3657	0.8497	0.3378	0.8497	0.3109	0.8497	0.2933
0.8902	0.831	0.8902	0.4886	0.8902	0.4288	0.8902	0.3942	0.8902	0.3631	0.8902	0.3404	0.8902	0.3207
0.9326	1.1005	0.9326	0.6506	0.9326	0.519	0.9326	0.4449	0.9326	0.3898	0.9326	0.3703	0.9326	0.3469
0.977	1.1005	0.977	0.7147	0.977	0.5864	0.977	0.4962	0.977	0.4337	0.977	0.3972	0.977	0.3706
1.0235	1.1005	1.0235	0.7147	1.0235	0.5864	1.0235	0.4962	1.0235	0.4691	1.0235	0.4309	1.0235	0.3909
1.0723	1.1005	1.0723	0.7147	1.0723	0.5864	1.0723	0.5524	1.0723	0.5282	1.0723	0.4852	1.0723	0.4308
1.1233	1.2677	1.1233	0.7412	1.1233	0.6432	1.1233	0.6123	1.1233	0.5832	1.1233	0.5321	1.1233	0.4696
1.1768	1.2677	1.1768	0.8293	1.1768	0.7065	1.1768	0.6555	1.1768	0.62	1.1768	0.5613	1.1768	0.4934
1.2328	1.2677	1.2328	0.8293	1.2328	0.7065	1.2328	0.6555	1.2328	0.62	1.2328	0.5639	1.2328	0.5024
1.2916	1.4479	1.2916	1.0168	1.2916	0.8501	1.2916	0.7366	1.2916	0.6556	1.2916	0.5639	1.2916	0.5055
1.353	1.6058	1.353	1.1275	1.353	0.9398	1.353	0.8103	1.353	0.7197	1.353	0.6176	1.353	0.5488
1.4175	1.6058	1.4175	1.1275	1.4175	0.9845	1.4175	0.9078	1.4175	0.8382	1.4175	0.7198	1.4175	0.5908
1.485	1.6058	1.485	1.2335	1.485	1.1052	1.485	1.0054	1.485	0.9202	1.485	0.7812	1.485	0.6369
1.5557	2.1846	1.5557	1.3621	1.5557	1.1315	1.5557	1.0054	1.5557	0.9202	1.5557	0.7812	1.5557	0.6625
1.6298	2.1846	1.6298	1.3621	1.6298	1.1769	1.6298	1.0959	1.6298	1.0225	1.6298	0.8962	1.6298	0.7518
1.7074	2.1846	1.7074	1.4719	1.7074	1.3054	1.7074	1.2055	1.7074	1.1171	1.7074	0.9707	1.7074	0.8071
1.7887	2.7802	1.7887	1.6856	1.7887	1.4812	1.7887	1.3211	1.7887	1.1842	1.7887	0.9918	1.7887	0.8152
1.8738	2.7802	1.8738	1.6856	1.8738	1.4926	1.8738	1.3481	1.8738	1.2212	1.8738	1.0136	1.8738	0.8884
1.963	2.7802	1.963	1.9172	1.963	1.5603	1.963	1.3481	1.963	1.2212	1.963	1.0811	1.963	0.9548
2.0565	2.7802	2.0565	1.9172	2.0565	1.5603	2.0565	1.3571	2.0565	1.2869	2.0565	1.1624	2.0565	1.0171
2.1544	2.7802	2.1544	1.9172	2.1544	1.5603	2.1544	1.4424	2.1544	1.3536	2.1544	1.2355	2.1544	1.0641
2.257	3.1449	2.257	1.9172	2.257	1.7334	2.257	1.6089	2.257	1.4947	2.257	1.309	2.257	1.0916

2.3645	3.2327	2.3645	2.2136	2.3645	1.968	2.3645	1.7697	2.3645	1.6071	2.3645	1.3579	2.3645	1.1296
2.4771	3.2327	2.4771	2.2136	2.4771	1.968	2.4771	1.7697	2.4771	1.6071	2.4771	1.3579	2.4771	1.1301
2.595	3.7738	2.595	2.4327	2.595	2.131	2.595	1.8936	2.595	1.6778	2.595	1.3976	2.595	1.1754
2.7186	4.3838	2.7186	2.4327	2.7186	2.131	2.7186	1.9075	2.7186	1.7384	2.7186	1.4956	2.7186	1.2512
2.848	4.3838	2.848	2.4327	2.848	2.131	2.848	1.9075	2.848	1.7384	2.848	1.5139	2.848	1.2815
2.9836	4.3838	2.9836	2.4327	2.9836	2.131	2.9836	1.9075	2.9836	1.8855	2.9836	1.5536	2.9836	1.2917
3.1257	4.3838	3.1257	2.4327	3.1257	2.131	3.1257	1.9075	3.1257	1.8855	3.1257	1.5536	3.1257	1.2917
3.2745	4.3838	3.2745	2.4327	3.2745	2.131	3.2745	1.9075	3.2745	1.8855	3.2745	1.5536	3.2745	1.2917
3.4305	4.1005	3.4305	2.4327	3.4305	2.131	3.4305	1.9075	3.4305	1.8855	3.4305	1.5536	3.4305	1.2917
3.5938	4.1005	3.5938	2.4327	3.5938	2.131	3.5938	1.9075	3.5938	1.8855	3.5938	1.5536	3.5938	1.2917
3.7649	2.5959	3.7649	2.4327	3.7649	2.131	3.7649	1.9042	3.7649	1.7489	3.7649	1.5021	3.7649	1.265
3.9442	2.5959	3.9442	2.121	3.9442	1.8355	3.9442	1.6598	3.9442	1.5405	3.9442	1.3563	3.9442	1.2103
4.132	2.5959	4.132	1.8694	4.132	1.6226	4.132	1.4573	4.132	1.3351	4.132	1.2096	4.132	1.1326
4.3288	2.5959	4.3288	1.8694	4.3288	1.6226	4.3288	1.4573	4.3288	1.3351	4.3288	1.162	4.3288	1.0536
4.5349	2.5959	4.5349	1.7534	4.5349	1.5274	4.5349	1.3901	4.5349	1.2878	4.5349	1.1559	4.5349	1.0242
4.7508	2.4293	4.7508	1.4177	4.7508	1.3814	4.7508	1.25	4.7508	1.1959	4.7508	1.1203	4.7508	1.0119
4.977	2.4293	4.977	1.4177	4.977	1.3814	4.977	1.25	4.977	1.1959	4.977	1.1002	4.977	0.9832
5.214	2.4293	5.214	1.4177	5.214	1.3011	5.214	1.2293	5.214	1.1678	5.214	1.0665	5.214	0.9502
5.4623	1.9405	5.4623	1.3108	5.4623	1.2385	5.4623	1.1382	5.4623	1.084	5.4623	0.9911	5.4623	0.8858
5.7224	2.5389	5.7224	1.3108	5.7224	1.2385	5.7224	1.1157	5.7224	1.0195	5.7224	0.8782	5.7224	0.7893
5.9948	2.5389	5.9948	1.3108	5.9948	1.2138	5.9948	1.0915	5.9948	0.996	5.9948	0.8782	5.9948	0.7551
6.2803	2.5389	6.2803	1.3108	6.2803	1.1292	6.2803	1.0403	6.2803	0.9828	6.2803	0.8782	6.2803	0.7551
6.5793	2.5389	6.5793	1.3108	6.5793	1.1292	6.5793	1.0403	6.5793	0.9828	6.5793	0.8776	6.5793	0.7522
6.8926	2.5389	6.8926	1.3108	6.8926	1.1292	6.8926	1.0107	6.8926	0.9301	6.8926	0.8305	6.8926	0.7234
7.2208	2.5389	7.2208	1.3108	7.2208	1.0813	7.2208	0.9868	7.2208	0.9225	7.2208	0.8305	7.2208	0.7231
7.5646	2.5389	7.5646	1.3108	7.5646	1.0813	7.5646	0.9868	7.5646	0.9225	7.5646	0.8305	7.5646	0.7231
7.9248	2.5389	7.9248	1.3108	7.9248	1.0494	7.9248	0.9755	7.9248	0.9203	7.9248	0.8305	7.9248	0.7231
8.3022	2.4941	8.3022	1.3108	8.3022	1.0494	8.3022	0.9755	8.3022	0.9182	8.3022	0.8251	8.3022	0.7169
8.6975	1.8253	8.6975	1.0955	8.6975	0.9976	8.6975	0.9284	8.6975	0.8735	8.6975	0.7863	8.6975	0.6887
9.1116	1.4804	9.1116	0.8931	9.1116	0.8487	9.1116	0.8084	9.1116	0.7724	9.1116	0.7118	9.1116	0.6409
9.5455	1.4804	9.5455	0.8385	9.5455	0.7483	9.5455	0.684	9.5455	0.6476	9.5455	0.612	9.5455	0.5642
10	0.9957	10	0.7233	10	0.685	10	0.6511	10	0.6232	10	0.5792	10	0.5466
10.4762	0.9436	10.4762	0.6652	10.4762	0.6378	10.4762	0.6134	10.4762	0.5916	10.4762	0.5543	10.4762	0.5416
10.975	0.9436	10.975	0.6547	10.975	0.6085	10.975	0.5856	10.975	0.5694	10.975	0.5453	10.975	0.5376
11.4976	0.9436	11.4976	0.648	11.4976	0.6085	11.4976	0.5856	11.4976	0.5658	11.4976	0.5453	11.4976	0.5376
12.045	0.9057	12.045	0.6115	12.045	0.5714	12.045	0.561	12.045	0.5542	12.045	0.5453	12.045	0.5376
12.6186	0.9057	12.6186	0.6023	12.6186	0.5714	12.6186	0.561	12.6186	0.5542	12.6186	0.5453	12.6186	0.5376
13.2194	0.9057	13.2194	0.574	13.2194	0.5614	13.2194	0.5505	13.2194	0.5472	13.2194	0.5416	13.2194	0.5356
13.8489	0.6913	13.8489	0.574	13.8489	0.5614	13.8489	0.5504	13.8489	0.5417	13.8489	0.535	13.8489	0.5308

14.5083	0.6913	14.5083	0.574	14.5083	0.5614	14.5083	0.5504	14.5083	0.5417	14.5083	0.5301	14.5083	0.5264
15.1991	0.6913	15.1991	0.574	15.1991	0.5614	15.1991	0.5504	15.1991	0.5417	15.1991	0.5301	15.1991	0.5234
15.9228	0.6913	15.9228	0.574	15.9228	0.5614	15.9228	0.5504	15.9228	0.5417	15.9228	0.5292	15.9228	0.5181
16.681	0.6913	16.681	0.5725	16.681	0.5477	16.681	0.5365	16.681	0.5284	16.681	0.518	16.681	0.5095
17.4753	0.6486	17.4753	0.5314	17.4753	0.5237	17.4753	0.518	17.4753	0.5141	17.4753	0.5087	17.4753	0.5051
18.3074	0.6404	18.3074	0.5314	18.3074	0.5237	18.3074	0.518	18.3074	0.5141	18.3074	0.5087	18.3074	0.5057
19.1791	0.6404	19.1791	0.5314	19.1791	0.5237	19.1791	0.518	19.1791	0.5141	19.1791	0.5087	19.1791	0.5057
20.0923	0.6104	20.0923	0.5314	20.0923	0.5237	20.0923	0.518	20.0923	0.5141	20.0923	0.5087	20.0923	0.5057
21.049	0.5894	21.049	0.5192	21.049	0.515	21.049	0.5122	21.049	0.5106	21.049	0.5081	21.049	0.5057
22.0513	0.5736	22.0513	0.5155	22.0513	0.5137	22.0513	0.5122	22.0513	0.5106	22.0513	0.5081	22.0513	0.5057
23.1013	0.5736	23.1013	0.5131	23.1013	0.5105	23.1013	0.5085	23.1013	0.507	23.1013	0.5056	23.1013	0.5045
24.2013	0.5233	24.2013	0.5131	24.2013	0.5105	24.2013	0.5085	24.2013	0.507	24.2013	0.505	24.2013	0.5034
25.3536	0.5233	25.3536	0.5131	25.3536	0.5105	25.3536	0.5085	25.3536	0.507	25.3536	0.505	25.3536	0.5034
26.5609	0.5233	26.5609	0.5131	26.5609	0.5105	26.5609	0.5085	26.5609	0.507	26.5609	0.505	26.5609	0.5034
27.8256	0.5233	27.8256	0.5131	27.8256	0.5105	27.8256	0.5085	27.8256	0.507	27.8256	0.505	27.8256	0.5031
29.1505	0.5079	29.1505	0.5031	29.1505	0.5033	29.1505	0.5033	29.1505	0.5031	29.1505	0.5026	29.1505	0.5017
30.5386	0.5079	30.5386	0.5022	30.5386	0.5014	30.5386	0.501	30.5386	0.5008	30.5386	0.5005	30.5386	0.5001
31.9927	0.5079	31.9927	0.5022	31.9927	0.5005	31.9927	0.4997	31.9927	0.4994	31.9927	0.4991	31.9927	0.4988
33.516	0.4972	33.516	0.4972	33.516	0.4974	33.516	0.4975	33.516	0.4976	33.516	0.4976	33.516	0.4975
35.1119	0.4965	35.1119	0.4965	35.1119	0.4965	35.1119	0.4965	35.1119	0.4965	35.1119	0.4965	35.1119	0.4965
36.7838	0.4957	36.7838	0.4957	36.7838	0.4957	36.7838	0.4957	36.7838	0.4957	36.7838	0.4958	36.7838	0.4958
38.5353	0.495	38.5353	0.495	38.5353	0.495	38.5353	0.4951	38.5353	0.4951	38.5353	0.4951	38.5353	0.4951
40.3702	0.4944	40.3702	0.4944	40.3702	0.4945	40.3702	0.4945	40.3702	0.4945	40.3702	0.4945	40.3702	0.4945
42.2924	0.4939	42.2924	0.4939	42.2924	0.4939	42.2924	0.4939	42.2924	0.4939	42.2924	0.494	42.2924	0.494
44.3062	0.4934	44.3062	0.4935	44.3062	0.4935	44.3062	0.4935	44.3062	0.4935	44.3062	0.4935	44.3062	0.4935
46.4159	0.493	46.4159	0.4931	46.4159	0.4931	46.4159	0.4931	46.4159	0.4931	46.4159	0.4931	46.4159	0.4931
48.626	0.4927	48.626	0.4927	48.626	0.4927	48.626	0.4927	48.626	0.4927	48.626	0.4927	48.626	0.4927
50.9414	0.4923	50.9414	0.4923	50.9414	0.4923	50.9414	0.4923	50.9414	0.4923	50.9414	0.4923	50.9414	0.4923

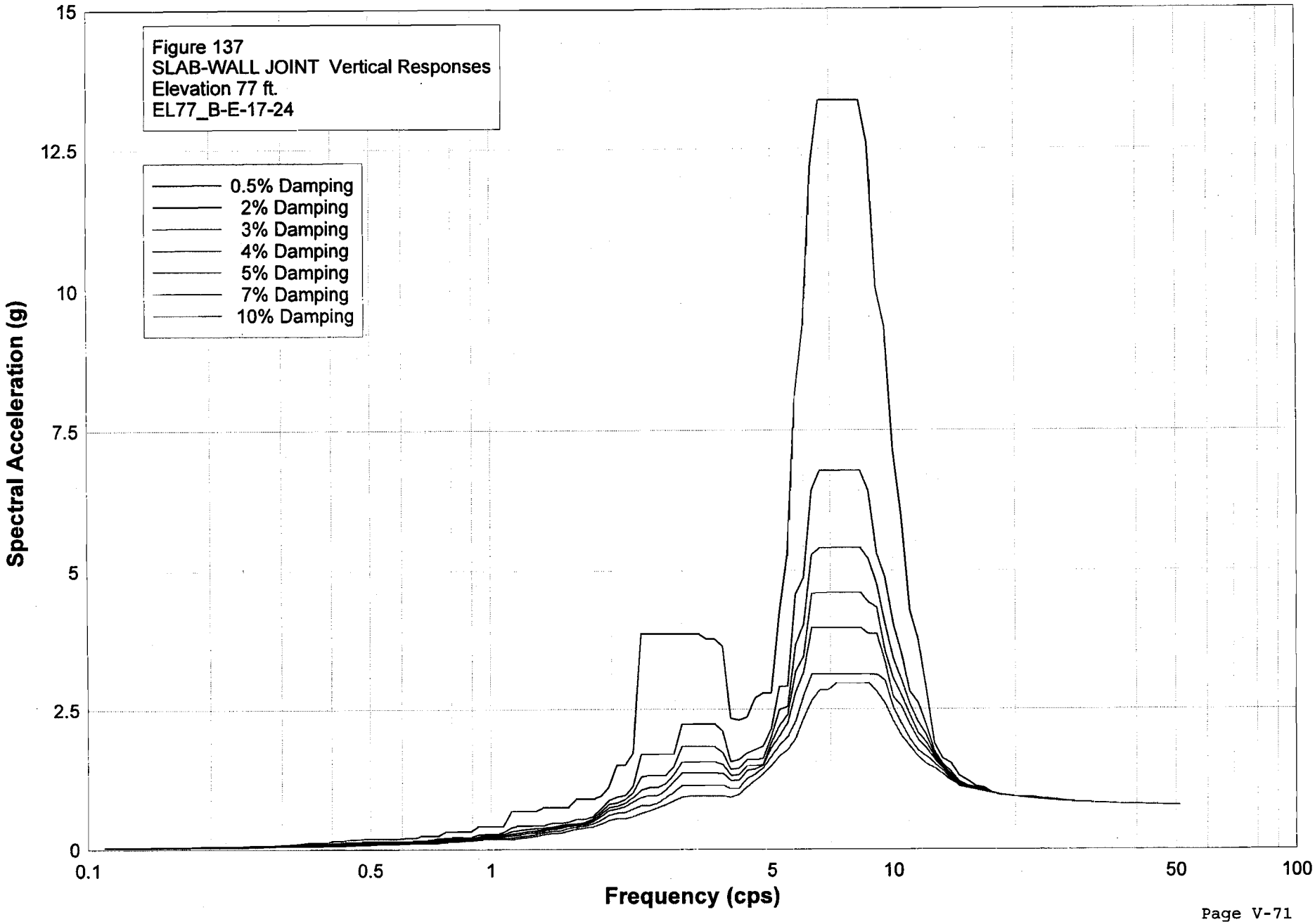
Figure 137
SLAB-WALL JOINT Vertical Responses
Elevation 77 ft.
EL77_B-E-17-24
0.5% Damping
2% Damping
3% Damping
4% Damping
5% Damping
7% Damping
10% Damping
Spectral Acceleration (g)
15
12.5
10
7.5
5
2.5
0
0.1
0.5
1
5
10
50
100
Frequency (cps)

S_PTWW137.grf
RPP-WTP Pretreatment Facility ISRS
Calc No.: 24590-PTF-S0C-S15T-00005, Rev. 0B
Frequency (cps)
Spectral Acceleration (g)
Figure 137
SLAB-WALL JOINT Vertical Responses
Elevation 77 ft.
EL77_B-E-17-24

Damping	0.50%	Damping	2%	Damping	3%	Damping	4%	Damping	5%	Damping	7%	Damping	10%
Freq.	Accel.	Freq.	Accel.	Freq.	Accel.	Freq.	Accel.	Freq.	Accel.	Freq.	Accel.	Freq.	Accel.
0.1098	0.0329	0.1098	0.0296	0.1098	0.0278	0.1098	0.0268	0.1098	0.0259	0.1098	0.0243	0.1098	0.0227
0.115	0.0347	0.115	0.0312	0.115	0.0291	0.115	0.0273	0.115	0.0261	0.115	0.0247	0.115	0.0232
0.1204	0.0348	0.1204	0.0313	0.1204	0.0293	0.1204	0.0275	0.1204	0.0261	0.1204	0.0247	0.1204	0.0232
0.1262	0.0349	0.1262	0.0313	0.1262	0.0293	0.1262	0.0275	0.1262	0.0261	0.1262	0.0247	0.1262	0.0232
0.1322	0.0349	0.1322	0.0313	0.1322	0.0293	0.1322	0.0275	0.1322	0.0261	0.1322	0.0247	0.1322	0.0232
0.1385	0.0349	0.1385	0.0313	0.1385	0.0293	0.1385	0.0275	0.1385	0.0262	0.1385	0.0248	0.1385	0.0232
0.1451	0.0349	0.1451	0.0313	0.1451	0.0293	0.1451	0.0275	0.1451	0.0262	0.1451	0.0248	0.1451	0.0235
0.152	0.0349	0.152	0.0313	0.152	0.0293	0.152	0.0278	0.152	0.0271	0.152	0.0258	0.152	0.0246
0.1592	0.0349	0.1592	0.0313	0.1592	0.0295	0.1592	0.0288	0.1592	0.0282	0.1592	0.0271	0.1592	0.0258
0.1668	0.0349	0.1668	0.0313	0.1668	0.0302	0.1668	0.0294	0.1668	0.0288	0.1668	0.0277	0.1668	0.0266
0.1748	0.0423	0.1748	0.0358	0.1748	0.0324	0.1748	0.0297	0.1748	0.0288	0.1748	0.0279	0.1748	0.0269
0.1831	0.0536	0.1831	0.0446	0.1831	0.0399	0.1831	0.0359	0.1831	0.0325	0.1831	0.0284	0.1831	0.0269
0.1918	0.0578	0.1918	0.0479	0.1918	0.0426	0.1918	0.0381	0.1918	0.0354	0.1918	0.0331	0.1918	0.0306
0.2009	0.0578	0.2009	0.0479	0.2009	0.0426	0.2009	0.0399	0.2009	0.0383	0.2009	0.0356	0.2009	0.0325
0.2105	0.0578	0.2105	0.0479	0.2105	0.0426	0.2105	0.0401	0.2105	0.0385	0.2105	0.0358	0.2105	0.0336
0.2205	0.0578	0.2205	0.0479	0.2205	0.0438	0.2205	0.0425	0.2205	0.0412	0.2205	0.0389	0.2205	0.036
0.231	0.0582	0.231	0.0496	0.231	0.0468	0.231	0.0447	0.231	0.0432	0.231	0.0403	0.231	0.0368
0.242	0.0628	0.242	0.0559	0.242	0.0518	0.242	0.0483	0.242	0.0457	0.242	0.0415	0.242	0.0383
0.2535	0.0718	0.2535	0.0628	0.2535	0.0583	0.2535	0.0547	0.2535	0.0515	0.2535	0.0468	0.2535	0.0422
0.2656	0.0718	0.2656	0.0628	0.2656	0.0583	0.2656	0.0547	0.2656	0.0515	0.2656	0.0468	0.2656	0.0422
0.2783	0.0718	0.2783	0.0628	0.2783	0.0583	0.2783	0.0547	0.2783	0.0515	0.2783	0.0468	0.2783	0.0422
0.2915	0.0751	0.2915	0.0675	0.2915	0.0638	0.2915	0.0605	0.2915	0.0576	0.2915	0.0527	0.2915	0.0473
0.3054	0.0882	0.3054	0.0765	0.3054	0.0701	0.3054	0.0658	0.3054	0.0621	0.3054	0.0561	0.3054	0.0493
0.3199	0.0922	0.3199	0.0798	0.3199	0.0729	0.3199	0.067	0.3199	0.0621	0.3199	0.0561	0.3199	0.0493
0.3352	0.1108	0.3352	0.0902	0.3352	0.0805	0.3352	0.0732	0.3352	0.0674	0.3352	0.0595	0.3352	0.0526
0.3511	0.1266	0.3511	0.096	0.3511	0.0832	0.3511	0.0743	0.3511	0.0692	0.3511	0.0614	0.3511	0.0542
0.3678	0.1266	0.3678	0.096	0.3678	0.0851	0.3678	0.078	0.3678	0.072	0.3678	0.0628	0.3678	0.0542

0.3853	0.1266	0.3853	0.0968	0.3853	0.0891	0.3853	0.0825	0.3853	0.0771	0.3853	0.0679	0.3853	0.0575
0.4037	0.1556	0.4037	0.1128	0.4037	0.0977	0.4037	0.0862	0.4037	0.0772	0.4037	0.0679	0.4037	0.0575
0.4229	0.1556	0.4229	0.1198	0.4229	0.1048	0.4229	0.0928	0.4229	0.0831	0.4229	0.0687	0.4229	0.0575
0.4431	0.1788	0.4431	0.1373	0.4431	0.1175	0.4431	0.1021	0.4431	0.09	0.4431	0.0727	0.4431	0.062
0.4642	0.1788	0.4642	0.1373	0.4642	0.1175	0.4642	0.1021	0.4642	0.0924	0.4642	0.0797	0.4642	0.0684
0.4863	0.1989	0.4863	0.1478	0.4863	0.1261	0.4863	0.1102	0.4863	0.0981	0.4863	0.0811	0.4863	0.0718
0.5094	0.1989	0.5094	0.1478	0.5094	0.1261	0.5094	0.1102	0.5094	0.0999	0.5094	0.0883	0.5094	0.0755
0.5337	0.1989	0.5337	0.1478	0.5337	0.1261	0.5337	0.1123	0.5337	0.1057	0.5337	0.0955	0.5337	0.0848
0.5591	0.1989	0.5591	0.1478	0.5591	0.1261	0.5591	0.1123	0.5591	0.107	0.5591	0.0991	0.5591	0.0891
0.5857	0.1996	0.5857	0.1489	0.5857	0.1273	0.5857	0.1124	0.5857	0.1076	0.5857	0.0992	0.5857	0.0891
0.6136	0.2118	0.6136	0.1492	0.6136	0.1284	0.6136	0.1155	0.6136	0.1076	0.6136	0.0992	0.6136	0.0891
0.6428	0.2118	0.6428	0.1607	0.6428	0.1455	0.6428	0.1342	0.6428	0.1253	0.6428	0.1121	0.6428	0.1004
0.6734	0.2447	0.6734	0.168	0.6734	0.1558	0.6734	0.1454	0.6734	0.1366	0.6734	0.1223	0.6734	0.1071
0.7055	0.2447	0.7055	0.1758	0.7055	0.1558	0.7055	0.1454	0.7055	0.1366	0.7055	0.1223	0.7055	0.1071
0.7391	0.2447	0.7391	0.2046	0.7391	0.1828	0.7391	0.165	0.7391	0.1501	0.7391	0.1276	0.7391	0.1108
0.7743	0.3235	0.7743	0.2046	0.7743	0.1828	0.7743	0.1668	0.7743	0.1542	0.7743	0.1338	0.7743	0.1258
0.8111	0.3235	0.8111	0.2226	0.8111	0.1927	0.8111	0.1741	0.8111	0.162	0.8111	0.148	0.8111	0.1388
0.8497	0.3235	0.8497	0.2226	0.8497	0.1989	0.8497	0.1825	0.8497	0.1686	0.8497	0.148	0.8497	0.144
0.8902	0.3235	0.8902	0.2226	0.8902	0.1989	0.8902	0.1825	0.8902	0.1686	0.8902	0.1499	0.8902	0.1536
0.9326	0.4162	0.9326	0.2704	0.9326	0.2331	0.9326	0.2122	0.9326	0.1988	0.9326	0.1834	0.9326	0.1717
0.977	0.4162	0.977	0.2758	0.977	0.2548	0.977	0.2364	0.977	0.2215	0.977	0.2006	0.977	0.1822
1.0235	0.4162	1.0235	0.2758	1.0235	0.2548	1.0235	0.2364	1.0235	0.2215	1.0235	0.2006	1.0235	0.1822
1.0723	0.4162	1.0723	0.3054	1.0723	0.276	1.0723	0.2529	1.0723	0.2346	1.0723	0.2077	1.0723	0.1835
1.1233	0.6808	1.1233	0.3906	1.1233	0.3224	1.1233	0.2796	1.1233	0.25	1.1233	0.2121	1.1233	0.1835
1.1768	0.6808	1.1768	0.4285	1.1768	0.3494	1.1768	0.3004	1.1768	0.2678	1.1768	0.2326	1.1768	0.2022
1.2328	0.6808	1.2328	0.4285	1.2328	0.362	1.2328	0.3249	1.2328	0.2939	1.2328	0.2462	1.2328	0.2197
1.2916	0.6808	1.2916	0.4285	1.2916	0.3767	1.2916	0.3361	1.2916	0.3025	1.2916	0.2706	1.2916	0.238
1.353	0.7474	1.353	0.4307	1.353	0.3822	1.353	0.3605	1.353	0.3408	1.353	0.3074	1.353	0.2695
1.4175	0.7474	1.4175	0.4745	1.4175	0.399	1.4175	0.3783	1.4175	0.3595	1.4175	0.327	1.4175	0.2904
1.485	0.7474	1.485	0.4745	1.485	0.4308	1.485	0.4027	1.485	0.3776	1.485	0.3367	1.485	0.2965
1.5557	0.7474	1.5557	0.4917	1.5557	0.4567	1.5557	0.4327	1.5557	0.4106	1.5557	0.3746	1.5557	0.3318
1.6298	0.8991	1.6298	0.5424	1.6298	0.4596	1.6298	0.4435	1.6298	0.4278	1.6298	0.3983	1.6298	0.362
1.7074	0.8991	1.7074	0.5424	1.7074	0.4907	1.7074	0.4675	1.7074	0.4447	1.7074	0.4175	1.7074	0.3835
1.7887	0.8991	1.7887	0.5865	1.7887	0.5461	1.7887	0.5203	1.7887	0.498	1.7887	0.4559	1.7887	0.4044
1.8738	0.9445	1.8738	0.7195	1.8738	0.6654	1.8738	0.6223	1.8738	0.5827	1.8738	0.5201	1.8738	0.4509
1.963	1.1123	1.963	0.8748	1.963	0.8034	1.963	0.7426	1.963	0.691	1.963	0.6109	1.963	0.5227
2.0565	1.5088	2.0565	0.933	2.0565	0.8293	2.0565	0.7716	2.0565	0.7237	2.0565	0.645	2.0565	0.5543
2.1544	1.5088	2.1544	0.961	2.1544	0.8884	2.1544	0.8244	2.1544	0.7652	2.1544	0.6607	2.1544	0.5543
2.257	1.7236	2.257	1.1268	2.257	1.013	2.257	0.9252	2.257	0.849	2.257	0.7236	2.257	0.59

2.3645	3.866	2.3645	1.6971	2.3645	1.2916	2.3645	1.0575	2.3645	0.9248	2.3645	0.7851	2.3645	0.6424
2.4771	3.866	2.4771	1.6971	2.4771	1.3169	2.4771	1.1038	2.4771	0.9563	2.4771	0.7851	2.4771	0.6887
2.595	3.866	2.595	1.6971	2.595	1.3169	2.595	1.1038	2.595	0.9563	2.595	0.8262	2.595	0.7426
2.7186	3.866	2.7186	1.6971	2.7186	1.3169	2.7186	1.1727	2.7186	1.0567	2.7186	0.9171	2.7186	0.7945
2.848	3.866	2.848	1.6971	2.848	1.4804	2.848	1.3327	2.848	1.206	2.848	1.018	2.848	0.8669
2.9836	3.866	2.9836	2.2406	2.9836	1.8408	2.9836	1.5625	2.9836	1.3591	2.9836	1.1387	2.9836	0.928
3.1257	3.866	3.1257	2.2406	3.1257	1.8408	3.1257	1.5625	3.1257	1.3591	3.1257	1.143	3.1257	0.9493
3.2745	3.866	3.2745	2.2406	3.2745	1.8408	3.2745	1.5625	3.2745	1.3591	3.2745	1.143	3.2745	0.9493
3.4305	3.7694	3.4305	2.2406	3.4305	1.8408	3.4305	1.5625	3.4305	1.3591	3.4305	1.143	3.4305	0.9493
3.5938	3.7694	3.5938	2.2406	3.5938	1.8408	3.5938	1.5625	3.5938	1.3591	3.5938	1.143	3.5938	0.9493
3.7649	3.6368	3.7649	2.1031	3.7649	1.7293	3.7649	1.5178	3.7649	1.3536	3.7649	1.143	3.7649	0.9493
3.9442	2.3406	3.9442	1.5628	3.9442	1.4278	3.9442	1.3158	3.9442	1.2252	3.9442	1.0832	3.9442	0.9243
4.132	2.3105	4.132	1.6043	4.132	1.4457	4.132	1.33	4.132	1.2346	4.132	1.0881	4.132	0.9795
4.3288	2.3606	4.3288	1.7203	4.3288	1.5989	4.3288	1.4967	4.3288	1.4076	4.3288	1.2637	4.3288	1.1134
4.5349	2.7028	4.5349	1.7884	4.5349	1.5989	4.5349	1.4967	4.5349	1.4341	4.5349	1.3413	4.5349	1.2294
4.7508	2.7941	4.7508	1.8475	4.7508	1.626	4.7508	1.5163	4.7508	1.5039	4.7508	1.4543	4.7508	1.3491
4.977	2.7941	4.977	2.1563	4.977	2.0226	4.977	1.9141	4.977	1.822	4.977	1.6659	4.977	1.4987
5.214	4.219	5.214	2.9143	5.214	2.4943	5.214	2.205	5.214	2.0309	5.214	1.8627	5.214	1.6667
5.4623	5.2918	5.4623	2.9192	5.4623	2.5485	5.4623	2.4104	5.4623	2.2607	5.4623	2.0112	5.4623	1.7876
5.7224	8.1324	5.7224	4.5631	5.7224	3.6583	5.7224	3.1823	5.7224	2.8095	5.7224	2.2869	5.7224	1.9827
5.9948	9.3796	5.9948	4.8676	5.9948	4.0343	5.9948	3.4641	5.9948	3.179	5.9948	2.7514	5.9948	2.3427
6.2803	12.1837	6.2803	6.4303	6.2803	5.2789	6.2803	4.5801	6.2803	3.9709	6.2803	3.1363	6.2803	2.6609
6.5793	13.368	6.5793	6.7759	6.5793	5.4003	6.5793	4.5998	6.5793	3.9709	6.5793	3.1363	6.5793	2.8505
6.8926	13.368	6.8926	6.7759	6.8926	5.4003	6.8926	4.5998	6.8926	3.9709	6.8926	3.1363	6.8926	2.8505
7.2208	13.368	7.2208	6.7759	7.2208	5.4003	7.2208	4.5998	7.2208	3.9709	7.2208	3.1363	7.2208	2.9722
7.5646	13.368	7.5646	6.7759	7.5646	5.4003	7.5646	4.5998	7.5646	3.9709	7.5646	3.1363	7.5646	2.9722
7.9248	13.368	7.9248	6.7759	7.9248	5.4003	7.9248	4.5998	7.9248	3.9709	7.9248	3.1363	7.9248	2.9722
8.3022	13.368	8.3022	6.7759	8.3022	5.4003	8.3022	4.5998	8.3022	3.9709	8.3022	3.1363	8.3022	2.9722
8.6975	12.5927	8.6975	6.4217	8.6975	5.1938	8.6975	4.425	8.6975	3.8585	8.6975	3.1363	8.6975	2.9722
9.1116	10.032	9.1116	5.2956	9.1116	4.7479	9.1116	4.3324	9.1116	3.8585	9.1116	3.1278	9.1116	2.8105
9.5455	9.3441	9.5455	4.8676	9.5455	4.0343	9.5455	3.5395	9.5455	3.3508	9.5455	3.014	9.5455	2.5933
10	7.1545	10	4.045	10	3.4174	10	3.0579	10	2.7208	10	2.5271	10	2.2822
10.4762	5.9747	10.4762	3.5047	10.4762	3.0327	10.4762	2.7438	10.4762	2.5427	10.4762	2.2327	10.4762	2.0169
10.975	4.2808	10.975	2.8111	10.975	2.5879	10.975	2.3944	10.975	2.2183	10.975	1.956	10.975	1.8268
11.4976	3.7662	11.4976	2.6092	11.4976	2.2639	11.4976	2.0699	11.4976	1.9469	11.4976	1.7588	11.4976	1.648
12.045	2.8902	12.045	2.215	12.045	2.0392	12.045	1.9048	12.045	1.8023	12.045	1.6549	12.045	1.5218
12.6186	1.8788	12.6186	1.7416	12.6186	1.6839	12.6186	1.6394	12.6186	1.6018	12.6186	1.5334	12.6186	1.4443
13.2194	1.6128	13.2194	1.5184	13.2194	1.4878	13.2194	1.4617	13.2194	1.4374	13.2194	1.393	13.2194	1.3351
13.8489	1.5359	13.8489	1.3774	13.8489	1.3281	13.8489	1.2932	13.8489	1.2655	13.8489	1.2404	13.8489	1.2179

14.5083	1.3107	14.5083	1.2007	14.5083	1.1687	14.5083	1.1419	14.5083	1.121	14.5083	1.1308	14.5083	1.1366
15.1991	1.2196	15.1991	1.1295	15.1991	1.1116	15.1991	1.1016	15.1991	1.0957	15.1991	1.0862	15.1991	1.09
15.9228	1.1205	15.9228	1.1	15.9228	1.0915	15.9228	1.0833	15.9228	1.0757	15.9228	1.0631	15.9228	1.0579
16.681	1.0927	16.681	1.0685	16.681	1.058	16.681	1.0504	16.681	1.0446	16.681	1.0363	16.681	1.0281
17.4753	1.0023	17.4753	1.0048	17.4753	1.0053	17.4753	1.0048	17.4753	1.0038	17.4753	1.0012	17.4753	0.9968
18.3074	0.961	18.3074	0.9671	18.3074	0.9687	18.3074	0.9693	18.3074	0.9695	18.3074	0.969	18.3074	0.9673
19.1791	0.9518	19.1791	0.9477	19.1791	0.9463	19.1791	0.9455	19.1791	0.9448	19.1791	0.9436	19.1791	0.9415
20.0923	0.9305	20.0923	0.9309	20.0923	0.9296	20.0923	0.9286	20.0923	0.9278	20.0923	0.9263	20.0923	0.9238
21.049	0.9233	21.049	0.9146	21.049	0.9138	21.049	0.9133	21.049	0.9127	21.049	0.9111	21.049	0.9085
22.0513	0.9233	22.0513	0.908	22.0513	0.9049	22.0513	0.9025	22.0513	0.9006	22.0513	0.8977	22.0513	0.8945
23.1013	0.8961	23.1013	0.8852	23.1013	0.8849	23.1013	0.8846	23.1013	0.884	23.1013	0.8827	23.1013	0.8807
24.2013	0.8833	24.2013	0.8727	24.2013	0.8712	24.2013	0.87	24.2013	0.8691	24.2013	0.869	24.2013	0.868
25.3536	0.8713	25.3536	0.8633	25.3536	0.8611	25.3536	0.8595	25.3536	0.8586	25.3536	0.858	25.3536	0.8571
26.5609	0.8529	26.5609	0.8516	26.5609	0.8504	26.5609	0.8496	26.5609	0.8491	26.5609	0.8483	26.5609	0.8474
27.8256	0.838	27.8256	0.8397	27.8256	0.8399	27.8256	0.8398	27.8256	0.8396	27.8256	0.8392	27.8256	0.8385
29.1505	0.8335	29.1505	0.8322	29.1505	0.8319	29.1505	0.8316	29.1505	0.8313	29.1505	0.8309	29.1505	0.8303
30.5386	0.8228	30.5386	0.8232	30.5386	0.8232	30.5386	0.8232	30.5386	0.8232	30.5386	0.8231	30.5386	0.8229
31.9927	0.8147	31.9927	0.8153	31.9927	0.8155	31.9927	0.8158	31.9927	0.8159	31.9927	0.8161	31.9927	0.8162
33.516	0.8095	33.516	0.8097	33.516	0.8098	33.516	0.8099	33.516	0.8101	33.516	0.8102	33.516	0.8104
35.1119	0.8048	35.1119	0.8049	35.1119	0.805	35.1119	0.8051	35.1119	0.8051	35.1119	0.8052	35.1119	0.8054
36.7838	0.8005	36.7838	0.8006	36.7838	0.8007	36.7838	0.8007	36.7838	0.8007	36.7838	0.8008	36.7838	0.8009
38.5353	0.7966	38.5353	0.7967	38.5353	0.7967	38.5353	0.7967	38.5353	0.7968	38.5353	0.7968	38.5353	0.7969
40.3702	0.7931	40.3702	0.7931	40.3702	0.7931	40.3702	0.7931	40.3702	0.7932	40.3702	0.7932	40.3702	0.7933
42.2924	0.7898	42.2924	0.7898	42.2924	0.7898	42.2924	0.7898	42.2924	0.7899	42.2924	0.7899	42.2924	0.79
44.3062	0.7868	44.3062	0.7868	44.3062	0.7868	44.3062	0.7868	44.3062	0.7868	44.3062	0.7869	44.3062	0.787
46.4159	0.7839	46.4159	0.7839	46.4159	0.784	46.4159	0.784	46.4159	0.784	46.4159	0.7841	46.4159	0.7842
48.626	0.7813	48.626	0.7813	48.626	0.7813	48.626	0.7813	48.626	0.7814	48.626	0.7814	48.626	0.7815
50.9414	0.7788	50.9414	0.7788	50.9414	0.7788	50.9414	0.7788	50.9414	0.7789	50.9414	0.7789	50.9414	0.7791

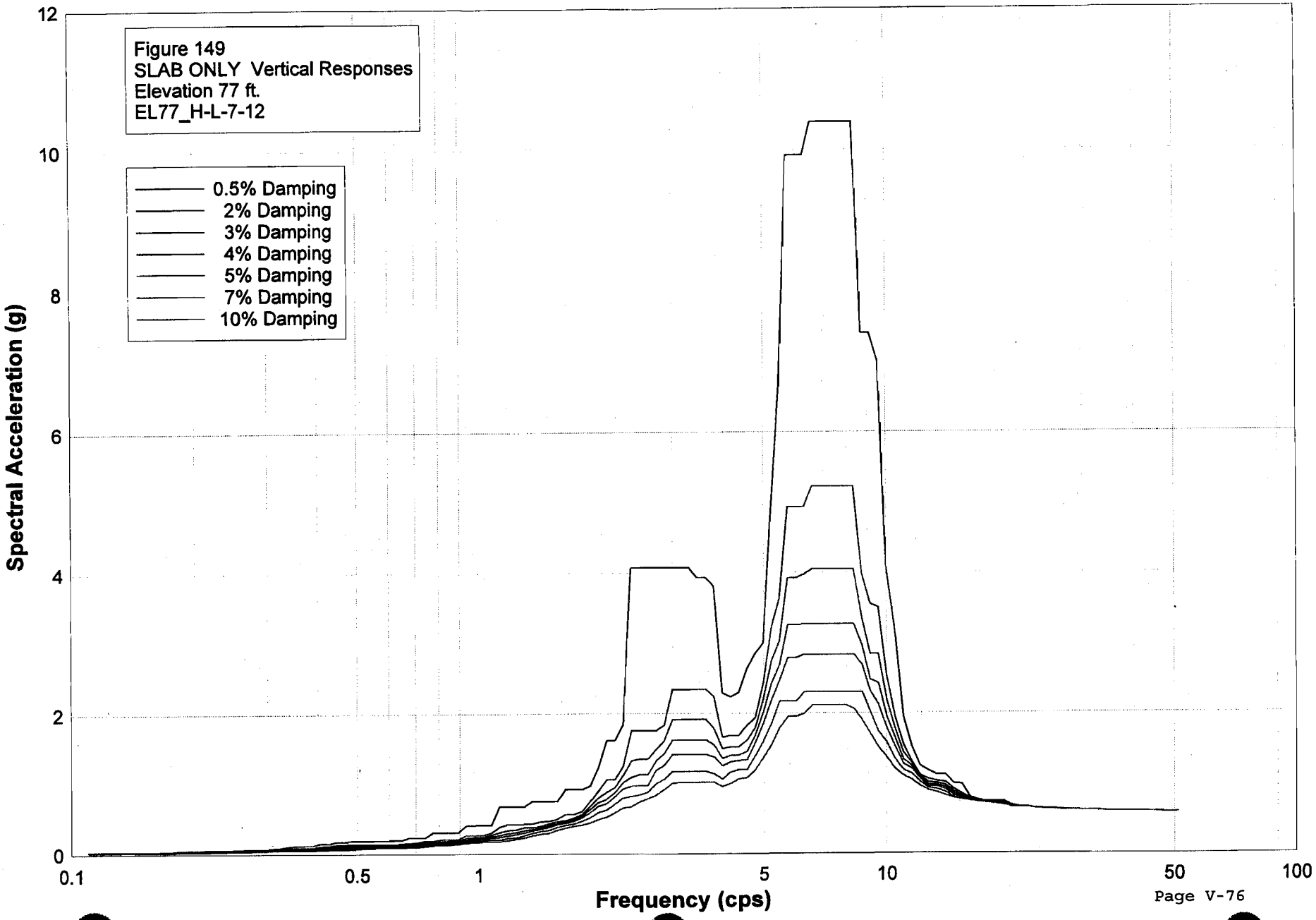
Figure 149
SLAB ONLY Vertical Responses
Elevation 77 ft.
EL77_H-L-7-12
0.5% Damping
2% Damping
3% Damping
4% Damping
5% Damping
7% Damping
10% Damping
Spectral Acceleration (g)
Frequency (cps)
0
2
4
6
8
10
12
0.1
0.5
1
5
10
50
100

S_PTWW149.grf
RPP-WTP Pretreatment Facility ISRS
Calc No.: 24590-PTF-S0C-S15T-00005, Rev. 0B
Frequency (cps)
Spectral Acceleration (g)
Figure 149
SLAB ONLY Vertical Responses
Elevation 77 ft.
EL77_H-L-7-12

Damping	0.50%	Damping	2%	Damping	3%	Damping	4%	Damping	5%	Damping	7%	Damping	10%
Freq.	Accel.	Freq.	Accel.	Freq.	Accel.	Freq.	Accel.	Freq.	Accel.	Freq.	Accel.	Freq.	Accel.
0.1098	0.033	0.1098	0.0296	0.1098	0.0277	0.1098	0.0266	0.1098	0.0257	0.1098	0.024	0.1098	0.0226
0.115	0.0347	0.115	0.0312	0.115	0.0291	0.115	0.0273	0.115	0.0261	0.115	0.0246	0.115	0.023
0.1204	0.0348	0.1204	0.0313	0.1204	0.0292	0.1204	0.0274	0.1204	0.0261	0.1204	0.0246	0.1204	0.023
0.1262	0.0349	0.1262	0.0313	0.1262	0.0292	0.1262	0.0274	0.1262	0.0261	0.1262	0.0246	0.1262	0.023
0.1322	0.0349	0.1322	0.0313	0.1322	0.0292	0.1322	0.0274	0.1322	0.0261	0.1322	0.0246	0.1322	0.023
0.1385	0.0349	0.1385	0.0313	0.1385	0.0292	0.1385	0.0274	0.1385	0.0261	0.1385	0.0246	0.1385	0.023
0.1451	0.0349	0.1451	0.0313	0.1451	0.0292	0.1451	0.0274	0.1451	0.0261	0.1451	0.0245	0.1451	0.0231
0.152	0.035	0.152	0.0313	0.152	0.0292	0.152	0.0276	0.152	0.0269	0.152	0.0256	0.152	0.0239
0.1592	0.035	0.1592	0.0313	0.1592	0.0292	0.1592	0.0285	0.1592	0.0278	0.1592	0.0265	0.1592	0.0252
0.1668	0.035	0.1668	0.0313	0.1668	0.0299	0.1668	0.0291	0.1668	0.0284	0.1668	0.0273	0.1668	0.026
0.1748	0.0423	0.1748	0.0359	0.1748	0.0325	0.1748	0.0297	0.1748	0.0285	0.1748	0.0275	0.1748	0.0262
0.1831	0.0536	0.1831	0.0446	0.1831	0.0399	0.1831	0.0359	0.1831	0.0325	0.1831	0.0279	0.1831	0.0266
0.1918	0.0578	0.1918	0.0479	0.1918	0.0426	0.1918	0.0382	0.1918	0.0353	0.1918	0.0328	0.1918	0.0303
0.2009	0.0578	0.2009	0.0479	0.2009	0.0426	0.2009	0.0398	0.2009	0.0381	0.2009	0.0353	0.2009	0.032
0.2105	0.0578	0.2105	0.0479	0.2105	0.0426	0.2105	0.0398	0.2105	0.0381	0.2105	0.0361	0.2105	0.0339
0.2205	0.0578	0.2205	0.0479	0.2205	0.044	0.2205	0.0427	0.2205	0.0414	0.2205	0.0391	0.2205	0.0363
0.231	0.0581	0.231	0.0501	0.231	0.0473	0.231	0.0449	0.231	0.0433	0.231	0.0405	0.231	0.0371
0.242	0.0626	0.242	0.0557	0.242	0.0519	0.242	0.0485	0.242	0.0454	0.242	0.0416	0.242	0.0385
0.2535	0.0718	0.2535	0.0633	0.2535	0.0588	0.2535	0.055	0.2535	0.0519	0.2535	0.047	0.2535	0.0422
0.2656	0.0718	0.2656	0.0633	0.2656	0.0588	0.2656	0.055	0.2656	0.0519	0.2656	0.047	0.2656	0.0422
0.2783	0.0718	0.2783	0.0633	0.2783	0.0588	0.2783	0.055	0.2783	0.0519	0.2783	0.047	0.2783	0.0422
0.2915	0.0748	0.2915	0.0674	0.2915	0.0634	0.2915	0.0599	0.2915	0.057	0.2915	0.0521	0.2915	0.0463
0.3054	0.088	0.3054	0.0765	0.3054	0.0702	0.3054	0.0654	0.3054	0.0616	0.3054	0.0554	0.3054	0.0485
0.3199	0.0924	0.3199	0.08	0.3199	0.0733	0.3199	0.0676	0.3199	0.0627	0.3199	0.0554	0.3199	0.0485
0.3352	0.1119	0.3352	0.091	0.3352	0.0811	0.3352	0.0736	0.3352	0.0677	0.3352	0.0594	0.3352	0.0521
0.3511	0.1269	0.3511	0.096	0.3511	0.0832	0.3511	0.0737	0.3511	0.0685	0.3511	0.0607	0.3511	0.0533
0.3678	0.1269	0.3678	0.096	0.3678	0.0854	0.3678	0.0784	0.3678	0.0725	0.3678	0.0632	0.3678	0.0538

0.3853	0.1269	0.3853	0.0967	0.3853	0.0889	0.3853	0.0828	0.3853	0.0774	0.3853	0.068	0.3853	0.0577
0.4037	0.1558	0.4037	0.1134	0.4037	0.0984	0.4037	0.0868	0.4037	0.0777	0.4037	0.068	0.4037	0.0577
0.4229	0.1558	0.4229	0.12	0.4229	0.1046	0.4229	0.0924	0.4229	0.0826	0.4229	0.0685	0.4229	0.0577
0.4431	0.1796	0.4431	0.138	0.4431	0.1181	0.4431	0.1026	0.4431	0.0904	0.4431	0.073	0.4431	0.0635
0.4642	0.1796	0.4642	0.138	0.4642	0.1181	0.4642	0.1026	0.4642	0.0907	0.4642	0.0774	0.4642	0.0671
0.4863	0.1988	0.4863	0.1472	0.4863	0.1254	0.4863	0.1094	0.4863	0.0976	0.4863	0.0828	0.4863	0.0708
0.5094	0.1988	0.5094	0.1472	0.5094	0.1254	0.5094	0.1094	0.5094	0.1005	0.5094	0.0887	0.5094	0.0766
0.5337	0.1988	0.5337	0.1472	0.5337	0.1254	0.5337	0.1132	0.5337	0.1066	0.5337	0.0963	0.5337	0.0852
0.5591	0.1988	0.5591	0.1472	0.5591	0.1254	0.5591	0.1132	0.5591	0.1071	0.5591	0.0989	0.5591	0.0884
0.5857	0.2009	0.5857	0.1489	0.5857	0.127	0.5857	0.1132	0.5857	0.1071	0.5857	0.0989	0.5857	0.0884
0.6136	0.2117	0.6136	0.1492	0.6136	0.1286	0.6136	0.116	0.6136	0.1077	0.6136	0.0989	0.6136	0.0884
0.6428	0.2117	0.6428	0.162	0.6428	0.1468	0.6428	0.1344	0.6428	0.1242	0.6428	0.1094	0.6428	0.0956
0.6734	0.2463	0.6734	0.168	0.6734	0.1527	0.6734	0.1421	0.6734	0.1328	0.6734	0.1174	0.6734	0.101
0.7055	0.2463	0.7055	0.1736	0.7055	0.1527	0.7055	0.1421	0.7055	0.1328	0.7055	0.1175	0.7055	0.1013
0.7391	0.2463	0.7391	0.2014	0.7391	0.1797	0.7391	0.1616	0.7391	0.1463	0.7391	0.1236	0.7391	0.1129
0.7743	0.3234	0.7743	0.2014	0.7743	0.1797	0.7743	0.1646	0.7743	0.1516	0.7743	0.134	0.7743	0.1268
0.8111	0.3234	0.8111	0.2195	0.8111	0.1922	0.8111	0.1747	0.8111	0.1629	0.8111	0.1485	0.8111	0.1372
0.8497	0.3234	0.8497	0.2195	0.8497	0.1962	0.8497	0.1798	0.8497	0.1658	0.8497	0.1485	0.8497	0.1406
0.8902	0.3234	0.8902	0.2211	0.8902	0.201	0.8902	0.1842	0.8902	0.1702	0.8902	0.1486	0.8902	0.1489
0.9326	0.4198	0.9326	0.2792	0.9326	0.2383	0.9326	0.2146	0.9326	0.1992	0.9326	0.1804	0.9326	0.1644
0.977	0.4198	0.977	0.2792	0.977	0.2504	0.977	0.2316	0.977	0.2163	0.977	0.1944	0.977	0.1753
1.0235	0.4198	1.0235	0.2792	1.0235	0.2504	1.0235	0.2316	1.0235	0.2191	1.0235	0.2007	1.0235	0.1804
1.0723	0.4198	1.0723	0.3095	1.0723	0.2808	1.0723	0.2575	1.0723	0.2389	1.0723	0.2132	1.0723	0.189
1.1233	0.6844	1.1233	0.3935	1.1233	0.3182	1.1233	0.2754	1.1233	0.2456	1.1233	0.2132	1.1233	0.189
1.1768	0.6844	1.1768	0.4309	1.1768	0.3456	1.1768	0.3014	1.1768	0.27	1.1768	0.2317	1.1768	0.2005
1.2328	0.6844	1.2328	0.4309	1.2328	0.3555	1.2328	0.3182	1.2328	0.2875	1.2328	0.242	1.2328	0.2184
1.2916	0.6844	1.2916	0.4367	1.2916	0.3871	1.2916	0.3464	1.2916	0.3129	1.2916	0.2714	1.2916	0.2384
1.353	0.7599	1.353	0.4415	1.353	0.3871	1.353	0.362	1.353	0.3421	1.353	0.3087	1.353	0.2704
1.4175	0.7599	1.4175	0.4716	1.4175	0.4059	1.4175	0.3841	1.4175	0.3646	1.4175	0.3316	1.4175	0.2943
1.485	0.7599	1.485	0.4772	1.485	0.4445	1.485	0.416	1.485	0.3917	1.485	0.3508	1.485	0.3069
1.5557	0.7599	1.5557	0.5063	1.5557	0.4753	1.5557	0.4507	1.5557	0.4289	1.5557	0.3928	1.5557	0.3496
1.6298	0.9291	1.6298	0.5737	1.6298	0.4806	1.6298	0.4629	1.6298	0.4471	1.6298	0.4181	1.6298	0.3789
1.7074	0.9291	1.7074	0.5737	1.7074	0.522	1.7074	0.4969	1.7074	0.4744	1.7074	0.4365	1.7074	0.4026
1.7887	0.9291	1.7887	0.6146	1.7887	0.5734	1.7887	0.5478	1.7887	0.5228	1.7887	0.4764	1.7887	0.4212
1.8738	0.9814	1.8738	0.7586	1.8738	0.696	1.8738	0.6464	1.8738	0.6012	1.8738	0.5264	1.8738	0.453
1.963	1.2411	1.963	0.9059	1.963	0.8076	1.963	0.7419	1.963	0.6881	1.963	0.5999	1.963	0.5004
2.0565	1.6176	2.0565	1.0647	2.0565	0.8875	2.0565	0.7869	2.0565	0.723	2.0565	0.6342	2.0565	0.5339
2.1544	1.6176	2.1544	1.0647	2.1544	0.9533	2.1544	0.8819	2.1544	0.8219	2.1544	0.7158	2.1544	0.5935
2.257	1.8429	2.257	1.2512	2.257	1.1235	2.257	1.0205	2.257	0.9348	2.257	0.8052	2.257	0.6626

2.3645	4.0699	2.3645	1.7554	2.3645	1.3289	2.3645	1.0963	2.3645	0.9746	2.3645	0.8303	2.3645	0.6835
2.4771	4.0699	2.4771	1.7554	2.4771	1.3554	2.4771	1.1336	2.4771	0.9787	2.4771	0.8493	2.4771	0.746
2.595	4.0699	2.595	1.7554	2.595	1.3554	2.595	1.1336	2.595	0.9787	2.595	0.8889	2.595	0.7961
2.7186	4.0699	2.7186	1.7554	2.7186	1.4847	2.7186	1.3257	2.7186	1.1963	2.7186	1.0049	2.7186	0.8443
2.848	4.0699	2.848	1.8374	2.848	1.6183	2.848	1.4326	2.848	1.2673	2.848	1.0698	2.848	0.9235
2.9836	4.0699	2.9836	2.3349	2.9836	1.9127	2.9836	1.6189	2.9836	1.412	2.9836	1.1782	2.9836	1.0145
3.1257	4.0699	3.1257	2.3349	3.1257	1.9127	3.1257	1.6189	3.1257	1.412	3.1257	1.1782	3.1257	1.0257
3.2745	4.0699	3.2745	2.3349	3.2745	1.9127	3.2745	1.6189	3.2745	1.412	3.2745	1.1782	3.2745	1.0257
3.4305	3.9252	3.4305	2.3349	3.4305	1.9127	3.4305	1.6189	3.4305	1.412	3.4305	1.1782	3.4305	1.0257
3.5938	3.9252	3.5938	2.3349	3.5938	1.9127	3.5938	1.6189	3.5938	1.412	3.5938	1.1782	3.5938	1.0257
3.7649	3.804	3.7649	2.2244	3.7649	1.7791	3.7649	1.55	3.7649	1.3773	3.7649	1.1417	3.7649	1.0257
3.9442	2.2828	3.9442	1.6635	3.9442	1.4979	3.9442	1.355	3.9442	1.2502	3.9442	1.0633	3.9442	0.9604
4.132	2.2248	4.132	1.685	4.132	1.5218	4.132	1.4035	4.132	1.3092	4.132	1.1637	4.132	1.0062
4.3288	2.288	4.3288	1.685	4.3288	1.5218	4.3288	1.4071	4.3288	1.3287	4.3288	1.2037	4.3288	1.0665
4.5349	2.6268	4.5349	1.8325	4.5349	1.6161	4.5349	1.4583	4.5349	1.3356	4.5349	1.2037	4.5349	1.0858
4.7508	2.8442	4.7508	1.9334	4.7508	1.7955	4.7508	1.6875	4.7508	1.5786	4.7508	1.3925	4.7508	1.1956
4.977	2.9945	4.977	2.4197	4.977	2.1964	4.977	2.0129	4.977	1.8562	4.977	1.6043	4.977	1.3684
5.214	4.8895	5.214	3.196	5.214	2.7298	5.214	2.4134	5.214	2.1805	5.214	1.8538	5.214	1.5482
5.4623	6.643	5.4623	3.6241	5.4623	3.0266	5.4623	2.6787	5.4623	2.4595	5.4623	2.1662	5.4623	1.7974
5.7224	9.9168	5.7224	4.9346	5.7224	3.9171	5.7224	3.2471	5.7224	2.7804	5.7224	2.1672	5.7224	1.9541
5.9948	9.9168	5.9948	4.9346	5.9948	3.9171	5.9948	3.2471	5.9948	2.7804	5.9948	2.1672	5.9948	1.9541
6.2803	9.9168	6.2803	4.9346	6.2803	3.9685	6.2803	3.2662	6.2803	2.8301	6.2803	2.2953	6.2803	1.9935
6.5793	10.3887	6.5793	5.2245	6.5793	4.0457	6.5793	3.2662	6.5793	2.8301	6.5793	2.2953	6.5793	2.1124
6.8926	10.3887	6.8926	5.2245	6.8926	4.0457	6.8926	3.2662	6.8926	2.8301	6.8926	2.2953	6.8926	2.1124
7.2208	10.3887	7.2208	5.2245	7.2208	4.0457	7.2208	3.2662	7.2208	2.8301	7.2208	2.2953	7.2208	2.1124
7.5646	10.3887	7.5646	5.2245	7.5646	4.0457	7.5646	3.2662	7.5646	2.8301	7.5646	2.2953	7.5646	2.1124
7.9248	10.3887	7.9248	5.2245	7.9248	4.0457	7.9248	3.2662	7.9248	2.8301	7.9248	2.2953	7.9248	2.1124
8.3022	10.3887	8.3022	5.2245	8.3022	4.0457	8.3022	3.2662	8.3022	2.8301	8.3022	2.2953	8.3022	2.0603
8.6975	7.3975	8.6975	3.974	8.6975	3.3379	8.6975	2.9621	8.6975	2.6815	8.6975	2.2953	8.6975	1.8954
9.1116	7.3975	9.1116	3.5465	9.1116	2.8359	9.1116	2.4675	9.1116	2.2993	9.1116	2.0155	9.1116	1.7008
9.5455	6.9962	9.5455	3.4966	9.5455	2.8359	9.5455	2.4192	9.5455	2.1154	9.5455	1.729	9.5455	1.5076
10	4.0615	10	2.522	10	2.1855	10	1.9525	10	1.7893	10	1.5795	10	1.3631
10.4762	3.1699	10.4762	1.9404	10.4762	1.776	10.4762	1.6394	10.4762	1.5179	10.4762	1.337	10.4762	1.2021
10.975	1.9474	10.975	1.5462	10.975	1.4306	10.975	1.3319	10.975	1.272	10.975	1.1863	10.975	1.1066
11.4976	1.5165	11.4976	1.3046	11.4976	1.2807	11.4976	1.2422	11.4976	1.2023	11.4976	1.1318	11.4976	1.0488
12.045	1.2489	12.045	1.1132	12.045	1.0935	12.045	1.0811	12.045	1.0607	12.045	1.0187	12.045	0.9603
12.6186	1.1761	12.6186	1.0559	12.6186	1.0122	12.6186	0.9796	12.6186	0.9552	12.6186	0.9329	12.6186	0.8986
13.2194	1.1222	13.2194	1.0329	13.2194	1.0014	13.2194	0.9756	13.2194	0.9532	13.2194	0.9153	13.2194	0.8706
13.8489	1.1222	13.8489	1.0163	13.8489	0.9733	13.8489	0.9402	13.8489	0.9132	13.8489	0.8719	13.8489	0.8283

14.5083	0.9999	14.5083	0.9199	14.5083	0.8835	14.5083	0.8538	14.5083	0.8294	14.5083	0.7998	14.5083	0.7902
15.1991	0.9904	15.1991	0.8457	15.1991	0.8202	15.1991	0.8039	15.1991	0.7915	15.1991	0.7732	15.1991	0.7648
15.9228	0.8007	15.9228	0.7875	15.9228	0.7748	15.9228	0.7634	15.9228	0.7533	15.9228	0.7476	15.9228	0.7458
16.681	0.7564	16.681	0.745	16.681	0.7406	16.681	0.7383	16.681	0.7367	16.681	0.7341	16.681	0.7307
17.4753	0.7396	17.4753	0.7337	17.4753	0.728	17.4753	0.7234	17.4753	0.7236	17.4753	0.7215	17.4753	0.7171
18.3074	0.7396	18.3074	0.7337	18.3074	0.728	18.3074	0.7222	18.3074	0.7173	18.3074	0.7102	18.3074	0.7033
19.1791	0.7396	19.1791	0.7105	19.1791	0.7035	19.1791	0.6983	19.1791	0.6949	19.1791	0.6904	19.1791	0.6864
20.0923	0.6835	20.0923	0.6497	20.0923	0.6558	20.0923	0.6604	20.0923	0.6634	20.0923	0.6669	20.0923	0.6687
21.049	0.6556	21.049	0.6476	21.049	0.6466	21.049	0.6466	21.049	0.6494	21.049	0.6529	21.049	0.6557
22.0513	0.6556	22.0513	0.6476	22.0513	0.6466	22.0513	0.6461	22.0513	0.646	22.0513	0.6462	22.0513	0.647
23.1013	0.6334	23.1013	0.6388	23.1013	0.6393	23.1013	0.6393	23.1013	0.6394	23.1013	0.6395	23.1013	0.6399
24.2013	0.6321	24.2013	0.6316	24.2013	0.6324	24.2013	0.6327	24.2013	0.6329	24.2013	0.6332	24.2013	0.6335
25.3536	0.6321	25.3536	0.6263	25.3536	0.6267	25.3536	0.627	25.3536	0.6273	25.3536	0.6276	25.3536	0.6279
26.5609	0.6191	26.5609	0.6223	26.5609	0.6227	26.5609	0.6229	26.5609	0.6229	26.5609	0.623	26.5609	0.6231
27.8256	0.618	27.8256	0.617	27.8256	0.6181	27.8256	0.6185	27.8256	0.6187	27.8256	0.6189	27.8256	0.6189
29.1505	0.618	29.1505	0.617	29.1505	0.6164	29.1505	0.6159	29.1505	0.6157	29.1505	0.6154	29.1505	0.6151
30.5386	0.612	30.5386	0.612	30.5386	0.612	30.5386	0.6119	30.5386	0.6118	30.5386	0.6117	30.5386	0.6115
31.9927	0.6082	31.9927	0.6083	31.9927	0.6083	31.9927	0.6083	31.9927	0.6082	31.9927	0.6082	31.9927	0.6081
33.516	0.605	33.516	0.6051	33.516	0.6051	33.516	0.6051	33.516	0.6051	33.516	0.6051	33.516	0.605
35.1119	0.6022	35.1119	0.6022	35.1119	0.6022	35.1119	0.6022	35.1119	0.6022	35.1119	0.6022	35.1119	0.6022
36.7838	0.5997	36.7838	0.5997	36.7838	0.5997	36.7838	0.5997	36.7838	0.5997	36.7838	0.5997	36.7838	0.5997
38.5353	0.5974	38.5353	0.5974	38.5353	0.5974	38.5353	0.5974	38.5353	0.5974	38.5353	0.5974	38.5353	0.5974
40.3702	0.5953	40.3702	0.5953	40.3702	0.5953	40.3702	0.5953	40.3702	0.5953	40.3702	0.5953	40.3702	0.5953
42.2924	0.5934	42.2924	0.5934	42.2924	0.5934	42.2924	0.5934	42.2924	0.5934	42.2924	0.5934	42.2924	0.5935
44.3062	0.5917	44.3062	0.5917	44.3062	0.5917	44.3062	0.5917	44.3062	0.5917	44.3062	0.5917	44.3062	0.5917
46.4159	0.5901	46.4159	0.5901	46.4159	0.5901	46.4159	0.5901	46.4159	0.5901	46.4159	0.5901	46.4159	0.5902
48.626	0.5886	48.626	0.5886	48.626	0.5886	48.626	0.5886	48.626	0.5886	48.626	0.5887	48.626	0.5887
50.9414	0.5873	50.9414	0.5873	50.9414	0.5873	50.9414	0.5873	50.9414	0.5873	50.9414	0.5873	50.9414	0.5874

ATTACHMENT #2

BNI TLP Coupled Structural Analysis Draft Report

Memorandum

To:	Le, E.	MS5-H	Date: June 15, 2006
	Minichiello, J.	MS6-N2	
	Ocoma, E.C.	MS6-N1	
From:	E.O. Weiner		CCN: 122811
Ext:	371 3150		

Subject: **PT TLP COUPLED STRUCTURAL ANALYSIS**

Reference: SCN 24590-PTF-3PS-MEVV-T0001 Rev 1.

Attached is the coupled analysis draft as called for in Appendix U of the reference and containing supplemental tasks to date.

The draft has been checked.

This CCN supercedes CCN 134137.

E.O. Weiner
Structural Analyst
CSA

Attachment Draft: PT TLP Coupled Analysis for Evaluation of Nozzle Loads

Distribution

Copy Coverage	MSIN
Jeffrey, A.H.	MS5-K
Power, J.	MS5-K
Julyk, J.	MS5-I
PDC	MS9-A

BY: E.O. Weiner
DATE: 6/15/06

SUBJECT: PT TLP Coupled Structural Analysis for Evaluation of Nozzle Loads

Contents

1 Objective 2
2 Inputs 3
3 Background 3
4 Applicable Codes and Standards 4
5 Methodology 4
5.1 Piping Models 4
5.2 Vessel and Support Frame Models 4
5.3 Merging of the Models 4
5.4 Seismic Analysis 6
5.5 SAP2000 Results Cases 9
5.6 Analysis Cases 9
6 Assumptions 11
7 Calculations 11
8 Results and Conclusions 11
9 References 36

BY: E.O. Weiner
DATE:6/15/06

SUBJECT: PT TLP Coupled Structural Analysis for Evaluation of Nozzle Loads

1 Objective

The objective of this analysis is to describe the effects of coupling on the nozzle loads of the TLP (Treated LAW Evaporation Process) arrangement consisting of a separator, pump, reboiler and major connecting piping. Load considered are deadweight, seismic and thermal. Nozzle loads are compared for coupled and uncoupled analysis and anchor movements are compiled. The first three analysis cases were specified in Ref. SCN, Section 8. The remainder evolved as requested by the participants of the study.

Analysis Cases

Case	Type	Pump Mount	Nozzle Flexibility	Other
8a	Uncoupled	Fixed	No	
8b	Coupled	Free EW & NS	No	
8c	Coupled	Free EW & NS	Yes	
8d	Coupled	Free EW	Yes	
8e	Uncoupled	Fixed	Yes	
8f	Coupled	Free EW	Yes	No Grayloc weights
8g	Coupled	Free EW	Yes	Removed separator top support
8h	Coupled	Free EW	Yes	Pre-RGM spectra
8i	Coupled	Free EW	Yes	NS support at top of 2nd elbow of reboiler discharge line
8j	Coupled	Fixed	Yes	8i plus pump fixed to frame
8k	Coupled	Free EW	Yes	8i plus replacement of separator discharge NS constraint with NS restraint on far end of 2nd elbow from pump inlet line.
8L	Coupled	Fixed	Yes	8k with fixed pump mount
8o	Coupled	Free EW	Yes	8i with 10.5 Kip upward load support on reboiler discharge line to represent a spring can support. Piping and vessels have 131 F temperature instead of 150 F.
8p	Coupled	Gapped	Yes	8i with 1/8" gap at west pump support point. Piping and vessels have 131 F temperature instead of 150 F
8q	Coupled	Gapped	Yes	8p with 1/16" gap instead of 1/8".
8r	Coupled	Gapped	Yes	8q with 1/32" gap.
8s	Coupled	Gapped	Yes	8r with Elev 00' spectra and 10.5 Kip upward load support on reboiler discharge line.

BY: E.O. Weiner
DATE: 6/15/06

SUBJECT: PT TLP Coupled Structural Analysis for Evaluation of Nozzle Loads

2 Inputs

Design Inputs

Item	Reference
Piping arrangement & properties	Ref SCN, Item 10c. Item includes piping isometrics with restraints, Grayloc fitting locations and weights. NS restraint at reboiler discharge was omitted per Ref. ECO
Piping content	Specific gravity 1.57
Separator model	GTSTRUDL (Ref GTS) model, from analysis of Ref A472
Reboiler model	GTSTRUDL model, from analysis of Ref A402
Pump frame	Fig 2 of Ref A603
Pump arrangement	Ref A647B
Pump weight & cg	Section 3.0 of Ref A603
Design temperatures	Frames 113 F Vessels, piping 150 F Reference 75 F
Seismic inertial loading	Ref SCN Item 10b with ISRS attachments. Damping = 3%.
Seismic drift loading	Drift of Elev 56' relative to Elev 00' is 0.06" EW, 0.23" NS, 0.03" Vertical per Ref. SCN Item 10d.
Material properties	Stainless steel Young's Modulus 28e6 psi Poisson's ratio 0.3 Coeff. Thermal Exp 9.25e-6 F^{-1} Density 0.284 lb/in^3
Nozzle flexibility for separator & reboiler	Vendor supplied. See table below.

Nozzle Stiffness Components

Component	Vessel: Nozzle:	Separator Dischg	Separator Inlet	Reboiler 24"	Reboiler 18"	Pump All
Axial	lb/in	9.39E+06	4.97E+05	7.78E+05	3.24E+06	1e9
Lateral	lb/in			1.00E+09	1.00E+09	1e9
Torsional	lb/in/rad	4.02E+09	3.27E+09	1.00E+09	1.00E+09	1e12
Outplane-rotational	lb/in/rad	2.15E+09	3.83E+07	9.95E+07	2.54E+08	1e12
Inplane-rotational	lb/in/rad	2.15E+09	2.71E+08	4.74E+08	4.52E+08	1e12

Notes
1. Unspecified lateral components set to 1e9. Rotational components given as 1e9 were set to 1e12, because there were flexible values given on the order of 1e9.
2. 24" reboiler data apply to inlet and discharge. 18" nozzle is not connected to piping.
3. Separator and reboiler components provided by vendor. Pump components are rigid per tee data of B31.3.

3 Background

Uncoupled analysis typically offers more restraint to thermal expansion than the more complex coupled analysis. Therefore, coupled analysis is expected to have lower nozzle loads.

BY: E.O. Weiner
DATE: 6/15/06

SUBJECT: PT TLP Coupled Structural Analysis for Evaluation of Nozzle Loads

4 Applicable Codes and Standards

ASME B31.3-2004, ASME Code for Process Piping.

5 Methodology

Models for the separator, reboiler, pump and piping were imported into SAP2000, Ref SAP, as separate models and then merged into one model.

5.1 Piping Models

Piping models were generated with an Excel VBA routine that takes keypoints and tangent intersections and produces joints and straight frame members representing straight runs and elbows with refinement. The elbows are modeled with 10° segments, and straight runs are limited to 2 ft. The data is imported into SAP2000, and the loadings, materials and sections are input graphically. Each of the five piping runs is a separate model.

Elbow flexibility (a section property) was used with the bending stiffnesses of the straight sections in the elbow and not with the torsional stiffness. The flexibility factor for the 24" OD x 0.375"T long radius elbow for both in-plane and out-of-plane is 16.27 (Ref B31.3 App D).

5.2 Vessel and Support Frame Models

The separator and reboiler vessels and their frames were provided as two GTSTRUDL models that were imported to SAP2000. The pump and frame model was developed from scratch.

5.3 Merging of the Models

The coupled model was obtained by merger of the individual models achieved by import after consistent positioning controlled by the piping arrangement. Short links between vessels and piping were added with the given nozzle stiffness properties. The merged model is shown below in an extruded view. The separator and reboiler vessels as well as the pump motor are shown as equivalent stick elements. The cross-sectional dimensions are scaled to solid cross sectional area. If they were scaled to radii of gyration, they would overwhelm the rest of the model. The XYZ coordinate triad shown in the figure gives the orientation of the SAP2000 global coordinate system that is used for reporting global results such as anchor movements.

BY: E.O. Weiner
DATE: 6/15/06

SUBJECT: PT TLP Coupled Structural Analysis for Evaluation of Nozzle Loads

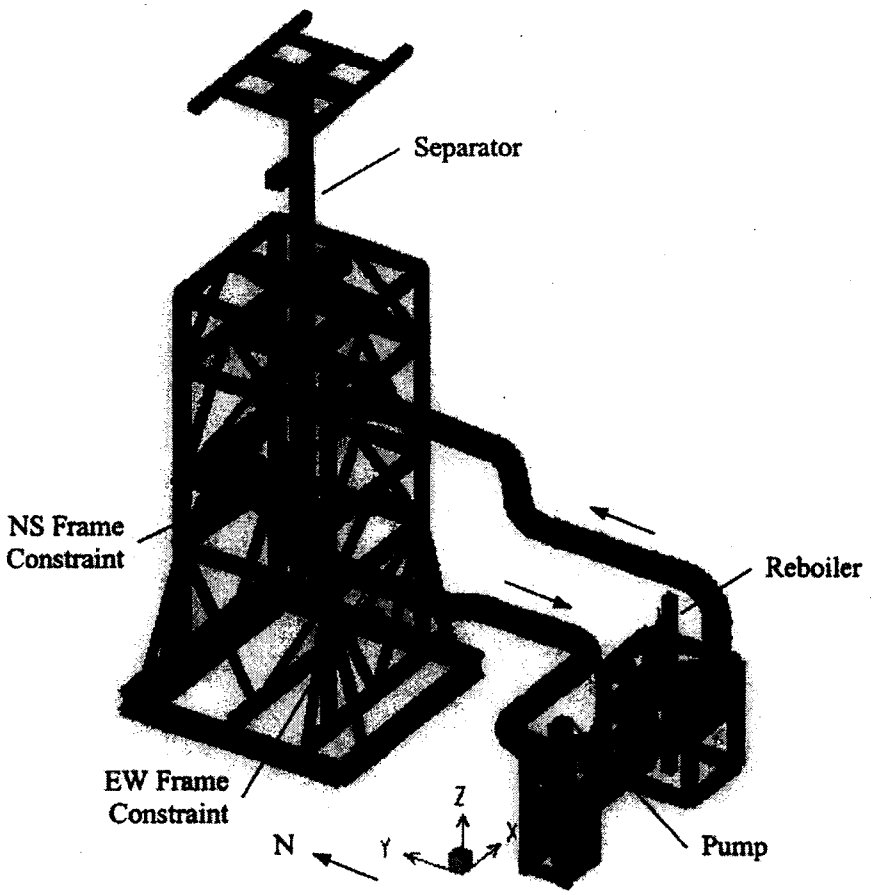

Merged Model

Two piping constraints to the separator frame are shown. They are not detailed in Ref SCN. For the constraint nearest the discharge nozzle, a weightless X-brace was placed in the north side of the frame to get a joint in line with the desired point of constraint. A TS10x10x5/8 section was then brought to the piping to provide a NS constraint. The choice of member end releases in the X-brace provides the NS support required but does not affect the inplane behavior of the north side of the frame. The EW constraint was implemented by a simple constraint condition to a joint in the center of a nearby EW beam. The frames are supported at their bases. The separator is also supported at the top. The piping restraints (to ground) are shown in the following piping restraint diagram.

BY: E.O. Weiner
DATE: 6/15/06

SUBJECT: PT TLP Coupled Structural Analysis for Evaluation of Nozzle Loads

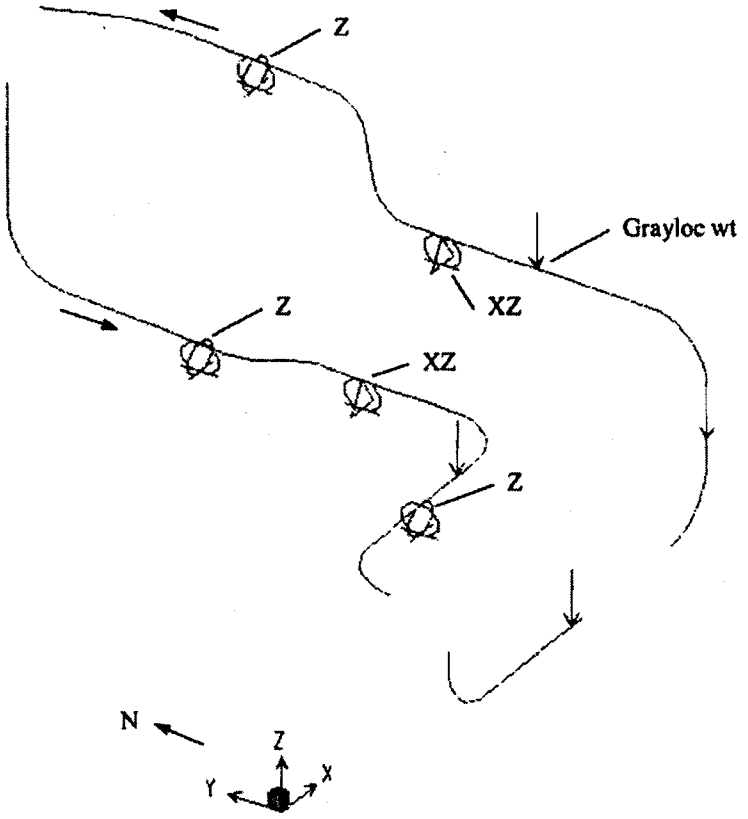

Piping Restraints and Grayloc Locations (Case 8d)

5.4 Seismic Analysis

Seismic data and parameters used in the analysis are as follows.

Seismic Parameters

Item	Description
Modal Analysis	Load Directed Ritz method
Inertia	From deadweight loading
Ritz Vectors	Linear in each direction: 8 Rotational about each axis: 3
Number of Modes	24
Damping	3%
Frequency Range	3.8 - 71 Hz (Case 8d)
Mass Participation	X = 95%, Y = 97%, Z = 92% (Case 8d)
Seismic Analysis Method	Response Spectrum Analysis
Modal Combination	CQC
Loading Directions	EW = X, NS = Y, Vert = Z
Directional Combination	SRSS.
Drift Combination	SRSS.

BY: E.O. Weiner
DATE:6/15/06

SUBJECT: PT TLP Coupled Structural Analysis for Evaluation of Nozzle Loads

Enveloped response spectra are shown below. The RGM data is that specified in Item 10b of the SCN, but the spectrum of Fig 407 was omitted in the envelope since there is no piping restraint normal to the wall. The Pre-RGM data precedes this data and corresponds to the same figure numbers in Ref. 00005A.

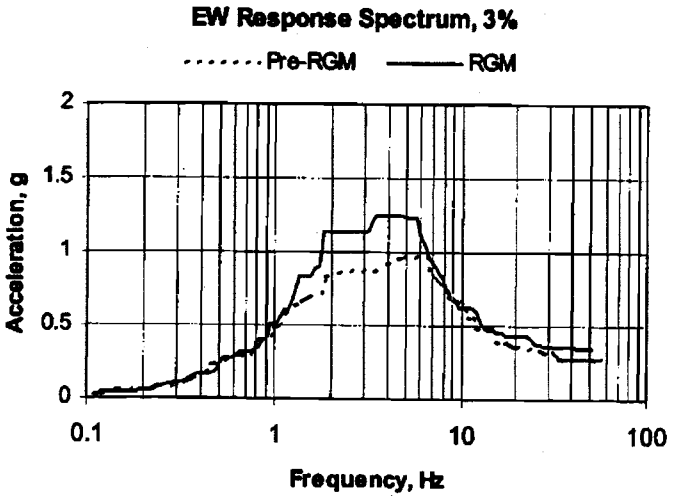

BY: E.O. Weiner
DATE:6/15/06

SUBJECT: PT TLP Coupled Structural Analysis for Evaluation of Nozzle Loads

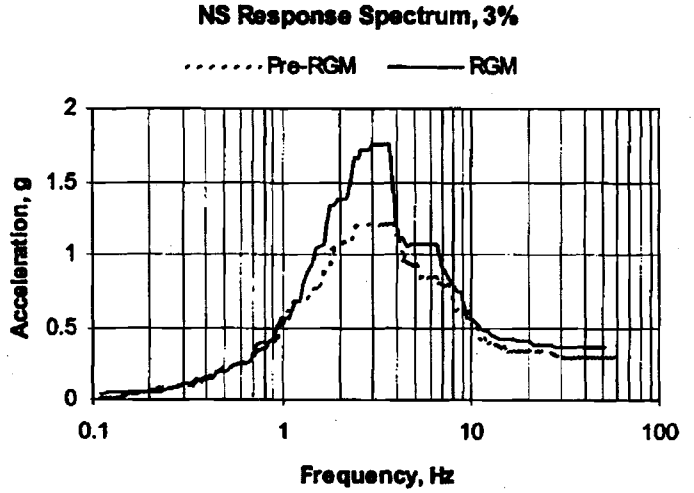

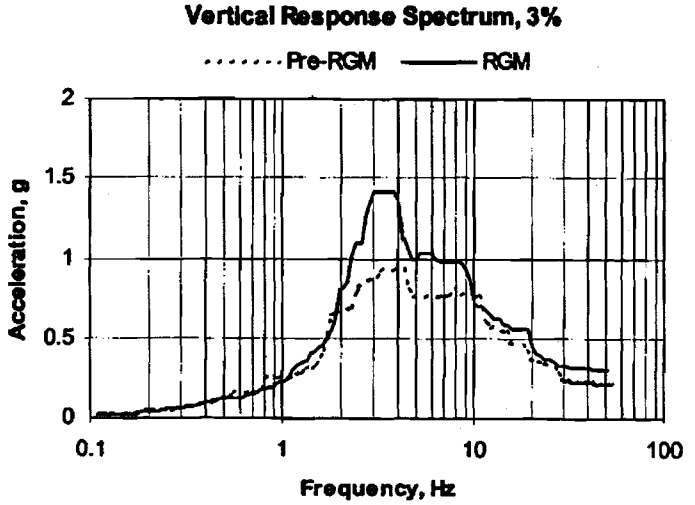

Case 8s used unenveloped RGM Elev 00 spectra that essentially leave out the Elev 56 effects. The vertical spectrum is the same as before. The horizontal spectra are those of Figures 21E and 22E of Ref. SCN, Item 10.b, and are shown below.

BY: E.O. Weiner
DATE: 6/15/06

SUBJECT: PT TLP Coupled Structural Analysis for Evaluation of Nozzle Loads

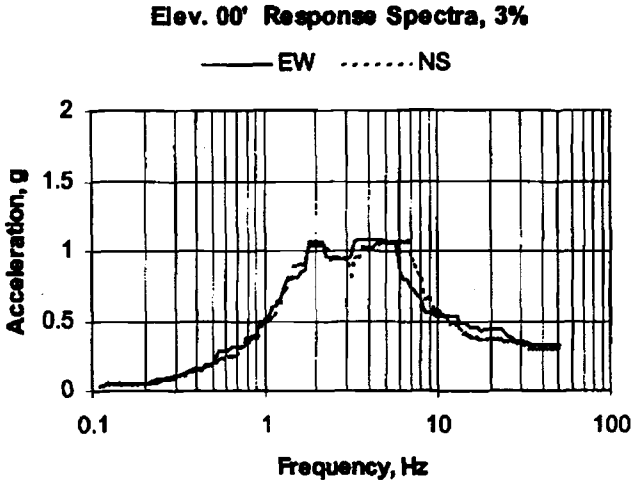

The static drift solution has the prescribed displacements at the top of the separator and 1/3 of those displacements at the piping restraints.

5.5 SAP2000 Results Cases

SAP2000 results cases (analysis cases and combinations) are as follows.

Results Cases

Case	Description
D	Deadweight
T	Thermal
MODAL	Modal analysis
RS	Response spectrum analysis
Dr	Drift
E	Seismic = SRSS of Dr and RS

5.6 Analysis Cases

Separate models were created for the various analysis cases. Each model is a modification of the merged model that was set up for Case 8d with the RGM spectra. The first three are those of Ref. SCN, and the remainders were subsequently requested by the participants of the study (J. Minichiello, E. Le, E. Ocoma & J. Julyk).

BY: E.O. Weiner
DATE: 6/15/06

SUBJECT: PT TLP Coupled Structural Analysis for Evaluation of Nozzle Loads

Analysis Case Modifications

Analysis Case	Parent Case	Model Changes Relative to Parent Case
8a	8e	Relative to the final model of 8e, the nozzle links were assigned stiff properties.
8b	8d	Nozzle links were assigned stiff properties. Pump was set free in the horizontal plane.
8c	8d	Pump was set free in the horizontal plane.
8d		Parent model
8e	8d	Nozzle links were separated from the vessels but retained with the piping, thus isolating the runs between the pump, reboiler and separator. Vessel joints previously connected to the links were left free. Analysis provides anchor movements at these vessel-side joints. The deadweight and thermal movements were input as prescribed displacements on the piping-side joints. The seismic and drift displacements at all piping supports are input as zero. The vessels and frames were deleted to avoid obscuring mass participation of the piping, and the model was reanalyzed.
8f	8d	Removed Grayloc weights. This affects deadweight and seismic inertia.
8dB	8d	Constrained frame bases and top support to single joints for reporting reactions needed to compare with Case 8g.
8g	8dB	Removed separator top support.
8h	8d	Reread spectral functions with pre-RGM data.
8i	8d	Added NS restraint at top of 2nd elbow of reboiler discharge line.
8j	8i	Fixed the pump to the frame.
8k	8i	Replaced separator discharge NS frame constraint with NS ground restraint on far end of 2nd elbow from pump inlet.
8L	8k	Fixed the pump to the frame.
8o	8i	Added 10.5 Kip upward load support on reboiler discharge line between the first and second elbow from the reboiler. This does not affect inertia for seismic loading. Piping and vessels have 131 F temperature instead of 150 F.
8p	8i	Modeled 1/8" gap in EW direction at west pump support point. The gap was modeled by fixing the pump to the frame at this support and introducing a thermal load below reference on the support arm. The gap is the free thermal expansion. A large expansion coefficient was used to avoid swamping temperature contour plots used for checking. Piping and vessels have 131 F temperature instead of 150 F.
8q	8p	Reduced 1/8" gap to 1/16".
8r	8q	Reduced gap to 1/32".
8s	8r	Used Elev 00' spectra and 10.5 Kip upward load support on reboiler discharge line.

BY: E.O. Weiner
DATE:6/15/06

SUBJECT: PT TLP Coupled Structural Analysis for Evaluation of Nozzle Loads

6 Assumptions

Item	Assumption
Pump support	Various cases of pump fixity to the frame were considered, including gaps.
Nozzle stiffness	Vendor provided data, see Inputs section
Vessel & frame geometry, dimensions and weights	Base on preliminary data
Piping arrangement	Base on preliminary data
Weights of Grayloc fittings	Base on preliminary data
Piping constraints near separator discharge	Analyst provided. See Section 5.3.
SAP V&V	Dynamics features not included in Ref SAPVV.

7 Calculations

All calculations are in the SAP2000 system, Version 10. Verification and validation are reported in Ref SAPVV. It is to be noted that this reference does not cover dynamics features of the program.

8 Results and Conclusions

Nozzle loads and anchor movements from the SAP2000 analyses are shown in the following tables.

Results Tables - Description and Location

Table	Purpose	Page
Nozzle Loads	List P, V1, V2, T, M2 & M3 nozzle loads	12
Pump Support Gap Closure Loads	Gap compression loadings in west pump support arm indicate closure status	20
Mid-Elbow Loads	List P, V1, V2, T, M2 & M3 mid-elbow loads	21
RGM vs Pre-RGM Nozzle Loads	Compare RGM & Pre-RGM loads	25
Drift Nozzle Loads	Compare drift effects with total seismic	26
Frame Reactions	Show effect of top frame support on separator	26
Nozzle Displacements	List global nozzle displacements	27
Modal Participation	List mass participation of significant modes	34

BY: E.O. Weiner
DATE:6/15/06

SUBJECT: PT TLP Coupled Structural Analysis for Evaluation of Nozzle Loads

Nozzle Loads

Case	Location		Load	Kip P	Kip V2	Kip V3	in-Kip T	in-Kip M2	in-Kip M3
Case 8a	Pump	Inlet	D	-0.03	0.81	-0.04	-4	-1	55
		Dischg	D	4.27	2.36	0.76	26	-18	25
	Reboiler	Inlet	D	2.38	-3.95	0.76	17	-75	36
		Dischg	D	-0.53	-10.81	0.56	25	8	-275
	Separator	Inlet	D	0.32	-1.01	-0.56	-70	28	39
		Dischg	D	4.87	0.03	0.10	-1	-3	2
	Pump	Inlet	E	1.89	1.27	3.89	9	-109	37
		Dischg	E	1.88	0.62	0.98	13	-21	9
	Reboiler	Inlet	E	2.98	1.73	1.78	12	-43	25
		Dischg	E	7.55	4.30	7.88	473	-159	444
	Separator	Inlet	E	5.39	5.83	15.27	176	-1659	444
		Dischg	E	2.48	1.37	6.19	5	-33	55
	Pump	Inlet	T	-3.41	-2.62	-7.52	124	34	-29
		Dischg	T	-20.91	-70.84	0.51	21	-2	-1918
	Reboiler	Inlet	T	-70.73	-21.27	0.51	21	-46	-1512
		Dischg	T	-1.59	-1.91	5.14	352	-26	9
	Separator	Inlet	T	0.59	-1.00	-5.14	54	559	-84
		Dischg	T	-1.73	3.28	-22.24	16	1288	347
Case 8b	Pump	Inlet	D	0.02	0.64	0.02	2	1	49
		Dischg	D	2.88	-0.02	0.02	0	-6	-29
	Reboiler	Inlet	D	0.00	-5.35	0.02	-5	-3	-95
		Dischg	D	-0.53	-10.69	0.45	21	11	-269
	Separator	Inlet	D	0.28	-0.95	-0.45	-75	15	42
		Dischg	D	4.88	0.02	0.45	-1	-25	1
	Pump	Inlet	E	3.45	2.19	10.04	75	-189	59
		Dischg	E	3.45	15.76	14.51	519	-318	421
	Reboiler	Inlet	E	18.21	4.23	19.59	436	-1968	225
		Dischg	E	11.67	9.72	17.15	1058	-278	704
	Separator	Inlet	E	8.51	9.06	28.16	277	-3010	692
		Dischg	E	5.07	5.53	29.27	110	-1242	544
	Pump	Inlet	T	-1.70	-2.45	-1.91	106	-86	-23
		Dischg	T	-0.15	1.91	-1.70	-19	54	62
	Reboiler	Inlet	T	1.91	-0.14	-1.70	-23	207	-43
		Dischg	T	-1.49	-1.78	4.74	323	-24	9
	Separator	Inlet	T	0.53	-0.96	-4.74	51	512	-82
		Dischg	T	-1.07	0.41	2.57	19	-94	60

Notes: P is axial, positive is tension. V3 is horizontal
V2 has an upward sense, unless P is vertical. Then V2 follows X (east)
M2 & M3 axes follow V2 and V3.
M2 has the sign reversed relative to the SAP2000 local system so all systems are right handed.
M2 reversal reverses the sign of the positive seismic amplitude.

BY: E.O. Weiner
DATE: 6/15/06

SUBJECT: PT TLP Coupled Structural Analysis for Evaluation of Nozzle Loads

Nozzle Loads

Case	Location		Load	Kip P	Kip V2	Kip V3	in-Kip T	in-Kip M2	in-Kip M3
Case 8c	Pump	Inlet	D	0.01	0.65	0.00	2	1	50
		Dischg	D	3.35	0.00	0.01	1	-6	-34
	Reboiler	Inlet	D	0.02	-4.88	0.01	-5	-1	-39
		Dischg	D	-0.62	-10.57	0.37	20	13	-247
	Separator	Inlet	D	0.21	-1.03	-0.37	-74	2	17
		Dischg	D	4.87	0.03	0.29	-1	-15	2
	Pump	Inlet	E	8.50	1.94	27.76	96	-285	50
		Dischg	E	5.23	32.66	13.88	1244	-97	880
	Reboiler	Inlet	E	35.39	6.19	22.76	762	-1432	128
		Dischg	E	10.91	12.12	35.48	2404	-298	560
	Separator	Inlet	E	12.58	8.32	11.65	237	-458	388
		Dischg	E	8.00	9.62	27.69	136	-838	934
	Pump	Inlet	T	-1.11	-2.34	-0.80	100	-89	-21
		Dischg	T	-0.10	0.80	-1.11	-61	19	30
	Reboiler	Inlet	T	0.80	-0.09	-1.11	-32	87	-19
		Dischg	T	-0.96	-0.97	1.75	103	0	13
	Separator	Inlet	T	-0.82	-0.24	-1.75	36	69	-13
		Dischg	T	-0.86	0.06	0.64	16	-14	23
Case 8d	Pump	Inlet	D	-0.05	0.65	-0.11	2	2	50
		Dischg	D	3.37	0.11	0.09	6	-6	-31
	Reboiler	Inlet	D	0.14	-4.86	0.09	-2	-6	-39
		Dischg	D	-0.62	-10.57	0.37	20	14	-247
	Separator	Inlet	D	0.21	-1.03	-0.37	-74	2	17
		Dischg	D	4.85	0.06	0.32	-1	-15	5
	Pump	Inlet	E	4.53	1.93	8.57	80	-165	47
		Dischg	E	2.68	15.59	2.21	316	-85	423
	Reboiler	Inlet	E	19.04	3.57	4.39	157	-74	91
		Dischg	E	9.60	10.77	30.61	2074	-254	497
	Separator	Inlet	E	11.03	7.29	10.12	206	-398	339
		Dischg	E	5.22	3.46	23.88	102	-763	325
	Pump	Inlet	T	-2.01	-2.32	-2.75	103	-64	-19
		Dischg	T	0.21	2.75	-0.10	-6	11	82
	Reboiler	Inlet	T	2.75	0.23	-0.10	6	6	-13
		Dischg	T	-0.96	-0.95	1.73	103	1	13
	Separator	Inlet	T	-0.81	-0.24	-1.73	35	69	-14
		Dischg	T	-1.14	0.58	1.15	20	-5	74

Notes: P is axial, positive is tension. V3 is horizontal
V2 has an upward sense, unless P is vertical. Then V2 follows X (east)
M2 & M3 axes follow V2 and V3.
M2 has the sign reversed relative to the SAP2000 local system so all systems are right handed.
M2 reversal reverses the sign of the positive seismic amplitude.

BY: E.O. Weiner
DATE:6/15/06

SUBJECT: PT TLP Coupled Structural Analysis for Evaluation of Nozzle Loads

Nozzle Loads

Case	Location		Load	Kip P	Kip V2	Kip V3	in-Kip T	in-Kip M2	in-Kip M3
Case 8e	Pump	Inlet	D	-0.03	0.81	-0.04	-4	-1	55
		Dischg	D	3.86	1.30	0.14	11	-3	-2
	Reboiler	Inlet	D	1.32	-4.37	0.14	4	-7	1
		Dischg	D	-0.62	-10.66	0.40	18	12	-253
	Separator	Inlet	D	0.22	-1.08	-0.40	-70	4	16
		Dischg	D	4.86	0.03	0.06	-1	-2	1
	Pump	Inlet	E	2.03	1.40	3.95	9	-110	38
		Dischg	E	2.52	1.24	1.34	24	-31	30
	Reboiler	Inlet	E	1.65	1.44	1.25	22	-5	12
		Dischg	E	8.33	7.76	26.89	1837	-233	426
	Separator	Inlet	E	8.10	6.08	8.62	175	-336	285
		Dischg	E	2.27	1.27	5.94	6	-19	44
	Pump	Inlet	T	-3.37	-2.67	-7.31	125	29	-29
		Dischg	T	-6.66	-38.21	0.12	12	7	-1097
	Reboiler	Inlet	T	-38.18	-6.85	0.12	12	-4	-263
		Dischg	T	-0.99	-0.99	1.79	106	1	13
	Separator	Inlet	T	-0.84	-0.25	-1.79	37	72	-13
		Dischg	T	-1.69	2.59	-10.31	31	637	273
Case 8f	Pump	Inlet	D	-0.06	-0.22	-0.13	0	1	18
		Dischg	D	3.23	0.13	0.08	6	-3	-28
	Reboiler	Inlet	D	0.14	-2.05	0.08	0	-5	-18
		Dischg	D	-0.33	-6.09	0.25	15	5	-132
	Separator	Inlet	D	0.56	-1.32	-0.25	-56	-1	13
		Dischg	D	4.64	0.11	0.27	-4	-14	7
	Pump	Inlet	E	3.04	1.40	5.10	67	-91	26
		Dischg	E	2.18	12.57	1.38	200	-69	342
	Reboiler	Inlet	E	15.00	2.66	2.66	96	-51	72
		Dischg	E	4.74	6.48	18.02	1259	-141	257
	Separator	Inlet	E	8.38	5.03	6.65	127	-253	227
		Dischg	E	4.00	2.68	21.60	101	-776	246
	Pump	Inlet	T	-2.01	-2.32	-2.75	103	-64	-19
		Dischg	T	0.21	2.75	-0.10	-6	11	82
	Reboiler	Inlet	T	2.75	0.23	-0.10	6	6	-13
		Dischg	T	-0.96	-0.95	1.73	103	1	13
	Separator	Inlet	T	-0.81	-0.24	-1.73	35	69	-14
		Dischg	T	-1.14	0.58	1.15	20	-5	74

Notes: P is axial, positive is tension. V3 is horizontal
V2 has an upward sense, unless P is vertical. Then V2 follows X (east)
M2 & M3 axes follow V2 and V3.
M2 has the sign reversed relative to the SAP2000 local system so all systems are right handed.
M2 reversal reverses the sign of the positive seismic amplitude.

BY: E.O. Weiner
DATE: 6/15/06

SUBJECT: PT TLP Coupled Structural Analysis for Evaluation of Nozzle Loads

Nozzle Loads

Case	Location		Load	Kip P	Kip V2	Kip V3	in-Kip T	in-Kip M2	in-Kip M3
Case 8i	Pump	Inlet	D	-0.05	0.65	-0.11	2	2	50
		Dischg	D	3.37	0.11	0.09	6	-6	-31
	Reboiler	Inlet	D	0.14	-4.86	0.09	-2	-6	-39
		Dischg	D	-0.62	-10.56	0.34	17	14	-247
	Separator	Inlet	D	0.20	-1.03	-0.38	-74	3	18
		Dischg	D	4.85	0.06	0.32	-1	-15	5
	Pump	Inlet	E	4.61	1.65	8.58	80	-167	34
		Dischg	E	2.62	15.60	2.17	318	-83	424
	Reboiler	Inlet	E	19.05	3.52	4.38	157	-63	79
		Dischg	E	8.79	7.06	1.86	112	-101	499
	Separator	Inlet	E	8.33	4.33	1.71	118	-57	163
		Dischg	E	5.33	3.44	24.43	102	-771	323
	Pump	Inlet	T	-2.01	-2.32	-2.75	103	-64	-19
		Dischg	T	0.22	2.75	-0.09	-6	10	82
	Reboiler	Inlet	T	2.75	0.23	-0.09	6	6	-13
		Dischg	T	-0.91	-0.82	1.30	71	4	15
	Separator	Inlet	T	-0.89	-0.16	-1.85	32	75	-10
		Dischg	T	-1.14	0.58	1.18	20	-7	74
Case 8j	Pump	Inlet	D	-0.04	0.65	-0.10	2	1	50
		Dischg	D	3.38	0.16	0.10	8	-6	-30
	Reboiler	Inlet	D	0.18	-4.85	0.10	-1	-6	-38
		Dischg	D	-0.61	-10.56	0.34	17	14	-247
	Separator	Inlet	D	0.20	-1.03	-0.38	-74	3	18
		Dischg	D	4.85	0.05	0.32	-1	-15	4
	Pump	Inlet	E	4.08	1.20	6.81	33	-154	32
		Dischg	E	1.02	5.15	1.74	217	-62	142
	Reboiler	Inlet	E	2.53	1.61	3.43	103	-50	42
		Dischg	E	7.91	6.83	2.15	101	-94	450
	Separator	Inlet	E	7.99	4.06	1.63	108	-58	155
		Dischg	E	5.21	1.63	24.65	102	-776	135
	Pump	Inlet	T	-3.14	-1.64	-5.76	56	-31	-14
		Dischg	T	-2.24	-12.28	0.29	37	14	-321
	Reboiler	Inlet	T	-12.27	-2.30	0.29	28	-2	-66
		Dischg	T	-0.99	-0.91	1.44	79	6	14
	Separator	Inlet	T	-0.91	-0.23	-1.87	37	75	-12
		Dischg	T	-1.39	1.72	1.85	26	4	182

Notes: P is axial, positive is tension. V3 is horizontal
V2 has an upward sense, unless P is vertical. Then V2 follows X (east)
M2 & M3 axes follow V2 and V3.
M2 has the sign reversed relative to the SAP2000 local system so all systems are right handed.
M2 reversal reverses the sign of the positive seismic amplitude.

BY: E.O. Weiner
DATE: 6/15/06

SUBJECT: PT TLP Coupled Structural Analysis for Evaluation of Nozzle Loads

Nozzle Loads

Case	Location		Load	Kip P	Kip V2	Kip V3	in-Kip T	in-Kip M2	in-Kip M3
Case 8k	Pump	Inlet	D	0.01	0.65	-0.09	2	3	50
		Dischg	D	3.37	0.09	0.11	8	-6	-31
	Reboiler	Inlet	D	0.12	-4.86	0.11	-1	-6	-39
		Dischg	D	-0.61	-10.56	0.34	17	14	-247
	Separator	Inlet	D	0.20	-1.03	-0.38	-75	3	18
		Dischg	D	4.81	0.06	-0.19	-1	17	5
	Pump	Inlet	E	2.08	2.14	10.63	94	-120	43
		Dischg	E	3.20	19.55	2.16	305	-91	531
	Reboiler	Inlet	E	24.01	4.25	4.49	152	-57	92
		Dischg	E	8.87	7.19	2.24	114	-104	506
	Separator	Inlet	E	8.39	4.33	1.73	118	-43	157
		Dischg	E	3.86	4.15	9.42	102	-938	385
	Pump	Inlet	T	1.06	-2.19	-2.33	108	22	-9
		Dischg	T	0.14	2.33	0.61	70	18	71
	Reboiler	Inlet	T	2.33	0.15	0.61	45	-11	-15
		Dischg	T	-0.87	-0.80	1.28	70	4	14
	Separator	Inlet	T	-0.80	-0.18	-1.65	25	64	-12
		Dischg	T	-4.18	0.60	-12.15	17	1065	74
Case 8L	Pump	Inlet	D	0.02	0.65	-0.07	2	3	50
		Dischg	D	3.38	0.15	0.11	9	-6	-30
	Reboiler	Inlet	D	0.18	-4.85	0.11	-1	-7	-38
		Dischg	D	-0.61	-10.56	0.34	17	14	-247
	Separator	Inlet	D	0.20	-1.03	-0.38	-75	3	18
		Dischg	D	4.81	0.05	-0.18	-1	16	4
	Pump	Inlet	E	2.01	1.88	10.27	35	-134	55
		Dischg	E	1.08	5.71	1.82	254	-75	158
	Reboiler	Inlet	E	3.62	1.73	3.96	120	-56	42
		Dischg	E	7.89	6.85	2.45	103	-95	450
	Separator	Inlet	E	8.01	4.03	1.68	107	-45	149
		Dischg	E	3.84	2.07	8.08	106	-840	117
	Pump	Inlet	T	0.00	-1.55	-5.23	62	60	-5
		Dischg	T	-2.27	-12.39	0.92	104	20	-324
	Reboiler	Inlet	T	-12.38	-2.33	0.92	61	-18	-68
		Dischg	T	-0.94	-0.88	1.42	78	6	13
	Separator	Inlet	T	-0.81	-0.25	-1.66	30	64	-15
		Dischg	T	-4.37	1.73	-13.09	23	1149	180

Notes: P is axial, positive is tension. V3 is horizontal
V2 has an upward sense, unless P is vertical. Then V2 follows X (east)
M2 & M3 axes follow V2 and V3.
M2 has the sign reversed relative to the SAP2000 local system so all systems are right handed.
M2 reversal reverses the sign of the positive seismic amplitude.

BY: E.O. Weiner
DATE: 6/15/06

SUBJECT: PT TLP Coupled Structural Analysis for Evaluation of Nozzle Loads

Nozzle Loads

Case	Location		Load	Kip P	Kip V2	Kip V3	in-Kip T	in-Kip M2	in-Kip M3
Case 8o	Pump	Inlet	D	-0.10	0.66	-0.25	2	3	50
		Dischg	D	3.82	0.25	0.11	8	-6	-34
	Reboiler	Inlet	D	0.27	-4.41	0.11	-1	-7	12
		Dischg	D	-0.01	-0.49	0.36	-4	-14	12
	Separator	Inlet	D	0.96	-1.61	-0.22	-46	1	6
		Dischg	D	4.83	0.10	0.34	0	-14	9
	Pump	Inlet	E	4.61	1.65	8.58	80	-167	34
		Dischg	E	2.62	15.60	2.17	318	-83	424
	Reboiler	Inlet	E	19.05	3.52	4.38	157	-63	79
		Dischg	E	8.79	7.06	1.86	112	-101	499
	Separator	Inlet	E	8.33	4.33	1.71	118	-57	163
		Dischg	E	5.33	3.44	24.43	102	-771	323
	Pump	Inlet	T	-1.45	-2.62	-2.02	98	-45	-36
		Dischg	T	0.26	2.02	-0.05	-3	12	57
	Reboiler	Inlet	T	2.02	0.27	-0.05	9	5	2
		Dischg	T	-0.71	-0.71	1.09	61	9	-1
	Separator	Inlet	T	-0.32	-0.68	-1.28	43	57	-67
		Dischg	T	0.03	0.29	0.83	24	25	53
Case 8p	Pump	Inlet	D	-0.05	0.65	-0.11	2	2	50
		Dischg	D	3.38	0.15	0.09	6	-6	-30
	Reboiler	Inlet	D	0.17	-4.85	0.09	-2	-6	-38
		Dischg	D	-0.61	-10.56	0.34	17	14	-247
	Separator	Inlet	D	0.20	-1.03	-0.38	-74	3	18
		Dischg	D	4.85	0.06	0.32	-1	-15	5
	Pump	Inlet	E	4.25	1.18	7.20	33	-148	30
		Dischg	E	1.00	4.50	1.99	273	-75	123
	Reboiler	Inlet	E	4.00	1.53	3.98	134	-57	44
		Dischg	E	8.02	6.89	2.09	103	-95	457
	Separator	Inlet	E	8.05	4.08	1.65	109	-58	155
		Dischg	E	5.28	1.90	24.72	101	-776	173
	Pump	Inlet	T	-1.32	-2.74	-1.67	106	-49	-37
		Dischg	T	0.57	3.83	-0.11	-9	11	106
	Reboiler	Inlet	T	3.83	0.59	-0.11	6	6	9
		Dischg	T	-0.70	-0.70	1.08	60	9	-1
	Separator	Inlet	T	-0.32	-0.67	-1.28	42	57	-67
		Dischg	T	0.07	0.15	0.75	24	24	41

Notes: P is axial, positive is tension. V3 is horizontal
V2 has an upward sense, unless P is vertical. Then V2 follows X (east)
M2 & M3 axes follow V2 and V3.
M2 has the sign reversed relative to the SAP2000 local system so all systems are right handed.
M2 reversal reverses the sign of the positive seismic amplitude.

BY: E.O. Weiner
DATE: 6/15/06

SUBJECT: PT TLP Coupled Structural Analysis for Evaluation of Nozzle Loads

Nozzle Loads

Case	Location		Load	Kip P	Kip V2	Kip V3	in-Kip T	in-Kip M2	in-Kip M3
Case 8q	Pump	Inlet	D	-0.05	0.65	-0.11	2	2	50
		Dischg	D	3.38	0.15	0.09	6	-6	-30
	Reboiler	Inlet	D	0.17	-4.85	0.09	-2	-6	-38
		Dischg	D	-0.61	-10.56	0.34	17	14	-247
	Separator	Inlet	D	0.20	-1.03	-0.38	-74	3	18
		Dischg	D	4.85	0.06	0.32	-1	-15	5
	Pump	Inlet	E	4.25	1.18	7.20	33	-148	30
		Dischg	E	1.00	4.50	1.99	273	-75	123
	Reboiler	Inlet	E	4.00	1.53	3.98	134	-57	44
		Dischg	E	8.02	6.89	2.09	103	-95	457
	Separator	Inlet	E	8.05	4.08	1.65	109	-58	155
		Dischg	E	5.28	1.90	24.72	101	-776	173
	Pump	Inlet	T	-1.70	-2.51	-2.66	90	-39	-35
		Dischg	T	-0.26	-1.28	0.05	9	13	-32
	Reboiler	Inlet	T	-1.28	-0.27	0.05	15	3	-9
		Dischg	T	-0.73	-0.73	1.13	63	9	-1
	Separator	Inlet	T	-0.32	-0.69	-1.29	44	57	-68
		Dischg	T	-0.02	0.53	0.98	26	27	76
Case 8r	Pump	Inlet	D	-0.05	0.65	-0.11	2	2	50
		Dischg	D	3.38	0.15	0.09	6	-6	-30
	Reboiler	Inlet	D	0.17	-4.85	0.09	-2	-6	-38
		Dischg	D	-0.61	-10.56	0.34	17	14	-247
	Separator	Inlet	D	0.20	-1.03	-0.38	-74	3	18
		Dischg	D	4.85	0.06	0.32	-1	-15	5
	Pump	Inlet	E	4.25	1.18	7.20	33	-148	30
		Dischg	E	1.00	4.50	1.99	273	-75	123
	Reboiler	Inlet	E	4.00	1.53	3.98	134	-57	44
		Dischg	E	8.02	6.89	2.09	103	-95	457
	Separator	Inlet	E	8.05	4.08	1.65	109	-58	155
		Dischg	E	5.28	1.90	24.72	101	-776	173
	Pump	Inlet	T	-1.89	-2.39	-3.16	82	-34	-35
		Dischg	T	-0.68	-3.84	0.13	18	14	-101
	Reboiler	Inlet	T	-3.83	-0.70	0.13	20	1	-18
		Dischg	T	-0.74	-0.75	1.15	65	10	-2
	Separator	Inlet	T	-0.33	-0.70	-1.29	45	57	-68
		Dischg	T	-0.06	0.72	1.09	27	29	94

Notes:
P is axial, positive is tension. V3 is horizontal
V2 has an upward sense, unless P is vertical. Then V2 follows X (east)
M2 & M3 axes follow V2 and V3.
M2 has the sign reversed relative to the SAP2000 local system so all systems are right handed.
M2 reversal reverses the sign of the positive seismic amplitude.

BY: E.O. Weiner
DATE: 6/15/06

SUBJECT: PT TLP Coupled Structural Analysis for Evaluation of Nozzle Loads

Nozzle Loads

Case	Location		Load	Kip P	Kip V2	Kip V3	in-Kip T	in-Kip M2	in-Kip M3
Case 8s	Pump	Inlet	D	-0.07	0.64	-0.16	4	2	50
		Dischg	D	3.89	0.67	0.10	7	-6	-23
	Reboiler	Inlet	D	0.70	-4.33	0.10	-1	-7	14
		Dischg	D	-0.01	-0.49	0.36	-4	-14	12
	Separator	Inlet	D	0.96	-1.61	-0.22	-46	1	6
		Dischg	D	4.84	0.07	0.32	0	-14	6
	Pump	Inlet	E	4.19	1.17	6.57	32	-143	30
		Dischg	E	0.98	4.30	1.93	255	-70	118
	Reboiler	Inlet	E	3.68	1.50	3.77	125	-54	43
		Dischg	E	7.60	6.79	2.08	98	-91	434
	Separator	Inlet	E	7.77	3.93	1.61	104	-57	152
		Dischg	E	5.24	1.77	24.71	98	-774	163
	Pump	Inlet	T	-1.89	-2.39	-3.16	82	-34	-35
		Dischg	T	-0.68	-3.84	0.13	18	14	-101
	Reboiler	Inlet	T	-3.83	-0.70	0.13	20	1	-18
		Dischg	T	-0.74	-0.75	1.15	65	10	-2
	Separator	Inlet	T	-0.33	-0.70	-1.29	45	57	-68
		Dischg	T	-0.06	0.72	1.09	27	29	94

Notes: P is axial, positive is tension. V3 is horizontal
V2 has an upward sense, unless P is vertical. Then V2 follows X (east)
M2 & M3 axes follow V2 and V3.
M2 has the sign reversed relative to the SAP2000 local system so all systems are right handed.
M2 reversal reverses the sign of the positive seismic amplitude.

BY: E.O. Weiner
DATE: 6/15/06

SUBJECT: PT TLP Coupled Structural Analysis for Evaluation of Nozzle Loads

Pump Support Gap Closure Loads

Case	in Gap	Load	Klp P	Remark
Case 8p	1/8	D	0.04	
		E	8.74	Seismic amplitude
		T	2.16	Tension, gap did not close
Case 8q	1/16	D	0.04	
		E	8.74	Seismic amplitude, exceeds thermal compression and suggests opening during seismic event
		T	-3.94	Compression, gap closed
Case 8r	1/32	D	0.04	
		E	8.74	Seismic amplitude, exceeds thermal compression and suggests opening during seismic event
		T	-6.99	Compression, gap closed
Case 8s	1/32	D	0.51	
		E	8.08	Seismic amplitude, exceeds thermal compression and suggests opening during seismic event
		T	-7.00	Compression, gap closed

BY: E.O. Weiner
DATE: 6/15/06

SUBJECT: PT TLP Coupled Structural Analysis for Evaluation of Nozzle Loads

Mid-Elbow Loads

Case	Location		Load	Kip P	Kip V2	Kip V3	in-Kip T	in-Kip M2	in-Kip M3
Case 8a	Pump	Inlet	D	-0.05	0.01	-1.74	24	8	1
	Reboiler	Dischg	D	-7.40	6.57	0.56	30	3	-8
	Separator	Dischg	D	0.99	-0.98	-0.03	-2	0	16
	Pump	Inlet	E	2.42	3.28	1.16	8	2	17
	Reboiler	Dischg	E	4.24	7.47	7.83	349	217	288
	Separator	Dischg	E	5.76	4.23	0.34	3	5	40
	Pump	Inlet	T	-7.73	2.91	2.62	96	-39	128
	Reboiler	Dischg	T	-2.48	0.21	5.14	286	-134	42
	Separator	Dischg	T	-3.60	-1.27	-3.28	39	29	79
Case 8b	Pump	Inlet	D	0.03	0.00	-1.57	26	4	-1
	Reboiler	Dischg	D	-7.32	6.49	0.45	28	5	-4
	Separator	Dischg	D	1.04	-0.96	-0.02	-1	0	16
	Pump	Inlet	E	5.53	7.97	2.10	61	28	151
	Reboiler	Dischg	E	8.09	12.45	16.97	794	465	439
	Separator	Dischg	E	11.38	7.85	5.80	75	88	73
	Pump	Inlet	T	-2.55	0.14	2.45	86	-27	118
	Reboiler	Dischg	T	-2.32	0.20	4.74	263	-122	40
	Separator	Dischg	T	-1.83	-0.61	-0.41	28	3	29
Case 8c	Pump	Inlet	D	0.01	0.01	-1.58	26	4	-1
	Reboiler	Dischg	D	-7.29	6.34	0.37	28	5	13
	Separator	Dischg	D	1.02	-0.96	-0.03	-1	0	16
	Pump	Inlet	E	26.06	13.94	1.77	87	38	383
	Reboiler	Dischg	E	11.80	10.80	35.29	1895	975	368
	Separator	Dischg	E	20.84	14.10	9.62	109	171	139
	Pump	Inlet	T	-1.35	-0.23	2.34	82	-24	98
	Reboiler	Dischg	T	-1.36	-0.01	1.75	92	-28	28
	Separator	Dischg	T	-1.34	-0.27	-0.06	24	-1	27
Case 8d	Pump	Inlet	D	-0.11	0.05	-1.58	26	4	1
	Reboiler	Dischg	D	-7.29	6.34	0.37	28	5	13
	Separator	Dischg	D	0.97	-0.99	-0.06	-1	1	17
	Pump	Inlet	E	4.48	7.30	1.80	69	29	116
	Reboiler	Dischg	E	10.34	9.64	30.44	1638	839	326
	Separator	Dischg	E	12.42	8.95	3.79	67	74	71
	Pump	Inlet	T	-3.37	0.52	2.32	85	-26	115
	Reboiler	Dischg	T	-1.35	-0.01	1.73	92	-27	28
	Separator	Dischg	T	-2.12	-0.76	-0.58	28	7	32

Notes Results are at the center of each elbow listed nearest the nozzle listed.
Forces & moments are in the SAP2000 frame local coordinate system.
The user-specified local system for elbows have the 2-axis pointing to the center of the elbow run.
M2 is out-of-plane bending. M3 is in-plane bending. Positive P is tension.

BY: E.O. Weiner
DATE:6/15/06

SUBJECT: PT TLP Coupled Structural Analysis for Evaluation of Nozzle Loads

Mid-Elbow Loads

Case	Location		Load	Kip P	Kip V2	Kip V3	in-Kip T	in-Kip M2	in-Kip M3
Case 8e	Pump	Inlet	D	-0.05	0.01	-1.74	24	8	1
	Reboiler	Dischg	D	-7.35	6.40	0.40	26	6	10
	Separator	Dischg	D	0.98	-0.97	-0.03	-2	1	17
	Pump	Inlet	E	2.52	3.32	1.16	8	2	17
	Reboiler	Dischg	E	8.13	7.80	26.82	1439	756	285
	Separator	Dischg	E	5.78	4.24	0.32	4	6	40
	Pump	Inlet	T	-7.56	2.79	2.67	97	-39	128
	Reboiler	Dischg	T	-1.40	-0.01	1.79	95	-28	28
	Separator	Dischg	T	-3.55	-1.28	-2.59	44	36	77
Case 8f	Pump	Inlet	D	-0.13	0.05	-0.71	12	6	1
	Reboiler	Dischg	D	-3.91	3.39	0.25	17	-1	13
	Separator	Dischg	D	0.81	-0.85	-0.11	-5	2	17
	Pump	Inlet	E	2.96	3.95	1.32	55	25	96
	Reboiler	Dischg	E	6.13	4.79	17.90	995	516	183
	Separator	Dischg	E	8.83	6.56	3.12	65	65	46
	Pump	Inlet	T	-3.37	0.52	2.32	85	-26	115
	Reboiler	Dischg	T	-1.35	-0.01	1.73	92	-27	28
	Separator	Dischg	T	-2.12	-0.76	-0.58	28	7	32
Case 8i	Pump	Inlet	D	-0.11	0.05	-1.58	26	4	1
	Reboiler	Dischg	D	-7.28	6.33	0.34	26	6	13
	Separator	Dischg	D	0.97	-0.99	-0.06	-1	1	17
	Pump	Inlet	E	4.52	7.33	1.57	67	28	117
	Reboiler	Dischg	E	5.89	9.26	1.42	152	25	306
	Separator	Dischg	E	12.75	9.19	3.79	67	74	72
	Pump	Inlet	T	-3.37	0.52	2.32	85	-26	115
	Reboiler	Dischg	T	-1.22	-0.07	1.30	67	-14	26
	Separator	Dischg	T	-2.12	-0.76	-0.58	29	7	32
Case 8j	Pump	Inlet	D	-0.10	0.04	-1.58	26	4	1
	Reboiler	Dischg	D	-7.28	6.33	0.34	26	6	13
	Separator	Dischg	D	0.97	-0.99	-0.05	-1	1	17
	Pump	Inlet	E	4.37	5.85	1.10	30	12	93
	Reboiler	Dischg	E	5.64	8.43	1.70	137	26	276
	Separator	Dischg	E	12.37	8.95	2.41	66	55	67
	Pump	Inlet	T	-6.30	1.85	1.64	47	-7	149
	Reboiler	Dischg	T	-1.34	-0.06	1.44	76	-15	27
	Separator	Dischg	T	-3.02	-1.46	-1.72	34	27	39

Notes Results are at the center of each elbow listed nearest the nozzle listed.
Forces & moments are in the SAP2000 frame local coordinate system.
The user-specified local system for elbows have the 2-axis pointing to the center of the elbow run.
M2 is out-of-plane bending. M3 is in-plane bending. Positive P is tension.

BY: E.O. Weiner
DATE: 6/15/06

SUBJECT: PT TLP Coupled Structural Analysis for Evaluation of Nozzle Loads

Mid-Elbow Loads

Case	Location		Load	Kip P	Kip V2	Kip V3	in-Kip T	in-Kip M2	in-Kip M3
Case 8k	Pump	Inlet	D	-0.06	0.07	-1.58	26	4	-1
	Reboiler	Dischg	D	-7.28	6.33	0.34	26	6	13
	Separator	Dischg	D	0.83	-1.05	-0.06	-1	1	19
	Pump	Inlet	E	6.21	7.16	1.99	75	35	163
	Reboiler	Dischg	E	5.96	9.38	1.80	153	26	310
	Separator	Dischg	E	9.55	6.02	4.28	67	83	113
	Pump	Inlet	T	-0.89	2.40	2.19	94	-25	51
	Reboiler	Dischg	T	-1.18	-0.06	1.28	67	-13	25
	Separator	Dischg	T	-11.40	-5.92	-0.60	24	8	159
Case 8L	Pump	Inlet	D	-0.04	0.06	-1.58	26	4	-1
	Reboiler	Dischg	D	-7.28	6.33	0.34	26	6	13
	Separator	Dischg	D	0.84	-1.05	-0.05	-1	1	19
	Pump	Inlet	E	6.32	7.28	1.64	35	16	142
	Reboiler	Dischg	E	5.65	8.42	2.00	137	27	276
	Separator	Dischg	E	8.94	5.61	1.88	69	66	100
	Pump	Inlet	T	-3.70	3.70	1.55	58	-7	78
	Reboiler	Dischg	T	-1.29	-0.05	1.42	75	-14	26
	Separator	Dischg	T	-12.18	-6.47	-1.73	29	28	170
Case 8o	Pump	Inlet	D	-0.25	0.10	-1.59	26	4	3
	Reboiler	Dischg	D	0.30	-0.32	0.36	-9	2	13
	Separator	Dischg	D	0.92	-1.02	-0.10	0	2	17
	Pump	Inlet	E	4.52	7.33	1.57	67	28	117
	Reboiler	Dischg	E	5.89	9.26	1.42	152	25	306
	Separator	Dischg	E	12.75	9.19	3.79	67	74	72
	Pump	Inlet	T	-2.46	0.40	2.62	73	-27	83
	Reboiler	Dischg	T	-1.00	0.00	1.09	62	-9	10
	Separator	Dischg	T	-0.91	-1.14	-0.29	36	2	3
Case 8p	Pump	Inlet	D	-0.11	0.04	-1.58	26	4	1
	Reboiler	Dischg	D	-7.28	6.33	0.34	26	6	13
	Separator	Dischg	D	0.97	-0.99	-0.06	-1	1	17
	Pump	Inlet	E	4.41	6.20	1.05	30	10	102
	Reboiler	Dischg	E	5.69	8.54	1.62	139	26	280
	Separator	Dischg	E	12.77	9.20	2.67	66	57	71
	Pump	Inlet	T	-2.12	0.25	2.74	79	-29	79
	Reboiler	Dischg	T	-0.99	0.00	1.08	61	-9	10
	Separator	Dischg	T	-0.80	-1.06	-0.15	36	-1	2

Notes Results are at the center of each elbow listed nearest the nozzle listed.
Forces & moments are in the SAP2000 frame local coordinate system.
The user-specified local system for elbows have the 2-axis pointing to the center of the elbow run.
M2 is out-of-plane bending. M3 is in-plane bending. Positive P is tension.

BY: E.O. Weiner
DATE: 6/15/06

SUBJECT: PT TLP Coupled Structural Analysis for Evaluation of Nozzle Loads

Mid-Elbow Loads

Case	Location		Load	Kip P	Kip V2	Kip V3	in-Kip T	in-Kip M2	in-Kip M3
Case 8q	Pump	Inlet	D	-0.11	0.04	-1.58	26	4	1
	Reboiler	Dischg	D	-7.28	6.33	0.34	26	6	13
	Separator	Dischg	D	0.97	-0.99	-0.06	-1	1	17
	Pump	Inlet	E	4.41	6.20	1.05	30	10	102
	Reboiler	Dischg	E	5.69	8.54	1.62	139	26	280
	Separator	Dischg	E	12.77	9.20	2.67	66	57	71
	Pump	Inlet	T	-3.09	0.68	2.51	66	-23	91
	Reboiler	Dischg	T	-1.03	0.00	1.13	64	-9	10
	Separator	Dischg	T	-1.11	-1.30	-0.53	37	6	4
Case 8r	Pump	Inlet	D	-0.11	0.04	-1.58	26	4	1
	Reboiler	Dischg	D	-7.28	6.33	0.34	26	6	13
	Separator	Dischg	D	0.97	-0.99	-0.06	-1	1	17
	Pump	Inlet	E	4.41	6.20	1.05	30	10	102
	Reboiler	Dischg	E	5.69	8.54	1.62	139	26	280
	Separator	Dischg	E	12.77	9.20	2.67	66	57	71
	Pump	Inlet	T	-3.57	0.89	2.39	60	-20	97
	Reboiler	Dischg	T	-1.05	0.00	1.15	65	-9	10
	Separator	Dischg	T	-1.26	-1.41	-0.72	38	9	6
Case 8s	Pump	Inlet	D	-0.16	0.07	-1.57	27	4	2
	Reboiler	Dischg	D	0.30	-0.32	0.36	-9	3	13
	Separator	Dischg	D	0.95	-1.00	-0.07	-1	1	17
	Pump	Inlet	E	4.13	5.79	1.05	29	10	94
	Reboiler	Dischg	E	5.56	8.17	1.61	132	26	265
	Separator	Dischg	E	12.64	9.12	2.58	64	54	70
	Pump	Inlet	T	-3.57	0.89	2.39	60	-20	97
	Reboiler	Dischg	T	-1.05	0.00	1.15	65	-9	10
	Separator	Dischg	T	-1.26	-1.41	-0.72	38	9	6

Notes Results are at the center of each elbow listed nearest the nozzle listed.
Forces & moments are in the SAP2000 frame local coordinate system.
The user-specified local system for elbows have the 2-axis pointing to the center of the elbow run.
M2 is out-of-plane bending. M3 is in-plane bending. Positive P is tension.

BY: E.O. Weiner
DATE: 6/15/06

SUBJECT: PT TLP Coupled Structural Analysis for Evaluation of Nozzle Loads

RGM vs Pre-RGM Nozzle Loads

Nozzle		Load	RGM - Case 8d				Pre-RGM - Case 8h			
			Kip P	Kip V	in-Kip T	in-Kip M	Kip P	Kip V	in-Kip T	in-Kip M
Pump	Inlet	D	-0.05	0.66	2	50	-0.05	0.66	2	50
	Dischg	D	3.37	0.15	6	31	3.37	0.15	6	31
Reboiler	Inlet	D	0.14	4.86	-2	39	0.14	4.86	-2	39
	Dischg	D	-0.62	10.58	20	248	-0.62	10.58	20	248
Separator	Inlet	D	0.21	1.10	-74	18	0.21	1.10	-74	18
	Dischg	D	4.85	0.32	-1	16	4.85	0.32	-1	16
Pump	Inlet	E	4.53	8.79	80	172	4.06	7.87	71	152
	Dischg	E	2.68	15.75	316	432	2.35	14.15	286	388
Reboiler	Inlet	E	19.04	5.66	157	117	17.13	5.05	142	102
	Dischg	E	9.60	32.45	2074	558	7.80	27.02	1725	455
Separator	Inlet	E	11.03	12.47	206	523	9.90	10.46	172	437
	Dischg	E	5.22	24.13	102	829	4.53	21.32	105	729
Pump	Inlet	T	-2.01	3.60	103	67	-2.01	3.60	103	67
	Dischg	T	0.21	2.75	-6	83	0.21	2.75	-6	83
Reboiler	Inlet	T	2.75	0.25	6	15	2.75	0.25	6	15
	Dischg	T	-0.96	1.97	103	13	-0.96	1.97	103	13
Separator	Inlet	T	-0.81	1.75	35	70	-0.81	1.75	35	70
	Dischg	T	-1.14	1.28	20	74	-1.14	1.28	20	74

BY: E.O. Weiner
DATE:6/15/06

SUBJECT: PT TLP Coupled Structural Analysis for Evaluation of Nozzle Loads

Drift Nozzle Loads (Case 8d)

Nozzle		Load	Kip P	Kip V	in-Kip T	in-Kip M
Pump	Inlet	E	4.53	8.79	80	172
	Dischg	E	2.68	15.75	316	432
Reboiler	Inlet	E	19.04	5.66	157	117
	Dischg	E	9.60	32.45	2074	558
Separator	Inlet	E	11.03	12.47	206	523
	Dischg	E	5.22	24.13	102	829
Pump	Inlet	Dr	0.40	1.06	-23	10
	Dischg	Dr	-0.13	0.85	-9	24
Reboiler	Inlet	Dr	-0.85	0.15	-6	3
	Dischg	Dr	0.16	0.24	-15	6
Separator	Inlet	Dr	-0.01	0.30	10	30
	Dischg	Dr	0.12	4.94	-19	251

Frame Base Reactions

Case	Base	Loc	Load	Kip FX	Kip FY	Kip FZ	Kip-ft MX	Kip-ft MY	Kip-ft MZ
Case 8g	Pump Frame	Bottom	E	3	6	8	61	57	12
	Reboiler Frame	Bottom	E	25	38	23	280	141	125
	Separator Frame	Bottom	E	133	153	67	4220	3841	80
Case 8d	Pump Frame	Bottom	Dr	0	0	-1	2	-2	2
	Reboiler Frame	Bottom	Dr	-1	0	0	1	-2	-1
	Separator Frame	Bottom	Dr	-10	-23	0	1236	-475	-3
	Separator Frame	Top	Dr	9	24	0	0	0	-1
	Pump Frame	Bottom	E	4	7	8	66	56	12
	Reboiler Frame	Bottom	E	24	36	21	261	142	115
	Separator Frame	Bottom	E	61	100	65	2007	1011	47
	Separator Frame	Top	E	32	47	1	0	1	41

Notes: Case 8g is Case 8d with top support removed from separator.
Frame bases constrained to single joint for reactions.
Components are global.

BY: E.O. Weiner
DATE: 6/15/06

SUBJECT: PT TLP Coupled Structural Analysis for Evaluation of Nozzle Loads

Nozzle Displacements

Case	Location		Load	in U1	in U2	in U3	deg R1	deg R2	deg R3
Case 8a	Pump	Inlet	D	0.0006	0.0000	-0.0011	0.0000	-0.0012	0.0000
		Dischg	D	0.0010	0.0000	-0.0011	0.0000	-0.0012	0.0000
	Reboiler	Inlet	D	0.0000	-0.0089	-0.0126	-0.0018	0.0001	-0.0001
		Dischg	D	0.0000	-0.0090	-0.0128	-0.0018	0.0001	-0.0001
	Separator	Inlet	D	0.0000	0.0000	-0.0297	0.0000	0.0000	0.0000
		Dischg	D	0.0000	0.0000	-0.0297	0.0000	0.0000	0.0000
	Pump	Inlet	E	0.0178	0.0217	0.0006	0.0005	0.0034	0.0238
		Dischg	E	0.0093	0.0215	0.0005	0.0005	0.0034	0.0238
	Reboiler	Inlet	E	0.0420	0.0245	0.0072	0.0020	0.0071	0.0015
		Dischg	E	0.0420	0.0250	0.0072	0.0020	0.0071	0.0015
	Separator	Inlet	E	0.0710	0.1839	0.0178	0.0229	0.0120	0.0003
		Dischg	E	0.0751	0.1879	0.0167	0.0229	0.0120	0.0003
	Pump	Inlet	T	0.0006	0.0252	0.0402	0.0000	-0.0001	0.0000
		Dischg	T	0.0007	0.0000	0.0238	0.0000	-0.0001	0.0000
	Reboiler	Inlet	T	-0.0296	-0.0036	-0.0020	0.0038	0.0000	0.0000
		Dischg	T	0.0296	-0.0036	-0.0020	0.0038	0.0000	0.0000
	Separator	Inlet	T	0.0221	0.0001	0.0714	0.0000	0.0000	0.0000
		Dischg	T	0.0000	0.0000	0.0506	0.0000	0.0000	0.0000
Case 8b	Pump	Inlet	D	0.0013	-0.0090	0.0007	0.0041	-0.0005	0.0004
		Dischg	D	0.0016	-0.0083	-0.0014	0.0018	0.0001	0.0003
	Reboiler	Inlet	D	-0.0031	-0.0106	-0.0136	-0.0021	0.0046	-0.0011
		Dischg	D	-0.0031	-0.0122	-0.0212	-0.0021	0.0060	-0.0011
	Separator	Inlet	D	-0.0002	0.0002	-0.0313	-0.0001	0.0000	0.0002
		Dischg	D	-0.0002	0.0001	-0.0313	-0.0001	0.0000	0.0002
	Pump	Inlet	E	0.2014	0.4905	0.0169	0.0249	0.0244	0.2407
		Dischg	E	0.1085	0.4751	0.0028	0.0379	0.0413	0.2425
	Reboiler	Inlet	E	0.0593	0.0769	0.0127	0.0057	0.0129	0.0572
		Dischg	E	0.0592	0.0418	0.0135	0.0069	0.0138	0.0527
	Separator	Inlet	E	0.0759	0.1572	0.0175	0.0204	0.0128	0.0092
		Dischg	E	0.0806	0.1557	0.0159	0.0201	0.0128	0.0087
	Pump	Inlet	T	-0.1541	-0.0214	0.0380	-0.0029	0.0046	0.0190
		Dischg	T	-0.1404	-0.0467	0.0226	0.0014	-0.0026	0.0215
	Reboiler	Inlet	T	-0.0355	-0.0109	-0.0026	0.0041	0.0011	0.0013
		Dischg	T	0.0252	-0.0098	-0.0043	0.0049	0.0012	0.0006
	Separator	Inlet	T	0.0227	-0.0113	0.0713	0.0015	0.0001	0.0013
		Dischg	T	-0.0003	0.0112	0.0499	0.0014	0.0001	0.0012

Notes

1. Displacement components are global: 1 = East 2 = North 3 = Up
2. Case 8a seismic displacements are from the frame/vessel model analysis. Seismic anchor movements were input to the piping model as zero.

BY: E.O. Weiner
DATE:6/15/06

SUBJECT: PT TLP Coupled Structural Analysis for Evaluation of Nozzle Loads

Nozzle Displacements

Case	Location		Load	in U1	in U2	in U3	deg R1	deg R2	deg R3
Case 8c	Pump	Inlet	D	0.0018	-0.0087	0.0007	0.0042	-0.0004	0.0006
		Dischg	D	0.0021	-0.0079	-0.0015	0.0018	0.0003	0.0005
	Reboiler	Inlet	D	-0.0035	-0.0105	-0.0129	-0.0021	0.0054	-0.0011
		Dischg	D	-0.0035	-0.0120	-0.0215	-0.0020	0.0066	-0.0011
	Separator	Inlet	D	-0.0004	0.0002	-0.0314	-0.0001	0.0001	0.0001
		Dischg	D	-0.0005	0.0001	-0.0313	-0.0001	0.0001	0.0001
	Pump	Inlet	E	0.2583	2.0886	0.0180	0.0222	0.0459	0.5562
		Dischg	E	0.2316	2.0768	0.0049	0.0261	0.0807	0.6103
	Reboiler	Inlet	E	0.0776	0.0748	0.0198	0.0074	0.0210	0.0568
		Dischg	E	0.0771	0.0679	0.0189	0.0130	0.0213	0.0547
	Separator	Inlet	E	0.0842	0.1997	0.0198	0.0210	0.0138	0.0028
		Dischg	E	0.0895	0.2027	0.0183	0.0209	0.0138	0.0028
	Pump	Inlet	T	-0.1559	-0.1031	0.0375	-0.0040	0.0058	0.0332
		Dischg	T	-0.1346	-0.1293	0.0227	-0.0009	0.0000	0.0379
	Reboiler	Inlet	T	-0.0329	-0.0075	-0.0023	0.0038	0.0004	0.0013
		Dischg	T	0.0277	-0.0060	-0.0031	0.0040	0.0005	0.0010
	Separator	Inlet	T	0.0219	0.0049	0.0716	0.0006	0.0002	0.0002
		Dischg	T	-0.0011	0.0049	0.0502	0.0006	0.0002	0.0002
Case 8d	Pump	Inlet	D	0.0020	-0.0006	0.0006	0.0041	-0.0006	-0.0013
		Dischg	D	0.0014	0.0001	-0.0015	0.0017	0.0001	-0.0016
	Reboiler	Inlet	D	-0.0037	-0.0102	-0.0128	-0.0021	0.0054	-0.0013
		Dischg	D	-0.0037	-0.0120	-0.0215	-0.0020	0.0067	-0.0012
	Separator	Inlet	D	-0.0004	0.0003	-0.0314	-0.0001	0.0001	0.0001
		Dischg	D	-0.0005	0.0001	-0.0313	-0.0001	0.0001	0.0001
	Pump	Inlet	E	0.1957	0.0551	0.0057	0.0070	0.0227	0.1026
		Dischg	E	0.1292	0.0555	0.0028	0.0057	0.0411	0.0820
	Reboiler	Inlet	E	0.0534	0.0302	0.0088	0.0067	0.0133	0.0306
		Dischg	E	0.0532	0.0600	0.0168	0.0116	0.0141	0.0324
	Separator	Inlet	E	0.0751	0.1859	0.0174	0.0206	0.0127	0.0020
		Dischg	E	0.0798	0.1882	0.0160	0.0205	0.0127	0.0019
	Pump	Inlet	T	-0.1479	0.0187	0.0363	-0.0055	0.0033	-0.0031
		Dischg	T	-0.1470	-0.0083	0.0224	-0.0030	-0.0045	-0.0023
	Reboiler	Inlet	T	-0.0361	-0.0044	-0.0013	0.0038	0.0016	-0.0015
		Dischg	T	0.0246	-0.0066	-0.0036	0.0041	0.0016	-0.0016
	Separator	Inlet	T	0.0221	0.0056	0.0717	0.0007	0.0001	0.0001
		Dischg	T	-0.0009	0.0058	0.0503	0.0007	0.0001	0.0000

Notes
1. Displacement components are global: 1 = East 2 = North 3 = Up

BY: E.O. Weiner
DATE: 6/15/06

SUBJECT: PT TLP Coupled Structural Analysis for Evaluation of Nozzle Loads

Nozzle Displacements

Case	Location		Load	in U1	in U2	in U3	deg R1	deg R2	deg R3
Case 8e	Pump	Inlet	D	0.0006	0.0000	-0.0011	0.0000	-0.0012	0.0000
		Dischg	D	0.0010	0.0000	-0.0011	0.0000	-0.0012	0.0000
	Reboiler	Inlet	D	0.0000	-0.0089	-0.0126	-0.0018	0.0001	-0.0001
		Dischg	D	0.0000	-0.0090	-0.0128	-0.0018	0.0001	-0.0001
	Separator	Inlet	D	0.0000	0.0000	-0.0297	0.0000	0.0000	0.0000
		Dischg	D	0.0000	0.0000	-0.0297	0.0000	0.0000	0.0000
	Pump	Inlet	E	0.0178	0.0217	0.0006	0.0005	0.0034	0.0238
		Dischg	E	0.0093	0.0215	0.0005	0.0005	0.0034	0.0238
	Reboiler	Inlet	E	0.0420	0.0245	0.0072	0.0020	0.0071	0.0015
		Dischg	E	0.0420	0.0250	0.0072	0.0020	0.0071	0.0015
	Separator	Inlet	E	0.0710	0.1839	0.0178	0.0229	0.0120	0.0003
		Dischg	E	0.0751	0.1879	0.0167	0.0229	0.0120	0.0003
	Pump	Inlet	T	0.0006	0.0252	0.0402	0.0000	-0.0001	0.0000
		Dischg	T	0.0007	0.0000	0.0238	0.0000	-0.0001	0.0000
	Reboiler	Inlet	T	-0.0296	-0.0036	-0.0020	0.0038	0.0000	0.0000
		Dischg	T	0.0296	-0.0036	-0.0020	0.0038	0.0000	0.0000
	Separator	Inlet	T	0.0221	0.0001	0.0714	0.0000	0.0000	0.0000
		Dischg	T	0.0000	0.0000	0.0506	0.0000	0.0000	0.0000
Case 8f	Pump	Inlet	D	0.0024	-0.0008	-0.0013	0.0007	-0.0009	-0.0009
		Dischg	D	0.0021	-0.0008	-0.0016	0.0000	-0.0002	-0.0013
	Reboiler	Inlet	D	-0.0023	-0.0093	-0.0122	-0.0019	0.0035	-0.0009
		Dischg	D	-0.0023	-0.0106	-0.0177	-0.0018	0.0042	-0.0009
	Separator	Inlet	D	-0.0003	0.0001	-0.0314	-0.0001	0.0001	0.0001
		Dischg	D	-0.0003	0.0000	-0.0314	-0.0001	0.0001	0.0001
	Pump	Inlet	E	0.1477	0.0420	0.0044	0.0045	0.0197	0.0640
		Dischg	E	0.1075	0.0427	0.0025	0.0043	0.0346	0.0524
	Reboiler	Inlet	E	0.0459	0.0247	0.0066	0.0045	0.0089	0.0181
		Dischg	E	0.0458	0.0393	0.0111	0.0074	0.0093	0.0191
	Separator	Inlet	E	0.0745	0.1808	0.0171	0.0204	0.0126	0.0014
		Dischg	E	0.0791	0.1831	0.0158	0.0202	0.0126	0.0013
	Pump	Inlet	T	-0.1479	0.0187	0.0363	-0.0055	0.0033	-0.0031
		Dischg	T	-0.1470	-0.0083	0.0224	-0.0030	-0.0045	-0.0023
	Reboiler	Inlet	T	-0.0361	-0.0044	-0.0013	0.0038	0.0016	-0.0015
		Dischg	T	0.0246	-0.0066	-0.0036	0.0041	0.0016	-0.0016
	Separator	Inlet	T	0.0221	0.0056	0.0717	0.0007	0.0001	0.0001
		Dischg	T	-0.0009	0.0058	0.0503	0.0007	0.0001	0.0000

Notes

1. Displacement components are global: 1 = East 2 = North 3 = Up
2. Case 8e seismic displacements are from the frame/vessel analysis. Seismic anchor movements were input to the piping model as zero.

BY: E.O. Weiner
DATE: 6/15/06

SUBJECT: PT TLP Coupled Structural Analysis for Evaluation of Nozzle Loads

Nozzle Displacements

Case	Location		Load	in U1	in U2	in U3	deg R1	deg R2	deg R3
Case 8i	Pump	Inlet	D	0.0020	-0.0006	0.0006	0.0041	-0.0006	-0.0012
		Dischg	D	0.0014	0.0001	-0.0015	0.0017	0.0001	-0.0016
	Reboiler	Inlet	D	-0.0037	-0.0102	-0.0128	-0.0021	0.0054	-0.0012
		Dischg	D	-0.0037	-0.0120	-0.0215	-0.0020	0.0067	-0.0012
	Separator	Inlet	D	-0.0004	0.0003	-0.0314	-0.0001	0.0001	0.0001
		Dischg	D	-0.0005	0.0002	-0.0313	-0.0001	0.0001	0.0001
	Pump	Inlet	E	0.1957	0.0556	0.0052	0.0056	0.0228	0.1032
		Dischg	E	0.1288	0.0561	0.0028	0.0050	0.0411	0.0824
	Reboiler	Inlet	E	0.0525	0.0304	0.0090	0.0042	0.0107	0.0064
		Dischg	E	0.0523	0.0295	0.0114	0.0043	0.0113	0.0062
	Separator	Inlet	E	0.0749	0.1902	0.0176	0.0206	0.0127	0.0008
		Dischg	E	0.0796	0.1927	0.0164	0.0205	0.0126	0.0008
	Pump	Inlet	T	-0.1478	0.0187	0.0363	-0.0055	0.0033	-0.0030
		Dischg	T	-0.1469	-0.0083	0.0224	-0.0030	-0.0045	-0.0022
	Reboiler	Inlet	T	-0.0360	-0.0043	-0.0013	0.0037	0.0014	-0.0011
		Dischg	T	0.0247	-0.0059	-0.0034	0.0039	0.0015	-0.0011
	Separator	Inlet	T	0.0221	0.0058	0.0717	0.0007	0.0001	0.0001
		Dischg	T	-0.0009	0.0060	0.0503	0.0007	0.0001	0.0001
Case 8j	Pump	Inlet	D	0.0015	-0.0005	0.0006	0.0040	-0.0006	-0.0009
		Dischg	D	0.0012	0.0001	-0.0015	0.0016	0.0000	-0.0013
	Reboiler	Inlet	D	-0.0037	-0.0102	-0.0128	-0.0021	0.0055	-0.0013
		Dischg	D	-0.0037	-0.0120	-0.0215	-0.0020	0.0067	-0.0012
	Separator	Inlet	D	-0.0004	0.0003	-0.0314	-0.0001	0.0001	0.0001
		Dischg	D	-0.0005	0.0002	-0.0313	-0.0001	0.0001	0.0001
	Pump	Inlet	E	0.0582	0.0437	0.0036	0.0057	0.0056	0.0698
		Dischg	E	0.0257	0.0452	0.0012	0.0058	0.0111	0.0541
	Reboiler	Inlet	E	0.0391	0.0301	0.0076	0.0043	0.0086	0.0049
		Dischg	E	0.0392	0.0301	0.0103	0.0043	0.0094	0.0048
	Separator	Inlet	E	0.0752	0.1924	0.0176	0.0207	0.0127	0.0007
		Dischg	E	0.0798	0.1951	0.0164	0.0206	0.0127	0.0007
	Pump	Inlet	T	-0.0512	0.0202	0.0405	-0.0041	0.0200	0.0133
		Dischg	T	-0.0537	-0.0065	0.0258	-0.0022	0.0287	0.0096
	Reboiler	Inlet	T	-0.0126	-0.0050	-0.0069	0.0036	-0.0054	-0.0003
		Dischg	T	0.0479	-0.0055	0.0006	0.0039	-0.0051	-0.0003
	Separator	Inlet	T	0.0225	0.0068	0.0719	0.0008	-0.0001	-0.0002
		Dischg	T	-0.0004	0.0071	0.0504	0.0008	-0.0001	-0.0002

Notes
1. Displacement components are global: 1 = East 2 = North 3 = Up

BY: E.O. Weiner
DATE: 6/15/06

SUBJECT: PT TLP Coupled Structural Analysis for Evaluation of Nozzle Loads

Nozzle Displacements

Case	Location		Load	in U1	in U2	in U3	deg R1	deg R2	deg R3
Case 8k	Pump	Inlet	D	0.0020	-0.0003	0.0006	0.0041	-0.0005	-0.0009
		Dischg	D	0.0016	0.0004	-0.0015	0.0017	0.0001	-0.0013
	Reboiler	Inlet	D	-0.0036	-0.0102	-0.0128	-0.0021	0.0054	-0.0013
		Dischg	D	-0.0036	-0.0120	-0.0215	-0.0020	0.0066	-0.0012
	Separator	Inlet	D	-0.0004	0.0010	-0.0314	0.0000	0.0001	0.0001
		Dischg	D	-0.0005	0.0010	-0.0313	0.0001	0.0001	0.0001
	Pump	Inlet	E	0.2337	0.0501	0.0067	0.0068	0.0289	0.1032
		Dischg	E	0.1620	0.0504	0.0036	0.0053	0.0518	0.0831
	Reboiler	Inlet	E	0.0655	0.0311	0.0104	0.0042	0.0126	0.0070
		Dischg	E	0.0652	0.0294	0.0121	0.0043	0.0131	0.0068
	Separator	Inlet	E	0.0747	0.1391	0.0174	0.0205	0.0126	0.0010
		Dischg	E	0.0794	0.1394	0.0161	0.0204	0.0126	0.0010
	Pump	Inlet	T	-0.1570	0.0335	0.0373	-0.0039	0.0042	0.0189
		Dischg	T	-0.1442	0.0066	0.0225	-0.0019	-0.0033	0.0144
	Reboiler	Inlet	T	-0.0353	-0.0030	-0.0013	0.0036	0.0013	-0.0020
		Dischg	T	0.0254	-0.0059	-0.0033	0.0039	0.0013	-0.0020
	Separator	Inlet	T	0.0218	0.0336	0.0725	0.0065	0.0001	0.0000
		Dischg	T	-0.0013	0.0370	0.0512	0.0067	0.0001	0.0000
Case 8L	Pump	Inlet	D	0.0014	-0.0003	0.0006	0.0041	-0.0006	-0.0006
		Dischg	D	0.0012	0.0004	-0.0015	0.0016	0.0000	-0.0010
	Reboiler	Inlet	D	-0.0037	-0.0102	-0.0128	-0.0021	0.0055	-0.0013
		Dischg	D	-0.0037	-0.0120	-0.0215	-0.0020	0.0067	-0.0012
	Separator	Inlet	D	-0.0004	0.0010	-0.0314	0.0000	0.0001	0.0001
		Dischg	D	-0.0005	0.0009	-0.0313	0.0001	0.0001	0.0001
	Pump	Inlet	E	0.0765	0.0455	0.0049	0.0079	0.0072	0.0860
		Dischg	E	0.0287	0.0472	0.0012	0.0068	0.0134	0.0670
	Reboiler	Inlet	E	0.0389	0.0312	0.0081	0.0043	0.0089	0.0058
		Dischg	E	0.0390	0.0304	0.0104	0.0044	0.0097	0.0057
	Separator	Inlet	E	0.0752	0.1506	0.0173	0.0207	0.0128	0.0006
		Dischg	E	0.0799	0.1516	0.0160	0.0207	0.0128	0.0006
	Pump	Inlet	T	-0.0608	0.0346	0.0416	-0.0021	0.0207	0.0324
		Dischg	T	-0.0528	0.0082	0.0258	-0.0007	0.0292	0.0235
	Reboiler	Inlet	T	-0.0124	-0.0038	-0.0068	0.0035	-0.0054	-0.0011
		Dischg	T	0.0481	-0.0054	0.0007	0.0038	-0.0051	-0.0011
	Separator	Inlet	T	0.0222	0.0358	0.0727	0.0070	-0.0001	-0.0003
		Dischg	T	-0.0008	0.0396	0.0512	0.0072	-0.0001	-0.0003

Notes
1. Displacement components are global: 1 = East 2 = North 3 = Up

BY: E.O. Weiner
DATE: 6/15/06

SUBJECT: PT TLP Coupled Structural Analysis for Evaluation of Nozzle Loads

Nozzle Displacements

Case	Location		Load	in U1	in U2	in U3	deg R1	deg R2	deg R3
Case 8o	Pump	Inlet	D	0.0063	-0.0005	0.0006	0.0041	-0.0006	-0.0003
		Dischg	D	0.0063	0.0002	-0.0016	0.0016	0.0001	-0.0008
	Reboiler	Inlet	D	0.0005	-0.0094	-0.0153	-0.0020	-0.0020	-0.0005
		Dischg	D	0.0005	-0.0101	-0.0125	-0.0020	-0.0018	-0.0005
	Separator	Inlet	D	-0.0001	0.0001	-0.0316	-0.0001	0.0000	0.0001
		Dischg	D	-0.0001	0.0000	-0.0316	-0.0001	0.0000	0.0001
	Pump	Inlet	E	0.1957	0.0556	0.0052	0.0056	0.0228	0.1032
		Dischg	E	0.1288	0.0561	0.0028	0.0050	0.0411	0.0824
	Reboiler	Inlet	E	0.0525	0.0304	0.0090	0.0042	0.0107	0.0064
		Dischg	E	0.0523	0.0295	0.0114	0.0043	0.0113	0.0062
	Separator	Inlet	E	0.0749	0.1902	0.0176	0.0206	0.0127	0.0008
		Dischg	E	0.0796	0.1927	0.0164	0.0205	0.0126	0.0008
	Pump	Inlet	T	-0.1110	0.0142	0.0378	-0.0069	0.0041	-0.0022
		Dischg	T	-0.1106	-0.0070	0.0287	-0.0036	-0.0026	-0.0018
	Reboiler	Inlet	T	-0.0275	-0.0042	0.0055	0.0037	0.0015	-0.0009
		Dischg	T	0.0188	-0.0055	0.0033	0.0039	0.0015	-0.0009
	Separator	Inlet	T	0.0165	0.0043	0.0959	0.0006	0.0002	0.0000
		Dischg	T	-0.0011	0.0045	0.0797	0.0006	0.0002	0.0000
Case 8r	Pump	Inlet	D	0.0018	-0.0006	0.0006	0.0040	-0.0006	-0.0013
		Dischg	D	0.0012	0.0001	-0.0015	0.0016	0.0000	-0.0016
	Reboiler	Inlet	D	-0.0037	-0.0102	-0.0128	-0.0021	0.0055	-0.0012
		Dischg	D	-0.0037	-0.0120	-0.0215	-0.0020	0.0067	-0.0012
	Separator	Inlet	D	-0.0004	0.0003	-0.0314	-0.0001	0.0001	0.0001
		Dischg	D	-0.0005	0.0002	-0.0313	-0.0001	0.0001	0.0001
	Pump	Inlet	E	0.0805	0.0494	0.0030	0.0048	0.0058	0.0876
		Dischg	E	0.0380	0.0501	0.0008	0.0048	0.0105	0.0701
	Reboiler	Inlet	E	0.0390	0.0308	0.0070	0.0043	0.0081	0.0055
		Dischg	E	0.0390	0.0304	0.0103	0.0044	0.0089	0.0053
	Separator	Inlet	E	0.0752	0.1922	0.0177	0.0207	0.0127	0.0006
		Dischg	E	0.0798	0.1948	0.0165	0.0206	0.0127	0.0006
	Pump	Inlet	T	-0.0742	0.0150	0.0398	-0.0065	0.0104	0.0051
		Dischg	T	-0.0743	-0.0061	0.0305	-0.0034	0.0100	0.0038
	Reboiler	Inlet	T	-0.0184	-0.0044	0.0033	0.0036	-0.0011	-0.0006
		Dischg	T	0.0278	-0.0053	0.0049	0.0039	-0.0010	-0.0006
	Separator	Inlet	T	0.0166	0.0047	0.0960	0.0006	0.0001	-0.0001
		Dischg	T	-0.0010	0.0049	0.0797	0.0006	0.0001	-0.0001

Notes
1. Displacement components are global: 1 = East 2 = North 3 = Up

BY: E.O. Weiner
DATE: 6/15/06

SUBJECT: PT TLP Coupled Structural Analysis for Evaluation of Nozzle Loads

Nozzle Displacements

Case	Location		Load	in U1	in U2	in U3	deg R1	deg R2	deg R3
Case 8s	Pump	Inlet	D	0.0036	-0.0005	0.0004	0.0040	-0.0011	-0.0008
		Dischg	D	0.0037	0.0001	-0.0016	0.0016	-0.0009	-0.0012
	Reboiler	Inlet	D	-0.0002	-0.0094	-0.0152	-0.0020	-0.0018	-0.0005
		Dischg	D	-0.0002	-0.0101	-0.0126	-0.0020	-0.0016	-0.0005
	Separator	Inlet	D	-0.0001	0.0001	-0.0316	-0.0001	0.0001	0.0001
		Dischg	D	-0.0002	0.0000	-0.0316	-0.0001	0.0000	0.0001
	Pump	Inlet	E	0.0737	0.0467	0.0030	0.0048	0.0055	0.0814
		Dischg	E	0.0353	0.0475	0.0008	0.0047	0.0100	0.0651
	Reboiler	Inlet	E	0.0372	0.0306	0.0068	0.0043	0.0078	0.0052
		Dischg	E	0.0372	0.0304	0.0102	0.0043	0.0087	0.0051
	Separator	Inlet	E	0.0728	0.1921	0.0176	0.0207	0.0124	0.0006
		Dischg	E	0.0773	0.1947	0.0164	0.0206	0.0124	0.0006
	Pump	Inlet	T	-0.0742	0.0150	0.0398	-0.0065	0.0104	0.0051
		Dischg	T	-0.0743	-0.0061	0.0305	-0.0034	0.0100	0.0038
	Reboiler	Inlet	T	-0.0184	-0.0044	0.0033	0.0036	-0.0011	-0.0006
		Dischg	T	0.0278	-0.0053	0.0049	0.0039	-0.0010	-0.0006
	Separator	Inlet	T	0.0166	0.0047	0.0960	0.0006	0.0001	-0.0001
		Dischg	T	-0.0010	0.0049	0.0797	0.0006	0.0001	-0.0001

Notes
1. Displacement components are global: 1 = East 2 = North 3 = Up

BY: E.O. Weiner
DATE:6/15/06

SUBJECT: PT TLP Coupled Structural Analysis for Evaluation of Nozzle Loads

Modal Participation

Case	Mode Num	Hz Freq	Mass Participation X	Y	Z	Feature
Case8a	1	6.2	0.10	0.09	0.01	Reboiler Dischg EW & NS
	2	6.8	0.07	0.28	0.01	Separator Inlet NS
	3	13.4	0.01	0.28	0.00	Pump Inlet NS
	5	20.0	0.00	0.00	0.12	Separator Inlet Vert
	6	20.7	0.11	0.01	0.01	Pump Inlet EW
	14	47.4	0.00	0.00	0.11	
	17	63.8	0.22	0.01	0.01	
	19	85.7	0.00	0.00	0.15	
	23	161.5	0.00	0.02	0.13	
	24	183.3	0.12	0.00	0.00	
	Total		0.83	0.91	0.86	
Case8d	1	3.8	0.00	0.12	0.00	Reboiler Dischg NS
	3	7.2	0.01	0.55	0.00	Separator NS
	4	7.5	0.14	0.02	0.00	Pump EW
	5	9.9	0.50	0.00	0.00	Separator EW
	8	12.7	0.01	0.19	0.01	Reboiler NS
	12	18.2	0.00	0.00	0.39	Separator Vert
	17	28.5	0.00	0.01	0.13	Reboiler Vert
	24	71.0	0.01	0.00	0.11	Pump Vert
	Total		0.95	0.97	0.92	
Case 8e	1	3.9	0.00	0.41	0.00	Reboiler Dischg NS
	2	5.9	0.16	0.00	0.02	Reboiler Dischg EW
	3	13.4	0.01	0.28	0.00	Pump Inlet NS
	4	13.6	0.10	0.00	0.00	Separator Inlet EW
	7	20.6	0.11	0.01	0.01	Pump Inlet EW
	13	38.9	0.11	0.00	0.01	Reboiler Inlet EW
	18	57.2	0.12	0.00	0.02	
	19	62.5	0.14	0.00	0.06	
	21	93.2	0.00	0.00	0.11	
	23	105.6	0.00	0.00	0.14	
	Total		0.89	0.91	0.86	
Case 8g	1	3.9	0.00	0.13	0.00	Reboiler Dischg NS
	2	5.6	0.00	0.50	0.00	Separator NS
	4	6.7	0.53	0.00	0.00	Separator EW
	11	18.3	0.00	0.00	0.38	Separator Vert
	17	31.7	0.22	0.00	0.00	Reboiler EW
	19	34.3	0.00	0.19	0.00	Reboiler NS
	24	79.2	0.00	0.00	0.28	
	Total		0.93	0.93	0.89	

Notes: Modes shown for participation > 10%.
Total participation includes modes not shown.

BY: E.O. Weiner
DATE:6/15/06

SUBJECT: PT TLP Coupled Structural Analysis for Evaluation of Nozzle Loads

Modal Participation

Case	Mode Num	Hz Freq	Mass Participation X	Y	Z	Feature
Case 8i	2	7.2	0.01	0.59	0.00	Separator NS
	3	7.5	0.14	0.02	0.00	Pump EW
	4	9.9	0.50	0.00	0.00	Separator EW
	7	12.7	0.01	0.21	0.01	Reboiler NS
	12	18.4	0.00	0.00	0.46	Separator Vert
	17	28.6	0.00	0.00	0.18	Reboiler Vert
	Total		0.95	0.95	0.91	
Case 8j	2	7.2	0.00	0.61	0.00	Separator NS
	4	9.9	0.50	0.00	0.00	Separator EW
	5	11.5	0.21	0.01	0.00	Reboiler EW
	7	12.8	0.00	0.19	0.02	Reboiler NS
	12	18.4	0.00	0.00	0.47	Separator Vert
	17	28.7	0.00	0.00	0.11	Reboiler Vert
	Total		0.95	0.96	0.91	

Notes: Modes shown for participation > 10%.
Total participation includes modes not shown.

BY: E.O. Weiner
DATE:6/15/06

SUBJECT: PT TLP Coupled Structural Analysis for Evaluation of Nozzle Loads

9 References

SCN 24590-PTF-3PN-MEVV-00012. Implementation of parametric study and high pressure steam design change.
A402 AREVA Doc Id 32-5058402-00 HEP 1 TLP Reboiler Vessel Skid Seismic Qualification
A472 AREVA Doc Id 32-5034472-03, HEP 1 FPE and TLP Separator Vessel Skids Seismic Qualification
A603 AREVA Doc Id 51-5071603-01, Recirculation Pump Support Arrangement
A647B AREVA Doc Id 51-5048647B-00, WTP 24590-QL-P0A-MEW-00001-01-00550, Rev. 00A
SAPVV 24590-WTP-VV-ST-05-004 Rev 1. SAP 2000 Verification and Validation Test Report
SAP Analysis Reference Manual, SAP2000, Integrated Software for Structural Analysis and Design, Version 10.0.1, Computer and Structure, Inc. (CSI), 1995 University Avenue, Berkeley, California 94704 USA.
GTS GTSTRUDL User Reference Manual, Rev 25, Computer Aided Structural Engineering Center, School of Civil and Environmental Engineering, Georgia Institute of Technology, Atlanta, GA 30332-0355.
B31.3 ASME B31.3-2004, ASME Code for Process Piping.
ECO E.C. Ocoma verbal instructions
00005A Calculation 24590-PTF-S0C-S15T-00005-RevA

ATTACHMENT #3

FEP & TLP Separator Recirculation Isometrics And Mid Roller Details

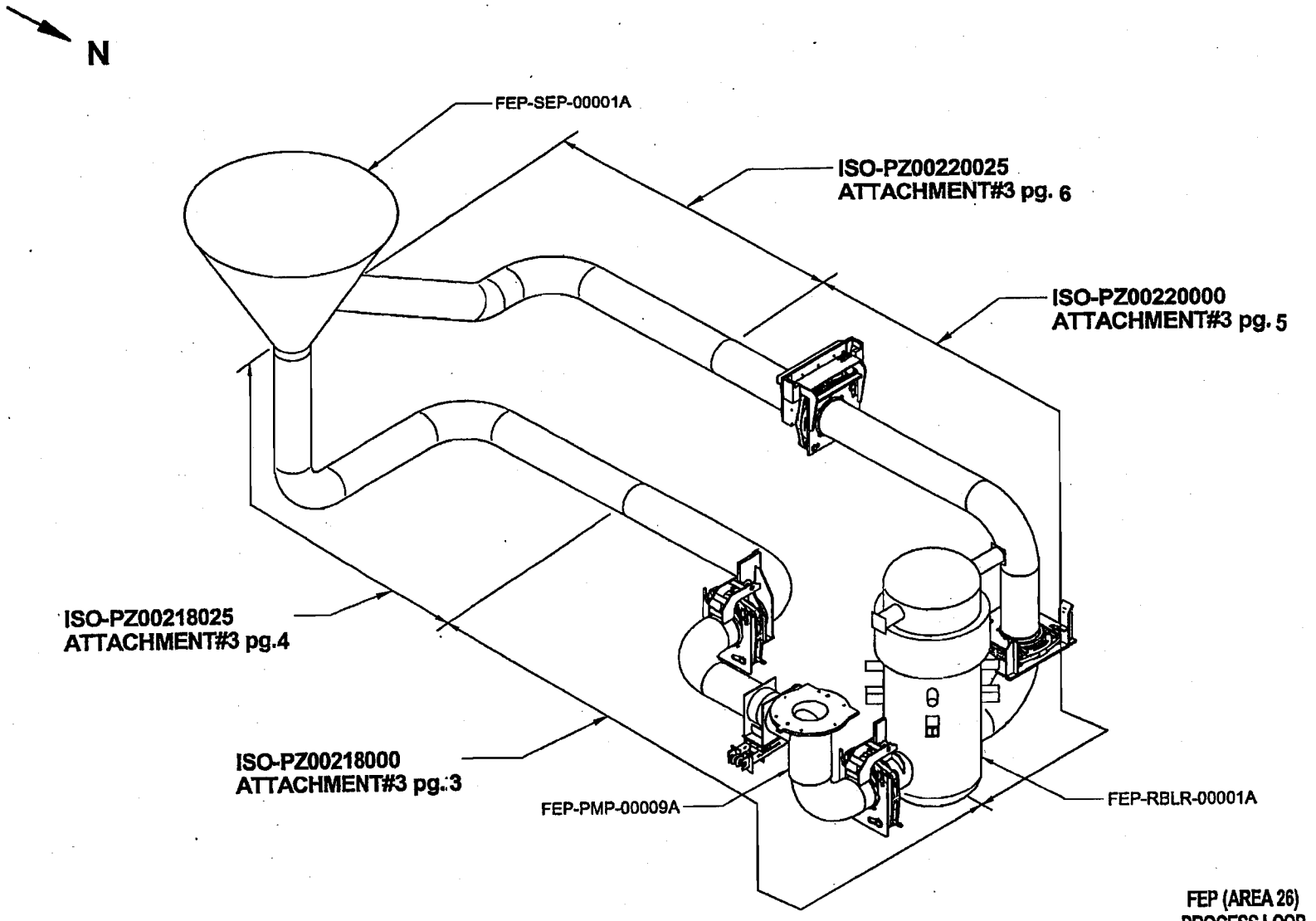

FEP (AREA 26)
PROCESS LOOP
INFORMATION ISO

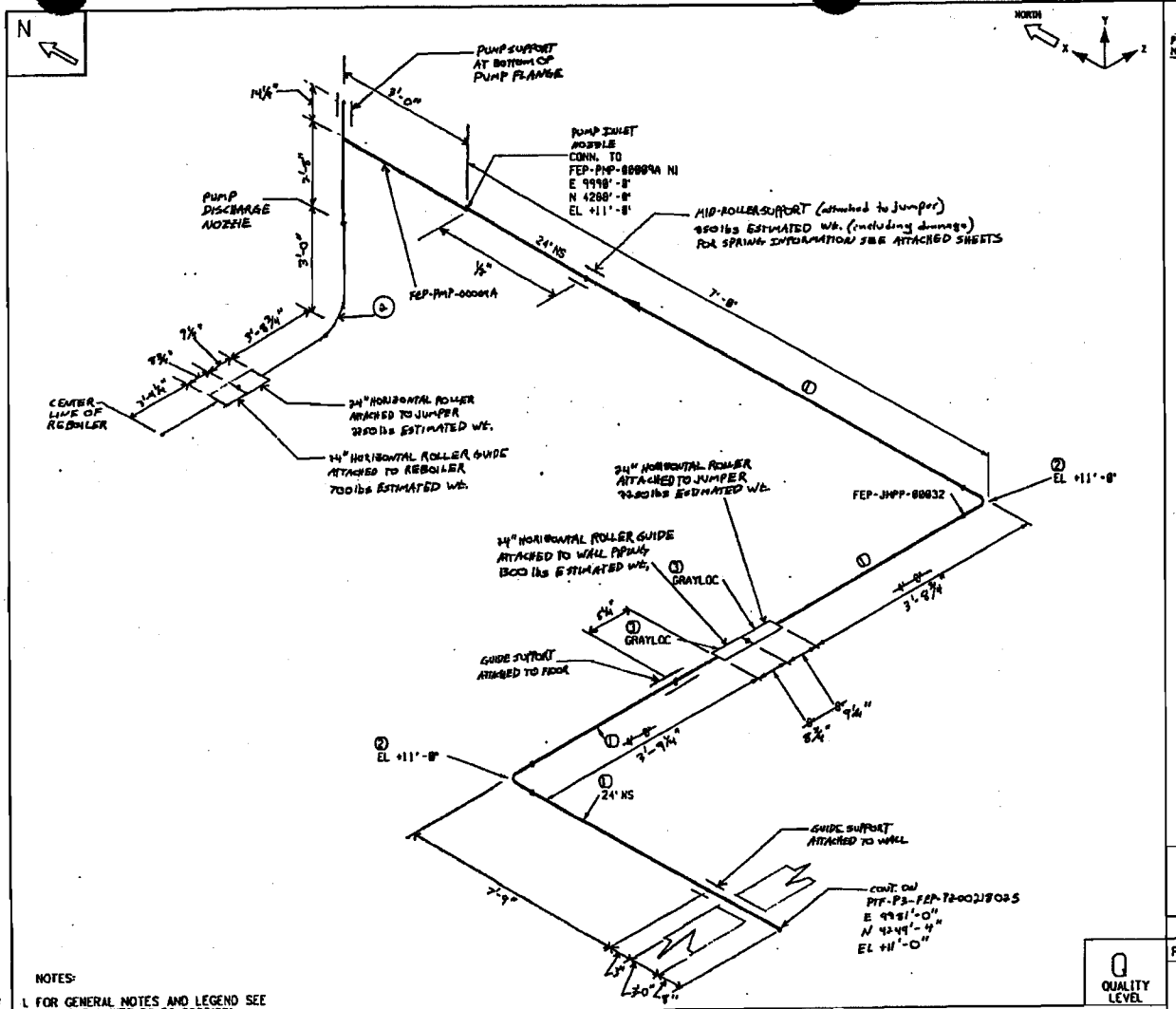

NOTES:

1. FOR GENERAL NOTES AND LEGEND SEE DWG. 24590-WTP-PO-50-00001001.

SHOP MATERIALS

PART NO	COMPONENT DESCRIPTION	N.S. (INCHES)	QTY	BECHTEL STK CODE
	PIPE			
1	PIPE, A312TP304/304L, EFW, 0.375", BBE	24	8'0"	PPPCX00L1V0C
	FITTINGS			
2	EL - 90, LR, BW, A403WP304/304L-WX, 0.375"	24	2	PFONX00L240U
3	RCC (GRAYLOC)	24	2	N/A

AREA 26

STRESS REVIEW PRINT	REV
☐ ACCEPTED	☐ NOT ACCEPTED
☐ ACCEPTED W/ COMMENTS	☐ SUPPORTS ADDED TO MODEL
BY:	
STRESS ANALYST:	DATE:

RIVER PROTECTION PROJECT
WASTE TREATMENT PLANT
2435 STEVENS CENTER PLACE
RICHLAND, WA 99352

CONTRACT No: DE-AC27-01RV14136

P&ID: 24590-PTF-M6-FEP-00002 | CONST. WORK AREA: 21

PRETREATMENT FACILITY ISOMETRIC

LINE No. FEP-PZ-00218-S12D-24 | PIPE SPEC: S12D

DWG No. 24590-PTF-P3-FEP-PZ00218000 | REV A

PAINT CODE	N/A	CONTENT APPLICABLE TO ALARA? ☐ YES ☐ NO	
INSULATION TYPE	NI	ADR NO.	REV.
INSULATION THK.	0		SEISMIC CAT. SC-1

QUALITY LEVEL Q

LENGTH (FT.) NO DATA (FOR INFO ONLY) JSM Created: JUN-26-2006 16:21 Iso Created: JUN-26-2006 16:21 PCF File: 24590-PTF-P3-FEP-PZ00218000

PLOTTED BY: trvincen PLOT DATE: 06/28/2006 04:44:01 PM SHT. 1 OF 1

Use view file place fence for plotting to not print data fields

COMPUTER GENERATED - MANUAL CHANGES NOT PERMITTED

ISO TYPE: PT_STRESS h:\STRESS\STRESS_ISO\jumper\Area_26\24590-PTF-P3-FEP-PZ00218000.DGN

24590-PTF-3PS-MEVV-T0001, Rev. 2
Forced Circulation Vacuum Evaporator System

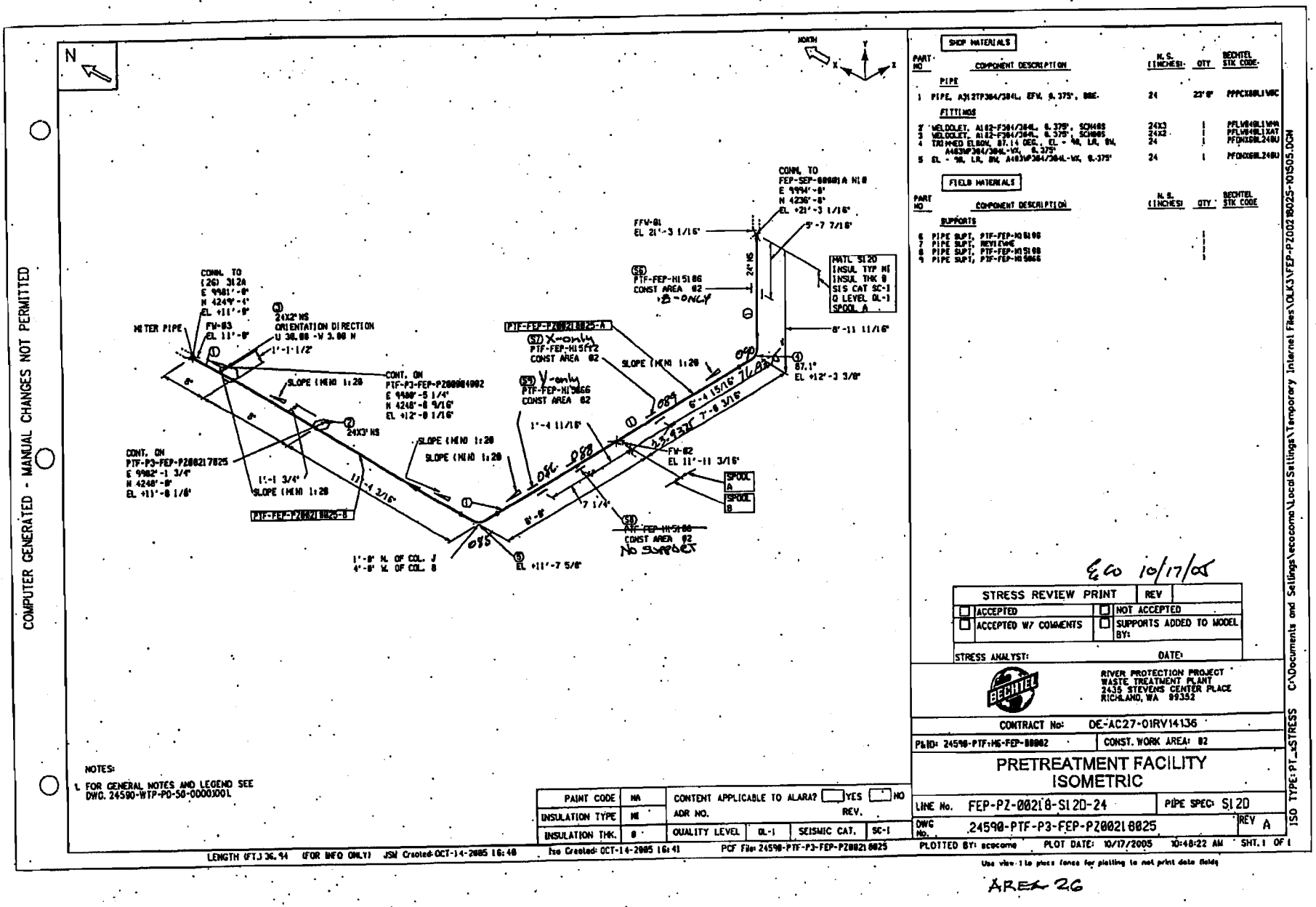
COMPUTER GENERATED - MANUAL CHANGES NOT PERMITTED
N
NORTH
CONN. TO (26) 3124 E 9981'-0" N 4249'-4" EL +11'-9"
MITER PIPE
FW-83 EL 11'-9"
24X2" NS ORIENTATION DIRECTION U 36.00 -W 3.00 N
1'-1 1/2"
CONT. ON PTF-P3-FEP-PZ00004002 E 9980'-5 1/4" N 4248'-8 9/16" EL +12'-8 1/16"
SLOPE (MIN) 1:20
24X3" NS
CONT. ON PTF-P3-FEP-PZ00217825 E 9982'-1 3/4" N 4248'-8" EL +11'-8 1/8"
1'-1 3/4"
PTF-FEP-PZ00218825-B
11'-4 3/16"
1'-8" N. OF COL. J
4'-8" W. OF COL. 8
EL +11'-7 5/8"
PTF-FEP-PZ00218825-A
(S7) X-only PTF-FEP-HI5112 CONST AREA 02
(S5) V-only PTF-FEP-HI5066 CONST AREA 02
1'-4 11/16"
7 1/4"
(S5) PTF-FEP-HI5186 CONST AREA 02 No support
CONN. TO FEP-SEP-00001A N18 E 9994'-8" N 4236'-8" EL +21'-3 1/16"
FFV-81 EL 21'-3 1/16"
5'-7 7/16"
(S5) PTF-FEP-HI5186 CONST AREA 02 -B- ONLY
24" NS
MATL SI2D INSUL TYP MI INSUL THK 8 SIS CAT SC-1 Q LEVEL QL-1 SPOOL A
8'-11 11/16"
87.1° EL +12'-3 3/8"
6'-4 15/16"
7'-8 3/16"
FW-82 EL 11'-11 3/16"
SPOOL A
SPOOL B
NOTES:
1. FOR GENERAL NOTES AND LEGEND SEE DWG. 24590-WTP-PD-50-00003001
PAINT CODE MA
INSULATION TYPE MI
INSULATION THK. 8
CONTENT APPLICABLE TO ALARA? YES NO
ADR NO.
REV.
QUALITY LEVEL QL-1
SEISMIC CAT. SC-1
LENGTH (FT.) 36.94 (FOR INFO ONLY) JSN Created: OCT-14-2005 16:48
Iso Created: OCT-14-2005 16:41
PCF File: 24590-PTF-P3-FEP-PZ00218825
SHOP MATERIALS
PART NO | COMPONENT DESCRIPTION | N.S. (INCHES) | QTY | BECHTEL STK CODE
PIPE
1 PIPE, A312TP304/304L, EFW, 0.375", SCH. | 24 | 23'-8" | PPPCX08L1V8C
FITTINGS
2 WELDOLET, A182-F304/304L, 0.375", SCH40S | 24X3 | 1 | PFLW04BL1WA
3 WELDOLET, A182-F304/304L, 0.375", SCH40S | 24X2 | 1 | PFLW04BL1XAT
4 TRIMMED ELBOW, 87.14 DEG., EL - WL, LR, BW, A403WP304/304L-WX, 0.375" | 24 | 1 | PFDX08L248U
5 EL - WL, LR, BW, A403WP304/304L-WX, 0.375" | 24 | 1 | PFDX08L248U
FIELD MATERIALS
PART NO | COMPONENT DESCRIPTION | N.S. (INCHES) | QTY | BECHTEL STK CODE
SUPPORTS
6 PIPE SUPT, PTF-FEP-HI5186 | 1
7 PIPE SUPT, REVISED | 1
8 PIPE SUPT, PTF-FEP-HI5188 | 1
9 PIPE SUPT, PTF-FEP-HI5066 | 1
Eco 10/17/05
STRESS REVIEW PRINT REV
ACCEPTED
NOT ACCEPTED
ACCEPTED W/ COMMENTS
SUPPORTS ADDED TO MODEL BY:
STRESS ANALYST: DATE:
BECHTEL
RIVER PROTECTION PROJECT WASTE TREATMENT PLANT 2435 STEVENS CENTER PLACE RICHLAND, WA 99352
CONTRACT No: DE-AC27-01RV14136
P&ID: 24590-PTF-M5-FEP-00002
CONST. WORK AREA: 02
PRETREATMENT FACILITY ISOMETRIC
LINE No. FEP-PZ-00218-SI2D-24
PIPE SPEC: SI2D
DWG No. 24590-PTF-P3-FEP-PZ00218825
REV A
PLOTTED BY: ecocome PLOT DATE: 10/17/2005 10:48:22 AM SHT. 1 OF 1
Use view 1 to place fence for plotting to not print data fields
ISO TYPE: PT_4STRESS C:\Documents and Settings\ecocome\Local Settings\Temporary Internet Files\OLK3\FEP-PZ00218025-101505.DGN
AREA 26

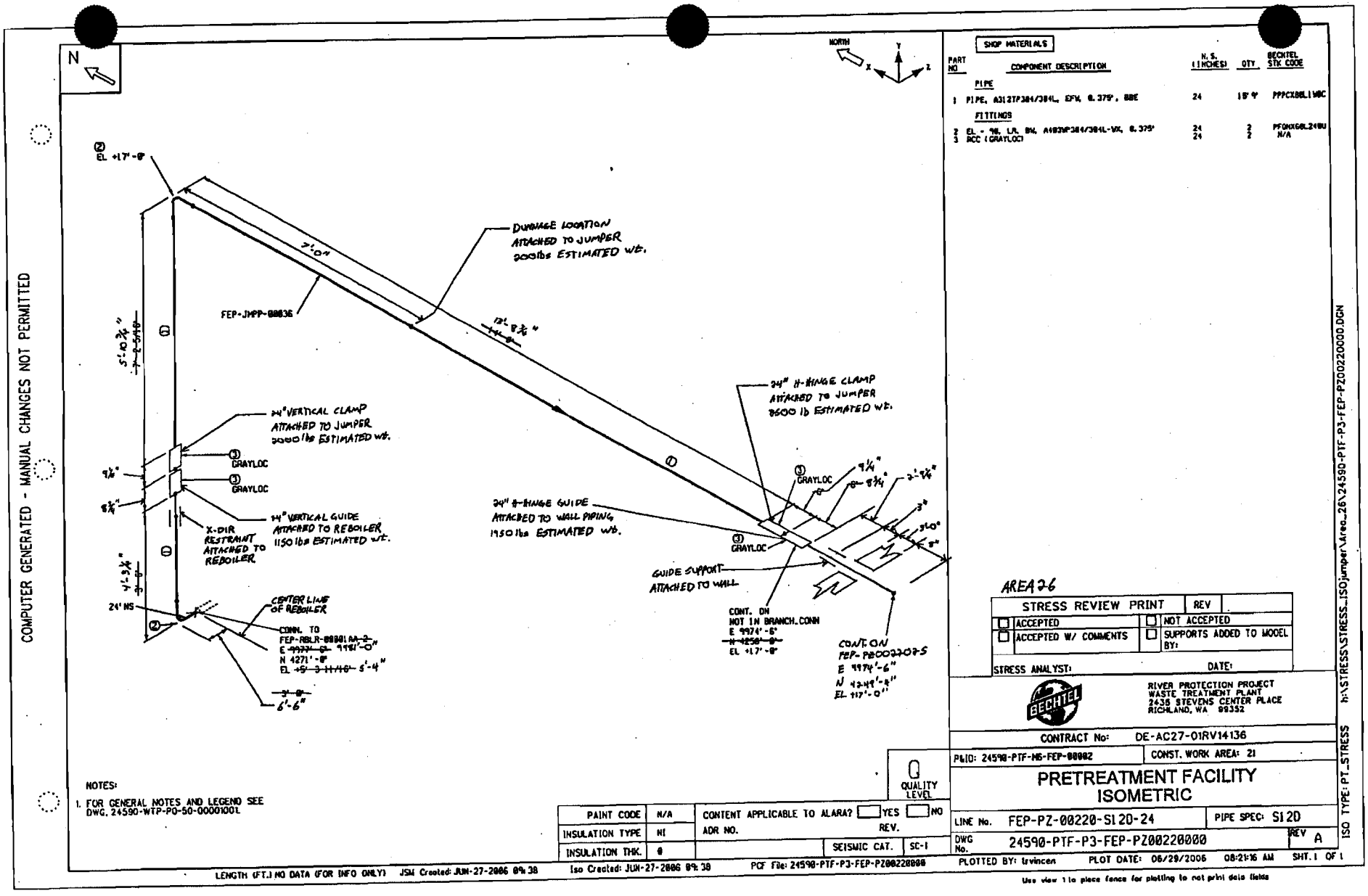
COMPUTER GENERATED - MANUAL CHANGES NOT PERMITTED
N
NORTH
EL +17'-9"
FEP-JMPP-00036
DUNNAGE LOCATION ATTACHED TO JUMPER 2000lbs ESTIMATED WT.
24" VERTICAL CLAMP ATTACHED TO JUMPER 2000 lbs ESTIMATED WT.
GRAYLOC
GRAYLOC
24" VERTICAL GUIDE ATTACHED TO REBOILER 1150 lbs ESTIMATED WT.
X-DIR RESTRAINT ATTACHED TO REBOILER
24" NS
CENTER LINE OF REBOILER
CONN. TO FEP-RBLR-00001A
E 9974'-6"
N 4271'-8"
EL +5'-3 11/16"
24" H-HINGE CLAMP ATTACHED TO JUMPER 8500 lb ESTIMATED WT.
24" H-HINGE GUIDE ATTACHED TO WALL PIPING 1950 lbs ESTIMATED WT.
GUIDE SUPPORT ATTACHED TO WALL
CONT. ON NOT IN BRANCH CONN
E 9974'-6"
EL +17'-0"
CONT ON FEP-PZ00220-S
E 9974'-6"
N 4249'-8"
EL +17'-0"
AREA 26
SHOP MATERIALS
PART NO
COMPONENT DESCRIPTION
N.S. (INCHES)
QTY
BECHTEL STK CODE
PIPE
1 PIPE, A312TP304/304L, EFW, 0.375", BBE 24 15'-9" PPPCX06L1W0C
FITTINGS
2 EL - 90, LR, BW, A403WP304/304L-WX, 0.375" 24 2 PFQWX06L240U
3 RCC (GRAYLOC) 24 2 N/A
STRESS REVIEW PRINT
REV
ACCEPTED
NOT ACCEPTED
ACCEPTED W/ COMMENTS
SUPPORTS ADDED TO MODEL BY:
STRESS ANALYST:
DATE:
BECHTEL
RIVER PROTECTION PROJECT
WASTE TREATMENT PLANT
2435 STEVENS CENTER PLACE
RICHLAND, WA 99352
CONTRACT No: DE-AC27-01RV14136
P&ID: 24590-PTF-M6-FEP-00002
CONST. WORK AREA: 21
PRETREATMENT FACILITY
ISOMETRIC
LINE No. FEP-PZ-00220-S12D-24
PIPE SPEC: S12D
DWG No. 24590-PTF-P3-FEP-PZ00220000
REV A
NOTES:
1. FOR GENERAL NOTES AND LEGEND SEE DWG. 24590-WTP-PO-50-00001001
Q QUALITY LEVEL
PAINT CODE N/A
INSULATION TYPE NI
INSULATION THK. 0
CONTENT APPLICABLE TO ALARA? YES NO
ADR NO.
REV.
SEISMIC CAT. SC-1
LENGTH (FT.) NO DATA (FOR INFO ONLY) JSM Created: JUN-27-2006 09:38
Iso Created: JUN-27-2006 09:38
PCF File: 24590-PTF-P3-FEP-PZ00220000
PLOTTED BY: tvincen
PLOT DATE: 06/29/2006 08:21:16 AM
SHT. 1 OF 1
Use view 1 to place fence for plotting to not print data fields
ISO TYPE: PT_STRESS
h:\STRESS\STRESS_ISO\jumper\Area_26\24590-PTF-P3-FEP-PZ00220000.DGN

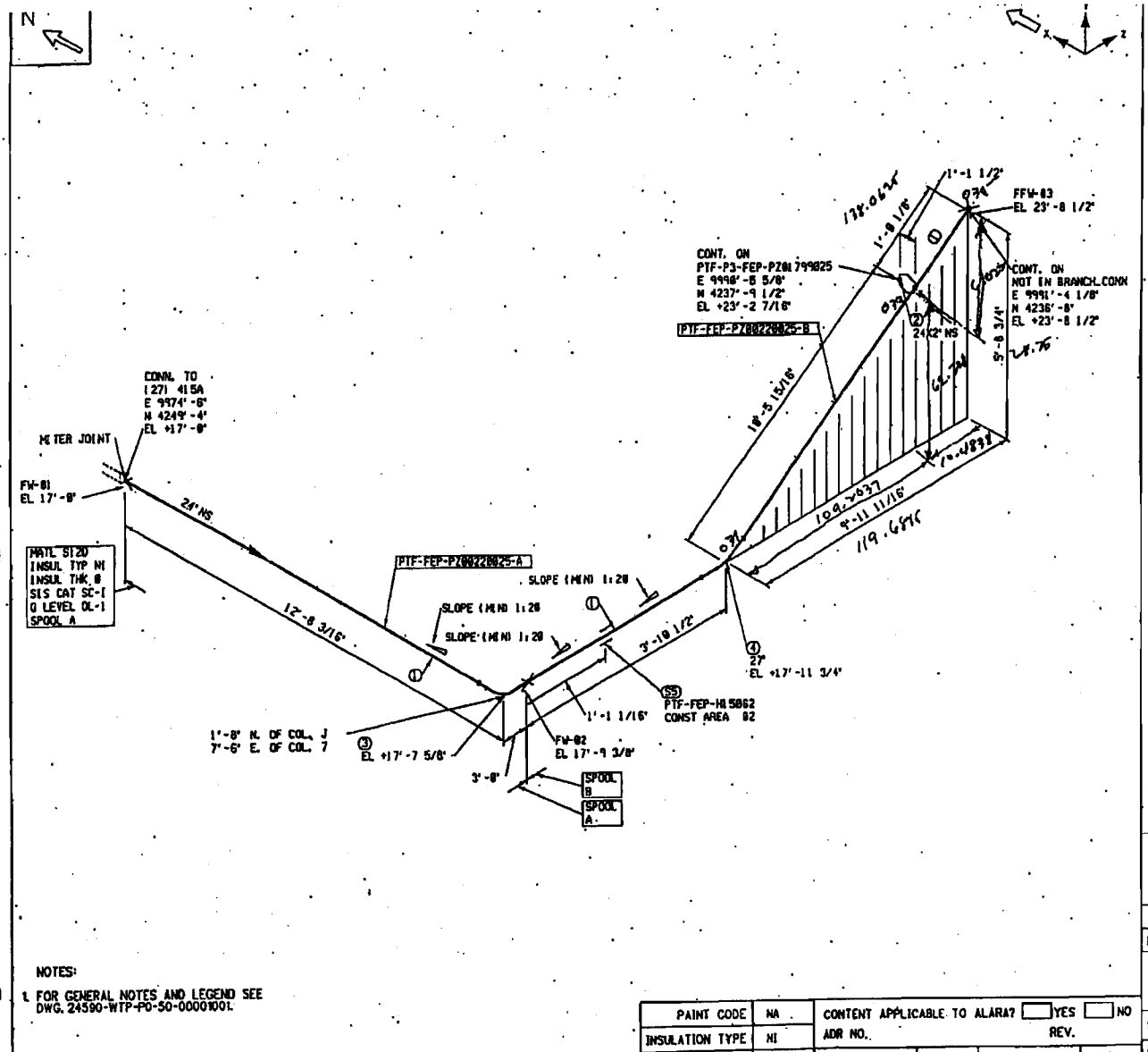

PART NO	COMPONENT DESCRIPTION	N.S. (INCHES)	QTY	BECHTEL STK CODE
	PIPE			
1	PIPE, A312TP304/304L, EFW, 0.375", BBE	24	23'8"	PPPCX8BLLWBC
	FITTINGS			
2	WELDOLET, A182-F304/304L, 0.375", SCH80S	24X2	1	PFLW848LLXAT
3	EL - 90, LR, BW, A403WP304/304L-WX, 0.375"	24	1	PFRXGBL240U
4	TRIMMED ELBOW, 27.82 DEG., EL - 45, LR, BW, A403WP304/304L-WX, 0.375"	24	1	PFRXGBL236U
	FIELD MATERIALS			
	SUPPORTS			
5	PIPE SUPT, PTF-FEP-HL5862		1	

PAINT CODE	NA	CONTENT APPLICABLE TO ALARA? ☐ YES ☐ NO
INSULATION TYPE	NI	ADR NO. REV.
INSULATION THK.	8	QUALITY LEVEL QL-1 SEISMIC CAT. SC-1

NOTES:
1. FOR GENERAL NOTES AND LEGEND SEE DWG. 24590-WTP-PO-50-00001001.

ECO 10/17/05

STRESS REVIEW PRINT	REV
☐ ACCEPTED	☐ NOT ACCEPTED
☐ ACCEPTED W/ COMMENTS	☐ SUPPORTS ADDED TO MODEL BY:
STRESS ANALYST:	DATE:

RIVER PROTECTION PROJECT
WASTE TREATMENT PLANT
2435 STEVENS CENTER PLACE
RICHLAND, WA 99352

CONTRACT No: DE-AC27-01RV14136

P&ID: 24590-PTF-MS-FEP-00002 | CONST. WORK AREA: 82

PRETREATMENT FACILITY ISOMETRIC

LINE No. FEP-PZ-00220-S12D-24 | PIPE SPEC: S12D

DWG No. 24590-PTF-P3-FEP-PZ00220025 | REV A

PLOTTED BY: ykim PLOT DATE: 02/08/2005 07:27:53 AM SHT. 1 OF 1

ISO TYPE: PT_xSTRESS C:\iso\24590-PTF-P3-FEP-PZ00220025.DGN

LENGTH (FT.) 32.19 (FOR INFO ONLY) JSM Created: FEB-08-2005 07:24 Iso Created: FEB-08-2005 07:25 PCF File: 24590-PTF-P3-FEP-PZ00220825

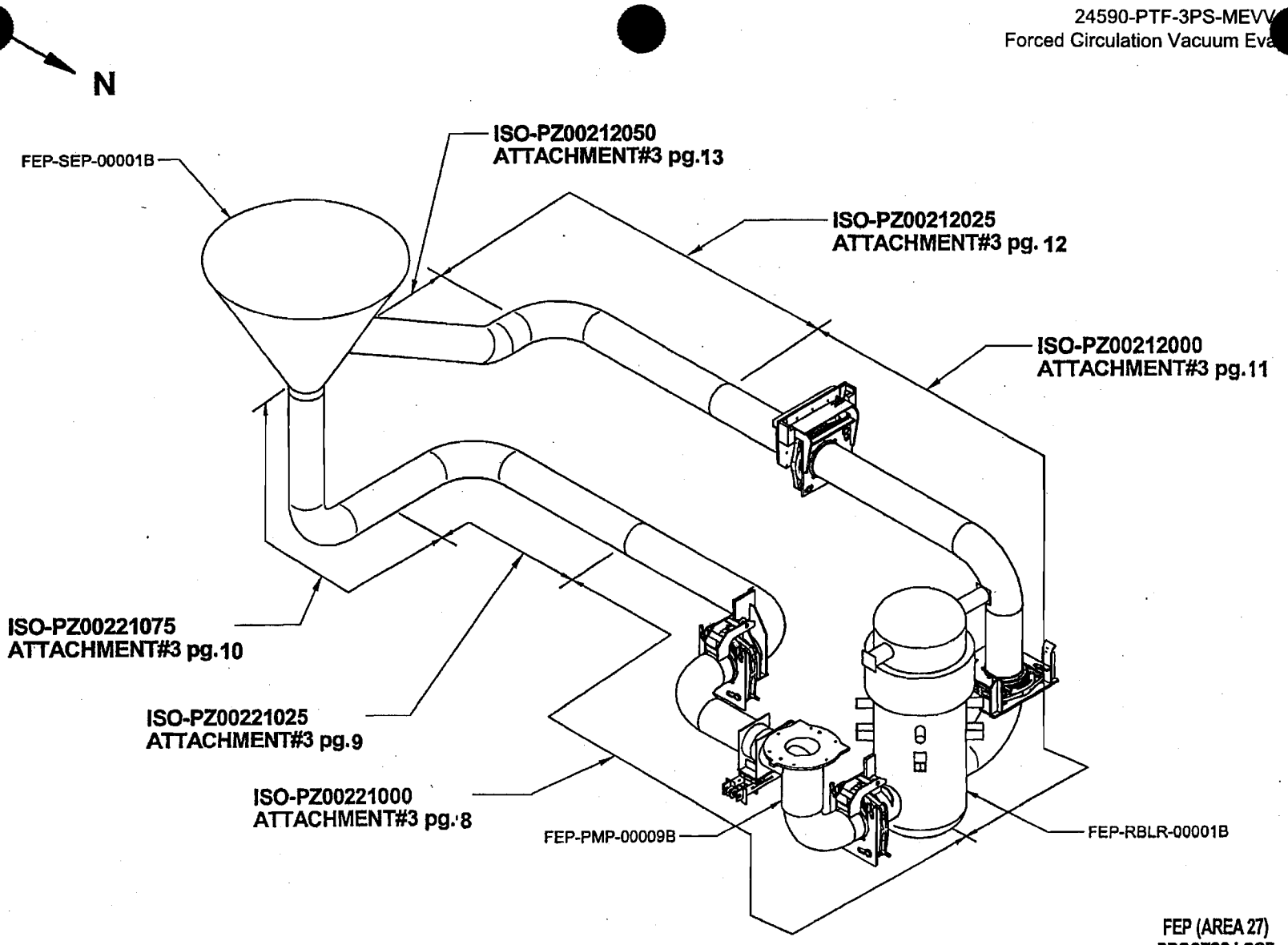

FEP (AREA 27)
PROCESS LOOP
INFORMATION ISO

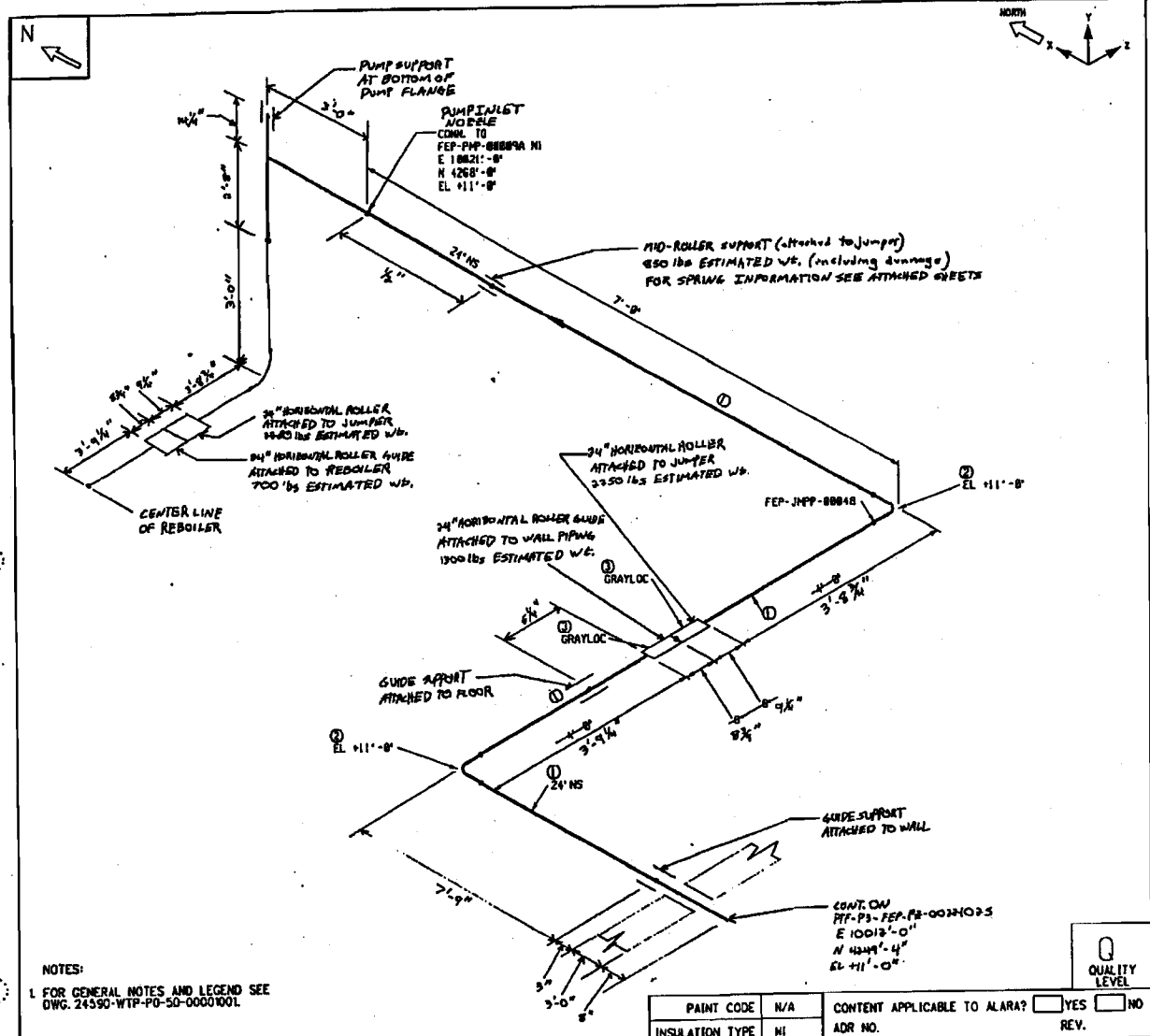
N
PUMP SUPPORT AT BOTTOM OF PUMP FLANGE
PUMP INLET NOZZLE
CONN. TO FEP-PMP-00004A N1
E 10021'-0"
N 4268'-0"
EL +11'-0"
MID-ROLLER SUPPORT (attached to jumper)
650 lbs ESTIMATED Wt. (including dunnage)
FOR SPRING INFORMATION SEE ATTACHED SHEETS
24"NS
7'-0"
3'-0"
24" HORIZONTAL ROLLER ATTACHED TO JUMPER 1440 lbs ESTIMATED Wt.
24" HORIZONTAL ROLLER GUIDE ATTACHED TO REBOILER 700 lbs ESTIMATED Wt.
CENTER LINE OF REBOILER
24" HORIZONTAL ROLLER ATTACHED TO JUMPER 2250 lbs ESTIMATED Wt.
FEP-JMPP-00004B
EL +11'-0"
24" HORIZONTAL ROLLER GUIDE ATTACHED TO WALL PIPING 1900 lbs ESTIMATED Wt.
GRAYLOC
GRAYLOC
GUIDE SUPPORT ATTACHED TO FLOOR
EL +11'-0"
24"NS
GUIDE SUPPORT ATTACHED TO WALL
CONT. ON PTF-P3-FEP-P2-00224003-S
E 10013'-0"
N 4349'-4"
EL +11'-0"
NOTES:
1. FOR GENERAL NOTES AND LEGEND SEE DWG. 24590-WTP-PO-50-00001001
NORTH
SHOP MATERIALS
PART NO
COMPONENT DESCRIPTION
N.S. (INCHES)
QTY
BECHTEL STK CODE
PIPE
1 PIPE, A312TP304/304L, EFW, 0.375", BBE 24 8'-8" PPPCX8BL1WBC
FITTINGS
2 EL - 90, LR, BW, A403WP304/304L-WX, 0.375" 24 2 PFDNX8BL240U
3 RCC (GRAYLOC) 24 2 N/A
AREA 87
STRESS REVIEW PRINT
REV
ACCEPTED
NOT ACCEPTED
ACCEPTED W/ COMMENTS
SUPPORTS ADDED TO MODEL BY:
STRESS ANALYST:
DATE:
RIVER PROTECTION PROJECT
WASTE TREATMENT PLANT
2435 STEVENS CENTER PLACE
RICHLAND, WA 99352
CONTRACT No: DE-AC27-01RV14136
P&ID: 24590-PTF-M6-FEP-00004
CONST. WORK AREA: 21
PRETREATMENT FACILITY
ISOMETRIC
LINE No. FEP-PZ-00221-S120-24
PIPE SPEC: S120
DWG No. 24590-PTF-P3-FEP-PZ00221000
REV A
Q QUALITY LEVEL
PAINT CODE N/A
INSULATION TYPE NI
INSULATION THK. 0
CONTENT APPLICABLE TO ALARA? YES NO
ADR NO.
REV.
SEISMIC CAT. SC-1
LENGTH (FT.) NO DATA (FOR INFO ONLY) ISO Created: JUN-29-2006 15:14
ISO Created: JUN-29-2006 15:15
PCF File: 24590-PTF-P3-FEP-PZ00221000
PLOTTED BY: krvincen
PLOT DATE: 06/29/2006 03:44:50 PM
SHT. 1 OF 1
Use view 1 to place fence for plotting to not print data fields
ISO TYPE: PT_STRESS
c:\iso\24590-PTF-P3-FEP-PZ00221000.DGN
COMPUTER GENERATED - MANUAL CHANGES NOT PERMITTED

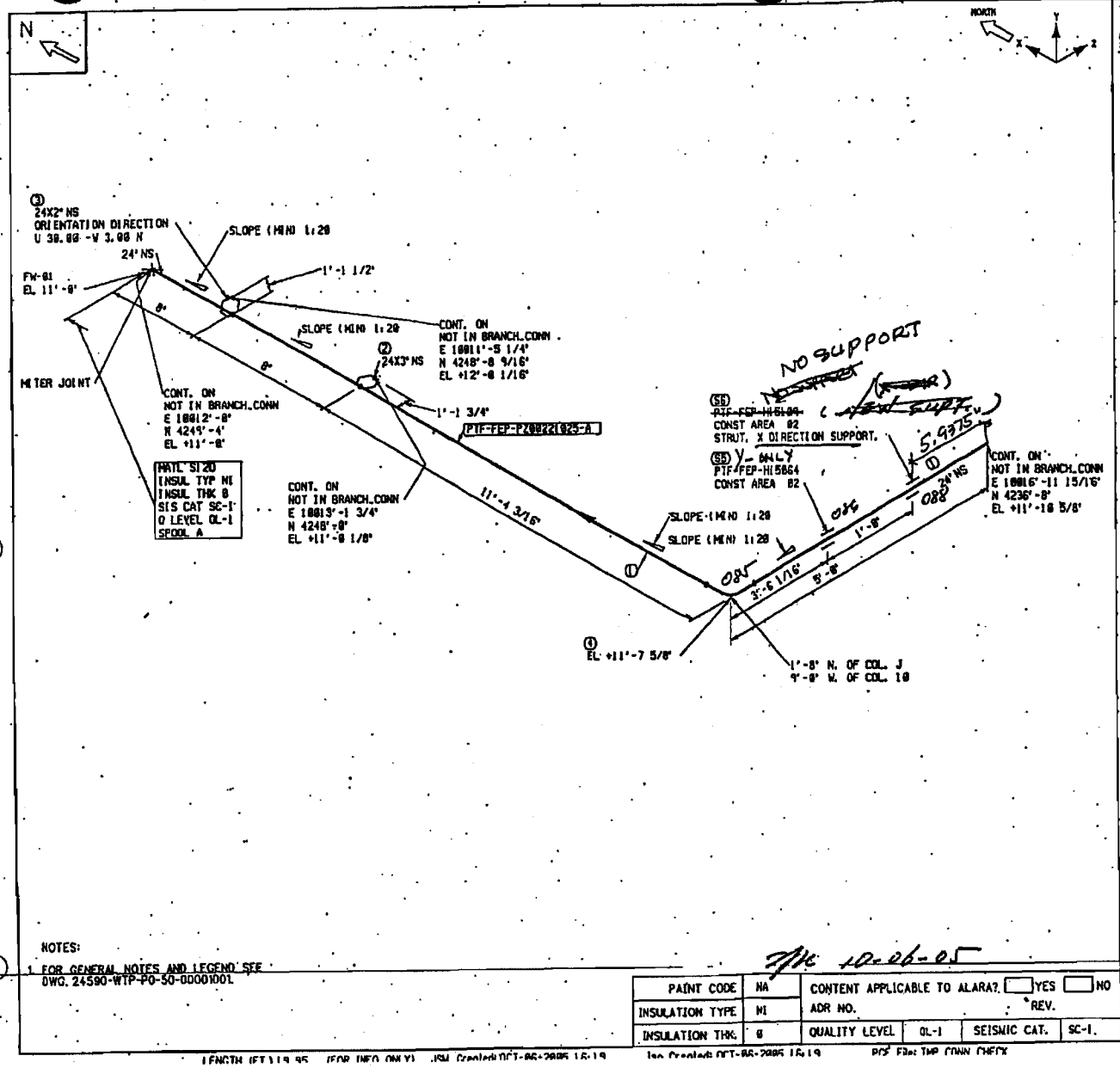

NOTES:
1 FOR GENERAL NOTES AND LEGEND SEE DWG. 24590-WTP-PO-50-00001001

PAINT CODE	NA	CONTENT APPLICABLE TO ALARA?	YES	NO		
INSULATION TYPE	MI	ADR NO.		REV.		
INSULATION THK.	0	QUALITY LEVEL	QL-1	SEISMIC CAT.	SC-1	

LENGTH (FT) 19.95 (FOR INFO ONLY) ISM Created: OCT-06-2005 15:19 Iso Created: OCT-06-2005 15:19 PCF File: TWP CONN CHECK

SHOP MATERIALS

PART NO	COMPONENT DESCRIPTION	N.S. (INCHES)	QTY	BECHTEL STK CODE
	PIPE			
1	PIPE, A312TP304/304L, EFW, 0.375", BBE	24	11'-9"	PPPCX80LIW0C
	FITTINGS			
2	WELDOLET, A182-F304/304L, 0.375", SCH40S	24X3	1	PFLW840LIWWA
3	WELDOLET, A182-F304/304L, 0.375", SCH80S	24X2	1	PFLW840LIXAT
4	EL - 90, LR, BW, A403WP304/304L-WX, 0.375"	24	1	PFQNX58L240U

FIELD MATERIALS

PART NO	COMPONENT DESCRIPTION	N.S. (INCHES)	QTY	BECHTEL STK CODE
	SUPPORTS			
5	PIPE SUPT, PTF-FEP-HI5864		1	
6	PIPE SUPT, PTF-FEP-HI6109		1	

STRESS REVIEW PRINT	REV
☐ ACCEPTED	☐ NOT ACCEPTED
☐ ACCEPTED W/ COMMENTS	☐ SUPPORTS ADDED TO MODEL BY:
STRESS ANALYST:	DATE:

RIVER PROTECTION PROJECT
WASTE TREATMENT PLANT
2435 STEVENS CENTER PLACE
RICHLAND, WA 99352

CONTRACT No: DE-AC27-01RV14136

P&ID: 24590-PTF-M6-FEP-00004 | CONST. WORK AREA: 02

PRETREATMENT FACILITY
ISOMETRIC

LINE No.: FEP-PZ-00221-SI20-24 | PIPE SPEC: SI20

DWG No. 24590-PTF-P3-FEP-PZ00221025 | REV: A

PLOTTED BY: ybim PLOT DATE: 10/06/2005 04:20:10 PM SHT 1 OF 1

ISO TYPE: PT_xSTRESS C:\Iso\tmp_conn_check.DGN

COMPUTER GENERATED - MANUAL CHANGES NOT PERMITTED

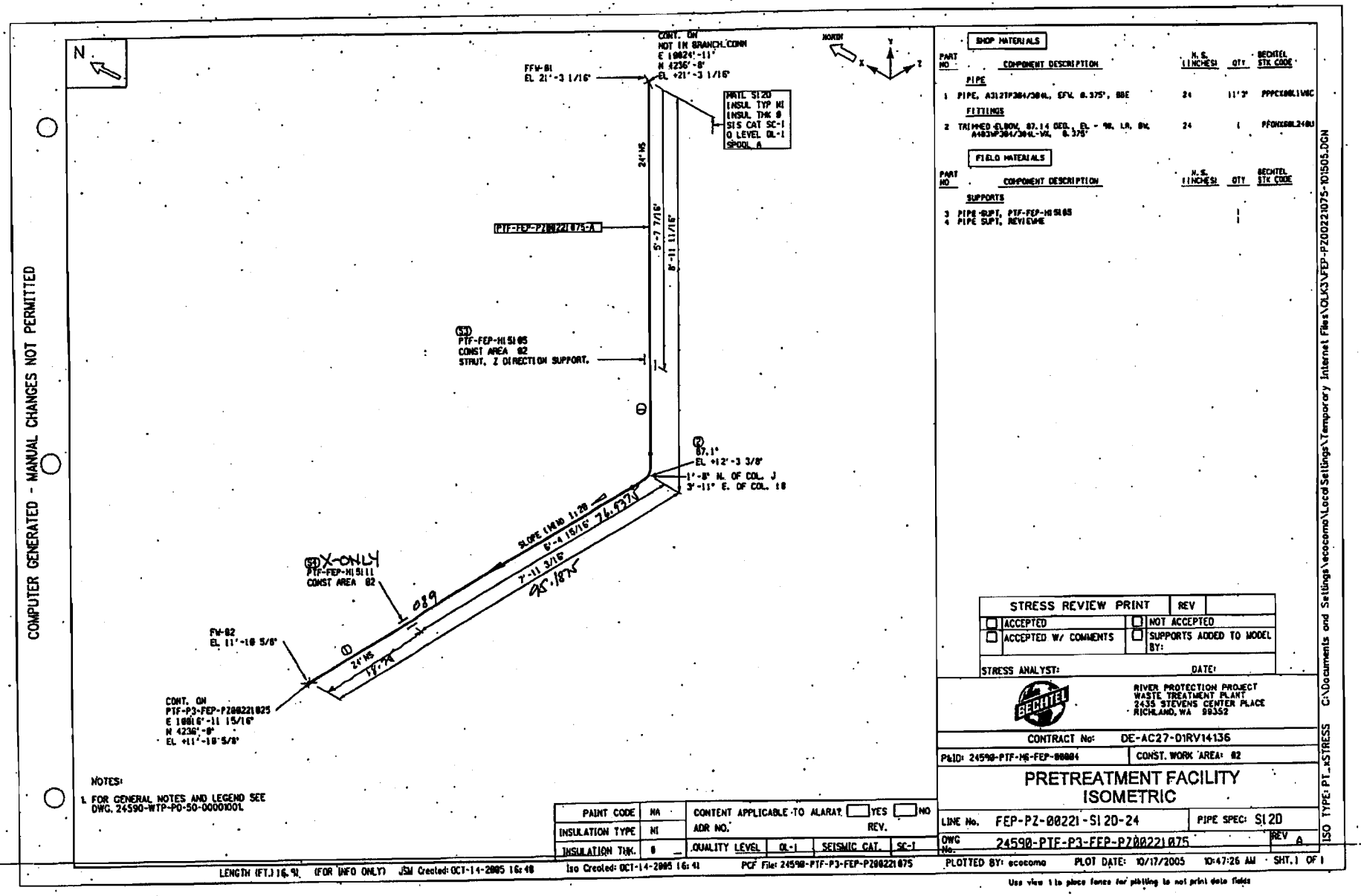
COMPUTER GENERATED - MANUAL CHANGES NOT PERMITTED
N
NORTH
CONT. ON
NOT IN BRANCH CONN
E 100824'-11"
N 4236'-8"
EL +21'-3 1/16"
FFW-B1
EL 21'-3 1/16"
PATL S12D
INSUL TYP MI
INSUL THK 0
SIS CAT SC-1
Q LEVEL QL-1
SPOOL A
24"MS
PTF-FEP-PZ00221075-A
5'-7 7/16"
8'-11 11/16"
(SD)
PTF-FEP-HISI05
CONST AREA 02
STRUT, Z DIRECTION SUPPORT.
(2)
87.1°
EL +12'-3 3/8"
1'-8" N. OF COL. J
3'-11" E. OF COL. 18
SLOPE (MIN) 1:20
6'-4 15/16"
7'-11 3/16"
76.537°
45.187°
(SD) X-ONLY
PTF-FEP-HISI11
CONST AREA 02
089
24"MS
14'-7"
FW-B2
EL 11'-10 5/8"
CONT. ON
PTF-P3-FEP-PZ00221025
E 100816'-11 15/16"
N 4236'-0"
EL +11'-10 5/8"
NOTES:
1. FOR GENERAL NOTES AND LEGEND SEE DWG. 24590-WTP-PO-50-00001001
SHOP MATERIALS
PART NO
COMPONENT DESCRIPTION
N.S. (INCHES)
QTY
BECHTEL STK CODE
PIPE
1 PIPE, A312TP304/304L, SCH. 0.375", BBE 24 11'3" PPPCX00L1W0C
FITTINGS
2 TRIMMED ELBOW, 87.14 DEG. EL - 90, LR, BW, A403WP304/304L-WX, 0.375" 24 1 PFOXX00L24B0
FIELD MATERIALS
PART NO
COMPONENT DESCRIPTION
N.S. (INCHES)
QTY
BECHTEL STK CODE
SUPPORTS
3 PIPE SUPT, PTF-FEP-HISI05
4 PIPE SUPT, REVIEWME 1
STRESS REVIEW PRINT
REV
ACCEPTED
NOT ACCEPTED
ACCEPTED W/ COMMENTS
SUPPORTS ADDED TO MODEL BY:
STRESS ANALYST:
DATE:
BECHTEL
RIVER PROTECTION PROJECT
WASTE TREATMENT PLANT
2435 STEVENS CENTER PLACE
RICHLAND, WA 99352
CONTRACT No: DE-AC27-01RV14136
P&ID: 24590-PTF-M6-FEP-00004
CONST. WORK AREA: 02
PRETREATMENT FACILITY
ISOMETRIC
LINE No. FEP-PZ-00221-S12D-24
PIPE SPEC: S12D
DWG No. 24590-PTF-P3-FEP-PZ00221075
REV A
PAINT CODE NA
INSULATION TYPE MI
INSULATION THK. 0
CONTENT APPLICABLE TO ALARA? YES NO
ADR NO.
REV.
QUALITY LEVEL QL-1
SEISMIC CAT. SC-1
LENGTH (FT.) 16.9 (FOR INFO ONLY) JSM Created: OCT-14-2005 16:48
Iso Created: OCT-14-2005 16:41
PCF File: 24590-PTF-P3-FEP-PZ00221075
PLOTTED BY: ecocomo
PLOT DATE: 10/17/2005 10:47:26 AM
SHT. 1 OF 1
Use view 1 to place fence for plotting to not print data fields
ISO TYPE: PT_ASTRESS
C:\Documents and Settings\ecocomo\Local Settings\Temporary Internet Files\VOLK3\FEP-PZ00221075-101505.DGN
AREA 27

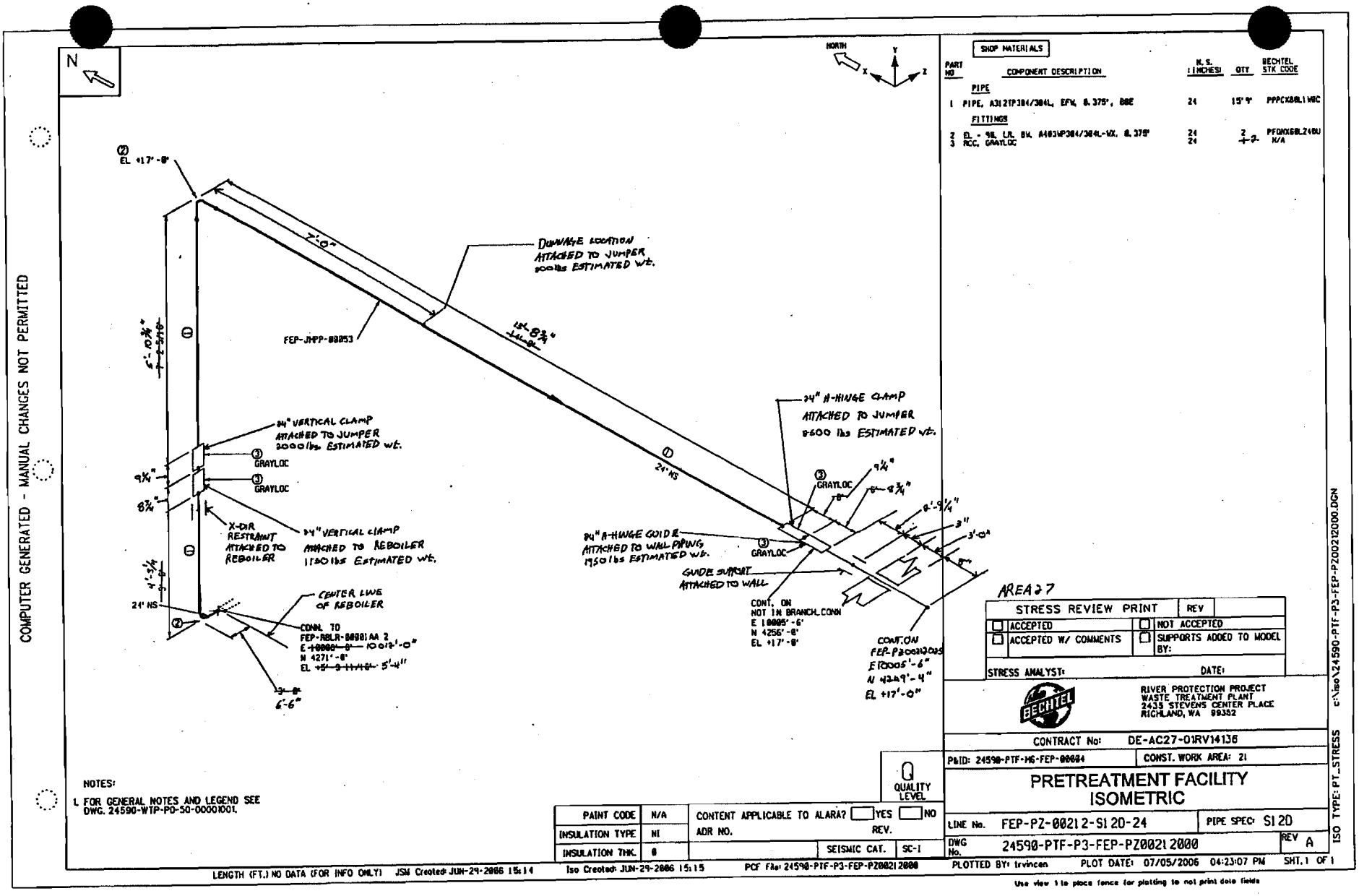
COMPUTER GENERATED - MANUAL CHANGES NOT PERMITTED
NORTH
SHOP MATERIALS
PART NO
COMPONENT DESCRIPTION
N.S. (INCHES)
QTY
BECHTEL STK CODE
PIPE
1 PIPE, A312TP304/304L, EFW, 0.375", SCH 10S 24 15'-9" PPPCK8BL1WBC
FITTINGS
2 EL - 90 LR, BW, A403WP304/304L-WX, 0.375" 24 2 PFQNX6BL240U
3 RCC, GRAYLOC 24 2 N/A
7'-0"
DRAWAGE LOCATION ATTACHED TO JUMPER 900lbs ESTIMATED wt.
FEP-JMPP-00053
24" VERTICAL CLAMP ATTACHED TO JUMPER 2000lbs ESTIMATED wt.
24" VERTICAL CLAMP ATTACHED TO REBOILER 11501bs ESTIMATED wt.
X-DIR RESTRAINT ATTACHED TO REBOILER
CENTER LINE OF REBOILER
CONN. TO FEP-RBLR-00001AA 2
24" H-HINGE CLAMP ATTACHED TO JUMPER 8600 lbs ESTIMATED wt.
24" H-HINGE GUIDE ATTACHED TO WALL PIPING 1950lbs ESTIMATED wt.
GUIDE SUPPORT ATTACHED TO WALL
CONT. ON NOT IN BRANCH CONN
CONT. ON FEP-PZ00213005
GRAYLOC
24" NS
AREA 27
STRESS REVIEW PRINT
REV
ACCEPTED
NOT ACCEPTED
ACCEPTED W/ COMMENTS
SUPPORTS ADDED TO MODEL BY:
STRESS ANALYST:
DATE:
BECHTEL
RIVER PROTECTION PROJECT
WASTE TREATMENT PLANT
2435 STEVENS CENTER PLACE
RICHLAND, WA 99352
CONTRACT No: DE-AC27-01RV14136
P&ID: 24590-PTF-MG-FEP-00004
CONST. WORK AREA: 21
PRETREATMENT FACILITY
ISOMETRIC
LINE No. FEP-PZ-00212-S120-24
PIPE SPEC: S12D
DWG No. 24590-PTF-P3-FEP-PZ00212000
REV A
Q QUALITY LEVEL
PAINT CODE N/A
INSULATION TYPE NI
INSULATION THK. 0
CONTENT APPLICABLE TO ALARA? YES NO
ADR NO.
REV.
SEISMIC CAT. SC-1
NOTES:
1. FOR GENERAL NOTES AND LEGEND SEE DWG. 24590-WTP-PO-50-00001001.
LENGTH (FT.) NO DATA (FOR INFO ONLY) JSM Created: JUN-29-2006 15:14
Iso Created: JUN-29-2006 15:15
PCF File: 24590-PTF-P3-FEP-PZ00212000
PLOTTED BY: trvincen PLOT DATE: 07/05/2006 04:23:07 PM SHT. 1 OF 1
Use view 1 to place fence for plotting to not print date fields
ISO TYPE: PT_STRESS c:\iso\24590-PTF-P3-FEP-PZ00212000.DGN

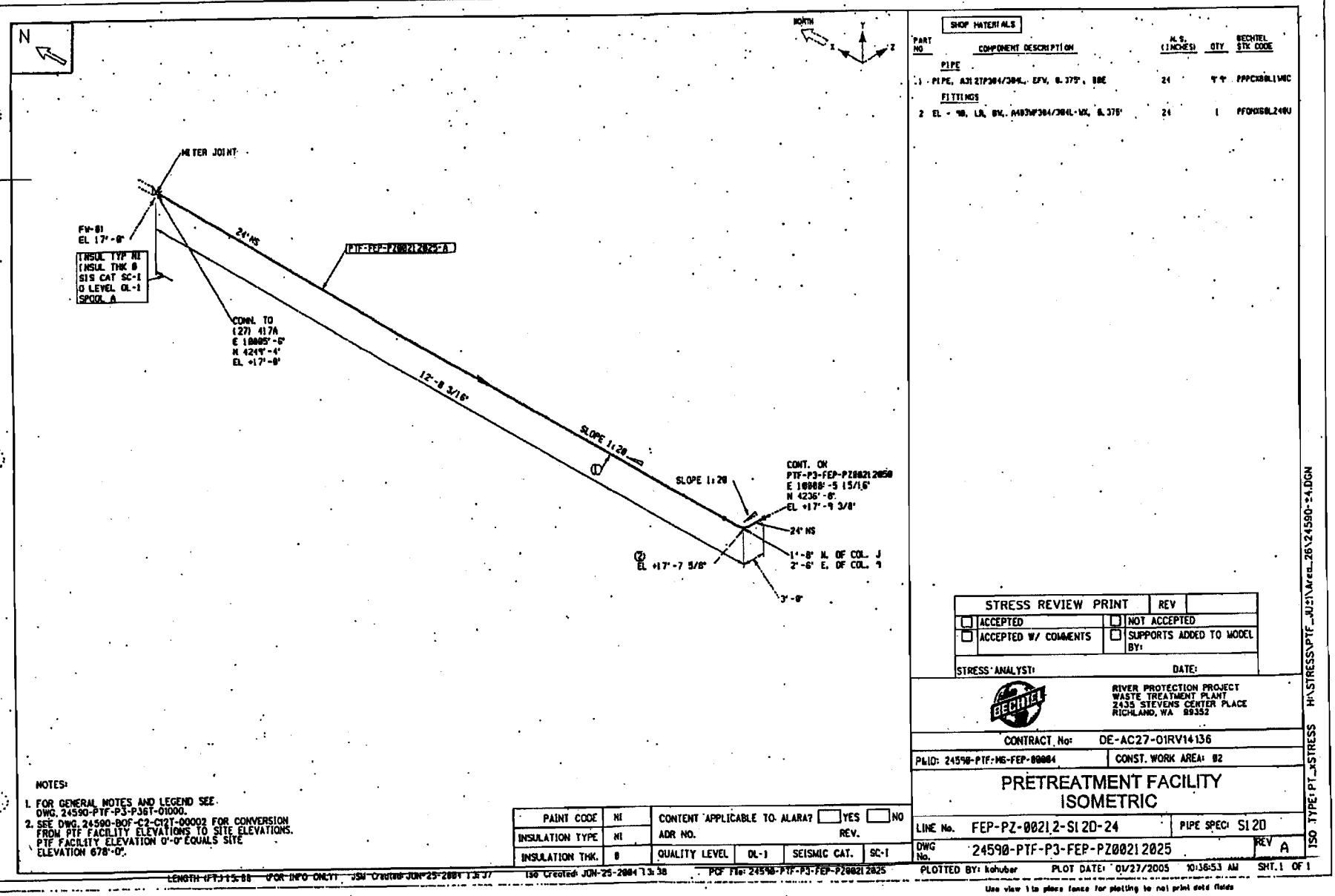
COMPUTER GENERATED - MANUAL CHANGES NOT PERMITTED
N
NORTH
METER JOINT
FW-81
EL 17'-8"
INSUL TYP NI
INSUL THK 8
SIS CAT SC-1
D LEVEL DL-1
SPOOL A
24"-MS
PTF-FEP-PZ00212025-A
CONN. TO
(27) 417A
E 10005'-6"
N 4249'-4"
EL +17'-8"
12'-8 3/16"
SLOPE 1:20
SLOPE 1:20
CONT. ON
PTF-P3-FEP-PZ00212050
E 10008'-5 15/16"
N 4236'-6"
EL +17'-9 3/8"
24"-MS
1'-8" N. OF COL. J
2'-6" E. OF COL. 9
EL +17'-7 5/8"
3'-0"
SHOP MATERIALS
PART NO
COMPONENT DESCRIPTION
N.S. (INCHES)
QTY
BECHTEL STK CODE
PIPE
1 - PIPE, A312TP304/304L, EFW, 0.375", SCH 10S
24
FITTINGS
2 EL - 90, LR, BW, A403WP304/304L-WX, 0.375"
24
1
PFGW90LR240U
NOTES:
1. FOR GENERAL NOTES AND LEGEND SEE DWG. 24590-PTF-P3-P36T-01000.
2. SEE DWG. 24590-BOF-C2-C12T-00002 FOR CONVERSION FROM PTF FACILITY ELEVATIONS TO SITE ELEVATIONS. PTF FACILITY ELEVATION 0'-0" EQUALS SITE ELEVATION 678'-0".
PAINT CODE
NI
INSULATION TYPE
NI
INSULATION THK.
8
CONTENT APPLICABLE TO ALARA? YES NO
ADR NO.
REV.
QUALITY LEVEL
DL-1
SEISMIC CAT.
SC-1
STRESS REVIEW PRINT
REV
ACCEPTED
NOT ACCEPTED
ACCEPTED W/ COMMENTS
SUPPORTS ADDED TO MODEL BY:
STRESS ANALYST:
DATE:
RIVER PROTECTION PROJECT
WASTE TREATMENT PLANT
2435 STEVENS CENTER PLACE
RICHLAND, WA 99352
CONTRACT No: DE-AC27-01RV14136
PWID: 24590-PTF-MS-FEP-00004
CONST. WORK AREA: 82
PRETREATMENT FACILITY
ISOMETRIC
LINE No. FEP-PZ-00212-S12D-24
PIPE SPEC: S12D
DWG No. 24590-PTF-P3-FEP-PZ00212025
REV A
PLOTTED BY: kohuber
PLOT DATE: 01/27/2005 10:36:53 AM
SHT. 1 OF 1
LENGTH (FT): 15.88 FOR INFO ONLY!
ISO Created: JON-25-2004 13:37
PCF File: 24590-PTF-P3-FEP-PZ00212025
Use view 1 to place fence for plotting to not print gold fields
ISO TYPE: PT_XSTRESS H:\STRESS\PTF_JU1\Area_26\24590-24.DGN

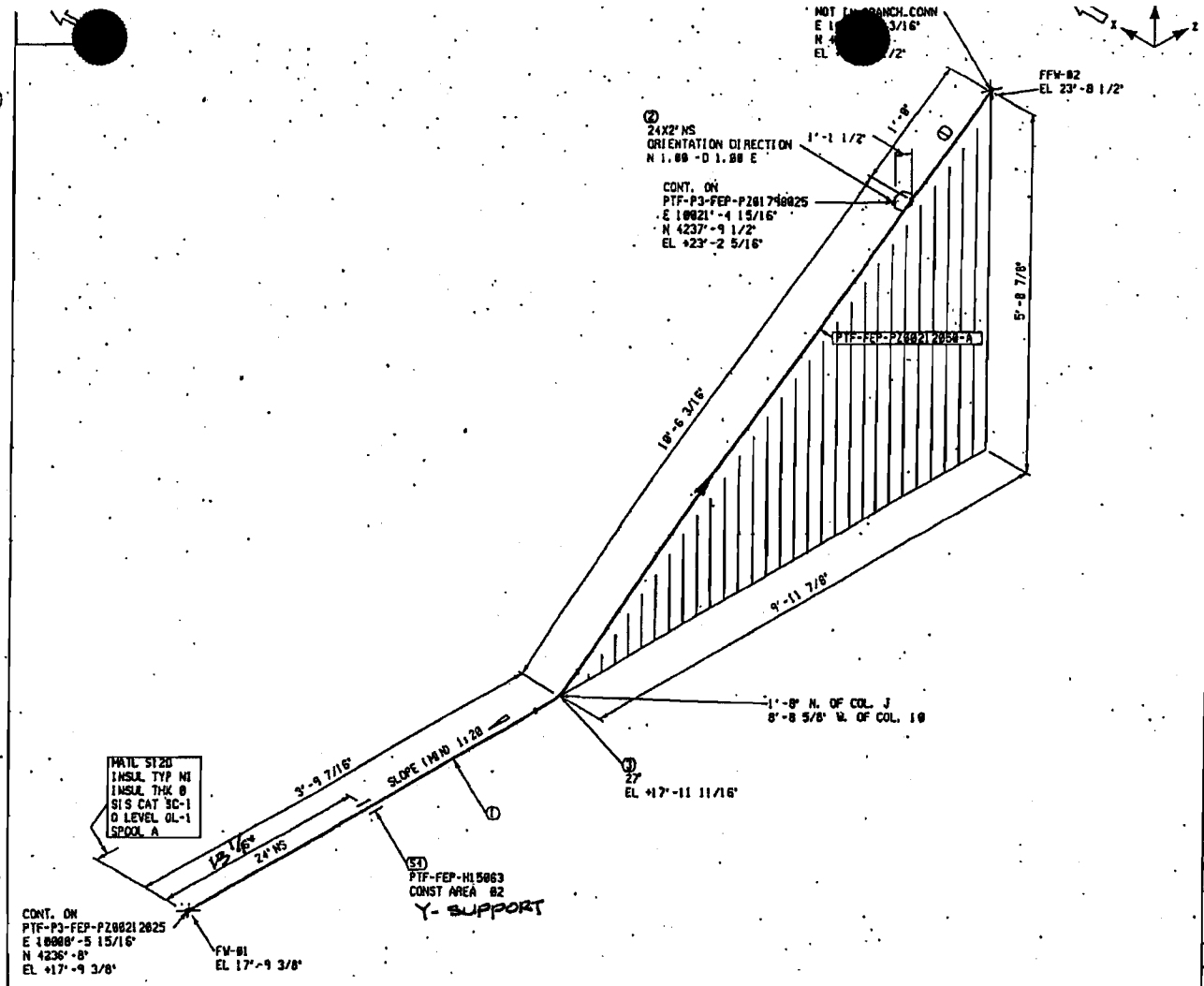

PART NO	COMPONENT DESCRIPTION	N.S. (INCHES)	QTY	BECHTEL STK CODE
	PIPE			
1	PIPE, A312TP304/304L, EFW, 0.375", BBE	24	13'11"	PPPCX08LNBC
	FITTINGS			
2	WELDOLET, A182-F304/304L, 0.375", SCH80S	24X2	1	PFLW24BLXAT
3	TRIMMED ELBOW, 27.81 DEG., EL. + 45, LR, BW, A403WP304/304L-WX, 0.375"	24	1	PFRWX08L230U
	FIELD MATERIALS			
PART NO	COMPONENT DESCRIPTION	N.S. (INCHES)	QTY	BECHTEL STK CODE
	SUPPORTS			
4	PIPE SUPT, PTF-FEP-HI5063		1	

TJK 2-9-05

STRESS REVIEW PRINT	REV
☐ ACCEPTED	☐ NOT ACCEPTED
☐ ACCEPTED W/ COMMENTS	☐ SUPPORTS ADDED TO MODEL
STRESS ANALYST:	DATE:

RIVER PROTECTION PROJECT
WASTE TREATMENT PLANT
2435 STEVENS CENTER PLACE
RICHLAND, WA 99352

CONTRACT No: DE-AC27-01RV14136

P&ID: 24590-PTF-MG-FEP-00004 | CONST. WORK AREA: B2

PRETREATMENT FACILITY ISOMETRIC

LINE No. FEP-PZ-00212-S120-24 | PIPE SPEC: S120

DWG No. 24590-PTF-P3-FEP-PZ00212050 | REV A

PAINT CODE	NA	CONTENT APPLICABLE TO ALARA? ☐ YES ☐ NO			
INSULATION TYPE	NI	ADR NO.		REV.	
INSULATION THK.	0	QUALITY LEVEL	QL-1	SEISMIC CAT.	SC-1

1. FOR GENERAL NOTES AND LEGEND SEE DWG. 24590-WTP-P0-S0-00001001.

COMPUTER GENERATED - MANUAL CHANGES NOT PERMITTED

ISO TYPE: PT_xSTRESS C:\iso\tmp_comm_check.DGN

LENGTH (FT.) 16.43 (FOR INFO ONLY) JSM Created: FEB-08-2005 08:17 | Iso Created: FEB-08-2005 08:17 | PCF File: TMP_COMM_CHECK | PLOTTED BY: ykim | PLOT DATE: 02/08/2005 08:18:45 AM | SHT. 1 OF 1

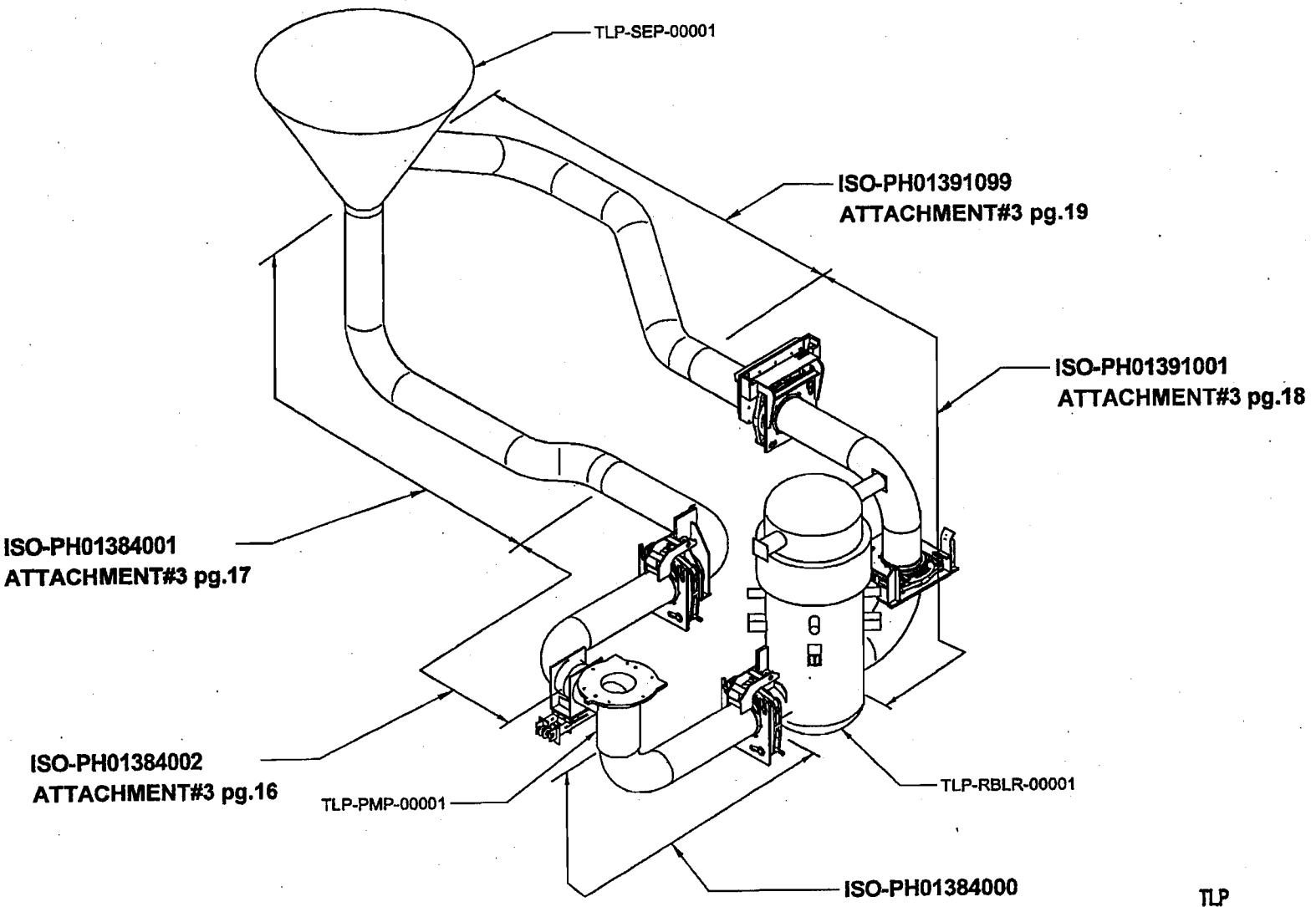
TLP-SEP-00001
ISO-PH01391099
ATTACHMENT#3 pg.19
ISO-PH01391001
ATTACHMENT#3 pg.18
ISO-PH01384001
ATTACHMENT#3 pg.17
ISO-PH01384002
ATTACHMENT#3 pg.16
TLP-PMP-00001
TLP-RBLR-00001
ISO-PH01384000
ATTACHMENT#3 pg.15
TLP
PROCESS LOOP
INFORMATION ISO

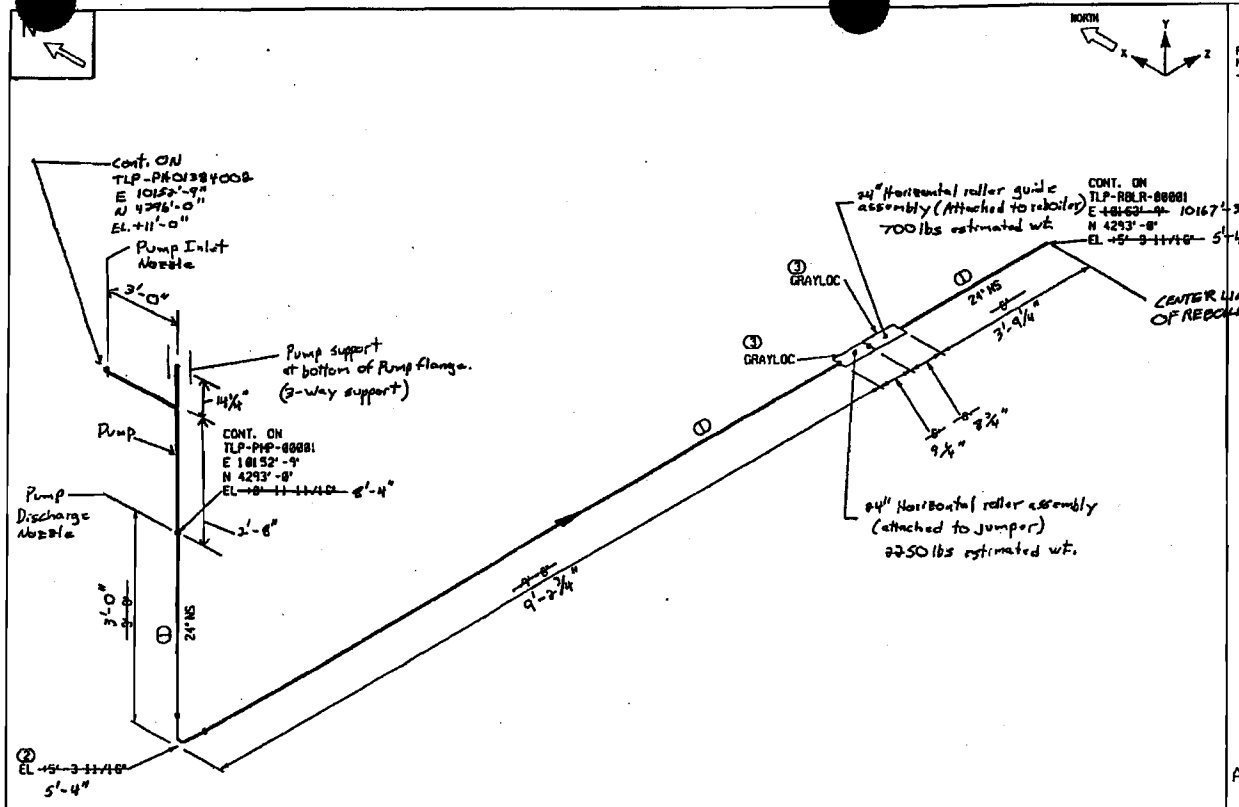

COMPUTER GENERATED - MANUAL CHANGES NOT PERMITTED

SHOP MATERIALS

PART NO	COMPONENT DESCRIPTION	N.S. (INCHES)	QTY	BECHTEL STK CODE
	PIPE			
1	PIPE, A312TP316/316L, EFW, 0.375", 80E	24	8'-8"	PPPC060L1V0C
	FITTINGS			
3	RCC (GRAYLOC)	24	1	N/A

AREA: 17

STRESS REVIEW PRINT		REV	
☐ ACCEPTED		☐ NOT ACCEPTED	
☐ ACCEPTED W/ COMMENTS		☐ SUPPORTS ADDED TO MODEL BY:	
STRESS ANALYST:		DATE:	

RIVER PROTECTION PROJECT
WASTE TREATMENT PLANT
2435 STEVENS CENTER PLACE
RICHLAND, WA 99352

CONTRACT No: DE-AC27-01RV14136

P&ID: NO DATA | CONST. WORK AREA: 21

PRETREATMENT FACILITY ISOMETRIC

LINE No. TLP-PH-01390-S120-24 | PIPE SPEC: S12A

DWG No. 24590-PTF-P3-TLP-PH~~01390001~~-01390000 REV A

NOTES:
1. FOR GENERAL NOTES AND LEGEND SEE DWG. 24590-PTF-P3-P36T-01000.
2. SEE DWG. 24590-BOF-C2-C12T-00002 FOR CONVERSION FROM PTF FACILITY ELEVATIONS TO SITE ELEVATIONS. PTF FACILITY ELEVATION 0'-0" EQUALS SITE ELEVATION 678'-0".

PAINT CODE	-	CONTENT APPLICABLE TO ALARA? ☐ YES ☐ NO	QUALITY LEVEL
INSULATION TYPE	NI	ADR NO. REV.	
INSULATION THK.	0	SEISMIC CAT.	

LENGTH (FT.) NO DATA (FOR INFO ONLY) JSM Created: Iso Created: PCF File: PTF-TLP-PH01390001S PLOTTED BY: trvincen PLOT DATE: 05/21/2006 08:09:48 AM SHT. 1 OF 1

Use view 1 to place fence for plotting to not print data fields

h:\STRESS\STRESS_ISO\jumper\Area_17\ptf-tlp-ph01390001s.DGN

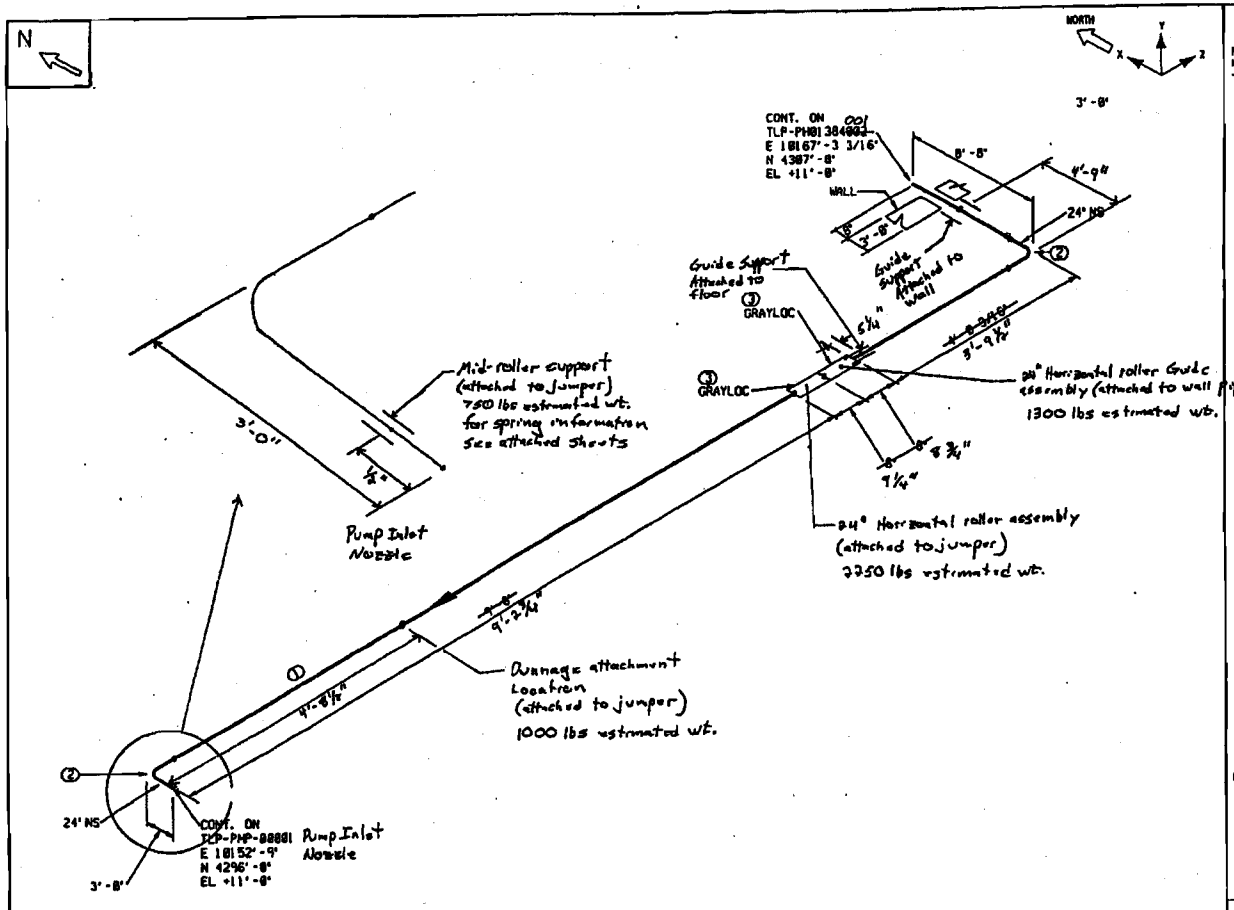

SHOP MATERIALS

PART NO	COMPONENT DESCRIPTION	N.S. (INCHES)	QTY	BECHTEL STK CODE
	PIPE			
1	PIPE, A312TP304/304L, EFW, 0.375", BBE	24	8'-0"	PPPCX80L1WBC
	FITTINGS			
2	EL - 90, LR, BW, A403WP304/304L-WX, 0.375"	24	2	PFDNX80L24BU
3	RCC (GRAYLOC)	24	1	N/A

NOTES:

1. FOR GENERAL NOTES AND LEGEND SEE DWG. 24590-PTF-P3-P36T-01000.
2. SEE DWG. 24590-BOF-C2-C12T-00002 FOR CONVERSION FROM PTF FACILITY ELEVATIONS TO SITE ELEVATIONS. PTF FACILITY ELEVATION 0'-0" EQUALS SITE ELEVATION 678'-0".

PAINT CODE	-	CONTENT APPLICABLE TO ALARA? ☐ YES ☐ NO		QUALITY LEVEL	
INSULATION TYPE	MI	ADR NO.	REV.		
INSULATION THK.	0	QL-2	SEISMIC CAT.	SC-III	

LENGTH (FT.) NO DATA (FOR INFO ONLY) JSW Created: Iso Created: PCF File: PTF-TLP-PH01384001S

AREA: 17

STRESS REVIEW PRINT	REV
☐ ACCEPTED	☐ NOT ACCEPTED
☐ ACCEPTED W/ COMMENTS	☐ SUPPORTS ADDED TO MODEL BY:
STRESS ANALYST:	DATE:

BECHTEL

RIVER PROTECTION PROJECT
WASTE TREATMENT PLANT
2435 STEVENS CENTER PLACE
RICHLAND, WA 99352

CONTRACT No: DE-AC27-01RV14136

P&ID: 24590-PTF-M6-TLP-00003 | CONST. WORK AREA: 21

PRETREATMENT FACILITY ISOMETRIC

LINE No. TLP-PH-01384-S12D-24 | PIPE SPEC: S12D

DWG No. 24590-PTF-P3-TLP-PH01384001-002 | REV A

PLOTTED BY: lrvincan PLOT DATE: 06/21/2006 08:00:59 AM SHT. 1 OF 1

Use view 1 to place fence for plotting to not print data fields

COMPUTER GENERATED - MANUAL CHANGES NOT PERMITTED

h:\STRESS\STRESS_ISO\jumper\Area_17\ptf-tlp-ph01384001a.DGN

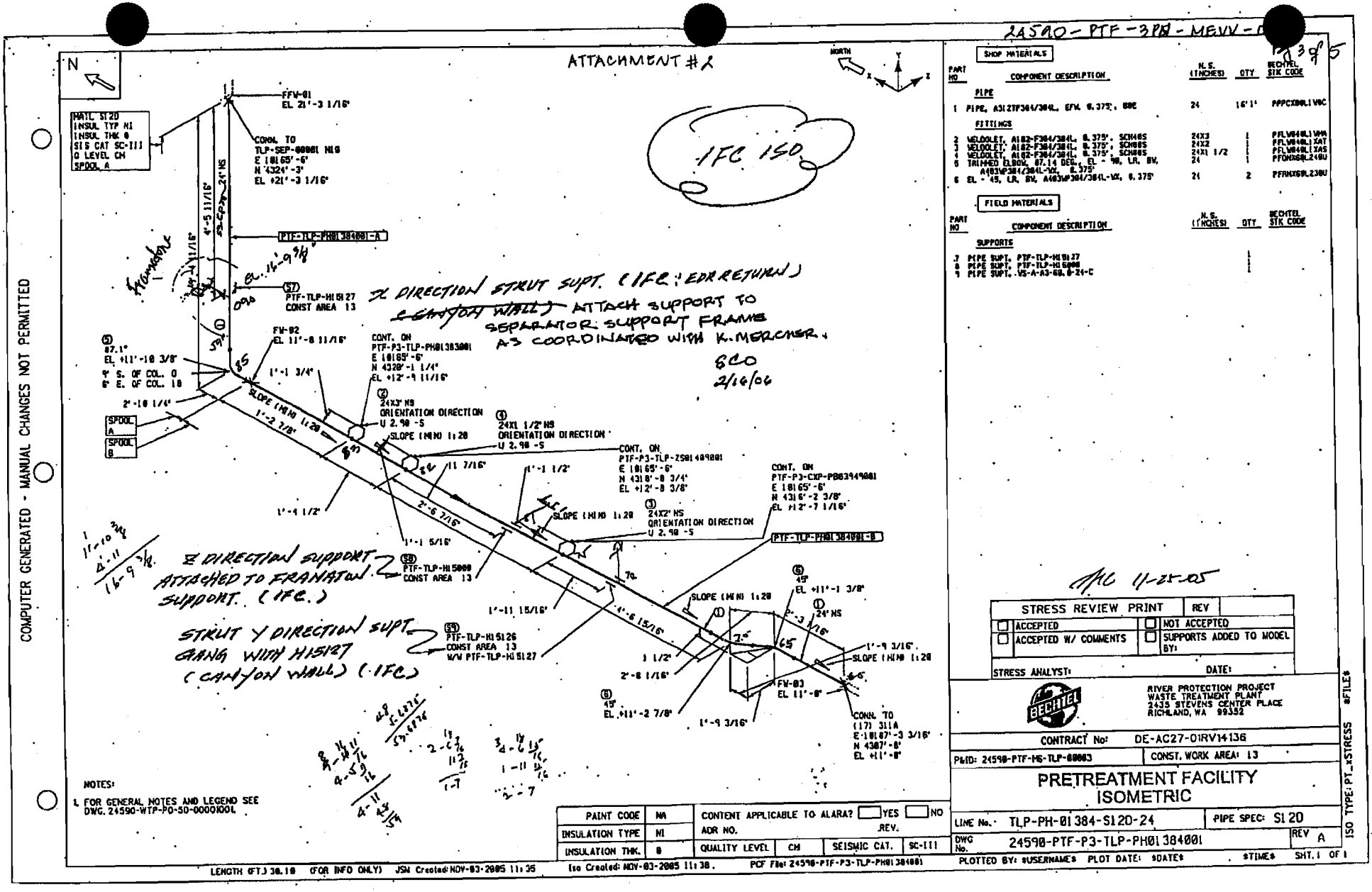
ATTACHMENT #2
24590-PTF-3PM-MEVV-0
Page 3 of 5
COMPUTER GENERATED - MANUAL CHANGES NOT PERMITTED
IFC ISO
MATL S120
INSUL TYP NI
INSUL THK 8
SIS CAT SC-III
O LEVEL CH
SPOOL A
FFV-01
EL 21'-3 1/16"
CONN. TO
TLP-SEP-00001 NOZ
E 18165'-6"
N 4324'-3"
EL +21'-3 1/16"
PTF-TLP-PH01384001-A
(57) PTF-TLP-HI5127
CONST AREA 13
FW-02
EL 11'-8 11/16"
CONT. ON
PTF-P3-TLP-PH01383001
E 18165'-6"
N 4320'-1 1/4"
EL +12'-9 11/16"
(2) 24X3" NS
ORIENTATION DIRECTION
U 2.98 -S
SLOPE (MIN) 1:20
(4) 24X1 1/2" NS
ORIENTATION DIRECTION
U 2.98 -S
(5) 87.1°
EL +11'-10 3/8"
4" S. OF COL. O
6" E. OF COL. 18
SPOOL A
SPOOL B
CONT. ON
PTF-P3-TLP-ZS01409001
E 18165'-6"
N 4318'-8 3/4"
EL +12'-8 3/8"
(3) 24X2" NS
ORIENTATION DIRECTION
U 2.98 -S
CONT. ON
PTF-P3-CXP-P0003949001
E 18165'-6"
N 4316'-2 3/8"
EL +12'-7 1/16"
PTF-TLP-PH01384001-B
(58) PTF-TLP-HI5008
CONST AREA 13
(54) PTF-TLP-HI5126
CONST AREA 13
W/W PTF-TLP-HI5127
(6) 45°
EL +11'-2 7/8"
(6) 45°
EL +11'-1 3/8"
(1) 24" NS
SLOPE (MIN) 1:20
FW-03
EL 11'-8"
CONN. TO
(17) 311A
E 18187'-3 3/16"
N 4307'-8"
EL +11'-8"
X DIRECTION STRUT SUPT. (IFC; EDR RETURN)
CANYON WALL - ATTACH SUPPORT TO SEPARATOR SUPPORT FRAME AS COORDINATED WITH K. MERCHER.
SCO 2/16/06
X DIRECTION SUPPORT ATTACHED TO FRAMATOM SUPPORT. (IFC.)
STRUT Y DIRECTION SUPT. GANG WITH H15127 (CANYON WALL) (IFC.)
NOTES:
1. FOR GENERAL NOTES AND LEGEND SEE DWG. 24590-WTP-PO-SD-00001001.
SHOP MATERIALS
PART NO | COMPONENT DESCRIPTION | N.S. (INCHES) | QTY | BECHTEL STK CODE
PIPE
1 PIPE, A312TP304/304L, EFW, 0.375", 80S | 24 | 16'1" | PPPCX80L1V0C
FITTINGS
2 WELDOLET, A182-F304/304L, 0.375", SCH40S | 24X3 | 1 | PFLW040L1VWA
3 WELDOLET, A182-F304/304L, 0.375", SCH80S | 24X2 | 1 | PFLW040L1XAT
4 WELDOLET, A182-F304/304L, 0.375", SCH80S | 24X1 1/2 | 1 | PFLW040L1XAS
5 TRIMMED ELBOW, 87.14 DEG., EL - 90, LR, BW, A403WP304/304L-WX, 0.375" | 24 | 1 | PFFNX90L238U
6 EL - 45, LR, BW, A403WP304/304L-WX, 0.375" | 24 | 2 | PFFNX45L238U
FIELD MATERIALS
PART NO | COMPONENT DESCRIPTION | N.S. (INCHES) | QTY | BECHTEL STK CODE
SUPPORTS
7 PIPE SUPT, PTF-TLP-HI5127
8 PIPE SUPT, PTF-TLP-HI5008
9 PIPE SUPT, VS-A-A3-80.8-24-C
IFC 11-28-05
STRESS REVIEW PRINT | REV
ACCEPTED | NOT ACCEPTED
ACCEPTED W/ COMMENTS | SUPPORTS ADDED TO MODEL BY:
STRESS ANALYST: | DATE:
RIVER PROTECTION PROJECT
WASTE TREATMENT PLANT
2435 STEVENS CENTER PLACE
RICHLAND, WA 99352
CONTRACT No: DE-AC27-01RV14136
P&ID: 24590-PTF-MS-TLP-00003 | CONST. WORK AREA: 13
PRETREATMENT FACILITY
ISOMETRIC
LINE No.: TLP-PH-01384-S120-24 | PIPE SPEC: S120
DWG No. 24590-PTF-P3-TLP-PH01384001 | REV A
PAINT CODE | NA
INSULATION TYPE | NI
INSULATION THK. | 8
CONTENT APPLICABLE TO ALARA? YES NO
ADR NO. REV.
QUALITY LEVEL | CM | SEISMIC CAT. | SC-III
LENGTH (FT.) 38.18 (FOR INFO ONLY) JSM Created: NOV-03-2005 11:35
Iso Created: NOV-03-2005 11:38. PCF File: 24590-PTF-P3-TLP-PH01384001
PLOTTED BY: &USERNAME& PLOT DATE: &DATE& &TIME& SHT. 1 OF 1
ISO TYPE: PT_XSTRESS &FILE&

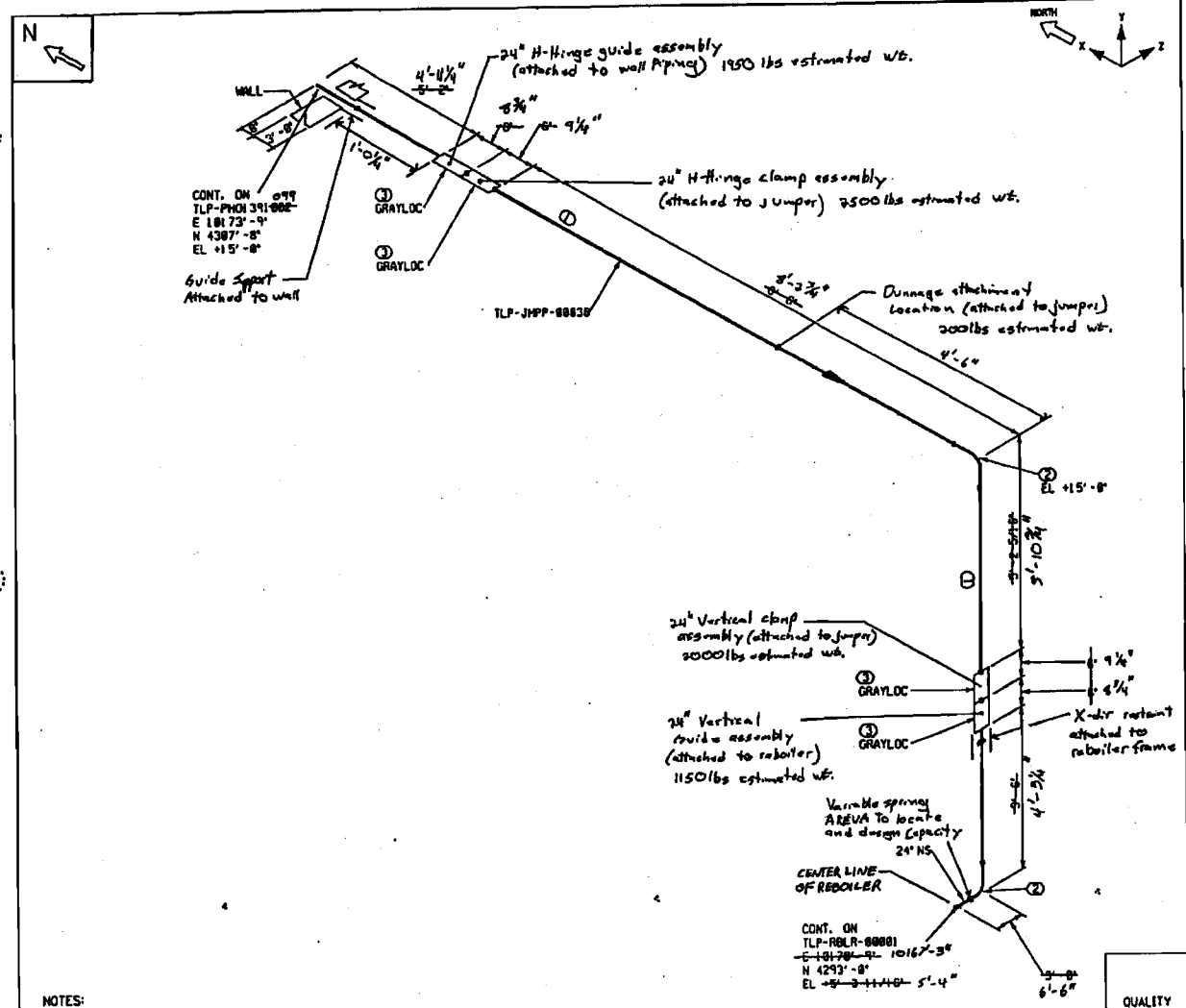

SHOP MATERIALS

PART NO	COMPONENT DESCRIPTION	N.S. (INCHES)	QTY	BECHTEL STK CODE
	PIPE			
1	PIPE, A312TP304/304L, EFW, 0.375", BBE	24	8'3"	PPFCX08LJ WBC
	FITTINGS			
2	EL - 90, LR, BW, A403WP304/304L-WX, 0.375"	24	2	PFDNX08L240U
3	RCC (GRAYLOC)	24	2	N/A

AREA: 17

STRESS REVIEW PRINT		REV	
☐ ACCEPTED		☐ NOT ACCEPTED	
☐ ACCEPTED W/ COMMENTS		☐ SUPPORTS ADDED TO MODEL BY:	
STRESS ANALYST:		DATE:	

NOTES:

1. FOR GENERAL NOTES AND LEGEND SEE DWG. 24590-PTF-P3-P36T-01000.
2. SEE DWG. 24590-BOF-C2-C12T-00002 FOR CONVERSION FROM PTF FACILITY ELEVATIONS TO SITE ELEVATIONS. PTF FACILITY ELEVATION 0'-0" EQUALS SITE ELEVATION 678'-0".

PAINT CODE	-	CONTENT APPLICABLE TO ALARA? ☐ YES ☐ NO		
INSULATION TYPE	MI	ADR NO.	REV.	
INSULATION THK.	0	QL-2	SEISMIC CAT.	SC-III

QUALITY LEVEL

RIVER PROTECTION PROJECT
WASTE TREATMENT PLANT
2435 STEVENS CENTER PLACE
RICHLAND, WA 99352

CONTRACT No: DE-AC27-01RV14136

P&ID: 24590-PTF-M6-TLP-88883 | CONST. WORK AREA: 21

PRETREATMENT FACILITY ISOMETRIC

LINE No. TLP-PH-01391-S12D-24 | PIPE SPEC: S12D

DWG No. 24590-PTF-P3-TLP-PH01391001 | REV A

PLOTTED BY: trvincen | PLOT DATE: 06/21/2006 09:43:41 AM | SHT. 1 OF 1

LENGTH (FT.) NO DATA (FOR INFO ONLY) JSM Created: | Iso Created: | PCF File: PTF-TLP-PH01391001S

Use view 1 to place fence for plotting to get print data fields

COMPUTER GENERATED - MANUAL CHANGES NOT PERMITTED

N:\STRESS\STRESS_ISOJumper\Area_17\ptf-tlp-ph01391001a.DGN

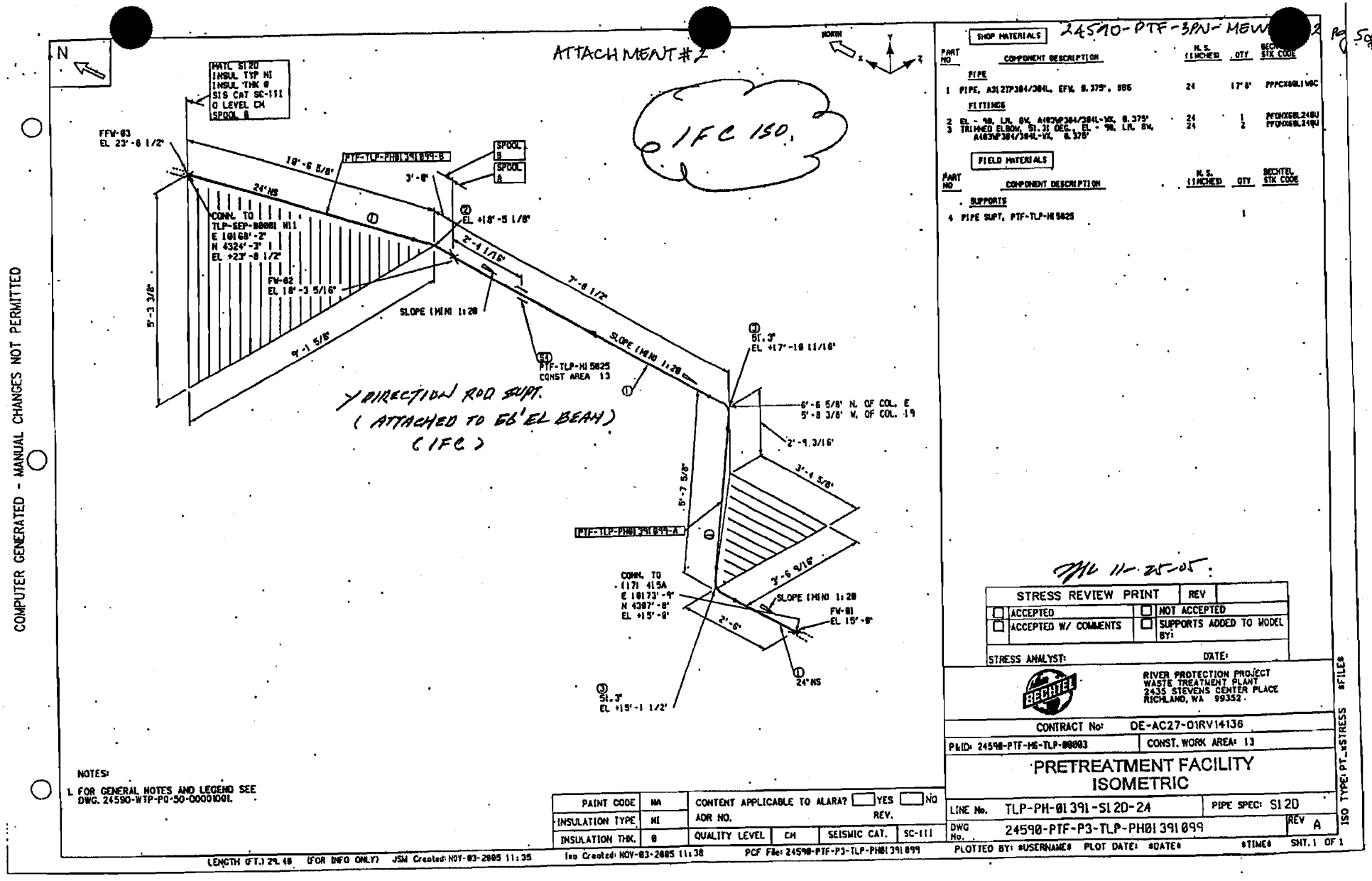

PART NO	SHOP MATERIALS COMPONENT DESCRIPTION	N.S. (INCHES)	QTY	BECHTEL STK CODE
	PIPE			
1	PIPE, A312TP304/304L, EFW, 0.375", BBE	24	17'8"	PPPCX08BL1W0C
	FITTINGS			
2	EL - 90, LR, BW, A403WP304/304L-WX, 0.375"	24	1	PFCNX08BL24BU
3	TRIMMED ELBOW, 51.31 DEG., EL - 90, LR, BW, A403WP304/304L-WX, 0.375"	24	2	PFCNX08BL24BU

PART NO	FIELD MATERIALS COMPONENT DESCRIPTION	N.S. (INCHES)	QTY	BECHTEL STK CODE
	SUPPORTS			
4	PIPE SUPT, PTF-TLP-HI 5825		1	

JHL 11-25-05

STRESS REVIEW PRINT	REV
☐ ACCEPTED	☐ NOT ACCEPTED
☐ ACCEPTED W/ COMMENTS	☐ SUPPORTS ADDED TO MODEL BY:
STRESS ANALYST:	DATE:

BECHTEL

RIVER PROTECTION PROJECT
WASTE TREATMENT PLANT
2435 STEVENS CENTER PLACE
RICHLAND, WA 99352

CONTRACT No: DE-AC27-01RV14136

P&ID: 24590-PTF-M6-TLP-00003 | CONST. WORK AREA: 13

PRETREATMENT FACILITY ISOMETRIC

LINE No. TLP-PH-01391-S12D-24 | PIPE SPEC: S12D

DWG No. 24590-PTF-P3-TLP-PH01391899 | REV A

PLOTTED BY: #USERNAME# PLOT DATE: #DATE# #TIME# SHT. 1 OF 1

PAINT CODE	NA	CONTENT APPLICABLE TO ALARA? ☐ YES ☐ NO			
INSULATION TYPE	NI	ADR NO.	REV.		
INSULATION THK.	0	QUALITY LEVEL	CH	SEISMIC CAT.	SC-III

NOTES:

1. FOR GENERAL NOTES AND LEGEND SEE DWG. 24590-WTP-PO-50-00001001.

LENGTH (FT.) 29.48 (FOR INFO ONLY) JSM Created: NOV-03-2005 11:35 Iso Created: NOV-03-2005 11:38 PCF File: 24590-PTF-P3-TLP-PH01391899

ISO TYPE: PT_sSTRESS #FILE#

24" Mid Roller Assembly.

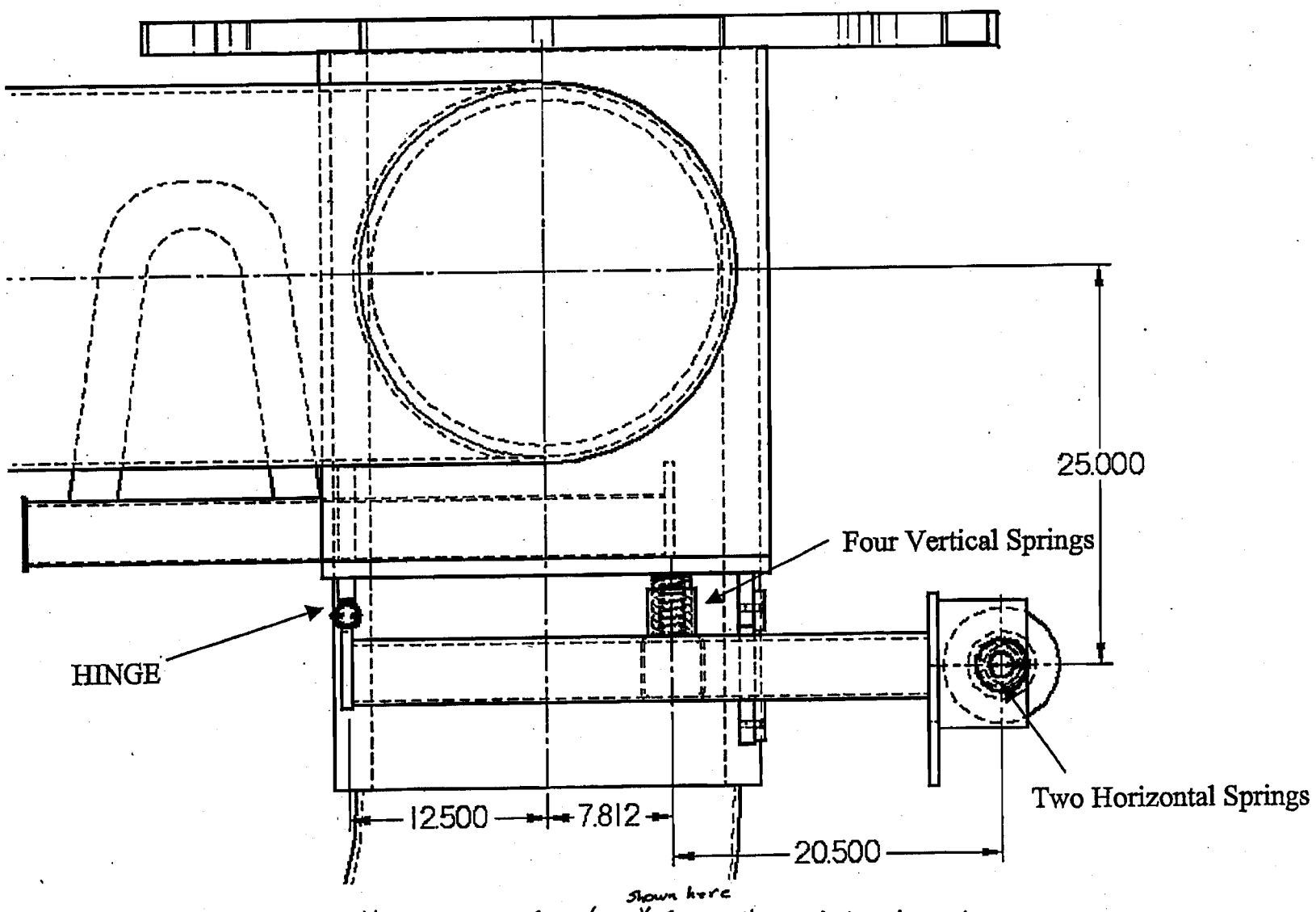

Note: Use Mid Roller Assembly spring configuration shown here for all Mid Roller Assemblies until finalized information is available.

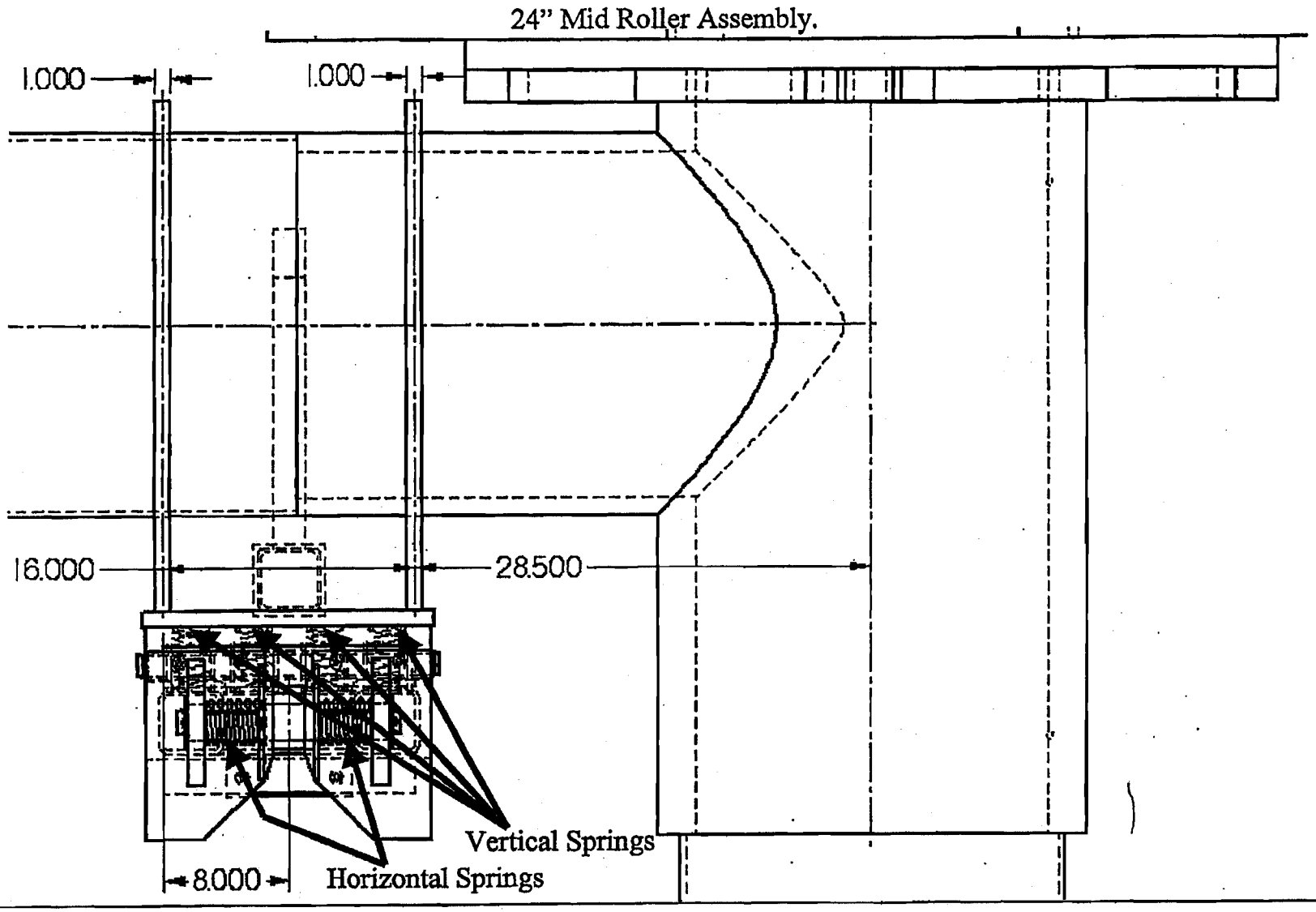

Vertical Spring:
•Spring Rate: 1310 lbs/in
•Preload: Four springs are compressed approximately 0.150" during installed cold condition. (Springs are in parallel)
Horizontal Spring (North-South):
•Spring Rate: 76 lbs/in
•Preload: 0.000" preload during the installed cold condition. (One spring acting in north direction, one acting spring in south direction)

ATTACHMENT # 4

Attached tables show the design load requirements for forces and moments applied to piping nozzles on separator vessels, reboilers, and condensers.

The direction of the listed forces and moments for vertical nozzles into the equipment head are provided in global coordinates (X = North/South, y = vertical, and z = East/West - Vessel 0° defined as North).

The directions of the listed forces and moments for horizontal nozzles into the equipment shell are provided in local coordinates per 24590-WTP-3PS-MV00-T0001.

FEP-SEP-00001A SC-I : TABLE 1

CCN 124031

Note:
*V = vertical head nozzle - values are x = North/South, y = vertical, z = East/West (global coordinates), Vessel 0° defined as North
**H = horizontal shell nozzle - values are per axes shown in 24590-WTP-3PS-MV00-T0001 Rev 2, Appendix A (local coordinates)

Nozzle Number	Nozzle Size (in)	Orientation (V* / H**)	Load Case	Design Loads (Force in lbs, Moment in ft-lb)					
				Fx	Fy	Fz	Mx	My	Mz
N01 *	1	H	Weight	15	20	15	20	20	20
			Seismic	30	20	30	37	55	55
			Thermal	10	10	10	10	20	20
N02 *	1	H	Weight	15	20	15	20	20	20
			Seismic	30	20	30	37	55	55
			Thermal	10	10	21	10	39	20
N03 *	1	H	Weight	15	20	15	20	20	20
			Seismic	30	20	30	37	55	55
			Thermal	10	10	10	10	20	20
N04	30	H	Weight	By Vendor	By Vendor	By Vendor	By Vendor	By Vendor	By Vendor
			Seismic	By Vendor	By Vendor	By Vendor	By Vendor	By Vendor	By Vendor
			Thermal	By Vendor	By Vendor	By Vendor	By Vendor	By Vendor	By Vendor
N05	2	H	Weight	50	60	50	75	75	75
			Seismic	106	70	106	158	237	237
			Thermal	30	38	40	68	80	80
N07	1	H	Weight	15	20	15	20	20	20
			Seismic	30	20	30	37	55	55
			Thermal	10	12	10	10	20	32
N08 *	1	H	Weight	15	20	15	20	20	20
			Seismic	30	20	30	37	55	55
			Thermal	10	10	10	10	20	20
N09 *	1	H	Weight	15	20	15	20	20	20
			Seismic	30	20	30	37	55	55
			Thermal	10	10	10	10	20	20
N10[1]	24	V	Weight	Later	Later	Later	Later	Later	Later
			Seismic	Later	Later	Later	Later	Later	Later
			Thermal	Later	Later	Later	Later	Later	Later
N11[1]	24	H	Weight	Later	Later	Later	Later	Later	Later
			Seismic	Later	Later	Later	Later	Later	Later
			Thermal	Later	Later	Later	Later	Later	Later
N13	4	H	Weight	90	242	90	257	161	398
			Seismic	626	712	626	2220	3330	3330
			Thermal	80	70	110	270	540	540
N14	2	H	Weight	50	64	50	75	75	188
			Seismic	106	189	106	158	237	593
			Thermal	86	33	46	94	154	80
N17	2	H	Weight	50	60	50	75	75	88
			Seismic	106	106	106	158	237	254
			Thermal	159	30	67	40	236	80
N19	1	H	Weight	15	20	15	20	20	20
			Seismic	33	29	55	37	55	55
			Thermal	16	13	25	10	20	20

1. Values to be provided later upon completion of piping analysis.

2 of 3

FEP-SEP-00001A SC-I : TABLE 1 (CONT.)

CCN 124031

Note:
*V = vertical head nozzle - values are x = North/South, y = vertical, z = East/West (global coordinates), Vessel 0° defined as North
**H = horizontal shell nozzle - values are per axes shown in 24590-WTP-3PS-MV00-T0001 Rev 2, Appendix A (local coordinates)

Nozzle Number	Nozzle Size (in)	Orientation (V* / H**)	Load Case	Design Loads (Force in lbs, Moment in ft-lb)					
				Fx	Fy	Fz	Mx	My	Mz
N21*	1	H	Weight	15	20	15	20	20	20
			Seismic	30	20	30	37	55	55
			Thermal	10	10	10	10	20	20
N22	1	H	Weight	15	20	15	20	20	20
			Seismic	30	21	30	37	55	55
			Thermal	10	21	10	10	20	20
N23	1	H	Weight	15	20	15	20	20	20
			Seismic	30	23	30	37	55	55
			Thermal	10	10	10	10	20	20
N24	1	H	Weight	15	20	15	20	20	20
			Seismic	30	20	30	37	55	55
			Thermal	10	10	10	10	20	20
N25	1	H	Weight	15	20	15	20	20	20
			Seismic	30	23	30	37	73	55
			Thermal	10	10	10	10	20	20
N27*	1	H	Weight	15	20	15	20	20	20
			Seismic	30	20	30	37	55	55
			Thermal	10	10	10	10	20	20
N28*	1	H	Weight	15	20	15	20	20	20
			Seismic	30	20	30	37	55	55
			Thermal	12	10	10	10	20	20
N30	24	Manway	Weight	Manway	Manway	Manway	Manway	Manway	Manway
			Seismic	Manway	Manway	Manway	Manway	Manway	Manway
			Thermal	Manway	Manway	Manway	Manway	Manway	Manway
N32 Spare	1	H	Weight	15	20	15	20	20	20
			Seismic	30	20	30	37	55	55
			Thermal	10	10	10	10	20	20

*Nozzle loads for these bubblers due to hydrogen accumulation are not available and will be provided later.

3 of 3

1. Values to be provided later upon completion of piping analysis.

FEP-SEP-00001B SC-I : TABLE 2

CCN 124032

Note:
*V = vertical head nozzle - values are x = North/South, y = vertical, z = East/West (global coordinates), Vessel 0° defined as North
**H = horizontal shell nozzle - values are per axes shown in 24590-WTP-3PS-MV00-T0001 Rev 2, Appendix A (local coordinates)

Nozzle Number	Nozzle Size (in)	Orientation (V* / H**)	Load Case	Design Loads (Force in lbs, Moment in ft-lb)					
				Fx	Fy	Fz	Mx	My	Mz
N01*	1	H	Weight	15	20	15	20	20	20
			Seismic	30	20	30	37	55	55
			Thermal	10	10	10	10	20	20
N02*	1	H	Weight	15	20	15	20	20	20
			Seismic	30	20	30	37	55	55
			Thermal	10	10	10	10	20	20
N03*	1	H	Weight	15	20	15	20	20	20
			Seismic	30	20	30	37	55	55
			Thermal	10	10	10	10	20	20
N04	30	H	Weight	By Vendor	By Vendor	By Vendor	By Vendor	By Vendor	By Vendor
			Seismic	By Vendor	By Vendor	By Vendor	By Vendor	By Vendor	By Vendor
			Thermal	By Vendor	By Vendor	By Vendor	By Vendor	By Vendor	By Vendor
N05	2	H	Weight	50	60	50	75	75	75
			Seismic	106	70	106	158	237	237
			Thermal	30	30	40	40	80	80
N07	1	H	Weight	15	20	15	20	20	20
			Seismic	33	20	30	37	55	55
			Thermal	10	20	10	10	20	48
N08*	1	H	Weight	15	20	15	20	20	20
			Seismic	30	20	30	37	55	55
			Thermal	10	10	10	10	20	20
N09*	1	H	Weight	15	20	15	20	20	20
			Seismic	30	20	30	37	55	55
			Thermal	10	10	10	10	20	20
N10[1]	24	V	Weight	Later	Later	Later	Later	Later	Later
			Seismic	Later	Later	Later	Later	Later	Later
			Thermal	Later	Later	Later	Later	Later	Later
N11[1]	24	H?	Weight	Later	Later	Later	Later	Later	Later
			Seismic	Later	Later	Later	Later	Later	Later
			Thermal	Later	Later	Later	Later	Later	Later
N13	4	H	Weight	90	215	90	257	161	347
			Seismic	626	418	626	2220	3330	3330
			Thermal	80	70	116	407	540	540
N14	2	H	Weight	50	64	50	75	75	142
			Seismic	106	70	106	201	237	237
			Thermal	69	33	40	70	118	80
N17	2	H	Weight	50	60	50	75	75	80
			Seismic	106	70	106	188	237	237
			Thermal	158	30	53	40	298	80
N19	1	H	Weight	15	20	15	20	20	20
			Seismic	39	20	38	37	55	55
			Thermal	14	10	15	10	20	20

1. Values to be provided later upon completion of piping analysis.

FEP-SEP-00001B SC-I : TABLE 2 (cont.)

CCN 124032

Note:
*V = vertical head nozzle - values are x = North/South, y = vertical, z = East/West (global coordinates), Vessel 0° defined as North
**H = horizontal shell nozzle - values are per axes shown in 24590-WTP-3PS-MV00-T0001 Rev 2, Appendix A (local coordinates)

Nozzle Number	Nozzle Size (in)	Orientation (V* / H**)	Load Case	Design Loads (Force in lbs, Moment in ft-lb)					
				Fx	Fy	Fz	Mx	My	Mz
N21*	1	H	Weight	15	20	15	20	20	20
			Seismic	30	21	30	37	55	55
			Thermal	10	10	10	10	20	20
N22	1	H	Weight	15	20	15	20	20	20
			Seismic	30	20	30	37	55	55
			Thermal	10	20	10	10	20	20
N23	1	H	Weight	15	20	15	20	20	20
			Seismic	30	21	30	37	55	55
			Thermal	10	10	10	10	20	20
N24	1	H	Weight	15	20	15	20	20	20
			Seismic	30	20	30	37	55	55
			Thermal	10	10	10	10	20	20
N25	1	H	Weight	15	20	15	20	20	20
			Seismic	30	20	30	37	55	55
			Thermal	10	10	10	10	20	20
N27*	1	H	Weight	15	20	15	20	20	20
			Seismic	30	20	30	37	55	55
			Thermal	10	10	10	10	20	20
N28*	1	H	Weight	15	20	15	20	20	20
			Seismic	30	20	30	37	55	55
			Thermal	10	10	10	10	20	20
N30	24	Manway	Weight	Manway	Manway	Manway	Manway	Manway	Manway
			Seismic	Manway	Manway	Manway	Manway	Manway	Manway
			Thermal	Manway	Manway	Manway	Manway	Manway	Manway
N32 Spare	1	H	Weight	15	20	15	20	20	20
			Seismic	30	20	30	37	55	55
			Thermal	10	10	10	10	20	20

* Nozzle loads for these bubblers due to hydrogen accumulation are not available and will be provided later.

1. Values to be provided later upon completion of piping analysis.

TLP-SEP-00001 SC-I : TABLE 3

CCN 139984

Note:
*V = vertical head nozzle - values are x = North/South, y = vertical, z = East/West (global coordinates), Vessel 0° defined as North
**H = horizontal shell nozzle - values are per axes shown in 24590-WTP-3PS-MV00-T0001 Rev 2, Appendix A (local coordinates)

Nozzle Number	Nozzle Size (in)	Orientation (V* / H*)	Load Case	Design Loads (Force in lbs, Moment in ft-lb)					
				Fx	Fy	Fz	Mx	My	Mz
N01*	1	H	Weight	15	20	15	20	20	20
			Seismic	69	21	30	37	55	69
			Thermal	20	37	20	33	30	55
N02*	1	H	Weight	15	24	15	20	20	25
			Seismic	117	28	46	43	55	117
			Thermal	20	10	20	20	30	30
N03*	1	H	Weight	15	20	15	20	20	23
			Seismic	60	26	30	37	78	60
			Thermal	20	10	20	20	30	30
N04	30	Vendor	Weight Seismic Thermal	Vendor	Vendor	Vendor	Vendor	Vendor	Vendor
N07	1	H	Weight	15	20	15	20	20	20
			Seismic	30	20	30	37	55	55
			Thermal	20	13	20	20	30	30
N08*	1	H	Weight	15	28	15	29	20	49
			Seismic	64	32	30	42	59	64
			Thermal	20	12	20	20	30	30
N09*	1	H	Weight	15	21	15	20	20	42
			Seismic	89	33	64	37	145	89
			Thermal	20	10	20	20	30	30
N10	24	V	Weight Seismic Thermal	Later	Later	Later	Later	Later	Later
N11	24	H	Weight Seismic Thermal	Later	Later	Later	Later	Later	Later
N13	4	H	Weight	87	281	87	216	142	748
			Seismic	1722	541	274	878	1320	1722
			Thermal	150	246	200	480	950	950
N14	2	H	Weight	50	60	50	75	75	89
			Seismic	162	70	106	158	237	237
			Thermal	115	40	60	70	130	130
N17	2	H	Weight	50	60	50	75	75	75
			Seismic	106	70	106	158	237	237
			Thermal	136	81	60	75	130	130
N19	1	H	Weight	15	20	15	20	20	20
			Seismic	30	20	30	37	55	55
			Thermal	20	10	20	20	30	30

TLP-SEP-00001 SC-I : TABLE 3 (CONT.)

CCN 139984

Note:
*V = vertical head nozzle - values are x = North/South, y = vertical, z = East/West (global coordinates), Vessel 0° defined as North
**H = horizontal shell nozzle - values are per axes shown in 24590-WTP-3PS-MV00-T0001 Rev 2, Appendix A (local coordinates)

Nozzle Number	Nozzle Size (in)	Orientation (V* / H*)	Load Case	Design Loads (Force in lbs, Moment in ft-lb)					
				Fx	Fy	Fz	Mx	My	Mz
N21 *	1	H	Weight	15	20	15	20	20	20
			Seismic	30	20	30	37	55	55
			Thermal	20	10	20	20	30	30
N22	1	H	Weight	15	20	15	20	20	20
			Seismic	30	20	30	37	55	55
			Thermal	20	12	20	20	30	30
N23	1	H	Weight	15	20	15	20	20	20
			Seismic	30	20	30	37	55	55
			Thermal	20	23	20	20	30	30
N24	1	H	Weight	15	20	15	20	20	36
			Seismic	77	26	34	37	85	77
			Thermal	20	11	20	20	30	30
N25	1	H	Weight	15	20	15	20	20	20
			Seismic	41	20	30	37	62	55
			Thermal	20	10	20	20	30	30
N27 *	1	H	Weight	15	20	15	20	20	20
			Seismic	30	20	30	37	55	55
			Thermal	20	15	20	20	30	30
N28 *	1	H	Weight	15	20	15	20	20	20
			Seismic	30	20	30	37	55	55
			Thermal	20	10	20	20	30	30

* Nozzle loads for these bubblers due to hydrogen accumulation are not available and will be provided later.

TABLE 4

PRELIMINARY Nozzle Loads on Non-Black Cell Vessels Designated as SC-1

Pipe Size	Load Type	Forces			Moments		
		Fx (lb)	Fy (lb)	Fz (lb)	Mx (ft-lb)	My (ft-lb)	Mz (ft-lb)
1 in	Weight	15	20	15	20	20	20
1 in	Seismic	45	30	45	56	83	83
1 in	Thermal	30	26	40	38	77	77
1-1/2 in	Weight	35	45	35	40	40	40
1-1/2 in	Seismic	90	60	90	137	206	206
1-1/2 in	Thermal	64	56	86	96	192	192
2 in	Weight	50	60	50	75	75	75
2 in	Seismic	159	105	159	237	356	356
2 in	Thermal	114	100	152	169	337	337
3 in	Weight	69	111	69	158	99	99
3 in	Seismic	323	215	323	935	1401	1401
3 in	Thermal	228	203	305	664	1330	1330
4 in	Weight	116	186	116	288	180	180
4 in	Seismic	548	365	548	1755	2640	2640
4 in	Thermal	393	350	524	1260	2520	2520
6 in	Weight	279	446	279	797	498	498
6 in	Seismic	1326	885	1326	4845	7275	7275
6 in	Thermal	980	872	1310	3580	7160	7160
8 in	Weight	311	497	311	988	618	618
8 in	Seismic	1467	980	1467	5895	8835	8835
8 in	Thermal	1190	1060	1590	4800	9590	9590
10 in	Weight	351	561	351	1880	1180	1180
10 in	Seismic	1635	1092	1635	11010	16500	16500
10 in	Thermal	1270	1130	1690	8500	17000	17000
12 in	Weight	485	776	485	2710	1700	1700
12 in	Seismic	2265	1515	2265	15750	23700	23700
12 in	Thermal	1780	1580	2370	12400	24800	24800
14 in	Weight	581	930	581	3320	2080	2080
14 in	Seismic	2700	1800	2700	18900	28350	28350
14 in	Thermal	2140	1900	2860	15000	30100	30100
16 in	Weight	729	1170	729	4170	2610	2610
16 in	Seismic	3420	2280	3420	24150	36300	36300
16 in	Thermal	2800	2490	3730	19800	39500	39500
18 in	Weight	911	1460	911	5070	3170	3170
18 in	Seismic	4230	2820	4230	30000	44850	44850
18 in	Thermal	3550	3160	4730	25200	50300	50300
20 in	Weight	1120	1790	1120	6310	3950	3950
20 in	Seismic	5100	3405	5100	35850	53700	53700
20 in	Thermal	4440	3950	5920	31200	62400	62400
22 in	Weight	1340	2150	1340	7300	4560	4560
22 in	Seismic	6045	4035	6045	42150	63300	63300
22 in	Thermal	5430	4830	7240	37900	75800	75800
24 in	Weight	1570	2510	1570	8510	5320	5320
24 in	Seismic	7065	4710	7065	48600	73050	73050
24 in	Thermal	6560	5840	8750	45200	90400	90400

TABLE 5: FEP/TLP Reboiler Steam Design Nozzle Loads

Reboiler Vessel ID Number	Nozzle Number	Calculation Number	Load Case	Reboiler Steam Nozzle Design Loads					
				Fx (lb)	Fy (lb)	Fz (lb)	Mx (ft-lb)	My(ft-lb)	Mz (ft-lb)
FEP-RBLR-00001A	N03	24590-PTF-P61C-FEP-00015	WT01	55	-1500	-238	-5750	4974	-5670
			OCC	6023	8655	1823	11131	2714	2101
			THRM01	-318	-261	-211	-6381	5289	510
FEP-RBLR-00001B	N03	24590-PTF-P61C-FEP-00015	WT01	-16	-1036	93	-1029	343	246
			OCC	5761	15950	1181	10124	4741	3286
			THRM01	-1285	1069	-73	-1230	1208	1243
TLP-RBLR-00001	N03	24590-PTF-P61C-TLP-00007	WT01	-174	3798	-70	-285	896	6518
			OCC	3283	3484	3728	15635	2205	5629
			THRM01	-2071	5003	253	3144	-53	6870

NOTES:

- Load direction per 24590-WTP-3PS-MV000-T0001, APPENDIX A.
- Tabulated loads are from ME101 analyses results with 25% increase factor for design purposes.
- Seismic loads considered the new ISRS, 5% damping and Modal Sum by CQC. Applied $F\mu$ is unity.
- Ref. CCN 110509

ATTACHMENT #5

Design Concepts

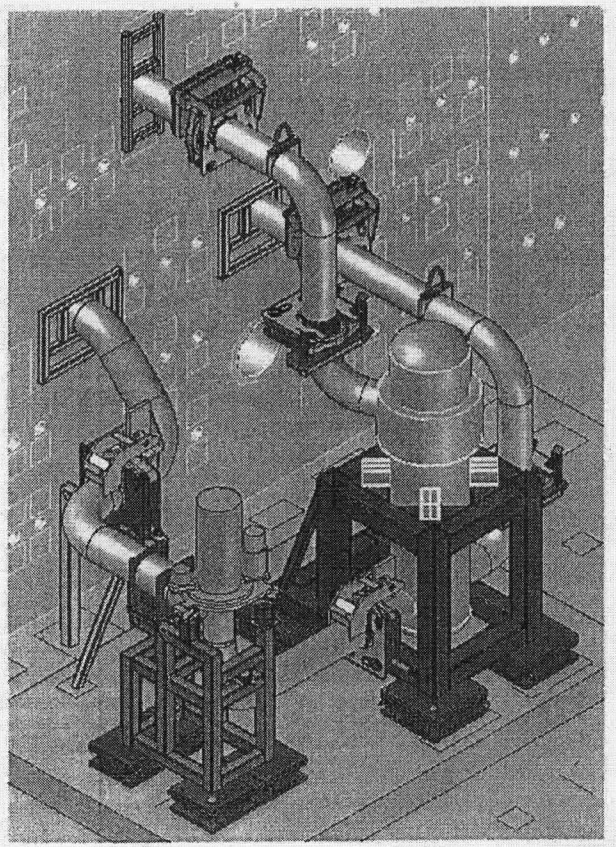

Area 9
CNP

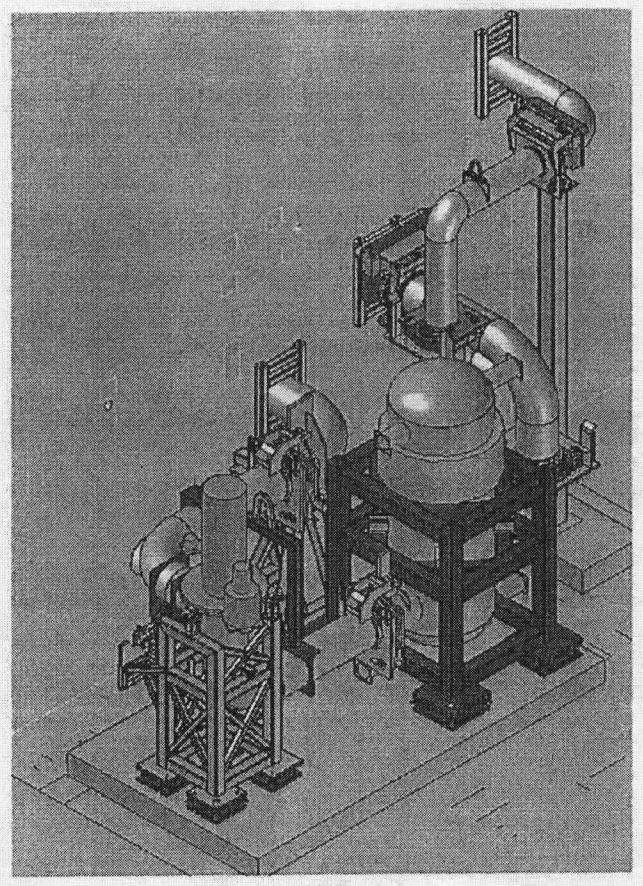

Area 17
TLP

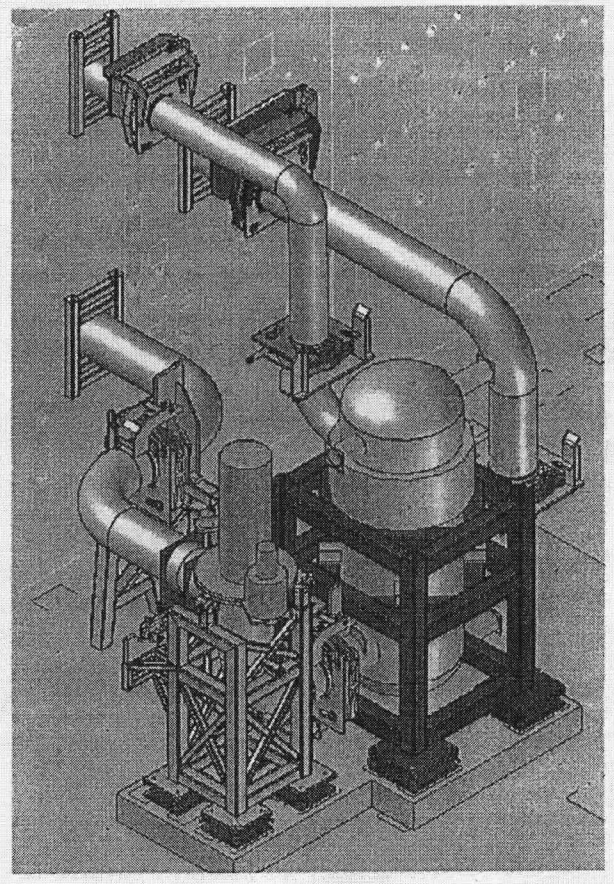

Area 26/27
FEP

Assumptions

- Top of concrete pad elevation will be 1'-4"
- Concrete pad will be rigid, e.g. 33 hz
- Bottom of Pump and Reboiler frames/top of remote interface will be 2'-2". With the exception of the FEP and TLP Reboilers, which will be 2'-2 5\16".
- AREVA will qualify Structural steel between 1'-4" and 2'-2", BNI will be responsible for remotability interface and fabrication drawings. Structural members will be same size as Reboiler and Pump frames or larger, see attached.
- There will be two 4" Dowel Pins per frame (opposing corners) as shown on drawings which will take the sheer loads.

Area 17 (TLP)
Design Concepts

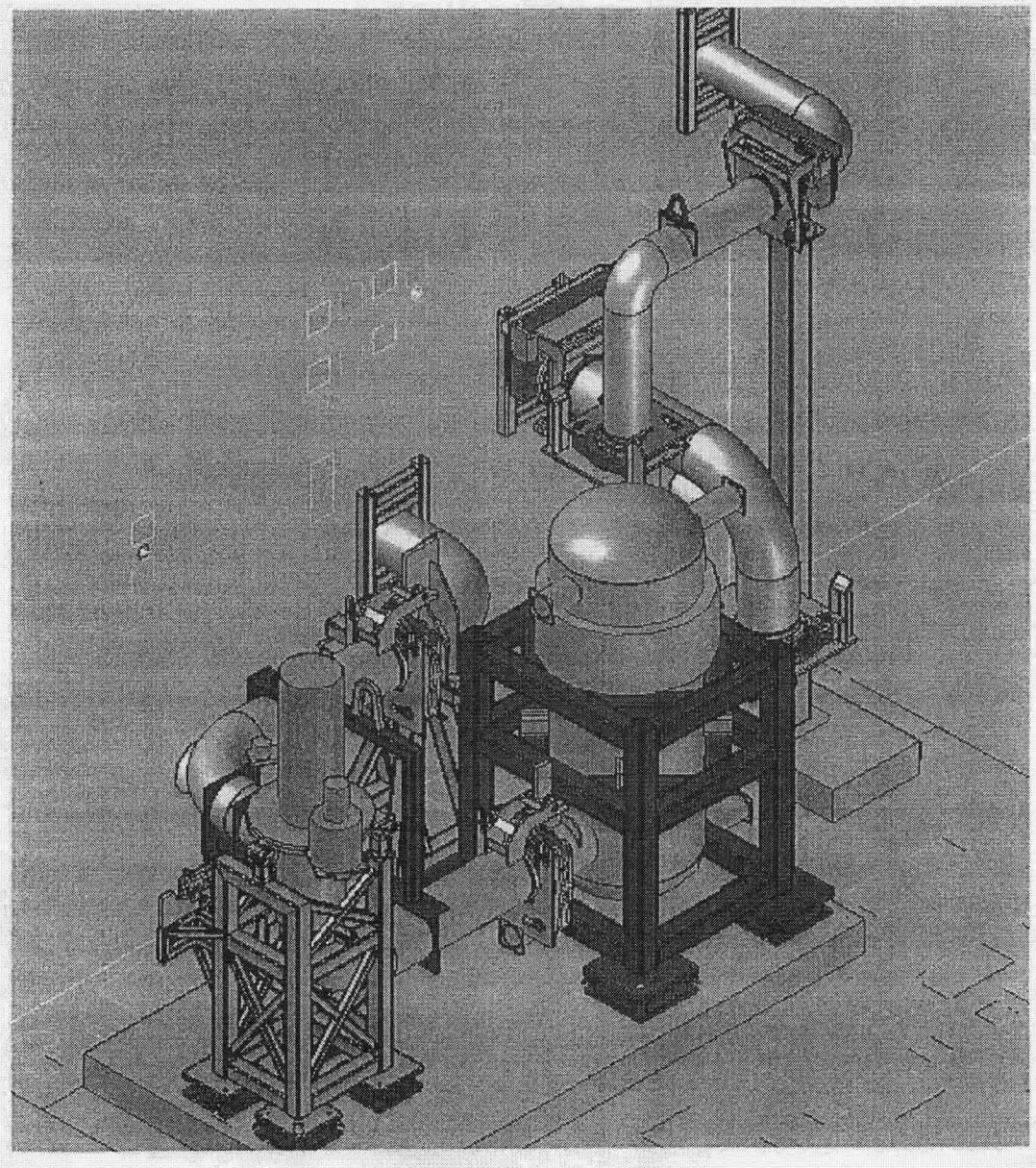

Current Layout

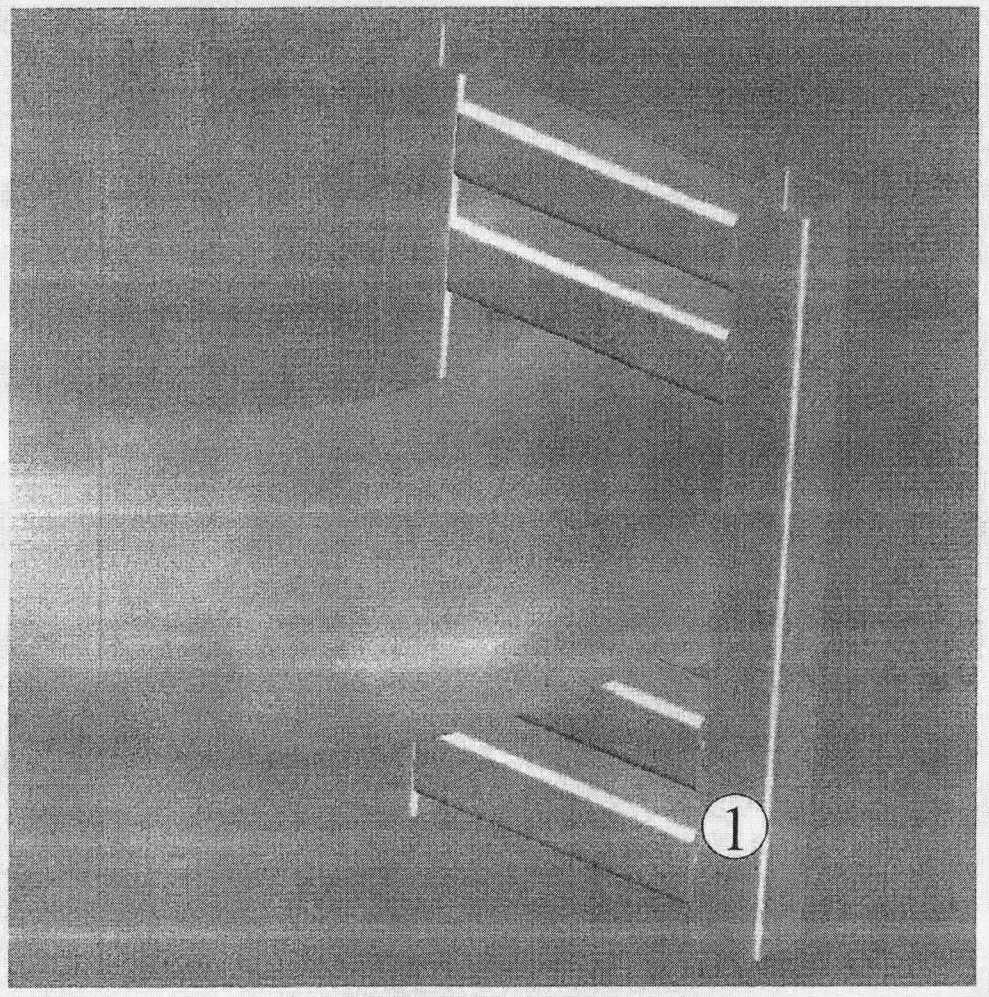

Guide supports at face of hot cell wall

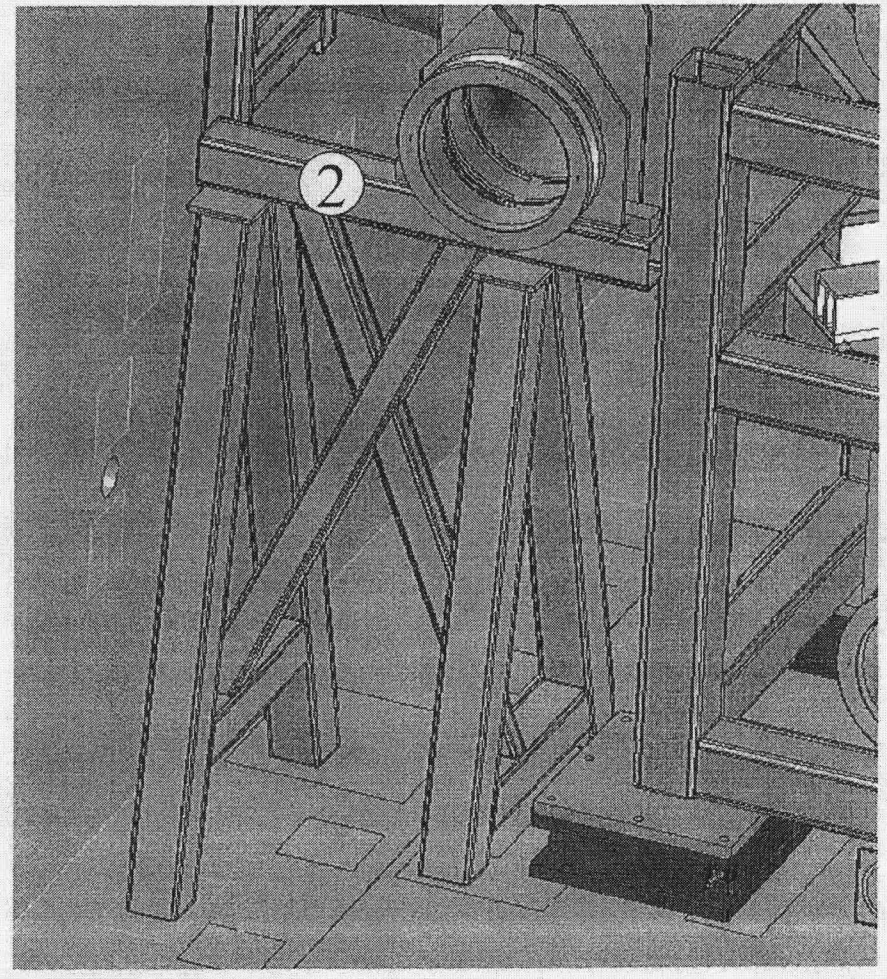

Guide support on back side of wall Grayloc hub.

TLP Layout

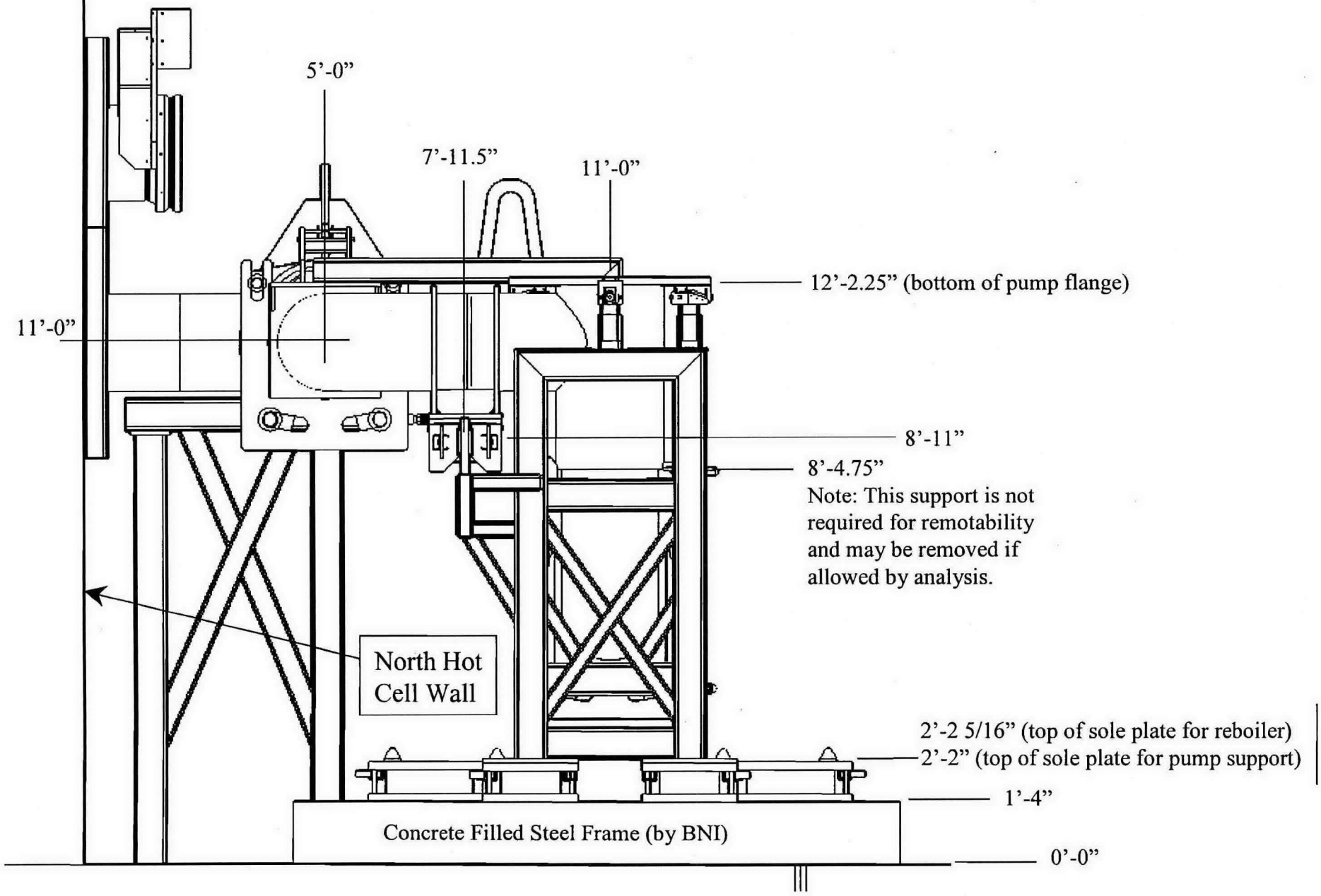

Elevation View (looking east)

Pump Support Frame (TLP)

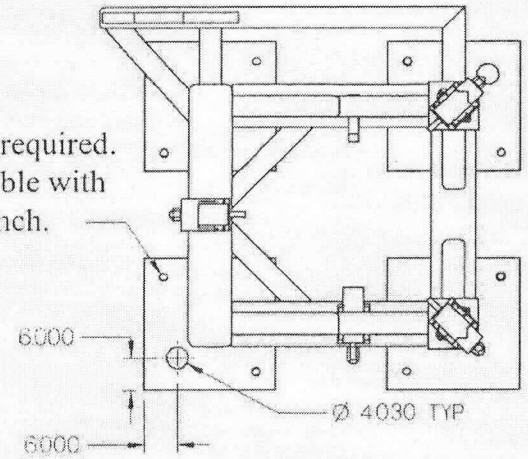

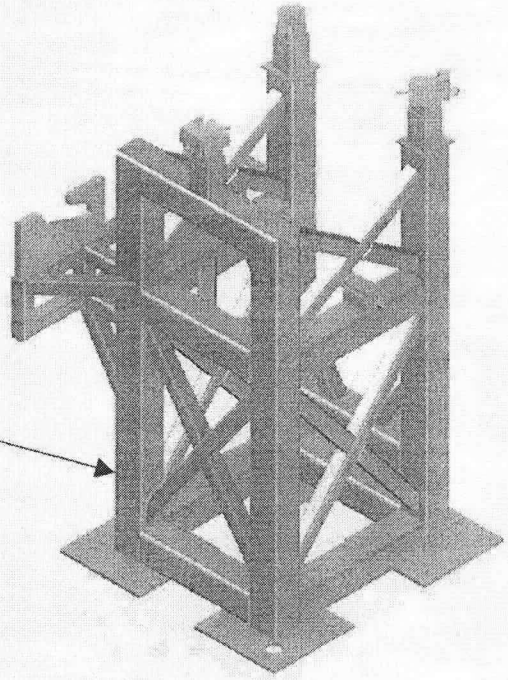

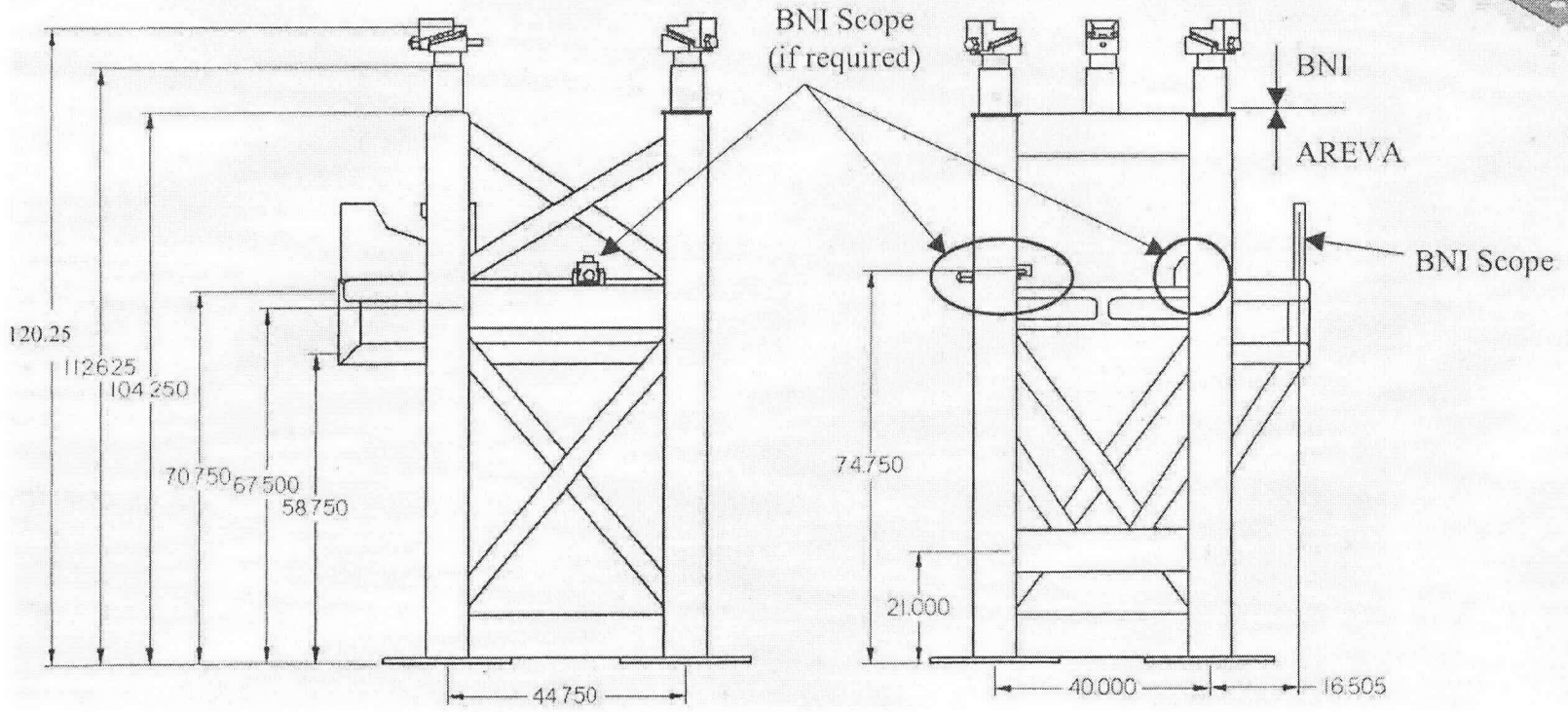

Sole Plates (TLP)

Stud location as required. Must be accessible with impact wrench.

Example Sole Plate

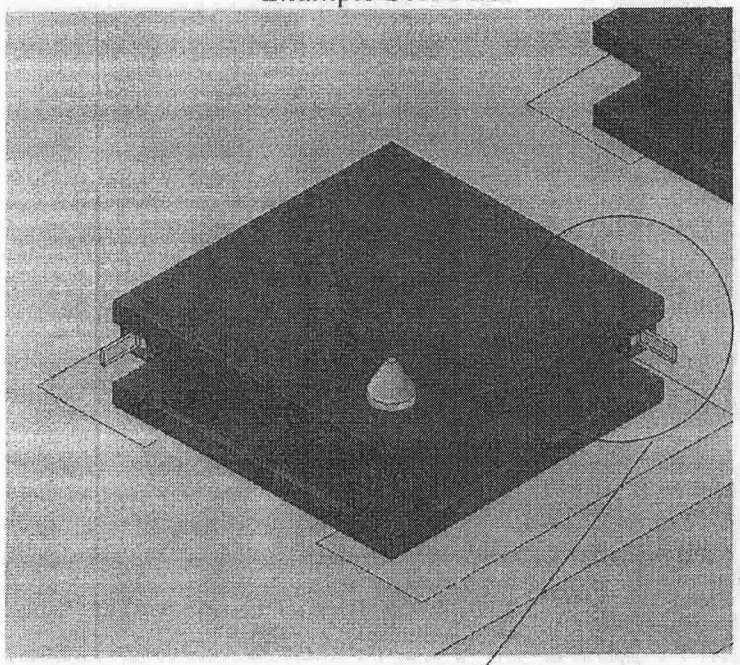

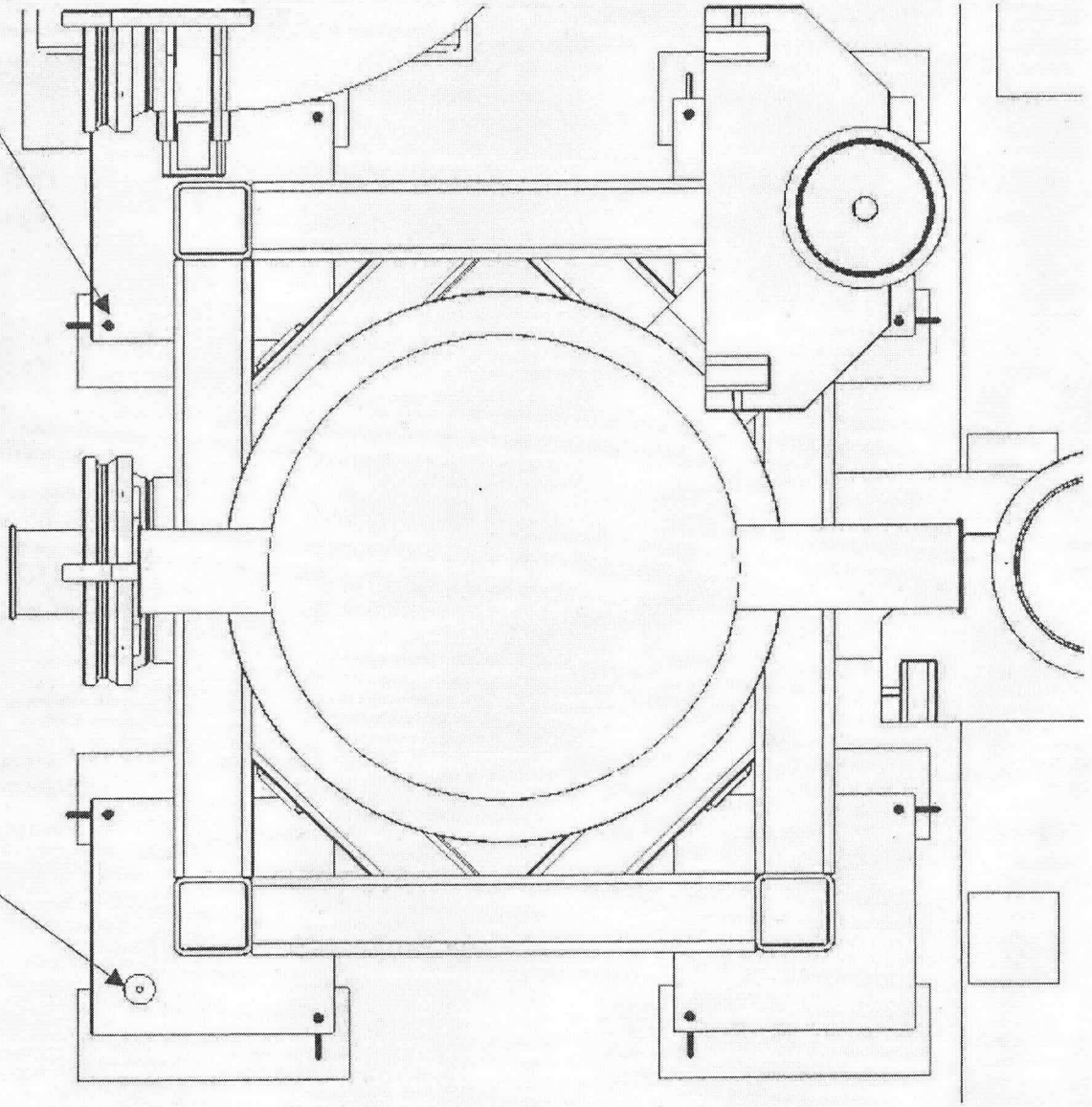

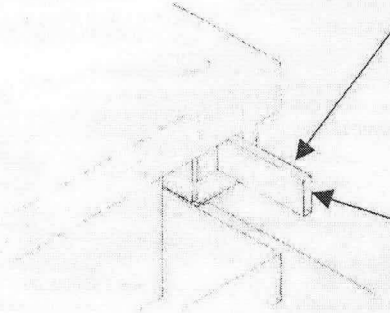

Dowel Pin (Typ)

Captured Nuts must be accessible with the Power Manipulator.

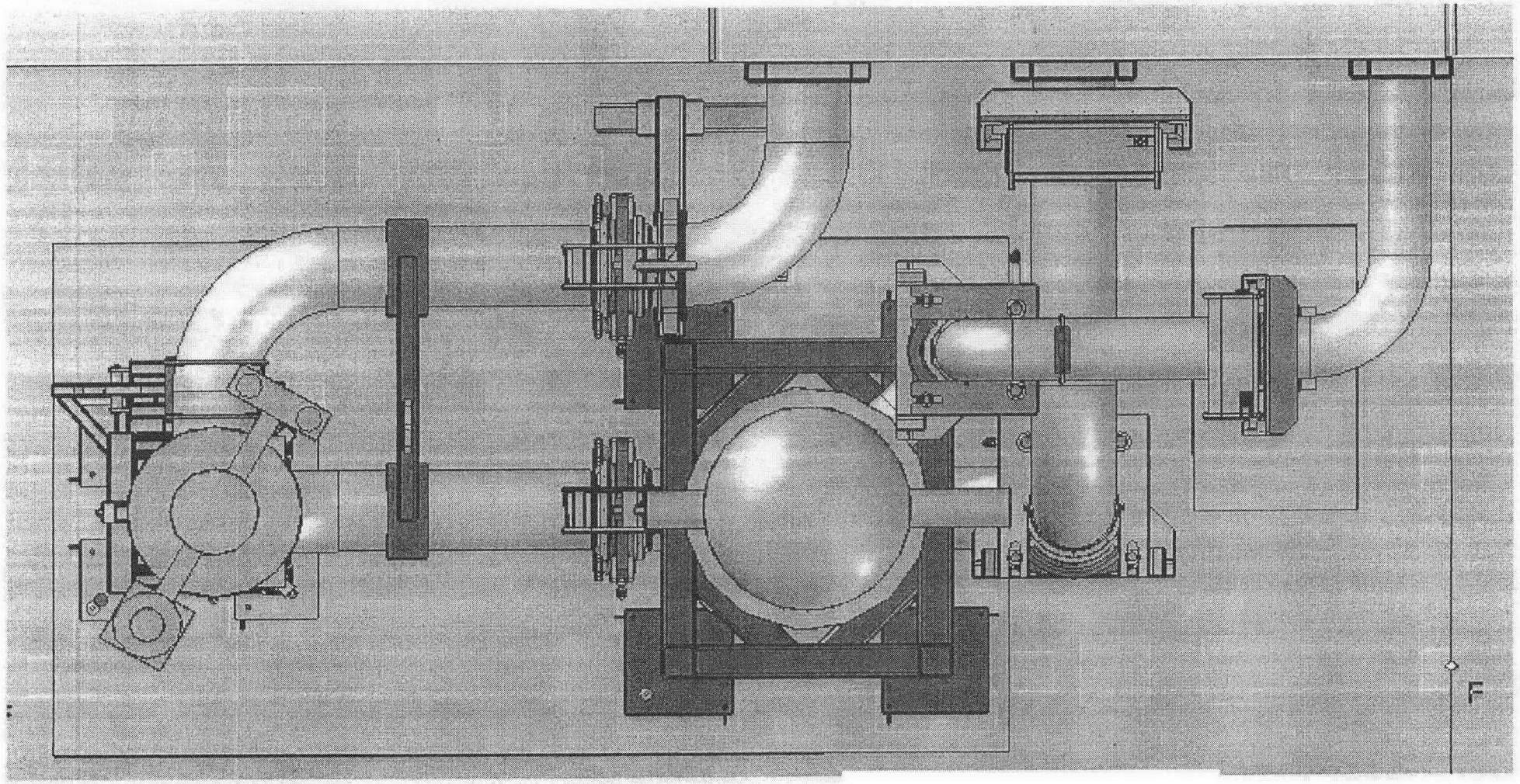
F

Area 26/27 (FEP)
Design Concepts

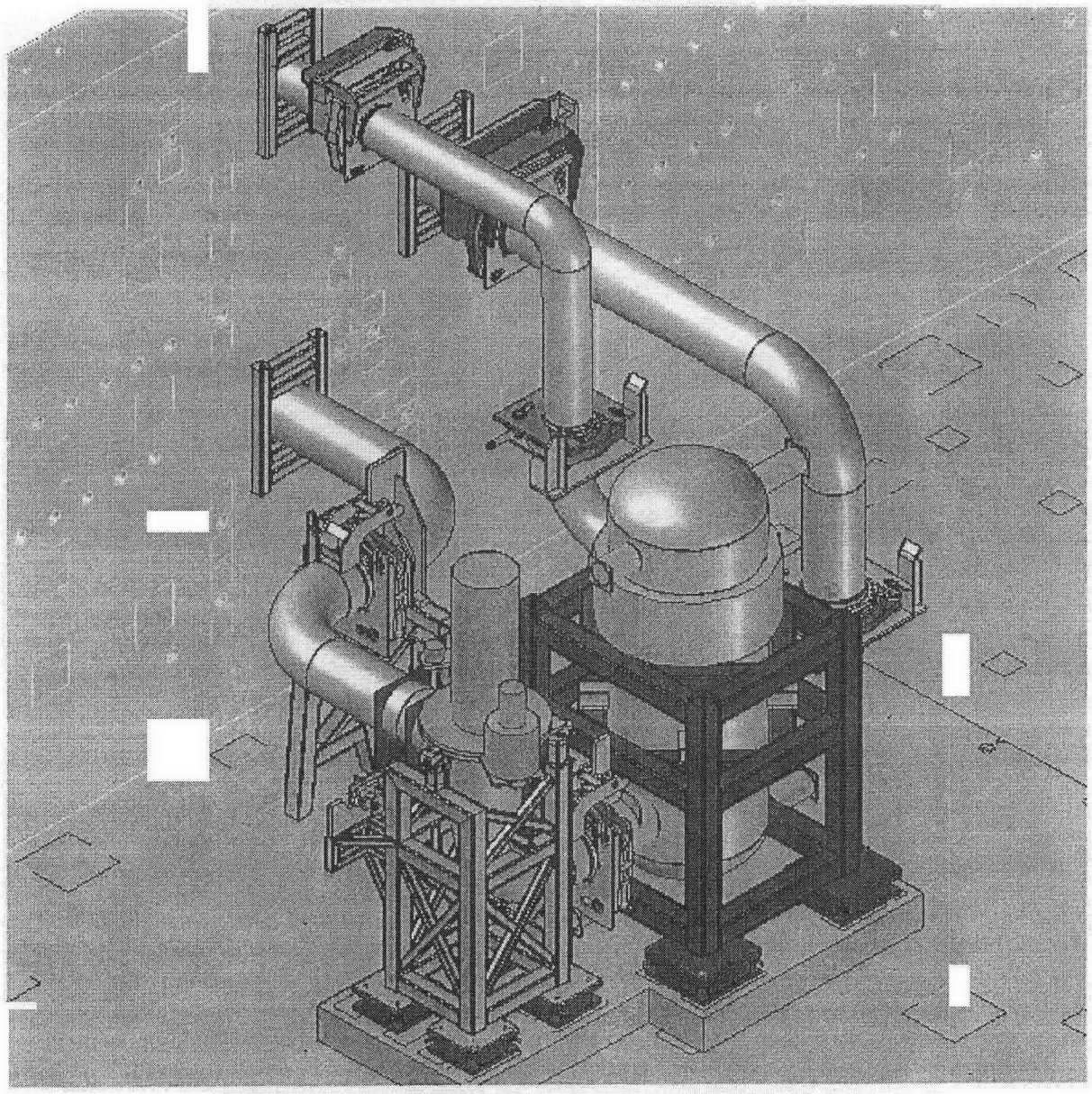

Current Layout

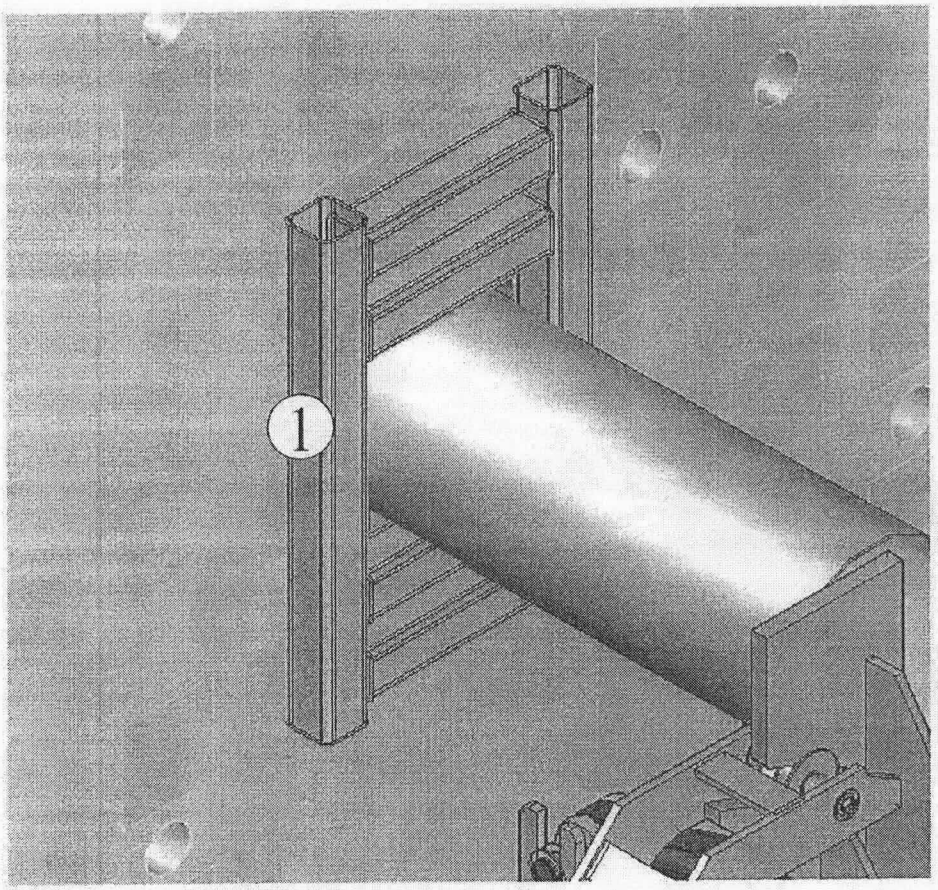

Guide supports at face of hot cell wall

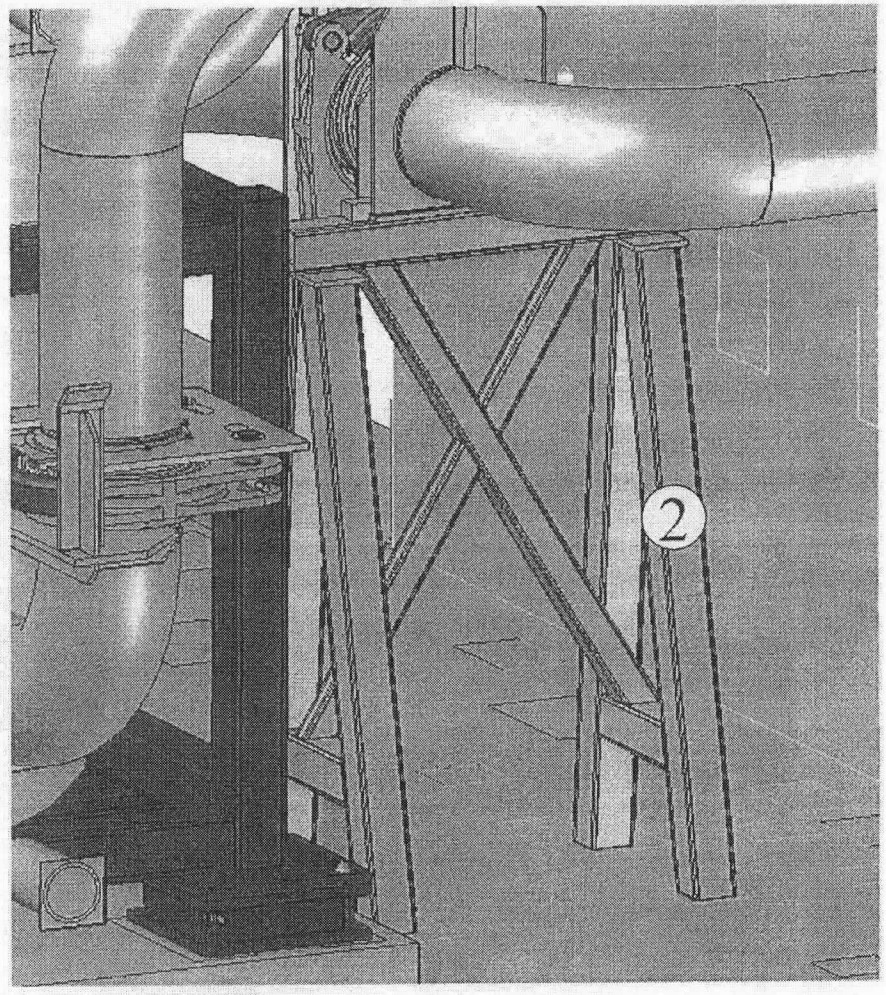

Guide support on back side of wall Grayloc hub.

FEP Layout

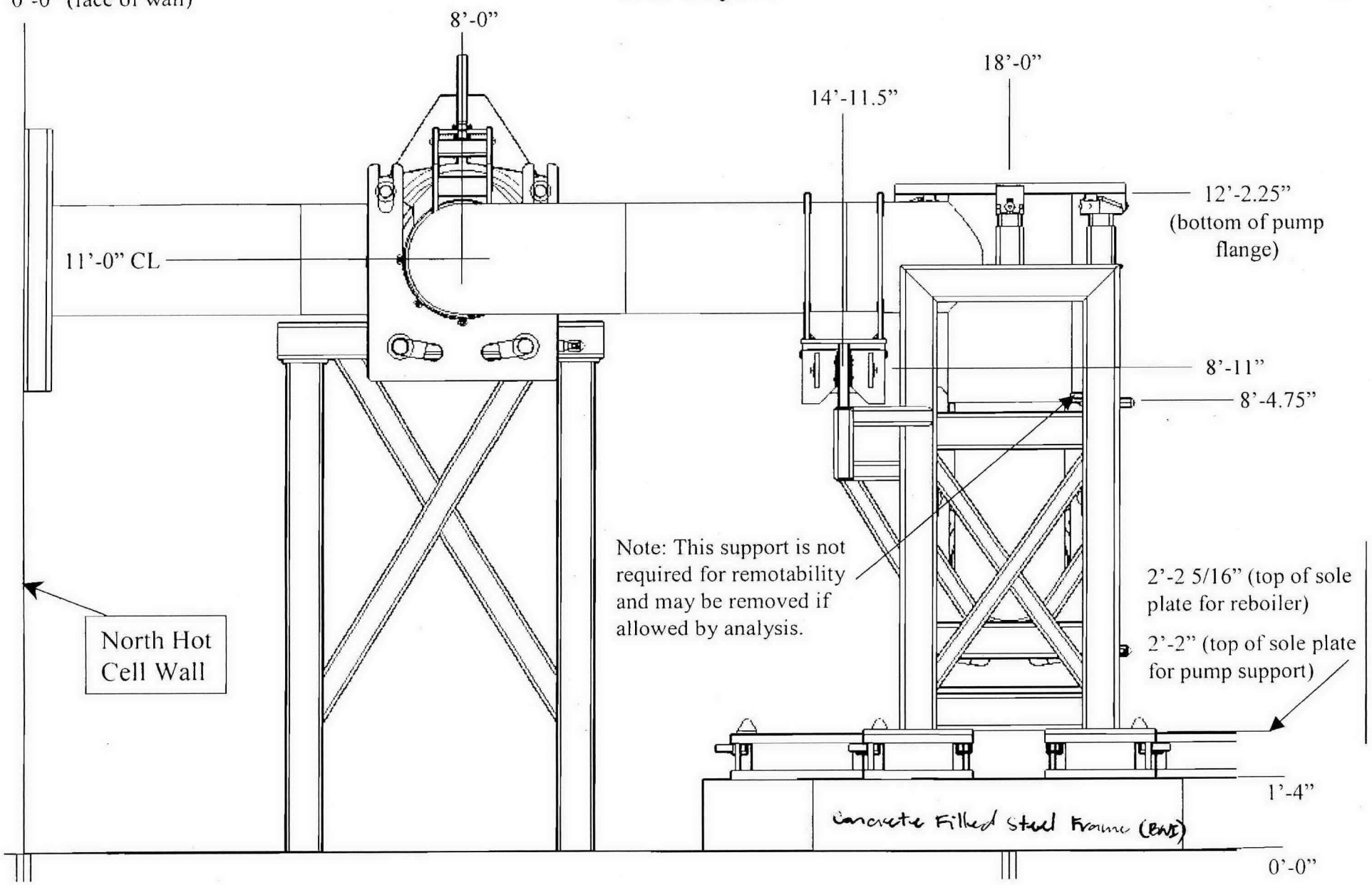

Elevation View (looking west)

Pump Support Frame
(FEP)

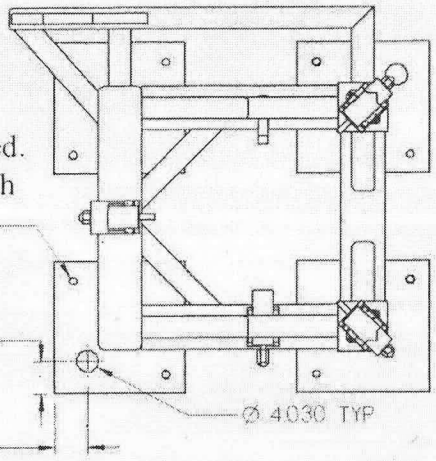

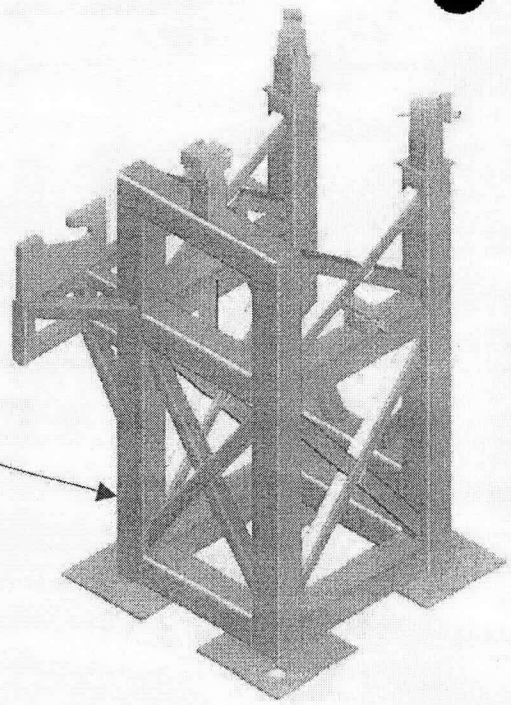

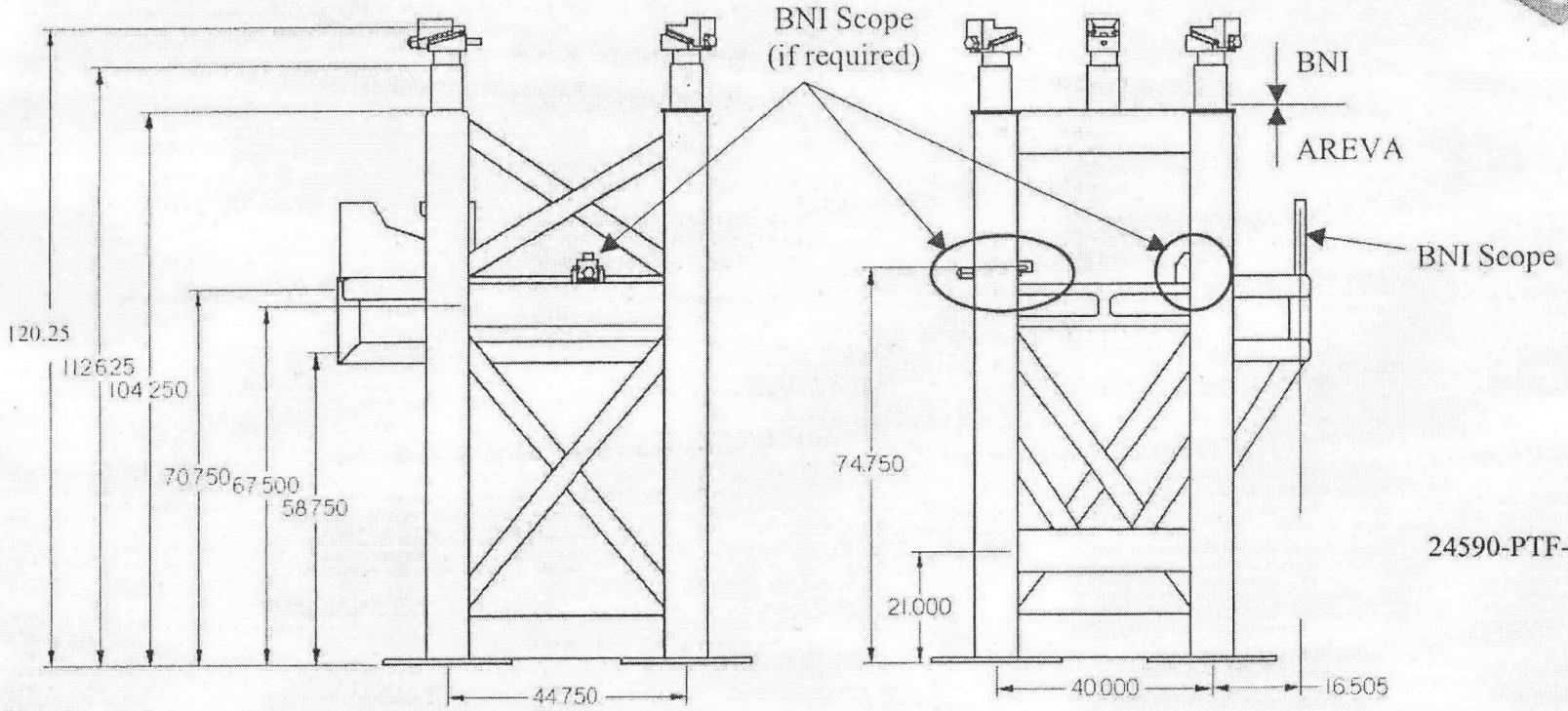

Sole Plates (FEP)

Example Sole Plate

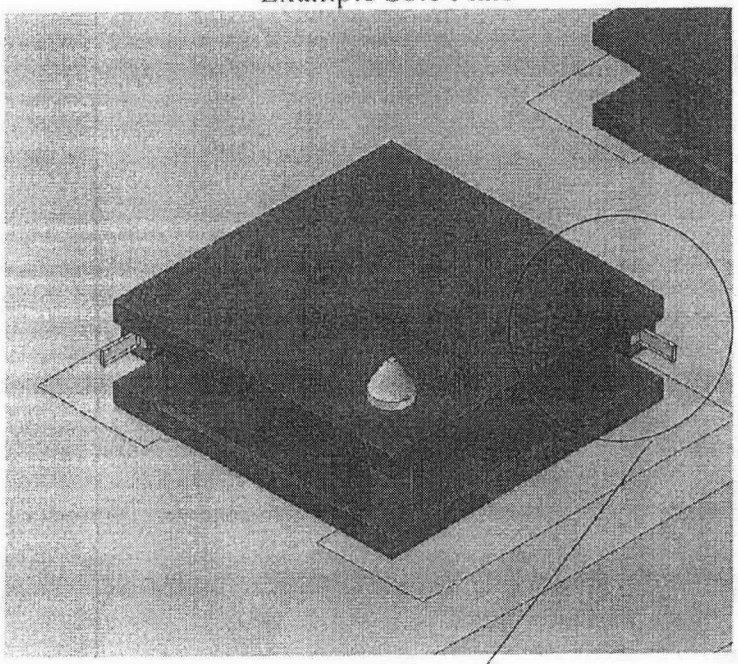

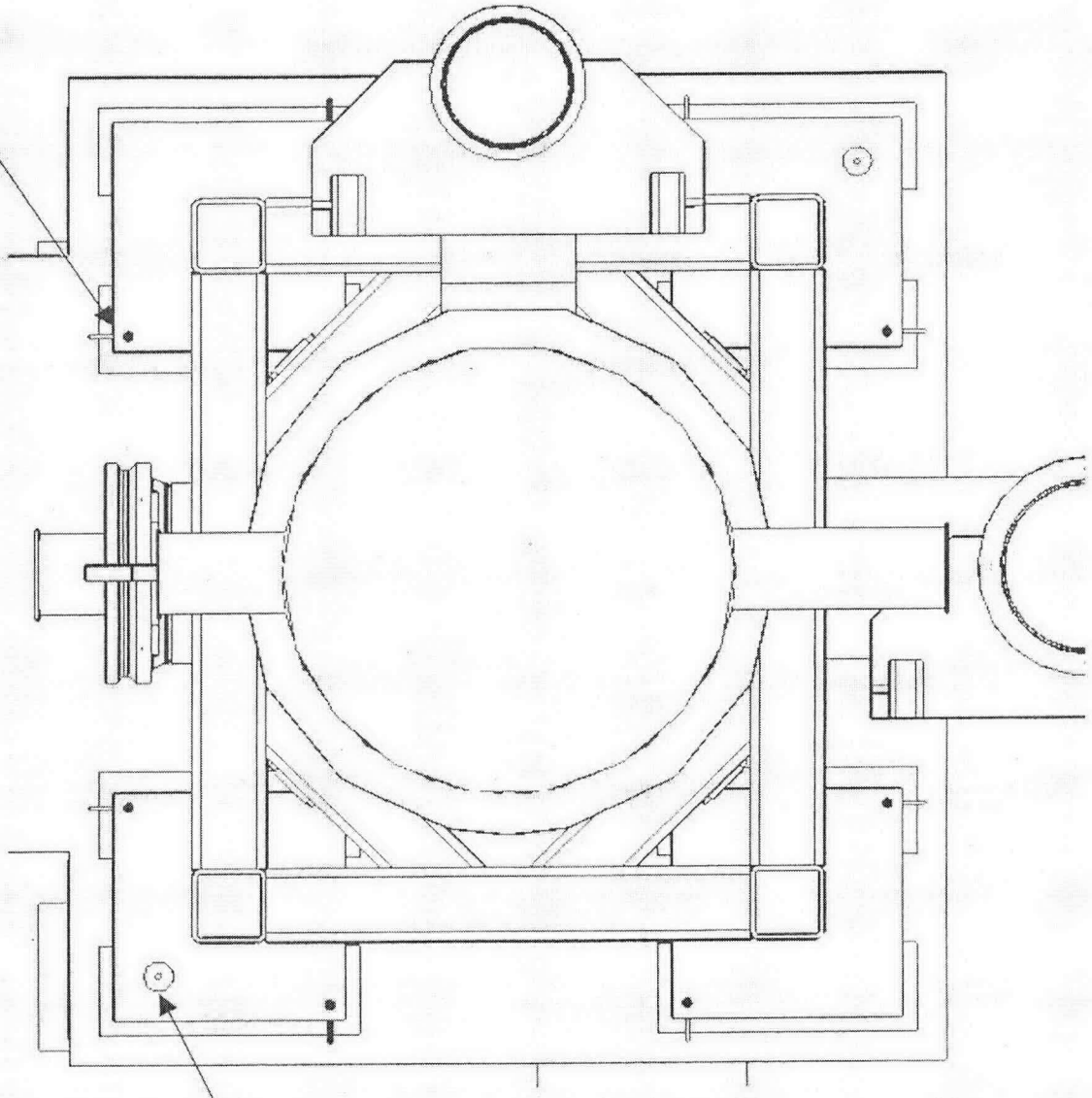

FEP

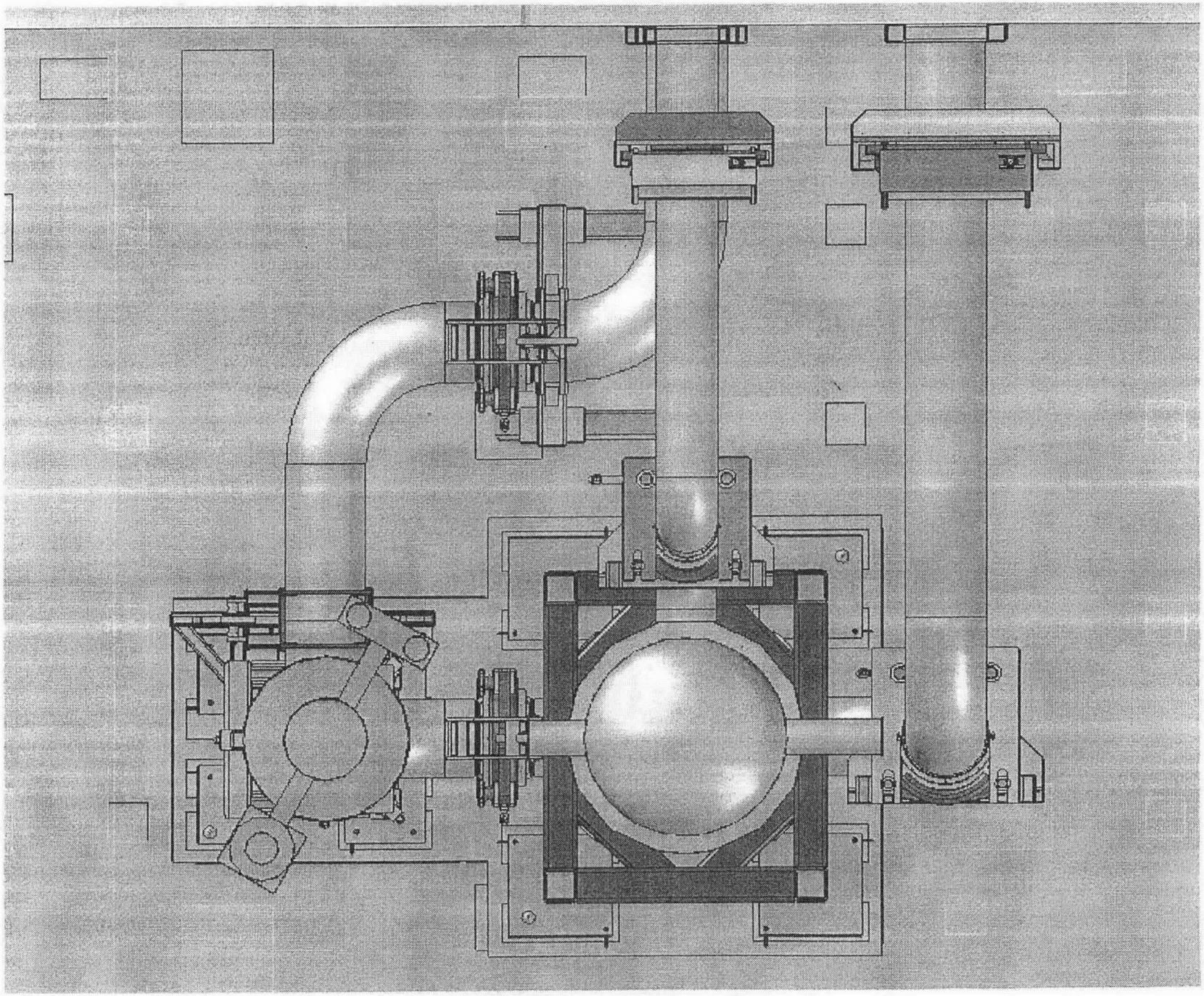

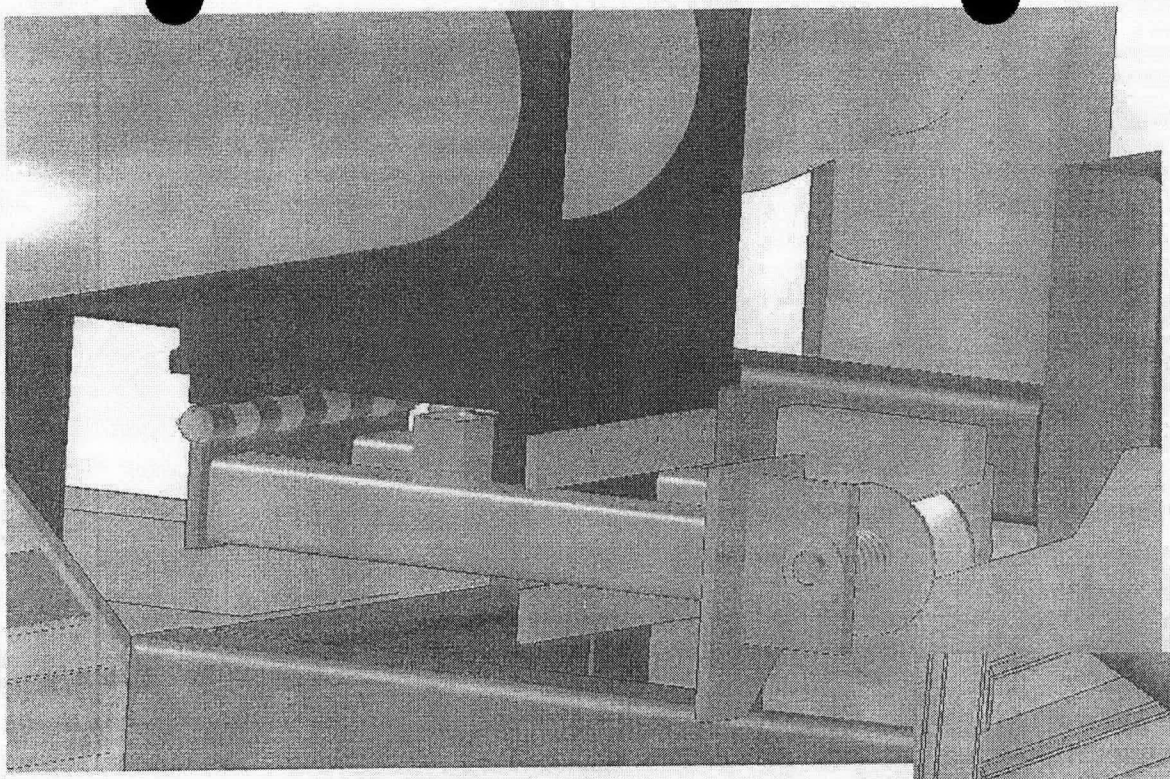

Mid-Roller Assembly

Connector Roller Assembly

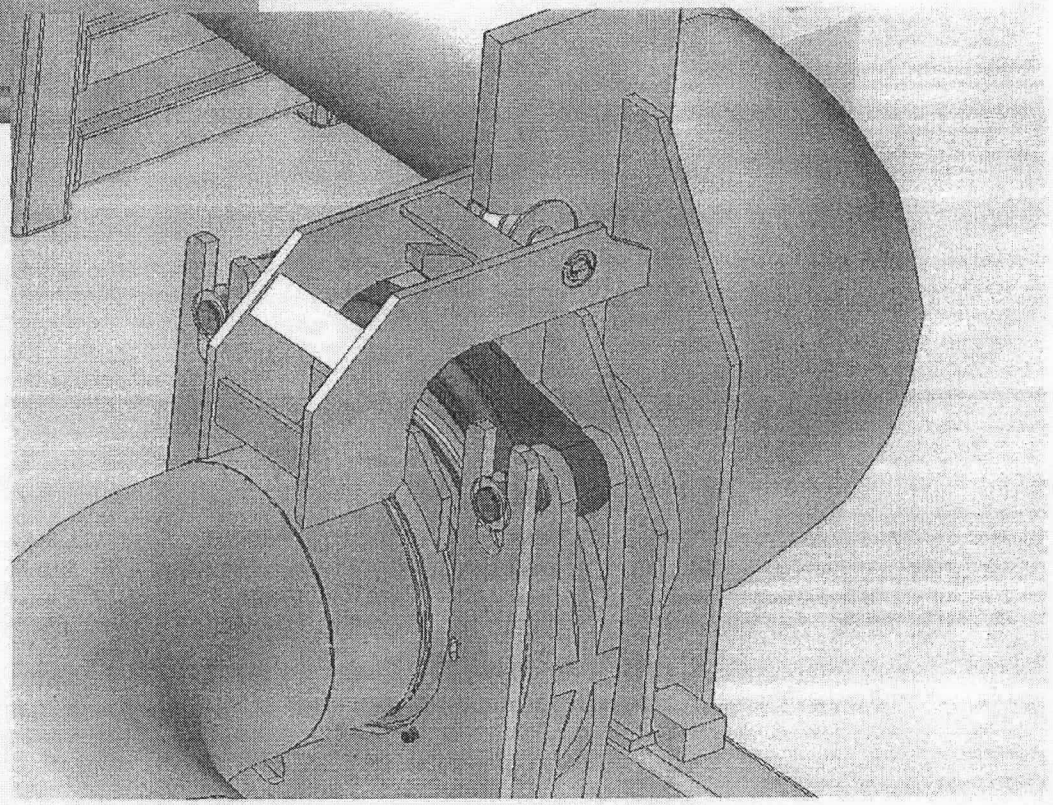

SC-I/II Seismic Analysis Qualification and FEA Report Check List

	Required Data	Source Reference	Applicable Section of Seismic Qualification Report
1	**Identification and Description of Equipment**		
1.1	Equipment Tag Number or other identification that uniquely defines the equipment	24590-WTP-3PS-SS90-T0001 §7.1.2(a)	
1.2	Identification of safety functions of the equipment that must be provided during and after a design basis earthquake (DBE)	24590-WTP-3PS-SS90-T0001 §7.1.2(d) 24590-WTP-3PS-MV00-T0002 §7.3.1 Equipment specification and/or data sheet	
1.3	Identification and description of the parts or features of the equipment that perform the safety functions and are therefore required to resist the DBE (this includes identification of Seismic Categories of relevant components or parts of the equipment)	Equipment specification and/or data sheet 24590-WTP-3PS-MV00-T0002 §2.2.4 DOE-STD-1020-94 §1.4 (page 1-7) and §C.8 (page C-65)	
1.4	Identification of basic material properties, key dimensions, and physical configuration of the equipment, including reference to design drawings/documents (including revision designation) that are used to control the design/configuration of the equipment	24590-WTP-3PS-SS90-T0001 §7.1.2(c)	
2	**Description of Analyses and Methodology**		
2.1	Reference to governing code(s) that specify ultimate or yield values (code allowable strength or stress levels)	Equipment specification and/or data sheet 24590-WTP-3PS-SS90-T0001 §7.1.2(e) 24590-WTP-3PS-MV00-T0002 §2.2.4 DOE-STD-1020-94 §2.3.2 (page 2-12)	
2.2	Identification of the code-defined strength or stress levels used in the analyses (the capacity of the equipment based on code ultimate or yield values)	24590-WTP-3PS-SS90-T0001 §7.1.2(e) 24590-WTP-3PS-MV00-T0002 §2.2.4 DOE-STD-1020-94 §2.3.2 (page 2-12)	
2.3	Definition of the seismic loads (earthquake loadings) used in the analysis (e.g., in-structure response spectra)	24590-WTP-3PS-SS90-T0001 §7.1.2(e) DOE-STD-1020-94 §1.4 (page 1-7), §2.2 (page 2-4), §C.8 (page C-65) 24590-WTP-3PS-MV00-T0002 §2.2.4	
2.4	Identification of equipment aging processes (e.g., corrosion, erosion, radiation, vibration/thermal fatigue, etc.), documentation or reference to documentation of these affects on material properties over the design life of the equipment, and evidence that the equipment will continue to provide its safety functions during and after a DBE at the end of design life	Equipment specification and/or data sheet 24590-WTP-3PS-SS90-T0001 §2.3 IEEE Std 344	

SC-I/II Seismic Analysis Qualification and FEA Report Check List

	Required Data	Source Reference	Applicable Section of Seismic Qualification Report
3.3	Description of how the analyses address the distribution of resulting seismic-induced inertial forces and evaluation of the load path(s)	24590-WTP-3PS-SS90-T0001 §7.1.2(g) 24590-WTP-3PS-MV00-T0002 §2.2.4 DOE-STD-1020-94 §2.2 (page 2-4)	
3.4	Description of method used to combine seismic and non-seismic loads (using code-defined load factors) and to compare the result with code-defined strength or stress levels to confirm the design is adequate	Equipment specification and/or data sheet 24590-WTP-3PS-SS90-T0001 §5 24590-WTP-3PS-MV00-T0002 §2.2.4 DOE-STD-1020-94 §2.3.2 (page 2-12)	
3.5	Identification of relative seismic anchor motion (SAM) between equipment and interconnected piping	24590-WTP-3PS-SS90-T0001 §7.4 24590-WTP-3PS-MV00-T0002 §2.2.4 DOE-STD-1020-94 §2.2 (page 2-6) and §2.4.1 (page 2-19)	
3.6	Identification of reaction loads on connecting structural supports and piping (individual loads as well as load combinations)	24590-WTP-3PS-SS90-T0001 §7.2	
4	**Quality Assurance**		
4.1	Signature of responsible engineer who performed the calculation	24590-WTP-3PS-MV00-T0002 §2.2.4 NQA-1-1989 DOE-STD-1020-94 §1.4 (page 1-7) and §C.8 (page C-65)	
4.2	Signature of engineer(s) who checked the calculation for numerical accuracy, and theory and assumptions	24590-WTP-3PS-MV00-T0002 §2.2.4 NQA-1-1989 Supplement 3S-1 DOE-STD-1020-94 §1.4 (page 1-7) and §C.8 (page C-65)	
4.3	Description of theory (analytical method) and assumptions used in the seismic analyses	NQA-1-1989 Supplement 3S-1 24590-WTP-3PS-SS90-T0001 §7.1.2(g)	
4.4	Description of computer program(s) used in the analyses, including model(s) used, input values, and output results calculated by the computer program	24590-WTP-3PS-SS90-T0001 §7.1.2(g) 24590-WTP-3PS-MV00-T0002 §2.2.4 NQA-1-1989 Supplement 3S-1 DOE-STD-1020-94 §C.8 (page C-65)	
4.5	Printout of output of computer analyses, including signature of responsible engineer who performed the computer analyses on first page of output	24590-WTP-3PS-MV00-T0002 §2.2.4 NQA-1-1989 Supplement 3S-1 DOE-STD-1020-94 §C.8 (page C-65)	

R10756965

ISSUED BY
RPP-WTP PDC

RIVER PROTECTION PROJECT – WASTE TREATMENT PLANT

ENGINEERING SPECIFICATION

FOR

Cesium Nitric Acid Recovery Forced Circulation Vacuum Evaporator System

Content applicable to ALARA? ☒ Yes ☐ No

ADR No.
24590-PTF-ADR-M-03-011

Rev
0

Quality Level
Q
DOE Contract No. DE-AC27-01RV14136

NOTE: Contents of this document are Dangerous Waste Permit affecting.

REV	DATE	BY	CHECK	REVIEW	E&NS	QA	DPEM
4	2/21/07	E. Le	L. Donahoe	B. Makadia / J. Julyk		M. Ehlinger	R. Yoke
3	4/01/05	J. Hickman	K. Pandey	R. Stevens	N/A	G. Warner	R. Smith
2	4/22/04	J. Hickman	G. Butt	J. Julyk	N/A	G. Warner	R. Smith
1	7/17/03	J. Hickman	G. Butt	R. Stevens	N/A	G. Warner	S. Grabowski
0	7/2602	J. Hickman	C. Morley	S. Kirk	N/A	G. Warner	M. Hoffmann

SPECIFICATION No.
24590-PTF-3PS-MEVV-T0002

Rev
4

Best Available Copy

Revision History

Revision	Reason for Revision
0	Issued for Procurement For bid only
1	Issued for Procurement Total revision
2	Issued for Purchase Incorporated Design Change: 24590-PTF-3PN-MEVV-00003 with revision of section 2.1.2 for clarification.
3	Issued for Purchase Incorporated Design Changes: 24590-PTF-3PN-MEVV-00002 with section 2.3.1.24 and Appendix H deleted. 24590-PTF-3PN-MEVV-00008 with the following additional revisions 1. Revised section 1.2.1 to add CNP-SKID-00006 2. Revised section 1.2.12 for clarification of Seller's responsibility 3. Rephrased section 1.3.12 for clarification 4. Moved section 1.4.24 to section 1.4.31 5. Revised section 3.1.27 to change "Appendix F" to "Appendix I" 6. Revised section 3.1.28 to clarify the scope of responsibilities for Buyer and Seller 7. Revised section 3.1.29 to clarify the reboiler design requirements 8. Revised section 3.6.2 to clarify the Seller's responsibilities 9. Revised section 3.6.7 to provide accuracy requirement 10. Moved section 3.7.11 to section 3.7.20 11. Revised section 3.7.12 to add reboiler tolerance requirements 12. Revised section 3.17.9 to delete "over the complete vessel height" at the end of the 4th sentence 13. Revised section 3.18.3.2 to add support frame assembly & rephrase the requirement 14. Revised section 7.1.6 to add support frame assembly
4	Incorporated Design Changes: 24590-PTF-3PN-MEVV-00011 24590-PTF-3PN-MEVV-00013 with revision of 3.4.3.3 for clarification. 24590-PTF-3PN-MEVV-00016 with the following revisions 1. Revised section J8b of appendix J to remove digitized data verification requirements that is no longer applicable. 2. Revised section J5.2 of appendix J to add "or greater" at the end of the sentence for clarification. 24590-PTF-3PN-MEVV-00020 24590-WTP-SDDR-M-06-00150

Revision	Reason for Revision
	24590-WTP-SDDR-ML-05-00264 with revision of 4.2.8 to allow threaded and fitting outside of black cells. Deleted Appendix F and all internal references that are no longer needed. Revised Section 1.2.1 to add "CNP-PMP-00002" for clarification Revised Section 1.2.6, 3.4.3.1, 3.7.13 to remove low-pressure steam information which is no longer applicable Revised section 1.2.12 to indicate that seismic information is provided in Appendix J Revised section 1.2.14 to correct steam supply information Deleted section 1.3.26 to correct Buyer's scope of work. Revised section 1.4.9 to delete outdated acceleration values. Revised sections 1.4.11, 1.4.13, 1.4.15, 1.4.16, 1.4.18, 1.4.24, 1.4.25, 1.4.28, 1.4.29, & 1.4.32 to correct definitions Revised sections 1.6.1 and 2.1.2 for clarifications Revised sections 2.2.6 and 2.2.15 to be consistent with SRD. Revised section 2.2.25 to correct typos Added sections 2.2.31, 2.2.32 and 2.2.33 for references Added sections 2.3.1.2 from 24590-PTF-3PN-MEVV-00002 which was erroneously deleted in Rev. 2 of this specification Revised sections 3.1.5, 3.1.26, 3.1.27, 3.1.29, 3.4.2.1 - 3.4.2.4, 3.6.1, 3.7.1, 3.8.1, 3.9.1, 3.9.10, 3.11.1 to remove Appendix F reference which was deleted Revised sections 3.1.21 to remove attachments in section 2 of the MR which was deleted. Added 3.12.13 to incorporate 2" drain nozzle inlet to reboiler steam condensate vessel from desuperheater Revised section 6.6.3 to clarify the weld acceptance criteria. Revised Section 7.2 to clarify that the stimulant test using non-radioactive cesium is not required. Revised 3.2.4 to correct typos. Revised section 11.2 to clarify design stress/seismic report submittal requirements. Revised sections 3.7.20, 3.8.5, 3.9.5, 3.10.12, and 3.11.13, to correct nozzle loading requirements. Revised section 3.14.3 to clarify seismic analysis requirements Revised section 4.2.12 to include table header and correct typos. Added Appendix K to provide location of the 2-inch inlet drain nozzle on the reboiler steam condensate vessel. Revised Appendices B and C to correct steam supply conditions. Revised Appendix I to add a note for clarification regarding QL-1 and QL-2 used by Seller.

Contents

1 Scope 4
1.1 Project Description and Location 4
1.2 Equipment, Material, and Services Required 4
1.3 Work by Others 10
1.4 Definitions 12
1.5 Mechanical Data Sheets 16
1.6 Safety/Quality/Seismic Classifications 16
2 Applicable Documents 16
2.1 General 16
2.2 Codes and Industry Standards 17
2.3 Reference Documents 18
2.4 Reference Drawings / Data Sheets 20
3 Design Requirements 23
3.1 General 23
3.2 Basic Function 26
3.3 Performance 26
3.4 Design Conditions 27
3.5 Environmental Conditions 28
3.6 Recirculation Pump 29
3.7 Reboiler 30
3.8 Evaporator Separator Vessel 31
3.9 Rectifier 32
3.10 Primary Condenser 33
3.11 Secondary Condenser System 34
3.12 Reboiler Condensate Transfer Station (RCTS) 35
3.13 Mechanical Handling Requirements 36
3.14 Loadings 36
3.15 Electrical Requirements 37
3.16 Instrumentation and Control Requirements 38
3.17 Lifting Requirements 39
3.18 Accessibility and Maintenance 40
4 Materials 41
4.1 Positive Material Identification 41

Contents

4.2 Construction 41
4.3 Vessels 43
4.4 Pipework 43
4.5 Prohibited Materials 43
4.6 Storage of Special Materials (e.g., stainless steel) prior to work 44
5 Fabrication 44
5.1 General 44
5.2 Welding 44
6 Inspections and Examinations 45
6.1 Nondestructive Examinations 45
6.2 Dimensional Inspections 45
6.3 Visual Weld Inspections 46
6.4 Liquid Penetrant Test 46
6.5 Radiography 47
6.6 Magnetic Particle Examination 47
6.7 Final Inspection 47
6.8 Inspection and Test Status 48
6.9 Control of Nonconforming Items 48
7 Testing 48
7.1 Shop Tests 48
7.2 Integrated Acceptance Tests 49
8 Preparation for Shipment 50
8.1 General Requirements 50
8.2 Painting 51
8.3 Tagging 52
9 Quality Assurance 53
9.1 General Commercial Designation (CM) Requirements 53
9.2 Quality Level (QL) Requirements 53
10 Configuration Management 54
11 Documentation and Submittals 54
11.1 General 54
11.2 Calculations 55
11.2.1 ANSI/AISC N690 Steel Frame / Support Designs 55
11.2.2 ASME VIII, Div 2, Appendix 4, Vessel including internal supports/components 55
11.2.3 ASME B31.3 Piping Design 56

Contents

11.3 As-Built Drawings 56
11.4 Dimensional Record Drawings 56
11.5 Project Start 56
11.6 30 % Design Review 56
11.7 60 % Design Review 57
11.8 90 % Design Review 58
11.9 Final Design Review 63

Appendices

A	Evaporator Stream Data		A-1
B	CNP Nitric Acid Recovery Forced Circulation Vacuum Evaporator Thru-Put Flow Chart		B-1
C	Evaporator Process Data		C-1
D	Figures Deleted		D-1
E	Figures Deleted		E-1
F	**Deleted**		F-1
G	Figures Deleted		G-1
H	Manufacturer's Standard Coating Data Sheet		H-1
I	Quality Level and Seismic Category for Evaporator Equipment		I-1
J	**CNP Evaporator System Composite Analyses**		**J-1**
K	**Location of the 2-inch inlet drain nozzle on reboiler steam condensate vessel**		**K-1**

Contents

1 Scope 4
1.1 Project Description and Location 4
1.2 Equipment, Material, and Services Required 4
1.3 Work by Others 10
1.4 Definitions 12
1.5 Mechanical Data Sheets 16
1.6 Safety/Quality/Seismic Classifications 16
2 Applicable Documents 16
2.1 General 16
2.2 Codes and Industry Standards 17
2.3 Reference Documents 18
2.4 Reference Drawings / Data Sheets 20
3 Design Requirements 23
3.1 General 23
3.2 Basic Function 26
3.3 Performance 26
3.4 Design Conditions 27
3.5 Environmental Conditions 28
3.6 Recirculation Pump 29
3.7 Reboiler 30
3.8 Evaporator Separator Vessel 31
3.9 Rectifier 32
3.10 Primary Condenser 33
3.11 Secondary Condenser System 34
3.12 Reboiler Condensate Transfer Station (RCTS) 35
3.13 Mechanical Handling Requirements 36
3.14 Loadings 36
3.15 Electrical Requirements 37
3.16 Instrumentation and Control Requirements 38
3.17 Lifting Requirements 39
3.18 Accessibility and Maintenance 40
4 Materials 41
4.1 Positive Material Identification 41

Contents

4.2 Construction 41
4.3 Vessels 43
4.4 Pipework 43
4.5 Prohibited Materials 43
4.6 Storage of Special Materials (e.g., stainless steel) prior to work 44
5 Fabrication 44
5.1 General 44
5.2 Welding 44
6 Inspections and Examinations 45
6.1 Nondestructive Examinations 45
6.2 Dimensional Inspections 45
6.3 Visual Weld Inspections 46
6.4 Liquid Penetrant Test 46
6.5 Radiography 47
6.6 Magnetic Particle Examination 47
6.7 Final Inspection 47
6.8 Inspection and Test Status 48
6.9 Control of Nonconforming Items 48
7 Testing 48
7.1 Shop Tests 48
7.2 Integrated Acceptance Tests 49
8 Preparation for Shipment 50
8.1 General Requirements 50
8.2 Painting 51
8.3 Tagging 52
9 Quality Assurance 53
9.1 General Commercial Designation (CM) Requirements 53
9.2 Quality Level (QL) Requirements 53
10 Configuration Management 54
11 Documentation and Submittals 54
11.1 General 54
11.2 Calculations 55
11.2.1 ANSI/AISC N690 Steel Frame / Support Designs 55
11.2.2 ASME VIII, Div 2, Appendix 4, Vessel including internal supports/components 55
11.2.3 ASME B31.3 Piping Design 56

Contents

11.3 As-Built Drawings 56
11.4 Dimensional Record Drawings 56
11.5 Project Start 56
11.6 30 % Design Review 56
11.7 60 % Design Review 57
11.8 90 % Design Review 58
11.9 Final Design Review 63

Appendices

A	Evaporator Stream Data		A-1
B	CNP Nitric Acid Recovery Forced Circulation Vacuum Evaporator Thru-Put Flow Chart		B-1
C	Evaporator Process Data		C-1
D	Figures Deleted		D-1
E	Figures Deleted		E-1
F	**Deleted**		F-1
G	Figures Deleted		G-1
H	Manufacturer's Standard Coating Data Sheet		H-1
I	Quality Level and Seismic Category for Evaporator Equipment		I-1
J	**CNP Evaporator System Composite Analyses**		**J-1**
K	**Location of the 2-inch inlet drain nozzle on reboiler steam condensate vessel**		**K-1**

1 Scope

1.1 Project Description and Location

The Hanford Tank Waste Treatment and Immobilization Plant (WTP) is a complex of waste treatment facilities where the US Department of Energy (DOE) Hanford Site tank waste will be pretreated and immobilized into stable glass form via vitrification. The WTP Contractor will design, build, and startup the WTP pretreatment and vitrification facilities for the DOE Office of River Protection (ORP). The waste treatment facilities will pretreat and immobilize the low-activity waste (LAW) and high-level waste (HLW) currently stored in underground storage tanks at the Hanford Site.

The Hanford Site occupies an area of about 560 square miles and is located along the Columbia River, north of Richland, WA in the U.S.A. The WTP Facility will be constructed at the east end of the 200 East Area of the Hanford Site. The counties of Benton, Franklin, and Grant surround the Hanford Site.

1.2 Equipment, Material, and Services Required

This specification provides the requirements for the design, analysis, fabrication, quality assurance, inspection, testing, qualification, and labeling of one forced circulation vacuum evaporator system Cesium Nitric Acid recovery. This specification also provides the requirements for the supply of services, manuals, instructions, procedures, and other associated documentation.

The scope of work for the Seller includes all work defined in this specification and its addenda and attachments. Work shall include, but is not limited to, the following:

1.2.1 Provide fully detailed designs, drawings, diagrams, supporting calculations, supporting analyses, operating & maintenance procedures, installation instructions, and all labor, materials, equipment, and services necessary to manufacture, test, inspect, label and package one forced circulation vacuum evaporator system, including handling and servicing equipment, all fabricated to appropriate NQA-1 requirements in accordance with all specification requirements, with the deliverables being reports, calculations, procedures, data sheets, drawings and diagrams as outlined in this specification and the Material Requisition (MR). Refer to table below for what shall be included as part of evaporator system to be provided.

Equipment	Tag
One (1) Separator Vessel. Includes spraybars above and below the mesh pad, nozzles, vessel support pads, and support frame (CNP-SKID-00007) with anchorage and bracing. Bracing may be shipped loose and intended for field installation at Buyer's facility.	CNP-EVAP-00001
One (1) internal deentrainment separation system	Included above
One (1) stainless steel structural support frame with anchorage for the separator vessel.	Not tagged
One (1) reboiler with inlet and outlet pipe ends welded to Buyer's supplied jumper nozzles. Includes structural support frame with anchorage for the reboiler.	CNP-HX-00001
One (1) recirculation pump including motor, mechanical seal, and adjustable speed drive. The pump inlet and outlet pipe ends welded to Buyer's supplied jumper nozzles.	CNP-PMP-00001
One (1) reboiler steam condensate transfer station (CNP-SKID-00006). Equipment platform includes condensate transfer vessel (CNP-VSL-00168) and pumps (CNP-PMP-00003A & B).	CNP-SKID-00006
One (1) Rectifier vessel including internal trays. Includes structural support frame with anchorage (CNP-SKID-00002) for the rectifier.	CNP-DISTC-00001
One (1) primary condenser including tubes, tubesheet, nozzles, saddles, mounted on condenser skid with anchorage (CNP-SKID-00002).	CNP-HX-00002
One (1) Inter-Condenser including tubes, tubesheet, nozzles, and piping connecting to primary condenser and after-condenser mounted on condenser skid with anchorage (CNP-SKID-00002).	CNP-HX-00003
One (1) After-Condenser including tubes, tubesheet, and nozzles mounted on condenser skid with anchorage (CNP-SKID-00002).	CNP-HX-00004
Two (2) Steam Ejectors include piping connecting to inter-condenser and after-condenser mounted on condenser skid with anchorage (CNP-SKID-00002).	CNP-EJCTR-00010A CNP-EJCTR-00010B
One (1) Centrifugal Pump for removal of condenser system process condensate	**CNP-PMP-00002**
One (1) steam conditioning system skid (with anchorage). Skid contains pressure reducing valve and control and a desuperheater.	CNP-SKID-00003 "Note 1"
Lifting yokes for one (1) reboiler, and one (1) recirculation pump	"Note 1"

Note 1: Stainless steel or plastic tags (foil strip is not acceptable) shall be firmly attached by stainless steel wire or stainless steel screws to each separate item. Each tag shall be stamped with, as a minimum: (1) Purchase Order Number, (2) Purchase Order item number, and (3) Equipment/Instrument Tag number.

1.2.2 Provide a guarantee that all equipment listed in section 1.2.1 will perform in accordance with the requirements of this specification and all referenced codes, standards, and documentation in section 2 of this specification. Process warranty shall include demonstration of compliance of the Seller's provided evaporator system during testing per section 7.2 of this specification with the boil-off and decontamination factor requirements.

1.2.3 Perform sizing calculations and process performance modeling to ensure that each component of the evaporator system is properly specified.

1.2.4 Provide the nonreplaceable separator vessel and all internal parts (exception made for demister pad life), which shall attain a 40-year life.

1.2.5 Deleted.

1.2.6 Provide one (1) steam conditioning equipment necessary to reduce plant pressure steam to Seller's provided optimal saturated steam condition for reboiler operation. Provide specifications (i.e., pipe diameter, associated equipment and layout) for reboiler shell vacuum/vent line.

1.2.7 Deleted

1.2.8 Provide evaporator skids, equipment, components, and structural supports with the materials of construction as specified per this specification and on the attached data sheets in section 2 of the MR. The structural supports for evaporator equipment shall match with Buyer's provided embed layout and floor beams above.

1.2.9 Provide evaporator systems that accommodate the wall penetrations, piping layout, equipment dimension envelopes, and equipment locations as specified in Appendix F.

1.2.10 Provide stainless steel skid framing to match Buyer embed plates for the separator vessel. The vessel skid shall conform to the proposed embed layout dimensions shown in the Appendix D.

1.2.11 Provide below-the-hook lifting devices for installation, commissioning, and operation/maintenance of the demister pad assembly, reboiler, and recirculation pump. These will include lifting yokes, beams, fixtures, etc., according to Buyer design constraints for remote handling. Seller is also to provide all special lifting equipment and special tools required for installation and maintenance of the evaporator system.

1.2.12 Provide seismic analysis for evaporator structures, systems, and components. The seismic response spectra and damping values for the performance of the seismic analysis **are provided in the Appendix J**.

1.2.13 Provide the thermal and static stress analyses for the evaporator structures, systems, and components. Buyer will provide the necessary cyclic data for Seller to perform an assessment regarding the fatigue life of the equipment. However, Seller will be responsible for confirmation that the cyclic data has been

accurately interpreted before proceeding with the component fatigue analysis. The Seller shall provide a fatigue analysis to support a 40-year design life for the evaporator system. The fatigue analysis shall include all calculations and all supporting data.

1.2.14 Identify all interfaces and requirements for external connections with equipment and services supplied by the Buyer. The interface system data parameters for use in each of the evaporator systems shall include, as a minimum, the following:

Inlet Conditions:

- High pressure steam **(see section 3.4.3.3)**
- Service Water (flow rate)
- Instrument air (flow rate @ pressure)
- Cooling water (flow rate @ 75 °F)
- Operating electrical (kW)
- Installed electrical (kW)

Outlet Conditions:

- Steam Condensate (volumetric flow rate & temperature)
- Process Condensate (volumetric flow rate & temperature)
- Vent System (mass flow rate & temperature)
- Recirculation Loop (volumetric flow rate & temperature)
- Separator offgas (mass flow rate & temperature)
- Concentrated waste (volumetric flow rate & temperature)
- Rectifier offgas (mass & volumetric flow rate & temperature)
- Rectifier bottoms (volumetric flow rate & temperature)

1.2.15 Provide completed Instrument and Mechanical data sheets for all instruments and equipment in the 60 % design review package, utilizing Buyer's supplied instrument data sheet samples attached in the section 2 of the MR as templates. Buyer will procure the required instruments as detailed by the Seller's control documents (data sheets) for installation by others. Instrumentation shall conform to 24590-WTP-3PS-JQ07-T0001, *Engineering Specification for Instrumentation for Package Systems*. Seller's design may differ from the Buyer proposed evaporator Piping and Instrumentation sketches in Section 2 of the material requisition with Buyer's review

1.2.16 Provide the following for instrumentation and controls of Seller's supplied evaporator systems, equipment, and components to support Buyer's software development. Any effect that the evaporator control strategy has on equipment operating parameters (i.e., pump flow rates, line flushes, feed and concentrate takeoff strategies, temperature, or pressure) will be mutually agreed upon prior to being implemented into the design.

- P&IDs
- Completed Buyer's Instrument data sheets
- Instrument Control philosophies
- Instrument Logic Diagrams
- Functional descriptions
- Instrument index which includes control set points

- Control and sequencing requirements (logic narratives)
- Instrumentation and controls requirements for the CNP evaporator feed cycle and concentration & eluant recovery cycle (Buyer to procure).

1.2.17 Provide a reliability analysis and documentation for the evaporator system in accordance with the following:

1.2.17.1 A complete Failure Modes and Effects Analysis (FMEA) shall be performed on all the equipment that falls within Seller's scope of supply. This shall include associated components such as vessels, remote handling equipment, pumps that have electronic control systems used for process variability (e.g., flow rate). All support systems (e.g., power, air, water, steam, etc.) will be assumed to be 100 % reliable and will not be considered in the FMEA. Structural failure modes will be limited to seismic events, based on whatever seismic analyses have been performed to support the design. The FMEA shall follow in MIL-STD-1629A as close as possible. The equivalent standard actually used to perform the FMEA shall be provided as a reference (including version and year) at the 60 % design review. Also, an explanation shall be included to demonstrate how the standard has been applied. Failure modes for a reboiler are at least as follows: (1) pin hole, (2) crack, and (3) tube rupture. In addition, Seller shall indicate the possibility of the reboiler tube rupture without precursor of pin hole or crack. Determination of the possibility of reboiler tube rupture without a precursor of a pinhole or crack can be made with a qualitative argument based on fracture mechanics. No stress analysis or fracture mechanics calculations will be required to support the qualitative assessment. Failure modes for the remaining components covered by the FMEA shall be as determined by the Seller; however, the basis for the failure mode shall be specified.

1.2.17.2 Failure rate data for the purposes of an availability assessment (performed by Seller) will be derived using the following hierarchy:

- Supplier In-Service Data
- In-Service Data of similar equipment, preferably in similar applications
- Generic Documented Failure Rate Data – data taken from recognized data sources, e.g., Dexter & Perkins, NPRD 1995, etc.

1.2.17.3 The specific data source shall be provided at the 60 % design review

1.2.17.4 A remote maintainability analysis will be undertaken in concert with the Buyer. The analysis will address corrective maintenance activities and estimate the required maintenance for the reboiler and appurtenances.

1.2.17.5 A recommended spare parts list, operations manuals, and maintenance manuals shall be provided.

1.2.17.6 Assume operations are 8,760 operating hours per year.

1.2.18 Provide an analysis of operating life for separator vessel, including its internal demister pads, and feed distribution, reboiler, recirculation pump and rectifier. Justify all assumptions and references.

1.2.19 Provide structural support requirements and recommended support locations for the recirculation pump (i.e., load points, weight distribution, and maximum weight, geometry of equipment, and location of center gravity). Equipment support locations shall be mutually agreed with the Buyer due to remote handling requirements in the hot cell.

1.2.20 Provide design and fabrication of a reboiler support frame. The support frame shall be welded to the reboiler and designed to force the thermal expansion of all nozzles upward. Upper support points can be maintained for a lateral guide support. The reboiler and frame shall be designed to be remotely removeable and maintained in the Buyer's hot cell.

1.2.21 Provide demonstration and recorded VHS format video tape for demister pad removal and replacement. Buyer shall be notified prior to demonstration.

1.2.22 Provide radiographic film with technique and reader sheets. Exposed film must be sent, along with a copy of the technique and reader sheets in accordance with section 3 of the MR. Film must be suitably packaged to preclude moisture and handling damage.

1.2.23 Provide any necessary special remote repair tools for the reboiler, support frame assembly and recirculation pump. Special tools shall not include tools readily available in the commercial market. Also, provide a list of commercially available tools needed.

1.2.24 Deleted.

1.2.25 Provide personnel to perform dimensional measurements for the separator vessel, reboiler, and recirculation pump at the Seller's shop.

1.2.26 Provide certified reports for all components subject to any heat treatment during manufacture.

1.2.27 Provide procedures suggesting how the integrated testing of evaporator system functionality be conducted by Buyer at the Hanford jobsite per section 7.2 of this specification. Technical support for installation, testing and commissioning will be under a separate contract.

1.2.28 Provide design documents in progressively complete package form. Design reviews at 30 %, 60 %, 90 % and Final Design to resolve all outstanding issues are planned to include face-to-face discussions between Buyer's personnel and Seller's personnel at Buyer's location. Future meetings will be arranged after Design Review Package Materials have been reviewed and meeting agenda have been established. The discussions are intended to help establish/clarify interface points in system requirements, review design/design progress, design documents,

exchange ideas/information, and provide design direction. See G-321-E Form for document submittal requirements.

1.2.29 Perform a coupled seismic response spectra dynamic analysis that will qualify the recirculation piping, offgas piping, and provide nozzle loads & nozzle loads at the Grayloc connection on each jumper. See Appendix J for requirement details on coupled dynamic analysis.

1.2.30 Perform detailed FEA uncoupled seismic response spectra dynamic analysis of all SC-I/SC-II evaporator components (including the individual component's frames). See Appendix J for requirement details on FEA uncoupled analysis.

1.3 Work by Others

The following items are not the responsibility of the Seller:

1.3.1 Provide installation labor.

1.3.2 Provide equipment shipment, unloading and storage at Buyer's site.

1.3.3 Provide Instrumentation and controls (including installation). Provide Buyer internal standards for digital control system (DCS) equipment and will specify and procure the control system equipment based on the necessary I/O requirements detailed by Seller.

1.3.4 Deleted.

1.3.5 Generate control logic in Buyer standard format using the final control loop definitions, system interlocks and alarms, system control philosophies, and control and sequencing requirements provided by Seller.

1.3.6 Procure the DCS components. Buyer will provide the "Device" and "I/O" address of the serial communications link for each instrument for inclusion in the Instrument Index.

1.3.7 Perform remote handling verification testing for the reboiler, recirculation pump, and recirculation pipework jumper functionality at Buyer's site.

1.3.8 Provide the appropriate seismic response spectra and damping values for Seller to perform the evaporator equipment skid seismic analyses.

1.3.9 Deleted.

1.3.10 Provide heat tracing and any necessary uninterruptible power supplies.

1.3.11 Provide all valves (including control valves) located in the jumpers for remote maintenance in the R5/C5 hot cell.

1.3.12 Provide fabrication for all piping, and jumpers. This includes the separator vessel to the recirculation pump, the recirculation pump to the reboiler nozzle,

and the reboiler nozzle to the separator vessel. The Seller shall provide reboiler nozzle extensions including pipe spools up to the first available jumper coupling point. The Seller shall install the Buyer's jumper connectors on the reboiler nozzle extensions. The Buyer shall design and layout piping for the recirculation pipework Layout acceptability will be mutually agreed upon between the Buyer and Seller.

1.3.13 Provide structural supports for the evaporator piping.

1.3.14 Provide hot cell process equipment platform (PEP) for the reboiler and recirculation pump.

1.3.15 Provide the necessary cyclic data for Seller to perform an assessment regarding the fatigue life of the equipment.

1.3.16 Deleted.

1.3.17 Provide all jumpers, jumper mounted equipment, and pipework connections to the separator vessel within the black cell.

1.3.18 Provide all pipework between Seller's provided skids (excluding piping connecting condensers and steam ejectors).

1.3.19 Provide specification of process and utility piping jumper interfaces and their locations.

1.3.20 Provide Jumper stack-up tolerance study.

1.3.21 Provide shielding for penetrations through the walls and floors.

1.3.22 Provide hot cell remote handling equipment (including impact wrenches and standard lifting equipment).

1.3.23 Provide eluate lute pot (CNP-VSL-00001).

1.3.24 Provide break pots (CNP-BRKPT-00001 and CNP-BRKPT-00002).

1.3.25 Provide Vessel Vent system.

1.3.26 **Deleted.**

1.3.27 Provide CXP feed pumps (CXP-PMP-00001A/B).

1.3.28 Provide utility (i.e., air, steam, and cooling water) supply systems. However, Seller is responsible to provide steam-conditioning skid for reboiler operation.

1.3.29 Interface drawings for evaporator equipment skids.

1.4 Definitions

1.4.1 *Skid:* A skid is a group of components that can be manufactured and installed as a unit. These skid units are structurally self-supporting, allowing the skid to be handled by crane. Whenever practical, skids will contain all the equipment associated with the process, including vessels, piping, and supports.

1.4.2 *ALARA:* As Low As Reasonably Achievable (ALARA) documentation requirements apply to systems, structures, and components (SSCs) that have the potential to affect radiation doses, contamination levels, or releases to the environment.

1.4.3 *Buyer's Representative(s)*: The Buyer's designee(s), who shall witness onsite operations at the Seller and sub-seller sites and perform onsite inspections and surveillances.

1.4.4 *Black Cell (R5/C5)*: is a sealed concrete structure containing very high radiation and contamination where human access is prohibited during the normal operating lifetime of the cell and maintenance is not performed in the cell.

1.4.5 *C1:* Uncontrolled Area.

1.4.6 *C2:* Controlled area. Personnel must be verified free of contamination prior to exit.

1.4.7 *C3:* Contamination classification for plant areas that are ordinarily free of contamination, but have the potential of being contaminated.

1.4.8 *C5:* Contamination classification for plant areas that are considered high contamination areas. Access to C5 areas is not permitted.

1.4.9 *Design Basis Earthquake (DBE):* A specification of the ground motion at the site.

1.4.10 *Hot Cell (R5/C5):* A room that is restricted from personnel due to high levels of radiation and/or high levels of contamination. A hot cell is constructed with thick concrete walls usually lined internally with stainless steel sheet. Process equipment located in the hot cell is connected to wall nozzles using jumpers. Process equipment in the hot cell is skid mounted and designed for either remote maintenance using crane-mounted services or, preferably, no maintenance over the 40-year design life of the WTP.

1.4.11 *Important to Safety (ITS):* SSCs that serve to provide reasonable assurance that the facility can be operated without undue risk to the health and safety of the workers and the public. ITS encompasses the broad class of facility features addressed (not necessarily explicitly) in the top-level radiological, nuclear, and process safety standards and principles that contribute to the safe operation and protection of workers and the public during all phases and aspects of facility operations (i.e., normal operation as well as accident mitigation). ITS includes SSCs designated as Safety Class (SC), Safety Significant (SS), and **additional protection class (APC).**

1.4.12 *Jumper:* A remotely removable section of pipework usually incorporating connector heads and some items of process equipment (i.e., valves, instruments, etc.).

1.4.13 *Commercial Material (CM)*: SSC items and associated services (those that are not designated as SC or SS) that are manufactured using standard commercial practices.

1.4.14 *Paragraph*: When a paragraph of this specification, referenced documents, referenced codes, or referenced standards is referenced in this specification, the paragraph referenced and all subparagraphs and sub-subparagraphs of the paragraph referenced shall be considered inclusive.

1.4.15 *Quality (Q):* SC **and SS** items. NQA-1 (1989) compliance is required. **QL-1 and QL-2 designations are used by the Seller to comply with other referenced specification requirements (i.e weld, design). These designations meet NQA-1 (Q) requirements and are not necessarily reflected in their associated Buyer's P&IDs.**

1.4.16 ***Deleted.***

1.4.17 *Rad*: A unit of energy absorbed from ionizing radiation, equal to 100 ergs per gram or 0.01 joules per kilogram of irradiated material.

1.4.18 ***Additional Protection Class***: **APC** SSCs are ITS SSCs that are neither SC nor SS.

1.4.19 *R1*: Unrestricted area.

1.4.20 *R2*: Radiation controlled area.

1.4.21 *R3:* Radiation classification for plant areas considered average. Contamination area requiring anti-contamination clothing for entry. At early design stages, when insufficient information is available regarding worker occupancy, an initial target radiation level of 2.5 mRad/hr is to be used for the R3 classification.

1.4.22 *R4:* Radiation area (maximum).

1.4.23 *R5:* Radiation classification for areas considered to be high or very high radiation areas.

1.4.24 *Safety Class (SC):* SSCs that, by performing their specified safety function, prevent workers or the maximally exposed member of the public from receiving a radiological exposure that exceeds the accident exposure standards defined in the Safety Requirements Document (SRD). SC also applies to those features that, by functioning, prevent the worker or maximally exposed member of the public from receiving a chemical exposure that exceeds the ERPG-2 (AIHA 2001) chemical release standard. Those features credited for the prevention of a criticality event are also designated as SC.

1.4.25 *Safety Significant (SS)*: SSCs needed to achieve compliance with the radiological or chemical exposure standards for the public and workers during normal operation; and SSCs that can, if they fail or malfunction, place frequent demands on or adversely affect the function of SC SSCs.

1.4.26 *Seismic Category I (SC-I):* Equipment/tanks important to safety, which have a seismic safety function. For the design of Seismic Category I equipment/tanks, no credit for inelastic energy absorption is allowed. Seismic Category I equipment/tanks shall be functional during and after a Design Basis Earthquake (DBE).

1.4.27 *Seismic Category II (SC-II):* Equipment/tanks important to safety whose failure during a seismic event could prevent a Seismic Category I structure, system, or component (SSC) from performing its seismic safety function. For the design of Seismic Category II equipment/tanks, credit for inelastic energy absorption is allowed. Seismic Category II equipment/tanks shall maintain control and confinement of hazardous materials during and after a Design Basis Earthquake (DBE), but do not need to be functional.

1.4.28 *Seismic Category III Equipment (SC-III):* (a) SC and SS SSCs that do not have a natural phenomena hazard (NPH) safety function. (b) SSCs that have a seismic safety function solely because they protect workers and members of the public from exposure to chemical hazards. (c) **APC** SSCs that provide primary confinement of significant inventories of radioactive materials, but in amounts less than quantities that require an SC or SS designation.

1.4.29 *Seismic Category IV (SC-IV)*: **APC** SSCs that have been designated as RRC do not provide primary confinement of significant inventories of radioactive materials.

1.4.30 *Special Tools:* Any tooling, which is not commercially available required to perform maintenance on the evaporator system.

1.4.31 *Reboiler and support frame assembly:* Reboiler and pipe work up to and including PUREX nozzles, remote clamp connector (Grayloc) hubs, and permanently attached frame work.

1.4.32 *Acronyms*

- ALARA As Low As Reasonably Achievable
- AISC American Institute of Steel Construction
- ANSI American National Standards Institute
- **APC** **Additional Protection Class**
- ASD Adjustable Speed Drive
- ASD Manual of Steel Construction (Allowable Stress Design)
- ASME American Society of Mechanical Engineers
- ASNT American Society of Nondestructive Testing
- ASTM American Society for Testing and Materials
- AWS American Welding Society
- CCTV Closed Caption Television

- CFR Code of Federal Regulations
- CM Commercial grade
- CNP Cesium Nitric Acid Recovery Process
- CTP Condensate Transfer Pump
- CXP Cesium Ion Exchange Process
- DBE Design Basis Earthquake
- DOE US Department of Energy
- DOT Department of Transportation
- **FEA** **Finite Element Analysis**
- GPM Gallons per minute
- HLW High Level Waste
- ERPG Emergency Response Planning Guidelines
- ITS Important to Safety
- IX Ion Exchange
- LAW Low-Activity Waste
- M Molarity
- MDS Mechanical Data Sheet
- MR Material Requisition
- MSDS Material Safety Data Sheet
- NDE Nondestructive Evaluation/Examination
- NPS Nominal Pipe Size
- NQA Nuclear Quality Assurance
- ORP DOE Office of River Protection
- PEP Process Equipment Platform
- PMI Positive Material Identification
- P&ID Piping and Instrumentation Diagram
- PTF Pretreatment Facility
- PWD Plant Wash and Disposal System
- QA Quality Assurance
- QAP Quality Assurance Program
- QAM Quality Assurance Manual
- QL Quality Level
- RCV Reboiler Condensate Vessel
- RCTS Reboiler Condensate Transfer Station
- RRC Risk Reduction Class
- SBS Submerged Bed Scrubber
- SC Safety Class
- SS Safety Significant
- SC Seismic Category
- SSCs Structures, Systems, and Components
- SSPC The Society For Protective Coatings
- RPP-WTP River Protection Project-Waste Treatment Plant
- TID Total Integrated Dose
- TEMA Tube and Exchanger Manufacturer's Association
- SDDR Supplier Deviation Disposition Request
- SG Specific Gravity
- UBC Uniform Building Code
- VT Visual Test

- WT % Weight percent
- WTP Hanford Tank Waste Treatment and Immobilization Plant

1.5 Mechanical Data Sheets

Specific design parameters and requirements for evaporator components will be shown on the individual Mechanical Data Sheet (MDS) in section 2 of the MR. The data shall be considered as preliminary. Seller shall verify thermal, hydraulic, mechanical and process designs. Where necessary, the Seller shall change the data in order to furnish complete thermal, hydraulic, mechanical, and process guarantees, including loads (Dead, operation and seismic) to structural members. Any difference between Seller's final design and Buyer's preliminary data shall be brought to Buyer's attention for resolution and approval. Seller shall supply evaporator components that meet specified materials of construction, quality level, and seismic category as described on the MDS. The nominal feed chemistries used for the design should be based on Appendix A of this specification. Process design of the evaporator system is given in Appendix C of this specification.

1.6 Safety/Quality/Seismic Classifications

1.6.1 The quality level (QL) and seismic category (SC) of the major components of the evaporator system are specified on the data sheets **in section 2 of the MR and Appendix I of this specification.**

1.6.2 Seismic category (SC) classification requirements are specified in 24590-WTP-3PS-SS90-T0001, Specification for Seismic Qualification of Seismic Category I/II Equipment and Tanks and 24590-WTP-3PS-FB01-T0001, Specification for Seismic Qualification for Seismic Category III/IV Equipment and Tanks.

2 Applicable Documents

2.1 General

2.1.1 Work shall be done in accordance with the referenced codes, standards, and documents listed below, which are an integral part of this specification.

2.1.2 When specific chapters, sections, parts, or paragraphs are listed following a code, industry standard, or reference document, only those chapters, sections, parts, or paragraphs of the document are applicable and shall be applied. If a date or revision is not listed, the latest issue, including addenda, at the time of award shall apply. See Section 4.2.12 for pre-approved equivalencies. For codes and standards listed below, the specific revisions or effective dates **identified, as well as the specific revisions or effective dates** of codes and standards that they incorporate by reference (daughter codes and standards), shall **apply**. When more than one code, standard, or referenced document covers the same topic, the requirements for all must be met with the most stringent governing. For commercial grade quality items, Seller may use any year of the ASME or ASTM standards for materials.

2.1.2.1 CNP separator vessel (CNP-EVAP-00001) and CNP reboiler condensate transfer vessel (CNP-VSL-00168) can be fabricated to ASME Section VIII, Division 1, 2004 Edition

2.2 Codes and Industry Standards

2.2.1 ASME B31.3-1996, Process Piping

2.2.2 ASME B16.5-1988, Pipe Flanges and Flanged Fittings NPS 1/2 Through NPS 24 Addenda A

2.2.3 ASME B16.47-1990, Large Diameter Steel Flanges NPS 26 through NPS 60 Addenda A

2.2.4 ASME B18.15-1985, Forged Eye Bolts

2.2.5 ASME Boiler and Pressure Vessel Code, Section VIII, Div. 1, Rules for Construction of Pressure Vessel

2.2.6 ASME Boiler and Pressure Vessel Code, Section IX-**1995 or later**, Welding and Brazing Qualifications

2.2.7 ASME NQA-1-1989, Quality Assurance Program Requirements for Nuclear Facility Applications

2.2.8 ASME Y14.100, Engineering Drawing Practices

2.2.9 AISC ASD, 9th Edition, Manual of Steel Construction, Allowable Stress Design

2.2.10 AISC N690-1994, Specification for the Design, Fabrication, and Erection of Steel Safety-Related Structures for Nuclear Facilities

2.2.11 ANSI N14.6, For Radioactive Materials-Special Lifting Devices for Shipping Containers Weighing 10,000 Pounds (4500 kg) or More

2.2.12 ASTM F593, Standard Specification for Stainless Steel Bolts, Hex Cap Screws, and Studs

2.2.13 ASTM F594, Standard Specification for Stainless Steel Nuts

2.2.14 AWS D1.6, Structural Welding Code-Stainless Steel

2.2.15 AWS D9.1-**1984 or later**, Sheet Metal Welding Code

2.2.16 IEEE Std 1023-88, IEEE Guide for the Application of Human Factors Engineering to Systems, Equipment, and Facilities of Nuclear Power Generating Stations

2.2.17 MIL-STD-1629A, Military Standard, Procedures for Performing A Failure Mode, Effects and Criticality Analysis

2.2.18 UBC-1997, Uniform Building Code

2.2.19 10 CFR 835, Occupational Radiation Protection

2.2.20 49 CFR 173, General Requirements for Shipments and Packaging. Code of Federal Regulations. U.S. Department of Transportation, Washington, D.C.

2.2.21 29 CFR 1910, Occupational Safety and Health Standards

2.2.22 NFPA 101, Code for Safety to Life from Fire in Buildings and Structures

2.2.23 NFPA 70-1999, National Electric Code

2.2.24 WAC 296-24, General Safety and Health Standards

2.2.25 ASTM E709, Standard Guide for Magnetic Particle Examination

2.2.26 API 610, Centrifugal Pumps for Petroleum, Petrochemical and Natural Gas Industries

2.2.27 **ASCE 4-98, Seismic Analysis of Safety Related Nuclear Structures and Commentary.**

2.2.28 ASTM A194 Editions 1991 through 2005a, Standard Specification for Carbon and Alloy Steel Nuts for Bolts for High Pressure or High Temperature Service, or Both

2.2.29 ASTM A564 Editions 1988b, 1989, 1991, 1992, 1992a, 1994, 1995, 1997, 1999, 2001, 2002, 2002a, 2004, Standard Specification for Hot Rolled and Cold-Finished Age-Hardening Stainless Steel Bars and Shapes

2.2.30 ASTM A582, Any Year, Standard Specification for Free-Machining Stainless and Heat-Resisting Steel Bars, Hot-Rolled and Cold-Finished.

2.2.31 SSPC-SP10, Near White Metal Blast Cleaning

2.2.32 SSPC-SP11, Power Tool Cleaning to Bare Metal

2.2.33 API 610-1995 Centrifugal Pumps for General Refinery Service

2.3 Reference Documents

2.3.1 Interfacing References

2.3.1.1 24590-WTP-3PS-G000-T0001, General Specification for Supplier Quality Assurance Program Requirements

2.3.1.2 24590-WTP-3PS-G000-T0002, Specification for Positive Material Identification (PMI)

2.3.1.3 24590-WTP-3PS-G000-T0003, General Specification for Packaging, Shipping, Handling, and Storage Requirements

2.3.1.4 24590-WTP-3PS-NWP0-T0001, Engineering Specification for General Welding and NDE Requirements for Supplier Fabricated Piping

2.3.1.5 24590-WTP-3PS-P000-T0001, Engineering Specification for Piping Material Classes General Description and Summary

2.3.1.6 24590-WTP-3PS-SS00-T0002, Engineering Specification for Welding of Structural Stainless Steel and Welding of Structural Carbon Steel to Structural Stainless Steel

2.3.1.7 24590-WTP-3PS-SS90-T0001, Specification for Seismic Qualification of Seismic Category I/II Equipment and Tanks

2.3.1.8 24590-WTP-3PS-FB01-T0001, Engineering Specification for Structural Design Loads for Seismic Category III & IV Equipment and Tanks

2.3.1.9 24590-WTP-3PS-EVV1-T0001, Specification for Low Voltage Adjustable Speed Drives

2.3.1.10 24590-WTP-3PS-MUMI-T0002, Specification for Low Voltage Induction Motors

2.3.1.11 24590-WTP-3PS-MPC0-T0002, Engineering Specification for General Centrifugal Pumps to Meet Requirements of ASME B73.2M-1991 for Commercial (CM) Components

2.3.1.12 24590-WTP-3PS-M000-T0002, General Specification for Mechanical Handling Equipment Design and Manufacture

2.3.1.13 24590-WTP-3PS-MJJ0-T0001, Engineering Specification for Lifting Beams for Mechanical Handling Equipment Important to Safety Quality Level II

2.3.1.14 24590-WTP-3PS-MV00-T0001, Engineering Specification for Pressure Vessel Design and Fabrication

2.3.1.15 24590-WTP-3PS-MV00-T0002, Engineering Specification for Seismic Qualification Criteria for Pressure Vessels

2.3.1.16 24590-WTP-3PS-MES0-T0001, Engineering Specification for Shell and Tube Heat Exchangers

2.3.1.17 24590-WTP-3PS-MVB2-T0001, Engineering Specification for Welding of Pressure Vessels, Heat Exchangers, and Boilers

2.3.1.18 24590-WTP-3PS-JQ07-T0001, Engineering Specification for Instrumentation for Package Systems

2.3.1.19 24590-WTP-3PS-PS02-T0001, Engineering Specification for Shop Fabrication of Piping

2.3.1.20 24590-WTP-3PS-SS00-T0001, Engineering Specification for Welding of Carbon Structural Steel

2.3.1.21 24590-WTP-3PS-EKP0-T0001, Engineering Specification for Electrical Requirements for Packaged Equipment

2.3.1.22 24590-WTP-3PS-PP00-T0002, Engineering Specification for Dimensional Record Program

2.3.1.23 24590-PTF-S0C-S15T-00005, Seismic Analysis of Pretreatment Building – In structure Response Spectra (ISRS)

2.3.1.24 24590-WTP-3PS-MPC0-T0002, Engineering Specificaiton for General Centrifugal Pumps to Meet Requirements of ASME B73.1M-1991 and ASME B73.2M-1991 for Commercial (CM) Components

2.3.2 Developmental References

2.3.2.1 24590-PTF-3YD-CNP-00001, System Description for Cesium Nitric Acid Recovery Process-System CNP

2.3.2.2 24590-WTP-3PS-MV00-T0003, Engineering Specification for Pressure Vessel Fatigue Analysis

2.4 Reference Drawings / Data Sheets

2.4.1 24590-WTP-MV-M59T-00001, Pressure Vessel Tolerances Standard Details

2.4.2 24590-WTP-MV-M59T-00007, Thermowell Connection Standard Details

2.4.3 24590-WTP-MV-M59T-00009, Lifting Lugs Standard Details

2.4.4 24590-WTP-MV-M59T-00010, Tailing Lug Standard Details

2.4.5 24590-WTP-MV-M59T-00011, Wash Rings Standard Details

2.4.6 24590-WTP-MV-M59T-00012, Grounding Lug Standard Details

2.4.7 24590-WTP-MV-M59T-00016001, Vessel Connections Standard Details Sheet 1 of 3

2.4.8 24590-WTP-MV-M59T-00016002, Vessel Connections Standard Details Sheet 2 of 3

2.4.9 24590-WTP-MV-M59T-00016003, Vessel Connections Standard Details Sheet 3 of 3

2.4.10 24590-WTP-MV-M59T-00017, Vessel Inspection Manway Standard Details

2.4.11 24590-WTP-MV-M59T-00018, Vessel Name Plate Standard Details

2.4.12 24590-WTP-MV-M59T-00026, Anchor Bolt Chair Details for Vertical Vessels

2.4.13 24590-WTP-M0-M10T-00004, HLW & PTF Vitrification Systems HSH, RWH, PFH, PIH Design Proposal Drawing 3 Ton Capacity Lifting Hook

2.4.14 24590-WTP-M6-50-00001, P&ID Symbol and Legend Sheet 1 of 6

2.4.15 24590-WTP -M6-50-00002, P&ID Symbol and Legend Sheet 2 of 6

2.4.16 24590-WTP -M6-50-00003, P&ID Symbol and Legend Sheet 3 of 6

2.4.17 24590-WTP -M6-50-00004, P&ID Symbol and Legend Sheet 4 of 6

2.4.18 24590-WTP -M6-50-00005, P&ID Symbol and Legend Sheet 5 of 6

2.4.19 24590-WTP -M6-50-00006, P&ID Symbol and Legend Sheet 6 of 6

2.4.20 24590-PTF-M6-CNP-00008, P&ID PTF Cesium Nitric Acid Recovery Process System Evaporator Vessel

2.4.21 24590-PTF-M6-CNP-00010, P&ID PTF Cesium Nitric Acid Recovery Process System Rectifier and Condensers

2.4.22 24590-PTF-M6-CNP-00011, P&ID PTF Cesium Nitric Acid Recovery Process System Reboiler Condensate Collection & Transfer

2.4.23 24590-PTF-P1-P01T-00001, Pretreatment Building General Arrangement Plan at El. 0'-0"

2.4.24 24590-PTF-P1-P01T-00002, Pretreatment Building General Arrangement Plan at El. 28'-0"

2.4.25 24590-PTF-P1-P01T-00003, Pretreatment Building General Arrangement Plan at El. 56'-0"

2.4.26 24590-PTF-P1-P01T-00004, Pretreatment Building General Arrangement Plan at El. 77'-0"

2.4.27 24590-PTF-DD-S13T-00002, Pretreatment Facility Structural Concrete Embed Plates

2.4.28 24590-PTF-DD-S13T-00022, Pretreatment Facility Structural Concrete Embedments Key Plan Elevation 0 ft – 0 in

2.4.29 24590-PTF-DD-S13T-00024, Pretreatment Facility Structural Concrete Embedments Plan EL. 0'-0" SH2

2.4.30 24590-PTF-DD-S13T-00036, Pretreatment Facility Structural Concrete Embedments EL. 0'-0" Vessels SH 1

2.4.31 24590-PTF-DD-S13T-00039, Pretreatment Facility Structural Concrete Embedments EL. 0'-0" Vessels SH 2

2.4.32 24590-PTF-DD-S13T-00044, Pretreatment Facility Structural Concrete Embedment Details EL 0 ft – 0 in Vessels Sh 3

2.4.33 24590-PTF-MJD-PIH-00001, Mechanical Handling Data Sheet for Overhead Mast Power Manipulator

2.4.34 24590-PTF-M0-PIH-00008, Pretreatment System PIH Design Proposal Drawing 30 Ton Capacity Lifting Hook

2.4.35 24590-WTP-M0-M10T-00012001, WTP Vitrification Facility Design Proposal Drawing Remote Impact Wrench

2.4.36 24590-WTP-M61-P23T-00056, WTP Details Lower Holder Bottom Outlet Electrical Connector 2"

2.4.37 24590-PTF-DD-S13T-00023, Pretreatment Facility Structural Concrete Embedments Plan El. 0'-0" Sh 1

2.4.38 24590-PTF-SS-S15T-00033, Pretreatment Facility Structural Steel Framing Floor Plan 56'-0" SH 2

2.4.39 24590-PTF-SS-S15T-00311, Pretreatment Facility Structural Misc Support Steel El. 0'-0" Plan Sh 1

2.4.40 24590-PTF-SS-S15T-00312, Pretreatment Facility Structural Misc Support Steel El. 0'-0" Plan Sh 2

2.4.41 24590-WTP-PW-P30T-00001, WTP End Prep Detail for Field Butt Welds

2.4.42 24590-WTP-M0-50-00016, WTP Remote Fasteners

2.4.43 24590-WTP-M61-P23T-00057, WTP Assembly Lower Holder Electrical Connector 2 Inch.

2.4.44 24590-WTP-M61-P23T-00005, WTP Details - Nozzles PUREX Male Connector 1", 2", 3", 4"

2.4.45 24590-WTP-M61N-P23T-00006, Nozzles PUREX Connector 1", 2", 3", 4"

2.4.46 24590-WTP-M61-P23T-00040, WTP Details - Kickoff Plates PUREX Connector 1", 2", 3", 4"

3 Design Requirements

3.1 General

3.1.1 As Low As Reasonably Achievable (ALARA) principles shall be factored into the design and maintenance of the evaporator system per 10 CFR 835, *Occupational Radiation Protection.*

3.1.2 Unless otherwise specified, the evaporator system shall be designed and fabricated per applicable documents listed in section 2.0 of this specification, and the data sheets in section 2 of the MR. No changes, substitutions, or deviations shall be made without Buyer's concurrence.

3.1.3 The evaporator system design shall comply with the requirements stipulated in this specification. Seller shall conform with Buyer's requirements for hot cell wall penetrations, recirculation piping/jumper configuration, layout, and dimensions. Seller shall confirm locations for all evaporator equipment are adequate for system functionality. Seller shall submit any variances to these requirements during design review stage for concurrence.

3.1.4 The evaporator piping and instrumentation sketches provided in the Section 2 of the MR illustrate the conceptual piping and instrument control of the evaporator system. All evaporator system components shall have adequate control features to bring evaporator operations to a safe and stable 'shutdown' condition during an abnormal event. Seller's control design philosophy can differ from Buyer's conceptual control; however, the Seller's control system design shall conform to Buyer's specification 24590-WTP-3PS-JQ07-T0001.

3.1.5 General Arrangement drawings should be used to convey approximate equipment locations for skids.

3.1.6 The Seller shall be responsible for the evaporator system design including component specification such as design parameters, sizing and environmental protection (temperature, humidity, etc.) as required.

3.1.7 Deleted.

3.1.8 All heat exchangers including the reboiler and condensers shall comply with ASME section VIII and TEMA standard, Class B. "Code Stamp & National Board Registration" shall be provided for all Seller's provided heat exchangers.

3.1.9 Seller shall comply with nozzle loading requirements specified in the 24590-WTP-3PS-MV00-T0001, *Engineering Specification for Pressure Vessel Design and Fabrication* for vessels. Recirculation pump allowable nozzle loading shall comply with API 610.

3.1.10 Gusset plates cannot be utilized to accommodate the required nozzle loading on safety class vessels and heat exchangers.

3.1.11 The equipment shall be designed such that personnel sound level exposure outside of R5/C5 area shall not exceed 85 dBA. Seller shall clearly state how the specified sound level limit will be met.

3.1.12 All calculations, modeling, analyses, drawings, and documentation shall utilize U.S. customary units.

3.1.13 Design of the evaporator systems shall incorporate the latest and best-proven technology, components, and materials for the required service conditions and performance.

3.1.14 The evaporator system model analysis, thermal analysis, design analysis, and seismic analysis shall be verified such that the final system, equipment and component design meet the requirements of this specification as well as its addenda and attachments.

3.1.15 Evaporator system equipment shall be furnished as discrete skid mounted units that are ready to integrate with the Buyer's structures, systems, and components.

3.1.16 The evaporator system shall utilize common component types and equipment manufacturers as applicable.

3.1.17 The evaporator system operates on a batch-wise process continuously. The evaporator system shall be designed in accordance with following feed conditions:

- Design CXP eluate feed flow of 6.9 to 10 gpm (non-constant feed rate)
- Design feed temperature of 77 °F
- Eluate feed pH of 0 - 9
- Eluate feed cycle duration (range: 18 – 25 hours, every 33 hours)

3.1.18 Design cooling water temperature of 75 °F shall be used for designing/sizing all condensers.

3.1.19 Evaporator systems and components should be designed to prevent the migration of contamination into the utility / reagent systems.

3.1.20 Human factors and ergonomics shall be designed into all evaporator equipment requiring manual operations per IEEE Std 1023, *IEEE Guide for the Application of Human Factors Engineering to Systems, Equipment, and Facilities of Nuclear Power Generating Stations*.

3.1.21 Quality level, seismic category, materials of construction, design pressure, and design temperature shall be in accordance with the data sheets in section 2 of the MR. If a change to the requirements for materials and/or the equipment types to be used during the execution of the contract is dictated because of design analyses, then the Seller is required to provide Buyer its recommendation for review and concurrence prior to incorporation into the design of the evaporator systems.

3.1.22 All equipment in the evaporator system requiring maintenance or removal shall have flushing and draining capability to facilitate decontamination. Design features shall minimize the need for decontamination by including sloping features, replacing sharp bends with gradual bends, etc. where practical, consistent with ALARA practices.

3.1.23 Provision for temperature instrumentation shall be jumper nozzles incorporating the required thermowell details.

3.1.24 Nozzle and flange alignment shall be within ± 0.5 degrees of nominal design specifications.

3.1.25 Jumper nozzle connections shall be included in the evaporator system to interface with the Buyer supplied jumpers.

3.1.26 **Deleted**

3.1.27 Seller's reboiler frame design shall not protrude into the crane path.

3.1.28 The hub type (remote clamp) connectors and PUREX nozzles are the only government-furnished equipment, which will be sent to Seller for installation. Buyer will provide Seller hydro test blanks for the remote clamp connectors (Grayloc) and the remote PUREX and other connectors for installation on the axial flow pump and reboiler.

3.1.29 Nozzles for the reboiler and support frame assembly are to be designed to maintain positional tolerance during operational loading conditions and maintain structural integrity during and after a DBE.

3.1.30 All adjustable speed drives for pumps can be designed for non-radiation environment.

3.1.31 Seller's fabrication drawings shall be used as the document of record for fabrication of the components. Seller's specification drawings are not required to be revised and maintained in total agreement with approved fabrication drawings.

3.1.32 Regarding Buyer's specification 24590-WTP-3PS-G000-T0003, *Engineering Specification for Packing, Handling, and Storage requirements,* the center of gravity and sling points are not needed for the separator vessel support tower because awkward hollow parts do not allow a meaningful center of gravity to be determined or designed. Multiple sling configurations are possible to affect a successful lift and should be at the discretion of site construction supervisor.

3.1.33 Seller shall provide the evaporator system in the skids for ease of transportation, installation, and replacement. Seller is responsible for equipment skid sizing and layout to fit Buyer's facility. For the baseline design, the evaporator system will comprise the following skids:

- Separator vessel skid
- Reboiler skid inclusive of reboiler
- Rectifier skid inclusive of rectifier

- Condenser skid which includes steam ejectors, primary, inter, and after-condensers
- Steam conditioning system which includes a pressure reducing valve and control and a desuperheater

3.2 Basic Function

The Cesium Nitric Acid Recovery System (CNP) supports the Cesium Ion Exchange System (CXP) and must be available at all times to maintain the CXP system in a continuous operation to maintain LAW throughput. The design CXP loading cycle is 33 hours. In order to have continuous processing of LAW the complete regeneration of a Cs ion exchange (IX) resin bed must be completed in under 33 hours. A regeneration of a resin bed requires multiple steps, of which elution and post elution rinse are sent to the CNP system for evaporation. The CNP system will maintain a constant volume of eluant for each regeneration step, thus the volume of rinse water sent to the CNP system must be disposed of to the PWD system. The PWD vessels are located at the 0 foot elevation and are approximately 45.5 ft high. The separator vessel is initially charged with a 5M to 8M HNO_3 solution in order to attain the correct vapor liquid equilibrium to recover a 0.5M HNO_3 rectifier bottoms product to be re-used in the CXP system as eluant. The recovered eluant vessel, which receives the rectifier bottoms product, is located on the 0 foot elevation. The vessel has a liquid operating level of approximately 15.3 ft at a maximum, however the level will cycle through the elution and rinse steps. The change in volume depends on the rinse volume used in the IX system. The volume of eluant and rinse will be provided as input to the CNP system each cycle.

The CNP system will receive and concentrate multiple eluate batches until a specified density is met which correlates to a specific solubility limit. Once the specified density is met, the system is shut down and the concentrate is transferred out of the system. A fresh charge volume of nitric acid is then added to the evaporator system and the process restarted.

The control for the evaporator system should allow for the system to be fully automated, receiving inputs from the CXP system for the eluate flow rates and volumes that will be received, and initiation of receipt and standby modes of operation. The CNP system will require automated control during possible upset conditions to ensure a safe working environment is maintained for workers and the public and that the environment is protected.

3.3 Performance

3.3.1 The evaporator system shall be capable of continuous operation while achieving a process boil off rate ranging from 6.9 to 10 gpm. All water/fluid addition to demister pads spray, and reflux via the rectifier separation trays and primary condenser shall be in addition to the evaporation rate.

3.3.2 The evaporator system shall have the ability to be placed on "total reflux" mode.

3.3.3 The evaporator system shall be capable of transferring from a cold shutdown state to a hot standby state in under 4 hours.

3.3.4 The evaporator system shall require a hot standby mode to accommodate receiving an initial 5-8 M HNO_3 charge (preliminary estimate of 4300 gallons as appropriate), an elution batch (6200 gallons) and rinse water feed (1200 gallons) for 18 to 25 hours every 33 hours.

3.3.5 The evaporator system shall maintain constant recovered eluant working volumes; excess water & nitric acid is to be purged from the system as a rectifier overhead product.

3.3.6 Evaporator system operating parameters shall minimize reboiler fouling by using low differential temperature and high tube velocity to the extent practical in the design.

3.3.7 The evaporator system shall be able to cool concentrate to a temperature, which will allow for transfer with a steam-emptying ejector. This should be performed by pulling a stronger vacuum on the system.

3.3.8 The evaporator system shall produce a maximum concentrated waste specific gravity of 1.37 (for $NaNO_3$ at 80% of its solubility limit), which is exclusive of any solids present in the waste.

3.3.9 The evaporator system shall produce a rectifier bottoms product of 0.5 M HNO_3.

3.3.10 All evaporator system components within the R5/C5 black cell (except the demister pads) shall be nonreplaceable components with a design life of 40 years. The reboilers and recirculation pump in the R5/C5 hot cell shall be remotely replaceable.

3.4 Design Conditions

3.4.1 General

3.4.1.1 For nominal conditions refer to Appendix A and Appendix B for the evaporator stream data and simplified thru-put flow diagram, respectively. Appendix C provides data that defines the system performance operating conditions and requirements.

3.4.1.2 All equipment skids shall meet applicable Department of Transportation (DOT) requirements for road transportation per 49 CFR 173.

3.4.2 Physical Constraints/Interfaces

3.4.2.1 The evaporator separator vessel (CNP-EVAP-00001) with demister pads shall be located in the R5/C5 black cell, room P-0112 on the 0-ft floor elevation. The demister pad assembly shall be accessed through a sealed, shielded aperture in the 56 ft floor (10-ft diameter maximum).

3.4.2.2 The Reboiler and recirculation pump shall be located in the R5/C5 hot cell, room P-0123 on the 0-ft floor elevation. The reboiler assembly (including the residual process fluids left inside reboiler after flushing and draining) shall not weigh more than 25 tons including all lifting fixtures and lifting beams. The available space for the reboiler (excluding nozzles) has dimensions of 4 ft diameter by 15 ft high. All equipment assembly must fit through a 13 ft by 13

ft air lock door while supported by buyer-supplied cart and shall not exceed 21 ft length.

3.4.2.3 The evaporator primary condenser (CNP-HX-00002) and secondary condenser system (CNP-HX-00003, -00004, and CNP-EJCTR-00009A/B, -00010A/B) shall be designed to fit on the 77-ft floor elevation.

3.4.2.4 The rectifier (CNP-DISTC-00001) shall be designed to fit on the 56-ft floor elevation.

3.4.3 Buyer Supplied Utilities

Values for all utility supply pressures and temperatures are nominal values.

3.4.3.1 Plant service air and instrument air will be supplied at approximately 100 psig and 65 °F.

3.4.3.2 **Deleted**

3.4.3.3 **High pressure steam supply conditions:**

3.4.3.3.1 Minimum operating condition: 110 psig @ 344°F

3.4.3.3.2 Normal operating condition: 118 psig @ 349°F

3.4.3.3.3 Maximum operating condition: 135 psig @ 358°F

3.4.3.3.4 Design condition: 163 psig @ 372°F

3.4.3.4 Cooling water will be supplied at approximately 45 psig and 75 °F with a peak summer maximum of 83 °F. The cooling water temperature of 75 °F is valid for 85 % of the time through a year.

3.4.3.5 Demineralized water will be supplied at approximately 72.5 psig and 75 °F for demister pad and separation tray spray in the event that sufficient process condensate is unavailable.

3.4.3.6 Water, 5 M nitric acid at approximately 75 psig and 77 °F, or up to 50 % wt caustic (2 M to 5 M typically) at approximately 75 psig and 77 °F can be supplied for the Seller's flushing system.

3.5 Environmental Conditions

3.5.1 Storage

Prior to installation, the evaporator system may be stored outdoors at ambient temperature extremes ranging from –30 °F dry-bulb to 117 °F dry-bulb and with a relative humidity of 0-100 %.

3.5.2 Evaporator Separator Vessel

The separator vessel (CNP-EVAP-00001) will be installed indoors in an R5/C5 black cell maintained between 59 to 113 °F dry-bulb temperature during normal operation. Radiation exposure for the separator vessel will be 1,000 Rad/hr or more.

3.5.3 Reboiler and Recirculation Pump

The reboiler (CNP-HX-00001) and recirculation pump (CNP-PMP-00001) will be installed indoors in an R5/C5 hot cell maintained between 59 to 113 °F dry-bulb temperature during normal operation. Radiation exposure will be 1,000 Rad/hr or more.

3.5.4 Primary and secondary condensers

The primary condenser (CNP-HX-00002) and secondary condensers (CNP-HX-00003, -00004, CNP-EJCTR-00009A/B, -00010A/B), and process condensate pump (CNP-PMP-00002) will be installed indoors in an R3/C3 area maintained between 59 to 113 °F dry-bulb temperature during normal operation. Radiation exposure will be 2.5 mRad/hr or less during normal operation.

3.5.5 Rectifier

The rectifier (CNP-DISTC-00001) will be installed indoors in an R5/R3/C3 area. The R5/R3/C3 areas are maintained between 59 to 113 °F dry-bulb temperature during normal operation. Radiation exposure will be 1000 Rad/hr.

3.6 Recirculation Pump

3.6.1 For recirculation pump requirements, refer to individual MDS in section 2 of the MR.

3.6.2 The recirculation pump shall be axial-flow type mounted vertically in an elbow of the recirculation loop. The remote handling structural support requirements for the recirculation pump will be provided by the Buyer.

3.6.3 The recirculation pump shall be provided with a pump motor and an adjustable speed drive (ASD). Motors shall be provided with radiation resistant insulation, rated for 10^9 Total Integrated Dose (TID) rad (gamma). The ASD shall be compliant with specification *24590-WTP-3PS-EVV1-T0001, Engineering Specification for LAW Voltage Adjustable Speed Drives* and specification *24590-WTP-3PS-MUMI-T0002, Engineering Specification for Low Voltage Induction Motors.*

3.6.4 The recirculation pump shall have dual mechanical seals that will be lubricated/flushed with water. Flush piping will be based on API Plan 53. Seller shall coordinate with Buyer for details.

3.6.5 Inlet and outlet pipe ends of the recirculation pumps shall be butt welded to Buyer's supplied jumper nozzle flanges at the Seller's facility.

3.6.6 Pump nozzle loading shall comply with API 610.

3.6.7 The recirculation pump nozzle locations shall be within (±) 1/4-inch tolerance. However, the tolerance measurement device shall have a minimum of 1/1000-inch accuracy.

3.6.8 Deleted.

3.6.9 The recirculation pump shall be designed with the following features to ensure ease of process operating with a long expected mechanical lifetime:

- Low operating speed, high flow, and low head process conditions.
- Low casing fluid velocity to minimize wear on the casing.
- Top mounted motor and vertical removal design for easy crane access.
- The recirculation pump motor, impeller, shafting, and seals shall be remotely removable as one unit by using a single crane hook and crane mounted impact wrench with CCTV cameras.

3.6.10 The recirculation pump shall be designed for the following operating conditions. All fluid properties are referenced at 77 °F.

- (Seller provided flow rate gpm)
- (Seller provided viscosity cP)
- 1.0 to 1.37 SG
- 59 to 140 °F

3.7 Reboiler

3.7.1 For reboiler requirements, refer to individual MDS in section 2 of the MR.

3.7.2 The reboiler shall be designed in accordance with Buyer's specification 24590-WTP-3PS-MES0-T0001, *Specification for Shell and Tube Heat Exchangers*.

3.7.3 The reboiler (CNP-HX-00001) shall be of all welded construction on both tube and shell sides.

3.7.4 Reboiler tubes shall be seamless and welded to the tubesheet(s) with full strength welds. The tubes shall include a corrosion allowance of 0.04 inch for the process side.

3.7.5 The reboiler shall be capable of sustaining a process evaporation rate of 6.9 to 10 gpm plus demister spray.

3.7.6 Reboiler process fluid velocity shall be greater than 4.0 ft/sec and not exceed 10 ft/sec.

3.7.7 The reboiler shall be designed for remote installation and replacement as one unit.

3.7.8 Deleted.

3.7.9 The maximum dimensions for the reboiler shall be 4 ft diameter and 15 ft height. The reboiler design shall be a U-tube heat exchanger with side bottom process fluid inlet and outlet.

3.7.10 The reboiler process fluid inlet and outlet nozzle diameters shall be 14 inches. Inlet and outlet pipe ends of the reboiler shall be butt welded to Buyer's supplied jumper nozzle flanges at the Seller's facility.

3.7.11 Deleted.

3.7.12 The reboiler nozzle locations and support frame dimensions shall be within (±) 1/4-inch diametric tolerance from a master dowel defined by the Buyer. Nozzles shall be perpendicular/parallel within 0.5 degrees or 1/4 inch whichever is smaller relative to the datum formed by the lower base plate of the reboiler and support frame assembly. The tolerance measurement device shall have a minimum of 1/1000-inch accuracy. Seller shall supply as built nozzle locations as soon as possible to facilitate the Fabrication of the Buyer's Jumpers.

3.7.13 The Seller is responsible for providing a steam-conditioning skid. The skid will include a pressure reducing valve and control and a desuperheater to produce Seller's specified saturated pressure steam for reboiler operation.

3.7.14 Deleted.

3.7.15 The reboiler shall be designed such that the static pressure of the process fluid above the reboiler is sufficient to suppress the boiling in the reboiler tubes. Boiling shall occur only near or at the liquid surface in the evaporator separator vessel.

3.7.16 The temperature rise of the process fluid as it passes through the reboiler shall be approximately 2 – 4 °F design basis to minimize the potential for tube fouling.

3.7.17 Reboiler will be installed without insulation. Reboiler duty and steam demand calculations shall include heat loss from all reboiler surfaces without insulation.

3.7.18 The reboiler and support frame assembly shall be designed for remote installation and replacement as one unit.

3.7.19 The reboiler and support frame assembly shall be transported horizontally into the hotcell staging area on a transporter skid at which it will be maneuvered to a vertical orientation for installation.

3.7.20 Seller shall comply with nozzle loading requirements specified in **Appendix J of this specification.**

3.8 Evaporator Separator Vessel

3.8.1 For separator vessel requirements, refer to individual MDS in section 2 of the MR.

3.8.2 The separator vessel shall be designed in accordance with Buyer's specification 24590-WTP-3PS-MV00-T0001, *Specification for Pressure Vessel Design and Fabrication.*

3.8.3 The separator vessel shall be designed to maximize liquid – vapor separation and to achieve a 10-gpm-evaporation rate plus any excess fluid for demister spray.

3.8.4 The separator vessel shall incorporate nozzle connections for temperature (including thermowells), pressure, level, and density instrumentation as required. The Seller shall propose reliable measurement instrumentation for Buyer to review.

3.8.5 Seller shall comply with nozzle loading requirements for vessels/reboilers specified in **Appendix J of this specification**

3.8.6 The top section of the separator vessel shall incorporate lateral guides to the 56 ft floor and black cell walls to minimize horizontal forces and base overturning moments during a seismic event.

3.8.7 The centerline elevation of the separator vessel offgas nozzles shall be no higher than 47 ft-0 inch plant elevation.

3.8.8 The separator vessel head shall be removable for access to the demister pads section.

3.8.9 The separator vessel shall incorporate a 2-inch inlet nozzle to supply sufficient dilution air to negate hydrogen buildup.

3.8.10 Spray nozzles shall be provided to allow nitric acid cleaning of the demister mesh. The placement of spray nozzles shall accommodate demister section removal and not hinder maintenance operations.

3.8.11 A spray pipe with nozzles located below the lower demister pad shall be provided to spray demin water or recycled condensate into the steam flow to assist in mesh performance.

3.8.12 To improve demister efficiency and facilitate decontamination, the demister pad shall be sprayed from above and below with recycled condensate or 5 M nitric acid from a spray control system located at the 56 ft elevation.

3.8.13 Differential pressure across a series of separation trays and the demisters pad section shall not significantly elevate boiling point.

3.8.14 All nozzle connection points shall be provided clear and below any surrounding floor structural steel at 56 ft plant elevation.

3.9 Rectifier

3.9.1 For rectifier requirements, refer to individual MDS in section 2 of the MR.

3.9.2 The rectifier shall be designed in accordance with Buyer's specification 24590-WTP-3PS-MES0-T0001, *Specification for Shell and Tube Heat Exchangers*.

3.9.3 The rectifier shall incorporate nozzle connections, which allow for rinsing and decontamination with process condensate, nitric acid, or sodium hydroxide.

3.9.4 The rectifier shall be equipped with piped vents.

3.9.5 Seller shall comply with nozzle loading requirements specified in **Appendix J of this specification**

3.10 Primary Condenser

3.10.1 For primary condenser requirements, refer to individual MDS in section 2 of the MR.

3.10.2 The primary condenser shall be designed in accordance with Buyer's specification 24590-WTP-3PS-MES0-T0001, *Specification for Shell and Tube Heat Exchangers*.

3.10.3 The primary condenser (CNP-HX-00002) shall be of all welded construction on the process fluid side. Tubes shall be welded to the tubesheet(s) with full strength welds.

3.10.4 Deleted.

3.10.5 The condenser shall be designed with hinged bonnets to allow isolation of leaking tubes utilizing contact maintenance techniques.

3.10.6 The condenser shall be designed for retubing as part of the maintenance strategy.

3.10.7 The condenser shall be designed to maximize vapor condensation from the offgas streams at a nominal rate of at least 10 gpm plus any excess fluid for demisters.

3.10.8 Average cooling water temperature rise of 18 °F shall be used for condenser design.

3.10.9 Cooling water (tube side) pressure must exceed the process vapor (shell side) pressure.

3.10.10 The primary condenser shall be compatible with process condensate that has a pH of 0 to 9, and a temperature of 240 °F (In the event of Rectifier failure). It shall also be compatible with 5 M nitric acid used for washing and decontamination.

3.10.11 The primary condenser will be installed without insulation. The primary condenser duty and cooling water demand calculations shall include heat gain from all primary condenser surfaces without insulation.

3.10.12 Seller shall comply with nozzle loading requirements specified in **Appendix J of this specification**

3.10.13 A pump shall be incorporated into the primary condenser and secondary condenser system to remove discharged process condensate.

3.10.14 The process condensate pump shall be designed in accordance with Buyer's specification 24590-WTP-3PS-MPC0-T0002, *Specification for General Centrifugal Pumps to Meet Requirements of ASME B73.1M-1991 and ASME B73.2M 1991 for Commercial (CM) Components.*

3.11 Secondary Condenser System

3.11.1 The secondary condenser system shall consist of an inter-condenser, after-condenser, and four steam ejectors. For secondary condenser system requirements, refer to individual MDS in section 2 of the MR.

3.11.2 The inter-condenser and after-condenser shall be designed in accordance with Buyer's specification 24590-WTP-3PS-MES0-T0001, *Specification for Shell and Tube Heat Exchangers*.

3.11.3 Deleted.

3.11.4 The inter-condenser and after-condenser shall be of all welded construction on the process fluid side. Tubes shall be welded to the tubesheet(s) with full strength welds.

3.11.5 Deleted.

3.11.6 The evaporator separator vessel pressure shall be maintained by a two-stage vacuum ejector system. The first stage shall maintain a vacuum on the primary condenser and consists of a steam ejector, air in-bleed control valve, and an inter-condenser. The vapor discharged from the inter-condenser enters the second stage of the vacuum system. The second stage shall consist of a second steam ejector and an after-condenser.

3.11.7 The secondary condenser system shall provide capability for operating at a vacuum as low as achievable.

3.11.8 The two-stage vacuum system shall be designed to control the separator vessel pressure at 1.45 psia and pull a strong enough vacuum to cool evaporator contents adequately to transfer contents with a steam ejector.

3.11.9 The desired vacuum within the separator vessel shall be controlled by the air in-bleed into the suction of the 1st stage vacuum ejector.

3.11.10 Process condensate from each condenser shall be hydraulically connected to the process condensate vessel.

3.11.11 All components of the condenser skid will be installed without insulation. The duty, cooling water demand, and steam demand calculations shall include heat loss from all surfaces without insulation.

3.11.12 Cooling water pressure must exceed the process vapor pressure.

3.11.13 Seller shall comply with nozzle loading requirements specified in **Appendix J of this specification**

3.12 Reboiler Condensate Transfer Station (RCTS)

3.12.1 The Seller shall supply a RCTS, which collects steam condensate drained from the reboiler.

3.12.2 The RCTS shall be designed to support continuous steady state operation in maintaining nominal operating level while receiving and supplying steam condensate to the steam-conditioning skid and to a condensate receipt vessel.

3.12.3 The reboiler condensate vessel (RCV) shall be designed in accordance with Specification 24590-WTP-3PS-MV00-T0001, *Specification for Pressure Vessel Design and Fabrication.*

3.12.4 The RCV shall comply with nozzle loading requirements specified in Buyer's specification 24590-WTP-3PS-MV00-T0001, *Specification for Pressure Vessel Design and Fabrication.*

3.12.5 The RCV design and configuration shall support installation of differential pressure level instrumentation and associated flanged "direct connect" diaphragm seal pressure transmitters.

3.12.6 The RCV shall be a vertical oriented vessel constructed of 304L stainless steel with a capacity of 225 gallons.

3.12.7 The RCV shall be designed to be attached to a mounting ring which will be installed using anchor bolts.

3.12.8 The RCV shall be designed to support a minimum operating volume of 80 gallons.

3.12.9 The condensate transfer pumps (CTP) shall be vertical turbine pumps with a by-pass valve to limit the pump discharge pressure allowing prevention of motor overload. The pumps along with their motors shall be mounted on the transfer station.

3.12.10 API Plan 11 single mechanical seals shall be incorporated in each CTP.

3.12.11 The CTP's shall be designed to comply with pump nozzle loading requirements specified in API 610.

3.12.12 The CTP's and accessories shall be made of 300 series stainless steel. The pump materials of construction for wetted parts shall be cast high alloy steel 316 SS.

3.12.13 A 2-inch nozzle on the side of each reboiler steam condensate vessel shall be provided for an additional condensate drain from the reboiler steam conditioning system desuperheater to function. Location of the 2-inch inlet drain nozzle is provided in Appendix K.

3.13 Mechanical Handling Requirements

3.13.1 Equipment located in the R5/C5 hot cell shall be designed in accordance with Buyer's specification 24590-WTP-3PS-M000-T0002, *General Specification for Mechanical Handling Equipment Design & Manufacture.*

3.13.2 Seller designed equipment shall incorporate jumper connector nozzles to facilitate process, utility, instrument, and power connections to the Buyer supplied jumpers and systems.

3.13.3 The reboiler and recirculation pump shall incorporate jumper nozzles for process pipework (e.g., pump suction and discharge connections, utilities, instrumentation, and power, as required).

3.13.4 Seller shall identify all interface points for systems requiring connection to the Buyer's process piping, jumpers, and utility systems.

3.13.5 The nozzle tolerance requirements for reboiler and recirculation pumps in the R5/C5 hot cell shall be ±1/4 inch for location and ±1/2° for angular tilt. The nozzle tolerance measurement device shall have a minimum of ±1/1000-inch accuracy. The Buyer's jumpers shall be built to as-built dimensions (x, y, z, and angular tilt) and replaced with equipment as necessary.

3.13.6 Deleted.

3.13.7 Deleted.

3.14 Loadings

3.14.1 The evaporator equipment assemblies shall be self-supporting, capable of carrying the static loads of components, and capable of handling stresses imposed during shipment, installation, operation and an earthquake.

3.14.2 Loads to be considered for the structural design of evaporator vessel, equipment, and components shall be in accordance with applicable codes, standards, and reference documents listed in section 2 of this specification.

3.14.3 All support structures with SC-I and SC-II designation shall be seismically analyzed with provided ISRS curves **as specified in Appendix J** and qualified in accordance with AISC N690.

3.14.4 All support structures with SC-III and SC-IV designation shall be seismically analyzed and qualified in accordance with the AISC ASD and UBC zone 2B.

3.14.5 Seller shall complete a seismic analysis of the evaporator package designs, including skids, and skid anchorage, equipment and pressure vessel anchorage, piping anchorage. Loadings shall be calculated in accordance with the appropriate requirements of Buyer's specifications 24590-WTP-3PS-SS90-T0001, Engineering Specification for Seismic Qualification of Seismic Category I/II Equipment and Tanks, and 24590-WTP-3PS-FB01-T0001, Structural Design Loads for Seismic Category III & IV Equipment and Tanks. Analysis shall show

that the evaporator system and components are capable of withstanding seismic loadings.

3.14.6 The separator vessel, heat exchangers, and rectifier shall be seismically analyzed and qualified by the Seller per Buyer's specification 24590-WTP-3PS-MV00-T0002, *Engineering Specification for Seismic Qualification Criteria for Pressure Vessels,* Buyer's specification 24590-WTP-3PS-MV00-T0001, *Specification for Pressure Vessel Design and Fabrication.*

3.14.7 The Seller shall perform thermal and static stress analyses for all evaporator structures, systems, and components.

3.14.8 Except for the reboiler and recirculation pump, all equipment skids shall be designed for a maximum floor loading of 160 lbs/ft^2. Refer to drawings in section 2.4 for structural concrete embed details.

3.14.9 The embed location for the reboiler is detailed on drawings in section 2.4. Each embed has a support post which connects to the PEP. To avoid displacement in skid under the heavy reboiler weight, reboiler frame shall rest upon support posts with the embeds underneath. These embeds are type "D" which have been designed for ultimate compressive strength of 100 kips.

3.14.10 The flow meter unit of the CNP steam conditioning skid is SC-III and may not be qualified at the accelerations defined in the Buyer's specification for Seismic Qualification of Seismic Category I/II Equipment and Tanks, and 24590-WTP-3PS-FB01-T0001. Equivalent test can be performed and considered successful if there is no physical damage to the instrument. For the equivalent test, the flow meter units will undergo a frequency sweep (0 to 500 Hz) to determine their resonant frequency. Once the resonant frequency is determined, the units are tested at 1 g vertical and then 1 g horizontal for a period of twenty minutes each, all while being excited at the resonant frequency.

3.15 Electrical Requirements

3.15.1 The electric motor drive shall conform to the requirements set forth in Buyer's specification 24590-WTP-3PS-EVV1-T0001, *Engineering Specification for Low Voltage Adjustable Speed Drives.*

3.15.2 The recirculation pump motor shall conform to the requirements set forth in Buyer's specification 24590-WTP-3PS-MUMI-T0002, *Engineering Specification for Low Voltage Induction Motors.*

3.15.3 Seller shall comply with the requirements set forth in Buyer's specification 24590-WTP-3PS-EKP0-T0001, *Engineering Specification for Electrical Requirements for Packaged Equipment.*

3.16 Instrumentation and Control Requirements

3.16.1 General

3.16.1.1 All controls, control systems, control panels, alarm systems, analyzers, instrumentation, and their installation into the evaporator system shall conform to the requirements set forth in Buyer's specification 24590-WTP-3PS-JQ07-T0001, *Engineering Specification for Instrumentation for Package Systems*.

3.16.1.2 The Seller shall provide completed Buyer's instrument data sheets. The Buyer will use this information for procurement and installation of required instrumentation.

3.16.1.3 The Seller shall provide functional test set points and recommended operating set points with the packaged systems.

3.16.1.4 The Seller shall provide a control philosophy, which shall consist of the control loop definitions, system interlocks, alarms, and control philosophy.

3.16.1.5 The Buyer will use the Seller's control philosophies and logic narratives to provide the logic programming which will integrate the Seller's control requirements into the Buyer's overall control system.

3.16.1.6 Deleted.

3.16.1.7 The following table describes the work processes and the division of the responsibilities:

	Buyer's Responsibility	Seller's Responsibility
Blank Instrument Data Sheet	•	
Complete Instrument Data Sheet	*	•
Instrument Installation Details	•	
Instrumentation Procurement	•	
Instrumentation Installation	•	
Functional Test Set Points		•
Operating Set Points		•
Control Philosophies		•
Software Requirements Specification	•	
Logic Programming	•	
DCS Hardware	•	

*Buyer will provide, Seller will complete

3.16.2 Other

The Seller shall provide accuracy requirements of the measured range of instrumentation as specified in Buyer's specification 24590-WTP-3PS-JQ07-T0001, *Engineering Specification for Instrumentation for Package Systems.*

3.17 Lifting Requirements

3.17.1 Seller shall identify the weight and center of gravity of each equipment skid.

3.17.2 Seller shall provide yokes for the separator vessel, reboiler, and recirculation pump for installation and remote maintenance. Each yoke will be made of structural steel except for components that directly contact Evaporator Equipment during lift; contact components shall be made of 304SS. The yokes shall be designed for balanced lifting and handling by a single hook crane. The yokes shall be designed in accordance with ANSI N14.6

3.17.3 All evaporator equipment and skids shall have lift points and attachment mechanism. Lifting bail design shall comply with proposal hook design.

3.17.4 All lifting attachments shall have either a safety factor of three (3), based on the material yield strength, or five (5), based on the material ultimate strength, whichever is more conservative. The lifting points shall have a label clearly identifying its safe working load. If forged bolts are used, they shall be used in accordance with ASME B18.15.

3.17.5 The reboiler and support assembly shall be designed for horizontal transportation in the hot cell. The reboiler and support assembly shall have tailing lug and tilt-up features for vertical installation with a 2-ton hoist for tailing operation.

3.17.6 The maximum hook height is 27 ft-6 in. The bottom of the reboiler, while in the vertical orientation, shall be above 5 ft-0 in.

3.17.7 The lifting lugs shall be designed to permit lifting the equipment skid without distortion or damage to the components of the equipment skid.

3.17.8 All lifting points shall be proof tested. Test and examination certificates shall be provided to the Buyer review.

3.17.9 The reboiler and support frame assembly shall be lift tested by the Seller to demonstrate proper vertical orientation using the Seller-supplied lifting fixture. This testing includes verification of all tilt up features. The reboiler shall be balanced after fabrication. Actual vertical lift (with vessel empty) shall not be more than 1/4 inch from true vertical. Permanent deflection or a change in the assembly alignment is unacceptable. The Seller shall notify the Buyer a minimum of 15 working days in advance of reboiler and support frame assembly lift test. The Buyer may send representatives to witness the inspections or perform an independent inspection.

3.18 Accessibility and Maintenance

3.18.1 General Maintenance Requirements

Accessibility and maintenance requirements shall be per this specification and its addenda and attachments.

3.18.2 R5/C5 Black Cell Equipment Maintenance Requirements

3.18.2.1 No equipment requiring maintenance, with the exception of demister pads, shall be located inside the R5/C5 black cell. The nonreplaceable 40-year life components shall include the separator vessel and all its internal parts (except demister pads) and their supporting structures/anchorage.

3.18.2.2 Demister pad assembly shall be remotely removable and replaceable through a 10-foot diameter opening from the 56-foot elevation floor, which is directly above the black cell. The demister pad, support, and frame shall be designed and fabricated such that they can be removed. The demister pad assembly design shall be installed as an integral unit. If the spray down mechanism's water connections are incorporated into the pad assembly, the connections shall utilize a quick disconnect type connection for the water source. Due to potential radiation and contamination concerns, viewing and removal of the of the demister pad will be accomplished with the top demister pad submerged approximately 6-inch below the water during the maintenance duration. Seller shall demonstrate and record on VHS format videotape demister pad removal and replacement in their shop test.

3.18.3 R5/C5 Hot Cell Equipment Maintenance Requirements

3.18.3.1 The reboiler and recirculation pump in the R5/C5 hot cell shall be designed to be remotely removable and replaceable.

3.18.3.2 The reboiler and support frame assembly and recirculation pump in R5/C5 hot cell shall be designed in accordance with the requirements stated within this specification.

3.18.3.3 The reboiler shall not weigh more than 25 tons, including all required lifting fixtures.

3.18.3.4 All fittings, pipe connections, electrical power, and control connections for equipment in R5/C5 hot cell shall be engineered on jumpers suitable for remote operation using a crane hook and crane mounted impact wrench, and/or power manipulator, see Ref. 2.4.41, with CCTV cameras.

3.18.3.5 The reboiler and recirculation pump shall be made suitable for remote operation utilizing features such as trunnions, guide pins, location dowels, captive bolts, and lead-ins on bolts, and be able to

be removed using a crane hook and crane mounted impact wrench with CCTV cameras. Refer to drawings in section 2.4 for remote impact wrench, crane, and hook details.

3.18.3.6 The use of shims to position the reboiler and support frame assembly or recirculation pump in the R5/C5 hot cell is not allowed. All surfaces shall be machined to locate equipment and support remote handling and replaceability.

3.18.3.7 Due to the requirement of a 12-foot reserved path for equipment removal in the hot cell, Seller shall comply with the location requirements for the reboiler and support frame assembly and recirculation pump as shown in sketches in Appendix F.

3.18.3.8 All services to or from the recirculation pump shall be provided using jumper connections.

3.18.3.9 The maximum height of any 2-inch hex nut (jumper connector), oriented vertically, is 24 ft-6 inches in plant elevation.

3.18.3.10 The maximum height of any 2-inch hex nut (jumper connector), oriented horizontally, is 25 ft-6 inches in plant elevation.

3.18.3.11 The maximum height of the 2-ton slewing hoist is 28 ft-6 inches.

3.18.3.12 The maximum height and hook approach of the 30-ton hook is distinctly different than the 2-ton hoist. Refer to the crane data sheet, 24590-PTF-MJD-PIH-00001 for details.

3.18.3.13 Hot Cell Equipment capable of disassembly in the Hot Cell via remote crane operations shall employ nut cups with tabs or alternate design with Buyer approval. See section 2 of the material requisition for details on remote fasteners.

4 Materials

4.1 Positive Material Identification

Refer to Buyer's specification 24590-WTP-3PS-G000-T0002, *Specification for Positive Material Identification (PMI)* for PMI requirements. Seller shall submit documentation of all PMI test results which show chemical properties and material classification.

4.2 Construction

4.2.1 Seller shall specify surface finish for all materials and submit to Buyer for review.

4.2.2 Seller shall maintain a record of ASTM numbers, material test reports, and manufacturer material certifications for materials used for construction of evaporator equipment/skids. Seller shall provide copies to the Buyer.

4.2.3 All stainless steel bolts and studs shall conform to ASTM F593.

4.2.4 All stainless steel nuts shall conform to ASTM F594.

4.2.5 Seller shall provide Material Safety Data Sheets (MSDSs) for all materials installed or used.

4.2.6 Process fluids may contain caustic solutions (50 wt % caustic), and 5 M nitric acid solutions may also be used for decontamination of the pipework, recirculation pump, valves, and instruments/instrument tubing.

4.2.7 All flanges and pipe fittings shall conform to ASME B31.3 1996 and be weld-neck and long radius type, respectively, unless otherwise specified. Flanges shall also be in accordance with ASME B16.5, and B16.47 Series A, as applicable.

4.2.8 No threaded flanges or fittings shall be used **in the black cell. Threaded flanges or fitting can be used for the condenser condensate centrifugal pump CNP-PMP-00002 since it is not located in a black cell.**

4.2.9 Certified material test reports shall be supplied for all alloy, stainless, and carbon steel construction materials that make up the separator vessel, distillation column, condensate collection vessel, heat exchangers, piping, and equipment skids.

4.2.10 Selection of materials for threaded components shall minimize galling. The Seller shall also consider different material selection, sleeving, etc., where practical.

4.2.11 All materials used in the construction of the evaporator equipment shall be new and unused. Where specific criteria are not provided, material section shall be determined by the Seller and have properties and composition suitable for the specific service conditions and consistent with this specification and its addenda and attachments.

4.2.12 The alternate ASTM editions can be used in place of the ASTM standards listed below on the date the purchase order went into effect.

Alternate Materials	Specified Materials
ASTM A182-98, A182-01	ASTM A182/A182M-99
ASTM A312-04	ASTM A312/A312M-00c
ASTM A403-95	ASTM A403/A403M-99
ASTM A403-99	ASME Section II Part A, 2001 Edition 2002 Addenda, SA-403 / ASTM A403-95

ASTM A182-98	ASME Section II Part A, 2001 Edition 2002 Addenda, SA-182 / ASTM A182-99
ASME 2001 Edition SA-312, 2003 Addenda SA-312 ASME 1995 Edition SA-312, 1995 Addenda SA-312	ASME Section II Part A, 2001 Edition 2002 Addenda, SA-312 / ASTM A312-00c
ASME 1998 Edition SA-240, 2003 Addenda SA-240 ASME 1997 Addenda SA-240	ASME Section II Part A, 2001 Edition 2002 Addenda, SA-240 / ASTM A240-97a
ASTM A240-00, -02, -03, -03c, - 04a	ASTM A240/A240M-03b
ASME SFA 5.22 Part C - 1995 Edition 1996 Addenda	ASME SFA 5.22, Section II, Part C 2001 Edition 2002 Addenda
ASTM A480-03c	ATM A480-03b
ASTM 554-98, -03	ASTM 554-98el
ASME SFA-5.9, SFA5.22 Sec III, Subsec NB, 1995 Edition, 1996 Addenda	ASME Code, Section II, 2001 Edition with 2002 Addenda (weld wire)
ASME A240-00, -03 /A240-01	ASME A240/A240M-03b

4.3 Vessels

Vessel materials shall conform to individual MDS in section 2 of the MR.

4.4 Pipework

Pipework material shall meet the piping material requirements in Buyer's specification 24590-WTP-3PS-P000-T0001, *Specification for Piping Material Classes*.

4.5 Prohibited Materials

4.5.1 Mercury and other low melting point metals, their alloys, or materials containing such metals as their basic constituents shall not be used in the construction of any components of the evaporator systems.

4.5.2 Molybdenum and halides shall not be used in direct contact with stainless steel.

4.5.3 Asbestos shall not be included in any component of the evaporator system.

4.5.4 Halide containing materials shall not be used in any component of the evaporator system.

4.5.5 "Teflon" or compounds thereof must be qualified for use with the radiation levels specified in this specification.

4.6 Storage of Special Materials (e.g., stainless steel) prior to work

4.6.1 The Seller shall meet the storage requirements in Buyer's specification 24590-WTP-3PS-G000-T0003, *General Specification for Packaging, Handling, and Storage Requirements*.

4.6.2 Stainless steel is susceptible to corrosion caused by the contact and interaction with incompatible materials. All stainless steel material shall be stored in separate areas away from other materials.

5 Fabrication

The Seller shall obtain written Final Design Review from the Buyer prior to the start of fabrication activities.

5.1 General

5.1.1 Fabrication of vessels shall be performed in accordance with Buyer's specification 24590-WTP-3PS-MV00-T0001, *Specification for Pressure Vessel Design and Fabrication.*

5.1.2 Fabrication of pipework shall be performed in accordance with Buyer's specification 24590WTP-3PS-PS02-T0001, *Specification for Shop Fabrication of Piping*.

5.1.3 Deleted.

5.1.4 All fabrication shall be performed by personnel qualified in accordance with this specification and applicable documents in section 2 of this specification.

5.2 Welding

5.2.1 Seller shall develop detailed welding, weld inspection, NDE, and weld repair procedures for fabrication of the evaporator vessel, equipment, and structural supports. Seller shall submit them to the Buyer for review prior to fabrication. Procedures shall include acceptance criteria. The procedures shall conform to the following, as applicable:

- Buyer's Specification 24590-WTP-3PS-SS00-T0002
- Buyer's Specification 24590-WTP-3PS-NWP0-T0001
- Buyer's Specification 24590-WTP-3PS-MVB2-T0001
- Buyer's Specification 24590-WTP-3PS-SS00-T0001
- ASME Boiler and Press Vessel Code, section VIII, Div. 1
- ASME B31.3-1996
- AWS D1.6
- AWS D9.1

5.2.2 Welding, weld inspection, NDE, and weld repair shall be carried out in accordance with the applicable procedures developed per section 5.2.1 above.

5.2.3 Each procedure shall be prepared and qualified in accordance with the requirements of the listed specification and standards in 5.2.1 above or ASME section IX, whichever is more stringent.

5.2.4 Welder qualifications shall be performed in accordance with ASME section IX or AWS as required.

5.2.5 Personnel performing weld inspection shall be qualified in accordance with ASME Boiler and Pressure Vessel Code, section VIII, Div. 1 and Buyer's specification 24590-WTP-3PS-SS00-T0002, *Specification for Welding of Structural Stainless Steel and Welding of Structural Carbon Steel to Structural Stainless Steel.*

5.2.6 Repairs required as a result of weld rejection by either the Buyer's or Seller's final inspection shall be fully documented in accordance with Seller's Quality Assurance Program (QAP). Weld repairs shall be performed in accordance with ASME Boiler and Pressure Vessel Code, section VIII. Weld repair records shall be included with Seller's quality verification document package to be submitted to Buyer.

6 Inspections and Examinations

6.1 Nondestructive Examinations

6.1.1 Unless otherwise specified, all vessel welds shall be inspected in accordance with the requirements outlined in the Buyer's specification 24590-WTP-3PS-MV00-T0001, *Specification for Pressure Vessel Design and Fabrication.*

6.1.2 Unless otherwise specified all pipework welds shall be inspected in accordance with the requirements outlined in Buyer's specification 24590-WTP-3PS-PS02-T0001, *Specification for Shop Fabrication of Piping.*

6.2 Dimensional Inspections

6.2.1 Refer to Buyer's specification 24590-WTP-3PS-PP00-T0002, *Specification for Dimensional Record Program,* for final dimensional measurement requirements. Third party validation of special dimensional inspection is not required.

6.2.2 Buyer's specification 24590-WTP-3PS-PP00-T0002, *Specification for Dimensional Record Program,* is applicable only to the recirculation pump and reboiler and support frame assembly and does not apply to any other components.

6.2.3 For the recirculation pump, a dimensional record is required for remotable pump features that are not part of the process jumper. The process portion of the

recirculation pump will be installed in a jumper, and the jumper dimensional record will be performed by the Buyer.

6.2.4 For the reboiler, all remote connector nozzles shall be measured to precise as-built dimensions.

6.2.5 Seller shall furnish personnel to perform measurement activities.

6.3 Visual Weld Inspections

6.3.1 The Seller shall develop and implement a procedure to perform visual weld inspections (visual tests, VT) to inspect each weld. The inspection procedure shall be developed in accordance with Buyer's specification 24590-WTP-3PS-MVB2-T0001, *Specification for Welding Pressure Vessels, Heat Exchangers and Boilers* and ASME B31.3 1996, and shall include inspection materials and acceptance criteria.

6.3.2 Acceptance criteria for visual weld inspections for the separator vessel and heat exchangers shall be in accordance with Buyer's specification 24590-WTP-3PS-MVB2-T0001, *Specification for Welding Pressure Vessels, Heat Exchangers and Boilers* and for pipework shall be in accordance with ASME B31.3 1996.

6.3.3 The Seller shall prepare a visual weld inspection report for each fabricated item.

6.3.4 Deleted.

6.3.5 Deleted.

6.3.6 The Seller shall notify the Buyer in advance of inspections. The Buyer may send representatives to witness inspections or perform independent inspections.

6.4 Liquid Penetrant Test

6.4.1 The Seller shall develop and implement a procedure to perform a liquid penetrant test (PT) to inspect each weld. The procedure shall be developed in accordance with Buyer's specification 24590-WTP-3PS-MVB2-T0001, *Specification for Welding Pressure Vessels, Heat Exchangers and Boilers* and ASME B31.3 1996, and shall include inspection materials, dwell time for dye and developer, and acceptance criteria.

6.4.2 Acceptance criteria for PT inspection shall be in accordance with Buyer's specification 24590-WTP-3PS-MVB2-T0001, *Specification for Welding Pressure Vessels, Heat Exchangers and Boilers* and for pipework shall be in accordance with ASME B31.3 1996.

6.4.3 The Seller shall prepare a liquid penetrant test report for each weld connection on each fabricated item.

6.4.4 Deleted.

6.4.5 Deleted.

6.4.6 The Seller shall notify the Buyer in advance of testing. The Buyer may send representatives to witness testing.

6.5 Radiography

6.5.1 Radiographic examinations shall be carried out on all primary containment pipework butt-welds using 100 % radiography for QL components.

6.5.2 The Seller shall develop and implement a procedure to perform radiographic weld examinations of piping butt-welds. The procedure shall be developed in accordance with ASME B31.3 1996, and shall include examination materials and acceptance criteria.

6.5.3 Deleted.

6.5.4 Deleted.

6.5.5 The Seller shall provide radiographic film with technique and reader sheets. Exposed film must be sent, along with a copy of the technique and reader sheets in accordance with section 3 of the MR. Film must be suitably packaged to preclude moisture and handling damage.

6.5.6 The Seller shall notify the Buyer in advance of examinations. The Buyer may send representatives to witness examinations.

6.6 Magnetic Particle Examination

6.6.1 The Seller shall develop and implement a procedure to perform magnetic particle examination. The procedure shall be submitted to the Buyer for review prior to fabrication.

6.6.2 Magnetic particle examination (MT) shall be in accordance with ASTM Specification E709.

6.6.3 **Welds specified under AWS D1.1 will be evaluated and accepted under** criteria **of** AWS **D1.1 Table 6.1.**

6.7 Final Inspection

6.7.1 The Seller shall develop and implement a procedure for final inspection of each fabricated item. The inspections shall be performed after completion of all fabrication, cleaning, and testing, and just prior to final packaging. The inspections shall include inspection of all surfaces for contamination. Visible evidence of contamination is not acceptable.

6.7.2 The Seller shall prepare a final inspection report for each item, which documents the results of the final inspection. The Seller shall include the final inspection report in the documentation package for each piece.

6.8 Inspection and Test Status

The Seller shall maintain a positive system for identifying inspection and testing status of items and systems.

6.9 Control of Nonconforming Items

The Seller shall use the Supplier Deviation Disposition Request per MR section 2 to notify the Buyer of fabricated items and fabrication activities not conforming to the requirements. Any nonconforming work shall be redone by the Seller at Seller's cost.

7 Testing

7.1 Shop Tests

7.1.1 The Buyer reserves the right to witness all shop tests and shall be given a minimum of 10 working days written notice prior to each test date.

7.1.2 All pipework shall be hydrostatically tested in accordance with ASME B31.3 1996. Test water used for hydrostatic testing shall be tested for chlorides. The chloride content of the test water shall not exceed 50 ppm and the water temperature shall not exceed 120 °F. Buyer shall review all test pressures prior to commencement of any testing. The testing results shall be documented and provided to Buyer.

7.1.3 Testing of vessels shall be performed in accordance with Buyer's specification 24590-WTP-3PS-MV00-T0001, *Specification for Pressure Vessel Design and Fabrication*.

7.1.4 Functional tests of evaporator equipment/skids shall be performed by the Seller.

7.1.5 Seller shall demonstrate and record on VHS format videotape demister pad removal. Test shall be done with equipment representative of what will actually be installed and utilized in the Buyer's facility.

7.1.6 Seller will furnish lifting yokes details for the separator vessel, reboiler and support frame assembly, and recirculation pump. All Seller supplied lifting yokes shall be load tested to 1.5 times the design load.

7.1.7 Each evaporator equipment skid shall be lift tested by the Seller to demonstrate proper vertical orientation using the Seller-supplied tooling and fixtures. This testing includes verification of all tilt up features. During the lift test the deflection at the midpoint of each skid shall be monitored and recorded to ensure that proper alignment is maintained. The centerline of the evaporator skid shall be within ±1 inch of true vertical when measured from the lift point. Permanent deflection or a change in the evaporator skid alignment is unacceptable.

7.1.8 Seller shall furnish blind flanges or other acceptable closures for the nozzles, as required for hydrotesting. Closures shall be removed after testing, unless they are required for shipment.

7.1.9 Deleted.

7.1.10 All test results shall be documented, certified, and submitted to the Buyer for review.

7.2 Integrated Acceptance Tests

An Integrated Acceptance Test **(stimulant test) using stable (non-radioactive) cesium is not required. The specified requirements provided in this section shall be used only for determining minimum separator decontaminator factor.**

7.2.1 Performance

7.2.1.1 Limiting the entrainment of radionuclides from the evaporator rectifier to the primary condenser is an important safety function. During cold commissioning, the performance of the evaporator system will be measured using surrogate chemicals to determine the degree of entrainment from the evaporator to the primary condenser. Stable (nonradioactive) cesium will be the surrogate of choice for simulating radionuclide carryover to the condensing system.

7.2.1.2 Steady state operation is defined as:

- Liquid density of the concentrate ranges from 72.4 to 85.5 lbm/ft^3 at operating temperature.
- Sodium cation and nitrate, chloride anions are the predominate soluble chemical analytes in the concentrate.

7.2.1.3 The following criteria must be met prior to final acceptance of the evaporator system design:

At steady state operation, the **concentration of stable (nonradioactive) cesium in the evaporator bottoms shall be at least 5,000,000 times greater than that in the recovered eluant (i.e., the decontamination factor or DF shall be at least 5,000,000:1). This minimum DF shall be met over each eluant recovery cycle over the batch concentration cycle of the evaporators.**

7.2.1.4 The performance testing and acceptance criteria shall apply over a boil-off range from 6.9 gpm to 10 gpm of total condensate, as measured in the condensate receiver vessel and recovered nitric acid collection vessel.

7.2.1.5 Performance testing shall be corrected for uncertainty in instrument and analytical measurements.

7.2.2 A full simulation of abnormal shutdown conditions.

8 Preparation for Shipment

8.1 General Requirements

8.1.1 The evaporator equipment/skids shall be packaged/prepared for shipment, handled, and stored in accordance with the following requirements in

- Material Requisition.
- Buyer's Specification 24590-WTP-3PS-G000-T0003, *General Specification for Packaging, Handling, and Storage Requirements.*
- Buyer's Specification 24590-WTP-3PS-PS02-T0001, *Specification for Shop Fabrication of Piping.*
- Buyer's Specification 24590-WTP-MV00-T0001, *Pressure Vessel Design and Fabrication.*

8.1.2 Seller shall ensure that appropriate documentation is prepared and, if required, signed by the appropriate person(s). The shipping documentation shall accurately reflect specific traceability to the items being shipped.

8.1.3 Seller shall ensure that appropriate documentation is prepared for the evaporator equipment/skids. At a minimum, documentation shall include the following information, as applicable:

- Manufacturer name, model number, and serial number.
- Skid number.
- Plant item number.

8.1.4 Solvents and cleaning solutions used on stainless steel shall have a halogen content of less than 200 ppm.

8.1.5 The Recirculation pump will be shipped only in a temporary shipping skid not meant for installation. The reboiler and support frame assembly shall be transported from the Seller's site to the Buyer's site in the horizontal orientation due to air lock size limits.

8.1.6 The separator vessel will be shipped on a temporary shipping skid not meant for installation.

8.1.7 The separator vessel support skid (CNP-SKID-00007) including any field welded attachments will be shipped together but separate from the separator vessel.

8.1.8 Lifting weight shall be clearly marked on both the equipment skid and its shipping documentation.

8.1.9 Regarding Buyer's Specification 24590-WTP-3PS-PS02-T0001, *Specification for Shop Fabrication of Piping,* polyethylene wrap can be used and subsequent blocking using Styrofoam cushioning and equivalent backed by plywood/wood to provide protection against damage or access by elements. Special end caps are not required.

8.2 Painting

8.2.1 Stainless steel or exotic alloy metals shall not have coating applied.

8.2.2 Seller shall submit the information requested on Form H (see appendix H) along with technical data sheet and MSDS. Supplier shall provide Certificate of Conformance verifying application of coating in compliance with coating manufacturers technical product data sheet.

8.2.3 All painting and coating shall be applied in accordance with the manufacturer's directions for application.

8.2.4 Exposed carbon steel surface shall be primed and painted with enamel base coating in accordance with the coating manufacturers surface and application requirements. All visible oil, grease, dust, dirt, mill scale, rust, coating, oxides, corrosion products and other foreign matter shall be removed prior to application of primer. See section 8.2.13 and 8.2.14 for custom fabricated equipment.

8.2.5 In the absence of standard manufacturer's colors, the finish coat of all carbon steel items and equipment shall be ANSI 70 Gray. Contrasting colors shall be used for fasteners and bails.

8.2.6 Repainting by the Seller, or custom finishing by the manufacturer shall not be required when commercially available components and equipment which are normally mass produced, inventoried, and supplied from stock, have been coated with the manufacturer's standard coating system.

8.2.7 Surfaces exposed to the environment, but inaccessible after assembly, shall be coated prior to assembly.

8.2.8 Painting of interior and enclosed surfaces of the equipment, such as inside a welded box section, is not required.

8.2.9 Machined carbon steel mating surfaces and other surfaces not protected by coating system (such as seal surfaces, threaded surfaces, lifting hooks, hook nuts, wheel treads, gears, shafts, pinions, and couplings), shall be protected with a solvent cutback asphalt temporary preservative (Dauber Chemical Tectyl 891, EF Houghton Chemical Rust Veto 342 or Buyer's accepted equivalent) for shipment and storage. The Seller shall specify which preservatives must be removed and how the preservatives are removed by the Buyer before operation of the equipment.

8.2.10 Welds shall be coated only after completion of the required tests. Required tests include leak tightness, hydrostatic testing or other NDE of the welds.

8.2.11 Filler, sealant, and caulking compounds shall be compatible with the coating system.

8.2.12 Items covered by 8.2.13 and 8.2.14, shall be surface prepared in accordance with SSPC SP10. For repair, the sufaces shall be prepared in accordance with SSPC SP11.

8.2.13 For support frames such as the steam conditioning skid and reboiler transporter, Seller shall use two coats (P04) of Epoxy with 4-6 mils per coat. Acceptable coating products for P04 are as follows:

8.2.13.1 Amercoat 385 from Ameron

8.2.13.2 Carboguard 890 from Carbonline

8.2.13.3 224HS from Devoe

8.2.13.4 Protecto-Coat 330 or 300 from Dudick

8.2.13.5 Intergard 475HS from International

8.2.13.6 Macropoxy 646 from Sherwin Williams

8.2.14 For the reboiler and recirculation pump lifting beams, the Seller shall use three coats with 1st coat (P02) of Epoxy Primer with 3-5 mils and (P06) Epoxy Novolac with 5-10 mils for 2nd and 3rd coats. Acceptable coating products for P02 are as follows:

8.2.14.1 Amercoat 68HS from Ameron

8.2.14.2 Carbozinc 859 from Carbonline

8.2.14.3 313 from Devoe

8.2.14.4 Interzinc 52 from International

8.2.14.5 Zinc Clad IV from Sherwin Williams

Acceptable coating products for P06 are as follows:

8.2.14.6 Amercoat 91 from Ameron

8.2.14.7 Phenoline 1205 FR from Carbonline

8.2.14.8 253 from Devoe

8.2.14.9 Protecto-Coat 100XT from Dudick

8.2.14.10 Intertherm 875 HS from International

8.2.14.11 macropoxy 646 from Sherwin Williams

8.3 Tagging

8.3.1 Tagging of evaporator components, equipment, and skids shall be per this specification and the applicable documents listed in section 2 of this specification. Plant item numbers for evaporator component/equipment shall be per the data sheets that are in section 2 of the MR.

8.3.2 Instruments shall have nameplates installed per section 8 of Buyer's specification 24590-WTP-3PS-JQ07-T0001, *Engineering Specification for Instrumentation for Package Systems*.

8.3.3 The recirculation pump motor shall have a nameplate per section 3 of Buyer's specification 24590-WTP-3PS-MUMI-T0002, *Engineering Specification for Low Voltage Induction Motors.*

8.3.4 Packages shall be suitably marked on the outside to facilitate identification of the purchase order, the procurement specification, the package contents, and any special handling instructions.

8.3.5 Slinging points and orientation for storage shall be clearly marked.

8.3.6 Deleted.

8.3.7 A stainless steel nameplate shall be rigidly attached to the evaporator equipment skid packages in a prominent position for ease of visibility, and shall include the following:

- Manufacturer's name.
- Shop location.
- Date of manufacture.
- Serial number.
- Skid number.
- Weight of assembly.
- Purchase order number.

9 Quality Assurance

9.1 General Commercial Designation (CM) Requirements

9.1.1 The Seller's Quality Assurance Program (QAP) Requirements are included in 24590-WTP-3PS-G000-T0001, *Supplier Quality Assurance Program.*

9.1.2 Seller's QAP Manual shall be submitted to buyer for review in accordance with 24590-WTP-3PS-G000-T0001, *Supplier Quality Assurance Program.*

9.1.3 Seller's QAP, as a minimum, shall contain the requirements of DOE Order 414.1A as detailed in the Supplier Quality Assurance Program Requirements Data Sheets listed in section 2 of the MR. The very same requirements shall be passed down to any lower tier subcontractor.

9.2 Quality Level (QL) Requirements

9.2.1 Seller shall have in place a QA program meeting the requirements marked as applicable in the Supplier Quality Assurance Program Requirements Data Sheet(s) attached to the MR, and Buyer's specification 24590-WTP-3PS-G000-T0001.

9.2.2 Seller shall demonstrate that its quality program is in compliance with the procurement quality requirements listed in the Supplier Quality Assurance Program Requirements Data Sheet(s). The Supplier shall allow the Buyer, its agent, and DOE access to their facilities and records pertaining to this purchase order for the purpose of QA Audits and Surveillance at mutually agreed times.

9.2.3 All items shall be manufactured in accordance with the Supplier's Quality Assurance Program that has been previously evaluated and accepted by the RPP-WTP Quality Organization. The very same requirements shall be passed down to any lower tier subcontractor.

9.2.4 Seller shall submit their QA program and work plan to Buyer for review prior to commencement of work. The plan shall include documents and procedures to implement the work and include a matrix of essential Quality Assurance elements cross-referenced with the documents/procedures.

10 Configuration Management

Equipment and/or components covered by this specification are identified with Plant Item Numbers shown in the attached data sheets in section 2 of the MR. Each item shall be identified in accordance with section 8.3 of this specification.

11 Documentation and Submittals

11.1 General

11.1.1 Seller shall submit to Buyer all detailed designs, drawings, documentation, procedures, instructions, calculations, analyses, manufacturer documentation, manufacturer data, inspection reports, test reports, certifications, certificates, manuals, MSDSs, video tapes, and drawings required per this specification, the applicable codes, standards, and reference documents in section 2 of this specification, and the MR.

11.1.2 All detailed designs, drawings, assembly drawings, shop drawings, final P&IDs, MDSs, supporting calculation, supporting analyses, and all other requirements in the 60 % design stage shall be issued to the Buyer for review prior to fabrication of evaporator vessels and equipment.

11.1.3 Seller shall submit to Buyer Engineering and Quality Verification documents in the forms and quantities shown in Form G-321-E, *Engineering Document Requirements*, and Form G-321-V, *Quality Verification Document Requirements* attached to the MR, section 3.

11.1.4 Seller shall submit a report identifying any deviations and/or conflicts per section 2 of the MR to the Buyer for review.

11.1.5 Each documentation transmittal package shall have a documentation inventory sheet attached listing all documents and the number of pages each.

11.1.6 All documents submitted for review (e.g., General Arrangement, Shop Details, Calculations must contain their own unique NAME AND IDENTIFICATION NUMBER) Example:

Calculations for Item:
Document No: Calc TLP-PMP-00001-0001

11.1.7 Data sheets in section 2 of the MR shall be marked up by the Seller and submitted to the Buyer for review with the detailed design. Seller shall fill in all information that is marked as asterisk or TBD and markup actual overall dimensions for each evaporator component, equipment, and skid based on the detailed design.

11.1.8 All drawings shall be produced per the drawing practices set forth in ASME Y14.100, Engineering Drawing Practices.

11.2 Calculations

All calculations to be provided shall be orderly, complete, and sufficiently clear to permit verification. The body of the calculations shall include:

- A concise statement of the purpose of the calculation.
- Input data, applicable criteria, and stated assumptions.
- A list of references used, including drawings, codes, standards, and computer programs (indicate the version or issue date).
- A discussion of rationale used for design assumption basis.
- Equations used for all computations.
- Numerical calculation including identification of units used.
- A concise statement addressing the calculation results and/or recommendations.
- A table of contents for complex calculations.

Design Stress/Seismic Reports shall provided, as a minimum, the following information

11.2.1 ANSI/AISC N690 Steel Frame / Support Designs

For Finite Element Analysis (FEA) by Computer Program, submit the bases or reference to the bases that supports applicability of the computer program to the specific physical problem being solved. (i.e; application /validation to steel code formulas and allowable stresses)

11.2.2 ASME VIII, Div 2, Appendix 4, Vessel including internal supports/components

For FEA Computer Program analysis, submittal for the bases or reference to the bases supporting application of the computer program to the specific physical problem being solved. (i.e; application/validation to the ASME VIII, Div 2, Appendix 4, Maximum Shear Stress Theory.)

11.2.3 ASME B31.3 Piping Design

For FEA Computer Program analysis, submittal for the bases or reference to the bases supporting application of the computer program to the specific physical problem being solved. [i.e; application/validity to the ASME B31.3 design requirements in accordance with B31.3-96, section 300(c)(3)]

11.3 As-Built Drawings

11.3.1 Progress As-Builts

During construction, the Seller shall keep an updated marked-up set of progress as-built drawings on the jobsite as an accurate record of all deviations between the work, as shown on the Buyer reviewed drawings, and work as fabricated. These drawings shall be available to the Buyer for inspection at any time during regular business hours.

11.3.2 Final As-Builts

Seller shall furnish to Buyer final as-built drawings with AS-BUILT clearly printed on each sheet for all final work left in place. Seller shall accurately and neatly transfer all deviations from progress as-builts to final as-builts.

11.4 Dimensional Record Drawings

See 24590-WTP-3PS-PP00-T0002 for final dimensional measurement requirements. Third party validation of special dimensional inspection is not required. Seller shall furnish to Buyer dimensional record drawings for reboiler and support frame assemblies, and recirculation pumps with all their associated lifting yokes and/or lifting lugs.

11.5 Project Start

Seller shall submit drawing index and detailed schedule of engineering document submittals, material purchases, fabrication, shop test, and ready for shipment. Include bar charts or critical path method diagrams, which detail the chronological sequence of activities.

11.6 30 % Design Review

11.6.1 Provide drawings with outline dimensions, services, foundations, and mounting details of the evaporator system. Drawings shall show external envelope, including lugs, centerline(s), location and size for electrical cable, conduit, fluid, other service connections, isometrics, and details related to foundations and mountings.

11.6.2 Provide preliminary dimension, location, and layout for all evaporator components, equipment, and skids.

11.6.3 Provide preliminary design of the demister pad replacement methodology.

11.6.4 Provide preliminary system description. Describe general system functions and basis of design. It shall include a systematic process flow diagram for system operation.

11.6.5 Provide preliminary Piping and Instrumentation Diagrams (P&IDs).

11.6.6 Provide preliminary instrument control requirements. Include system interlocks and control philosophy. Provide flow charts, schematics, logic diagrams, or function diagrams showing the equipment functional controls.

11.6.7 Provide document that describes the proposed equipment skids, including sketches of typical skids indicating skid-to-skid and skid-to-building interfaces, as well as the components included.

11.6.8 Identify all large and heavy items of equipment to ensure lifting capability during construction, maintenance, and decommissioning.

11.6.9 Provide motor data sheets per Buyer's specifications 24590-WTP-3PS-MUMI-T0002 and 24590-WTP-3PS-EKP0-T0001.

11.7 60 % Design Review

11.7.1 Provide final P&IDs.

11.7.2 Provide final skid constructability study.

11.7.3 Provide final evaporator component, equipment, skid size, and layout.

11.7.4 Provide assembly drawings.

11.7.5 Provide shop detail drawings with sufficient detail to facilitate fabrication, manufacture, or installation. This includes a complete Bill of Materials (BOM), pipe spool drawings, internal piping and wiring details, cross-section details, and structural details.

11.7.6 Provide wiring diagrams including schematic diagrams, equipment internal wiring diagrams, and interconnection wiring diagrams for electrical items

11.7.7 Submit completed Instrument and Mechanical data sheets for all instruments and equipment, utilizing Buyer's supplied instrument data sheets attached in section 2 of the MR as templates.

11.7.8 Provide functional test setpoints and recommended operating set points for the instrumentation and control packaged systems.

11.7.9 Provide final instrument control requirements including control definitions, system interlocks, alarms, and control philosophies. Control and sequencing requirements of the system and its components shall be detailed as described in section 3.5 of 24590-WTP-3PS-JQ07-T0001, *Engineering Specification for Instrumentation for Package Systems*.

11.7.10 Submit all final detailed drawings, calculations, analyses, and information necessary for evaporator vessels and equipment fabrication.

11.7.11 Submit all FMEA documentation.

11.7.12 Provide final motor data sheets and nameplates per Buyer's specifications 24590-WTP-3PS-MUMI-T0002 and 24590-WTP-3PS-EKP0-T0001.

11.8 90 % Design Review

11.8.1 Provide detailed written procedures, instructions, and drawings (including all lifting requirements) for evaporator system erection/installation.

11.8.2 Provide complete remote installation instructions for the utilization of the hot cell existing cranes for the needed reorientation, installation, and extraction of the reboiler.

11.8.3 Deleted.

11.8.4 Provide list of required spares.

11.8.5 Provide startup and commissioning spares list, including all components or equipment that may be needed during startup and commissioning.

11.8.6 Provide operation manuals with detailed written instructions describing how the evaporator systems and components should be operated. Manuals shall include specific instructions, procedures, and illustrations for the following:

11.8.6.1 Safety Precautions – List personnel hazards and equipment or product safety precautions for all operating conditions.

11.8.6.2 Operator Prestart – Include requirements to set up and prepare the system for use.

11.8.6.3 Startup, Shutdown, and Post-shutdown Procedures – Include a control sequence for each of these operations.

11.8.6.4 Normal Operations – Include control diagrams with data to explain operation and control of systems and specific equipment.

11.8.6.5 Emergency Operations – Include emergency procedures for equipment malfunctions to permit a short period of continued operation or to shut down the equipment to prevent further damage to systems and equipment. Include emergency shutdown instructions for fire, over-pressure, spills, or other foreseeable contingencies. Provide guidance on emergency operations of all utility systems including valve locations and portions of systems controlled.

11.8.6.6 Operator Service Requirements – Include instructions for services to be performed by the operator, such as lubrication, adjustments, and inspections.

11.8.6.7 Environmental Conditions – Include a list of environmental conditions (temperature, humidity, and other relevant data), which are best suited for each product or piece of equipment and describe conditions under which equipment should not be allowed to run.

11.8.6.8 Lay-up Instructions – Include step-by-step instructions for lay-up.

11.8.7 Provide maintenance manuals with detailed written instructions to disassemble, reassemble, and maintain systems or components in an operating condition. Manuals shall include specific instructions, procedures, and illustrations for the following phases of maintenance:

11.8.7.1 Preventive Maintenance - Include the following information for preventive and scheduled maintenance to minimize corrective maintenance and repair:

11.8.7.1.1 Lubrication Data – Include lubrication data, other than instructions for lubrication, in accordance with operator service requirements to be included in operation manuals.

11.8.7.1.2 Preventive Maintenance Plan and Schedule – Include manufacturer's schedule for routine preventive maintenance, inspections, testing, and adjustments required to ensure proper and economical operation and to minimize corrective maintenance and repair. Provide manufacturer's projection of preventive maintenance frequency of work, and hours to complete the task. Provide surveillance and in-service inspection recommendations.

11.8.7.2 Corrective Maintenance – Include manufacturer's schedule for procedures and instructions for correcting problems and making repairs. Include the following information for performing corrective maintenance:

11.8.7.2.1 Troubleshooting Guide and Diagnostic Techniques – Include step-by-step procedures to promptly isolate the cause of typical malfunctions. Describe clearly why the checkout is performed and what conditions are to be sought. Identify tests or inspections and test equipment required to determine whether parts and equipment may be reused or require replacement.

11.8.7.2.2 Deleted.

11.8.7.2.3 Maintenance and Repair Procedures – Include instructions and list tools required to restore product or equipment to proper condition or operating standards.

11.8.7.2.4 Removal and Replacement Instructions – Include step-by-step procedures and list required tools and supplies for removal, replacement, disassembly, and assembly of components, assemblies, subassemblies, accessories, and attachments. Provide all tolerances, dimensions, settings, and adjustments required. Instructions shall include a combination of text and illustrations.

11.8.7.2.5 Recommended Spare Parts and Supply Lists – Include list of spare parts and supplies required for maintenance and repair to ensure continued service or operation without unreasonable delays. Include the cost of each item.

11.8.7.2.6 MSDSs – Include MSDSs for all chemicals and hazardous materials supplied as part of the product, system, or equipment. In addition, include MSDSs for all chemicals and hazardous materials required to be added (lubricants, antifreeze, etc.).

11.8.7.2.7 Parts Identification – Provide identification and coverage for all parts of each component, assembly, subassembly, and accessory of the end items subject to replacement. Include special hardware requirements, such as requirement to use high-strength bolts and nuts. Identify parts by make, model, serial number, and source of supply to allow reordering without further identification. Provide clear and legible illustrations, drawings, and exploded views to enable easy identification of the items. When illustrations omit the part numbers and description, both the illustration and separate listing shall show the index, reference, or key number, which will cross-reference the illustrated part to the listed part. Parts shown in the listings shall be grouped by components, assemblies, and subassemblies.

11.8.7.2.8 Other than Seller's Commercial Practice – End item manufacturer may add a cross-reference to implement component assemblies and parts requirements when implementation in manual form varies significantly from the style, format, and method of Seller's standard commercial practice.

11.8.7.2.9 Warranty Information – List and explain the various warranties and include the servicing and technical precautions prescribed by the Seller or contract documents to keep warranties in force.

11.8.7.2.10 Personnel Training Requirements – Provide information available from the Seller to use for training designated personnel to operate and maintain the equipment and systems properly.

11.8.7.3 Calibration Testing Equipment and Special Tool Information – Include information on test equipment required to perform specific tests and on special tools needed for the operation, maintenance, and repair of components.

11.8.8 Provide system, component, and instrumentation descriptions as identified below:

11.8.8.1 System Descriptions - Include comprehensive system description describing, in detail, how the overall system functions, and the basic design basis. Include component interfaces and interactions. Provide a systematic process flow diagram for system operation.

11.8.8.2 Component Descriptions – Include comprehensive component descriptions describing, in detail, how each individual process component functions and the basic design basis. Include other component interfaces and interactions. Provide a systematic process flow diagram for component operation.

11.8.8.3 Instrument Descriptions – Include a list or table-describing instrument ID number, ID name, location, and basic operating function. Include separately, in systematic descriptive detail, instrument controls and logic that correspond to instrumentation and logic diagrams.

11.8.9 Provide design and operational requirements per the following:

11.8.9.1 Design requirements – Include a list or table describing the maximum design limits and conditions required to safely operate the equipment (i.e., temperatures, pressures, etc.).

11.8.9.2 Operational requirements – Include a list or table describing the normal operating ranges for equipment (i.e., temperatures, pressures, etc.).

11.8.10 Provide analysis and design reports, including analytical data (stress, electrical loading, fluid dynamics, etc.), which demonstrates that an item satisfies all specified requirements.

11.8.11 Provide seismic analysis or test data reports providing data and demonstrating suitability of materials, components, or systems in relation to the conditions imposed by the stated seismic criteria.

11.8.12 Provide thermal stress analysis or test data reports providing data and demonstrating suitability of materials, components, or systems in relation to the conditions imposed by thermal stresses.

11.8.13 Provide site storage and handling manuals including the requirements and time period for lubrication, rotation, heating, lifting, or other handling requirements to prevent damage or deterioration during storage and handling at job site. Include return shipping instructions.

11.8.14 Provide inspection and test plan including detailed descriptions of the inspections and tests planned during the receipt, manufacturing, and conformance verification activities. Include identification of witness and hold points.

11.8.15 Provide welding procedures, specifications, and supporting qualification records required for welding, hard facing, overlaying, brazing, and soldering.

11.8.16 Provide material control procedures including controlling issuance, handling, storage, and traceability of materials such as weld rod.

11.8.17 Provide PMI procedures for performing PMI testing of materials.

11.8.18 Provide repair procedures including controlling material removal and replacement by welding, brazing, etc., subsequent thermal treatments, and final acceptance inspection.

11.8.19 Provide pressure-testing procedures including hydro, air, leak, separation, or vacuum test procedures for performing hydrostatic or pneumatic structural integrity and leakage tests.

11.8.20 Provide inspection procedures for the purpose of determining that specified requirements (i.e., dimensions, properties, performance results, etc.) are met.

11.8.21 Provide radiographic testing procedures for identifying the presence and certain characteristics of discontinuities and inclusions in materials by x-ray or gamma ray exposure of photographic film.

11.8.22 Provide liquid penetrant testing procedures for detection of surface discontinuities in materials by application of a penetrating liquid in conjunction with suitable developing techniques.

11.8.23 Provide functional shop test procedures to demonstrate that design function and operational parameters are met (e.g., pump performance data, valve stroking, load, temperature rise, calibration, environment, etc.).

11.8.24 Provide integrated acceptance test requirements document per engineering specifications to demonstrate design function and operational parameters for the complete assembled evaporator systems.

11.8.25 Provide electrical test procedures to demonstrate that design function and operational parameters are met (e.g., impulse, overload, continuity, voltage, temperature rise, calibration, saturation loss, etc.)

11.8.26 Provide shipping preparation procedures for cleaning, packaging, and handling.

11.9 Final Design Review

Provide final design report including all design documents, manuals, and drawings that are specified in this specification. All procedures and instructions shall be completed and submitted to the Buyer a minimum of eight (8) weeks prior to evaporator components, equipment, and skid shipment.

APPENDIX A

EVAPORATOR STREAM DATA

Cesium Concentrate Product Stream

	Units	
Total	kg/day	8.10E+03
SpG		1.46E+00
Volume	liters	5.67E+03
Liquids		
Total	kg	8.10E+03
Na Molarity	gmol/liter	5.08E+00
SpG		1.46E+00
Volume	liters	5.67E+03
pH		
129-I	kg	3.42E-03
134-Cs	kg	1.16E-05
137-Cs	kg	1.00E+01
14-C	kg	6.02E-06
126-Sn	kg	9.73E-05
233-U	kg	1.51E-05
235-U	kg	2.75E-02
152-Eu	kg	8.83E-08
154-Eu	kg	1.31E-05
155-Eu	kg	7.56E-07
237-Np	kg	4.28E-03
238-Pu	kg	2.36E-07
239-Pu	kg	3.51E-04
240-Pu	kg	2.45E-05
241-Am	kg	2.68E-04
241-Pu	kg	3.23E-06
242-Cm	kg	1.26E-08
243-Am	kg	3.97E-07
243-Cm	kg	2.09E-07
244-Cm	kg	1.74E-06
3-H	kg	5.63E-09
60-Co	kg	9.79E-09
90-Sr	kg	1.27E-04
99-Tc	kg	7.62E-01
Ag+	kg	5.45E-03
Al+3	kg	2.80E+01
B+3	kg	3.39E-02
Ba+2	kg	1.46E-02
Bi+3	kg	3.15E-02
Ca+2	kg	1.09E-01
Cd+2	kg	5.06E-03
Cl-	kg	6.40E+00
CO3-2	kg	4.74E+01
Cr(TOTAL)	kg	1.20E+00
Cs+	kg	5.36E+00
F-	kg	6.33E+00
Fe+3	kg	1.61E-01
Hg+2	kg	6.64E-03

K+	kg	1.23E+01
La+3	kg	3.03E-03
Li+	kg	4.35E-03
Mg+2	kg	1.99E-02
Mn+4	kg	1.04E-02
Mo+6	kg	2.64E-02
Na+	kg	6.62E+02
NH3	kg	3.72E+00
Ni+2	kg	3.13E-02
NO2-	kg	9.86E+01
NO3-	kg	2.79E+03
OH(BOUND)	kg	4.41E+01
OH-	kg	5.83E+01
Pb+2	kg	8.38E-02
Phosphor containing components	kg	1.07E+01
Se+6	kg	2.07E-02
Si+4	kg	6.80E-01
SO4-2	kg	6.87E+00
Sr+2	kg	6.90E-03
Ti+4	kg	1.95E-03
TOC	kg	5.58E+00
U(TOTAL)	kg	3.81E-02
Zn+2	kg	4.49E-03
Zr+4	kg	3.10E-01
H2O	kg	4.25E+03
H+	kg	4.50E+01
CO2	kg	0.00E+00

Cesium Eluate Stream

	Units	Eluate Stream Sent to the Evaporator	Rinse Stream displaced to Evaporator
Total	kg/day	1.72E+04	3.29E+03
SpG		1.02E+00	1.02E+00
Volume	liters/day	1.68E+04	3.24E+03
Liquids			
Total	kg/day	1.72E+04	3.29E+03
Na Molarity	gmol/liter	9.24E-02	3.97E-02
SpG		1.02E+00	1.02E+00
Volume	liters/day	1.68E+04	3.24E+03
pH		3.74E-01	5.17E-01
129-I	kg/day	1.90E-04	5.46E-08
134-Cs	kg/day	6.44E-07	3.40E-13
137-Cs	kg/day	5.57E-01	2.94E-07
14-C	kg/day	3.34E-07	9.63E-11
126-Sn	kg/day	5.40E-06	1.56E-09
233-U	kg/day	8.37E-07	2.41E-10
235-U	kg/day	1.53E-03	4.39E-07
152-Eu	kg/day	4.91E-09	1.41E-12
154-Eu	kg/day	7.26E-07	2.09E-10
155-Eu	kg/day	4.20E-08	1.21E-11
237-Np	kg/day	2.38E-04	6.84E-08
238-Pu	kg/day	1.31E-08	3.78E-12
239-Pu	kg/day	1.95E-05	5.61E-09
240-Pu	kg/day	1.36E-06	3.91E-10
241-Am	kg/day	1.49E-05	4.29E-09
241-Pu	kg/day	1.79E-07	5.16E-11
242-Cm	kg/day	6.97E-10	2.01E-13
243-Am	kg/day	2.21E-08	6.36E-12
243-Cm	kg/day	1.16E-08	3.35E-12
244-Cm	kg/day	9.65E-08	2.78E-11
3-H	kg/day	3.12E-10	9.00E-14
60-Co	kg/day	5.43E-10	1.57E-13
90-Sr	kg/day	7.05E-06	2.03E-09
99-Tc	kg/day	4.23E-02	1.22E-05
Ag+	kg/day	3.03E-04	8.71E-08
Al+3	kg/day	1.56E+00	4.48E-04
B+3	kg/day	1.88E-03	5.41E-07
Ba+2	kg/day	8.14E-04	2.34E-07
Bi+3	kg/day	1.75E-03	5.03E-07
Ca+2	kg/day	6.08E-03	1.75E-06
Cd+2	kg/day	2.81E-04	8.09E-08
Cl-	kg/day	3.55E-01	1.02E-04
CO3-2	kg/day	2.63E+00	7.58E-04
Cr(TOTAL)	kg/day	6.64E-02	1.91E-05

Cs+	kg/day	2.98E-01	1.57E-07
F-	kg/day	3.52E-01	1.01E-04
Fe+3	kg/day	8.92E-03	2.57E-06
Hg+2	kg/day	3.69E-04	1.06E-07
K+	kg/day	6.83E-01	1.97E-04
La+3	kg/day	1.68E-04	4.85E-08
Li+	kg/day	2.42E-04	6.96E-08
Mg+2	kg/day	1.10E-03	3.18E-07
Mn+4	kg/day	5.75E-04	1.66E-07
Mo+6	kg/day	1.47E-03	4.23E-07
Na+	kg/day	3.68E+01	4.73E-03
NH3	kg/day	2.07E-01	5.95E-05
Ni+2	kg/day	1.74E-03	5.01E-07
NO2-	kg/day	5.48E+00	1.58E-03
NO3-	kg/day	4.58E+02	6.14E+01
OH(BOUND)	kg/day	2.45E+00	7.06E-04
OH-	kg/day	3.24E+00	9.32E-04
Pb+2	kg/day	4.65E-03	1.34E-06
Phosphor containing components	kg/day	5.97E-01	1.72E-04
Se+6	kg/day	1.15E-03	3.31E-07
Si+4	kg/day	3.78E-02	1.09E-05
SO4-2	kg/day	3.82E-01	1.10E-04
Sr+2	kg/day	3.83E-04	1.10E-07
Ti+4	kg/day	1.08E-04	3.12E-08
TOC	kg/day	3.10E-01	8.92E-05
U(TOTAL)	kg/day	2.12E-03	6.10E-07
Zn+2	kg/day	2.49E-04	7.18E-08
Zr+4	kg/day	1.72E-02	4.96E-06
H2O	kg/day	1.67E+04	3.23E+03
H+	kg/day	7.16E+00	9.92E-01
CO2	kg/day	0.00E+00	0.00E+00

APPENDIX B

CNP Nitric Acid Recovery Forced Circulation Vacuum Evaporator Thru-Put Flow Chart

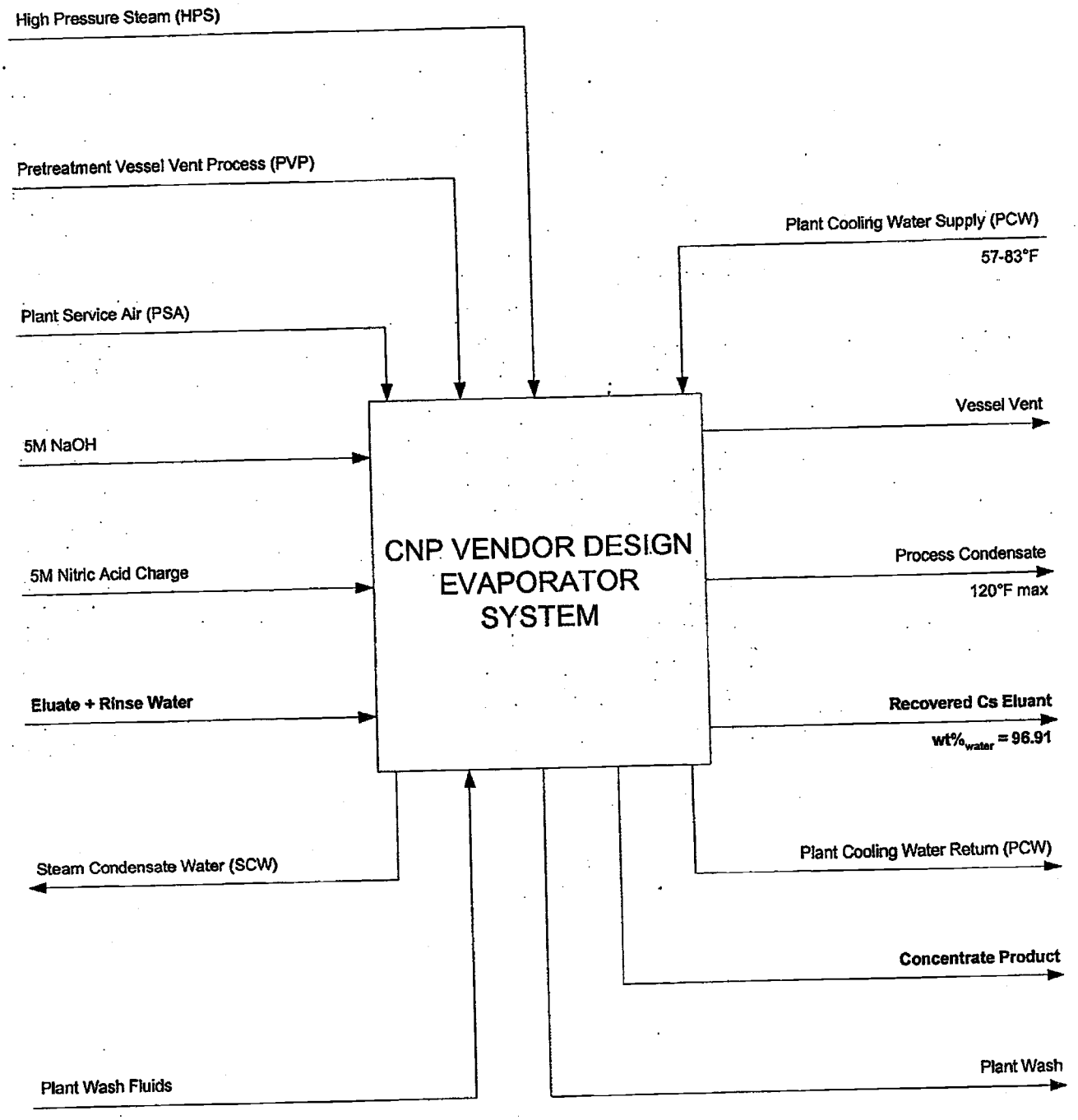

APPENDIX C

EVAPORATOR PROCESS DATA

PROCESS DATA SHEET: Evaporator

PLANT ITEM No.
24590-PTF-CNP-EVAP-00001

Project:	RPP-WTP	System:	CNP
Project No:	24590	Description:	Cs Nitric Acid Recovery Evaporator
Site:	Hanford	Supporting Calcs No.	
Building No.:	10	Associated Drawings:	24590-PTF-M5-V17T-000014, Rev. B

UTILITIES DATA	Units	Cooling Water		High Pressure Steam	Compressed Air	Instrument Air
Temperature	°F	83			60	60
Pressure	psig	95			150	100

		Feed to Evaporator		Acid Charge			Concentrate			Evaporator Overheads		Recovered Eluent		Condensate Product	
PROCESS DATA	Units	Minimum	Maximum	Minimum	Normal	Maximum	Minimum	Normal	Maximum	Minimum (Note 6)	Maximum (Note 6)	Minimum (Note 6)	Maximum (Note 6)	Minimum (Note 6)	Maximum (Note 6)
Fluid Flow (Note 4)	lb_m/hr	3,600	5,100	Note 4	Note 4	Note 4	Note 4	Note 4	Note 4	3600	5,100	3,000	4,500	600	600
Liquid Flow (Note 4)	gpm	6.9	10.0	Note 4	Note 4	Note 4	Note 4	Note 4	Note 4	N/A	N/A	5.9	8.9	1.2	1.22
Vapor Flow	lb_m/hr	N/A	N/A	N/A	N/A	N/A	N/A	N/A	N/A	3600	5100	N/A	N/A	N/A	N/A
Temperature (Note 6)	°F	59	77	59	77	113	59	122 - 140	230	130	140	115	140	63	140
HNO3 Molarity	gmol/l	0.4	0.6	5	7.2	8	4.2	Note 2	8	0.4	0.6	0.45	0.55	0	0
Na Molarity	gmol/l	0	0.1 (Note 5)	0	0	0	0	Note 2	2.6	0	0	0	0	0	0
Density	lb_m /ft^3	62.2	64.4	72.4	76.7	78.0	72.4	Note 2	85.5	0.0045	0.0071	63.3	63.6	61.4	62.4
Specific Gravity		0.996	1.03	1.16	1.23	1.25	1.16	Note 2	1.37	N/A	N/A	0.998	1.02	0.98	1
Viscosity	cP	0.85	1.0	1.25	1.47	1.57	1.25	Note 2	2.45	0.0099	0.0103	0.55	1.18	0.45	0.95
Specific Heat	BTU/lb_m°F	0.97	1	0.68	0.69	0.75	0.68	Note 2	0.83	0.45	0.46	0.97	1	0.97	1.00
Thermal Conductivity	BTU/hr ft °F	0.32	0.37	0.27	0.28	0.33	0.27	Note 2	0.32	0.012	0.013	0.32	0.37	0.34	0.38
Latent Heat	BTU/lb_m									1,030	1,090				

Notes:
1. Minimum and maximum fluid properties are not associated with minimum and maximum fluid flow rates.
2. The evaporator concentrates in batches, thus every cycle the concentrate should range from minimum to maximum fluid properties listed, or vice versa depending on the property.
3. Vacuum system enables concentration of feed at reduced temperature.
4. The Cs concentrate is transfered out and replaced by a fresh acid charge when NaNO3 is at 80% of its solubility limit. The estimated frequency for transfering a 1500 gallon batch of concentrate is 16 elution cycles (33 h per cycle) 495 h. Flow rate is approximately 60 gpm.
5. Highest expected value shown. Normal concentration of Na+ in eluate is expected to be 0.043 M.
6. The fluid property ranges shown are the expected operating minimum and maximums. The vedor design will depict the normal operating ranges based on the designed pressure drops through the system. The maximum temperature that may be seen under accident scenario (self boiling) is 230F
7. Only a portion of the condensed vapor is condensate, the remeinded of the condensate is refluxed to the rectifier.
8. The normal operating pressure is 1.45 psia in the separator vessel.
9. See Section 3.4.3.3 for high pressure steam supply conditions

APPENDIX D

FIGURES DELETED

APPENDIX E

FIGURES DELETED

APPENDIX F

DELETED

APPENDIX G

DELETED

Appendix H
Manufacturer's Standard Coating Data Sheet

The SELLER proposes the following Manufacturer's Standard (Mfg. Std.) or alternate coating system that is suitable for the exposure conditions of steel items and equipment in radiation and non-radiation areas.

1. **^Equipment Description:** _____
   - A. Tag Number _____
   - B. Part(s) i.e. skirt, shell, channels, lugs, etc.* _____
   - C. Design/Operating Temperatures, designate °F or °C ..... _____ °F °C
   - D. Does Equipment Receive Steam out (Yes/No), Temperature _____ °F °C
   - E. Insulated/Uninsulated _____
   - F. Fireproofing (Yes/No) _____
   - ^G. Carbon Steel (CS), Stainless Steel (SS), other (List) _____
2. **^Seller:** _____
3. **^Surface Preparation:** SSPC No./Profile _____ / _____
4. **Coating System Designation:** (Code)

	First Coat	Second Coat	Third Coat
^A. Type of Coating			
^B. Coating Mfg./No.**			
^C. Dry Film Thickness (Min/Max in mils)/(µm)			
D. Wet/Film Thickness (Min/Max in mils)/(µm)			
E. Curing Method			
^F. Color			
G. Dry to Recoat			
H. Pot Life			
L. Thinner / %			

5. **Total DFT of System:** (Mils/µm)(Min/Max) ..... _____ / Min. _____ / Max.
6. **Material Storage:** Temperature Requirements (Min/Max) _____ / _____
7. **Shelf Life:** _____ Months
8. **Application Environmental Limits:**
   - A. Temperature Ambient and Surface (Min/Max) ..... _____ / _____ _____ / _____
   - B. Humidity (Min/Max) ..... _____ / _____
   - C. Surface Temp ≥5°F above Dew Point temp. (Yes/No) ..... _____
9. **Protection of surfaces that will be inaccessible after equipment installation (such as underside of base plates, interior of fans, vessels or equipment housings)** _____
10. **Rust Preventative for machined faces:** (**Mfg./No.) _____
11. **Quantity of touch-up coating supplied:** *None* _____
12. **Additional information:** (attach extra page as necessary) _____

* Use additional copies of this form for each part described in 1 above that requires a different coating system. A completed copy of this data sheet shall be submitted to CONTRACTOR/BUYER with the initial vendor data submittal.

** Include manufacturer's technical data sheets and MSDS for each proposed coating, preservative & solvent

^ Mandatory data entry. Other entries should be completed where information is available from sub vendor or from coating material technical data sheets.

APPENDIX I

QUALITY LEVEL AND SEISMIC CATEGORY FOR EVAPORATOR EQUIPMENT

SSC	Description	QL	SC
Separator Vessel	CNP-EVAP-00001	QL-1	SC-I
• Demister Pad	Pad Materials	CM	SC-II
• Demister Pad Supports	Structural Supports	QL-2	SC-II
• Internal Piping/Misc.	Bubble Trays, Spray Rings, Dip Legs, Etc.	QL-2	SC-II
• External Piping	External Connections	QL-1	SC-I
• ITS Instrumentation	Instruments & Piping	QL-1	SC-I
• Support Tower	CNP-SKID-00007	QL-1	SC-I
Reboiler	CNP-HX-00001	QL-1	SC-I
• Support Frame	CNP-SKID-00005	QL-1	SC-I
Recirculation Pump	CNP-PMP-00001	QL-1	SC-I
Condensers			
• Primary Condenser	CNP-HX-00002	QL-1	SC-I
• 1st Stage Ejector	CNP-EJCTR-00010A	QL-1	SC-I
• Inter Condenser	CNP-HX-00003	QL-1	SC-I
• 2nd Stage Ejector	CNP-EJCTR-00010B	QL-1	SC-I
• After Condenser	CNP-HX-00004	QL-1	SC-I
• Support Frame	CNP-SKID-00002	QL-1	SC-I
Distillation Column	CNP-DISTC-00001	QL-1	SC-I
• Support Frame	CNP-SKID-00001	QL-1	SC-I
Transfer Station			
• Vessel	CNP-VSL-00168	CM	SC-III
• Desuperheater Pump	CNP-PMP-00003A	CM	SC-III
• Steam Condensate Transfer Pump	CNP-PMP-00003B	CM	SC-III
Desuperheater	CNP-SKID-00003	CM	SC-III
• External Piping	External Connections	CM	SC-III

Note: QL-1 and QL-2 designations are used by the Seller to comply with other referenced specification requirements (i.e weld, design). These designations meet NQA-1 (Q) requirements and are not necessarily reflected in their associated Buyer's P&IDs.

APPENDIX J

CNP Evaporator System Composite Analyses

J1. Seller shall perform a coupled dynamic analysis of CNP evaporator system to qualify the recirculation piping/process jumper, offgas piping, and provide nozzle loads. Seller shall provide vessel nozzle loads, Grayloc loads, and all piping/jumper support interface loads. The evaporator system model shall include the separator vessel on its frames, reboiler in its frame, recirculation pump on its frame, all interconnecting large bore piping/jumpers but excluding branch piping, separator offgas piping (connecting separator vessel and distillation column), distillation column and its frame, distillation column offgas piping (connecting distillation column and primary condenser), and condenser skid.

J2. The coupled dynamic analysis shall be performed using the revised ISRS curves (provided in this appendix) and shall account for the seismic differential movement between 0' floor, 56' floor, and 77' floor (provided in this appendix). Requirements for determining the percent critical damping for the couple dynamic analysis is provided in ASCE Std 4 Section 3.1.5 "Modeling of Damping".

J3. All piping dimensions, weights (including grayloc/guide assemblies), and support locations (including fixity) for CNP evaporator system are provided on the isometric drawings included in this appendix shall be used as the design inputs for the coupled dynamic analysis.

J4. Although Seller has provided estimated process temperatures for various system condition and components, Seller shall define and use the maximum operating temperature in dynamic analysis in lieu of design temperature for CNP evaporator system.

J5. See attachment #5 for CNP recirculation pump frame conceptual designs. Seller is responsible for qualifying all support structures above 1'-4" in elevation, including all interface plates, bolts, nuts, and dowel pins for reboiler support frame and pump support frame. Seller is responsible for providing all final frame member sizes and configuration, all weld and joint designs, dowel / bolting configuration, quantity of bolts /nuts, and frame calculations to be submitted to Buyer for review. Location of dowels and location / quantity of bolts shall be provided to Buyer for review and permission to proceed.

J5.1 Top of concrete filled steel frame elevation will be 1'-4"

J5.2 Concrete filled steel frame will be rigid, e.g. 33 hz or greater.

J5.3 Top of sole plate shall be 2'-2" in plant elevation for pump support and reboiler. Bottom of pump support and reboiler support frame shall be designed to interface with the corresponding sole plate without the use of shims.

J5.4 Seller shall qualify structural steel between 1'-4" and 2'-2". Seller must design all weld joints and provide all weld details to Buyer. Buyer will be responsible for remotability interface and fabrication drawings.

J5.5 There will be two 4" diameter Dowel Pins per frame (opposing corners) as shown on drawings which will take the shear loads. The 4" diameter dowel pin is an assumption. Seller is responsible to verify and size the dowel pin diameter with actual loads. All Dowel pin material shall be ASTM A582 Type 416.

J5.6 Seller shall qualify all plates, structural steel, dowel pins, the bolting interface, and all weld joint designs.

J5.7 Initial assumption, there are two bolts per plate. Bolts shall be 1 1/4" - 8 ACME - 2G. Stud material shall be ASTM A564 Type 630 H1150 and Nut material shall be ASTM A194 Grade 8S. Seller is to determine quantity and configuration for studs. Stud location shall be submitted to Buyer for review and permission to proceed. Note: Tightening torque from impact wrench is 400 ft-lbs ± 25%. Loosening

torque from impact wrench is 700 ft-lbs ± 25%. Tightening and loosening torques are not adjustable, or variable over time.

J5.8 Seller shall qualify recirculation pump frame. Seller must design all weld joints and provide all weld details to Buyer. Seller shall provide detail design of the frame in the form of a drawing that includes member sizes, configuration and weld design. The drawing shall be sufficient for Buyer to solicit a fabricator who can generate fabrication drawings. Buyer will be responsible for remotability interface for pump frame

J6. Seller shall perform detailed Finite Element Analysis uncoupled dynamic analysis using revised ISRS curves (provided in this appendix) of individual SC-I/SC-II vessel/equipment (including recirculation pumps) of each evaporator system. Internal components, supports, and piping systems shall be analyzed the same as the parent vessel/equipment.

J7. The report(s) shall be officially submitted to Bechtel for review per G321-E Category 8.0. The report(s) shall include pipe/jumper stress, nozzle loads, Grayloc loads, all piping/jumper support interface loads, pipe support design recommendations, and results of the coupled dynamic analysis of CNP evaporator system and FEA dynamic analyses for individual SC-I/SC-II components. Seller shall use the "SC-I/II Seismic Analysis Qualification and FEA Report Check List" provided in attachment #6 to document required data in their reports.

Design Stress/Seismic Reports shall provided, as a minimum, the following information

J.7.1 ANSI/AISC N690 Steel Frame / Support Designs for the CNP-EVAP-00001, CNP-PMP-00001 and CNP-HX-00001: For Finite Element Analysis (FEA) by Computer Program, submit the bases or reference to the bases that supports applicability of the computer program to the specific physical problem being solved. (i.e; application /validation to steel code formulas and allowable stresses).

J.7.2 ASME VIII, Div 2, Appendix 4, Vessel including internal supports/components: For FEA Computer Program analysis, submittal for the bases or reference to the bases supporting application of the computer program to the specific physical problem being solved. (i.e; application/validation to the ASME VIII, Div 2, Appendix 4, Maximum Shear Stress Theory.)

J.7.3 ASME B31.3 Piping Design: For FEA Computer Program analysis, submittal for the bases or reference to the bases supporting application of the computer program to the specific physical problem being solved. [i.e; application/validity to the ASME B31.3 design requirements in accordance with B31.3-96, section 300(c)(3)]

J8. Listed below are design inputs to be used

J8a. See Attachment #3 for 14" & 16" grayloc/guide assemblies design inputs provided on the isometric sketches.

J8b. Revised In-Structure Response Spectra curves (see Attachment #1)

- RGM ISRS Figures 37, 38, 39, 49, 50, 51, and 114 for separator vessel (CNP-EVAP-00001)
- RGM ISRS Figures 16, 17, 22, 23, and 144 for CNP condenser skid (CNP-SKID-00002)
- RGM ISRS Figures 37, 38, and 114 for distillation column (CNP-DISTC-00001)
- RGM ISRS Figures 67, 68, and 69 for reboiler (CNP-HX-00001). If the equipment support is not rigid, it shall be simulated or duplicated in the equipment seismic analysis model.
- RGM ISRS Figures 67, 68, and 69 for recirculation pump (CNP-PMP-00001). If the equipment support is not rigid, it shall be simulated or duplicated in the equipment seismic analysis model.

J8c. Redesign of CNP support frame to eliminate lower tie (CNP-SKID-00007-12 member) to canyon wall (see Attachment #2).

J8d. CNP Evaporator recirculation and off-gas piping isometrics (see Attachment #3)

J8e. Nozzle loading for separator vessel (CNP-EVAP-00001) shall be based on actual values as listed in table 1 of Attachment #4. The Seller shall use the actual nozzle load values instead of the values shown in the table in Appendix A of the Pressure Vessel Design and Fabrication Specification, 24590-WTP-3PS-MV00-T0001. The thermal reduction factor found in 24590-WTP-3PS-MV00-T0001, Section 3.7.4, shall not be applied. The nozzle load for separator vessel offgas outlet nozzle (N03), discharge nozzle (N02) and inlet nozzle (N01) shall be per Seller's design & qualification using the results of the coupled FEA. Nozzle loads for separator vessel bubblers (N09A, N09B, N16, N21A, N21B, and N22) due to hydrogen accumulation are not available and will be provided later.

J8f. Nozzle loading for distillation column (CNP-DISTC-00001) shall be based on nozzle design loads for non-black cell vessels provided in table 2 of Attachment #4. The Seller shall use these nozzle load values instead of the values shown in the table in Appendix A of the Pressure Vessel Design and Fabrication Specification, 24590-WTP-3PS-MV00-T0001. The thermal reduction factor found in 24590-WTP-3PS-MV00-T0001, Section 3.7.4, shall not be applied. The nozzle load for distillation column inlet nozzle (N03) and outlet nozzle (N04) shall be per Seller's design & qualification using the results of the coupled FEA.

J8g. Nozzle loading for condenser vessels (CNP-HX-00002/3/4) shall be based on nozzle design loads for non-black cell vessels provided in table 2 of Attachment #4. The Seller shall use these provided values instead of the values shown in the table in Appendix A of the Pressure Vessel Design and Fabrication Specification, 24590-WTP-3PS-MV00-T0001. The thermal reduction factor found in 24590-WTP-3PS-MV00-T0001, Section 3.7.4, shall not be applied. The primary condenser offgas inlet nozzle (N03, 18" vapor inlet from distillation column) shall be per Seller's design and qualification using the results of the coupled FEA.

J8h. Nozzle loading for reboiler vessel (CNP-HX-00001) shall be based on nozzle design loads for non-black cell vessels provided in Table 4 and Table 5 (for steam nozzle NO3) of Attachment #4. The Seller shall use these nozzle load values instead of the values shown in the table in Appendix A of the Pressure Vessel Design and Fabrication Specification, 24590-WTP-3PS-MV00-T0001. The thermal reduction factor found in 24590-WTP-3PS-MV00-T0001, Section 3.7.4, shall not be applied. The reboiler process inlet nozzle (N01) and outlet nozzle (N02) shall be per Seller's design and qualification using the results of the coupled FEA.

J8i. Nozzle loads for recirculation pumps shall be per Seller's design & qualification using the results of the coupled FEA.

J8j. For CNP-EVAP-00001,

a. The relative floor movement at location Row D/Column 9 at elevation 36' to location Row D/Column 9 at elevation 56' is: 0.04" EW; 0.10" NS, and 0.01" vertical

b. The relative floor movement at location Row E/Column 10 at elevation 36' to location Row E/Column 10 at elevation 56' is: 0.04" EW; 0.10" NS, and 0.03" vertical

c. The relative floor movement at location Row D/Column 9 at elevation 77' to location Row D/Column 9 at elevation 56' is: 0.04" EW; 0.08" NS, and 0.01" vertical

d. The relative floor movement at location Row E/Column 10 at elevation 77' to location Row E/Column 10 at elevation 56' is: 0.04" EW; 0.09" NS, and 0.03" vertical

J8k. CNP recirculation pump frame conceptual design (See attachment #5).

Attachment #1

Revised ISRS Curves
(Ref. CCN 128490 and CCN 138088)

RPP-WTP Pretreatment Facility ISRS
Calc No.: 24590-PTF-S0C-S15T-00005, Rev. 0B

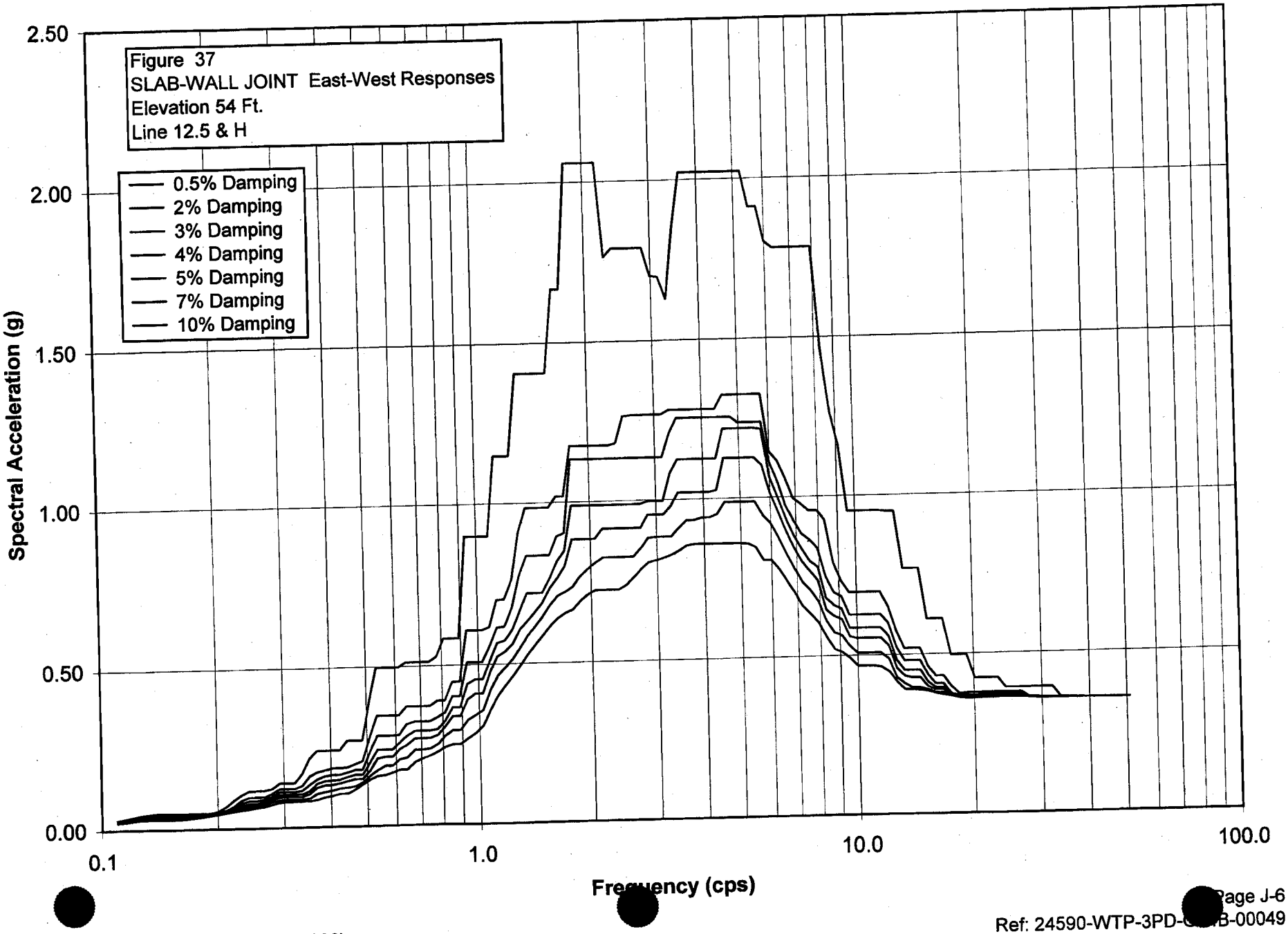

S_PTWW037.grf
RPP-WTP Pretreatment Facility ISRS
Calc No.: 24590-PTF-S0C-S15T-00005, Rev. 0B
Frequency (cps)
Spectral Acceleration (g)
Figure 37
SLAB-WALL JOINT East-West Responses
Elevation 54 Ft.
Line 12.5 & H

Damping	0.50%	Damping	2%	Damping	3%	Damping	4%	Damping	5%	Damping	7%	Damping	10%
Freq.	Accel.	Freq.	Accel.	Freq.	Accel.	Freq.	Accel.	Freq.	Accel.	Freq.	Accel.	Freq.	Accel.
0.1098	0.0314	0.1098	0.0288	0.1098	0.0276	0.1098	0.0268	0.1098	0.0261	0.1098	0.0248	0.1098	0.0232
0.115	0.0359	0.115	0.0331	0.115	0.0315	0.115	0.0301	0.115	0.029	0.115	0.0275	0.115	0.0254
0.1204	0.041	0.1204	0.0383	0.1204	0.0367	0.1204	0.0353	0.1204	0.034	0.1204	0.0316	0.1204	0.0288
0.1262	0.046	0.1262	0.0427	0.1262	0.0408	0.1262	0.0389	0.1262	0.0373	0.1262	0.0344	0.1262	0.0312
0.1322	0.0489	0.1322	0.0443	0.1322	0.0422	0.1322	0.0403	0.1322	0.0386	0.1322	0.0356	0.1322	0.0321
0.1385	0.0518	0.1385	0.0463	0.1385	0.0431	0.1385	0.0403	0.1385	0.0386	0.1385	0.0356	0.1385	0.0321
0.1451	0.0518	0.1451	0.0463	0.1451	0.0431	0.1451	0.0403	0.1451	0.0386	0.1451	0.0356	0.1451	0.0321
0.152	0.0518	0.152	0.0463	0.152	0.0431	0.152	0.0403	0.152	0.0386	0.152	0.0356	0.152	0.0321
0.1592	0.0518	0.1592	0.0463	0.1592	0.0431	0.1592	0.0403	0.1592	0.0386	0.1592	0.0356	0.1592	0.0324
0.1668	0.0518	0.1668	0.0463	0.1668	0.0431	0.1668	0.0403	0.1668	0.0384	0.1668	0.0362	0.1668	0.0351
0.1748	0.0518	0.1748	0.0463	0.1748	0.0431	0.1748	0.0409	0.1748	0.0404	0.1748	0.0394	0.1748	0.0379
0.1831	0.0518	0.1831	0.0463	0.1831	0.0454	0.1831	0.0447	0.1831	0.044	0.1831	0.0426	0.1831	0.0405
0.1918	0.0521	0.1918	0.0505	0.1918	0.0495	0.1918	0.0485	0.1918	0.0476	0.1918	0.0458	0.1918	0.0437
0.2009	0.0569	0.2009	0.0549	0.2009	0.0536	0.2009	0.0525	0.2009	0.0514	0.2009	0.0497	0.2009	0.0474
0.2105	0.0708	0.2105	0.0601	0.2105	0.0587	0.2105	0.0574	0.2105	0.0562	0.2105	0.054	0.2105	0.0517
0.2205	0.091	0.2205	0.0714	0.2205	0.0643	0.2205	0.0624	0.2205	0.061	0.2205	0.0586	0.2205	0.0558
0.231	0.1079	0.231	0.0908	0.231	0.0814	0.231	0.0735	0.231	0.0672	0.231	0.0631	0.231	0.0594
0.242	0.1195	0.242	0.0993	0.242	0.0884	0.242	0.0793	0.242	0.0716	0.242	0.0666	0.242	0.062
0.2535	0.1204	0.2535	0.0993	0.2535	0.0884	0.2535	0.0797	0.2535	0.0755	0.2535	0.0695	0.2535	0.0658
0.2656	0.1204	0.2656	0.0993	0.2656	0.0923	0.2656	0.088	0.2656	0.084	0.2656	0.0769	0.2656	0.0687
0.2783	0.1255	0.2783	0.1097	0.2783	0.1008	0.2783	0.095	0.2783	0.0907	0.2783	0.0836	0.2783	0.0755
0.2915	0.1424	0.2915	0.1248	0.2915	0.1148	0.2915	0.106	0.2915	0.0982	0.2915	0.0888	0.2915	0.0813
0.3054	0.1424	0.3054	0.1248	0.3054	0.1152	0.3054	0.1069	0.3054	0.0996	0.3054	0.091	0.3054	0.0842
0.3199	0.1424	0.3199	0.1248	0.3199	0.1152	0.3199	0.1069	0.3199	0.0996	0.3199	0.091	0.3199	0.0847
0.3352	0.1711	0.3352	0.1346	0.3352	0.1186	0.3352	0.1069	0.3352	0.0996	0.3352	0.091	0.3352	0.0847
0.3511	0.2174	0.3511	0.1631	0.3511	0.137	0.3511	0.1169	0.3511	0.1078	0.3511	0.0932	0.3511	0.0847
0.3678	0.2401	0.3678	0.1757	0.3678	0.1532	0.3678	0.1396	0.3678	0.1277	0.3678	0.108	0.3678	0.0887

0.3853	0.2401	0.3853	0.1802	0.3853	0.1621	0.3853	0.1466	0.3853	0.1334	0.3853	0.1123	0.3853	0.0951
0.4037	0.2401	0.4037	0.1853	0.4037	0.165	0.4037	0.1482	0.4037	0.1342	0.4037	0.1165	0.4037	0.0995
0.4229	0.2401	0.4229	0.1853	0.4229	0.165	0.4229	0.1498	0.4229	0.1383	0.4229	0.122	0.4229	0.1052
0.4431	0.2697	0.4431	0.1872	0.4431	0.1712	0.4431	0.1571	0.4431	0.1446	0.4431	0.1243	0.4431	0.1052
0.4642	0.2697	0.4642	0.1964	0.4642	0.1791	0.4642	0.1638	0.4642	0.1504	0.4642	0.128	0.4642	0.1176
0.4863	0.2697	0.4863	0.2048	0.4863	0.1795	0.4863	0.1638	0.4863	0.1504	0.4863	0.1397	0.4863	0.1335
0.5094	0.3933	0.5094	0.2804	0.5094	0.2338	0.5094	0.2006	0.5094	0.1758	0.5094	0.1597	0.5094	0.1485
0.5337	0.498	0.5337	0.3467	0.5337	0.2831	0.5337	0.2392	0.5337	0.2125	0.5337	0.1765	0.5337	0.159
0.5591	0.498	0.5591	0.3467	0.5591	0.2831	0.5591	0.2392	0.5591	0.2173	0.5591	0.1897	0.5591	0.1607
0.5857	0.498	0.5857	0.3467	0.5857	0.2831	0.5857	0.2392	0.5857	0.2173	0.5857	0.1897	0.5857	0.1683
0.6136	0.498	0.6136	0.3467	0.6136	0.2856	0.6136	0.2598	0.6136	0.2393	0.6136	0.2082	0.6136	0.1768
0.6428	0.5114	0.6428	0.3731	0.6428	0.3181	0.6428	0.2803	0.6428	0.2522	0.6428	0.2127	0.6428	0.1768
0.6734	0.5114	0.6734	0.3731	0.6734	0.3249	0.6734	0.296	0.6734	0.2724	0.6734	0.236	0.6734	0.1983
0.7055	0.5114	0.7055	0.3731	0.7055	0.3249	0.7055	0.296	0.7055	0.2724	0.7055	0.236	0.7055	0.2086
0.7391	0.5114	0.7391	0.3731	0.7391	0.3249	0.7391	0.296	0.7391	0.2724	0.7391	0.239	0.7391	0.2174
0.7743	0.528	0.7743	0.3894	0.7743	0.3374	0.7743	0.3002	0.7743	0.2812	0.7743	0.2527	0.7743	0.2293
0.8111	0.5842	0.8111	0.3894	0.8111	0.3513	0.8111	0.3253	0.8111	0.3078	0.8111	0.2783	0.8111	0.2431
0.8497	0.5842	0.8497	0.4479	0.8497	0.4022	0.8497	0.367	0.8497	0.3388	0.8497	0.2955	0.8497	0.2503
0.8902	0.5842	0.8902	0.4479	0.8902	0.4022	0.8902	0.367	0.8902	0.3388	0.8902	0.2955	0.8902	0.2503
0.9326	0.8989	0.9326	0.6071	0.9326	0.5073	0.9326	0.4398	0.9326	0.3912	0.9326	0.3262	0.9326	0.2684
0.977	0.8989	0.977	0.6071	0.977	0.5073	0.977	0.4541	0.977	0.4086	0.977	0.3405	0.977	0.2839
1.0235	0.8989	1.0235	0.6071	1.0235	0.5073	1.0235	0.4541	1.0235	0.4086	1.0235	0.3559	1.0235	0.3074
1.0723	0.8989	1.0723	0.6169	1.0723	0.5578	1.0723	0.512	1.0723	0.4768	1.0723	0.4199	1.0723	0.3581
1.1233	1.1502	1.1233	0.6991	1.1233	0.614	1.1233	0.5663	1.1233	0.5238	1.1233	0.4629	1.1233	0.4004
1.1768	1.1502	1.1768	0.7013	1.1768	0.6178	1.1768	0.574	1.1768	0.5383	1.1768	0.4888	1.1768	0.4326
1.2328	1.1502	1.2328	0.7596	1.2328	0.6754	1.2328	0.6064	1.2328	0.5615	1.2328	0.5147	1.2328	0.4624
1.2916	1.4068	1.2916	0.9098	1.2916	0.7736	1.2916	0.6645	1.2916	0.6073	1.2916	0.5502	1.2916	0.4952
1.353	1.4068	1.353	0.9837	1.353	0.8352	1.353	0.7185	1.353	0.6331	1.353	0.5866	1.353	0.5279
1.4175	1.4068	1.4175	0.9837	1.4175	0.8352	1.4175	0.7185	1.4175	0.6595	1.4175	0.6157	1.4175	0.5573
1.485	1.4068	1.485	0.9837	1.485	0.8352	1.485	0.7185	1.485	0.6887	1.485	0.6451	1.485	0.5868
1.5557	1.4068	1.5557	0.9837	1.5557	0.8352	1.5557	0.7621	1.5557	0.7323	1.5557	0.6811	1.5557	0.6154
1.6298	1.6671	1.6298	1.0185	1.6298	0.8939	1.6298	0.8172	1.6298	0.764	1.6298	0.7078	1.6298	0.6397
1.7074	1.6671	1.7074	1.0185	1.7074	0.9033	1.7074	0.8484	1.7074	0.8	1.7074	0.7196	1.7074	0.6548
1.7887	2.06	1.7887	1.175	1.7887	1.1351	1.7887	0.9877	1.7887	0.8836	1.7887	0.7359	1.7887	0.6657
1.8738	2.06	1.8738	1.175	1.8738	1.1351	1.8738	0.9877	1.8738	0.8836	1.8738	0.767	1.8738	0.691
1.963	2.06	1.963	1.175	1.963	1.1351	1.963	0.9877	1.963	0.8836	1.963	0.7893	1.963	0.7111
2.0565	2.06	2.0565	1.175	2.0565	1.1351	2.0565	0.9877	2.0565	0.8836	2.0565	0.809	2.0565	0.7233
2.1544	2.06	2.1544	1.175	2.1544	1.1351	2.1544	0.9877	2.1544	0.9145	2.1544	0.8248	2.1544	0.7233
2.257	1.7633	2.257	1.175	2.257	1.1351	2.257	0.9877	2.257	0.9145	2.257	0.8248	2.257	0.7233

2.3645	1.7905	2.3645	1.1812	2.3645	1.1351	2.3645	0.9877	2.3645	0.9145	2.3645	0.8248	2.3645	0.7233
2.4771	1.7905	2.4771	1.2641	2.4771	1.1351	2.4771	0.9877	2.4771	0.9145	2.4771	0.8248	2.4771	0.7363
2.595	1.7905	2.595	1.2669	2.595	1.1351	2.595	0.9877	2.595	0.9145	2.595	0.8248	2.595	0.7588
2.7186	1.7905	2.7186	1.2669	2.7186	1.1351	2.7186	0.9877	2.7186	0.9145	2.7186	0.8512	2.7186	0.7851
2.848	1.7905	2.848	1.2669	2.848	1.1351	2.848	0.9964	2.848	0.9535	2.848	0.8827	2.848	0.8066
2.9836	1.7027	2.9836	1.2669	2.9836	1.1351	2.9836	0.9964	2.9836	0.9535	2.9836	0.8849	2.9836	0.8127
3.1257	1.6996	3.1257	1.2669	3.1257	1.1351	3.1257	0.9964	3.1257	0.9535	3.1257	0.8849	3.1257	0.8201
3.2745	1.6283	3.2745	1.2808	3.2745	1.2073	3.2745	1.0843	3.2745	0.9787	3.2745	0.885	3.2745	0.8282
3.4305	1.8505	3.4305	1.2808	3.4305	1.2545	3.4305	1.1266	3.4305	1.0213	3.4305	0.9111	3.4305	0.8401
3.5938	2.0228	3.5938	1.2808	3.5938	1.2545	3.5938	1.1266	3.5938	1.0213	3.5938	0.9346	3.5938	0.8563
3.7649	2.0228	3.7649	1.2808	3.7649	1.2545	3.7649	1.1266	3.7649	1.0213	3.7649	0.9346	3.7649	0.8595
3.9442	2.0228	3.9442	1.2808	3.9442	1.2545	3.9442	1.1266	3.9442	1.0213	3.9442	0.9409	3.9442	0.8595
4.132	2.0228	4.132	1.2808	4.132	1.2545	4.132	1.1266	4.132	1.0213	4.132	0.9409	4.132	0.8598
4.3288	2.0228	4.3288	1.2808	4.3288	1.2545	4.3288	1.1266	4.3288	1.0265	4.3288	0.9503	4.3288	0.8598
4.5349	2.0228	4.5349	1.3256	4.5349	1.2545	4.5349	1.2184	4.5349	1.1271	4.5349	0.987	4.5349	0.8598
4.7508	2.0228	4.7508	1.3256	4.7508	1.2545	4.7508	1.2184	4.7508	1.1271	4.7508	0.987	4.7508	0.8598
4.977	2.0228	4.977	1.3256	4.977	1.2365	4.977	1.2184	4.977	1.1271	4.977	0.987	4.977	0.8598
5.214	2.0228	5.214	1.3256	5.214	1.2365	5.214	1.2184	5.214	1.1271	5.214	0.987	5.214	0.8574
5.4623	1.9118	5.4623	1.3256	5.4623	1.2365	5.4623	1.2184	5.4623	1.1271	5.4623	0.987	5.4623	0.8452
5.7224	1.9118	5.7224	1.3256	5.7224	1.2365	5.7224	1.2141	5.7224	1.103	5.7224	0.944	5.7224	0.8044
5.9948	1.8019	5.9948	1.1437	5.9948	1.1117	5.9948	1.0649	5.9948	1.0143	5.9948	0.919	5.9948	0.8044
6.2803	1.7825	6.2803	1.1158	6.2803	1.0505	6.2803	0.9983	6.2803	0.9528	6.2803	0.8733	6.2803	0.7753
6.5793	1.7825	6.5793	1.0616	6.5793	0.9721	6.5793	0.9326	6.5793	0.8937	6.5793	0.8232	6.5793	0.7371
6.8926	1.7825	6.8926	0.9948	6.8926	0.9254	6.8926	0.8781	6.8926	0.8395	6.8926	0.7757	6.8926	0.6988
7.2208	1.7825	7.2208	0.9766	7.2208	0.8836	7.2208	0.8362	7.2208	0.7973	7.2208	0.7333	7.2208	0.6574
7.5646	1.7825	7.5646	0.9553	7.5646	0.8653	7.5646	0.7978	7.5646	0.7657	7.5646	0.7059	7.5646	0.6333
7.9248	1.7825	7.9248	0.9553	7.9248	0.8374	7.9248	0.7789	7.9248	0.7357	7.9248	0.6724	7.9248	0.6047
8.3022	1.467	8.3022	0.9256	8.3022	0.7482	8.3022	0.6811	8.3022	0.6451	8.3022	0.6114	8.3022	0.5606
8.6975	1.2634	8.6975	0.7906	8.6975	0.6976	8.6975	0.6577	8.6975	0.6254	8.6975	0.5739	8.6975	0.5206
9.1116	1.1614	9.1116	0.734	9.1116	0.6851	9.1116	0.6466	9.1116	0.6147	9.1116	0.5644	9.1116	0.5109
9.5455	0.9513	9.5455	0.6972	9.5455	0.6272	9.5455	0.5869	9.5455	0.5603	9.5455	0.5292	9.5455	0.4915
10	0.9513	10	0.6972	10	0.6272	10	0.5869	10	0.5545	10	0.5075	10	0.4672
10.4762	0.9513	10.4762	0.6972	10.4762	0.6272	10.4762	0.5869	10.4762	0.5545	10.4762	0.5075	10.4762	0.4672
10.975	0.9513	10.975	0.6972	10.975	0.6272	10.975	0.5869	10.975	0.5545	10.975	0.5075	10.975	0.4672
11.4976	0.9513	11.4976	0.6972	11.4976	0.6272	11.4976	0.5869	11.4976	0.5545	11.4976	0.5075	11.4976	0.4637
12.045	0.9476	12.045	0.6512	12.045	0.5986	12.045	0.559	12.045	0.529	12.045	0.4872	12.045	0.4481
12.6186	0.9476	12.6186	0.5757	12.6186	0.5238	12.6186	0.4831	12.6186	0.4585	12.6186	0.4288	12.6186	0.4166
13.2194	0.7684	13.2194	0.5197	13.2194	0.4807	13.2194	0.452	13.2194	0.4333	13.2194	0.4097	13.2194	0.3907
13.8489	0.7684	13.8489	0.5197	13.8489	0.4807	13.8489	0.4508	13.8489	0.4275	13.8489	0.3956	13.8489	0.39

14.5083	0.7684	14.5083	0.5197	14.5083	0.4807	14.5083	0.4508	14.5083	0.4275	14.5083	0.3953	14.5083	0.3877
15.1991	0.6109	15.1991	0.462	15.1991	0.4357	15.1991	0.4127	15.1991	0.3986	15.1991	0.389	15.1991	0.3834
15.9228	0.6109	15.9228	0.4312	15.9228	0.4068	15.9228	0.3944	15.9228	0.3869	15.9228	0.3787	15.9228	0.3756
16.681	0.6109	16.681	0.4312	16.681	0.4068	16.681	0.3944	16.681	0.3869	16.681	0.3781	16.681	0.371
17.4753	0.4963	17.4753	0.3971	17.4753	0.3731	17.4753	0.3731	17.4753	0.3729	17.4753	0.3709	17.4753	0.367
18.3074	0.4963	18.3074	0.3731	18.3074	0.3686	18.3074	0.3667	18.3074	0.3656	18.3074	0.3639	18.3074	0.3615
19.1791	0.4963	19.1791	0.3752	19.1791	0.3678	19.1791	0.3639	19.1791	0.3615	19.1791	0.3592	19.1791	0.3588
20.0923	0.4216	20.0923	0.3752	20.0923	0.3678	20.0923	0.3639	20.0923	0.3615	20.0923	0.3593	20.0923	0.3585
21.049	0.4216	21.049	0.3752	21.049	0.3678	21.049	0.3639	21.049	0.362	21.049	0.3611	21.049	0.3597
22.0513	0.4216	22.0513	0.3757	22.0513	0.3701	22.0513	0.3666	22.0513	0.3643	22.0513	0.3616	22.0513	0.3597
23.1013	0.4216	23.1013	0.3757	23.1013	0.3701	23.1013	0.3666	23.1013	0.3643	23.1013	0.3616	23.1013	0.3597
24.2013	0.3898	24.2013	0.3757	24.2013	0.3701	24.2013	0.3666	24.2013	0.3643	24.2013	0.3616	24.2013	0.3597
25.3536	0.3898	25.3536	0.3757	25.3536	0.3701	25.3536	0.3666	25.3536	0.3643	25.3536	0.3616	25.3536	0.3597
26.5609	0.3898	26.5609	0.3757	26.5609	0.3701	26.5609	0.3666	26.5609	0.3643	26.5609	0.3616	26.5609	0.3596
27.8256	0.3898	27.8256	0.3593	27.8256	0.357	27.8256	0.358	27.8256	0.3585	27.8256	0.3585	27.8256	0.3579
29.1505	0.3898	29.1505	0.3593	29.1505	0.357	29.1505	0.3561	29.1505	0.3559	29.1505	0.3559	29.1505	0.3561
30.5386	0.3898	30.5386	0.3564	30.5386	0.356	30.5386	0.3557	30.5386	0.3555	30.5386	0.3552	30.5386	0.3549
31.9927	0.3898	31.9927	0.3564	31.9927	0.356	31.9927	0.3557	31.9927	0.3555	31.9927	0.3552	31.9927	0.3549
33.516	0.3588	33.516	0.3564	33.516	0.356	33.516	0.3557	33.516	0.3555	33.516	0.3552	33.516	0.3549
35.1119	0.3567	35.1119	0.3563	35.1119	0.356	35.1119	0.3557	35.1119	0.3555	35.1119	0.3552	35.1119	0.3549
36.7838	0.3557	36.7838	0.3556	36.7838	0.3555	36.7838	0.3553	36.7838	0.3552	36.7838	0.355	36.7838	0.3548
38.5353	0.3551	38.5353	0.355	38.5353	0.3549	38.5353	0.3549	38.5353	0.3548	38.5353	0.3547	38.5353	0.3546
40.3702	0.3546	40.3702	0.3545	40.3702	0.3545	40.3702	0.3544	40.3702	0.3544	40.3702	0.3543	40.3702	0.3543
42.2924	0.3541	42.2924	0.3541	42.2924	0.3541	42.2924	0.354	42.2924	0.354	42.2924	0.354	42.2924	0.3539
44.3062	0.3537	44.3062	0.3537	44.3062	0.3537	44.3062	0.3537	44.3062	0.3537	44.3062	0.3537	44.3062	0.3536
46.4159	0.3534	46.4159	0.3534	46.4159	0.3534	46.4159	0.3534	46.4159	0.3534	46.4159	0.3534	46.4159	0.3533
48.626	0.3531	48.626	0.3531	48.626	0.3531	48.626	0.353	48.626	0.353	48.626	0.353	48.626	0.3531
50.9414	0.3528	50.9414	0.3528	50.9414	0.3528	50.9414	0.3528	50.9414	0.3528	50.9414	0.3528	50.9414	0.3528

RPP-WTP Pretreatment Facility ISRS
Calc No.: 24590-PTF-S0C-S15T-00005, Rev. 0B

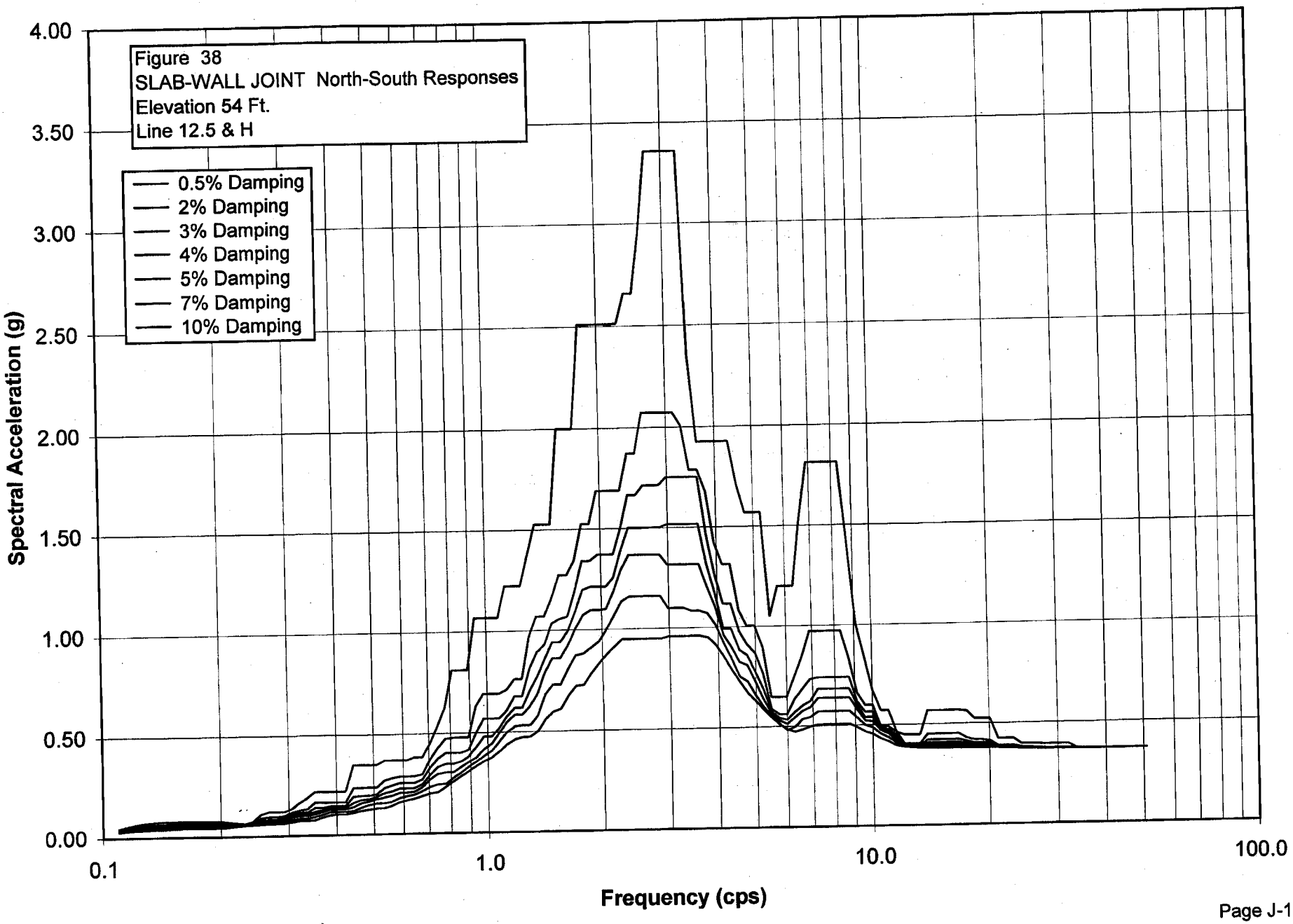

S_PTWW038.grf
RPP-WTP Pretreatment Facility ISRS
Calc No.: 24590-PTF-S0C-S15T-00005, Rev. 0B
Frequency (cps)
Spectral Acceleration (g)
Figure 38
SLAB-WALL JOINT North-South Responses
Elevation 54 Ft.
Line 12.5 & H

Damping	0.50%	Damping	2%	Damping	3%	Damping	4%	Damping	5%	Damping	7%	Damping	10%
Freq.	Accel.	Freq.	Accel.	Freq.	Accel.	Freq.	Accel.	Freq.	Accel.	Freq.	Accel.	Freq.	Accel.
0.1098	0.0457	0.1098	0.0394	0.1098	0.0365	0.1098	0.0345	0.1098	0.0331	0.1098	0.0312	0.1098	0.0286
0.115	0.0556	0.115	0.0494	0.115	0.0467	0.115	0.0443	0.115	0.0422	0.115	0.0384	0.115	0.0338
0.1204	0.0648	0.1204	0.0583	0.1204	0.0546	0.1204	0.0512	0.1204	0.0481	0.1204	0.0428	0.1204	0.0365
0.1262	0.072	0.1262	0.0618	0.1262	0.0572	0.1262	0.0533	0.1262	0.0498	0.1262	0.0438	0.1262	0.0384
0.1322	0.0763	0.1322	0.0653	0.1322	0.0604	0.1322	0.0565	0.1322	0.053	0.1322	0.0471	0.1322	0.0404
0.1385	0.0786	0.1385	0.0673	0.1385	0.0609	0.1385	0.0565	0.1385	0.053	0.1385	0.0471	0.1385	0.0404
0.1451	0.0789	0.1451	0.0675	0.1451	0.0612	0.1451	0.0565	0.1451	0.053	0.1451	0.0471	0.1451	0.0412
0.152	0.0789	0.152	0.0675	0.152	0.0612	0.152	0.0568	0.152	0.0538	0.152	0.0487	0.152	0.0434
0.1592	0.0789	0.1592	0.0675	0.1592	0.0612	0.1592	0.0568	0.1592	0.0538	0.1592	0.049	0.1592	0.0442
0.1668	0.0789	0.1668	0.0675	0.1668	0.0612	0.1668	0.0568	0.1668	0.0538	0.1668	0.049	0.1668	0.0442
0.1748	0.0789	0.1748	0.0675	0.1748	0.0612	0.1748	0.0568	0.1748	0.0538	0.1748	0.049	0.1748	0.0442
0.1831	0.0789	0.1831	0.0675	0.1831	0.0612	0.1831	0.0568	0.1831	0.0538	0.1831	0.049	0.1831	0.0442
0.1918	0.0789	0.1918	0.0675	0.1918	0.0612	0.1918	0.0564	0.1918	0.0535	0.1918	0.049	0.1918	0.0442
0.2009	0.0789	0.2009	0.0675	0.2009	0.0612	0.2009	0.0564	0.2009	0.0534	0.2009	0.0483	0.2009	0.0442
0.2105	0.0737	0.2105	0.0634	0.2105	0.0597	0.2105	0.0564	0.2105	0.0534	0.2105	0.0495	0.2105	0.0481
0.2205	0.0686	0.2205	0.0626	0.2205	0.0591	0.2205	0.0563	0.2205	0.0553	0.2205	0.0536	0.2205	0.0518
0.231	0.0653	0.231	0.063	0.231	0.0616	0.231	0.0604	0.231	0.0592	0.231	0.0573	0.231	0.0552
0.242	0.0765	0.242	0.0692	0.242	0.0652	0.242	0.0639	0.242	0.0627	0.242	0.0606	0.242	0.0581
0.2535	0.1105	0.2535	0.092	0.2535	0.0827	0.2535	0.0753	0.2535	0.0694	0.2535	0.0632	0.2535	0.0604
0.2656	0.1221	0.2656	0.0955	0.2656	0.083	0.2656	0.0753	0.2656	0.0694	0.2656	0.0652	0.2656	0.0619
0.2783	0.1221	0.2783	0.0955	0.2783	0.0836	0.2783	0.0789	0.2783	0.0748	0.2783	0.0679	0.2783	0.0626
0.2915	0.1221	0.2915	0.1011	0.2915	0.0941	0.2915	0.0879	0.2915	0.0824	0.2915	0.0732	0.2915	0.0631
0.3054	0.1371	0.3054	0.1191	0.3054	0.1092	0.3054	0.1006	0.3054	0.0931	0.3054	0.0811	0.3054	0.0706
0.3199	0.1652	0.3199	0.1286	0.3199	0.1172	0.3199	0.1073	0.3199	0.0989	0.3199	0.0856	0.3199	0.0757
0.3352	0.1878	0.3352	0.1337	0.3352	0.1172	0.3352	0.1073	0.3352	0.0989	0.3352	0.0865	0.3352	0.0771
0.3511	0.2181	0.3511	0.1647	0.3511	0.1395	0.3511	0.12	0.3511	0.1078	0.3511	0.0935	0.3511	0.0785
0.3678	0.2181	0.3678	0.1647	0.3678	0.1397	0.3678	0.1283	0.3678	0.1183	0.3678	0.1047	0.3678	0.0915

0.3853	0.2181	0.3853	0.1647	0.3853	0.147	0.3853	0.138	0.3853	0.13	0.3853	0.1166	0.3853	0.1017
0.4037	0.2181	0.4037	0.1647	0.4037	0.1478	0.4037	0.1391	0.4037	0.1314	0.4037	0.1186	0.4037	0.1044
0.4229	0.2189	0.4229	0.1647	0.4229	0.1478	0.4229	0.1391	0.4229	0.1314	0.4229	0.1186	0.4229	0.1044
0.4431	0.3472	0.4431	0.2355	0.4431	0.1923	0.4431	0.1615	0.4431	0.1413	0.4431	0.1213	0.4431	0.1119
0.4642	0.3472	0.4642	0.2355	0.4642	0.1951	0.4642	0.1751	0.4642	0.1594	0.4642	0.1384	0.4642	0.1214
0.4863	0.3472	0.4863	0.2355	0.4863	0.1951	0.4863	0.1781	0.4863	0.1665	0.4863	0.1492	0.4863	0.1273
0.5094	0.3472	0.5094	0.2355	0.5094	0.2018	0.5094	0.1893	0.5094	0.178	0.5094	0.1574	0.5094	0.133
0.5337	0.3695	0.5337	0.2689	0.5337	0.232	0.5337	0.2061	0.5337	0.1852	0.5337	0.1574	0.5337	0.133
0.5591	0.3695	0.5591	0.281	0.5591	0.2442	0.5591	0.2148	0.5591	0.193	0.5591	0.1633	0.5591	0.1435
0.5857	0.3695	0.5857	0.2873	0.5857	0.2546	0.5857	0.228	0.5857	0.2062	0.5857	0.1801	0.5857	0.1608
0.6136	0.3695	0.6136	0.2873	0.6136	0.2546	0.6136	0.228	0.6136	0.2069	0.6136	0.1894	0.6136	0.1692
0.6428	0.3817	0.6428	0.2873	0.6428	0.2546	0.6428	0.2298	0.6428	0.2121	0.6428	0.1961	0.6428	0.1762
0.6734	0.3817	0.6734	0.2976	0.6734	0.2715	0.6734	0.2487	0.6734	0.2338	0.6734	0.2138	0.6734	0.1889
0.7055	0.4491	0.7055	0.37	0.7055	0.3283	0.7055	0.2935	0.7055	0.2706	0.7055	0.2341	0.7055	0.2005
0.7391	0.5365	0.7391	0.4265	0.7391	0.3742	0.7391	0.3318	0.7391	0.2971	0.7391	0.2451	0.7391	0.2071
0.7743	0.628	0.7743	0.4729	0.7743	0.4012	0.7743	0.3465	0.7743	0.3042	0.7743	0.2469	0.7743	0.2325
0.8111	0.813	0.8111	0.4774	0.8111	0.4012	0.8111	0.3465	0.8111	0.3042	0.8111	0.2755	0.8111	0.2586
0.8497	0.813	0.8497	0.4774	0.8497	0.4012	0.8497	0.3574	0.8497	0.3295	0.8497	0.3025	0.8497	0.2836
0.8902	0.813	0.8902	0.4774	0.8902	0.4159	0.8902	0.3821	0.8902	0.3545	0.8902	0.3296	0.8902	0.3085
0.9326	1.0682	0.9326	0.63	0.9326	0.502	0.9326	0.4299	0.9326	0.3762	0.9326	0.3568	0.9326	0.3336
0.977	1.0682	0.977	0.6921	0.977	0.5678	0.977	0.4802	0.977	0.4166	0.977	0.3823	0.977	0.3564
1.0235	1.0682	1.0235	0.6921	1.0235	0.5678	1.0235	0.4802	1.0235	0.4461	1.0235	0.4083	1.0235	0.3759
1.0723	1.0682	1.0723	0.6921	1.0723	0.5678	1.0723	0.5223	1.0723	0.499	1.0723	0.457	1.0723	0.4039
1.1233	1.2235	1.1233	0.7093	1.1233	0.6072	1.1233	0.5774	1.1233	0.5491	1.1233	0.5	1.1233	0.4397
1.1768	1.2235	1.1768	0.7609	1.1768	0.6761	1.1768	0.6181	1.1768	0.5844	1.1768	0.5279	1.1768	0.4629
1.2328	1.2235	1.2328	0.7609	1.2328	0.6761	1.2328	0.6181	1.2328	0.5848	1.2328	0.5319	1.2328	0.4733
1.2916	1.38	1.2916	0.9702	1.2916	0.8115	1.2916	0.7038	1.2916	0.6261	1.2916	0.5319	1.2916	0.4757
1.353	1.5277	1.353	1.0704	1.353	0.893	1.353	0.7708	1.353	0.6847	1.353	0.5767	1.353	0.5012
1.4175	1.5277	1.4175	1.0704	1.4175	0.9317	1.4175	0.8594	1.4175	0.7938	1.4175	0.6823	1.4175	0.5606
1.485	1.5277	1.485	1.1558	1.485	1.036	1.485	0.9419	1.485	0.8621	1.485	0.7311	1.485	0.5961
1.5557	1.9994	1.5557	1.2739	1.5557	1.0575	1.5557	0.9419	1.5557	0.8621	1.5557	0.7311	1.5557	0.6097
1.6298	1.9994	1.6298	1.2739	1.6298	1.0685	1.6298	0.9942	1.6298	0.9258	1.6298	0.8095	1.6298	0.6757
1.7074	1.9994	1.7074	1.3467	1.7074	1.1921	1.7074	1.0891	1.7074	1.0073	1.7074	0.8754	1.7074	0.7234
1.7887	2.5094	1.7887	1.5259	1.7887	1.3435	1.7887	1.198	1.7887	1.0737	1.7887	0.8849	1.7887	0.7284
1.8738	2.5094	1.8738	1.5259	1.8738	1.3435	1.8738	1.2126	1.8738	1.0986	1.8738	0.9122	1.8738	0.7848
1.963	2.5094	1.963	1.6919	1.963	1.3738	1.963	1.2126	1.963	1.0986	1.963	0.9419	1.963	0.8346
2.0565	2.5094	2.0565	1.6919	2.0565	1.3738	2.0565	1.2126	2.0565	1.1043	2.0565	1.0014	2.0565	0.8791
2.1544	2.5094	2.1544	1.6919	2.1544	1.3738	2.1544	1.2586	2.1544	1.1906	2.1544	1.0705	2.1544	0.9161
2.257	2.5118	2.257	1.6919	2.257	1.4972	2.257	1.3913	2.257	1.2957	2.257	1.1384	2.257	0.9527

2.3645	2.6594	2.3645	1.8721	2.3645	1.6678	2.3645	1.5032	2.3645	1.3686	2.3645	1.1626	2.3645	0.9527
2.4771	2.6594	2.4771	1.8721	2.4771	1.6678	2.4771	1.5032	2.4771	1.3686	2.4771	1.1626	2.4771	0.9527
2.595	2.9473	2.595	2.0725	2.595	1.7153	2.595	1.5032	2.595	1.3686	2.595	1.1626	2.595	0.9527
2.7186	3.3563	2.7186	2.0725	2.7186	1.7153	2.7186	1.5032	2.7186	1.3686	2.7186	1.1626	2.7186	0.9527
2.848	3.3563	2.848	2.0725	2.848	1.7153	2.848	1.5032	2.848	1.3686	2.848	1.1626	2.848	0.9527
2.9836	3.3563	2.9836	2.0725	2.9836	1.7536	2.9836	1.5166	2.9836	1.3191	2.9836	1.1021	2.9836	0.9624
3.1257	3.3563	3.1257	2.0725	3.1257	1.7536	3.1257	1.5166	3.1257	1.3191	3.1257	1.1021	3.1257	0.9624
3.2745	3.3563	3.2745	2.0076	3.2745	1.7536	3.2745	1.5166	3.2745	1.3191	3.2745	1.1021	3.2745	0.9624
3.4305	2.3492	3.4305	1.7893	3.4305	1.7536	3.4305	1.5166	3.4305	1.3191	3.4305	1.0863	3.4305	0.9624
3.5938	1.9258	3.5938	1.7893	3.5938	1.7536	3.5938	1.5166	3.5938	1.3191	3.5938	1.0863	3.5938	0.9624
3.7649	1.9258	3.7649	1.6814	3.7649	1.4648	3.7649	1.3142	3.7649	1.2046	3.7649	1.0723	3.7649	0.9532
3.9442	1.9258	3.9442	1.4249	3.9442	1.266	3.9442	1.1716	3.9442	1.1062	3.9442	1.0158	3.9442	0.9161
4.132	1.9258	4.132	1.3151	4.132	1.1186	4.132	0.9925	4.132	0.9639	4.132	0.9241	4.132	0.8565
4.3288	1.9258	4.3288	1.3151	4.3288	1.1186	4.3288	0.9925	4.3288	0.9036	4.3288	0.8451	4.3288	0.7892
4.5349	1.7138	4.5349	1.0833	4.5349	0.9804	4.5349	0.8879	4.5349	0.8266	4.5349	0.7534	4.5349	0.726
4.7508	1.5698	4.7508	1.006	4.7508	0.9133	4.7508	0.8601	4.7508	0.8104	4.7508	0.727	4.7508	0.671
4.977	1.5698	4.977	1.006	4.977	0.8727	4.977	0.7769	4.977	0.7266	4.977	0.659	4.977	0.6299
5.214	1.5698	5.214	0.8976	5.214	0.7649	5.214	0.6877	5.214	0.636	5.214	0.5985	5.214	0.5865
5.4623	1.0521	5.4623	0.6474	5.4623	0.5881	5.4623	0.5734	5.4623	0.5654	5.4623	0.5556	5.4623	0.546
5.7224	1.2	5.7224	0.6474	5.7224	0.5602	5.7224	0.5421	5.7224	0.5301	5.7224	0.5147	5.7224	0.5117
5.9948	1.2	5.9948	0.6474	5.9948	0.5599	5.9948	0.5327	5.9948	0.512	5.9948	0.4821	5.9948	0.4861
6.2803	1.2	6.2803	0.7482	6.2803	0.6357	6.2803	0.5707	6.2803	0.5436	6.2803	0.4982	6.2803	0.4735
6.5793	1.5424	6.5793	0.8479	6.5793	0.6847	6.5793	0.6018	6.5793	0.5757	6.5793	0.5344	6.5793	0.4848
6.8926	1.8136	6.8926	0.974	6.8926	0.7343	6.8926	0.6233	6.8926	0.5933	6.8926	0.5446	6.8926	0.4987
7.2208	1.8136	7.2208	0.974	7.2208	0.7423	7.2208	0.684	7.2208	0.6378	7.2208	0.5711	7.2208	0.5069
7.5646	1.8136	7.5646	0.974	7.5646	0.7423	7.5646	0.684	7.5646	0.6378	7.5646	0.5711	7.5646	0.5069
7.9248	1.8136	7.9248	0.974	7.9248	0.7423	7.9248	0.684	7.9248	0.6378	7.9248	0.5711	7.9248	0.5069
8.3022	1.8136	8.3022	0.974	8.3022	0.7423	8.3022	0.684	8.3022	0.6378	8.3022	0.5711	8.3022	0.5069
8.6975	1.4099	8.6975	0.8352	8.6975	0.7423	8.6975	0.684	8.6975	0.6378	8.6975	0.5711	8.6975	0.5069
9.1116	1.001	9.1116	0.6622	9.1116	0.6162	9.1116	0.5977	9.1116	0.5769	9.1116	0.5373	9.1116	0.4896
9.5455	0.8404	9.5455	0.5998	9.5455	0.5657	9.5455	0.5394	9.5455	0.5225	9.5455	0.5005	9.5455	0.4689
10	0.6745	10	0.5998	10	0.5657	10	0.5394	10	0.5187	10	0.4877	10	0.4553
10.4762	0.572	10.4762	0.4915	10.4762	0.487	10.4762	0.4816	10.4762	0.4736	10.4762	0.4556	10.4762	0.433
10.975	0.572	10.975	0.4915	10.975	0.4781	10.975	0.4658	10.975	0.4552	10.975	0.4378	10.975	0.4175
11.4976	0.4636	11.4976	0.4648	11.4976	0.4484	11.4976	0.4337	11.4976	0.4218	11.4976	0.4094	11.4976	0.3962
12.045	0.4491	12.045	0.4045	12.045	0.3965	12.045	0.3945	12.045	0.393	12.045	0.3913	12.045	0.3895
12.6186	0.4491	12.6186	0.4045	12.6186	0.3957	12.6186	0.392	12.6186	0.3903	12.6186	0.3885	12.6186	0.3869
13.2194	0.4491	13.2194	0.4045	13.2194	0.3957	13.2194	0.3907	13.2194	0.3882	13.2194	0.3853	13.2194	0.3846
13.8489	0.5669	13.8489	0.4508	13.8489	0.4226	13.8489	0.4077	13.8489	0.3984	13.8489	0.3876	13.8489	0.3834

14.5083	0.5669	14.5083	0.4508	14.5083	0.4226	14.5083	0.4077	14.5083	0.3984	14.5083	0.3876	14.5083	0.3822
15.1991	0.5669	15.1991	0.4508	15.1991	0.4226	15.1991	0.4077	15.1991	0.3984	15.1991	0.3876	15.1991	0.3805
15.9228	0.5669	15.9228	0.4508	15.9228	0.4226	15.9228	0.4077	15.9228	0.3984	15.9228	0.3876	15.9228	0.3804
16.681	0.5669	16.681	0.4508	16.681	0.4226	16.681	0.4077	16.681	0.3984	16.681	0.3876	16.681	0.3793
17.4753	0.5622	17.4753	0.4284	17.4753	0.4129	17.4753	0.4035	17.4753	0.3964	17.4753	0.3864	17.4753	0.3788
18.3074	0.5236	18.3074	0.4191	18.3074	0.4041	18.3074	0.397	18.3074	0.3916	18.3074	0.3843	18.3074	0.3788
19.1791	0.5236	19.1791	0.4191	19.1791	0.4041	19.1791	0.397	19.1791	0.3916	19.1791	0.3843	19.1791	0.3788
20.0923	0.5236	20.0923	0.4128	20.0923	0.4041	20.0923	0.397	20.0923	0.3916	20.0923	0.3843	20.0923	0.3788
21.049	0.4235	21.049	0.3889	21.049	0.3847	21.049	0.3848	21.049	0.3841	21.049	0.382	21.049	0.3788
22.0513	0.4235	22.0513	0.3889	22.0513	0.384	22.0513	0.3822	22.0513	0.3809	22.0513	0.3798	22.0513	0.3777
23.1013	0.4235	23.1013	0.3889	23.1013	0.384	23.1013	0.3822	23.1013	0.3807	23.1013	0.3785	23.1013	0.3762
24.2013	0.396	24.2013	0.3804	24.2013	0.3791	24.2013	0.3781	24.2013	0.3771	24.2013	0.3754	24.2013	0.3738
25.3536	0.396	25.3536	0.3788	25.3536	0.3776	25.3536	0.3766	25.3536	0.3757	25.3536	0.3743	25.3536	0.3729
26.5609	0.396	26.5609	0.3769	26.5609	0.3743	26.5609	0.3732	26.5609	0.3726	26.5609	0.372	26.5609	0.3715
27.8256	0.3933	27.8256	0.3748	27.8256	0.3724	27.8256	0.3717	27.8256	0.3711	27.8256	0.3703	27.8256	0.3703
29.1505	0.3933	29.1505	0.3735	29.1505	0.3724	29.1505	0.3717	29.1505	0.3711	29.1505	0.3703	29.1505	0.3699
30.5386	0.3933	30.5386	0.3735	30.5386	0.3724	30.5386	0.3717	30.5386	0.3711	30.5386	0.3702	30.5386	0.3695
31.9927	0.3933	31.9927	0.3729	31.9927	0.3707	31.9927	0.3699	31.9927	0.3693	31.9927	0.3687	31.9927	0.3687
33.516	0.3733	33.516	0.3719	33.516	0.3707	33.516	0.3699	33.516	0.3693	33.516	0.3685	33.516	0.3684
35.1119	0.3694	35.1119	0.3692	35.1119	0.3689	35.1119	0.3687	35.1119	0.3685	35.1119	0.3685	35.1119	0.3684
36.7838	0.3686	36.7838	0.3686	36.7838	0.3685	36.7838	0.3685	36.7838	0.3685	36.7838	0.3685	36.7838	0.3684
38.5353	0.3686	38.5353	0.3686	38.5353	0.3685	38.5353	0.3685	38.5353	0.3685	38.5353	0.3685	38.5353	0.3684
40.3702	0.3686	40.3702	0.3686	40.3702	0.3685	40.3702	0.3685	40.3702	0.3685	40.3702	0.3685	40.3702	0.3684
42.2924	0.3685	42.2924	0.3685	42.2924	0.3685	42.2924	0.3685	42.2924	0.3685	42.2924	0.3684	42.2924	0.3684
44.3062	0.3685	44.3062	0.3684	44.3062	0.3684	44.3062	0.3684	44.3062	0.3684	44.3062	0.3684	44.3062	0.3684
46.4159	0.3684	46.4159	0.3684	46.4159	0.3684	46.4159	0.3683	46.4159	0.3683	46.4159	0.3683	46.4159	0.3683
48.626	0.3683	48.626	0.3683	48.626	0.3683	48.626	0.3683	48.626	0.3683	48.626	0.3683	48.626	0.3683
50.9414	0.3682	50.9414	0.3682	50.9414	0.3682	50.9414	0.3682	50.9414	0.3682	50.9414	0.3682	50.9414	0.3682

RPP-WTP Pretreatment Facility ISRS
Calc No.: 24590-PTF-S0C-S15T-00005, Rev. 0B

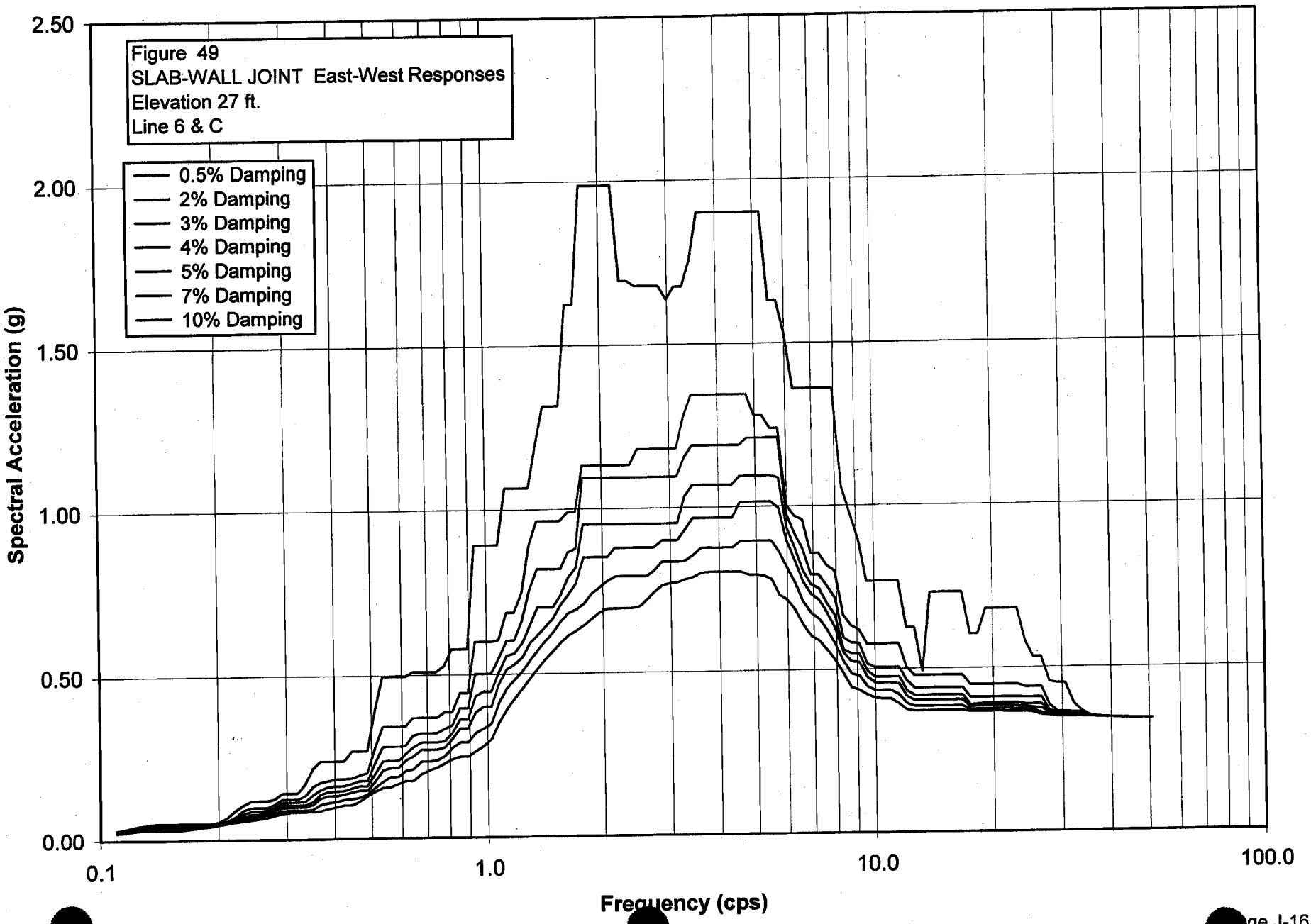

S_PTWW049.grf
RPP-WTP Pretreatment Facility ISRS
Calc No.: 24590-PTF-S0C-S15T-00005, Rev. 0B
Frequency (cps)
Spectral Acceleration (g)
Figure 49
SLAB-WALL JOINT East-West Responses
Elevation 27 ft.
Line 6 & C

Damping	0.50%	Damping	2%	Damping	3%	Damping	4%	Damping	5%	Damping	7%	Damping	10%
Freq.	Accel.	Freq.	Accel.	Freq.	Accel.	Freq.	Accel.	Freq.	Accel.	Freq.	Accel.	Freq.	Accel.
0.1098	0.0314	0.1098	0.0288	0.1098	0.0275	0.1098	0.0268	0.1098	0.026	0.1098	0.0248	0.1098	0.0232
0.115	0.0358	0.115	0.033	0.115	0.0314	0.115	0.03	0.115	0.029	0.115	0.0274	0.115	0.0253
0.1204	0.041	0.1204	0.0382	0.1204	0.0366	0.1204	0.0352	0.1204	0.0339	0.1204	0.0316	0.1204	0.0287
0.1262	0.0459	0.1262	0.0426	0.1262	0.0407	0.1262	0.0389	0.1262	0.0372	0.1262	0.0344	0.1262	0.0311
0.1322	0.0488	0.1322	0.0442	0.1322	0.0421	0.1322	0.0402	0.1322	0.0385	0.1322	0.0356	0.1322	0.032
0.1385	0.0518	0.1385	0.0462	0.1385	0.0431	0.1385	0.0402	0.1385	0.0385	0.1385	0.0356	0.1385	0.032
0.1451	0.0518	0.1451	0.0462	0.1451	0.0431	0.1451	0.0402	0.1451	0.0385	0.1451	0.0356	0.1451	0.032
0.152	0.0518	0.152	0.0462	0.152	0.0431	0.152	0.0402	0.152	0.0385	0.152	0.0356	0.152	0.032
0.1592	0.0518	0.1592	0.0462	0.1592	0.0431	0.1592	0.0402	0.1592	0.0385	0.1592	0.0356	0.1592	0.0322
0.1668	0.0518	0.1668	0.0462	0.1668	0.0431	0.1668	0.0402	0.1668	0.0385	0.1668	0.0361	0.1668	0.035
0.1748	0.0518	0.1748	0.0462	0.1748	0.0431	0.1748	0.041	0.1748	0.0404	0.1748	0.0393	0.1748	0.0377
0.1831	0.0518	0.1831	0.0463	0.1831	0.0454	0.1831	0.0446	0.1831	0.0439	0.1831	0.0425	0.1831	0.0404
0.1918	0.0521	0.1918	0.0505	0.1918	0.0494	0.1918	0.0485	0.1918	0.0475	0.1918	0.0457	0.1918	0.0435
0.2009	0.0569	0.2009	0.0548	0.2009	0.0536	0.2009	0.0525	0.2009	0.0514	0.2009	0.0496	0.2009	0.0472
0.2105	0.0707	0.2105	0.06	0.2105	0.0586	0.2105	0.0573	0.2105	0.0561	0.2105	0.0539	0.2105	0.0514
0.2205	0.0909	0.2205	0.0714	0.2205	0.0643	0.2205	0.0624	0.2205	0.0609	0.2205	0.0585	0.2205	0.0556
0.231	0.1078	0.231	0.0907	0.231	0.0813	0.231	0.0735	0.231	0.0672	0.231	0.0629	0.231	0.0591
0.242	0.1195	0.242	0.0992	0.242	0.0883	0.242	0.0792	0.242	0.0715	0.242	0.0664	0.242	0.0618
0.2535	0.1201	0.2535	0.0992	0.2535	0.0883	0.2535	0.0796	0.2535	0.0755	0.2535	0.0692	0.2535	0.0656
0.2656	0.1201	0.2656	0.0992	0.2656	0.0923	0.2656	0.0879	0.2656	0.084	0.2656	0.0769	0.2656	0.0686
0.2783	0.1253	0.2783	0.1095	0.2783	0.1007	0.2783	0.095	0.2783	0.0907	0.2783	0.0834	0.2783	0.0752
0.2915	0.1422	0.2915	0.1246	0.2915	0.1146	0.2915	0.1058	0.2915	0.0981	0.2915	0.0885	0.2915	0.0808
0.3054	0.1422	0.3054	0.1246	0.3054	0.1151	0.3054	0.1068	0.3054	0.0995	0.3054	0.0905	0.3054	0.0836
0.3199	0.1422	0.3199	0.1246	0.3199	0.1151	0.3199	0.1068	0.3199	0.0995	0.3199	0.0905	0.3199	0.0842
0.3352	0.1709	0.3352	0.1344	0.3352	0.1181	0.3352	0.1068	0.3352	0.0995	0.3352	0.0905	0.3352	0.0842
0.3511	0.2171	0.3511	0.1629	0.3511	0.1368	0.3511	0.1167	0.3511	0.1074	0.3511	0.0928	0.3511	0.0842
0.3678	0.2398	0.3678	0.1755	0.3678	0.1528	0.3678	0.1392	0.3678	0.1273	0.3678	0.1077	0.3678	0.0883

S_PTFWW049.grf
24590-G04B-F00019 Rev 4 (1/17/2006)

0.3853	0.2398	0.3853	0.18	0.3853	0.1619	0.3853	0.1464	0.3853	0.1332	0.3853	0.1121	0.3853	0.0946
0.4037	0.2398	0.4037	0.1847	0.4037	0.1644	0.4037	0.1477	0.4037	0.1336	0.4037	0.1159	0.4037	0.0992
0.4229	0.2398	0.4229	0.1847	0.4229	0.1644	0.4229	0.1497	0.4229	0.1382	0.4229	0.1216	0.4229	0.1048
0.4431	0.2692	0.4431	0.1869	0.4431	0.171	0.4431	0.1569	0.4431	0.1444	0.4431	0.1238	0.4431	0.1048
0.4642	0.2692	0.4642	0.1959	0.4642	0.1787	0.4642	0.1634	0.4642	0.15	0.4642	0.1277	0.4642	0.116
0.4863	0.2692	0.4863	0.2041	0.4863	0.1788	0.4863	0.1634	0.4863	0.15	0.4863	0.1384	0.4863	0.1318
0.5094	0.392	0.5094	0.2796	0.5094	0.2333	0.5094	0.2002	0.5094	0.1756	0.5094	0.1582	0.5094	0.1469
0.5337	0.4964	0.5337	0.3455	0.5337	0.282	0.5337	0.2378	0.5337	0.211	0.5337	0.175	0.5337	0.1575
0.5591	0.4964	0.5591	0.3455	0.5591	0.282	0.5591	0.2378	0.5591	0.2165	0.5591	0.189	0.5591	0.1594
0.5857	0.4964	0.5857	0.3455	0.5857	0.282	0.5857	0.2378	0.5857	0.2165	0.5857	0.189	0.5857	0.1675
0.6136	0.4964	0.6136	0.3455	0.6136	0.2842	0.6136	0.2585	0.6136	0.2381	0.6136	0.2071	0.6136	0.1757
0.6428	0.5096	0.6428	0.3717	0.6428	0.3166	0.6428	0.2792	0.6428	0.2511	0.6428	0.2116	0.6428	0.1757
0.6734	0.5096	0.6734	0.3717	0.6734	0.3233	0.6734	0.2945	0.6734	0.271	0.6734	0.2347	0.6734	0.1972
0.7055	0.5096	0.7055	0.3717	0.7055	0.3233	0.7055	0.2945	0.7055	0.271	0.7055	0.2347	0.7055	0.2075
0.7391	0.5096	0.7391	0.3717	0.7391	0.3233	0.7391	0.2945	0.7391	0.271	0.7391	0.2375	0.7391	0.2158
0.7743	0.5275	0.7743	0.3887	0.7743	0.3368	0.7743	0.298	0.7743	0.2779	0.7743	0.251	0.7743	0.228
0.8111	0.5803	0.8111	0.3887	0.8111	0.348	0.8111	0.3233	0.8111	0.3061	0.8111	0.2768	0.8111	0.2418
0.8497	0.5803	0.8497	0.4454	0.8497	0.4	0.8497	0.365	0.8497	0.337	0.8497	0.2941	0.8497	0.2492
0.8902	0.5803	0.8902	0.4454	0.8902	0.4	0.8902	0.365	0.8902	0.337	0.8902	0.2941	0.8902	0.2492
0.9326	0.892	0.9326	0.6018	0.9326	0.5026	0.9326	0.4355	0.9326	0.3872	0.9326	0.3226	0.9326	0.2652
0.977	0.892	0.977	0.6018	0.977	0.5026	0.977	0.4488	0.977	0.4037	0.977	0.3362	0.977	0.2804
1.0235	0.892	1.0235	0.6018	1.0235	0.5026	1.0235	0.4488	1.0235	0.4037	1.0235	0.3512	1.0235	0.3029
1.0723	0.892	1.0723	0.6075	1.0723	0.5491	1.0723	0.5065	1.0723	0.4717	1.0723	0.4154	1.0723	0.3548
1.1233	1.0658	1.1233	0.6891	1.1233	0.6044	1.1233	0.5572	1.1233	0.5151	1.1233	0.4582	1.1233	0.3964
1.1768	1.0658	1.1768	0.6891	1.1768	0.6061	1.1768	0.5648	1.1768	0.5296	1.1768	0.483	1.1768	0.4276
1.2328	1.0658	1.2328	0.7474	1.2328	0.6643	1.2328	0.5952	1.2328	0.5507	1.2328	0.508	1.2328	0.4564
1.2916	1.0658	1.2916	0.8905	1.2916	0.7571	1.2916	0.6503	1.2916	0.5954	1.2916	0.5412	1.2916	0.4866
1.353	1.1983	1.353	0.9638	1.353	0.8182	1.353	0.7039	1.353	0.6206	1.353	0.5749	1.353	0.5174
1.4175	1.3153	1.4175	0.9638	1.4175	0.8182	1.4175	0.7039	1.4175	0.6449	1.4175	0.6022	1.4175	0.545
1.485	1.3153	1.485	0.9638	1.485	0.8182	1.485	0.7039	1.485	0.6716	1.485	0.6291	1.485	0.5719
1.5557	1.3171	1.5557	0.9638	1.5557	0.8182	1.5557	0.7408	1.5557	0.7117	1.5557	0.6618	1.5557	0.5978
1.6298	1.6249	1.6298	0.9909	1.6298	0.8676	1.6298	0.7925	1.6298	0.7406	1.6298	0.6857	1.6298	0.6199
1.7074	1.6249	1.7074	0.9909	1.7074	0.8791	1.7074	0.8217	1.7074	0.7743	1.7074	0.696	1.7074	0.6329
1.7887	1.9874	1.7887	1.1332	1.7887	1.0948	1.7887	0.9523	1.7887	0.8516	1.7887	0.7134	1.7887	0.6496
1.8738	1.9874	1.8738	1.1332	1.8738	1.0948	1.8738	0.9523	1.8738	0.8516	1.8738	0.7433	1.8738	0.6691
1.963	1.9874	1.963	1.1332	1.963	1.0948	1.963	0.9523	1.963	0.8516	1.963	0.7616	1.963	0.6867
2.0565	1.9874	2.0565	1.1332	2.0565	1.0948	2.0565	0.9523	2.0565	0.8516	2.0565	0.7797	2.0565	0.6975
2.1544	1.9874	2.1544	1.1332	2.1544	1.0948	2.1544	0.9523	2.1544	0.879	2.1544	0.7931	2.1544	0.6975
2.257	1.6947	2.257	1.1332	2.257	1.0948	2.257	0.9523	2.257	0.879	2.257	0.7931	2.257	0.6975

S_PTFWW049.grf
245[redacted]04B-F00019 Rev 4 (1/17/2006)

2.3645	1.6947	2.3645	1.1332	2.3645	1.0948	2.3645	0.9523	2.3645	0.879	2.3645	0.7931	2.3645	0.6975
2.4771	1.6786	2.4771	1.1814	2.4771	1.0948	2.4771	0.9523	2.4771	0.879	2.4771	0.7931	2.4771	0.7021
2.595	1.6786	2.595	1.1814	2.595	1.0948	2.595	0.9523	2.595	0.879	2.595	0.7931	2.595	0.722
2.7186	1.6786	2.7186	1.1814	2.7186	1.0948	2.7186	0.9523	2.7186	0.879	2.7186	0.8094	2.7186	0.7455
2.848	1.6786	2.848	1.1814	2.848	1.0948	2.848	0.9523	2.848	0.9003	2.848	0.8358	2.848	0.7644
2.9836	1.6376	2.9836	1.1814	2.9836	1.0948	2.9836	0.9523	2.9836	0.9003	2.9836	0.8358	2.9836	0.7704
3.1257	1.6758	3.1257	1.1814	3.1257	1.0948	3.1257	0.9523	3.1257	0.9003	3.1257	0.8358	3.1257	0.7734
3.2745	1.6758	3.2745	1.2788	3.2745	1.1532	3.2745	1.0344	3.2745	0.9325	3.2745	0.8387	3.2745	0.7819
3.4305	1.7557	3.4305	1.3454	3.4305	1.1896	3.4305	1.068	3.4305	0.9678	3.4305	0.8543	3.4305	0.7879
3.5938	1.9013	3.5938	1.3454	3.5938	1.1896	3.5938	1.068	3.5938	0.9678	3.5938	0.8757	3.5938	0.801
3.7649	1.9013	3.7649	1.3454	3.7649	1.1896	3.7649	1.068	3.7649	0.9678	3.7649	0.8757	3.7649	0.8026
3.9442	1.9013	3.9442	1.3454	3.9442	1.1896	3.9442	1.068	3.9442	0.9678	3.9442	0.8757	3.9442	0.8026
4.132	1.9013	4.132	1.3454	4.132	1.1896	4.132	1.068	4.132	0.9678	4.132	0.8757	4.132	0.8026
4.3288	1.9013	4.3288	1.3454	4.3288	1.1896	4.3288	1.068	4.3288	0.9678	4.3288	0.8757	4.3288	0.8026
4.5349	1.9013	4.5349	1.3454	4.5349	1.1903	4.5349	1.0937	4.5349	1.0144	4.5349	0.8958	4.5349	0.8026
4.7508	1.9013	4.7508	1.3454	4.7508	1.2105	4.7508	1.0937	4.7508	1.0144	4.7508	0.8958	4.7508	0.7932
4.977	1.9013	4.977	1.2792	4.977	1.2105	4.977	1.0937	4.977	1.0144	4.977	0.8958	4.977	0.7926
5.214	1.9013	5.214	1.2792	5.214	1.2105	5.214	1.0937	5.214	1.0144	5.214	0.8958	5.214	0.7897
5.4623	1.6306	5.4623	1.2391	5.4623	1.2105	5.4623	1.0937	5.4623	1.0144	5.4623	0.8958	5.4623	0.7781
5.7224	1.6306	5.7224	1.2391	5.7224	1.2105	5.7224	1.0879	5.7224	0.9942	5.7224	0.8596	5.7224	0.7304
5.9948	1.5309	5.9948	1.0026	5.9948	0.9746	5.9948	0.9353	5.9948	0.8928	5.9948	0.8126	5.9948	0.7163
6.2803	1.3612	6.2803	0.9697	6.2803	0.9148	6.2803	0.8704	6.2803	0.832	6.2803	0.7655	6.2803	0.6843
6.5793	1.3612	6.5793	0.9585	6.5793	0.868	6.5793	0.8025	6.5793	0.7697	6.5793	0.71	6.5793	0.6408
6.8926	1.3612	6.8926	0.8554	6.8926	0.7904	6.8926	0.7613	6.8926	0.7324	6.8926	0.6758	6.8926	0.6062
7.2208	1.3612	7.2208	0.8554	7.2208	0.7904	7.2208	0.749	7.2208	0.7148	7.2208	0.6581	7.2208	0.5919
7.5646	1.3612	7.5646	0.8177	7.5646	0.7556	7.5646	0.7021	7.5646	0.6749	7.5646	0.6236	7.5646	0.5612
7.9248	1.3612	7.9248	0.8014	7.9248	0.7204	7.9248	0.6679	7.9248	0.6294	7.9248	0.5809	7.9248	0.5295
8.3022	1.0565	8.3022	0.6678	8.3022	0.6005	8.3022	0.5636	8.3022	0.5528	8.3022	0.526	8.3022	0.487
8.6975	0.9764	8.6975	0.6367	8.6975	0.5844	8.6975	0.5504	8.6975	0.5255	8.6975	0.4873	8.6975	0.4455
9.1116	0.8988	9.1116	0.6244	9.1116	0.5824	9.1116	0.5495	9.1116	0.5228	9.1116	0.4817	9.1116	0.4379
9.5455	0.7685	9.5455	0.5801	9.5455	0.5173	9.5455	0.4949	9.5455	0.4767	9.5455	0.4477	9.5455	0.4241
10	0.7685	10	0.5801	10	0.5062	10	0.4771	10	0.4589	10	0.4355	10	0.4135
10.4762	0.7685	10.4762	0.5801	10.4762	0.5062	10.4762	0.4771	10.4762	0.4589	10.4762	0.4355	10.4762	0.4107
10.975	0.7685	10.975	0.5801	10.975	0.5062	10.975	0.4771	10.975	0.4589	10.975	0.4355	10.975	0.4107
11.4976	0.7685	11.4976	0.5801	11.4976	0.5062	11.4976	0.4771	11.4976	0.4553	11.4976	0.4233	11.4976	0.3954
12.045	0.6292	12.045	0.5034	12.045	0.4637	12.045	0.4342	12.045	0.4171	12.045	0.3959	12.045	0.3765
12.6186	0.6292	12.6186	0.4794	12.6186	0.4422	12.6186	0.4199	12.6186	0.405	12.6186	0.3867	12.6186	0.3728
13.2194	0.4919	13.2194	0.4794	13.2194	0.4422	13.2194	0.4199	13.2194	0.405	13.2194	0.3867	13.2194	0.3728
13.8489	0.7331	13.8489	0.4794	13.8489	0.4422	13.8489	0.4199	13.8489	0.405	13.8489	0.3867	13.8489	0.3728

S_PTFWW049.grf
24590-G04B-F00019 Rev 4 (1/17/2006)

14.5083	0.7331	14.5083	0.4794	14.5083	0.4422	14.5083	0.4199	14.5083	0.405	14.5083	0.3867	14.5083	0.3728
15.1991	0.7331	15.1991	0.4794	15.1991	0.4422	15.1991	0.4199	15.1991	0.405	15.1991	0.3867	15.1991	0.3728
15.9228	0.7331	15.9228	0.4794	15.9228	0.4422	15.9228	0.4199	15.9228	0.405	15.9228	0.3867	15.9228	0.3728
16.681	0.7331	16.681	0.4794	16.681	0.4422	16.681	0.4199	16.681	0.405	16.681	0.3867	16.681	0.3728
17.4753	0.6074	17.4753	0.4489	17.4753	0.4111	17.4753	0.3896	17.4753	0.382	17.4753	0.3742	17.4753	0.3684
18.3074	0.6074	18.3074	0.4489	18.3074	0.4111	18.3074	0.3914	18.3074	0.386	18.3074	0.3761	18.3074	0.3684
19.1791	0.6818	19.1791	0.4489	19.1791	0.4111	19.1791	0.3933	19.1791	0.386	19.1791	0.3761	19.1791	0.3684
20.0923	0.6818	20.0923	0.4489	20.0923	0.4111	20.0923	0.3933	20.0923	0.386	20.0923	0.3761	20.0923	0.3684
21.049	0.6818	21.049	0.4489	21.049	0.4111	21.049	0.3933	21.049	0.386	21.049	0.3761	21.049	0.3684
22.0513	0.6818	22.0513	0.4489	22.0513	0.4111	22.0513	0.3933	22.0513	0.386	22.0513	0.3761	22.0513	0.3671
23.1013	0.6818	23.1013	0.4489	23.1013	0.4111	23.1013	0.3933	23.1013	0.3831	23.1013	0.3746	23.1013	0.3671
24.2013	0.5838	24.2013	0.4402	24.2013	0.4098	24.2013	0.3892	24.2013	0.3828	24.2013	0.3746	24.2013	0.3671
25.3536	0.5332	25.3536	0.4402	25.3536	0.4098	25.3536	0.3892	25.3536	0.3787	25.3536	0.3712	25.3536	0.3639
26.5609	0.5332	26.5609	0.4402	26.5609	0.4098	26.5609	0.3892	26.5609	0.3751	26.5609	0.3625	26.5609	0.3561
27.8256	0.4569	27.8256	0.3858	27.8256	0.368	27.8256	0.3656	27.8256	0.3631	27.8256	0.3587	27.8256	0.3539
29.1505	0.4509	29.1505	0.3647	29.1505	0.3631	29.1505	0.36	29.1505	0.3564	29.1505	0.3523	29.1505	0.3503
30.5386	0.4509	30.5386	0.3647	30.5386	0.3613	30.5386	0.3574	30.5386	0.3549	30.5386	0.3523	30.5386	0.3498
31.9927	0.3911	31.9927	0.362	31.9927	0.359	31.9927	0.3567	31.9927	0.3549	31.9927	0.3523	31.9927	0.3498
33.516	0.3669	33.516	0.362	33.516	0.359	33.516	0.3567	33.516	0.3549	33.516	0.3523	33.516	0.3498
35.1119	0.3532	35.1119	0.353	35.1119	0.3527	35.1119	0.3522	35.1119	0.3517	35.1119	0.3506	35.1119	0.3491
36.7838	0.3493	36.7838	0.3492	36.7838	0.3492	36.7838	0.349	36.7838	0.3489	36.7838	0.3485	36.7838	0.3478
38.5353	0.3471	38.5353	0.3471	38.5353	0.3471	38.5353	0.347	38.5353	0.347	38.5353	0.3468	38.5353	0.3465
40.3702	0.3457	40.3702	0.3457	40.3702	0.3457	40.3702	0.3457	40.3702	0.3456	40.3702	0.3455	40.3702	0.3454
42.2924	0.3447	42.2924	0.3447	42.2924	0.3447	42.2924	0.3447	42.2924	0.3447	42.2924	0.3446	42.2924	0.3445
44.3062	0.3439	44.3062	0.3439	44.3062	0.3439	44.3062	0.3439	44.3062	0.3439	44.3062	0.3438	44.3062	0.3438
46.4159	0.3432	46.4159	0.3432	46.4159	0.3432	46.4159	0.3432	46.4159	0.3432	46.4159	0.3432	46.4159	0.3431
48.626	0.3426	48.626	0.3426	48.626	0.3426	48.626	0.3426	48.626	0.3426	48.626	0.3426	48.626	0.3426
50.9414	0.342	50.9414	0.342	50.9414	0.342	50.9414	0.342	50.9414	0.342	50.9414	0.342	50.9414	0.3421

RPP-WTP Pretreatment Facility ISRS
Calc No.: 24590-PTF-S0C-S15T-00005, Rev. 0B

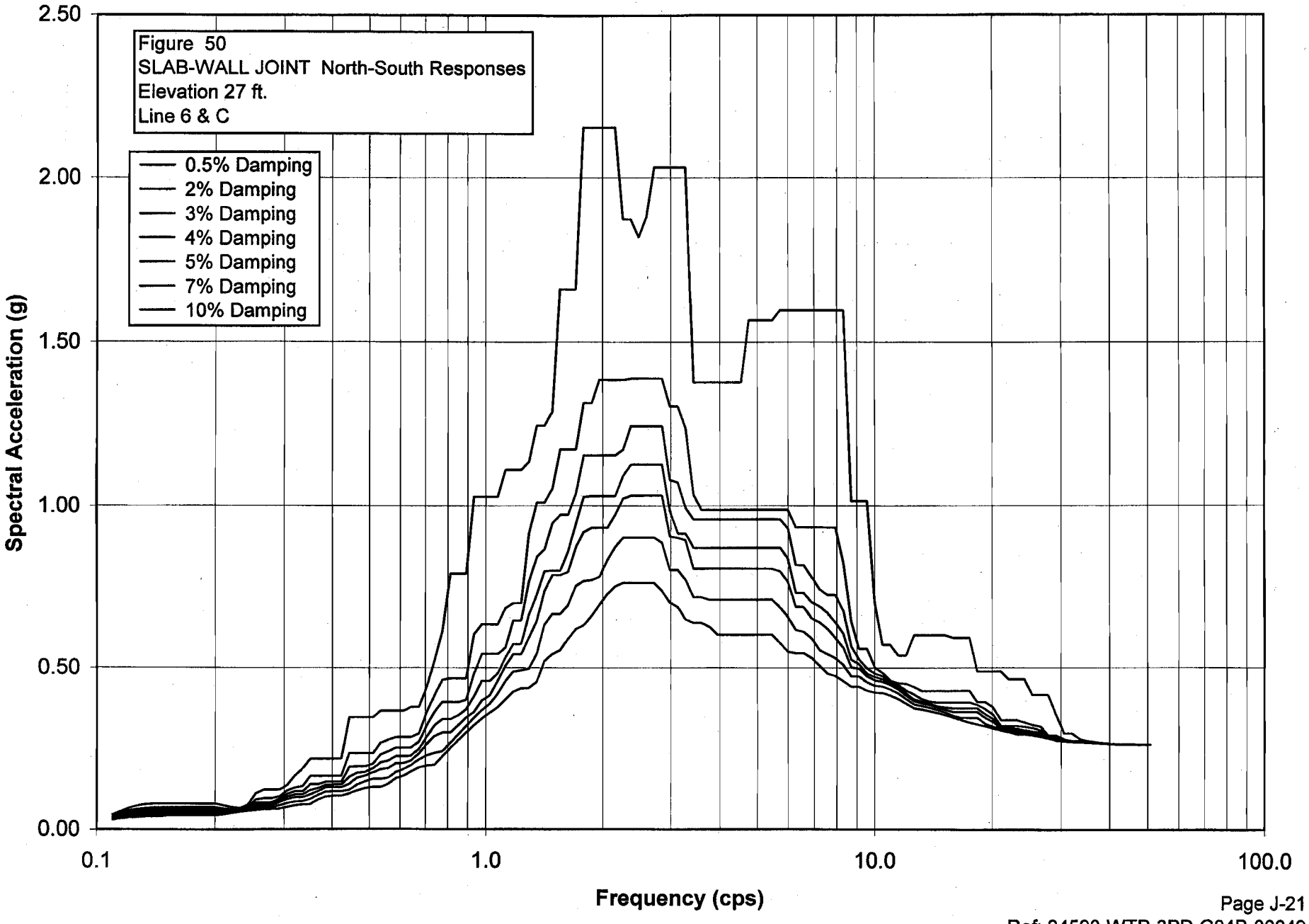

S_PTWW050.grf
RPP-WTP Pretreatment Facility ISRS
Calc No.: 24590-PTF-S0C-S15T-00005, Rev. 0B
Frequency (cps)
Spectral Acceleration (g)
Figure 50
SLAB-WALL JOINT North-South Responses
Elevation 27 ft.
Line 6 & C

Damping	0.50%	Damping	2%	Damping	3%	Damping	4%	Damping	5%	Damping	7%	Damping	10%
Freq.	Accel.	Freq.	Accel.	Freq.	Accel.	Freq.	Accel.	Freq.	Accel.	Freq.	Accel.	Freq.	Accel.
0.1098	0.0457	0.1098	0.0394	0.1098	0.0364	0.1098	0.0343	0.1098	0.0327	0.1098	0.0308	0.1098	0.0283
0.115	0.0555	0.115	0.0493	0.115	0.0464	0.115	0.044	0.115	0.0419	0.115	0.0381	0.115	0.0335
0.1204	0.0648	0.1204	0.0582	0.1204	0.0544	0.1204	0.051	0.1204	0.048	0.1204	0.0427	0.1204	0.0363
0.1262	0.0719	0.1262	0.0618	0.1262	0.0571	0.1262	0.0533	0.1262	0.0498	0.1262	0.0437	0.1262	0.038
0.1322	0.0762	0.1322	0.0652	0.1322	0.0602	0.1322	0.0562	0.1322	0.0527	0.1322	0.0468	0.1322	0.04
0.1385	0.0785	0.1385	0.0672	0.1385	0.0608	0.1385	0.0562	0.1385	0.0527	0.1385	0.0468	0.1385	0.04
0.1451	0.0789	0.1451	0.0676	0.1451	0.0612	0.1451	0.0562	0.1451	0.0527	0.1451	0.0468	0.1451	0.0408
0.152	0.0789	0.152	0.0676	0.152	0.0612	0.152	0.0565	0.152	0.0535	0.152	0.0483	0.152	0.043
0.1592	0.0789	0.1592	0.0676	0.1592	0.0612	0.1592	0.0565	0.1592	0.0535	0.1592	0.0485	0.1592	0.0439
0.1668	0.0789	0.1668	0.0676	0.1668	0.0612	0.1668	0.0565	0.1668	0.0535	0.1668	0.0485	0.1668	0.0439
0.1748	0.0789	0.1748	0.0676	0.1748	0.0612	0.1748	0.0565	0.1748	0.0535	0.1748	0.0485	0.1748	0.0439
0.1831	0.0789	0.1831	0.0676	0.1831	0.0612	0.1831	0.0565	0.1831	0.0535	0.1831	0.0485	0.1831	0.0439
0.1918	0.0789	0.1918	0.0676	0.1918	0.0612	0.1918	0.0563	0.1918	0.0532	0.1918	0.0485	0.1918	0.0439
0.2009	0.0789	0.2009	0.0676	0.2009	0.0612	0.2009	0.0563	0.2009	0.0532	0.2009	0.048	0.2009	0.0439
0.2105	0.0736	0.2105	0.0632	0.2105	0.0596	0.2105	0.0563	0.2105	0.0532	0.2105	0.049	0.2105	0.047
0.2205	0.0685	0.2205	0.0624	0.2205	0.0589	0.2205	0.056	0.2205	0.0549	0.2205	0.0528	0.2205	0.0508
0.231	0.0649	0.231	0.0625	0.231	0.0611	0.231	0.0598	0.231	0.0585	0.231	0.0564	0.231	0.0543
0.242	0.0761	0.242	0.0688	0.242	0.065	0.242	0.0631	0.242	0.0618	0.242	0.0597	0.242	0.0572
0.2535	0.11	0.2535	0.0917	0.2535	0.0824	0.2535	0.0752	0.2535	0.0694	0.2535	0.0624	0.2535	0.0596
0.2656	0.1218	0.2656	0.0952	0.2656	0.0827	0.2656	0.0752	0.2656	0.0694	0.2656	0.0645	0.2656	0.0612
0.2783	0.1218	0.2783	0.0952	0.2783	0.0829	0.2783	0.0782	0.2783	0.074	0.2783	0.0672	0.2783	0.0621
0.2915	0.1218	0.2915	0.1006	0.2915	0.0937	0.2915	0.0876	0.2915	0.0822	0.2915	0.073	0.2915	0.0629
0.3054	0.1364	0.3054	0.1184	0.3054	0.1083	0.3054	0.0996	0.3054	0.0922	0.3054	0.0803	0.3054	0.0681
0.3199	0.1646	0.3199	0.1276	0.3199	0.1162	0.3199	0.1064	0.3199	0.0979	0.3199	0.0846	0.3199	0.0735
0.3352	0.1871	0.3352	0.1325	0.3352	0.1162	0.3352	0.1064	0.3352	0.0979	0.3352	0.0857	0.3352	0.076
0.3511	0.2165	0.3511	0.1635	0.3511	0.1384	0.3511	0.1191	0.3511	0.1059	0.3511	0.0919	0.3511	0.0768
0.3678	0.2165	0.3678	0.1635	0.3678	0.1384	0.3678	0.1265	0.3678	0.1169	0.3678	0.1046	0.3678	0.0905

0.3853	0.2165	0.3853	0.1635	0.3853	0.1455	0.3853	0.1364	0.3853	0.1284	0.3853	0.1147	0.3853	0.099
0.4037	0.2165	0.4037	0.1635	0.4037	0.1455	0.4037	0.1365	0.4037	0.1288	0.4037	0.1159	0.4037	0.1016
0.4229	0.218	0.4229	0.1641	0.4229	0.1455	0.4229	0.1365	0.4229	0.1288	0.4229	0.1159	0.4229	0.1016
0.4431	0.3448	0.4431	0.2339	0.4431	0.1912	0.4431	0.1606	0.4431	0.1396	0.4431	0.12	0.4431	0.1091
0.4642	0.3448	0.4642	0.2339	0.4642	0.193	0.4642	0.1732	0.4642	0.158	0.4642	0.1365	0.4642	0.1183
0.4863	0.3448	0.4863	0.2339	0.4863	0.193	0.4863	0.1761	0.4863	0.1638	0.4863	0.1467	0.4863	0.1254
0.5094	0.3448	0.5094	0.2339	0.5094	0.2005	0.5094	0.1865	0.5094	0.1748	0.5094	0.1542	0.5094	0.1297
0.5337	0.3656	0.5337	0.2669	0.5337	0.2304	0.5337	0.2052	0.5337	0.1846	0.5337	0.1542	0.5337	0.1297
0.5591	0.3656	0.5591	0.2766	0.5591	0.2401	0.5591	0.211	0.5591	0.1881	0.5591	0.1584	0.5591	0.1397
0.5857	0.3656	0.5857	0.2834	0.5857	0.2509	0.5857	0.2245	0.5857	0.2028	0.5857	0.176	0.5857	0.1563
0.6136	0.3656	0.6136	0.2834	0.6136	0.2509	0.6136	0.2245	0.6136	0.2033	0.6136	0.1849	0.6136	0.1645
0.6428	0.3762	0.6428	0.2834	0.6428	0.2509	0.6428	0.2259	0.6428	0.2103	0.6428	0.1964	0.6428	0.1774
0.6734	0.3762	0.6734	0.2949	0.6734	0.2693	0.6734	0.2462	0.6734	0.2322	0.6734	0.2135	0.6734	0.1894
0.7055	0.4391	0.7055	0.3606	0.7055	0.3194	0.7055	0.2848	0.7055	0.2628	0.7055	0.2277	0.7055	0.1953
0.7391	0.5239	0.7391	0.4137	0.7391	0.3623	0.7391	0.3207	0.7391	0.2866	0.7391	0.2356	0.7391	0.1976
0.7743	0.614	0.7743	0.4625	0.7743	0.3924	0.7743	0.3391	0.7743	0.298	0.7743	0.2405	0.7743	0.2244
0.8111	0.7914	0.8111	0.467	0.8111	0.3924	0.8111	0.3391	0.8111	0.298	0.8111	0.2659	0.8111	0.2499
0.8497	0.7914	0.8497	0.467	0.8497	0.3924	0.8497	0.3511	0.8497	0.3206	0.8497	0.2919	0.8497	0.2743
0.8902	0.7914	0.8902	0.467	0.8902	0.4001	0.8902	0.3709	0.8902	0.345	0.8902	0.3184	0.8902	0.2981
0.9326	1.0278	0.9326	0.6041	0.9326	0.4807	0.9326	0.4108	0.9326	0.3626	0.9326	0.3443	0.9326	0.321
0.977	1.0278	0.977	0.6353	0.977	0.5431	0.977	0.4591	0.977	0.3979	0.977	0.3677	0.977	0.3421
1.0235	1.0278	1.0235	0.6353	1.0235	0.5431	1.0235	0.4591	1.0235	0.414	1.0235	0.3873	1.0235	0.3602
1.0723	1.0278	1.0723	0.6353	1.0723	0.5431	1.0723	0.4819	1.0723	0.4594	1.0723	0.4189	1.0723	0.3771
1.1233	1.1107	1.1233	0.6861	1.1233	0.5637	1.1233	0.5322	1.1233	0.506	1.1233	0.4588	1.1233	0.4017
1.1768	1.1107	1.1768	0.7008	1.1768	0.6472	1.1768	0.5742	1.1768	0.5418	1.1768	0.488	1.1768	0.426
1.2328	1.1107	1.2328	0.7008	1.2328	0.6472	1.2328	0.5742	1.2328	0.5426	1.2328	0.4923	1.2328	0.4364
1.2916	1.1346	1.2916	0.9159	1.2916	0.7678	1.2916	0.6655	1.2916	0.5934	1.2916	0.4968	1.2916	0.438
1.353	1.2446	1.353	1.0101	1.353	0.8426	1.353	0.7277	1.353	0.6464	1.353	0.5439	1.353	0.4567
1.4175	1.2446	1.4175	1.0101	1.4175	0.8662	1.4175	0.7991	1.4175	0.738	1.4175	0.6344	1.4175	0.5207
1.485	1.2865	1.485	1.0536	1.485	0.9467	1.485	0.8006	1.485	0.7876	1.485	0.6676	1.485	0.5425
1.5557	1.6615	1.5557	1.1722	1.5557	0.9725	1.5557	0.8006	1.5557	0.7876	1.5557	0.6676	1.5557	0.5551
1.6298	1.6615	1.6298	1.1722	1.6298	0.9725	1.6298	0.8601	1.6298	0.7973	1.6298	0.6949	1.6298	0.5902
1.7074	1.6615	1.7074	1.1722	1.7074	1.0371	1.7074	0.9444	1.7074	0.8737	1.7074	0.7537	1.7074	0.6205
1.7887	2.1535	1.7887	1.3133	1.7887	1.1545	1.7887	1.0275	1.7887	0.92	1.7887	0.7686	1.7887	0.6322
1.8738	2.1535	1.8738	1.3133	1.8738	1.1545	1.8738	1.0307	1.8738	0.9325	1.8738	0.7721	1.8738	0.6615
1.963	2.1535	1.963	1.3856	1.963	1.1545	1.963	1.0307	1.963	0.9325	1.963	0.7827	1.963	0.6963
2.0565	2.1535	2.0565	1.3856	2.0565	1.1545	2.0565	1.0307	2.0565	0.9325	2.0565	0.8343	2.0565	0.7285
2.1544	2.1535	2.1544	1.3856	2.1544	1.1545	2.1544	1.0307	2.1544	0.9732	2.1544	0.8748	2.1544	0.7529
2.257	1.8736	2.257	1.3856	2.257	1.1724	2.257	1.0924	2.257	1.0227	2.257	0.9021	2.257	0.7632

2.3645	1.8736	2.3645	1.389	2.3645	1.2437	2.3645	1.1269	2.3645	1.0316	2.3645	0.9021	2.3645	0.7632
2.4771	1.8196	2.4771	1.389	2.4771	1.2437	2.4771	1.1269	2.4771	1.0316	2.4771	0.9021	2.4771	0.7632
2.595	1.881	2.595	1.389	2.595	1.2437	2.595	1.1269	2.595	1.0316	2.595	0.9021	2.595	0.7632
2.7186	2.0314	2.7186	1.389	2.7186	1.2437	2.7186	1.1269	2.7186	1.0316	2.7186	0.9021	2.7186	0.7632
2.848	2.0314	2.848	1.389	2.848	1.2437	2.848	1.1269	2.848	1.0316	2.848	0.8863	2.848	0.7389
2.9836	2.0314	2.9836	1.303	2.9836	1.08	2.9836	0.9836	2.9836	0.9059	2.9836	0.8032	2.9836	0.7031
3.1257	2.0314	3.1257	1.303	3.1257	1.0724	3.1257	0.9157	3.1257	0.9022	3.1257	0.8032	3.1257	0.6898
3.2745	2.0314	3.2745	1.2366	3.2745	0.9931	3.2745	0.9152	3.2745	0.8946	3.2745	0.7732	3.2745	0.6511
3.4305	1.378	3.4305	1.0337	3.4305	0.9587	3.4305	0.8718	3.4305	0.8069	3.4305	0.7189	3.4305	0.641
3.5938	1.378	3.5938	0.9882	3.5938	0.9587	3.5938	0.8718	3.5938	0.8069	3.5938	0.7189	3.5938	0.641
3.7649	1.378	3.7649	0.9882	3.7649	0.9587	3.7649	0.8718	3.7649	0.8069	3.7649	0.7113	3.7649	0.6277
3.9442	1.378	3.9442	0.9882	3.9442	0.9587	3.9442	0.8718	3.9442	0.8069	3.9442	0.7113	3.9442	0.6037
4.132	1.378	4.132	0.9882	4.132	0.9587	4.132	0.8718	4.132	0.8069	4.132	0.7113	4.132	0.6037
4.3288	1.378	4.3288	0.9882	4.3288	0.9587	4.3288	0.8718	4.3288	0.8069	4.3288	0.7113	4.3288	0.6037
4.5349	1.378	4.5349	0.9882	4.5349	0.9587	4.5349	0.8718	4.5349	0.8069	4.5349	0.7113	4.5349	0.6037
4.7508	1.5669	4.7508	0.9882	4.7508	0.9587	4.7508	0.8718	4.7508	0.8069	4.7508	0.7113	4.7508	0.6037
4.977	1.5669	4.977	0.9882	4.977	0.9587	4.977	0.8718	4.977	0.8069	4.977	0.7113	4.977	0.6037
5.214	1.5669	5.214	0.9882	5.214	0.9587	5.214	0.8718	5.214	0.8069	5.214	0.7113	5.214	0.6037
5.4623	1.5669	5.4623	0.9882	5.4623	0.9587	5.4623	0.8718	5.4623	0.8069	5.4623	0.7113	5.4623	0.6037
5.7224	1.5971	5.7224	0.9882	5.7224	0.9587	5.7224	0.8718	5.7224	0.7996	5.7224	0.6886	5.7224	0.5771
5.9948	1.5971	5.9948	0.9882	5.9948	0.9303	5.9948	0.8387	5.9948	0.7665	5.9948	0.6589	5.9948	0.5506
6.2803	1.5971	6.2803	0.9332	6.2803	0.8185	6.2803	0.7329	6.2803	0.6896	6.2803	0.6182	6.2803	0.5461
6.5793	1.5971	6.5793	0.9332	6.5793	0.8185	6.5793	0.7321	6.5793	0.6896	6.5793	0.6127	6.5793	0.5461
6.8926	1.5971	6.8926	0.9332	6.8926	0.782	6.8926	0.7038	6.8926	0.6547	6.8926	0.5928	6.8926	0.5303
7.2208	1.5971	7.2208	0.9332	7.2208	0.744	7.2208	0.6919	7.2208	0.6422	7.2208	0.5564	7.2208	0.5073
7.5646	1.5971	7.5646	0.9332	7.5646	0.7259	7.5646	0.6707	7.5646	0.6218	7.5646	0.5421	7.5646	0.4819
7.9248	1.5971	7.9248	0.9332	7.9248	0.7259	7.9248	0.6426	7.9248	0.5944	7.9248	0.5307	7.9248	0.475
8.3022	1.5971	8.3022	0.8247	8.3022	0.6776	8.3022	0.6066	8.3022	0.5633	8.3022	0.5094	8.3022	0.4593
8.6975	1.0152	8.6975	0.6458	8.6975	0.5676	8.6975	0.5258	8.6975	0.5026	8.6975	0.473	8.6975	0.4411
9.1116	1.0152	9.1116	0.5599	9.1116	0.5261	9.1116	0.5124	9.1116	0.4985	9.1116	0.473	9.1116	0.4411
9.5455	1.0152	9.5455	0.5599	9.5455	0.4992	9.5455	0.4815	9.5455	0.4734	9.5455	0.4558	9.5455	0.4296
10	0.7029	10	0.5024	10	0.4823	10	0.4718	10	0.462	10	0.4448	10	0.4232
10.4762	0.5723	10.4762	0.4841	10.4762	0.4737	10.4762	0.4648	10.4762	0.4567	10.4762	0.4417	10.4762	0.4214
10.975	0.5723	10.975	0.4609	10.975	0.4589	10.975	0.4533	10.975	0.4467	10.975	0.4331	10.975	0.4143
11.4976	0.5389	11.4976	0.4529	11.4976	0.4468	11.4976	0.4398	11.4976	0.4329	11.4976	0.4201	11.4976	0.4029
12.045	0.5389	12.045	0.4506	12.045	0.4294	12.045	0.4205	12.045	0.414	12.045	0.403	12.045	0.3884
12.6186	0.6021	12.6186	0.4408	12.6186	0.4169	12.6186	0.4013	12.6186	0.3955	12.6186	0.3854	12.6186	0.3735
13.2194	0.6021	13.2194	0.4277	13.2194	0.4024	13.2194	0.3942	13.2194	0.3892	13.2194	0.3804	13.2194	0.3697
13.8489	0.6021	13.8489	0.4277	13.8489	0.3935	13.8489	0.3881	13.8489	0.3833	13.8489	0.3749	13.8489	0.3643

14.5083	0.6021	14.5083	0.4277	14.5083	0.3907	14.5083	0.379	14.5083	0.3752	14.5083	0.3678	14.5083	0.3587
15.1991	0.6021	15.1991	0.4277	15.1991	0.3907	15.1991	0.3759	15.1991	0.3688	15.1991	0.3602	15.1991	0.3517
15.9228	0.5938	15.9228	0.4277	15.9228	0.3907	15.9228	0.373	15.9228	0.3618	15.9228	0.3489	15.9228	0.3435
16.681	0.5938	16.681	0.4277	16.681	0.3907	16.681	0.373	16.681	0.3618	16.681	0.343	16.681	0.3359
17.4753	0.5938	17.4753	0.4277	17.4753	0.3907	17.4753	0.373	17.4753	0.3618	17.4753	0.3425	17.4753	0.3285
18.3074	0.4889	18.3074	0.392	18.3074	0.3836	18.3074	0.373	18.3074	0.3618	18.3074	0.3425	18.3074	0.3223
19.1791	0.4889	19.1791	0.392	19.1791	0.3706	19.1791	0.3549	19.1791	0.3427	19.1791	0.3243	19.1791	0.3167
20.0923	0.4889	20.0923	0.3764	20.0923	0.354	20.0923	0.3401	20.0923	0.3303	20.0923	0.3164	20.0923	0.31
21.049	0.4889	21.049	0.3361	21.049	0.3183	21.049	0.3128	21.049	0.3106	21.049	0.308	21.049	0.3044
22.0513	0.4644	22.0513	0.3361	22.0513	0.3183	22.0513	0.3128	22.0513	0.3101	22.0513	0.3049	22.0513	0.2997
23.1013	0.4644	23.1013	0.3361	23.1013	0.3183	23.1013	0.31	23.1013	0.3047	23.1013	0.2982	23.1013	0.2928
24.2013	0.4644	24.2013	0.3289	24.2013	0.3159	24.2013	0.3045	24.2013	0.3008	24.2013	0.2967	24.2013	0.2917
25.3536	0.4147	25.3536	0.3214	25.3536	0.3115	25.3536	0.3009	25.3536	0.2939	25.3536	0.2915	25.3536	0.2883
26.5609	0.4147	26.5609	0.316	26.5609	0.3047	26.5609	0.2981	26.5609	0.2939	26.5609	0.2887	26.5609	0.2843
27.8256	0.4147	27.8256	0.288	27.8256	0.2828	27.8256	0.2812	27.8256	0.281	27.8256	0.28	27.8256	0.2785
29.1505	0.3507	29.1505	0.288	29.1505	0.2828	29.1505	0.2789	29.1505	0.2758	29.1505	0.2722	29.1505	0.2731
30.5386	0.2947	30.5386	0.2761	30.5386	0.2752	30.5386	0.2742	30.5386	0.2731	30.5386	0.271	30.5386	0.2699
31.9927	0.2947	31.9927	0.2708	31.9927	0.2697	31.9927	0.2694	31.9927	0.2691	31.9927	0.2683	31.9927	0.2682
33.516	0.2762	33.516	0.2708	33.516	0.2693	33.516	0.2686	33.516	0.2682	33.516	0.2677	33.516	0.2673
35.1119	0.2706	35.1119	0.2695	35.1119	0.2689	35.1119	0.2683	35.1119	0.2678	35.1119	0.2671	35.1119	0.2663
36.7838	0.2671	36.7838	0.2667	36.7838	0.2665	36.7838	0.2662	36.7838	0.266	36.7838	0.2655	36.7838	0.2649
38.5353	0.2646	38.5353	0.2644	38.5353	0.2643	38.5353	0.2641	38.5353	0.264	38.5353	0.2638	38.5353	0.2634
40.3702	0.2626	40.3702	0.2625	40.3702	0.2624	40.3702	0.2623	40.3702	0.2623	40.3702	0.2621	40.3702	0.2619
42.2924	0.2611	42.2924	0.261	42.2924	0.261	42.2924	0.2609	42.2924	0.2609	42.2924	0.2608	42.2924	0.2607
44.3062	0.2607	44.3062	0.2606	44.3062	0.2606	44.3062	0.2605	44.3062	0.2605	44.3062	0.2605	44.3062	0.2604
46.4159	0.2603	46.4159	0.2602	46.4159	0.2602	46.4159	0.2602	46.4159	0.2602	46.4159	0.2601	46.4159	0.2601
48.626	0.2599	48.626	0.2599	48.626	0.2599	48.626	0.2599	48.626	0.2598	48.626	0.2598	48.626	0.2598
50.9414	0.2596	50.9414	0.2596	50.9414	0.2596	50.9414	0.2596	50.9414	0.2596	50.9414	0.2595	50.9414	0.2595

RPP-WTP Pretreatment Facility ISRS
Calc No.: 24590-PTF-S0C-S15T-00005, Rev. 0B

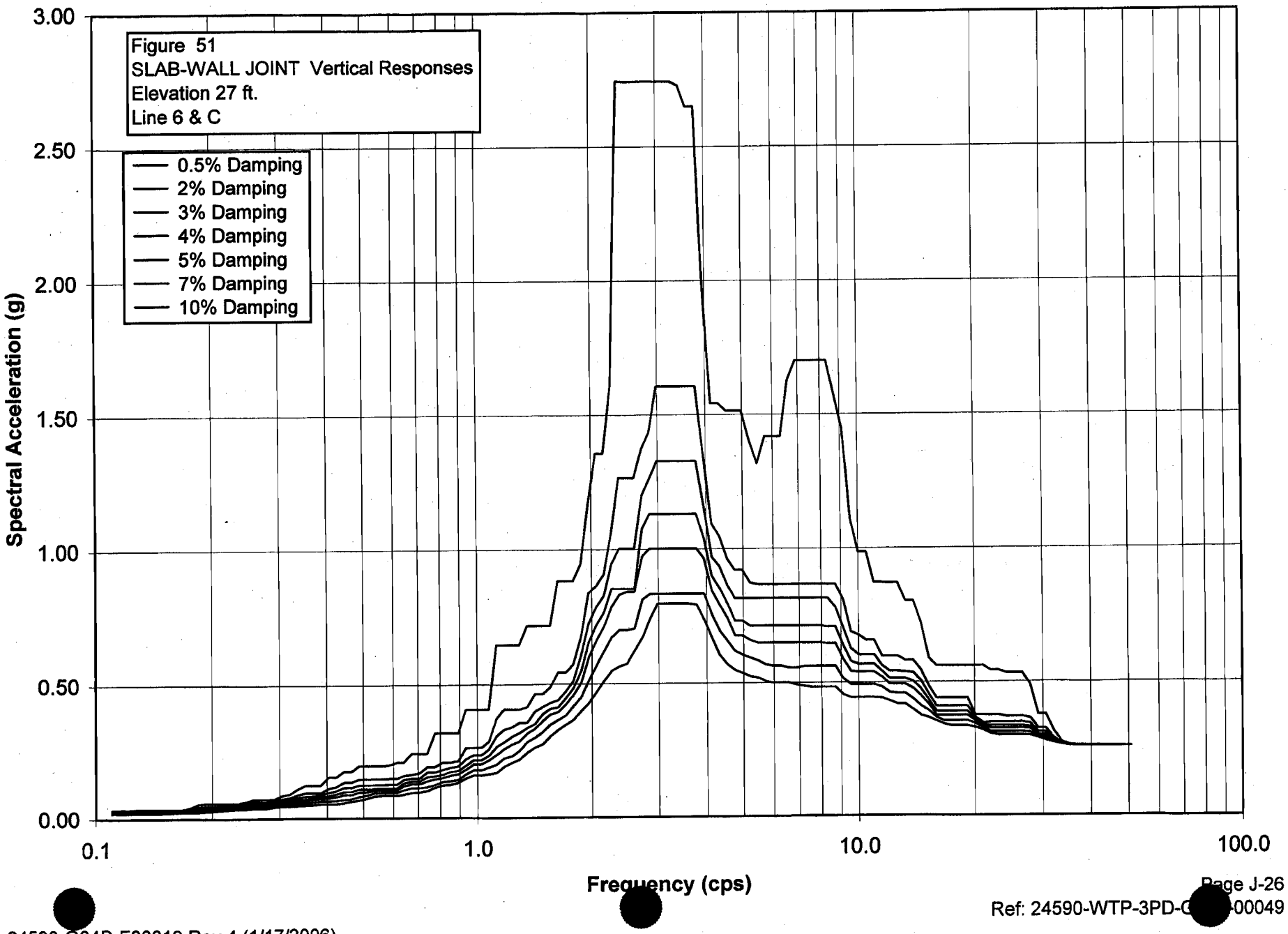

S_PTWW051.grf
RPP-WTP Pretreatment Facility ISRS
Calc No.: 24590-PTF-S0C-S15T-00005, Rev. 0B
Frequency (cps)
Spectral Acceleration (g)
Figure 51
SLAB-WALL JOINT Vertical Responses
Elevation 27 ft.
Line 6 & C

Damping	0.50%	Damping	2%	Damping	3%	Damping	4%	Damping	5%	Damping	7%	Damping	10%
Freq.	Accel.	Freq.	Accel.	Freq.	Accel.	Freq.	Accel.	Freq.	Accel.	Freq.	Accel.	Freq.	Accel.
0.1098	0.0328	0.1098	0.0294	0.1098	0.0275	0.1098	0.0264	0.1098	0.0254	0.1098	0.0237	0.1098	0.0217
0.115	0.0346	0.115	0.0311	0.115	0.029	0.115	0.0271	0.115	0.0257	0.115	0.024	0.115	0.022
0.1204	0.0347	0.1204	0.0311	0.1204	0.0291	0.1204	0.0272	0.1204	0.0257	0.1204	0.024	0.1204	0.022
0.1262	0.0349	0.1262	0.0311	0.1262	0.0291	0.1262	0.0272	0.1262	0.0257	0.1262	0.024	0.1262	0.022
0.1322	0.0349	0.1322	0.0311	0.1322	0.0291	0.1322	0.0272	0.1322	0.0257	0.1322	0.024	0.1322	0.022
0.1385	0.0349	0.1385	0.0311	0.1385	0.0291	0.1385	0.0272	0.1385	0.0259	0.1385	0.0242	0.1385	0.0222
0.1451	0.0349	0.1451	0.0311	0.1451	0.0291	0.1451	0.0272	0.1451	0.0259	0.1451	0.0242	0.1451	0.0222
0.152	0.0349	0.152	0.0311	0.152	0.0291	0.152	0.0272	0.152	0.0262	0.152	0.0247	0.152	0.0233
0.1592	0.0349	0.1592	0.0311	0.1592	0.0291	0.1592	0.0281	0.1592	0.0274	0.1592	0.0261	0.1592	0.0245
0.1668	0.0349	0.1668	0.0311	0.1668	0.0297	0.1668	0.0289	0.1668	0.0281	0.1668	0.0268	0.1668	0.0251
0.1748	0.0422	0.1748	0.0358	0.1748	0.0324	0.1748	0.0296	0.1748	0.0281	0.1748	0.0268	0.1748	0.0257
0.1831	0.0535	0.1831	0.0445	0.1831	0.0398	0.1831	0.0358	0.1831	0.0324	0.1831	0.0272	0.1831	0.026
0.1918	0.0577	0.1918	0.0478	0.1918	0.0425	0.1918	0.038	0.1918	0.0347	0.1918	0.0318	0.1918	0.0286
0.2009	0.0577	0.2009	0.0478	0.2009	0.0425	0.2009	0.0392	0.2009	0.0373	0.2009	0.034	0.2009	0.0301
0.2105	0.0577	0.2105	0.0478	0.2105	0.0425	0.2105	0.0392	0.2105	0.0374	0.2105	0.0347	0.2105	0.0323
0.2205	0.0577	0.2205	0.0478	0.2205	0.0432	0.2205	0.0417	0.2205	0.0403	0.2205	0.0378	0.2205	0.0348
0.231	0.058	0.231	0.0493	0.231	0.0463	0.231	0.0439	0.231	0.0423	0.231	0.0393	0.231	0.0357
0.242	0.0623	0.242	0.0553	0.242	0.0512	0.242	0.0476	0.242	0.0442	0.242	0.0393	0.242	0.0357
0.2535	0.0713	0.2535	0.0624	0.2535	0.0575	0.2535	0.0532	0.2535	0.0496	0.2535	0.0441	0.2535	0.0384
0.2656	0.0713	0.2656	0.0624	0.2656	0.0575	0.2656	0.0532	0.2656	0.0496	0.2656	0.0441	0.2656	0.0384
0.2783	0.0713	0.2783	0.0624	0.2783	0.0575	0.2783	0.0532	0.2783	0.0496	0.2783	0.0441	0.2783	0.0395
0.2915	0.0744	0.2915	0.0666	0.2915	0.0623	0.2915	0.0586	0.2915	0.0554	0.2915	0.0502	0.2915	0.0443
0.3054	0.0875	0.3054	0.0757	0.3054	0.0693	0.3054	0.0642	0.3054	0.0604	0.3054	0.054	0.3054	0.0469
0.3199	0.092	0.3199	0.0796	0.3199	0.0728	0.3199	0.0669	0.3199	0.0618	0.3199	0.054	0.3199	0.0469
0.3352	0.1105	0.3352	0.0889	0.3352	0.0786	0.3352	0.0706	0.3352	0.0644	0.3352	0.0555	0.3352	0.0476
0.3511	0.1252	0.3511	0.0953	0.3511	0.0826	0.3511	0.0727	0.3511	0.0665	0.3511	0.0579	0.3511	0.0494
0.3678	0.1252	0.3678	0.0953	0.3678	0.0847	0.3678	0.0775	0.3678	0.0713	0.3678	0.0614	0.3678	0.0511

0.3853	0.1252	0.3853	0.0957	0.3853	0.088	0.3853	0.0809	0.3853	0.0754	0.3853	0.0657	0.3853	0.0548
0.4037	0.155	0.4037	0.1124	0.4037	0.0974	0.4037	0.0858	0.4037	0.0767	0.4037	0.0657	0.4037	0.0548
0.4229	0.155	0.4229	0.1187	0.4229	0.1033	0.4229	0.0912	0.4229	0.0815	0.4229	0.067	0.4229	0.0548
0.4431	0.1769	0.4431	0.1354	0.4431	0.1155	0.4431	0.0999	0.4431	0.0877	0.4431	0.0701	0.4431	0.0582
0.4642	0.1769	0.4642	0.1354	0.4642	0.1155	0.4642	0.0999	0.4642	0.0877	0.4642	0.0733	0.4642	0.0628
0.4863	0.1978	0.4863	0.1466	0.4863	0.1249	0.4863	0.109	0.4863	0.0971	0.4863	0.0808	0.4863	0.0674
0.5094	0.1978	0.5094	0.1466	0.5094	0.1249	0.5094	0.109	0.5094	0.0976	0.5094	0.0856	0.5094	0.074
0.5337	0.1978	0.5337	0.1466	0.5337	0.1249	0.5337	0.111	0.5337	0.1042	0.5337	0.0936	0.5337	0.0818
0.5591	0.1978	0.5591	0.1466	0.5591	0.1249	0.5591	0.111	0.5591	0.1044	0.5591	0.0958	0.5591	0.0848
0.5857	0.1999	0.5857	0.1483	0.5857	0.1264	0.5857	0.111	0.5857	0.105	0.5857	0.096	0.5857	0.0848
0.6136	0.2094	0.6136	0.1483	0.6136	0.1264	0.6136	0.1126	0.6136	0.105	0.6136	0.096	0.6136	0.0848
0.6428	0.2094	0.6428	0.1593	0.6428	0.144	0.6428	0.1314	0.6428	0.121	0.6428	0.105	0.6428	0.0886
0.6734	0.2426	0.6734	0.1636	0.6734	0.1492	0.6734	0.1381	0.6734	0.1283	0.6734	0.1122	0.6734	0.0946
0.7055	0.2426	0.7055	0.1691	0.7055	0.1492	0.7055	0.1381	0.7055	0.1283	0.7055	0.1134	0.7055	0.096
0.7391	0.2426	0.7391	0.1937	0.7391	0.1722	0.7391	0.1542	0.7391	0.1392	0.7391	0.1165	0.7391	0.1015
0.7743	0.3181	0.7743	0.1939	0.7743	0.1727	0.7743	0.1579	0.7743	0.1454	0.7743	0.1251	0.7743	0.1137
0.8111	0.3181	0.8111	0.2101	0.8111	0.1828	0.8111	0.163	0.8111	0.1508	0.8111	0.1355	0.8111	0.1229
0.8497	0.3181	0.8497	0.2101	0.8497	0.1907	0.8497	0.1742	0.8497	0.1603	0.8497	0.139	0.8497	0.1258
0.8902	0.3181	0.8902	0.2143	0.8902	0.1948	0.8902	0.1786	0.8902	0.1649	0.8902	0.1435	0.8902	0.1332
0.9326	0.4052	0.9326	0.2628	0.9326	0.2213	0.9326	0.1974	0.9326	0.1824	0.9326	0.1644	0.9326	0.1493
0.977	0.4052	0.977	0.2628	0.977	0.2362	0.977	0.2172	0.977	0.2019	0.977	0.1799	0.977	0.1598
1.0235	0.4052	1.0235	0.2628	1.0235	0.2362	1.0235	0.2172	1.0235	0.2019	1.0235	0.18	1.0235	0.16
1.0723	0.4052	1.0723	0.2849	1.0723	0.2568	1.0723	0.234	1.0723	0.2161	1.0723	0.1898	1.0723	0.1645
1.1233	0.6467	1.1233	0.3714	1.1233	0.3066	1.1233	0.2657	1.1233	0.2373	1.1233	0.2005	1.1233	0.1696
1.1768	0.6467	1.1768	0.4055	1.1768	0.3296	1.1768	0.2835	1.1768	0.2569	1.1768	0.2234	1.1768	0.1927
1.2328	0.6467	1.2328	0.4055	1.2328	0.3382	1.2328	0.303	1.2328	0.2744	1.2328	0.2302	1.2328	0.2071
1.2916	0.6467	1.2916	0.4055	1.2916	0.3557	1.2916	0.3173	1.2916	0.2858	1.2916	0.2514	1.2916	0.2182
1.353	0.7184	1.353	0.4147	1.353	0.3559	1.353	0.3348	1.353	0.3157	1.353	0.2832	1.353	0.2458
1.4175	0.7184	1.4175	0.463	1.4175	0.3962	1.4175	0.3501	1.4175	0.3316	1.4175	0.2996	1.4175	0.2626
1.485	0.7184	1.485	0.463	1.485	0.4137	1.485	0.3858	1.485	0.3607	1.485	0.3198	1.485	0.2745
1.5557	0.7184	1.5557	0.4893	1.5557	0.4292	1.5557	0.406	1.5557	0.3847	1.5557	0.3473	1.5557	0.305
1.6298	0.8858	1.6298	0.5437	1.6298	0.4392	1.6298	0.4118	1.6298	0.3941	1.6298	0.3642	1.6298	0.3268
1.7074	0.8858	1.7074	0.5437	1.7074	0.4729	1.7074	0.4469	1.7074	0.423	1.7074	0.3815	1.7074	0.3465
1.7887	0.8858	1.7887	0.5746	1.7887	0.5116	1.7887	0.4842	1.7887	0.4586	1.7887	0.4165	1.7887	0.3653
1.8738	0.9496	1.8738	0.6768	1.8738	0.6085	1.8738	0.5489	1.8738	0.505	1.8738	0.4504	1.8738	0.3969
1.963	1.1699	1.963	0.8403	1.963	0.7275	1.963	0.6563	1.963	0.5998	1.963	0.5135	1.963	0.4285
2.0565	1.3571	2.0565	0.8674	2.0565	0.7884	2.0565	0.7211	2.0565	0.6628	2.0565	0.5702	2.0565	0.4699
2.1544	1.3571	2.1544	0.909	2.1544	0.8297	2.1544	0.7674	2.1544	0.7149	2.1544	0.623	2.1544	0.5127
2.257	1.6105	2.257	1.0659	2.257	0.9486	2.257	0.8552	2.257	0.7893	2.257	0.6746	2.257	0.5507

2.3645	2.7436	2.3645	1.2661	2.3645	1.0029	2.3645	0.8552	2.3645	0.8328	2.3645	0.7008	2.3645	0.5658
2.4771	2.7436	2.4771	1.2661	2.4771	1.0029	2.4771	0.8552	2.4771	0.8436	2.4771	0.7008	2.4771	0.5767
2.595	2.7436	2.595	1.2661	2.595	1.0029	2.595	0.8552	2.595	0.8436	2.595	0.707	2.595	0.6251
2.7186	2.7436	2.7186	1.374	2.7186	1.2008	2.7186	1.0764	2.7186	0.9746	2.7186	0.8148	2.7186	0.6725
2.848	2.7436	2.848	1.437	2.848	1.2625	2.848	1.1314	2.848	1.0026	2.848	0.8356	2.848	0.7442
2.9836	2.7436	2.9836	1.6061	2.9836	1.3268	2.9836	1.1314	2.9836	1.0026	2.9836	0.8356	2.9836	0.7993
3.1257	2.7436	3.1257	1.6061	3.1257	1.3268	3.1257	1.1314	3.1257	1.0026	3.1257	0.8356	3.1257	0.7993
3.2745	2.7436	3.2745	1.6061	3.2745	1.3268	3.2745	1.1314	3.2745	1.0026	3.2745	0.8356	3.2745	0.7993
3.4305	2.7282	3.4305	1.6061	3.4305	1.3268	3.4305	1.1314	3.4305	1.0026	3.4305	0.8356	3.4305	0.7993
3.5938	2.651	3.5938	1.6061	3.5938	1.3268	3.5938	1.1314	3.5938	1.0026	3.5938	0.8356	3.5938	0.7993
3.7649	2.651	3.7649	1.6061	3.7649	1.3268	3.7649	1.1314	3.7649	1.0026	3.7649	0.8356	3.7649	0.7953
3.9442	2.0001	3.9442	1.3467	3.9442	1.1631	3.9442	1.0408	3.9442	0.9658	3.9442	0.8356	3.9442	0.7382
4.132	1.5412	4.132	1.0957	4.132	0.9718	4.132	0.9014	4.132	0.8463	4.132	0.7561	4.132	0.6687
4.3288	1.5412	4.3288	1.0482	4.3288	0.9372	4.3288	0.8564	4.3288	0.7931	4.3288	0.6969	4.3288	0.6045
4.5349	1.5142	4.5349	0.9655	4.5349	0.8667	4.5349	0.7984	4.5349	0.744	4.5349	0.6575	4.5349	0.5696
4.7508	1.5142	4.7508	0.9231	4.7508	0.8167	4.7508	0.7335	4.7508	0.679	4.7508	0.6203	4.7508	0.5484
4.977	1.5142	4.977	0.9231	4.977	0.8167	4.977	0.7335	4.977	0.6777	4.977	0.6058	4.977	0.5379
5.214	1.4035	5.214	0.8756	5.214	0.8167	5.214	0.714	5.214	0.6605	5.214	0.5939	5.214	0.5255
5.4623	1.3162	5.4623	0.8698	5.4623	0.8167	5.4623	0.714	5.4623	0.6502	5.4623	0.5838	5.4623	0.5205
5.7224	1.4183	5.7224	0.8698	5.7224	0.8167	5.7224	0.714	5.7224	0.6502	5.7224	0.5687	5.7224	0.5058
5.9948	1.4183	5.9948	0.8698	5.9948	0.8167	5.9948	0.714	5.9948	0.6502	5.9948	0.564	5.9948	0.4998
6.2803	1.4183	6.2803	0.8698	6.2803	0.8167	6.2803	0.714	6.2803	0.6502	6.2803	0.564	6.2803	0.4998
6.5793	1.6258	6.5793	0.8698	6.5793	0.8167	6.5793	0.714	6.5793	0.6502	6.5793	0.5565	6.5793	0.4998
6.8926	1.7003	6.8926	0.8698	6.8926	0.8167	6.8926	0.714	6.8926	0.6502	6.8926	0.5569	6.8926	0.4929
7.2208	1.7003	7.2208	0.8698	7.2208	0.8167	7.2208	0.714	7.2208	0.6502	7.2208	0.5625	7.2208	0.4872
7.5646	1.7003	7.5646	0.8698	7.5646	0.8167	7.5646	0.714	7.5646	0.6502	7.5646	0.5625	7.5646	0.4832
7.9248	1.7003	7.9248	0.8698	7.9248	0.8167	7.9248	0.714	7.9248	0.6502	7.9248	0.5625	7.9248	0.4832
8.3022	1.7003	8.3022	0.8698	8.3022	0.8167	8.3022	0.7092	8.3022	0.647	8.3022	0.5625	8.3022	0.4832
8.6975	1.5728	8.6975	0.8698	8.6975	0.7825	8.6975	0.7092	8.6975	0.647	8.6975	0.5625	8.6975	0.4832
9.1116	1.449	9.1116	0.8125	9.1116	0.7071	9.1116	0.6412	9.1116	0.5881	9.1116	0.5151	9.1116	0.4543
9.5455	1.1103	9.5455	0.6914	9.5455	0.6271	9.5455	0.5797	9.5455	0.5429	9.5455	0.4927	9.5455	0.4426
10	0.987	10	0.6788	10	0.6039	10	0.5686	10	0.5394	10	0.4927	10	0.4426
10.4762	0.987	10.4762	0.6575	10.4762	0.6033	10.4762	0.5686	10.4762	0.5394	10.4762	0.4927	10.4762	0.4426
10.975	0.875	10.975	0.6575	10.975	0.6033	10.975	0.5686	10.975	0.5394	10.975	0.4927	10.975	0.4426
11.4976	0.875	11.4976	0.597	11.4976	0.5629	11.4976	0.5424	11.4976	0.5204	11.4976	0.4823	11.4976	0.4399
12.045	0.873	12.045	0.597	12.045	0.5418	12.045	0.5142	12.045	0.4928	12.045	0.4618	12.045	0.4291
12.6186	0.873	12.6186	0.597	12.6186	0.5418	12.6186	0.5142	12.6186	0.4928	12.6186	0.4573	12.6186	0.417
13.2194	0.8059	13.2194	0.5817	13.2194	0.5393	13.2194	0.5142	13.2194	0.4928	13.2194	0.4573	13.2194	0.417
13.8489	0.8059	13.8489	0.5817	13.8489	0.5365	13.8489	0.5027	13.8489	0.4758	13.8489	0.4357	13.8489	0.3956

14.5083	0.7241	14.5083	0.5447	14.5083	0.5045	14.5083	0.473	14.5083	0.4475	14.5083	0.4095	14.5083	0.373
15.1991	0.5902	15.1991	0.485	15.1991	0.4541	15.1991	0.4321	15.1991	0.4153	15.1991	0.3905	15.1991	0.3645
15.9228	0.5601	15.9228	0.4379	15.9228	0.4075	15.9228	0.3869	15.9228	0.372	15.9228	0.3647	15.9228	0.352
16.681	0.5601	16.681	0.4379	16.681	0.4075	16.681	0.3869	16.681	0.372	16.681	0.3518	16.681	0.339
17.4753	0.5601	17.4753	0.4379	17.4753	0.4075	17.4753	0.3869	17.4753	0.372	17.4753	0.3518	17.4753	0.3329
18.3074	0.5601	18.3074	0.4379	18.3074	0.4075	18.3074	0.3869	18.3074	0.372	18.3074	0.3518	18.3074	0.3329
19.1791	0.5601	19.1791	0.4379	19.1791	0.4075	19.1791	0.3869	19.1791	0.372	19.1791	0.3518	19.1791	0.3329
20.0923	0.5601	20.0923	0.3732	20.0923	0.3648	20.0923	0.3579	20.0923	0.352	20.0923	0.341	20.0923	0.3269
21.049	0.5601	21.049	0.3732	21.049	0.3417	21.049	0.3359	21.049	0.3315	21.049	0.3244	21.049	0.3155
22.0513	0.5425	22.0513	0.3732	22.0513	0.3457	22.0513	0.332	22.0513	0.3223	22.0513	0.3098	22.0513	0.3035
23.1013	0.5425	23.1013	0.3732	23.1013	0.3457	23.1013	0.332	23.1013	0.3223	23.1013	0.3098	23.1013	0.2985
24.2013	0.5325	24.2013	0.3666	24.2013	0.3457	24.2013	0.332	24.2013	0.3223	24.2013	0.3098	24.2013	0.2985
25.3536	0.5325	25.3536	0.3666	25.3536	0.3457	25.3536	0.332	25.3536	0.3223	25.3536	0.3098	25.3536	0.2985
26.5609	0.5325	26.5609	0.3666	26.5609	0.3457	26.5609	0.332	26.5609	0.3223	26.5609	0.3098	26.5609	0.2985
27.8256	0.4895	27.8256	0.3609	27.8256	0.3413	27.8256	0.3287	27.8256	0.3197	27.8256	0.3074	27.8256	0.2962
29.1505	0.3751	29.1505	0.322	29.1505	0.308	29.1505	0.2991	29.1505	0.2973	29.1505	0.2934	29.1505	0.2872
30.5386	0.3751	30.5386	0.322	30.5386	0.308	30.5386	0.2991	30.5386	0.2928	30.5386	0.2841	30.5386	0.2774
31.9927	0.3133	31.9927	0.2869	31.9927	0.2784	31.9927	0.2747	31.9927	0.2748	31.9927	0.2733	31.9927	0.2698
33.516	0.2719	33.516	0.2655	33.516	0.2651	33.516	0.2653	33.516	0.2652	33.516	0.2648	33.516	0.2637
35.1119	0.2622	35.1119	0.2613	35.1119	0.2609	35.1119	0.2603	35.1119	0.2597	35.1119	0.259	35.1119	0.2589
36.7838	0.2601	36.7838	0.2598	36.7838	0.2595	36.7838	0.2592	36.7838	0.2589	36.7838	0.2583	36.7838	0.2574
38.5353	0.2591	38.5353	0.2589	38.5353	0.2587	38.5353	0.2585	38.5353	0.2583	38.5353	0.2579	38.5353	0.2573
40.3702	0.2584	40.3702	0.2583	40.3702	0.2581	40.3702	0.258	40.3702	0.2579	40.3702	0.2576	40.3702	0.2573
42.2924	0.258	42.2924	0.2578	42.2924	0.2577	42.2924	0.2576	42.2924	0.2576	42.2924	0.2574	42.2924	0.2571
44.3062	0.2575	44.3062	0.2574	44.3062	0.2574	44.3062	0.2573	44.3062	0.2573	44.3062	0.2572	44.3062	0.257
46.4159	0.2571	46.4159	0.2571	46.4159	0.2571	46.4159	0.257	46.4159	0.257	46.4159	0.2569	46.4159	0.2568
48.626	0.2568	48.626	0.2568	48.626	0.2567	48.626	0.2567	48.626	0.2567	48.626	0.2567	48.626	0.2567
50.9414	0.2564	50.9414	0.2565	50.9414	0.2565	50.9414	0.2565	50.9414	0.2565	50.9414	0.2565	50.9414	0.2566

RPP-WTP Pretreatment Facility ISRS
Calc No.: 24590-PTF-S0C-S15T-00005, Rev. 0B

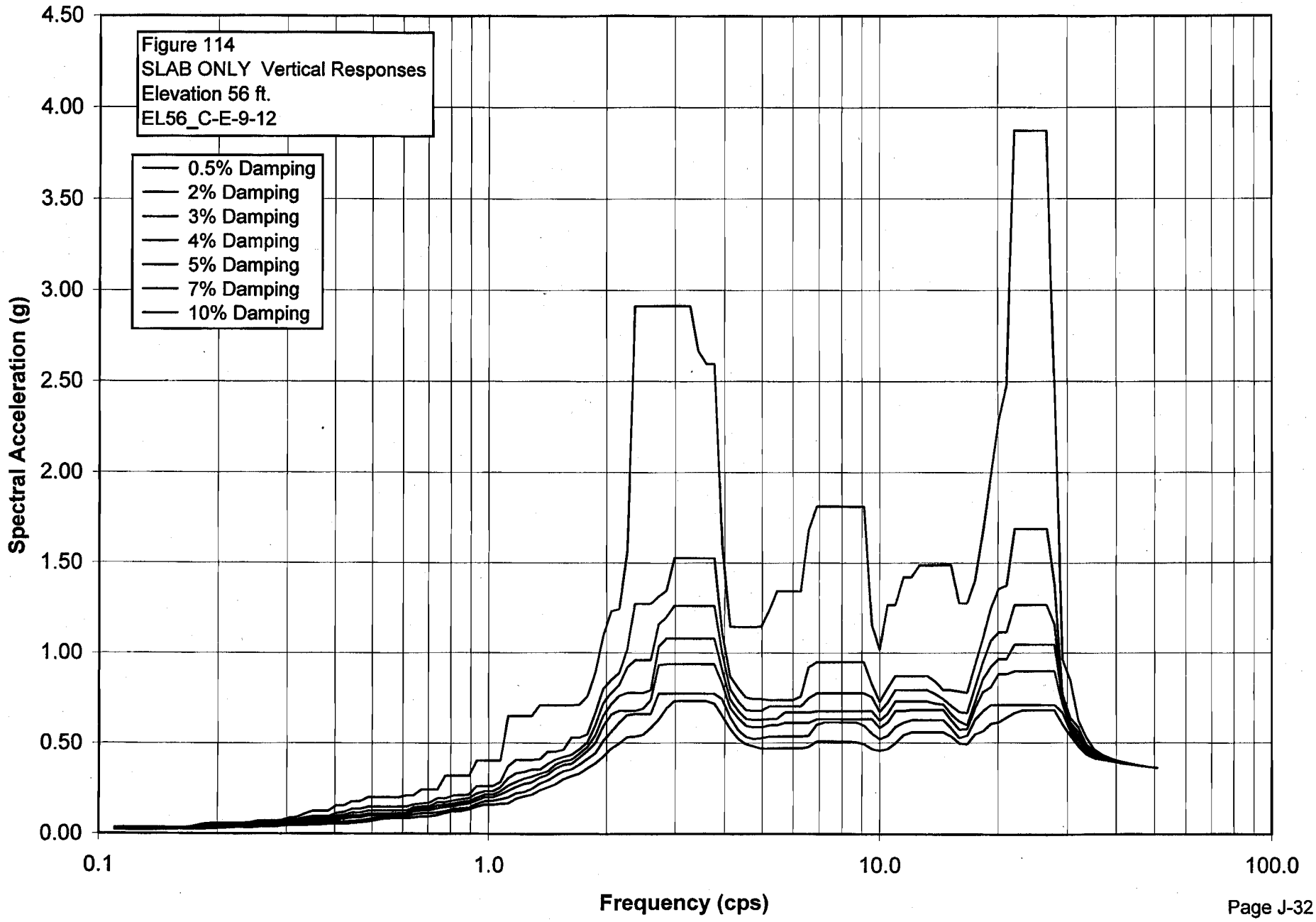

RPP-WTP Pretreatment Facility ISRS
Calc No.: 24590-PTF-S0C-S15T-00005, Rev. 0B

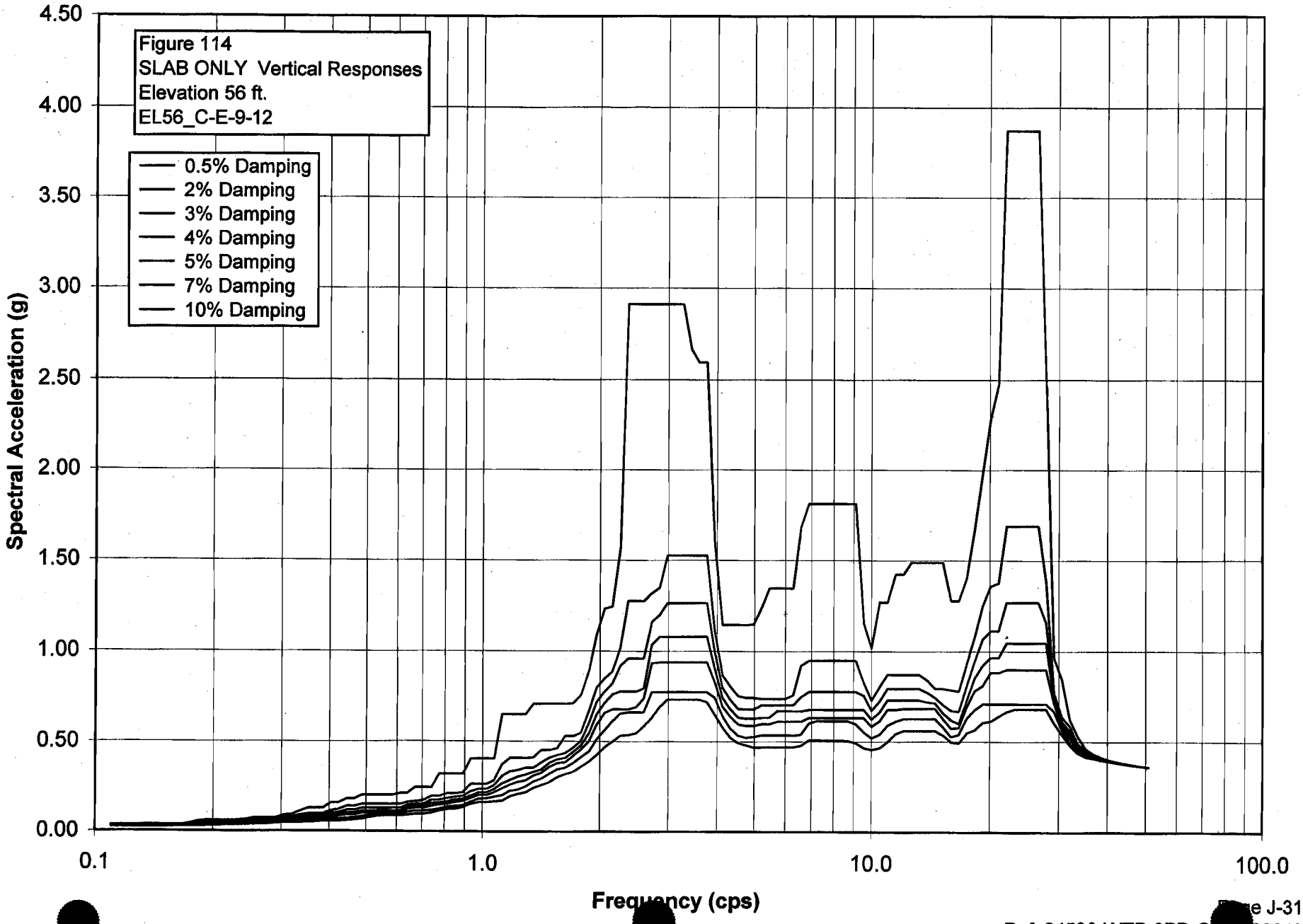

S_PTWW114.grf
RPP-WTP Pretreatment Facility ISRS
Calc No.: 24590-PTF-S0C-S15T-00005, Rev. 0B
Frequency (cps)
Spectral Acceleration (g)
Figure 114
SLAB ONLY Vertical Responses
Elevation 56 ft.
EL56_C-E-9-12

Damping	0.50%	Damping	2%	Damping	3%	Damping	4%	Damping	5%	Damping	7%	Damping	10%
Freq.	Accel.	Freq.	Accel.	Freq.	Accel.	Freq.	Accel.	Freq.	Accel.	Freq.	Accel.	Freq.	Accel.
0.1098	0.0329	0.1098	0.0295	0.1098	0.0275	0.1098	0.0264	0.1098	0.0254	0.1098	0.0237	0.1098	0.0216
0.115	0.0347	0.115	0.0311	0.115	0.029	0.115	0.0271	0.115	0.0257	0.115	0.0239	0.115	0.0219
0.1204	0.0348	0.1204	0.0312	0.1204	0.0291	0.1204	0.0272	0.1204	0.0257	0.1204	0.0239	0.1204	0.0219
0.1262	0.0349	0.1262	0.0312	0.1262	0.0291	0.1262	0.0272	0.1262	0.0257	0.1262	0.0239	0.1262	0.0219
0.1322	0.0349	0.1322	0.0312	0.1322	0.0291	0.1322	0.0272	0.1322	0.0257	0.1322	0.0239	0.1322	0.0219
0.1385	0.0349	0.1385	0.0312	0.1385	0.0291	0.1385	0.0272	0.1385	0.0257	0.1385	0.024	0.1385	0.0221
0.1451	0.0349	0.1451	0.0312	0.1451	0.0291	0.1451	0.0272	0.1451	0.0257	0.1451	0.024	0.1451	0.0221
0.152	0.0349	0.152	0.0312	0.152	0.0291	0.152	0.0272	0.152	0.0262	0.152	0.0249	0.152	0.0235
0.1592	0.0348	0.1592	0.0312	0.1592	0.0291	0.1592	0.0283	0.1592	0.0276	0.1592	0.0263	0.1592	0.0247
0.1668	0.0348	0.1668	0.0312	0.1668	0.0297	0.1668	0.029	0.1668	0.0282	0.1668	0.0269	0.1668	0.0252
0.1748	0.0422	0.1748	0.0358	0.1748	0.0324	0.1748	0.0296	0.1748	0.0282	0.1748	0.0269	0.1748	0.0258
0.1831	0.0535	0.1831	0.0445	0.1831	0.0398	0.1831	0.0358	0.1831	0.0324	0.1831	0.0273	0.1831	0.0261
0.1918	0.0577	0.1918	0.0477	0.1918	0.0424	0.1918	0.038	0.1918	0.0347	0.1918	0.0318	0.1918	0.0285
0.2009	0.0577	0.2009	0.0477	0.2009	0.0424	0.2009	0.0391	0.2009	0.0372	0.2009	0.034	0.2009	0.0301
0.2105	0.0577	0.2105	0.0477	0.2105	0.0424	0.2105	0.0392	0.2105	0.0375	0.2105	0.0347	0.2105	0.0324
0.2205	0.0577	0.2205	0.0477	0.2205	0.0432	0.2205	0.0416	0.2205	0.0402	0.2205	0.0378	0.2205	0.0349
0.231	0.0586	0.231	0.0493	0.231	0.0464	0.231	0.044	0.231	0.0423	0.231	0.0394	0.231	0.0358
0.242	0.0624	0.242	0.0554	0.242	0.0513	0.242	0.0476	0.242	0.0442	0.242	0.0394	0.242	0.0358
0.2535	0.0714	0.2535	0.0624	0.2535	0.0575	0.2535	0.0532	0.2535	0.0496	0.2535	0.044	0.2535	0.0384
0.2656	0.0714	0.2656	0.0624	0.2656	0.0575	0.2656	0.0532	0.2656	0.0496	0.2656	0.044	0.2656	0.0384
0.2783	0.0714	0.2783	0.0624	0.2783	0.0575	0.2783	0.0532	0.2783	0.0496	0.2783	0.044	0.2783	0.0396
0.2915	0.0743	0.2915	0.0667	0.2915	0.0623	0.2915	0.0587	0.2915	0.0554	0.2915	0.0503	0.2915	0.0444
0.3054	0.0876	0.3054	0.0758	0.3054	0.0693	0.3054	0.0643	0.3054	0.0605	0.3054	0.0541	0.3054	0.0469
0.3199	0.0921	0.3199	0.0796	0.3199	0.0728	0.3199	0.0669	0.3199	0.0618	0.3199	0.0541	0.3199	0.0469
0.3352	0.1106	0.3352	0.089	0.3352	0.0786	0.3352	0.0706	0.3352	0.0644	0.3352	0.0555	0.3352	0.0478
0.3511	0.1252	0.3511	0.0954	0.3511	0.0826	0.3511	0.0726	0.3511	0.0667	0.3511	0.0582	0.3511	0.0497
0.3678	0.1252	0.3678	0.0954	0.3678	0.0849	0.3678	0.0776	0.3678	0.0712	0.3678	0.0614	0.3678	0.0509

0.3853	0.1252	0.3853	0.0957	0.3853	0.088	0.3853	0.0809	0.3853	0.0753	0.3853	0.0656	0.3853	0.0547
0.4037	0.155	0.4037	0.1125	0.4037	0.0976	0.4037	0.086	0.4037	0.0768	0.4037	0.0656	0.4037	0.0547
0.4229	0.155	0.4229	0.119	0.4229	0.1036	0.4229	0.0912	0.4229	0.0814	0.4229	0.0671	0.4229	0.0547
0.4431	0.1769	0.4431	0.1354	0.4431	0.1155	0.4431	0.1001	0.4431	0.0878	0.4431	0.0702	0.4431	0.0587
0.4642	0.1769	0.4642	0.1354	0.4642	0.1155	0.4642	0.1001	0.4642	0.0878	0.4642	0.0734	0.4642	0.0628
0.4863	0.1981	0.4863	0.1469	0.4863	0.1252	0.4863	0.1094	0.4863	0.0975	0.4863	0.081	0.4863	0.0671
0.5094	0.1981	0.5094	0.1469	0.5094	0.1252	0.5094	0.1094	0.5094	0.0975	0.5094	0.0854	0.5094	0.0742
0.5337	0.1981	0.5337	0.1469	0.5337	0.1252	0.5337	0.111	0.5337	0.1043	0.5337	0.0939	0.5337	0.0821
0.5591	0.1981	0.5591	0.1469	0.5591	0.1252	0.5591	0.111	0.5591	0.1043	0.5591	0.0956	0.5591	0.0843
0.5857	0.1986	0.5857	0.1481	0.5857	0.1265	0.5857	0.111	0.5857	0.1045	0.5857	0.0956	0.5857	0.0843
0.6136	0.2097	0.6136	0.1481	0.6136	0.1265	0.6136	0.1132	0.6136	0.1048	0.6136	0.0956	0.6136	0.0843
0.6428	0.2097	0.6428	0.1595	0.6428	0.1441	0.6428	0.1318	0.6428	0.1214	0.6428	0.1054	0.6428	0.0887
0.6734	0.2429	0.6734	0.1643	0.6734	0.1495	0.6734	0.1384	0.6734	0.1286	0.6734	0.1123	0.6734	0.0941
0.7055	0.2429	0.7055	0.1698	0.7055	0.1495	0.7055	0.1384	0.7055	0.1286	0.7055	0.1129	0.7055	0.0954
0.7391	0.2429	0.7391	0.1938	0.7391	0.1723	0.7391	0.1543	0.7391	0.1393	0.7391	0.1166	0.7391	0.102
0.7743	0.3187	0.7743	0.1938	0.7743	0.1728	0.7743	0.158	0.7743	0.1453	0.7743	0.125	0.7743	0.1141
0.8111	0.3187	0.8111	0.2097	0.8111	0.1822	0.8111	0.1632	0.8111	0.1511	0.8111	0.1359	0.8111	0.1231
0.8497	0.3187	0.8497	0.2097	0.8497	0.1902	0.8497	0.1739	0.8497	0.16	0.8497	0.1392	0.8497	0.1257
0.8902	0.3187	0.8902	0.2147	0.8902	0.1952	0.8902	0.1789	0.8902	0.1653	0.8902	0.1438	0.8902	0.1331
0.9326	0.4043	0.9326	0.2626	0.9326	0.2209	0.9326	0.1971	0.9326	0.1821	0.9326	0.1638	0.9326	0.1491
0.977	0.4043	0.977	0.2626	0.977	0.2339	0.977	0.2155	0.977	0.2004	0.977	0.1789	0.977	0.1592
1.0235	0.4043	1.0235	0.2626	1.0235	0.2339	1.0235	0.2155	1.0235	0.2004	1.0235	0.1807	1.0235	0.1592
1.0723	0.4043	1.0723	0.2849	1.0723	0.2568	1.0723	0.234	1.0723	0.2159	1.0723	0.1896	1.0723	0.1643
1.1233	0.6502	1.1233	0.373	1.1233	0.3071	1.1233	0.2653	1.1233	0.2365	1.1233	0.1989	1.1233	0.1675
1.1768	0.6502	1.1768	0.4086	1.1768	0.3325	1.1768	0.285	1.1768	0.2582	1.1768	0.2243	1.1768	0.1928
1.2328	0.6502	1.2328	0.4086	1.2328	0.34	1.2328	0.3047	1.2328	0.2751	1.2328	0.23	1.2328	0.2061
1.2916	0.6502	1.2916	0.4086	1.2916	0.3543	1.2916	0.3156	1.2916	0.2838	1.2916	0.2478	1.2916	0.2145
1.353	0.7086	1.353	0.4121	1.353	0.3543	1.353	0.3302	1.353	0.311	1.353	0.2783	1.353	0.2406
1.4175	0.7086	1.4175	0.454	1.4175	0.385	1.4175	0.3437	1.4175	0.3254	1.4175	0.2936	1.4175	0.2567
1.485	0.7086	1.485	0.454	1.485	0.4103	1.485	0.3839	1.485	0.3602	1.485	0.3199	1.485	0.2743
1.5557	0.7086	1.5557	0.4636	1.5557	0.4243	1.5557	0.4012	1.5557	0.381	1.5557	0.3453	1.5557	0.3011
1.6298	0.7086	1.6298	0.5297	1.6298	0.4359	1.6298	0.4097	1.6298	0.3854	1.6298	0.3555	1.6298	0.318
1.7074	0.7121	1.7074	0.5297	1.7074	0.4668	1.7074	0.4428	1.7074	0.4206	1.7074	0.3816	1.7074	0.3319
1.7887	0.7575	1.7887	0.5496	1.7887	0.5036	1.7887	0.4793	1.7887	0.4566	1.7887	0.414	1.7887	0.3611
1.8738	0.892	1.8738	0.6685	1.8738	0.6011	1.8738	0.544	1.8738	0.5018	1.8738	0.4443	1.8738	0.3894
1.963	1.0943	1.963	0.801	1.963	0.7199	1.963	0.6514	1.963	0.5935	1.963	0.5124	1.963	0.4262
2.0565	1.2337	2.0565	0.8511	2.0565	0.7793	2.0565	0.7154	2.0565	0.6581	2.0565	0.5628	2.0565	0.4701
2.1544	1.2448	2.1544	0.8899	2.1544	0.823	2.1544	0.762	2.1544	0.6789	2.1544	0.6122	2.1544	0.4991
2.257	1.5688	2.257	1.0198	2.257	0.9214	2.257	0.7794	2.257	0.6789	2.257	0.6552	2.257	0.5322

2.3645	2.9117	2.3645	1.2761	2.3645	0.9616	2.3645	0.7794	2.3645	0.6789	2.3645	0.6628	2.3645	0.5365
2.4771	2.9117	2.4771	1.2761	2.4771	0.9616	2.4771	0.7794	2.4771	0.6908	2.4771	0.6628	2.4771	0.5471
2.595	2.9117	2.595	1.2761	2.595	0.9616	2.595	0.7954	2.595	0.7391	2.595	0.6628	2.595	0.5846
2.7186	2.9117	2.7186	1.3188	2.7186	1.1593	2.7186	1.0362	2.7186	0.9353	2.7186	0.7752	2.7186	0.6316
2.848	2.9117	2.848	1.3484	2.848	1.2006	2.848	1.0805	2.848	0.9403	2.848	0.7752	2.848	0.692
2.9836	2.9117	2.9836	1.5277	2.9836	1.264	2.9836	1.0805	2.9836	0.9403	2.9836	0.7752	2.9836	0.7343
3.1257	2.9117	3.1257	1.5277	3.1257	1.264	3.1257	1.0805	3.1257	0.9403	3.1257	0.7752	3.1257	0.7343
3.2745	2.9117	3.2745	1.5277	3.2745	1.264	3.2745	1.0805	3.2745	0.9403	3.2745	0.7752	3.2745	0.7343
3.4305	2.6673	3.4305	1.5277	3.4305	1.264	3.4305	1.0805	3.4305	0.9403	3.4305	0.7752	3.4305	0.7343
3.5938	2.5949	3.5938	1.5277	3.5938	1.264	3.5938	1.0805	3.5938	0.9403	3.5938	0.7752	3.5938	0.7343
3.7649	2.5949	3.7649	1.5277	3.7649	1.264	3.7649	1.0805	3.7649	0.9403	3.7649	0.7752	3.7649	0.7201
3.9442	1.6012	3.9442	1.1133	3.9442	1.0007	3.9442	0.9087	3.9442	0.8333	3.9442	0.7453	3.9442	0.6514
4.132	1.1465	4.132	0.8693	4.132	0.8001	4.132	0.7444	4.132	0.6953	4.132	0.6424	4.132	0.5789
4.3288	1.1465	4.3288	0.8084	4.3288	0.7336	4.3288	0.6811	4.3288	0.6391	4.3288	0.5725	4.3288	0.5234
4.5349	1.1465	4.5349	0.7546	4.5349	0.6828	4.5349	0.6342	4.5349	0.5952	4.5349	0.534	4.5349	0.4939
4.7508	1.1465	4.7508	0.7453	4.7508	0.6799	4.7508	0.6294	4.7508	0.5877	4.7508	0.5225	4.7508	0.4822
4.977	1.1489	4.977	0.7453	4.977	0.6799	4.977	0.6294	4.977	0.5877	4.977	0.5283	4.977	0.4703
5.214	1.2396	5.214	0.7395	5.214	0.7043	5.214	0.6335	5.214	0.5978	5.214	0.5371	5.214	0.4707
5.4623	1.3455	5.4623	0.7395	5.4623	0.7043	5.4623	0.6346	5.4623	0.5978	5.4623	0.5371	5.4623	0.4707
5.7224	1.3455	5.7224	0.7395	5.7224	0.7043	5.7224	0.6698	5.7224	0.6123	5.7224	0.5371	5.7224	0.4707
5.9948	1.3455	5.9948	0.7395	5.9948	0.7043	5.9948	0.6698	5.9948	0.6123	5.9948	0.5371	5.9948	0.4707
6.2803	1.3455	6.2803	0.7595	6.2803	0.7043	6.2803	0.6698	6.2803	0.6123	6.2803	0.5371	6.2803	0.4707
6.5793	1.684	6.5793	0.9222	6.5793	0.7494	6.5793	0.6698	6.5793	0.6123	6.5793	0.5413	6.5793	0.4805
6.8926	1.8149	6.8926	0.9509	6.8926	0.778	6.8926	0.6768	6.8926	0.6324	6.8926	0.6013	6.8926	0.5087
7.2208	1.8149	7.2208	0.9509	7.2208	0.778	7.2208	0.6768	7.2208	0.6324	7.2208	0.6144	7.2208	0.5087
7.5646	1.8149	7.5646	0.9509	7.5646	0.778	7.5646	0.6768	7.5646	0.6324	7.5646	0.6144	7.5646	0.5087
7.9248	1.8149	7.9248	0.9509	7.9248	0.778	7.9248	0.6768	7.9248	0.6324	7.9248	0.6144	7.9248	0.5087
8.3022	1.8149	8.3022	0.9509	8.3022	0.778	8.3022	0.6768	8.3022	0.6324	8.3022	0.6144	8.3022	0.5087
8.6975	1.8149	8.6975	0.9509	8.6975	0.778	8.6975	0.6768	8.6975	0.6324	8.6975	0.6144	8.6975	0.5059
9.1116	1.8149	9.1116	0.9509	9.1116	0.778	9.1116	0.6768	9.1116	0.6324	9.1116	0.5976	9.1116	0.4947
9.5455	1.1574	9.5455	0.8285	9.5455	0.7562	9.5455	0.6768	9.5455	0.6324	9.5455	0.5527	9.5455	0.4669
10	1.0191	10	0.7303	10	0.6741	10	0.6247	10	0.584	10	0.5211	10	0.4588
10.4762	1.2689	10.4762	0.8051	10.4762	0.7252	10.4762	0.6633	10.4762	0.6143	10.4762	0.5403	10.4762	0.4679
10.975	1.2689	10.975	0.8733	10.975	0.7952	10.975	0.7316	10.975	0.6774	10.975	0.5899	10.975	0.499
11.4976	1.4247	11.4976	0.8733	11.4976	0.7952	11.4976	0.7316	11.4976	0.6783	11.4976	0.6128	11.4976	0.5446
12.045	1.4247	12.045	0.8733	12.045	0.7952	12.045	0.7316	12.045	0.684	12.045	0.6273	12.045	0.5606
12.6186	1.4909	12.6186	0.8733	12.6186	0.7952	12.6186	0.7316	12.6186	0.684	12.6186	0.6273	12.6186	0.5606
13.2194	1.4909	13.2194	0.8733	13.2194	0.7952	13.2194	0.7316	13.2194	0.684	13.2194	0.6273	13.2194	0.5606
13.8489	1.4909	13.8489	0.8422	13.8489	0.7725	13.8489	0.7204	13.8489	0.684	13.8489	0.6273	13.8489	0.5606

14.5083	1.4909	14.5083	0.7952	14.5083	0.7458	14.5083	0.7151	14.5083	0.684	14.5083	0.6273	14.5083	0.5606
15.1991	1.4909	15.1991	0.7952	15.1991	0.7064	15.1991	0.6596	15.1991	0.6265	15.1991	0.5817	15.1991	0.5361
15.9228	1.2797	15.9228	0.7883	15.9228	0.6725	15.9228	0.6193	15.9228	0.5748	15.9228	0.5277	15.9228	0.4985
16.681	1.2797	16.681	0.78	16.681	0.6679	16.681	0.5999	16.681	0.578	16.681	0.5418	16.681	0.494
17.4753	1.4073	17.4753	0.9347	17.4753	0.8112	17.4753	0.7304	17.4753	0.6932	17.4753	0.6314	17.4753	0.549
18.3074	1.6723	18.3074	1.0801	18.3074	0.949	18.3074	0.8549	18.3074	0.7825	18.3074	0.6755	18.3074	0.5649
19.1791	1.9879	19.1791	1.2503	19.1791	1.0688	19.1791	0.9246	19.1791	0.8121	19.1791	0.7102	19.1791	0.6054
20.0923	2.2843	20.0923	1.3591	20.0923	1.1154	20.0923	0.9682	20.0923	0.8852	20.0923	0.7102	20.0923	0.6137
21.049	2.4787	21.049	1.3786	21.049	1.1154	21.049	0.9682	21.049	0.8852	21.049	0.7102	21.049	0.6403
22.0513	3.8727	22.0513	1.6902	22.0513	1.2689	22.0513	1.0476	22.0513	0.9009	22.0513	0.7102	22.0513	0.6658
23.1013	3.8727	23.1013	1.6902	23.1013	1.2689	23.1013	1.0476	23.1013	0.9009	23.1013	0.7102	23.1013	0.6815
24.2013	3.8727	24.2013	1.6902	24.2013	1.2689	24.2013	1.0476	24.2013	0.9009	24.2013	0.7102	24.2013	0.6815
25.3536	3.8727	25.3536	1.6902	25.3536	1.2689	25.3536	1.0476	25.3536	0.9009	25.3536	0.7102	25.3536	0.6815
26.5609	3.8727	26.5609	1.6902	26.5609	1.2689	26.5609	1.0476	26.5609	0.9009	26.5609	0.7102	26.5609	0.6815
27.8256	2.4743	27.8256	1.3858	27.8256	1.1604	27.8256	1.0476	27.8256	0.9009	27.8256	0.7102	27.8256	0.6815
29.1505	0.9665	29.1505	0.7731	29.1505	0.7537	29.1505	0.7357	29.1505	0.7154	29.1505	0.6686	29.1505	0.6036
30.5386	0.8492	30.5386	0.6389	30.5386	0.6134	30.5386	0.5966	30.5386	0.5827	30.5386	0.566	30.5386	0.5402
31.9927	0.624	31.9927	0.5865	31.9927	0.5601	31.9927	0.5376	31.9927	0.5188	31.9927	0.4921	31.9927	0.4842
33.516	0.5318	33.516	0.4922	33.516	0.4753	33.516	0.4638	33.516	0.4549	33.516	0.4414	33.516	0.44
35.1119	0.4647	35.1119	0.4581	35.1119	0.4528	35.1119	0.4473	35.1119	0.4419	35.1119	0.4315	35.1119	0.4174
36.7838	0.4365	36.7838	0.4331	36.7838	0.4305	36.7838	0.4277	36.7838	0.4248	36.7838	0.4187	36.7838	0.4096
38.5353	0.4178	38.5353	0.4157	38.5353	0.4141	38.5353	0.4124	38.5353	0.4106	38.5353	0.4069	38.5353	0.401
40.3702	0.4039	40.3702	0.4024	40.3702	0.4014	40.3702	0.4003	40.3702	0.3992	40.3702	0.3967	40.3702	0.3928
42.2924	0.3928	42.2924	0.3918	42.2924	0.3911	42.2924	0.3904	42.2924	0.3897	42.2924	0.3881	42.2924	0.3855
44.3062	0.3835	44.3062	0.3829	44.3062	0.3825	44.3062	0.3821	44.3062	0.3816	44.3062	0.3806	44.3062	0.379
46.4159	0.3756	46.4159	0.3753	46.4159	0.3751	46.4159	0.3748	46.4159	0.3746	46.4159	0.374	46.4159	0.3732
48.626	0.3686	48.626	0.3685	48.626	0.3684	48.626	0.3683	48.626	0.3683	48.626	0.3682	48.626	0.368
50.9414	0.362	50.9414	0.3622	50.9414	0.3623	50.9414	0.3624	50.9414	0.3625	50.9414	0.3628	50.9414	0.3633

RPP-WTP Pretreatment Facility ISRS
Calc No.: 24590-PTF-S0C-S15T-00005, Rev. 0B

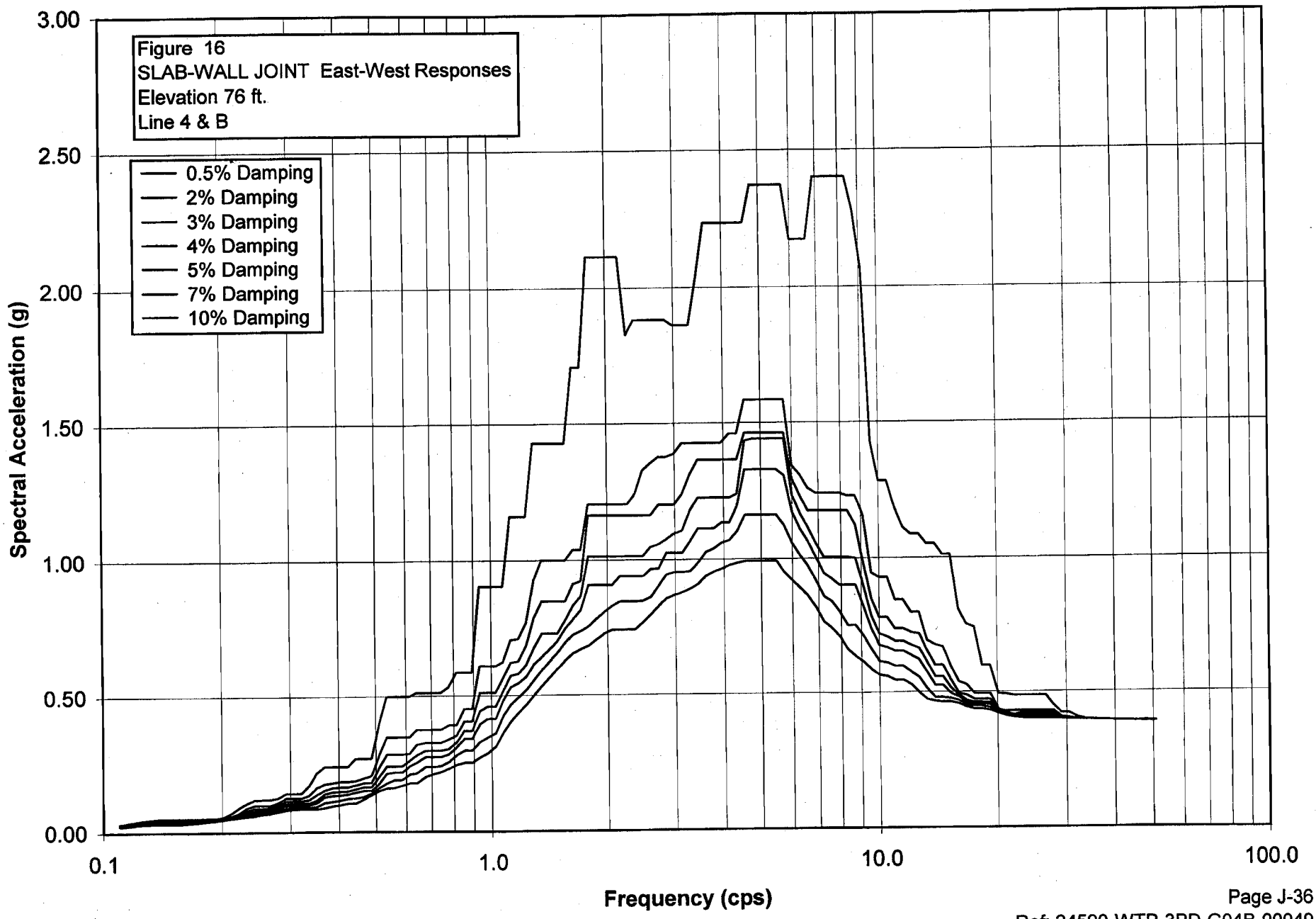

S_PTWW016.grf
RPP-WTP Pretreatment Facility ISRS
Calc No.: 24590-PTF-S0C-S15T-00005, Rev. 0B
Frequency (cps)
Spectral Acceleration (g)
Figure 16
SLAB-WALL JOINT East-West Responses
Elevation 76 ft.
Line 4 & B

Damping	0.50%	Damping	2%	Damping	3%	Damping	4%	Damping	5%	Damping	7%	Damping	10%
Freq.	Accel.	Freq.	Accel.	Freq.	Accel.	Freq.	Accel.	Freq.	Accel.	Freq.	Accel.	Freq.	Accel.
0.1098	0.0314	0.1098	0.0289	0.1098	0.0276	0.1098	0.0268	0.1098	0.0261	0.1098	0.0248	0.1098	0.0233
0.115	0.0359	0.115	0.0331	0.115	0.0315	0.115	0.0301	0.115	0.0291	0.115	0.0276	0.115	0.0255
0.1204	0.0411	0.1204	0.0383	0.1204	0.0367	0.1204	0.0354	0.1204	0.0341	0.1204	0.0317	0.1204	0.0288
0.1262	0.046	0.1262	0.0427	0.1262	0.0408	0.1262	0.039	0.1262	0.0373	0.1262	0.0344	0.1262	0.0312
0.1322	0.0489	0.1322	0.0443	0.1322	0.0422	0.1322	0.0403	0.1322	0.0386	0.1322	0.0356	0.1322	0.0322
0.1385	0.0518	0.1385	0.0463	0.1385	0.0431	0.1385	0.0403	0.1385	0.0386	0.1385	0.0356	0.1385	0.0322
0.1451	0.0518	0.1451	0.0463	0.1451	0.0431	0.1451	0.0403	0.1451	0.0386	0.1451	0.0356	0.1451	0.0322
0.152	0.0518	0.152	0.0463	0.152	0.0431	0.152	0.0403	0.152	0.0386	0.152	0.0356	0.152	0.0322
0.1592	0.0518	0.1592	0.0463	0.1592	0.0431	0.1592	0.0403	0.1592	0.0386	0.1592	0.0356	0.1592	0.0325
0.1668	0.0518	0.1668	0.0463	0.1668	0.0431	0.1668	0.0403	0.1668	0.0383	0.1668	0.0363	0.1668	0.0353
0.1748	0.0518	0.1748	0.0463	0.1748	0.0431	0.1748	0.041	0.1748	0.0405	0.1748	0.0395	0.1748	0.038
0.1831	0.0518	0.1831	0.0463	0.1831	0.0455	0.1831	0.0448	0.1831	0.0441	0.1831	0.0427	0.1831	0.0407
0.1918	0.0522	0.1918	0.0506	0.1918	0.0496	0.1918	0.0487	0.1918	0.0477	0.1918	0.0459	0.1918	0.0438
0.2009	0.057	0.2009	0.055	0.2009	0.0537	0.2009	0.0525	0.2009	0.0515	0.2009	0.0498	0.2009	0.0476
0.2105	0.0708	0.2105	0.0601	0.2105	0.0587	0.2105	0.0575	0.2105	0.0563	0.2105	0.0541	0.2105	0.0519
0.2205	0.091	0.2205	0.0715	0.2205	0.0644	0.2205	0.0625	0.2205	0.0611	0.2205	0.0588	0.2205	0.0561
0.231	0.108	0.231	0.0908	0.231	0.0814	0.231	0.0735	0.231	0.0674	0.231	0.0633	0.231	0.0597
0.242	0.1196	0.242	0.0994	0.242	0.0885	0.242	0.0794	0.242	0.0717	0.242	0.0668	0.242	0.0623
0.2535	0.1206	0.2535	0.0994	0.2535	0.0885	0.2535	0.0797	0.2535	0.0756	0.2535	0.0697	0.2535	0.066
0.2656	0.1206	0.2656	0.0994	0.2656	0.0924	0.2656	0.0882	0.2656	0.0842	0.2656	0.0771	0.2656	0.0689
0.2783	0.1256	0.2783	0.1098	0.2783	0.1009	0.2783	0.095	0.2783	0.0906	0.2783	0.0838	0.2783	0.0758
0.2915	0.1426	0.2915	0.1249	0.2915	0.1149	0.2915	0.106	0.2915	0.0982	0.2915	0.089	0.2915	0.0817
0.3054	0.1426	0.3054	0.1249	0.3054	0.1154	0.3054	0.1071	0.3054	0.0997	0.3054	0.0913	0.3054	0.0847
0.3199	0.1426	0.3199	0.1249	0.3199	0.1154	0.3199	0.1071	0.3199	0.0997	0.3199	0.0913	0.3199	0.0852
0.3352	0.1713	0.3352	0.1349	0.3352	0.1189	0.3352	0.1071	0.3352	0.0997	0.3352	0.0913	0.3352	0.0852
0.3511	0.2175	0.3511	0.1632	0.3511	0.1371	0.3511	0.1172	0.3511	0.1081	0.3511	0.0936	0.3511	0.0852
0.3678	0.2403	0.3678	0.1759	0.3678	0.1535	0.3678	0.1399	0.3678	0.128	0.3678	0.1082	0.3678	0.0889

0.3853	0.2403	0.3853	0.1805	0.3853	0.1624	0.3853	0.1469	0.3853	0.1337	0.3853	0.1126	0.3853	0.0954
0.4037	0.2403	0.4037	0.1857	0.4037	0.1654	0.4037	0.1487	0.4037	0.1347	0.4037	0.1168	0.4037	0.0998
0.4229	0.2403	0.4229	0.1857	0.4229	0.1654	0.4229	0.1499	0.4229	0.1383	0.4229	0.1223	0.4229	0.1056
0.4431	0.27	0.4431	0.1874	0.4431	0.1715	0.4431	0.1574	0.4431	0.1449	0.4431	0.1245	0.4431	0.1056
0.4642	0.27	0.4642	0.1967	0.4642	0.1794	0.4642	0.1641	0.4642	0.1506	0.4642	0.1282	0.4642	0.1187
0.4863	0.27	0.4863	0.2054	0.4863	0.1802	0.4863	0.1641	0.4863	0.1506	0.4863	0.1407	0.4863	0.1348
0.5094	0.3943	0.5094	0.281	0.5094	0.2344	0.5094	0.2011	0.5094	0.1764	0.5094	0.1609	0.5094	0.1499
0.5337	0.4992	0.5337	0.3477	0.5337	0.284	0.5337	0.2403	0.5337	0.2137	0.5337	0.1777	0.5337	0.1604
0.5591	0.4992	0.5591	0.3477	0.5591	0.284	0.5591	0.2403	0.5591	0.2181	0.5591	0.1904	0.5591	0.162
0.5857	0.4992	0.5857	0.3477	0.5857	0.284	0.5857	0.2403	0.5857	0.2181	0.5857	0.1904	0.5857	0.1691
0.6136	0.4992	0.6136	0.3477	0.6136	0.2869	0.6136	0.2609	0.6136	0.2403	0.6136	0.2092	0.6136	0.1778
0.6428	0.5116	0.6428	0.3742	0.6428	0.3192	0.6428	0.2813	0.6428	0.2532	0.6428	0.2136	0.6428	0.1778
0.6734	0.5116	0.6734	0.3742	0.6734	0.3261	0.6734	0.2971	0.6734	0.2735	0.6734	0.237	0.6734	0.1992
0.7055	0.5116	0.7055	0.3742	0.7055	0.3261	0.7055	0.2971	0.7055	0.2735	0.7055	0.237	0.7055	0.2095
0.7391	0.5116	0.7391	0.3742	0.7391	0.3261	0.7391	0.2971	0.7391	0.2735	0.7391	0.24	0.7391	0.2184
0.7743	0.5323	0.7743	0.3909	0.7743	0.3386	0.7743	0.3025	0.7743	0.2834	0.7743	0.254	0.7743	0.2303
0.8111	0.5871	0.8111	0.3915	0.8111	0.3531	0.8111	0.3269	0.8111	0.3094	0.8111	0.2798	0.8111	0.2444
0.8497	0.5871	0.8497	0.4501	0.8497	0.4042	0.8497	0.3687	0.8497	0.3404	0.8497	0.297	0.8497	0.2515
0.8902	0.5871	0.8902	0.4501	0.8902	0.4042	0.8902	0.3687	0.8902	0.3404	0.8902	0.297	0.8902	0.2515
0.9326	0.9044	0.9326	0.6108	0.9326	0.5104	0.9326	0.4427	0.9326	0.3941	0.9326	0.3288	0.9326	0.2714
0.977	0.9044	0.977	0.6108	0.977	0.5118	0.977	0.4588	0.977	0.413	0.977	0.3445	0.977	0.2871
1.0235	0.9044	1.0235	0.6108	1.0235	0.5118	1.0235	0.4588	1.0235	0.413	1.0235	0.3599	1.0235	0.3111
1.0723	0.9044	1.0723	0.6244	1.0723	0.5649	1.0723	0.5166	1.0723	0.4812	1.0723	0.4236	1.0723	0.3613
1.1233	1.1629	1.1233	0.7071	1.1233	0.622	1.1233	0.574	1.1233	0.5312	1.1233	0.4673	1.1233	0.4044
1.1768	1.1629	1.1768	0.7114	1.1768	0.6268	1.1768	0.5814	1.1768	0.5455	1.1768	0.4933	1.1768	0.4362
1.2328	1.1629	1.2328	0.7698	1.2328	0.6847	1.2328	0.6148	1.2328	0.5695	1.2328	0.5195	1.2328	0.4666
1.2916	1.4292	1.2916	0.9259	1.2916	0.7874	1.2916	0.6766	1.2916	0.6164	1.2916	0.5565	1.2916	0.5009
1.353	1.4292	1.353	1.0006	1.353	0.8493	1.353	0.7307	1.353	0.6419	1.353	0.5947	1.353	0.5351
1.4175	1.4292	1.4175	1.0006	1.4175	0.8493	1.4175	0.7307	1.4175	0.6705	1.4175	0.6261	1.4175	0.567
1.485	1.4292	1.485	1.0006	1.485	0.8493	1.485	0.7307	1.485	0.7027	1.485	0.658	1.485	0.599
1.5557	1.4292	1.5557	1.0006	1.5557	0.8493	1.5557	0.7794	1.5557	0.749	1.5557	0.6968	1.5557	0.6298
1.6298	1.7077	1.6298	1.0388	1.6298	0.9126	1.6298	0.8346	1.6298	0.783	1.6298	0.7256	1.6298	0.6557
1.7074	1.7077	1.7074	1.0388	1.7074	0.9223	1.7074	0.8679	1.7074	0.8184	1.7074	0.7383	1.7074	0.672
1.7887	2.1137	1.7887	1.2054	1.7887	1.1656	1.7887	1.0145	1.7887	0.9077	1.7887	0.7562	1.7887	0.6839
1.8738	2.1137	1.8738	1.2054	1.8738	1.1656	1.8738	1.0145	1.8738	0.9077	1.8738	0.7847	1.8738	0.7074
1.963	2.1137	1.963	1.2054	1.963	1.1656	1.963	1.0145	1.963	0.9077	1.963	0.8101	1.963	0.7294
2.0565	2.1137	2.0565	1.2054	2.0565	1.1656	2.0565	1.0145	2.0565	0.9077	2.0565	0.8314	2.0565	0.7428
2.1544	2.1137	2.1544	1.2054	2.1544	1.1656	2.1544	1.0145	2.1544	0.9395	2.1544	0.8475	2.1544	0.7428
2.257	1.827	2.257	1.2057	2.257	1.1656	2.257	1.0145	2.257	0.9395	2.257	0.8475	2.257	0.7428

2.3645	1.8804	2.3645	1.2434	2.3645	1.1656	2.3645	1.0145	2.3645	0.9395	2.3645	0.8475	2.3645	0.7447
2.4771	1.8804	2.4771	1.3292	2.4771	1.1656	2.4771	1.0145	2.4771	0.9395	2.4771	0.8498	2.4771	0.7715
2.595	1.8804	2.595	1.3552	2.595	1.1656	2.595	1.0484	2.595	0.9655	2.595	0.8633	2.595	0.7995
2.7186	1.8804	2.7186	1.3777	2.7186	1.2022	2.7186	1.0582	2.7186	0.968	2.7186	0.9044	2.7186	0.8316
2.848	1.8804	2.848	1.3777	2.848	1.2022	2.848	1.0766	2.848	1.0257	2.848	0.9446	2.848	0.8584
2.9836	1.8607	2.9836	1.3893	2.9836	1.2036	2.9836	1.0969	2.9836	1.0257	2.9836	0.9532	2.9836	0.8695
3.1257	1.8607	3.1257	1.4271	3.1257	1.2419	3.1257	1.108	3.1257	1.0257	3.1257	0.9532	3.1257	0.8799
3.2745	1.8607	3.2745	1.4271	3.2745	1.3122	3.2745	1.1806	3.2745	1.0677	3.2745	0.957	3.2745	0.8919
3.4305	2.0366	3.4305	1.4271	3.4305	1.3656	3.4305	1.2277	3.4305	1.1143	3.4305	0.9881	3.4305	0.9092
3.5938	2.2364	3.5938	1.4271	3.5938	1.3656	3.5938	1.2277	3.5938	1.1143	3.5938	1.0274	3.5938	0.9381
3.7649	2.2364	3.7649	1.4271	3.7649	1.3656	3.7649	1.2277	3.7649	1.1143	3.7649	1.0407	3.7649	0.9544
3.9442	2.2364	3.9442	1.4271	3.9442	1.3656	3.9442	1.2277	3.9442	1.1355	3.9442	1.0614	3.9442	0.965
4.132	2.2364	4.132	1.4602	4.132	1.3656	4.132	1.2277	4.132	1.1355	4.132	1.0703	4.132	0.9778
4.3288	2.2364	4.3288	1.4602	4.3288	1.3656	4.3288	1.2408	4.3288	1.1959	4.3288	1.1036	4.3288	0.9854
4.5349	2.2364	4.5349	1.5826	4.5349	1.4622	4.5349	1.4348	4.5349	1.3288	4.5349	1.1628	4.5349	0.992
4.7508	2.3716	4.7508	1.5826	4.7508	1.4622	4.7508	1.4409	4.7508	1.3288	4.7508	1.1628	4.7508	0.992
4.977	2.3716	4.977	1.5826	4.977	1.4622	4.977	1.4409	4.977	1.3288	4.977	1.1628	4.977	0.992
5.214	2.3716	5.214	1.5826	5.214	1.4622	5.214	1.4409	5.214	1.3288	5.214	1.1628	5.214	0.992
5.4623	2.3716	5.4623	1.5826	5.4623	1.4622	5.4623	1.4409	5.4623	1.3288	5.4623	1.1628	5.4623	0.992
5.7224	2.3716	5.7224	1.5826	5.7224	1.4622	5.7224	1.4409	5.7224	1.3065	5.7224	1.1218	5.7224	0.9494
5.9948	2.174	5.9948	1.3435	5.9948	1.2949	5.9948	1.2349	5.9948	1.173	5.9948	1.0574	5.9948	0.9187
6.2803	2.174	6.2803	1.3083	6.2803	1.2302	6.2803	1.1657	6.2803	1.1086	6.2803	1.0114	6.2803	0.8913
6.5793	2.174	6.5793	1.2587	6.5793	1.1757	6.5793	1.1146	6.5793	1.0633	6.5793	0.9712	6.5793	0.8607
6.8926	2.4006	6.8926	1.2413	6.8926	1.1757	6.8926	1.0556	6.8926	1.0029	6.8926	0.9176	6.8926	0.8191
7.2208	2.4006	7.2208	1.2413	7.2208	1.1757	7.2208	1.0053	7.2208	0.9447	7.2208	0.8592	7.2208	0.7652
7.5646	2.4006	7.5646	1.2413	7.5646	1.1757	7.5646	1.0053	7.5646	0.923	7.5646	0.841	7.5646	0.7421
7.9248	2.4006	7.9248	1.2413	7.9248	1.1757	7.9248	1.0053	7.9248	0.9008	7.9248	0.8025	7.9248	0.7109
8.3022	2.4006	8.3022	1.2296	8.3022	1.1757	8.3022	1.0053	8.3022	0.9008	8.3022	0.7518	8.3022	0.6612
8.6975	2.2773	8.6975	1.2296	8.6975	1.1232	8.6975	1.0001	8.6975	0.9008	8.6975	0.7518	8.6975	0.6359
9.1116	2.0653	9.1116	1.1587	9.1116	0.9831	9.1116	0.8993	9.1116	0.8231	9.1116	0.7124	9.1116	0.6152
9.5455	1.4291	9.5455	0.9457	9.5455	0.85	9.5455	0.7861	9.5455	0.7386	9.5455	0.6612	9.5455	0.5865
10	1.2844	10	0.927	10	0.7809	10	0.7196	10	0.6766	10	0.6164	10	0.565
10.4762	1.2844	10.4762	0.927	10.4762	0.7809	10.4762	0.7073	10.4762	0.6673	10.4762	0.611	10.4762	0.5598
10.975	1.1868	10.975	0.8449	10.975	0.7376	10.975	0.6909	10.975	0.654	10.975	0.5981	10.975	0.5451
11.4976	1.114	11.4976	0.8449	11.4976	0.7376	11.4976	0.6909	11.4976	0.654	11.4976	0.5981	11.4976	0.5451
12.045	1.0882	12.045	0.7988	12.045	0.7234	12.045	0.6756	12.045	0.6369	12.045	0.5755	12.045	0.5279
12.6186	1.0882	12.6186	0.7988	12.6186	0.7182	12.6186	0.6644	12.6186	0.6212	12.6186	0.5547	12.6186	0.4982
13.2194	1.0533	13.2194	0.6937	13.2194	0.6541	13.2194	0.6121	13.2194	0.5741	13.2194	0.512	13.2194	0.4728
13.8489	1.0533	13.8489	0.6765	13.8489	0.6007	13.8489	0.5574	13.8489	0.5245	13.8489	0.4799	13.8489	0.4666

14.5083	1.012	14.5083	0.6692	14.5083	0.6007	14.5083	0.5574	14.5083	0.5245	14.5083	0.4799	14.5083	0.4628
15.1991	1.012	15.1991	0.5971	15.1991	0.5461	15.1991	0.5158	15.1991	0.4944	15.1991	0.4764	15.1991	0.4628
15.9228	0.8097	15.9228	0.5374	15.9228	0.495	15.9228	0.4885	15.9228	0.4812	15.9228	0.4679	15.9228	0.4559
16.681	0.7535	16.681	0.5267	16.681	0.487	16.681	0.4672	16.681	0.459	16.681	0.4511	16.681	0.4435
17.4753	0.741	17.4753	0.4931	17.4753	0.471	17.4753	0.4599	17.4753	0.4548	17.4753	0.4458	17.4753	0.4353
18.3074	0.5983	18.3074	0.4931	18.3074	0.471	18.3074	0.4599	18.3074	0.4548	18.3074	0.4458	18.3074	0.4353
19.1791	0.5983	19.1791	0.4931	19.1791	0.471	19.1791	0.4588	19.1791	0.4508	19.1791	0.4402	19.1791	0.4301
20.0923	0.4937	20.0923	0.4338	20.0923	0.4303	20.0923	0.4283	20.0923	0.4265	20.0923	0.4234	20.0923	0.4193
21.049	0.491	21.049	0.4263	21.049	0.4206	21.049	0.4172	21.049	0.4148	21.049	0.4121	21.049	0.41
22.0513	0.4851	22.0513	0.4272	22.0513	0.4133	22.0513	0.4078	22.0513	0.4067	22.0513	0.4055	22.0513	0.405
23.1013	0.4851	23.1013	0.4273	23.1013	0.4197	23.1013	0.414	23.1013	0.4097	23.1013	0.4043	23.1013	0.4017
24.2013	0.4851	24.2013	0.4273	24.2013	0.4197	24.2013	0.414	24.2013	0.4097	24.2013	0.4043	24.2013	0.4003
25.3536	0.4851	25.3536	0.4273	25.3536	0.4197	25.3536	0.414	25.3536	0.4097	25.3536	0.4043	25.3536	0.4003
26.5609	0.4851	26.5609	0.4273	26.5609	0.4197	26.5609	0.414	26.5609	0.4097	26.5609	0.4043	26.5609	0.4003
27.8256	0.4481	27.8256	0.4273	27.8256	0.4197	27.8256	0.414	27.8256	0.4097	27.8256	0.4043	27.8256	0.4003
29.1505	0.419	29.1505	0.4045	29.1505	0.4037	29.1505	0.4029	29.1505	0.402	29.1505	0.4006	29.1505	0.3988
30.5386	0.419	30.5386	0.4009	30.5386	0.3989	30.5386	0.3982	30.5386	0.3978	30.5386	0.3977	30.5386	0.3973
31.9927	0.4031	31.9927	0.3968	31.9927	0.3966	31.9927	0.3966	31.9927	0.3966	31.9927	0.3965	31.9927	0.3962
33.516	0.3964	33.516	0.3966	33.516	0.3966	33.516	0.3964	33.516	0.3961	33.516	0.3957	33.516	0.3953
35.1119	0.3946	35.1119	0.3947	35.1119	0.3946	35.1119	0.3946	35.1119	0.3946	35.1119	0.3945	35.1119	0.3943
36.7838	0.3934	36.7838	0.3935	36.7838	0.3934	36.7838	0.3934	36.7838	0.3934	36.7838	0.3934	36.7838	0.3933
38.5353	0.3925	38.5353	0.3925	38.5353	0.3925	38.5353	0.3925	38.5353	0.3925	38.5353	0.3925	38.5353	0.3925
40.3702	0.3917	40.3702	0.3917	40.3702	0.3917	40.3702	0.3917	40.3702	0.3917	40.3702	0.3917	40.3702	0.3917
42.2924	0.391	42.2924	0.391	42.2924	0.391	42.2924	0.3911	42.2924	0.3911	42.2924	0.3911	42.2924	0.3911
44.3062	0.3904	44.3062	0.3904	44.3062	0.3904	44.3062	0.3904	44.3062	0.3905	44.3062	0.3905	44.3062	0.3905
46.4159	0.3899	46.4159	0.3899	46.4159	0.3899	46.4159	0.3899	46.4159	0.3899	46.4159	0.3899	46.4159	0.3899
48.626	0.3894	48.626	0.3894	48.626	0.3894	48.626	0.3894	48.626	0.3894	48.626	0.3894	48.626	0.3895
50.9414	0.3889	50.9414	0.3889	50.9414	0.3889	50.9414	0.3889	50.9414	0.3889	50.9414	0.389	50.9414	0.389

RPP-WTP Pretreatment Facility ISRS
Calc No.: 24590-PTF-S0C-S15T-00005, Rev. 0B

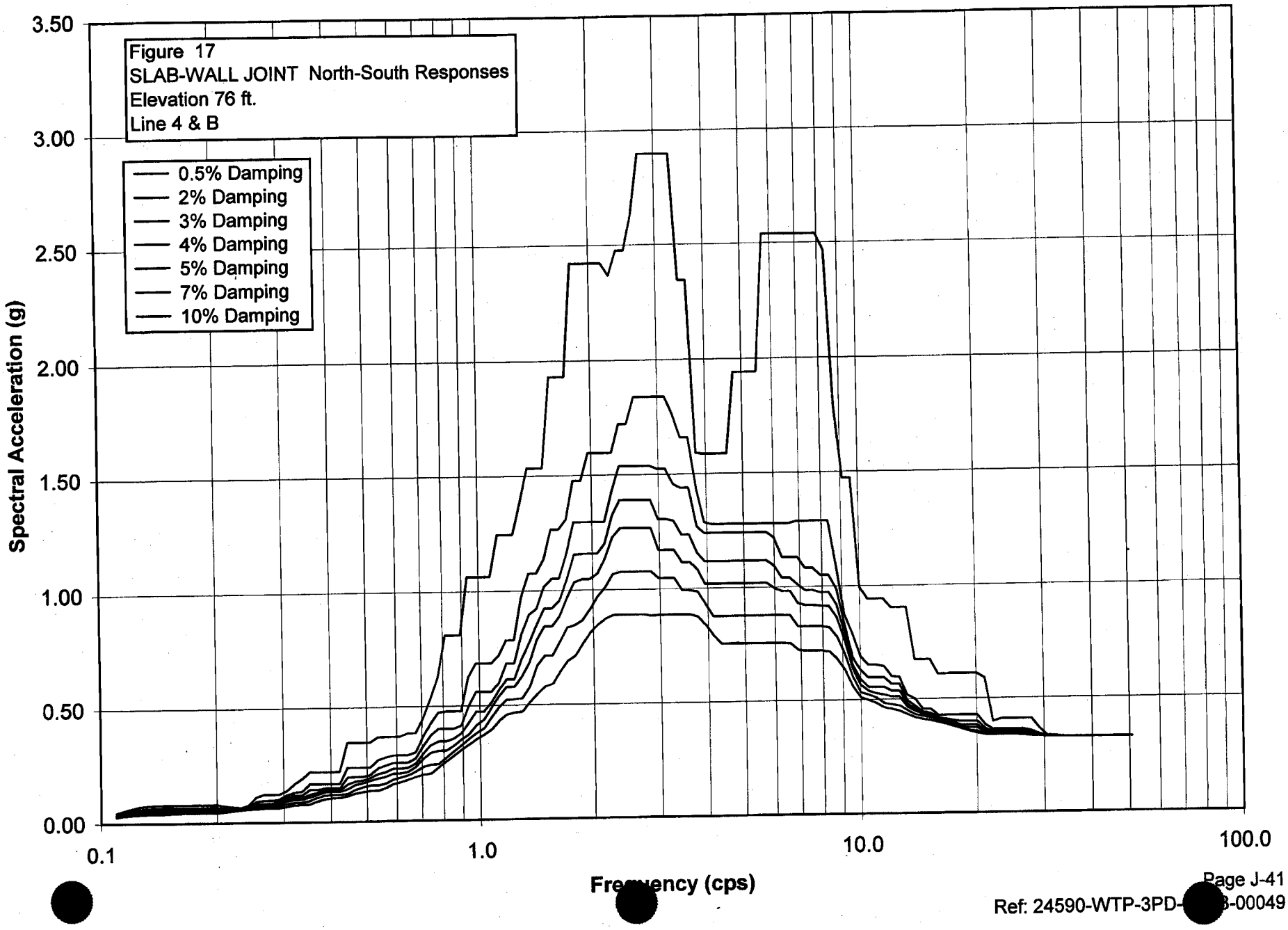

S_PTWW017.grf
RPP-WTP Pretreatment Facility ISRS
Calc No.: 24590-PTF-S0C-S15T-00005, Rev. 0B
Frequency (cps)
Spectral Acceleration (g)
Figure 17
SLAB-WALL JOINT North-South Responses
Elevation 76 ft.
Line 4 & B

Damping	0.50%	Damping	2%	Damping	3%	Damping	4%	Damping	5%	Damping	7%	Damping	10%
Freq.	Accel.	Freq.	Accel.	Freq.	Accel.	Freq.	Accel.	Freq.	Accel.	Freq.	Accel.	Freq.	Accel.
0.1098	0.0457	0.1098	0.0394	0.1098	0.0365	0.1098	0.0344	0.1098	0.033	0.1098	0.0312	0.1098	0.0287
0.115	0.0556	0.115	0.0493	0.115	0.0466	0.115	0.0443	0.115	0.0422	0.115	0.0385	0.115	0.0339
0.1204	0.0648	0.1204	0.0584	0.1204	0.0546	0.1204	0.0513	0.1204	0.0482	0.1204	0.0429	0.1204	0.0366
0.1262	0.072	0.1262	0.0618	0.1262	0.0573	0.1262	0.0534	0.1262	0.0499	0.1262	0.0438	0.1262	0.0383
0.1322	0.0763	0.1322	0.0654	0.1322	0.0604	0.1322	0.0565	0.1322	0.053	0.1322	0.047	0.1322	0.0403
0.1385	0.0787	0.1385	0.0673	0.1385	0.0609	0.1385	0.0565	0.1385	0.053	0.1385	0.047	0.1385	0.0403
0.1451	0.0789	0.1451	0.0676	0.1451	0.0613	0.1451	0.0565	0.1451	0.053	0.1451	0.047	0.1451	0.041
0.152	0.0789	0.152	0.0676	0.152	0.0613	0.152	0.0567	0.152	0.0537	0.152	0.0485	0.152	0.0433
0.1592	0.0789	0.1592	0.0676	0.1592	0.0613	0.1592	0.0567	0.1592	0.0537	0.1592	0.0492	0.1592	0.0442
0.1668	0.0789	0.1668	0.0676	0.1668	0.0613	0.1668	0.0567	0.1668	0.0537	0.1668	0.0492	0.1668	0.0442
0.1748	0.0789	0.1748	0.0676	0.1748	0.0613	0.1748	0.0567	0.1748	0.0537	0.1748	0.0492	0.1748	0.0442
0.1831	0.0789	0.1831	0.0676	0.1831	0.0612	0.1831	0.0567	0.1831	0.0537	0.1831	0.0492	0.1831	0.0442
0.1918	0.0789	0.1918	0.0676	0.1918	0.0612	0.1918	0.0564	0.1918	0.0536	0.1918	0.0492	0.1918	0.0442
0.2009	0.0789	0.2009	0.0676	0.2009	0.0612	0.2009	0.0564	0.2009	0.0534	0.2009	0.0485	0.2009	0.0442
0.2105	0.0738	0.2105	0.0634	0.2105	0.0597	0.2105	0.0564	0.2105	0.0534	0.2105	0.0493	0.2105	0.048
0.2205	0.0688	0.2205	0.0627	0.2205	0.0591	0.2205	0.0562	0.2205	0.055	0.2205	0.0534	0.2205	0.0519
0.231	0.0652	0.231	0.0628	0.231	0.0614	0.231	0.06	0.231	0.0589	0.231	0.0572	0.231	0.0554
0.242	0.0763	0.242	0.0692	0.242	0.0653	0.242	0.0637	0.242	0.0626	0.242	0.0606	0.242	0.0584
0.2535	0.1104	0.2535	0.0919	0.2535	0.0827	0.2535	0.0755	0.2535	0.0696	0.2535	0.0635	0.2535	0.0608
0.2656	0.1222	0.2656	0.0954	0.2656	0.083	0.2656	0.0755	0.2656	0.0696	0.2656	0.0656	0.2656	0.0625
0.2783	0.1222	0.2783	0.0954	0.2783	0.0834	0.2783	0.0787	0.2783	0.0746	0.2783	0.0678	0.2783	0.0633
0.2915	0.1222	0.2915	0.1011	0.2915	0.0942	0.2915	0.088	0.2915	0.0825	0.2915	0.0733	0.2915	0.0633
0.3054	0.137	0.3054	0.1189	0.3054	0.1089	0.3054	0.1003	0.3054	0.093	0.3054	0.0814	0.3054	0.0699
0.3199	0.1652	0.3199	0.1288	0.3199	0.1173	0.3199	0.1075	0.3199	0.0991	0.3199	0.0858	0.3199	0.0753
0.3352	0.1878	0.3352	0.133	0.3352	0.1173	0.3352	0.1075	0.3352	0.0991	0.3352	0.0868	0.3352	0.0772
0.3511	0.2182	0.3511	0.1648	0.3511	0.1394	0.3511	0.1198	0.3511	0.1077	0.3511	0.0934	0.3511	0.0781
0.3678	0.2182	0.3678	0.1648	0.3678	0.1394	0.3678	0.128	0.3678	0.1179	0.3678	0.1053	0.3678	0.0913

0.3853	0.2182	0.3853	0.1648	0.3853	0.1469	0.3853	0.1377	0.3853	0.1296	0.3853	0.1157	0.3853	0.1001
0.4037	0.2182	0.4037	0.1648	0.4037	0.1472	0.4037	0.1383	0.4037	0.1306	0.4037	0.1178	0.4037	0.1038
0.4229	0.2196	0.4229	0.1651	0.4229	0.1472	0.4229	0.1383	0.4229	0.1306	0.4229	0.1178	0.4229	0.1038
0.4431	0.3471	0.4431	0.2358	0.4431	0.1927	0.4431	0.1619	0.4431	0.1417	0.4431	0.1216	0.4431	0.1117
0.4642	0.3471	0.4642	0.2358	0.4642	0.1944	0.4642	0.1745	0.4642	0.1591	0.4642	0.1376	0.4642	0.1213
0.4863	0.3471	0.4863	0.2358	0.4863	0.1944	0.4863	0.1782	0.4863	0.1664	0.4863	0.1494	0.4863	0.128
0.5094	0.3471	0.5094	0.2358	0.5094	0.2023	0.5094	0.1889	0.5094	0.1775	0.5094	0.157	0.5094	0.1327
0.5337	0.3694	0.5337	0.269	0.5337	0.2322	0.5337	0.2067	0.5337	0.1859	0.5337	0.157	0.5337	0.1327
0.5591	0.3694	0.5591	0.2795	0.5591	0.2425	0.5591	0.2131	0.5591	0.1923	0.5591	0.1626	0.5591	0.1441
0.5857	0.3694	0.5857	0.2874	0.5857	0.2546	0.5857	0.228	0.5857	0.2062	0.5857	0.1802	0.5857	0.1605
0.6136	0.3694	0.6136	0.2874	0.6136	0.2546	0.6136	0.228	0.6136	0.2069	0.6136	0.1881	0.6136	0.1674
0.6428	0.3838	0.6428	0.2874	0.6428	0.2546	0.6428	0.2304	0.6428	0.2129	0.6428	0.198	0.6428	0.1784
0.6734	0.3838	0.6734	0.2993	0.6734	0.2732	0.6734	0.2494	0.6734	0.2341	0.6734	0.2147	0.6734	0.1893
0.7055	0.4476	0.7055	0.3685	0.7055	0.3268	0.7055	0.2921	0.7055	0.2698	0.7055	0.2339	0.7055	0.1997
0.7391	0.5354	0.7391	0.4255	0.7391	0.3731	0.7391	0.3307	0.7391	0.2961	0.7391	0.2439	0.7391	0.204
0.7743	0.6277	0.7743	0.4727	0.7743	0.4011	0.7743	0.3464	0.7743	0.3042	0.7743	0.2459	0.7743	0.2311
0.8111	0.8112	0.8111	0.4771	0.8111	0.4011	0.8111	0.3464	0.8111	0.3042	0.8111	0.274	0.8111	0.2569
0.8497	0.8112	0.8497	0.4771	0.8497	0.4011	0.8497	0.3574	0.8497	0.3261	0.8497	0.3007	0.8497	0.2821
0.8902	0.8112	0.8902	0.4771	0.8902	0.4144	0.8902	0.3805	0.8902	0.3532	0.8902	0.328	0.8902	0.307
0.9326	1.0637	0.9326	0.6267	0.9326	0.4986	0.9326	0.4267	0.9326	0.3743	0.9326	0.3553	0.9326	0.3309
0.977	1.0637	0.977	0.6855	0.977	0.5616	0.977	0.4746	0.977	0.4148	0.977	0.38	0.977	0.3532
1.0235	1.0637	1.0235	0.6855	1.0235	0.5616	1.0235	0.4746	1.0235	0.4394	1.0235	0.4014	1.0235	0.3729
1.0723	1.0637	1.0723	0.6855	1.0723	0.5616	1.0723	0.5139	1.0723	0.4905	1.0723	0.4486	1.0723	0.3956
1.1233	1.2428	1.1233	0.7188	1.1233	0.6006	1.1233	0.5695	1.1233	0.5416	1.1233	0.4926	1.1233	0.4331
1.1768	1.2428	1.1768	0.7851	1.1768	0.684	1.1768	0.6142	1.1768	0.5807	1.1768	0.5239	1.1768	0.4597
1.2328	1.2428	1.2328	0.7851	1.2328	0.684	1.2328	0.6142	1.2328	0.5807	1.2328	0.5263	1.2328	0.4688
1.2916	1.3814	1.2916	0.9712	1.2916	0.8123	1.2916	0.7043	1.2916	0.6263	1.2916	0.5301	1.2916	0.4714
1.353	1.533	1.353	1.0745	1.353	0.8967	1.353	0.7736	1.353	0.6873	1.353	0.5798	1.353	0.513
1.4175	1.533	1.4175	1.0745	1.4175	0.9239	1.4175	0.8519	1.4175	0.7856	1.4175	0.6729	1.4175	0.5491
1.485	1.533	1.485	1.1333	1.485	1.0159	1.485	0.9236	1.485	0.8444	1.485	0.7155	1.485	0.5803
1.5557	1.9303	1.5557	1.2635	1.5557	1.0508	1.5557	0.9236	1.5557	0.8444	1.5557	0.7155	1.5557	0.5918
1.6298	1.9303	1.6298	1.2635	1.6298	1.0508	1.6298	0.9544	1.6298	0.8875	1.6298	0.7745	1.6298	0.644
1.7074	1.9303	1.7074	1.3071	1.7074	1.1559	1.7074	1.0443	1.7074	0.9675	1.7074	0.8379	1.7074	0.6902
1.7887	2.4221	1.7887	1.4752	1.7887	1.2941	1.7887	1.1537	1.7887	1.034	1.7887	0.8493	1.7887	0.713
1.8738	2.4221	1.8738	1.4752	1.8738	1.2941	1.8738	1.1559	1.8738	1.0476	1.8738	0.8706	1.8738	0.7652
1.963	2.4221	1.963	1.5955	1.963	1.2941	1.963	1.1559	1.963	1.0476	1.963	0.9171	1.963	0.8134
2.0565	2.4221	2.0565	1.5955	2.0565	1.2941	2.0565	1.1559	2.0565	1.07	2.0565	0.9722	2.0565	0.8496
2.1544	2.4221	2.1544	1.5955	2.1544	1.2941	2.1544	1.1997	2.1544	1.1339	2.1544	1.0119	2.1544	0.8753
2.257	2.3679	2.257	1.5955	2.257	1.4258	2.257	1.3212	2.257	1.227	2.257	1.0672	2.257	0.8914

2.3645	2.477	2.3645	1.7215	2.3645	1.537	2.3645	1.3876	2.3645	1.2649	2.3645	1.0763	2.3645	0.8914
2.4771	2.477	2.4771	1.7215	2.4771	1.537	2.4771	1.3876	2.4771	1.2649	2.4771	1.0763	2.4771	0.8914
2.595	2.6307	2.595	1.8387	2.595	1.537	2.595	1.3876	2.595	1.2649	2.595	1.0763	2.595	0.8914
2.7186	2.8968	2.7186	1.8387	2.7186	1.537	2.7186	1.3876	2.7186	1.2649	2.7186	1.0763	2.7186	0.8914
2.848	2.8968	2.848	1.8387	2.848	1.537	2.848	1.3876	2.848	1.2649	2.848	1.0763	2.848	0.8853
2.9836	2.8968	2.9836	1.8387	2.9836	1.5231	2.9836	1.3025	2.9836	1.168	2.9836	1.0465	2.9836	0.8885
3.1257	2.8968	3.1257	1.8387	3.1257	1.5231	3.1257	1.3025	3.1257	1.168	3.1257	1.0465	3.1257	0.8885
3.2745	2.8968	3.2745	1.7642	3.2745	1.4552	3.2745	1.2955	3.2745	1.168	3.2745	1.0465	3.2745	0.8885
3.4305	2.3461	3.4305	1.6586	3.4305	1.4384	3.4305	1.2328	3.4305	1.1139	3.4305	0.9924	3.4305	0.8885
3.5938	2.3461	3.5938	1.6586	3.5938	1.4384	3.5938	1.2328	3.5938	1.1139	3.5938	0.9924	3.5938	0.8885
3.7649	1.591	3.7649	1.433	3.7649	1.2678	3.7649	1.1522	3.7649	1.0829	3.7649	0.9868	3.7649	0.8786
3.9442	1.5852	3.9442	1.2849	3.9442	1.2385	3.9442	1.1157	3.9442	1.0195	3.9442	0.9338	3.9442	0.8426
4.132	1.5852	4.132	1.2768	4.132	1.2385	4.132	1.1157	4.132	1.0195	4.132	0.8782	4.132	0.7929
4.3288	1.5852	4.3288	1.2768	4.3288	1.2385	4.3288	1.1157	4.3288	1.0195	4.3288	0.8782	4.3288	0.7551
4.5349	1.5852	4.5349	1.2768	4.5349	1.2385	4.5349	1.1157	4.5349	1.0195	4.5349	0.8782	4.5349	0.7551
4.7508	1.9405	4.7508	1.2768	4.7508	1.2385	4.7508	1.1157	4.7508	1.0195	4.7508	0.8782	4.7508	0.7551
4.977	1.9405	4.977	1.2768	4.977	1.2385	4.977	1.1157	4.977	1.0195	4.977	0.8782	4.977	0.7551
5.214	1.9405	5.214	1.2768	5.214	1.2385	5.214	1.1157	5.214	1.0195	5.214	0.8782	5.214	0.7551
5.4623	1.9405	5.4623	1.2768	5.4623	1.2385	5.4623	1.1157	5.4623	1.0195	5.4623	0.8782	5.4623	0.7551
5.7224	2.5389	5.7224	1.2768	5.7224	1.2385	5.7224	1.1157	5.7224	1.0195	5.7224	0.8782	5.7224	0.7551
5.9948	2.5389	5.9948	1.2768	5.9948	1.2138	5.9948	1.0915	5.9948	0.996	5.9948	0.8782	5.9948	0.7551
6.2803	2.5389	6.2803	1.2768	6.2803	1.1292	6.2803	1.0403	6.2803	0.9828	6.2803	0.8782	6.2803	0.7551
6.5793	2.5389	6.5793	1.2768	6.5793	1.1292	6.5793	1.0403	6.5793	0.9828	6.5793	0.8776	6.5793	0.7522
6.8926	2.5389	6.8926	1.2849	6.8926	1.1292	6.8926	1.0107	6.8926	0.9301	6.8926	0.8273	6.8926	0.7234
7.2208	2.5389	7.2208	1.2849	7.2208	1.0813	7.2208	0.9849	7.2208	0.921	7.2208	0.8273	7.2208	0.7197
7.5646	2.5389	7.5646	1.2849	7.5646	1.0813	7.5646	0.9849	7.5646	0.921	7.5646	0.8273	7.5646	0.7197
7.9248	2.5389	7.9248	1.2849	7.9248	1.0493	7.9248	0.9738	7.9248	0.9177	7.9248	0.8273	7.9248	0.7197
8.3022	2.4675	8.3022	1.2849	8.3022	1.0493	8.3022	0.9738	8.3022	0.9155	8.3022	0.8218	8.3022	0.7139
8.6975	1.7908	8.6975	1.0886	8.6975	0.9904	8.6975	0.9211	8.6975	0.8663	8.6975	0.7793	8.6975	0.6822
9.1116	1.4709	9.1116	0.8803	9.1116	0.8371	9.1116	0.7977	9.1116	0.7631	9.1116	0.7042	9.1116	0.6346
9.5455	1.4709	9.5455	0.7911	9.5455	0.6864	9.5455	0.6531	9.5455	0.6365	9.5455	0.6025	9.5455	0.5596
10	0.9957	10	0.6919	10	0.6306	10	0.5911	10	0.5651	10	0.5327	10	0.5111
10.4762	0.9436	10.4762	0.6547	10.4762	0.5987	10.4762	0.5554	10.4762	0.5397	10.4762	0.5224	10.4762	0.4978
10.975	0.9436	10.975	0.6547	10.975	0.5987	10.975	0.5554	10.975	0.5278	10.975	0.5083	10.975	0.4838
11.4976	0.9436	11.4976	0.648	11.4976	0.5987	11.4976	0.5554	11.4976	0.521	11.4976	0.4831	11.4976	0.4638
12.045	0.9057	12.045	0.604	12.045	0.5683	12.045	0.5381	12.045	0.512	12.045	0.4776	12.045	0.4572
12.6186	0.9057	12.6186	0.6001	12.6186	0.5683	12.6186	0.5381	12.6186	0.512	12.6186	0.4712	12.6186	0.4476
13.2194	0.9057	13.2194	0.5198	13.2194	0.4936	13.2194	0.4797	13.2194	0.4652	13.2194	0.4501	13.2194	0.4338
13.8489	0.6748	13.8489	0.5007	13.8489	0.4691	13.8489	0.4573	13.8489	0.4459	13.8489	0.4326	13.8489	0.4193

14.5083	0.6748	14.5083	0.4549	14.5083	0.4436	14.5083	0.4396	14.5083	0.4347	14.5083	0.4249	14.5083	0.4123
15.1991	0.6748	15.1991	0.4549	15.1991	0.437	15.1991	0.4313	15.1991	0.4262	15.1991	0.4173	15.1991	0.406
15.9228	0.6104	15.9228	0.4264	15.9228	0.4171	15.9228	0.4149	15.9228	0.4122	15.9228	0.4062	15.9228	0.3971
16.681	0.6104	16.681	0.4264	16.681	0.4097	16.681	0.4057	16.681	0.4023	16.681	0.396	16.681	0.3876
17.4753	0.6104	17.4753	0.4264	17.4753	0.4026	17.4753	0.3953	17.4753	0.3906	17.4753	0.3842	17.4753	0.377
18.3074	0.6104	18.3074	0.4264	18.3074	0.3978	18.3074	0.3813	18.3074	0.3724	18.3074	0.3699	18.3074	0.3654
19.1791	0.6104	19.1791	0.4264	19.1791	0.3978	19.1791	0.3813	19.1791	0.3698	19.1791	0.3582	19.1791	0.3553
20.0923	0.6104	20.0923	0.4264	20.0923	0.3978	20.0923	0.3813	20.0923	0.3698	20.0923	0.3543	20.0923	0.3474
21.049	0.5894	21.049	0.3822	21.049	0.3659	21.049	0.3554	21.049	0.3479	21.049	0.344	21.049	0.3401
22.0513	0.3986	22.0513	0.3623	22.0513	0.3529	22.0513	0.3502	22.0513	0.3477	22.0513	0.3435	22.0513	0.3394
23.1013	0.4085	23.1013	0.3623	23.1013	0.3529	23.1013	0.3502	23.1013	0.3477	23.1013	0.3435	23.1013	0.3394
24.2013	0.4085	24.2013	0.3623	24.2013	0.3529	24.2013	0.3502	24.2013	0.3477	24.2013	0.3435	24.2013	0.3394
25.3536	0.4085	25.3536	0.3623	25.3536	0.3529	25.3536	0.3502	25.3536	0.3477	25.3536	0.3435	25.3536	0.3394
26.5609	0.4085	26.5609	0.3623	26.5609	0.3529	26.5609	0.3473	26.5609	0.3437	26.5609	0.3395	26.5609	0.3363
27.8256	0.4085	27.8256	0.3543	27.8256	0.3475	27.8256	0.3434	27.8256	0.3402	27.8256	0.3355	27.8256	0.3318
29.1505	0.3651	29.1505	0.3403	29.1505	0.3378	29.1505	0.3359	29.1505	0.3344	29.1505	0.3324	29.1505	0.3305
30.5386	0.3346	30.5386	0.3341	30.5386	0.3313	30.5386	0.3293	30.5386	0.3278	30.5386	0.3273	30.5386	0.3278
31.9927	0.3323	31.9927	0.3288	31.9927	0.3276	31.9927	0.327	31.9927	0.3267	31.9927	0.3264	31.9927	0.3266
33.516	0.3276	33.516	0.327	33.516	0.3267	33.516	0.3264	33.516	0.3262	33.516	0.3262	33.516	0.3264
35.1119	0.3276	35.1119	0.327	35.1119	0.3267	35.1119	0.3264	35.1119	0.3262	35.1119	0.326	35.1119	0.3262
36.7838	0.3269	36.7838	0.3266	36.7838	0.3264	36.7838	0.3262	36.7838	0.3261	36.7838	0.326	36.7838	0.3261
38.5353	0.3261	38.5353	0.3259	38.5353	0.3259	38.5353	0.3259	38.5353	0.3259	38.5353	0.326	38.5353	0.3261
40.3702	0.3259	40.3702	0.3259	40.3702	0.3259	40.3702	0.3259	40.3702	0.3259	40.3702	0.3259	40.3702	0.326
42.2924	0.3258	42.2924	0.3258	42.2924	0.3258	42.2924	0.3258	42.2924	0.3258	42.2924	0.3258	42.2924	0.3258
44.3062	0.3257	44.3062	0.3257	44.3062	0.3257	44.3062	0.3257	44.3062	0.3257	44.3062	0.3257	44.3062	0.3257
46.4159	0.3255	46.4159	0.3255	46.4159	0.3255	46.4159	0.3255	46.4159	0.3255	46.4159	0.3256	46.4159	0.3256
48.626	0.3254	48.626	0.3254	48.626	0.3254	48.626	0.3254	48.626	0.3254	48.626	0.3254	48.626	0.3254
50.9414	0.3253	50.9414	0.3253	50.9414	0.3253	50.9414	0.3253	50.9414	0.3253	50.9414	0.3253	50.9414	0.3253

S_PTWW017.grf
24590-WTP-3PD-G04B-F00019 Rev 4 (1/17/2006)

RPP-WTP Pretreatment Facility ISRS
Calc No.: 24590-PTF-S0C-S15T-00005, Rev. 0B

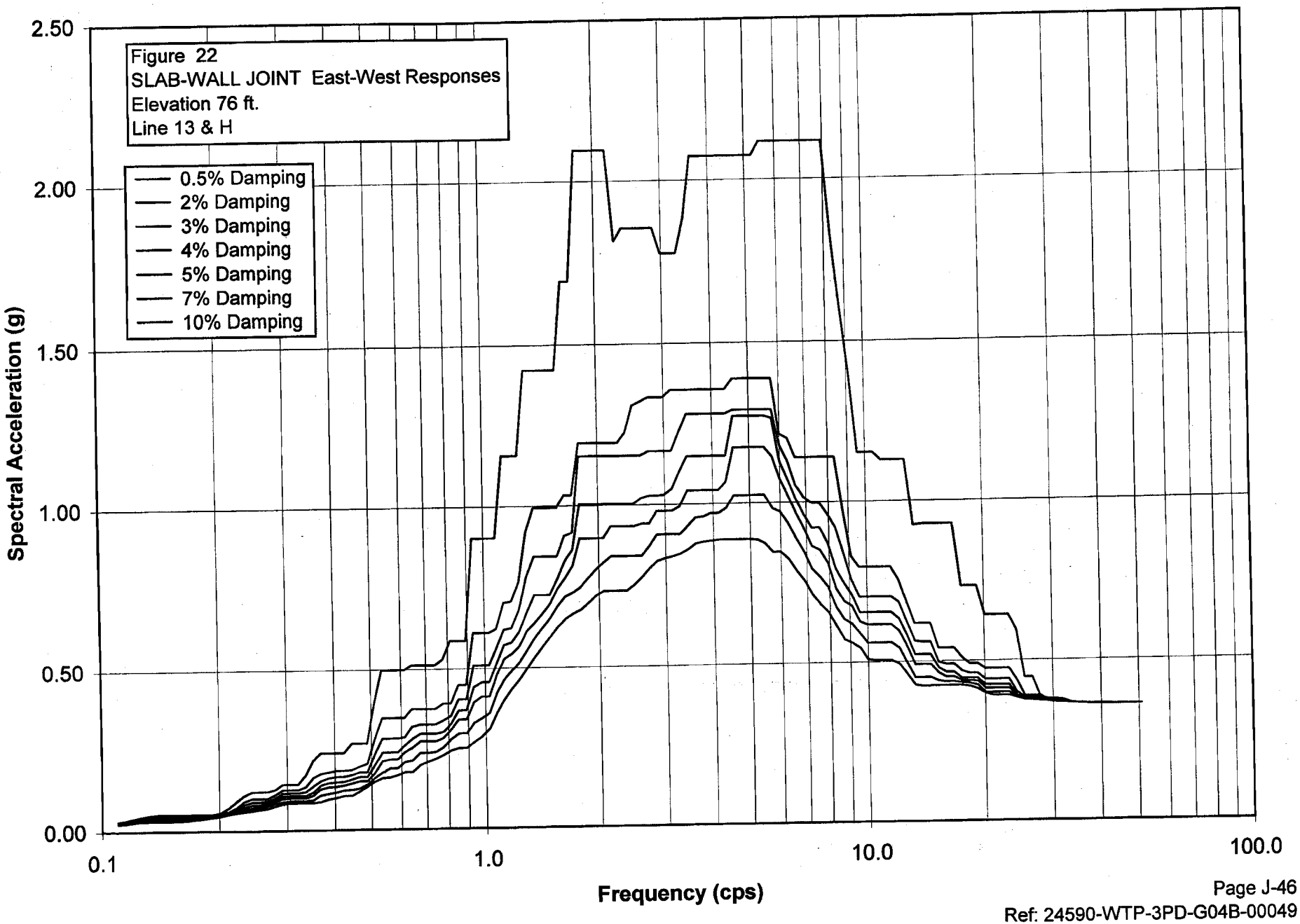

S_PTWW022.grf
RPP-WTP Pretreatment Facility ISRS
Calc No.: 24590-PTF-S0C-S15T-00005, Rev. 0B
Frequency (cps)
Spectral Acceleration (g)
Figure 22
SLAB-WALL JOINT East-West Responses
Elevation 76 ft.
Line 13 & H

Damping	0.50%	Damping	2%	Damping	3%	Damping	4%	Damping	5%	Damping	7%	Damping	10%
Freq.	Accel.	Freq.	Accel.	Freq.	Accel.	Freq.	Accel.	Freq.	Accel.	Freq.	Accel.	Freq.	Accel.
0.1098	0.0314	0.1098	0.0288	0.1098	0.0276	0.1098	0.0268	0.1098	0.0261	0.1098	0.0249	0.1098	0.0233
0.115	0.0359	0.115	0.0331	0.115	0.0315	0.115	0.0301	0.115	0.029	0.115	0.0275	0.115	0.0255
0.1204	0.041	0.1204	0.0383	0.1204	0.0367	0.1204	0.0353	0.1204	0.034	0.1204	0.0317	0.1204	0.0288
0.1262	0.046	0.1262	0.0427	0.1262	0.0408	0.1262	0.0389	0.1262	0.0373	0.1262	0.0344	0.1262	0.0312
0.1322	0.0489	0.1322	0.0443	0.1322	0.0422	0.1322	0.0403	0.1322	0.0386	0.1322	0.0356	0.1322	0.0322
0.1385	0.0518	0.1385	0.0463	0.1385	0.0431	0.1385	0.0403	0.1385	0.0386	0.1385	0.0356	0.1385	0.0322
0.1451	0.0518	0.1451	0.0463	0.1451	0.0431	0.1451	0.0403	0.1451	0.0386	0.1451	0.0356	0.1451	0.0322
0.152	0.0518	0.152	0.0463	0.152	0.0431	0.152	0.0403	0.152	0.0386	0.152	0.0356	0.152	0.0322
0.1592	0.0518	0.1592	0.0463	0.1592	0.0431	0.1592	0.0403	0.1592	0.0386	0.1592	0.0356	0.1592	0.0325
0.1668	0.0519	0.1668	0.0463	0.1668	0.0431	0.1668	0.0403	0.1668	0.0386	0.1668	0.0363	0.1668	0.0352
0.1748	0.0519	0.1748	0.0463	0.1748	0.0431	0.1748	0.041	0.1748	0.0404	0.1748	0.0395	0.1748	0.038
0.1831	0.0519	0.1831	0.0463	0.1831	0.0455	0.1831	0.0448	0.1831	0.0441	0.1831	0.0427	0.1831	0.0407
0.1918	0.0522	0.1918	0.0506	0.1918	0.0496	0.1918	0.0486	0.1918	0.0477	0.1918	0.0459	0.1918	0.0438
0.2009	0.057	0.2009	0.055	0.2009	0.0537	0.2009	0.0526	0.2009	0.0515	0.2009	0.0498	0.2009	0.0475
0.2105	0.0708	0.2105	0.0602	0.2105	0.0587	0.2105	0.0575	0.2105	0.0563	0.2105	0.0541	0.2105	0.0518
0.2205	0.091	0.2205	0.0715	0.2205	0.0644	0.2205	0.0626	0.2205	0.0612	0.2205	0.0587	0.2205	0.0559
0.231	0.108	0.231	0.0908	0.231	0.0815	0.231	0.0735	0.231	0.0673	0.231	0.0632	0.231	0.0595
0.242	0.1196	0.242	0.0993	0.242	0.0885	0.242	0.0794	0.242	0.0716	0.242	0.0667	0.242	0.0621
0.2535	0.1205	0.2535	0.0993	0.2535	0.0885	0.2535	0.0797	0.2535	0.0756	0.2535	0.0697	0.2535	0.066
0.2656	0.1205	0.2656	0.0993	0.2656	0.0924	0.2656	0.0881	0.2656	0.0842	0.2656	0.077	0.2656	0.0688
0.2783	0.1256	0.2783	0.1098	0.2783	0.1009	0.2783	0.095	0.2783	0.0907	0.2783	0.0838	0.2783	0.0757
0.2915	0.1425	0.2915	0.1249	0.2915	0.1149	0.2915	0.1061	0.2915	0.0983	0.2915	0.089	0.2915	0.0816
0.3054	0.1425	0.3054	0.1249	0.3054	0.1153	0.3054	0.107	0.3054	0.0996	0.3054	0.0912	0.3054	0.0845
0.3199	0.1425	0.3199	0.1249	0.3199	0.1153	0.3199	0.107	0.3199	0.0996	0.3199	0.0912	0.3199	0.0851
0.3352	0.1712	0.3352	0.1348	0.3352	0.1188	0.3352	0.107	0.3352	0.0996	0.3352	0.0912	0.3352	0.0851
0.3511	0.2175	0.3511	0.1632	0.3511	0.1371	0.3511	0.1171	0.3511	0.1079	0.3511	0.0934	0.3511	0.0851
0.3678	0.2402	0.3678	0.1758	0.3678	0.1534	0.3678	0.1398	0.3678	0.1279	0.3678	0.1082	0.3678	0.089

0.3853	0.2402	0.3853	0.1803	0.3853	0.1621	0.3853	0.1467	0.3853	0.1334	0.3853	0.1124	0.3853	0.0955
0.4037	0.2402	0.4037	0.1855	0.4037	0.1653	0.4037	0.1485	0.4037	0.1346	0.4037	0.1168	0.4037	0.0997
0.4229	0.2402	0.4229	0.1855	0.4229	0.1653	0.4229	0.1499	0.4229	0.1384	0.4229	0.1221	0.4229	0.1054
0.4431	0.2699	0.4431	0.1872	0.4431	0.1713	0.4431	0.1572	0.4431	0.1447	0.4431	0.1246	0.4431	0.1054
0.4642	0.2699	0.4642	0.1967	0.4642	0.1794	0.4642	0.1641	0.4642	0.1506	0.4642	0.1282	0.4642	0.1183
0.4863	0.2699	0.4863	0.2052	0.4863	0.1799	0.4863	0.1641	0.4863	0.1506	0.4863	0.1404	0.4863	0.1344
0.5094	0.3941	0.5094	0.2808	0.5094	0.2341	0.5094	0.2008	0.5094	0.1761	0.5094	0.1605	0.5094	0.1494
0.5337	0.4989	0.5337	0.3475	0.5337	0.2838	0.5337	0.24	0.5337	0.2133	0.5337	0.1773	0.5337	0.1598
0.5591	0.4989	0.5591	0.3475	0.5591	0.2838	0.5591	0.24	0.5591	0.2179	0.5591	0.1902	0.5591	0.1613
0.5857	0.4989	0.5857	0.3475	0.5857	0.2838	0.5857	0.24	0.5857	0.2179	0.5857	0.1902	0.5857	0.1686
0.6136	0.4989	0.6136	0.3475	0.6136	0.2863	0.6136	0.2604	0.6136	0.2398	0.6136	0.2087	0.6136	0.1773
0.6428	0.5129	0.6428	0.374	0.6428	0.319	0.6428	0.2809	0.6428	0.2528	0.6428	0.2134	0.6428	0.1773
0.6734	0.5129	0.6734	0.374	0.6734	0.3258	0.6734	0.2968	0.6734	0.2731	0.6734	0.2367	0.6734	0.1989
0.7055	0.5129	0.7055	0.374	0.7055	0.3258	0.7055	0.2968	0.7055	0.2731	0.7055	0.2367	0.7055	0.2092
0.7391	0.5129	0.7391	0.374	0.7391	0.3258	0.7391	0.2968	0.7391	0.2731	0.7391	0.2399	0.7391	0.2183
0.7743	0.5295	0.7743	0.3898	0.7743	0.3375	0.7743	0.302	0.7743	0.283	0.7743	0.2537	0.7743	0.23
0.8111	0.5863	0.8111	0.3898	0.8111	0.3512	0.8111	0.3264	0.8111	0.3088	0.8111	0.2792	0.8111	0.2438
0.8497	0.5863	0.8497	0.4492	0.8497	0.4033	0.8497	0.368	0.8497	0.3397	0.8497	0.2962	0.8497	0.2508
0.8902	0.5863	0.8902	0.4492	0.8902	0.4033	0.8902	0.368	0.8902	0.3397	0.8902	0.2962	0.8902	0.2508
0.9326	0.9027	0.9326	0.6101	0.9326	0.5099	0.9326	0.4422	0.9326	0.3935	0.9326	0.3281	0.9326	0.27
0.977	0.9027	0.977	0.6101	0.977	0.5099	0.977	0.4569	0.977	0.4111	0.977	0.3426	0.977	0.2856
1.0235	0.9027	1.0235	0.6101	1.0235	0.5099	1.0235	0.4569	1.0235	0.4111	1.0235	0.3584	1.0235	0.3097
1.0723	0.9027	1.0723	0.6219	1.0723	0.5626	1.0723	0.5148	1.0723	0.4794	1.0723	0.4222	1.0723	0.3598
1.1233	1.1587	1.1233	0.7044	1.1233	0.6193	1.1233	0.5713	1.1233	0.5286	1.1233	0.4651	1.1233	0.4024
1.1768	1.1587	1.1768	0.7081	1.1768	0.6241	1.1768	0.5793	1.1768	0.5435	1.1768	0.4919	1.1768	0.4352
1.2328	1.1587	1.2328	0.7665	1.2328	0.6816	1.2328	0.6128	1.2328	0.5676	1.2328	0.5182	1.2328	0.4654
1.2916	1.4218	1.2916	0.9202	1.2916	0.7825	1.2916	0.6722	1.2916	0.6141	1.2916	0.5551	1.2916	0.4999
1.353	1.4218	1.353	0.9944	1.353	0.8443	1.353	0.7264	1.353	0.64	1.353	0.593	1.353	0.5336
1.4175	1.4218	1.4175	0.9944	1.4175	0.8443	1.4175	0.7264	1.4175	0.6676	1.4175	0.6233	1.4175	0.5643
1.485	1.4218	1.485	0.9944	1.485	0.8443	1.485	0.7264	1.485	0.6984	1.485	0.6542	1.485	0.5952
1.5557	1.4218	1.5557	0.9944	1.5557	0.8443	1.5557	0.774	1.5557	0.7438	1.5557	0.6919	1.5557	0.6252
1.6298	1.6945	1.6298	1.033	1.6298	0.9073	1.6298	0.8297	1.6298	0.7772	1.6298	0.7201	1.6298	0.651
1.7074	1.6945	1.7074	1.033	1.7074	0.9166	1.7074	0.8629	1.7074	0.8139	1.7074	0.7333	1.7074	0.6674
1.7887	2.0952	1.7887	1.1949	1.7887	1.1542	1.7887	1.0044	1.7887	0.8986	1.7887	0.7485	1.7887	0.6789
1.8738	2.0952	1.8738	1.1949	1.8738	1.1542	1.8738	1.0044	1.8738	0.8986	1.8738	0.7771	1.8738	0.7004
1.963	2.0952	1.963	1.1949	1.963	1.1542	1.963	1.0044	1.963	0.8986	1.963	0.8017	1.963	0.7222
2.0565	2.0952	2.0565	1.1949	2.0565	1.1542	2.0565	1.0044	2.0565	0.8986	2.0565	0.8235	2.0565	0.7363
2.1544	2.0952	2.1544	1.1949	2.1544	1.1542	2.1544	1.0044	2.1544	0.934	2.1544	0.8422	2.1544	0.7363
2.257	1.8139	2.257	1.1949	2.257	1.1542	2.257	1.0044	2.257	0.934	2.257	0.8422	2.257	0.7363

2.3645	1.8527	2.3645	1.2245	2.3645	1.1542	2.3645	1.0044	2.3645	0.934	2.3645	0.8422	2.3645	0.7363
2.4771	1.8527	2.4771	1.3088	2.4771	1.1542	2.4771	1.0044	2.4771	0.934	2.4771	0.8422	2.4771	0.7541
2.595	1.8527	2.595	1.3196	2.595	1.1542	2.595	1.0208	2.595	0.9412	2.595	0.8422	2.595	0.777
2.7186	1.8527	2.7186	1.3328	2.7186	1.1667	2.7186	1.0275	2.7186	0.9412	2.7186	0.8724	2.7186	0.804
2.848	1.8527	2.848	1.3328	2.848	1.1667	2.848	1.0275	2.848	0.9801	2.848	0.9067	2.848	0.8258
2.9836	1.7756	2.9836	1.3328	2.9836	1.1667	2.9836	1.0302	2.9836	0.9801	2.9836	0.9078	2.9836	0.8333
3.1257	1.7756	3.1257	1.3538	3.1257	1.1669	3.1257	1.0484	3.1257	0.9801	3.1257	0.9078	3.1257	0.8392
3.2745	1.7756	3.2745	1.3538	3.2745	1.2252	3.2745	1.1008	3.2745	0.9938	3.2745	0.9078	3.2745	0.8459
3.4305	1.8813	3.4305	1.3538	3.4305	1.2793	3.4305	1.1491	3.4305	1.042	3.4305	0.9326	3.4305	0.8603
3.5938	2.0738	3.5938	1.3538	3.5938	1.2793	3.5938	1.1491	3.5938	1.042	3.5938	0.9577	3.5938	0.8775
3.7649	2.0738	3.7649	1.3538	3.7649	1.2793	3.7649	1.1491	3.7649	1.042	3.7649	0.961	3.7649	0.8826
3.9442	2.0738	3.9442	1.3538	3.9442	1.2793	3.9442	1.1491	3.9442	1.042	3.9442	0.9712	3.9442	0.8851
4.132	2.0738	4.132	1.3538	4.132	1.2793	4.132	1.1491	4.132	1.042	4.132	0.9712	4.132	0.888
4.3288	2.0738	4.3288	1.3538	4.3288	1.2793	4.3288	1.1491	4.3288	1.0677	4.3288	0.9865	4.3288	0.888
4.5349	2.0738	4.5349	1.3866	4.5349	1.2904	4.5349	1.271	4.5349	1.1737	4.5349	1.0245	4.5349	0.888
4.7508	2.0738	4.7508	1.3866	4.7508	1.2904	4.7508	1.271	4.7508	1.1737	4.7508	1.0245	4.7508	0.888
4.977	2.0738	4.977	1.3866	4.977	1.2904	4.977	1.271	4.977	1.1737	4.977	1.0245	4.977	0.888
5.214	2.0738	5.214	1.3866	5.214	1.2904	5.214	1.271	5.214	1.1737	5.214	1.0245	5.214	0.886
5.4623	2.1167	5.4623	1.3866	5.4623	1.2904	5.4623	1.271	5.4623	1.1737	5.4623	1.0245	5.4623	0.8742
5.7224	2.1167	5.7224	1.3866	5.7224	1.2904	5.7224	1.2638	5.7224	1.1455	5.7224	0.9827	5.7224	0.8467
5.9948	2.1167	5.9948	1.2138	5.9948	1.1803	5.9948	1.1301	5.9948	1.0755	5.9948	0.9721	5.9948	0.8467
6.2803	2.1167	6.2803	1.2006	6.2803	1.129	6.2803	1.0716	6.2803	1.0216	6.2803	0.934	6.2803	0.8255
6.5793	2.1167	6.5793	1.1406	6.5793	1.0531	6.5793	1.0107	6.5793	0.9678	6.5793	0.8882	6.5793	0.789
6.8926	2.1167	6.8926	1.1406	6.8926	1.0156	6.8926	0.9617	6.8926	0.9178	6.8926	0.8452	6.8926	0.7575
7.2208	2.1167	7.2208	1.1406	7.2208	0.9969	7.2208	0.9201	7.2208	0.8636	7.2208	0.7922	7.2208	0.7147
7.5646	2.1167	7.5646	1.1406	7.5646	0.9969	7.5646	0.9201	7.5646	0.8512	7.5646	0.7678	7.5646	0.684
7.9248	2.1167	7.9248	1.1406	7.9248	0.9628	7.9248	0.8735	7.9248	0.8122	7.9248	0.7374	7.9248	0.658
8.3022	1.8243	8.3022	1.1406	8.3022	0.9203	8.3022	0.792	8.3022	0.7323	8.3022	0.673	8.3022	0.614
8.6975	1.6077	8.6975	0.9739	8.6975	0.8399	8.6975	0.7481	8.6975	0.6927	8.6975	0.6357	8.6975	0.5718
9.1116	1.4078	9.1116	0.8293	9.1116	0.7567	9.1116	0.7128	9.1116	0.6771	9.1116	0.6205	9.1116	0.5605
9.5455	1.1538	9.5455	0.7968	9.5455	0.7052	9.5455	0.6564	9.5455	0.6273	9.5455	0.5894	9.5455	0.5448
10	1.1538	10	0.7968	10	0.7052	10	0.6564	10	0.6172	10	0.5597	10	0.5092
10.4762	1.1538	10.4762	0.7968	10.4762	0.7052	10.4762	0.6564	10.4762	0.6172	10.4762	0.5597	10.4762	0.5057
10.975	1.1294	10.975	0.7968	10.975	0.7052	10.975	0.6564	10.975	0.6172	10.975	0.5597	10.975	0.5057
11.4976	1.1294	11.4976	0.7968	11.4976	0.7052	11.4976	0.6564	11.4976	0.6172	11.4976	0.5597	11.4976	0.5057
12.045	1.1294	12.045	0.7562	12.045	0.6873	12.045	0.6356	12.045	0.5968	12.045	0.5433	12.045	0.4939
12.6186	1.1294	12.6186	0.6859	12.6186	0.6241	12.6186	0.581	12.6186	0.5472	12.6186	0.4956	12.6186	0.4602
13.2194	0.9248	13.2194	0.6189	13.2194	0.5638	13.2194	0.5215	13.2194	0.4914	13.2194	0.4499	13.2194	0.4261
13.8489	0.9276	13.8489	0.6189	13.8489	0.5601	13.8489	0.5215	13.8489	0.4914	13.8489	0.4499	13.8489	0.4222

14.5083	0.9276	14.5083	0.6189	14.5083	0.5601	14.5083	0.5215	14.5083	0.4914	14.5083	0.4499	14.5083	0.4225
15.1991	0.9276	15.1991	0.541	15.1991	0.4978	15.1991	0.4797	15.1991	0.4639	15.1991	0.439	15.1991	0.4225
15.9228	0.9276	15.9228	0.541	15.9228	0.4904	15.9228	0.4655	15.9228	0.451	15.9228	0.4348	15.9228	0.4225
16.681	0.9276	16.681	0.541	16.681	0.4904	16.681	0.4655	16.681	0.451	16.681	0.4348	16.681	0.4225
17.4753	0.7343	17.4753	0.5111	17.4753	0.4688	17.4753	0.4453	17.4753	0.4373	17.4753	0.4308	17.4753	0.4225
18.3074	0.7343	18.3074	0.4909	18.3074	0.4614	18.3074	0.4453	18.3074	0.4373	18.3074	0.429	18.3074	0.4191
19.1791	0.7343	19.1791	0.4909	19.1791	0.4614	19.1791	0.4453	19.1791	0.435	19.1791	0.4221	19.1791	0.4109
20.0923	0.6437	20.0923	0.4752	20.0923	0.4408	20.0923	0.4225	20.0923	0.4112	20.0923	0.3984	20.0923	0.3959
21.049	0.6437	21.049	0.4752	21.049	0.4408	21.049	0.4225	21.049	0.4112	21.049	0.3984	21.049	0.3893
22.0513	0.6437	22.0513	0.4752	22.0513	0.4408	22.0513	0.4225	22.0513	0.4112	22.0513	0.3984	22.0513	0.3893
23.1013	0.6437	23.1013	0.4752	23.1013	0.4408	23.1013	0.4225	23.1013	0.4112	23.1013	0.3984	23.1013	0.3888
24.2013	0.5958	24.2013	0.4369	24.2013	0.3982	24.2013	0.3879	24.2013	0.3865	24.2013	0.3843	24.2013	0.3808
25.3536	0.4468	25.3536	0.3862	25.3536	0.3825	25.3536	0.3791	25.3536	0.3767	25.3536	0.3759	25.3536	0.3746
26.5609	0.4468	26.5609	0.3862	26.5609	0.3825	26.5609	0.3791	26.5609	0.3767	26.5609	0.3744	26.5609	0.3731
27.8256	0.3825	27.8256	0.3862	27.8256	0.3825	27.8256	0.3791	27.8256	0.3767	27.8256	0.3736	27.8256	0.3713
29.1505	0.3749	29.1505	0.3704	29.1505	0.3687	29.1505	0.3677	29.1505	0.3683	29.1505	0.3686	29.1505	0.368
30.5386	0.3749	30.5386	0.3684	30.5386	0.3677	30.5386	0.367	30.5386	0.3665	30.5386	0.3656	30.5386	0.3654
31.9927	0.3721	31.9927	0.3677	31.9927	0.3665	31.9927	0.3659	31.9927	0.3654	31.9927	0.3647	31.9927	0.364
33.516	0.3635	33.516	0.3637	33.516	0.3636	33.516	0.3635	33.516	0.3634	33.516	0.3631	33.516	0.3628
35.1119	0.3609	35.1119	0.3612	35.1119	0.3613	35.1119	0.3614	35.1119	0.3615	35.1119	0.3616	35.1119	0.3616
36.7838	0.3599	36.7838	0.3601	36.7838	0.3602	36.7838	0.3602	36.7838	0.3603	36.7838	0.3604	36.7838	0.3605
38.5353	0.3593	38.5353	0.3593	38.5353	0.3594	38.5353	0.3595	38.5353	0.3595	38.5353	0.3596	38.5353	0.3597
40.3702	0.3587	40.3702	0.3587	40.3702	0.3588	40.3702	0.3588	40.3702	0.3589	40.3702	0.3589	40.3702	0.359
42.2924	0.3582	42.2924	0.3582	42.2924	0.3583	42.2924	0.3583	42.2924	0.3583	42.2924	0.3584	42.2924	0.3584
44.3062	0.3578	44.3062	0.3578	44.3062	0.3578	44.3062	0.3578	44.3062	0.3578	44.3062	0.3579	44.3062	0.3579
46.4159	0.3574	46.4159	0.3574	46.4159	0.3574	46.4159	0.3574	46.4159	0.3574	46.4159	0.3575	46.4159	0.3575
48.626	0.357	48.626	0.357	48.626	0.357	48.626	0.357	48.626	0.357	48.626	0.3571	48.626	0.3571
50.9414	0.3567	50.9414	0.3567	50.9414	0.3567	50.9414	0.3567	50.9414	0.3567	50.9414	0.3567	50.9414	0.3567

RPP-WTP Pretreatment Facility ISRS
Calc No.: 24590-PTF-S0C-S15T-00005, Rev. 0B

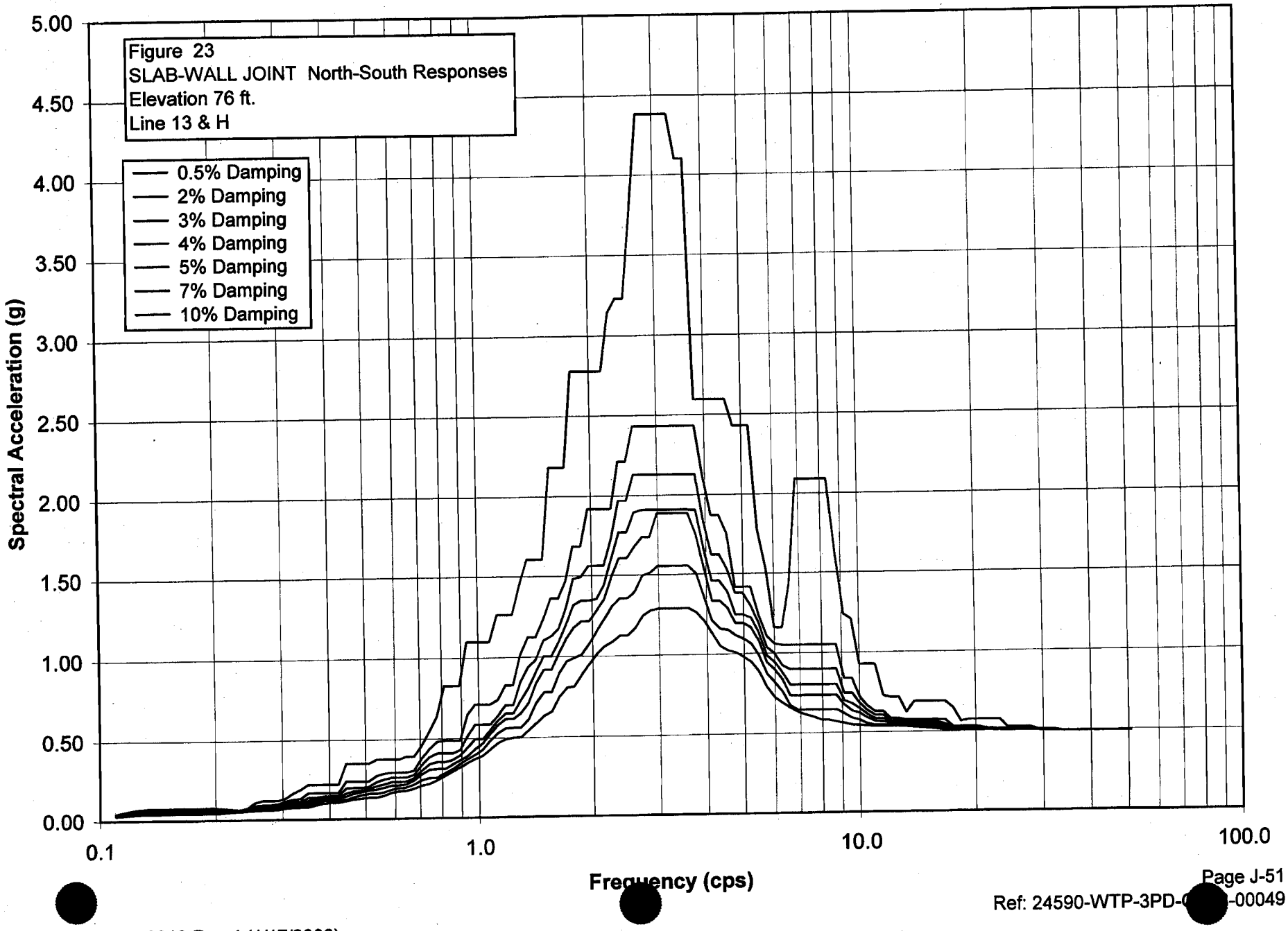

S_PTWW023.grf
RPP-WTP Pretreatment Facility ISRS
Calc No.: 24590-PTF-S0C-S15T-00005, Rev. 0B
Frequency (cps)
Spectral Acceleration (g)
Figure 23
SLAB-WALL JOINT North-South Responses
Elevation 76 ft.
Line 13 & H

Damping	0.50%	Damping	2%	Damping	3%	Damping	4%	Damping	5%	Damping	7%	Damping	10%
Freq.	Accel.	Freq.	Accel.	Freq.	Accel.	Freq.	Accel.	Freq.	Accel.	Freq.	Accel.	Freq.	Accel.
0.1098	0.0457	0.1098	0.0394	0.1098	0.0366	0.1098	0.0346	0.1098	0.0333	0.1098	0.0314	0.1098	0.029
0.115	0.0556	0.115	0.0495	0.115	0.0468	0.115	0.0445	0.115	0.0424	0.115	0.0387	0.115	0.0341
0.1204	0.065	0.1204	0.0585	0.1204	0.0548	0.1204	0.0514	0.1204	0.0484	0.1204	0.0431	0.1204	0.0368
0.1262	0.072	0.1262	0.0619	0.1262	0.0573	0.1262	0.0534	0.1262	0.0499	0.1262	0.044	0.1262	0.0387
0.1322	0.0763	0.1322	0.0654	0.1322	0.0606	0.1322	0.0566	0.1322	0.0532	0.1322	0.0474	0.1322	0.0408
0.1385	0.0787	0.1385	0.0673	0.1385	0.0609	0.1385	0.0566	0.1385	0.0532	0.1385	0.0474	0.1385	0.0408
0.1451	0.0789	0.1451	0.0675	0.1451	0.0611	0.1451	0.0566	0.1451	0.0532	0.1451	0.0474	0.1451	0.0414
0.152	0.0789	0.152	0.0675	0.152	0.0611	0.152	0.0569	0.152	0.054	0.152	0.049	0.152	0.0438
0.1592	0.0789	0.1592	0.0675	0.1592	0.0611	0.1592	0.0569	0.1592	0.054	0.1592	0.0495	0.1592	0.0446
0.1668	0.0792	0.1668	0.0677	0.1668	0.0613	0.1668	0.0569	0.1668	0.054	0.1668	0.0495	0.1668	0.0446
0.1748	0.0794	0.1748	0.068	0.1748	0.0616	0.1748	0.0569	0.1748	0.054	0.1748	0.0495	0.1748	0.0446
0.1831	0.0794	0.1831	0.068	0.1831	0.0616	0.1831	0.0569	0.1831	0.054	0.1831	0.0495	0.1831	0.0446
0.1918	0.0794	0.1918	0.068	0.1918	0.0616	0.1918	0.0568	0.1918	0.0539	0.1918	0.0495	0.1918	0.0446
0.2009	0.0794	0.2009	0.068	0.2009	0.0616	0.2009	0.0568	0.2009	0.0537	0.2009	0.0487	0.2009	0.0448
0.2105	0.0744	0.2105	0.0638	0.2105	0.0601	0.2105	0.0568	0.2105	0.0537	0.2105	0.0501	0.2105	0.0489
0.2205	0.0694	0.2205	0.0633	0.2205	0.0597	0.2205	0.0567	0.2205	0.0557	0.2205	0.0543	0.2205	0.0527
0.231	0.0656	0.231	0.0633	0.231	0.062	0.231	0.0608	0.231	0.0598	0.231	0.0581	0.231	0.0561
0.242	0.0768	0.242	0.0695	0.242	0.0657	0.242	0.0645	0.242	0.0633	0.242	0.0614	0.242	0.059
0.2535	0.1108	0.2535	0.0924	0.2535	0.0831	0.2535	0.0756	0.2535	0.0696	0.2535	0.064	0.2535	0.0613
0.2656	0.1224	0.2656	0.0958	0.2656	0.0833	0.2656	0.0756	0.2656	0.0696	0.2656	0.066	0.2656	0.0628
0.2783	0.1224	0.2783	0.0958	0.2783	0.0843	0.2783	0.0796	0.2783	0.0755	0.2783	0.0686	0.2783	0.0634
0.2915	0.1224	0.2915	0.1016	0.2915	0.0946	0.2915	0.0884	0.2915	0.0829	0.2915	0.0737	0.2915	0.0659
0.3054	0.1376	0.3054	0.1198	0.3054	0.1099	0.3054	0.1013	0.3054	0.0938	0.3054	0.0818	0.3054	0.0736
0.3199	0.1656	0.3199	0.1295	0.3199	0.118	0.3199	0.1082	0.3199	0.0997	0.3199	0.0864	0.3199	0.0786
0.3352	0.1885	0.3352	0.1345	0.3352	0.118	0.3352	0.1082	0.3352	0.0997	0.3352	0.0888	0.3352	0.0799
0.3511	0.2195	0.3511	0.1658	0.3511	0.1404	0.3511	0.121	0.3511	0.1094	0.3511	0.0947	0.3511	0.0799
0.3678	0.2195	0.3678	0.1658	0.3678	0.1411	0.3678	0.1297	0.3678	0.1197	0.3678	0.1054	0.3678	0.0927

0.3853	0.2195	0.3853	0.1658	0.3853	0.1482	0.3853	0.1392	0.3853	0.1313	0.3853	0.1182	0.3853	0.1037
0.4037	0.2195	0.4037	0.1658	0.4037	0.1497	0.4037	0.141	0.4037	0.1333	0.4037	0.1207	0.4037	0.1067
0.4229	0.2197	0.4229	0.1658	0.4229	0.1497	0.4229	0.141	0.4229	0.1333	0.4229	0.1207	0.4229	0.1067
0.4431	0.3492	0.4431	0.237	0.4431	0.1936	0.4431	0.1625	0.4431	0.1433	0.4431	0.123	0.4431	0.1141
0.4642	0.3492	0.4642	0.237	0.4642	0.1965	0.4642	0.1766	0.4642	0.1607	0.4642	0.14	0.4642	0.1239
0.4863	0.3492	0.4863	0.237	0.4863	0.1965	0.4863	0.1797	0.4863	0.1687	0.4863	0.1514	0.4863	0.1297
0.5094	0.3492	0.5094	0.237	0.5094	0.2038	0.5094	0.1919	0.5094	0.1804	0.5094	0.1599	0.5094	0.1356
0.5337	0.3728	0.5337	0.2709	0.5337	0.2336	0.5337	0.2071	0.5337	0.1861	0.5337	0.1599	0.5337	0.1356
0.5591	0.3728	0.5591	0.2844	0.5591	0.2472	0.5591	0.2178	0.5591	0.1969	0.5591	0.1672	0.5591	0.1469
0.5857	0.3728	0.5857	0.291	0.5857	0.2581	0.5857	0.2314	0.5857	0.2095	0.5857	0.1839	0.5857	0.1647
0.6136	0.3728	0.6136	0.291	0.6136	0.2581	0.6136	0.2314	0.6136	0.211	0.6136	0.1935	0.6136	0.1734
0.6428	0.3892	0.6428	0.291	0.6428	0.2581	0.6428	0.2341	0.6428	0.2164	0.6428	0.1968	0.6428	0.176
0.6734	0.3892	0.6734	0.3002	0.6734	0.2736	0.6734	0.253	0.6734	0.2391	0.6734	0.2144	0.6734	0.189
0.7055	0.4568	0.7055	0.3773	0.7055	0.3354	0.7055	0.3005	0.7055	0.2769	0.7055	0.2399	0.7055	0.2062
0.7391	0.5468	0.7391	0.437	0.7391	0.3838	0.7391	0.3407	0.7391	0.3056	0.7391	0.2529	0.7391	0.2172
0.7743	0.6403	0.7743	0.4827	0.7743	0.4094	0.7743	0.3537	0.7743	0.3106	0.7743	0.254	0.7743	0.239
0.8111	0.831	0.8111	0.4886	0.8111	0.4094	0.8111	0.3537	0.8111	0.3106	0.8111	0.2831	0.8111	0.2657
0.8497	0.831	0.8497	0.4886	0.8497	0.4094	0.8497	0.3657	0.8497	0.3378	0.8497	0.3109	0.8497	0.2933
0.8902	0.831	0.8902	0.4886	0.8902	0.4288	0.8902	0.3942	0.8902	0.3631	0.8902	0.3404	0.8902	0.3207
0.9326	1.1005	0.9326	0.6506	0.9326	0.519	0.9326	0.4449	0.9326	0.3898	0.9326	0.3703	0.9326	0.3469
0.977	1.1005	0.977	0.7147	0.977	0.5864	0.977	0.4962	0.977	0.4337	0.977	0.3972	0.977	0.3706
1.0235	1.1005	1.0235	0.7147	1.0235	0.5864	1.0235	0.4962	1.0235	0.4691	1.0235	0.4309	1.0235	0.3909
1.0723	1.1005	1.0723	0.7147	1.0723	0.5864	1.0723	0.5524	1.0723	0.5282	1.0723	0.4852	1.0723	0.4308
1.1233	1.2677	1.1233	0.7412	1.1233	0.6432	1.1233	0.6123	1.1233	0.5832	1.1233	0.5321	1.1233	0.4696
1.1768	1.2677	1.1768	0.8293	1.1768	0.7065	1.1768	0.6555	1.1768	0.62	1.1768	0.5613	1.1768	0.4934
1.2328	1.2677	1.2328	0.8293	1.2328	0.7065	1.2328	0.6555	1.2328	0.62	1.2328	0.5639	1.2328	0.5024
1.2916	1.4479	1.2916	1.0168	1.2916	0.8501	1.2916	0.7366	1.2916	0.6556	1.2916	0.5639	1.2916	0.5055
1.353	1.6058	1.353	1.1275	1.353	0.9398	1.353	0.8103	1.353	0.7197	1.353	0.6176	1.353	0.5488
1.4175	1.6058	1.4175	1.1275	1.4175	0.9845	1.4175	0.9078	1.4175	0.8382	1.4175	0.7198	1.4175	0.5908
1.485	1.6058	1.485	1.2335	1.485	1.1052	1.485	1.0054	1.485	0.9202	1.485	0.7812	1.485	0.6369
1.5557	2.1846	1.5557	1.3621	1.5557	1.1315	1.5557	1.0054	1.5557	0.9202	1.5557	0.7812	1.5557	0.6625
1.6298	2.1846	1.6298	1.3621	1.6298	1.1769	1.6298	1.0959	1.6298	1.0225	1.6298	0.8962	1.6298	0.7518
1.7074	2.1846	1.7074	1.4719	1.7074	1.3054	1.7074	1.2055	1.7074	1.1171	1.7074	0.9707	1.7074	0.8071
1.7887	2.7802	1.7887	1.6856	1.7887	1.4812	1.7887	1.3211	1.7887	1.1842	1.7887	0.9918	1.7887	0.8152
1.8738	2.7802	1.8738	1.6856	1.8738	1.4926	1.8738	1.3481	1.8738	1.2212	1.8738	1.0136	1.8738	0.8884
1.963	2.7802	1.963	1.9172	1.963	1.5603	1.963	1.3481	1.963	1.2212	1.963	1.0811	1.963	0.9548
2.0565	2.7802	2.0565	1.9172	2.0565	1.5603	2.0565	1.3571	2.0565	1.2869	2.0565	1.1624	2.0565	1.0171
2.1544	2.7802	2.1544	1.9172	2.1544	1.5603	2.1544	1.4424	2.1544	1.3536	2.1544	1.2355	2.1544	1.0641
2.257	3.1449	2.257	1.9172	2.257	1.7334	2.257	1.6089	2.257	1.4947	2.257	1.309	2.257	1.0916

2.3645	3.2327	2.3645	2.2136	2.3645	1.968	2.3645	1.7697	2.3645	1.6071	2.3645	1.3579	2.3645	1.1296
2.4771	3.2327	2.4771	2.2136	2.4771	1.968	2.4771	1.7697	2.4771	1.6071	2.4771	1.3579	2.4771	1.1301
2.595	3.7738	2.595	2.4327	2.595	2.131	2.595	1.8936	2.595	1.6778	2.595	1.3976	2.595	1.1754
2.7186	4.3838	2.7186	2.4327	2.7186	2.131	2.7186	1.9075	2.7186	1.7384	2.7186	1.4956	2.7186	1.2512
2.848	4.3838	2.848	2.4327	2.848	2.131	2.848	1.9075	2.848	1.7384	2.848	1.5139	2.848	1.2815
2.9836	4.3838	2.9836	2.4327	2.9836	2.131	2.9836	1.9075	2.9836	1.8855	2.9836	1.5536	2.9836	1.2917
3.1257	4.3838	3.1257	2.4327	3.1257	2.131	3.1257	1.9075	3.1257	1.8855	3.1257	1.5536	3.1257	1.2917
3.2745	4.3838	3.2745	2.4327	3.2745	2.131	3.2745	1.9075	3.2745	1.8855	3.2745	1.5536	3.2745	1.2917
3.4305	4.1005	3.4305	2.4327	3.4305	2.131	3.4305	1.9075	3.4305	1.8855	3.4305	1.5536	3.4305	1.2917
3.5938	4.1005	3.5938	2.4327	3.5938	2.131	3.5938	1.9075	3.5938	1.8855	3.5938	1.5536	3.5938	1.2917
3.7649	2.5959	3.7649	2.4327	3.7649	2.131	3.7649	1.9042	3.7649	1.7489	3.7649	1.5021	3.7649	1.265
3.9442	2.5959	3.9442	2.121	3.9442	1.8355	3.9442	1.6598	3.9442	1.5405	3.9442	1.3563	3.9442	1.2103
4.132	2.5959	4.132	1.8694	4.132	1.6226	4.132	1.4573	4.132	1.3351	4.132	1.2096	4.132	1.1326
4.3288	2.5959	4.3288	1.8694	4.3288	1.6226	4.3288	1.4573	4.3288	1.3351	4.3288	1.162	4.3288	1.0536
4.5349	2.5959	4.5349	1.7534	4.5349	1.5274	4.5349	1.3901	4.5349	1.2878	4.5349	1.1559	4.5349	1.0242
4.7508	2.4293	4.7508	1.4177	4.7508	1.3814	4.7508	1.25	4.7508	1.1959	4.7508	1.1203	4.7508	1.0119
4.977	2.4293	4.977	1.4177	4.977	1.3814	4.977	1.25	4.977	1.1959	4.977	1.1002	4.977	0.9832
5.214	2.4293	5.214	1.4177	5.214	1.3011	5.214	1.2293	5.214	1.1678	5.214	1.0665	5.214	0.9502
5.4623	1.7778	5.4623	1.2464	5.4623	1.1957	5.4623	1.1382	5.4623	1.084	5.4623	0.9911	5.4623	0.8858
5.7224	1.5321	5.7224	1.1155	5.7224	1.0411	5.7224	0.9896	5.7224	0.9448	5.7224	0.8715	5.7224	0.7893
5.9948	1.1665	5.9948	1.0654	5.9948	1.0023	5.9948	0.947	5.9948	0.8992	5.9948	0.8196	5.9948	0.7273
6.2803	1.1638	6.2803	1.053	6.2803	0.9234	6.2803	0.8781	6.2803	0.8351	6.2803	0.7608	6.2803	0.6935
6.5793	1.4341	6.5793	1.053	6.5793	0.8984	6.5793	0.803	6.5793	0.7364	6.5793	0.6753	6.5793	0.6608
6.8926	2.0926	6.8926	1.053	6.8926	0.8984	6.8926	0.803	6.8926	0.7364	6.8926	0.6474	6.8926	0.6342
7.2208	2.0926	7.2208	1.053	7.2208	0.8984	7.2208	0.803	7.2208	0.7364	7.2208	0.6474	7.2208	0.6171
7.5646	2.0926	7.5646	1.053	7.5646	0.8984	7.5646	0.803	7.5646	0.7364	7.5646	0.6474	7.5646	0.603
7.9248	2.0926	7.9248	1.053	7.9248	0.8984	7.9248	0.803	7.9248	0.7364	7.9248	0.6474	7.9248	0.583
8.3022	2.0926	8.3022	1.053	8.3022	0.8984	8.3022	0.803	8.3022	0.7364	8.3022	0.6474	8.3022	0.5819
8.6975	1.6311	8.6975	1.053	8.6975	0.8984	8.6975	0.803	8.6975	0.7364	8.6975	0.6474	8.6975	0.5706
9.1116	1.246	9.1116	0.8385	9.1116	0.7483	9.1116	0.7033	9.1116	0.6765	9.1116	0.6224	9.1116	0.5604
9.5455	1.2115	9.5455	0.8385	9.5455	0.7483	9.5455	0.684	9.5455	0.6367	9.5455	0.5931	9.5455	0.5492
10	0.9271	10	0.7233	10	0.685	10	0.6511	10	0.6232	10	0.5792	10	0.5466
10.4762	0.9271	10.4762	0.6652	10.4762	0.6378	10.4762	0.6134	10.4762	0.5916	10.4762	0.5543	10.4762	0.5416
10.975	0.9271	10.975	0.6299	10.975	0.6085	10.975	0.5856	10.975	0.5694	10.975	0.5453	10.975	0.5376
11.4976	0.7303	11.4976	0.6299	11.4976	0.6085	11.4976	0.5856	11.4976	0.5658	11.4976	0.5453	11.4976	0.5376
12.045	0.7196	12.045	0.5849	12.045	0.5706	12.045	0.561	12.045	0.5542	12.045	0.5453	12.045	0.5376
12.6186	0.7196	12.6186	0.5849	12.6186	0.5706	12.6186	0.561	12.6186	0.5542	12.6186	0.5453	12.6186	0.5376
13.2194	0.6254	13.2194	0.574	13.2194	0.5614	13.2194	0.5505	13.2194	0.5472	13.2194	0.5416	13.2194	0.5356
13.8489	0.6913	13.8489	0.574	13.8489	0.5614	13.8489	0.5504	13.8489	0.5417	13.8489	0.535	13.8489	0.5308

14.5083	0.6913	14.5083	0.574	14.5083	0.5614	14.5083	0.5504	14.5083	0.5417	14.5083	0.5301	14.5083	0.5264
15.1991	0.6913	15.1991	0.574	15.1991	0.5614	15.1991	0.5504	15.1991	0.5417	15.1991	0.5301	15.1991	0.5234
15.9228	0.6913	15.9228	0.574	15.9228	0.5614	15.9228	0.5504	15.9228	0.5417	15.9228	0.5292	15.9228	0.5181
16.681	0.6913	16.681	0.5725	16.681	0.5477	16.681	0.5365	16.681	0.5284	16.681	0.518	16.681	0.5095
17.4753	0.6486	17.4753	0.5314	17.4753	0.5237	17.4753	0.518	17.4753	0.5141	17.4753	0.5087	17.4753	0.5051
18.3074	0.5639	18.3074	0.5314	18.3074	0.5237	18.3074	0.518	18.3074	0.5141	18.3074	0.5087	18.3074	0.5057
19.1791	0.5736	19.1791	0.5314	19.1791	0.5237	19.1791	0.518	19.1791	0.5141	19.1791	0.5087	19.1791	0.5057
20.0923	0.5736	20.0923	0.5314	20.0923	0.5237	20.0923	0.518	20.0923	0.5141	20.0923	0.5087	20.0923	0.5057
21.049	0.5736	21.049	0.5192	21.049	0.515	21.049	0.5122	21.049	0.5106	21.049	0.5081	21.049	0.5057
22.0513	0.5736	22.0513	0.5155	22.0513	0.5137	22.0513	0.5122	22.0513	0.5106	22.0513	0.5081	22.0513	0.5057
23.1013	0.5736	23.1013	0.5131	23.1013	0.5105	23.1013	0.5085	23.1013	0.507	23.1013	0.5056	23.1013	0.5045
24.2013	0.5233	24.2013	0.5131	24.2013	0.5105	24.2013	0.5085	24.2013	0.507	24.2013	0.505	24.2013	0.5034
25.3536	0.5233	25.3536	0.5131	25.3536	0.5105	25.3536	0.5085	25.3536	0.507	25.3536	0.505	25.3536	0.5034
26.5609	0.5233	26.5609	0.5131	26.5609	0.5105	26.5609	0.5085	26.5609	0.507	26.5609	0.505	26.5609	0.5034
27.8256	0.5233	27.8256	0.5131	27.8256	0.5105	27.8256	0.5085	27.8256	0.507	27.8256	0.505	27.8256	0.5031
29.1505	0.5079	29.1505	0.5031	29.1505	0.5033	29.1505	0.5033	29.1505	0.5031	29.1505	0.5026	29.1505	0.5017
30.5386	0.5079	30.5386	0.5022	30.5386	0.5014	30.5386	0.501	30.5386	0.5008	30.5386	0.5005	30.5386	0.5001
31.9927	0.5079	31.9927	0.5022	31.9927	0.5005	31.9927	0.4997	31.9927	0.4994	31.9927	0.4991	31.9927	0.4988
33.516	0.4972	33.516	0.4972	33.516	0.4974	33.516	0.4975	33.516	0.4976	33.516	0.4976	33.516	0.4975
35.1119	0.4965	35.1119	0.4965	35.1119	0.4965	35.1119	0.4965	35.1119	0.4965	35.1119	0.4965	35.1119	0.4965
36.7838	0.4957	36.7838	0.4957	36.7838	0.4957	36.7838	0.4957	36.7838	0.4957	36.7838	0.4958	36.7838	0.4958
38.5353	0.495	38.5353	0.495	38.5353	0.495	38.5353	0.4951	38.5353	0.4951	38.5353	0.4951	38.5353	0.4951
40.3702	0.4944	40.3702	0.4944	40.3702	0.4945	40.3702	0.4945	40.3702	0.4945	40.3702	0.4945	40.3702	0.4945
42.2924	0.4939	42.2924	0.4939	42.2924	0.4939	42.2924	0.4939	42.2924	0.4939	42.2924	0.494	42.2924	0.494
44.3062	0.4934	44.3062	0.4935	44.3062	0.4935	44.3062	0.4935	44.3062	0.4935	44.3062	0.4935	44.3062	0.4935
46.4159	0.493	46.4159	0.4931	46.4159	0.4931	46.4159	0.4931	46.4159	0.4931	46.4159	0.4931	46.4159	0.4931
48.626	0.4927	48.626	0.4927	48.626	0.4927	48.626	0.4927	48.626	0.4927	48.626	0.4927	48.626	0.4927
50.9414	0.4923	50.9414	0.4923	50.9414	0.4923	50.9414	0.4923	50.9414	0.4923	50.9414	0.4923	50.9414	0.4923

RPP-WTP Pretreatment Facility ISRS
Calc No.: 24590-PTF-S0C-S15T-00005, Rev. 0B

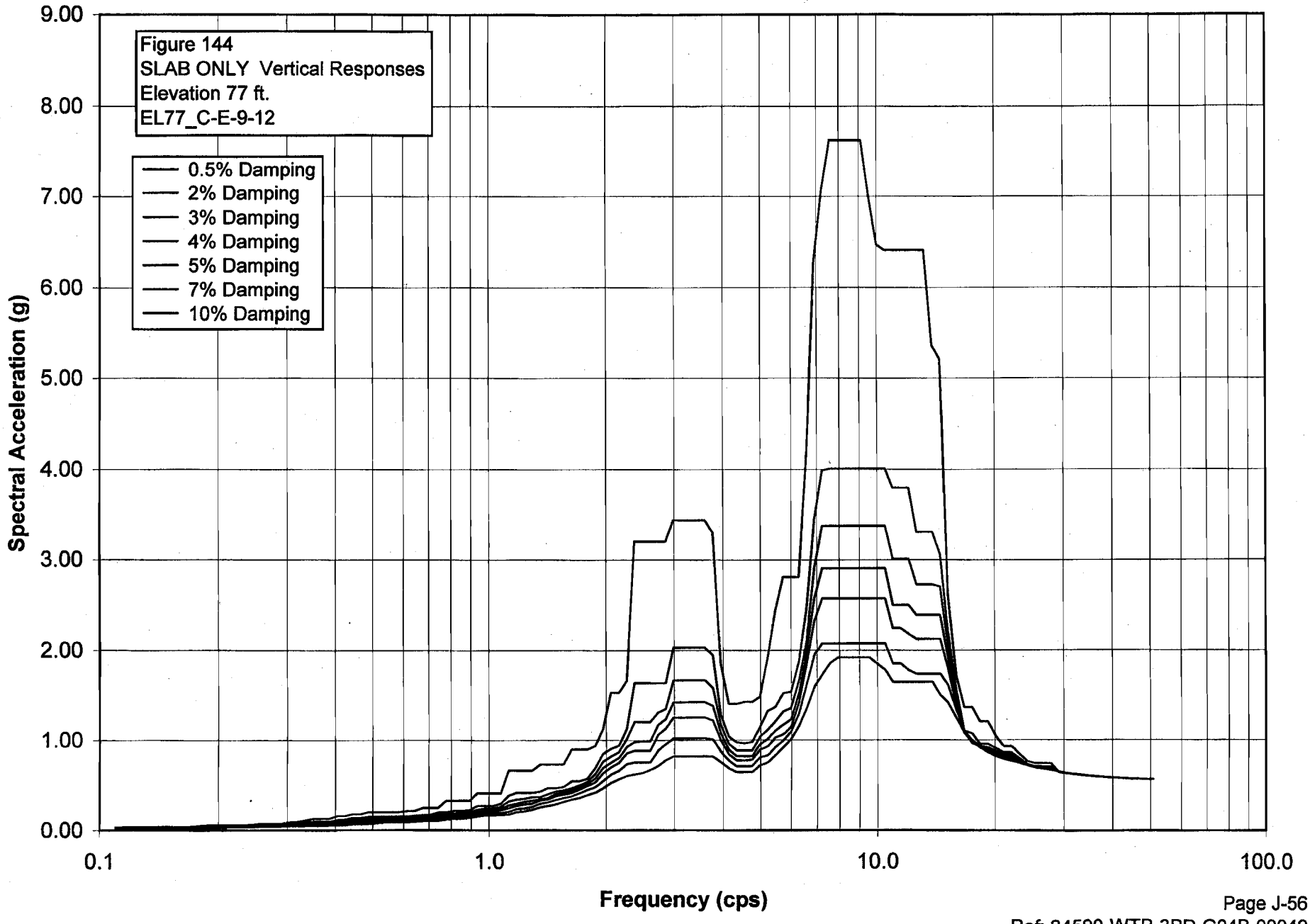

S_PTWW144.grf
RPP-WTP Pretreatment Facility ISRS
Calc No.: 24590-PTF-S0C-S15T-00005, Rev. 0B
Frequency (cps)
Spectral Acceleration (g)
Figure 144
SLAB ONLY Vertical Responses
Elevation 77 ft.
EL77_C-E-9-12

Damping	0.50%	Damping	2%	Damping	3%	Damping	4%	Damping	5%	Damping	7%	Damping	10%
Freq.	Accel.	Freq.	Accel.	Freq.	Accel.	Freq.	Accel.	Freq.	Accel.	Freq.	Accel.	Freq.	Accel.
0.1098	0.033	0.1098	0.0296	0.1098	0.0277	0.1098	0.0267	0.1098	0.0257	0.1098	0.0241	0.1098	0.0222
0.115	0.0348	0.115	0.0312	0.115	0.0291	0.115	0.0272	0.115	0.026	0.115	0.0243	0.115	0.0225
0.1204	0.0349	0.1204	0.0313	0.1204	0.0292	0.1204	0.0274	0.1204	0.026	0.1204	0.0243	0.1204	0.0225
0.1262	0.0349	0.1262	0.0313	0.1262	0.0292	0.1262	0.0274	0.1262	0.026	0.1262	0.0243	0.1262	0.0225
0.1322	0.0349	0.1322	0.0313	0.1322	0.0292	0.1322	0.0274	0.1322	0.026	0.1322	0.0243	0.1322	0.0225
0.1385	0.0349	0.1385	0.0313	0.1385	0.0292	0.1385	0.0274	0.1385	0.026	0.1385	0.0244	0.1385	0.0225
0.1451	0.0349	0.1451	0.0313	0.1451	0.0292	0.1451	0.0274	0.1451	0.026	0.1451	0.0244	0.1451	0.0228
0.152	0.0349	0.152	0.0313	0.152	0.0292	0.152	0.0274	0.152	0.0265	0.152	0.0256	0.152	0.0247
0.1592	0.0349	0.1592	0.0313	0.1592	0.0292	0.1592	0.0286	0.1592	0.0281	0.1592	0.0271	0.1592	0.026
0.1668	0.0349	0.1668	0.0313	0.1668	0.03	0.1668	0.0294	0.1668	0.0288	0.1668	0.0278	0.1668	0.0267
0.1748	0.0424	0.1748	0.0359	0.1748	0.0325	0.1748	0.0297	0.1748	0.0288	0.1748	0.0278	0.1748	0.0268
0.1831	0.0535	0.1831	0.0445	0.1831	0.0398	0.1831	0.0358	0.1831	0.0324	0.1831	0.0278	0.1831	0.0271
0.1918	0.0577	0.1918	0.0478	0.1918	0.0425	0.1918	0.038	0.1918	0.0351	0.1918	0.0324	0.1918	0.0294
0.2009	0.0577	0.2009	0.0478	0.2009	0.0425	0.2009	0.0395	0.2009	0.0377	0.2009	0.0346	0.2009	0.0309
0.2105	0.0577	0.2105	0.0478	0.2105	0.0425	0.2105	0.0398	0.2105	0.0382	0.2105	0.0353	0.2105	0.0329
0.2205	0.0577	0.2205	0.0478	0.2205	0.0433	0.2205	0.0419	0.2205	0.0407	0.2205	0.0384	0.2205	0.0354
0.231	0.0582	0.231	0.0495	0.231	0.0466	0.231	0.0444	0.231	0.0428	0.231	0.0399	0.231	0.0364
0.242	0.0629	0.242	0.0558	0.242	0.0516	0.242	0.0478	0.242	0.0445	0.242	0.0399	0.242	0.0364
0.2535	0.0719	0.2535	0.0628	0.2535	0.0577	0.2535	0.0534	0.2535	0.05	0.2535	0.0448	0.2535	0.0395
0.2656	0.0719	0.2656	0.0628	0.2656	0.0577	0.2656	0.0534	0.2656	0.05	0.2656	0.0448	0.2656	0.0395
0.2783	0.0719	0.2783	0.0628	0.2783	0.0577	0.2783	0.0534	0.2783	0.05	0.2783	0.0448	0.2783	0.0401
0.2915	0.0746	0.2915	0.0669	0.2915	0.0625	0.2915	0.0592	0.2915	0.0563	0.2915	0.0513	0.2915	0.0456
0.3054	0.0878	0.3054	0.0762	0.3054	0.0698	0.3054	0.0649	0.3054	0.0612	0.3054	0.0549	0.3054	0.0479
0.3199	0.0922	0.3199	0.0798	0.3199	0.073	0.3199	0.0671	0.3199	0.0621	0.3199	0.0549	0.3199	0.0479
0.3352	0.1107	0.3352	0.0891	0.3352	0.0789	0.3352	0.071	0.3352	0.0651	0.3352	0.0567	0.3352	0.0493
0.3511	0.1255	0.3511	0.0958	0.3511	0.083	0.3511	0.073	0.3511	0.0676	0.3511	0.0592	0.3511	0.051
0.3678	0.1255	0.3678	0.0958	0.3678	0.0851	0.3678	0.0779	0.3678	0.0717	0.3678	0.062	0.3678	0.0518

0.3853	0.1255	0.3853	0.096	0.3853	0.0882	0.3853	0.0815	0.3853	0.076	0.3853	0.0665	0.3853	0.0558
0.4037	0.1553	0.4037	0.113	0.4037	0.0981	0.4037	0.0866	0.4037	0.0775	0.4037	0.0665	0.4037	0.0558
0.4229	0.1553	0.4229	0.1191	0.4229	0.1037	0.4229	0.0916	0.4229	0.0818	0.4229	0.0673	0.4229	0.0558
0.4431	0.1773	0.4431	0.1361	0.4431	0.1162	0.4431	0.1008	0.4431	0.0886	0.4431	0.0711	0.4431	0.0618
0.4642	0.1773	0.4642	0.1361	0.4642	0.1162	0.4642	0.1008	0.4642	0.0886	0.4642	0.0752	0.4642	0.0654
0.4863	0.199	0.4863	0.1474	0.4863	0.1256	0.4863	0.1098	0.4863	0.098	0.4863	0.0815	0.4863	0.0683
0.5094	0.199	0.5094	0.1474	0.5094	0.1256	0.5094	0.1098	0.5094	0.0985	0.5094	0.0869	0.5094	0.0758
0.5337	0.199	0.5337	0.1474	0.5337	0.1256	0.5337	0.112	0.5337	0.1055	0.5337	0.0953	0.5337	0.0843
0.5591	0.199	0.5591	0.1474	0.5591	0.1256	0.5591	0.112	0.5591	0.1058	0.5591	0.0976	0.5591	0.0869
0.5857	0.2002	0.5857	0.1487	0.5857	0.1269	0.5857	0.112	0.5857	0.1058	0.5857	0.0976	0.5857	0.0869
0.6136	0.2123	0.6136	0.1487	0.6136	0.1269	0.6136	0.1141	0.6136	0.1058	0.6136	0.0976	0.6136	0.0869
0.6428	0.2123	0.6428	0.1627	0.6428	0.1477	0.6428	0.1354	0.6428	0.1254	0.6428	0.1094	0.6428	0.0937
0.6734	0.245	0.6734	0.1654	0.6734	0.151	0.6734	0.14	0.6734	0.1305	0.6734	0.1152	0.6734	0.0997
0.7055	0.245	0.7055	0.1706	0.7055	0.151	0.7055	0.14	0.7055	0.1305	0.7055	0.1156	0.7055	0.0997
0.7391	0.245	0.7391	0.1968	0.7391	0.1753	0.7391	0.157	0.7391	0.1419	0.7391	0.1189	0.7391	0.105
0.7743	0.3218	0.7743	0.1968	0.7743	0.1777	0.7743	0.163	0.7743	0.1509	0.7743	0.1309	0.7743	0.1174
0.8111	0.3218	0.8111	0.2126	0.8111	0.186	0.8111	0.1664	0.8111	0.1543	0.8111	0.1391	0.8111	0.1264
0.8497	0.3218	0.8497	0.2126	0.8497	0.1936	0.8497	0.1787	0.8497	0.166	0.8497	0.1467	0.8497	0.1286
0.8902	0.3218	0.8902	0.2184	0.8902	0.1993	0.8902	0.1834	0.8902	0.1702	0.8902	0.1495	0.8902	0.1359
0.9326	0.4071	0.9326	0.267	0.9326	0.2262	0.9326	0.2022	0.9326	0.1868	0.9326	0.1679	0.9326	0.1515
0.977	0.4071	0.977	0.267	0.977	0.2404	0.977	0.2211	0.977	0.2055	0.977	0.183	0.977	0.1631
1.0235	0.4071	1.0235	0.267	1.0235	0.2404	1.0235	0.2211	1.0235	0.2055	1.0235	0.1842	1.0235	0.1648
1.0723	0.4071	1.0723	0.2914	1.0723	0.2627	1.0723	0.2398	1.0723	0.2217	1.0723	0.1948	1.0723	0.1702
1.1233	0.6635	1.1233	0.3827	1.1233	0.3162	1.1233	0.274	1.1233	0.245	1.1233	0.2072	1.1233	0.1762
1.1768	0.6635	1.1768	0.4157	1.1768	0.3403	1.1768	0.2928	1.1768	0.269	1.1768	0.2339	1.1768	0.2019
1.2328	0.6635	1.2328	0.4157	1.2328	0.3494	1.2328	0.3147	1.2328	0.2855	1.2328	0.2417	1.2328	0.2109
1.2916	0.6635	1.2916	0.4157	1.2916	0.3668	1.2916	0.3275	1.2916	0.2955	1.2916	0.2601	1.2916	0.2253
1.353	0.7315	1.353	0.4278	1.353	0.3675	1.353	0.3456	1.353	0.3259	1.353	0.2913	1.353	0.2528
1.4175	0.7315	1.4175	0.4664	1.4175	0.3974	1.4175	0.3581	1.4175	0.3391	1.4175	0.3067	1.4175	0.2682
1.485	0.7315	1.485	0.4664	1.485	0.4301	1.485	0.4016	1.485	0.3763	1.485	0.3348	1.485	0.2853
1.5557	0.7315	1.5557	0.4789	1.5557	0.44	1.5557	0.416	1.5557	0.3949	1.5557	0.3577	1.5557	0.3126
1.6298	0.8957	1.6298	0.5439	1.6298	0.4608	1.6298	0.434	1.6298	0.4088	1.6298	0.3748	1.6298	0.3366
1.7074	0.8957	1.7074	0.5439	1.7074	0.4975	1.7074	0.4718	1.7074	0.4478	1.7074	0.4066	1.7074	0.3569
1.7887	0.8957	1.7887	0.5697	1.7887	0.5367	1.7887	0.5112	1.7887	0.4873	1.7887	0.4425	1.7887	0.3876
1.8738	0.9394	1.8738	0.6897	1.8738	0.6221	1.8738	0.5745	1.8738	0.5318	1.8738	0.4747	1.8738	0.415
1.963	1.1252	1.963	0.8496	1.963	0.763	1.963	0.6912	1.963	0.6306	1.963	0.5461	1.963	0.4619
2.0565	1.5309	2.0565	0.9056	2.0565	0.819	2.0565	0.7513	2.0565	0.6985	2.0565	0.6162	2.0565	0.5268
2.1544	1.5309	2.1544	0.94	2.1544	0.8705	2.1544	0.8061	2.1544	0.7493	2.1544	0.661	2.1544	0.5651
2.257	1.6654	2.257	1.1282	2.257	1.0188	2.257	0.9293	2.257	0.8567	2.257	0.7363	2.257	0.6011

2.3645	3.2019	2.3645	1.6409	2.3645	1.2057	2.3645	0.9845	2.3645	0.8844	2.3645	0.7543	2.3645	0.6199
2.4771	3.2019	2.4771	1.6409	2.4771	1.2057	2.4771	0.9923	2.4771	0.8844	2.4771	0.7543	2.4771	0.634
2.595	3.2019	2.595	1.6409	2.595	1.2057	2.595	0.9923	2.595	0.8844	2.595	0.7543	2.595	0.6712
2.7186	3.2019	2.7186	1.6409	2.7186	1.3102	2.7186	1.1743	2.7186	1.0634	2.7186	0.889	2.7186	0.7149
2.848	3.2019	2.848	1.6409	2.848	1.3533	2.848	1.2382	2.848	1.1373	2.848	0.9621	2.848	0.7803
2.9836	3.435	2.9836	2.035	2.9836	1.6724	2.9836	1.4273	2.9836	1.2549	2.9836	1.0273	2.9836	0.8233
3.1257	3.435	3.1257	2.035	3.1257	1.6724	3.1257	1.4273	3.1257	1.2549	3.1257	1.0273	3.1257	0.8233
3.2745	3.435	3.2745	2.035	3.2745	1.6724	3.2745	1.4273	3.2745	1.2549	3.2745	1.0273	3.2745	0.8233
3.4305	3.435	3.4305	2.035	3.4305	1.6724	3.4305	1.4273	3.4305	1.2549	3.4305	1.0273	3.4305	0.8233
3.5938	3.435	3.5938	2.035	3.5938	1.6724	3.5938	1.4273	3.5938	1.2549	3.5938	1.0273	3.5938	0.8233
3.7649	3.3006	3.7649	1.9448	3.7649	1.5871	3.7649	1.381	3.7649	1.2206	3.7649	1.0121	3.7649	0.8176
3.9442	1.8583	3.9442	1.286	3.9442	1.1718	3.9442	1.0802	3.9442	1.001	3.9442	0.8724	3.9442	0.7551
4.132	1.407	4.132	1.0422	4.132	0.9587	4.132	0.8932	4.132	0.8437	4.132	0.7724	4.132	0.689
4.3288	1.407	4.3288	0.9789	4.3288	0.8846	4.3288	0.8233	4.3288	0.7745	4.3288	0.7098	4.3288	0.6438
4.5349	1.4296	4.5349	0.9692	4.5349	0.8846	4.5349	0.8233	4.5349	0.7745	4.5349	0.7098	4.5349	0.6438
4.7508	1.4296	4.7508	0.9827	4.7508	0.8846	4.7508	0.826	4.7508	0.7843	4.7508	0.7148	4.7508	0.6473
4.977	1.4844	4.977	1.147	4.977	1.0394	4.977	0.9561	4.977	0.8966	4.977	0.8092	4.977	0.7185
5.214	1.9172	5.214	1.3256	5.214	1.1195	5.214	1.0161	5.214	0.9317	5.214	0.832	5.214	0.7531
5.4623	2.4312	5.4623	1.3711	5.4623	1.2108	5.4623	1.109	5.4623	1.0308	5.4623	0.9219	5.4623	0.8362
5.7224	2.8095	5.7224	1.5237	5.7224	1.3181	5.7224	1.173	5.7224	1.0639	5.7224	0.9962	5.7224	0.9209
5.9948	2.8095	5.9948	1.5398	5.9948	1.3592	5.9948	1.2311	5.9948	1.1477	5.9948	1.0971	5.9948	1.014
6.2803	2.8095	6.2803	1.8781	6.2803	1.6652	6.2803	1.521	6.2803	1.4188	6.2803	1.296	6.2803	1.1608
6.5793	4.1325	6.5793	2.4464	6.5793	2.0943	6.5793	1.9701	6.5793	1.8481	6.5793	1.6202	6.5793	1.3533
6.8926	6.2782	6.8926	3.4476	6.8926	2.9157	6.8926	2.5771	6.8926	2.3242	6.8926	1.9553	6.8926	1.5985
7.2208	7.071	7.2208	3.9889	7.2208	3.3741	7.2208	2.9088	7.2208	2.574	7.2208	2.0749	7.2208	1.7348
7.5646	7.6291	7.5646	4.009	7.5646	3.3741	7.5646	2.9088	7.5646	2.574	7.5646	2.0749	7.5646	1.8631
7.9248	7.6291	7.9248	4.009	7.9248	3.3741	7.9248	2.9088	7.9248	2.574	7.9248	2.0749	7.9248	1.9214
8.3022	7.6291	8.3022	4.009	8.3022	3.3741	8.3022	2.9088	8.3022	2.574	8.3022	2.0749	8.3022	1.9214
8.6975	7.6291	8.6975	4.009	8.6975	3.3741	8.6975	2.9088	8.6975	2.574	8.6975	2.0749	8.6975	1.9214
9.1116	7.6291	9.1116	4.009	9.1116	3.3741	9.1116	2.9088	9.1116	2.574	9.1116	2.0749	9.1116	1.9214
9.5455	6.9952	9.5455	4.009	9.5455	3.3741	9.5455	2.9088	9.5455	2.574	9.5455	2.0749	9.5455	1.9214
10	6.4689	10	4.009	10	3.3741	10	2.9088	10	2.574	10	2.0749	10	1.8526
10.4762	6.4105	10.4762	4.009	10.4762	3.3741	10.4762	2.9088	10.4762	2.574	10.4762	2.0749	10.4762	1.7842
10.975	6.4105	10.975	3.797	10.975	3.014	10.975	2.4993	10.975	2.2427	10.975	1.8543	10.975	1.6473
11.4976	6.4105	11.4976	3.797	11.4976	3.014	11.4976	2.4993	11.4976	2.2427	11.4976	1.8543	11.4976	1.6473
12.045	6.4105	12.045	3.797	12.045	3.014	12.045	2.4993	12.045	2.1807	12.045	1.7772	12.045	1.6473
12.6186	6.4105	12.6186	3.3047	12.6186	2.7283	12.6186	2.3905	12.6186	2.1241	12.6186	1.7375	12.6186	1.6473
13.2194	6.4105	13.2194	3.3047	13.2194	2.7283	13.2194	2.3905	13.2194	2.1241	13.2194	1.7375	13.2194	1.6473
13.8489	5.3624	13.8489	3.3047	13.8489	2.7283	13.8489	2.3905	13.8489	2.1241	13.8489	1.7375	13.8489	1.6473

14.5083	5.2089	14.5083	3.0577	14.5083	2.7038	14.5083	2.3905	14.5083	2.1241	14.5083	1.7375	14.5083	1.499
15.1991	2.6001	15.1991	2.2044	15.1991	2.0461	15.1991	1.9128	15.1991	1.7975	15.1991	1.6125	15.1991	1.4111
15.9228	1.7158	15.9228	1.5528	15.9228	1.4679	15.9228	1.3925	15.9228	1.3721	15.9228	1.3273	15.9228	1.2463
16.681	1.3631	16.681	1.1044	16.681	1.0991	16.681	1.0919	16.681	1.0806	16.681	1.0968	16.681	1.0873
17.4753	1.3631	17.4753	1.0709	17.4753	0.9973	17.4753	0.9668	17.4753	0.9748	17.4753	0.9835	17.4753	0.9822
18.3074	1.2052	18.3074	0.9593	18.3074	0.9349	18.3074	0.9287	18.3074	0.9263	18.3074	0.9227	18.3074	0.9152
19.1791	1.2052	19.1791	0.9546	19.1791	0.9171	19.1791	0.9012	19.1791	0.892	19.1791	0.8794	19.1791	0.8652
20.0923	1.0468	20.0923	0.9082	20.0923	0.877	20.0923	0.8587	20.0923	0.8483	20.0923	0.8361	20.0923	0.8209
21.049	0.9305	21.049	0.8595	21.049	0.8346	21.049	0.8182	21.049	0.8118	21.049	0.8052	21.049	0.7904
22.0513	0.9305	22.0513	0.8595	22.0513	0.8346	22.0513	0.8182	22.0513	0.8064	22.0513	0.7893	22.0513	0.7707
23.1013	0.8414	23.1013	0.7957	23.1013	0.7868	23.1013	0.7792	23.1013	0.7723	23.1013	0.7604	23.1013	0.7461
24.2013	0.7635	24.2013	0.732	24.2013	0.7297	24.2013	0.7289	24.2013	0.728	24.2013	0.7252	24.2013	0.7189
25.3536	0.7411	25.3536	0.7066	25.3536	0.6973	25.3536	0.6989	25.3536	0.6998	25.3536	0.6998	25.3536	0.697
26.5609	0.7411	26.5609	0.7066	26.5609	0.6937	26.5609	0.6923	26.5609	0.6904	26.5609	0.6865	26.5609	0.6811
27.8256	0.7411	27.8256	0.7066	27.8256	0.6937	27.8256	0.6855	27.8256	0.6799	27.8256	0.6725	27.8256	0.6657
29.1505	0.6389	29.1505	0.6472	29.1505	0.6502	29.1505	0.6516	29.1505	0.6519	29.1505	0.651	29.1505	0.6485
30.5386	0.6276	30.5386	0.6295	30.5386	0.6307	30.5386	0.6316	30.5386	0.6323	30.5386	0.6331	30.5386	0.6329
31.9927	0.6179	31.9927	0.6186	31.9927	0.6191	31.9927	0.6195	31.9927	0.6199	31.9927	0.6204	31.9927	0.6205
33.516	0.6093	33.516	0.6097	33.516	0.6099	33.516	0.6101	33.516	0.6102	33.516	0.6105	33.516	0.6106
35.1119	0.6017	35.1119	0.6019	35.1119	0.602	35.1119	0.6021	35.1119	0.6022	35.1119	0.6023	35.1119	0.6023
36.7838	0.5949	36.7838	0.595	36.7838	0.5951	36.7838	0.5951	36.7838	0.5952	36.7838	0.5952	36.7838	0.5952
38.5353	0.5889	38.5353	0.5889	38.5353	0.589	38.5353	0.589	38.5353	0.589	38.5353	0.589	38.5353	0.589
40.3702	0.5835	40.3702	0.5835	40.3702	0.5835	40.3702	0.5836	40.3702	0.5836	40.3702	0.5836	40.3702	0.5835
42.2924	0.5787	42.2924	0.5787	42.2924	0.5787	42.2924	0.5787	42.2924	0.5787	42.2924	0.5787	42.2924	0.5787
44.3062	0.5743	44.3062	0.5743	44.3062	0.5743	44.3062	0.5743	44.3062	0.5743	44.3062	0.5743	44.3062	0.5743
46.4159	0.5703	46.4159	0.5703	46.4159	0.5703	46.4159	0.5703	46.4159	0.5703	46.4159	0.5703	46.4159	0.5703
48.626	0.5667	48.626	0.5667	48.626	0.5667	48.626	0.5667	48.626	0.5667	48.626	0.5667	48.626	0.5667
50.9414	0.5634	50.9414	0.5634	50.9414	0.5634	50.9414	0.5634	50.9414	0.5634	50.9414	0.5634	50.9414	0.5635

RPP-WTP Pretreatment Facility ISRS
Calc No.: 24590-PTF-S0C-S15T-00005, Rev. 0B

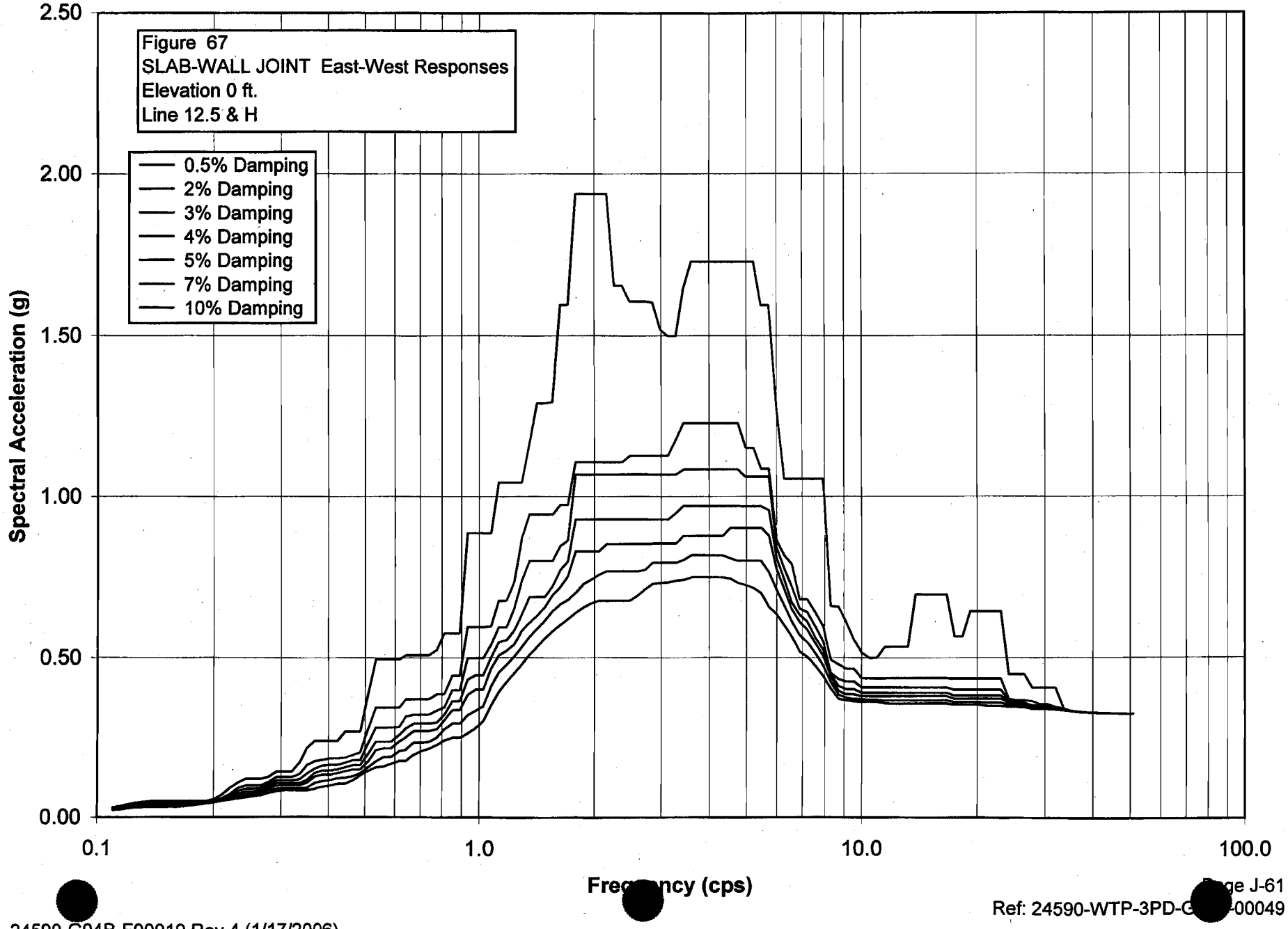

S_PTWW067.grf
RPP-WTP Pretreatment Facility ISRS
Calc No.: 24590-PTF-S0C-S15T-00005, Rev. 0B
Frequency (cps)
Spectral Acceleration (g)
Figure 67
SLAB-WALL JOINT East-West Responses
Elevation 0 ft.
Line 12.5 & H

Damping	0.50%	Damping	2%	Damping	3%	Damping	4%	Damping	5%	Damping	7%	Damping	10%
Freq.	Accel.	Freq.	Accel.	Freq.	Accel.	Freq.	Accel.	Freq.	Accel.	Freq.	Accel.	Freq.	Accel.
0.1098	0.0314	0.1098	0.0288	0.1098	0.0275	0.1098	0.0267	0.1098	0.026	0.1098	0.0247	0.1098	0.0231
0.115	0.0358	0.115	0.033	0.115	0.0314	0.115	0.03	0.115	0.0289	0.115	0.0273	0.115	0.0253
0.1204	0.041	0.1204	0.0382	0.1204	0.0366	0.1204	0.0352	0.1204	0.0339	0.1204	0.0316	0.1204	0.0287
0.1262	0.0459	0.1262	0.0426	0.1262	0.0406	0.1262	0.0389	0.1262	0.0372	0.1262	0.0344	0.1262	0.0311
0.1322	0.0488	0.1322	0.0442	0.1322	0.0421	0.1322	0.0402	0.1322	0.0385	0.1322	0.0355	0.1322	0.032
0.1385	0.0518	0.1385	0.0463	0.1385	0.0431	0.1385	0.0402	0.1385	0.0385	0.1385	0.0355	0.1385	0.032
0.1451	0.0518	0.1451	0.0463	0.1451	0.0431	0.1451	0.0402	0.1451	0.0385	0.1451	0.0355	0.1451	0.032
0.152	0.0518	0.152	0.0463	0.152	0.0431	0.152	0.0402	0.152	0.0385	0.152	0.0355	0.152	0.032
0.1592	0.0518	0.1592	0.0463	0.1592	0.0431	0.1592	0.0402	0.1592	0.0385	0.1592	0.0355	0.1592	0.0322
0.1668	0.0518	0.1668	0.0463	0.1668	0.0431	0.1668	0.0402	0.1668	0.0385	0.1668	0.0361	0.1668	0.0348
0.1748	0.0518	0.1748	0.0463	0.1748	0.0431	0.1748	0.041	0.1748	0.0403	0.1748	0.0392	0.1748	0.0375
0.1831	0.0518	0.1831	0.0463	0.1831	0.0454	0.1831	0.0446	0.1831	0.0438	0.1831	0.0424	0.1831	0.0402
0.1918	0.0521	0.1918	0.0504	0.1918	0.0494	0.1918	0.0484	0.1918	0.0474	0.1918	0.0455	0.1918	0.0433
0.2009	0.0569	0.2009	0.0549	0.2009	0.0536	0.2009	0.0524	0.2009	0.0513	0.2009	0.0494	0.2009	0.0471
0.2105	0.0707	0.2105	0.06	0.2105	0.0585	0.2105	0.0572	0.2105	0.056	0.2105	0.0538	0.2105	0.0513
0.2205	0.0909	0.2205	0.0714	0.2205	0.0642	0.2205	0.0623	0.2205	0.0608	0.2205	0.0584	0.2205	0.0554
0.231	0.1078	0.231	0.0906	0.231	0.0813	0.231	0.0735	0.231	0.0671	0.231	0.0628	0.231	0.0589
0.242	0.1194	0.242	0.0991	0.242	0.0883	0.242	0.0791	0.242	0.0714	0.242	0.0663	0.242	0.0617
0.2535	0.12	0.2535	0.0991	0.2535	0.0883	0.2535	0.0796	0.2535	0.0755	0.2535	0.069	0.2535	0.0654
0.2656	0.12	0.2656	0.0991	0.2656	0.0922	0.2656	0.0879	0.2656	0.0839	0.2656	0.0769	0.2656	0.0684
0.2783	0.1252	0.2783	0.1094	0.2783	0.1006	0.2783	0.0949	0.2783	0.0907	0.2783	0.0832	0.2783	0.0751
0.2915	0.1421	0.2915	0.1244	0.2915	0.1145	0.2915	0.1057	0.2915	0.0979	0.2915	0.0883	0.2915	0.0805
0.3054	0.1421	0.3054	0.1244	0.3054	0.115	0.3054	0.1067	0.3054	0.0994	0.3054	0.0903	0.3054	0.0832
0.3199	0.1421	0.3199	0.1244	0.3199	0.115	0.3199	0.1067	0.3199	0.0994	0.3199	0.0903	0.3199	0.0837
0.3352	0.1707	0.3352	0.1342	0.3352	0.1178	0.3352	0.1067	0.3352	0.0994	0.3352	0.0903	0.3352	0.0837
0.3511	0.2169	0.3511	0.1627	0.3511	0.1366	0.3511	0.1164	0.3511	0.107	0.3511	0.0922	0.3511	0.0837
0.3678	0.2396	0.3678	0.1754	0.3678	0.1523	0.3678	0.1387	0.3678	0.1269	0.3678	0.1073	0.3678	0.0882

0.3853	0.2396	0.3853	0.1799	0.3853	0.1618	0.3853	0.1463	0.3853	0.1331	0.3853	0.112	0.3853	0.0944
0.4037	0.2396	0.4037	0.1842	0.4037	0.164	0.4037	0.1472	0.4037	0.1332	0.4037	0.1155	0.4037	0.0992
0.4229	0.2396	0.4229	0.1842	0.4229	0.164	0.4229	0.1495	0.4229	0.1381	0.4229	0.1214	0.4229	0.1046
0.4431	0.2688	0.4431	0.1868	0.4431	0.1709	0.4431	0.1568	0.4431	0.1442	0.4431	0.1234	0.4431	0.1046
0.4642	0.2688	0.4642	0.1954	0.4642	0.1781	0.4642	0.1629	0.4642	0.1495	0.4642	0.1272	0.4642	0.1151
0.4863	0.2688	0.4863	0.2037	0.4863	0.1784	0.4863	0.1629	0.4863	0.1495	0.4863	0.1378	0.4863	0.1308
0.5094	0.3911	0.5094	0.2791	0.5094	0.2331	0.5094	0.2001	0.5094	0.1754	0.5094	0.1572	0.5094	0.1456
0.5337	0.4951	0.5337	0.3445	0.5337	0.2811	0.5337	0.237	0.5337	0.2102	0.5337	0.174	0.5337	0.1562
0.5591	0.4951	0.5591	0.3445	0.5591	0.2811	0.5591	0.237	0.5591	0.2161	0.5591	0.1886	0.5591	0.1586
0.5857	0.4951	0.5857	0.3445	0.5857	0.2811	0.5857	0.237	0.5857	0.2161	0.5857	0.1886	0.5857	0.1672
0.6136	0.4951	0.6136	0.3445	0.6136	0.2835	0.6136	0.2579	0.6136	0.2376	0.6136	0.2068	0.6136	0.1755
0.6428	0.5081	0.6428	0.3704	0.6428	0.3158	0.6428	0.2788	0.6428	0.2506	0.6428	0.2109	0.6428	0.1755
0.6734	0.5081	0.6734	0.3704	0.6734	0.3214	0.6734	0.2929	0.6734	0.2694	0.6734	0.2332	0.6734	0.1957
0.7055	0.5081	0.7055	0.3704	0.7055	0.3214	0.7055	0.2929	0.7055	0.2694	0.7055	0.2332	0.7055	0.2068
0.7391	0.5081	0.7391	0.3704	0.7391	0.3214	0.7391	0.2929	0.7391	0.2694	0.7391	0.2359	0.7391	0.2145
0.7743	0.5246	0.7743	0.3867	0.7743	0.3352	0.7743	0.2967	0.7743	0.2757	0.7743	0.2494	0.7743	0.2264
0.8111	0.5776	0.8111	0.3867	0.8111	0.3456	0.8111	0.3215	0.8111	0.3045	0.8111	0.2755	0.8111	0.2408
0.8497	0.5776	0.8497	0.444	0.8497	0.3988	0.8497	0.3642	0.8497	0.3363	0.8497	0.2936	0.8497	0.2491
0.8902	0.5776	0.8902	0.444	0.8902	0.3988	0.8902	0.3642	0.8902	0.3363	0.8902	0.2936	0.8902	0.2491
0.9326	0.8877	0.9326	0.5975	0.9326	0.4991	0.9326	0.4325	0.9326	0.3845	0.9326	0.3203	0.9326	0.2634
0.977	0.8877	0.977	0.5975	0.977	0.4991	0.977	0.4459	0.977	0.4011	0.977	0.3342	0.977	0.2792
1.0235	0.8877	1.0235	0.5975	1.0235	0.4991	1.0235	0.4459	1.0235	0.4011	1.0235	0.3491	1.0235	0.3012
1.0723	0.8877	1.0723	0.6	1.0723	0.5421	1.0723	0.5019	1.0723	0.4672	1.0723	0.4115	1.0723	0.3515
1.1233	1.0436	1.1233	0.6796	1.1233	0.5961	1.1233	0.5493	1.1233	0.5076	1.1233	0.454	1.1233	0.393
1.1768	1.0436	1.1768	0.6796	1.1768	0.5966	1.1768	0.5564	1.1768	0.5218	1.1768	0.4787	1.1768	0.424
1.2328	1.0436	1.2328	0.7363	1.2328	0.6543	1.2328	0.5857	1.2328	0.5418	1.2328	0.503	1.2328	0.452
1.2916	1.0436	1.2916	0.8733	1.2916	0.7423	1.2916	0.6374	1.2916	0.5853	1.2916	0.5346	1.2916	0.4807
1.353	1.1657	1.353	0.9454	1.353	0.8025	1.353	0.6903	1.353	0.6111	1.353	0.5663	1.353	0.5097
1.4175	1.2899	1.4175	0.9454	1.4175	0.8025	1.4175	0.6903	1.4175	0.6337	1.4175	0.5919	1.4175	0.5357
1.485	1.2899	1.485	0.9454	1.485	0.8025	1.485	0.6903	1.485	0.6584	1.485	0.617	1.485	0.5609
1.5557	1.2945	1.5557	0.9454	1.5557	0.8025	1.5557	0.7243	1.5557	0.696	1.5557	0.6469	1.5557	0.584
1.6298	1.5963	1.6298	0.9746	1.6298	0.8489	1.6298	0.7751	1.6298	0.7218	1.6298	0.6683	1.6298	0.604
1.7074	1.5963	1.7074	0.9746	1.7074	0.8647	1.7074	0.8015	1.7074	0.7551	1.7074	0.6813	1.7074	0.6226
1.7887	1.939	1.7887	1.1073	1.7887	1.0689	1.7887	0.93	1.7887	0.8319	1.7887	0.7035	1.7887	0.6419
1.8738	1.939	1.8738	1.1073	1.8738	1.0689	1.8738	0.93	1.8738	0.8319	1.8738	0.7304	1.8738	0.6589
1.963	1.939	1.963	1.1073	1.963	1.0689	1.963	0.93	1.963	0.8319	1.963	0.7451	1.963	0.671
2.0565	1.939	2.0565	1.1073	2.0565	1.0689	2.0565	0.93	2.0565	0.8319	2.0565	0.7593	2.0565	0.6798
2.1544	1.939	2.1544	1.1073	2.1544	1.0689	2.1544	0.93	2.1544	0.8543	2.1544	0.771	2.1544	0.6798
2.257	1.6562	2.257	1.1073	2.257	1.0689	2.257	0.93	2.257	0.8543	2.257	0.771	2.257	0.6798

2.3645	1.6562	2.3645	1.1073	2.3645	1.0689	2.3645	0.93	2.3645	0.8543	2.3645	0.771	2.3645	0.6798
2.4771	1.6073	2.4771	1.127	2.4771	1.0689	2.4771	0.93	2.4771	0.8543	2.4771	0.771	2.4771	0.6798
2.595	1.6073	2.595	1.127	2.595	1.0689	2.595	0.93	2.595	0.8543	2.595	0.771	2.595	0.6948
2.7186	1.6073	2.7186	1.127	2.7186	1.0689	2.7186	0.93	2.7186	0.8543	2.7186	0.775	2.7186	0.7152
2.848	1.6038	2.848	1.127	2.848	1.0689	2.848	0.93	2.848	0.8559	2.848	0.7972	2.848	0.7309
2.9836	1.5188	2.9836	1.127	2.9836	1.0689	2.9836	0.93	2.9836	0.8559	2.9836	0.7972	2.9836	0.7343
3.1257	1.4997	3.1257	1.127	3.1257	1.0689	3.1257	0.93	3.1257	0.8559	3.1257	0.7972	3.1257	0.7358
3.2745	1.4997	3.2745	1.1771	3.2745	1.0689	3.2745	0.9489	3.2745	0.8559	3.2745	0.7972	3.2745	0.7415
3.4305	1.6477	3.4305	1.2287	3.4305	1.0843	3.4305	0.9715	3.4305	0.8786	3.4305	0.8056	3.4305	0.7439
3.5938	1.729	3.5938	1.2287	3.5938	1.0843	3.5938	0.9715	3.5938	0.8786	3.5938	0.8201	3.5938	0.7521
3.7649	1.729	3.7649	1.2287	3.7649	1.0843	3.7649	0.9715	3.7649	0.8786	3.7649	0.8201	3.7649	0.7521
3.9442	1.729	3.9442	1.2287	3.9442	1.0843	3.9442	0.9715	3.9442	0.8786	3.9442	0.8201	3.9442	0.7521
4.132	1.729	4.132	1.2287	4.132	1.0843	4.132	0.9715	4.132	0.8786	4.132	0.8201	4.132	0.7521
4.3288	1.729	4.3288	1.2287	4.3288	1.0843	4.3288	0.9715	4.3288	0.8786	4.3288	0.8201	4.3288	0.7521
4.5349	1.729	4.5349	1.2287	4.5349	1.0843	4.5349	0.9715	4.5349	0.9034	4.5349	0.8114	4.5349	0.7477
4.7508	1.729	4.7508	1.2287	4.7508	1.0843	4.7508	0.9715	4.7508	0.9034	4.7508	0.8028	4.7508	0.7348
4.977	1.729	4.977	1.1517	4.977	1.0607	4.977	0.9698	4.977	0.9034	4.977	0.8028	4.977	0.7272
5.214	1.729	5.214	1.1517	5.214	1.0607	5.214	0.9698	5.214	0.9034	5.214	0.8028	5.214	0.7183
5.4623	1.5947	5.4623	1.0863	5.4623	1.0607	5.4623	0.9698	5.4623	0.9034	5.4623	0.8028	5.4623	0.7033
5.7224	1.5947	5.7224	1.0863	5.7224	1.0607	5.7224	0.9582	5.7224	0.8798	5.7224	0.767	5.7224	0.6597
5.9948	1.2803	5.9948	0.866	5.9948	0.8444	5.9948	0.8127	5.9948	0.7784	5.9948	0.714	5.9948	0.6374
6.2803	1.0548	6.2803	0.8195	6.2803	0.7776	6.2803	0.744	6.2803	0.7149	6.2803	0.6643	6.2803	0.6028
6.5793	1.0548	6.5793	0.7923	6.5793	0.7225	6.5793	0.6735	6.5793	0.6523	6.5793	0.6139	6.5793	0.5669
6.8926	1.0548	6.8926	0.6827	6.8926	0.6543	6.8926	0.635	6.8926	0.6133	6.8926	0.5713	6.8926	0.5194
7.2208	1.0548	7.2208	0.6827	7.2208	0.6434	7.2208	0.6137	7.2208	0.5893	7.2208	0.5492	7.2208	0.5024
7.5646	1.0548	7.5646	0.643	7.5646	0.5993	7.5646	0.5643	7.5646	0.5464	7.5646	0.5145	7.5646	0.476
7.9248	1.0548	7.9248	0.6	7.9248	0.5525	7.9248	0.5251	7.9248	0.5059	7.9248	0.4766	7.9248	0.444
8.3022	0.6638	8.3022	0.4935	8.3022	0.453	8.3022	0.4489	8.3022	0.4419	8.3022	0.4251	8.3022	0.4054
8.6975	0.6605	8.6975	0.4805	8.6975	0.4345	8.6975	0.413	8.6975	0.3975	8.6975	0.3855	8.6975	0.3723
9.1116	0.6123	9.1116	0.4662	9.1116	0.4277	9.1116	0.403	9.1116	0.3873	9.1116	0.3764	9.1116	0.3684
9.5455	0.5564	9.5455	0.4662	9.5455	0.4277	9.5455	0.403	9.5455	0.3873	9.5455	0.3716	9.5455	0.3649
10	0.5166	10	0.4371	10	0.4088	10	0.3922	10	0.3815	10	0.3716	10	0.3633
10.4762	0.4998	10.4762	0.4371	10.4762	0.4088	10.4762	0.3922	10.4762	0.3812	10.4762	0.37	10.4762	0.3633
10.975	0.5011	10.975	0.4371	10.975	0.4088	10.975	0.3922	10.975	0.3812	10.975	0.37	10.975	0.3633
11.4976	0.5346	11.4976	0.4371	11.4976	0.4088	11.4976	0.3922	11.4976	0.3812	11.4976	0.3678	11.4976	0.3593
12.045	0.5346	12.045	0.4371	12.045	0.4088	12.045	0.3922	12.045	0.3812	12.045	0.3678	12.045	0.3575
12.6186	0.5346	12.6186	0.4371	12.6186	0.4088	12.6186	0.3922	12.6186	0.3812	12.6186	0.3678	12.6186	0.3575
13.2194	0.5346	13.2194	0.4371	13.2194	0.4088	13.2194	0.3922	13.2194	0.3812	13.2194	0.3678	13.2194	0.3575
13.8489	0.6983	13.8489	0.4371	13.8489	0.4088	13.8489	0.3922	13.8489	0.3812	13.8489	0.3678	13.8489	0.3575

14.5083	0.6983	14.5083	0.4371	14.5083	0.4088	14.5083	0.3922	14.5083	0.3812	14.5083	0.3678	14.5083	0.3575
15.1991	0.6983	15.1991	0.4371	15.1991	0.4088	15.1991	0.3922	15.1991	0.3812	15.1991	0.3678	15.1991	0.3575
15.9228	0.6983	15.9228	0.4371	15.9228	0.4088	15.9228	0.3922	15.9228	0.3812	15.9228	0.3678	15.9228	0.3575
16.681	0.6983	16.681	0.4371	16.681	0.4088	16.681	0.3922	16.681	0.3812	16.681	0.3678	16.681	0.3575
17.4753	0.5675	17.4753	0.4359	17.4753	0.4009	17.4753	0.3832	17.4753	0.3725	17.4753	0.3623	17.4753	0.3546
18.3074	0.5675	18.3074	0.4359	18.3074	0.4009	18.3074	0.3832	18.3074	0.3725	18.3074	0.3623	18.3074	0.3546
19.1791	0.6461	19.1791	0.4359	19.1791	0.4009	19.1791	0.3832	19.1791	0.3725	19.1791	0.3623	19.1791	0.3546
20.0923	0.6461	20.0923	0.4359	20.0923	0.4009	20.0923	0.3832	20.0923	0.3725	20.0923	0.3623	20.0923	0.3546
21.049	0.6461	21.049	0.4359	21.049	0.4009	21.049	0.3832	21.049	0.3725	21.049	0.3601	21.049	0.3508
22.0513	0.6461	22.0513	0.4359	22.0513	0.4009	22.0513	0.3832	22.0513	0.3725	22.0513	0.3601	22.0513	0.3504
23.1013	0.6461	23.1013	0.4359	23.1013	0.4009	23.1013	0.3832	23.1013	0.3725	23.1013	0.3601	23.1013	0.3504
24.2013	0.4489	24.2013	0.3721	24.2013	0.3669	24.2013	0.3636	24.2013	0.3605	24.2013	0.3546	24.2013	0.3479
25.3536	0.4489	25.3536	0.3675	25.3536	0.3609	25.3536	0.3581	25.3536	0.3561	25.3536	0.3522	25.3536	0.3477
26.5609	0.4489	26.5609	0.3675	26.5609	0.3609	26.5609	0.3565	26.5609	0.3534	26.5609	0.3491	26.5609	0.3452
27.8256	0.4073	27.8256	0.3647	27.8256	0.3523	27.8256	0.3488	27.8256	0.3467	27.8256	0.3435	27.8256	0.3406
29.1505	0.4073	29.1505	0.3548	29.1505	0.3516	29.1505	0.3488	29.1505	0.3467	29.1505	0.3435	29.1505	0.3402
30.5386	0.4073	30.5386	0.3548	30.5386	0.3516	30.5386	0.3488	30.5386	0.3467	30.5386	0.3435	30.5386	0.3402
31.9927	0.4073	31.9927	0.3465	31.9927	0.345	31.9927	0.3447	31.9927	0.3438	31.9927	0.3417	31.9927	0.3392
33.516	0.3423	33.516	0.3426	33.516	0.3419	33.516	0.341	33.516	0.3401	33.516	0.3386	33.516	0.3369
35.1119	0.3337	35.1119	0.3344	35.1119	0.3347	35.1119	0.3349	35.1119	0.3349	35.1119	0.3348	35.1119	0.3343
36.7838	0.3313	36.7838	0.3316	36.7838	0.3318	36.7838	0.3319	36.7838	0.332	36.7838	0.3321	36.7838	0.332
38.5353	0.3298	38.5353	0.3299	38.5353	0.33	38.5353	0.3301	38.5353	0.3302	38.5353	0.3303	38.5353	0.3303
40.3702	0.3286	40.3702	0.3287	40.3702	0.3288	40.3702	0.3289	40.3702	0.3289	40.3702	0.329	40.3702	0.3291
42.2924	0.3277	42.2924	0.3278	42.2924	0.3278	42.2924	0.3279	42.2924	0.3279	42.2924	0.328	42.2924	0.328
44.3062	0.327	44.3062	0.327	44.3062	0.3271	44.3062	0.3271	44.3062	0.3271	44.3062	0.3271	44.3062	0.3272
46.4159	0.3263	46.4159	0.3264	46.4159	0.3264	46.4159	0.3264	46.4159	0.3264	46.4159	0.3264	46.4159	0.3265
48.626	0.3257	48.626	0.3257	48.626	0.3257	48.626	0.3257	48.626	0.3258	48.626	0.3258	48.626	0.3258
50.9414	0.3252	50.9414	0.3252	50.9414	0.3252	50.9414	0.3252	50.9414	0.3252	50.9414	0.3252	50.9414	0.3252

RPP-WTP Pretreatment Facility ISRS
Calc No.: 24590-PTF-S0C-S15T-00005, Rev. 0B

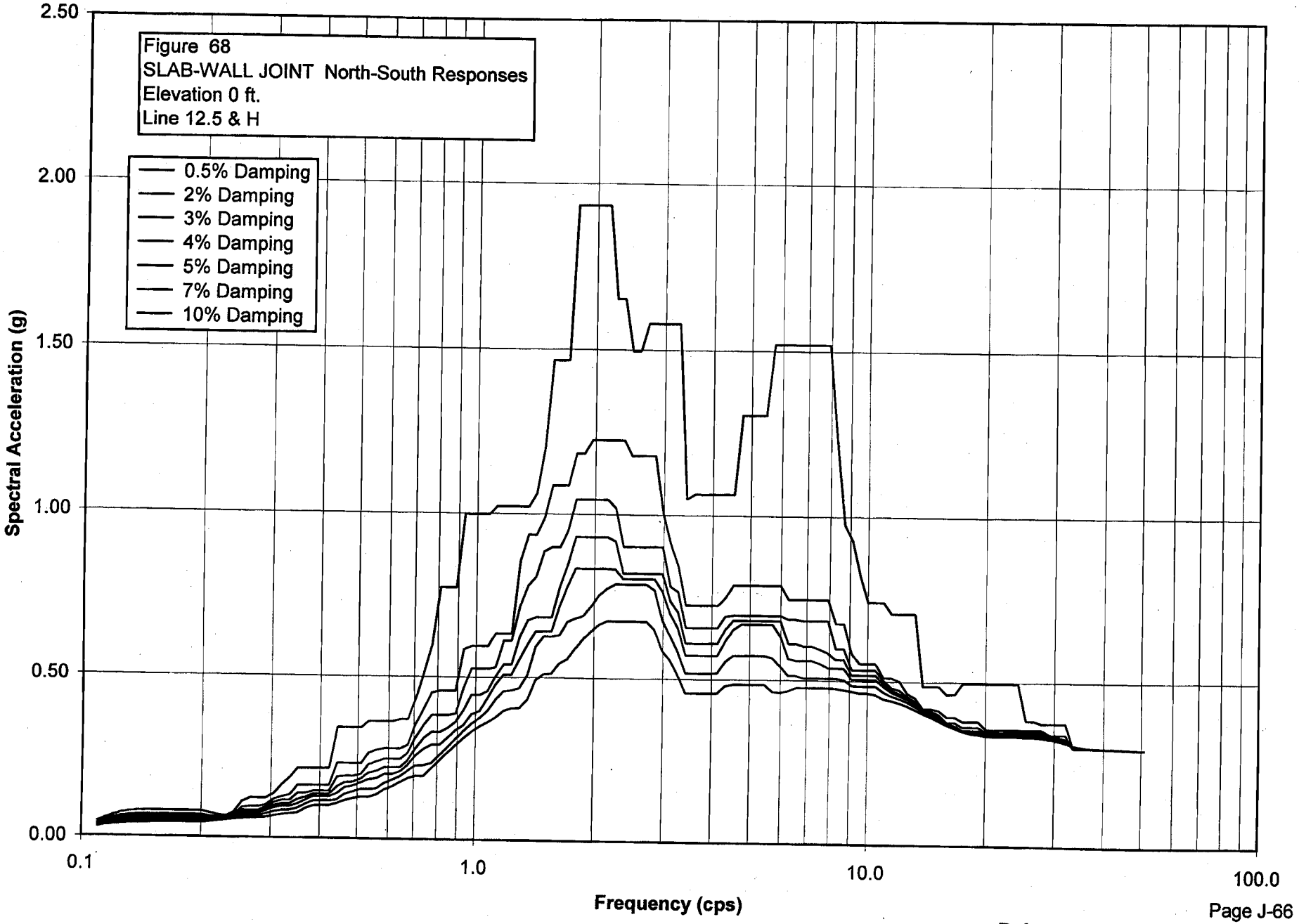

S_PTWW068.grf
RPP-WTP Pretreatment Facility ISRS
Calc No.: 24590-PTF-S0C-S15T-00005, Rev. 0B
Frequency (cps)
Spectral Acceleration (g)
Figure 68
SLAB-WALL JOINT North-South Responses
Elevation 0 ft.
Line 12.5 & H

Damping	0.50%	Damping	2%	Damping	3%	Damping	4%	Damping	5%	Damping	7%	Damping	10%
Freq.	Accel.	Freq.	Accel.	Freq.	Accel.	Freq.	Accel.	Freq.	Accel.	Freq.	Accel.	Freq.	Accel.
0.1098	0.0456	0.1098	0.0394	0.1098	0.0365	0.1098	0.0343	0.1098	0.0327	0.1098	0.0305	0.1098	0.028
0.115	0.0555	0.115	0.0492	0.115	0.0464	0.115	0.0438	0.115	0.0416	0.115	0.0378	0.115	0.0332
0.1204	0.0647	0.1204	0.058	0.1204	0.0542	0.1204	0.0508	0.1204	0.0478	0.1204	0.0424	0.1204	0.036
0.1262	0.0719	0.1262	0.0617	0.1262	0.0571	0.1262	0.0532	0.1262	0.0497	0.1262	0.0437	0.1262	0.0378
0.1322	0.0761	0.1322	0.0652	0.1322	0.06	0.1322	0.0561	0.1322	0.0525	0.1322	0.0466	0.1322	0.0398
0.1385	0.0785	0.1385	0.0671	0.1385	0.0608	0.1385	0.0561	0.1385	0.0525	0.1385	0.0466	0.1385	0.0398
0.1451	0.0789	0.1451	0.0676	0.1451	0.0612	0.1451	0.0561	0.1451	0.0525	0.1451	0.0466	0.1451	0.0407
0.152	0.0789	0.152	0.0676	0.152	0.0612	0.152	0.0564	0.152	0.0534	0.152	0.0482	0.152	0.0426
0.1592	0.0789	0.1592	0.0676	0.1592	0.0612	0.1592	0.0564	0.1592	0.0534	0.1592	0.0482	0.1592	0.0435
0.1668	0.0789	0.1668	0.0676	0.1668	0.0612	0.1668	0.0564	0.1668	0.0534	0.1668	0.0482	0.1668	0.0435
0.1748	0.0789	0.1748	0.0676	0.1748	0.0612	0.1748	0.0564	0.1748	0.0534	0.1748	0.0482	0.1748	0.0435
0.1831	0.0789	0.1831	0.0676	0.1831	0.0612	0.1831	0.0564	0.1831	0.0534	0.1831	0.0482	0.1831	0.0435
0.1918	0.0789	0.1918	0.0676	0.1918	0.0612	0.1918	0.0562	0.1918	0.0532	0.1918	0.048	0.1918	0.0435
0.2009	0.0789	0.2009	0.0676	0.2009	0.0612	0.2009	0.0562	0.2009	0.0532	0.2009	0.0478	0.2009	0.0435
0.2105	0.0734	0.2105	0.0632	0.2105	0.0596	0.2105	0.0562	0.2105	0.0532	0.2105	0.049	0.2105	0.0468
0.2205	0.0683	0.2205	0.0622	0.2205	0.0587	0.2205	0.0559	0.2205	0.0547	0.2205	0.0527	0.2205	0.0501
0.231	0.0647	0.231	0.0623	0.231	0.0609	0.231	0.0595	0.231	0.0583	0.231	0.056	0.231	0.0532
0.242	0.0759	0.242	0.0684	0.242	0.0646	0.242	0.0627	0.242	0.0614	0.242	0.0589	0.242	0.0561
0.2535	0.1097	0.2535	0.0914	0.2535	0.0822	0.2535	0.0748	0.2535	0.069	0.2535	0.0615	0.2535	0.0585
0.2656	0.1215	0.2656	0.0949	0.2656	0.0825	0.2656	0.0748	0.2656	0.069	0.2656	0.0636	0.2656	0.0602
0.2783	0.1215	0.2783	0.0949	0.2783	0.0825	0.2783	0.0776	0.2783	0.0734	0.2783	0.0664	0.2783	0.0612
0.2915	0.1215	0.2915	0.1001	0.2915	0.0932	0.2915	0.0871	0.2915	0.0817	0.2915	0.0726	0.2915	0.0624
0.3054	0.1358	0.3054	0.1179	0.3054	0.1078	0.3054	0.099	0.3054	0.0914	0.3054	0.0795	0.3054	0.0671
0.3199	0.164	0.3199	0.1266	0.3199	0.1152	0.3199	0.1054	0.3199	0.097	0.3199	0.0837	0.3199	0.0716
0.3352	0.1864	0.3352	0.1319	0.3352	0.1152	0.3352	0.1054	0.3352	0.097	0.3352	0.0843	0.3352	0.0745
0.3511	0.2149	0.3511	0.1624	0.3511	0.1375	0.3511	0.1182	0.3511	0.1047	0.3511	0.0907	0.3511	0.0762
0.3678	0.2149	0.3678	0.1624	0.3678	0.1375	0.3678	0.1252	0.3678	0.1164	0.3678	0.104	0.3678	0.09

0.3853	0.2149	0.3853	0.1624	0.3853	0.1446	0.3853	0.1356	0.3853	0.1276	0.3853	0.1141	0.3853	0.0986
0.4037	0.2149	0.4037	0.1624	0.4037	0.1446	0.4037	0.1356	0.4037	0.1276	0.4037	0.1144	0.4037	0.1004
0.4229	0.2162	0.4229	0.1627	0.4229	0.1446	0.4229	0.1356	0.4229	0.1276	0.4229	0.1144	0.4229	0.1004
0.4431	0.3426	0.4431	0.2319	0.4431	0.1895	0.4431	0.1592	0.4431	0.1381	0.4431	0.1184	0.4431	0.1069
0.4642	0.3426	0.4642	0.2319	0.4642	0.1921	0.4642	0.1724	0.4642	0.1573	0.4642	0.1361	0.4642	0.116
0.4863	0.3426	0.4863	0.2319	0.4863	0.1921	0.4863	0.1742	0.4863	0.1618	0.4863	0.1445	0.4863	0.1231
0.5094	0.3426	0.5094	0.2319	0.5094	0.1986	0.5094	0.1844	0.5094	0.1729	0.5094	0.1523	0.5094	0.1276
0.5337	0.3621	0.5337	0.2644	0.5337	0.2284	0.5337	0.2033	0.5337	0.1829	0.5337	0.1523	0.5337	0.1276
0.5591	0.3621	0.5591	0.2742	0.5591	0.238	0.5591	0.2093	0.5591	0.1863	0.5591	0.1548	0.5591	0.1353
0.5857	0.3621	0.5857	0.2791	0.5857	0.2469	0.5857	0.2206	0.5857	0.1991	0.5857	0.1715	0.5857	0.1521
0.6136	0.3621	0.6136	0.2791	0.6136	0.2469	0.6136	0.2206	0.6136	0.1993	0.6136	0.1818	0.6136	0.1615
0.6428	0.3694	0.6428	0.2791	0.6428	0.2469	0.6428	0.2213	0.6428	0.2086	0.6428	0.1933	0.6428	0.1748
0.6734	0.3694	0.6734	0.2906	0.6734	0.2657	0.6734	0.2429	0.6734	0.2288	0.6734	0.2108	0.6734	0.1877
0.7055	0.4317	0.7055	0.3543	0.7055	0.3133	0.7055	0.279	0.7055	0.2569	0.7055	0.2257	0.7055	0.1944
0.7391	0.5134	0.7391	0.4029	0.7391	0.3524	0.7391	0.3115	0.7391	0.278	0.7391	0.2281	0.7391	0.1944
0.7743	0.5998	0.7743	0.4518	0.7743	0.3831	0.7743	0.331	0.7743	0.2909	0.7743	0.2351	0.7743	0.2186
0.8111	0.7728	0.8111	0.458	0.8111	0.3831	0.8111	0.331	0.8111	0.2909	0.8111	0.2586	0.8111	0.2434
0.8497	0.7728	0.8497	0.458	0.8497	0.3831	0.8497	0.3436	0.8497	0.3138	0.8497	0.2842	0.8497	0.2671
0.8902	0.7728	0.8902	0.458	0.8902	0.388	0.8902	0.3627	0.8902	0.3375	0.8902	0.3097	0.8902	0.2901
0.9326	0.9974	0.9326	0.5856	0.9326	0.4664	0.9326	0.3986	0.9326	0.3523	0.9326	0.3345	0.9326	0.3123
0.977	0.9974	0.977	0.5962	0.977	0.5269	0.977	0.4456	0.977	0.3864	0.977	0.3568	0.977	0.3322
1.0235	0.9974	1.0235	0.5962	1.0235	0.5269	1.0235	0.4456	1.0235	0.3963	1.0235	0.375	1.0235	0.3489
1.0723	0.9974	1.0723	0.5962	1.0723	0.5269	1.0723	0.4578	1.0723	0.4362	1.0723	0.3969	1.0723	0.362
1.1233	1.022	1.1233	0.6338	1.1233	0.5306	1.1233	0.5028	1.1233	0.4775	1.1233	0.432	1.1233	0.3768
1.1768	1.022	1.1768	0.6338	1.1768	0.6129	1.1768	0.5399	1.1768	0.5088	1.1768	0.4574	1.1768	0.3977
1.2328	1.022	1.2328	0.6338	1.2328	0.6129	1.2328	0.5399	1.2328	0.5088	1.2328	0.4606	1.2328	0.4062
1.2916	1.022	1.2916	0.8562	1.2916	0.7174	1.2916	0.624	1.2916	0.5564	1.2916	0.4677	1.2916	0.4071
1.353	1.022	1.353	0.9365	1.353	0.781	1.353	0.6757	1.353	0.6023	1.353	0.5084	1.353	0.4311
1.4175	1.0636	1.4175	0.9365	1.4175	0.8087	1.4175	0.6853	1.4175	0.6424	1.4175	0.5953	1.4175	0.4919
1.485	1.2052	1.485	0.988	1.485	0.8866	1.485	0.6853	1.485	0.6424	1.485	0.6264	1.485	0.511
1.5557	1.4673	1.5557	1.0882	1.5557	0.8988	1.5557	0.6853	1.5557	0.6427	1.5557	0.6264	1.5557	0.5133
1.6298	1.4673	1.6298	1.0882	1.6298	0.8988	1.6298	0.7781	1.6298	0.7205	1.6298	0.6315	1.6298	0.5443
1.7074	1.4673	1.7074	1.0882	1.7074	0.9509	1.7074	0.8465	1.7074	0.7818	1.7074	0.6721	1.7074	0.5582
1.7887	1.9337	1.7887	1.1866	1.7887	1.0454	1.7887	0.9314	1.7887	0.8343	1.7887	0.6827	1.7887	0.5914
1.8738	1.9337	1.8738	1.1866	1.8738	1.0454	1.8738	0.9314	1.8738	0.8343	1.8738	0.6909	1.8738	0.6195
1.963	1.9337	1.963	1.2264	1.963	1.0454	1.963	0.9314	1.963	0.8343	1.963	0.7213	1.963	0.6444
2.0565	1.9337	2.0565	1.2264	2.0565	1.0454	2.0565	0.9314	2.0565	0.8343	2.0565	0.7554	2.0565	0.6649
2.1544	1.9337	2.1544	1.2264	2.1544	1.0454	2.1544	0.9314	2.1544	0.8343	2.1544	0.7745	2.1544	0.6753
2.257	1.6526	2.257	1.2264	2.257	1.0189	2.257	0.9197	2.257	0.8328	2.257	0.7876	2.257	0.6753

2.3645	1.6526	2.3645	1.2264	2.3645	0.9027	2.3645	0.8216	2.3645	0.8042	2.3645	0.7876	2.3645	0.6753
2.4771	1.4968	2.4771	1.1813	2.4771	0.9027	2.4771	0.8216	2.4771	0.8042	2.4771	0.7876	2.4771	0.6753
2.595	1.4968	2.595	1.1813	2.595	0.9027	2.595	0.8216	2.595	0.8042	2.595	0.7876	2.595	0.6753
2.7186	1.5785	2.7186	1.1813	2.7186	0.9027	2.7186	0.8216	2.7186	0.8042	2.7186	0.7876	2.7186	0.6751
2.848	1.5785	2.848	1.1813	2.848	0.9027	2.848	0.8216	2.848	0.8042	2.848	0.771	2.848	0.6514
2.9836	1.5785	2.9836	1.0072	2.9836	0.9027	2.9836	0.8216	2.9836	0.7681	2.9836	0.6806	2.9836	0.5889
3.1257	1.5785	3.1257	0.9135	3.1257	0.7834	3.1257	0.7396	3.1257	0.7002	3.1257	0.6334	3.1257	0.5581
3.2745	1.5785	3.2745	0.8453	3.2745	0.7676	3.2745	0.706	3.2745	0.6569	3.2745	0.5846	3.2745	0.5121
3.4305	1.0503	3.4305	0.7273	3.4305	0.6584	3.4305	0.6105	3.4305	0.5739	3.4305	0.5184	3.4305	0.4584
3.5938	1.0648	3.5938	0.7273	3.5938	0.6584	3.5938	0.6105	3.5938	0.5739	3.5938	0.5184	3.5938	0.4584
3.7649	1.0648	3.7649	0.7273	3.7649	0.6584	3.7649	0.6105	3.7649	0.5739	3.7649	0.5184	3.7649	0.4584
3.9442	1.0648	3.9442	0.7273	3.9442	0.6584	3.9442	0.6105	3.9442	0.5739	3.9442	0.5184	3.9442	0.4584
4.132	1.0648	4.132	0.7273	4.132	0.6584	4.132	0.6105	4.132	0.5739	4.132	0.5204	4.132	0.4587
4.3288	1.0648	4.3288	0.7521	4.3288	0.6945	4.3288	0.6539	4.3288	0.6178	4.3288	0.5556	4.3288	0.4808
4.5349	1.0648	4.5349	0.7892	4.5349	0.6979	4.5349	0.6817	4.5349	0.6537	4.5349	0.5747	4.5349	0.4858
4.7508	1.3052	4.7508	0.7892	4.7508	0.6979	4.7508	0.6817	4.7508	0.6702	4.7508	0.5747	4.7508	0.4858
4.977	1.3052	4.977	0.7892	4.977	0.6979	4.977	0.6817	4.977	0.6702	4.977	0.5747	4.977	0.4858
5.214	1.3052	5.214	0.7892	5.214	0.6979	5.214	0.6817	5.214	0.6702	5.214	0.5747	5.214	0.4858
5.4623	1.3052	5.4623	0.7892	5.4623	0.6979	5.4623	0.6817	5.4623	0.6702	5.4623	0.5747	5.4623	0.4858
5.7224	1.5193	5.7224	0.7892	5.7224	0.6979	5.7224	0.6817	5.7224	0.6702	5.7224	0.568	5.7224	0.4651
5.9948	1.5193	5.9948	0.7892	5.9948	0.6979	5.9948	0.6817	5.9948	0.6343	5.9948	0.5423	5.9948	0.4627
6.2803	1.5193	6.2803	0.7477	6.2803	0.6873	6.2803	0.6133	6.2803	0.5671	6.2803	0.5154	6.2803	0.4687
6.5793	1.5193	6.5793	0.7477	6.5793	0.6873	6.5793	0.6133	6.5793	0.5619	6.5793	0.5154	6.5793	0.4777
6.8926	1.5193	6.8926	0.7477	6.8926	0.6832	6.8926	0.6059	6.8926	0.5619	6.8926	0.5081	6.8926	0.4777
7.2208	1.5193	7.2208	0.7477	7.2208	0.6832	7.2208	0.6059	7.2208	0.5619	7.2208	0.5081	7.2208	0.4777
7.5646	1.5193	7.5646	0.7477	7.5646	0.6832	7.5646	0.5969	7.5646	0.5534	7.5646	0.5081	7.5646	0.4777
7.9248	1.5193	7.9248	0.7477	7.9248	0.6832	7.9248	0.5857	7.9248	0.5403	7.9248	0.5081	7.9248	0.4777
8.3022	1.2327	8.3022	0.6751	8.3022	0.5995	8.3022	0.5656	8.3022	0.5394	8.3022	0.508	8.3022	0.4774
8.6975	0.9775	8.6975	0.6751	8.6975	0.5995	8.6975	0.5656	8.6975	0.5394	8.6975	0.5041	8.6975	0.4735
9.1116	0.9295	9.1116	0.5846	9.1116	0.5348	9.1116	0.5193	9.1116	0.5065	9.1116	0.4867	9.1116	0.4695
9.5455	0.823	9.5455	0.5551	9.5455	0.5348	9.5455	0.5193	9.5455	0.5065	9.5455	0.4859	9.5455	0.4651
10	0.742	10	0.5551	10	0.5348	10	0.5193	10	0.5065	10	0.4859	10	0.4651
10.4762	0.742	10.4762	0.5551	10.4762	0.5348	10.4762	0.5193	10.4762	0.5065	10.4762	0.4855	10.4762	0.4609
10.975	0.742	10.975	0.5121	10.975	0.5044	10.975	0.4954	10.975	0.4859	10.975	0.4687	10.975	0.4468
11.4976	0.7067	11.4976	0.5121	11.4976	0.4824	11.4976	0.4755	11.4976	0.4693	11.4976	0.4577	11.4976	0.4423
12.045	0.7067	12.045	0.5026	12.045	0.4753	12.045	0.4651	12.045	0.4586	12.045	0.4489	12.045	0.436
12.6186	0.7067	12.6186	0.4664	12.6186	0.4572	12.6186	0.4527	12.6186	0.4481	12.6186	0.4393	12.6186	0.4274
13.2194	0.7067	13.2194	0.4531	13.2194	0.4433	13.2194	0.4378	13.2194	0.4336	13.2194	0.4263	13.2194	0.4166
13.8489	0.4879	13.8489	0.4205	13.8489	0.4173	13.8489	0.4169	13.8489	0.4158	13.8489	0.412	13.8489	0.4049

14.5083	0.4879	14.5083	0.4205	14.5083	0.4147	14.5083	0.4103	14.5083	0.4068	14.5083	0.4011	14.5083	0.394
15.1991	0.4879	15.1991	0.4145	15.1991	0.4024	15.1991	0.3966	15.1991	0.393	15.1991	0.3882	15.1991	0.3825
15.9228	0.464	15.9228	0.3946	15.9228	0.3783	15.9228	0.3773	15.9228	0.3774	15.9228	0.3753	15.9228	0.3712
16.681	0.464	16.681	0.3946	16.681	0.3783	16.681	0.3694	16.681	0.366	16.681	0.3635	16.681	0.3605
17.4753	0.497	17.4753	0.3813	17.4753	0.3644	17.4753	0.3552	17.4753	0.3513	17.4753	0.352	17.4753	0.3511
18.3074	0.497	18.3074	0.3813	18.3074	0.3644	18.3074	0.3552	18.3074	0.35	18.3074	0.3471	18.3074	0.3445
19.1791	0.497	19.1791	0.3813	19.1791	0.3644	19.1791	0.3552	19.1791	0.35	19.1791	0.3449	19.1791	0.3419
20.0923	0.497	20.0923	0.3574	20.0923	0.3499	20.0923	0.347	20.0923	0.3445	20.0923	0.3407	20.0923	0.3381
21.049	0.497	21.049	0.3574	21.049	0.3499	21.049	0.347	21.049	0.3445	21.049	0.3407	21.049	0.3371
22.0513	0.497	22.0513	0.3574	22.0513	0.3499	22.0513	0.347	22.0513	0.3445	22.0513	0.3407	22.0513	0.3371
23.1013	0.497	23.1013	0.3574	23.1013	0.3521	23.1013	0.3479	23.1013	0.3445	23.1013	0.3407	23.1013	0.3371
24.2013	0.497	24.2013	0.3574	24.2013	0.3521	24.2013	0.3479	24.2013	0.3445	24.2013	0.3407	24.2013	0.3371
25.3536	0.3847	25.3536	0.3574	25.3536	0.3521	25.3536	0.3479	25.3536	0.3445	25.3536	0.3396	25.3536	0.3356
26.5609	0.3847	26.5609	0.3574	26.5609	0.3521	26.5609	0.3479	26.5609	0.3445	26.5609	0.3396	26.5609	0.3356
27.8256	0.3766	27.8256	0.3574	27.8256	0.3521	27.8256	0.3479	27.8256	0.3445	27.8256	0.3393	27.8256	0.334
29.1505	0.3766	29.1505	0.3422	29.1505	0.3374	29.1505	0.335	29.1505	0.3348	29.1505	0.3331	29.1505	0.3297
30.5386	0.3766	30.5386	0.3422	30.5386	0.3374	30.5386	0.3349	30.5386	0.3325	30.5386	0.3287	30.5386	0.3247
31.9927	0.3766	31.9927	0.3422	31.9927	0.3313	31.9927	0.326	31.9927	0.323	31.9927	0.3199	31.9927	0.3178
33.516	0.3014	33.516	0.3015	33.516	0.3016	33.516	0.3036	33.516	0.306	33.516	0.3088	33.516	0.3105
35.1119	0.3014	35.1119	0.3015	35.1119	0.3016	35.1119	0.3019	35.1119	0.3025	35.1119	0.3043	35.1119	0.3061
36.7838	0.3014	36.7838	0.3015	36.7838	0.3016	36.7838	0.3019	36.7838	0.3022	36.7838	0.3029	36.7838	0.3039
38.5353	0.3014	38.5353	0.3015	38.5353	0.3016	38.5353	0.3017	38.5353	0.3018	38.5353	0.3021	38.5353	0.3027
40.3702	0.301	40.3702	0.301	40.3702	0.3011	40.3702	0.3011	40.3702	0.3012	40.3702	0.3014	40.3702	0.3016
42.2924	0.3004	42.2924	0.3004	42.2924	0.3004	42.2924	0.3004	42.2924	0.3005	42.2924	0.3006	42.2924	0.3007
44.3062	0.2996	44.3062	0.2997	44.3062	0.2997	44.3062	0.2997	44.3062	0.2997	44.3062	0.2998	44.3062	0.2999
46.4159	0.2989	46.4159	0.2989	46.4159	0.2989	46.4159	0.2989	46.4159	0.2989	46.4159	0.299	46.4159	0.2991
48.626	0.2982	48.626	0.2982	48.626	0.2982	48.626	0.2982	48.626	0.2982	48.626	0.2982	48.626	0.2983
50.9414	0.2975	50.9414	0.2975	50.9414	0.2975	50.9414	0.2975	50.9414	0.2975	50.9414	0.2975	50.9414	0.2975

RPP-WTP Pretreatment Facility ISRS
Calc No.: 24590-PTF-S0C-S15T-00005, Rev. 0B

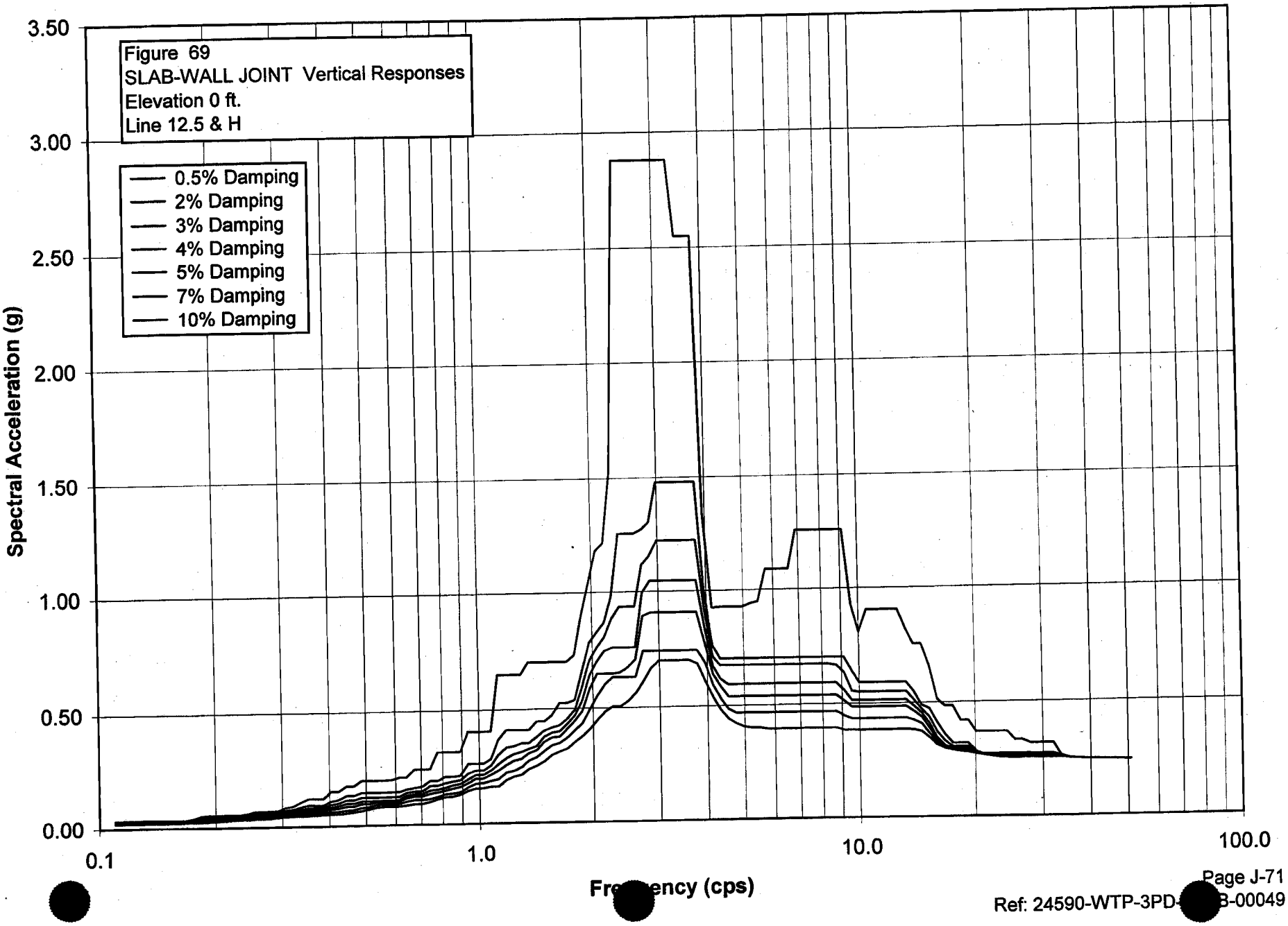

S_PTWW069.grf
RPP-WTP Pretreatment Facility ISRS
Calc No.: 24590-PTF-S0C-S15T-00005, Rev. 0B
Frequency (cps)
Spectral Acceleration (g)
Figure 69
SLAB-WALL JOINT Vertical Responses
Elevation 0 ft.
Line 12.5 & H

Damping	0.50%	Damping	2%	Damping	3%	Damping	4%	Damping	5%	Damping	7%	Damping	10%
Freq.	Accel.	Freq.	Accel.	Freq.	Accel.	Freq.	Accel.	Freq.	Accel.	Freq.	Accel.	Freq.	Accel.
0.1098	0.0329	0.1098	0.0294	0.1098	0.0275	0.1098	0.0263	0.1098	0.0253	0.1098	0.0236	0.1098	0.0217
0.115	0.0346	0.115	0.031	0.115	0.029	0.115	0.0271	0.115	0.0257	0.115	0.024	0.115	0.022
0.1204	0.0347	0.1204	0.0312	0.1204	0.0291	0.1204	0.0272	0.1204	0.0257	0.1204	0.024	0.1204	0.022
0.1262	0.0349	0.1262	0.0312	0.1262	0.0291	0.1262	0.0272	0.1262	0.0257	0.1262	0.024	0.1262	0.022
0.1322	0.0349	0.1322	0.0312	0.1322	0.0291	0.1322	0.0272	0.1322	0.0257	0.1322	0.024	0.1322	0.022
0.1385	0.0349	0.1385	0.0312	0.1385	0.0291	0.1385	0.0272	0.1385	0.0259	0.1385	0.0242	0.1385	0.0222
0.1451	0.0349	0.1451	0.0312	0.1451	0.0291	0.1451	0.0272	0.1451	0.0259	0.1451	0.0242	0.1451	0.0222
0.152	0.035	0.152	0.0312	0.152	0.0291	0.152	0.0272	0.152	0.0262	0.152	0.0249	0.152	0.0235
0.1592	0.035	0.1592	0.0312	0.1592	0.0291	0.1592	0.0282	0.1592	0.0275	0.1592	0.0262	0.1592	0.0246
0.1668	0.035	0.1668	0.0312	0.1668	0.0297	0.1668	0.0289	0.1668	0.0282	0.1668	0.0269	0.1668	0.0252
0.1748	0.0422	0.1748	0.0358	0.1748	0.0323	0.1748	0.0296	0.1748	0.0282	0.1748	0.0269	0.1748	0.0257
0.1831	0.0535	0.1831	0.0445	0.1831	0.0398	0.1831	0.0358	0.1831	0.0324	0.1831	0.0272	0.1831	0.026
0.1918	0.0577	0.1918	0.0477	0.1918	0.0424	0.1918	0.038	0.1918	0.0347	0.1918	0.0318	0.1918	0.0286
0.2009	0.0577	0.2009	0.0477	0.2009	0.0424	0.2009	0.0391	0.2009	0.0373	0.2009	0.034	0.2009	0.0301
0.2105	0.0577	0.2105	0.0477	0.2105	0.0424	0.2105	0.0391	0.2105	0.0373	0.2105	0.0347	0.2105	0.032
0.2205	0.0577	0.2205	0.0477	0.2205	0.0432	0.2205	0.0416	0.2205	0.0402	0.2205	0.0376	0.2205	0.0345
0.231	0.0579	0.231	0.0493	0.231	0.0463	0.231	0.0438	0.231	0.0421	0.231	0.0391	0.231	0.0354
0.242	0.0624	0.242	0.0554	0.242	0.0513	0.242	0.0476	0.242	0.0442	0.242	0.0391	0.242	0.0354
0.2535	0.0713	0.2535	0.0623	0.2535	0.0574	0.2535	0.0532	0.2535	0.0496	0.2535	0.0439	0.2535	0.038
0.2656	0.0713	0.2656	0.0623	0.2656	0.0574	0.2656	0.0532	0.2656	0.0496	0.2656	0.0439	0.2656	0.038
0.2783	0.0713	0.2783	0.0623	0.2783	0.0574	0.2783	0.0532	0.2783	0.0496	0.2783	0.0439	0.2783	0.0395
0.2915	0.0742	0.2915	0.0666	0.2915	0.0624	0.2915	0.0587	0.2915	0.0554	0.2915	0.0501	0.2915	0.0441
0.3054	0.0875	0.3054	0.0758	0.3054	0.0693	0.3054	0.0641	0.3054	0.0603	0.3054	0.0539	0.3054	0.0468
0.3199	0.0921	0.3199	0.0797	0.3199	0.0728	0.3199	0.067	0.3199	0.0619	0.3199	0.0539	0.3199	0.0468
0.3352	0.1105	0.3352	0.0889	0.3352	0.0786	0.3352	0.0705	0.3352	0.0641	0.3352	0.0551	0.3352	0.0471
0.3511	0.1251	0.3511	0.0953	0.3511	0.0825	0.3511	0.0725	0.3511	0.0662	0.3511	0.0575	0.3511	0.0488
0.3678	0.1251	0.3678	0.0953	0.3678	0.0848	0.3678	0.0775	0.3678	0.0712	0.3678	0.0613	0.3678	0.0508

0.3853	0.1251	0.3853	0.0956	0.3853	0.0879	0.3853	0.0806	0.3853	0.0751	0.3853	0.0653	0.3853	0.0543
0.4037	0.1549	0.4037	0.1124	0.4037	0.0974	0.4037	0.0858	0.4037	0.0767	0.4037	0.0653	0.4037	0.0543
0.4229	0.1549	0.4229	0.1189	0.4229	0.1035	0.4229	0.0912	0.4229	0.0812	0.4229	0.0667	0.4229	0.0543
0.4431	0.1769	0.4431	0.1354	0.4431	0.1155	0.4431	0.0999	0.4431	0.0876	0.4431	0.0699	0.4431	0.0582
0.4642	0.1769	0.4642	0.1354	0.4642	0.1155	0.4642	0.0999	0.4642	0.0876	0.4642	0.0733	0.4642	0.0627
0.4863	0.1981	0.4863	0.1469	0.4863	0.1252	0.4863	0.1094	0.4863	0.0976	0.4863	0.0813	0.4863	0.0673
0.5094	0.1981	0.5094	0.1469	0.5094	0.1252	0.5094	0.1094	0.5094	0.0976	0.5094	0.0852	0.5094	0.0741
0.5337	0.1981	0.5337	0.1469	0.5337	0.1252	0.5337	0.111	0.5337	0.1042	0.5337	0.0936	0.5337	0.0818
0.5591	0.1981	0.5591	0.1469	0.5591	0.1252	0.5591	0.111	0.5591	0.1042	0.5591	0.0955	0.5591	0.0843
0.5857	0.1998	0.5857	0.1484	0.5857	0.1265	0.5857	0.111	0.5857	0.1044	0.5857	0.0955	0.5857	0.0843
0.6136	0.2095	0.6136	0.1484	0.6136	0.1265	0.6136	0.1134	0.6136	0.105	0.6136	0.0955	0.6136	0.0843
0.6428	0.2095	0.6428	0.1592	0.6428	0.1438	0.6428	0.1313	0.6428	0.1209	0.6428	0.105	0.6428	0.0888
0.6734	0.2431	0.6734	0.1645	0.6734	0.1488	0.6734	0.1376	0.6734	0.1279	0.6734	0.1116	0.6734	0.0934
0.7055	0.2431	0.7055	0.1697	0.7055	0.1488	0.7055	0.1376	0.7055	0.1279	0.7055	0.1119	0.7055	0.0943
0.7391	0.2431	0.7391	0.1929	0.7391	0.1714	0.7391	0.1533	0.7391	0.1383	0.7391	0.1155	0.7391	0.102
0.7743	0.3175	0.7743	0.1929	0.7743	0.1719	0.7743	0.1571	0.7743	0.1443	0.7743	0.1242	0.7743	0.1138
0.8111	0.3175	0.8111	0.209	0.8111	0.1824	0.8111	0.1628	0.8111	0.1507	0.8111	0.1354	0.8111	0.1227
0.8497	0.3175	0.8497	0.209	0.8497	0.1891	0.8497	0.1726	0.8497	0.1587	0.8497	0.1381	0.8497	0.1251
0.8902	0.3175	0.8902	0.2137	0.8902	0.1942	0.8902	0.1779	0.8902	0.1643	0.8902	0.143	0.8902	0.1324
0.9326	0.4048	0.9326	0.2629	0.9326	0.221	0.9326	0.1969	0.9326	0.1816	0.9326	0.1631	0.9326	0.1478
0.977	0.4048	0.977	0.2629	0.977	0.2331	0.977	0.2144	0.977	0.1991	0.977	0.1772	0.977	0.1571
1.0235	0.4048	1.0235	0.2629	1.0235	0.2331	1.0235	0.2144	1.0235	0.1995	1.0235	0.1799	1.0235	0.1575
1.0723	0.4048	1.0723	0.2835	1.0723	0.2555	1.0723	0.2329	1.0723	0.2147	1.0723	0.1885	1.0723	0.1632
1.1233	0.6478	1.1233	0.3684	1.1233	0.3014	1.1233	0.2603	1.1233	0.2316	1.1233	0.1946	1.1233	0.1635
1.1768	0.6478	1.1768	0.4092	1.1768	0.3316	1.1768	0.2847	1.1768	0.2551	1.1768	0.2216	1.1768	0.1911
1.2328	0.6478	1.2328	0.4092	1.2328	0.338	1.2328	0.3029	1.2328	0.2737	1.2328	0.2287	1.2328	0.2043
1.2916	0.6478	1.2916	0.4092	1.2916	0.3509	1.2916	0.3127	1.2916	0.2812	1.2916	0.2453	1.2916	0.2123
1.353	0.7014	1.353	0.4092	1.353	0.3509	1.353	0.3253	1.353	0.3066	1.353	0.2739	1.353	0.2367
1.4175	0.7014	1.4175	0.4461	1.4175	0.3788	1.4175	0.3371	1.4175	0.3191	1.4175	0.2878	1.4175	0.2509
1.485	0.7014	1.485	0.4461	1.485	0.4051	1.485	0.3792	1.485	0.3557	1.485	0.3154	1.485	0.27
1.5557	0.7014	1.5557	0.4721	1.5557	0.4179	1.5557	0.3954	1.5557	0.3754	1.5557	0.3399	1.5557	0.2966
1.6298	0.7014	1.6298	0.5225	1.6298	0.4273	1.6298	0.4017	1.6298	0.3782	1.6298	0.3494	1.6298	0.3129
1.7074	0.7014	1.7074	0.5225	1.7074	0.4561	1.7074	0.4333	1.7074	0.4115	1.7074	0.373	1.7074	0.3246
1.7887	0.729	1.7887	0.5356	1.7887	0.4929	1.7887	0.4698	1.7887	0.4473	1.7887	0.405	1.7887	0.3536
1.8738	0.8996	1.8738	0.6537	1.8738	0.5881	1.8738	0.5321	1.8738	0.4865	1.8738	0.4344	1.8738	0.3787
1.963	1.0379	1.963	0.7829	1.963	0.7049	1.963	0.6387	1.963	0.5812	1.963	0.4957	1.963	0.4097
2.0565	1.1799	2.0565	0.8292	2.0565	0.7618	2.0565	0.7008	2.0565	0.6444	2.0565	0.5516	2.0565	0.4489
2.1544	1.2145	2.1544	0.8698	2.1544	0.8071	2.1544	0.7471	2.1544	0.6444	2.1544	0.5977	2.1544	0.4842
2.257	1.5239	2.257	0.9814	2.257	0.887	2.257	0.7601	2.257	0.6444	2.257	0.6292	2.257	0.5055

S_PTWW069.grf
2459[redacted]4B-F00019 Rev 4 (1/17/2006)

2.3645	2.8799	2.3645	1.2551	2.3645	0.9373	2.3645	0.7601	2.3645	0.6498	2.3645	0.6292	2.3645	0.5055
2.4771	2.8799	2.4771	1.2551	2.4771	0.9373	2.4771	0.7601	2.4771	0.6732	2.4771	0.6292	2.4771	0.5278
2.595	2.8799	2.595	1.2551	2.595	0.9373	2.595	0.7601	2.595	0.706	2.595	0.6292	2.595	0.5594
2.7186	2.8799	2.7186	1.2732	2.7186	1.1168	2.7186	0.9952	2.7186	0.8955	2.7186	0.7427	2.7186	0.6096
2.848	2.8799	2.848	1.3029	2.848	1.1559	2.848	1.0459	2.848	0.9094	2.848	0.7428	2.848	0.6654
2.9836	2.8799	2.9836	1.4788	2.9836	1.2234	2.9836	1.0459	2.9836	0.9094	2.9836	0.7428	2.9836	0.6994
3.1257	2.8799	3.1257	1.4788	3.1257	1.2234	3.1257	1.0459	3.1257	0.9094	3.1257	0.7428	3.1257	0.6994
3.2745	2.8799	3.2745	1.4788	3.2745	1.2234	3.2745	1.0459	3.2745	0.9094	3.2745	0.7428	3.2745	0.6994
3.4305	2.549	3.4305	1.4788	3.4305	1.2234	3.4305	1.0459	3.4305	0.9094	3.4305	0.7428	3.4305	0.6994
3.5938	2.549	3.5938	1.4788	3.5938	1.2234	3.5938	1.0459	3.5938	0.9094	3.5938	0.7428	3.5938	0.6994
3.7649	2.549	3.7649	1.4788	3.7649	1.2234	3.7649	1.0459	3.7649	0.9094	3.7649	0.7428	3.7649	0.6835
3.9442	1.336	3.9442	1.0077	3.9442	0.9273	3.9442	0.8498	3.9442	0.779	3.9442	0.6898	3.9442	0.6087
4.132	0.9261	4.132	0.7625	4.132	0.7136	4.132	0.6724	4.132	0.6358	4.132	0.5904	4.132	0.5372
4.3288	0.9277	4.3288	0.7029	4.3288	0.6731	4.3288	0.6136	4.3288	0.5832	4.3288	0.5315	4.3288	0.4822
4.5349	0.9277	4.5349	0.7029	4.5349	0.6731	4.5349	0.5902	4.5349	0.5371	4.5349	0.4844	4.5349	0.4432
4.7508	0.9277	4.7508	0.7029	4.7508	0.6731	4.7508	0.5902	4.7508	0.5371	4.7508	0.4673	4.7508	0.4215
4.977	0.9277	4.977	0.7029	4.977	0.6731	4.977	0.5902	4.977	0.5371	4.977	0.4673	4.977	0.4074
5.214	0.9431	5.214	0.7029	5.214	0.6731	5.214	0.5902	5.214	0.5371	5.214	0.4673	5.214	0.4019
5.4623	0.9511	5.4623	0.7029	5.4623	0.6731	5.4623	0.5902	5.4623	0.5371	5.4623	0.4673	5.4623	0.4019
5.7224	1.089	5.7224	0.7029	5.7224	0.6731	5.7224	0.5902	5.7224	0.5371	5.7224	0.4673	5.7224	0.3968
5.9948	1.089	5.9948	0.7029	5.9948	0.6731	5.9948	0.5902	5.9948	0.5371	5.9948	0.4673	5.9948	0.3958
6.2803	1.089	6.2803	0.7029	6.2803	0.6731	6.2803	0.5902	6.2803	0.5371	6.2803	0.4673	6.2803	0.3958
6.5793	1.089	6.5793	0.7029	6.5793	0.6731	6.5793	0.5902	6.5793	0.5371	6.5793	0.4673	6.5793	0.3958
6.8926	1.2586	6.8926	0.7029	6.8926	0.6731	6.8926	0.5902	6.8926	0.5371	6.8926	0.4673	6.8926	0.3958
7.2208	1.2586	7.2208	0.7029	7.2208	0.6731	7.2208	0.5902	7.2208	0.5371	7.2208	0.4673	7.2208	0.3958
7.5646	1.2586	7.5646	0.7029	7.5646	0.6731	7.5646	0.5902	7.5646	0.5371	7.5646	0.4673	7.5646	0.3958
7.9248	1.2586	7.9248	0.7029	7.9248	0.6731	7.9248	0.5902	7.9248	0.5371	7.9248	0.4673	7.9248	0.3958
8.3022	1.2586	8.3022	0.7029	8.3022	0.6731	8.3022	0.5902	8.3022	0.5371	8.3022	0.4673	8.3022	0.3958
8.6975	1.2586	8.6975	0.7029	8.6975	0.6666	8.6975	0.5902	8.6975	0.5371	8.6975	0.4673	8.6975	0.3958
9.1116	1.2586	9.1116	0.7029	9.1116	0.6351	9.1116	0.5581	9.1116	0.5128	9.1116	0.4488	9.1116	0.3861
9.5455	0.9314	9.5455	0.6406	9.5455	0.5535	9.5455	0.5142	9.5455	0.4846	9.5455	0.4367	9.5455	0.3855
10	0.813	10	0.589	10	0.5484	10	0.5142	10	0.4846	10	0.4367	10	0.3855
10.4762	0.9068	10.4762	0.589	10.4762	0.5484	10.4762	0.5142	10.4762	0.4846	10.4762	0.4367	10.4762	0.3855
10.975	0.9068	10.975	0.589	10.975	0.5484	10.975	0.5142	10.975	0.4846	10.975	0.4367	10.975	0.3855
11.4976	0.9068	11.4976	0.589	11.4976	0.5484	11.4976	0.5142	11.4976	0.4846	11.4976	0.4367	11.4976	0.3855
12.045	0.9068	12.045	0.589	12.045	0.5484	12.045	0.5142	12.045	0.4846	12.045	0.4367	12.045	0.3855
12.6186	0.9068	12.6186	0.589	12.6186	0.5484	12.6186	0.5142	12.6186	0.4846	12.6186	0.4367	12.6186	0.3855
13.2194	0.8261	13.2194	0.589	13.2194	0.5484	13.2194	0.5142	13.2194	0.4846	13.2194	0.4367	13.2194	0.3855
13.8489	0.7566	13.8489	0.5475	13.8489	0.5135	13.8489	0.4864	13.8489	0.4635	13.8489	0.4259	13.8489	0.384

S_PTWW069.grf
24590-G04B-F00019 Rev 4 (1/17/2006)

14.5083	0.7566	14.5083	0.4885	14.5083	0.4717	14.5083	0.4548	14.5083	0.4385	14.5083	0.4093	14.5083	0.3747
15.1991	0.6596	15.1991	0.4732	15.1991	0.4364	15.1991	0.4094	15.1991	0.3887	15.1991	0.3655	15.1991	0.3466
15.9228	0.513	15.9228	0.4119	15.9228	0.3714	15.9228	0.3441	15.9228	0.3341	15.9228	0.3257	15.9228	0.3144
16.681	0.4842	16.681	0.3603	16.681	0.331	16.681	0.3117	16.681	0.3017	16.681	0.3008	16.681	0.2976
17.4753	0.4842	17.4753	0.3202	17.4753	0.3054	17.4753	0.2977	17.4753	0.2955	17.4753	0.2928	17.4753	0.2898
18.3074	0.4207	18.3074	0.3202	18.3074	0.3054	18.3074	0.2977	18.3074	0.2924	18.3074	0.2879	18.3074	0.2848
19.1791	0.4207	19.1791	0.3202	19.1791	0.3054	19.1791	0.2977	19.1791	0.2924	19.1791	0.286	19.1791	0.2804
20.0923	0.3705	20.0923	0.2829	20.0923	0.2805	20.0923	0.2802	20.0923	0.2794	20.0923	0.2772	20.0923	0.274
21.049	0.3705	21.049	0.2706	21.049	0.2695	21.049	0.2693	21.049	0.269	21.049	0.2686	21.049	0.2674
22.0513	0.3705	22.0513	0.2705	22.0513	0.2681	22.0513	0.2665	22.0513	0.2652	22.0513	0.2634	22.0513	0.2619
23.1013	0.3705	23.1013	0.2713	23.1013	0.264	23.1013	0.2589	23.1013	0.2573	23.1013	0.2578	23.1013	0.2579
24.2013	0.3705	24.2013	0.2713	24.2013	0.264	24.2013	0.2589	24.2013	0.2571	24.2013	0.2555	24.2013	0.2548
25.3536	0.3322	25.3536	0.2713	25.3536	0.264	25.3536	0.2588	25.3536	0.2565	25.3536	0.2552	25.3536	0.2539
26.5609	0.3322	26.5609	0.2713	26.5609	0.264	26.5609	0.2614	26.5609	0.2597	26.5609	0.257	26.5609	0.2544
27.8256	0.3173	27.8256	0.2713	27.8256	0.264	27.8256	0.2614	27.8256	0.2597	27.8256	0.257	27.8256	0.2544
29.1505	0.3173	29.1505	0.2708	29.1505	0.263	29.1505	0.2614	29.1505	0.2597	29.1505	0.257	29.1505	0.2544
30.5386	0.3173	30.5386	0.2708	30.5386	0.263	30.5386	0.2614	30.5386	0.2597	30.5386	0.257	30.5386	0.2544
31.9927	0.3173	31.9927	0.2708	31.9927	0.263	31.9927	0.2614	31.9927	0.2597	31.9927	0.257	31.9927	0.2544
33.516	0.2599	33.516	0.2631	33.516	0.2624	33.516	0.2607	33.516	0.2589	33.516	0.256	33.516	0.2535
35.1119	0.2503	35.1119	0.2513	35.1119	0.2518	35.1119	0.2521	35.1119	0.2521	35.1119	0.2519	35.1119	0.2511
36.7838	0.2484	36.7838	0.2486	36.7838	0.2488	36.7838	0.2489	36.7838	0.249	36.7838	0.249	36.7838	0.2488
38.5353	0.2468	38.5353	0.2469	38.5353	0.247	38.5353	0.247	38.5353	0.2471	38.5353	0.2471	38.5353	0.247
40.3702	0.2455	40.3702	0.2455	40.3702	0.2456	40.3702	0.2456	40.3702	0.2456	40.3702	0.2456	40.3702	0.2456
42.2924	0.2443	42.2924	0.2444	42.2924	0.2444	42.2924	0.2444	42.2924	0.2444	42.2924	0.2444	42.2924	0.2444
44.3062	0.2433	44.3062	0.2434	44.3062	0.2434	44.3062	0.2434	44.3062	0.2434	44.3062	0.2434	44.3062	0.2434
46.4159	0.2424	46.4159	0.2424	46.4159	0.2425	46.4159	0.2425	46.4159	0.2425	46.4159	0.2425	46.4159	0.2425
48.626	0.2416	48.626	0.2416	48.626	0.2416	48.626	0.2416	48.626	0.2417	48.626	0.2417	48.626	0.2417
50.9414	0.2409	50.9414	0.2409	50.9414	0.2409	50.9414	0.2409	50.9414	0.2409	50.9414	0.2409	50.9414	0.2409

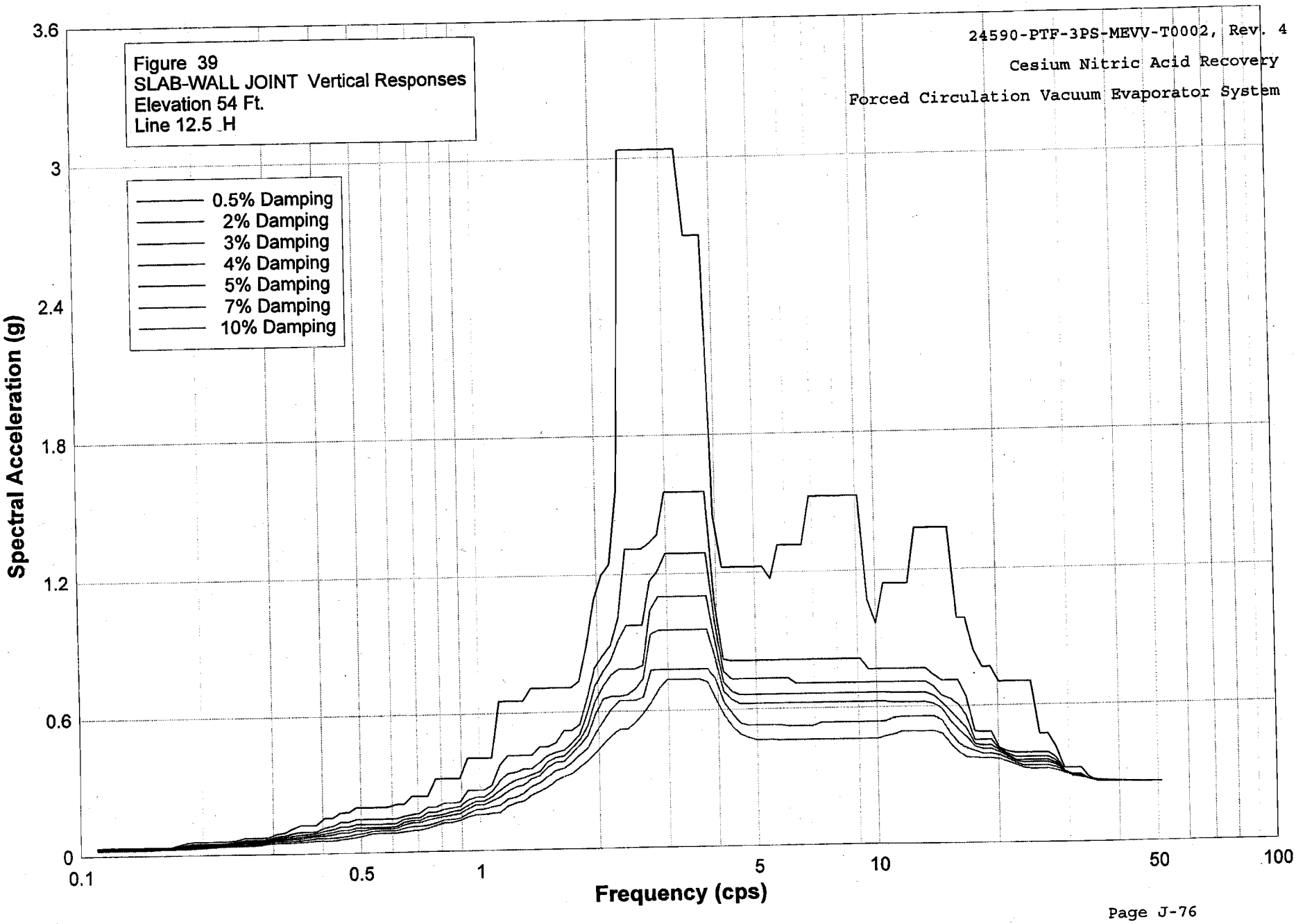
Figure 39
SLAB-WALL JOINT Vertical Responses
Elevation 54 Ft.
Line 12.5 H
24590-PTF-3PS-MEVV-T0002, Rev. 4
Cesium Nitric Acid Recovery
Forced Circulation Vacuum Evaporator System
0.5% Damping
2% Damping
3% Damping
4% Damping
5% Damping
7% Damping
10% Damping
Spectral Acceleration (g)
3.6
3
2.4
1.8
1.2
0.6
0
0.1
0.5
1
5
10
50
100
Frequency (cps)

S_PTWW039.grf
RPP-WTP Pretreatment Facility ISRS
Calc No.: 24590-PTF-S0C-S15T-00005, Rev. 0B
Frequency (cps)
Spectral Acceleration (g)
Figure 39
SLAB-WALL JOINT Vertical Responses
Elevation 54 Ft.
Line 12.5 & H

Damping	0.50%	Damping	2%	Damping	3%	Damping	4%	Damping	5%	Damping	7%	Damping	10%
Freq.	Accel.	Freq.	Accel.	Freq.	Accel.	Freq.	Accel.	Freq.	Accel.	Freq.	Accel.	Freq.	Accel.
0.1098	0.0329	0.1098	0.0295	0.1098	0.0275	0.1098	0.0264	0.1098	0.0254	0.1098	0.0236	0.1098	0.0217
0.115	0.0347	0.115	0.0311	0.115	0.029	0.115	0.0271	0.115	0.0257	0.115	0.024	0.115	0.022
0.1204	0.0348	0.1204	0.0312	0.1204	0.0291	0.1204	0.0272	0.1204	0.0257	0.1204	0.024	0.1204	0.022
0.1262	0.0349	0.1262	0.0312	0.1262	0.0291	0.1262	0.0272	0.1262	0.0257	0.1262	0.024	0.1262	0.022
0.1322	0.0349	0.1322	0.0312	0.1322	0.0291	0.1322	0.0272	0.1322	0.0257	0.1322	0.024	0.1322	0.022
0.1385	0.0349	0.1385	0.0312	0.1385	0.0291	0.1385	0.0272	0.1385	0.0258	0.1385	0.0241	0.1385	0.0222
0.1451	0.0349	0.1451	0.0312	0.1451	0.0291	0.1451	0.0272	0.1451	0.0258	0.1451	0.0241	0.1451	0.0222
0.152	0.0349	0.152	0.0312	0.152	0.0291	0.152	0.0272	0.152	0.0262	0.152	0.0249	0.152	0.0235
0.1592	0.0349	0.1592	0.0312	0.1592	0.0291	0.1592	0.0282	0.1592	0.0276	0.1592	0.0263	0.1592	0.0247
0.1668	0.0349	0.1668	0.0312	0.1668	0.0297	0.1668	0.0289	0.1668	0.0282	0.1668	0.0269	0.1668	0.0252
0.1748	0.0423	0.1748	0.0358	0.1748	0.0324	0.1748	0.0296	0.1748	0.0282	0.1748	0.0269	0.1748	0.0258
0.1831	0.0535	0.1831	0.0445	0.1831	0.0398	0.1831	0.0358	0.1831	0.0324	0.1831	0.0272	0.1831	0.0261
0.1918	0.0577	0.1918	0.0477	0.1918	0.0424	0.1918	0.038	0.1918	0.0347	0.1918	0.0319	0.1918	0.0286
0.2009	0.0577	0.2009	0.0477	0.2009	0.0424	0.2009	0.0392	0.2009	0.0373	0.2009	0.034	0.2009	0.0302
0.2105	0.0577	0.2105	0.0477	0.2105	0.0424	0.2105	0.0392	0.2105	0.0374	0.2105	0.0347	0.2105	0.0322
0.2205	0.0577	0.2205	0.0477	0.2205	0.0433	0.2205	0.0417	0.2205	0.0402	0.2205	0.0378	0.2205	0.0347
0.231	0.0582	0.231	0.0494	0.231	0.0464	0.231	0.0439	0.231	0.0422	0.231	0.0393	0.231	0.0356
0.242	0.0624	0.242	0.0554	0.242	0.0513	0.242	0.0476	0.242	0.0442	0.242	0.0393	0.242	0.0356
0.2535	0.0714	0.2535	0.0624	0.2535	0.0575	0.2535	0.0533	0.2535	0.0497	0.2535	0.044	0.2535	0.0382
0.2656	0.0714	0.2656	0.0624	0.2656	0.0575	0.2656	0.0533	0.2656	0.0497	0.2656	0.044	0.2656	0.0382
0.2783	0.0714	0.2783	0.0624	0.2783	0.0575	0.2783	0.0533	0.2783	0.0497	0.2783	0.044	0.2783	0.0396
0.2915	0.0742	0.2915	0.0667	0.2915	0.0624	0.2915	0.0587	0.2915	0.0555	0.2915	0.0503	0.2915	0.0443
0.3054	0.0876	0.3054	0.0758	0.3054	0.0693	0.3054	0.0642	0.3054	0.0604	0.3054	0.054	0.3054	0.0468
0.3199	0.0922	0.3199	0.0797	0.3199	0.0729	0.3199	0.067	0.3199	0.0619	0.3199	0.054	0.3199	0.0468
0.3352	0.1106	0.3352	0.0891	0.3352	0.0787	0.3352	0.0707	0.3352	0.0643	0.3352	0.0554	0.3352	0.0474
0.3511	0.1252	0.3511	0.0954	0.3511	0.0826	0.3511	0.0726	0.3511	0.0664	0.3511	0.0577	0.3511	0.0491
0.3678	0.1252	0.3678	0.0954	0.3678	0.0849	0.3678	0.0776	0.3678	0.0714	0.3678	0.0615	0.3678	0.0511

0.3853	0.1252	0.3853	0.0957	0.3853	0.088	0.3853	0.0808	0.3853	0.0753	0.3853	0.0655	0.3853	0.0545
0.4037	0.1549	0.4037	0.1125	0.4037	0.0975	0.4037	0.0859	0.4037	0.0768	0.4037	0.0655	0.4037	0.0545
0.4229	0.1549	0.4229	0.1191	0.4229	0.1036	0.4229	0.0913	0.4229	0.0813	0.4229	0.067	0.4229	0.0545
0.4431	0.1771	0.4431	0.1356	0.4431	0.1157	0.4431	0.1002	0.4431	0.0879	0.4431	0.0702	0.4431	0.0586
0.4642	0.1771	0.4642	0.1356	0.4642	0.1157	0.4642	0.1002	0.4642	0.0879	0.4642	0.0736	0.4642	0.063
0.4863	0.1984	0.4863	0.1471	0.4863	0.1253	0.4863	0.1095	0.4863	0.0977	0.4863	0.0814	0.4863	0.0676
0.5094	0.1984	0.5094	0.1471	0.5094	0.1253	0.5094	0.1095	0.5094	0.0977	0.5094	0.0857	0.5094	0.0743
0.5337	0.1984	0.5337	0.1471	0.5337	0.1253	0.5337	0.1112	0.5337	0.1045	0.5337	0.0939	0.5337	0.0821
0.5591	0.1984	0.5591	0.1471	0.5591	0.1253	0.5591	0.1112	0.5591	0.1045	0.5591	0.0958	0.5591	0.0845
0.5857	0.1995	0.5857	0.1484	0.5857	0.1266	0.5857	0.1112	0.5857	0.1045	0.5857	0.0958	0.5857	0.0845
0.6136	0.2101	0.6136	0.1484	0.6136	0.1266	0.6136	0.1137	0.6136	0.1053	0.6136	0.0958	0.6136	0.0845
0.6428	0.2101	0.6428	0.1595	0.6428	0.1442	0.6428	0.1317	0.6428	0.1213	0.6428	0.1054	0.6428	0.0891
0.6734	0.2435	0.6734	0.1649	0.6734	0.1492	0.6734	0.1381	0.6734	0.1282	0.6734	0.1119	0.6734	0.0936
0.7055	0.2435	0.7055	0.1702	0.7055	0.1492	0.7055	0.1381	0.7055	0.1282	0.7055	0.1123	0.7055	0.0948
0.7391	0.2435	0.7391	0.1938	0.7391	0.1722	0.7391	0.1541	0.7391	0.1391	0.7391	0.1163	0.7391	0.1027
0.7743	0.3186	0.7743	0.1938	0.7743	0.1727	0.7743	0.158	0.7743	0.1452	0.7743	0.1249	0.7743	0.1147
0.8111	0.3186	0.8111	0.2103	0.8111	0.1832	0.8111	0.164	0.8111	0.1519	0.8111	0.1366	0.8111	0.1239
0.8497	0.3186	0.8497	0.2103	0.8497	0.1896	0.8497	0.1732	0.8497	0.1595	0.8497	0.139	0.8497	0.1264
0.8902	0.3186	0.8902	0.2147	0.8902	0.1952	0.8902	0.1789	0.8902	0.1652	0.8902	0.1439	0.8902	0.1339
0.9326	0.4069	0.9326	0.2647	0.9326	0.2228	0.9326	0.1987	0.9326	0.1834	0.9326	0.1649	0.9326	0.1495
0.977	0.4069	0.977	0.2647	0.977	0.235	0.977	0.2164	0.977	0.2011	0.977	0.179	0.977	0.159
1.0235	0.4069	1.0235	0.2647	1.0235	0.235	1.0235	0.2164	1.0235	0.2012	1.0235	0.1817	1.0235	0.1592
1.0723	0.4069	1.0723	0.2863	1.0723	0.2582	1.0723	0.2353	1.0723	0.2171	1.0723	0.1909	1.0723	0.1654
1.1233	0.6549	1.1233	0.3732	1.1233	0.3044	1.1233	0.263	1.1233	0.2342	1.1233	0.1968	1.1233	0.1659
1.1768	0.6549	1.1768	0.414	1.1768	0.3355	1.1768	0.2883	1.1768	0.2581	1.1768	0.2245	1.1768	0.1934
1.2328	0.6549	1.2328	0.414	1.2328	0.3417	1.2328	0.3064	1.2328	0.2768	1.2328	0.2315	1.2328	0.2063
1.2916	0.6549	1.2916	0.414	1.2916	0.3553	1.2916	0.3167	1.2916	0.285	1.2916	0.2485	1.2916	0.2145
1.353	0.7094	1.353	0.414	1.353	0.3553	1.353	0.3301	1.353	0.3111	1.353	0.2781	1.353	0.2405
1.4175	0.7094	1.4175	0.4509	1.4175	0.3825	1.4175	0.3426	1.4175	0.3244	1.4175	0.2929	1.4175	0.2556
1.485	0.7094	1.485	0.4509	1.485	0.4112	1.485	0.3849	1.485	0.3611	1.485	0.3203	1.485	0.2744
1.5557	0.7094	1.5557	0.4679	1.5557	0.425	1.5557	0.4019	1.5557	0.3815	1.5557	0.3455	1.5557	0.3015
1.6298	0.7094	1.6298	0.5202	1.6298	0.4336	1.6298	0.4078	1.6298	0.3845	1.6298	0.3552	1.6298	0.318
1.7074	0.7094	1.7074	0.5202	1.7074	0.4644	1.7074	0.4411	1.7074	0.4188	1.7074	0.3795	1.7074	0.3306
1.7887	0.7372	1.7887	0.5441	1.7887	0.5022	1.7887	0.4784	1.7887	0.4554	1.7887	0.4122	1.7887	0.3597
1.8738	0.8906	1.8738	0.662	1.8738	0.5953	1.8738	0.5386	1.8738	0.4968	1.8738	0.4422	1.8738	0.3861
1.963	1.0888	1.963	0.795	1.963	0.7156	1.963	0.6479	1.963	0.5892	1.963	0.507	1.963	0.4197
2.0565	1.1994	2.0565	0.8457	2.0565	0.7762	2.0565	0.7135	2.0565	0.6568	2.0565	0.5613	2.0565	0.46
2.1544	1.2457	2.1544	0.8903	2.1544	0.8251	2.1544	0.7629	2.1544	0.6675	2.1544	0.6111	2.1544	0.4955
2.257	1.5724	2.257	1.0092	2.257	0.9139	2.257	0.787	2.257	0.6675	2.257	0.6478	2.257	0.5221

S_PTWW039.grf
24590-G04B-F00019 Rev 4 (1/17/2006)

2.3645	3.0358	2.3645	1.3091	2.3645	0.9767	2.3645	0.787	2.3645	0.6738	2.3645	0.6478	2.3645	0.5221
2.4771	3.0358	2.4771	1.3091	2.4771	0.9767	2.4771	0.787	2.4771	0.6996	2.4771	0.6478	2.4771	0.5535
2.595	3.0358	2.595	1.3091	2.595	0.9767	2.595	0.8024	2.595	0.7441	2.595	0.6625	2.595	0.5909
2.7186	3.0358	2.7186	1.3326	2.7186	1.1682	2.7186	1.0405	2.7186	0.9372	2.7186	0.7795	2.7186	0.6406
2.848	3.0358	2.848	1.3674	2.848	1.2124	2.848	1.0985	2.848	0.9538	2.848	0.7823	2.848	0.699
2.9836	3.0358	2.9836	1.5563	2.9836	1.2869	2.9836	1.0985	2.9836	0.9538	2.9836	0.7823	2.9836	0.7384
3.1257	3.0358	3.1257	1.5563	3.1257	1.2869	3.1257	1.0985	3.1257	0.9538	3.1257	0.7823	3.1257	0.7384
3.2745	3.0358	3.2745	1.5563	3.2745	1.2869	3.2745	1.0985	3.2745	0.9538	3.2745	0.7823	3.2745	0.7384
3.4305	2.661	3.4305	1.5563	3.4305	1.2869	3.4305	1.0985	3.4305	0.9538	3.4305	0.7823	3.4305	0.7384
3.5938	2.661	3.5938	1.5563	3.5938	1.2869	3.5938	1.0985	3.5938	0.9538	3.5938	0.7823	3.5938	0.7384
3.7649	2.661	3.7649	1.5563	3.7649	1.2869	3.7649	1.0985	3.7649	0.9538	3.7649	0.7823	3.7649	0.7242
3.9442	1.4442	3.9442	1.0743	3.9442	0.9842	3.9442	0.9015	3.9442	0.8266	3.9442	0.7368	3.9442	0.6479
4.132	1.2245	4.132	0.821	4.132	0.767	4.132	0.7197	4.132	0.6788	4.132	0.6329	4.132	0.5756
4.3288	1.2245	4.3288	0.8143	4.3288	0.7354	4.3288	0.6803	4.3288	0.6428	4.3288	0.5811	4.3288	0.5258
4.5349	1.2245	4.5349	0.8143	4.5349	0.7354	4.5349	0.6643	4.5349	0.6244	4.5349	0.5408	4.5349	0.4918
4.7508	1.2245	4.7508	0.8143	4.7508	0.7354	4.7508	0.6643	4.7508	0.6244	4.7508	0.5295	4.7508	0.4762
4.977	1.2245	4.977	0.8143	4.977	0.7354	4.977	0.6643	4.977	0.6244	4.977	0.5295	4.977	0.4651
5.214	1.2245	5.214	0.8143	5.214	0.7354	5.214	0.6643	5.214	0.6244	5.214	0.5295	5.214	0.4651
5.4623	1.1693	5.4623	0.8143	5.4623	0.7354	5.4623	0.6643	5.4623	0.6244	5.4623	0.5295	5.4623	0.4651
5.7224	1.3152	5.7224	0.8143	5.7224	0.7354	5.7224	0.6643	5.7224	0.6244	5.7224	0.5291	5.7224	0.4615
5.9948	1.3152	5.9948	0.8143	5.9948	0.7354	5.9948	0.6643	5.9948	0.6244	5.9948	0.5224	5.9948	0.4615
6.2803	1.3152	6.2803	0.8143	6.2803	0.7108	6.2803	0.6643	6.2803	0.6244	6.2803	0.5224	6.2803	0.4615
6.5793	1.3152	6.5793	0.8143	6.5793	0.7108	6.5793	0.6643	6.5793	0.6244	6.5793	0.5224	6.5793	0.4615
6.8926	1.5276	6.8926	0.8143	6.8926	0.7108	6.8926	0.6643	6.8926	0.6244	6.8926	0.5224	6.8926	0.4615
7.2208	1.5276	7.2208	0.8143	7.2208	0.7108	7.2208	0.6643	7.2208	0.6244	7.2208	0.5367	7.2208	0.4615
7.5646	1.5276	7.5646	0.8143	7.5646	0.7108	7.5646	0.6643	7.5646	0.6244	7.5646	0.5367	7.5646	0.4615
7.9248	1.5276	7.9248	0.8143	7.9248	0.7108	7.9248	0.6643	7.9248	0.6244	7.9248	0.5367	7.9248	0.4615
8.3022	1.5276	8.3022	0.8143	8.3022	0.7108	8.3022	0.6643	8.3022	0.6244	8.3022	0.5367	8.3022	0.4615
8.6975	1.5276	8.6975	0.8143	8.6975	0.7108	8.6975	0.6643	8.6975	0.6244	8.6975	0.5367	8.6975	0.4615
9.1116	1.5276	9.1116	0.8143	9.1116	0.7108	9.1116	0.6643	9.1116	0.6244	9.1116	0.5367	9.1116	0.4615
9.5455	1.0683	9.5455	0.7685	9.5455	0.7108	9.5455	0.6643	9.5455	0.6244	9.5455	0.5367	9.5455	0.4615
10	0.966	10	0.7685	10	0.7108	10	0.6643	10	0.6244	10	0.5367	10	0.4615
10.4762	1.1413	10.4762	0.7685	10.4762	0.7108	10.4762	0.6643	10.4762	0.6244	10.4762	0.5383	10.4762	0.4729
10.975	1.1413	10.975	0.7685	10.975	0.7108	10.975	0.6623	10.975	0.6206	10.975	0.5532	10.975	0.4802
11.4976	1.1413	11.4976	0.7685	11.4976	0.7108	11.4976	0.6623	11.4976	0.6206	11.4976	0.5569	11.4976	0.4932
12.045	1.1413	12.045	0.7685	12.045	0.7108	12.045	0.6623	12.045	0.6206	12.045	0.5569	12.045	0.4932
12.6186	1.3801	12.6186	0.7685	12.6186	0.7108	12.6186	0.6623	12.6186	0.6206	12.6186	0.5569	12.6186	0.4932
13.2194	1.3801	13.2194	0.7685	13.2194	0.7108	13.2194	0.6623	13.2194	0.6206	13.2194	0.5569	13.2194	0.4932
13.8489	1.3801	13.8489	0.7393	13.8489	0.6881	13.8489	0.6477	13.8489	0.6134	13.8489	0.5569	13.8489	0.4932

14.5083	1.3801	14.5083	0.7138	14.5083	0.6481	14.5083	0.6173	14.5083	0.5885	14.5083	0.5384	14.5083	0.4812
15.1991	1.3801	15.1991	0.7138	15.1991	0.6322	15.1991	0.5765	15.1991	0.5354	15.1991	0.4794	15.1991	0.4344
15.9228	0.9839	15.9228	0.7138	15.9228	0.6059	15.9228	0.5404	15.9228	0.4951	15.9228	0.4367	15.9228	0.397
16.681	0.9839	16.681	0.6414	16.681	0.5532	16.681	0.499	16.681	0.4622	16.681	0.4151	16.681	0.3744
17.4753	0.8392	17.4753	0.4892	17.4753	0.4497	17.4753	0.4327	17.4753	0.4227	17.4753	0.4016	17.4753	0.3733
18.3074	0.7701	18.3074	0.4851	18.3074	0.4497	18.3074	0.4264	18.3074	0.4102	18.3074	0.3887	18.3074	0.3692
19.1791	0.7701	19.1791	0.4851	19.1791	0.4497	19.1791	0.4264	19.1791	0.4102	19.1791	0.3887	19.1791	0.3692
20.0923	0.7053	20.0923	0.4141	20.0923	0.4086	20.0923	0.4022	20.0923	0.3951	20.0923	0.3821	20.0923	0.3658
21.049	0.7053	21.049	0.3974	21.049	0.3868	21.049	0.3798	21.049	0.3751	21.049	0.3664	21.049	0.3544
22.0513	0.7053	22.0513	0.3912	22.0513	0.3729	22.0513	0.3598	22.0513	0.3557	22.0513	0.3489	22.0513	0.34
23.1013	0.7053	23.1013	0.3912	23.1013	0.3729	23.1013	0.3598	23.1013	0.3493	23.1013	0.334	23.1013	0.3247
24.2013	0.7053	24.2013	0.3912	24.2013	0.3729	24.2013	0.3598	24.2013	0.3493	24.2013	0.334	24.2013	0.3197
25.3536	0.4743	25.3536	0.3912	25.3536	0.3729	25.3536	0.3598	25.3536	0.3493	25.3536	0.334	25.3536	0.3197
26.5609	0.4743	26.5609	0.3912	26.5609	0.3729	26.5609	0.3598	26.5609	0.3493	26.5609	0.334	26.5609	0.3197
27.8256	0.4162	27.8256	0.3683	27.8256	0.3546	27.8256	0.3444	27.8256	0.3364	27.8256	0.3247	27.8256	0.3138
29.1505	0.3218	29.1505	0.3084	29.1505	0.3088	29.1505	0.3086	29.1505	0.3079	29.1505	0.3058	29.1505	0.3018
30.5386	0.3218	30.5386	0.2953	30.5386	0.2889	30.5386	0.2879	30.5386	0.2894	30.5386	0.2909	30.5386	0.2906
31.9927	0.3218	31.9927	0.2953	31.9927	0.2889	31.9927	0.2856	31.9927	0.2842	31.9927	0.283	31.9927	0.2824
33.516	0.2832	33.516	0.2739	33.516	0.2714	33.516	0.2734	33.516	0.2743	33.516	0.2751	33.516	0.2756
35.1119	0.2621	35.1119	0.2633	35.1119	0.2646	35.1119	0.2659	35.1119	0.2669	35.1119	0.2686	35.1119	0.2701
36.7838	0.2621	36.7838	0.2629	36.7838	0.2634	36.7838	0.2639	36.7838	0.2645	36.7838	0.2654	36.7838	0.2666
38.5353	0.2617	38.5353	0.2621	38.5353	0.2624	38.5353	0.2627	38.5353	0.2629	38.5353	0.2635	38.5353	0.2642
40.3702	0.2609	40.3702	0.2612	40.3702	0.2614	40.3702	0.2615	40.3702	0.2617	40.3702	0.262	40.3702	0.2625
42.2924	0.2601	42.2924	0.2603	42.2924	0.2604	42.2924	0.2605	42.2924	0.2606	42.2924	0.2608	42.2924	0.2611
44.3062	0.2592	44.3062	0.2594	44.3062	0.2594	44.3062	0.2595	44.3062	0.2596	44.3062	0.2597	44.3062	0.2599
46.4159	0.2585	46.4159	0.2585	46.4159	0.2586	46.4159	0.2586	46.4159	0.2587	46.4159	0.2587	46.4159	0.2589
48.626	0.2577	48.626	0.2577	48.626	0.2577	48.626	0.2578	48.626	0.2578	48.626	0.2578	48.626	0.2579
50.9414	0.257	50.9414	0.257	50.9414	0.2569	50.9414	0.2569	50.9414	0.2569	50.9414	0.257	50.9414	0.257

ATTACHMENT # 2

CNP Frame Modification

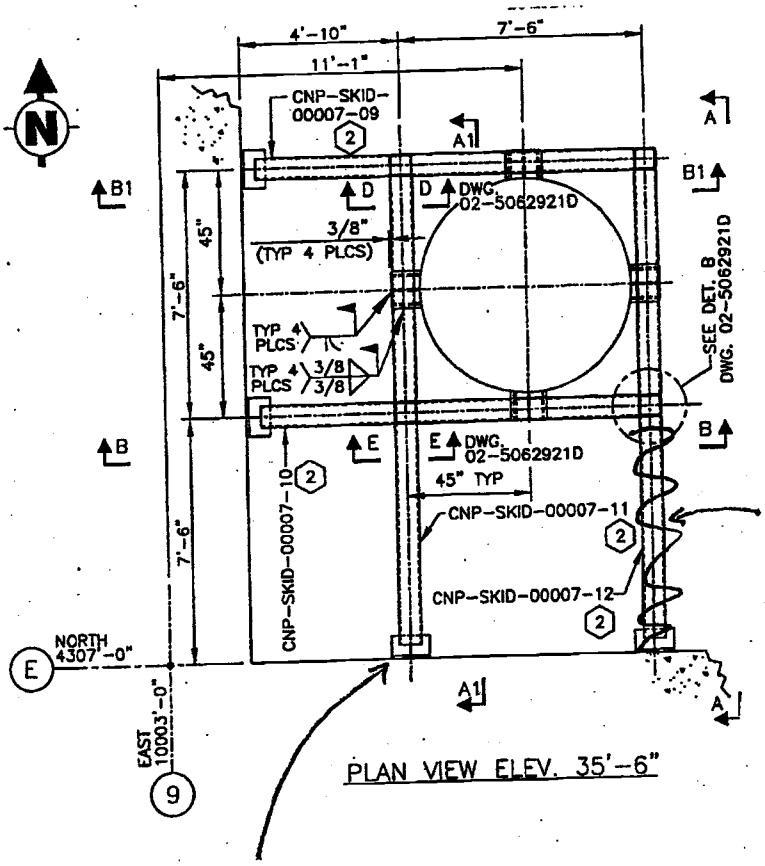

Delete frame member CNP-SKID-0007-12

See RGM ISRS figures 37, 38, and 39 in Appendix J, Attachment 1

ATTACHMENT # 3

Isometrics for CNP Evaporator Recirculation Piping and Off-gas piping

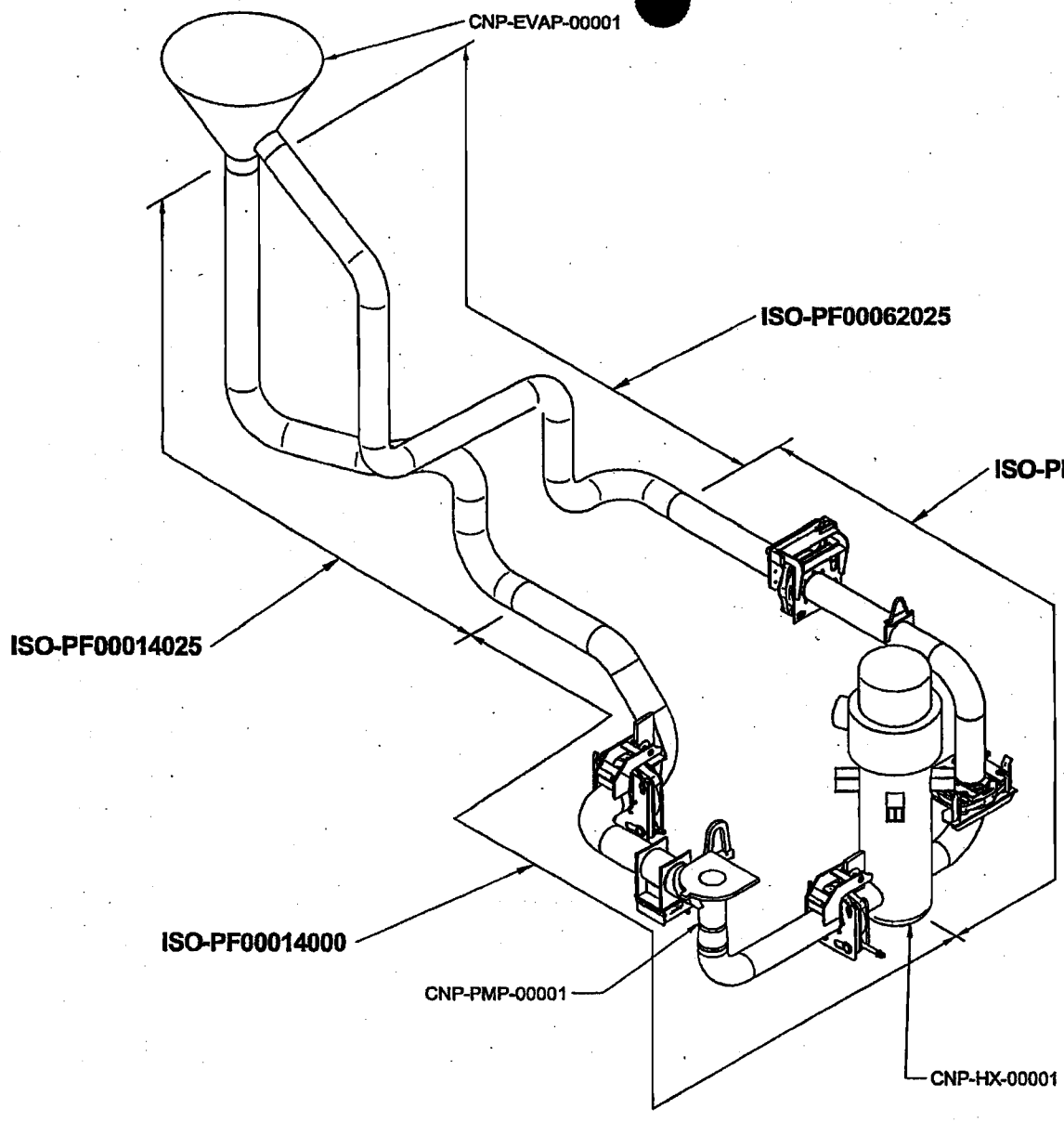

CNP
PROCESS LOOP
INFORMATION ISO

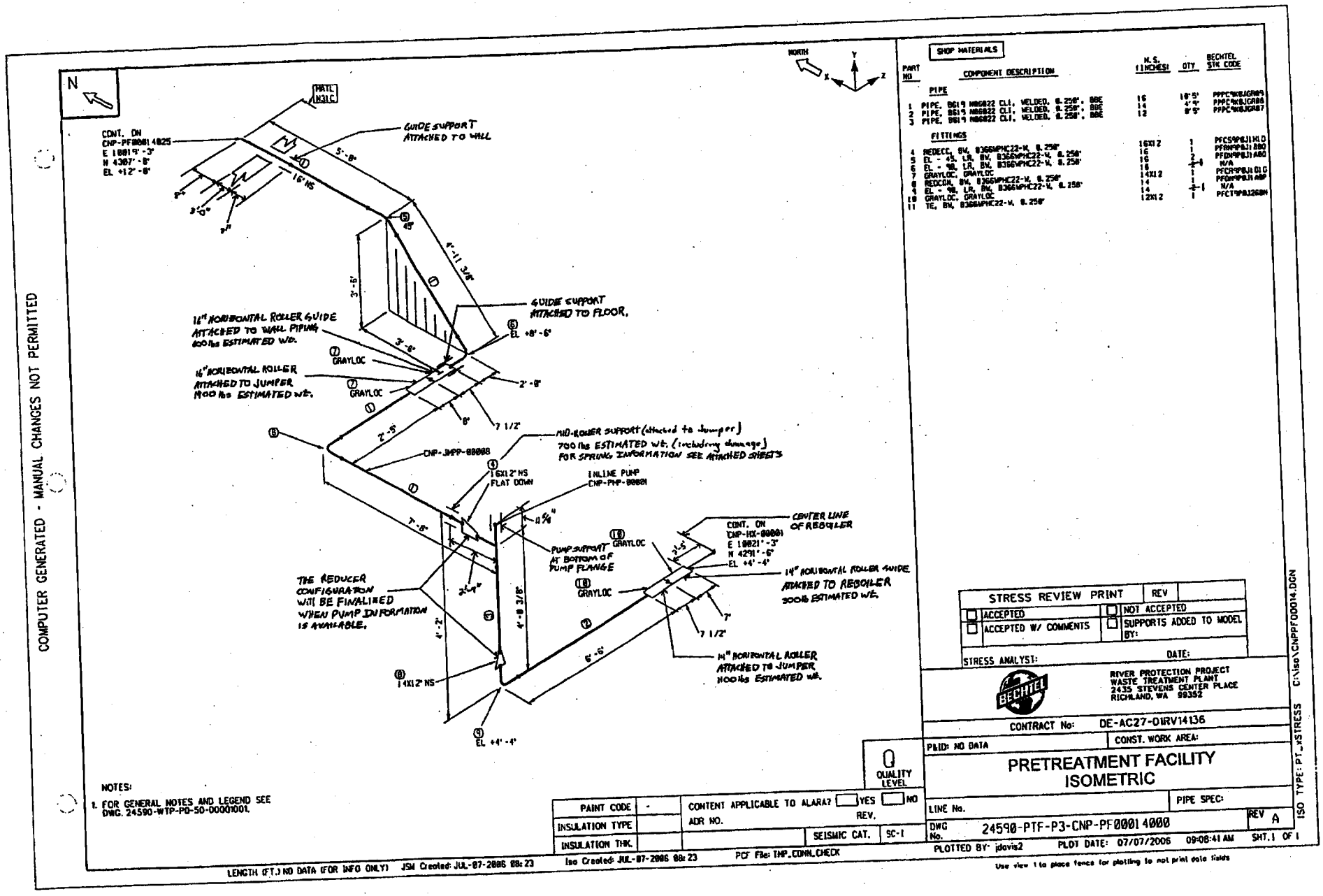
COMPUTER GENERATED - MANUAL CHANGES NOT PERMITTED
SHOP MATERIALS
PART NO
COMPONENT DESCRIPTION
N.S. (INCHES)
QTY
BECHTEL STK CODE
PIPE
1 PIPE, B&S, ASTM A312 TP316L, WELDED, 0.250" WALL, SCH 10S
2 PIPE, B&S, ASTM A312 TP316L, WELDED, 0.250" WALL, SCH 10S
3 PIPE, B&S, ASTM A312 TP316L, WELDED, 0.250" WALL, SCH 10S
FITTINGS
4 REDUCER, BW, B366WPHC22-W, 0.250" WALL
5 ELBOW - 45, LR, BW, B366WPHC22-W, 0.250" WALL
6 ELBOW - 90, LR, BW, B366WPHC22-W, 0.250" WALL
7 GRAYLOC, GRAYLOC
8 REDUCER, BW, B366WPHC22-W, 0.250" WALL
9 ELBOW - 90, LR, BW, B366WPHC22-W, 0.250" WALL
10 GRAYLOC, GRAYLOC
11 TEE, BW, B366WPHC22-W, 0.250" WALL
16X12
16
14
12
16X12
16
16
14X12
14
12X12
1
1
2
1
1
1
PFCS9PBJIHLD
PFBN9PBJIBBD
PFDN9PBJIABD
N/A
PFCP9PBJLDLD
PFDN9PBJIABP
N/A
PFCTPBJ26BN
CONT. ON CNP-PFB0801 4825 E 19815'-3" N 4387'-8" EL +12'-8"
MATL N3LC
GUIDE SUPPORT ATTACHED TO WALL
5'-8"
16" NS
45°
4'-11 3/8"
3'-8"
16" HORIZONTAL ROLLER GUIDE ATTACHED TO WALL PIPING 600lbs ESTIMATED WT.
GUIDE SUPPORT ATTACHED TO FLOOR.
EL +8'-6"
GRAYLOC
16" HORIZONTAL ROLLER ATTACHED TO JUMPER 900 lbs ESTIMATED WT.
2'-8"
8"
7 1/2"
2'-5"
MID-ROLLER SUPPORT (attached to Jumper) 700 lbs ESTIMATED WT. (including damage) FOR SPRING INFORMATION SEE ATTACHED SHEETS
CNP-JMPP-00008
16X12" NS FLAT DOWN
INLINE PUMP CNP-PMP-00001
11 5/8"
7'-8"
PUMP SUPPORT AT BOTTOM OF PUMP FLANGE
CONT. ON CNP-HX-00001 E 19821'-3" N 4291'-6" EL +4'-4"
CENTER LINE OF REBOILER
14" HORIZONTAL ROLLER GUIDE ATTACHED TO REBOILER 200lb ESTIMATED WT.
THE REDUCER CONFIGURATION WILL BE FINALIZED WHEN PUMP INFORMATION IS AVAILABLE.
2'-4"
4'-2"
4'-8 3/8"
7"
7 1/2"
6'-6"
14" HORIZONTAL ROLLER ATTACHED TO JUMPER 900lbs ESTIMATED WT.
14X12" NS
EL +4'-4"
NOTES:
1. FOR GENERAL NOTES AND LEGEND SEE DWG. 24590-WTP-PD-50-00001001.
STRESS REVIEW PRINT
REV
ACCEPTED
ACCEPTED W/ COMMENTS
NOT ACCEPTED
SUPPORTS ADDED TO MODEL BY:
STRESS ANALYST:
DATE:
RIVER PROTECTION PROJECT WASTE TREATMENT PLANT 2435 STEVENS CENTER PLACE RICHLAND, WA 99352
CONTRACT No: DE-AC27-01RV14136
P&ID: NO DATA
CONST. WORK AREA:
PRETREATMENT FACILITY ISOMETRIC
LINE No.
PIPE SPEC:
REV A
DWG No. 24590-PTF-P3-CNP-PF00014000
PLOTTED BY: jdavis2
PLOT DATE: 07/07/2006 09:08:41 AM
SHT.1 OF 1
QUALITY LEVEL
PAINT CODE
INSULATION TYPE
INSULATION THK.
CONTENT APPLICABLE TO ALARA? YES NO
ADR NO.
REV.
SEISMIC CAT. SC-1
LENGTH (FT.) NO DATA (FOR INFO ONLY)
JSM Created: JUL-07-2006 08:23
Iso Created: JUL-07-2006 08:23
PCF File: TMP_CONN_CHECK
Use view 1 to place fence for plotting to not print data fields
ISO TYPE: PT_xSTRESS
C:\Iso\CNPPF00014.DGN

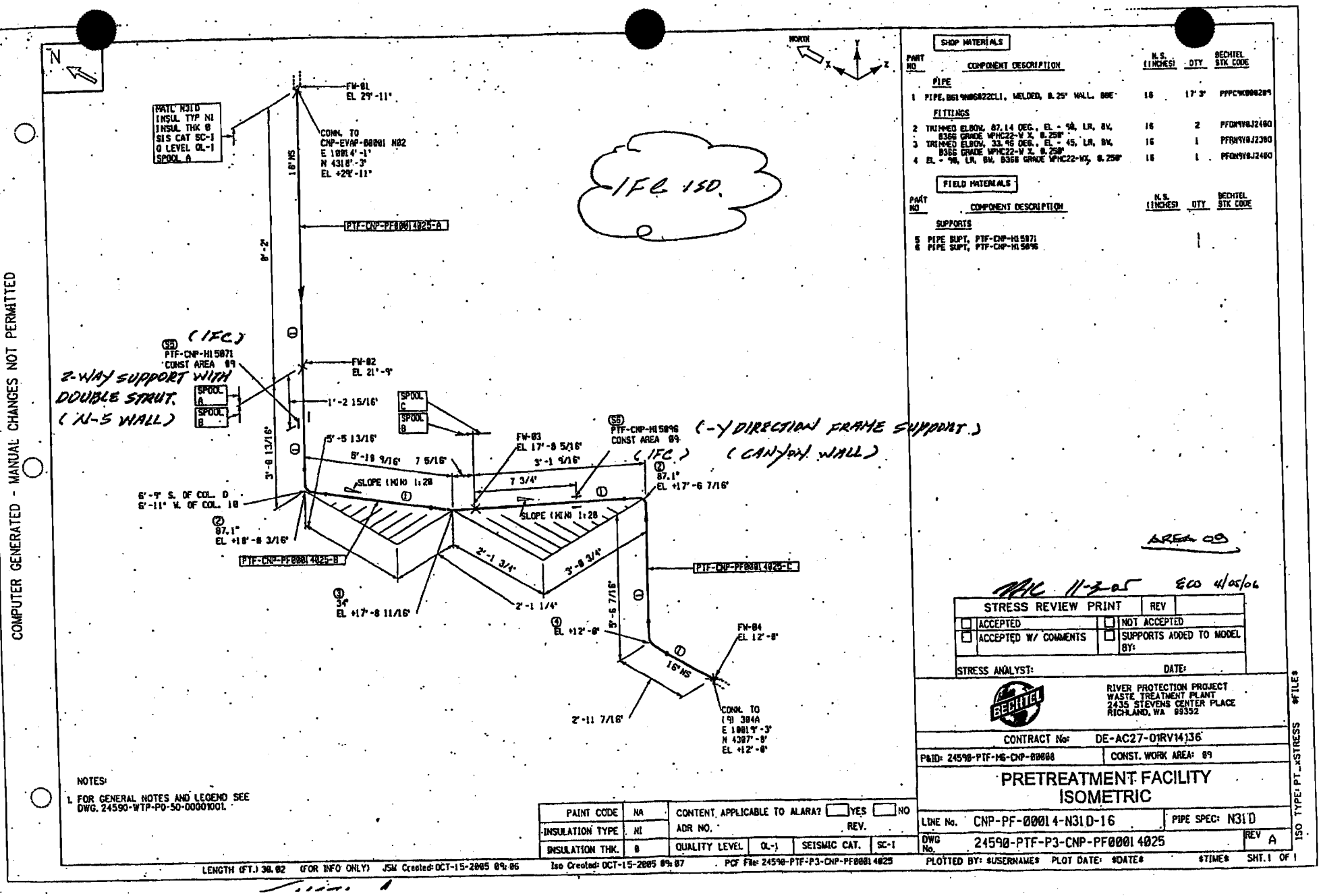
COMPUTER GENERATED - MANUAL CHANGES NOT PERMITTED
NORTH
FW-01
EL 29'-11"
MATL N31D
INSUL TYP NI
INSUL THK 8
SIS CAT SC-1
Q LEVEL QL-1
SPOOL A
CONN. TO
CNP-EVAP-00001 N02
E 1001'-1"
N 4318'-3"
EL +29'-11"
16"NS
PTF-CNP-PF00014025-A
8'-2"
IFC ISO.
(IFC)
PTF-CNP-H15071
CONST AREA 09
2-WAY SUPPORT WITH
DOUBLE STRUT.
(N-S WALL)
SPOOL A
SPOOL B
FW-02
EL 21'-9"
1'-2 15/16"
SPOOL C
SPOOL B
5'-5 13/16"
3'-8 13/16"
FW-03
EL 17'-8 5/16"
PTF-CNP-H15096
CONST AREA 09
(IFC)
(-Y DIRECTION FRAME SUPPORT)
(CANYON WALL)
5'-10 9/16"
7 5/16"
3'-1 9/16"
7 3/4"
SLOPE (MIN) 1:28
6'-9" S. OF COL. D
6'-11" W. OF COL. 10
2
87.1°
EL +18'-8 3/16"
2
87.1°
EL +17'-6 7/16"
PTF-CNP-PF00014025-B
PTF-CNP-PF00014025-C
2'-1 3/4"
3'-8 3/4"
3
34°
EL +17'-8 11/16"
2'-1 1/4"
4
EL +12'-8"
3'-5 7/16"
FW-04
EL 12'-8"
16"NS
2'-11 7/16"
CONN. TO
(9) 304A
E 1001'-3"
N 4307'-8"
EL +12'-8"
AREA 09
11-3-05
ECO 4/05/06
NOTES:
1. FOR GENERAL NOTES AND LEGEND SEE DWG. 24590-WTP-PO-50-00001001
SHOP MATERIALS
PART NO
COMPONENT DESCRIPTION
N.S. (INCHES)
QTY
BECHTEL STK CODE
PIPE
1 PIPE, B61'MMSB22CL1, WELDED, 0.25" WALL, 88E 16 17' 3" PPPC*K000289
FITTINGS
2 TRIMMED ELBOW, 87.14 DEG., EL - 90, LR, BW, B366 GRADE WPHC22-W X, 0.250" 16 2 PFDM*W8J2480
3 TRIMMED ELBOW, 33.96 DEG., EL - 45, LR, BW, B366 GRADE WPHC22-W X, 0.250" 16 1 PFDM*W8J2380
4 EL - 90, LR, BW, B366 GRADE WPHC22-W, 0.250" 16 1 PFDM*W8J2480
FIELD MATERIALS
PART NO
COMPONENT DESCRIPTION
N.S. (INCHES)
QTY
BECHTEL STK CODE
SUPPORTS
5 PIPE SUPT, PTF-CNP-H15071 1
6 PIPE SUPT, PTF-CNP-H15096 1
STRESS REVIEW PRINT
REV
ACCEPTED
NOT ACCEPTED
ACCEPTED W/ COMMENTS
SUPPORTS ADDED TO MODEL
BY:
STRESS ANALYST:
DATE:
BECHTEL
RIVER PROTECTION PROJECT
WASTE TREATMENT PLANT
2435 STEVENS CENTER PLACE
RICHLAND, WA 99352
CONTRACT No: DE-AC27-01RV14136
P&ID: 24590-PTF-MG-CNP-00008
CONST. WORK AREA: 09
PRETREATMENT FACILITY
ISOMETRIC
LINE No. CNP-PF-00014-N31D-16
PIPE SPEC: N31D
DWG No. 24590-PTF-P3-CNP-PF00014025
REV A
PAINT CODE NA
INSULATION TYPE NI
INSULATION THK. 8
CONTENT APPLICABLE TO ALARA? YES NO
ADR NO.
REV.
QUALITY LEVEL QL-1
SEISMIC CAT. SC-1
LENGTH (FT.) 30.02 (FOR INFO ONLY) JSM Created: OCT-15-2005 09:06
Iso Created: OCT-15-2005 09:07
PCF File: 24590-PTF-P3-CNP-PF00014025
PLOTTED BY: $USERNAME$ PLOT DATE: $DATE$ $TIME$ SHT. 1 OF 1
ISO TYPE: PT_xSTRESS $FILE$

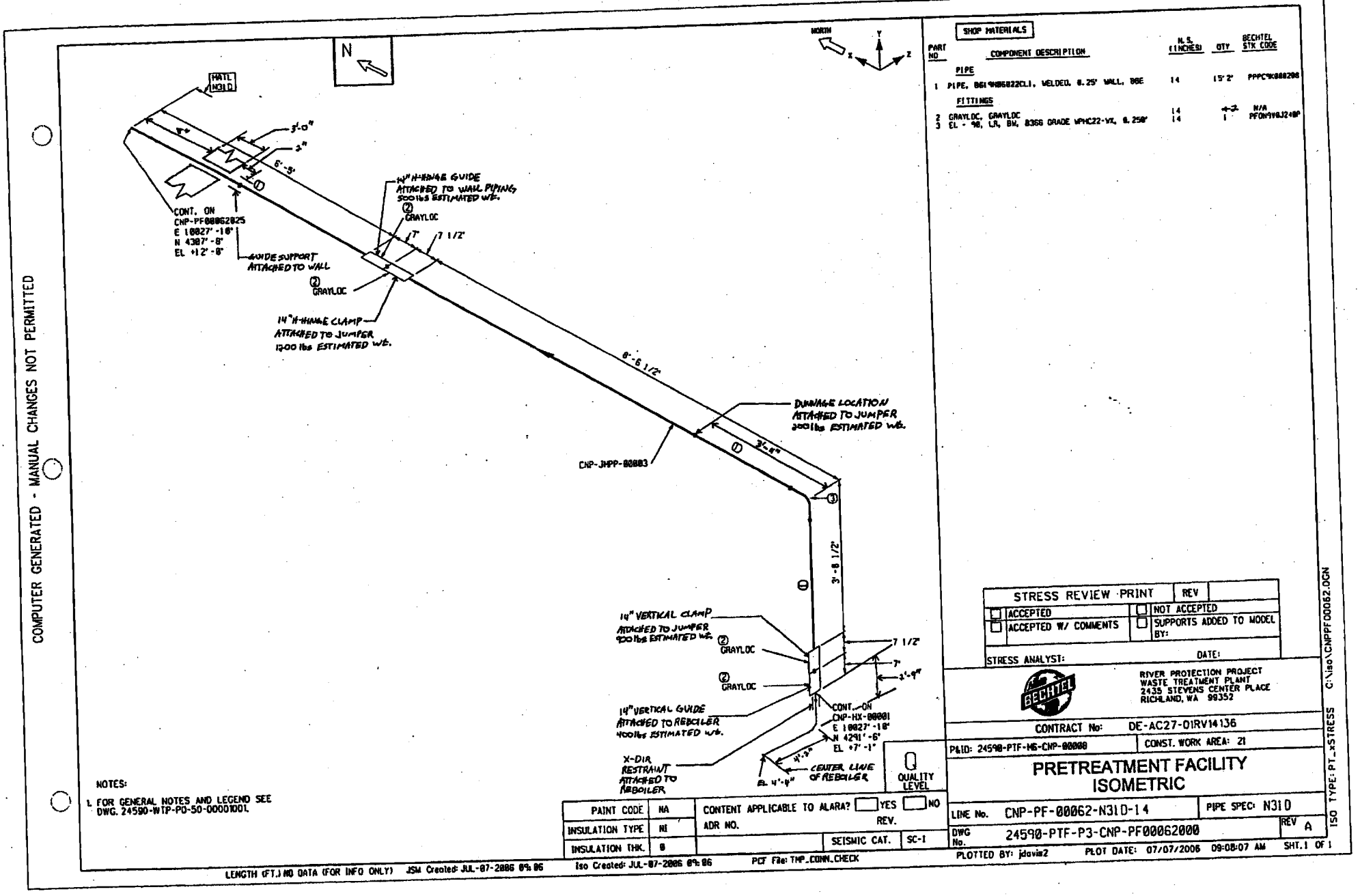
COMPUTER GENERATED - MANUAL CHANGES NOT PERMITTED
MATL (N31D)
3'-0"
2"
6'-5"
CONT. ON CNP-PF00062025 E 10827'-10" N 4387'-8" EL +12'-8"
14" H-HINGE GUIDE ATTACHED TO WALL PIPING 500lbs ESTIMATED WT.
GRAYLOC
7"
7 1/2"
GUIDE SUPPORT ATTACHED TO WALL
14" H-HINGE CLAMP ATTACHED TO JUMPER 1200 lbs ESTIMATED WT.
8'-6 1/2"
DUMMAGE LOCATION ATTACHED TO JUMPER 300lbs ESTIMATED WT.
CNP-JMPP-00003
3'-8"
3'-8 1/2"
14" VERTICAL CLAMP ATTACHED TO JUMPER 900 lbs ESTIMATED WT.
14" VERTICAL GUIDE ATTACHED TO REBOILER 400lbs ESTIMATED WT.
X-DIR. RESTRAINT ATTACHED TO REBOILER
CONT. ON CNP-HX-00001 E 10827'-10" N 4291'-6" EL +7'-1"
3'-2"
CENTER LINE OF REBOILER
EL. 4'-9"
NORTH
SHOP MATERIALS
PART NO
COMPONENT DESCRIPTION
N.S. (INCHES)
QTY
BECHTEL STK CODE
PIPE
1 PIPE, SEAMLESS, WELDED, 0.25" WALL, 316L 14 15'2" PPPC*K000206
FITTINGS
2 GRAYLOC, GRAYLOC 14 4-2 N/A
3 EL - 90, LR, BW, B366 GRADE WPHC22-VX, 0.250" 14 1 PFON9X6J240P
STRESS REVIEW PRINT
REV
ACCEPTED
NOT ACCEPTED
ACCEPTED W/ COMMENTS
SUPPORTS ADDED TO MODEL BY:
STRESS ANALYST:
DATE:
BECHTEL
RIVER PROTECTION PROJECT WASTE TREATMENT PLANT 2435 STEVENS CENTER PLACE RICHLAND, WA 99352
CONTRACT No: DE-AC27-01RV14136
P&ID: 24590-PTF-M6-CNP-00008
CONST. WORK AREA: 21
PRETREATMENT FACILITY ISOMETRIC
LINE No. CNP-PF-00062-N31D-14
PIPE SPEC: N31D
DWG No. 24590-PTF-P3-CNP-PF00062000
REV A
PLOTTED BY: jdavis2
PLOT DATE: 07/07/2006 09:08:07 AM
SHT. 1 OF 1
ISO TYPE: PT_xSTRESS
C:\iso\CNPPF00062.DGN
NOTES:
1. FOR GENERAL NOTES AND LEGEND SEE DWG. 24590-WTP-PO-50-00001001.
QUALITY LEVEL
PAINT CODE NA
INSULATION TYPE NI
INSULATION THK. 8
CONTENT APPLICABLE TO ALARA? YES NO
ADR NO.
REV.
SEISMIC CAT. SC-1
LENGTH (FT.) NO DATA (FOR INFO ONLY)
JSM Created: JUL-07-2006 09:06
Iso Created: JUL-07-2006 09:06
PCF File: TMP_CONN_CHECK

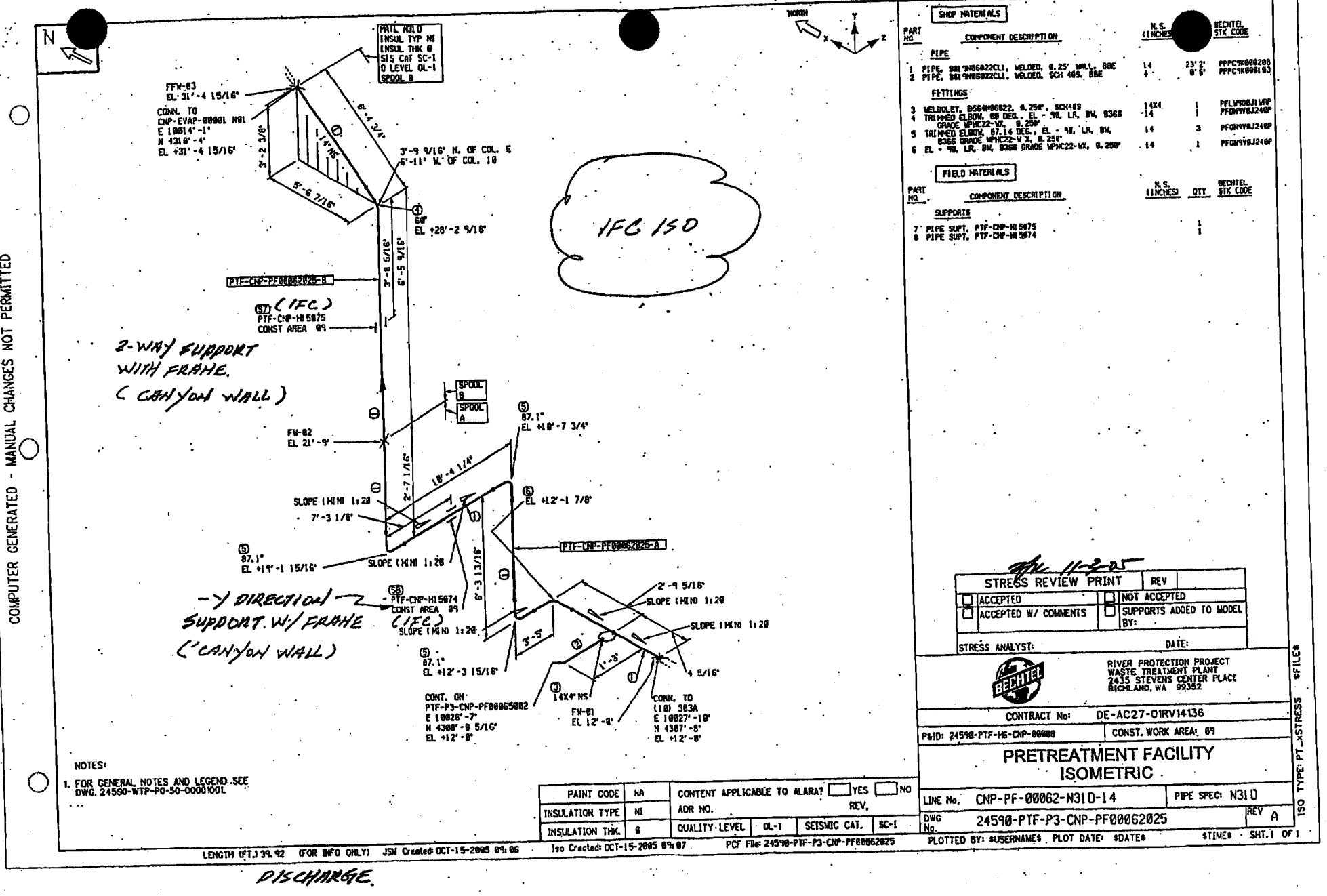
COMPUTER GENERATED - MANUAL CHANGES NOT PERMITTED
N
NORTH
MATL NO 10
INSUL TYP NI
INSUL THK 6
SIS CAT SC-1
Q LEVEL QL-1
SPOOL 6
FFW-03
EL 31'-4 15/16"
CONN. TO
CNP-EVAP-00001 N01
E 10014'-1"
N 4318'-4"
EL +31'-4 15/16"
3'-2 3/8"
5'-6 7/16"
6'-4 3/4"
1'-4"
3'-9 9/16" N. OF COL. E
6'-11" W. OF COL. 10
6"
EL +28'-2 9/16"
3'-8 5/16"
6'-5 9/16"
PTF-CNP-PF00062025-B
(S7) (IFC)
PTF-CNP-HI5075
CONST AREA 09
2-WAY SUPPORT
WITH FRAME.
(CANYON WALL)
IFC ISO
SPOOL B
SPOOL A
FW-02
EL 21'-9"
87.1°
EL +18'-7 3/4"
18'-4 1/4"
2'-7 1/16"
SLOPE (MIN) 1:28
7'-3 1/8"
EL +12'-1 7/8"
87.1°
EL +19'-1 15/16"
SLOPE (MIN) 1:28
PTF-CNP-PF00062025-A
-Y DIRECTION
SUPPORT W/ FRAME
(CANYON WALL)
(S8)
PTF-CNP-HI5074
CONST AREA 09
(IFC)
SLOPE (MIN) 1:28
6'-3 13/16"
3'-5"
2'-9 5/16"
SLOPE (MIN) 1:28
SLOPE (MIN) 1:28
87.1°
EL +12'-3 15/16"
1'-3"
4 5/16"
CONT. ON
PTF-P3-CNP-PF00065002
E 10026'-7"
N 4388'-8 5/16"
EL +12'-8"
14X4"NS
FW-01
EL 12'-8"
CONN. TO
(18) 383A
E 10027'-10"
N 4387'-8"
EL +12'-8"
DISCHARGE
SHOP MATERIALS
PART NO
COMPONENT DESCRIPTION
N.S. (INCHES)
BECHTEL STK CODE
PIPE
1 PIPE, B61 *N06022CL1, WELDED, 0.25" WALL, BBE 14 23' 2"
2 PIPE, B61 *N06022CL1, WELDED, SCH 40S, BBE 4 0' 8"
PPPC*K000208
PPPC*K000103
FITTINGS
3 WELDOLET, B564N06022, 0.250", SCH40S 14X4 1
4 TRIMMED ELBOW, 60 DEG., EL - 90, LR, BW, B366 GRADE WPHC22-WX, 0.250" 14 1
5 TRIMMED ELBOW, 87.14 DEG., EL - 90, LR, BW, B366 GRADE WPHC22-WX, 0.250" 14 3
6 EL - 90, LR, BW, B366 GRADE WPHC22-WX, 0.250" 14 1
PFLV*00BJ1 VRP
PFGN*Y0BJ240P
PFGN*Y0BJ240P
PFGN*Y0BJ240P
FIELD MATERIALS
PART NO
COMPONENT DESCRIPTION
N.S. (INCHES)
QTY
BECHTEL STK CODE
SUPPORTS
7 PIPE SUPT, PTF-CNP-HI5075 1
8 PIPE SUPT, PTF-CNP-HI5074 1
NOTES:
1. FOR GENERAL NOTES AND LEGEND SEE DWG. 24590-WTP-PO-50-00001001
PAINT CODE NA
INSULATION TYPE NI
INSULATION THK. 6
CONTENT APPLICABLE TO ALARA? YES NO
ADR NO.
REV.
QUALITY LEVEL QL-1
SEISMIC CAT. SC-1
LENGTH (FT.) 39.92 (FOR INFO ONLY) JSW Created: OCT-15-2005 09:06
Iso Created: OCT-15-2005 09:07
PCF File: 24590-PTF-P3-CNP-PF00062025
STRESS REVIEW PRINT
REV
ACCEPTED
NOT ACCEPTED
ACCEPTED W/ COMMENTS
SUPPORTS ADDED TO MODEL BY:
STRESS ANALYST:
DATE:
11-2-05
BECHTEL
RIVER PROTECTION PROJECT
WASTE TREATMENT PLANT
2435 STEVENS CENTER PLACE
RICHLAND, WA 99352
CONTRACT No: DE-AC27-01RV14136
P&ID: 24590-PTF-M6-CNP-00008
CONST. WORK AREA: 09
PRETREATMENT FACILITY
ISOMETRIC
LINE No. CNP-PF-00062-N31D-14
PIPE SPEC: N31D
DWG No. 24590-PTF-P3-CNP-PF00062025
REV A
PLOTTED BY: $USERNAME$ PLOT DATE: $DATE$ $TIME$ SHT.1 OF 1
ISO TYPE: PT-#STRESS $FILE$

24" Mid Roller Assembly.

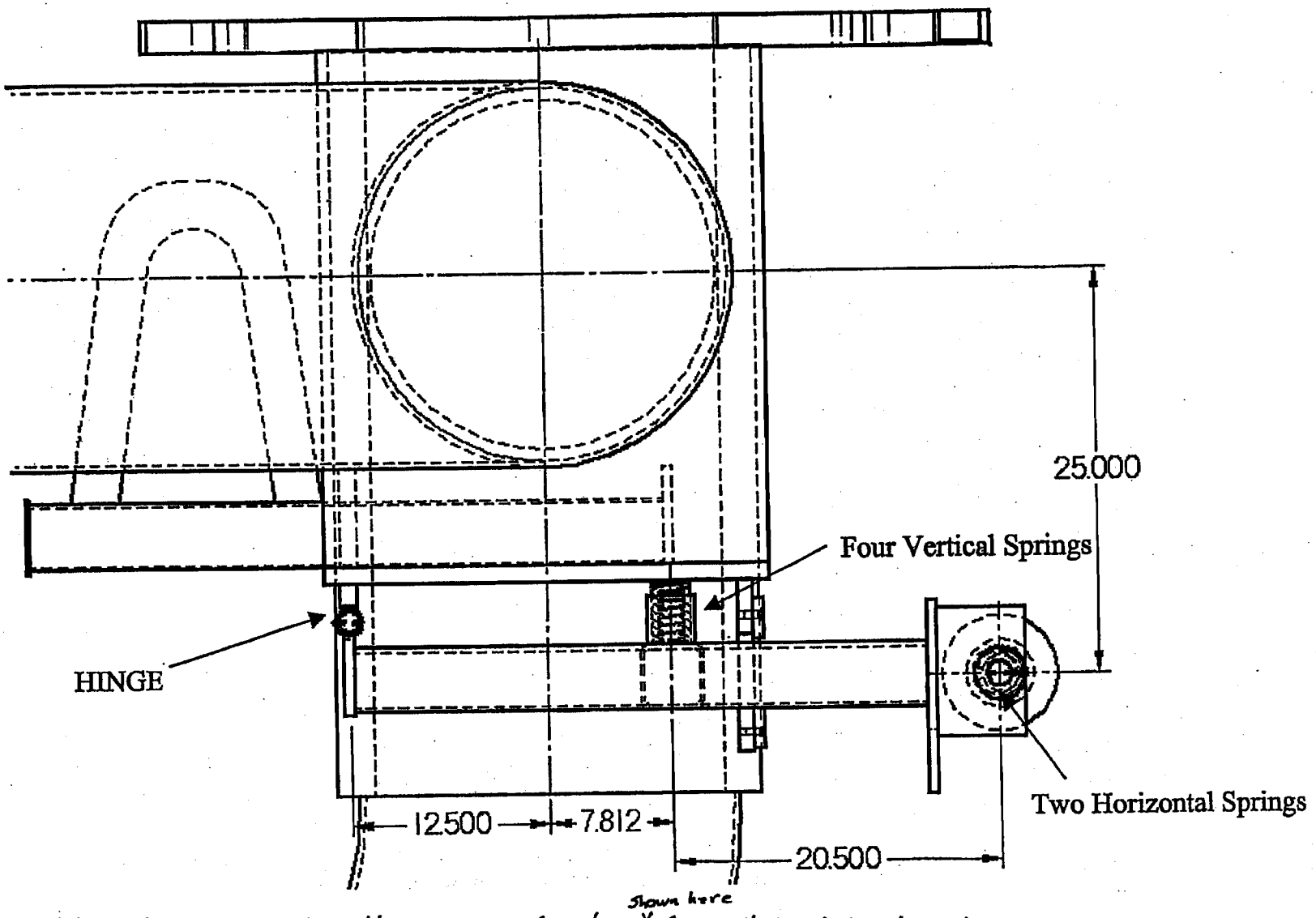

shown here

Note: Use Mid Roller Assembly spring configuration V for all Mid Roller Assemblies until finalized information is available.

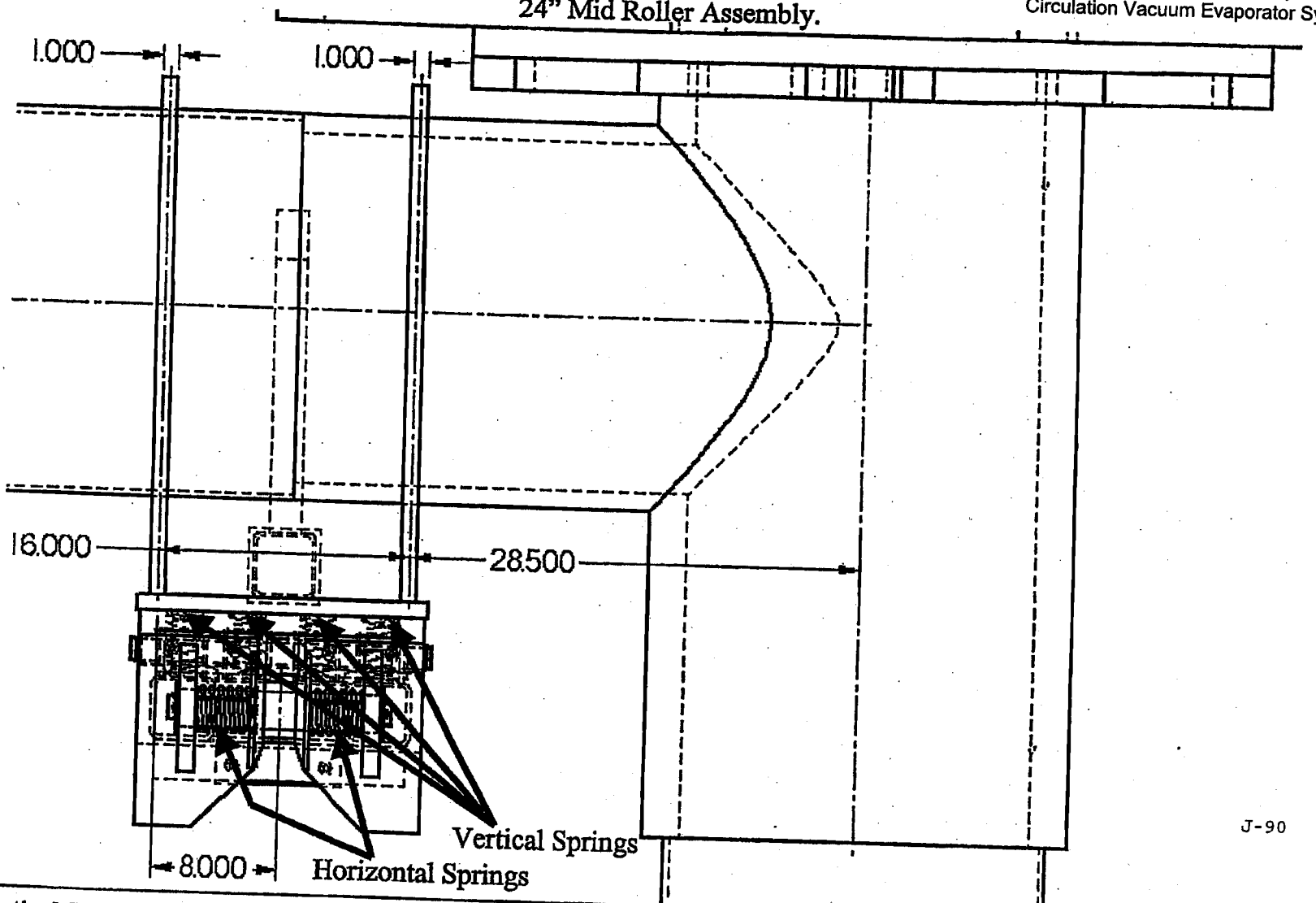

Vertical Spring:
•Spring Rate: 1310 lbs/in
•Preload: Four springs are compressed approximately 0.150" during installed cold condition. (Springs are in parallel)
Horizontal Spring (North-South):
•Spring Rate: 76 lbs/in
•Preload: 0.000" preload during the installed cold condition. (One spring acting in north direction, one acting spring in south direction)

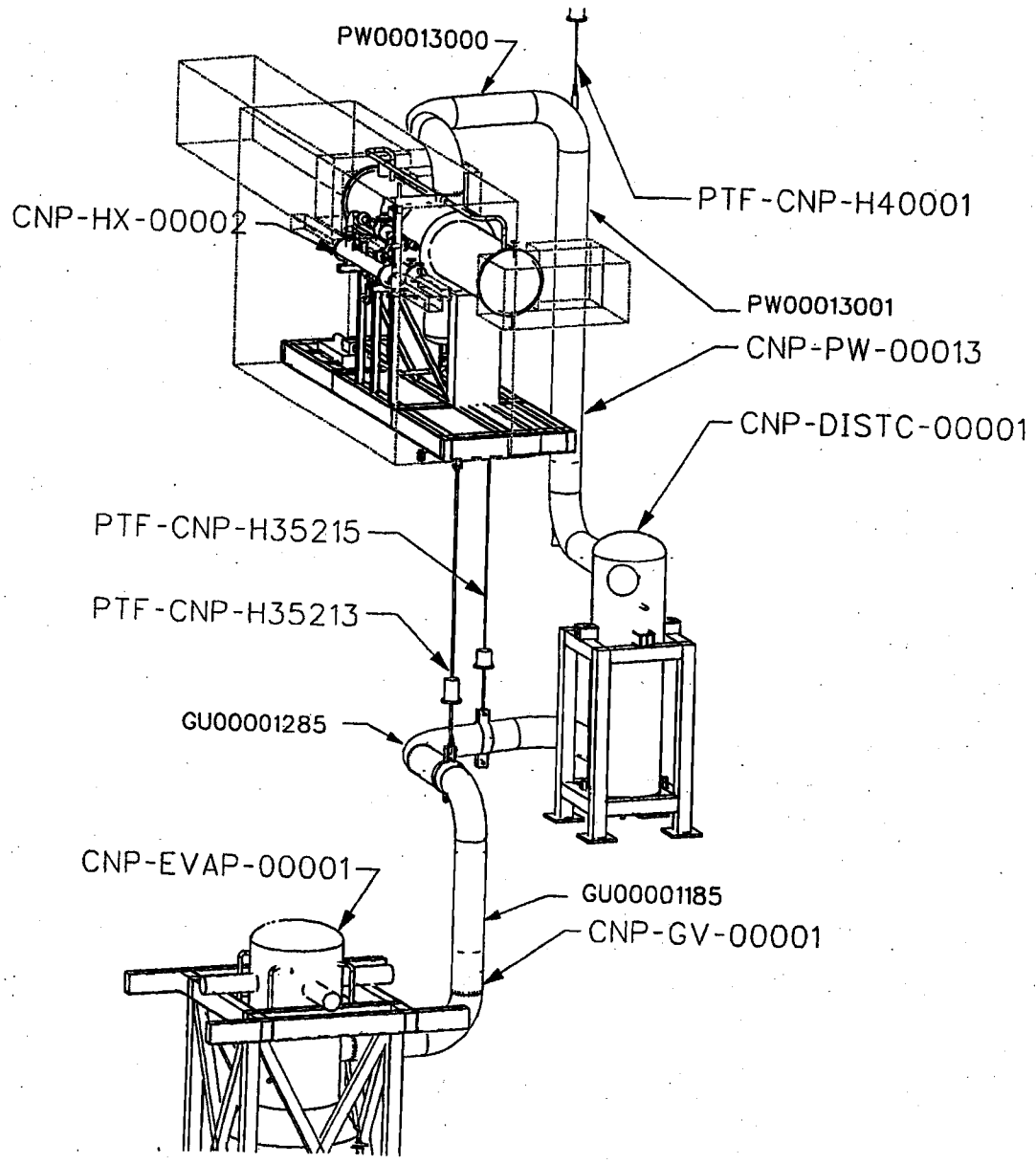
PW00013000
PTF-CNP-H40001
CNP-HX-00002
PW00013001
CNP-PW-00013
CNP-DISTC-00001
PTF-CNP-H35215
PTF-CNP-H35213
GU00001285
CNP-EVAP-00001
GU00001185
CNP-GV-00001

J-91

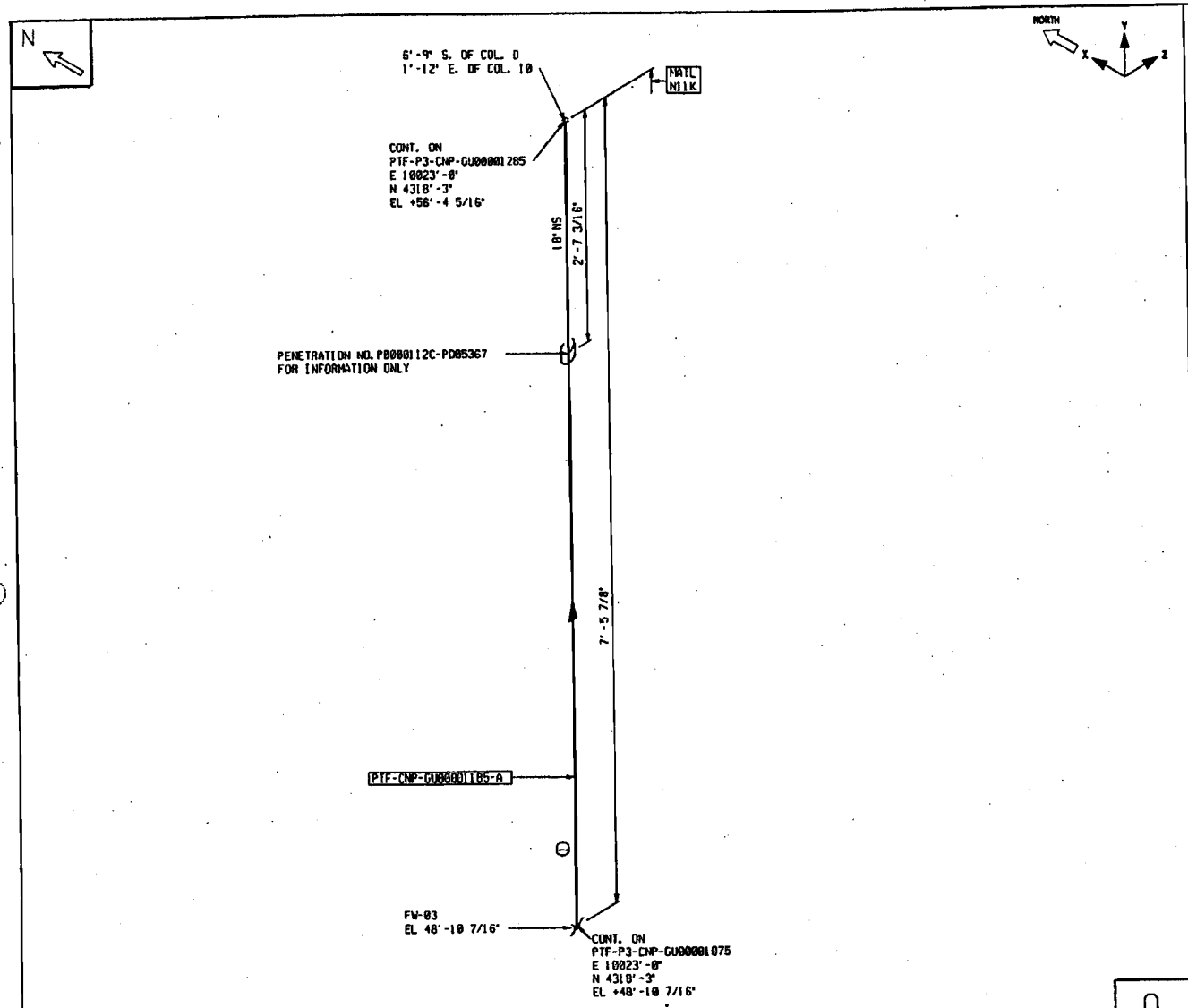

NOTES:

1. FOR GENERAL NOTES AND LEGEND SEE DWG. 24590-WTP-P0-50-00001001.

SHOP MATERIALS

PART NO	COMPONENT DESCRIPTION	N.S. (INCHES)	QTY	BECHTEL STK CODE
	PIPE			
1	NICKEL ALLOY PIPE	18	7'6"	PPPC9R00030A

STRESS REVIEW PRINT	REV	
☐ ACCEPTED	☐	NOT ACCEPTED
☐ ACCEPTED W/ COMMENTS	☐	SUPPORTS ADDED TO MODEL
STRESS ANALYST:	BY:	DATE:

BECHTEL

RIVER PROTECTION PROJECT
WASTE TREATMENT PLANT
2435 STEVENS CENTER PLACE
RICHLAND, WA 99352

CONTRACT No: DE-AC27-01RV14136

P&ID: 24590-PTF-M6-CNP-00008 | CONST. WORK AREA: 09

PRETREATMENT FACILITY ISOMETRIC

LINE No. CNP-GU-00001-N11K-18 | PIPE SPEC: N11K

DWG No. 24590-PTF-P3-CNP-GU00001185 | REV A

PAINT CODE	NA	CONTENT APPLICABLE TO ALARA? ☐ YES ☐ NO	
INSULATION TYPE	NI	ADR NO.	REV.
INSULATION THK.	0	SEISMIC CAT.	SC-1

Q QUALITY LEVEL

LENGTH (FT.) 7.49 (FOR INFO ONLY) JSM Created: AUG-17-2006 10:02 Iso Created: AUG-17-2006 10:02 PCF File: 24590-PTF-P3-CNP-GU00001185 PLOTTED BY: sjwitkow PLOT DATE: 08/17/2006 10:05:44 AM SHT.1 OF 1

ISO TYPE: PT_xSTRESS C:\iso\24590-PTF-P3-CNP-GU00001185.DGN

COMPUTER GENERATED - MANUAL CHANGES NOT PERMITTED

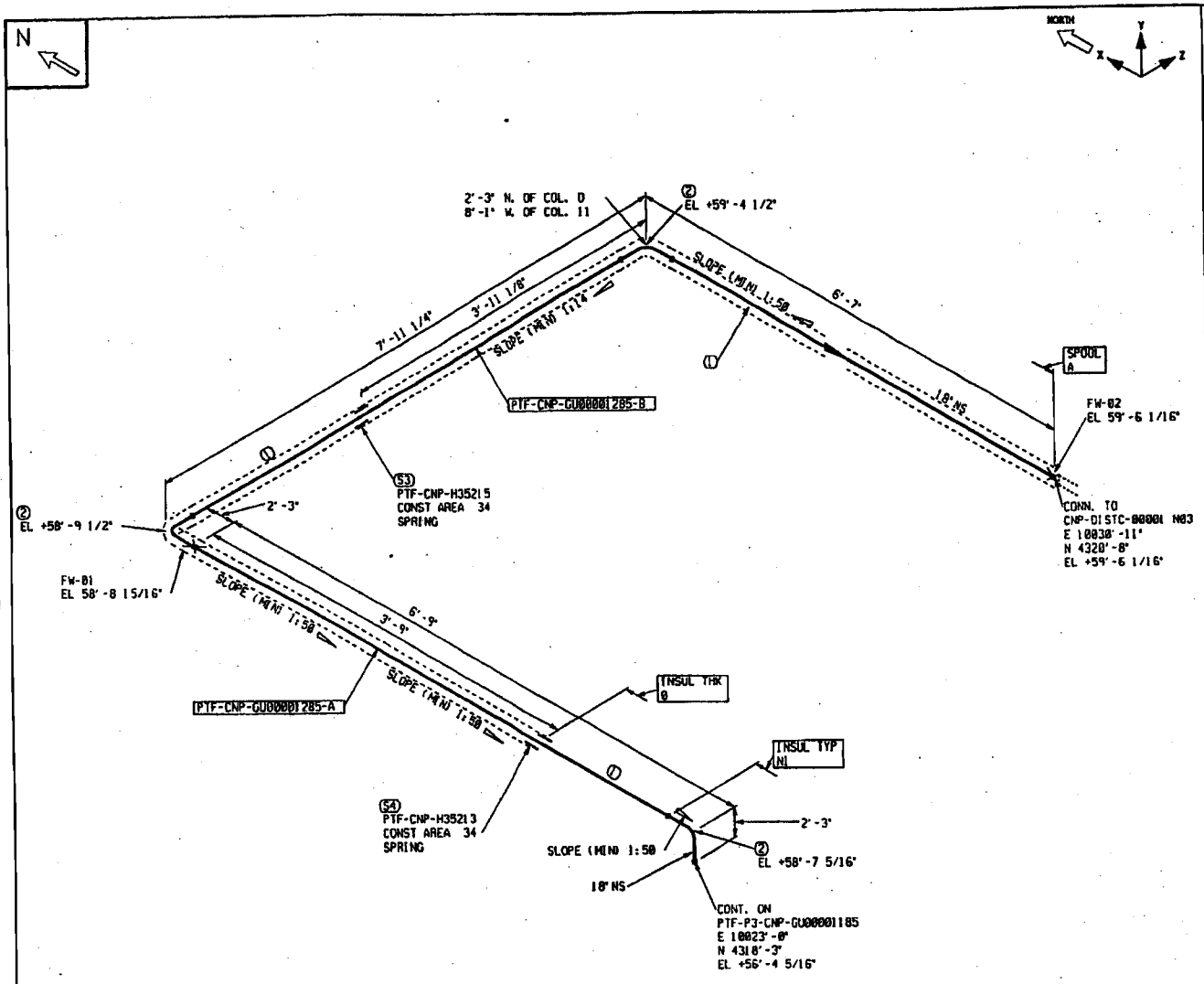

NOTES:

1. FOR GENERAL NOTES AND LEGEND SEE DWG. 24590-WTP-PD-50-00001001.

SHOP MATERIALS

PART NO	COMPONENT DESCRIPTION	N.S. (INCHES)	QTY	BECHTEL STK CODE
	PIPE			
1	PIPE, B675N08367CLI, WELDED, 0.250", BBE	18	12'4"	PPPC9R8JPZ0A
	FITTINGS			
2	EL - 90, LR, BW, B366 GRADE WP6XN-W, 0.250"	18	3	PFON9R8J1A0R

FIELD MATERIALS

PART NO	COMPONENT DESCRIPTION	N.S. (INCHES)	QTY	BECHTEL STK CODE
	SUPPORTS			
3	PIPE SUPT, PTF-CNP-H35215		1	
4	PIPE SUPT, PTF-CNP-H35213		1	

STRESS REVIEW PRINT		REV
☐ ACCEPTED	☐	NOT ACCEPTED
☐ ACCEPTED W/ COMMENTS	☐	SUPPORTS ADDED TO MODEL BY:
STRESS ANALYST:		DATE:

RIVER PROTECTION PROJECT
WASTE TREATMENT PLANT
2435 STEVENS CENTER PLACE
RICHLAND, WA 99352

CONTRACT No: DE-AC27-01RV14136

P&ID: 24590-PTF-MG-CNP-00010 | CONST. WORK AREA: 34

PRETREATMENT FACILITY ISOMETRIC

LINE No. CNP-GU-00001-N11G-18 | PIPE SPEC: N11G

DWG No. 24590-PTF-P3-CNP-GU00001285 | REV A

PAINT CODE	NA	CONTENT APPLICABLE TO ALARA? ☐ YES ☐ NO	
INSULATION TYPE	PP	ADR NO.	REV.
INSULATION THK.	1.5	SEISMIC CAT.	SC-1

QUALITY LEVEL: Q

LENGTH (FT.) 25.77 (FOR INFO ONLY) JSM Created: AUG-17-2006 10:02 | Iso Created: AUG-17-2006 10:03 | PCF File: 24590-PTF-P3-CNP-GU00001285 | PLOTTED BY: sjwitkow | PLOT DATE: 08/17/2006 10:06:06 AM | SHT. 1 OF 1

ISO TYPE: PT_xSTRESS C:\iso\24590-PTF-P3-CNP-GU00001285.DGN

COMPUTER GENERATED - MANUAL CHANGES NOT PERMITTED

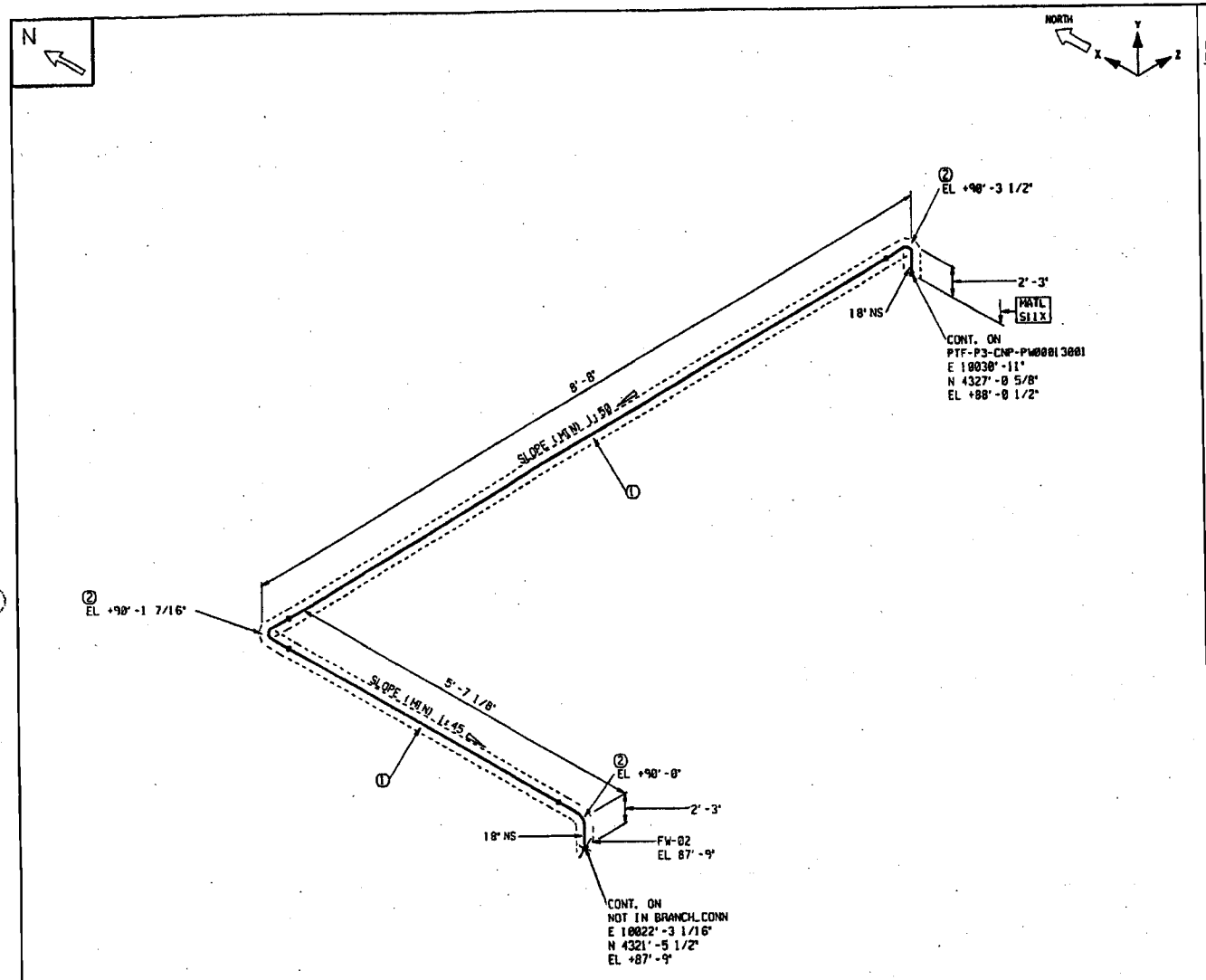

SHOP MATERIALS

PART NO	COMPONENT DESCRIPTION	N.S. (INCHES)	QTY	BECHTEL STK CODE
	PIPE			
1	PIPE, A312TP316/316L, EFW, 0.250", BBE	18	5'-4"	PPPC08BJ1WBA
	FITTINGS			
2	EL - 90, LR, BW, A403WP316/316L-WX, 0.250"	18	3	PFON4Y8BJ240R

COMPUTER GENERATED - MANUAL CHANGES NOT PERMITTED

NOTES:
1. FOR GENERAL NOTES AND LEGEND SEE DWG. 24590-WTP-PO-50-00001001.

STRESS REVIEW PRINT	REV
☐ ACCEPTED	☐ NOT ACCEPTED
☐ ACCEPTED W/ COMMENTS	☐ SUPPORTS ADDED TO MODEL BY:
STRESS ANALYST:	DATE:

RIVER PROTECTION PROJECT
WASTE TREATMENT PLANT
2435 STEVENS CENTER PLACE
RICHLAND, WA 99352

CONTRACT No: DE-AC27-01RV14136

P&ID: 24590-PTF-M6-CNP-00018 | CONST. WORK AREA:

PRETREATMENT FACILITY ISOMETRIC

LINE No. | PIPE SPEC:

DWG No. 24590-PTF-P3-CNP-PW00013000 | REV A

PAINT CODE	NA	CONTENT APPLICABLE TO ALARA? ☐ YES ☐ NO	
INSULATION TYPE		ADR NO.	REV.
INSULATION THK.		SEISMIC CAT.	SC-1

Q QUALITY LEVEL

LENGTH (FT.) NO DATA (FOR INFO ONLY) JSM Created: AUG-17-2006 10:02 Iso Created: AUG-17-2006 10:03 PCF File: 24590-PTF-P3-CNP-PW00013000 PLOTTED BY: sjwitkow PLOT DATE: 08/17/2006 10:06:25 AM SHT. 1 OF 1

ISO TYPE: PT_xSTRESS C:\Iso\24590-PTF-P3-CNP-PW00013000.DGN

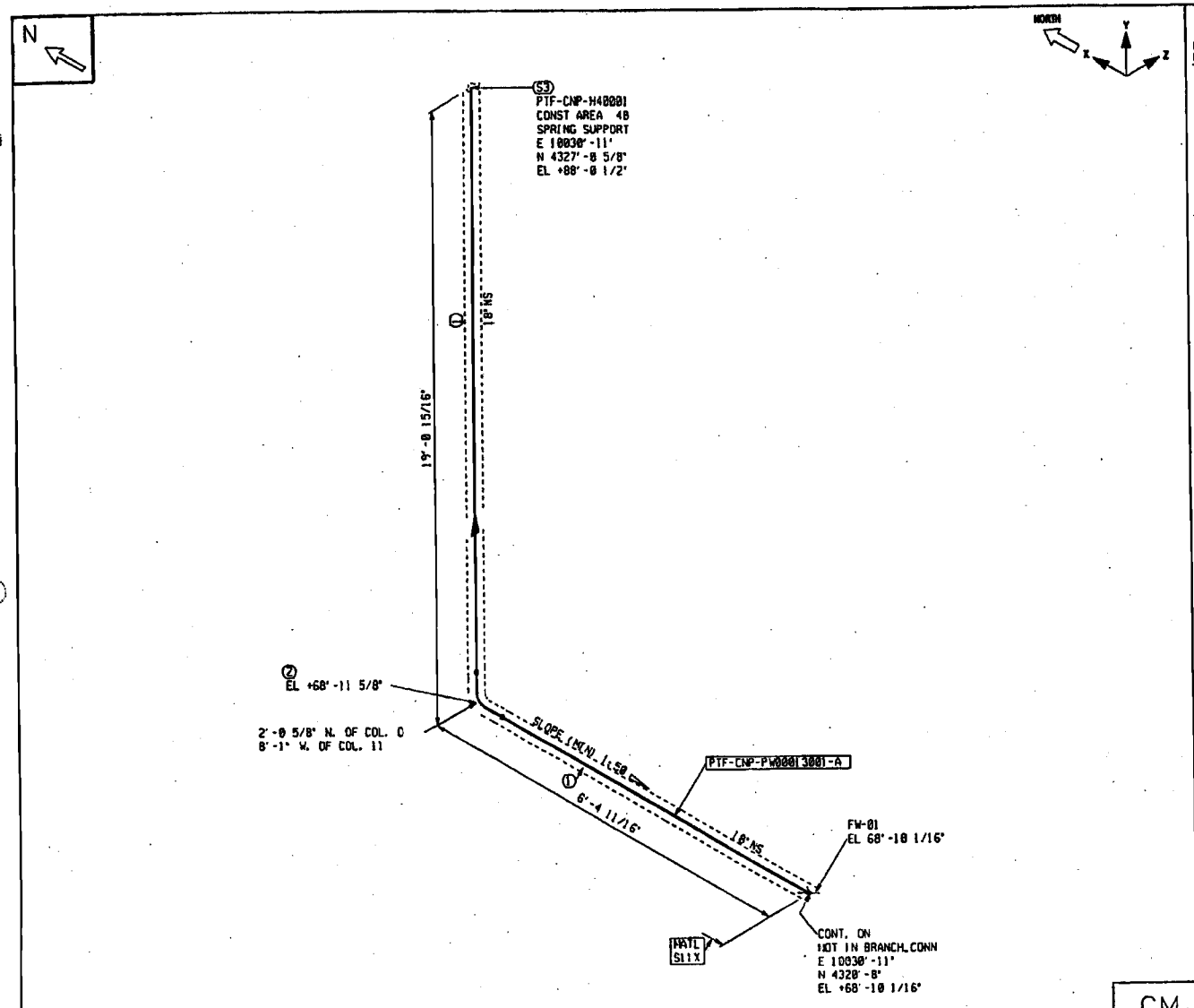

NOTES:
1. FOR GENERAL NOTES AND LEGEND SEE DWG. 24590-WTP-PO-SO-00001001.

SHOP MATERIALS

PART NO	COMPONENT DESCRIPTION	N.S. (INCHES)	QTY	BECHTEL STK CODE
	PIPE			
1	PIPE, A312TP316/316L, EFW, 0.250", BBE	18	21'-8"	PPPC0B0J1W0A
	FITTINGS			
2	EL - 90, LR, BW, 4403WP316/316L-WX, 0.250"	18	1	PFQN4Y0J240R

FIELD MATERIALS

PART NO	COMPONENT DESCRIPTION	N.S. (INCHES)	QTY	BECHTEL STK CODE
	SUPPORTS			
3	PIPE SUPT, PTF-CNP-H40001		1	

STRESS REVIEW PRINT		REV	
☐ ACCEPTED		☐ NOT ACCEPTED	
☐ ACCEPTED W/ COMMENTS		☐ SUPPORTS ADDED TO MODEL	BY:
STRESS ANALYST:		DATE:	

RIVER PROTECTION PROJECT
WASTE TREATMENT PLANT
2435 STEVENS CENTER PLACE
RICHLAND, WA 99352

CONTRACT No: DE-AC27-01RV14136

P&ID: 24590-PTF-HG-CNP-00010 | CONST. WORK AREA: 34

PRETREATMENT FACILITY ISOMETRIC

LINE No. CNP-PW-00013-S11X-18 | PIPE SPEC: S11X

DWG No. 24590-PTF-P3-CNP-PW00013001 | REV A

CM QUALITY LEVEL

PAINT CODE	NA	CONTENT APPLICABLE TO ALARA? ☐ YES ☐ NO			
INSULATION TYPE	PP	ADR NO.	REV.		
INSULATION THK.	1.5		SEISMIC CAT.	SC-1	

LENGTH (FT.) 25.47 (FOR INFO ONLY) JSM Created: AUG-17-2006 10:02 Iso Created: AUG-17-2006 10:03 PCF File: 24590-PTF-P3-CNP-PW00013001 PLOTTED BY: sjwilkow PLOT DATE: 08/17/2006 10:06:46 AM SHT. 1 OF 1

ISO TYPE: PT_sSTRESS C:\iso\24590-PTF-P3-CNP-PW00013001.DGN

COMPUTER GENERATED - MANUAL CHANGES NOT PERMITTED

ATTACHMENT # 4

Attached tables show the design load requirements for forces and moments applied to piping nozzles on separator vessel, reboiler, distillation column, and condensers.

The direction of the listed forces and moments for vertical nozzles into the equipment head are provided in global coordinates (X = North/South, y = vertical, and z = East/West - Vessel 0° defined as North).

The directions of the listed forces and moments for horizontal nozzles into the equipment shell are provided in local coordinates per 24590-WTP-3PS-MV00-T0001.

CNP-EVAP-00001 SC-I

TABLE 1

CCN 126201

Note:
*V = vertical head nozzle - values are x = North/South, y = vertical, z = East/West (global coordinates), Vessel 0° defined as North
**H = horizontal shell nozzle - values are per axes shown in 24590-WTP-3PS-MV00-T0001 Rev 2, Appendix A (local coordinates)

Nozzle Number	Nozzle Size (in)	Orientation (V* / H**)	Load Case	Design Loads (Force in lbs, Moment in ft-lb)					
				Fx	Fy	Fz	Mx	My	Mz
N01	14	Note 1	~~Weight~~	~~2990~~	~~3770~~	~~436~~	~~2490~~	~~1500~~	~~10000~~
			~~Seismic~~	~~1950~~	~~1090~~	~~1430~~	~~9450~~	~~14175~~	~~14175~~
			~~Thermal~~	~~1950~~	~~1820~~	~~1840~~	~~9850~~	~~19350~~	~~19350~~
N02	16	Note 1	~~Weight~~	~~547~~	~~4550~~	~~547~~	~~3128~~	~~1958~~	~~1958~~
			~~Seismic~~	~~1710~~	~~1885~~	~~1710~~	~~12075~~	~~18150~~	~~18150~~
			~~Thermal~~	~~2080~~	~~1810~~	~~2400~~	~~16850~~	~~25400~~	~~25400~~
N03	18	H	~~Weight~~	~~684~~	~~1095~~	~~684~~	~~3803~~	~~2378~~	~~2378~~
			~~Seismic~~	~~2115~~	~~2871~~	~~3035~~	~~20735~~	~~22425~~	~~22425~~
			~~Thermal~~	~~2290~~	~~2080~~	~~3050~~	~~16200~~	~~32340~~	~~32340~~
N05	2	H	Weight	50	60	50	75	75	75
			Seismic	106	70	106	158	237	237
			Thermal	80	70	100	110	220	220
N06	3	H	Weight	52	84	52	119	75	75
			Seismic	162	108	162	468	701	701
			Thermal	203	219	200	430	860	860
N07	1	H	Weight	15	20	15	20	20	20
			Seismic	30	20	30	37	55	55
			Thermal	20	20	30	30	50	50
N08	2	H	Weight	50	60	50	75	75	75
			Seismic	106	70	106	158	237	237
			Thermal	80	70	100	110	220	220
N09A*	1	H	Weight	15	20	15	20	20	20
			Seismic	41	20	30	37	84	55
			Thermal	21	20	30	42	50	50
N09B*	1	H	Weight	15	20	15	20	20	20
			Seismic	30	20	30	37	55	55
			Thermal	20	32	30	30	50	58
N10	0.75	H	Weight	15	20	15	20	20	20
			Seismic	51	20	30	37	55	55
			Thermal	20	20	30	30	50	50
N11A	1	H	Weight	15	20	15	20	20	20
			Seismic	30	20	30	37	55	55
			Thermal	20	23	30	30	50	50
N11B	1	H	Weight	15	20	15	20	20	20
			Seismic	30	20	51	37	99	55
			Thermal	20	20	30	30	50	50
N12	2	H	Weight	50	60	50	75	75	75
			Seismic	106	70	106	158	237	237
			Thermal	80	70	100	110	220	220
N13	2	H	Weight	50	60	50	75	75	75
			Seismic	106	70	106	158	237	237
			Thermal	80	70	100	110	220	220

EQL 8/10/04

* Nozzle loads for these bubblers due to hydrogen accumulation are not available and will be provided later.

Note 1: Nozzle loads for N01, N02, and N03 shall be per Seller's design & qualification using the results of the coupled FEA.

CNP-EVAP-00001 SC-I

TABLE 1 (CONT.)

Note:
*V = vertical head nozzle - values are x = North/South, y = vertical, z = East/West (global coordinates), Vessel 0° defined as North
**H = horizontal shell nozzle - values are per axes shown in 24590-WTP-3PS-MV00-T0001 Rev 2, Appendix A (local coordinates)

Nozzle Number	Nozzle Size (in)	Orientation (V* / H**)	Load Case	Design Loads (Force in lbs, Moment in ft-lb)					
				Fx	Fy	Fz	Mx	My	Mz
N16*	1	H	Weight	15	20	15	20	20	20
			Seismic	30	47	30	37	60	85
			Thermal	23	20	30	30	50	50
N17 Spare	2	H	Weight	50	60	50	75	75	75
			Seismic	106	70	106	158	237	237
			Thermal	80	70	100	110	220	220
N18 Spare	2	H	Weight	50	60	50	75	75	75
			Seismic	106	70	106	158	237	237
			Thermal	80	70	100	110	220	220
N21A*	1	H	Weight	15	20	15	20	20	20
			Seismic	30	54	30	37	55	55
			Thermal	20	25	30	30	50	58
N21B*	1	H	Weight	15	20	15	20	20	20
			Seismic	30	20	30	37	80	55
			Thermal	20	25	30	64	50	50
N22*	1	H	Weight	15	20	15	20	20	20
			Seismic	30	20	30	37	59	55
			Thermal	21	36	30	33	50	95
N24A	1	H	Weight	15	20	15	20	20	28
			Seismic	30	28	37	37	106	88
			Thermal	20	20	30	30	60	50
N24B	1	H	Weight	15	20	15	20	20	20
			Seismic	30	20	30	37	91	55
			Thermal	20	20	30	30	50	50
N25	24	Manway	Weight	Manway	Manway	Manway	Manway	Manway	Manway
			Seismic	Manway	Manway	Manway	Manway	Manway	Manway
			Thermal	Manway	Manway	Manway	Manway	Manway	Manway

* Nozzle loads for these bubblers due to hydrogen accumulation are not available and will be provided later.

Note 1: Nozzle loads for N01, N02, and N03 shall be per Seller's design & qualification using the results of the coupled FEA.

TABLE 2

PRELIMINARY Nozzle Loads on Non-Black Cell Vessels Designated as SC-1							
Pipe Size	Load Type	Forces			Moments		
		Fx (lb)	Fy (lb)	Fz (lb)	Mx (ft-lb)	My (ft-lb)	Mz (ft-lb)
1 in	Weight	15	20	15	20	20	20
1 in	Seismic	45	30	45	56	83	83
1 in	Thermal	30	26	40	38	77	77
1-1/2 in	Weight	35	45	35	40	40	40
1-1/2 in	Seismic	90	60	90	137	206	206
1-1/2 in	Thermal	64	56	86	96	192	192
2 in	Weight	50	60	50	75	75	75
2 in	Seismic	159	105	159	237	356	356
2 in	Thermal	114	100	152	169	337	337
3 in	Weight	69	111	69	158	99	99
3 in	Seismic	323	215	323	935	1401	1401
3 in	Thermal	228	203	305	664	1330	1330
4 in	Weight	116	186	116	288	180	180
4 in	Seismic	548	365	548	1755	2640	2640
4 in	Thermal	393	350	524	1260	2520	2520
6 in	Weight	279	446	279	797	498	498
6 in	Seismic	1326	885	1326	4845	7275	7275
6 in	Thermal	980	872	1310	3580	7160	7160
8 in	Weight	311	497	311	988	618	618
8 in	Seismic	1467	980	1467	5895	8835	8835
8 in	Thermal	1190	1060	1590	4800	9590	9590
10 in	Weight	351	561	351	1880	1180	1180
10 in	Seismic	1635	1092	1635	11010	16500	16500
10 in	Thermal	1270	1130	1690	8500	17000	17000
12 in	Weight	485	776	485	2710	1700	1700
12 in	Seismic	2265	1515	2265	15750	23700	23700
12 in	Thermal	1780	1580	2370	12400	24800	24800
14 in	Weight	581	930	581	3320	2080	2080
14 in	Seismic	2700	1800	2700	18900	28350	28350
14 in	Thermal	2140	1900	2860	15000	30100	30100
16 in	Weight	729	1170	729	4170	2610	2610
16 in	Seismic	3420	2280	3420	24150	36300	36300
16 in	Thermal	2800	2490	3730	19800	39500	39500
18 in	Weight	911	1460	911	5070	3170	3170
18 in	Seismic	4230	2820	4230	30000	44850	44850
18 in	Thermal	3550	3160	4730	25200	50300	50300
20 in	Weight	1120	1790	1120	6310	3950	3950
20 in	Seismic	5100	3405	5100	35850	53700	53700
20 in	Thermal	4440	3950	5920	31200	62400	62400
22 in	Weight	1340	2150	1340	7300	4560	4560
22 in	Seismic	6045	4035	6045	42150	63300	63300
22 in	Thermal	5430	4830	7240	37900	75800	75800
24 in	Weight	1570	2510	1570	8510	5320	5320
24 in	Seismic	7065	4710	7065	48600	73050	73050
24 in	Thermal	6560	5840	8750	45200	90400	90400

TABLE 3: CNP Reboiler Steam Design Nozzle Loads

Reboiler Vessel ID Number	Nozzle Number	Calculation Number	Load Case	Reboiler Steam Nozzle Design Loads					
				Fx (lb)	Fy (lb)	Fz (lb)	Mx (ft-lb)	My(ft-lb)	Mz (ft-lb)
CNP-RBLR-00001	N03	24590-PTF-P61C-CNP-00011	WT01	-339	-1510	-45	-64	58	-5958
			OCC	2768	4430	1608	3594	2415	7509
			THRM01	-405	-940	-16	641	181	-1870

NOTES:

- Load direction per 24590-WTP-3PS-MV000-T0001, APPENDIX A.
- Tabulated loads are from ME101 analyses results with 25% increase factor for design purposes.
- Seismic loads considered the new ISRS, 5% damping and Modal Sum by CQC. Applied Fμ is unity.
- Ref. CCN 110509

ATTACHMENT # 5

CNP Design Concepts

Pump Flange Detail

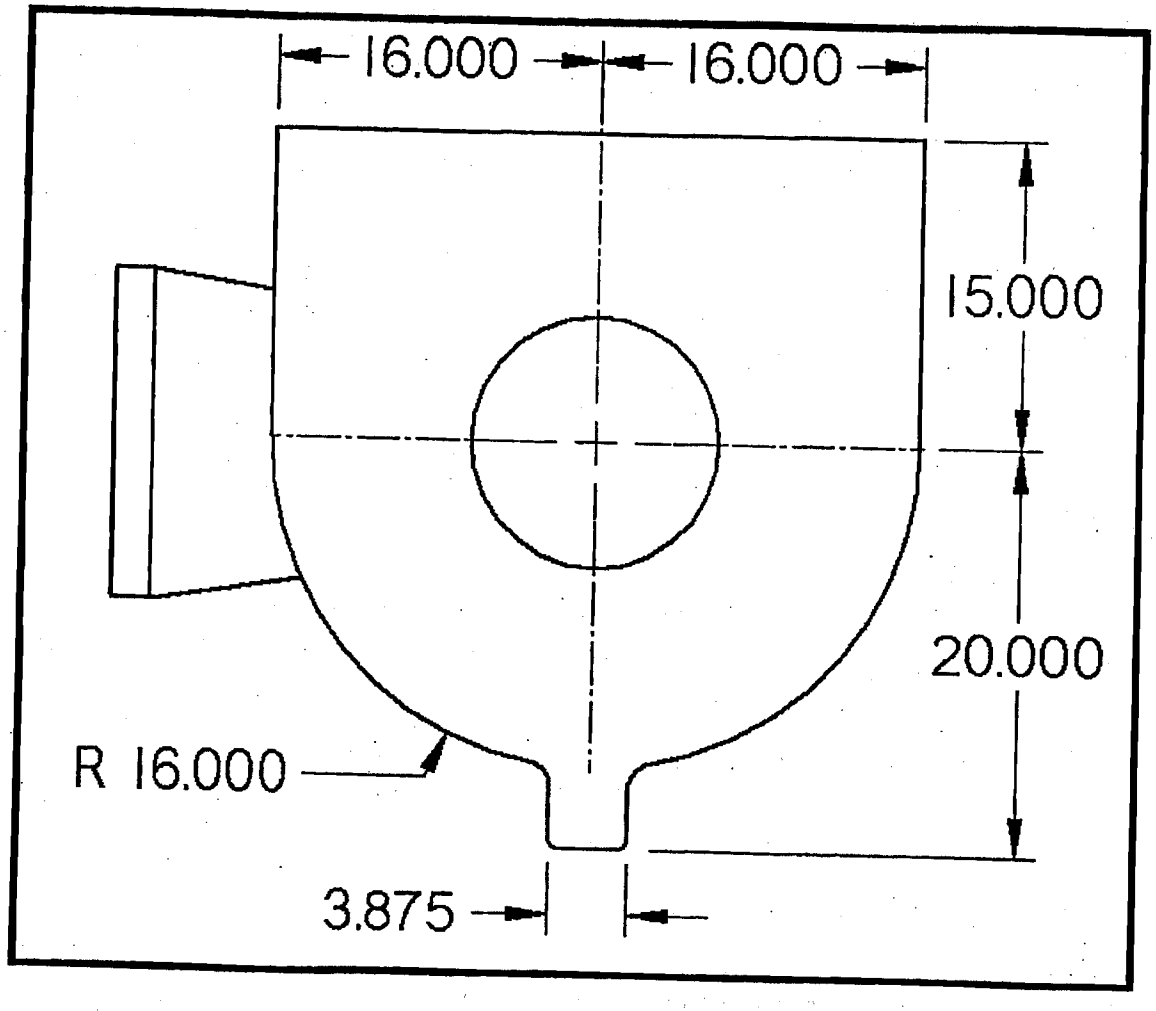

Pump Support Frame (CNP)

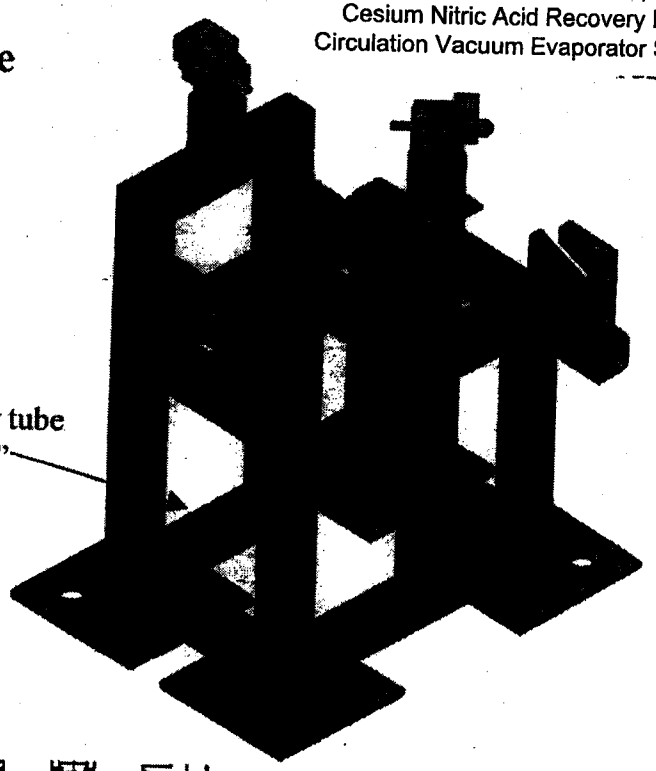

Proposed main member tube steel size: 8" x 8" x 1/2"

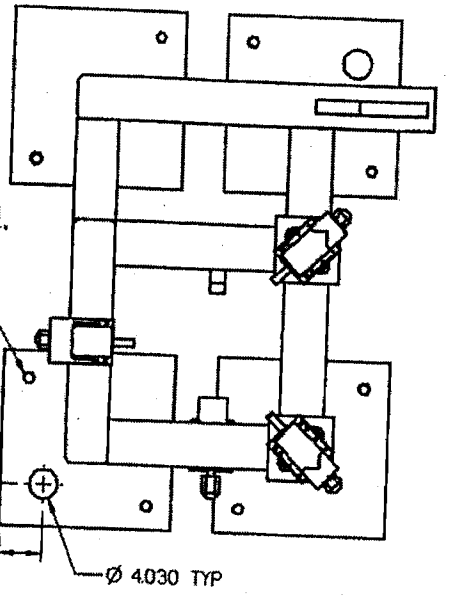

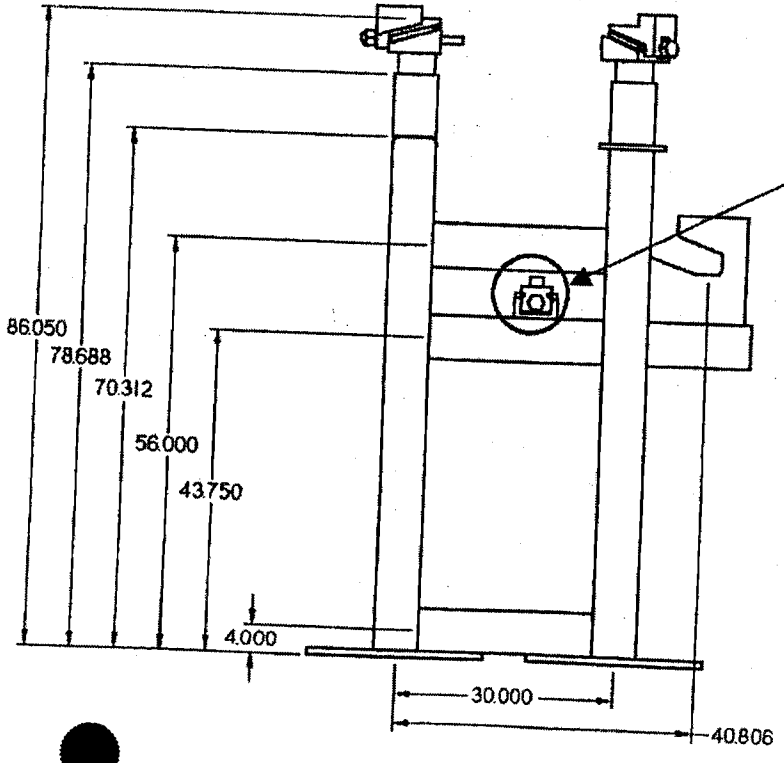

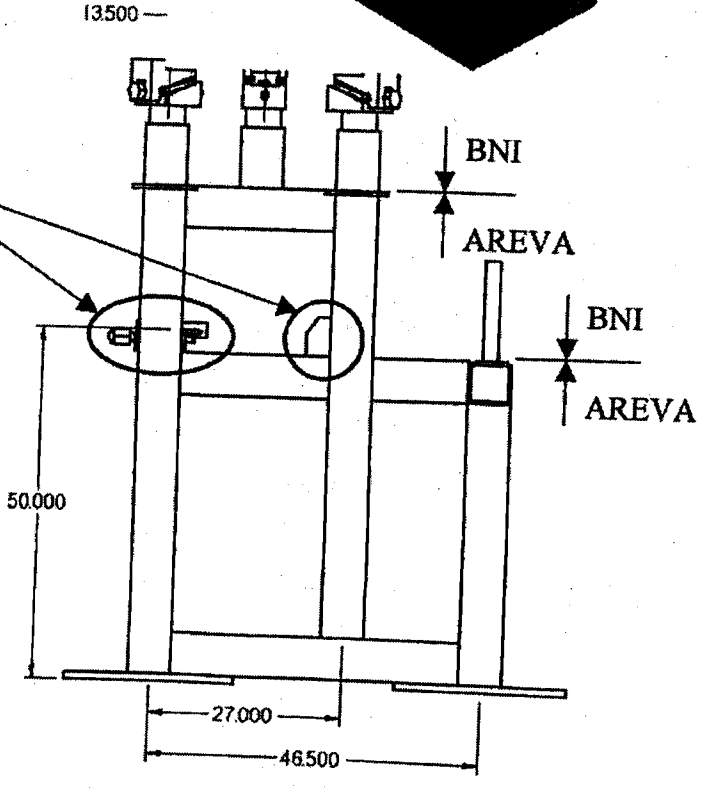

Sole Plates (CNP)

Stud location as required. Must be accessible with impact wrench.

Example Sole Plate

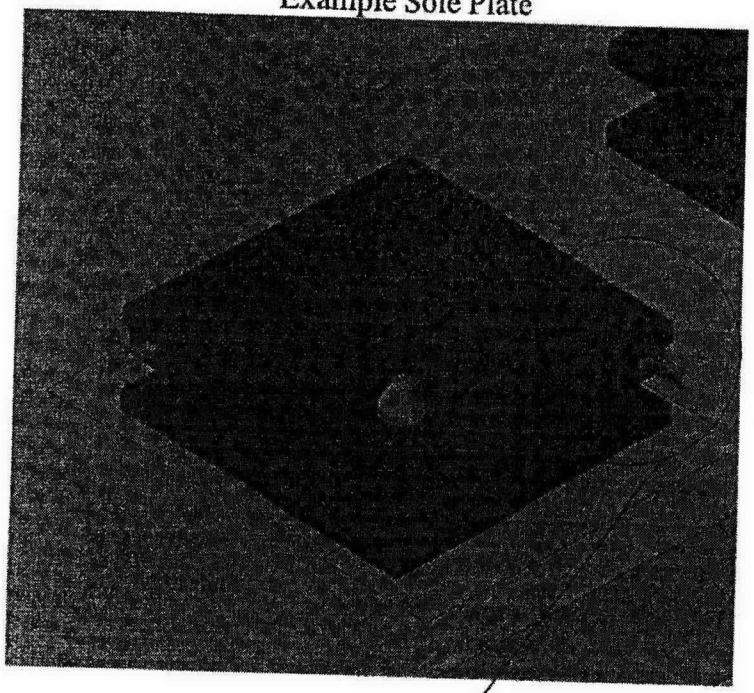

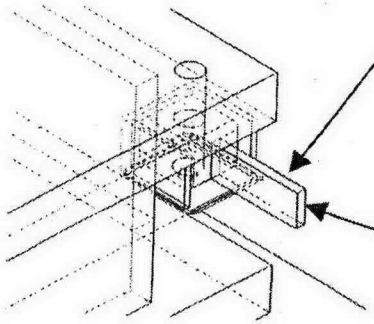

Dowel Pin (Typ)

Captured Nuts must be accessible with the Power Manipulator.

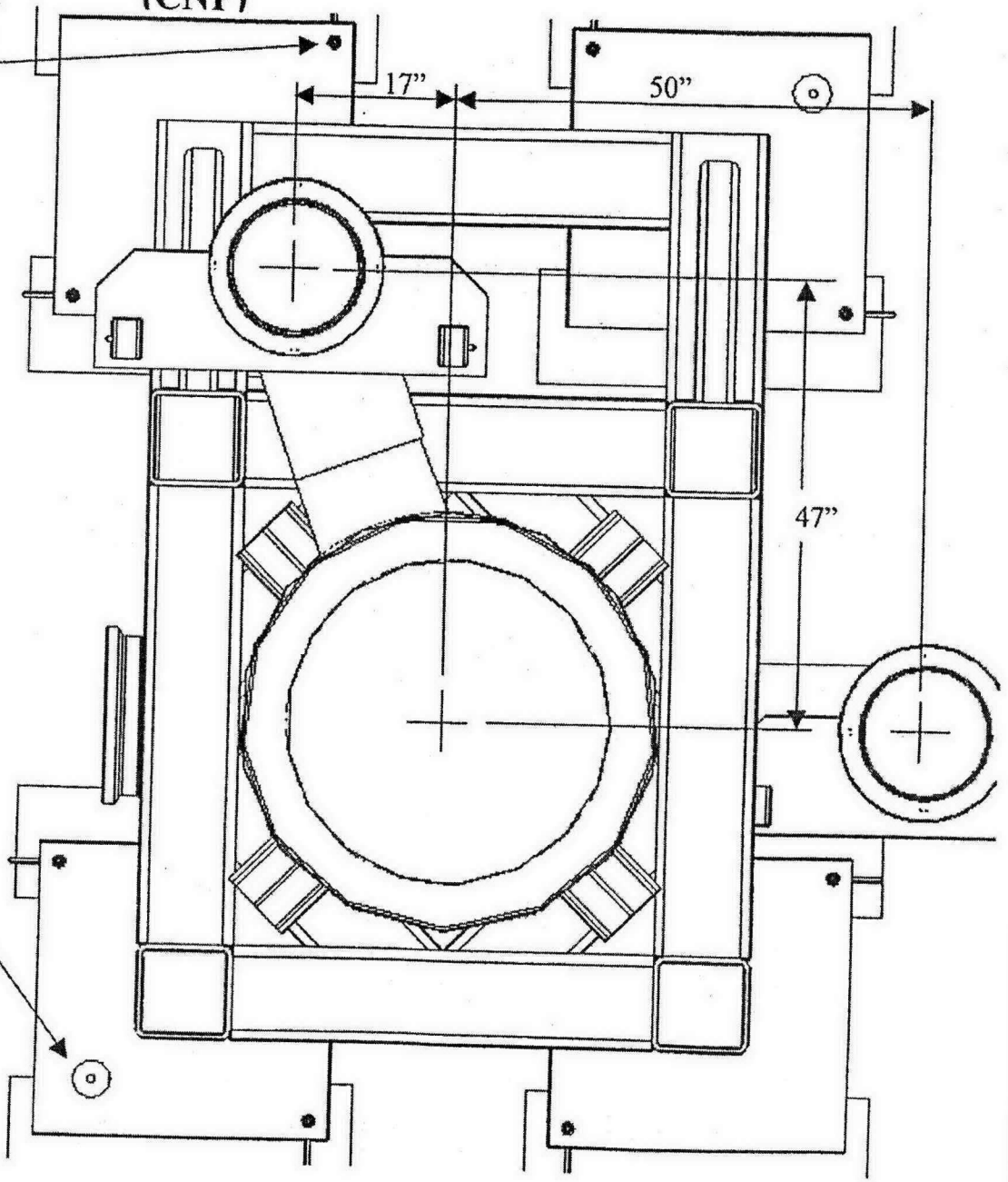

ATTACHMENT # 6

SC-I/II Seismic Analysis Qualification and FEA Report Check List

SC-I/II Seismic Analysis Qualification and FEA Report Check List

Required Data	Source Reference	Applicable Section of Seismic Qualification Report
1 Identification and Description of Equipment		
1.1 Equipment Tag Number or other identification that uniquely defines the equipment	24590-WTP-3PS-SS90-T0001 §7.1.2(a)	
1.2 Identification of safety functions of the equipment that must be provided during and after a design basis earthquake (DBE)	24590-WTP-3PS-SS90-T0001 §7.1.2(d) 24590-WTP-3PS-MV00-T0002 §7.3.1 Equipment specification and/or data sheet	
1.3 Identification and description of the parts or features of the equipment that perform the safety functions and are therefore required to resist the DBE (this includes identification of Seismic Categories of relevant components or parts of the equipment)	Equipment specification and/or data sheet 24590-WTP-3PS-MV00-T0002 §2.2.4 DOE-STD-1020-94 §1.4 (page 1-7) and §C.8 (page C-65)	
1.4 Identification of basic material properties, key dimensions, and physical configuration of the equipment, including reference to design drawings/documents (including revision designation) that are used to control the design/configuration of the equipment	24590-WTP-3PS-SS90-T0001 §7.1.2(c)	
2 Description of Analyses and Methodology		
2.1 Reference to governing code(s) that specify ultimate or yield values (code allowable strength or stress levels)	Equipment specification and/or data sheet 24590-WTP-3PS-SS90-T0001 §7.1.2(e) 24590-WTP-3PS-MV00-T0002 §2.2.4 DOE-STD-1020-94 §2.3.2 (page 2-12)	
2.2 Identification of the code-defined strength or stress levels used in the analyses (the capacity of the equipment based on code ultimate or yield values)	24590-WTP-3PS-SS90-T0001 §7.1.2(e) 24590-WTP-3PS-MV00-T0002 §2.2.4 DOE-STD-1020-94 §2.3.2 (page 2-12)	
2.3 Definition of the seismic loads (earthquake loadings) used in the analysis (e.g., in-structure response spectra)	24590-WTP-3PS-SS90-T0001 §7.1.2(e) DOE-STD-1020-94 §1.4 (page 1-7), §2.2 (page 2-4), §C.8 (page C-65) 24590-WTP-3PS-MV00-T0002 §2.2.4	
2.4 Identification of equipment aging processes (e.g., corrosion, erosion, radiation, vibration/thermal fatigue, etc.), documentation or reference to documentation of these affects on material properties over the design life of the equipment, and evidence that the equipment will continue to provide its safety functions during and after a DBE at the end of design life	Equipment specification and/or data sheet 24590-WTP-3PS-SS90-T0001 §2.3 IEEE Std 344	

SC-I/II Seismic Analysis Qualification and FEA Report Check List

Required Data		Source Reference	Applicable Section of Seismic Qualification Report
2.5	If an equivalent static analysis model is used in lieu of dynamic analyses, include justification of the adequacy of this approach (e.g., evidence that the structural features of the equipment are relatively simple, symmetric, and have essentially uniform distribution of mass and stiffness)	24590-WTP-3PS-SS90-T0001 §6.1.2 and §7.1.2(g) 24590-WTP-3PS-MV00-T0002 §2.2.4 DOE-STD-1020-94 §2.2, page 2-4	
2.6	Description of how the analysis considers 3 orthogonal components of earthquake ground motion (two horizontal and one vertical), and how the responses from the various direction components are combined in accordance with American Society of Civil Engineers (ASCE) Standard 4.	24590-WTP-3PS-SS90-T0001 §6.1.3 24590-WTP-3PS-MV00-T0002 §2.2.4 DOE-STD-1020-94 §2.3.2 (page 2-12)	
2.7	Identification of the damping values used in the analyses (e.g., damping values of 2 for massive low-stressed equipment with 0.5 for sloshing modes in liquid-containing metal tanks, or 3 for electrical cabinets and other equipment)	24590-WTP-3PS-SS90-T0001 §6.1.1(b) 24590-WTP-3PS-MV00-T0002 §2.2.4 DOE-STD-1020-94 §2.3.3 (page 2-15)	
2.8	Evidence that connecting structural supports and piping (and the associated dynamic coupling effects) are properly represented in the analytical model	Equipment specification and/or data sheet 24590-WTP-3PS-SS90-T0001 §6.2.3 24590-WTP-3PS-MV00-T0002 §2.2.4 DOE-STD-1020-94 §C.6.1, Items 2 & 3 (page C-58)	
2.9	Identification of the best estimate of all non-seismic demands expected to occur concurrently with a DBE (in a comparable format to the code allowable values)	Equipment specification and/or data sheet 24590-WTP-3PS-SS90-T0001 §4 and §5 24590-WTP-3PS-MV00-T0002 §2.2.4 DOE-STD-1020-94 §2.3.2 (page 2-12)	
3	Results/Conclusions		
3.1	Identification of the important natural frequencies of the equipment (or the peak of the design response spectrum must be used)	24590-WTP-3PS-SS90-T0001 §6.1.1(a) and §6.1.2(a) 24590-WTP-3PS-MV00-T0002 §2.2.4 DOE-STD-1020-94 §2.2 (page 2-4)	done
3.2	Identification of the computed elastic seismic response of the equipment (in a comparable format to the code allowable values)	24590-WTP-3PS-SS90-T0001 §7.1.2(g) 24590-WTP-3PS-MV00-T0002 §2.2.4 DOE-STD-1020-94 §2.3.2 (page 2-12)	

J-107

SC-I/II Seismic Analysis Qualification and FEA Report Check List

Required Data	Source Reference	Applicable Section of Seismic Qualification Report
3.3 Description of how the analyses address the distribution of resulting seismic-induced inertial forces and evaluation of the load path(s)	24590-WTP-3PS-SS90-T0001 §7.1.2(g) 24590-WTP-3PS-MV00-T0002 §2.2.4 DOE-STD-1020-94 §2.2 (page 2-4)	
3.4 Description of method used to combine seismic and non-seismic loads (using code-defined load factors) and to compare the result with code-defined strength or stress levels to confirm the design is adequate	Equipment specification and/or data sheet 24590-WTP-3PS-SS90-T0001 §5 24590-WTP-3PS-MV00-T0002 §2.2.4 DOE-STD-1020-94 §2.3.2 (page 2-12)	
3.5 Identification of relative seismic anchor motion (SAM) between equipment and interconnected piping	24590-WTP-3PS-SS90-T0001 §7.4 24590-WTP-3PS-MV00-T0002 §2.2.4 DOE-STD-1020-94 §2.2 (page 2-6) and §2.4.1 (page 2-19)	
3.6 Identification of reaction loads on connecting structural supports and piping (individual loads as well as load combinations)	24590-WTP-3PS-SS90-T0001 §7.2	
4 Quality Assurance		
4.1 Signature of responsible engineer who performed the calculation	24590-WTP-3PS-MV00-T0002 §2.2.4 NQA-1-1989 DOE-STD-1020-94 §1.4 (page 1-7) and §C.8 (page C-65)	
4.2 Signature of engineer(s) who checked the calculation for numerical accuracy, and theory and assumptions	24590-WTP-3PS-MV00-T0002 §2.2.4 NQA-1-1989 Supplement 3S-1 DOE-STD-1020-94 §1.4 (page 1-7) and §C.8 (page C-65)	
4.3 Description of theory (analytical method) and assumptions used in the seismic analyses	NQA-1-1989 Supplement 3S-1 24590-WTP-3PS-SS90-T0001 §7.1.2(g)	
4.4 Description of computer program(s) used in the analyses, including model(s) used, input values, and output results calculated by the computer program	24590-WTP-3PS-SS90-T0001 §7.1.2(g) 24590-WTP-3PS-MV00-T0002 §2.2.4 NQA-1-1989 Supplement 3S-1 DOE-STD-1020-94 §C.8 (page C-65)	
4.5 Printout of output of computer analyses, including signature of responsible engineer who performed the computer analyses on first page of output	24590-WTP-3PS-MV00-T0002 §2.2.4 NQA-1-1989 Supplement 3S-1 DOE-STD-1020-94 §C.8 (page C-65)	

SC-I/II Seismic Analysis Qualification and FEA Report Check List

Required Data	Source Reference	Applicable Section of Seismic Qualification Report
4.6 Documentation or reference to documentation of verification of computer program accuracy	24590-WTP-3PS-SS90-T0001 §7.1.2(g) 24590-WTP-3PS-MV00-T0002 §2.2.4 NQA-1-1989 Supplement 3S-1 DOE-STD-1020-94 §C.8 (page C-65)	

APPENDIX K

Location of the 2-inch inlet drain nozzle on reboiler steam condensate vessel

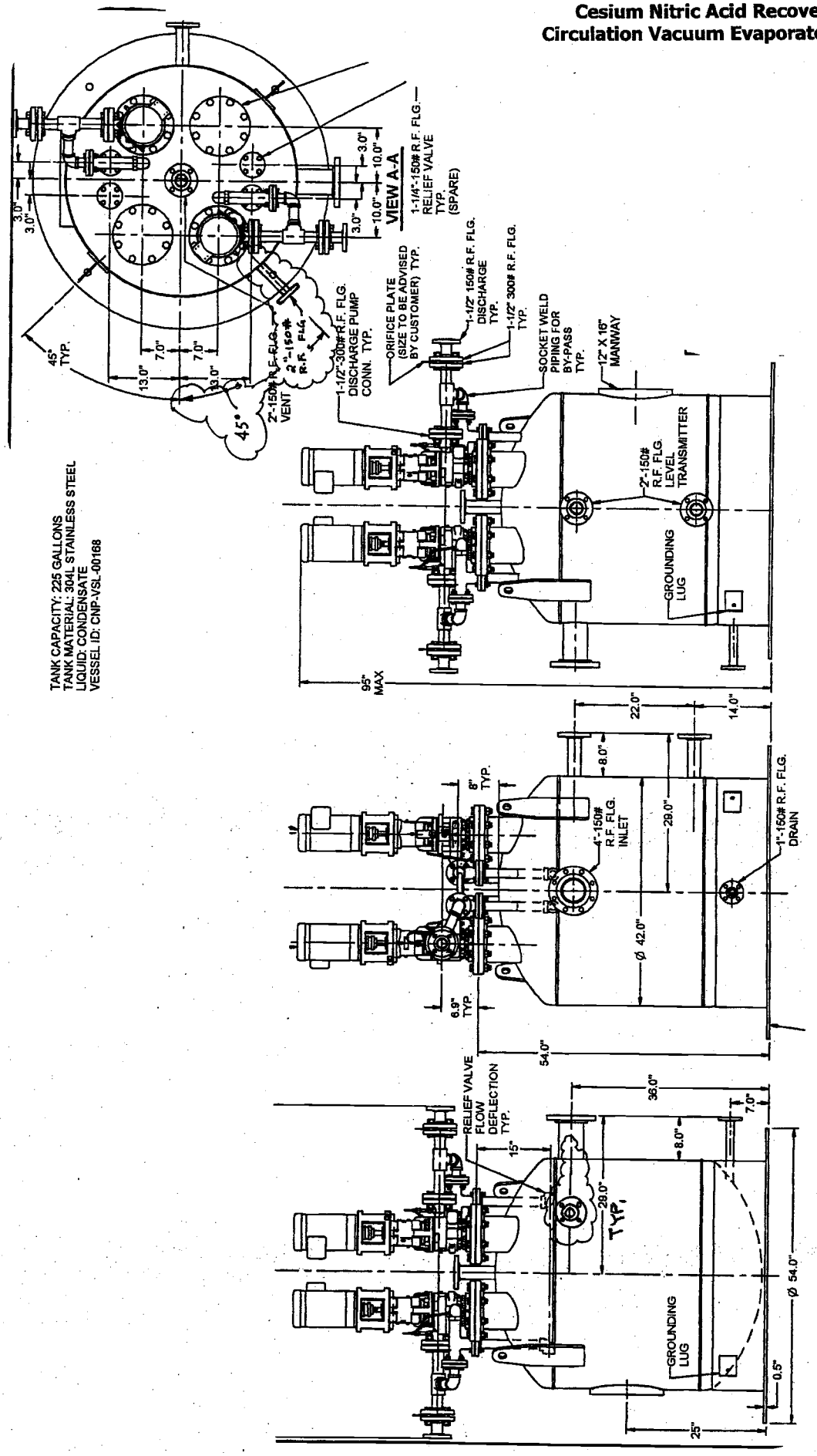
VIEW A-A
1-1/4"-150# R.F. FLG. RELIEF VALVE TYP. (SPARE)
1-1/2" 150# R.F. FLG. DISCHARGE TYP.
1-1/2" 300# R.F. FLG. TYP.
ORIFICE PLATE (SIZE TO BE ADVISED BY CUSTOMER) TYP.
SOCKET WELD PIPING FOR BY-PASS TYP.
12" X 16" MANWAY
1-1/2"-300# R.F. FLG. DISCHARGE PUMP CONN. TYP.
2"-150# R.F. FLG. VENT
2"-150# R.F. FLG. LEVEL TRANSMITTER
GROUNDING LUG
95" MAX
TANK CAPACITY: 225 GALLONS
TANK MATERIAL: 304L STAINLESS STEEL
LIQUID: CONDENSATE
VESSEL ID: CNP-VSL-00168
4"-150# R.F. FLG. INLET
1"-150# R.F. FLG. DRAIN
RELIEF VALVE FLOW DEFLECTION TYP.
TYP.
Ø 42.0"
Ø 54.0"
54.0"
36.0"
28.0"
22.0"
14.0"
8.0"
7.0"
6.9" TYP.
8" TYP.
15°
45° TYP.
45°
0.5"
25"

Drawings and Documents

Operating Unit Group 10 – Appendix 8.8
Pretreatment Building
Engineering Calculations

The documents listed in the following table are incorporated by reference into this permit and are subject to the requirements set forth in Part I Standard Conditions, Part II General Facility Conditions, and Part III Operating Unit Group 10 Conditions. Upon request, copies of the documents can be viewed at the Nuclear Waste Program Resource Center located at 3100 Port of Benton Blvd. Richland, WA. Appointments for viewing can be scheduled by calling (509) 372-7950.

Drawing/Document Number	***Description***
24590-PTF-PER-M-02-005, Rev 7	Flooding Volume for PT Facility
24590-PTF-PER-M-03-001 Rev 0	Flooding Volume for 28 Ft Level in PT Facility
24590-PTF-PER-M-04-001, Rev 0	Flooding Volume for 56 Ft Level in PT Facility
24590-PTF-PER-M-04-0003, Rev 0	Flooding Volume for 77 Ft Level in PT Facility
24590-PTF-PER-M-04-0007, Rev 0	Flooding Volume For Room P-0123A In PT Facility
24590-PTF-PER-M-04-0008, Rev 1	Flooding Volume for Room P-0150 in PT Facility
RESERVED	RESERVED

Source documents (which do not include a "P" in the last set of numbers, e.g. "-P0001," or "-TP001") should be used in conjunction with any document change notices issued against them.

We are currently transitioning from permit documents (which do include a "P" in the last set of numbers) to source documents. At the end of the transition period, permit submittals will contain source documents and will be incorporated into the permit as described in Ecology Publication # 07-05-006 (www.ecy.wa.gov/biblio/nwp.html).

This page intentionally left blank.

R10538803

ISSUED BY
RPP-WTP PDC

Document title: **Flooding Volume for Room P-0123A in the PT Facility**

Contract number: DE-AC27-01RV14136

Department: Mechanical Systems

Author(s): G. Chiaramonte

Principal author signature:

Document number: 24590-PTF-PER-M-04-0007, Rev 0

Checked by: D. Reinemann

Checker signature:

Date of issue: 15 April 2005

Issue status: Issued for Permitting Use

Approved by: R. Smith

Approver's position: Area Project Engineering Manager

Approver signature:

GERALD RUSSEL CHIARAMONTE
STATE OF WASHINGTON
026043
REGISTERED
PROFESSIONAL ENGINEER

4-15-05

EXPIRES. 11/9/2006

This bound document contains a total of ~~11~~ 12 sheets

4-14-05

River Protection Project
Waste Treatment Plant
2435 Stevens Center Place
Richland, WA 99352
United States of America
Tel: 509 371 2000

Notice

Please note that source, special nuclear, and byproduct materials, as defined in the Atomic Energy Act of 1954 (AEA), are regulated at the US Department of Energy (DOE) facilities exclusively by DOE acting pursuant to its AEA authority. DOE asserts, that pursuant to the AEA, it has sole and exclusive responsibility and authority to regulate source, special nuclear, and byproduct materials at DOE-owned nuclear facilities. Information contained herein on radionuclides is provided for process description purposes only.

History Sheet

Rev	Date	Reason for revision	Revised by
0	4-15-05	Issued For Permitting Use	G.Chiaramonte

Contents

Notice ii
History Sheet iii
Acronyms and Abbreviations v
1 Introduction 1
2 Applicable Documents 1
3 Description 1
3.1 Room P-0123A Flooding Volume 2

Appendices

Appendix A - Evaluation of Flooding Volume for Room P-0123A ..... A-i

Acronyms and Abbreviations

AEA	Atomic Energy Act of 1954
DOE	US Department of Energy
FRP	feed receipt process
HLP	HLW lag storage and feed blending process
HLW	high-level waste
LAW	low-activity waste
MSM	master-slave manipulator
PT	pretreatment
PIH	pretreatment in-cell handling
PWD	plant wash and drain
RDMC	remote decontamination maintenance cave
WAC	Washington Administrative Code

1 Introduction

The Washington Administrative Code, WAC 173-303-640(4)(e), addresses tank systems containing dangerous waste. This code requires that secondary containment systems be designed to contain 100 % of the capacity of the largest tank within its boundary. Also included is the containment of the fire water discharge, where applicable, within the boundary of the secondary containment.

This report specifically addresses flooding scenarios to be contained within the pretreatment (PT) facility Room P-0123A and establishes the minimum requirements for secondary containment. This room contains the Remote Decontamination Maintenance Cave (RDMC) which is part of the Pretreatment In-Cell Handling (PIH) System.

2 Applicable Documents

WAC 173-303, *Dangerous Waste Regulations*, Washington Administrative Code

3 Description

The PT facility receives low-activity waste (LAW) feed and high-level waste (HLW) feed from the Double-Shell Tank System. This mixed waste feed is pumped through double-walled underground transfer lines to the PT facility.

The purpose of the PT facility is to pretreat the waste received from the Double-Shell Tank System and to transfer it to the LAW and the HLW vitrification facilities. Within the LAW and HLW vitrification facilities, the waste is formed into glass logs suitable for long-term disposal.

Within the PT facility, the LAW feed is transferred to the waste feed receipt process (FRP) vessels (FRP-VSL-00002A/B/C/D), while the HLW feed is sent to the HLW feed receipt vessel (HLP-VSL-00022). These wastes are temporarily stored in the vessels before being pumped and treated by the PT processing equipment.

These vessels are located in black cells and are not accessible. The black cells are arranged in a "U" shape around a central hot cell in the PT facility, where major processing equipment is located.

The hot cell is remotely maintainable with the use of a crane system. Below the center of the hot cell are two adjacent rooms in the deep pit at the -45 ft elevation. This is the low point for the PT facility. Within these rooms are the plant wash and disposal (PWD) ultimate overflow vessel (PWD-VSL-00033) and the HLW effluent transfer vessel (PWD-VSL-00043).

The FRP vessels are the largest in the PT facility. The flood scenario at 0 ft elevation addressed a postulated failure of one FRP vessel and the movement of its fluid from a black cell to the hot cell, and then to the -45 ft elevation pit in *Flooding Volume for Below Grade and 0 Ft Level in PT Facility* (24590-PTF-PER-M-02-005). The flooding scenario also addressed the fire water pit at the -19 ft elevation. The

0 ft elevation flooding document did not specifically address the flooding volume in Room P-0123A, which is addressed in this document.

3.1 Room P-0123A Flooding Volume

Room P-0123A is located on the east end of the hot cell (Room P-0123) in the PT facility and houses the Remote Decontamination Maintenance Cave (RDMC). The RDMC provides shielded windows for direct viewing, master-slave manipulators (MSMs), and jib cranes for enhanced equipment handling capabilities. The RDMC includes five areas separated by function. The Spray Decontamination Area provides remotely deployed lances to clean and decontaminate equipment surfaces. The Size Reduction Area provides the equipment needed to cut process components or other handling equipment into more manageable pieces. The Soak Decontamination Area provides decontamination equipment to clean and decontaminate the internals of failed equipment. MSMs and remote handling tooling are deployed in the Remote Repair Area for performing maintenance on items that cannot be decontaminated sufficiently for direct or indirect hands-on maintenance. Finally, the Laydown Area provides temporary storage of contaminated components and local storage of contaminated tools and fixtures.

The entire cell floor of Room P-0123A is lined with stainless steel, and the walls are lined up to 18 ft (for spray decontamination operations). A stainless steel lined stub wall (4 ft 8 in high) on the west end of the RDMC separates the RDMC room from the hot cell. Two sumps (PWD-SUMP-00032 and PWD-SUMP-00033) are located in Room P-0123A and the floor of the room slopes toward the sumps. Room P-0123A does not have floor drains and in the event of flooding, the liquid is removed from the room via two steam ejectors located in the sumps. The room is not serviced by fire protection sprinklers.

The Soak Decontamination Area within the RDMC contains a Decontamination Tank (PIH-TK-00001). This is the only tank in Room P-0123A.

The evaluation of flooding volume, which is provided in Appendix A, determines the flooding volume for Room P-0123A and determines the minimum height for the stainless steel liner.

The flooding volume is determined from the volume of the largest vessel within the containment. Firewater discharge is not applicable to this room.

The results of the evaluation indicate a flood volume of 231 cubic feet and a required minimum liner height that is 2-inches above the highest point of the grout or 16-inches referenced to the 0' 0'' concrete elevation (Elevation 1' 4").

Appendix A
Evaluation of Flooding Volume for Room P-0123A

Appendix A
Evaluation of Flood Volume for Room P-0123A

Description

Room P-0123A is located on the east side of the PT facility hot cell and houses the Decontamination Tank (PIH-TK-00001). The Decontamination Tank is the only vessel in the room. The secondary containment for Room P-0123A includes two low point sumps (PWD-SUMP-00032, and PWD-SUMP-00033) and a stainless steel liner. The floor of the room is sloped towards the sump. Room P-0123A does not have floor drains; in the event of flooding, the liquid is removed from the room through two steam ejectors provided at the floor sump. The room does not have sprinklers.

This evaluation determines the flooding volume for Room P-0123A and determines the minimum height for the stainless steel liner.

Basis

- The dimensions of Room P-0123A are provided in Figure 1 below.
- The dimensions of PIH-TK-00001 are 96 inches diameter by 55 inches tall
- The volume of PWD-SUMP-00032 is 73.5 gallons
- The volume of PWD-SUMP-00033 is 73.5 gallons
- The maximum height of grout in Room P-0123A is 14 inches above the 0'-0" elevation concrete.

Figure 1 - Dimensions of Room P-0123A

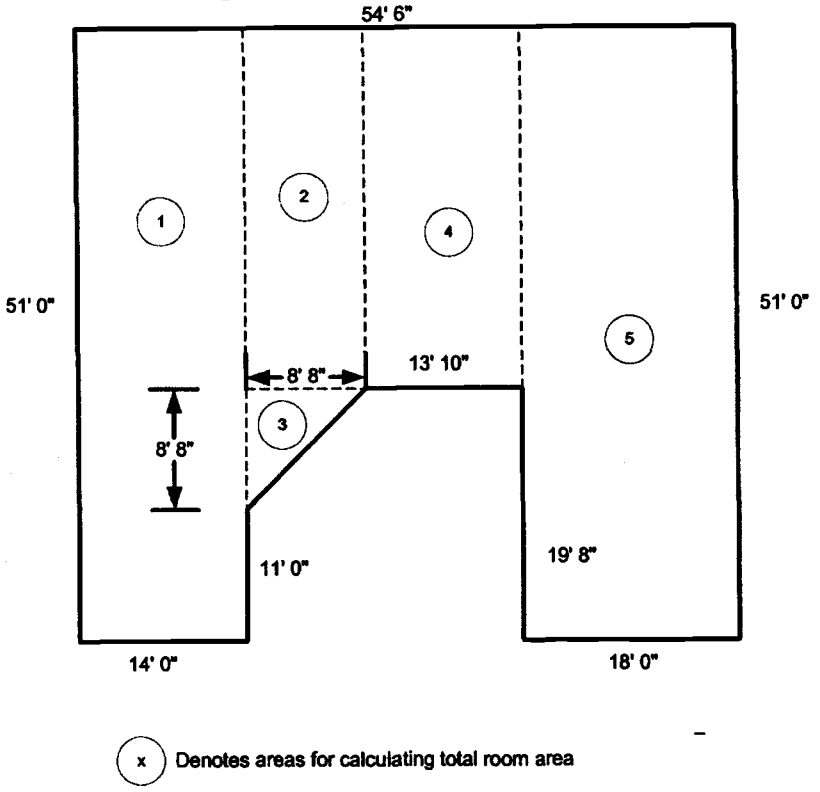

Method

The flooding volume is determined from the volume of the largest vessel within the containment.

The minimum height for the liner is based on the flooding volume. Since the slope of the floor will direct water to the sump, credit is taken for the sump volume. The resulting net volume is divided by the available room area. The total room area is reduced by the footprint of the enclosed equipment to determine the available room area. The height of the liner will be determined from the height of the grout; for conservatism, no credit is taken for the volume created by the slope of the floor.

Determination of Flood Volume

From the dimensions of PIH-TK-00001, the vessel volume contribution to flooding volume, Vv, is calculated from:

$$Vv = \pi/4 \times Dv^2 \times Hv$$

Where:

Dv = Vessel diameter, feet = 96 inches / 12 inch/ft = 8 ft

Hv = Vessel height, feet = 55 inches / 12 inch/ft = 4.6 ft

Then

$Vv = \pi/4 \times (8\ ft)^2 \times (4.6\ ft) = 231.2\ cu\ ft$

The flooding volume, Vflood, is:

$Vflood = Vv = 231.2\ cu\ ft$

Rounding to the nearest integer gives

$\boxed{Vflood = 231\ cu\ ft}$

Determination of Minimum Liner Height

The total room area is calculated as the sum of areas 1-5 (denoted by circles in Figure 1 above) as follows:

A1 = 14' 0" x 51' 0" = 714 ft2

A2 = 31' 4" x 8' 8" = 271.6 ft2

A3 = 1/2 x 8' 8" x 8' 8" = 37.6 ft2

A4 = 13' 10" x 31' 4" = 433.4 ft2

A5 = 18' 0" x 51' 0" = 918 ft2

Total room area At = A1+A2+A3+A4+A5 = 2374.6 ft2 (round to 2375 ft2)

The available area for containment excludes the area occupied by the equipment. For PIH-TK-00001, the footprint area of the vessel, Av, is:

$Av = \pi/4 \times Dv^2 = \pi/4 \times (8\ ft)^2 = 50.3\ sq\ ft$ (round to 50 sq ft)

Where Dv = diameter of vessel in ft

For the other equipment in the room, the footprint is estimated as follows:

Decon turntable	PIH-TTBL-00001	20 sq ft
Repair turntable	PIH-TTBL-00002	95 sq ft
Miscellaneous area for baskets*, tools, equipment laydown, etc. (allow 5% of total floor area)		120 sq ft
Subtotal component footprint, Ae		235 sq ft

*Note: Basket Staging Frame (PIH-MHAN-00015) has no significant footprint and is therefore neglected.

The available area, Aa, is determined from:

$Aa = At - Av - Ae = 2375\ sq\ ft - 50\ sq\ ft - 235\ sq\ ft = 2090\ sq\ ft$

The volume of each of the two sumps is:

$Vsump = 73.5\ gal / 7.48\ gal/cu\ ft = 9.8\ cu\ ft$

As stated in the method section, for conservatism, the volume created within the sloped area of the floor is neglected.

The minimum liner height, Lmin, above the height of the grout, is

Lmin = (Vflood - 2Vsump) / Aa = (231 cu ft - 2 x 9.8 cu ft) / 2090 sq ft

Lmin = 0.101 ft = 1.21 in

Rounded up to the nearest inch,

Lmin = 2 inches above the grout

Referenced from the 0'-0" concrete elevation, the minimum liner height is 14 inches + 2 inches for a total of 16 inches (Elevation 1' 4")

Drawings and Documents

Operating Unit Group 10 – Appendix 8.9
Pretreatment Building
Material Selection Documentation

The documents listed in the following table are incorporated by reference into this permit and are subject to the requirements set forth in Part I Standard Conditions, Part II General Facility Conditions, and Part III Operating Unit Group 10 Conditions. Upon request, copies of the documents can be viewed at the Nuclear Waste Program Resource Center located at 3100 Port of Benton Blvd. Richland, WA. Appointments for viewing can be scheduled by calling (509) 372-7950.

Drawing/Document Number	***Description***
24590-PTF-N1D-CNP-P0001, Rev 0	Material Selection Data Sheet for CNP-DISTC-00001
24590-PTF-N1D-CNP-P0002, Rev 1	Material Selection Data Sheet for CNP-HX-00002
24590-PTF-N1D-CNP-P0003, Rev 1	Material Selection Data Sheet for CNP-HX-00003
24590-PTF-N1D-CNP-P0004, Rev 1	Material Selection Data Sheet for CNP-HX-00001
24590-PTF-N1D-CNP-P0005, Rev 1	Material Selection Data Sheet for CNP-EVAP-00001
24590-PTF-N1D-CNP-P0006, Rev 3	Material Selection Data Sheet for CNP-VSL-00004
24590-PTF-N1D-CNP-P0008, Rev 1	Material Selection Data Sheet for CNP-BRKPT-00002
24590-PTF-N1D-CNP-P0009, Rev 1	Material Selection Data Sheet for CNP-VSL-00003
24590-PTF-N1D-CNP-P0010, Rev 1	Material Selection Data Sheet for CNP-BRKPT-00001
24590-PTF-N1D-CNP-P0011, Rev 1	Material Selection Data Sheet for CNP-VSL-00001
24590-PTF-N1D-CNP-P0012, Rev 1	Material Selection Data Sheet for CNP-HX-00004
24590-PTF-N1D-CXP-P0001, Rev 1	Material Selection Data Sheet for CXP-VSL-00001

24590-PTF-N1D-CXP-P0003, Rev 1	Material Selection Data Sheet for CXP-VSL-00026A/B/C
24590-PTF-N1D-CXP-P0007, Rev 1	Material Selection Data Sheet for CXP-VSL-00004
24590-PTF-N1D-CXP-P0008, Rev 1	Material Selection Data Sheet for CXP-VSL-00005
24590-PTF-N1D-FEP-P0002, Rev 1	Material Selection Data Sheet for FEP-VSL-00017A/B
24590-PTF-N1D-FEP-P0003, Rev 1	Material Selection Data Sheet for FEP-VSL-00005
24590-PTF-N1D-FEP-P0007, Rev 1	Material Selection Data Sheet for FEP-SEP-00001A/B
24590-PTF-N1D-FEP-P0008, Rev 0	Material Selection Data Sheet for FEP-RBLR-00001A/B
24590-PTF-N1D-FEP-P0009, Rev 0	Material Selection Data Sheet for FEP-COND-00002A/B
24590-PTF-N1D-FEP-P0010, Rev 0	Material Selection Data Sheet for FEP-COND-00003A/B
24590-PTF-N1D-FEP-P0013, Rev 0	Material Selection Data Sheet for FEP-COND-00001A/B
24590-PTF-N1D-FRP-P0001, Rev 2	Material Selection Data Sheet for FRP-VSL-00002A-D
24590-PTF-N1D-HLP-P0001, Rev 0	Material Selection Data Sheet for HLP-BRKPT-00004/6
24590-PTF-N1D-HLP-P0003, Rev 1	Material Selection Data Sheet for HLP-VSL-00022
24590-PTF-N1D-HLP-P0007, Rev 1	Material Selection Data Sheet for HLP-VSL-00027A/B
24590-PTF-N1D-HLP-P0010, Rev 1	Material Selection Data Sheet for HLP-VSL-00028
24590-PTF-N1D-PIH-P0001, Rev 0	Material Selection Data Sheet for PIH-TK-00001
24590-PTF-N1D-PJV-P0001, Rev 1	Material Selection Data Sheet for PJV-VSL-00002
24590-PTF-N1D-PVP-P0001, Rev 1	Material Selection Data Sheet for PVP-SCB-00002

24590-PTF-N1D-PVP-P0002, Rev 1	Material Selection Data Sheet for PVP-VSL-00001
24590-PTF-N1D-PWD-P0001, Rev 1	Material Selection Data Sheet for PWD-VSL-00044
24590-PTF-N1D-PWD-P0002, Rev 1	Material Selection Data Sheet for PWD-VSL-00043
24590-PTF-N1D-PWD-P0003, Rev 3	Material Selection Data Sheet for PWD-VSL-00015/16
24590-PTF-N1D-PWD-P0005, Rev 2	Material Selection Data Sheet for PWD-VSL-00033
24590-PTF-N1D-PWD-P0006, Rev 2	Material Selection Data Sheet for PWD-VSL-00046
24590-PTF-N1D-PWD-P0007, Rev 0	Plant Item Material Selection Data Sheet for PWD-BRKPT-00007/8/9/10/17/19
24590-PTF-N1D-PWD-P0008, Rev 1	Material Selection Data Sheet for PWD-BRKPT-00015/16
24590-PTF-N1D-RDP-00001, Rev 6	Corrosion Evaluation for RDP-VSL-00002A/B/C
24590-PTF-N1D-RDP-00002, Rev 3	Corrosion Evaluation for RDP-VSL-00004
24590-PTF-N1D-RLD-P0002, Rev 2	Material Selection Data Sheet for RLD-VSL-00017A/B
24590-PTF-N1D-TCP-P0001, Rev 2	Material Selection Data Sheet for TCP-VSL-00001
24590-PTF-N1D-TLP-P0001, Rev 2	Material Selection Data Sheet for TLP-VSL-00009A/B
24590-PTF-N1D-TLP-P0002, Rev 0	Material Selection Data Sheet for TLP-COND-00001
24590-PTF-N1D-TLP-P0003, Rev 0	Material Selection Data Sheet for TLP-COND-00002/3
24590-PTF-N1D-TLP-P0005, Rev 3	Material Selection Data Sheet for TLP-SEP-00001
24590-PTF-N1D-TLP-P0006, Rev 1	Material Selection Data Sheet for TLP-VSL-00002
24590-PTF-N1D-TLP-P0011, Rev 1	Material Selection Data Sheet for TLP-RBLR-00001

24590-PTF-N1D-UFP-P0001, Rev 2	Material Selection Data Sheet for UFP-BRKPT-00001A/B
24590-PTF-N1D-UFP-P0002, Rev 2	Material Selection Data Sheet for UFP-PP-00001, 2, 3A/B
24590-PTF-N1D-UFP-P0003, Rev 0	Material Selection Data Sheet for UFP-VSL-00002A/B
24590-PTF-N1D-UFP-P0004, Rev 3	Material Selection Data Sheet for UFP-FILT-00001, 2, 3A/B
24590-PTF-N1D-UFP-P0005, Rev 2	Material Selection Data Sheet for UFP-VSL-00001A/B
24590-PTF-N1D-UFP-P0008, Rev 2	Material Selection Data Sheet for UFP-VSL-00062A/B/C
RESERVED	RESERVED

Source documents (which do not include a "P" in the last set of numbers, e.g. "-P0001," or "-TP001") should be used in conjunction with any document change notices issued against them.

We are currently transitioning from permit documents (which do include a "P" in the last set of numbers) to source documents. At the end of the transition period, permit submittals will contain source documents and will be incorporated into the permit as described in Ecology Publication # 07-05-006 (www.ecy.wa.gov/biblio/nwp.html).

PLANT ITEM MATERIAL SELECTION DATA SHEET

PIH-TK-00001 (PTF)
Pretreatment Decontamination Tank
Decon Soak Tank

- Design Temperature (°F): 212
- Design Pressure (psig): 0
- Location: outcell

ISSUED BY
RPP-WTP PDC

Contents of this document are Dangerous Waste Permit affecting

Operating conditions are as stated on sheet 5

Operating Modes Considered:

- The tank is expected to contain nitric acid at 0.5 M or greater.
- Evaluation based on the assumption that chlorides, including HCl, will not be added to the tank.

Materials Considered:

Material	Relative Cost	Acceptable Material	Unacceptable Material
Carbon Steel	0.23		X
304L	1.00		X
316L	1.18	X	
6% Mo	7.64	X	
Alloy 22	11.4	X	
Ti-2	10.1	X	

Recommended Material: 316 (max 0.030%; dual certified)

Recommended Corrosion Allowance: 0.04 inch (includes 0.0 inch erosion allowance)

Process & Operations Limitations:

- None identified at this time

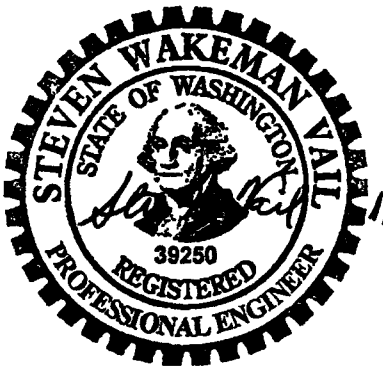

1/19/07

EXPIRES: 12/07/07

Please note that source, special nuclear and byproduct materials, as defined in the Atomic Energy Act of 1954 (AEA), are regulated at the U.S. Department of Energy (DOE) facilities exclusively by DOE acting pursuant to its AEA authority. DOE asserts, that pursuant to the AEA, it has sole and exclusive responsibility and authority to regulate source, special nuclear, and byproduct materials at DOE-owned nuclear facilities. Information contained herein on radionuclides is provided for process description purposes only.

This bound document contains a total of 5 sheets.

REV	DATE	REASON FOR REVISION	PREPARER	CHECKER	APPROVER
0	1/19/07	Issued for Permitting Use			

PLANT ITEM MATERIAL SELECTION DATA SHEET

Corrosion Considerations:

a General Corrosion
Hamner (1981) lists a corrosion rate for 304 (and 304L) in 2 M HNO_3 of less than 2 mpy. Davis (1994) states the corrosion rate for 304L in 12% HNO_3 will be less than about 1 mpy up to about 212°F. 316L should have similar corrosion rates in similar conditions.

Conclusion:
At the proposed temperature range, either 304L or 316L is expected to be sufficiently resistant to the anticipated acid solution with a probable general corrosion rate of less than 1 mpy. A minimum corrosion allowance of 0.04 inch is recommended.

b Pitting Corrosion
At the concentrations and temperatures used, nitric acid will not pit 304L. 316L is more resistant than 304L and is recommended to allow for possible future process evolution.

Conclusion:
Under normal operating conditions, pitting is not considered a problem for either 304L or 316L.

c End Grain Corrosion
End grain corrosion only occurs in metal with exposed end grains and in highly oxidizing acid conditions.

Conclusion:
Not expected in this system.

d Stress Corrosion Cracking
The exact amount of chloride required to stress corrosion crack stainless steel is unknown. In part this is because the amount varies with temperature, metal sensitization, the environment and because chloride tends to concentrate under heat transfer conditions, by evaporation, and electrochemically during a corrosion process. Hence, even as little as 10 ppm can lead to cracking under some conditions. The use of "L" grade stainless reduces the opportunity for sensitization and, therefore, the likelihood of cracking. The tank is not expected to have significant concentrations of chlorides present and the normal operating temperature should not be high enough to cause concern.

Conclusion:
The use of 304L and 316L are expected to be acceptable with 316L marginally better.

e Crevice Corrosion
See Pitting.

Conclusion:
See Pitting

f Corrosion at Welds
The low carbon grades of 304 and 316 used on this project are generally not susceptible to weld corrosion. Higher alloys, when used, are more resistant than the 300 series stainless steels.

Conclusion:
Weld corrosion is not considered a problem for this system.

g Microbiologically Induced Corrosion (MIC)
The proposed operating conditions are not conducive to microbial growth. Typically, MIC is not encountered in operating systems.

Conclusion:
MIC is not considered a problem.

PLANT ITEM MATERIAL SELECTION DATA SHEET

h Fatigue/Corrosion Fatigue
Vessels are designed to accommodate the expected fatigue cycles for the design life.

Conclusions
Not expected to be a concern.

i Vapor Phase Corrosion
316L is sufficiently resistant to the conditions encountered in both the liquid phase and the vapour phase portions of the vessel

Conclusion:
316L is recommended.

j Erosion
Velocities within the vessel are expected to be low.

Conclusion:
Not expected to be of concern.

k Galling of Moving Surfaces
Components have been designed to minimize the possibility of galling.

Conclusion:
Design of components is such as to eliminate concern.

l Fretting/Wear
Components have been designed to minimize the possibility of fretting.

Conclusion:
Design of components is such as to eliminate concern.

m Galvanic Corrosion
No dissimilar metals are present.

Conclusion:
Not applicable.

n Cavitation
Cavitation is usually encountered in high velocity fluids and not normally expected in vessels.

Conclusion:
Not believed to be of concern.

o Creep
The temperatures are too low to be a concern.

Conclusion:
Not applicable.

p Inadvertent Addition of Nitric Acid
The tank normally contains nitric acid.

Conclusion:
Not applicable.

PLANT ITEM MATERIAL SELECTION DATA SHEET

References:

1. Davis, JR (Ed), 1994, *Stainless Steels*, In ASM Metals Handbook, ASM International, Metals Park, OH 44073
2. Hamner, NE, 1981, *Corrosion Data Survey*, Metals Section, 5th Ed, NACE International, Houston, TX 77218

Bibliography:

1. Davis, JR (Ed), 1987, *Corrosion, Vol 13*, In "Metals Handbook", ASM International, Metals Park, OH 44073
2. Sedriks, AJ, 1996, *Corrosion of Stainless Steels*, John Wiley & Sons, Inc., New York, NY 10158
3. Jones, RH (Ed.), 1992, *Stress-Corrosion Cracking*, ASM International, Metals Park, OH 44073
4. Uhlig, HH, 1948, *Corrosion Handbook*, John Wiley & Sons, New York, NY 10158

PLANT ITEM MATERIAL SELECTION DATA SHEET

OPERATING CONDITIONS

PROCESS CORROSION DATA SHEETS

Component(s) (Name/ID #) Pretreatment Decontamination Tank (PIH-TK-00001)

Facility PTF

In Black Cell? No

Chemicals	Unit[1]	Contract Max		Non-Routine		Notes
		Leach	No leach	Leach	No Leach	
Aluminum	g/l					
Chloride	g/l					
Fluoride	g/l					
Iron	g/l					
Nitrate	g/l					
Nitrite	g/l					
Phosphate	g/l					
Sulfate	g/l					
Mercury	g/l					
Carbonate	g/l					
Undissolved solids	wt%					
Other (NaMnO4, Pb,...)	g/l					
Other	g/l					
pH	N/A					Assumption 2
Temperature	°F					Assumption 1

List of Organic Species:

Notes:

1. Concentrations less than 1x 10^{-4} g/l do not need to be reported; list values to two significant digits max.

Assumptions:

1. T minimum 59 °F; T maximum 212 °F.
2. Assume pH near or below 0.

ISSUED BY
RPP-WTP PDC

R10930322

CORRUSION EVALUATION

RDP-VSL-00002A/B/C (PTF)

Spent Resin Slurry Vessels

- Design Temperature (°F)(Max/min): 148/30
- Design Pressure (psig) (Max/min): 15/FV
- Location: incell
- PJM Discharge Velocity (fps): 40
- Drive Cycle: 17 % (at 40 fps)

Associated Items

RDP-PJM-00001 – RDP-PJM-00012
RDP-PMP-00008A/B

Contents of this document are Dangerous Waste Permit affecting

Operating conditions are as stated on attached Process Corrosion Data Sheets

Options Considered:

- Normal operations include receipt, storage and transfer of spent IX media
- Slurry received contains approximately 20 volume% solids (not considered normal operating condition)
- Off-normal conditions include the receipt of fresh resin overflow from system CRP and the receipt of un-eluted or off-spec Cs resin to be returned for further elution

Materials Considered:

Material (UNS No.)	Relative Cost	Acceptable Material	Unacceptable Material
Carbon Steel	0.23		X
Type 304L (S30403)	1.00		X
Type 316L (S31603)	1.18	X	
6% Mo (N08367/N08926)	7.64	X	
Alloy 22 (N06022)	11.4	X	
Ti-2 (R50400)	10.1	X	

Recommended Material: Type 316 (max 0.030% C; dual certified)

Recommended Corrosion Allowance: 0.040 inch (includes 0.024 inch corrosion allowance and 0.016 inch general erosion allowance; localized protection will be provided as necessary as discussed in section j)

Process & Operations Limitations:

- Develop flushing/rinsing procedure

Concurrence JR for KW
Operations

REV	DATE	REASON FOR REVISION	PREPARER	CHECKER	MET	APPROVER
6	7/30/08	Incorporate revised PCDS Update design temperature	EL Adler	JRDivine	RBDavis	SWVail

CORROSION EVALUATION

REVISION HISTORY

REV	DATE	REASON FOR REVISION	PREPARER	CHECKER	MET	APPROVER
5	1/6/05	Update wear allowance based on 24590-WTP-RPT-M-04-0008	DLAdler	JRDivine	RBDavis	SWVail
4	1/24/05	Update PJM and erosion info based on 24590-WTP-M0E-50-00003	DLAdler	JRDivine	NA	SWVail for APRangus
3	5/17/04	Addition of information regarding inadvertent nitric acid addition Append updated PCDS	DLAdler	APRangus	NA	SWVail
2	5/12/04	Revised to incorporate new PCDS	DLAdler	JRDivine	NA	APRangus
1	4/26/04	Update design temp/pressure Include assoc. items Add PJM information Delete reference to system TRP and Tc resin Revise erosion section Re-format references Add DWP note Append updated MSDS	DLAdler	JRDivine	NA	APRangus
0	6/2/02	Initial Issue	DLAdler	JRDivine	SS	SMKirk

Please note that source, special nuclear and byproduct materials, as defined in the Atomic Energy Act of 1954 (AEA), are regulated at the U.S. Department of Energy (DOE) facilities exclusively by DOE acting pursuant to its AEA authority. DOE asserts, that pursuant to the AEA, it has sole and exclusive responsibility and authority to regulate source, special nuclear, and byproduct materials at DOE-owned nuclear facilities. Information contained herein on radionuclides is provided for process description purposes only.

This bound document contains a total of 7 sheets.

CORROSION EVALUATION

Corrosion Considerations:

RDP-VSL-00002A/B/C collect and transfer spent resin. These vessels receive both transport liquid and spent resin slurry streams. Normally the vessels operate between 50 and 123 °F.

a General Corrosion
Hamner (1981) lists a corrosion rate for 304 (and type 304L) in 2 M HNO_3 of less than 2 mpy. Davis (1994) states the corrosion rate for type 304L in 12% HNO_3 will be less than about 1 mpy up to about 212°F.

In this system, the conditions are such that type 304L stainless steel will be acceptable.

Conclusion:
Under normal conditions either type 304L or type 316L will be satisfactory.

b Pitting Corrosion
While chloride is known to cause pitting in acid and neutral solutions, with no chloride present in reportable concentrations, both type 304L and type 316L stainless steel are acceptable.

Conclusion:
The use of type 304L or type 316L is acceptable.

c End Grain Corrosion
End grain corrosion only occurs in metal with exposed end grains and in highly oxidizing acid conditions.

Conclusion:
Not expected in this system.

d Stress Corrosion Cracking
The exact amount of chloride required to cause stress corrosion cracking is unknown. In part this is because the amount varies with temperature, metal sensitization, and the environment. But it is also unknown because chloride tends to concentrate under heat transfer conditions, by evaporation, and electrochemically during a corrosion process. Hence, even as little as a few ppm can lead to cracking under some conditions. Generally, as seen in Sedriks (1996) and Davis (1987), chloride stress corrosion cracking does not usually occur below about 140°F. During the normal operations, either type 304L or type 316L is expected to be satisfactory.

Conclusion:
At the normal operating environment, either type 304L or type 316L is acceptable.

e Crevice Corrosion
Comments under Pitting are generally applicable here. However, the one additional factor is the presence of resin beads. These will form crevices at the wall that could initiate crevice corrosion.

Conclusion:
The presence of resin increases the probability of initiating crevice corrosion. The more resistant type 316L is recommended.

f Corrosion at Welds
Corrosion at welds is not considered a problem in the proposed environment.

Conclusion:
Weld corrosion is not considered a problem for this system.

g Microbiologically Induced Corrosion (MIC)
MIC is not considered a problem in this system.

Conclusion:
Not a concern.

h Fatigue/Corrosion Fatigue
Corrosion fatigue is not expected to be a concern. The pressures encountered are so low and the strength of the material is so comparatively high that corrosion fatigue is not a problem.

Conclusions
Not a concern.

i Vapor Phase Corrosion
Not expected in this system.

Conclusion:
Not considered to be a concern.

CORROSION EVALUATION

j Erosion
Based on past experiments by Smith & Elmore (1992), the solids are soft and erosion is not expected to be a concern for the vessel wall. Based on 24590-WTP-RPT-M-04-0008, a general erosion allowance of 0.016 inch is adequate for components with maximum solids content up to 27.3 wt%. Additional type 316L stainless steel should be provided as localized protection for the applicable portions of the bottom head to accommodate PJM discharge velocities of up to 12 m/s with normal maximum solids concentrations of 7.0 wt% and maximum solids concentrations of 53 wt% with a usage of 19 % operation as documented in 24590-WTP-M0C-50-00004. Vessels RDP-VSL-00002A/B/C require at least 0.060-inch additional protection. The 53 wt% is considered to be conservative. The fraction of time the solids concentration is expected to be at maximum is 10 %. During normal operation, 90 % of the time, the solids content of RDP-VSL-00002A/B/C is expected to be 7.0 wt%.

The wear of the PJM nozzles can occur from flow for both the discharge and reflood cycles of operation. At least 0.038–inch of additional type 316L stainless steel should be provided on the inner surface of the PJM nozzle to accommodate wear due to PJM discharge and suction velocities with normal solids concentrations of 7.0 wt% and a maximum solids concentrations of 53 wt% with a usage of 19 % operation as documented in 24590-WTP-M0C-50-00004.

Conclusion:
The recommended corrosion allowance provides sufficient protection for erosion of the vessel wall. Additional localized protection for the bottom head will accommodate PJM discharge velocities and for the PJM nozzles will accommodate PJM discharge and reflood velocities.

k Galling of Moving Surfaces
Not applicable.

Conclusion:
Not applicable.

l Fretting/Wear
No contacting surfaces expected.

Conclusion:
Not applicable.

m Galvanic Corrosion
No dissimilar metals are present.

Conclusion:
Not applicable.

n Cavitation
None expected.

Conclusion:
Not believed to be of concern.

o Creep
The temperatures are too low to be a concern.

Conclusion:
Not applicable.

p Inadvertent Nitric Acid Addition
Vessels normally operate at low pH.

Conclusion:
Not applicable.

CORROSION EVALUATION

References:

1. 24590-WTP-M0C-50-00004, *Wear Allowance for WTP Waste Slurry Systems*
2. 24590-WTP-RPT-M-04-0008, Rev. 2, *Evaluation Of Stainless Steel Wear Rates In WTP Waste Streams At Low Velocities*
3. 24590-WTP-RPT-PR-04-0001, Rev. C, *WTP Process Corrosion Data*
4. Davis, JR (Ed), 1987, *Corrosion, Vol 13*, In "Metals Handbook", ASM International, Metals Park, OH 44073
5. Davis, JR (Ed), 1994, *Stainless Steels*, In ASM Metals Handbook, ASM International, Metals Park, OH 44073
6. Hamner, NE, 1981, *Corrosion Data Survey*, Metals Section, 5th Ed, NACE International, Houston, TX 77218
7. Sedriks, AJ, 1996, *Corrosion of Stainless Steels*, John Wiley & Sons, Inc., New York, NY 10158
8. Smith, H. D. and M. R. Elmore, 1992, Corrosion Studies of Carbon Steel under Impinging Jets of Simulated Slurries of Neutralized Current Acid Waste (NCAW) and Neutralized Cladding Removal Waste (NCRW), PNL-7816, Pacific Northwest Laboratory, Richland, Washington.
9. Zapp, PE, 2000, *Material Corrosion and Plate-Out Test of Types 304L and 316L Stainless Steel*, WSRC-TR-2000-00434, Savannah River Site, Aiken, SC

Bibliography:

1. CCN 130171, Ohl, PC to PG Johnson, Internal Memo, Westinghouse Hanford Co, *Technical Bases for Cl- and pH Limits for Liquid Waste Tank Cars*, MA: PCO:90/01, January 16, 1990.
2. CCN 130172, Dillon, CP (Nickel Development Institute), Personal Communication to J R Divine (ChemMet, Ltd., PC), 3 Feb 2000.
3. CCN 170127, Cook, S to J Julyk, "Red Lined Data Sheets for the Equipment & In-Line Components for the RDP in the PT Facility, 30 January 2008.
4. Agarwal, DC, *Nickel and Nickel Alloys*, In: Revie, WW, 2000. *Uhlig's Corrosion Handbook*, 2nd Edition, Wiley-Interscience, New York, NY 10158
5. Jones, RH (Ed.), 1992, *Stress-Corrosion Cracking*, ASM International, Metals Park, OH 44073
6. Koch, GH, 1995, *Localized Corrosion in Halides Other Than Chlorides*, MTI Pub No. 41, Materials Technology Institute of the Chemical Process Industries, Inc, St Louis, MO 63141
7. Uhlig, HH, 1948, *Corrosion Handbook*, John Wiley & Sons, New York, NY 10158
8. Van Delinder, LS (Ed), 1984, *Corrosion Basics*, NACE International, Houston, TX 77084

CORROSION EVALUATION

Attachment to CCN 163061
Replaces Page A-45 of
24590-WP-RPT-PR-04-0001, Rev C
WTP Process Corrosion Data

PROCESS CORROSION DATA SHEET

Component(s) (Name/ID #) Spent resin slurry vessel (RDP-VSL-00002 A/B/C)
Spent resin dewatering moisture separation vessel (RDP-VSL-00004)

Facility PTF

In Black Cell? Yes (RDP-VSL-00002A/B/C only)

Chemicals	Unit[1]	Contract Max[2]		Non-Routine		Notes
		Leach	No leach	Leach	No Leach	
Aluminum	g/L					
Chloride	g/L					
Fluoride	g/L					
Iron	g/L					
Nitrate	g/L	6.0E+00	6.0E+00			
Nitrite	g/L					
Phosphate	g/L					
Sulfate	g/L					
Mercury	g/L					
Carbonate	g/L					
Undissolved solids	wt%					
Other (NaMnO4, Pb,...)	g/L					
Other	g/L					
pH	N/A					Note 4
Temperature	°F					Note 3, Assumption 1

List of Organic Species:

References

System Description: 24590-PTF-3YD-RDP-00001
Mass Balance Document: 24590-WTP-M4C-V11T-00005, Rev A
Normal Input Stream #: CXP19, CXP18, RDP01
Off Normal Input Stream # (e.g., overflow from other vessels): N/A
P&ID N/A
PFD: 24590-PTF-M5-V17T-00020
Technical Reports:

Notes:

1 Concentrations less than 1x 10^{-4} g/L do not need to be reported, list concentration values to three significant digits max
2. Data developed from a mass balance model which has constituents in the plant feed which are important to corrosion, adjusted to contract maximum values
3. For RDP-VSL-00002ABC: 50 °F to 123 °F (24590-WTP-RPT-ENG-07-007, Rev 0)
4 Minimum pH approximately 1

Assumptions:

1 For RDP-VSL-00004 123 °F maximum operating temperature based on maximum temperature in RDP-VSL-00002ABC, and given that there is no heating in the dewatering unit

4.10.1 Spent Resin Slurry Vessel (RDP-VSL-00002 A/B/C)

Routine Operations

The spent resin slurry vessels (RDP-VSL-00002-A/B/C) are designed to collect and transfer a batch of spent resin every week. After commissioning, the time between spent resin batch transfers will be determined by operational experience.

The spent resin slurry vessels (RDP-VSL-00002-A/B/C) receive both liquid and slurry streams.

These vessels, with associated piping and controls, serve as both the source of transport liquid and the receipt vessels for spent resin slurry. Each vessel is designed to contain one full batch of IX resin plus the transport liquid associated with transferring the resin bed out of an IX column. The total batch volume required for removing the spent resin from an IX column is 7500 gallons per vessel (6900 gallons of transport fluid and 600 gallons of resin). During normal operation, the vessels will contain approximately 8 % vol/vol solids. The solids content is greater during the first few minutes of displacement when the incoming slurry line could be very high in solids, but the high solids content is gradually diluted to 8 % vol/vol solids as the clear column sequence is completed and the full batch of transport fluid is transferred. Nozzles will be included as required for process feed streams, overflow lines, reagent addition, ventilation, and recycle return lines.

Each vessel contains pulse jet mixers which provide mixing of the vessel contents to suspend resin particles for slurry transport and representative sample collection.

Non-Routine Operations that Could Affect Corrosion or Erosion

None identified.

See Appendix A for process corrosion data sheet.

CORROSION EVALUATION

R10848451

RDP-VSL-00004 (PTF)
Spent Resin Dewatering Moisture Separation Vessel

- Design Temperature (°F)(max/min): 300/-10
- Design Pressure (psig) (internal/external): 15/FV
- Location: Room P-0119

Contents of this document are Dangerous Waste Permit affecting

Operating conditions are as stated on attached Process Corrosion Data Sheet

Materials Considered:

Material (UNS No.)	Relative Cost	Acceptable Material	Unacceptable Material
Carbon Steel	0.23		X
304L (S30403)	1.00	X	
316L (S31603)	1.18	X	
6% Mo (N08367/N08926)	7.64	X	
Alloy 22 (N06022)	11.4	X	
Ti-2 (R50400)	10.1	X	

Recommended Material: 304 (max 0.030% C; dual certified)

Recommended Corrosion Allowance: 0.040 inch (includes 0.024 inch corrosion allowance and 0.004 inch general erosion allowance)

Process & Operations Limitations:

- None

Concurrence NA
C & T

REV	DATE	REASON FOR REVISION	PREPARER	CHECKER	MET	APPROVER
3	12/19/07	To correct Rev. C issued with incorrect page 5 of 6	DLAdler	RBDavis	NA	SWVail
2	11/1/07	Incorporate revised PCDS	DLAdler	RBDavis	NA	SWVail
1	3/8/06	Update wear allowance based on 24590-WTP-RPT-M-04-0008	DLAdler	HMKrafft	NA	SWVail
0	7/14/04	Initial Issue	DLAdler	JRDivine	APR	APRangus

CORROSION EVALUATION

Corrosion Considerations:

Warm air is circulated by a blower to pick up moisture from the spent resin and is cooled and condensed in RDP-VSL-00004.

a General Corrosion
Hamner (1981) lists a corrosion rate for 304 (and 304L) in 2 M HNO_3 of less than 2 mpy. Davis (1994) states the corrosion rate for 304L in 12% HNO_3 will be less than about 1 mpy up to about 212°F.

In this system, the conditions are such that 304L stainless steel will be acceptable.

Conclusion:
Under normal conditions either 304L or 316L will be satisfactory.

b Pitting Corrosion
While chloride is known to cause pitting in acid and neutral solutions, with no chloride present in reportable concentrations, both 304L and 316L stainless steel are acceptable.

Conclusion:
The use of 304L or 316L is acceptable.

c End Grain Corrosion
End grain corrosion only occurs in metal with exposed end grains and in highly oxidizing acid conditions.

Conclusion:
Not expected in this system.

d Stress Corrosion Cracking
The exact amount of chloride required to cause stress corrosion cracking is unknown. In part this is because the amount varies with temperature, metal sensitization, and the environment. But it is also unknown because chloride tends to concentrate under heat transfer conditions, by evaporation, and electrochemically during a corrosion process. Hence, even as little as a few ppm can lead to cracking under some conditions. Generally, as seen in Sedriks (1996) and Davis (1987), chloride stress corrosion cracking does not usually occur below about 140°F. During the normal operations, either 304L or 316L is expected to be satisfactory.

Conclusion:
At the normal operating environment, either 304L or 316L is acceptable.

e Crevice Corrosion
Comments under Pitting are generally applicable here.

Conclusion:
See Pitting.

f Corrosion at Welds
Corrosion at welds is not considered a problem in the proposed environment.

Conclusion:
Weld corrosion is not considered a problem for this system.

g Microbiologically Induced Corrosion (MIC)
MIC is not considered a problem in this system.

Conclusion:
Not a concern.

h Fatigue/Corrosion Fatigue
Corrosion fatigue is not expected to be a concern. The pressures encountered are so low and the strength of the material is so comparatively high that corrosion fatigue is not a problem.

Conclusions
Not a concern.

i Vapor Phase Corrosion
Not expected in this system.

Conclusion:
Not considered to be a concern.

CORROSION EVALUATION

j Erosion
Velocities in the vessel are expected to be low. Erosion allowance of 0.004 inch for components with low solids content (< 2 wt%) at low velocities is based on 24590-WTP-RPT-M-04-0008.

Conclusion:
Erosion is not expected to be a concern.

k Galling of Moving Surfaces
Not applicable.

Conclusion:
Not applicable.

l Fretting/Wear
No contacting surfaces expected.

Conclusion:
Not applicable.

m Galvanic Corrosion
No dissimilar metals are present.

Conclusion:
Not applicable.

n Cavitation
None expected.

Conclusion:
Not believed to be of concern.

o Creep
The temperatures are too low to be a concern.

Conclusion:
Not applicable.

p Inadvertent Nitric Acid Addition
Vessel normally operates at low pH.

Conclusion:
Not applicable.

CORROSION EVALUATION

References:

1. 24590-WTP-RPT-M-04-0008, Rev. 2, *Evaluation Of Stainless Steel Wear Rates In WTP Waste Streams At Low Velocities*
2. 24590-WTP-RPT-PR-04-0001, Rev. C, *WTP Process Corrosion Data*
3. CCN 130177, Zapp, PE, 2000, *Material Corrosion and Plate-Out Test of Types 304L and 316L Stainless Steel*, WSRC-TR-2000-00434, Savannah River Site, Aiken, SC
4. Davis, JR (Ed), 1987, *Corrosion, Vol 13*, In "Metals Handbook", ASM International, Metals Park, OH 44073
5. Davis, JR (Ed), 1994, *Stainless Steels*, In ASM Metals Handbook, ASM International, Metals Park, OH 44073
6. Hamner, NE, 1981, *Corrosion Data Survey*, Metals Section, 5th Ed, NACE International, Houston, TX 77218
7. Sedriks, AJ, 1996, *Corrosion of Stainless Steels*, John Wiley & Sons, Inc., New York, NY 10158
8. Smith, H. D. and M. R. Elmore, 1992, Corrosion Studies of Carbon Steel under Impinging Jets of Simulated Slurries of Neutralized Current Acid Waste (NCAW) and Neutralized Cladding Removal Waste (NCRW), PNL-7816, Pacific Northwest Laboratory, Richland, Washington.

Bibliography:

1. CCN 130171, Ohl, PC to PG Johnson, Internal Memo, Westinghouse Hanford Co, *Technical Bases for Cl- and pH Limits for Liquid Waste Tank Cars*, MA: PCO:90/01, January 16, 1990.
2. CCN 130173, Dillon, CP (Nickel Development Institute), Personal Communication to J R Divine (ChemMet, Ltd., PC), 3 Feb 2000.
3. Agarwal, DC, *Nickel and Nickel Alloys*, In: Revie, WW, 2000. *Uhlig's Corrosion Handbook*, 2nd Edition, Wiley-Interscience, New York, NY 10158
4. Jones, RH (Ed.), 1992, *Stress-Corrosion Cracking*, ASM International, Metals Park, OH 44073
5. Koch, GH, 1995, *Localized Corrosion in Halides Other Than Chlorides*, MTI Pub No. 41, Materials Technology Institute of the Chemical Process Industries, Inc, St Louis, MO 63141
6. Uhlig, HH, 1948, *Corrosion Handbook*, John Wiley & Sons, New York, NY 10158
7. Van Delinder, LS (Ed), 1984, *Corrosion Basics*, NACE International, Houston, TX 77084

CORROSION EVALUATION

Attachment to CCN 163061
Replaces Page A-45 of
24590-WP-RPT-PR-04-0001, Rev C
WTP Process Corrosion Data

PROCESS CORROSION DATA SHEET

Component(s) (Name/ID #) Spent resin slurry vessel (RDP-VSL-00002 A/B/C)
Spent resin dewatering moisture separation vessel (RDP-VSL-00004)

Facility PTF

In Black Cell? Yes (RDP-VSL-00002A/B/C only)

Chemicals	Unit[1]	Contract Max[2]		Non-Routine		Notes
		Leach	No leach	Leach	No Leach	
Aluminum	g/L					
Chloride	g/L					
Fluoride	g/L					
Iron	g/L					
Nitrate	g/L	6.0E+00	6.0E+00			
Nitrite	g/L					
Phosphate	g/L					
Sulfate	g/L					
Mercury	g/L					
Carbonate	g/L					
Undissolved solids	wt%					
Other (NaMnO4, Pb,...)	g/L					
Other	g/L					
pH	N/A					Note 4
Temperature	°F					Note 3, Assumption 1

List of Organic Species:

References

System Description: 24590-PTF-3YD-RDP-00001
Mass Balance Document: 24590-WTP-M4C-V11T-00005, Rev A
Normal Input Stream #: CXP19, CXP18, RDP01
Off Normal Input Stream # (e.g., overflow from other vessels): N/A
P&ID N/A
PFD: 24590-PTF-M5-V17T-00020
Technical Reports:

Notes:

1 Concentrations less than 1×10^{-4} g/L do not need to be reported, list concentration values to three significant digits max
2. Data developed from a mass balance model which has constituents in the plant feed which are important to corrosion, adjusted to contract maximum values
3. For RDP-VSL-00002ABC: 50 °F to 123 °F (24590-WTP-RPT-ENG-07-007, Rev 0)
4 Minimum pH approximately 1

Assumptions:

1 For RDP-VSL-00004 123 °F maximum operating temperature based on maximum temperature in RDP-VSL-00002ABC, and given that there is no heating in the dewatering unit

4.10.2 Spent Resin Dewatering Moisture Separation Vessel (RDP-VSL-00004)

Routine Operations

The spent resin dewatering moisture separation vessel serves to collected liquid from spent resin dewatering operations performed by the vendor dewatering package (page 9, 24590-PTF-3YD-RDP-00001, Rev 0).

Non-Routine Operations that Could Affect Corrosion or Erosion

None identified.

Drawings and Documents

Operating Unit Group 10 – Appendix 8.10
Pretreatment Building
Critical Systems Equipment/Instrument List

The documents listed in the following table are incorporated by reference into this permit and are subject to the requirements set forth in Part I Standard Conditions, Part II General Facility Conditions, and Part III Operating Unit Group 10 Conditions. Upon request, copies of the documents can be viewed at the Nuclear Waste Program Resource Center located at 3100 Port of Benton Blvd. Richland, WA. Appointments for viewing can be scheduled by calling (509) 372-7950.

Drawing/Document Number	*Description*
	PTF Equipment Room List @ El 0
	PTF Equipment Room List @ El +19 and +28
RESERVED	RESERVED

Source documents (which do not include a "P" in the last set of numbers, e.g. "-P0001," or "-TP001") should be used in conjunction with any document change notices issued against them.

We are currently transitioning from permit documents (which do include a "P" in the last set of numbers) to source documents. At the end of the transition period, permit submittals will contain source documents and will be incorporated into the permit as described in Ecology Publication # 07-05-006 (www.ecy.wa.gov/biblio/nwp.html).

This page intentionally left blank.

Drawings and Documents

Operating Unit Group 10 – Appendix 8.11
Pretreatment Building
IQRPE Reports

The documents listed in the following table are incorporated by reference into this permit and are subject to the requirements set forth in Part I Standard Conditions, Part II General Facility Conditions, and Part III Operating Unit Group 10 Conditions. Upon request, copies of the documents can be viewed at the Nuclear Waste Program Resource Center located at 3100 Port of Benton Blvd. Richland, WA. Appointments for viewing can be scheduled by calling (509) 372-7950.

Drawing/Document Number	***Description***
AREVA-IA-085, Rev 0 (CCN 139506)	IQRPE Integrity Assessment Report for PIH-TK-00001
IA-3001630-000, Rev 0 (CCN 193196)	IQRPE Structural Integrity Assessment Report for PTF Secondary Containment up to Floor Elev. 56'-0"
24590-CM-HC4-HXYG-00138-01-01, Rev 0	IQRPE Integrity Assessment Report for Secondary Containment El. -45
24590-CM-HC4-HXYG-00138-01-02, Rev 00C	IQRPE Integrity Assessment Report for Below Grade PWD Ancillary Equipment
24590-CM-HC4-HXYG-00138-01-07, Rev 00B	IQRPE Integrity Assessment Report for Below Grade PWD Tanks
24590-CM-HC4-HXYG-00138-01-13, Rev 00A	IQRPE Integrity Assessment Report for El. 28 Secondary Containment
24590-CM-HC4-HXYG-00138-01-15, Rev 00A	IQRP Integrity Assessment Report for Below Grade PWD Transfer Lines, Secondary Containment, Ancillary Equipment and Corrosion Assessment
24590-CM-HC4-HXYG-00138-01-18, Rev 00A	IQRP Integrity Assessment Report for UFP Vessels
24590-CM-HC4-HXYG-00138-02-00013, Rev 00A	IQRPE Integrity Assessment Report for PWD Ancillary Equipment
24590-CM-HC4-HXYG-00138-02-00014, Rev 00A	IQRP Integrity Assessment Report for PWD-VSL-00015/16/44
24590-CM-HC4-HXYG-00138-02-00015, Rev 00A	IQRPE Integrity Assessment Report for RLD-VSL-00017A/B

24590-CM-HC4-HXYG-00138-02-00017, Rev 00A	IQRP Integrity Assessment Report for El. 0 RLD Ancillary Equipment
24590-CM-HC4-HXYG-00138-02-00019, Rev 00A	IQRPE Integrity Assessment Report FEP Vessels, Miscellaneous Treatment Units, and Ancillary Equipment
24590-CM-HC4-HXYG-00138-02-00020, Rev 00A	IQRPE Integrity Assessment Report for FEP-VSL-00017A/B, FEP-VSL-00005, FEP-SEP-00001A/B, and FEP-RBLR-00001A/B
24590-CM-HC4-HXYG-00138-02-00021, Rev 00A	IQRPE Integrity Assessment Report for TLP Ancillary Equipment
24590-CM-HC4-HXYG-00138-02-00022, Rev 00A	IQRPE Integrity Assessment Report for El. 56 Miscellaneous Treatment Units Secondary Containment
24590-CM-HC4-HXYG-00138-02-00023, Rev 00A	IQRPE Integrity Assessment Report for TLP Miscellaneous Treatment Units and Vessels
24590-CM-HC4-HXYG-00138-02-00027, Rev 00A	IQRPE Integrity Assessment Report for RDP-VSL-00002A/B/C
24590-CM-HC4-HXYG-00138-02-00028, Rev 00A	IQRPE Integrity Assessment Report RDP Ancillary Equipment
24590-CM-HC4-HXYG-00138-02-00031, Rev 00A	IQRPE Integrity Assessment Report for El. 77 Miscellaneous Treatment Units Secondary Containment
24590-CM-HC4-HXYG-00138-02-00033, Rev 00A	IQRPE Integrity Assessment Report for CXP Vessels
24590-CM-HC4-HXYG-00138-02-00034, Rev 00A	IQRPE Integrity Assessment Report El. 0 CXP Ancillary Equipment
24590-CM-HC4-HXYG-00138-02-00035, Rev 00C	IQRPE Integrity Assessment Report El. 0 PVP Ancillary Equipment
24590-CM-HC4-HXYG-00138-02-00036, Rev 00A	IQRPE Impendent Assessment Report for CNP-VSL-00001/3/4
24590-CM-HC4-HXYG-00138-02-00037, Rev 00B	IQRPE Impendent Assessment Report for CNP Ancillary Equipment
24590-CM-HC4-HXYG-00138-02-00040, Rev 00A	IQRPE Integrity Assessment Report for RDP-VSL-00004

24590-CM-HC4-HXYG-00138-02-00041, Rev 00A	IQRPE Integrity Assessment Report El. 0 RDP-VSL-00004 Ancillary Equipment
24590-CM-HC4-HXYG-00138-02-00045, Rev 00B	IQRPE Integrity Assessment Report CNP Miscellaneous Treatment Units
24590-CM-HC4-HXYG-00138-02-00046, Rev 00A	IQRPE Impendent Assessment Report for PJV-VSL-00002
24590-CM-HC4-HXYG-00138-02-00047, Rev 00A	IQRPE Impendent Assessment Report for El. 0 PJV Ancillary Equipment
24590-CM-HC4-HXYG-00138-02-00051, Rev 00A	IQRPE Integrity Assessment Report for PVP-VSL-00001, PVP-SCB-00002
24590-CM-HC4-HXYG-00138-02-00054, Rev 00A	IQRPE Integrity Assessment Report for TLP-VSL-00009A/B
24590-CM-HC4-HXYG-00138-02-00057, Rev 00A	IQRPE Integrity Assessment Report for El. -2'.0" RLD Tanks RLD-TK-00006 A/B
24590-CM-HC4-HXYG-00138-02-01A, Rev A	IQRPE Integrity Assessment Report for El. 0 Secondary Containment
24590-CM-HC4-HXYG-00138-02-02, Rev 00A	IQRPE Integrity Assessment Report for FRP Ancillary Equipment, Rev. 1
24590-CM-HC4-HXYG-00138-02-03, Rev 00B	IQRPE Integrity Assessment Report for FRP-VSL-00002A/B/C/D
24590-CM-HC4-HXYG-00138-02-04, Rev 00B	IQRPE Integrity Assessment Report for TCP-VSL-00001
24590-CM-HC4-HXYG-00138-02-05, Rev 00A	IQRPE Integrity Assessment Report for TCP Ancillary Equipment
24590-CM-HC4-HXYG-00138-02-06, Rev 00A	IQRPE Integrity Assessment Report for UFP Ancillary Equipment
24590-CM-HC4-HXYG-00138-02-09, Rev 00A	IQRPE Integrity Assessment Report for HLP Ancillary Equipment
24590-CM-HC4-HXYG-00138-02-10, Rev 00A	IQRPE Integrity Assessment Report for HLP-VSL-00022, 00027A/B, and 00028
RESERVED	RESERVED

Source documents (which do not include a "P" in the last set of numbers, e.g. "-P0001," or "-TP001") should be used in conjunction with any document change notices issued against them.

We are currently transitioning from permit documents (which do include a "P" in the last set of numbers) to source documents. At the end of the transition period, permit submittals will contain source documents and will be incorporated into the permit as described in Ecology Publication # 07-05-006 (www.ecy.wa.gov/biblio/nwp.html).

R10747699

RPP-WTP
RECEIVED
FEB 0 6 2007
BY PDC

AREVA

CW 2/12/07
CCN ~~152588~~
139506

AREVA-07-010

Ms. Anne Weldon
Subcontracts
Bechtel National, Inc.
2435 Stevens Center Place
Richland, Washington 99354

February 1, 2007

Dear Ms. Weldon:

BECHTEL NATIONAL, INC. CONTRACT NO. 24590-CM-HC4-HXYG-00211 - STRUCTURAL INTEGRITY ASSESSMENT FOR THE PRETREATMENT IN-CELL HANDLING (PIH) SYSTEM PRETREATMENT DECONTAMINATION TANK (PIH-TK-00001) (AREVA-IA-085, REV. 0)

The integrity assessment of the subject tank (PIH-TK-00001) has been completed per the contract requirements and is enclosed for your use. The assessment found that the design is sufficient to ensure that the tank is adequately designed and has sufficient structural strength, compatibility with the waste(s) to be processed/ stored/treated, and corrosion protection to ensure that it will not collapse, rupture, or fail.

If you have any questions, please feel free to contact Tarlok Hundal at (509) 373-4438.

Sincerely,

M. D. Rickenbach, Director
Engineering & Services
AREVA NC Inc.
Richland

llm

Enclosure

cc: D. C. Pfluger MS 5-I w/enclosure (2)

AREVA NC INC.

2425 Stevens Center Place, Second Floor, Richland, Washington 99354 - P.O. Box 840, Richland, Washington 99352
Tel.: 509 372 8256 - Fax: 509 372 3169 - www.areva.com

STRUCTURAL INTEGRITY ASSESSMENT FOR THE PRETREATMENT IN-CELL HANDLING (PIH) SYSTEM PRETREATMENT DECONTAMINATION TANK (PIH-TK-00001)

Please note that source, special nuclear and byproduct materials, as defined in the Atomic Energy Act of 1954 (AEA), are regulated at the U.S. Department of Energy (DOE) facilities exclusively by DOE acting pursuant to its AEA authority. DOE asserts, that pursuant to the AEA, it has sole and exclusive responsibility and authority to regulate source, special nuclear, and byproduct materials at DOE-owned nuclear facilities. Information contained herein on radionuclides is provided for process description purposes only.

IQRPE REVIEW
FOR
THE PRETREATMENT IN-CELL HANDLING (PIH) SYSTEM PRETREATMENT DECONTAMINATION TANK (PIH-TK-00001)

"I, Tarlok S. Hundal, have reviewed, and certified a portion of the design of a new tank system or component located at the Hanford Waste Treatment Plant, owned/operated by Department of Energy, Office of River Protection, Richland, Washington. My duties were independent review of the current design for the Pretreatment In-Cell Handling (PIH) System Pretreatment Decontamination Tank (PIH-TK-00001) as required by the Washington Administrative Code, *Dangerous Waste Regulations*, Section WAC-173-303-640(3) (a) through (g) applicable components."

"I certify under penalty of law that I have personally examined and am familiar with the information submitted in this document and all attachments and that, based on my inquiry of those individuals immediately responsible for obtaining the information, I believe that the information is true, accurate, and complete. I am aware that there are significant penalties for submitting false information, including the possibility of fine and imprisonment."

The documentation reviewed indicates that the design fully satisfies the requirements of the WAC.

The attached review is nine (9) pages numbered one (1) through nine (9).

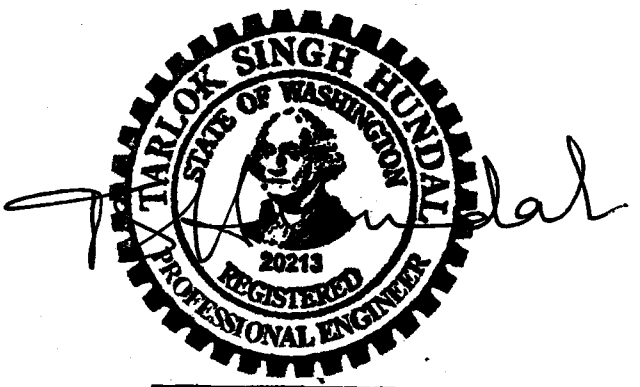

EXPIRES: 02/15/08

T S Hundal
Signature

2/1/07
Date

Scope	Scope of this Integrity Assessment	This Integrity Assessment is for the Pretreatment In-Cell Handling (PIH) System Pretreatment Decontamination Tank (PIH-TK-00001), located in Room P-0123A at Elevation 0'-0" of the PTF.
References	Material Requisition, Specifications, Mechanical Data Sheet, Plant Item Material Selection Data Sheet, and System Description	Material Requisition (MR): 24590-CM-MRA-HDYR-00001, Rev. 4, Maintenance Decontamination Equip C/DS (MH051) (VHCQ) (ECI) (PUREX), Section 2 – Technical Specifications. Specifications: The following Specifications with their respective revision and specification change notices are listed in the above listed Material Requisition: 24590-WTP-3PS-HD00-T0001, Engineering Specification for Maintenance Decontamination Equipment; 24590-WTP-3PS-MTSS-T0001, Specification for Tank Welding; 24590-WTP-3PS-FB01-T0001, Engineering Specification for Structural Design Loads for Seismic Category III & IV Equipment and Tanks; 24590-WTP-3PS-G000-T0001, General Specification for Supplier Quality Assurance Program Requirements; 24590-WTP-3PS-G000-T0002, Engineering Specification for Positive Material Identification (PMI); 24590-WTP-3PS-G000-T0003, General Specification for Packaging, Shipping, Handling, and Storage Requirements. *24590-WTP-MV00-T0001, Engineering Specification for Pressure Vessel Design and Fabrication; *24590-WTP-3PS-MV00-T0002, Engineering Specification for Seismic Qualification Criteria for Pressure Vessels. * Specification not listed in MR, however, it is embedded in 24590-WTP-3PS-HD00-T0001 document. Mechanical Data Sheet: 24590-PTF-M0D-PIH-00015, Rev. 2, Pretreatment Decontamination Tank (PIH-TK-00001). Plant Item Material Selection Data Sheet: 24590-PTF-N1D-PIH-P0001, Rev. 0, Pretreatment Decontamination Tank PIH-TK-00001 (PTF). System Description: 24590-PTF-3YD-PIH-00001, Rev. 0, System Description for Pretreatment In-Cell Handling System.

References (cont'd)	Drawings	PTF Drawings: 24590-PTF-P1-P01T-00001, Rev. 6, Pretreatment Facility General Arrangement Plan at El. 0'-0"; 24590-PTF-M6-PIH-00001, Rev. 0, P&ID – PTF Mechanical Handling, Hot Cell Maintenance Cave P-0123A Utilities, System PIH. Vendor Fabrication Drawings (**Code 1 or Code 4 Drawings): 24590-CM-POA-HDYR-00001-06-00059, Rev. 00G, PTF Decon Tank Assembly; 24590-CM-POA-HDYR-00001-06-00060, Rev. 00E, PTF Decon Tank Weldment and Details; 24590-CM-POA-HDYR-00001-06-00061, Rev. 00E, PTF Decon Tank Weldment and Details; 24590-CM-POA-HDYR-00001-06-00062, Rev. 00E, PTF Decon Tank Cover Weldment and Details; 24590-CM-POA-HDYR-00001-06-00063, Rev. 00C, PTF Decon Tank Sparge & Pump Assembly; 24590-CM-POA-HDYR-00001-06-00064, Rev. 00C, PTF Decon Tank Sparge & Pump Details; 24590-CM-POA-HDYR-00001-06-00065, Rev. 00C, PTF Decon Tank Sparge & Pump Details; 24590-CM-POA-HDYR-00001-06-00066, Rev. 00C, PTF Decon Tank Sparge & Miscellaneous Details. **Code 1 Drawing is an "as fabricated vendor drawing" approved/accepted by Bechtel. Code 4 Drawing is an "as fabricated vendor drawing" accepted by Bechtel (no formal review required).
Summary of Assessment		For each item of "Information Assessed" (i.e., Criteria) on the following pages, the items listed under "Source of Information" were reviewed and found to furnish adequate design controls and requirements to ensure that the design fully satisfies the requirements of Washington Administrative Code, WAC-173-303-640, *Dangerous Waste Regulations* for Tank Systems.

	Information Assessed	Source of Information	Assessment
Design	Tank design standards are appropriate and adequate for the tank's intended use.	Specifications, Drawings, Mechanical Data Sheet, and Plant Item Material Selection Data Sheet listed above under References; API-620, Design and Construction of Large, Welded, Low Pressure Storage Tanks, 10th edition, February 2002, American Petroleum Institute.	The Engineering Specification for Maintenance Decontamination Equipment requires that the Pretreatment Decontamination Tank (PIH-TK-00001) is to be designed and fabricated in accordance with the provisions of the API 620 Standard. Welding requirements for fabrication are furnished in the Specification for Tank Welding. Tank nozzle design and fabrication is to comply with the Engineering Specification for Pressure Vessel Design and Fabrication. The Engineering Specification for Maintenance Decontamination Equipment provides additional supplementary requirements for tank design and fabrication. These requirements address positive material identification, lifting attachment design, fabrication tolerances, welding procedures for the tank and appurtenances, welder qualifications and testing records, NDE inspections and records, quality assurance records, and lifting, packaging, shipping, handling and storage requirements. The tank's Quality Level is commercial material (CM) grade and its Seismic Category is (SC-III) as noted in the Mechanical Data Sheet for PIH-TK-00001. Tank PIH-TK-00001 is fabricated as shown on the referenced vendor fabrication drawings. It is an open top tank with 96 in. ID and an overall height of about 55 in. This tank is to be used as a decontamination soak tank for various PTF equipment items as discussed in the System Description document. The tank is equipped with a removable lid to control splashing during normal operations. The tank and its appurtenances material as identified in the Plant Item Material Selection Data Sheet and Mechanical Data Sheet is 316L stainless steel. The tank shell and bottom are fabricated of 1/2" and 5/8" thick plates, respectively. The design standards discussed above are appropriate and adequate for the tank's intended use.

	Information Assessed	Source of Information	Assessment
Design (cont'd)	If a non-standard tank is to be used, the design calculations demonstrate sound engineering principles of construction.	Specifications, Material Requisition, and Drawings listed above under References; API-620, Design and Construction of Large, Welded, Low Pressure Storage Tanks, 10th Edition, February 2002, American Petroleum Institute; 24590-CM-POA-HDYR-00001-05-00005, Rev. 00F, PTF Tank Stress and Thermal Design Calculation; 24590-CM-POA-HDYR-00001-05-00006, Rev. 00F, PTF Tank Seismic Structural Calculation.	The Engineering Specification for Maintenance Decontamination Equipment requires that the Pretreatment Decontamination Tank (PIH-TK-00001) is designed and fabricated as a standard tank, in accordance with the provisions of the API-620 Standard. Supplemental design information is included in the specifications for utilizing sound engineering principles of construction for the tank. It is a shop fabricated tank that is delivered to the WTP site after design, fabrication and testing to the requirements of the Engineering Specification for Maintenance Decontamination Equipment and API-620 Standard. Review of the PTF Tank Stress and PTF Tank Seismic calculation documents show that the tank has been designed as a standard tank per applicable requirements of API-620 Standard and other documents listed in the Material Requisition for the tank. The aforementioned statements and the vendor fabrication drawings reviewed demonstrate that sound engineering principles of construction and fabrication has been used for the tank.

	Information Assessed	Source of Information	Assessment
Design (cont'd)	Tank has adequate strength, after consideration of the corrosion allowance, to withstand the operating pressure, operating temperature, and seismic loads.	Mechanical Data Sheet, Specifications, Material Requisition, and Drawings listed above under References; API-620, Design and Construction of Large, Welded, Low Pressure Storage Tanks, 10th Edition, February 2002, American Petroleum Institute; 24590-WTP-3DP-G04T-00905, Rev. 7, Determination of Quality Levels; 24590-CM-POA-HDYR-00001-05-00005, Rev. 00F, PTF Tank Stress and Thermal Design Calculation; 24590-CM-POA-HDYR-00001-05-00006, Rev. 00F, PTF Tank Seismic Structural Calculation.	The Mechanical Data Sheet identifies the Pretreatment Decontamination Tank's operating pressure and temperature ranges, the materials selected for the tank and the tank quality level which determines the requirements for seismic design. Tank PIH-TK-00001 is Quality Level (CM) and Seismic Category (SC-III). The Engineering Specification for Maintenance Decontamination Equipment and API-620 Standard require specific consideration of the operating pressures, temperatures, corrosion allowance and seismic loads in the design process. API-620 Standard requires that corrosion allowance thickness be added to the nominal tank design thickness when evaluating the adequacy of the tank components for these loads at end of its life. Detailed requirements for seismic analysis and load determination are furnished in the API-620 Standard and the Engineering Specification for Structural Design Loads for Seismic Category III & IV Equipment and Tanks; including a discussion of Seismic Categories. Quality Levels are discussed in detail in the Determination of Quality Levels document. Review of the PTF Tank Stress and PTF Tank Seismic calculation documents show that the tank has adequate strength after the appropriate consideration of corrosion allowance, operating temperature and pressure, seismic, and other applicable loads have been accounted for. Furthermore, approval and acceptance of the vendor fabrication drawings by Bechtel National, Inc. (BNI) is an added assurance that all applicable requirements stated above and as described in documents (including daughter documents) listed in Material Requisition for the tank have been met.

	Information Assessed	Source of Information	Assessment
Foundation	Tank foundation will maintain the load of a full tank.	Specifications listed above under References; API-620, Design and Construction of Large, Welded, Low Pressure Storage Tanks, 10th edition, February 2002, American Petroleum Institute; 24590-WTP-DB-ENG-01-001, Rev. 1I, Basis of Design; 24590-CM-POA-HDYR-00001-05-00005, Rev. 00F, PTF Tank Stress and Thermal Design Calculation; 24590-CM-POA-HDYR-00001-05-00006, Rev. 00F, PTF Tank Seismic Structural Calculation.	The Engineering Specification for Maintenance Decontamination Equipment and API-620 Standard both specify requirements that ensure adequate design of tank supports. The design load cases include the load of a full tank. Review of the PTF Tank Stress and PTF Tank Seismic calculation documents show that the tank supports have adequate strength to maintain the loads of full tank. Furthermore, Chapter 14 of the Basis of Design document requires that the foundation underlying the tank support must be adequate to support the loads from full tank, which is out of scope of this assessment. The assessment of the adequacy of the underlying foundation is part of a separate integrity assessment report for the secondary containment of the tank.
	If in an area subject to flooding, the tank is anchored.	Specifications listed above under References. 24590-PTF-PER-M-04-0007, Rev. 0, Flooding Volume for Room P-0123A in the PTF Facility.	The Engineering Specification for Maintenance Decontamination Equipment includes the requirement that the tank supports and anchors shall be designed for the load case where the tank is empty and externally fully submerged. However, the Flooding Volume document shows that the computed flood height in Room P-0123A is 1.21in. above the grout level on which the 3.5 in. high steel angle tank base retainer ring sits. The lowest elevation of the tank bottom plate is higher than this tank base retainer ring, therefore, no buoyant forces act on the tank and hence there is no need for such consideration for this remotely removable tank.
	Tank system will withstand the effects of frost heave.	Drawings listed above under References; 24590-WTP-DC-ST-01-001, Rev. 11, Structural Design Criteria.	The Structural Design Criteria requires that structural foundations for all outdoor equipment shall extend into the surrounding soil below the frost line to preclude frost heave effects. The frost line for structural foundations is 30 in. The PTF foundation mat as shown on the drawings is an 8 ft thick slab and therefore, is not subject to frost heave; hence, tank PIH-TK-00001 located in room P-0123A inside the PTF is not subject to frost heave effects.

	Information Assessed	Source of Information	Assessment
Waste Characteristics	Characteristics of the waste to be stored or treated have been identified (ignitable, reactive, toxic, specific gravity, vapor pressure, flash point, storage temperature)	Mechanical Data Sheet, Drawings, Plant Item Material Selection Data Sheet, and System Description listed above under References; 24590-WTP-PER-PR-03-002, Rev. 2, Toxic Vapors and Emissions from WTP Tank Systems and Miscellaneous Treatment Unit Systems; 24590-WTP-PER-PR-03-001, Rev. 1, Prevention of Hydrogen Accumulation in WTP Tank Systems and Miscellaneous Treatment Unit Systems.	The Mechanical Data Sheet presents the waste storage temperatures and pressures. Bounding estimates for the weight of the tank liquid contents and immersed equipment are provided in the drawings. The Plant Item Material Selection Data Sheet addresses the pH range and chemical composition of the waste to select appropriate tank materials and specify the corrosion allowance. The System Description document and drawings show that the non-combustible decontamination solutions normally used in the tank include dilute nitric acid (NAR), dilute sodium hydroxide (SHR) and de-ionized water (DIW). Tank PIH-TK-00001 is a decontamination soak tank used to decontaminate the internal surfaces of equipment placed in the tank. It is an open top tank with a removable lid that provides primary confinement of the waste during normal operations, abnormal operations and during and after a Seismic Category (SC-III) level earthquake. The open top tank is ventilated by the room ventilation system to prevent flammable gas build-up. Waste characteristics that are hazardous, such as ignitability, reactivity, and toxicity are appropriately addressed in the Toxic Vapors and Emissions document and Prevention of Hydrogen Accumulation document. These two aforementioned documents do not specifically list this tank to exhibit any hazardous characteristics.

	Information Assessed	Source of Information	Assessment
Waste Characteristics (cont'd)	Tank is designed to store or treat the wastes with the characteristics defined above and any treatment reagents.	Mechanical Data Sheet, Plant Item Material Selection Data Sheet and System Description listed above under References.	The Mechanical Data Sheet and Plant Item Material Data Sheet shows that the 316L stainless steel material selected for Tank PIH-TK-00001 is adequate for a design life of 40 years assuming maximum operating temperature of about 200°F with dilute nitric acid decontamination solution (0.5 M or higher). The Plant Item Material Selection Data Sheet demonstrates that the tank is designed to contain the decontamination solutions discussed above. The System Description document discusses normal operations for tank PIH-TK-00001. No additional reagents are added to the tank during normal operations. A steam sparging system is built into the tank to provide for heating and agitating the decontamination solutions. The material selected for the tank design is appropriate for the waste to be stored or treated.
	The waste types are compatible with each other.	System Description and Specifications listed above under References.	The System Description for the PTF PIH system does not describe any operations where incompatible wastes are mixed in tank PIH-TK-00001. The Engineering Specification for Maintenance Decontamination Equipment states that spent decontamination solutions are transferred to the PTF plant wash and drain disposal system using the steam ejector installed in the tank.
Corrosion Protection	Tank material and protective coatings ensure the tank structure is adequately protected from the corrosive effects of the waste stream and external environments (expected to not leak or fail for the design life of the system)	Mechanical Data Sheet, Plant Item Material Selection Data Sheet, Drawings, and System Description listed above under References.	The Mechanical Data Sheet, Plant Item Material Data Sheet, and drawings show that the 316L stainless steel material selected and used for Tank PIH-TK-00001 is adequate for a design life of 40 years assuming maximum operating temperature of about 200°F with dilute nitric acid decontamination solution (0.5 M or higher). The tank is located in the Remote Decontamination Maintenance Cave where there is ample spray equipment available to wash down the outside of the tank if necessary as discussed in the System Description. The material selected is appropriate against any corrosive effects of the waste streams and any external environment elements.

	Information Assessed	Source of Information	Assessment
Corrosion Allowance	Corrosion allowance is adequate for the intended service life of the tank.	Plant Item Material Selection Data Sheet, Mechanical Data Sheet, Drawings, and Specifications listed above under References; 24590-CM-POA-HDYR-00001-05-00005, Rev. 00F, PTF Tank Stress and Thermal Design Calculation.	The bases for Tank PIH-TK-00001 material selection and corrosion allowance are furnished in the Plant Item Material Selection Data Sheet and in Mechanical Data Sheet. The 316L stainless steel is selected for a service life of 40 years with a corrosion allowance of 0.04 in. Review of the vendor drawings, PTF Tank Stress calculations, Engineering Specification for Maintenance Decontamination Equipment shows a conservative internal corrosion allowance of 0.125 in. is specified and used in design media. Corrosion allowance specified and used for the tank is adequate and conservative for the intended use of its life.
Pressure Relief	Pressure controls (vents and relief valves) are adequately designed to ensure pressure relief if normal operating pressures in the tank are exceeded.	Drawings and listed above under References	The drawings show that Tank PIH-TK-00001 is equipped with a 2 in. diameter overflow line that will be routed to a sump. The tank is built with an open top to accommodate a removable fitted lid (used during decontamination operation process); therefore, the tank cannot be pressurized above atmospheric (design) pressure.

Master Distribution Schedule for WTP Project Subcontract Management Group

SUBMITTAL TRANSMITTAL:	☒ **First Submittal**	☐ **Re-Submittal**	☐ **QVRP Package**
☐ **No Review Required**	☐ **No Review Required Re-Submittal**		☐ **Submittal Supplement**
CORRESPONDENCE:	☒ **With Attachment**	☐ **W/O Attachment (letter only)**	
	☐ **Fax as Original (Letter Only)**	☐ **Fax as Original (With Attachment)**	
☐ **Pre-Award/Award Package**		☐ **Executed Change Order Package**	
☐ **Executed Amendment Package**		☐ **Back Charge**	

Subcontract Number:	24590-CM-HC4-HXYG-00211
Subcontract Title:	Tank Integrity
Subcontractor Name:	Areva
Subcontract Administrator:	Anne Weldon

PDC Document Number	Rev	Document Title	Rev
139506		Structural Integrity Assessment for the PIH	

INCOMING DISTRIBUTION

Name	MSIN/ E-mail	Original	Copy	Copy of cover sheet / transmittal only	Primary File Index	Alternate File Index	Assigned Action or Remarks
PDC	MS9-A	X			B-8		
Pfluger, Dan	dcpfluge		X				
Weldon, Anne	anweldon		X				

OUTGOING DISTRIBUTION FOR RETURNED STATUSED STICKER SUBMITTALS

Name	MSIN/ E-mail	Original	Copy	Copy of cover sheet / transmittal only	Primary File Index	File Index Alternate	Assigned Action or Remarks
PDC	MS9-A	X					

RPP-WTP
RECEIVED

APR 0 8 2009

BY PDC

CCN 193196

AREVA

R10964647

AFS-09-0140

April 7, 2009

Ms. Jennifer Broadbent
Subcontract Administrator
Bechtel National, Inc.
2435 Stevens Center Place
Richland, Washington 99354

Dear Ms. Broadbent:

BECHTEL NATIONAL, INC. CONTRACT NO. 24590-CM-HC4-HXYG-00211
IQRPE STRUCTURAL INTEGRITY ASSESSMENT REPORT FOR PTF SECONDARY CONTAINMENT UP TO FLOOR ELEV. 56'-0" (IA-3001630-000)

The structural integrity assessment of the subject secondary containment has been completed per the contract requirements and is enclosed for your use. The assessment found that the design is sufficient to ensure that the secondary containment is adequately designed and has sufficient structural strength, compatibility with the waste(s) to be processed/stored/treated, and corrosion protection to ensure that it will not collapse, rupture, or fail.

If you have any questions, please contact Tarlok Hundal at (509) 371-1975, or via email at tarlok.hundal@areva.com.

Sincerely,

Fred R. Renz
Contract Management
AREVA Federal Services LLC
Richland Office

llm

Enclosure (1)

cc: D. C. Pfluger, MS 5-L w/enclosure (2)

AREVA Federal Services LLC
2101 Horn Rapids Road, RC-19, Richland, WA 99354, P. O. Box 840, Richland, WA 99352
Tel.: 509 375 8096 - Fax: 509 375 8495 - www.areva.com

IQRPE STRUCTURAL INTEGRITY ASSESSMENT REPORT FOR PTF SECONDARY CONTAINMENT UP TO FLOOR ELEV. 56'-0"

Please note that source, special nuclear and byproduct materials, as defined in the Atomic Energy Act of 1954 (AEA), are regulated at the U.S. Department of Energy (DOE) facilities exclusively by DOE acting pursuant to its AEA authority. DOE asserts, that pursuant to the AEA, it has sole and exclusive responsibility and authority to regulate source, special nuclear, and byproduct materials at DOE-owned nuclear facilities. Information contained herein on radionuclides is provided for process description purposes only.

IQRPE STRUCTURAL INTEGRITY ASSESSMENT REPORT FOR PTF SECONDARY CONTAINMENT UP TO FLOOR ELEV. 56'-0"

"I, Tarlok Hundal have reviewed, and certified a portion of the design of a new tank system or component located at the Hanford Waste Treatment Plant, owned/operated by Department of Energy, Office of River Protection, Richland, Washington. My duties were independent review of the current design for the PTF Secondary Containment, as required by the Washington Administrative Code, *Dangerous Waste Regulations*, Section WAC-173-303-640(3) (a) through (g) applicable components."

"I certify under penalty of law that I have personally examined and am familiar with the information submitted in this document and all attachments and that, based on my inquiry of those individuals immediately responsible for obtaining the information, I believe that the information is true, accurate, and complete. I am aware that there are significant penalties for submitting false information, including the possibility of fine and imprisonment."

The documentation reviewed indicates that the design fully satisfies the requirements of the WAC.

The attached review is fourteen (14) pages numbered one (1) through fourteen (14).

T S Hundal

Signature

4/7/09

Date

Scope	Scope of this Integrity Assessment	This Integrity Assessment addresses the Pretreatment Facility Secondary Containment rooms from Elevation (-) 45'-0" to Elevation 56'-0" as listed in CCN # 184401 and as shown on General Arrangement Drawings listed in References below. The specific rooms at various floor elevations considered in this assessment report are: **Elevation (-) 45'-0":** P-B001A, P-B002, P-B003, and P-B004. **Elevation (-) 21'-0":** P-B001 **Elevation (-) 19'-0":** P-B005 **Elevation 0'-0":** P-0101, P-0101A, P-0102, P-0102A, P-0104, P-0105, P-0105A, P-0105B, P-0105C, P-0106, P-0108, P-0108A, P-0108B, P-0108C, P-0109, P-0110, P-0110A, P-0110B, P-0110C, P-0110D, P-0111, P-0112, P-0113, P-0114, P-0116, P-0117, P-0117A, P-0118, P-0119, P-0121A, P-0122A, P-0123, P-0123A, P-0124, P-0124A, and P-0128A. **Elevation 28'-0";** P-0201, P-0201A, P-0203, P-0203A, P-0203B, P-0204, P-0206, P-0207, P-0208, P-0209, P-0210, P-0212, and P-0223. **Elevation 56'-0";** P-0301, P-0302, P-0303, P-0303B, P-0304, P-0307, P-0311, P-0311A, P-0311B, P-0311C, P-0317, P-0320, P-0324, P-0325, P-0326, P-0328, P-0332B, P-0335, P-0335A, P-0336, and PC0311.
Summary of Assessment		For each item of "Information Assessed" (i.e., Criteria) on the following pages, the items listed under "Source of Information" were reviewed and found to furnish adequate design requirements and controls to ensure that the design fully satisfies the requirements of Washington Administrative Code (WAC), Chapter 173-303 WAC, *Dangerous Waste Regulations,* WAC-173-303-640, *Tank Systems.*

References	Drawings and Correspondence Control Number	Drawings: 24590-PTF- P1- P01T- 00001, Rev. 6, Pretreatment Facility General Arrangement Plan at El. 0'-0"; 24590-PTF- P1- P01T- 00002, Rev. 6, Pretreatment Facility General Arrangement Plan at El. 28'-0"; 24590-PTF- P1- P01T- 00003, Rev. 4, Pretreatment Facility General Arrangement Plan at El. 56'-0"; 24590-PTF- P1- P01T- 00006, Rev. 4, Pretreatment Facility General Arrangement Plan at El. (-) 45'-0"; 24590-PTF- P1- P01T- 00007, Rev. 9, Pretreatment Facility General Arrangement Plan at El. A-A; 24590-PTF-D0-S13T-00008, Rev. 15, Pretreatment Facility Structural Concrete Notes & Legend Sh. 1; 24590-PTF-DB-S13T-00001, Rev. 1, Pretreatment Facility Structural Concrete Forming Overall Pit Plan; 24590-PTF-DB-S13T-00002, Rev. 6, Pretreatment Facility Structural Concrete Forming Main Pit Plan; 24590-PTF-DB-S13T-00005, Rev. 9, Pretreatment Facility Structural Concrete Forming , El. 0'-0" Base Mat; 24590-PTF-DB-S13T-00008, Rev. 5, Pretreatment Facility Structural Concrete Forming , El. 0'-0" & Below Section A; 24590-PTF-DB-S13T-00014, Rev. 2, Pretreatment Facility Structural Concrete Walls Key Plan , El. 0'-0"; 24590-PTF-DB-S13T-00015, Rev. 4, Pretreatment Facility Structural Concrete Wall Forming Partial Plan , El. 0'-0", Sh. 1; 24590-PTF-DB-S13T-00030, Rev. 3, Pretreatment Facility Structural Concrete Forming Key Plan , El. 28'-0"; 24590-PTF-DB-S13T-00034, Rev. 4, Pretreatment Facility Structural Concrete Forming Partial Plan , El. 28'-0", Sh. 4; 24590-PTF-DB-S13T-00045, Rev. 2, Pretreatment Facility Structural Concrete Slab Key Plan , El. 56'-0"; 24590-PTF-DB-S13T-00048, Rev. 11, Pretreatment Facility Structural Concrete Embedments Partial Plan , El. 56'-0", Sh. 3; 24590-PTF-DB-S13T-00055, Rev. 5, Pretreatment Facility Structural Concrete Forming Embed Layout Details , El. 56'-0", Sh. 2, 24590-PTF-DB-S13T-00100, Rev. 17, Pretreatment Facility Structural Concrete Wall Key Plan , Key Plan El. 0'-0" to 56'-0"; 24590-PTF-DB-S13T-00111, Rev. 10, Pretreatment Facility Structural Concrete Walls Section CE-Sh.1; 24590-PTF-DB-S13T-00147, Rev. 7, Pretreatment Facility Structural Concrete Walls Section AN-Sh.1; 24590-PTF-DB-S13T-00183, Rev. 9, Pretreatment Facility Structural Concrete Walls Section CN, HN; 24590-PTF-DB-S13T-00215, Rev.14, Pretreatment Facility Structural Concrete Walls Layout Details , Sh. 15, 24590-PTF-DB-S13T-00300, Rev.15, Pretreatment Facility Structural Concrete Walls Key Plan El. 56'-0", 24590-PTF-DB-S13T-00307, Rev. 5, Pretreatment Facility Structural Concrete Walls Section BE-Sh.3; 24590-PTF-SS-S15T-00009, Rev. 0, Pretreatment Facility Structural Steel Framing Key Plan El. 28'-0"; 24590-PTF-SS-S15T-00015, Rev. 5, Pretreatment Facility Structural Steel Framing Plan El. 28'-0", Sh. 6; 24590-PTF-SS-S15T-00049, Rev. 6, Pretreatment Facility Structural Steel Framing El. 56'-0", Partial Plans Sh.1; 24590-PTF-DG-S13T-00001, Rev. 0, Pretreatment Facility Structural Concrete Reinforcement El. 0'-0", Key Plan; 24590-PTF-DG-S13T-00002, Rev. 4, Pretreatment Facility Structural Concrete Reinforcement Main Pit Plan; 24590-PTF-DG-S13T-00006, Rev. 9, Pretreatment Facility Structural Concrete Reinforcement Pit Sections A & B; 24590-PTF-DG-S13T-00025, Rev. 7, Pretreatment Facility Structural Concrete Reinforcement Sections; 24590-PTF-DG-S13T-00026, Rev. 14, Pretreatment Facility Structural Concrete Reinforcing Details Sh.1; 24590-PTF-DG-S13T-00036, Rev. 3, Pretreatment Facility Structural Concrete Reinforcement Partial Plan El. 28'-0", Sh. 6; 24590-PTF-DG-S13T-00046, Rev. 5, Pretreatment Facility Structural Concrete Reinforcement Partial Plan El. 56'-0", Sh. 1; 24590-PTF-DG-S13T-00048, Rev. 3, Pretreatment Facility Structural Concrete Reinforcement Partial Plan El. 56'-0", Sh. 3; 24590-PTF-DG-S13T-00050, Rev. 4, Pretreatment Facility Structural Concrete Reinforcement Partial Plan El. 56'-0", Sh. 5; 24590-PTF-DG-S13T-00051, Rev. 4, Pretreatment Facility Structural Concrete Reinforcement Partial Plan El. 56'-0", Sh. 6; 24590-PTF-DG-S13T-00054, Rev. 3, Pretreatment Facility Structural Concrete Reinforcement Partial Plan & Sections; 24590-PTF-DG-S13T-00140, Rev. 11, Pretreatment Facility Structural Concrete Reinforcement Sections AA, AB, AC, AD. Correspondence Control Number: CCN # 184401, PT Room lists for Elevations (-) 45' to 56' re: secondary containment IQRPE report.

Information Assessed		Source of Information	Assessment
Foundation Design	Description of subsurface conditions and soil bearing capacity are adequate.	24590-WTP-DC-ST-01-001, Rev. 12, Structural Design Criteria; 24590-BOF-3PS-CE01-T0001, Rev. 6, Engineering Specification for Excavation and Backfill; 24590-BOF-3PS-C000-T0001, Rev. 4, Engineering Specification for Material Testing Services; 24590-PTF-DGC-S13T-00001, Rev. 0, Verification of PT Basemat Thickness for Purposes of Determining Excavation (Calculations); 24590-PTF-S0C-S15T-00012, Rev. 1B, Structural Analysis for the PT Building (Calculations); 24590-PTF-S0C-S15T-00010, Rev. 1, Pretreatment Building-Soil Springs; WTSC99-1036-42-17, RPP-WTP Final Report Geotechnical Investigation, Shannon & Wilson Inc. (H-1616-51), May 2000; 24590-BOF-3PS-CE00-T0001, Rev. 0, Site Work.	The Structural Design Criteria adequately presents design guidance for both mat and spread footings based on the Geotechnical Investigation report for the site. Bearing capacity and settlement design parameters are furnished for the dense Hanford Upper and Lower Sand Units and Structural Fill. Use of the loose wind blown (dune) sands for foundations is precluded. The Verification of PT Basemat Thickness calculations reviewed indicates that the allowable bearing of subsurface soil below the foundation mat is more than the maximum computed value. The Excavation and Backfill Specification provides structural backfill requirements based on the Geotechnical Investigation report and adequate current codes and standards for selection, placing, and compacting structural backfill including testing of candidate fill materials and completed backfills. The Specification for Material Testing Services provides current adequate codes and standards for testing of candidate structural fill materials and in-situ testing of structural fills as they are constructed. The codes and standards are consistent with those called out in the Excavation and Backfill Specification. The review of the calculations show that appropriate values of the soil parameters including allowable bearing capacity, were used for the secondary containment structures' design.

Information Assessed		Source of Information	Assessment
Foundation Design (cont'd)	Foundation design loads (including full tanks) and estimated settlement are adequately considered.	24590-WTP-DC-ST-01-001, Rev. 12, Structural Design Criteria; ASCE 7-98, Minimum Design Loads for Buildings and Other Structures; ACI 349-01, Code Requirements for Nuclear Safety-Related Concrete Structures; ACI 318-99, Building Code Requirements for Structural Concrete; 24590-PTF-DGC-S13T-00001, Rev. 0, Verification of PT Basement Thickness for Purposes of Determining Excavation (Calculations); 24590-PTF-DGC-S13T-00003, Rev. 0, Design of Foundation Basemat for PT Building (Calculations).	The Structural Design Criteria uses current adequate standards to define design loads and load combinations (ASCE 7-98, ACI 349-01 and ACI 318-99). Dead and fluid loads are included in these loads and load combinations. Settlement design parameters are included in the Structural Design Criteria subsection on "geotechnical design parameters and foundation design." Review of the Calculations for various floor elevation slabs shows that the full loads of the tanks and other equipment have been appropriately considered in the foundation design.

Information Assessed		Source of Information	Assessment
Foundation Design (cont'd)	Design calculation approach and design basis of footings with design standard references (e.g., ACI) are adequate.	24590-WTP-DC-ST-01-001, Rev. 12, Structural Design Criteria; ACI 349-01, Code Requirements for Nuclear Safety-Related Concrete Structures; ACI 318-99, Building Code Requirements for Structural Concrete; 24590-WTP-PER-CSA-02-001, Rev. 8, Secondary Containment Design; 24590-PTF-DGC-S13T-00001, Rev. 0, Verification of PT Basemat Thickness for Purposes of Determining Excavation (Calculations); 24590-PTF-DGC-S13T-00003, Rev. 0, Design of Foundation Basemat for PT Building (Calculations); 24590-PTF-SSC-S15T-00004, Rev. C, Pretreatment Bldg-Structural Design of 28'-0" Level Typical Floor Framing; 24590-PTF-SSC-S15T-00005, Rev. E, Design of Steel Framing at Cell-Tops Above Black Cell and Hot Cell Areas; 24590-WTP-VV-ST-01-001, Rev. 5A, Verification and Validation Test Plan and Test Report for GTSTRUDL; 24590-PTF-DBC-S15T-00001, Rev. 0, Structural Drop Load Analysis for PT Building (Calculations).	The Structural Design Criteria references current adequate design criteria for the design of concrete foundations and footings. ACI 349-01 is referenced for design of "safety" grade structures and ACI 318-99 is referenced for the strength design of "commercial grade" structures. The Secondary Containment Design document provides the design approach, basis, and methodology used for the design of the secondary containment foundations/footings. The input parameters used in the GTSTRUDL computer code utilized for this secondary containment design are appropriates and the output results have been appropriately validated via the Verification and Validation Test Plan and Test Report document. The above mentioned codes and standards, design approach, methodology, and basis delineated are appropriate and adequate for the foundations design.

Information Assessed		Source of Information	Assessment
Foundation Design (cont'd)	Foundation material is compatible with the soil.	24590-WTP-3PS-DB01-T0001, Rev. 8, Engineering Specification for Furnishing and Delivering Ready-Mix Concrete; 24590-BOF-3PS-C000-T0001, Rev. 4, Engineering Specification for Material Testing Services; 24590-WTP-DB-ENG-01-001, Rev. 1M, Basis of Design. 24590-WTP-3PS-DG00-T0001, Rev. 4, Engineering Specification for Reinforcing Steel.	The specification for Furnishing and Delivering Ready-Mix Concrete provides adequate current testing requirements for the selection of coarse and fine aggregates and the procurement of cementitious materials. Adequate test procedures are provided in the Material Testing Services specification for testing candidate aggregates for chemical reactivity. Instructions for mixing and delivering Ready-Mix Concrete are adequate and current. As noted in the Basis of Design document (section 4.7), the water table lies about 200 feet below the deepest PTF Facility foundations so there is little reason to expect compatibility problems between the concrete foundations and the site soils.
	Foundation will withstand the effects of frost heave	Drawings listed above under References; 24590-WTP-DC-ST-01-001, Rev. 12, Structural Design Criteria.	The Structural Design Criteria includes adequate provisions to preclude frost heave in the section addressing lateral earth pressure loads. All structural foundations are required to extend into the soil below the frost line to preclude frost heave. The frost line is 30 inches below the finished grade (@ El. 0'-0"), however, the drawings show that majority of the bottom of PTF foundation mat is at (-) 8'-0" and some sections are even lower than this. Therefore, the secondary containment foundations will not be subjected to frost heave effects.

Information Assessed		Source of Information	Assessment
Seismic Design	Seismic considerations have been adequately addressed.	24590-WTP-PER-CSA-02-001, Rev. 8, Secondary Containment Design; 24590-WTP-DC-ST-01-001, Rev. 12, Structural Design Criteria; ACI 349-01, Code Requirements for Nuclear Safety-Related Concrete Structures; ACI 318-99, Building Code Requirements for Structural Concrete; ANSI/AISC N690, Specification for the Design, Fabrication and Erection of Steel Safety-Related Structures for Nuclear Facilities; AISC MO16-89, Manual of Steel Construction - Allowable Stress Design, Ninth Edition; ASCE 4-98, Seismic Analysis of Safety Related Nuclear Structures and Commentary; 24590-PTF-S0C-S15T-00012, Rev. 1B, Structural Analysis for the PT Building (Calculations); 24590-PTF-DGC-S13T-00021, Rev. A, Design of Slab at 28' Elevation (Including ECCN # 00042); 24590-PTF-DGC-S13T-00022, Rev. C, PTF- El. 56' Slab Bounded by Column Lines 1 to 8 - RGM; 24590-PTF-DGC-S13T-00005, Rev. A, Design of Wall at Col. Lines, 1, 4. 6, 7, B, E, H, & L From El. 0 to 28; 24590-PTF-DGC-S13T-00047, Rev. A, PTF-Validation of Placed Concrete for Above Grade and Below Grade Wall for RGM ; 24590-PTF-DGC-S13T-00003, Rev. 0, Design of Foundation Basemat for PT Building. 24590-PTF-SSC-S15T-00004, Rev. C, Pretreatment Bldg-Structural Design of 28'-0" Level Typical Floor Framing; 24590-PTF-SSC-S15T-00005, Rev. E, Design of Steel Framing at Cell-Tops Above Black Cell and Hot Cell Areas.	The Secondary Containment Design document describes and provides references for the design methodology, materials, loads, and load combinations (including seismic loads) for the PTF Building secondary containment. The Structural Design Criteria provides detailed discipline specific codes and standards for the design of Seismic Category (SC-I/II) PTF secondary containment foundations and structures by the design engineers. ACI-349-01 and ACI 318-99 provide the design codes and load combinations for design of the secondary containment reinforced concrete foundations and structures. Structural steel components of the secondary containment structures and stainless steel liners are designed using ANSI/AISC N690 and the AISC Allowable Stress Design code. ASCE 4-98 is used for guidance on seismic analysis of safety-related nuclear structures. These codes and standards listed above are adequate and acceptable for addressing seismic considerations. Review of the sample calculations show that the requirements of the applicable codes and standards are appropriately incorporated in these documents.

Information Assessed		Source of Information	Assessment
Compatibility	The stored waste is compatible with its Secondary Containment and leak detection hardware based on a detailed chemical and physical analysis of the wastes used and other information sources.	24590-WTP-DB-ENG-01-001, Rev. 1M, Basis of Design; 24590-WTP-PER-M-02-001, Rev. 3, Material Selections for Building Secondary Containment/Leak Detection; 24590-WTP-PER-CSA-02-001, Rev. 8, Secondary Containment Design; 24590-WTP-3PS-AFPS-T0006, Rev. 0, Engineering Specification for Field Applied Special Protective Coatings for Secondary Containment Areas; 24590-PTF-PER-M-03-002, Rev. 0, Sump and Drain Data at 28Ft Level for PT Facility; 24590-PTF-PER-M-04-002, Rev. 0, Sump and Drain Data at 56 Ft Level for PT Facility; 24590-PTF-PER-M-02-006, Rev. 5, Sump Data for PT Facility. 24590-WTP-3PS-NLLR-T0002, Rev. 1, Engineering Specification for Furnishing, Detailing, Fabrication, Delivery and Installation of Stainless Steel Liner Plates; 24590-PTF-PER-M-02-005, Rev. 8, Flooding Volume for Below Grade and 0 ft Level in PT Facility; 24590-PTF-PER-M-03-001, Rev. 0, Flooding Volume for 28 ft Level in PT Facility. 24590-PTF-PER-M-04-001, Rev. 0, Flooding Volume for 56 ft Level in PT Facility. 24590-PTF-PER-M-04-0005, Rev. 0, Flooding Volume for Room P-0119 in the PT Facility; 24590-PTF-PER-M-04-0007, Rev. 0, Flooding Volume for Room P-0123A in the PT Facility.	The Basis of Design states that cells and sumps are appropriately lined and any spills are removed and flushed within 24-hrs or as timely as possible. Secondary Containment liner design for cells and process areas requires both stainless steel liners and special protective coatings depending on the service conditions. Secondary Containment liner design for various rooms at different elevations requires stainless steel liner or special protective coatings liner. Flood Volume documents provide required specific liner height is various rooms. Based on detailed analysis of the corrosive properties of expected waste process operations and evaluation of potential leak scenarios, the Material Selection report identifies appropriate and adequate corrosion resistant materials requirements for Secondary Containment liners, sumps and leak detection equipment. The Engineering Specification for Field Applied Special Protective Coatings (SPCs) provides the selection test criteria used to determine acceptable approved coating systems. These test criteria include chemical resistance endurance requirements and wear abrasion resistance criteria which provides liners compatibility with the wastes considered. The Secondary Containment Design report provides adequate typical construction details for liners including tank anchorage details, stainless steel liner installation details and SPC installation details to be used for Secondary Containment. Rooms at various elevations are provided with floor drains as itemized in the Sump and Drain Data documents for the PTF. All sumps are equipped with leak detection; however, individual floor drains are not equipped with leak detection.

Information Assessed		Source of Information	Assessment
Strength	The design shows that the Secondary Containment has sufficient strength and thickness to prevent failure owing to pressure gradients, static head during a release, physical contact with the waste, climatic conditions, and the stress of daily operations (e.g., vehicular traffic).	Drawings listed above under References; 24590-WTP-DC-ST-01-001, Rev. 12, Structural Design Criteria; 24590-WTP-PER-CSA-02-001, Rev. 8, Secondary Containment Design; 24590-WTP-3PS-NLLR-T0002, Rev. 1, Engineering Specification for Furnishing, Detailing, Fabrication, Delivery and Installation of Stainless Steel Liner Plates; 24590-WTP-PER-M-02-001, Rev. 3, Material Selections for Building Secondary Containment/Leak Detection. 24590-PTF-DGC-S13T-00001, Rev. 0, Verification of PT Basemat Thickness for Purposes of Determining Excavation (Calculations); 24590-PTF-DGC-S13T-00003, Rev. 0, Design of Foundation Basemat for PT Building (Calculations); 24590-PTF-DGC-S13T-00005, Rev. A, Design of Walls at Col. Lines 1,4, 6, 7, B, E, H, & L from El. 0 to 28 (Calculations); 24590-PTF-DGC-S13T-00047, Rev. A, PTF-Validation of Placed Concrete for Above Grade and Below Grade Wall for RGM (Calculations); 24590-PTF-SSC-S15T-00005, Rev. E, Design of Steel Framing at Cell -Tops Above the Black Cell and Hot-cell Areas (Calculations); 24590-PTF-DGC-S13T-00021, Rev. A, Design of Slab at 28' Elevation (including ECCN # 00042) - (Calculations); 24590-PTF-DGC-S13T-00022, Rev. C, PTF-El. 56' Slab - Bounded by Column Lines 1 to 8 - RGM (Calculations).	Because the Secondary Containment structures being considered are installed inside the Pretreatment Facility as shown on the general arrangement drawings, climatic conditions and vehicular traffic are not applicable load cases. The Secondary Containment Design requirements document identifies adequate and appropriate design codes and standards and all applicable load cases (operational stresses) from site specific conditions that must be considered in the design. The Engineering Specification for Furnishing Stainless Steel Liner Plates includes specific provisions for protection of and repair of completed liners during the construction process. Review of the referenced sample Calculations shows that the secondary containment structures are designed appropriately with sufficient strength to sustain the applicable loads. Factors that were considered during stainless steel liner material selection and special protective coating (SPC) material selection are adequately discussed in the Material Selections for Building Secondary Containment/Leak Detection document.

Information Assessed		Source of Information	Assessment
Strength (cont'd)	The Secondary Containment system has sufficient strength in the presence of operational stresses from site-specific conditions (i.e., traffic, heavy equipment, precipitation, frost).	Drawings listed above under References; 24590-WTP-DC-ST-01-001, Rev. 12, Structural Design Criteria; 24590-WTP-PER-CSA-02-001, Rev.8, Secondary Containment Design; 24590-WTP-3PS-NLLR-T0002, Rev. 1, Engineering Specification for Furnishing, Detailing, Fabrication, Delivery and Installation of Stainless Steel Liner Plates; 24590-WTP-PER-M-02-001, Rev. 3, Material Selections for Building Secondary Containment/Leak Detection; 24590-PTF-DBC-S15T-00001, Rev. 0, Structural Drop Load Analysis for PT Building. 24590-PTF-DGC-S13T-00003, Rev. 0, Design of Foundation Basemat for PT Building (Calculations); 24590-PTF-DGC-S13T-00005, Rev. A, Design of Walls at Col. Lines 1, 4, 6, 7, B, E, H, & L from El. 0 to 28 (Calculations); 24590-PTF-DGC-S13T-00047, Rev. A, PTF-Validation of Placed Concrete for Above Grade and Below Grade Wall for RGM (Calculations); 24590-PTF-SSC-S15T-00005, Rev. E, Design of Steel Framing at Cell -Tops Above the Black Cell and Hot-cell Areas (Calculations); 24590-PTF-DGC-S13T-00021, Rev. A, Design of Slab at 28' Elevation (including ECCN # 00042) - (Calculations); 24590-PTF-DGC-S13T-00022, Rev. C, PTF-El. 56' Slab - Bounded by Column Lines 1 to 8 - RGM (Calculations).	The Secondary Containment Design requirements document identifies adequate and appropriate design codes and standards and all applicable load cases (operational stresses) from site specific conditions that must be considered in the design. Because the Secondary Containment structures being considered are installed inside the Pretreatment Facility Building as shown on the drawings, therefore, traffic, heavy equipment, precipitation, and frost are not applicable load cases. The Engineering Specification for Furnishing Stainless Steel Liner Plates includes specific provisions for protection of and repair of completed liners during the construction process. Review of the referenced sample Calculations shows that the secondary containment structures are designed appropriately with sufficient strength to sustain the applicable loads from the specific conditions. Factors that were considered during stainless steel liner material selection and SPC material selection are adequately discussed in the Material Selections for Building Secondary Containment/Leak Detection document.

Information Assessed		Source of Information	Assessment
Foundation Integrity	The Secondary Containment is properly supported by a foundation or base in order to prevent failure from settlement, compression, or uplift, including the residual effects of installation.	Drawings listed above under References; 24590-WTP-DC-ST-01-001, Rev. 12, Structural Design Criteria; 24590-BOF-3PS-CE00-T0001, Rev. 0, Site Work. 24590-BOF-3PS-CE01-T0001, Rev. 6, Engineering Specification for Excavation and Backfill; 24590-BOF-3PS-C000-T0001, Rev. 4, Engineering Specification for Material Testing Services; 24590-WTP-PER-CSA-02-001, Rev. 8, Secondary Containment Design. 24590-PTF-DGC-S13T-00001, Rev. 0, Verification of PT Basemat Thickness for Purposes of Determining Excavation (Calculations); 24590-PTF-DGC-S13T-00003, Rev. 0, Design of Foundation Basemat for PT Building (Calculations); 24590-PTF-DGC-S13T-00030, Rev. A, PT Concrete Subsidence Evaluation in the Below Grade Foundation and Walls at Lap Splices (Calculations). 24590-PTF-SSC-S15T-00005, Rev. E, 24590-24590-PTF-DGC-S13T-00021, Rev. A, Design of Slab at 28' Elevation (including ECCN # 00042) - (Calculations); 24590-PTF-DGC-S13T-00022, Rev. C, PTF-El. 56' Slab - Bounded by Column Lines 1 to 8 - RGM (Calculations).	These conditions are fully addressed in the Structural Design Criteria and the Secondary Containment Design requirements documents. The design requirements and codes and standards specified are adequate to satisfy these performance goals. The procurement and construction specifications adequately provide for proper foundation construction and installation of the Secondary Containment. The general arrangement plans and the associated cross-section drawings show the Secondary Containment boundaries. The sample Calculations reviewed show that the foundation slabs are appropriately designed and will not fail when subjected loads such as uplift, installation, settlement or residual effects.

Information Assessed		Source of Information	Assessment
Foundation Integrity (cont'd)	The placement, structural support, and type of material used for backfill around and below the Secondary Containment are appropriate.	Drawings listed above under References; 24590-BOF-3PS-CE01-T0001, Rev. 6, Engineering Specification for Excavation and Backfill; 24590-BOF-3PS-C000-T0001, Rev. 4, Engineering Specification for Material Testing Services. 24590-PTF-DGC-S13T-00001, Rev. 0, Verification of PT Basemat Thickness for Purposes of Determining Excavation (Calculations); 24590-PTF-DGC-S13T-00003, Rev. 0, Design of Foundation Basemat for PT Building (Calculations).	The Excavation and Backfill and Material Testing specifications contain current adequate industry standards for selecting and testing fill materials, placing and compacting backfills, and testing not less than once each lift to assure adequate compaction. Requirements for testing and record keeping are current and adequate for both "safety grade" fills and "commercial grade" fills. Drawings show that backfill requirements are properly applied, tested, documented, and accepted and approved by BNI. Review of sample Calculations shows that appropriate parameters for backfill are used in design.
Infiltration	The design or operation (e.g., diking & curbing) prevents run-on or infiltration of precipitation into the Secondary Containment system unless the collection system has sufficient excess capacity (25 yr rainfall) to contain the run-on precipitation.	Drawings listed above under References; 24590-WTP-DB-ENG-01-001, Rev. 1M, Basis of Design.	This requirement is specified in the Basis of Design document. All Secondary Containment structure rooms being reviewed in this Integrity Assessment are located at various levels inside the Pretreatment Facility building where they are protected from precipitation as shown in the general arrangement plans and other associated drawings. Therefore, this requirement is not applicable to these rooms. The Basis of Design document also describes that the ground water table under the WTP site is about 250 ft below the ground surface which makes it unlikely event for water infiltration or intrusion into the building.

Information Assessed		Source of Information	Assessment
Infiltration (cont'd)	The design includes an external moisture barrier or other means to prevent moisture from entering the cell.	Drawings listed above under References; 24590-WTP-DB-ENG-01-001, Rev. 1M, Basis of Design. W24590-WTP-3PS-NLLR-T0002, Rev. 1, Engineering Specification for Furnishing, Detailing, Fabrication, Delivery and Installation of Stainless Steel Liner Plates; 24590-WTP-3PS-AFPS-T0006, Rev. 0, Engineering Specification for Field Applied Special Protective Coatings for Secondary Containment Areas.	The Secondary Containments shown on the general arrangement plans at elevations (-) 45'-0", 0'-0", 28'-0" and 56''-0" are inside the Pretreatment Facility Building which shields them from precipitation and surface water percolation. The ground water table is located about 200 feet below the floors of the inaccessible process cells at elevation (-) 45'-0" as noted in the Basis of Design document, therefore it's not a credible event for infiltration of external moisture into the interior of the building. And furthermore the rooms are lined with stainless steel plates or special protective coating material as an added insurance against moisture infiltration.
Liner System	The containment area is free of cracks or gaps and the design discusses methods of their minimization.	Secondary Containment/Leak Detection; 24590-WTP-PER-CSA-02-001, Rev. 8, Secondary Containment Design; 24590-WTP-3PS-NLLR-T0002, Rev. 1, Engineering Specification for Furnishing, Detailing, Fabrication, Delivery and Installation of Stainless Steel Liner Plates; 24590-WTP-3PS-AFPS-T0006, Rev. 0, Engineering Specification for Field Applied Special Protective Coatings for Secondary Containment Areas.	The Secondary Containment Design requirements document provides adequate and appropriate codes and standards for design of leak-tight liners. This report includes appropriate details for design and installation of stainless steel and special protective coating liners and sumps free of cracks and gaps. The Engineering Specification for Furnishing, Detailing, Fabrication, Delivery and Installation of Stainless Steel Liner Plates provides detailed information on design, fabrication, installation, and inspection of stainless steel liners and sumps. The Engineering Specification for Field Applied Special Protective Coatings provides detailed information on the tested and approved coating systems. This information includes directions for surface preparation, patching materials and application methods, and specific directions for application of multi-layer coatings.

Information Assessed		Source of Information	Assessment
Liner System (cont'd)	The design has considered the compatibility of the concrete liner or coatings and waste and presents information on coatings planning to be used from the manufacturer addressing compatibility with the stored waste. The lining or coating must prevent the waste from migrating into the concrete.	Drawings listed above under References; 24590-WTP-PER-M-02-001, Rev. 3, Material Selections for Building Secondary Containment/Leak Detection; 24590-WTP-PER-CSA-02-001, Rev. 8, Secondary Containment Design; 24590-WTP-3PS-NLLR-T0002, Rev. 1, Engineering Specification for Furnishing, Detailing, Fabrication, Delivery and Installation of Stainless Steel Liner Plates; 24590-WTP-3PS-AFPS-T0006, Rev. 0, Engineering Specification for Field Applied Special Protective Coatings for Secondary Containment Areas.	The Material Selections document contains adequate and appropriate general information on the compatibility of planned Secondary Containment stainless steel and special protective coating liners with the waste. The Secondary Containment Design report provides adequate and appropriate standard details for design and installation of stainless steel and special protective coating liners that will prevent migration of the waste into the concrete. The Engineering Specification for Furnishing, Detailing, Fabrication, Delivery and Installation of Stainless Steel Liner Plates provides detailed information on design, fabrication, installation, and inspection of stainless steel liners and sumps. The Engineering Specification for Field Applied Special Protective Coatings provides detailed information on the tested and approved coating systems. This information includes directions for surface preparation, patching materials and application methods, and specific directions for application of multi-layer coatings.

Master Distribution Schedule for
WTP Project Subcontract Management Group

SUBMITTAL TRANSMITTAL:	☐ **First Submittal**	☐ **Re-Submittal**	☐ **QVRP Package**	☐ **RFI**
☐ **No Review Required**	☐ **No Review Required Re-Submittal**	☐ **Submittal Supplement**		
CORRESPONDENCE:	☒ **With Attachment**	☐ **W/O Attachment (letter only)**	☐ **RFI**	
	☐ **Fax as Original (Letter Only)**	☐ **Fax as Original (With Attachment)**		
☐ **Pre-Award/Award Package**	☐ **Executed Change Order Package**			
☐ **Executed Amendment Package**	☐ **Back Charge**	☐ **Closeout Package**		

Subcontract Number:	24590-CM-HC4-HXYG-00211
Subcontract Title:	Tank Integrity Design Assessments
Subcontractor Name:	AREVA Federal Services LLC
Subcontract Administrator:	Jennifer Broadbent

PDC Document Number	Rev	Document Title	Rev
CCN #193196		IQRPE Structural Integrity Assessment Report For PTF Secondary Containment Up To Floor Elev. 56'-0" (IA-3001630-000)	

DUE BACK TO SUBCONTRACT ADMINISTRATOR NO LATER THAN: N/A

INCOMING DISTRIBUTION

Name	MSIN/ E-mail	Original	Copy	Copy of cover sheet / transmittal only	Primary File Index	Alternate File Index	Assigned Action or Remarks
PDC		X			B.19		
Jennifer Broadbent	X						
Dan Pfluger	X						
Lee Bostic	X						
Jan Brown	X						
Julie Colby	X						

Master Distribution Schedule for
WTP Project Subcontract Management Group

Subcontract Number:	24590-CM-HC4-HXYG-00211
Subcontract Title:	Tank Integrity Design Assessments
Subcontractor Name:	AREVA Federal Services LLC
Subcontract Administrator:	Jennifer Broadbent

OUTGOING DISTRIBUTION FOR RETURNED STATUSED STICKER SUBMITTALS

Name	MSIN/ E-mail	Original	Copy	Copy of cover sheet / transmittal only	Primary File Index	File Index Alternate	Assigned Action or Remarks

Drawings and Documents

Operating Unit Group 10 – Appendix 8.13
Pretreatment Building
Instrument Control Logic and Narrative Descriptions

The documents listed in the following table are incorporated by reference into this permit and are subject to the requirements set forth in Part I Standard Conditions, Part II General Facility Conditions, and Part III Operating Unit Group 10 Conditions. Upon request, copies of the documents can be viewed at the Nuclear Waste Program Resource Center located at 3100 Port of Benton Blvd. Richland, WA. Appointments for viewing can be scheduled by calling (509) 372-7950.

Drawing/Document Number	***Description***
24590-PTF-PER-J-02-002, Rev 0	System Logic Description for FRP System
24590-PTF-PER-J-02-003, Rev 0	System Logic Description for FEP System
24590-PTF-PER-J-02-004, Rev 0	System Logic Description for UFP System
24590-PTF-PER-J-02-005, Rev 0	System Logic Description for CXP System
24590-PTF-PER-J-02-006, Rev 0	System Logic Description for HLP System
24590-PTF-PER-J-02-007, Rev 0	System Logic Description for CNP System
24590-PTF-PER-J-02-010, Rev 0	System Logic Description for TLP System
24590-PTF-PER-J-02-011, Rev 0	System Logic Description for RDP System
24590-PTF-PER-J-02-012, Rev 0	System Logic Description for TCP System
24590-PTF-PER-J-03-001, Rev 0	System Logic Description for RLD System
24590-PTF-PER-J-03-002, Rev 0	System Logic Description for PJV System
24590-PTF-PER-J-03-004, Rev 0	System Logic Description for PWD System
24590-PTF-PER-J-04-0003, Rev 0	System Logic Description for PVP/PVV System
RESERVED	RESERVED

Source documents (which do not include a "P" in the last set of numbers, e.g. "-P0001," or "-TP001") should be used in conjunction with any document change notices issued against them.

We are currently transitioning from permit documents (which do include a "P" in the last set of numbers) to source documents. At the end of the transition period, permit submittals will contain source documents and will be incorporated into the permit as described in Ecology Publication # 07-05-006 (www.ecy.wa.gov/biblio/nwp.html).

Operating Unit Group 10 – Appendix 9.0

Where information regarding treatment, management, and disposal of the radioactive source, byproduct material, and/or special nuclear components of mixed waste (as defined by the Atomic Energy Act of 1954, as amended) has been incorporated into this permit, it is not incorporated for the purpose of regulating the radiation hazards of such components under the authority of this permit and chapter 70.105 RCW. In the event of any conflict between Permit Condition III.10.A and any statement relating to the regulation of source, special nuclear, and byproduct material contained in portions of the permit application that are incorporated into this permit, Permit Condition III.10.A will prevail.

Operating Unit Group 10 – Appendix 9.0
Low Activity Waste Building
Index

Appendix 9.1	Process Flow Diagrams
Appendix 9.2	Piping and Instrumentation Diagrams
Appendix 9.3	System Description Documentation (RESERVED)
Appendix 9.4	General Arrangement Drawings
Appendix 9.5	Civil, Structural, and Architectural Criteria and Typical Design Details
Appendix 9.6	Mechanical Drawings
Appendix 9.7	Specifications
Appendix 9.8	Engineering Calculations
Appendix 9.9	Material Selection Documentation
Appendix 9.10	Critical Systems Equipment/Instrument List
Appendix 9.11	IQRPE Reports
Appendix 9.12	Installation Plans (RESERVED)
Appendix 9.13	Instrument Control Logic and Narrative Description
Appendix 9.14	Description of Instrument Installation and Testing Procedures (RESERVED)
Appendix 9.15	Demonstration Test Plan (RESERVED)
Appendix 9.16	Demonstration Test Report (RESERVED)
Appendix 9.17	Treatment Effectiveness Report (RESERVED)
Appendix 9.18	Operating Documents

This page intentionally left blank.

Drawings and Documents

Operating Unit Group 10 – Appendix 9.1
Low Activity Waste Building
Process Flow Diagrams

The documents listed in the following table are incorporated by reference into this permit and are subject to the requirements set forth in Part I Standard Conditions, Part II General Facility Conditions, and Part III Operating Unit Group 10 Conditions. Upon request, copies of the documents can be viewed at the Nuclear Waste Program Resource Center located at 3100 Port of Benton Blvd. Richland, WA. Appointments for viewing can be scheduled by calling (509) 372-7950

Drawing/Document Number	***Description***
24590-LAW-M5-V17T-00004, Rev 4	Process Flow Diagram LAW Vitrification Melter 1 (System LMP & LOP)
24590-LAW-M5-V17T-00005, Rev 4	Process Flow Diagram LAW Vitrification Melter 2 (System LMP & LOP)
24590-LAW-M5-V17T-P0001, Rev 0	Process Flow Diagram (LCP, GFR, & LFP Systems)
24590-LAW-M5-V17T-P0002, Rev 0	Process Flow Diagram (LCP, GFR, & LFP Systems)
24590-LAW-M5-V17T-P0007, Rev 0	Process Flow Diagram (Melter 1 LOP System)
24590-LAW-M5-V17T-P0008, Rev 0	Process Flow Diagram (Melter 2 LOP System)
24590-LAW-M5-V17T-P0010, Rev 2	Process Flow Diagram (AMR & LVP Systems)
24590-LAW-M5-V17T-P0011, Rev 1	Process Flow Diagram (LVP System)
24590-LAW-M5-V17T-P0014, Rev 2	Process Flow Diagram (RLD & NLD Systems)
RESERVED	RESERVED

Source documents (which do not include a "P" in the last set of numbers, e.g. "-P0001," or "-TP001") should be used in conjunction with any document change notices issued against them.

We are currently transitioning from permit documents (which do include a "P" in the last set of numbers) to source documents. At the end of the transition period, permit submittals will contain source documents and will be incorporated into the permit as described in Ecology Publication # 07-05-006 (www.ecy.wa.gov/biblio/nwp.html).

This page intentionally left blank.

24590-LAW-M5-V17T-00004 Δ1

PLANT ITEM NUMBER
DESCRIPTION

OPERATING DUTY
BATCH/OPERATING CAPACITY

LMP-MLTR-00001
LAW MELTER

N/A
15 MT/DAY

LOP-FCLR-00002
MELTER 1
STANDBY OFFGAS
FILM COOLER
N/A

LOP-FCLR-00001
MELTER 1
PRIMARY OFFGAS
FILM COOLER
N/A

MELTER 1 WESP
OFFGAS FLOW VALVE
2E | LAW-00007

BYPASS TO MELTER 2
STANDBY LINE
3G | LAW-00005

PRESSURE RELIEF
TO WET PROCESS CELL

MELTER 1 OFFGAS STANDBY
TO LOP-SCB-00001
8F | LAW-00007

MELTER 1 OFFGAS PRIMARY
TO LOP-SCB-00001
8F | LAW-00007

MELTER FEED
FROM LFP-VSL 00002
2D | LAW-00001

LFP04

MELTER AIR INLEAKAGE FROM
WET PROCESS CELL

SYSTEM LFP

SYSTEM LMP

SYSTEM LOP

LOP-FCLR-00002

LOP-FCLR-00001

PLENUM
GLASS POOL

LMP-MLTR-00001

MOLTEN GLASS
TO PRODUCT CONTAINER

MELTER ENCLOSURE

NOTE 6

NOTE 7

NOTE 9

NOTE 10

NOTE 12

NOTE 13

NOTE 14

NOTE 15

NOTES:

1. (DELETED)
2. MAJOR INDICATION AND CONTROL INSTRUMENTATION ONLY SHOWN
3. VALVES SHOWN ONLY TO INDICATE PROCESS INTENT
4. (DELETED)
5. (DELETED)
6. GLASS LEVEL INDICATION IS USED TO MANUALLY CONTROL THE GLASS AIRLIFT DISCHARGE.
7. AIR FOR VARIOUS DEVICES SUCH AS VIEWING LENS PROTECTION
8. (DELETED)
9. DIFFERENTIAL PRESSURE WILL BE MEASURED BETWEEN THE MELTER PLENUM OR SECONDARY FILM COOLER PROBE AND MELTER ENCLOSURE
10. STREAM LMP09 DOES NOT COMBINE AND GOES TO SEPARATE POUR CAVES.
11. CONTENTS OF THIS DRAWING ARE DANGEROUS WASTE PERMIT AFFECTING
12. PLENUM TEMPERATURE INDICATION IS USED TO MANUALLY CONTROL THE ADS PUMP OPERATION (LFP-PMP-00007 TO -00012).
13. PARTIALLY CLOSE, BUT MAINTAIN A CONSTANT, SMALL VOLUME OF AIR FLOW TO PREVENT SOLIDS BUILDUP (DESPITE BEING DEPICTED AS CLOSED).
14. CONTROL AIR IS BASED ON DIFFERENTIAL PRESSURE BETWEEN THE MELTER PLENUM AND THE MELTER ENCLOSURE, SEE NOTE 9.
15. OPENING OF THE STANDBY LINE VALVE IS BASED ON DIFFERENTIAL PRESSURE BETWEEN THE MELTER PLENUM AND THE MELTER ENCLOSURE, SEE NOTE 9.

REFERENCES:

1. 24590-LAW-3YD-LFP-00001, "SYSTEM DESCRIPTION FOR LOW ACTIVITY WASTE MELTER FEED PROCESS SYSTEM (LFP)"
2. 24590-LAW-3YD-LOP-00001, "SYSTEM DESCRIPTION FOR LOP AND LVP: LAW MELTER OFFGAS"
3. 24590-PTF-M5-V17T-00001, "PROCESS FLOW DIAGRAM LEGENDS & SYMBOLS"
4. 24590-WTP-RPT-PR-01-008, "PROCESS STREAM NUMBERS"
5. 24590-WTP-RPT-ENG-02-009, "SYSTEM AND AREA LOCATORS LIST AND SYSTEM DIVISION OF RESPONSIBILITY"
6. 24590-WTP-3DP-G03B-00044, "STANDARD COMPONENT NUMBERING"
7. 24590-LAW-3YD-LMP-00001, "SYSTEM LMP, SYSTEM DESCRIPTION FOR LOW-ACTIVITY WASTE MELTER"
8. 24590-LAW-MOD-LMP-00001, "DATASHEET LOW ACTIVE WASTE MELTER 1"
9. 24590-LAW-MAC-LVP-00007, "LAW OFFGAS SYSTEM PRESSURE DROP DETERMINATION"

Please note that source, special nuclear, and byproduct materials, as defined in the Atomic Energy Act of 1954 (AEA) are regulated at the U. S. Department of Energy (DOE) facilities exclusively by DOE acting pursuant to its AEA authority. DOE asserts that pursuant to AEA, it has sole and exclusive responsibility and authority to regulate source, special nuclear, and byproduct materials at DOE-owned nuclear facilities. Information contained herein on radionuclides is provided for process description purposes only.

REV	DESCRIPTION	ORG	CHKD	RVWD	APVD	DATE
4	UPDATED NOTES. REMOVED STREAM TABLE. DETAIL ADDED FOR CLARITY. REMOVED BOTTOM ELECTRODE. CHANGES PER 24590-LAW-DCN-PR-02-004	JH	RDP	AGD	CD	9-16-02
3	DOCUMENT DM REVIEW OF PFD	JH	RDP	AGD	CD	9-16-02
2	UPDATED REFERENCES. REVISED NOTES, DESIGN CHANGES ARE INCLUDED FOR 24590-WTP-DCN-M-02-001 AND 24590-LAW-DCN-PR-02-003	BWJ	RDP	N/A	CD	6-19-02
1	UPDATED EQUIPMENT NUMBERING, PROCESS STREAM NUMBERING, AND STREAM TABLE. VESSEL OPERATING CAPACITY CHANGED TO BATCH CAPACITY.	TH	RDP	N/A	AGD	12-5-01
0	THIS DRAWING SUPERCEDES DWG W375LV-PR01002, REV. 3.	TH	TJV	N/A	AGD	8-16-01

REVISION HISTORY

ISSUED BY RPP-WTP PDC & SEATTLE
ISSUE STAMP

ENG-CI No.	24590
SITE	HANFORD
AREA	200E
BUILDING No.	20

	BY	DATE
ORIGINATOR	PETERS, RICH	8/16/01
CHECKER	VALENTI, THOMAS	8/16/01
APPROVER	DADA, ABDUL	8/16/01
REVIEWER	N/A	N/A

CONTENT APPLICABLE TO ALARA? [X] YES [ ] NO
ADR NO. 24590-LAW-ADR-PR-02-002 REV: 1

BECHTEL
RIVER PROTECTION PROJECT
WASTE TREATMENT PLANT
2435 STEVENS CENTER PLACE
RICHLAND, WA 99352

CONTRACT No. DE-AC27-01RV14136

PROCESS FLOW DIAGRAM LAW VITRIFICATION MELTER 1 (SYSTEM LMP & LOP)

SCALE: NTS

24590-LAW-M5-V17T-00004 Δ1

REV 4

E SIZE 44x34
COMPUTER GENERATED - MANUAL CHANGES NOT PERMITTED

FORM L-SEN-DGN-02/2003

03/18/2004 11:32:32 AM

R:\ENG\24590\LAW\M5\24590-LAW-M5-V17T-00004.REV4

24590-LAW-M5-V17T-00005 A

PLANT ITEM NUMBER
DESCRIPTION

OPERATING RATE
BATCH/OPERATING CAPACITY A

LMP-MLTR-00002
LAW MELTER

N/A
15 MT/DAY

LOP-FCLR-00004
MELTER 2
STANDBY OFFGAS
FILM COOLER
N/A A

LOP-FCLR-00003
MELTER 2
PRIMARY OFFGAS
FILM COOLER
N/A A

MELTER 2 WESP
OFFGAS FLOW VALVE
2E | LAW-00008

FI
PSA
NOTE 14 A
LMP13

NOTE 16
YC
LMP08
BYPASS TO MELTER 1
STANDBY LINE
3G | LAW-00004

HPS
PSA
DIW
PRESSURE RELIEF
TO WET PROCESS CELL

MELTER FEED
FROM LFP-VSL-00004
2D | LAW-00002
LFP04

MELTER AIR INLEAKAGE FROM
WET PROCESS CELL

SYSTEM LFP
SYSTEM LMP

NOTE 13
NOTE 6
NOTE 15
LMP07
MELTER 2 OFFGAS STANDBY
TO LOP-SCB-00002
8F | LAW-00008

LMP11
LMP10
LMP09

NOTE 9
PDI
PDIC
NOTE 6
LI
DI
LMP01

NOTE 7
NOTE 12
TI
TIC
LMP03
LMP02

LMP14
MELTER 2 OFFGAS PRIMARY
TO LOP-SCB-00002
8F | LAW-00008

SYSTEM LOP
SYSTEM LMP
LMP15

LOP-FCLR-00004
LOP-FCLR-00003

PLENUM
GLASS POOL

PCW
FI
PCW

LMP-MLTR-00002

MOLTEN GLASS
TO PRODUCT CONTAINER
LMP09
NOTE 10

MELTER ENCLOSURE

NOTES:

A 1. (DELETED)
2. MAJOR INDICATION AND CONTROL INSTRUMENTATION ONLY SHOWN
3. VALVES SHOWN ONLY TO INDICATE PROCESS INTENT
A 4. (DELETED)
A 5. (DELETED)
6. GLASS LEVEL INDICATION IS USED TO MANUALLY CONTROL THE GLASS AIRLIFT DISCHARGE.
7. AIR FOR VARIOUS DEVICES SUCH AS VIEWING LENS PROTECTION
A 8. (DELETED)
9. DIFFERENTIAL PRESSURE WILL BE MEASURED BETWEEN THE MELTER PLENUM OR SECONDARY FILM COOLER PROBE AND MELTER ENCLOSURE.
10. STREAM LMP09 DOES NOT COMBINE AND GOES TO SEPARATE POUR CAVES.
A 11. CONTENTS OF THIS DRAWING ARE DANGEROUS WASTE PERMIT AFFECTING
12. PLENUM TEMPERATURE INDICATION IS USED TO MANUALLY CONTROL THE ADS PUMP OPERATION (LFP-PMP-00013 TO -00018).
13. PARTIALLY CLOSE, BUT MAINTAIN A CONSTANT, SMALL VOLUME OF AIR FLOW TO PREVENT SOLIDS BUILDUP (DESPITE BEING DEPICTED AS CLOSED).
14. CONTROL AIR IS BASED ON DIFFERENTIAL PRESSURE BETWEEN THE MELTER PLENUM AND THE MELTER ENCLOSURE, SEE NOTE 9.
15. OPENING OF THE STANDBY LINE VALVE IS BASED ON DIFFERENTIAL PRESSURE BETWEEN THE MELTER PLENUM AND THE MELTER ENCLOSURE, SEE NOTE 9.
16. VALVE IS OPENED TO PROVIDE VENTILATION TO MELTER DURING MAINENANCE.

REFERENCES:

1. 24590-LAW-3YD-LFP-00001, "SYSTEM DESCRIPTION FOR LOW ACTIVITY WAST MELTER FEED PROCESS SYSTEM (LFP)"
2. 24590-LAW-3YD-LOP-00001, "SYSTEM DESCRIPTION FOR LOP AND LVP: LAW MELTER OFFGAS"
A 3. 24590-PTF-M5-V17T-00001, "PROCESS FLOW DIAGRAM LEGENDS & SYMBOLS"
4. 24590-WTP-RPT-PR-01-008, "PROCESS STREAM NUMBERS"
5. 24590-WTP-RPT-ENG-02-009, "SYSTEM AND AREA LOCATORS LIST AND SYSTEM DIVISION OF RESPONSIBILITY"
6. 24590-WTP-3DP-G03B-00044, "STANDARD COMPONENT NUMBERING"
7. 24590-LAW-3YD-LMP-00001, "SYSTEM LMP, SYSTEM DESCRIPTION FOR LOW-ACTIVITY WASTE MELTER"
8. 24590-LAW-MOD-LMP-00002, "DATASTHEET LOW ACTIVE WASTE MELTER 2"
9. 24590-LAW-MAC-LVP-00007, "LAW OFFGAS SYSTEM PRESSURE DROP DETERMINATION"

A

REV	DESCRIPTION	ORG	CHKD	RVWD	AFVD	DATE
4	UPDATED NOTES. REMOVED STREAM TABLE. DETAIL ADDED FOR CLARITY. REMOVED BOTTOM ELECTRODE. CHANGES PER 24590-LAW-DCN-PR-02-004.		JFH	RDP	AGD	GD 9-16-02
3	DOCUMENT DM REVIEW OF PFD		JFH	RDP	AGD	GD 9-16-02
2	UPDATED REFERENCES. REVISED NOTES. DESIGN CHANGES ARE INCLUDED FOR 24590-WTP-DCN-M-02-001 AND 24590-LAW-DCN-PR-02-003.		BWJ	RDP	N/A	GD 6 19 02
1	UPDATED EQUIPMENT NUMBERING, PROCESS STREAM NUMBERING, AND STREAM TABLE. VESSEL OPERATING CAPACITY CHANGED TO BATCH CAPACITY.		TH	RDP	N/A	AGD 12-5-01
0	THIS DRAWING SUPERCEDES DWG-W375LV-PR0003, REV. 3.		TH	TJV	N/A	AGD 8-16-01

REVISION HISTORY

ISSUED BY PRETREATMENT ENGINEERING
ISSUE STAMP

PROJECT No. 24590
SITE HANFORD
AREA
BLDG No. 2005, 20

	BY	DATE
ORIGINATOR	R PETERS	8/16/01
CHECKER	T. VALENTI	8/16/01
APPROVER	A. DADA	8/16/01
REVIEWER	N/A	N/A

CONTENT APPLICABLE TO ARRAY [X] YES [ ] NO
ASR NO. 24590-LAW-ASR-PR-02-002 VOL. 1

BECHTEL
RIVER PROTECTION PROJECT
WASTE TREATMENT PLANT
2435 STEVENS CENTER PLACE
RICHLAND, WA 99352

CONTRACT No. DE-AC27-01RV14136

PROCESS FLOW DIAGRAM LAW VITRIFICATION MELTER 2 (SYSTEM LMP & LOP)

SCALE NTS
24590-LAW-M5-V17T-00005 A
REV 4

E SIZE - 44x34
COMPUTER GENERATED - MANUAL CHANGES NOT PERMITTED

FORM E_SDVDGN 02/2003

03/18/2004 11:27:23 AM

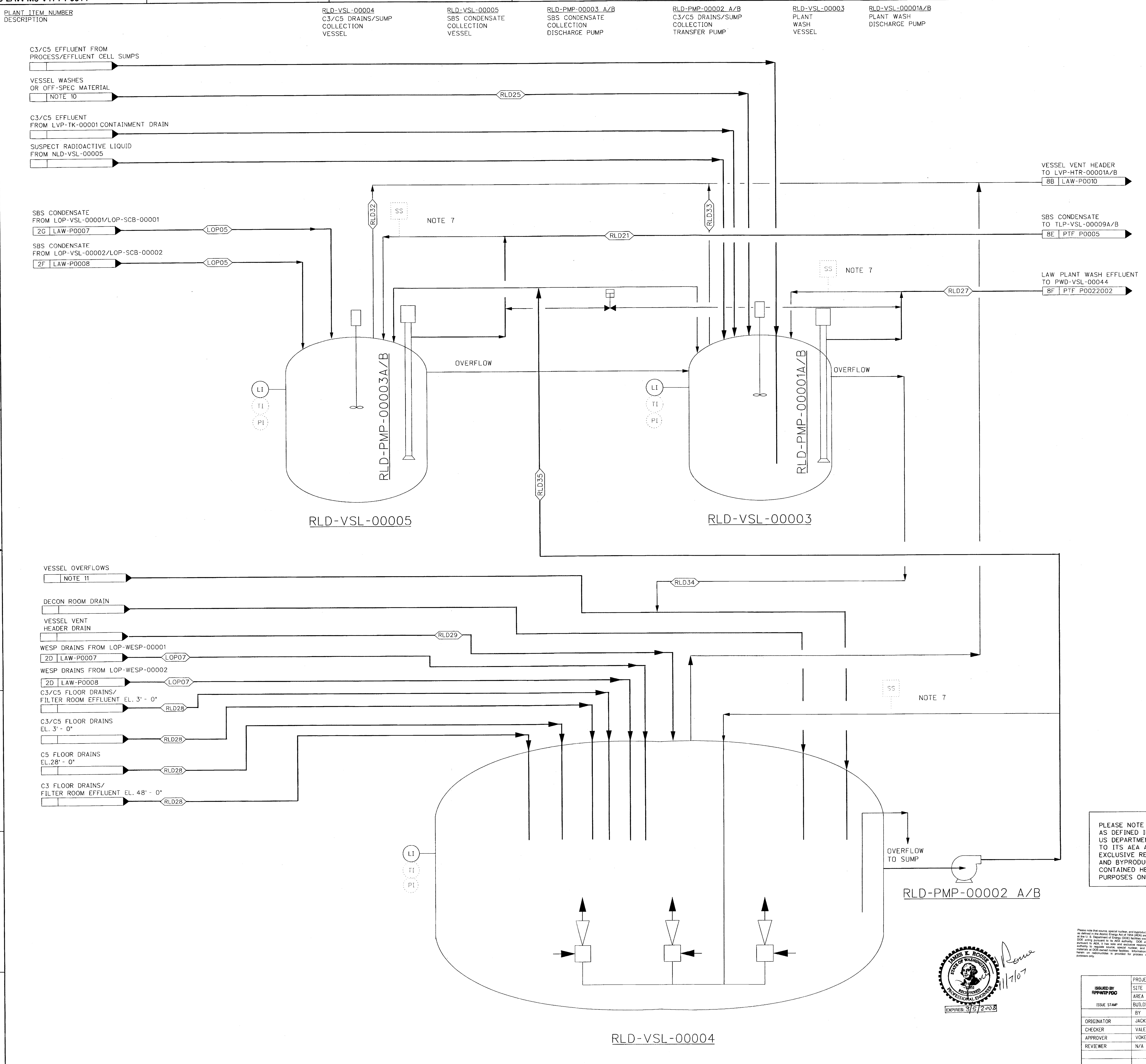

NOTES:

1. (DELETED)
2. MAJOR INDICATION AND CONTROL INSTRUMENTATION ONLY SHOWN
3. VALVES SHOWN ONLY TO INDICATE PROCESS INTENT
4. (DELETED)
5. (DELETED)
6. ALL VESSELS WILL BE FITTED WITH INTERNAL SPRAY NOZZLES FOR DECONTAMINATION.
7. SAMPLING OF VESSELS WILL UTILIZE A DISCHARGE PUMP WITH A RECIRCULATING LEG SAMPLING SYSTEM.
8. (DELETED)
9. CONTENTS OF THIS DOCUMENT ARE DANGEROUS WASTE PERMIT AFFECTING.
10. PLANT WASH VESSEL RECEIVES WASH EFFLUENT OR OFF-SPECIFICATION MATERIAL FROM LCP-VSL-00001 & -00002, AND LFP-VSL-00001 THROUGH -00004.
11. C3/C5 DRAINS/SUMP COLLECTION VESSEL RECEIVES OVERFLOWS FROM LCP-VSL-00001 & -00002, LFP-VSL-00001 & -00003, AND RLD-VSL-00003.
12. THE PORTIONS OF THIS DRAWING SHOWN IN PHANTOM DO NOT REQUIRE INDEPENDENT QUALIFIED REGISTERED PROFESSIONAL ENGINEER ASSESSMENTS OF DESIGN OR INSTALLATION INSPECTIONS BY A QUALIFIED INSTALLATION INSPECTOR IN ACCORDANCE WITH THE DWP AND/OR WASHINGTON ADMINSTRATIVE CODE REQUIREMENTS.
13. THIS IS AN EXTENSIVE REVISION. FOR CLARITY, CLOUDING IS NOT USED. REMOVED NLD-VSL-00005 AND NLD-PMP-00003A/B (NOT PROCESS EQUIPMENT). UPDATED PUMP NUMBERING. REMOVED DENSITY MEASUREMENTS ON VESSELS AND ADDED PRESSURE MEASUREMENTS. DELETED STREAMS FROM THIRD MELTER.

REFERENCES:

1. 24590-LAW-3YD-RLD-00001, "SYSTEM DESCRIPTION FOR LAW RADIOACTIVE LIQUID WASTE DISPOSAL (RLD) SYSTEM"
2. 24590-WTP-M5-V17T-00001, "PROCESS FLOW DIAGRAM LEGEND & SYMBOLS"
3. 24590-WTP-RPT-PR-01-008, "PROCESS STREAM NUMBERS"
4. 24590-WTP-RPT-ENG-02-009, "SYSTEM AND AREA LOCATORS LIST AND SYSTEM DIVISION OF RESPONSIBILITY"
5. 24590-WTP-3DP-G03B-00044, "STANDARD COMPONENT NUMBERING"
6. 24590-LAW-MVC-RLD-00009, "PROCESS DATA INPUT FOR LAW C3/C5 DRAINS/SUMP COLLECTION VESSEL (RLD-VSL-00004)"
7. 24590-LAW-MVC-RLD-00007, "PROCESS DATA INPUT FOR LAW SBS CONDENSATE COLLECTION VESSEL (RLD-VSL-00005) AND DISCHARGE PUMPS (RLD-PMP-00003A/B)"
8. 24590-LAW-MVC-RLD-00008, "PROCESS DATA INPUT FOR LAW PLANT WASH VESSEL (RLD-VSL-00003) AND DISCHARGE PUMPS (RLD-PMP-00001A/B)"

PLEASE NOTE THAT SOURCE, SPECIAL NUCLEAR AND BYPRODUCT MATERIALS, AS DEFINED IN THE ATOMIC ENERGY ACT OF 1954 (AEA), ARE REGULATED AT THE US DEPARTMENT OF ENERGY (DOE) FACILITIES EXCLUSIVELY BY DOE ACTING PURSUANT TO ITS AEA AUTHORITY. DOE ASSERTS, THAT PURSUANT TO THE AEA, IT HAS SOLE AND EXCLUSIVE RESPONSIBILITY AND AUTHORITY TO REGULATE SOURCE, SPECIAL NUCLEAR, AND BYPRODUCT MATERIALS AT DOE-OWNED NUCLEAR FACILITIES. INFORMATION CONTAINED HEREIN ON RADIONUCLIDES IS PROVIDED FOR PROCESS DESCRIPTION PURPOSES ONLY.

JAMES E. ROUSE — STATE OF WASHINGTON — REGISTERED PROFESSIONAL ENGINEER — EXPIRES: 9/5/2008 — 11/7/07

REV	DESCRIPTION	ORG	CHKD	RVWD	APVD	DATE
2	ISSUED FOR PERMITTING USE	NW	YN	WR	HS	11/7/07
1	SHOW AGITATION AND TRANSFER EQUIPMENT	KDB	TJV	AGD	CJW	11/25/02
0	ISSUED FOR PERMITTING USE	BWJ	TJV	N/A	AGD/RV	8/8/02

REVISION HISTORY

ISSUED BY RPP-WTP PDC — ISSUE STAMP

PROJECT No.	24590
SITE	HANFORD
AREA	200E
BUILDING No.	20

	BY	DATE
ORIGINATOR	JACKSON, JR., BARRY	8/8/02
CHECKER	VALENTI, THOMAS	8/8/02
APPROVER	VOKE, ROBERT	8/8/02
REVIEWER	N/A	

BECHTEL

RIVER PROTECTION PROJECT
WASTE TREATMENT PLANT
2435 STEVENS CENTER PLACE
RICHLAND, WA 99354

CONTRACT No: DE-AC27-01RV14136

PROCESS FLOW DIAGRAM LAW LIQUID EFFLUENT (SYSTEM RLD)

CONTENT APPLICABLE TO ALARA? [X] YES [ ] NO
ADR NO. N/A REV:
SAFETY SCREEN REQUIRED? [ ] YES [X] NO E&NS INITIAL IF YES

SCALE: NTS — 24590-LAW-M5-V17T-P0014 — REV 2

SAFETY SCREEN IS REQUIRED FOR DRAWING TYPES IDENTIFIED IN 24590-WTP-GPP-SREG-002

'E' SIZE - 44x34
COMPUTER GENERATED - MANUAL CHANGES NOT PERMITTED

R10851476

10/31/2007 08:16:02 AM

PLOTTED BY: newilkin
c:\work\newilkin\ams06004\24590-law-m5-v17t-p0014.dgn

Drawings and Documents

Operating Unit Group 10 – Appendix 9.2
Low Activity Waste Building
Piping and Instrumentation Diagrams

The documents listed in the following table are incorporated by reference into this permit and are subject to the requirements set forth in Part I Standard Conditions, Part II General Facility Conditions, and Part III Operating Unit Group 10 Conditions. Upon request, copies of the documents can be viewed at the Nuclear Waste Program Resource Center located at 3100 Port of Benton Blvd. Richland, WA. Appointments for viewing can be scheduled by calling (509) 372-7950.

Drawing/Document Number	***Description***
24590-LAW-M6-LCP-P0001, Rev 3	Piping & Instrumentation Diagram Concentrate Receipt Process System Concentrate Receipt Vessel (LCP-VSL-00001)
24590-LAW-M6-LCP-P0002, Rev 2	Piping & Instrumentation Diagram Concentrate Receipt Process System Concentrate Receipt Vessel (LCP-VSL-00002)
24590-LAW-M6-LFP-P0001, Rev 2	Piping &Instrumentation Diagram Melter Feed Process System Melter 1 Feed Preparation and Feed
24590-LAW-M6-LFP-P0003, Rev 2	Piping & Instrumentation Diagram Melter Feed Process System Melter 2 Feed Preparation and Feed
24590-LAW-M6-LMP-00001, Rev 2	P&ID – LAW Melter Process System Melter 1 Agitation – Zone 1 & Zone 2 *Confidential Business Information*
24590-LAW-M6-LMP-00002, Rev 2	P&ID –LAW Melter Process System Melter 1 Agitation Zone 3 & Level Detection System *Confidential Business Information*
24590-LAW-M6-LMP-00003, Rev 4	P&ID –LAW Melter Process System Melter 1 Walls and Floor Panels Cooling System
24590-LAW-M6-LMP-00005, Rev 2	P&ID –LAW Melter Process System Melter 1 Electrode Extension Cooling & Glass/Plenum Temperatures *Confidential Business Information*
24590-LAW-M6-LMP-00007, Rev 3	P&ID –LAW Melter Process System Melter 1 Glass Pouring and Monitoring Instrumentation
24590-LAW-M6-LMP-00008, Rev 3	P&ID –LAW Melter Process System Melter 1 Discharge Heaters, Power Controls (1-4) & Air Left - Eastside

24590-LAW-M6-LMP-00010, Rev 3	P&ID –LAW Melter Process System Melter 1 Discharge Heaters, Power Controls (1-4) & Air Lift - Westside
24590-LAW-M6-LMP-00012, Rev 5	P&ID –LAW Melter Process System Melter 1 Feed Nozzles Cooling System and Feed Nozzles
24590-LAW-M6-LMP-00013, Rev 5	P&ID –LAW Melter Process System Melter 1 Lid, Plenum and Offgas Ports Cooling System
24590-LAW-M6-LMP-00031, Rev 2	P&ID –LAW Melter Process System Melter 2 Agitations – Zone 1 & Zone 2 *Confidential Business Information*
24590-LAW-M6-LMP-00032, Rev 2	P&ID –LAW Melter Process System Melter 2 Agitations Zone 3 & Level Detection System *Confidential Business Information*
24590-LAW-M6-LMP-00033, Rev 4	P&ID –LAW Melter Process System Melter 2 Walls and Floor Panels Cooling System
24590-LAW-M6-LMP-00035, Rev 2	P&ID –LAW Melter Process System Melter 2 Electrode Extension Cooling & Glass/Plenum Temperatures *Confidential Business Information*
24590-LAW-M6-LMP-00037, Rev 3	P&ID –LAW Melter Process System Melter 2 Glass Pouring and Monitoring Instrumentation
24590-LAW-M6-LMP-00038, Rev 3	P&ID –LAW Melter Process System Melter 2 Discharge Heaters, Power Controls (1-4) & Air Lift - Eastside
24590-LAW-M6-LMP-00040, Rev 3	P&ID –LAW Melter Process System Melter 2 Discharge Heaters, Power Controls (1-4) & Air Lift - Westside
24590-LAW-M6-LMP-00042, Rev 5	P&ID –LAW Melter Process System Melter 2 Feed Nozzles Cooling System and Feed Nozzles
24590-LAW-M6-LMP-00043, Rev 5	P&ID –LAW Melter Process System Melter 2 Lid, Plenum Cooling System Ports Cooling System
24590-LAW-M6-LOP-00004, Rev 4	P&ID –LAW Primary Offgas Process System Melter 1 Offgas Film Coolers
24590-LAW-M6-LOP-00005, Rev 4	P&ID –LAW Primary Offgas Process System Melter 2 Offgas Film Coolers
24590-LAW-M6-LOP-P0001, Rev 2	Piping & Instrumentation Diagram Primary Offgas Process System Melter 1
24590-LAW-M6-LOP-P0002, Rev 2	Piping & Instrumentation Diagram Primary Offgas Process System Melter 2
24590-LAW-M6-LVP-P0001, Rev 1	Piping & Instrument Diagram Secondary Offgas/Vessel Vent Process System Melters Secondary Offgas

24590-LAW-M6-LVP-P0002, Rev 3	Piping & Instrument Diagram Secondary Offgas/Vessel Vent Process System and Stack Discharge Monitoring System
24590-LAW-M6-LVP-P0003, Rev 1	Piping & Instrument Diagram Secondary Offgas Vessel Vent Process System Equipment Vents
24590-LAW-M6-LVP-P0004, Rev 1	Piping & Instrument Diagram Melters Secondary Offgas, Vessel Vent Process System Mercury Mitigation Equipment
24590-LAW-M6-LVP-P0005, Rev 1	Piping & Instrument Diagram Melters Secondary Offgas Vessel Vent Process System SCR, VOC & Ammonia Dilution Packages
24590-LAW-M6-RLD-P0001, Rev 3	Piping & Instrumentation Diagram Radioactive Liquid Waste Disposal System Plant Wash & SBS Condensate Collection
24590-LAW-M6-RLD-P0002, Rev 3	Piping &Instrumentation Diagram Radioactive Liquid Waste Disposal System C3/C5 Drains Sump Collection
24590-LAW-M6-RLD-P0003, Rev 3	Piping & Instrumentation Diagram Radioactive Liquid Waste Disposal System C3/C5 Floor Drains Collection
24590-WTP-PEN-ENV-03-003	Equivalency Notice for 24590-LAW-M6-LCP-P0001, & 24590-LAW-M6-LCP-P0002
RESERVED	RESERVED

Source documents (which do not include a "P" in the last set of numbers, e.g. "-P0001," or "-TP001") should be used in conjunction with any document change notices issued against them.

We are currently transitioning from permit documents (which do include a "P" in the last set of numbers) to source documents. At the end of the transition period, permit submittals will contain source documents and will be incorporated into the permit as described in Ecology Publication # 07-05-006 (www.ecy.wa.gov/biblio/nwp.html).

This page intentionally left blank.

This information has been identified as **CONFIDENTIAL BUSINESS INFORMATION**

Per the Department of Ecology's April 1, 2009, letter "Re: Certification of Confidential Business Information for the Waste Treatment Plant," under the criteria of 43.21A.160 RCW and WAC 173-303-810 (15), the following document and associated changes are granted confidentiality and are exempt from public review:

Document Number: 24590-LAW-M6-LMP-00001 Title: P&ID – LAW Melter Process System Melter 1 Agitation – Zone 1 & Zone 2

This information has been identified as **CONFIDENTIAL BUSINESS INFORMATION**

Per the Department of Ecology's April 1, 2009, letter "Re: Certification of Confidential Business Information for the Waste Treatment Plant," under the criteria of 43.21A.160 RCW and WAC 173-303-810 (15), the following document and associated changes are granted confidentiality and are exempt from public review:

Document Number: 24590-LAW-M6-LMP-00002
Title: P&ID –LAW Melter Process System Melter 1 Agitation Zone 3 & Level Detection System

24590-LAW-M6-LMP-00003

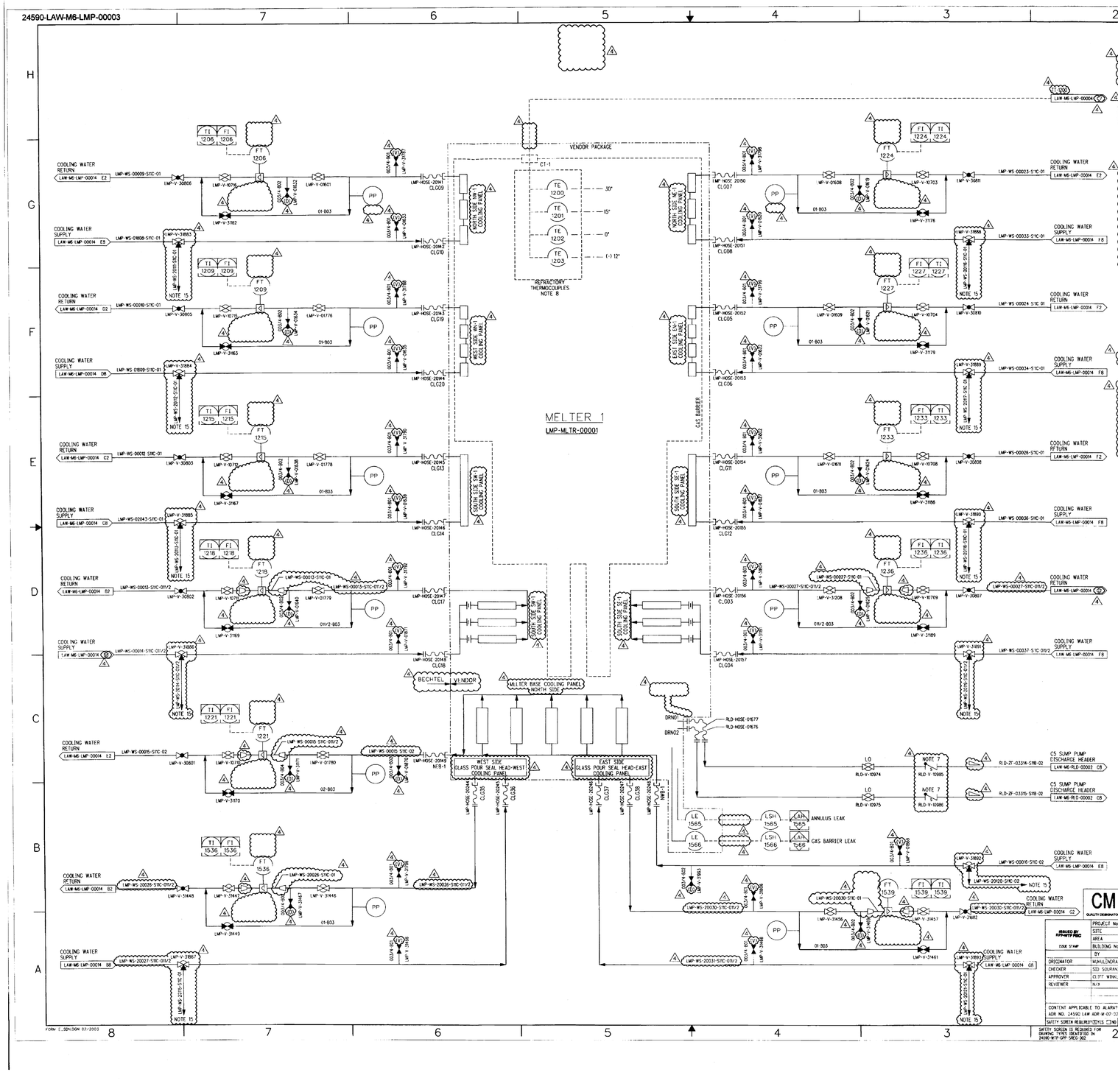

NOTES:

1. SEE DRAWINGS 24590-WTP-M6-50-00001 THROUGH 24590-WTP-M6-50-00008 FOR GENERAL NOTES, SYMBOLS AND LEGEND, AND GENERAL SLOPE REQUIREMENTS.
2-6. DELETED
7. INSTALL CHECK VALVE IN HORIZONTAL PIPING.
8. REFRACTORY THERMOCOUPLE LOCATIONS ARE RELATIVE TO REFRACTORY FLOOR.
9-11. DELETED
12. REVISION 3: CHANGES INCORPORATED IN REVISION 3 INCLUDE: REVISED TO ADD TAG NUMBERS PROVIDED BY THE MELTER GROUP AT THE MELTER ENCLOSURE NOZZLES, CHANGED "BOTTOM" TO "BASE" IN MELTER FLOOR COOLING, CORRECTED NAMES OF LEAK INDICATING INSTRUMENTS, REMOVED REVISION OF WASTE MELTERS DOCUMENT IN REFERENCE NUMBER 6, ADDED NOTE 12.
13. SLOPE SHOWN IS 1:500 MINIMUM.
14. THE PRESSURE BOUNDARY FOR ALL SYSTEMS, STRUCTURES, AND COMPONENTS IS QUALITY LEVEL CM AND SEISMIC CATEGORY SC-IV, UNLESS OTHERWISE NOTED.
15. 3-WAY VALVE DRAIN LINE TO BE ROUTED TOWARDS SAFE LOCATION. SUPPLY SIDE CLOSES WHEN DRAIN OPENS.
16. CONTENTS OF THIS DOCUMENT ARE DANEROUS WASTE PERMIT AFFECTING.
17. REVISED TO INCORPORATE 24590-LAW-M6N-LMP-00008 AND 24590-LAW-M6N-M8DT-00001. CHANGED COOLING WATER SUPPLY SIDE BALL VALVES TO 3-WAY BALL VALVES. CHANGED FLOW INSTRUMENT TYPE TO INTEGRAL. ADDED/DELETED/REVISED NOTES AND REFERENCES. REVISED VALVES ADDED/REVISED LINES.

HOLD/OPEN ITEMS:

1-3. DELETED

REFERENCES:

1. 24590-01-TSA-W000-0010-08-14, SHEETS 1 THROUGH 6, "WALL COOLING PANEL P&ID".
2. DELETED
3. 24590-LAW-3YD-LMP-00001, "SYSTEM DESCRIPTION FOR LAW MELTER PROCESS SYSTEM (LMP)".
4. 24590-LAW-3PS-AE00-T0001, "ENGINEERING SPECIFICATION FOR LOW ACTIVITY WASTE MELTERS".
5. THE REQUIRED BATCH SEQUENCES, PERMISSIVES, INTERLOCKS, ALARMS AND OPERATOR INTERFACE POINTS ARE FULLY DESCRIBED IN THE SOFTWARE FUNCTIONAL SPECIFICATION, FOR LMP-MELTER PROCESS SYSTEM, 24590-LAW-3PS-LMP-T0001.
6. SEE DRAWINGS 24590-LAW-M61-P23T-00101 THROUGH -00104, -00109, AND -00110 FOR NOZZLE TAG NUMBERS.

REV	DESCRIPTION	ORG	CHK'D	RVWD	APVD	DATE
4	REVISED PER NOTE 17	KC	AMP	CRK	RTL	12/21/06
3	REVISED PER NOTE 12	MD	SS	ED	RK	5/26/04
0	ISSUES FOR CONSTRUCTION	MD	SS	N/A	CW	12/17/02

CM — QUALITY DESIGNATION

REVISION HISTORY

ISSUED BY RPP-WTP/PNC — ISSUE STAMP

PROJECT No.	24590
SITE	HANFORD
AREA	200E
BUILDING No.	20

	BY	DATE
ORIGINATOR	M.MULENDRA DE	12/09/02
CHECKER	SID SOURAN	12/09/02
APPROVER	CLIFF WINKLER	12/11/02
REVIEWER	N/A	N/A

CONTENT APPLICABLE TO ALARA? [X] YES [ ] NO
ADR NO. 24590 LAW ADR-M-07-226 REV: 2
SAFETY SCREEN REQUIRED? [ ] YES [X] NO — ITAAS INCLUDED IF YES: N/A
SAFETY SCREEN IS REQUIRED FOR DRAWING TYPES IDENTIFIED IN 24590-WTP-GPP-SWES-002

BECHTEL

RIVER PROTECTION PROJECT
WASTE TREATMENT PLANT
2435 STEVENS CENTER PLACE
RICHLAND, WA 99354

CONTRACT No: DE-AC27-01RV14136

P&ID - LAW MELTER PROCESS SYSTEM MELTER 1 WALLS AND FLOOR PANELS COOLING SYSTEM

SCALE: NONE
24590-LAW-M6-LMP-00003
REV 4

IC SIZE: 44x34
COMPUTER GENERATED - MANUAL CHANGES NOT PERMITTED

12-21-2006 03:03:27

FORM C...SION 02/2003

This information has been identified as **CONFIDENTIAL BUSINESS INFORMATION**

Per the Department of Ecology's April 1, 2009, letter "Re: Certification of Confidential Business Information for the Waste Treatment Plant," under the criteria of 43.21A.160 RCW and WAC 173-303-810 (15), the following document and associated changes are granted confidentiality and are exempt from public review:

Document Number: 24590-LAW-M6-LMP-00005
Title: P&ID –LAW Melter Process System Melter 1 Electrode Extension Cooling & Glass/Plenum Temperatures

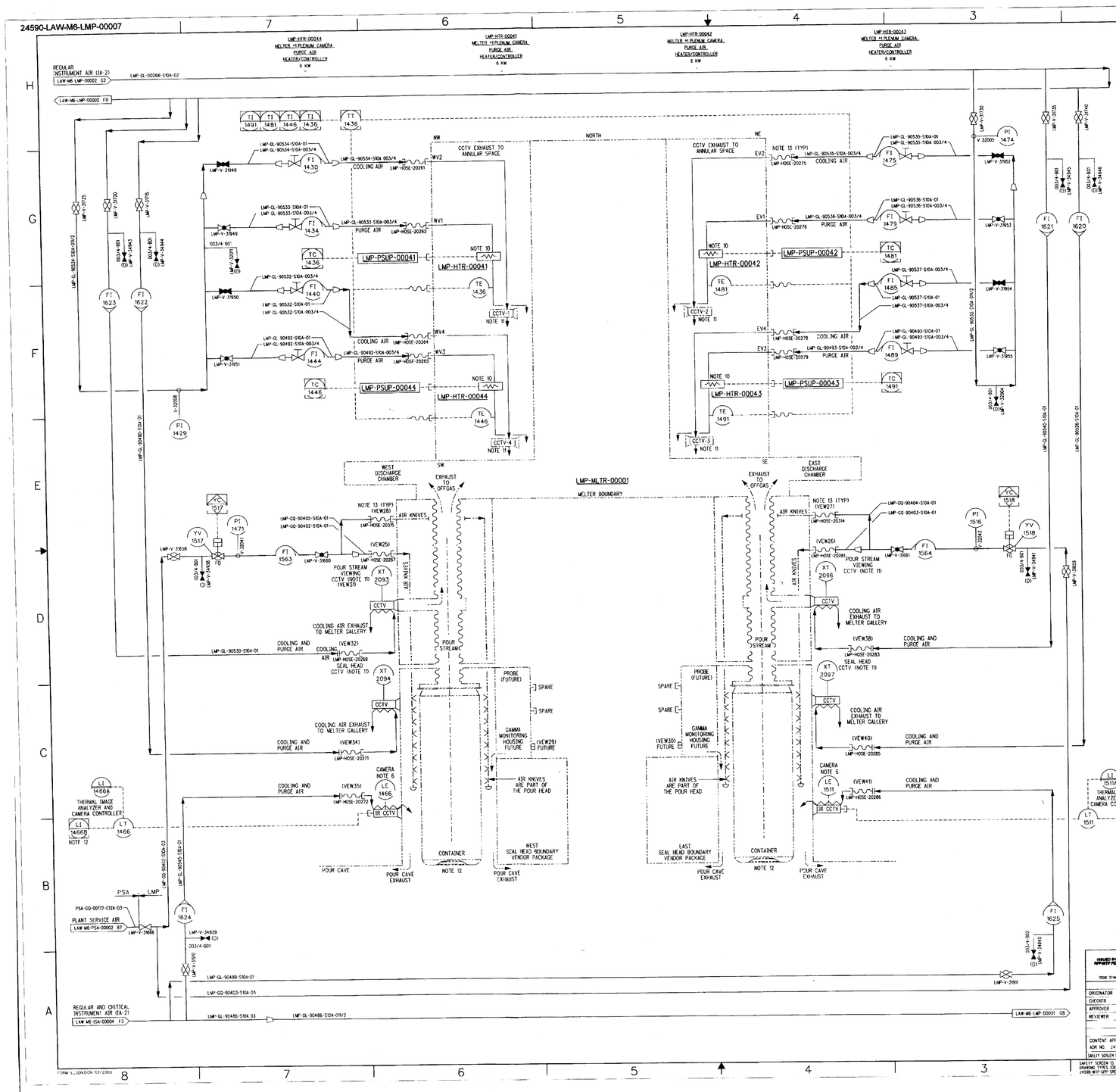

NOTES:

1. SEE DRAWINGS 24590-WTP-M6-50-00001 THROUGH 24590-WTP-M6-50-00008 FOR GENERAL NOTES, SYMBOLS AND LEGEND, AND GENERAL SLOPE REQUIREMENTS.
2. -5. DELETED
6. THE IR CAMERA DETECTS GLASS LEVEL (THERMAL TRANSITION REGION) ON CONTAINER.
7. DELETED
8. NEW MAIN FILTERS ON ISA P&ID WILL REPLACE DELETED POINT OF USE FILTERS ON LMP P&IDS.
9. SEE ARCHIVED REVISION 1 P&ID FOR REVISION 1 CHANGES.
10. CCTV VIEWPORT 6 KW HEATER.
11. PLENUM CCTV'S 1 THROUGH 4 ARE SHOWN IN PHANTOM FOR FUTURE (COOLING AIR VALVES ARE CLOSED). THE POUR HEAD AND SEAL HEAD CCTV'S ARE ASSIGNED TO THE PROCESS AND MECHANICAL HANDLING SYSTEM AND ARE PREFIXED WITH "PTJ" (I.E. TAG: PTJ-XT-2093). BLIND FLANGE INSTALLED IN PLACE OF CCTV.
12. HIGH HIGH LEVEL FROM THE THERMAL IMAGE SYSTEM AUTOMATICALLY SHUTS DOWN THE MELTER DISCHARGE. THE LAW CONTAINER POUR HANDLING SYSTEM LPH-WE-3505 (LOAD CELL) AT LPH-ELEV-00001 (WEST POUR CAVE ELEVATOR) PROVIDES SECONDARY HIGH HIGH LEVEL MONITORING TO PREVENT OVERFILL SEE DWG. 24590-LAW-M7-LPH-00001007. LPH-WE-4005 (LOAD CELL) AT LPH-ELEV-00002 (EAST POUR CAVE ELEVATOR) PROVIDES SECONDARY HIGH HIGH LEVEL MONITORING TO PREVENT OVERFILL, SEE DWG. 24590-LAW-M7-LPH-00001009.
13. SERVICE SIDE OF FLEX CONNECTION SHALL BE FEMALE CAMLOCK BY MELTER GROUP.
14. SEE ARCHIVED REVISION 2 P&ID FOR REVISION 2 CHANGES.
15. THE TAG NUMBERS INDICATED AT THE MELTER ENCLOSURE NOZZLE WERE PROVIDED BY THE MELTER GROUP.
16. CONTENTS OF THIS DOCUMENT ARE DANGEROUS WASTE PERMIT AFFECTING.
17. ITEMS IN PHANTOM LINED BOUNDARY ARE TO BE SUPPLIED BY VENDOR.
18. THE PRESSURE BOUNDARY FOR ALL SYSTEMS, STRUCTURES, AND COMPONENTS ON THIS DRAWING IS QUALITY LEVEL CM AND SEISMIC CATEGORY SC-IV, UNLESS OTHERWISE NOTED. SEE 24590-LAW-M6-LMP-00001 FOR SEISMIC & QUALITY DESIGNATION FOR LMP-MLTR-00001.
19. MAJOR REVISION: NO REVISION CLOUDS REQUIRED INCORPORATED 24590-LAW-M6N-LMP-00003, -00005, AND 24590-LAW-M6N-M807-00001. ADDED FLOW INDICATORS REMOVED EQUIPMENT INFORMATION FROM EQUIPMENT HEADER. DE-ETED PRESSURE INDICATORS. ADDED/DELETED VALVES. DELETED/REVISED LINES. ADDED/DELETED/REVISED NOTES, HOLDS AND REFERENCES.

HOLD/OPEN ITEMS:

1. DELETED
2. DELETED
3. DELETED
4. DELETED
5. DELETED

REFERENCES:

1. DELETED
2. 24590-LAW-M5-V17T-00004, "PROCESS FLOW DIAGRAM LAW VITRIFICATION MELTER 1 (SYSTEM LMP & LOP)".
3. 24590-LAW-3YD-LMP-00001, "SYSTEM DESCRIPTION FOR LAW MELTER PROCESS SYSTEM (LMP)".
4. 24590-LAW-3PS-AE00-T0001, "ENGINEERING SPECIFICATION FOR LOW ACTIVITY WASTE MELTERS".
5. THE REQUIRED BATCH SEQUENCES, PERMISSIVES, INTERLOCKS, ALARMS AND OPERATOR INTERFACE POINTS ARE FULLY DESCRIBED IN THE SOFTWARE FUNCTIONAL SPECIFICATION FOR LMP-MELTER PROCESS SYSTEM 24590-LAW-3PS-LMP-T0001.
6. 24590-101-TSA-W000-0010-08-'8, "CCTV P&ID".

Proprietary and Confidential Information
This document contains proprietary and confidential information of Bechtel National, Inc. ("BNI") and its customer. The unauthorized possession, use, reproduction, distribution or disclosure of this document or its proprietary and confidential information may violate rights of BNI, its customer, or third parties, and may result in civil or criminal penalties. BNI and its customer expressly reserve all rights in this document and its proprietary and confidential information. Possession, use, reproduction, distribution or disclosure of this document or its proprietary and confidential information does not grant any rights to this document or its proprietary and confidential information.

REV	DESCRIPTION	ORG	CHKD	RVWD	APVD	DATE
3	REVISED PER NOTE 19	JC	SJ	CER	SPK	12/19/06
2	REVISED PER NOTE 14 ABOVE	MD	SS	DTS	AK	7/09/04
1	MAJOR REVISION PER NOTE 5 ABOVE	MD	SS	EI	CW	11/10/03
0	ISSUED FOR CONSTRUCTION	MD	SS	N/A	CW	12/11/02

REVISION HISTORY

CM — QUALITY DESIGNATOR

ISSUED FOR APPROVED FOR CONSTRUCTION

PROJECT No.	24590
SITE	HANFORD
AREA	200E
BUILDING No.	2U

	BY	DATE
ORIGINATOR	MURALEEDHRA DE	12/11/02
CHECKER	SIDI SOURANI	12/11/02
APPROVER	CLIFF PINKLER	12/11/02
REVIEWER	N/A	

CONTENT APPLICABLE TO ALARA? ☐ YES ☐ NO
ADR NO. 24590-LAW-ADR-M-01-009 REV. 2
SMALL SCREEN REQUIRED? ☐ YES ☐ NO (LIVE, INITIAL & YYS CHK)

SAFETY SCREEN IS ACQUIRED FOR DRAWING TYPES IDENTIFIED IN 24590-WTP-GPP-SREQ-007

BECHTEL

RIVER PROTECTION PROJECT
WASTE TREATMENT PLANT
2435 STEVENS CENTER PLACE
RICHLAND, WA 99354

CONTRACT No: DE-AC27-01RV14136

P&ID -LAW MELTER PROCESS SYSTEM MELTER 1 GLASS POURING AND MONITORING INSTRUMENTATION

SCALE: NONE
24590-LAW-M6-LMP-00007
REV: 3

R SIZE 44x34
COMPUTER GENERATED. MANUAL CHANGES NOT PERMITTED

12/19/2006 09:04:14.55 AM
C:\Work\24590\53\M6\LMP\00007.dgn

24590-LAW-M6-LMP-00008

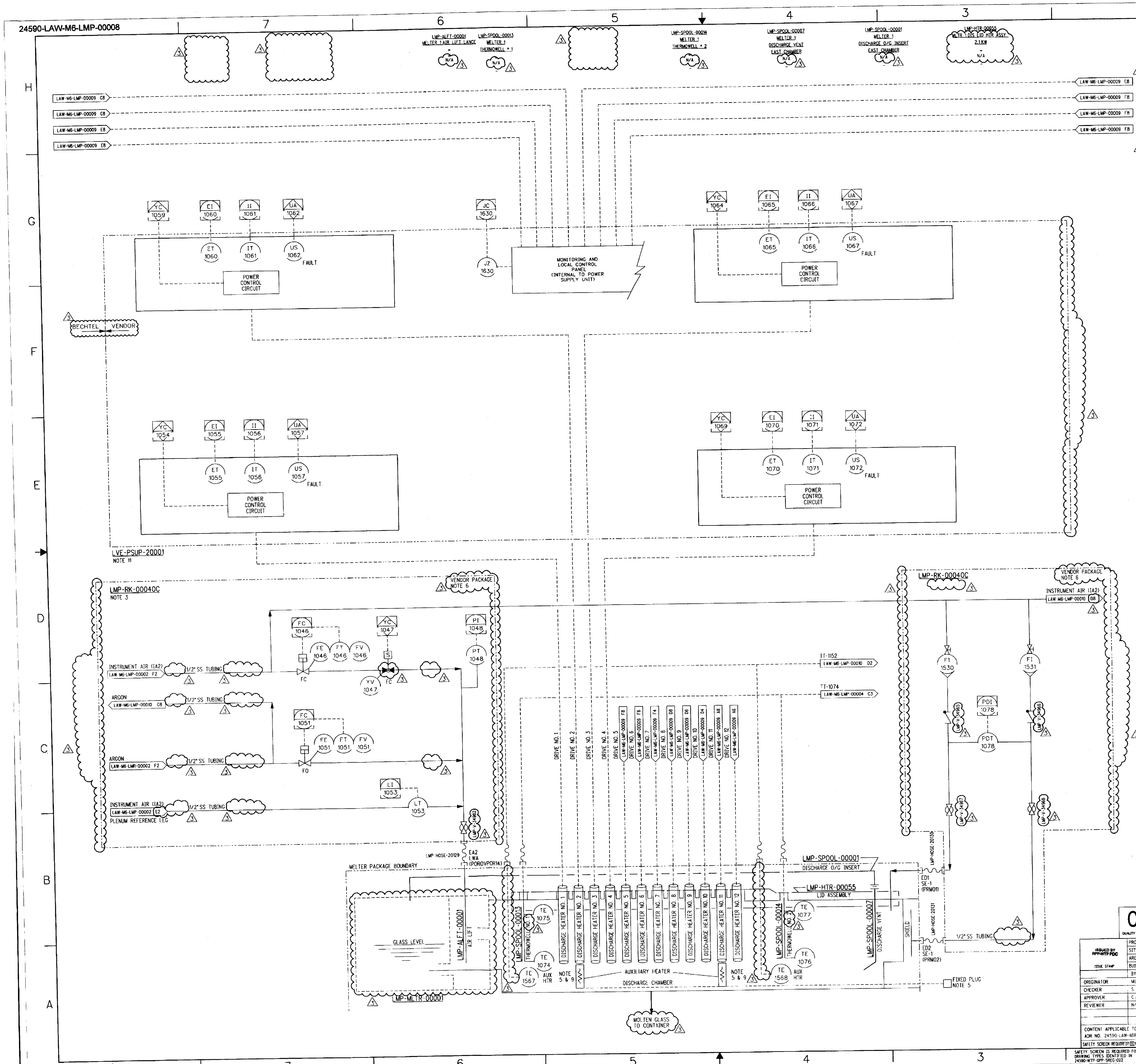

NOTES:

1. SEE DRAWINGS 24590-WTP-M6-50-00001 THROUGH 24590-WTP-M6-50-00008 FOR GENERAL NOTES, SYMBOLS AND LEGEND, AND GENERAL SLOPE REQUIREMENTS.
2. DELETED
3. ALL INSTRUMENTS AND VALVING FOR AIR LIFT SHOULD BE LOCATED AS CLOSE AS POSSIBLE TO THE SHIELD WALL TO REDUCE LINE CAPACITANCE AND AIR LIFT SURGING.
4. DELETED
5. DISCHARGE AUXILIARY HEATERS PREWIRED TO PLUG FOR USE, AS REQUIRED BY OPERATIONS.
6. JPSS-1 SPECIFICATION AS DEFINED IN INSTRUMENT PIPING MATERIAL CLASS SPECIFICATION NO 24590-WTP-3PS-JXF0-T0001. SPECIFICATION CHANGE ALSO DEFINES AREA OF C & I RESPONSIBILITY
7. DELETED
8. REVISION 1: INCORPORATES THE FOLLOWING ITEMS: AUXILIARY HEATER TE'S. REVISED NOTE 5, DELETED NOTES 2 AND 7, ADDED NOTES 8 AND 9. LMP-YV-1047 FROM PNEUMATIC TO SOLENOID ACTUATED. ADDED TT SYMBOLOGY. ADDED MECHANICAL HOSE NUMBERS. ADDED LVE-PSUP-20001 EQUIPMENT INFORMATION TO HEADING, REVISED LMP-RK-00040 TO LMP-RK-00040C AND REVISED HEADING INFORMATION. ADDED QUALITY LEVEL DESIGNATOR.
9. TE-1567 AND TE-1568 ARE INTEGRAL WITH AUXILIARY HEATER AND ARE NOT REPLACEABLE.
10. REVISION 2: INCORPORATES THE FOLLOWING ITEMS: CHANGED YV-1047 FROM A BALL VALVE TO A GENERIC VALVE. ADDED PLENUM REFERENCE LEG NOTATION. ADDED NOTE 10. ADDED BREAK LINE FOR POWER SUPPLIES. REMOVED HOLD 2. PUT HOLD ON ALL ELECTRICAL POWER SUPPLIES. REMOVED LIMITED RIGHTS LEGEND. ADDED NOTE 11.
11. ELECTRICAL SUPPLY DESIGN IS SHOWN ON DRAWING 24590-LAW-E1-LVE-00031.
12. THE PRESSURE BOUNDARY FOR ALL SYSTEMS, STRUCTURES, AND COMPONENTS ON THIS DRAWING IS QUALITY LEVEL CM AND SEISMIC CATEGORY SC-IV, UNLESS OTHERWISE NOTED. SEE 24590-LAW-M6-LMP-00001 FOR SEISMIC AND QUALITY DESIGNATION FOR LMP-MLTR-00001.
13. CONTENTS OF THIS DOCUMENT ARE DANGEROUS WASTE PERMIT AFFECTING.
14. REVISED TO INCORPORATE 24590-LAW-M6N-M80T-00001. CHANGED YV-1047 FROM A GENERIC VALVE TO A PLUG VALVE. ADDED TAGS TO VALVES IN RACKS. TE-1567 & TE-1568 LINE STYLE CHANGED TO ELECTRIC SIGNAL. REMOVED EQUIPMENT INFORMATION FROM EQUIPMENT HEADER. ADDED/DELETED/REVISED NOTES, HOLDS, AND REFERENCES.

HOLD/OPEN ITEMS:

1. DELETED
2. DELETED

REFERENCES:

1. 24590-101-TSA-W000-0010-08-13, "DISCHARGE SYSTEM P&ID", SHEETS 5 THROUGH 8.
2. 24590-LAW-M5-V17T-00004, "PROCESS FLOW DIAGRAM LAW VITRIFICATION MELTER 1 (SYSTEM LMP & LOP)".
3. 24590-LAW-3YD-LMP-00001, "SYSTEM DESCRIPTION FOR LAW MELTER PROCESS SYSTEM (LMP)".
4. 24590-LAW-3PS-AE00-T0001, "ENGINEERING SPECIFICATION FOR LOW ACTIVITY WASTE MELTERS".
5. DELETED
6. THE REQUIRED BATCH SEQUENCES, PERMISSIVES, INTERLOCKS, ALARMS AND OPERATOR INTERFACE POINTS ARE FULLY DESCRIBED IN THE SOFTWARE FUNCTIONAL SPECIFICATION FOR LMP-MELTER PROCESS SYSTEM 24590-LAW-3PS-LMP-T0001.

Please note that source, special nuclear, and byproduct materials, as defined in the Atomic Energy Act of 1954 (AEA) are regulated at the U. S. Department of Energy (DOE) facilities exclusively by DOE acting pursuant to its AEA authority. DOE asserts that pursuant to AEA, it has sole and exclusive responsibility and authority to regulate source, special nuclear, and byproduct materials at DOE-owned nuclear facilities. Information contained herein on radionuclides is provided for process description purposes only.

REV	DESCRIPTION	ORG	CHKD	RVWD	APVD	DATE
3	REVISED PER NOTE 14		SJ	CEX SPK		12/21/06
2	REVISED PER NOTE 10	SGS	RLH	ED	KK	8/30/04
1	REVISED PER NOTE 8	MD	SS	CW	EI	10/02/03
0	ISSUED FOR CONSTRUCTION	MD	SS	N/A	CJW	12/11/02

REVISION HISTORY

CM
QUALITY DESIGNATOR

ISSUED BY RPP-WTP PDC
ISSUE STAMP

PROJECT No.	24590
SITE	HANFORD
AREA	200E
BUILDING No.	20

	BY	DATE
ORIGINATOR	MUKUL DE	12/11/02
CHECKER	S. SOURANT	12/11/02
APPROVER	C. J. WINKLER	12/11/02
REVIEWER	N/A	N/A

CONTENT APPLICABLE TO ALARA? [X] YES [ ] NO
ADR NO. 24590-LAW-ADR-M-02-026 REV: 2
SAFETY SCREEN REQUIRED? [X] YES [ ] NO E&NS INITIAL IF YES DEK

BECHTEL
RIVER PROTECTION PROJECT
WASTE TREATMENT PLANT
2435 STEVENS CENTER PLACE
RICHLAND, WA 99354

CONTRACT No: DE-AC27-01RV14136

P&ID - LAW
MELTER PROCESS SYSTEM MELTER 1 DISCHARGE HEATERS, POWER CONTROLS (1 - 4) & AIR LIFT - EASTSIDE

SCALE: NONE
24590-LAW-M6-LMP-00008
REV 3

SAFETY SCREEN IS REQUIRED FOR DRAWING TYPES IDENTIFIED IN 24590-WTP-GPP-SREG-002
'E' SIZE 44x34
COMPUTER GENERATED - MANUAL CHANGES NOT PERMITTED
R10742772
12/19/2006 01:33:54 PM
PLOTTED BY eldern
FORM K-SON-20N 02/2003

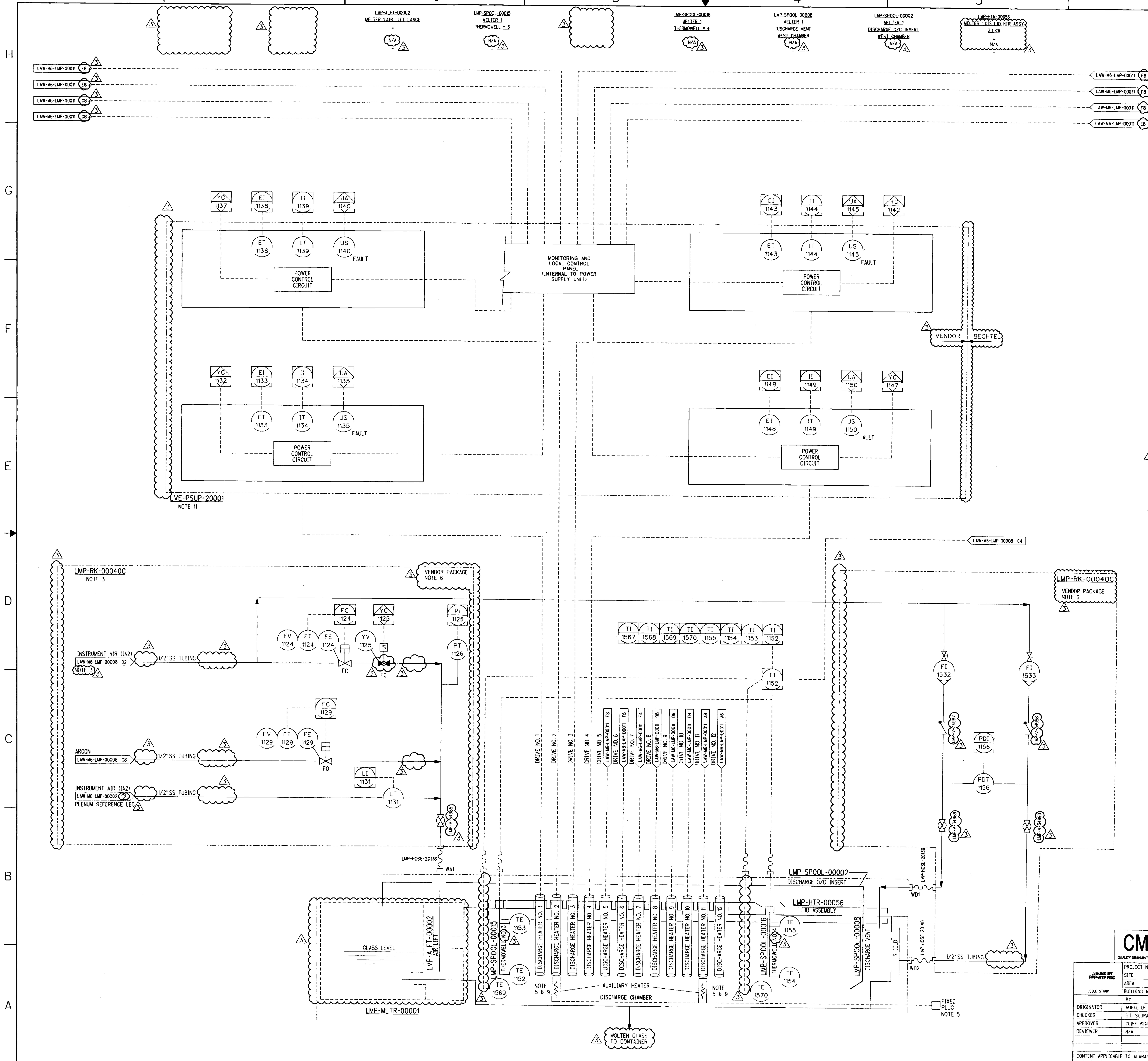

NOTES:

1. SEE DRAWINGS 24590-WTP-M6-50-00001 THROUGH 24590-WTP-M6-50-00008 FOR GENERAL NOTES, SYMBOLS AND LEGEND, AND GENERAL SLOPE REQUIREMENTS.
2. DELETED
3. ALL INSTRUMENTS AND VALVING FOR AIR LIFT SHOULD BE LOCATED AS CLOSE AS POSSIBLE TO THE SHIELD WALL TO REDUCE LINE CAPACITANCE AND AIR LIFT SURGING.
4. DELETED
5. DISCHARGE AUXILIARY HEATERS PREWIRED TO PLUG FOR USE, AS REQUIRED BY OPERATIONS.
6. JPSS-1 SPECIFICATION AS DEFINED IN INSTRUMENT PIPING MATERIAL CLASS SPECIFICATION NO 24590-WTP-3PS-JXF0-T0001. SPECIFICATION CHANGE ALSO DEFINES AREA OF C & I RESPONSIBILITY.
7. DELETED
8. REVISION 1: CHANGES INCORPORATED IN REVISION 1 INCLUDE: AUXILIARY HEATER TE'S. REVISED NOTE 5, DELETED NOTES 2 AND 7, ADDED NOTES 8 AND 9. LMP-YV-1125 FROM PNEUMATIC TO SOLENOID ACTUATED. ADDED TT SYMBOLOGY. ADDED MECHANICAL HOSE NUMBERS. ADDED LVE-PSUP-20002 EQUIPMENT INFORMATION TO HEADING, REVISED LMP-RK-00040 TO LMP-RK-00040C AND REVISED HEADING INFORMATION. ADDED MECHANICAL HOSE NUMBERS. ADDED QUALITY LEVEL DESIGNATOR.
9. TE-1569 AND TE-1570 ARE INTEGRAL WITH AUXILIARY HEATER AND ARE NOT REPLACEABLE.
10. REVISION 2: INCORPORATES THE FOLLOWING ITEMS: CHANGED YV-1125 FROM A BALL VALVE TO A GENERIC VALVE. ADDED PLENUM REFERENCE LEG NOTATION. ADDED BREAK LINES FOR POWER SUPPLIES. ADDED NOTE 10. REMOVED HOLD 2. PUT HOLD ON ALL ELECTRICAL POWER SUPPLIES. DELETED LIMITED RIGHTS LEGEND.
11. ELECTRICAL SUPPLY DESIGN IS SHOWN ON DRAWING NO. 24590-LAW-E1-LVE-00031.
12. THE PRESSURE BOUNDARY FOR ALL SYSTEMS, STRUCTURES, AND COMPONENTS ON THIS DRAWING IS QUALITY LEVEL CM AND SEISMIC CATEGORY SC-IV, UNLESS OTHERWISE NOTED. SEE 24590-LAW-M6-LMP-00001 FOR SEISMIC & QUALITY DESIGNATION FOR LMP-MLTR-00001.
13. CONTENTS ON THIS DOCUMENT ARE DANGEROUS WASTE PERMIT AFFECTING.
14. REVISED TO INCORPORATE 24590-LAW-M6N-M80T-00001. CHANGED YV-1125 FROM A GENERIC VALVE TO A PLUG VALVE. ADDED TAGS TO VALVES IN RACKS. TE-1569 & TE 1570 LINE STYLE CHANGED TO ELECTRIC SIGNAL. ADDED/DELETED/REVISED NOTES AND REFERENCES. REMOVED EQUIPMENT INFORMATION FROM EQUIPMENT HEADER.

HOLD/OPEN ITEMS:

1. DELETED
2. DELETED

REFERENCES:

1. 24590-101-TSA-W000-0010-08-13, "DISCHARGE SYSTEM P&ID", SHEETS 5 THROUGH 8.
2. 24590-LAW-M5-V17T-00004, "PROCESS FLOW DIAGRAM LAW VITRIFICATION MELTER 1 (SYSTEM LMP & LOP)".
3. 24590-LAW-3YD-LMP-00001, "SYSTEM DESCRIPTION FOR LAW MELTER PROCESS SYSTEM (LMP)".
4. 24590-LAW-3PS-AE00-T0001, "ENGINEERING SPECIFICATION FOR LOW ACTIVITY WASTE MELTERS".
5. DELETED
6. THE REQUIRED BATCH SEQUENCES, PERMISSIVES, INTERLOCKS, ALARMS AND OPERATOR INTERFACE POINTS ARE FULLY DESCRIBED IN THE SOFTWARE FUNCTIONAL SPECIFICATION FOR LMP-MELTER PROCESS SYSTEM 24590-LAW-3PS-LMP-T0001.

Please note that source, special nuclear, and byproduct materials, as defined in the Atomic Energy Act of 1954 (AEA) are regulated at the U. S. Department of Energy (DOE) facilities exclusively by DOE acting pursuant to its AEA authority. DOE asserts that pursuant to AEA it has sole and exclusive responsibility and authority to regulate source, special nuclear, and byproduct materials at DOE-owned nuclear facilities. Information contained herein on radionuclides is provided for process description purposes only.

CM
QUALITY DESIGNATOR

REV	DESCRIPTION	ORG	CHKD	RVWD	APVD	DATE
3	REVISED PER NOTE 14	[illegible]	SJ	CER SPK	[illegible]	12/21/06
2	REVISED PER NOTE 10 AND 11 ABOVE	SGS	RLH	ED	KK	8/30/04
1	REVISED PER NOTE 8 ABOVE	MD	SS	EI	CW	11/10/03
0	ISSUED FOR CONSTRUCTION	MD	SS	N/A	CW	12/11/02

REVISION HISTORY

ISSUED BY RPP-WTP PDC
ISSUE STAMP

PROJECT No.	24590
SITE	HANFORD
AREA	200E
BUILDING No.	20

	BY	DATE
ORIGINATOR	MUKUL DE	12/11/02
CHECKER	SID SOURANI	12/11/02
APPROVER	CLIFF WINKLER	12/11/02
REVIEWER	N/A	N/A

CONTENT APPLICABLE TO ALARA? [X] YES [ ] NO
ADR NO. 24590-LAW-ADR-M-02-026 REV: 2
SAFETY SCREEN REQUIRED? [X] YES [ ] NO E&NS INITIAL IF YES PEK

BECHTEL
RIVER PROTECTION PROJECT
WASTE TREATMENT PLANT
2435 STEVENS CENTER PLACE
RICHLAND, WA 99354

CONTRACT No: DE-AC27-01RV14136

P&ID - LAW MELTER PROCESS SYSTEM MELTER 1 DISCHARGE HEATERS, POWER CONTROLS (1 - 4) & AIR LIFT - WESTSIDE

SCALE: NONE

24590-LAW-M6-LMP-00010

REV 3

SAFETY SCREEN IS REQUIRED FOR DRAWING TYPES IDENTIFIED IN 24590-WTP-GPP-SREG-002

'E' SIZE 44x34
COMPUTER GENERATED - MANUAL CHANGES NOT PERMITTED

R10742773

12/19/2006 01:34:37 PM
PLOTTED BY: eidorn
C:\Work\dms03838\LAWM6LMP00010.dgn

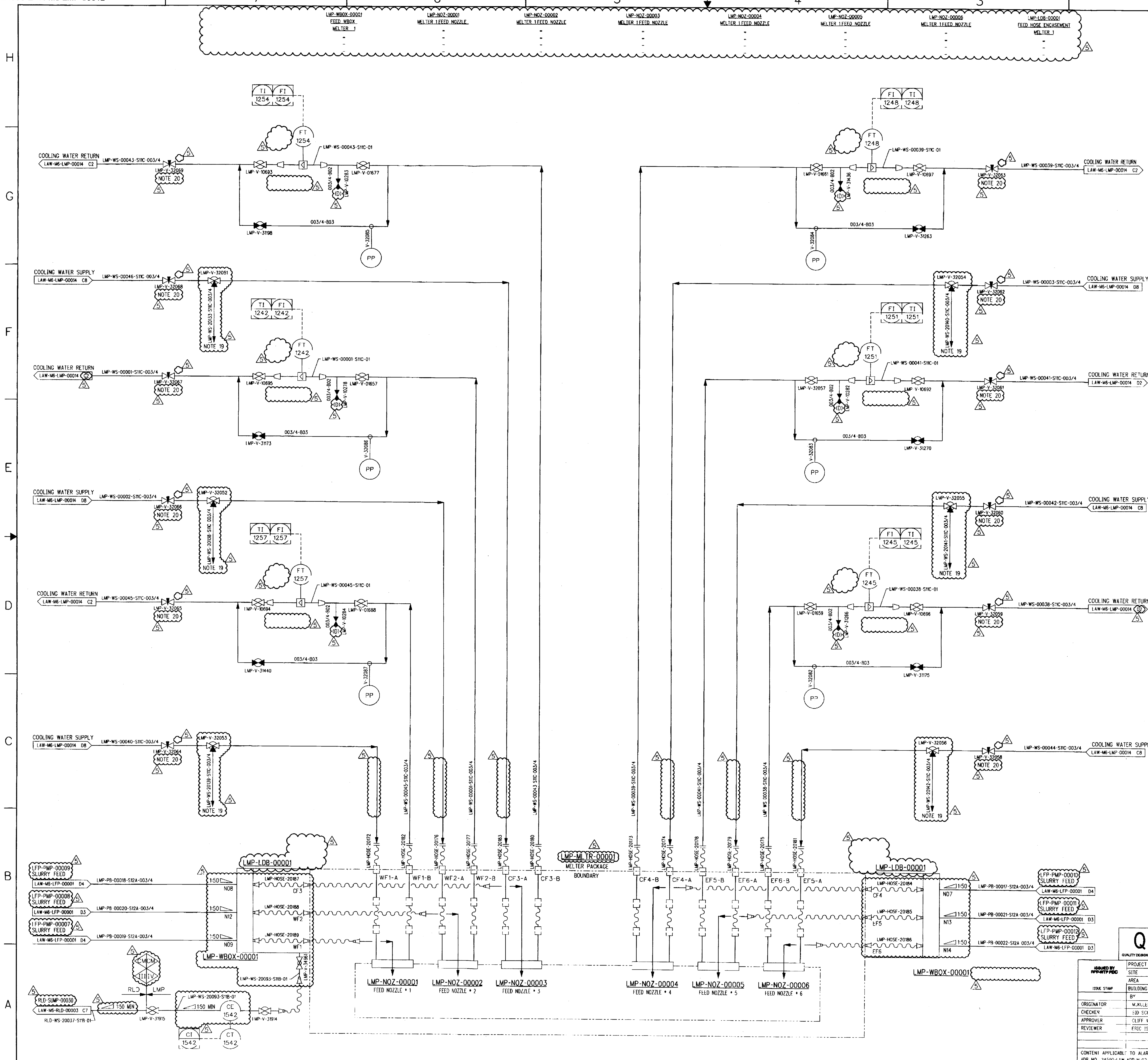

NOTES:

1. SEE DRAWINGS 24590-WTP-M6-50-00001 THROUGH 24590-WTP-M6-50-00008 FOR GENERAL NOTES, SYMBOLS AND LEGEND, AND GENERAL SLOPE REQUIREMENTS.

2-13. DELETED

14. THE PRESSURE BOUNDARY FOR ALL SYSTEMS, STRUCTURES, AND COMPONENTS ON THIS DRAWING IS QUALITY LEVEL CM AND SEISMIC CATEGORY SC-IV, UNLESS OTHERWISE NOTED. SEE 24590-LAW-M6-LMP-00001 FOR QUALITY AND SEISMIC DESIGNATION FOR LMP-MLTR-00001.

15. DELETED

16. REVISION 4: SEE DTD NUMBER 24590-LAW-DTD-ENS-04-0003. REMOVED HOLD NUMBER 4. NEEDLE VALVES ARE ITS QL-2 SEISMIC III.

17. ADDED QUALITY AND SEISMIC DESIGNATOR FLAGS.

18. CONTENTS OF THIS DOCUMENT ARE DANGEROUS WASTE PERMIT AFFECTING.

19. 3-WAY VALVE DRAIN LINE TO BE ROUTED TOWARD SAFE LOCATION. SUPPLY SIDE CLOSES WHEN DRAIN OPENS.

20. NEEDLE VALVES ARE QUALITY LEVEL Q AND SEISMIC CATEGORY SC-III. VALVE SETTING SHALL LIMIT FLOW TO MELT POOL IN THE EVENT OF A BREACHED FEED NOZZLE COOLING JACKET. TO PREVENT INADVERTENT BLOCKED-IN COOLING CIRCUIT, VALVE SHALL BE FURNISHED WITH CLOSURE TRAVEL LIMIT.

21. REVISED TO INCORPORATE 24590-LAW-M6N-LMP-00008, -00017, AND 24590-LAW-M6N-M80T-00001. 3-WAY BALL VALVES REPLACE SHUT-OFF VALVES. ADDED/DELETED/REVISED QUALITY/SEISMIC FLAGS, REDUCERS, SLOPES, LINE NUMBERS, VALVE NUMBERS, INSTRUMENTS, NOTES, HOLDS, AND REFERENCES. UPDATED EQUIPMENT DESCRTIPTIONS AND OFFSHEET CONNECTORS. CHANGED HOSE ENCASEMENT SYMBOL.

HOLD/OPEN ITEMS:

1-4. DELETED

5. DELETED

REFERENCES:

1. 24590-101-TSA-W000-0010-409-877 AND -1475, FEED PUMP P&ID.
2. DELETED
3. 24590-LAW-3YD-LMP-00001, "SYSTEM DESCRIPTION FOR LAW MELTER PROCESS SYSTEM (LMP)".
4. 24590-LAW-3PS-AE00-T0001, "ENGINEERING SPECIFICATION FOR LAW ACTIVITY WASTE MELTERS".
5. THE REQUIRED BATCH SEQUENCES, PERMISSIVES, INTERLOCKS, ALARMS AND OPERATOR INTERFACE POINTS ARE FULLY DESCRIBED IN THE SOFTWARE FUNCTIONAL SPECIFICATION, FOR LAW MELTER PROCESS (LMP) SYSTEM, 24590-LAW-3PS-LMP-T0001.

Please note that source, special nuclear, and byproduct materials, as defined in the Atomic Energy Act of 1954 (AEA) are regulated at the U. S. Department of Energy (DOE) facilities exclusively by DOE acting pursuant to its AEA authority. DOE asserts that pursuant to AEA, it has sole and exclusive responsibility and authority to regulate source, special nuclear, and byproduct materials at DOE-owned nuclear facilities. Information contained herein on radionuclides is provided for process description purposes only.

Q
QUALITY DESIGNATOR

REVISION HISTORY

REV	DESCRIPTION	ORG	CHKD	RVWD	APVD	DATE
5	REVISED PER NOTE 21	[signature]	[signature]	CEK SPK	[signature]	12/21/06
4	SEE NOTES 16, 17, AND 18	SGS	RH	SS	KK	10/26/04
0	ISSUED FOR CONSTRUCTION	M.D.	S.S.	E.I.	C.W.	11/26/02

ISSUED BY RPP-WTP PDC
ISSUE STAMP

PROJECT No.	24590
SITE	HANFORD
AREA	200E
BUILDING No.	20

	BY	DATE
ORIGINATOR	MUKULENDRA DE	11/24/02
CHECKER	SID SCURANI	11/24/02
APPROVER	CLIFF WINKLER	11/26/02
REVIEWER	ERIC ISERN	11/25/02

CONTENT APPLICABLE TO ALARA? [X] YES [ ] NO
ADR NO. 24590-LAW ADR-M-02-026 REV: 2
SAFETY SCREEN REQUIRED? [X] YES [ ] NO E&NS INITIAL IF YES DEK

BECHTEL
RIVER PROTECTION PROJECT
WASTE TREATMENT PLANT
2435 STEVENS CENTER PLACE
RICHLAND, WA 99354

CONTRACT No: DE-AC27-01RV14136

P&ID - LAW MELTER PROCESS SYSTEM MELTER 1 FEED NOZZLES COOLING SYSTEM AND FEED NOZZLES

SCALE: NONE

24590-LAW-M6-LMP-00012 REV 5

SAFETY SCREEN IS REQUIRED FOR DRAWING TYPES IDENTIFIED IN 24590-WTP-GPP-SREG-002

'E' SIZE 44x34
COMPUTER GENERATED - MANUAL CHANGES NOT PERMITTED

R10742758

12/21/2006 01:01:14 PM

PLOTTED BY: eldorn
C:\Work\drrs03838_AWM6LMP00012.dgn

FORM E_SDK001A 02/2003

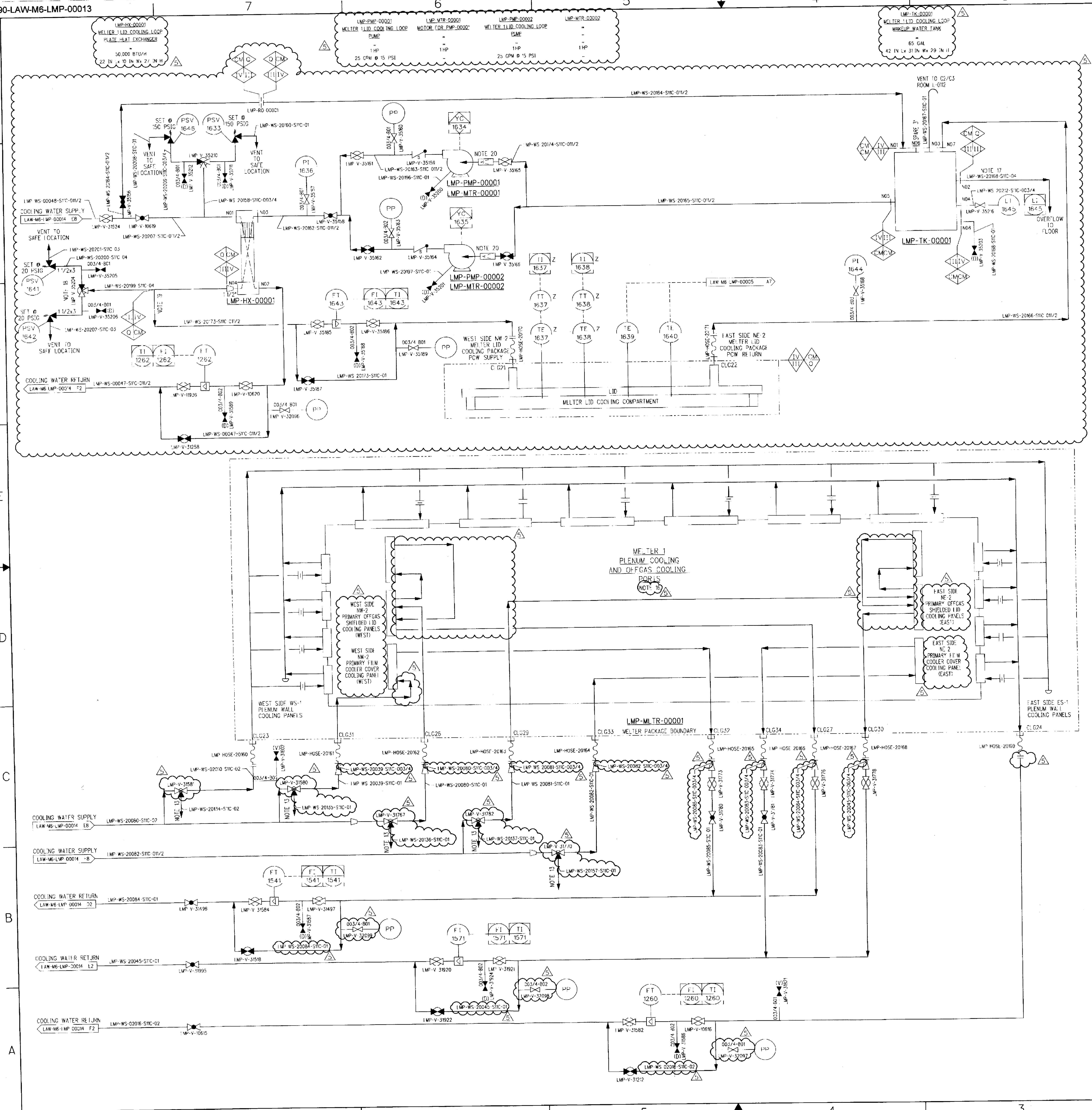

NOTES:

1. SEE DRAWINGS 24590-WTP-M6-50-00001 THROUGH 24590-WTP-M6-50-00008 FOR GENERAL NOTES, SYMBOLS AND LEGEND, AND GENERAL SLOPE REQUIREMENTS.

2-6. DELETED

7. PIPING SHALL NOT CONTAIN DEAD LEGS & LOW POINTS.

8-11. DELETED

12. THE PRESSURE BOUNDARY FOR ALL SYSTEMS, STRUCTURES, AND COMPONENTS ON THIS DRAWING IS QUALITY LEVEL CM AND SEISMIC CATEGORY SC-IV, UNLESS OTHERWISE NOTED. SEE 24590-LAW-M6-LMP-00001, REV. 2 FOR SEISMIC AND QUALITY DESIGNATION FOR LMP-MLTR-00001.

13. 3-WAY VALVE BLEED LINE TO BE ROUTED TOWARD SAFE LOCATION. SUPPLY SIDE CLOSES WHEN BLEED OPENS.

14. CONTENTS OF THIS DOCUMENT ARE DANGEROUS WASTE PERMIT AFFECTING.

15. REVISION 4: REVISED TO INCORPORATE 24590-LAW-M6N-M80T-00001. REPLACED SHUTOFF VALVES WITH 3-WAY BALL VALVES. CHANGED FLOW INSTRUMENT TYPE TO INTEGRAL. REMOVED MELTER TAG. CHANGED LINE SIZE FOR COOLING WATER RETURN AND BYPASS. ADDED/DELETED/REVISED NOTES AND REFERENCES.

16. THIS IS A SCHEMATIC REPRESENTATION OF MELTER PLENUM AND LID COOLING. THE PIPING IS INTEGRAL TO THE MELTER. THERE IS NO VENDOR PIPING AND INSTRUMENTATION DIAGRAM FOR MELTER INTERNALS.

17. TANK OVERFLOW LINE IS NOT SUPPORTED BY TANK.

18. SETPOINT AND PHYSICAL LOCATION OF PSV MAINTAINS MELTER LID BELOW 14.5 PSIG.

19. LOCATE LMP-WS-20173-S11C-01 1/2 BRANCH LESS THAN 6 FEET FROM HEAT EXCHANGER OUTLET N04. PLACE CENTERLINE OF PSV NO MORE THAN ONE FOOT ABOVE 3 FT ELEVATION FLOOR.

20. TEMPOARY STRAINER FOR STARTUP.

21. REVISION 5: REVISED TO ADD MELTER LID COOLING LOOP AND INCORPORATED DCN 24590-LAW-M6N-LMP-00031 AND 00033. ADDED NEW SECTION AND BRANCH NUMBERS. REVISED/ ADDED/ DELETED NOTES AND REFERENCES.

HOLD/OPEN ITEMS:

1-2. DELETED

REFERENCES:

1. 24590-101-TSA-W000-0010-08-14, "WALL COOLING PANEL P&ID".
2. DELETED
3. 24590-LAW-3YD-LMP-00001, "SYSTEM DESCRIPTION FOR LAW MELTER PROCESS SYSTEM (LMP)".
4. 24590-LAW-3PS-AL00-T0001, "ENGINEERING SPECIFICATION FOR LOW ACTIVITY WASTE MELTERS".
5. DELETED
6. SEE DRAWINGS 24590-LAW-M61-P23T-00101 THROUGH 24590-LAW-M61-P23T-00104, 24590-LAW-M61-P23T-00109 AND 24590-LAW-M61-P23T-00110 FOR NOZZLE TAG NUMBERS.

Please note that source, special nuclear, and byproduct materials, as defined in the Atomic Energy Act of 1954 (AEA) are regulated at the U. S. Department of Energy (DOE) facilities exclusively by DOE acting pursuant to its AEA authority. DOE asserts that pursuant to AEA, it has sole and exclusive responsibility and authority to regulate source, special nuclear, and byproduct materials at DOE owned nuclear facilities. Information contained herein on radionuclides is provided for process description purposes only.

Q
QUALITY DESIGNATOR

REV	DESCRIPTION	ORG	CHKD	RVWD	APVD	DATE
5	REVISED PER NOTE 21	MO	SUN	SPK	JJD	4/11/08
4	REVISED PER NOTE 15	KM	SJ	SPK	JJ	12/21/06
0	ISSUED FOR CONSTRUCTION	MD	SS	N/A	CW	11/25/02

REVISION HISTORY

ISSUED BY RPP-WTP PDC
ISSUE STAMP

PROJECT No.	24590
SITE	HANFORD
AREA	200E
BUILDING No.	20

	BY	DATE
ORIGINATOR	MUKULENDURA DE	11/23/02
CHECKER	SID SOURANI	11/23/02
APPROVER	CLIFF WINKLER	11/25/02
REVIEWER	N/A	

CONTENT APPLICABLE TO ALARA? [X] YES [ ] NO
ADR NO. 24590-LAW-ADR-M-02-026 REV: 2
SAFETY SCREEN REQUIRED? [X] YES [ ] NO E&NS INITIAL IF YES DEK

BECHTEL
RIVER PROTECTION PROJECT
WASTE TREATMENT PLANT
2435 STEVENS CENTER PLACE
RICHLAND, WA 99354

CONTRACT No: DE-AC27-01RV14136

P&ID-LAW
MELTER PROCESS SYSTEM
MELTER 1
LID, PLENUM AND OFFGAS PORTS COOLING SYSTEM

SCALE: NONE
24590-LAW-M6-LMP-00013
REV 5

SAFETY SCREEN IS REQUIRED FOR DRAWING TYPES IDENTIFIED IN 24590-WTP-GPP-SREG-002

'E' SIZE 44x34
COMPUTER GENERATED - MANUAL CHANGES NOT PERMITTED

WHEN REFERENCING DRAWING AND DIM NUMBERS IN DOCUMENTS, BE SURE TO INCLUDE DASHES BETWEEN ELEMENTS

04/09/2008 10:11:20 AM
R10894827

This information has been identified as **CONFIDENTIAL BUSINESS INFORMATION**

Per the Department of Ecology's April 1, 2009, letter "Re: Certification of Confidential Business Information for the Waste Treatment Plant," under the criteria of 43.21A.160 RCW and WAC 173-303-810 (15), the following document and associated changes are granted confidentiality and are exempt from public review:

Document Number: 24590-LAW-M6-LMP-00031 Title: P&ID –LAW Melter Process System Melter 2 Agitations – Zone 1 & Zone 2

This information has been identified as **CONFIDENTIAL BUSINESS INFORMATION**

Per the Department of Ecology's April 1, 2009, letter "Re: Certification of Confidential Business Information for the Waste Treatment Plant," under the criteria of 43.21A.160 RCW and WAC 173-303-810 (15), the following document and associated changes are granted confidentiality and are exempt from public review:

Document Number: 24590-LAW-M6-LMP-00032
Title: P&ID –LAW Melter Process System Melter 2 Agitations Zone 3 & Level Detection System

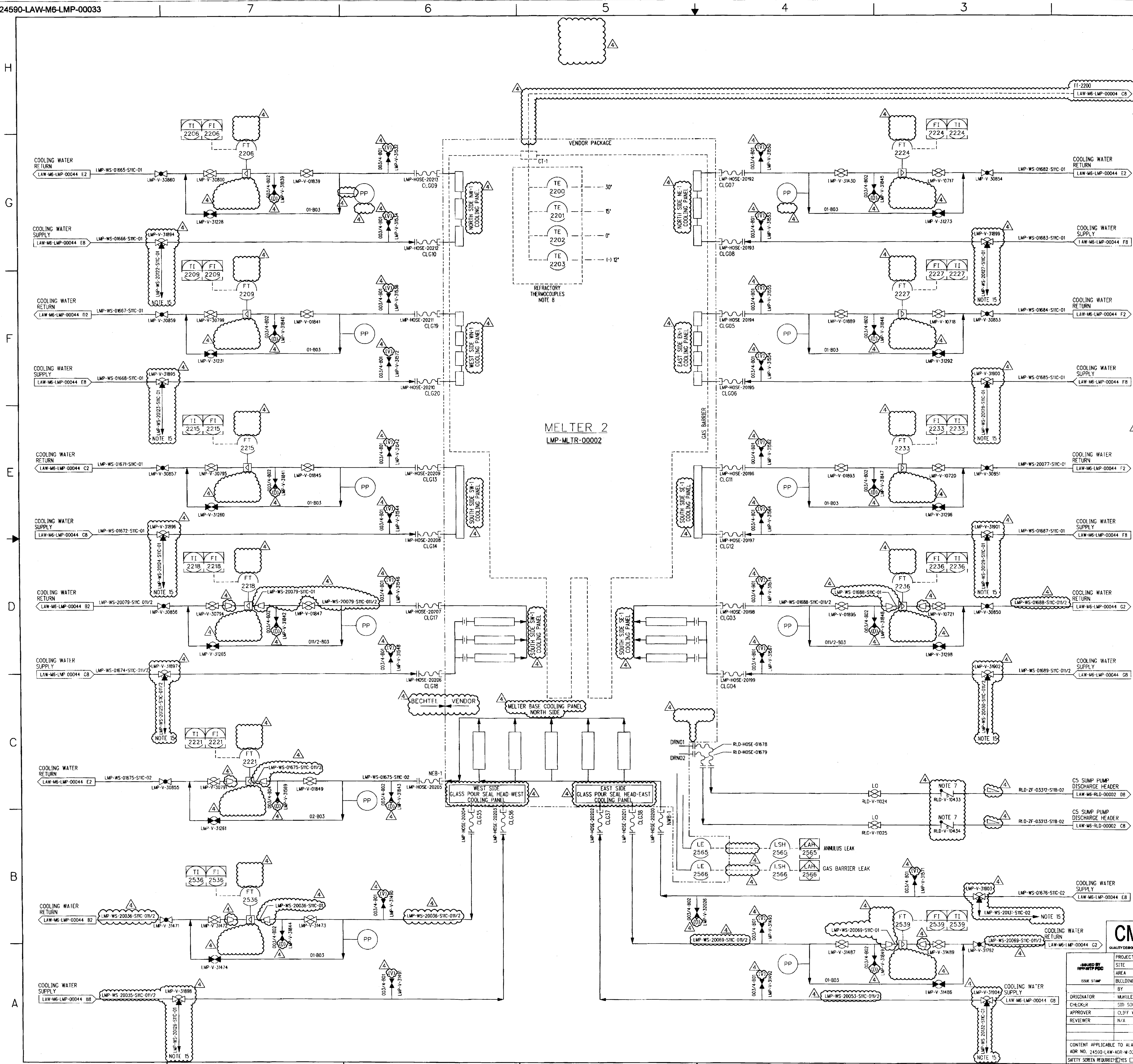

NOTES:

1. SEE DRAWINGS 24590-WTP-M6-50-00001 THROUGH 24590-WTP-M6-50-00008 FOR GENERAL NOTES, SYMBOLS AND LEGEND, AND GENERAL SLOPE REQUIREMENTS.

2-6. DELETED

7. INSTALL CHECK VALVE IN HORIZONTAL PIPING.

8. REFRACTORY THERMOCOUPLE LOCATIONS ARE RELATIVE TO REFRACTORY FLOOR.

9-11. DELETED

12. REVISION 3: CHANGES INCORPORATED IN REVISION 3 INCLUDE: ADDED TAG NUMBERS PROVIDED BY THE MELTER GROUP AT THE MELTER ENCLOSURE NOZZLES. ADDED LOW POINT DRAIN VALVE NUMBER LMP-V-32026. CHANGED "BOTTOM" TO "BASE" IN MELTER BASE FLOOR COOLING. CORRECTED NAMES OF LEAK INDICATING INSTRUMENTS. REMOVED REVISION OF WASTE MELTERS DOCUMENT IN REFERENCE NUMBER 4.

13. SLOPE SHOWN IS 1:500 MINIMUM.

14. THE PRESSURE BOUNDARY FOR ALL SYSTEMS, STRUCTURES, AND COMPONENTS IS QUALITY LEVEL CM AND SEISMIC CATFGORY SC-IV, UNLESS OTHERWISE NOTED.

15. 3-WAY VALVE DRAIN LINE TO BE ROUTED TOWARDS SAFE LOCATION. SUPPLY SIDE CLOSES WHEN DRAIN OPENS.

16. CONTENTS OF THIS DOCUMENT ARE DANGEROUS WASTE PERMIT AFFECTING.

17. REVISED TO INCORPORATE 24590-LAW-M6N-LMP-00008 AND 24590-LAW-M6N-M80T-00001. CHANGED COOLING WATER SUPPLY SIDE BALL VALVES TO 3-WAY BALL VALVES. CHANGED FLOW INSTRUMENT TYPE TO INTEGRAL. ADDED/DLETED/REVISED NOTES AND REFERENCES. REVISED VALVES. ADDED/REVISED LINES.

HOLD/OPEN ITEMS:

1-3. DELETED

REFERENCES:

1. 24590-101-TSA-W000-0010-08-14, SHEETS 1 THROUGH 6, "WALL COOLING PANEL P&ID".
2. DELETED
3. 24590-LAW-3YD-LMP-00001, "SYSTEM DESCRIPTION FOR LAW MELTER PROCESS SYSTEM (LMP)".
4. 24590-LAW-3PS-AE00-T0001, "ENGINEERING SPECIFICATION FOR LOW ACTIVITY WASTE MELTERS".
5. THE REQUIRED BATCH SEQUENCES, PERMISSIVES, INTERLOCKS, ALARMS AND OPERATOR INTERFACE POINTS ARE FULLY DESCRIBED IN THE SOFTWARE FUNCTIONAL SPECIFICATION, FOR LMP-MELTER PROCESS SYSTEM, 24590-LAW-3PS-LMP-T0001.
6. SEE DRAWINGS 24590-LAW-M61-P23T-00105 THROUGH -00108, -00111, AND -00112 FOR NOZZLE TAG NUMBERS.

Please note that source, special nuclear, and byproduct materials, as defined in the Atomic Energy Act of 1954 (AEA) are regulated at the U. S. Department of Energy (DOE) facilities exclusively by DOE acting pursuant to its AEA authority. DOE asserts that pursuant to AEA, it has sole and exclusive responsibility and authority to regulate source, special nuclear, and byproduct materials at DOE-owned nuclear facilities. Information contained herein on radionuclides is provided for process description purposes only.

REV	DESCRIPTION	ORG	CHKD	RVWD	APVD	DATE
4	REVISED PER NOTE 17					12/21/06
3	REVISED PER NOTE 12	MD	SGS	ED	KK	5/24/04
0	ISSUED FOR CONSTRUCTION	M.D.	S.S.	N/A	C.W.	12/11/02

REVISION HISTORY

CM
QUALITY DESIGNATOR

ISSUED BY RPP-WTP PDC
ISSUE STAMP

PROJECT No.	24590
SITE	HANFORD
AREA	200E
BUILDING No.	20

	BY	DATE
ORIGINATOR	MUKULENDRA DE	12/09/02
CHECKER	SID SOURANI	12/09/02
APPROVER	CLIFF WINKLER	12/11/02
REVIEWER	N/A	N/A

CONTENT APPLICABLE TO ALARA? [X] YES [ ] NO
ADR NO. 24590-LAW-ADR-M-02-026 REV: 2
SAFETY SCREEN REQUIRED? [X] YES [ ] NO E&NS INITIAL IF YES DEK

BECHTEL
RIVER PROTECTION PROJECT
WASTE TREATMENT PLANT
2435 STEVENS CENTER PLACE
RICHLAND, WA 99354

CONTRACT No: DE-AC27-01RV14136

P&ID - LAW MELTER PROCESS SYSTEM MELTER 2 WALLS AND FLOOR PANELS COOLING SYSTEM

SCALE: NONE
24590-LAW-M6-LMP-00033
REV 4

SAFETY SCREEN IS REQUIRED FOR DRAWING TYPES IDENTIFIED IN 24590-WTP-GPP-SREG-002
'E' SIZE - 44x34
COMPUTER GENERATED - MANUAL CHANGES NOT PERMITTED
R10742757
12/21/2006 03:00:14 PM
PLOTTED BY: bameyer
C:\Work\dms03839\LAWMELMP00033.dgr

FORM E_SDK1004 (03/2003)

This information has been identified as **CONFIDENTIAL BUSINESS INFORMATION**

Per the Department of Ecology's April 1, 2009, letter "Re: Certification of Confidential Business Information for the Waste Treatment Plant," under the criteria of 43.21A.160 RCW and WAC 173-303-810 (15), the following document and associated changes are granted confidentiality and are exempt from public review:

Document Number: 24590-LAW-M6-LMP-00035
Title: P&ID –LAW Melter Process System Melter 2 Electrode Extension Cooling & Glass/Plenum Temperatures

24590-LAW-M6-LMP-00037

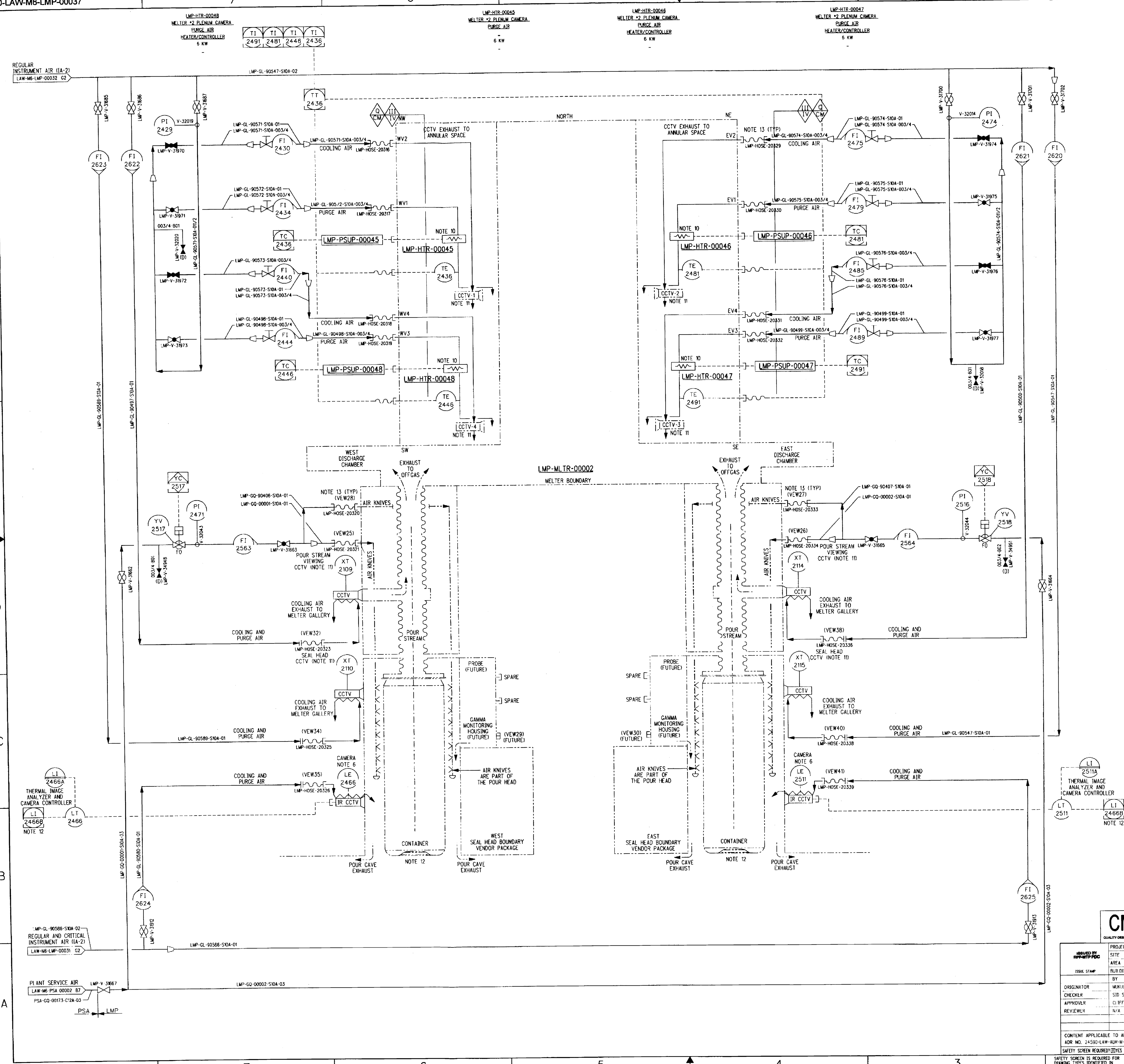

NOTES:

1. SEE DRAWINGS 24590-WTP-M6-50-00001 THROUGH 24590-WTP-M6-50-00008 FOR GENERAL NOTES, SYMBOLS AND LEGEND, AND GENERAL SLOPE REQUIREMENTS.

2-5. DELETED

6. THE IR CAMERA DETECTS GLASS LEVEL (THERMAL TRANSITION REGION) ON CONTAINER.
7. DELETED
8. NEW MAIN FILTERS ON ISA P&ID WILL REPLACE DELETED POINT OF USE FILTERS ON LMP P&IDS.
9. DELETED
10. CCTV VIEWPORT 6 KW HEATER.
11. PLENUM CCTV'S 1 THROUGH 4 ARE SHOWN IN PHANTOM FOR FUTURE (COOLING AIR VALVES ARE CLOSED), THE POUR HEAD AND SEAL HEAD CCTV'S ARE ASSIGNED TO THE PROCESS AND MECHANICAL HANDLING SYSTEM AND ARE PREFIXED WITH "PTJ" (I.E. TAG: PTJ-XT-2093). BLIND FLANGE INSTALLED IN PLACE OF CCTV.
12. HIGH HIGH LEVEL FROM THE THERMAL IMAGE SYSTEM AUTOMATICALLY SHUTS DOWN THE MELTER DISCHARGE. THE LAW CONTAINER POUR HANDLING SYSTEM LPH-WE-3505 (LOAD CELL) AT LPH-ELEV-00001 (WEST POUR CAVE ELEVATOR) PROVIDES SECONDARY HIGH HIGH LEVEL MONITORING TO PREVENT OVERFILL, SEE DWG. 24590-LAW-M7-LPH-00001007. LPH-WE-4005 (LOAD CELL) AT LPH-ELEV-00002 (EAST POUR CAVE ELEVATOR) PROVIDES SECONDARY HIGH HIGH LEVEL MONITORING TO PREVENT OVERFILL, SEE DWG. 24590-LAW-M7-LPH-00001009.
13. SERVICE SIDE OF FLEX CONNECTION SHALL BE FEMALE CAMLOCK BY MELTER GROUP.
14. REVISION 2 INCORPORATES THE FOLLOWING ITEMS: REVISED PIPE ROUTING TO REFLECT MODEL REVIEW COMMENTS. ADDED MELTER NOZZLE IDENTIFICATION NUMBERS. ADDED ROOT VALVES AT ALL PI'S. SWAPPED LINE NUMBERS 90499 TO 90574 AND 90498 TO 90571 (SEQUENCE). ADDED NOTES 13, 14, 15, HOLD 4 AND REVISED HOLD NOTE 3.
15. THE TAG NUMBERS INDICATED AT THE MELTER ENCLOSURE NOZZLE WERE PROVIDED BY THE MELTER GROUP.
16. CONTENTS OF THIS DOCUMENT ARE DANGEROUS WASTE PERMIT AFFECTING.
17. ITEMS IN PHANTOM LINED BOUNDARY ARE TO BE SUPPLIED BY VENDOR.
18. THE PRESSURE BOUNDARY FOR ALL SYSTEMS, STRUCTURES, AND COMPONENTS ON THIS DRAWING IS QUALITY LEVEL CM AND SEISMIC CATEGORY SC-IV, UNLESS OTHERWISE NOTED. SEE 24590-LAW-M6-LMP-00031 FOR SEISMIC AND QUALITY DESIGNATION FOR LMP-MLTR-00002.
19. MAJOR REVISION: NO REVISION CLOUDS REQUIRED. INCORPORATED 24590-LAW-M6N-LMP-00004, -00007, AND 24590-LAW-M6N-M80T-00001. ADDED FLOW INDICATORS. REMOVED EQUIPMENT INFORMATION FROM EQUIPMENT HEADER. DELETED PRESSURE INDICATORS. ADDED/DELETED VALVES. DELETED/REVISED LINES. ADDED/DELETED/REVISED NOTES, HOLDS AND REFERENCES.

HOLD/OPEN ITEMS:

1. DELETED
2. DELETED
3. DELETED
4. DELETED
5. DELETED

REFERENCES:

1. 24590-101-TSA-W000-0010-08-18, "CCTV P&ID".
2. 24590-LAW-M5-V17T-00005, "PROCESS FLOW DIAGRAM LAW VITRIFICATION MELTER 2 (SYSTEM LMP & LOP)".
3. 24590-LAW-3YD-LMP-00001, "SYSTEM DESCRIPTION FOR LAW MELTER PROCESS SYSTEM (LMP)".
4. 24590-LAW-3PS-AE00-T0001, "ENGINEERING SPECIFICATION FOR LOW ACTIVITY WASTE MELTERS".
5. THE REQUIRED BATCH SEQUENCES, PERMISSIVES, INTERLOCKS, ALARMS AND OPERATOR INTERFACE POINTS ARE FULLY DESCRIBED IN THE SOFTWARE FUNCTIONAL SPECIFICATION FOR LMP-MELTER PROCESS SYSTEM 24590-LAW-3PS-LMP-T0001.

Please note that source, special nuclear, and byproduct materials, as defined in the Atomic Energy Act of 1954 (AEA) are regulated at the U. S. Department of Energy (DOE) facilities exclusively by DOE acting pursuant to its AEA authority. DOE asserts that pursuant to AEA, it has sole and exclusive responsibility and authority to regulate source, special nuclear, and byproduct materials at DOE-owned nuclear facilities. Information contained herein on radionuclides is provided for process description purposes only.

CM
QUALITY DESIGNATOR

REV	DESCRIPTION	ORG	CHKD	RVWD	APVD	DATE
3	REVISED PER NOTE 19	[illegible]	SJ	CER SPK	[illegible]	12/21/06
2	REVISED PER NOTE 14 ABOVE	MD	SS	OTS	KK	7/09/04
0	ISSUED FOR CONSTRUCTION	MD	SS	N/A	CW	12/11/02

REVISION HISTORY

ISSUED BY RPP-WTP PDC
ISSUE STAMP

PROJECT No.	24590
SITE	HANFORD
AREA	200E
BUILDING No.	20

	BY	DATE
ORIGINATOR	MUKULENDRA DE	12/11/02
CHECKER	SID SOURANI	12/11/02
APPROVER	CLIFF WINKLER	12/11/02
REVIEWER	N/A	N/A

CONTENT APPLICABLE TO ALARA? [X] YES [ ] NO
ADR NO. 24590-LAW-ADR-M-02-026 REV: 2
SAFETY SCREEN REQUIRED? [X] YES [ ] NO E&NS INITIAL IF YES DEK

BECHTEL
RIVER PROTECTION PROJECT
WASTE TREATMENT PLANT
2435 STEVENS CENTER PLACE
RICHLAND, WA 99354

CONTRACT No: DE-AC27-01RV14136

P&ID-LAW MELTER PROCESS SYSTEM MELTER 2 GLASS POURING AND MONITORING INSTRUMENTATION

SCALE: NONE
24590-LAW-M6-LMP-00037
REV 3

SAFETY SCREEN IS REQUIRED FOR DRAWING TYPES IDENTIFIED IN 24590-WTP-GPP-SREG-002

'E' SIZE - 44x34
COMPUTER GENERATED - MANUAL CHANGES NOT PERMITTED

R10742765
12/19/2006 09:57:20 AM
PLOTTED BY: cewebb
C:\Work\cms03835_AWM6LMP00037.dgn

FORM E_SDN.DGN 02/2003

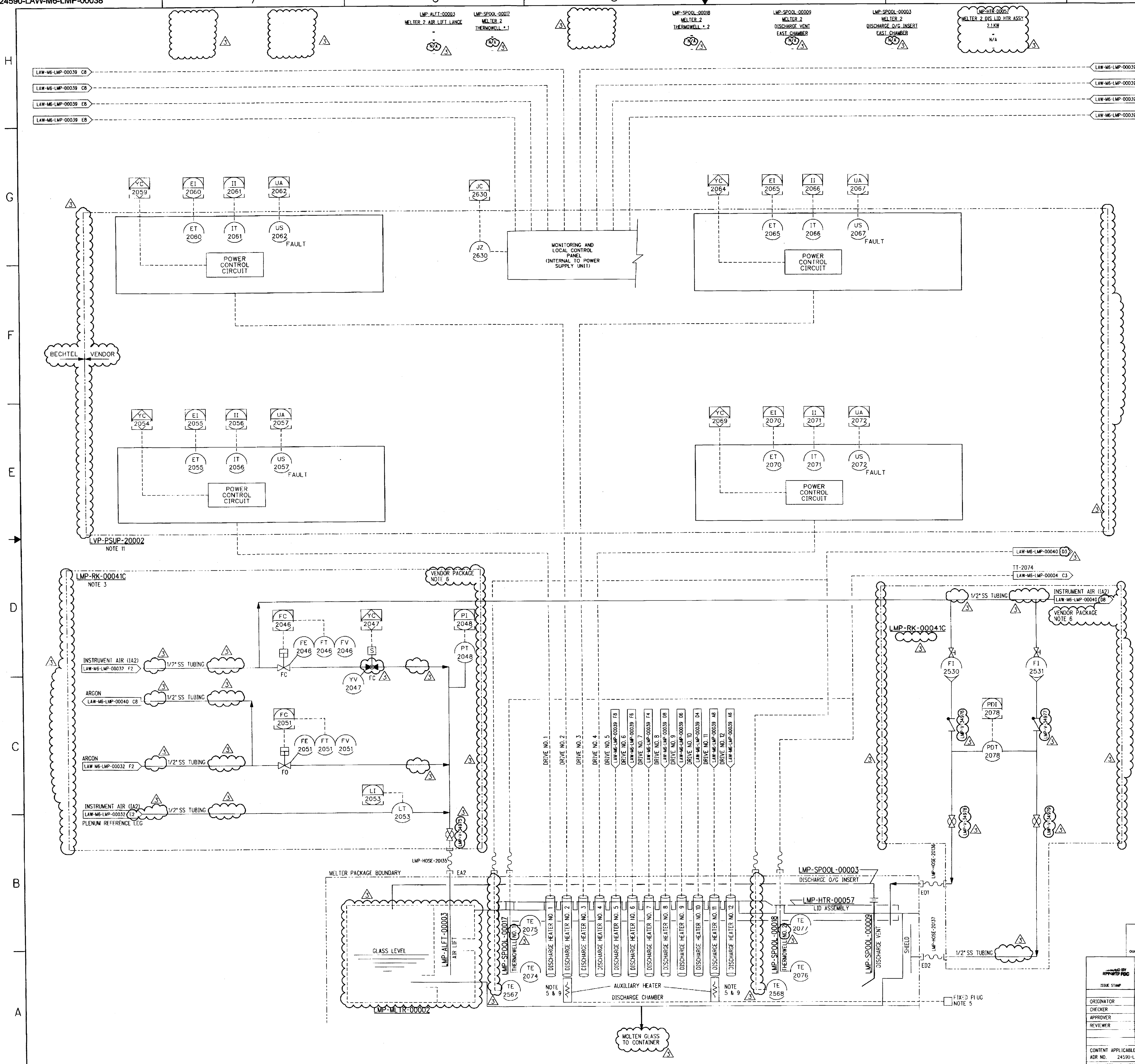

NOTES:

1. SEE DRAWINGS 24590-WTP-M6-50-00001 THROUGH 24590-WTP-M6-50-00008 FOR GENERAL NOTES, SYMBOLS AND LEGEND, AND GENERAL SLOPE REQUIREMENTS.
2. DELETED
3. ALL INSTRUMENTS AND VALVING FOR AIR LIFT SHOULD BE LOCATED AS CLOSE AS POSSIBLE TO THE SHIELD WALL TO REDUCE LINE CAPACITANCE AND AIR LIFT SURGING.
4. DELETED
5. DISCHARGE AUXILIARY HEATERS PREWIRED TO PLUG FOR USE, AS REQUIRED BY OPERATIONS.
6. JPSS-1 SPECIFICATION AS DEFINED IN INSTRUMENT PIPING MATERIAL CLASS SPECIFICATION NO 24590-WTP-3PS-JXF0-T0001. SPECIFICATION CHANGE ALSO DEFINES AREA OF C&I RESPONSIBILITIES.
7. DELETED
8. REVISION 1: INCORPORATES THE FOLLOWING ITEMS: AUXILIARY HEATER TE'S. REVISED NOTE 5, DELETED NOTES 2 AND 7, ADDED NOTES 8 AND 9. LMP-YV-2047 FROM PNEUMATIC TO SOLENOID ACTUATED. ADDED TT SYMBOLOGY. ADDED MECHANICAL HOSE NUMBERS. ADDED LVE-PSUP-20003 EQUIPMENT INFORMATION TO HEADING, REVISED LMP-RK-00041 TO LMP-RK-00041C AND REVISED HEADING INFORMATION. ADDED QUALITY LEVEL DESIGNATOR.
9. TE-2567 AND TE-2568 ARE INTEGRAL WITH AUXILIARY HEATER AND ARE NOT REPLACEABLE.
10. REVISION 2: INCORPORATES THE FOLLOWING ITEMS: CHANGED YV-2047 FROM A BALL VALVE TO A GENERIC VALVE. ADDED PLENUM REFERENCE LEG NOTATION. DELETED LIMITED RIGHTS LEGENG. ADDED NOTE 10. REMOVED HOLD 2. PUT HOLD ON ALL ELECTRICAL POWER SUPPLIES.
11. ELECTRICAL SUPPLY DESIGN IS SHOWN ON DRAWING 24590-LAW-E1-LVE-00033.
12. THE PRESSURE BOUNDARY FOR ALL SYSTEMS, STRUCTURES, AND COMPONENTS ON THIS DRAWING IS QUALITY LEVEL CM AND SEISMIC CATEGORY SC-IV, UNLESS OTHERWISE NOTED. SEE 24590-LAW-M6-LMP-00031 FOR SEISMIC AND QUALITY DESIGNATION FOR LMP-MLTR-00002.
13. CONTENTS OF THIS DOCUMENT ARE DANGEROUS WASTE PERMIT AFFECTING.
14. REVISED TO INCORPORATE 24590-LAW-M6N-M80T-00001. CHANGED YV-2047 FROM A GENERIC VALVE TO A PLUG VALVE. ADDED TAGS TO VALVES IN RACKS. TE-2567 & TE-2568 LINE STYLE CHANGED TO ELECTRIC SIGNAL. REMOVED EQUIPMENT INFORMATION FROM EQUIPMENT HEADER. ADDED/DELETED/REVISED NOTES, HOLDS, AND REFERENCES.

HOLD/OPEN ITEMS:

1. DELETED
2. DELETED

REFERENCES:

1. 24590-101-TSA-W000-0010-08-13, "DISCHARGE SYSTEM P&ID", SHEETS 5 THROUGH 8.
2. 24590-LAW-M5-V17T-00005, "PROCESS FLOW DIAGRAM LAW VITRIFICATION MELTER 2 (SYSTEM LMP & LOP)".
3. 24590-LAW-3YD-LMP-00001, "SYSTEM DESCRIPTION FOR LAW MELTER PROCESS SYSTEM (LMP)".
4. 24590-LAW-3PS-AE00-T0001, "ENGINEERING SPECIFICATION FOR LOW ACTIVITY WASTE MELTERS".
5. DELETED
6. THE REQUIRED BATCH SEQUENCES, PERMISSIVES, INTERLOCKS, ALARMS AND OPERATOR INTERFACE POINTS ARE FULLY DESCRIBED IN THE SOFTWARE FUNCTIONAL SPECIFICATION FOR LMP-MELTER PROCESS SYSTEM 24590-LAW-3PS-LMP-T0001.

Please note that source, special nuclear, and byproduct materials, as defined in the Atomic Energy Act of 1954 (AEA) are regulated at the U. S. Department of Energy (DOE) facilities exclusively by DOE acting pursuant to its AEA authority. DOE asserts that pursuant to AEA, it has sole and exclusive responsibility and authority to regulate source, special nuclear, and byproduct materials at DOE-owned nuclear facilities. Information contained herein on radionuclides is provided for process description purposes only.

REVISION HISTORY

REV	DESCRIPTION	ORG	CHKD	RVWD	APVD	DATE
3	REVISED PER NOTE 14		SJ			12/21/06
2	REVISED PER NOTE 10 & 11 ABOVE	SGS	RLH	ED	KK	8/30/04
1	REVISED PER NOTE 8 ABOVE	MD	SS	EI	CW	10/02/03
0	ISSUED FOR CONSTRUCTION	MD	SS	N/A	CJW	12/11/02

CM
QUALITY DESIGNATOR

ISSUED BY RPP-WTP PDC
ISSUE STAMP

PROJECT No.	24590
SITE	HANFORD
AREA	200E
BUILDING No.	20

	BY	DATE
ORIGINATOR	MUKUL DE	12/11/02
CHECKER	SID SOURANI	12/11/02
APPROVER	CLIFF WINKLER	12/11/02
REVIEWER	N/A	N/A

CONTENT APPLICABLE TO ALARA? [X] YES [ ] NO
ADR NO. 24590-LAW-ADR-M-02-026 REV: 2
SAFETY SCREEN REQUIRED? [X] YES [ ] NO E&NS INITIAL IF YES

RIVER PROTECTION PROJECT
WASTE TREATMENT PLANT
2435 STEVENS CENTER PLACE
RICHLAND, WA 99354

CONTRACT No: DE-AC27-01RV14136

P&ID - LAW MELTER PROCESS SYSTEM MELTER 2 DISCHARGE HEATERS, POWER CONTROLS (1 - 4) & AIR LIFT - EASTSIDE

SCALE: NONE
24590-LAW-M6-LMP-00038
REV 3

SAFETY SCREEN IS REQUIRED FOR DRAWING TYPES IDENTIFIED IN 24590-WTP-GPP-SREG-002

'E' SIZE - 44x34
COMPUTER GENERATED - MANUAL CHANGES NOT PERMITTED

R10742774
12/19/2006 01:35:17 PM
PLOTTED BY: eldorn
C:\Work\cms03838\LAWM6LMP00038.dgn

FORM K_SDN.DGN 02/2003

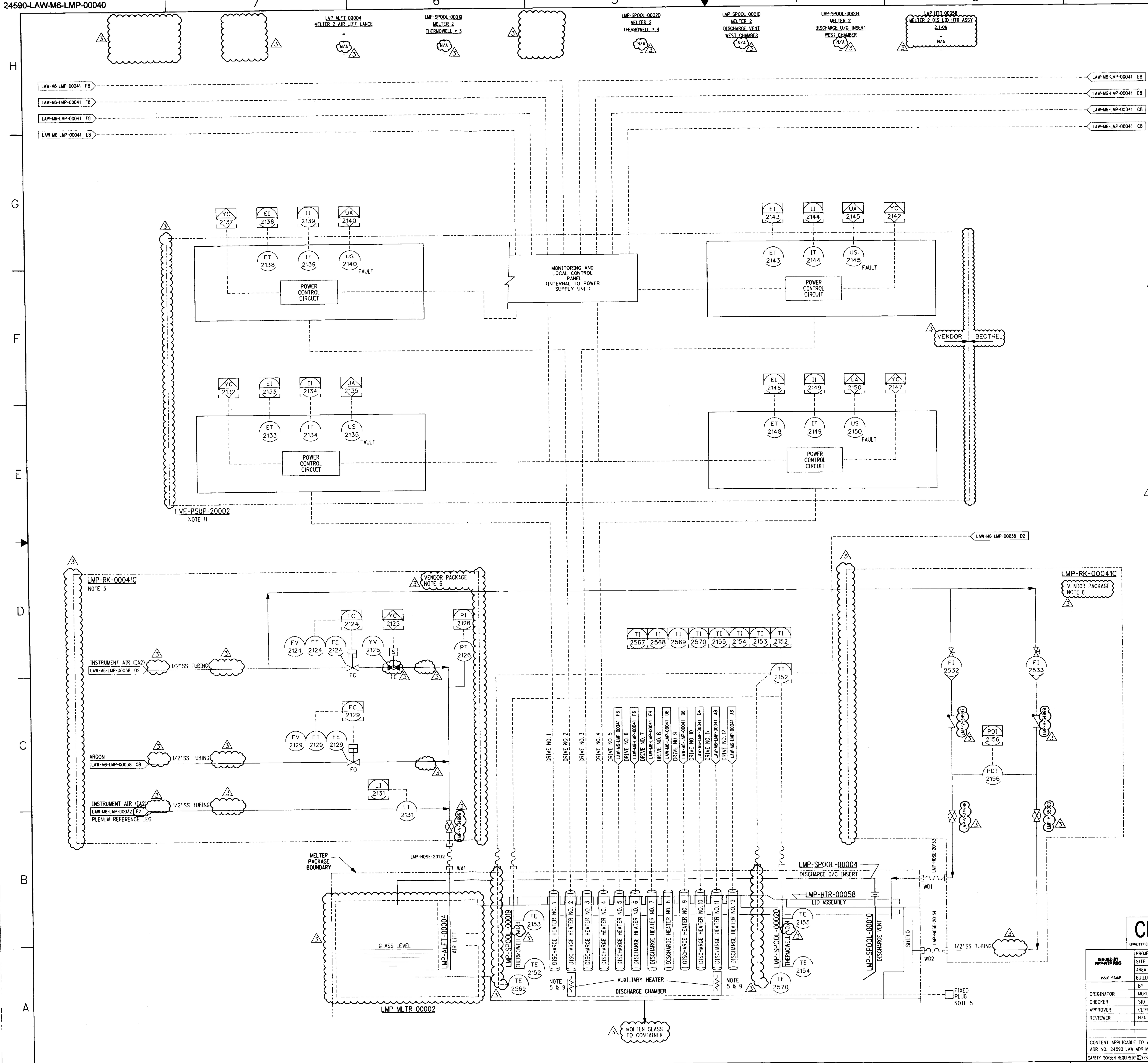

NOTES:

1. SEE DRAWINGS 24590-WTP-M6-50-00001 THROUGH 24590-WTP-M6-50-00008 FOR GENERAL NOTES, SYMBOLS AND LEGEND, AND GENERAL SLOPE REQUIREMENTS.
2. DELETED
3. ALL INSTRUMENTS AND VALVING FOR AIR LIFT SHOULD BE LOCATED AS CLOSE AS POSSIBLE TO THE SHIELD WALL TO REDUCE LINE CAPACITANCE AND AIR LIFT SURGING.
4. DELETED
5. DISCHARGE AUXILIARY HEATERS PREWIRED TO PLUG FOR USE, AS REQUIRED BY OPERATIONS.
6. JPSS-1 SPECIFICATION AS DEFINED IN INSTRUMENT PIPING MATERIAL CLASS SPECIFICATION NO 24590-WTP-3PS-JXF0-T0001. SPECIFICATION CHANGE ALSO DEFINES AREA OF C & I RESPONSIBILITY.
7. DELETED
8. REVISION 1: CHANGES INCORPORATED IN REVISION 1 INCLUDE: AUXILIARY HEATER TE'S. REVISED NOTE 5, DELETED NOTES 2 AND 7, ADDED NOTES 8 AND 9. LMP-YV-2125 FROM PNEUMATIC TO SOLENOID ACTUATED. ADDED TT SYMBOLOGY. ADDED MECHANICAL HOSE NUMBERS. ADDED LVE-PSUP-20004 EQUIPMENT INFORMATION TO HEADING, REVISED LMP-RK-00041 TO LMP-RK-00041C AND REVISED HEADING INFORMATION. ADDED QUALITY LEVEL DESIGNATOR.
9. TE-2569 AND TE-2570 ARE INTEGAL WITH AUXILARY HEATERS AND ARE NOT REPLACEABLE.
10. REVISION 2: CHANGED YV-2125 FROM A BALL VALVE TO A GENERIC VALVE. ADDED PLENUM REFERENCE LEG NOTATION. ADDED NOTE 10. ADDED POWER SUPPLY BREAK LINES. REMOVED HOLD 2. ADDED HOLD ON ALL POWER SUPPLIES. DELETED LIMITED RIGHTS LEGEND.
11. ELECTRICAL SUPPLY DESIGN IS SHOWN ON DRAWING NO. 24590-LAW-E1-LVE-00033.
12. THE PRESSURE BOUNDARY FOR ALL SYSTEMS, STRUCTURES, AND COMPONENTS ON THIS DRAWING IS QUALITY LEVEL CM AND SEISMIC CATEGORY SC-IV, UNLESS OTHERWISE NOTED. SEE 24590-LAW-M6-LMP-00031 FOR SEISMIC AND QUALITY DESIGNATION FOR LMP-00002.
13. CONTENTS OF THIS DOCUMENT ARE DANGEROUS WASTE PERMIT AFFECTING.
14. REVISED TO INCORPORATE 24590-LAW-M6N-M80T-00001. CHANGED YV-2125 FROM A GENERIC VALVE TO A PLUG VALVE. ADDED TAGS TO VALVES IN RACKS. TE-2569 & TE-2570 LINE STYLE CHANGED TO ELECTRIC SIGNAL. REMOVED EQUIPMENT INFORMATION FROM EQUIPMENT HEADER. ADDED/DELETED/REVISED NOTES, HOLDS, AND REFERENCES.

HOLD/OPEN ITEMS:

1. DELETED
2. DELETED

REFERENCES:

1. 24590-101-TSA-W000-0010-08-13, "DISCHARGE SYSTEM P&ID", SHEETS 5 THROUGH 8.
2. 24590-LAW-M5-V17T-00005, "PROCESS FLOW DIAGRAM LAW VITRIFICATION MELTER 2 (SYSTEM LMP & LOP)".
3. 24590-LAW-3YD-LMP-00001. "SYSTEM DESCRIPTION FOR LAW MELTER PROCESS SYSTEM (LMP)".
4. 24590-LAW-3PS-AE00-T0001, "ENGINEERING SPECIFICATION FOR LOW ACTIVITY WASTE MELTERS".
5. DELFTED
6. THE REQUIRED BATCH SEQUENCES, PERMISSIVES, INTERLOCKS, ALARMS AND OPERATOR INTERFACE POINTS ARE FULLY DESCRIBED IN THE SOFTWARE FUNCTIONAL SPECIFICATION FOR LMP-MELTER PROCESS SYSTEM 24590-LAW-3PS-LMP-T0001.

Please note that source, special nuclear, and byproduct materials, as defined in the Atomic Energy Act of 1954 (AEA) are regulated at the U. S. Department of Energy (DOE) facilities exclusively by DOE acting pursuant to its AEA authority. DOE asserts that pursuant to AEA, it has sole and exclusive responsibility and authority to regulate source, special nuclear, and byproduct materials at DOE-owned nuclear facilities. Information contained herein on radionuclides is provided for process description purposes only.

REV	DESCRIPTION	ORG	CHKD	RVWD	APVD	DATE
3	REVISED PER NOTE 14	[illegible]	SJ	CER SPK	[illegible]	12/21/06
2	REVISED PER NOTE 10	SCS	RLH	ED	KK	8/30/06
1	REVISED PER NOTE 8	MD	SS	EI	CW	10/02/03
0	ISSUED FOR CONSTRUCTION	MD	SS	N/A	CJW	12/11/02

REVISION HISTORY

CM
QUALITY DESIGNATOR

ISSUED BY RPP-WTP PDC
ISSUE STAMP

PROJECT No.	24590
SITE	HANFORD
AREA	200E
BUILDING No.	20

	BY	DATE
ORIGINATOR	MUKUL DE	12/11/02
CHECKER	SID SOURANI	12/11/02
APPROVER	CLIFF WINKLER	12/11/02
REVIEWER	N/A	

CONTENT APPLICABLE TO ALARA? [X] YES [ ] NO
ADR NO. 24590-LAW-ADR-M-02-026 REV: 2
SAFETY SCREEN REQUIRED? [X] YES [ ] NO EMNS INITIAL IF YES DEK

BECHTEL
RIVER PROTECTION PROJECT
WASTE TREATMENT PLANT
2435 STEVENS CENTER PLACE
RICHLAND, WA 99354

CONTRACT No: DE-AC27-01RV14136

P&ID - LAW
MELTER PROCESS SYSTEM MELTER 2 DISCHARGE HEATERS, POWER CONTROLS (1 - 4) & AIR LIFT - WESTSIDE

SCALE: NONE
24590-LAW-M6-LMP-00040
REV 3

SAFETY SCREEN IS REQUIRED FOR DRAWING TYPES IDENTIFIED IN 24590-WTP-GPP-SREG-002

'E' SIZE - 44x34
COMPUTER GENERATED - MANUAL CHANGES NOT PERMITTED

R10742775

12/19/2006 01:36:00 PM

PLOTTED BY: eidorn
C:\Work\dms03838\LAWM6_MP00040.dgn

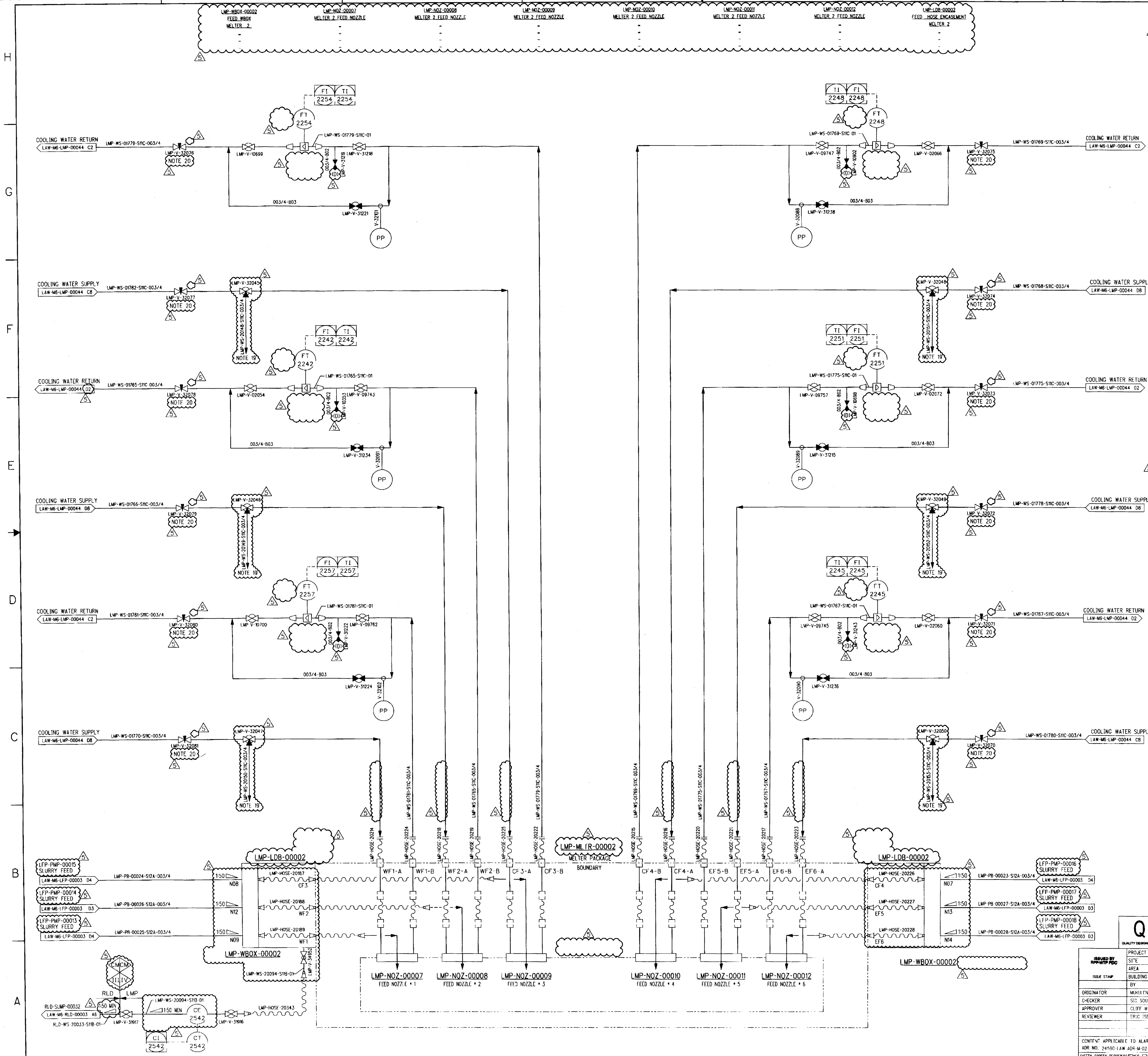

NOTES:

1. SEE DRAWINGS 24590-WTP-M6-50-00001 THROUGH 24590-WTP-M6-50-00008 FOR GENERAL NOTES, SYMBOLS AND LEGEND, AND GENERAL SLOPE REQUIREMENTS.

2-13. DELETED

14. THE PRESSURE BOUNDARY FOR ALL SYSTEMS, STRUCTURES, AND COMPONENTS ON THIS DRAWING IS QUALITY LEVEL CM AND SEISMIC CATEGORY SC-IV, UNLESS OTHERWISE NOTED. SEE 24590-LAW-M6-LMP-00031 FOR QUALITY AND SEISMIC DESIGNATION FOR LAW-MLTR-00002.

15. DELETED

16. REVISION 4: SEE DTD NUMBER 24590-LAW-DTD-ENS-04-0003. REMOVED HOLD NUMBER 4. NEEDLE VALVES ARE ITS QL-2 SEISMIC III.

17. ADDED QUALITY AND SEISMIC DESIGNATOR FLAGS.

18. CONTENTS OF THIS DOCUMENT ARE DANGEROUS WASTE PERMIT AFFECTING.

19. 3-WAY VALVE DRAIN LINE TO BE ROUTED TOWARD SAFE LOCATION. SUPPLY SIDE CLOSES WHEN DRAIN OPENS.

20. NEEDLE VALVES ARE QUALITY LEVEL Q AND SEISMIC CATEGORY SC-III. VALVE SETTING SHALL LIMIT FLOW TO MELT POOL IN THE EVENT OF A BREACHED FEED NOZZLE COOLING JACKET. TO PREVENT INADVERTENT BLOCKED-IN COOLING CIRCUIT, VALVE SHALL BE FURNISHED WITH CLOSURE TRAVEL LIMIT.

21. REVISED TO INCORPORATE 24590-LAW-M6N-LMP-00008, -00017, AND 24590-LAW-M6N-M80T-00001. 3-WAY BALL VALVES REPLACE SHUT-OFF VALVES. ADDED/DELETED/REVISED NOTES, HOLDS, REFERENCES, QUALITY/SEISMIC FLAGS, REDUCERS, SLOPES, VALVE AND LINE NUMBERS AND INSTRUMENTS. UPDATED EQUIPMENT DESCRIPTIONS AND OFF SHEET CONNECTORS. CHANGED HOSE ENCASEMENT SYMBOL.

HOLD/OPEN ITEMS:

1-4. DELETED

5. DELETED

REFERENCES:

1. 24590-101-TSA-W000-0010-409-877 AND -14/5, "FEED PUMP P&ID".
2. DELETED
3. 24590 LAW-3YD-LMP-00001, "SYSTEM DESCRIPTION FOR LAW MELTER PROCESS SYSTEM (LMP)".
4. 24590-LAW-3PS-AE00-T0001, "ENGINEERING SPECIFICATION FOR LOW ACTIVITY WASTE MELTERS".
5. THE REQUIRED BATCH SEQUENCES, PERMISSIVES, INTERLOCKS, ALARMS AND OPERATOR INTERFACE POINTS ARE FULLY DESCRIBED IN THE SOFTWARE FUNCTIONAL SPECIFICATION, FOR LAW-MELTER PROCESS (LMP) SYSTEM, 24590-LAW-3PS-LMP-T0001.

Please note that source, special nuclear, and byproduct materials, as defined in the Atomic Energy Act of 1954 (AEA) are regulated at the U. S. Department of Energy (DOE) facilities exclusively by DOE acting pursuant to its AEA authority. DOE asserts that pursuant to AEA, it has sole and exclusive responsibility and authority to regulate source, special nuclear, and byproduct materials at DOE-owned nuclear facilities. Information contained herein on radionuclides is provided for process description purposes only.

REVISION HISTORY

REV	DESCRIPTION	ORG	CHKD	RVWD	APVD	DATE
5	REVISED PER NOTE 21	[signature]	[signature]	CER SPK	[signature]	12/21/06
4	SEE NOTES 16, 17, AND 18	SCS	RH	SS	KK	10/20/04
0	ISSUED FOR CONSTRUCTION	MD	SS	EI	CW	11/26/02

Q
QUALITY DESIGNATOR

ISSUED BY RPP-WTP PDC
ISSUE STAMP

PROJECT No.	24590
SITE	HANFORD
AREA	200E
BUILDING No.	20

	BY	DATE
ORIGINATOR	MUKULENDRA DE	11/24/02
CHECKER	SID SOURANI	11/24/02
APPROVER	CLIFF WINKLER	11/26/02
REVIEWER	ERIC ISERN	11/25/02

CONTENT APPLICABLE TO ALARA? [X] YES [ ] NO
ADR NO. 24590-LAW-ADR-M-02-026 REV: 2
SAFETY SCREEN REQUIRED? [X] YES [ ] NO E&NS INITIAL IF YES DEK

BECHTEL
RIVER PROTECTION PROJECT
WASTE TREATMENT PLANT
2435 STEVENS CENTER PLACE
RICHLAND, WA 99354

CONTRACT No: DE-AC27-01RV14136

P&ID - LAW MELTER PROCESS SYSTEM MELTER 2 FEED NOZZLES COOLING SYSTEM AND FEED NOZZLES

SCALE: NONE

24590-LAW-M6-LMP-00042 REV 5

SAFETY SCREEN IS REQUIRED FOR DRAWING TYPES IDENTIFIED IN 24590-WTP-GPP-SREG-002

'E' SIZE - 44x34
COMPUTER GENERATED - MANUAL CHANGES NOT PERMITTED

R10742758

2/21/2006 12:59:14 PM

PLOTTED BY: e dorn
C:\Work\dms03838\LAWM6LMP00042.dgr

FORM E-SDN-DDN 02/2003

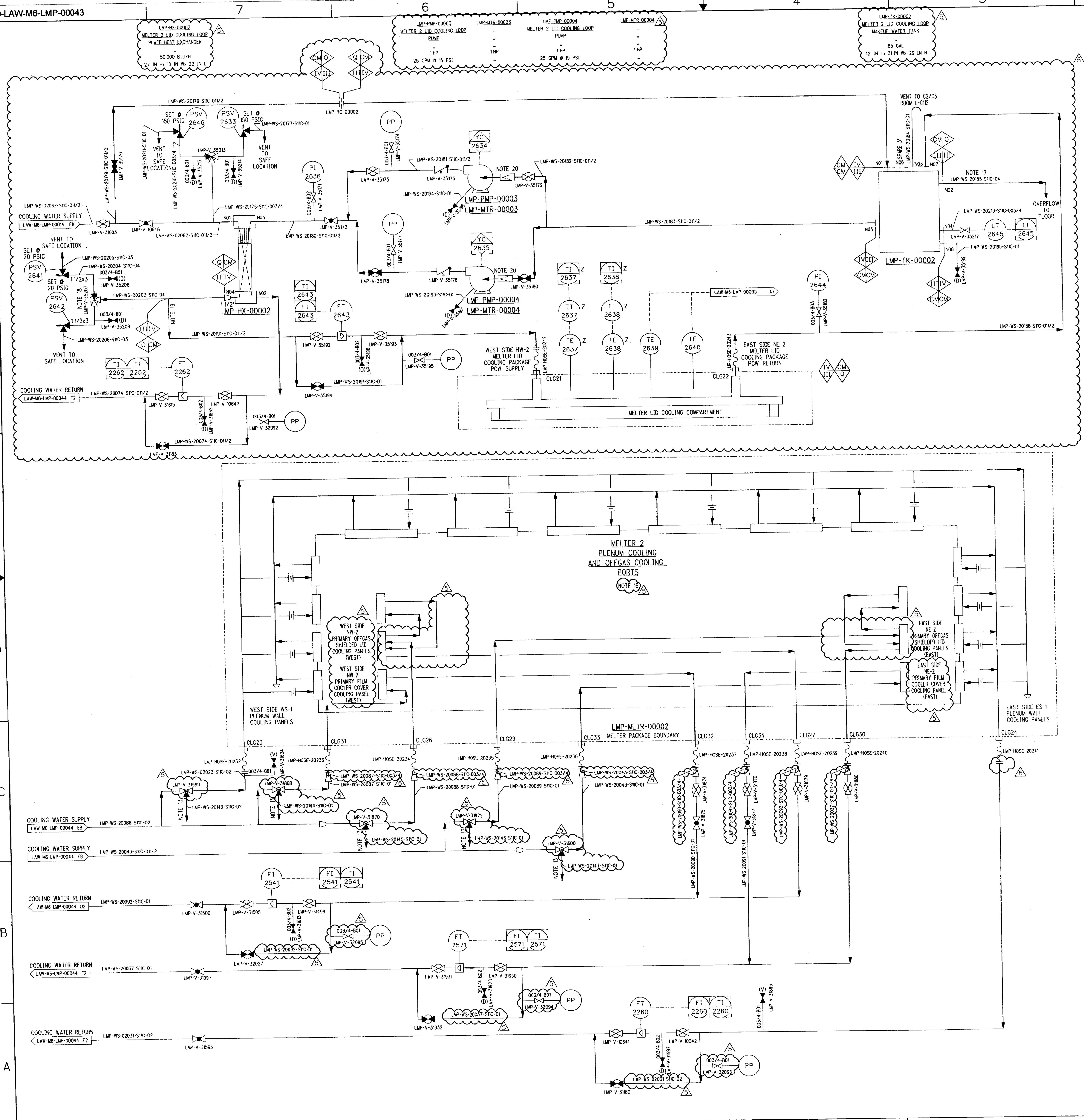

NOTES:

1. SEE DRAWINGS 24590-WTP-M6-50-00001 THROUGH 24590-WTP-M6-50-00008 FOR GENERAL NOTES, SYMBOLS AND LEGEND, AND GENERAL SLOPE REQUIREMENTS.

2-6. DELETED

7. PIPING SHALL NOT CONTAIN DEAD LEGS & LOW POINTS.

8-11. DELETED

12. THE PRESSURE BOUNDARY FOR ALL SYSTEMS, STRUCTURES, AND COMPONENTS ON THIS DRAWING IS QUALITY LEVEL CM AND SEISMIC CATEGORY SC-IV, UNLESS OTHERWISE NOTED. SEE 24590-LAW-M6-LMP-00031, REV. 2 FOR SEISMIC AND QUALITY DESIGNATION FOR LMP-MLTR-00002.

13. 3-WAY VALVE BLEED LINE TO BE ROUTED TOWARD SAFE LOCATION. SUPPLY SIDE CLOSES WHEN BLEED OPENS.

14. CONTENTS OF THIS DOCUMENT ARE DANGEROUS WASTE PERMIT AFFECTING.

15. REVISION 4: REVISED TO INCORPORATE 24590-LAW-M6N-M80T-00001. REPLACED SHUTOFF VALVES WITH 3-WAY BALL VALVES. CHANGED FLOW INSTRUMENT TYPE TO INTEGRAL. REMOVED MELTER TAG. CHANGED LINE SIZE FOR COOLING WATER RETURN AND BYPASS. ADDED/DELETED/REVISED NOTES AND REFERENCES.

16. THIS IS A SCHEMATIC REPRESENTATION OF MELTER PLENUM AND LID COOLING. THE PIPING IS INTEGRAL TO THE MELTER. THERE IS NO VENDOR PIPING AND INSTRUMENTATION DIAGRAM FOR MELTER INTERNALS.

17. TANK OVERFLOW LINE IS NOT SUPPORTED BY TANK.

18. SETPOINT AND PHYSICAL LOCATION OF PSV MAINTAINS MELTER LID BELOW 14.5 PSIG.

19. LOCATE LMP-WS-20191-S11C-01 1/2 BRANCH LESS THAN 6 FEET FROM HEAT EXCHANGER OUTLET N04. PLACE CENTERLINE OF PSV NO MORE THAN ONE FOOT ABOVE 3 FT ELEVATION FLOOR.

20. TEMPORARY STRAINER FOR STARTUP.

21. REVISION 5: REVISED TO ADD MELTER LID COOLING LOOP AND INCORPORATED DCN 24590-LAW-M6N-00033. ADDED NEW SECTION AND BRANCH NUMBERS. REVISED/ADDED/DELETED NOTES AND REFERENCES.

HOLD/OPEN ITEMS:

1-2. DELETED

REFERENCES:

1. 24590-101-TSA-W000-0010-08-14, "WALL COOLING PANEL P&ID".
2. DELETED
3. 24590-LAW-3YD-LMP-00001, "SYSTEM DESCRIPTION FOR LAW MELTER PROCESS SYSTEM (LMP)".
4. 24590-LAW-3PS-AE00-T0001, "ENGINEERING SPECIFICATION FOR LOW ACTIVITY WASTE MELTERS".
5. DELETED
6. SEE DRAWINGS 24590-LAW-M61-P23T-00101 THROUGH 24590-LAW-M61-P23T-00104, 24590-LAW-M61-P23T-00109 AND 24590-LAW-M61-P23T-00110 FOR NOZZLE TAG NUMBERS.

Please note that source, special nuclear, and byproduct materials, as defined in the Atomic Energy Act of 1954 (AEA) are regulated at the U. S. Department of Energy (DOE) facilities exclusively by DOE acting pursuant to its AEA authority. DOE asserts that pursuant to AEA, it has sole and exclusive responsibility and authority to regulate source, special nuclear, and byproduct materials at DOE owned nuclear facilities. Information contained herein on radionuclides is provided for process description purposes only.

REV	DESCRIPTION	ORG	CHKD	RVWD	APVD	DATE
5	REVISED PER NOTE 21	MP	SJW	SPK	JJ	4/11/08
4	REVISED PER NOTE 15	KM	SJ	SPK	JJ	12/21/06
0	ISSUED FOR CONSTRUCTION	MD	SS	N/A	CW	11/25/02

REVISION HISTORY

Q
QUALITY DESIGNATOR

ISSUED BY RPP-WTP PDC
ISSUE STAMP

PROJECT No.	24590
SITE	HANFORD
AREA	200E
BUILDING No.	20

	BY	DATE
ORIGINATOR	MUKULENDRA DE	11/23/02
CHECKER	SID SOURANI	11/23/02
APPROVER	CLIFF WINKLER	11/25/02
REVIEWER	N/A	

CONTENT APPLICABLE TO ALARA? [X] YES [ ] NO
ADR NO. 24590-LAW-ADR-M-02-026 REV: 2
SAFETY SCREEN REQUIRED? [X] YES [ ] NO F&NS INITIAL IF YES DEK

RIVER PROTECTION PROJECT
WASTE TREATMENT PLANT
2435 STEVENS CENTER PLACE
RICHLAND, WA 99354

CONTRACT No: DE-AC27-01RV14136

P&ID - LAW
MELTER PROCESS SYSTEM
MELTER 2
LID, PLENUM COOLING SYSTEM
PORTS COOLING SYSTEM

SCALE: NONE | 24590-LAW-M6-LMP-00043 | REV 5

SAFETY SCREEN IS REQUIRED FOR DRAWING TYPES IDENTIFIED IN 24590-WTP-GPP-SREG-002

'E' SIZE 44x34
COMPUTER GENERATED - MANUAL CHANGES NOT PERMITTED

R10894828
04/09/2008 10:09:57 AM

PLOTTED BY: e dorr

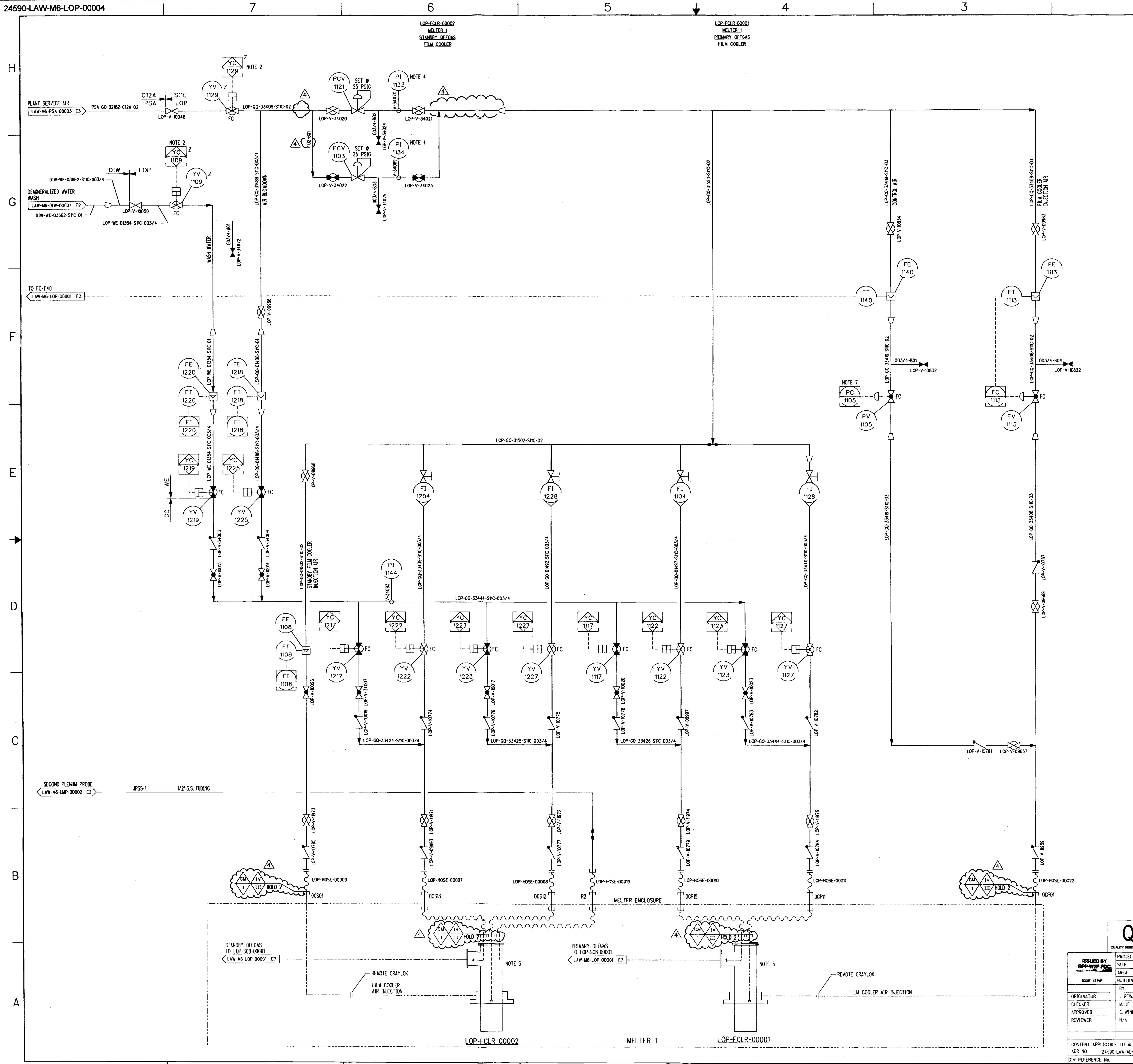

NOTES:

1. SEE DRAWINGS 24590-WTP-M6-50-00001 THROUGH 24590-WTP-M6-50-00006 FOR GENERAL NOTES, SYMBOLS AND LEGEND.
2. "Z" SUBSCRIPT INSTRUMENTS ARE THE ONLY IMPORTANT TO SAFETY INSTRUMENTS.
3. THE REQUIRED BATCH SEQUENCES, PERMISSIVES, INTERLOCKS, ALARMS AND OPERATOR INTERFACE POINTS ARE FULLY DESCRIBED IN THE SOFTWARE FUNCTIONAL SPECIFICATION, FOR LOP-LAW PRIMARY OFFGAS PROCESS SYSTEM, 24590-LAW-3PS-LOP-T0001.
4. PI TO BE VISIBLE FROM ASSOCIATED PRESSURE REGULATOR.
5. DELETED.
6. CONTENTS OF THIS DOCUMENT ARE DANGEROUS WASTE PERMIT AFFECTING.
7. MELTER PRESSURE CONTROL AIR LOOP IS BASED ON INPUT FROM LMP-PDY-1410 AS SHOWN ON P&ID 24590-LAW-M6-LMP-00002.
8. REFER TO CIS FOR ALL EQUIPMENT, SAFETY CLASSIFICATIONS, AND LINE QUALITY LEVEL DESIGNATIONS.
9. REVISED PER CCN 055206, CCN 069163, AND CCN 072060.
10. DELETED.
11. THE TAG NUMBERS INDICATED AT THE MELTER ENCLOSURE NOZZLES WERE PROVIDED BY THE MELTER SYSTEMS GROUP.
12. FOR REVISION 2 CHANGES SEE ARCHIVED REVISION 2 P&ID.
13. FOR REVISION 3 CHANGES SEE ARCHIVED REVISION 3 P&ID.
14. REVISION 4 CHANGES INCLUDE THE FOLLOWING LISTED ITEMS:
    - DELETED NOTE 5, REVISED NOTES 12, 13, AND ADDED NOTE 14.
    - ADDED QUALITY/SEISMIC INDICATOR AT MELTER ENCLOSURE CONNECTIONS.
    - DELETED PIPELINE LOP-GQ-33408-S11C-011/2 AND 2" x 1-1/2" REDUCER.
    - REVISED PIPELINE LOP-GQ-33408-S11C-011/2-B01 TO LOP-GQ-33408-S11C-02-B01.
    - ADDED HOLD NOTE 2.

HOLD/OPEN ITEMS:

1. DELETED.
2. QUALITY/SEISMIC BOUNDARY FLAG LOCATIONS WILL BE FINALIZED IN ISM MEETINGS.

REFERENCES:

NONE

Please note that source, special nuclear, and byproduct materials, as defined in the Atomic Energy Act of 1954 (AEA) are regulated at the U.S. Department of Energy (DOE) facilities exclusively by DOE acting pursuant to its AEA authority. DOE asserts that pursuant to AEA, it has sole and exclusive responsibility and authority to regulate source, special nuclear and byproduct materials at DOE owned nuclear facilities. Information contained herein on radionuclides is provided for process description purposes only.

REV	DESCRIPTION	ORG	CHKD	RVWD	APVD	DATE
4	REVISED PER NOTE 14 ABOVE	SS	RH	ED	KK	12/9/04
3	REVISED PER NOTE 13 ABOVE	SS	RH	ED	KK	9/17/04
2	REVISED PER NOTE 10, 11, & 12 ABOVE	SS	JR	EI	KK	6/01/04
1	REVISED TO INCORPORATE CHANGES IDENTIFIED IN NOTE 9	JR	MD	EI	CW	10/27/03
0	ISSUED FOR CONSTRUCTION	JR	MD	N/A	CW	12/07/02

REVISION HISTORY

Q
QUALITY DESIGNATOR

ISSUED BY RPP-WTP PDC
ISSUE STAMP

PROJECT No.	24590
SITE	HANFORD
AREA	200E
BUILDING No.	20

	BY	DATE
ORIGINATOR	J. REWARI	12/05/02
CHECKER	M. DE	12/05/02
APPROVED	C. WINKLER	12/07/02
REVIEWER	N/A	N/A

CONTENT APPLICABLE TO ALARA? [X] YES [ ] NO
ADR NO. 24590-LAW-ADR-M-02 022 REV: 0
DIM REFERENCE No.

BECHTEL
RIVER PROTECTION PROJECT
WASTE TREATMENT PLANT
2435 STEVENS CENTER PLACE
RICHLAND, WA 99352

CONTRACT No: DE-AC27-01RV14136

P&ID - LAW PRIMARY OFFGAS PROCESS SYSTEM MELTER 1 OFFGAS FILM COOLERS

SCALE: NONE
24590-LAW-M6-LOP-00004
REV 4

'E' SIZE - 44x34
COMPUTER GENERATED - MANUAL CHANGES NOT PERMITTED
R10445351
12/06/2004 11:28:31 AM
PLOTTED BY: tgsparks
C:\Work\dms03838\LAWM6LOP00004.dgn
FORM F 50N.DGN 02/2003

24590-LAW-M6-LOP-00005

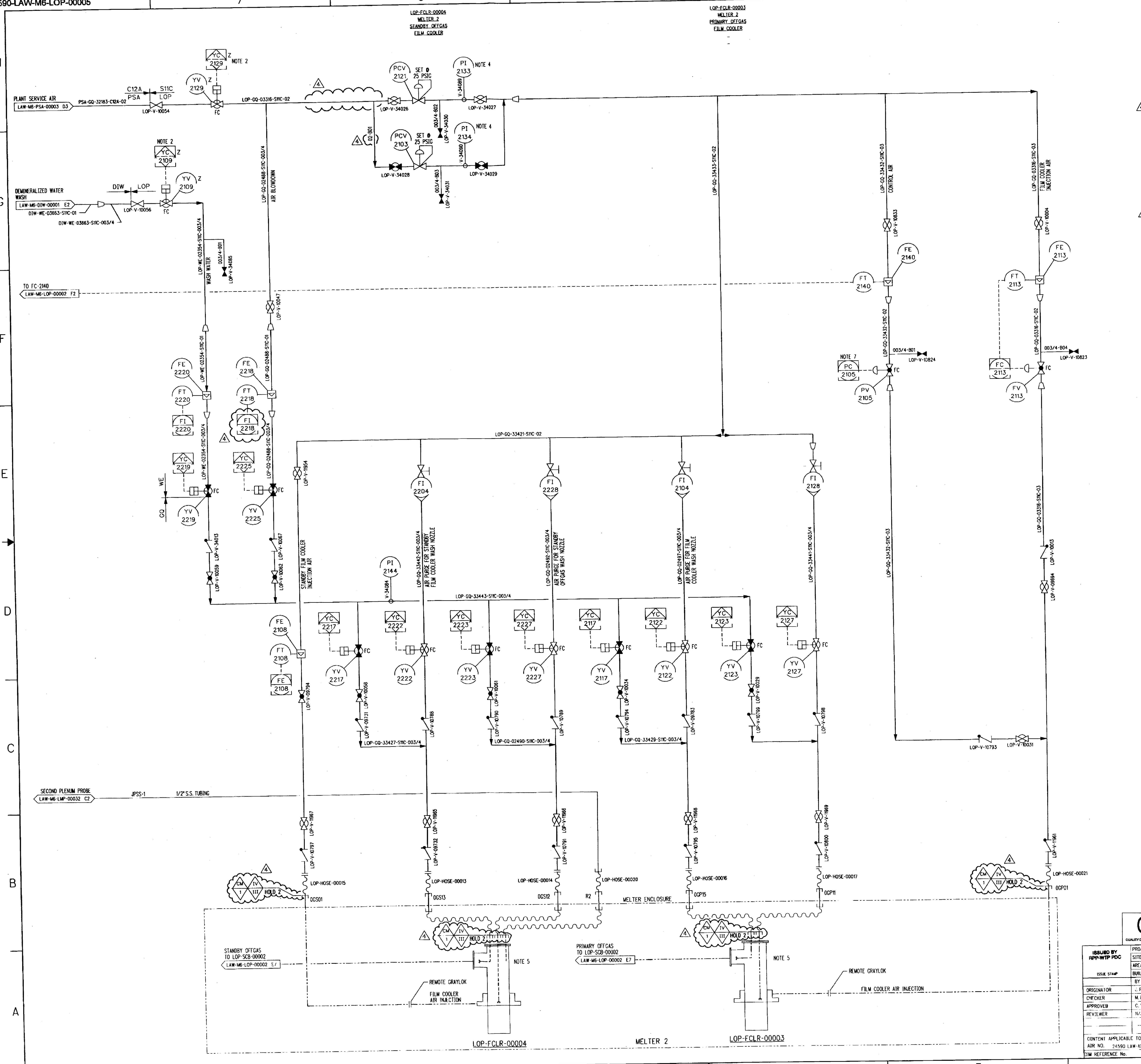

NOTES:

1. SEE DRAWINGS 24590-WTP-M6-50-00001 THROUGH 24590-WTP-M6-50-00006 FOR GENERAL NOTES, SYMBOLS AND LEGEND.
2. "Z" SUBSCRIPT INSTRUMENTS ARE THE ONLY IMPORTANT TO SAFETY INSTRUMENTS.
3. THE REQUIRED BATCH SEQUENCES, PERMISSIVES, INTERLOCKS, ALARMS AND OPERATOR INTERFACE POINTS ARE FULLY DESCRIBED IN THE SOFTWARE FUNCTIONAL SPECIFICATION, FOR LOP-LAW PRIMARY OFFGAS PROCESS SYSTEM, 24590-LAW-3PS-LOP-T0001.
4. PI TO BE VISIBLE FROM ASSOCIATED PRESSURE REGULATOR.
5. DELETED.
6. CONTENTS OF THIS DOCUMENT ARE DANGEROUS WASTE PERMIT AFFECTING.
7. MELTER PRESSURE CONTROL AIR LOOP IS BASED ON INPUT FROM LMP-PDY-2410 AS SHOWN ON P&ID 24590-LAW-M6-LMP-00002.
8. REFER TO CIS FOR ALL EQUIPMENT, SAFETY CLASSIFICATIONS, AND LINE QUALITY LEVEL DESIGNATIONS.
9. REVISED PER CCN 055206, CCN 069163, AND CCN 072060.
10. DELETED.
11. THE TAG NUMBERS INDICATED AT THE MELTER ENCLOSURE NOZZLES WERE PROVIDED BY THE MELTER SYSTEMS GROUP.
12. FOR REVISION 2 CHANGES, SEE ARCHIVED REVISION 2 P&ID.
13. FOR REVISION 3 CHANGES, SEE ARCHIVED REVISION 3 P&ID.
14. REVISION 4 CHANGES INCLUDE THE FOLLOWING LISTED ITEMS:
   - DELETED NOTE 5, REVISED NOTES 12, 13, AND ADDED NOTE 14.
   - ADDED QUALITY/SEISMIC INDICATOR AT MELTER ENCLOSURE CONNECTIONS.
   - DELETED PIPELINE LOP-GQ-03316-S11C-011/2 AND 2" x 1-1/2" REDUCER.
   - REVISED PIPELINE LOP-GQ-03316-S11C-011/2-B01 TO LOP-GQ-03316-S11C-02-B01.
   - CORRECTED DUPLICATE FE-2218 TO FI-2218.
   - ADDED HOLD NOTE 2.

HOLD/OPEN ITEMS:

1. DELETED.
2. QUALITY/SEISMIC BOUNDARY FLAG LOCATIONS WILL BE FINALIZED IN ISM MEETINGS.

REFERENCES:

NONE

Please note that source, special nuclear, and byproduct materials, as defined in the Atomic Energy Act of 1954 (AEA) are regulated at the U. S. Department of Energy (DOE) facilities exclusively by DOE acting pursuant to its AEA authority. DOE asserts that pursuant to AEA, it has sole and exclusive responsibility and authority to regulate source, special nuclear, and byproduct materials at DOE-owned nuclear facilities. Information contained herein on radionuclides is provided for process description purposes only.

REV	DESCRIPTION	ORG	CHKD	RVWD	APVD	DATE
4	REVISED PER NOTE 14 ABOVE	SS	RH	ED	KK	12/9/04
3	REVISED PER NOTE 13 ABOVE	SS	RH	ED	KK	9/17/04
2	REVISED PER NOTE 10, 11, 12 ABOVE	SS	JR	EI	KK	6/01/04
1	REVISED TO INCORPORATE CHANGES IDENTIFIED IN NOTE 9	JR	MS	EI	CW	10/27/03
0	ISSUED FOR CONSTRUCTION	JR	MD	N/A	CW	12/10/03

REVISION HISTORY

Q
QUALITY DESIGNATOR

ISSUED BY RPP-WTP PDC
ISSUE STAMP

PROJECT No.	24590	
SITE	HANFORD	
AREA	200E	
BUILDING No.	20	
	BY	DATE
ORIGINATOR	J. REWARI	12-09-02
CHECKER	M. DE	12-09-02
APPROVER	C. WINKLER	12-10-02
REVIEWER	N/A	N/A

CONTENT APPLICABLE TO ALARA? [X] YES [ ] NO
ADR NO. 24590-LAW-ADR-M-02-022 REV: 0
DIM REFERENCE No.

BECHTEL
RIVER PROTECTION PROJECT
WASTE TREATMENT PLANT
2435 STEVENS CENTER PLACE
RICHLAND, WA 99352

CONTRACT No: DE-AC27-01RV14136

P&ID - LAW PRIMARY OFFGAS PROCESS SYSTEM MELTER 2 OFFGAS FILM COOLERS

SCALE: NONE

24590-LAW-M6-LOP-00005 REV 4

'E' SIZE - 44x34
COMPUTER GENERATED - MANUAL CHANGES NOT PERMITTED

R10445352

12/06/2004 11:26:21 AM

PLOTTED BY: tgsparks
C:\Work\dms05838\LAWM6LOP00005.dgn

FORM E_SDN.DGN 02/2003

LVP-HEPA-00001A MELTER OFFGAS HEPA FILTER | LVP-HEPA-00001B MELTER OFFGAS HEPA FILTER | LVP-HEPA-00002A MELTER OFFGAS HEPA FILTER | LVP-HEPA-00002B MELTER OFFGAS HEPA FILTER | LVP-HEPA-00003A MELTER OFFGAS HEPA FILTER

LVP-SIL-00002A SILENCER | LVP-SIL-00002B SILENCER | LVP-SIL-00002C SILENCER

LVP-HTR-00001B MELTERS OFFGAS HEPA PREHEATER | LVP-EXHR-00001C MELTER OFFGAS EXHAUSTER | LVP-EXHR-00001B MELTER OFFGAS EXHAUSTER | LVP-EXHR-00001A MELTER OFFGAS EXHAUSTER | LVP-HTR-00001A MELTERS OFFGAS HEPA PREHEATER

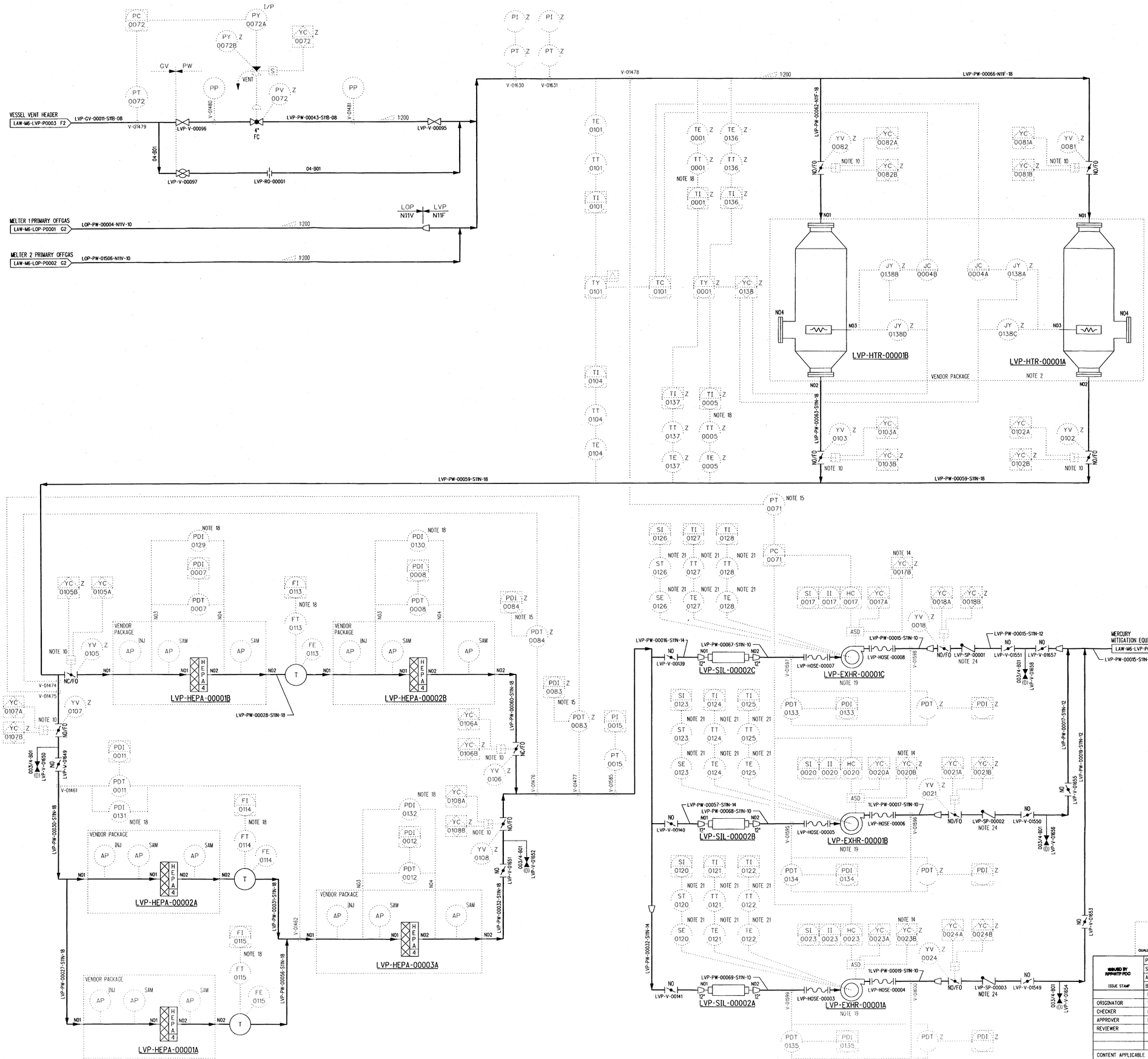

NOTES:

1. SEE DRAWINGS 24590-WTP-M6-50-P0001 THROUGH 24590-WTP-M6-50-P0008 FOR GENERAL NOTES, SYMBOLS AND LEGEND, AND GENERAL SLOPE REQUIREMENTS.
2. VENDOR-SUPPLIED EQUIPMENT IS A SKID MOUNTED UNIT.
3. THE PRESSURE BOUNDARY FOR ALL SYSTEMS, STRUCTURES, AND COMPONENTS SHOWN ON THIS DRAWING IS QUALITY LEVEL Q AND SEISMIC CATEGORY SC-III, UNLESS OTHERWISE NOTED.

4-5. DELETED

6. DELETED
7. ALL SSC'S ARE SC-III AND SHALL BE DESIGNED ACCORDING TO ENGINEERING SPECIFICATION 24590-WTP-3PS-FB01-T0001.

8-9. DELETED

10. LIMIT SWITCHES ARE ITS AND ROUTED TO PPJ. VALVES INTERLOCKED TO ENSURE THE CONTINUITY OF THE FLOW PATH AND FOR HEATER OPERATION THIS IS AN SS FUNCTION.
11. PARTS OF THIS P&ID HAVE BEEN TRANSFERRED TO 24590-LAW-M6-LVP-00004 AND 24590-LAW-M6-LVP-00005, INCLUDING DCN 24590-LAW-M6N-LVP-00002.
12. CONTENTS OF THIS DOCUMENT ARE DANGEROUS WASTE PERMIT AFFECTING.
13. ABBREVIATIONS: INJ - INJECTION, SAM - SAMPLE.
14. OVERRIDE SIGNAL FROM THE PPJ SYSTEM TRIGGERS CONTROLLERS TO AN INTERNAL SAFETY QUALIFIED SET POINT.
15. WILL BE SUPPLIED WITH AN INSTRUMENT AIR PURGE (NOT SHOWN).
16. DELETED
17. DELETED
18. THIS INSTRUMENT PERFORMS AN AIR PERMIT FUNCTION.
19. EXHAUSTER VENDOR TO PROVIDE SILENCER, AND FLEXIBLE CONNECTIONS AT SUCTION AND DISCHARGE PER APPLICABLE DATA SHEET.
20. MELTER OFFGAS PIPING SHALL BE SLOPED FROM HEPA FILTERS BACK TO WESP.
21. INSTRUMENT SUPPLIED BY VENDOR.
22. INSTRUMENT, ROOT VALVE AND TUBING CONFINEMENT REQUIREMENTS ARE THE SAME AS THE CONNECTING PROCESS PIPE, UNLESS OTHERWISE NOTED.
23. DELETED
24. SPECIALTY VALVE PROVIDED BY BNI MECHANICAL SYSTEMS.
25. THE COMPONENTS SHOWN ON THIS DRAWING IN PHANTOM DO NOT REQUIRE INDEPENDENT QUALIFIED REGISTERED PROFESSIONAL ENGINEER ASSESSMENTS OF DESIGN OR INSTALLATION INSPECTIONS BY A QUALIFIED INSTALLATION INSPECTOR IN ACCORDANCE WITH THE DWP AND/OR WASHINGTON ADMINISTRATIVE CODE REQUIREMENTS.
26. THE DOCUMENT WAS COMPLETELY REVISED AND IDENTIFICATION OF REVISED ITEM IS NOT NECESSARY. REVISED PER 24590-LAW-M6N-LVP-00002, 00011, 00012, 00020, 00025, 00030, 00043 AND 24590-LAW-M6N-M8OT-00001. ADDED INSTRUMENTATION DETAIL TO HEATERS, RE-ROUTED PIPING FROM VESSEL VENT HEADER, UPDATED INSTRUMENTATION SYMBOLS AND INCORPORATED VARIOUS EDITORIAL COMMENTS.

HOLD OPEN ITEMS:

1. DELETED
2. DELETED

3-4. DELETED

5. PENDING ITS/PPJ REQUIREMENTS.
6. DELETED
7. DELETED

REFERENCES:

1. THE REQUIRED BATCH SEQUENCES, PERMISSIVES, INTERLOCKS, ALARMS AND OPERATOR INTERFACE POINTS ARE FULLY DESCRIBED IN THE SOFTWARE FUNCTIONAL SPECIFICATION FOR LVP-LAW SECONDARY OFFGAS/VESSEL VENT PROCESS SYSTEM 24590-LAW-3PS-LVP-T0001.
2. FOR PERMISSIVES AND INTERLOCKS TO IMPORTANT TO SAFETY (ITS) SYSTEMS (SAFETY SIGNIFICANT) REFER TO SAFETY SYSTEM REQUIREMENTS SPECIFICATION 24590-LAW-3PS-PPJ-T0006 AND 24590-LAW-3PS-PPJ-T0008 (FUTURE).

STUART PAUL KRETZSCHMAR — STATE OF WASHINGTON — 23981 — REGISTERED PROFESSIONAL ENGINEER — 8/7/07
EXPIRES: 8/16/08

PLEASE NOTE THAT SOURCE, SPECIAL NUCLEAR AND BYPRODUCT MATERIALS, AS DEFINED IN THE ATOMIC ENERGY ACT OF 1954 (AEA), ARE REGULATED AT THE U.S. DEPARTMENT OF ENERGY (DOE) FACILITIES EXCLUSIVELY BY DOE ACTING PURSUANT TO ITS AEA AUTHORITY. DOE ASSERTS, THAT PURSUANT TO THE AEA, IT HAS SOLE AND EXCLUSIVE RESPONSIBILITY AND AUTHORITY TO REGULATE SOURCE, SPECIAL NUCLEAR, AND BYPRODUCT MATERIAL AT DOE-OWNED NUCLEAR FACILITIES. INFORMATION CONTAINED HEREIN ON RADIONUCLIDES IS PROVIDED FOR PROCESS DESCRIPTION PURPOSES ONLY.

REV	DESCRIPTION	ORG	CHKD	RVWD	APVD	DATE
1	ISSUED FOR PERMITTING USE	LGS	MAK	SPK	MAK	8/7/07
0	ISSUED FOR PERMITTING USE	SGS	EMH	SS	KK	12/21/04

Q — QUALITY DESIGNATOR

REVISION HISTORY

ISSUED BY RPP-WTP PDO — ISSUE STAMP

PROJECT No.	24590	
SITE	HANFORD	
AREA	200E	
BUILDING No.	20	
BY		DATE
ORIGINATOR	SID SOURANI	12/20/04
CHECKER	EM HAN	12/20/04
APPROVER	KEN KHANEY	12/21/04
REVIEWER	SEAN SWEENEY	12/21/04

CONTENT APPLICABLE TO ALARA? [X] YES [ ] NO
AOR NO. N/A — REV: N/A
SAFETY SCREEN REQUIRED? [ ] YES [X] NO — EWMS INITIAL IF YES

BECHTEL

RIVER PROTECTION PROJECT
WASTE TREATMENT PLANT
2435 STEVENS CENTER PLACE
RICHLAND, WA 99354

CONTRACT No: DE-AC27-01RV14136

P&ID-LAW SECONDARY OFFGAS/ VESSEL VENT PROCESS SYSTEM MELTERS SECONDARY OFFGAS

SCALE: NONE

24590-LAW-M6-LVP-P0001

REV 1

"E" SIZE - 44x34 COMPUTER GENERATED - MANUAL CHANGES NOT PERMITTED

SAFETY SCREEN IS REQUIRED FOR DRAWING TYPES IDENTIFIED IN 24590-WTP-GPP-SREG-002

FORM E_SDN.DGN 02/2003

LD0608013H

08/15/2007 04:14:27 PM

PLOTTED BY: eswebb
C:\Work\eswebb\cms05069\LAWM6LVPP0001.dgn

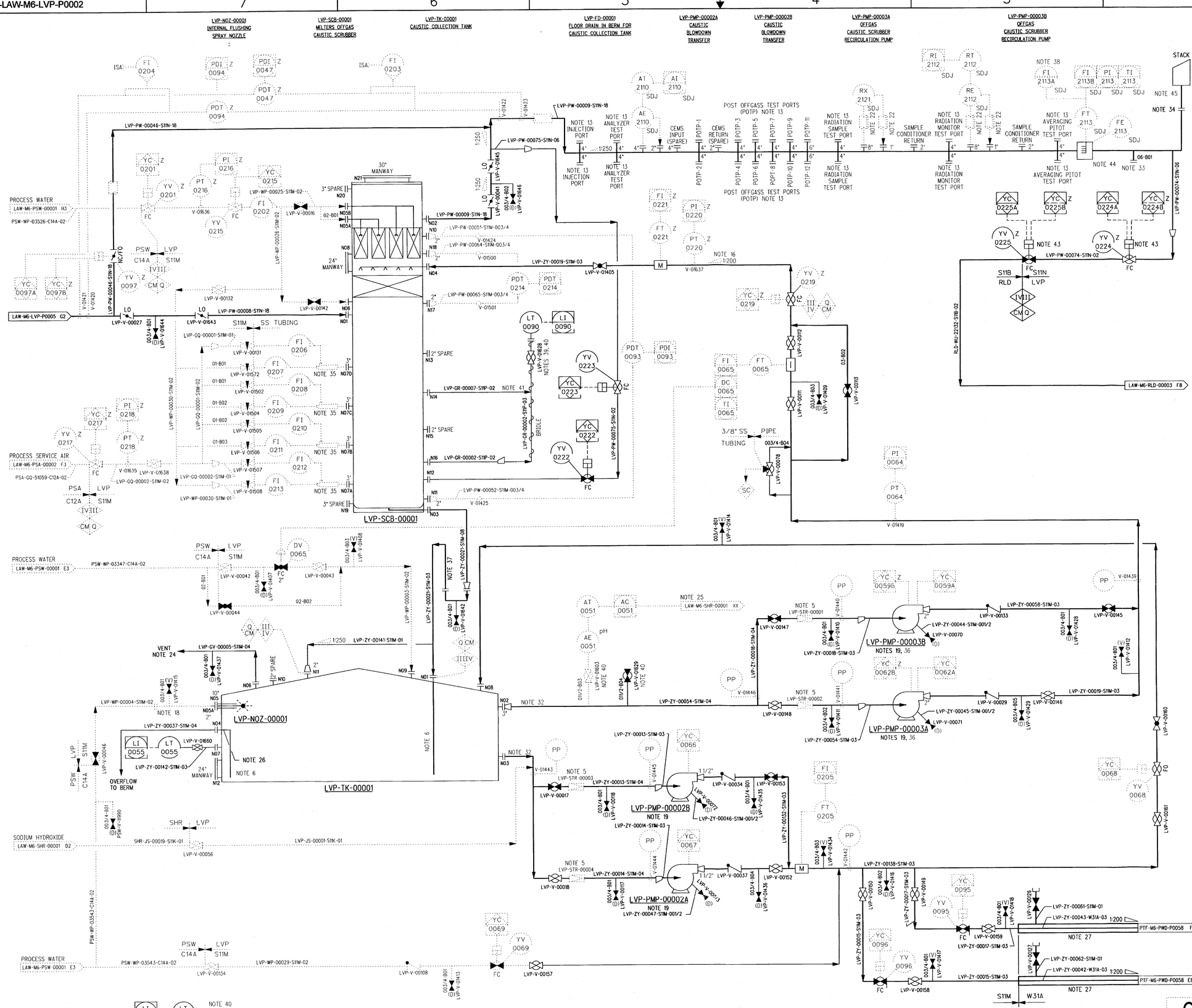

NOTES:

1. SEE DRAWINGS 24590-WTP-M6-50-P0001 THROUGH 24590-WTP-M6-50-P0008 FOR GENERAL NOTES, SYMBOLS AND LEGEND, AND GENERAL SLOPE REQUIREMENTS.
2. THE PRESSURE BOUNDARY FOR ALL SYSTEMS, STRUCTURES, AND COMPONENTS SHOWN ON THIS DRAWING IS QUALITY LEVEL CM AND SEISMIC CATEGORY SC-IV, UNLESS OTHERWISE NOTED.

3-4. DELETED

5. PROVIDE REMOVABLE SPOOL PIECE FOR STARTUP STRAINER. STRAINER ELEMENT SHALL BE REMOVED AFTER SYSTEM FLUSHING AND REPLACE WITH SPACER.
6. LINES TO TERMINATE 6 INCHES ABOVE VESSEL BOTTOM HEAD.

7-12. DELETED

13. TEST PORTS AND INJECTION PORTS ARE INSTALLED IN PAIRS. PORT PAIRS ARE LOCATED AT THE SAME CROSS-SECTIONAL AREA OF THE PIPE AND POSITIONED 90° APART RADIALLY.

14-15. DELETED

16. PIPE TO SLOPE FROM HIGHPOINT TO LVP-SCB-00001 AS INDICATED.
17. FLANGES WITH CAUSTIC SERVICE (CONTENT CODE JS & ZY) SHALL BE SUPPLIED WITH SPRAY COVERS.
18. A REMOVABLE SPOOL WILL BE PROVIDED TO FACILITATE SPRAY NOZZLE REMOVAL.
19. LVP-PMP-00002A/2B/3A/3B ARE LOCATED IN THE CONTAINMENT WALL.
20. CONTENTS OF THIS DOCUMENT ARE DANGEROUS WASTE PERMIT AFFECTING.
21. DELETED
22. SAMPLE LINE, INSULATION, AND HEAT TRACE SUPPLIED BY THE VENDOR.
23. DELETED
24. ROUTE VENT DISCHARGE TO C2V EXHAUST ADJACENT TO THE GRILLE LOCATED IN ROOM L-0218.
25. LVP-AC-0051 PROVIDES REMOTE SET POINT TO FLOW CONTROL LOOP SHR-FC-2004 AND SHR-FC-2005.
26. PROVIDE MINIMUM 1/4" SIPHON BREAK HOLE ON TOP OF PIPE AT THE HIGHEST POINT INSIDE THE TANK.
27. THERE SHALL BE NO POCKETS IN THE LINE WITHIN LAW AND PAST HOSE CONNECTIONS TO PRETREATMENT. MINIMUM SLOPE AS REQUIRED BY PERMIT P&ID PTF-M6-PWD-P0058.

28-31. DELETED

32. NOZZLE CENTERLINE SHALL BE LOCATED 9" ABOVE TANK FLOOR.
33. TEE SHALL BE LOCATED ON THE HORIZONTAL SECTION OF THE LINE AT MINIMAL DISTANCE FROM THE ELBOW. ORIENTATION SHALL BE IN THE HORIZONTAL POSITION. PLACE NOZZLE IN A LOCATION ACCESSIBLE FOR THE OPERATOR TO ALLOW FOR INSPECTION OF VERTICAL PIPE.
34. SPACER AND BLIND TO FACILITATE TESTING BY CONSTRUCTION. REPLACE BLIND WITH THE SPACER AFTER PRESSURE TESTING.
35. THIS IS A QUENCHING LANCE SYMBOL. FOR QUENCHING LANCE, WATER IS CONNECTED TO 1/2" TUBING AT END OF LANCE, AIR IS CONNECTED TO 1" NPT FITTING ON SIDE OF LANCE.
36. PUMP DRAIN PORT IS 1 1/2" NPT.
37. LOOP SEAL TO PROVIDE MINIMUM SEAL HEIGHT OF 10 FEET. DRAIN LINE TO AND FROM LOOP SEAL SHALL HAVE MINIMUM SLOPE OF 1:250.
38. INSTRUMENT PERFORMS AN AIR PERMIT FUNCTION.
39. RADAR GUIDE TUBE SHALL BE ROUTED TO TRANSMITTER OUTSIDE EQUIPMENT ROOM.
40. A FULL PORT BALL VALVE IS REQUIRED FOR ISOLATION PURPOSES.
41. LIMIT BRIDLE ORIFICE CONNECTION TO 3/8" OD.
42. DELETED
43. LIMIT SWITCHES ARE ITS AND ROUTED TO PPJ. INTERLOCK REQUIRED TO PREVENT SIMULTANEOUS OPENING OF BOTH VALVES.
44. DRILLED HOLE FOR PITOT ELEMENT SHALL BE 1 INCH NOMINAL AND FLANGE SIZE SHALL BE 1 1/2 INCH.
45. INSULATION SHALL TERMINATE APPROXIMATELY 7 FEET ABOVE ROOF ELEVATION.
46. THE COMPONENTS SHOWN ON THIS DRAWING IN PHANTOM DO NOT REQUIRE INDEPENDENT QUALIFIED REGISTERED PROFESSIONAL ENGINEER ASSESSMENTS OF DESIGN OR INSTALLATION INSPECTIONS BY A QUALIFIED INSTALLATION INSPECTOR IN ACCORDANCE WITH THE DWP AND/OR WASHINGTON ADMINISTRATIVE CODE REQUIREMENTS.
47. THE DOCUMENT WAS COMPLETELY REVISED AND IDENTIFICATION OF REVISED ITEM IS NOT NECESSARY. REVISED PER 24590-LAW-M6N-LVP-00006, 00008, 00015, 00019, 00024, 00038, 00041, 00042, 00045 AND 24590-LAW-M6N-M8OT-00001. REVISED THE CONFIGURATION OF LT-0090, PROVIDE QUENCHING LANCE PIPING DETAIL. ADDED ISOLATION VALVES, PRESSURE INDICATION AND SCRUBBER DRAIN LINE LOOP SEAL. ADDED SLOPES, UPDATED INSTRUMENTATION SYMBOLS AND INCORPORATED VARIOUS EDITORIAL COMMENTS.

HOLD/OPEN ITEMS:

1-8. DELETED

TIMOTHY PAUL KRETZSCHMAR — STATE OF WASHINGTON — 21602 — REGISTERED PROFESSIONAL ENGINEER — 8/16/07 — EXPIRES: 3/16/08

PLEASE NOTE THAT SOURCE, SPECIAL NUCLEAR AND BYPRODUCT MATERIALS, AS DEFINED IN THE ATOMIC ENERGY ACT OF 1954 (AEA), ARE REGULATED AT THE U.S. DEPARTMENT OF ENERGY (DOE) FACILITIES EXCLUSIVELY BY DOE ACTING PURSUANT TO ITS AEA AUTHORITY. DOE ASSERTS, THAT PURSUANT TO THE AEA, IT HAS SOLE AND EXCLUSIVE RESPONSIBILITY AND AUTHORITY TO REGULATE SOURCE, SPECIAL NUCLEAR, AND BYPRODUCT MATERIAL AT DOE-OWNED NUCLEAR FACILITIES. INFORMATION CONTAINED HEREIN ON RADIONUCLIDES IS PROVIDED FOR PROCESS DESCRIPTION PURPOSES ONLY.

REV	DESCRIPTION	ORG	CHKD	RVWD	APVD	DATE
3	ISSUED FOR PERMITTING USE	LGS	LWT/SPK	MW/TPK		8/17/07
2	ISSUED FOR PERMITTING USE	SGS	EH	SS	KK	12/21/03
1	ISSUED FOR PERMITTING USE	MS	EH	EI	KK	7/13/04
0	ISSUED FOR PERMITTING USE	JCR	EH	EI	CJW	7/30/03

REVISION HISTORY

Q — QUALITY DESIGNATOR

ISSUED BY RPP-WTP PDC — ISSUE STAMP

	BY	DATE
ORIGINATOR	JC REWARI	7/24/03
CHECKER	EM HAN	7/24/03
APPROVER	CJ WINKLER	7/30/03
REVIEWER	E ISERN	7/28/03

CONTENT APPLICABLE TO ALARA? [X] YES [ ] NO — ADR NO. N/A — REV: N/A

SAFETY SCREEN REQUIRED? [ ] YES [X] NO — EMS INITIAL IF YES

SAFETY SCREEN IS REQUIRED FOR DRAWING TYPES IDENTIFIED IN 24590-WTP-GPP-SREQ-002

COMPUTER GENERATED - MANUAL CHANGES NOT PERMITTED

E SIZE - 44 x 34

PROJECT No.	24590
SITE	HANFORD
AREA	200E
BUILDING No.	20

CONTRACT No: DE-AC27-01RV14136

RIVER PROTECTION PROJECT
WASTE TREATMENT PLANT
2435 STEVENS CENTER PLACE
RICHLAND, WA 99354

P&ID - LAW SECONDARY OFFGAS/ VESSEL VENT PROCESS SYSTEM AND STACK DISCHARGE MONITORING SYSTEM

SCALE: NONE

24590-LAW-M6-LVP-P0002 REV 3

0608080139

08/16/2007 07:17:10 AM

PLOTTED BY: eswanb
C:\Work\eswanb\ams05069\LAWM6LVP00002.dgn

FORM E_SDN.DGN 02/2003

NOTES:

1. SEE DRAWING 24590-WTP-M6-50-P0001 THROUGH 24590-WTP-M6-50-P0008 FOR GENERAL NOTES, SYMBOLS AND LEGEND, AND GENERAL SLOPE REQUIREMENTS.
2. DELETED
3. THE PRESSURE BOUNDARY FOR ALL SYSTEMS, STRUCTURES, AND COMPONENTS ON THIS DRAWING IS QUALITY LEVEL Q AND SEISMIC CATEGORY SC-III, UNLESS OTHERWISE NOTED.
4. DELETED
5. SLOPE PIPING 1:200 MINIMUM UNLESS OTHERWISE NOTED.
6. CONTENTS OF THIS DOCUMENT ARE DANGEROUS WASTE PERMIT AFFECTING.
7. DELETED
8. DEVIATION FROM QUALITY CLASS Q TO CM FOR THE EMBEDDED PIPE SPOOL PER REFERENCE 1.
9. DELETED
10. LINE SHALL BE FREE DRAINING WITH NO POCKETS.
11. THE COMPONENTS SHOWN ON THIS DRAWING IN PHANTOM DO NOT REQUIRE INDEPENDENT QUALIFIED REGISTERED PROFESSIONAL ENGINEER ASSESSMENTS OF DESIGN OR INSTALLATION INSPECTIONS BY A QUALIFIED INSTALLATION INSPECTOR IN ACCORDANCE WITH THE DWP AND/OR WASHINGTON ADMINISTRATIVE CODE REQUIREMENTS.
12. THE DOCUMENT WAS COMPLETELY REVISED AND IDENTIFICATION OF REVISED ITEM IS NOT NECESSARY. REVISED PER 24590-LAW-M6N-LVP-00004, 00005, 00030, 00039, 00040, 24590-LAW-M6N-M8OT-00001 AND INCORPORATED VARIOUS EDITORIAL COMMENTS.

HOLD/OPEN ITEMS:

NONE

REFERENCES:

1. CCN: 154263, WDOH APPROVAL OF "DEVIATION REQUEST FOR LOW ACTIVITY WASTE RADIOACTIVE LIQUID WASTE DISPOSAL SYSTEM (RLD-VSL-00004) VENT HEADER".

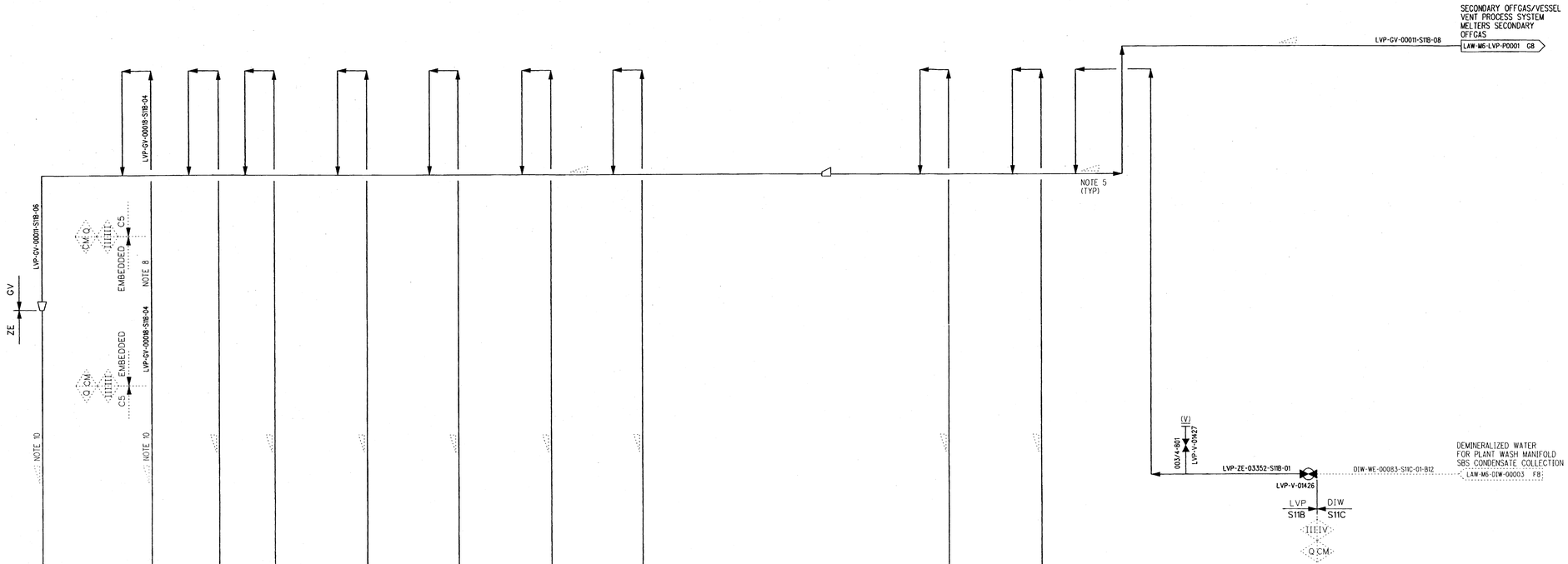

PLEASE NOTE THAT SOURCE, SPECIAL NUCLEAR AND BYPRODUCT MATERIALS, AS DEFINED IN THE ATOMIC ENERGY ACT OF 1954 (AEA), ARE REGULATED AT THE U.S. DEPARTMENT OF ENERGY (DOE) FACILITIES EXCLUSIVELY BY DOE ACTING PURSUANT TO ITS AEA AUTHORITY. DOE ASSERTS, THAT PURSUANT TO THE AEA, IT HAS SOLE AND EXCLUSIVE RESPONSIBILITY AND AUTHORITY TO REGULATE SOURCE, SPECIAL NUCLEAR, AND BYPRODUCT MATERIAL AT DOE-OWNED NUCLEAR FACILITIES. INFORMATION CONTAINED HEREIN ON RADIONUCLIDES IS PROVIDED FOR PROCESS DESCRIPTION PURPOSES ONLY.

QUALITY DESIGNATOR: Q

REVISION HISTORY

REV	DESCRIPTION	ORG	CHKD	RVWD	APVD	DATE
1	ISSUED FOR PERMITTING USE	LCS	GNB	SPK	[illegible]	8/17/07
0	ISSUED FOR PERMITTING USE	SS	EH	SS	KK	11/16/04

ISSUED BY RPP-WTP PDO — ISSUE STAMP

PROJECT No.	24590	
SITE	HANFORD	
AREA	200E	
BUILDING No.	20	

	BY	DATE
ORIGINATOR	S SOURANI	11/15/04
CHECKER	E HAN	11/16/04
APPROVER	K KHIANEY	11/16/04
REVIEWER	S SWEENEY	11/16/04

CONTENT APPLICABLE TO ALARA? [X] YES [ ] NO
ADR NO. N/A — REV: N/A
SAFETY SCREEN REQUIRED? [ ] YES [X] NO EWS INITIAL IF YES ____
SAFETY SCREEN IS REQUIRED FOR DRAWING TYPES IDENTIFIED IN 24590-WTP-OPP-SREQ-002

BECHTEL

RIVER PROTECTION PROJECT
WASTE TREATMENT PLANT
2435 STEVENS CENTER PLACE
RICHLAND, WA 99354

CONTRACT No: DE-AC27-01RV14136

P&ID - LAW SECONDARY OFFGAS / VESSEL VENT PROCESS SYSTEM EQUIPMENT VENTS

SCALE: NONE

24590-LAW-M6-LVP-P0003

REV 1

'E' SIZE - 44x34
COMPUTER GENERATED - MANUAL CHANGES NOT PERMITTED

08/15/2007 04:16:38 PM

PLOTTED BY: eswedo
C:\WorkArea\eswedo\24590\M6\LAW\M6_LVP\P0003.dgn

FORM E_SDN.DGN 02/2003

24590-LAW-M6-LVP-P0004

LVP-ADBR-00001A OFF GAS MERCURY ADSORBER

LVP-SKID-00001 MERCURY MITIGATION EQUIPMENT FOR LAW OFFGAS

LVP-ADBR-00001B OFF GAS MERCURY ADSORBER

OFFGAS EXHAUSTERS LVP-EXHR-00001A, B & C
LAW-M6-LVP-P0001 C2

LVP-PW-00015-S1N-18

LVP-SKID-00002 TO CATALYTIC OXIDIZER/ REDUCER SKID
LAW-M6-LVP-P0005 G2

PROCESS SERVICE WATER
LAW-M6-PSW-00001 H3

PSW-WP-33899-C14A-02

PSW-V-51476

LVP-V-01604

LVP-WP-00036-C14A-02

LVP-WP-00037-C14A-02

LVP-PW-00072-S1N-18

LVP-PW-00073-S1N-18

LVP-ADBR-00001A

LVP-ADBR-00001B

ADSORBER BED

GUARD BED

LVP-SKID-00001

NOTES:

1. SEE DRAWINGS 24590-WTP-M6-50-P0001 THROUGH 24590-WTP-M6-50-P0008 FOR GENERAL NOTES, SYMBOLS AND LEGEND, AND GENERAL SLOPE REQUIREMENTS.
2. VENDOR-SUPPLIED EQUIPMENT IS A SKID MOUNTED UNIT.
3. THE PRESSURE BOUNDARY FOR ALL SYSTEMS, STRUCTURES AND COMPONENTS SHOWN ON THIS DRAWING IS QUALITY LEVEL Q AND SEISMIC CATEGORY SC-III, UNLESS OTHERWISE NOTED.

4-7. DELETED

8. VALVES YV-0407 AND YV-0415 SHALL BE BUBBLE TIGHT.

9-10. DELETED

11. CONTENTS OF THIS DOCUMENT ARE DANGEROUS WASTE PERMIT AFFECTING.
12. RADAR GUIDE TUBE IS TO BE ROUTED TO TRANSMITTER OUTSIDE EQUIPMENT ROOM. A FULL PORT BALL VALVE IS REQUIRED FOR ISOLATION PURPOSES AT TRANSMITTER END OF GUIDE TUBE.
13. FIVE (5) FILL PORTS PER BED, ONE (1) SHOWN, THREE (3) WITHDRAWAL PORTS PER BED, ALL SHOWN. S1IN-8" NPS.
14. THIS INSTRUMENT PERFORMS AN AIR PERMIT FUNCTION.
15. ADSORBERS ARE NORMALLY RUN IN LEAD/LAG MODE. MANUAL BUTTERFLY VALVES ARE SHOWN NO/NC FOR LVP-ADBR-00001A IN LEAD MODE. VALVES WOULD BE REVERSED TO PUT LVP-ADBR-00001B INTO LEAD MODE.
16. LOCATE TRANSMITTERS AND ANALYZERS OUTSIDE OF MERCURY MITIGATION EQUIPMENT ROOM.
17. SUPPLIED BY VENDOR.
18. DELETED
19. THE COMPONENTS SHOWN ON THIS DRAWING IN PHANTOM DO NOT REQUIRE INDEPENDENT QUALIFIED REGISTERED PROFESSIONAL ENGINEER ASSESSMENTS OF DESIGN OR INSTALLATION INSPECTIONS BY A QUALIFIED INSTALLATION INSPECTOR IN ACCORDANCE WITH THE DWP AND/OR WASHINGTON ADMINISTRATIVE CODE REQUIREMENTS.
20. THE DOCUMENT WAS COMPLETELY REVISED AND IDENTIFICATION OF REVISED ITEM IS NOT NECESSARY. REVISED PER 24590-LAW-M6N-LVP-00009, 00014, 00016, 00044 AND 24590-LAW-M6N-M8OT-00001. ADDED INSTRUMENTATION DETAIL TO VENDOR SKID, RE-ROUTED PIPING, UPDATED INSTRUMENTATION SYMBOLS AND INCORPORATED VARIOUS EDITORIAL COMMENTS.

HOLD OPEN ITEMS:

1. DELETED
2. DELETED
3. DELETED

REFERENCES:

1. THE REQUIRED BATCH SEQUENCES, PERMISSIVES, INTERLOCKS, ALARMS AND OPERATOR INTERFACE POINTS ARE FULLY DESCRIBED IN THE SOFTWARE FUNCTIONAL SPECIFICATION FOR LVP-LAW SECONDARY OFFGAS/VESSEL VENT PROCESS SYSTEM 24590-LAW-3PS-LVP-T0001.
2. FOR PERMISSIVES AND INTERLOCKS FOR IMPORTANT TO SAFETY (ITS) SYSTEMS (SAFETY DESIGN CLASS/SAFETY SIGNIFICANT) REFER TO SAFETY SYSTEM REQUIREMENTS SPECIFICATION 24590-LAW-3PS-PPJ-T0006 AND 24590-LAW-3PS-PPJ-T0008.

STUART PAUL KRETZSCHMAR, STATE OF WASHINGTON, 20746, REGISTERED PROFESSIONAL ENGINEER, 8/17/07, EXPIRES: 5/16/08

PLEASE NOTE THAT SOURCE, SPECIAL NUCLEAR AND BYPRODUCT MATERIALS, AS DEFINED IN THE ATOMIC ENERGY ACT OF 1954 (AEA), ARE REGULATED AT THE U.S. DEPARTMENT OF ENERGY (DOE) FACILITIES EXCLUSIVELY BY DOE ACTING PURSUANT TO ITS AEA AUTHORITY. DOE ASSERTS, THAT PURSUANT TO THE AEA, IT HAS SOLE AND EXCLUSIVE RESPONSIBILITY AND AUTHORITY TO REGULATE SOURCE, SPECIAL NUCLEAR, AND BYPRODUCT MATERIAL AT DOE-OWNED NUCLEAR FACILITIES. INFORMATION CONTAINED HEREIN ON RADIONUCLIDES IS PROVIDED FOR PROCESS DESCRIPTION PURPOSES ONLY.

Q QUALITY DESIGNATOR

REVISION HISTORY

REV	DESCRIPTION	ORG	CHKD	RVWD	APVD	DATE
1	ISSUED FOR PERMITTING USE	LG	GM	SPK	PK	8/17/07
0	ISSUED FOR PERMITTING USE	SS	RH	SS	KK	12/21/04

ISSUED BY RPP-WTP PDO

ISSUE STAMP

PROJECT No.	24590
SITE	HANFORD
AREA	200E
BUILDING No.	20

	BY	DATE
ORIGINATOR	S SOURANI	12/21/04
CHECKER	E HAN	12/21/04
APPROVER	K KHANEY	12/21/04
REVIEWER	S SWEENEY	12/21/04

CONTENT APPLICABLE TO ALARA? [X] YES [ ] NO
ADR NO. N/A REV: N/A

SAFETY SCREEN REQUIRED? [ ] YES [X] NO E&S INITIAL IF YES

SAFETY SCREEN IS REQUIRED FOR DRAWING TYPES IDENTIFIED IN 24590-WTP-GPP-SREG-002

BECHTEL

RIVER PROTECTION PROJECT
WASTE TREATMENT PLANT
2435 STEVENS CENTER PLACE
RICHLAND, WA 99354

CONTRACT No: DE-AC27-01RV14136

P&ID - LAW MELTERS SECONDARY OFFGAS VESSEL VENT PROCESS SYSTEM MERCURY MITIGATION EQUIPMENT

SCALE: NONE

24590-LAW-M6-LVP-P0004

REV 1

E-SIZE: 44x34
COMPUTER GENERATED - MANUAL CHANGES NOT PERMITTED

08/15/2007 04:17:24 PM

PLOTTED BY: eeebb
C:\Work\eeebb\24590\50569\LAW\M6_VPP0004.dgn

FORM E_SDN.DGN 02/2003

24590-LAW-M6-LVP-P0005

LVP-SCO-00001 THERMAL CATALYTIC OXIDIZER | LVP-HTR-00002 CATALYTIC OXIDIZER ELECTRIC HEATER | LVP-SCR-00001 NOx SELECTIVE CATALYTIC REDUCER | LVP-MXR-00001 MIXING CHAMBER | LVP-SKID-00002 LAW CATALYTIC OXIDIZER/ REDUCER SKID | LVP-FAN-00001 AMMONIA DILUTION FAN | LVP-FAN-00002 AMMONIA DILUTION FAN | LVP-HX-00001 CATALYTIC OXIDIZER HEAT RECOVERY UNIT | LVP-SIL-00001A INTAKE SILENCER | LVP-SIL-00001B INTAKE SILENCER | LVP-HEPA-00004A HIGH EFFICIENCY PARTICULATE AIR FILTER | LVP-HEPA-00004B HIGH EFFICIENCY PARTICULATE AIR FILTER | LVP-FILT-00001 FILTER PARTICULATE LOW EFFICIENCY | LVP-SKID-00003 AMMONIA/AIR DILUTION SKID

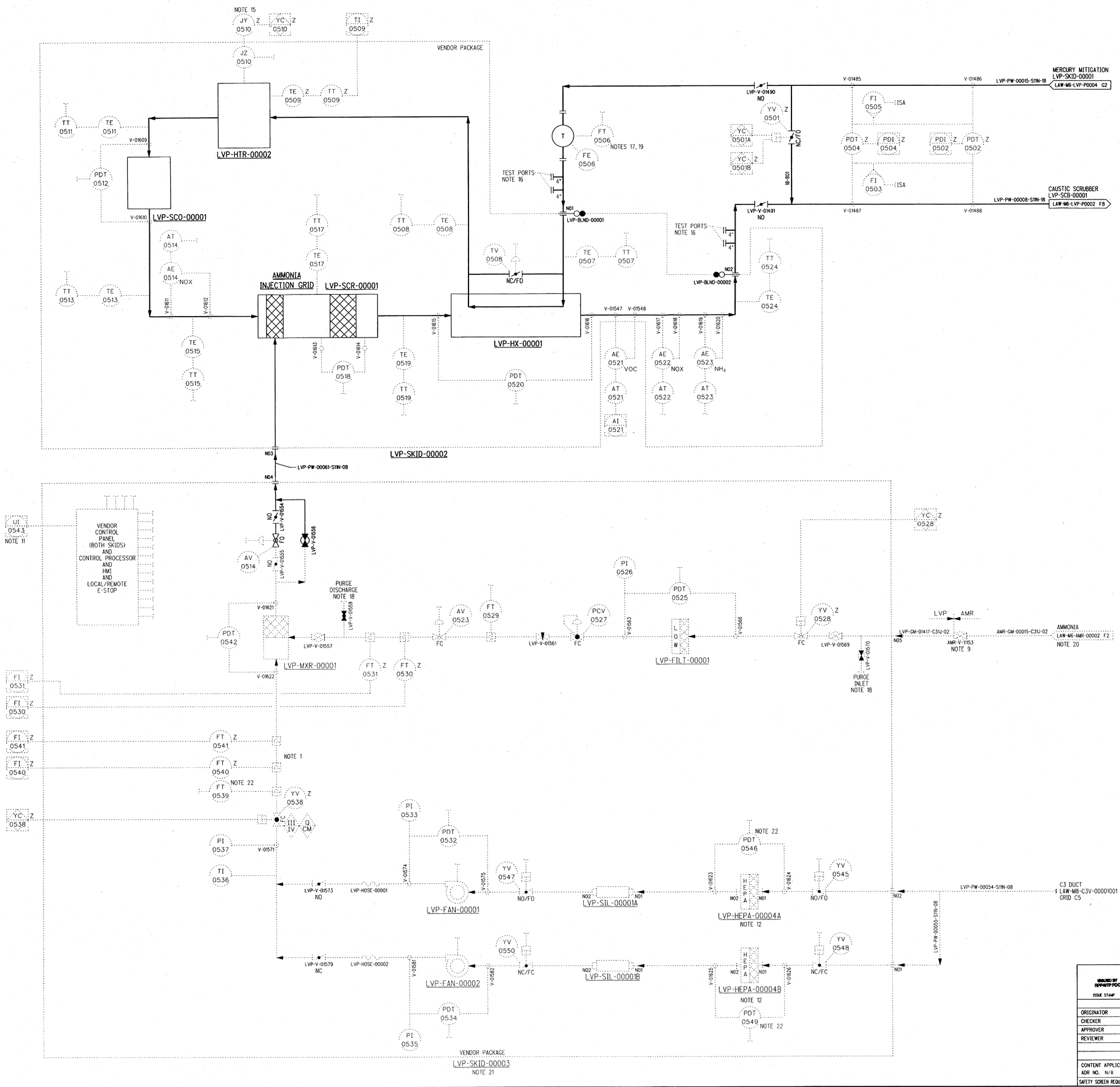

NOTES:

1. ITS MONITOR OF AMMONIA TO AIR RATIO TO ENSURE MIXTURE IS MAINTAINED BELOW LOWER FLAMMABILITY LEVEL. VENDOR SHALL RATIO FLOWS TO MAINTAIN AMMONIA TO AIR RATIO BELOW LOWER FLAMMABILITY LEVEL.
2. SEE DWG 24590-WTP-M6-50-P0001 THROUGH 24590-WTP-M6-50-P0008 FOR GENERAL NOTES, SYMBOLS AND LEGEND, AND GENERAL SLOPE REQUIREMENTS.
3. THE PRESSURE BOUNDARY FOR ALL SYSTEMS AND COMPONENTS SHOWN ON THIS DRAWING IS QUALITY LEVEL Q AND SEISMIC CATEGORY SC-III, UNLESS OTHERWISE NOTED.

4-8. DELETED

9. VALVE SHALL BE ACCESSIBLE TO THE OPERATOR (OUTSIDE OF OFFGAS ROOM/NOx HAZARDS).
10. CONTENTS OF THIS DOCUMENT ARE DANGEROUS WASTE PERMIT AFFECTING.
11. VENDOR TO PROVIDE ALL TRANSMITTER VALUES AND OUTPUT VALUES TO THE ICN VIA PROFI BUS CONNECTION LVP-UI-0543.
12. THESE HEPA FILTERS AND HOUSINGS ARE AIR PERMIT AFFECTING. THEY SHALL BE TESTABLE AND CARRY A QUALITY LEVEL Q AND SEISMIC CATEGORY SC-IV.

13. DELETED

14. LOCATE TRANSMITTERS AND ANALYZERS OUTSIDE OF CATALYTIC OXIDIZER/REDUCER EQUIPMENT ROOM.
15. HIGH TEMPERATURE SHALL INTERRUPT POWER TO HEATER (LVP-HTR-00002).
16. TEST PORTS ARE TO BE INSTALLED AT THE SAME AXIAL POSITION. ONE PORT SHOULD BE AS CLOSE TO VERTICAL (TOP) AS POSSIBLE. THE OTHER SHOULD BE 90° OPPOSED. TEST PORTS SHALL BE PLACED A MINIMUM OF TWO (2) INSIDE PIPE DIAMETERS FROM UPSTREAM FLOW DISTURBANCES AND A MINIMUM OF ONE-HALF (1/2) INSIDE PIPE DIAMETER FROM DOWNSTREAM DISTURBANCES. WHERE PRACTICAL, THESE STRAIGHT RUN DISTANCES SHOULD BE DOUBLED.
17. FLOW ELEMENT SHALL BE LOCATED A MINIMUM OF TEN PIPE INSIDE DIAMETERS FROM UPSTREAM AND DOWNSTREAM FLOW DISTURBANCES TO ENSURE STRAIGHT PIPE FLOW DISTRIBUTION THROUGH THE DEVICE. TEST PORTS ARE NOT REGARDED TO CREATE FLOW DISTURBANCES.
18. VENTING OF ANHYDROUS AMMONIA SHALL BE MADE TO A BUCKET OF WATER CONSISTENT WITH AMMONIA SAFE HANDLING PRACTICES.
19. LAW CATALYTIC OXIDIZER/REDUCER SKID VENDOR FURNISHED COMPONENT.
20. AMMONIA SUPPLY SHALL BE LIMITED TO A MAXIMUM FLOW OF 300 POUNDS PER HOUR.
21. ISOLATION VALVE CONFIGURATION ON LVP-SKID-00003 IS CONCEPTUAL. VENDOR MAY OPTIMIZE THE NUMBER OF REQUIRED VALVES BASED ON MINIMUM FUNCTIONAL AND MAINTENANCE REQUIREMENTS STIPULATED IN THE PROCUREMENT SPECIFICATION OR MATERIAL REQUISITION.
22. INSTRUMENT PERFORMS AN AIR PERMIT FUNCTION, BUT IS WASHINGTON DEPARTMENT OF HEALTH WAIVED AND PROCURED AS QUALITY LEVEL CM.

23. DELETED

24. THE COMPONENTS SHOWN ON THIS DRAWING IN PHANTOM DO NOT REQUIRE INDEPENDENT QUALIFIED REGISTERED PROFESSIONAL ENGINEER ASSESSMENTS OF DESIGN OR INSTALLATION INSPECTIONS BY A QUALIFIED INSTALLATION INSPECTOR IN ACCORDANCE WITH THE DWP AND/OR WASHINGTON ADMINISTRATIVE CODE REQUIREMENTS.
25. THE DOCUMENT WAS COMPLETELY REVISED AND IDENTIFICATION OF REVISED ITEM IS NOT NECESSARY. REVISED PER 24590-LAW-M6N-LVP-00010, 00013, 24590-WTP-SDDR-PROC-04-0882 AND 24590-LAW-M6N-M80T-00001. ADDED AND UPDATED INSTRUMENTATION DETAIL TO THE SKIDS AND INCORPORATED VARIOUS EDITORIAL COMMENTS.

HOLD/OPEN ITEMS:

1. DELETED
2. DELETED
3. DELETED
4. HEATER POWER CONTROL DESIGN TO BE ISM REVIEWED AND APPROVED.
5. PENDING ISM REVIEW FOR OFF-GAS FLAMMABILITY.

REFERENCES:

1. THE REQUIRED BATCH SEQUENCES, PERMISSIVES, INTERLOCKS, ALARMS AND OPERATOR INTERFACE POINTS ARE FULLY DESCRIBED IN THE SOFTWARE FUNCTIONAL SPECIFICATION FOR LVP SYSTEM, 24590-LAW-3PS-LVP-T0001.
2. FOR PERMISSIVES AND INTERLOCKS FOR IMPORTANT TO SAFETY (ITS) SYSTEMS, REFER TO SAFETY SYSTEM REQUIREMENT SPECIFICATIONS FOR LAW SELECTIVE CATALYTIC REDUCER 24590-LAW-3PS-PPJ-T0001 (FUTURE), 24590-LAW-3PS-PPJ-T0005, 24590-LAW-3PS-PPJ-T0008 (FUTURE), AND 24590-LAW-3PS-PPJ-T0013 (FUTURE).

STATE OF WASHINGTON 9396 REGISTERED PROFESSIONAL ENGINEER — B/7/07 — expires 3/16/08

PLEASE NOTE THAT SOURCE, SPECIAL NUCLEAR AND BYPRODUCT MATERIALS, AS DEFINED IN THE ATOMIC ENERGY ACT OF 1954 (AEA), ARE REGULATED AT THE U.S. DEPARTMENT OF ENERGY (DOE) FACILITIES EXCLUSIVELY BY DOE ACTING PURSUANT TO ITS AEA AUTHORITY. DOE ASSERTS, THAT PURSUANT TO THE AEA, IT HAS SOLE AND EXCLUSIVE RESPONSIBILITY AND AUTHORITY TO REGULATE SOURCE, SPECIAL NUCLEAR, AND BYPRODUCT MATERIAL AT DOE-OWNED NUCLEAR FACILITIES. INFORMATION CONTAINED HEREIN ON RADIONUCLIDES IS PROVIDED FOR PROCESS DESCRIPTION PURPOSES ONLY.

REV	DESCRIPTION	ORG	CHKD	RVWD	APVD	DATE
1	ISSUED FOR PERMITTING USE	LCS	EH	SK	KK	8/7/07
0	ISSUED FOR PERMITTING USE	SS	EH	SS	KK	12/21/04

REVISION HISTORY

Q — QUALITY DESIGNATOR

ISSUED BY RPP-WTP PDC — ISSUE STAMP

PROJECT No.	24590
SITE	HANFORD
AREA	200E
BUILDING No.	20

	BY	DATE
ORIGINATOR	SID SOURANI	12/21/04
CHECKER	E HAN	12/21/04
APPROVER	KEN KHANEY	12/21/04
REVIEWER	S SWEENEY	12/21/04

CONTENT APPLICABLE TO ALARA? [X] YES [ ] NO
ADR NO. N/A — REV: N/A
SAFETY SCREEN REQUIRED? [ ] YES [X] NO EWMS INITIAL IF YES

BECHTEL

RIVER PROTECTION PROJECT
WASTE TREATMENT PLANT
2435 STEVENS CENTER PLACE
RICHLAND, WA 99354

CONTRACT No: DE-AC27-01RV14136

P&ID-LAW MELTERS SECONDARY OFFGAS VESSEL VENT PROCESS SYSTEM SCR, VOC & AMMONIA DILUTION PACKAGES

SCALE: NONE

24590-LAW-M6-LVP-P0005 — REV 1

SAFETY SCREEN IS REQUIRED FOR DRAWING TYPES IDENTIFIED IN 24590-WTP-GPP-SREG-002

"E" SIZE - 44x34
COMPUTER GENERATED - MANUAL CHANGES NOT PERMITTED

FORM E_SDN.DGN 02/2003

PLOTTED BY: ernebb
C:\Work\ernebb\dms05069\LAW\M6\LVPP0005.sgn

08/15/2007 04:18:42 PM

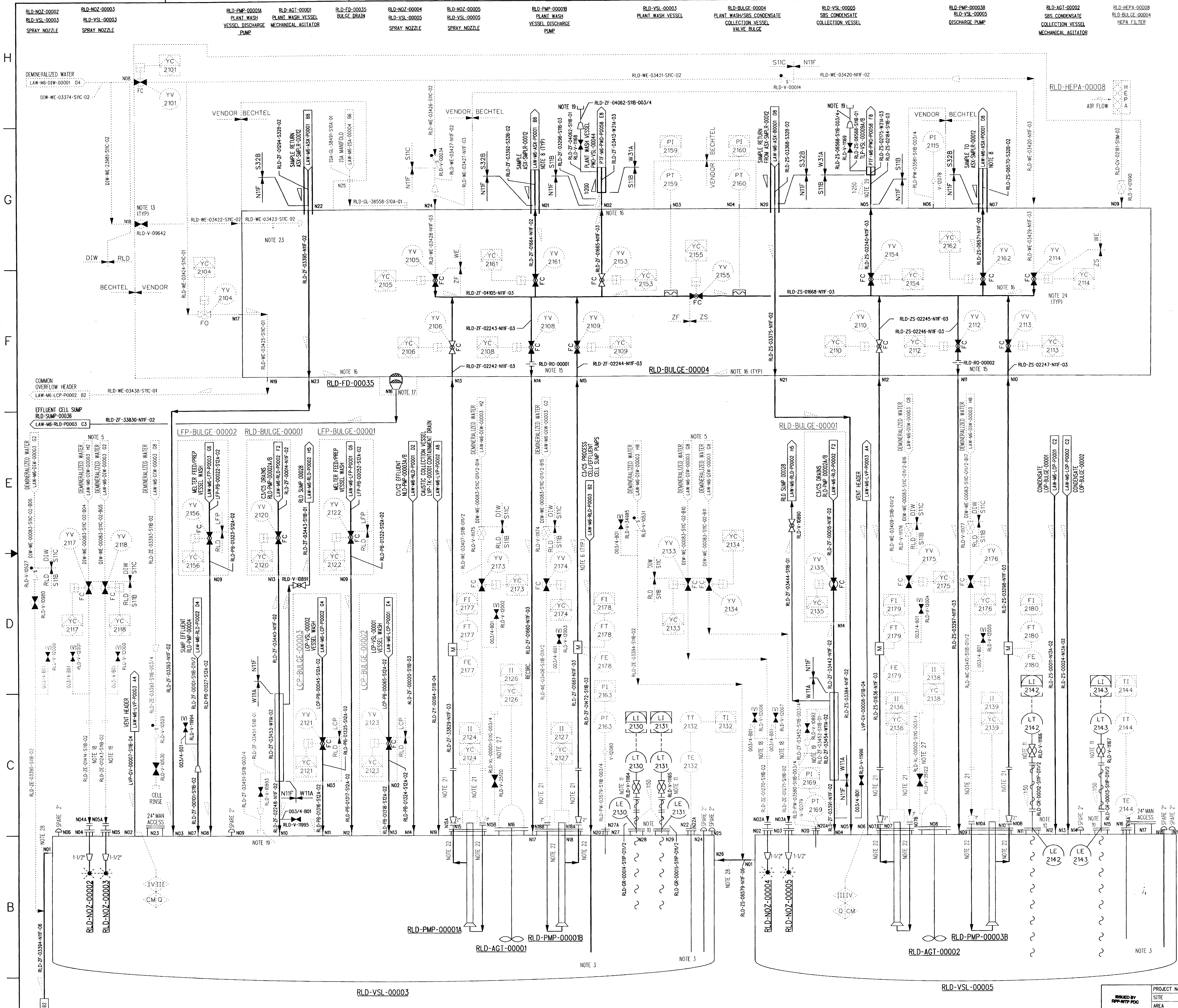

NOTES:

1. SEE DRAWINGS 24590-WTP-M6-50-P0001 THROUGH 24590-WTP-M6-50-P0008 FOR GENERAL NOTES, SYMBOLS AND LEGEND, AND GENERAL SLOPE REQUIREMENTS.
2. THE PRESSURE BOUNDARY FOR ALL SYSTEMS, STRUCTURES, AND COMPONENTS ON THIS DRAWING IS QUALITY LEVEL CM AND SEISMIC CATEGORY SC-IV, UNLESS OTHERWISE NOTED.
3. LINES TO TERMINATE 6 INCHES ABOVE VESSEL BOTTOM HEAD.
4. DELETED
5. NaOH FOR pH ADJUSTMENT CAN BE ADDED FROM WASH CART VIA WASH NOZZLES, IF NECESSARY.
6. INDICATED SLOPES ARE CONSIDERED MINIMUM. ALL PIPE LINES ON THIS PIPING AND INSTRUMENTATION DIAGRAM (P&ID) SHALL BE FREE DRAINING WITH NO POCKETS UNLESS OTHERWISE NOTED.
7. DELETED
8. SAMPLING SYSTEM DETAILS ARE TO BE DETERMINED. OUTER PIPE DRAINS INTO RLD-BULGE-00004.
9. DELETED
10. RADAR GUIDE TUBE IS TO BE ROUTED TO THE FLOOR ABOVE.
11. FULL PORT BALL VALVES REQUIRED.
12. DELETED
13. VALVES, INSTRUMENTATION, AND PIPING INSIDE THE PHANTOM LINE ARE LOCATED OUTSIDE THE BULGE AND PROVIDED BY THE BULGE VENDOR.
14. DELETED
15. WELDED RESTRICTION ORIFICE MACHINED FROM BAR STOCK.
16. SLOPE BULGE FLOOR 1:100 TOWARDS THE DRAIN.
17. STRAINER IS DESIGNED FOR MECHANICAL REMOVAL FROM THE BULGE EXTERIOR.
18. SPOOL PIECE TO FACILITATE SPRAY NOZZLE REMOVAL.
19. LOCATE HOSE CONNECTION IN CORRIDOR AT ELEVATION 3'-0".
20. CONTENTS OF THIS DOCUMENT ARE DANGEROUS WASTE PERMIT AFFECTING.
21. SPOOL PIECE TO FACILITATE PUMP REMOVAL.
22. VESSEL INTERNAL PUMP PRIMING AND DISCHARGE PIPING SUPPLIED WITH PUMP BY PUMP VENDOR.
23. SPRAY NOZZLES PROVIDED BY BULGE VENDOR.
24. PLUG VALVES LOCATED INSIDE BULGES TO BE 316 SS, BUTT WELD ENDS, AND PROVIDED BY BULGE VENDOR.

25-26. DELETED

27. LOCATE OIL VALVE AT EL. 28'-0".
28. SLOPE IS NOT REQUIRED IN HORIZONTAL PIPING. DO NOT POCKET.
29. THE SLOPE FOR TRANSFER LINES INSIDE THE BUILDING IS 1:250.
30. DELETED
31. THE COMPONENTS SHOWN ON THIS DRAWING IN PHANTOM DO NOT REQUIRE INDEPENDENT QUALIFIED REGISTERED PROFESSIONAL ENGINEER ASSESSMENTS OF DESIGN OR INSTALLATION INSPECTIONS BY A QUALIFIED INSTALLATION INSPECTOR IN ACCORDANCE WITH THE DWP AND/OR WASHINGTON ADMINISTRATIVE CODE REQUIREMENTS.
32. THE DOCUMENT WAS COMPLETELY REVISED AND IDENTIFICATION OF REVISED ITEM IS NOT NECESSARY. REVISED PER 24590-LAW-M6N-RLD-00024, 00033, 00036, 24590-LAW-M6N-M80T-00001 AND 24590-WTP-SDDR-M-06-00292. RELOCATE INSTRUMENT SERVICE AIR MANIFOLD FROM INSIDE TO OUTSIDE OF THE BULGE. REVISED/ADDED/DELETED NOTES, REFERENCES AND SEISMIC CATEGORY FLAGS. INCORPORATED VARIOUS EDITORIAL COMMENTS AND UPDATED LOCATION OF BULGE NOZZLE N09.

HOLD/OPEN ITEMS:

1-3. DELETED

REFERENCES:

1. THE REQUIRED BATCH SEQUENCES, PERMISSIVES, INTERLOCKS, ALARMS AND OPERATOR INTERFACE POINTS ARE FULLY DESCRIBED IN THE SOFTWARE FUNCTIONAL SPECIFICATION, FOR RLD-RADIOACTIVE LIQUID WASTE DISPOSAL SYSTEM, 24590-LAW-3PS-RLD-T0002.

8/17/07
EXPIRES: 3/16/08

PLEASE NOTE THAT SOURCE, SPECIAL NUCLEAR AND BYPRODUCT MATERIALS, AS DEFINED IN THE ATOMIC ENERGY ACT OF 1954 (AEA), ARE REGULATED AT THE U.S. DEPARTMENT OF ENERGY (DOE) FACILITIES EXCLUSIVELY BY DOE ACTING PURSUANT TO ITS AEA AUTHORITY. DOE ASSERTS, THAT PURSUANT TO THE AEA, IT HAS SOLE AND EXCLUSIVE RESPONSIBILITY AND AUTHORITY TO REGULATE SOURCE, SPECIAL NUCLEAR, AND BYPRODUCT MATERIAL AT DOE-OWNED NUCLEAR FACILITIES. INFORMATION CONTAINED HEREIN ON RADIONUCLIDES IS PROVIDED FOR PROCESS DESCRIPTION PURPOSES ONLY.

REV	DESCRIPTION	ORG	CHKD	RVWD	APVD	DATE
3	ISSUED FOR PERMITTING USE	LCS	[illegible]	SPK	[illegible]	8/17/07
2	ISSUED FOR PERMITTING USE	PSH	EH	EI	KK	4/14/04
1	ISSUED FOR PERMITTING USE	PSH	EH	EI	KK	11/11/03
0	ISSUED FOR PERMITTING USE	PSH	EH	EI	CJW	7/30/03

REVISION HISTORY

ISSUED BY RPP-WTP PDC
ISSUE STAMP

PROJECT No.	24590	
SITE	HANFORD	
AREA	200E	
BUILDING No.	20	
	BY	DATE
ORIGINATOR	PS HOLGADO	7/29/03
CHECKER	EM HAN	7/29/03
APPROVER	CJ WINKLER	7/30/03
REVIEWER	ERIC ISERN	7/29/03

RIVER PROTECTION PROJECT
WASTE TREATMENT PLANT
2435 STEVENS CENTER PLACE
RICHLAND, WA 99354

CONTRACT No: DE-AC27-01RV14136

P&ID - LAW RADIOACTIVE LIQUID WASTE DISPOSAL SYSTEM PLANT WASH & SBS CONDENSATE COLLECTION

Q
QUALITY DESIGNATOR

CONTENT APPLICABLE TO ALARA? [X] YES [ ] NO
ADR NO. N/A REV: N/A
SAFETY SCREEN REQUIRED? [ ] YES [X] NO E&NS INITIAL IF YES ____

SCALE: NONE
24590-LAW-M6-RLD-P0001
REV 3

SAFETY SCREEN IS REQUIRED FOR DRAWING TYPES IDENTIFIED IN 24590-WTP-GPP-SREG-002

'E' SIZE - 44x34
COMPUTER GENERATED - MANUAL CHANGES NOT PERMITTED

R10809532
08/15/2007 12:34:56 PM
PLOTTED BY: eewebb
C:\Work\eewebb\dms05069\LAWM6RLDP0001.dgn

24590-LAW-M6-RLD-P0002

RLD-SUMP-00010 L-B029 FILTER ROOM NORTH SUMP

RLD-SUMP-00011 L-B029 FILTER ROOM SOUTH SUMP

RLD-NOZ-00006 - SPRAY NOZZLE

RLD-NOZ-00007 - SPRAY NOZZLE

RLD-EDUC-00001A C3/C5 DRAINS/SUMP COLLECTION VESSEL MIXING EDUCTOR

RLD-PMP-00016 PORTABLE SUMP PUMP

RLD-EDUC-00001B C3/C5 DRAINS/SUMP COLLECTION VESSEL MIXING EDUCTOR

RLD-EDUC-00001C C3/C5 DRAINS/SUMP COLLECTION VESSEL MIXING EDUCTOR

RLD-VSL-00004 C3/C5 DRAINS/SUMP COLLECTION VESSEL

RLD-SUMP-00028 RLD-VSL-00004 CELL SUMP

RLD-PMP-00004 RLD-VSL-00004 CELL SUMP PUMP

RLD-FD-00001 RLD-BULGE-00001 FLOOR DRAIN

RLD-HEPA-00007 RLD-BULGE-00001 HEPA FILTER

RLD-BULGE-00001 C3/C5 DRAINS/SUMP COLLECTION PUMP BULGE

RLD-PMP-00002A C3/C5 DRAINS/SUMP COLLECTION TRANSFER PUMP

RLD-PMP-00002B C3/C5 DRAINS/SUMP COLLECTION TRANSFER PUMP

RLD-HEPA-00007

RLD-NOZ-00006

RLD-NOZ-00007

RLD-EDUC-00001A

RLD-EDUC-00001B

RLD-EDUC-00001C

RLD-VSL-00004

RLD-PMP-00002A

RLD-PMP-00002B

RLD-BULGE-00001

RLD-FD-00001

RLD-PMP-00004

RLD-SUMP-00028

RLD-SUMP-00010

RLD-SUMP-00011

RLD-PMP-00016

C3 HEADER

C5 HEADER

NOTES:

1. SEE DRAWINGS 24590-WTP-M6-50-P0001 THROUGH 24590-WTP-M6-50-P0008 FOR GENERAL NOTES, SYMBOLS AND LEGEND, AND GENERAL SLOPE REQUIREMENTS.
2. THE PRESSURE BOUNDARY FOR ALL SYSTEMS, STRUCTURES, AND COMPONENTS ON THIS DRAWING IS QUALITY LEVEL CM AND SEISMIC CATEGORY SC- IV, UNLESS OTHERWISE NOTED.
3. ALL DIPPED NON-INSTRUMENT LINES TERMINATE INSIDE THE VESSEL AT 6 INCHES ABOVE THE VESSEL BOTTOM HEAD.
4. INDICATED SLOPES ARE CONSIDERED MINIMUM. ALL PIPELINES ON THIS PIPING & INSTRUMENTATION DIAGRAM (P&ID) SHALL BE FREE DRAINING WITH NO POCKETS, UNLESS OTHERWISE NOTED.
5. STRAINER IS DESIGNED FOR MECHANICAL REMOVAL FROM THE BULGE EXTERIOR.
6.

C3/C5 SUMPS		
SUMP	LOCATION	PUMP
RLD-SUMP-00028 NOTE 7	RLD-VSL-00004 CELL	RLD-PMP-00004
RLD-SUMP-00010 NOTE 7	L-B029 FILTER ROOM (N)	NOTE 8
RLD-SUMP-00011 NOTE 7	L-B029 FILTER ROOM (S)	NOTE 8

7. SUMP RLD-SUMP-00028 IS 24" DIA X 30" DEEP. SUMPS RLD-SUMP-00010 AND RLD-SUMP-00011 ARE 18" DIA X 12" DEEP, FROM TOP OF SLAB, AT SUMP.
8. ONE PORTABLE WAREHOUSE PUMP WILL BE PROVIDED FOR C3 AND C5 AREAS.
9. LOCATE PUMP SUCTION BULGE NOZZLE 2'-11" FROM TOP OF CONCRETE.
10. A SINGLE CELL WASH HEADER PROVIDES SPRAY FOR THE TOTAL PERIMETER FOR C3/C5 DRAIN TANK CELL ROOM L-B001B.
11. TERMINATE PIPING ABOVE THE BULGE FLOOR NEAR THE DRAIN.
12. DELETED
13. WELDED TEE STRAINERS (S11B) AND PRESSURE POINTS WILL BE REMOVED PRIOR TO STARTUP AND REPLACED WITH N11F PIPING PER SPECIFICATION. STRAINER IS LOCATED INSIDE THE CELL. THE STRAINER ISOLATION VALVES (N11F) WILL REMAIN.
14. CHECK VALVES FOR THE MELTER COOLING PANEL DRAIN LINES ARE SHOWN ON THE MELTER P&ID'S.
15. PROVIDE A 1/2" DIA HOLE AS SIPHON BREAKER.

16-17. DELETED

18. EDUCTOR TO POINT DOWNWARD FOR SOLIDS AGITATION.
19. DOUBLE WALLED PIPING REQUIRED IN C1/C2 AREAS. DOUBLE WALLED PIPING TO TERMINATE INSIDE C5 ROOM (L-B001B).

20-21. DELETED

22. HORIZONTAL SECTION OF LINE TO SLOPE TOWARDS THE VESSEL FROM HIGH POINT OF VERTICAL LINE.
23. VALVES, INSTRUMENTATION, AND PIPING INSIDE THE PHANTOM LINE ARE LOCATED OUTSIDE THE BULGE AND PROVIDED BY THE BULGE VENDOR. SPRAY NOZZLES PROVIDED BY BULGE VENDOR.

24-25. DELETED

26. FULL PORT VALVES REQUIRED.
27. ALL VESSEL INTERNAL PIPING IS CONSTRUCTED OF 316L SS.
28. SLOPE BULGE FLOOR 1:100 TOWARDS THE DRAIN. BULGE PIPING PIPE WORK SLOPE IS 1:50 MINIMUM.
29. 16 SPRAY NOZZLES SPACED ON 5'-0" CENTERS.
30. DELETED
31. SPOOL PIECE TO FACILITATE SPRAY NOZZLE REMOVAL.
32. CONTENTS OF THIS DOCUMENT ARE DANGEROUS WASTE PERMIT AFFECTING.
33. PUMP DISCHARGE FLANGED CONNECTIONS LOCATED AT SOUTH END OF MELTER POUR CAVES ONE AND TWO.

34-35. DELETED

36. SLOPE IS NOT REQUIRED IN HORIZONTAL PIPING. DO NOT POCKET.
37. THIS 2" PIPE IS A VENT TO SUPPORT GRAVITY FLOW IN 6" OVERFLOW HEADER. LOCATE ENTRANCE OF 2" VENT PIPE AT ELBOW IN 6" LINE AT LEAST 2 FT ABOVE RLD-VSL-00004.
38. DELETED
39. THE COMPONENTS SHOWN ON THIS DRAWING IN PHANTOM DO NOT REQUIRE INDEPENDENT QUALIFIED REGISTERED PROFESSIONAL ENGINEER ASSESSMENTS OF DESIGN OR INSTALLATION INSPECTIONS BY A QUALIFIED INSTALLATION INSPECTOR IN ACCORDANCE WITH THE DWP AND/OR WASHINGTON ADMINISTRATIVE CODE REQUIREMENTS.
40. THE DOCUMENT WAS COMPLETELY REVISED AND IDENTIFICATION OF REVISED ITEM IS NOT NECESSARY. REVISED PER 24590-LAW-M6N-RLD-00003, 00005, 00010, 00026, 00033, 00036, 24590-LAW-DCA-M-02-009 AND 24590-LAW-M6N-M8OT-00001. ADDED SLOPE SYMBOLS, INSTRUMENT SERVICE AIR FROM ISA MANIFOLD TO OUTSIDE THE BULGE. ADD A 2" VENT SPOOL BETWEEN LINE LVP-GV-00018-S11B AND RLD-ZF-03394-N11F. REVISED ALL THE LINE CALL OUT TO SHOW BRANCH AND LINE NUMBERS THAT IS CONNECTED TO DIW MANIFOLD. REVISED/ADDED/DELETED NOTES, HOLDS, REFERENCES, SEISMIC CATEGORY FLAGS AND INCORPORATED VARIOUS EDITORIAL COMMENTS.

REFERENCES:

1. THE REQUIRED BATCH SEQUENCES, PERMISSIVES, INTERLOCK, ALARMS AND OPERATOR INTERFACE POINTS ARE FULLY DESCRIBED IN THE SOFTWARE FUNCTIONAL SPECIFICATION, FOR RLD-RADIOACTIVE LIQUID WASTE DISPOSAL SYSTEM, 24590-LAW-3PS-RLD-T0001.

HOLD/OPEN ITEMS:

1-4. DELETED

PLEASE NOTE THAT SOURCE, SPECIAL NUCLEAR AND BYPRODUCT MATERIALS, AS DEFINED IN THE ATOMIC ENERGY ACT OF 1954 (AEA), ARE REGULATED AT THE U.S. DEPARTMENT OF ENERGY (DOE) FACILITIES EXCLUSIVELY BY DOE ACTING PURSUANT TO ITS AEA AUTHORITY. DOE ASSERTS, THAT PURSUANT TO THE AEA, IT HAS SOLE AND EXCLUSIVE RESPONSIBILITY AND AUTHORITY TO REGULATE SOURCE, SPECIAL NUCLEAR, AND BYPRODUCT MATERIAL AT DOE-OWNED NUCLEAR FACILITIES. INFORMATION CONTAINED HEREIN ON RADIONUCLIDES IS PROVIDED FOR PROCESS DESCRIPTION PURPOSES ONLY.

STUART PAUL KRETZSCHMAR STATE OF WASHINGTON 20745 REGISTERED PROFESSIONAL ENGINEER 8/17/07

EXPIRES: 7/16/08

REV	DESCRIPTION	ORG	CHKD	RVWD	APVD	DATE
3	ISSUED FOR PERMITTING USE	LCS	GK	SPK	MG	8/17/07
2	ISSUED FOR PERMITTING USE	PSH	EMH	EI	CdW	3/27/3
1	ISSUED FOR PERMITTING USE	PSH	EMH	EI	GD	10/8/02
0	ISSUED FOR PERMITTING USE	PSH	EMH	N/A	GD	7/26/02

Q QUALITY DESIGNATION

REVISION HISTORY

ISSUED BY RPP-WTP PDC

ISSUE STAMP

PROJECT No.	24590	
SITE	HANFORD	
AREA	200E	
BUILDING No.	20	
BY		DATE
ORIGINATOR	PAQUITO HOLGADO	7/25/02
CHECKER	EM HAN	7/25/02
APPROVER	GARTH DUNCAN	7/26/02
REVIEWER	N/A	N/A

CONTENT APPLICABLE TO ALARA? [X] YES [ ] NO

ADR NO. NA REV: NA

SAFETY SCREEN REQUIRED? [ ] YES [X] NO EXNS INITIAL IF YES

BECHTEL

RIVER PROTECTION PROJECT
WASTE TREATMENT PLANT
2435 STEVENS CENTER PLACE
RICHLAND, WA 99354

CONTRACT No: DE-AC27-01RV14136

P&ID - LAW RADIOACTIVE LIQUID WASTE DISPOSAL SYSTEM C3/C5 DRAINS/SUMP COLLECTION

SCALE: NONE

24590-LAW-M6-RLD-P0002

REV 3

SAFETY SCREEN IS REQUIRED FOR DRAWING TYPES IDENTIFIED IN 24590-WTP-GPP-SREG-002

"E" SIZE - 44x34 COMPUTER GENERATED - MANUAL CHANGES NOT PERMITTED

08/15/2007 12:35:57 PM

PLOTTED BY: eewebb C:\Work\eewebb\dms05069\LAWM6RLDP0002.dgn

FORM E_SDN.DGN 02/2003

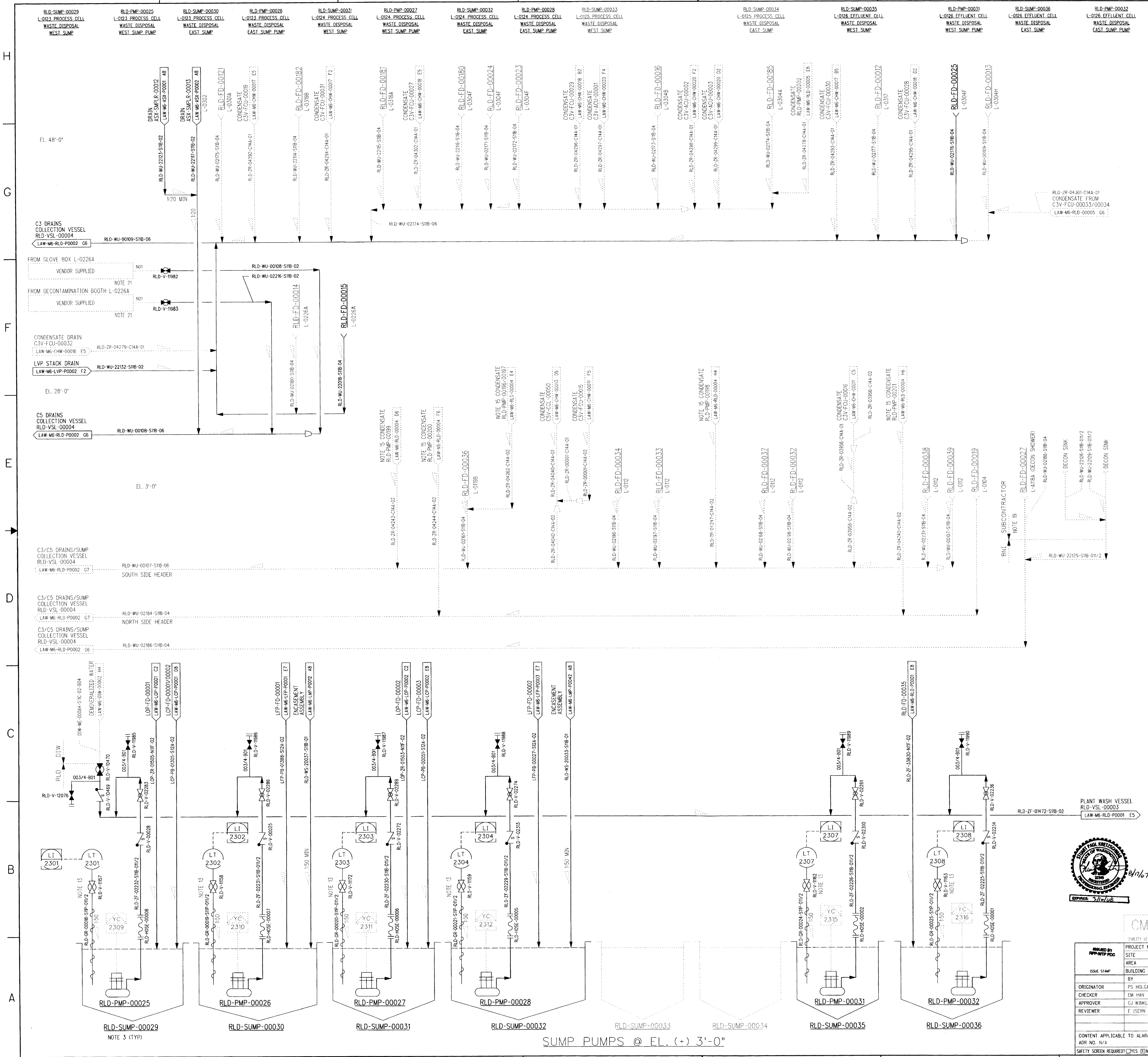

NOTES:

1. SEE DRAWINGS 24590-WTP-M6-50-P0001 THROUGH 24590-WTP-M6-50-P0008 FOR GENERAL NOTES, SYMBOLS AND LEGEND, AND GENERAL SLOPE REQUIREMENTS.
2. THE PRESSURE BOUNDARY FOR ALL SYSTEMS, STRUCTURES, AND COMPONENTS ON THIS DRAWING IS QUALITY LEVEL CM AND SEISMIC CATEGORY SC-IV, UNLESS OTHERWISE NOTED
3. THESE PUMPS ARE PERMANENTLY INSTALLED IN THE SUMPS. ALL SUMPS SHOWN ON THIS DRAWING ARE 30 INCHES DIAMETER BY 12 INCHES DEEP FROM TOP OF SLAB AT SUMP.
4. ONE FLOOR DRAIN FOR EACH 1500 SQ. FT. OF FIRE PROTECTION SPRINKLER WATER COLLECTION AREA WILL BE PROVIDED AS A MINIMUM.
5. ALL PIPELINES ON THIS PIPING AND INSTRUMENTATION DIAGRAM (P&ID) SHALL BE FREE DRAINING WITH NO POCKETS, UNLESS OTHERWISE NOTED.

6-8. DELETED

9.

C5 SUMPS		
SUMP	LOCATION	PUMP
RLD-SUMP-00029	L-0123 PROCESS CELL (WEST END)	RLD-PMP-00025
RLD-SUMP-00030	L-0123 PROCESS CELL (EAST END)	RLD-PMP-00026
RLD-SUMP-00031	L-0124 PROCESS CELL (WEST END)	RLD-PMP-00027
RLD-SUMP-00032	L-0124 PROCESS CELL (EAST END)	RLD-PMP-00028
RLD-SUMP-00033	L-0125 PROCESS CELL (WEST END)	
RLD-SUMP-00034	L-0125 PROCESS CELL (EAST END)	
RLD-SUMP-00035	L-0126 EFFLUENT CELL (WEST END)	RLD-PMP-00031
RLD-SUMP-00036	L-0126 EFFLUENT CELL (EAST END)	RLD-PMP-00032

10. FOR OPTIMAL PERFORMANCE, SUMP PUMPS IN ONE CELL ONLY SHOULD BE OPERATED AT A TIME.
11. LOCATE FLOOR DRAINS DIRECTLY BELOW SAFETY SHOWERS WHERE APPLICABLE.
12. ALL FLOOR DRAINS WILL HAVE PROVISION FOR SCREW IN PLUGS.
13. FULL PORT BALL VALVES REQUIRED.
14. CONTENTS OF THIS DOCUMENT ARE DANGEROUS WASTE PERMIT AFFECTING.
15. CONDENSATE LINES FROM PUMPING TRAPS TIE INTO TOP OF FLOOR DRAIN HEADER.

16-17. DELETED

18. DELETED
19. PIPELINE SHALL BE TERMINATED 6 INCHES ABOVE SLAB GRADE. DRAIN HUB, DRAIN FIXTURES, AND DRAIN TERMINATION SHALL BE BY SUBCONTRACTOR.
20. DELETED
21. SEE VENDOR DRAWING 24590-CM-POA-HDYR-00001-01-00203 FOR GLOVE BOX TAG 24590-WTP-MH-20-MHAN-00005.
22. DELETED
23. THE COMPONENTS SHOWN ON THIS DRAWING IN PHANTOM DO NOT REQUIRE INDEPENDENT QUALIFIED REGISTERED PROFESSIONAL ENGINEER ASSESSMENTS OF DESIGN OR INSTALLATION INSPECTIONS BY A QUALIFIED INSTALLATION INSPECTOR IN ACCORDANCE WITH THE DWP AND/OR WASHINGTON ADMINISTRATIVE CODE REQUIREMENTS.
24. THE DOCUMENT WAS COMPLETELY REVISED AND IDENTIFICATION OF REVISED ITEM IS NOT NECESSARY. REVISED PER 24590-LAW-M6N-M80T-00001, 24590-LAW-M6N-RLD-00002, 00026, 00030, 00031, 00033, 00036, 00038, 00039 AND 24590-LAW-M6PN-RLD-00002. DELETED QUALITY/SEISMIC FLAGS. ADDED SLOPE SYMBOLS. ADDED SLOPES TO LINES DRAINING INTO THE PROCESS CELL SUMPS. ADDED LVP STACK DRAIN STREAM TO EL. 28'-0" COLLECTION HEADER. UPDATE ALL 2 INCHES AND BELOW CHECK VALVES TO SPRING LOADED. ADDED LINE SIZE DESIGNATION CHANGES TO REFLECT ROUTING. ADDED REQUIREMENTS FOR RADAR GUIDE TUBE ROUTING. ADDED/REVISED/DELETED NOTES AND REFERENCES.

HOLD/OPEN ITEMS:

1- 4. DELETED

REFERENCES:

1. THE REQUIRED BATCH SEQUENCES, PERMISSIVES, INTERLOCKS, ALARMS, AND OPERATOR INTERFACE POINTS ARE FULLY DESCRIBED IN THE SOFTWARE FUNCTIONAL SPECIFICATION FOR RLD-RADIOACTIVE LIQUID WASTE DISPOSAL SYSTEM, 24590-LAW-3PS-RLD-T0002.

PLEASE NOTE THAT SOURCE, SPECIAL NUCLEAR AND BYPRODUCT MATERIALS, AS DEFINED IN THE ATOMIC ENERGY ACT OF 1954 (AEA), ARE REGULATED AT THE U.S. DEPARTMENT OF ENERGY (DOE) FACILITIES EXCLUSIVELY BY DOE ACTING PURSUANT TO ITS AEA AUTHORITY. DOE ASSERTS, THAT PURSUANT TO THE AEA, IT HAS SOLE AND EXCLUSIVE RESPONSIBILITY AND AUTHORITY TO REGULATE SOURCE, SPECIAL NUCLEAR, AND BYPRODUCT MATERIAL AT DOE-OWNED NUCLEAR FACILITIES. INFORMATION CONTAINED HEREIN ON RADIONUCLIDES IS PROVIDED FOR PROCESS DESCRIPTION PURPOSES ONLY.

STUART PAUL KRETZSCHMAR STATE OF WASHINGTON 32345 REGISTERED PROFESSIONAL ENGINEER 8/17/07
EXPIRES: 3/10/08

REV	DESCRIPTION	ORG	CHKD	RVWD	APVD	DATE
3	ISSUED FOR PERMITTING USE	LCS	[illegible]	SPK	[illegible]	8/17/07
2	ISSUED FOR PERMITTING USE	PM	EH	RCS	KK	10/5/06
1	ISSUED FOR PERMITTING USE	PSH	EH	EI	KK	4/14/04
0	ISSUED FOR PERMITTING USE	PSH	EH	EI	CJW	7/30/03

REVISION HISTORY

CM QUALITY LEVEL

ISSUED BY RPP-WTP PDC
ISSUE STAMP

PROJECT No.	24590
SITE	HANFORD
AREA	200E
BUILDING No.	20

	BY	DATE
ORIGINATOR	PS HOLGADO	7/24/03
CHECKER	EM HAN	7/24/03
APPROVER	CJ WINKLER	7/30/03
REVIEWER	E ISERN	7/25/03

CONTENT APPLICABLE TO ALARA? [X] YES [ ] NO
ADR NO. N/A REV: N/A
SAFETY SCREEN REQUIRED? [ ] YES [X] NO E&NS INITIAL IF YES

BECHTEL
RIVER PROTECTION PROJECT
WASTE TREATMENT PLANT
2435 STEVENS CENTER PLACE
RICHLAND, WA 99354

CONTRACT No: DE-AC27-01RV14136

P & ID - LAW RADIOACTIVE LIQUID WASTE DISPOSAL SYSTEM C3/C5 FLOOR DRAINS COLLECTION

SCALE: NONE
24590-LAW-M6-RLD-P0003
REV 3

Drawings and Documents

Operating Unit Group 10 – Appendix 9.4
Low Activity Waste Building
General Arrangement Drawings

The documents listed in the following table are incorporated by reference into this permit and are subject to the requirements set forth in Part I Standard Conditions, Part II General Facility Conditions, and Part III Operating Unit Group 10 Conditions. Upon request, copies of the documents can be viewed at the Nuclear Waste Program Resource Center located at 3100 Port of Benton Blvd. Richland, WA. Appointments for viewing can be scheduled by calling (509) 372-7950

Drawing/Document Number	*Description*
24590-LAW-P1-P01T-00001, Rev 2	General Arrangement Plan El. -21
24590-LAW-P1-P01T-00002, Rev 5	General Arrangement Plan El. 3
24590-LAW-P1-P01T-00003, Rev 4	General Arrangement Plan El. 22
24590-LAW-P1-P01T-00004, Rev 3	General Arrangement Plan El. 28
24590-LAW-P1-P01T-00007, Rev 8	General Arrangement Sections A-A, B-B, C-C
24590-LAW-P1-P01T-00008, Rev 7	General Arrangement Sections D-D, E-E, F-F, T-T
24590-LAW-P1-P01T-00009, Rev 8	General Arrangement Sections G-G, H-H, J-J
24590-LAW-P1-P01T-00010, Rev 8	General Arrangement Sections K-K, L-L, M-M, N-N
24590-LAW-P1-P01T-00011, Rev 6	General Arrangement Sections P-P, R-R, U-U
RESERVED	RESERVED

Source documents (which do not include a "P" in the last set of numbers, e.g. "-P0001," or "-TP001") should be used in conjunction with any document change notices issued against them.

We are currently transitioning from permit documents (which do include a "P" in the last set of numbers) to source documents. At the end of the transition period, permit submittals will contain source documents and will be incorporated into the permit as described in Ecology Publication # 07-05-006 (www.ecy.wa.gov/biblio/nwp.html).

Drawings and Documents

Operating Unit Group 10 – Appendix 9.5
Low Activity Waste Building
Civil, Structural, and Architectural Criteria and Typical Design Details

The documents listed in the following table are incorporated by reference into this permit and are subject to the requirements set forth in Part I Standard Conditions, Part II General Facility Conditions, and Part III Operating Unit Group 10 Conditions. Upon request, copies of the documents can be viewed at the Nuclear Waste Program Resource Center located at 3100 Port of Benton Blvd. Richland, WA. Appointments for viewing can be scheduled by calling (509) 372-7950

Drawing /Document Number	***Description***
24590-LAW-PER-M-02-001, Rev. 5	LAW Facility Sump Data
RESERVED	RESERVED

Source documents (which do not include a "P" in the last set of numbers, e.g. "-P0001," or "-TP001") should be used in conjunction with any document change notices issued against them.

We are currently transitioning from permit documents (which do include a "P" in the last set of numbers) to source documents. At the end of the transition period, permit submittals will contain source documents and will be incorporated into the permit as described in Ecology Publication # 07-05-006 (www.ecy.wa.gov/biblio/nwp.html).

This page intentionally left blank.

ISSUED BY
RPP-WTP PDC

R10804696

Document title: **LAW Facility Sump Data**

Contract number: DE-AC27-01RV14136

Department: Mechanical Systems

Author(s): Ronnie Moore

Principal author signature:

STUART PAUL KRETZSCHMAR
STATE OF WASHINGTON
32345
REGISTERED
PROFESSIONAL ENGINEER

7/19/07

EXPIRES: 3/16/08

Document number: 24590-LAW-PER-M-02-001, Rev 5

Checked by: David Reinemann

Checker signature:

Date of issue: 7/19/07

Issue status: Issued for Permitting Use

Approved by: John Julyk

Approver's position: Mechanical Systems Engineering Group Supervisor

Approver signature:

This bound document contains a total of 9 sheets

River Protection Project
Waste Treatment Plant
2435 Stevens Center Place
Richland, WA 99354
United States of America
Tel: 509 371 2000

Notice

Please note that source, special nuclear, and byproduct materials, as defined in the Atomic Energy Act of 1954 (AEA), are regulated at the US Department of Energy (DOE) facilities exclusively by DOE acting pursuant to its AEA authority. DOE asserts, that pursuant to the AEA, it has sole and exclusive responsibility and authority to regulate source, special nuclear, and byproduct materials at DOE-owned nuclear facilities. Information contained herein on radionuclides is provided for process description purposes only.

History Sheet

Rev	Date	Reason for revision	Revised by
0	7/16/02	Issued for permitting use	P.S. Holgado
1	8/27/02	Added statement regarding location of sumps	P.S. Holgado
2	9/19/02	Added Table 2	P.S. Holgado
3	3/19/03	Major revision, issued for permitting use	P.S. Holgado
4	4/21/05	Revised for permitting use	P.S. Holgado
5	7/02/07	Major revision, issued for permitting use	Ronnie Moore

Contents

1 Introduction 1
2 Applicable Documents 1
3 Description 1
3.1 Elevation -21 Ft Sumps 1
3.1.1 C3/C5 Drains/Sump Collection Vessel RLD-VSL-00004 Cell Sump 1
3.2 Elevation +3 Ft Sumps 1
3.2.1 Process Cell Sumps 2
3.2.2 Effluent Cell Sumps 2

Tables

Table 1 - LAW Regulated Sumps 4
Table 2 - Drains to LAW Sumps 5

1 Introduction

The Washington Administrative Code, WAC 173-303, *Dangerous Waste Regulations*, requires the use of secondary containment for systems managing dangerous waste. This document provides a brief description of the secondary containment sumps regulated under the Dangerous Waste Permit that are located at elevation -21 ft and elevation +3 ft of the Low-Activity Waste (LAW) Vitrification Facility. Detailed information about these sumps is included in Table 1. Effluent streams that drain into these sumps are listed in Table 2.

2 Applicable Documents

WAC 173-303. *Dangerous Waste Regulations.* Washington Administrative Code.

3 Description

3.1 Elevation -21 Ft Sumps

3.1.1 C3/C5 Drains/Sump Collection Vessel RLD-VSL-00004 Cell Sump

The C3/C5 Drains/Sump Collection Vessel cell sump (RLD-SUMP-00028) is in a C5 area at elevation -21 ft. It is a dry sump, approximately 24 inches in diameter and 30 inches deep, and is equipped with liquid level detection and alarm. Any overflow or leakage from the C3/C5 Drains/Sump Collection vessel (RLD-VSL-00004) or piping in the C3/C5 Drains/Sump Collection vessel cell flows to RLD-SUMP-00028. Overflow from the C3/C5 Drains/Sump Collection vessel (RLD-VSL-00004) flows to RLD-SUMP-00028. Similarly, leakage from piping or valves in LAW RLD-BULGE- 00001 also flows to sump RLD-SUMP-00028. Any liquid collecting in the sump can be transferred within 24 hours to the Plant Wash Vessel (RLD-VSL-00003) at el. +3 ft. using permanently installed submersible sump pumps. Sump waste that is transferred to the Plant Wash Vessel (RLD-VSL-00003) is eventually transferred to the Pretreatment Facility for processing.

3.2 Elevation +3 Ft Sumps

At elevation +3 ft, there are eight sumps, RLD-SUMP-00029, RLD-SUMP-00030, RLD-SUMP-00031, RLD-SUMP-00032, RLD-SUMP-00033, RLD-SUMP-00034, RLD-SUMP-00035, and RLD-SUMP-00036. All of these sumps are dry sumps. Two of the sumps, (RLD-SUMP-00033 and RLD-SUMP-00034), are both located in the third melter process cell (Room L-0125) and currently not included in the Dangerous Waste Permit. These sumps (RLD-SUMP-00033 and RLD-SUMP-00034) have been constructed but, at this time sumps RLD-SUMP-00033 and RLD-SUMP-00034 do not have permanently installed sump pumps or liquid level detectors. The other remaining six sumps (RLD-SUMP-00029, RLD-SUMP-00030, RLD-SUMP-00031, RLD-SUMP-00032, RLD-SUMP-00035, and RLD-SUMP-00036) are provided with liquid level detection, alarms, and permanently installed submersible sump pumps. The submersible sump pumps transfer the sump contents to the Plant Wash Vessel (RLD-VSL-00003) located at the same elevation.

3.2.1 Process Cell Sumps

The melter feed system vessels and the primary offgas equipment for the two (2) LAW melters are located in two (2) lined process cells in the LAW Vitrification building. Each process cell contains the vessels and primary offgas equipment for a single LAW melter.

Process Cell for Melter 1, Room L-0123

LCP-VSL-00001	Concentrate Receipt Vessel
LFP-VSL-00001	Melter 1 Feed Preparation Vessel
LFP-VSL-00002	Melter 1 Feed Vessel
LOP-SCB-00001	Melter 1 Submerged Bed Scrubber (SBS)
LOP-WESP-00001	Melter 1 Wet Electrostatic Precipitator
LOP-VSL-00001	Melter 1 SBS Condensate Vessel

Process Cell for Melter 2, Room L-0124

LCP-VSL-00002	Concentrate Receipt Vessel
LFP-VSL-00003	Melter 2 Feed Preparation Vessel
LFP-VSL-00004	Melter 2 Feed Vessel
LOP-SCB-00002	Melter 2 Submerged Bed Scrubber
LOP-WESP-00002	Melter 2 Wet Electrostatic Precipitator
LOP-VSL-00002	Melter 2 SBS Condensate Vessel

Process Cell for Melter 3, Room L-0125

NONE

Each process cell is equipped with two sumps. The floor of the cell is sloped to drain potential spillage to a sump at the base of the east wall or west wall.

Water can be introduced into the sumps if needed for flushing.

Any liquids collecting in the process cell sumps can be transferred within twenty four hours to the Plant Wash Vessel (RLD-VSL-00003) using permanently installed submersible sump pumps.

The Melter 1 and Melter 2 process cell sumps are 12 inches deep by 30 inches in diameter, and are equipped with liquid level detection, liquid level alarms, and permanently installed submersible sump pumps. Sump waste transferred to the Plant Wash Vessel (RLD-VSL-00003) is eventually transferred to the Pretreatment Facility for processing.

3.2.2 Effluent Cell Sumps

The Plant Wash Vessel (RLD-VSL-00003) and the SBS Condensate Collection Vessel (RLD-VSL-00005) are located in the effluent cell, room L-0126. The Effluent Cell is provided with two sumps, one in the west end and another in the east end. Any material collected in the Effluent Cell sump can be transferred to the Plant Wash Vessel (RLD-VSL-00003) within twenty four hours, using permanently installed electric submersible sump pumps.

The Effluent Cell sumps are12 inches deep by 30 inches in diameter, and are equipped with liquid level detection, liquid level alarms, and permanently installed sump pumps. Sump waste transferred to the Plant Wash Vessel (RLD-VSL-00003) is eventually transferred to the Pretreatment Facility for processing.

Table 1 - LAW Regulated Sumps

Sump Number	LAW Room Number & Elevation	Maximum Sump Capacity, gal	Sump Type	Sump Dimensions, Inch	Piping and Instrumentation Diagram Number 24590-LAW-M6-	Leak Detection Type	Sump Material of Fabrication
RLD-SUMP-00028	L-B001B C3/C5 Drains/Sump Collection Vessel Cell Elev. -21 ft	59	Dry Sump	24 Dia. x 30 Deep	RLD-P0002	Radar	UNS NO8367
RLD-SUMP-00029	L-0123 Process Cell West End Elev. +3 ft	30	Dry Sump	30 Dia. x 12 Deep	RLD-P0003	Radar	UNS NO8367
RLD-SUMP-00030	L-0123 Process Cell East End Elev. +3 ft	30	Dry Sump	30 Dia. x 12 Deep	RLD-P0003	Radar	UNS NO8367
RLD-SUMP-00031	L-0124 Process Cell Sump West End Elev. +3 ft	30	Dry Sump	30 Dia. x 12 Deep	RLD-P0003	Radar	UNS NO8367
RLD-SUMP-00032	L-0124 Process Cell Sump West End Elev. +3 ft	30	Dry Sump	30 Dia. x 12 Deep	RLD-P0003	Radar	UNS NO8367
RLD-SUMP-00035	L-0126 Effluent Cell West End Elev. +3 ft	30	Dry Sump	30 Dia. x 12 Deep	RLD-P0003	Radar	UNS NO8367
RLD-SUMP-00036	L-0126 Effluent Cell East End Elev. +3 ft	30	Dry Sump	30 Dia. x 12 Deep	RLD-P0003	Radar	UNS NO8367

Table 2 - Drains to LAW Sumps

Drain	Sump, LAW Room Number & Elevation	Max. Flow Capacity, gal/min*	Drain Type/Nom. Operating Volume, Gal	Drain Line Size (Pipe Dia.), Inch	Piping and Instrumentation Diagram Number 24590-LAW-M6-	Pipe Material of Fabrication
Pump Bulge RLD-BULGE-00001 Drain	RLD-SUMP-00028 L-B001B C3/C5 Drains/Sump Collection Vessel Cell Elev. -21 ft	60	N/A	2	RLD-P0002	316L SS
Double-Walled Piping Outer Containment Drains		10		1		316L SS
RLD-VSL-00004 Overflow		425		8		6 Moly
Primary Offgas (LOP) Melter 1 Valve Bulge Drain	RLD-SUMP-00029 L-0123 Process Cell West End Sump Elev. +3 ft	60	N/A	2	LOP-P0001	6 Moly
LCP-BULGE-00001/2 Drain		60		2		316L SS
Melter Feed Line Encasement Assembly (LMP-LDB-00001 drain)	RLD-SUMP-00030 L-0123 Process Cell East End Sump Elev. +3 ft	10	N/A	1	RLD-P0003	316L SS
Melter 1 Feed Prep/Feed Vessel Valve Bulge Drain		60		2	LFP-P0001	316L SS
Primary Offgas (LOP) Melter 2 Valve Bulge Drain	RLD-SUMP-00031 L-0124 Process Cell West End Sump Elev. +3 ft	60	N/A	2	LOP-P0002	6 Moly
LCP-BULGE-00003 Drain		60		2	LCP-P0002	316L SS
Melter Feed Line Encasement Assembly (LMP-LDB-00002 drain)	RLD-SUMP-00032 L-0124 Process Cell East End Sump Elev. +3 ft	10	N/A	1	LFP-P0003	316L SS
Melter 2 Feed Prep/Feed Vessel Valve Bulge Drain		60		2		316L SS
None	RLD-SUMP-00035 L-0126 Effluent Cell West End Sump Elev. +3 ft	N/A	N/A	N/A	N/A	N/A
Plant Wash Vessel/SBS Condensate Collection Vessel Valve Bulge Drain	RLD-SUMP-00036 L-0126 Effluent Cell East End Sump Elev. +3 ft	60	N/A	2	RLD-P0001	6 Moly

*Flow values are bounding, and based on Design Guide: 24590-WTP-GPG-M-022

Drawings and Documents

Operating Unit Group 10 – Appendix 9.6
Low Activity Waste Building
Mechanical Drawings

The documents listed in the following table are incorporated by reference into this permit and are subject to the requirements set forth in Part I Standard Conditions, Part II General Facility Conditions, and Part III Operating Unit Group 10 Conditions. Upon request, copies of the documents can be viewed at the Nuclear Waste Program Resource Center located at 3100 Port of Benton Blvd. Richland, WA. Appointments for viewing can be scheduled by calling (509) 372-7950

Drawing/Document Number	***Description***
24590-LAW-M7-LEH-00002002, Rev 1	LAW Vitrification System LEH Mechanical Handling Diagram Container Export Handling System
24590-LAW-M0D-LEH-00014, Rev 7	Mechanical Handling Data Sheet for LEH-CRN-00003
24590-LAW-M7-LPH-00001004, Rev 2	LAW Vitrification System LPH Mechanical Handling Diagram Container Pour Handling System
24590-LAW-M0D-LPH-00003, Rev 5	Mechanical Handling Data Sheet for LPH-CRN-00002
24590-LAW-MKD-LOP-P0008, Rev 0	Mechanical Data Sheet for LOP-SCB-00001/2
24590-LAW-MK-LOP-P0001001, Rev 0	Equipment Assembly Drawing for LOP-SCB-00001/2, Sheet 1 of 3
24590-LAW-MK-LOP-P0001002, Rev 0	Equipment Assembly Drawing for LOP-SCB-00001/2, Sheet 2 of 3
24590-LAW-MK-LOP-P0001003, Rev 0	Equipment Assembly Mechanical Drawing for LOP-SCB-00001/2, Sheet 3 of 3
24590-LAW-MTD-LVP-P0001, Rev 0	Mechanical Data Sheet for LVP-TK-00001
24590-LAW-MT-LVP-P0004, Rev 0	Equipment Assembly Drawing for LVP-TK-00001
24590-LAW-MVD-LCP-P0004, Rev 1	Mechanical Data Sheet for LCP-VSL-00001
24590-LAW-MVD-LCP-P0005, Rev 1	Mechanical Data Sheet for LCP-VSL-00002
24590-LAW-MVD-LFP-P0007, Rev 1	Mechanical Data Sheet for LFP-VSL-00002
24590-LAW-MVD-LFP-P0008, Rev 1	Mechanical Data Sheet for LFP-VSL-00004
24590-LAW-MVD-LFP-P0010, Rev 1	Mechanical Data Sheet for LFP-VSL-00001
24590-LAW-MVD-LFP-P0011, Rev 1	Mechanical Data Sheet for LFP-VSL-00003
24590-LAW-MVD-LOP-P0004, Rev 1	Mechanical Data Sheet for LOP-VSL-00001
24590-LAW-MVD-LOP-P0005, Rev 1	Mechanical Data Sheet for LOP-VSL-00002
24590-LAW-MVD-RLD-P0001, Rev 1	Mechanical Data Sheet for RLD-VSL-00004

24590-LAW-MVD-RLD-P0006, Rev 2	Mechanical Data Sheet for RLD-VSL-00005
24590-LAW-MVD-RLD-P0007, Rev 2	Mechanical Data Sheet for RLD-VSL-00003
24590-LAW-MV-LCP-P0001, Rev 0	Equipment Assembly Drawing for LCP-VSL-00001
24590-LAW-MV-LCP-P0002, Rev 0	Equipment Assembly Drawing for LCP-VSL-00002
24590-LAW-MV-LFP-P0001, Rev 0	Equipment Assembly Drawing for LFP-VSL-00002
24590-LAW-MV-LFP-P0002, Rev 0	Equipment Assembly Drawing for LFP-VSL-00004
24590-LAW-MV-LFP-P0004, Rev 0	Equipment Assembly Drawing for LFP-VSL-00001
24590-LAW-MV-LFP-P0005, Rev 0	Equipment Assembly Drawing for LFP-VSL-00003
24590-LAW-MV-LOP-P0001, Rev 0	Equipment Assembly Drawing for LOP-VSL-00001
24590-LAW-MV-LOP-P0002, Rev 0	Equipment Assembly Drawing for LOP-VSL-00002
24590-LAW-MV-RLD-P0001, Rev 2	Equipment Assembly Drawing for RLD-VSL-00004
24590-LAW-MV-RLD-P0002, Rev 1	Equipment Assembly Drawing for RLD-VSL-00003
24590-LAW-MV-RLD-P0003, Rev 1	Equipment Assembly Drawing for RLD-VSL-00005
RESERVED	RESERVED

Source documents (which do not include a "P" in the last set of numbers, e.g. "-P0001," or "-TP001") should be used in conjunction with any document change notices issued against them.

We are currently transitioning from permit documents (which do include a "P" in the last set of numbers) to source documents. At the end of the transition period, permit submittals will contain source documents and will be incorporated into the permit as described in Ecology Publication # 07-05-006 (www.ecy.wa.gov/biblio/nwp.html).

CRANE, EXPORT HIGH BAY
10 TON WITH RECOVERY
24590-LAW-MJ-LEH-CRN-00003
24590-CM-POA-MJKG-00003
24590-LAW-JC-LEH-PNL-00005

NOTE:

FOR NOTES, DRAWING INDEX, REFERENCE DRAWINGS, AND PARTS/MATERIAL LIST SEE 24590-LAW-M7-LEH-00002001.

BRIDGE <4>

- JZ 0101 — NORTH/SOUTH (VSPDR) NORTH (2 MOTORS) — PFB
- JZ 0167 — NORTH/SOUTH (VSPDR) SOUTH (2 MOTORS) — PFB
- YY 0108 — ENGA / DSENG (BK) NORTHEAST
- YY 0105 — ENGA / DSENG (BK) NORTHWEST
- YY 0106 — ENGA / DSENG (BK) SOUTHEAST
- YY 0107 — ENGA / DSENG (BK) SOUTHWEST
- TS 0175 — HI TEMP NORTHEAST
- TS 0176 — HI TEMP NORTHWEST
- TS 0178 — HI TEMP SOUTHEAST
- TS 0179 — HI TEMP SOUTHWEST
- ZS 0111 — ULTN/ULTS
- JZ 0137 — EXTND/RETR (RCVY) NORTH (2 MOTORS)
- JZ 0138 — EXTND/RETR (RCVY) SOUTH (2 MOTORS)
- ZS 0139 — EXTNDD/RETRD (RCVY) NORTHWEST — DI
- ZS 0140 — EXTNDD/RETRD (RCVY) NORTHEAST — DI
- ZS 0141 — EXTNDD/RETRD (RCVY) SOUTHWEST — DI
- ZS 0142 — EXTNDD/RETRD (RCVY) SOUTHEAST — DI
- ZT 0147 — POSN (LASER) — PFB
- TS 0180 — HI TEMP (LASER) POSITIONING DEVICE

TROLLEY

- JZ 0114 — EAST/WEST (VSPDR) EAST — PFB
- JZ 0115 — EAST/WEST (VSPDR) WEST — PFB
- YY 0119 — ENGA / DSENG (BK) EAST
- YY 0120 — ENGA / DSENG (BK) WEST
- TS 0173 — HI TEMP EAST
- TS 0174 — HI TEMP WEST
- ZS 0123 — ULTE/ULTW
- JZ 0148 — EXTND/RETR (RSYS)(2 MOTORS) NORTHEAST / SOUTHEAST
- JZ 0149 — EXTND/RETR (RSYS)(2 MOTORS) NORTHWEST / SOUTHWEST
- ZS 0150 — EXTNDD/RETRD (RCVY) SOUTHEAST — DI
- ZS 0151 — EXTNDD/RETRD (RCVY) NORTHEAST — DI
- ZS 0152 — EXTNDD/RETRD (RCVY) SOUTHWEST — DI
- ZS 0153 — EXTNDD/RETRD (RCVY) NORTHWEST — DI
- ZT 0158 — POSN (LASER) — PFB
- TS 0181 — HI TEMP (LASER) POSITIONING DEVICE

HOIST <3>

- JZ 0125 — RSE / LWR (VSPDR) MAIN MOTOR — PFB
- TS 0159 — HI TEMP SWITCH MAIN MOTOR
- QT 0160 — MAIN MOTOR DIAGNOSTICS ONLY
- JZ 0166 — RSE / LWR (DR/RSYS) RSYS MOTOR
- TS 0161 — HI TEMP SWITCH RSYS — DI
- YY 0127 — ENGA / DSENG (BK) MAIN MOTOR
- YY 0128 — ENGA / DSENG (BK) MAIN DRUM
- YY 0129 — ENGA / DSENG (BK) RSYS MOTOR
- YY 0130 — ENGA / DSENG (BK) RSYS DRUM
- WE 0131 — WT / SKCA / OVLD — DI/AI
- ZS 0135 — HI MAIN HOIST
- QT 0133 — POSN (ENCODER) — PFB
- ZS 0134 — HI HI MAIN HOIST — DI
- ZS 0162 — FLT (MIS-REEVING) — DI
- SE 0182 — SCTRL MAIN HOIST — DI
- ZS 0183 — HI (RSYS) RECOVERY HOIST

- XL 0165 — WARNING LIGHT — DO
- XA 0165 — AUDIBLE ALARM — DO

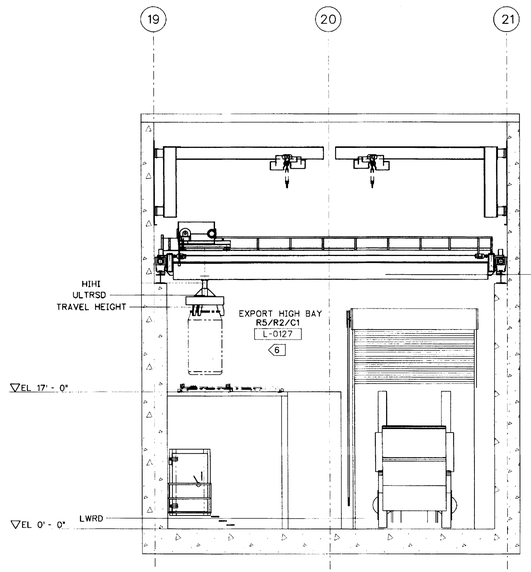

SECTION A-A
24590-LAW-M7-LEH-00002001

Please note that source, special nuclear, and byproduct materials, as defined in the Atomic Energy Act of 1954 (AEA) are regulated at the U. S. Department of Energy (DOE) facilities exclusively by DOE acting pursuant to its AEA authority. DOE asserts that pursuant to AEA, it has sole and exclusive responsibility and authority to regulate source, special nuclear, and byproduct materials at DOE-owned nuclear facilities. Information contained herein on radionuclides is provided for process description purposes only.

REV	DESCRIPTION	ORG	CHKD	RVWD	APVD	DATE
1	ISSUED FOR CONSTRUCTION - SEE NOTE 10				CEK	6-11-09
0	ISSUED FOR CONSTRUCTION, SUPERSEDES 24590-LAW-M7-LEH-00001006, REV B	MM	RAS	PL	CJW	9-30-03

REVISION HISTORY

CM — QUALITY DESIGNATOR

ISSUED BY RPP-WTP PDC — ISSUE STAMP

PROJECT No.	24590	
SITE	HANFORD	
AREA	200E	
BUILDING No.	20	
BY		DATE
ORIGINATOR	MATT MAYER	9-22-03
CHECKER	RICHARD STEELE	9-23-03
APPROVER	C.J. WINKLER	9-30-03
REVIEWER	P. LATHAM	9-23-03

CONTENT APPLICABLE TO ALARA [X] YES [ ] NO
ADR NO. 24590-LAW-ADR-M-02-003 REV. 2
SAFETY SCREEN REQUIRED? [X] YES [ ] NO EMG INITIAL IF YES pee

SAFETY SCREEN IS REQUIRED FOR DRAWING TYPES IDENTIFIED IN 24590-WTP-OPP-SWES-002

E SIZE - 44x34
COMPUTER GENERATED - MANUAL CHANGES NOT PERMITTED

BECHTEL

RIVER PROTECTION PROJECT
WASTE TREATMENT PLANT
2435 STEVENS CENTER PLACE
RICHLAND, WA 99354

CONTRACT No. DE-AC27-01RV14136

LAW VITRIFICATION SYSTEM LEH MECHANICAL HANDLING DIAGRAM CONTAINER EXPORT HANDLING SYSTEM

SCALE: NONE

24590-LAW-M7-LEH-00002002 REV 1

PLOTTED BY: tjohnson 09/14/2009 - 01:19:29 PM
C:\Documents\24590-LAW\TPCD\02002.dgn

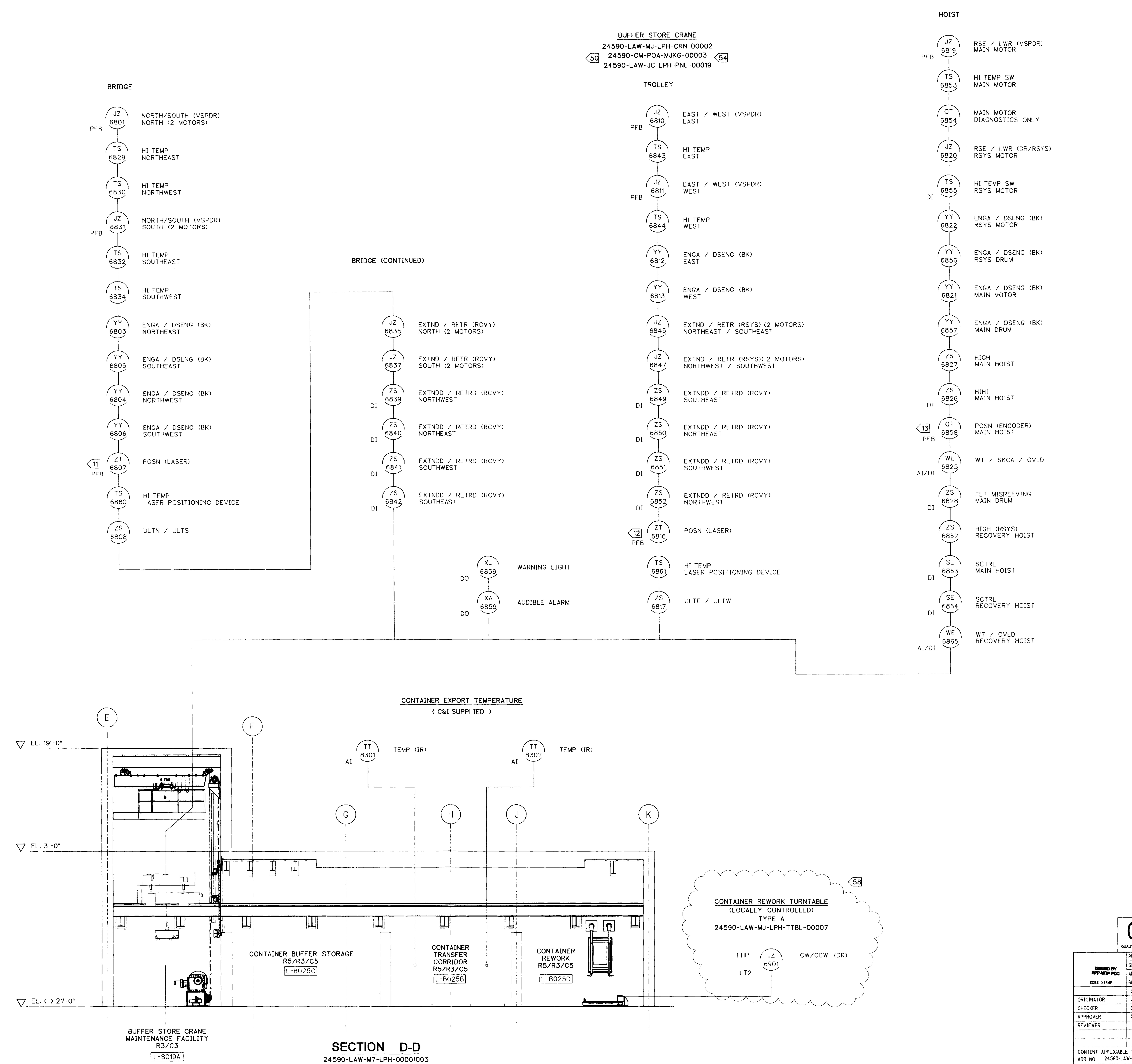

(NOTES CONTINUED FROM 24590-LAW-M7-LPH-00001003)

NOTES:

FOR NOTES AND REFERENCE DRAWINGS SEE 24590-LAW-M7-LPH-00001001.

11. FOR BRIDGE POSITIONS, SEE 24590-LAW-M7-LPH-00001003.

12. FOR TROLLEY POSITIONS, SEE 24590-LAW-M7-LPH-00001003.

13. BUFFER STORE CRANE HOIST POSITIONS:
    - CONTAINER RAISED POSTION
    - CONTAINER SET DOWN/PICKUP IN BUFFER STORAGE
    - CONTAINER PICKUP FROM TRANSPORT BOGIE
    - CONTAINER SET DOWN AT CONTAINER EXPORT STAND

14. THE FOLLOWING CHANGES HAVE BEEN MADE IN ACCORDANCE WITH DCA 24590-LAW-DCA-M-02-010, REV 0:

A. REVISED COMPONENT CONTROL CHANGES LISTED BELOW:

ADDED	DELETED
TS-6829	ZS-6809
TS-6830	YY-6814
JZ-6831	YY-6815
TS-6832	ZS-6818
TS-6834	YY-6823
JZ-6835	ZT-6824
JZ-6837	JZ-6802
ZS-6839	
ZS-6840	
ZS-6841	
ZS-6842	
TS-6843	
TS-6844	
JZ-6845	
JZ-6847	
ZS-6849	
ZS-6850	
ZS-6851	
ZS-6852	
TS-6853	
QT-6854	
TS-6855	
YY-6856	
YY-6857	
QT-6858	
XL-6859	
ZS-6826	
ZS-6827	
ZS-6828	
TS-6860	
TS-6861	
ZS-6862	

B. THE EQUIPMENT TYPE HAS BEEN CHANGED TO "BK" FROM "CLCH" FOR YY-6803, YY-6804, YY-6812, AND YY-6813.

C. THE LOOP TEMPLATE CODE FOR JZ-6801, JZ-6810, AND JZ-6819 HAVE BEEN CHANGED TO LT6 FROM LT5.

D. THE LOOP TEMPLATE CODE FOR ZS-6808 AND ZS-6817 HAS BEEN CHANGED TO LT9 FROM LT29.

E. THE HORSEPOWER RATING FOR JZ-6801 HAS BEEN CHANGED TO 1.75 HP FROM 1 HP.

F. THE HORSEPOWER RATING FOR JZ-6811 HAS BEEN CHANGED TO 1.75 HP FROM 0.5 HP.

G. THE HORSEPOWER RATING FOR JZ-6820 HAS BEEN CHANGED TO 5 HP FROM 2.5 HP.

H. THE LOOP TEMPLATE CODE FOR JZ-6811 HAS BEEN CHANGED TO LT6 FROM LT2.

J. THE LOOP TEMPLATE CODE FOR JZ-6820 HAS BEEN CHANGED TO LT42 FROM LT2.

THE FOLLOWING CHANGES HAVE BEEN MADE THAT DO NOT REQUIRE A DCA:

K. VARIOUS EDITORIAL CHANGES.

(NOTES CONTINUED ON 24590-LAW-M7-LPH-00001005)

Please note that source, special nuclear, and byproduct materials, as defined in the Atomic Energy Act of 1954 (AEA) are regulated at the U. S. Department of Energy (DOE) facilities exclusively by DOE acting pursuant to its AEA authority. DOE asserts that pursuant to AEA, it has sole and exclusive responsibility and authority to regulate source, special nuclear, and byproduct materials at DOE-owned nuclear facilities. Information contained herein on radionuclides is provided for process description purposes only.

REVISION HISTORY

REV	DESCRIPTION	ORG	CHKD	RVWD	APVD	DATE
2	ISSUED FOR CONSTRUCTION - SEE NOTE 55	[signature]	[signature]	[signature]	[signature]	5/30/07
1	ISSUED FOR CONSTRUCTION COMPLETE RE-DRAW : SEE NOTE 14	RAS	BD	MLJ	DW	10-07-03
0	ISSUED FOR CONSTRUCTION	JLO	CMK		GD	04-22-02

CM
QUALITY DESIGNATOR

ISSUED BY RPP-WTP PDC
ISSUE STAMP

PROJECT No.	24590
SITE	HANFORD
AREA	200E
BUILDING No.	20

	BY	DATE
ORIGINATOR	JON L. OSBORNE	04-22-02
CHECKER	CRAIG KELLER	04-22-02
APPROVER	G.M. DUNCAN	04-22-02
REVIEWER		

CONTENT APPLICABLE TO ALARA? [X] YES [ ] NO
ADR NO. 24590-LAW-ADR-M-02-038 REV: 1
SAFETY SCREEN REQUIRED? [X] YES [ ] NO E&NS INITIAL IF YES DEK

BECHTEL
RIVER PROTECTION PROJECT
WASTE TREATMENT PLANT
2435 STEVENS CENTER PLACE
RICHLAND, WA 99354

CONTRACT No: DE-AC27-01RV14136

LAW VITRIFICATION SYSTEM LPH MECHANICAL HANDLING DIAGRAM CONTAINER POUR HANDLING SYSTEM

SCALE: NONE | 24590-LAW-M7-LPH-00001004 | REV 2

SAFETY SCREEN IS REQUIRED FOR DRAWING TYPES IDENTIFIED IN 24590-WTP-GPP-SREG-002

'E' SIZE - 44x34
COMPUTER GENERATED - MANUAL CHANGES NOT PERMITTED

R10798542
05/29/2007 03:48:51 PM

Mechanical Handling Data Sheet

Top Running, Double Girder

ISSUED BY RPP-WTP POC CM

Data Sheet No. 24590-LAW-M0D-LEH-00014

Plant Item No 24590-LAW-MJ-LEH-CRN-00003 | Rev. 7

R10737254

Project	RPP-WTP	Description	LEH Crane Export High Bay With Recovery, 10 Ton
Project No.	24590	Supporting Calculation No.	24590-LAW-M0C-LRH-00004
Planning Area	6B	Associated Drawing No.	24590-LAW-M7-LEH-00002002; 24590-LAW-P1-P01T-00009
System No.	LEH	Associated Specification No.	24590-LAW-3PS-MJKG-T0001
Building No.	20	Associated MR No.	24590-CM-MRA-MJKG-00003
Quality Level	CM-Commercial		
Seismic Criteria	SC-III (UBC Zone 2B)		
Function	Load and transfer ILAW containers		

DESIGN CRITERIA

Design Life	40 years	Safety Class	Non Important To Safety (ITS)

OPERATING ENVIRONMENT			In-Cave	Rm #	NA	Out-Cave	Rm #	L-0127	List All Special Conditions
Temperature		deg F	N/A	N/A		50	113		Cave is considered R2 (Personnel may enter) when a LAW container is not present or is loaded into a cask. See Note 6.
Relative Humidity		%	N/A	N/A		5	100		
Radiological Equip. Dose	gamma	rad/ 40 yrs	N/A	N/A		175	2000		
	neutron	rad/ 40 yrs	N/A	N/A		Negligible	Negligible		
Radiological Classification			N/A	N/A		R2	R5		
Contamination Classification			N/A	N/A		C1	C1		

CRANE REQUIREMENTS

Type of Crane	LEH Crane Export High With Recovery, 10 Ton		Tons
Service Information	CMAA-70: Class D	Capacity	10
Crane Operation Indoors?	Yes	Main Hoist	10
Material Handled	Filled ILAW Product Containers	Auxiliary Hoist	N/A
Class Information	CMAA-70; Class D	Trolley	10
f Cranes Required	1	Bridge	10
ASCE Rail Type or Beam Size	104# CR [Buyer (CSA) supplied]		

Lifts	Symbol	(ft)	(in)		Quantity	Main Speed		Creep Speed	
Maximum Lift - Main Hoist	A	31	0	Lifts/day	5	VAR 0-25	(ft/min)	5	(ft/min)
Maximum Lift - Aux. Hoist	N/A	N/A	N/A	Lifts/day	N/A	N/A	(ft/min)	N/A	(ft/min)
Average Moves - Bridge	N/A	45	0	Moves/day	10	VAR 0-25	(ft/min)	5	(ft/min)
Average Moves - Trolley	N/A	30	0	Moves/day	10	VAR 0-25	(ft/min)	5	(ft/min)

Rail Lengths	Symbol	(ft)	(in)
Runway Length	B	79	0
Hook Approach - hook C/L to end walls (Maximum)	C	See note 2	See note 2
Span	D	40	0
Hook Approach - hook C/L to Rail C/L (Maximum)	E	See note 3	See note 3

Date						
11-14-06	7	Calc reference correction; As-builts; CCNs 137017 & 139194; Project closeout & 24590-LAW-M0N-LEH-00001.	WA Frier	D. Adams	J. LaBryer	P. Snider
12/8/2005	6	Revised "J" IAW 24590-CM-POA-MJKH 00002-01-00024, Incorporated 24590-WTP-SDDR-M-05-00201	WA Frier	N. Darwen	P Snider	J. LaBryer
10/1/2004	5	Revised rail beam attachmet in accordance with CCN 101264	WA Frier	N. Darwen	L. Harrison	D Wilsey
9/17/2004	4	Revised festoon location per Sellers request (CCN 089943)	WA Frier	N Darwen	L. Harrison	D. Wilsey
08/05/04	3	Revised Dim "H" & "G" in accordance with CCN 095329 & 095615 (except span retained as 40'-0"), clarified note 7; and added note 10 due to design evolution	WA Frier	N Darwen	L Harrison	D. Wilsey
/04	2	Revised throughput in accordance with CCN 068365	WA Frier JSH	E Szavay	L Harrison/N Darwen	D. Wilsey
03/15/04	1	Corrected Note in Environmental Conditions Notes 7 & 9 revised for clarification	WA Frier	E Szavay	L Harrison	D. Wilsey
10/07/03	0	Issued For Procurement	WA Frier	A Whitford	J. Weamer/M. Johnson	D. Wilsey
Date	REV	Revisions	By	Checked	Supervisor	Approved

Rail Positions	Symbol	(ft)	(in)
Top of Rail to Ceiling	F	N/A	N/A
Floor to Top of Rail	G	32	0
Rail Centerline to side wall	H	1	2
Bridge end to wall	N/A	N/A	N/A
Top of Rail to Lowest Obstruction	J	8	5

Drives	Volts	Phase	Hz	Control Type
Hook Rotate Drive Type	N/A	N/A	N/A	N/A
Main Hoist Drive Type	460	3	60	Intelligent Drive
Aux. Hoist Drive Type	N/A	N/A	N/A	N/A
Bridge Drive Type	460	3	60	Intelligent Drive
Trolley Drive Type	460	3	60	Intelligent Drive
Slewing Drive Type	N/A	N/A	N/A	N/A

CONDUCTOR TYPE

Bridge	Festoon
Trolley	Festoon

CONTROLS

Method of Control	Combination of Automation/Semi Automatic/manual - Through Integrated Control Network (ICN)
Location of Control	Facility Control Room HMI/ (CMA) Controller / LOI in Operating Area
Type of Control Enclosure	NEMA 12
Main Hoist	ICN
Auxiliary Hoist	N/A
Bridge	ICN
Trolley	ICN
Slewing Drive	N/A
Rotating Hook	N/A

MATERIALS

Item	Material	Grade/Type
.	A36	Seller shall designate
.	.	.

ELECTRICAL REQUIREMENTS

Item		HP		HP		HP		HP		HP
Motor	Main Hoist	20	Aux. Hoist	N/A	Bridge	(4) 1.75	Trolley	(2)1.75	Slewing	N/A
	Hook Rotate	N/A								

Special Wiring Conditions or Codes	National Electrical Code

Motor horsepower estimated for plant electrical load sizing. Seller to provide.

BECHTEL	**Mechanical Handling Data Sheet** Top Running, Double Girder	Data Sheet No. 24590-LAW-M0D-LEH-00014
		Plant Item No.: 24590-LAW-MJ-LEH-CRN-00003 / Rev.: 7

MAINTENANCE REQUIREMENTS

Retrieval	Bridge, Trolley, and Hoist Drives shall be recoverable in accordance with 24590-LAW-3PS-MJKG-T0001, Sec.3.2.10.
Decontamination	N/A

ADDITIONAL REQUIREMENTS

1. Three crane mounted cameras capable of pan, zoom and tilt. One on the East end truck, one mounted to the trolley, and one on the bridge approximately 10 feet from the East rail centerline. (Buyer Supplied)
2. C1 = 15'-0"; C2 = 15'-0"
3. E1 = 4'-0" maximum; E2 = 6'-0" maximum △7
4. Provide six crane mounted lights mounted to underside of bridge beams. Three lights shall be equally spaced on each beam. Provide 60-ft candles at 7.5-ft above floor level.
5. Recovery motor size: Hoist 4HP, Bridge (2) 1.75 HP, Trolley 1.75HP. Sizes are approximate and used for plant electrical load sizing. Seller shall verify size.
6. Room L-0127 is classified as R2/R5 when LAW canister is present which occurs less than 20% of time. Exposure is 30 mR/hr. at 4-ft from contact (24590-LAW-Z0C-W13T-00002).
7. The bottom of the festoon loop shall not hang below elevation 18'-0".
8. Provide walkway on south side of crane for maintenance.
9. Seller shall provide crane-mounted walkway for festoon rail inspection. Walkway shall be designed for 100 pounds per square foot.
10. Control and power feed will be from the north wall. Power and control cables will be a maximum of 150-ft length from 24590-LAW-JC-LEH-PNL-00005 to the junction boxes. △7
11. Seller shall identify number of bridge festoon wall supports and size common to wall. Festoon supports need not be painted if materials of fabrication are stainless steel. △7
12. For LEH-CRN-00003 seismic calculations use h_r = 48'-0".
13. Bridge festoon support (24590-CM-POA-MJKG-00003-08-00061) overall length shall be 52". △7
14. This data sheet is a lead document that contains input information for Design Basis Event calculations. Modification of the maximum lift height of the main hoist require AB review by the E&NS discipline. Changes to the text of this note require AB review by the E&NS discipline as well. If the changes being made do not alter the maximum lift height of the main hoist or the text of this note, AB review is not required. (A Safety Screening/Evaluation is required becasue the proposed changes identify these documents as Lead Documents that require E&NS screening when specific parameters are modified.) △7

BECHTEL	**Mechanical Handling Data Sheet** Top Running, Double Girder	Data Sheet No. 24590-LAW-M0D-LEH-00014 Plant Item No.: 24590-LAW-MJ-LEH-CRN-00003 — Rev.: 7

THIS DRAWING PROVIDED BASIC OUTLINES, DESIGN OBJECTIVES, AND BOUNDING DIMENSIONS TO CONTRACTED DESIGN OR FABRICATION SUPPLIER(S) AND SHALL NOT BE USED TO CONFIRM THE AS BUILT WTP STRUCTURE, SYSTEM OR COMPONENT IDENTIFIED HEREIN, SEE VENDOR INFORMATION FOR FINAL CONFIGURATION PROVIDED IN CONFORMANCE TO PURCHASE ORDER.

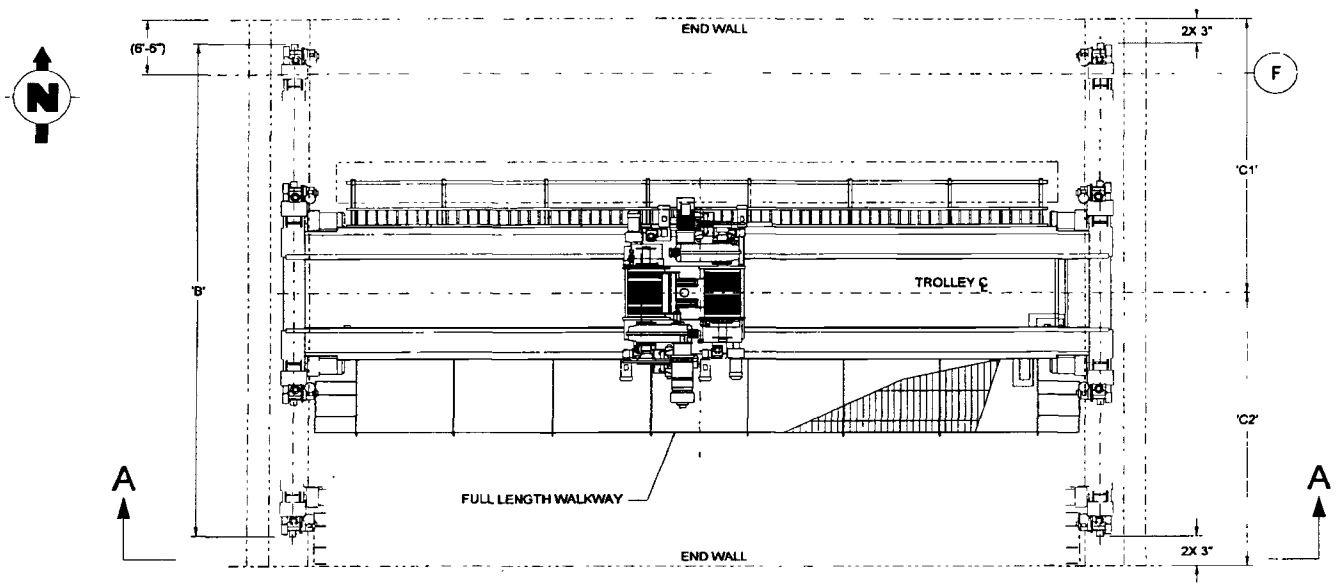

PLAN VIEW AT ELEV. 35'-0"

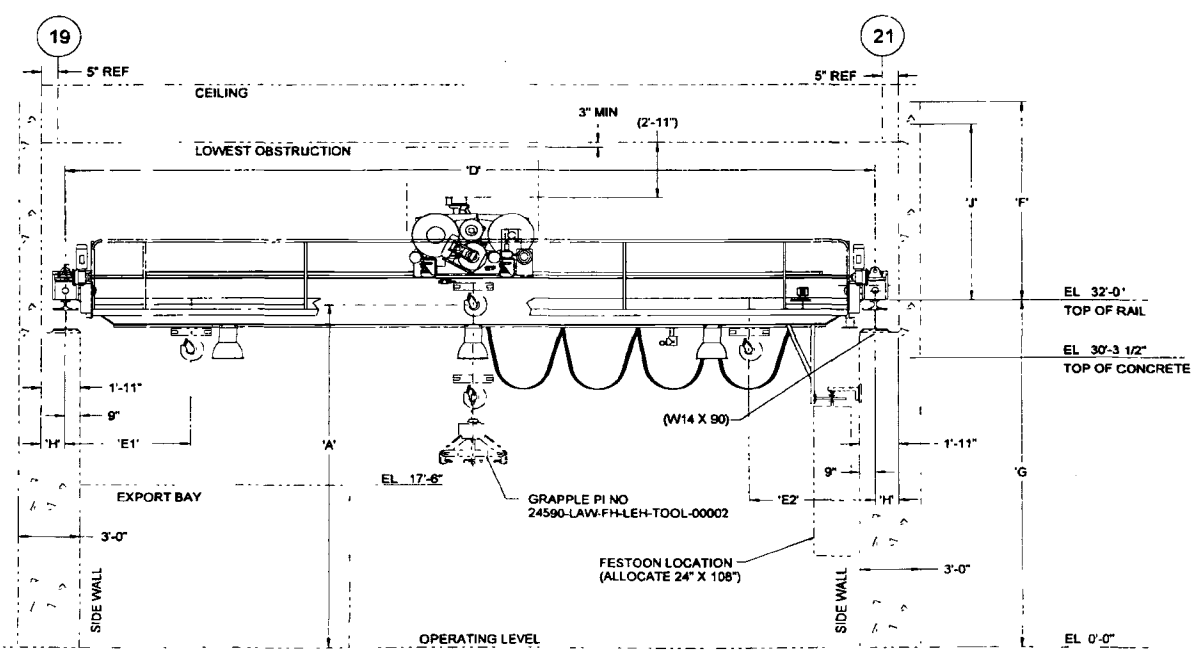

VIEW A-A

CRANE GRAPHICS UPDATED WITH VENDOR'S AS-BUILT CRANE

R10319622

Mechanical Handling Data Sheet

Top Running, Double Girder

CM

Data Sheet No	
24590-LAW-M0D-LPH-00003	
Plant Item No	Rev.
24590-LAW-MJ-LPH-CRN-00002	5

Project	RPP-WTP	Description	Top Running, Double Girder
Project No	24590	Supporting Calculation No.	24590-LAW-M0C-LRH-00001
Planning Area	3	Associated Drawing No	24590-LAW-M0-LPH-00014001, 24590-LAW-M0-LPH-00014002; 24590-LAW-M0-LPH-00014003; 24590-LAW-M7-LPH-00001004
System No.	LPH	Associated Specification No	24590-LAW-3PS-MJKG-T0001
Building No	20	Associated MR No.	24590-CM-MRA-MJKG-00003
Quality Level	Commercial		
Seismic Criteria	SC-III (UBC Zone 2B)		
Function	Transport ILAW Containers into/out of Buffer Storage		

ISSUED BY RPP WTP PDC
INIT DATE

DESIGN CRITERIA

Design Life	40 years	Safety Class	Non-Important To Safety

OPERATING ENVIRONMENT			In-Cave Rm # L-B025C Min	Max	Out-Cave Rm # L-B019A Min	Max	List All Special Conditions
Temperature		deg F	59	113	59	95	In-Cave temperature may be as high as 130 deg F Max
Relative Humidity		%	5	85	5	85	
Radiological Equip Dose	gamma	rad/ 40 yrs	3.5x10e3	3 5x10e4	875	3 5x10e3	
	neutron	rad/ 40 yrs	Negligible	Negligible	Negligible	Negligible	
Radiological Classification			R5	R5	R3	R3	
Contamination Classification			C5	R5	C3	C3	

CRANE REQUIREMENTS

Type of Crane	Top Running, Double Girder		
Service Information	CMAA-70: Class D		Capacity (tons)
Crane Operation Indoors?	Yes	Main Hoist	10
Material Handled	Filled ILAW Product Containers	Auxiliary Hoist	N/A
Class Information	CMAA-70, Class D	Bridge	10
ASCE Rail Type or Beam Size	104# CR [Buyer (CSA) supplied]		

Lifts	Symbol	(ft)	(in)		Quantity	Main Speed		Creep Speed	
Main Hoist Lift Height	A	15	5 5	Lifts/day	7	VAR 0-25	(ft/min)	N/A	(ft/min)
Aux. Hoist Lift Height	N/A	N/A	N/A	Lifts/day	N/A	N/A	(ft/min)	N/A	(ft/min)
Average Moves - Bridge	N/A	48	6	Moves/day	7	VAR 0-25	(ft/min)	N/A	(ft/min)
Average Moves - Trolley	N/A	10	0	Moves/day	14	VAR 0-25	(ft/min)	N/A	(ft/min)

Date	REV	Revisions	By	Checked	Supervisor	Approved
6/14/04	5	Incorporate 24590-WTP-SDDR-PROC-04-00414 and 24590-WTP-SDDR-PROC-04-00450	WA Frier	E. Szavay	L Harrison	Dave Wilsey
04/29/04	4	Revised hook approach in accordance with 24590-CM-POA-MJKG-00003-16-01. Revised motor control center rating in accordance with 24590-WTP-SDDR-PROC-04-00284. Editorial revision	WA Frier	E. Szavay	L Harrison	Dave Wilsey
09/09/03	3	Revised calc no., crane type & hook approach notation. Dose calculation based upon 24590-LAW-Z0C-W13T-00002, Rev A & CCN 068694. Revised dim 'F' Revised decon maint req'mt Clarified lighting requirements. Added note on configuration Added grapple profile & revised 'A' & 'B' dim in sketch	WA Frier	E. Szavay	J Weamer/Mark Johnson	Dave Wilsey
05/01/03	2	Note 1 changed to state 2 cameras required as close to each end truck as possible Template updated. Dimensions A and E improved based on Supplier information. Includes vendor information for motor sizing. Incorporates SDDR 24590-WTP-SDDR-PROC-03-0006	B Kempe	R. Leyva	J Weamer/Mark Johnson	Dave Wilsey
09/26/02	1	Issued for Procurement	B Kempe	C. Weddle	S Crow/J Weamer	Dave Wilsey
03/27/02	0	Issued for Procurement	M Meyer	Craig Keller	Mark Johnson	Dave Wilsey
Doc Number		24590-LAW-M0D-LPH-00003	REV	5	Page 1 of 4	

Mechanical Handling Data Sheet Top Running, Double Girder	Data Sheet No 24590-LAW-M0D-LPH-00003	
	Plant Item No 24590-LAW-MJ-LPH-CRN-00002	Rev. 5

Rail Lengths	Symbol	(ft)	(in)
Runway Length	B	76	4
Hook Approach - bridge to north wall (Max)	C1	6	0
Hook Approach - bridge to south wall (Max)	C2	6	2
Span	D	18	10
Hook Approach - trolley to west Beam C/L (Max)	E1	2	10
Hook Approach - trolley to east Beam C/L (Max)	E2	3	3

Rail Positions	Symbol	(ft)	(in)
Top of Rail to Ceiling	F	6	6
Floor to Top of Rail	G	16	0
Rail Centerline to side wall	H	0	10
Top of Rail to Lowest Obstruction	J	4	11

Drives	Volts	Phase	Hz	Control Type
Main Hoist Drive Type	460	3	60	ICN
Aux. Hoist Drive Type	N/A	N/A	N/A	N/A
Bridge Drive Type	460	3	60	ICN
Trolley Drive Type	460	3	60	ICN

CONDUCTOR TYPE

Bridge	Cable Track
Trolley	Cable Track

CONTROLS

Method of Control	Combination of Automation/Semi Automatic/manual - Through Integrated Control Network (ICN)
Location of Control	Facility Control Room HMI/ (CMA) Controller
Type of Control Enclosure	NEMA 1 for Motor Control Center
Main Hoist	ICN, flux vector drive 0-25 ft/min
Auxiliary Hoist	N/A
Bridge	ICN, variable frequency drive 0-25 ft/min
Trolley	ICN, variable frequency drive 0-25 ft/min

MATERIALS

Item	Material	Grade/Type
N/A	N/A	N/A
N/A	N/A	N/A

ELECTRICAL REQUIREMENTS

Item		HP		HP		HP		HP
Motor	Main Hoist	20	Aux. Hoist	N/A	Bridge	(4) 1.75	Trolley	(2) 1 75

Special Wiring Conditions or Codes	National Electrical Code

Mechanical Handling Data Sheet Top Running, Double Girder	Data Sheet No 24590-LAW-M0D-LPH-00003	
	Plant Item No. 24590-LAW-MJ-LPH-CRN-00002	Rev 5

MAINTENANCE REQUIREMENTS

Retrieval	Crane must be retrievable including hoist, bridge drive, and trolley drive Grapple sequence requires a lower-raise-lower to release
Decontamination	Cranes shall be decontaminated by hands on contact.

ADDITIONAL REQUIREMENTS

1. Two crane mounted cameras capable of pan, zoom and tilt. One camera mounted as close to each end truck as possible. (Buyer supplied).
2. Four crane mounted lights mounted to underside of bridge beam - capable of 40-60 foot candle at7.5 ft from floor level
3. Room maximum operational temp is 113 degrees F. Peak temperature may be as high as 130 degrees F.
4. Deleted
5. Hoist shall have a load cell, as shown in 24590-LAW-M7-LPH-00001004.

BECHTEL	**Mechanical Handling Data Sheet** Top Running, Double Girder	Data Sheet No 24590-LAW-M0D-LPH-00003	
		Plant Item No. 24590-LAW-MJ-LPH-CRN-00002	Rev 5

THIS DRAWING PROVIDES BASIC OUTLINES, DESIGN OBJECTIVES, AND BOUNDING DIMENSIONS TO CONTRACTED DESIGN OR FABRICATION SUPPLIER(S) AND SHALL NOT BE USED TO CONFIRM THE AS BUILT WTP STRUCTURE, SYSTEM OR COMPONENT IDENTIFIED HEREIN. SEE VENDOR INFORMATION FOR FINAL CONFIGURATION PROVIDED IN CONFORMANCE TO PURCHASE ORDER 24590-CM-POA-MJKG-00003.

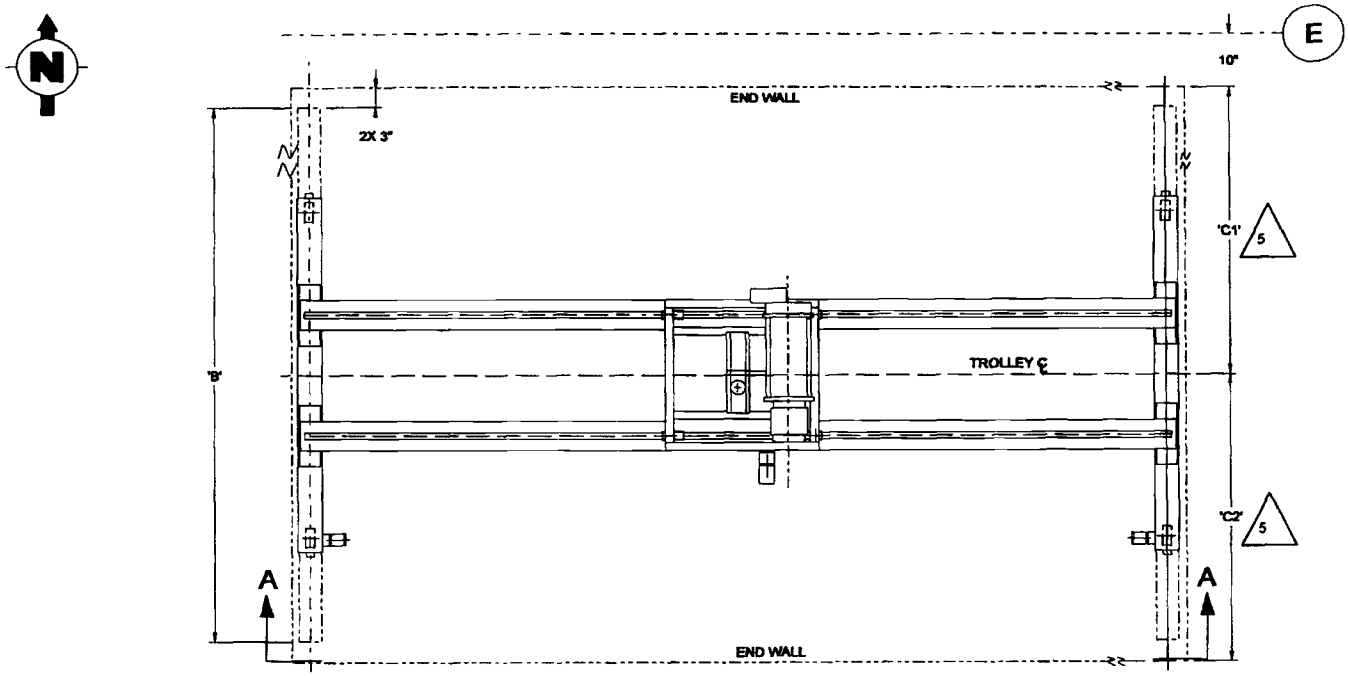

PLAN VIEW AT ELEV. -5'-0"

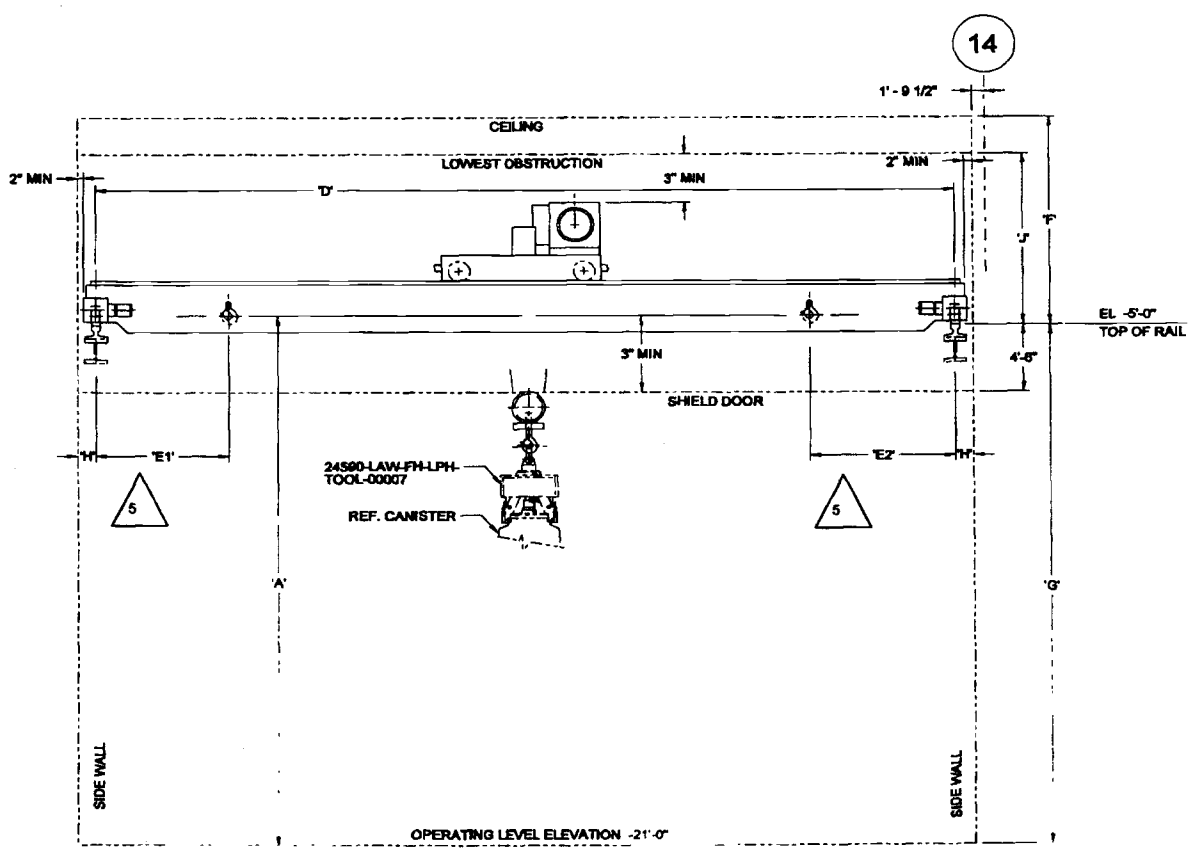

VIEW A-A

Drawings and Documents

Operating Unit Group 10 – Appendix 9.7
Low Activity Waste Building
Specifications

The documents listed in the following table are incorporated by reference into this permit and are subject to the requirements set forth in Part I Standard Conditions, Part II General Facility Conditions, and Part III Operating Unit Group 10 Conditions. Upon request, copies of the documents can be viewed at the Nuclear Waste Program Resource Center located at 3100 Port of Benton Blvd. Richland, WA. Appointments for viewing can be scheduled by calling (509) 372-7950

Drawing/Document Number	***Description***
24590-LAW-3PS-PF00-TP001, Rev 0	Engineering Specification for Shop Fabrication of LAW Melter Piping and Components
24590-LAW-3PS-RLD-T0001, Rev 1	Engineering Specification for Centrifugal Canned Motor Pumps to be Located In-Bulge
24590-QL-HC4-W000-00011-03-00590, Rev 00A	Engineering Specification - LAW ADS Pump Procurement Specification
24590-WTP-3PS-MPC0-T0008, Rev 1	Engineering Specification for Vessel-Mounted Vertical Transfer Pumps-LAW Facility
RESERVED	RESERVED

Source documents (which do not include a "P" in the last set of numbers, e.g. "-P0001," or "-TP001") should be used in conjunction with any document change notices issued against them.

We are currently transitioning from permit documents (which do include a "P" in the last set of numbers) to source documents. At the end of the transition period, permit submittals will contain source documents and will be incorporated into the permit as described in Ecology Publication # 07-05-006 (www.ecy.wa.gov/biblio/nwp.html).

This page intentionally left blank.

ISSUED BY
RPP-WTP PDC
MB 4-22-02
INIT DATE

RIVER PROTECTION PROJECT – WASTE TREATMENT PLANT

SPECIFICATION

FOR

Centrifugal Canned Motor Pumps to be Located In-Bulge

DIM # 24590-LAW-3PI-RLD-00001, Rev 1 4/19/02

DOE Contract No.
DE-AC27-01RV14136

REV	DATE	DESCRIPTION	ORIGINATOR	CHECKER	DM	QA	DEM
1	4/19/02	Issue for Use	W. Honsaker	M. Sanvictores	B. Rao	G. Warner	G. Duncan
0	11/29/01	Issued for Quote	W. Honsaker	M. Sanvictores	B. Posta	--	--

Doc. No. 24590-LAW-3PS-RLD-T0001 **Rev 1**

4/22/02 4/22/02

Processed/ Date Entry | Copied/ QA | Scanned | Filed

Contents

Item		Page Number
1	Scope	1
1.1	Project Description and Location	1
1.2	Equipment, Material, and Services Required	1
1.3	Work by Others	1
1.4	Definitions and Abbreviations	2
1.5	Safety/Quality Classifications	3
2	Applicable Documents	4
2.1	Codes and Industry Standards	4
2.2	Engineering Standards	4
2.3	Reference Documents/Drawings	4
3	Design Requirements	4
3.1	Basic Function	4
3.2	Performance	5
3.3	Design Conditions	5
3.4	Environmental Conditions	7
3.5	Mechanical Requirements	7
3.6	Loading	8
3.7	Electrical Requirements	8
3.8	Instrumentation and Control Requirements	8
3.9	Accessibility and Maintenance	8
4	Materials	9
4.1	Construction	9
4.2	Prohibited Materials	9
4.3	Special Requirements	9
4.4	Storage of Special Materials (e.g., stainless steel) prior to work	9
5	Fabrication	9
5.1	Welding	9
5.2	Assembly	9
5.2	Heat Treatment	9
5.4	Other Processes (as required)	9

Contents

Item		Page Number
6	Tests and Inspections	10
6.1	Personnel Qualifications	10
6.2	Non-Destructive Examinations	10
6.3	Shop Tests	10
6.4	Site Tests	10
7	Preparation for Shipment	10
7.1	Cleanliness	10
7.2	Painting	10
7.3	Tagging	10
7.4	Packaging	11
7.5	Documentation	11
7.6	Shipping Instructions	11
8	Quality Assurance	11
8.1	QA requirements specific to item(s) or service	11
8.2	Program QA elements	11
9	Configuration Management	11
10	Documentation and Submittals	11

TECHNICAL SPECIFICATION
FOR
CENTRIFUGAL CANNED MOTOR PUMPS
LOCATED IN-BULGE

1 Scope

1.1 Project Description and Location

The River Protection Project –Waste Treatment and Immobilization Plant (RPP-WTP) is a complex of waste treatment facilities where the U.S. Department of Energy (DOE) Hanford Site tank waste will be put into stable glass form. The WTP Contractor will design, build and startup the RPP-WTP pretreatment and vitrification facilities for the DOE Office of River Protection (ORP). The waste treatment facilities will pretreat and immobilize the low activity waste (LAW) and high level waste (HLW) currently stored in underground storage tanks at the Hanford Site.

The Hanford Site occupies an area of about 560 square miles and is located along the Columbia River, north of the city of Richland, Washington. The RPP-WTP Facility will be constructed at the east-end of the 200 East Area of the Hanford Site. The Counties of Benton, Franklin and Grant surround the Hanford Site.

1.2 Equipment, Material, and Services Required

Design, furnish materials, fabricate, assemble, test and deliver the centrifugal canned motor pumps and accessories in accordance with this specification, including:

1.2.1 Centrifugal canned motor pumps, each complete with electric motor and accessories specified on individual Pump Data Sheets and in this Specification.

1.2.2 Services of an installation supervisor when required.

1.2.3 One lot of any special tools required for installation and maintenance.

1.2.4 One lot of startup and commissioning spare parts, and list of recommended spare parts.

1.2.5 Installation, Operation and Maintenance Manuals.

1.2.6 Each pump and motor assembly shall include all components and accessories fully assembled, aligned, piped and wired, requiring only connecting to Buyer's pipe, electrical and control systems.

1.3 Work by Others

1.3.1 Material unloading and storage at jobsite

1.3.2 Installation labor

1.3.3 Interconnecting pipework external to the equipment

1.3.4 Electric power supply

1.3.5 Wiring external to the pump and driver

1.3.6 Motor starters.

1.4 Definitions and Abbreviations

1.4.1 Definitions – See API-610 and:

Bulge A fabricated steel, floor mounted enclosure to house items, such as pumps and valves, which is located adjacent to a room that contains radioactive material. Top covers will be removable to permit access to equipment.

Important to Safety (ITS) Project classification of Structures, Systems and Components (SSCs) based on their importance to safety controlling normal radiographic/chemical releases, accident prevention and mitigation. ITS safety classifications are 1) Safety Design Class (SDC), 2) Safety Design Significant (SDS), 3) Other SSCs and 4) Commercial Grade SSCs.

SDC Safety Design Class SSCs includes those that, by performing their specified safety function, prevent workers or the maximally exposed member of the public from receiving a radiological exposure that exceeds the accident exposure standards defined in the Safety Requirements Document. SDC also applies to those features that, by functioning, prevent the worker or maximally exposed member of the public from receiving a chemical exposure that exceeds the Emergency Response Planning Guidelines (ERPG)-2 (AIHA 1988) chemical release standard. Those features credited for the prevention of a criticality event are also designated as SDC.

SDS Safety classification for Important to Safety SSCs needed to achieve compliance with the radiological or chemical exposure standards for the public and workers during normal operation; and SSCs that can, if they fail or malfunction, place frequent demands on or adversely affect the function of SDC SSCs.

Other SSCs Those SSCs that are neither SDC nor SDS.

QL-1 SDC items. This level is based on the safety classification identified in the Standard Identification Process Database (SIPD).

QL-2 SDS items. This level is based on the safety classification identified in the SIPD. QL-2 shall also be used to identify other items and activities for which Nuclear Quality Assurance (NQA)-1 (1989) compliance is required.

QL-3 Quality Level 3 based on Immobilized High Level Waste (IHLW) Acceptance Items and Activity List for IHLW product quality-affecting items and associated services that affect the functionality of an SSC item that is not designated as SDC or SDS.

Non-Quality Related Remaining SSC items and associated services (those that are not designated as SDC or SDS) that are manufactured using standard commercial practices. For designed items, quality requirements will be defined in applicable design documents.

Seismic Category RPP-WTP Project's seismic classifications of SSCs based on their safety function. Seismic Categories are I (SC-I), II (SC-II), III (SC-III), IV (SC-IV) and V (SC-V).

SC-I SSC important to safety and which has a seismic safety function.

SC-II SSC important to safety, whose failure during a seismic event could prevent a Seismic Category I SSC from performing its seismic safety function.

SC-III (a) SSC important to safety, but without seismic safety function.
(b) SSC not important to safety, but has an inventory of radioactive or hazardous material in an amount less than an important-to-safety significant quantity.

SC-IV SSC not important to safety and without an inventory of radioactive or hazardous material, but requiring seismic protection.

SC-V SSC not important to safety and does not require seismic design.

1.4.2 Abbreviations of Organizations

ABMA	American Bearing Manufacturers Association
AGMA	American Gear Manufacturers Association
ANSI	American National Standards Institute
API	American Petroleum Institute
ASME	American Society of Mechanical Engineers
ASNT	American Society of Nondestructive Testing
ASTM	American Society for Testing and Materials
HI	Hydraulics Institute
ISO	International Organization for Standardization
NEMA	National Electrical Manufacturers Association
NFPA	National Fire Protection Association

1.5 Safety/Quality Classifications

Safety Classification, Quality Level and Seismic Category, if any, of each pump described in this specification will be on the individual Pump Data Sheets, included in Section 2 of the Material Requisition.

2 Applicable Documents

2.1 Codes and Industry Standards

2.1.1 API-610, Eighth Edition — Centrifugal Pumps for Petroleum, Heavy Duty Chemical and Gas Industry Service. (See its Appendix A for additional Referenced Publications and International Standards)

2.1.2 ASNT SNT-TC-1A, August 1984 — Recommended Practice (including Non-Destructive Examination [NDE] personnel certification)

2.1.3 NEMA MG 1-98 — Motors and Generators

2.2 Engineering Standards

2.2.1 24590-WTP-3PS-G000-T0001, General Specification for Supplier Quality Assurance Program Requirements

2.2.2 24590-WTP-3PS-G000-T0002, Specification for Positive Material Identification (PMI)

2.2.3 24590-WTP-3PS-G000-T0003, RPP-WTP General Specification for Packaging, Shipping, Handling and Storage Requirements

2.3 Reference Documents/Drawings

2.3.1 24590-LAW-MX-RLD-00001001, General Arrangement LAW-RLD C3/C5 Pump Bulge RLD-BULGE-00001

2.3.2 24590-LAW-MX-RLD-00001002, Piping Assembly LAW-RLD C3/C5 Pump Bulge RLD-BULGE-00001

3 Design Requirements

3.1 Basic Function

3.1.1 These centrifugal canned motor pumps will be located in a bulge in the Low Activity Waste Facility. They will transfer liquid to meet conditions as shown on the Pump Data Sheets.

3.1.2 The pumps shall have design refinements to extend the normal time between maintenance, and to allow removal of the canned motor/pump rotating element assemblies using semi-remote handling devices. Bidders shall include descriptions and sketches, as appropriate, of these design refinements in the proposal.

3.2 Performance

See the individual Pump Data Sheets.

3.3 Design Conditions

3.3.1 See the individual Pump Data Sheets.

3.3.2 These pumps will be designed to be mounted in a vertical position with the suction and discharge connections butt-welded to the piping. The bolts connecting the back cover to the pump casing shall be designed to permit removal from some distance above with a specially designed tool(s) to be furnished by the Supplier.

3.3.3 The equipment and appurtenances will be used in a plant that has a design life of 40 years. The design objective for these canned motor pumps shall also be based on a 40 year life. If the design life can not be met, the maintenance items shall be easily accessible once the motor and rotating element have been removed from the case.

3.3.4 All components of the pump and motor shall be self-draining. Pockets or voids that could entrain process fluid are not allowed.

3.3.5 The canned motor pumps shall be manufactured so that oil is not used for lubricant or cooling purposes. The motor windings shall be potted to reduce size as much as possible.

3.3.6 The Supplier shall include recommendations for safety monitoring devices, such as bearing wear detection and motor winding thermostats, to help avoid unexpected outages.

3.3.7 The pumps shall meet API Standard 610 as much as possible. **Paragraphs which do not match the type of pump and/or required modifications, will not apply.** The following Purchaser modifications to API 610, using the paragraph numbers found in API-610, apply:

API 610 Paragraph No.

1.1.1 This specification covers the minimum requirements for centrifugal pumps designed in accordance with API 610, Eighth Edition, "Centrifugal Pumps for Petroleum, Heavy Duty Chemical, and Gas Industry Services" as modified by this section. The paragraph numbers in this section correspond to those in API 610 and each of the paragraphs denotes an "Addition", "Decision" or "Modification" to the API requirements. Bulleted items not addressed in this specification shall have the decisions noted on the individual pump data sheets.

1.2.2 (Decision) Dimensions shall be U.S. Standard.

1.3 Conflicting Requirements (Modification)

In case of conflict between this specification and other referenced documents, the following order of precedence shall govern:

- Purchase Order
- Data Sheets
- This Specification
- API 610
- Other referenced specifications and standards

2.1.9 (Decision) Pump Suction Specific Speed (S) shall not exceed 12,000 (calculated using rotative speed in rev/min, BEP flow at the maximum diameter impeller in GPM and NPSH in feet). Pumps offered with suction specific speeds > 12,000 may be accepted subject to purchaser's written approval.

2.1.11 (Addition) Pumps for parallel operation shall have equal head rise (within ±1% as measured on the performance test) to shutoff.

2.1.14 (Addition) Noise level shall not exceed 85 dBA measured 3 ft from the edge of the baseplate.

2.1.29 (Decision) Pumps and auxiliaries shall be suitable for outdoor installation in the climatic zone specified on the data sheets.

2.2.4 (Modification) The maximum allowable working pressure shall apply to all parts referred to in the definition of "pressure casing" (See API paragraph 1.4.40), except for double-casing pumps. Components and sections of double-casing pumps which are normally subjected to suction pressure shall be designed to permit, as a minimum, a hydrostatic test pressure equal to the casing maximum allowable working pressure.

2.3.2.1 (Modification) ~~All pumps, except double-casing designs, shall have suction and discharge flanges of equal rating.~~ The pumps shall have weld ends at suction and discharge suitable to be butt welded to Purchaser's suction and discharge piping.

2.3.3.3 (Decision) Cylindrical threads shall not be used.

2.3.3.10 (Addition) Casings shall be provided with flanged vents and drains. Flanges shall be the same rating as the pump discharge nozzle capability.

2.3.3.11 (Decision) Pressure gauge connections shall not be provided.

2.6.4.1 (Addition) The wear ring running clearance (adjusted for temperature) and diameter, shall be provided for each service. Pump efficiencies shall be based on the corrected clearances.

3.2.12 (Addition) Coupling guards are not used due to canned motor, close-coupled design.

3.3.3 (Addition) Centers of the mounting pads shall be at the correct relative elevation with 0.002 inch per foot of separation between the pads. Each pad shall be machined flat to within 0.002 inch total variation across the surfaces. NOT APPLICABLE

3.3.4 (Modification) Pump pads are not to be machined to allow for the installation of shims. Pump feet will not be shimmed. NOT APPLICABLE

3.3.14 (Addition) Transverse alignment positioning jackscrews shall be provided for all components, except the pump. NOT APPLICABLE

3.3.21 (New) To insure that final alignment can be achieved in the field, the equipment manufacturer shall align the pump and driver to within 0.010 inch parallel offset and 0.002 inch/inch angular in the shop. The bolts shall be centered in their holes after the preliminary alignment. Undercutting of hold-down bolts is not acceptable. NOT APPLICABLE

Note : Hold down bolts shall not be bolt bound after final alignment in the field. The hold-down bolt shall be reasonably centered, based on visual inspection after the final field alignment.

4.2.3.3 (New) The following in process items shall be verified by the Supplier Quality Representative: NOT APPLICABLE

a. Flatness of the mounting feet at the machining process
b. Initial alignment of the drive train
c. Vertical NEMA frame motors with thrust bearings comply with paragraph 3.1.8 of API-610
d. Shaft runout of horizontal motors

4.3.2.1a (Modification) Double-casing pumps and other special-design pumps, as approved by the purchaser, may be segmentally tested at the appropriate section pressure. Segmental hydro testing of horizontal multistage pumps is not acceptable. Hydrostatic testing, whether on a component basis or assembled pump, shall be done after all machining and welding (such as piping connections, drain, vents, seal welding) has been completed. NOT APPLICABLE

4.3.4.1.1 (Addition) NPSHR test shall be performed if the NPSH required by the pump differs from the specified available NPSH by 3 feet or less. The NPSH test will be a vacuum tank suppression test unless a suction valve throttling test has been approved by the purchaser.

SECTION 6 – SUPPLIER'S DATA The requirements of Section 3 of the Material Requisition shall be applicable in addition to the API-610 requirements.

END OF COMMENTS TO API-610.

3.4 Environmental Conditions

3.4.1 See individual Pump Data Sheets.

3.4.2 When noted on the Data Sheets, motors will require radiation shielding. It is preferred that this be designed and furnished by the motor Supplier so they consider motor cooling air flow.

3.4.3 When noted on the Data Sheets, all bearings may require special radiation resistant lubricants.

3.4.4 When noted on the Data Sheets, the seal elastomer components shall use high radiation-tolerance materials.

3.5 Mechanical Requirements

3.5.1 See individual Pump Data Sheets.

3.5.2 If an external clean water supply is required to avoid problems due to the pumped liquid, ie. slurry content, or cooling, the Supplier shall advise the expected minimum flow and pressure required.

3.6 Loading

3.6.1 Suction and Discharge pipe ends, which will be butt welded to Project piping, shall meet the API 610 load capability requirements.

3.6.2 After initial installation, the motor and the pump rotating element will be removed through an opening in the bulge. Any maintenance tools, or devices shall be provided by the Supplier, and must be designed to allow for removal of the motor and rotating element from above.

3.6.3 See the individual Pump Data Sheets for Seismic Classification, if any.

3.7 Electrical Requirements

3.7.1 See individual Motor Data Sheets.

3.7.2 Electric motors shall meet the requirements of NEMA MG 1-98, Motors and Generators.

3.7.3 Motors shall be furnished with 30 foot long power cable to facilitate power hookup. The power cable shall be three (3) wire, No. 12 size plus ground wire, with standard insulation. The motor power leads shall be tagged with line phase designations to permit for proper motor and pump rotation.

3.8 Instrumentation and Control Requirements

See individual Pump Data Sheets.

3.9 Accessibility and Maintenance

3.9.1 These pumps will require semi-remote removal capability, and the following modifications must be furnished with clear information on how to perform maintenance:

3.9.1.1 Bolts holding the back cover to the pump casing shall be removable with a tool(s) used through a removable cover plate on top of the bulge.

3.9.1.2 Any other electrical / cooling liquid connections shall be removable from outside the bulge with manually handled tools.

3.9.1.3 Lifting eye(s) / lugs to be used by the maintenance crane to lift the canned motor and pump rotating element must be easily accessible and take into account balance points to prevent swinging of the unit.

3.9.2 As the pumps may not operate for some period of time after installation, the Supplier shall provide clear pre-operation maintenance and preservation instructions to keep the equipment like-new.

4 Materials

4.1 Construction

See individual Pump Data Sheets for materials of construction.

4.2 Prohibited Materials

Bronze, copper, lead, zinc, tin, antimony, cadmium, or other low melting point metals, their alloys, or materials containing such metals as their basic constituents, or molybdenum and halogens, shall not be used in direct contact with stainless steel, with the exception of oil impregnated bronze bearings. This prohibition applies to the use of tools, fixtures, paints, coatings and sealing compounds , and any other equipment or materials used by the Supplier in handling, assembly and storage of stainless steel parts or components.

4.3 Special Requirements

See individual Pump Data Sheets. Note the requirement in Specification for Positive Material Identification of casings of 316 SS and better.

4.4 Storage of Special Materials (e.g., stainless steel) prior to work

The Supplier shall advise any special storage and preservation requirements.

5 Fabrication

5.1 Welding

5.1.1 Welding and weld repairs shall follow requirements of API-610.

5.1.2 Weld repair records shall be available for shop inspection and be submitted with documentation package.

5.1.3 Weld procedures and procedure qualification records shall be submitted to Buyer for review and acceptance prior to start of fabrication.

5.2 Assembly

No special comments.

5.2 Heat Treatment

Heat treatment shall be conducted as required by Supplier and/or welding procedures.

5.4 Other Processes (as required)

No special comments.

6 Tests and Inspections

6.1 Personnel Qualifications

Qualification of Supplier's inspection and test personnel shall be verified.

6.2 Non-Destructive Examinations

Personnel performing non-destructive examinations or reviewing such test results shall be certified to ASNT Standard SNT-TC-1A.

6.3 Shop Tests

6.3.1 Supplier shall conduct and be responsible for all shop tests listed in the individual Pump Data Sheets, API-610 and other applicable standards and reference documents.

6.3.2 Supplier shall furnish all facilities necessary for the performance of such tests. In the event Supplier's own facilities are not suitable for such tests, Supplier shall advise Buyer and obtain permission for using alternative facilities.

6.4 Site Tests

Buyer's startup personnel will run field performance tests after installation. Buyer may request Supplier's assistance during startup. Supplier shall be responsible for after-installation performance of the pumps.

7 Preparation for Shipment

See instructions in the Material Requisition, Section 7 and General Specification for Packaging, Shipping, Handling and Storage.

7.1 Cleanliness

Remove all dirt, oil, grease, loose mill scale, weld spatter and other foreign matter from all surfaces, with special attention to surfaces to be painted in accordance with Buyer's cleaning and coating procedures.

7.2 Painting

After visual examination, all exposed surfaces, except if stainless steel, shall be primed and coated in accordance with Buyer's cleaning and coating procedures. Supplier shall submit their conforming procedures as part of the documentation package. Color shall be advised later.

7.3 Tagging

See Paragraph 2.12 of API-610.

7.4 Packaging

See Material Requisition, Section 7, and General Specification for Packaging, Shipping, Handling and Storage.

7.5 Documentation

See API 610 and Material Requisition, Section 3.

7.6 Shipping Instructions

See Material Requisition, Section 7.

8 Quality Assurance

See Material Requisition, Section 9.

8.1 QA requirements specific to item(s) or service

8.1.1 The Supplier Quality Assurance Program (QAP) Requirements are included in Reference Document 2.2.1.

8.1.2 Supplier's QAP Manual shall be submitted to Buyer for review in accordance with Reference 2.2.1.

8.2 Program QA elements

Supplier's Quality Assurance Program, as a minimum, shall contain the requirements detailed in the Material Requisition.

9 Configuration Management

Equipment and/or components covered by this specification are identified with Plant Item (equipment tag) Numbers as given on the individual Data Sheets. Each item to be tagged per Section 7.3.

10 Documentation and Submittals

See Section 3 of the Material Requisition, which includes Forms G-321-E and G-321-V with their associated instructions, for the required documents and submittals.

24590-QL-HC4-W000-00011 - 03 - 00590 00A

PO/SCT Submittal Rev

Bechtel National, Inc. Job No. 24590

SUPPLIER DOCUMENT STATUS

1. [x] **Work may proceed.**
2. [ ] **Revise and resubmit. Work may proceed subject to resolution of indicated comments.**
3. [ ] **Revise and resubmit. Work may not proceed.**
4. [ ] **Review not required. Work may proceed.**

Permission to proceed does not constitute acceptance or approval of design details, calculations, analyses, test methods, or materials developed or selected by the supplier and does not relieve supplier from full compliance with contractual obligations.

REVIEWED	M MS									

G-321 Document Category 8.0
[From Supplement A to G-321-E (E) or G-321-V (V), as applicable, or "N/A" if SSRS is used]

Supersedes BNI Document No. 24590-101-TSA-W000-0010-409-880 Rev. 00B
[When applicable]

Accepted by ROBERT VANCE (Print Name) (Signature) 9/15/04 (Date)

Released by N/A (Print Name) (Signature) (Date)
[When applicable]

TP0406_34 7-04

PURCHASE ORDER SUBMITTAL

Approvals Page

R10367717

RPP-WTP

LAW ADS Pump Procurement Specification

Originator: R. PJ — Date: 08.25.04

Reviewed by: [signature] — Date: 8/25/04

Approved by: [signature] — Date: 8/25/04
QA Manager

Approved by: [signature] — Date: 8/25/04
Design Authority

Approved by: [signature] — Date: 8/25/04
Engineering Manager

24590-QL-HC4-W000-00011-03-00590, Rev. 00A

Revision History

Revision	Date	Comments/Description
0	3/28/03	Original Release.
1	8/25/03	Incorporate customer's 90% design review comments.
2	9/25/04	Incorporate customer's final design review comments

TABLE OF CONTENTS

1. SCOPE 4
2. REFERENCES 5
3. DESIGN REQUIREMENTS 6
4. MATERIALS 6
5. FABRICATION 8
6. TESTS AND INSPECTIONS 16
7. ATTACHMENT 20

1. SCOPE

1.1. Project Description and Location

The River Protection Project-Waste Treatment Plant (RPP-WTP) is a facility located on the Department of Energy's Hanford Reservation in southeast Washington State. The facility's purpose is to vitrify radioactive tank waste for permanent disposal.

1.2. Equipment, Material, and Services Required

1.2.1. The purpose of this specification is to provide information for the Vendor to fabricate the Air Displacement Slurry (ADS) pump for the LAW melter feed system. This specification, used along with the attached design drawings, will provide all necessary information for the Vendor to procure all required materials, fabricate parts and provide assemblies. Guidance will be given for non-vendor specific materials such as fasteners and piping.

1.2.2. The Vendor is not responsible for the design of these components.

1.2.3. This specification covers the supply of materials, fabrication, inspection, assembly, disassembly, packing, and delivery to the site.

1.2.4. The Vendor shall be responsible to perform all activities necessary to provide a complete product as specified herein and in the design drawings. If any information contained on the drawings or other contractual documents conflicts with the information contained in this specification, then it must be resolved with the Buyer in writing before commencing work.

1.2.5. The quantity of assemblies shall be identified on the purchase order.

1.2.6. The Vendor may subcontract any portion of the fabrication, manufacturing, or inspections provided it meets the quality assurance requirements of this specification.

1.2.7. The Vendor shall provide any special tools required for assembly, disassembly and reassembly of the components. The latest revision of the drawings shall be listed and controlled by the Buyer documents.

1.3. Work by Others

Vendor's responsibility will terminate with shipment of the assemblies, unless otherwise specified.

1.4. Definitions

LAW Melter	Low Active Waste Melter
Vitrification	The process of joining a waste stream with glass formers at high temperature to produce a stable waste form.
Buyer	Bechtel National, Inc.
Vendor	Company selected by Buyer to fabricate the LAW melter components.
ADS	Air Displacement Slurry

2. REFERENCES

2.1. Codes

The items covered by this specification shall be fabricated in accordance with this specification, the codes and standards listed below and the drawings. The applicable edition of each code and standard shall be the edition in effect at the time of contract. Vendor shall submit a list of codes and standards including year of edition four weeks after contract award.

2.1.1. ASME Boiler and Pressure Vessel Code, Section II, Material Specification.

2.1.2. ASME Boiler and Pressure Vessel Code, Section V, Nondestructive Examination.

2.1.3. ASME Boiler and Pressure Vessel Code, Section VIII, Design & Fabrication of Pressure Vessels.

2.1.4. ASME Boiler and Pressure Vessel Code, Section IX, Qualification Standard For Welding and Brazing Procedures, Welders, Brazers, and Welding and Brazing Operators.

2.1.5. ASME B31.3-1996, Process Piping.

2.2. Industry Standards

2.2.1. SSPC-SP NO. 10 NACE NO.2, Joint Surface Preparation Standard Near-White Blast Cleaning.

2.2.2. ANSI/ASME B46.1, Surface Texture.

2.2.3. ANSI/ASME Y14.5M.

2.2.4. AWS A2.4, Symbols for Welding and Nondestructive Testing.

2.2.5. AWS A3.0, Standard Welding Terms and Definitions.

2.2.6. ASTM A-380, Standard Practice for Cleaning, Descaling, and Passivation of Stainless Steel Parts, Equipment, and Systems.

2.2.7. AWS D1.6, Structural Welding Code, Stainless Steel, 1999.

2.3. Engineering Standards

N/A

2.4. Reference Documents/Drawings

2.4.1. 24590-WTP-3PS-NW00-T0002, Chemical Requirements for Materials Used in Contact with Austenitic Stainless Steel and Nickel-Based Alloys

3. DESIGN REQUIREMENTS

N/A

4. MATERIALS

4.1. Construction

4.1.1. All materials shall be as specified on the relevant drawings and purchased by the Vendor. Any proposed substitutes or concessions shall be agreed to by the Buyer prior to procurement or incorporation into the work. Materials shall be standard products of established manufacturers who have produced the type specified.

4.1.2. Certified Material Test Reports (CMTRs) will be provided to the Vendor for all Buyer Furnished Materials. The test reports will certify that the materials conform to the applicable specification.

4.1.3. Layout and Record Keeping of Buyer Furnished Materials:

4.1.3.1. The Vendor shall keep a record of Buyer Furnished Materials used in fabricating components.

4.1.3.2. The Buyer will supply layout drawings for each supplied item, if uncut plate is supplied.

4.1.3.3. Surplus from the Buyer Furnished Materials shall be returned to the Buyer after completion of the job.

4.1.4. If no references are made in the drawings, provide all materials to complete the work.

4.1.5. All materials provided by the Vendor shall be new and free of defects or mechanical damage.

4.1.6. The Vendor shall submit Certified Material Test Reports (CMTRs) for the following items and shall certify that the test results and materials conform to the applicable specification.

- All base materials.
- All weld filler materials.

4.1.7. Traceability must be maintained to assure material compatibility.

4.1.8. The Vendor shall submit Certificates of Compliance (COC) certifying that the materials conform to the applicable specification.

4.1.9. Carbon steel materials may be cut by thermal or mechanical means. Stainless steel and similar corrosion resistance materials not suitable for standard thermal cutting means may be cut by plasma arc, water jet, laser, mechanical, or equivalent methods. All flame cut and rough edges shall be dressed by grinding or other mechanical methods to remove oxidized materials, burrs, scale, and other impurities that could affect weld quality or subsequent manufacturing operations and/or painting. Stainless steel tooling shall be new or not have been used on carbon steel.

4.1.10. The limits of size and form, including surface texture requirements, of mill stock material (plate, sheet, pipe, tube, etc.) shall, either directly or indirectly, be in accordance with the national standards identified on the drawings. Where stock materials are specified without condition, finish, or temper, the Vendor shall select a commercial grade that is readily available.

4.1.11. Vendor shall submit shop detail drawings for review and approval.

4.2. Prohibited Materials

4.2.1. Materials used in contact with Austenitic stainless steel and nickel-based alloys shall meet the requirements of 24590-WTP-3PS-NW00-T0002, Ref. 2.4.1.

4.3. Special Requirements

N/A

4.4. Storage of Special Materials Prior to Work

4.4.1. The Vendor shall handle and store materials indoors in a locked controlled area to prevent misappropriation and damage or deterioration of the materials. The Vendor shall protect shipping tags and other identifying objects on delivered material for establishing identification and traceability. Heat numbers removed by cutting material shall be transferred to the unused material to maintain traceability.

5. FABRICATION

5.1. Welding

5.1.1. The Vendor shall identify each weld with a unique weld number, providing the following information. In addition the Vendor shall provide weld map format for Buyer approval. A system of control such as "weld travelers" or packages shall be established by the Vendor to control welding activities.

- Purchase Order number
- Weld number
- Welder's name
- Filler metal heat number
- Weld and NDE symbols
- Applicable weld procedure
- Applicable weld inspection procedure(s)

5.1.2. Weld inspection to include:

- Inspector's name
- Accept/Reject statement
- Non-conforming conditions, if any
- Date of Inspection

5.1.3. Welders, Welding Procedure Specifications (WPS) and Procedure Qualification Records (PQR), Qualification of Base Metal, Welding, Inspection, and Inspection Personnel shall be in accordance with AWS D1.6 or ASME BPVC, Section IX. The Vendor shall submit Welding Procedure Specifications and Procedure Qualification Records for Buyer approval.

5.1.4. The Vendor shall be responsible for all welds meeting the requirements of the applicable code, including proper filler metal selection.

5.1.4.1. All structural welds shall be in accordance with AWS D1.6.

5.1.4.2. All pipe welds shall be in accordance with ASME B31.3.

5.1.5. The Vendor shall also have available for review Welder Qualification Records for all welders who will perform welding.

5.1.6. The Vendor shall maintain a record of welds employed at each weld joint, the filler metal heat number and applicable WPS utilized on a weld map, and include in Vendor's data package.

5.1.7. The Vendor shall be responsible for conducting the examination and tests required to qualify the performance of the welders and welding operations and procedures. Welding machines and welding operators shall be currently certified before welding.

5.1.8. Vendor shall use controlled welding techniques to meet final product dimensions and tolerances as provided in the drawings.

5.1.9. Welders shall be requalified when the Buyer determines their work does not meet the performance qualification requirements. Requalification tests shall be the Vendor's responsibility. Welders failing a requalification test shall be removed from work under this specification.

5.1.10. Weld joint symbols shall be interpreted in accordance with AWS A2.4 and AWS A3.0.

5.1.11. Temporary tack-welded attachments: All areas of material where temporary welded attachments have been removed shall be repaired with weld overlay, ground flush, and penetrant inspected to the same acceptance criteria as for VT on welds.

5.2. Assembly

5.2.1. The Vendor shall submit the fabrication plan for Buyer approval. As a minimum the Vendor's fabrication plan shall include the following information.

- Purchase order number
- Sequence of Operation
- Fabrication Techniques
- In-process Inspection
- Handling Techniques

5.2.2. A suggested assembly procedure has been provided as Attachment 1 that has been used to fabricate previous ADS pumps. The Vendor should use this as a basis for the fabrication plan listed in 5.2.1 above.

5.2.3. The Vendor shall inform the Buyer if any aspect of the drawing or specification content is incorrect, or if the application could have an adverse effect on ADS pump life or reliability.

5.2.4. Controls are to be exercised during all stages of fabrication to minimize exposure of stainless steel to contaminants and in particular any chlorides that might cause stress-corrosive cracking. Chloride and halide bearing compounds shall be avoided, however, if used, they must be completely removed by thorough cleaning.

5.2.5. All materials used shall be assembled in a clean condition and provisions to maintain this condition shall be outlined as a part of the fabrication plan.

5.2.6. The Vendor shall assemble components of the ADS pump at the factory. The Vendor shall ship the components to the Hanford site in approved shipping containers.

5.2.7. When equipment must be disassembled into multiple pieces for shipment, the components shall be initially assembled at the Vendor's shop to ensure compatibility. As many components as possible should be fit checked at the Vendor's location first to assure that potential interference and fit up problems are resolved prior to shipment. All items that have been disassembled for shipment should be clearly labeled and tagged.

5.2.8. Where sub-assemblies erected at the shop have to be dismantled for transport to site, then the fasteners holding them together shall be inspected. Fasteners exhibiting distortion, galling, permanent set, or other damage shall, at the discretion of the Buyer, be replaced.

5.2.9. Fasteners shall be tightened in accordance with the torque values in the following table titled "Schedule of Un-Lubricated Bolt Torque" unless otherwise stated on the drawings. ACME nuts and studs shall be lubricated with Bostik Pure Nickel Never-Seez®, Nuclear Grade unless otherwise approved by the Buyer. Torque values for this application are per the drawing requirement. Anti galling compound shall be applied to mating stainless steel threads prior to assembly.

Schedule of Un-Lubricated Bolt Torque

Size	Thds/In		Tensile Stress Area (in2)	50% Yield Load (lbs.)	Torque (ft-lbs)
¼	20	UNC	0.0318	1288	5
3/8	16	UNC	0.0775	3137	20
½	13	UNC	0.1418	5744	48
5/8	11	UNC	0.2259	9148	95
¾	10	UNC	0.3343	13539	169
1	8	UNC	0.6054	24520	409
1-1/8	7	UNC	0.7629	30897	579
1-1/4	7	UNC	0.9686	39229	817
Yield Strength 81000 PSI, Nut Factor – 0.2					

Size	Thds/In		Tensile Stress Area (in2)	50% Yield Load (lbs.)	Torque (ft-lbs)
¼	20	UNC	0.0318	477	2
3/8	16	UNC	0.0776	1162	7
½	13	UNC	0.1418	2127	18
5/8	11	UNC	0.2259	3388	35
¾	10	UNC	0.3343	5014	63
1	8	UNC	0.6054	9082	151
1-1/8	7	UNC	0.7629	11443	215
1-1/4	7	UNC	0.9686	14529	303
Yield Strength 30000 PSI, Nut Factor -0.2					

Size	Thds/In		Tensile Stress Area (in2)	50% Yield Load (lbs.)	Torque (ft-lbs)
¼	20	UNC	0.0318	2385	10
3/8	16	UNC	0.-0775	5809	36
½	13	UNC	0. 1418	10637	89
5/8	11	UNC	0.2259	16942	176
¾	10	UNC	0.3343	25072	313
1	8	UNC	0.6054	45408	757
1-1/8	7	UNC	0.7629	57216	1073
1-1/4	7	UNC	0.9686	72646	1513
Yield Strength 150000 PSI, Nut Factor -0.2					

5.3. Fabrication Hold Points

5.3.1. The Vendor shall provide necessary access to facilities, equipment, records, and personnel to allow performance of required Buyer verifications/inspections. Accomplishment of Buyer source verifications/inspections does not indicate Buyer's final acceptance of the supplied item.

5.4. Heat Treatment

5.4.1. The Vendor shall develop and implement a procedure for heat treatment.

5.4.2. The following components listed in WTP-M-13505 shall be heat treated per AMS 5670:

5.4.2.1. Item 12, nipple

5.4.2.2. Item14, poppet

5.4.2.3. Item 21, rocker arm

5.4.2.4. Item 22, pivot pin

5.4.2.5. Item 23, lift rod pin

5.4.2.6. Item 33, housing

5.4.2.7. Item 36, lift rod assembly comprising of upper and lower lift rods

5.4.3. The heat treatment process shall include solution annealing at an initial temperature of 1,800 degrees Fahrenheit, held at 1,350 degrees Fahrenheit for 8 hours and furnace cooled to 1,150 degrees Fahrenheit for a total time of 18 hours.

5.4.4. The following components listed in WTP-M-13505 also shall be heat-treated.

5.4.4.1. Item 15, actuator magnet target

5.4.4.2. Item 20, lift rod magnet target

5.4.5. The heat treatment process shall include annealing in a wet hydrogen atmosphere at a temperature of 1,550 to 1,600 degrees Fahrenheit for two to four hours and cooled at a rate of 100 to 200 degrees Fahrenheit per hour down to 1,000 degrees Fahrenheit and any rate thereafter.

5.4.6. The Vendor shall maintain heat treatment reports and furnace charts. These shall be include the procedure used for heat treatment and annealing, serial numbers of the temperature measuring devices used to control temperature, and the name of the person responsible for heat treatment and annealing.

5.4.7. The Vendor shall include the heat treatment reports and furnace charts in the documentation package.

5.5. Other Processes

5.5.1. Handling, Cleaning and Maintaining Cleanliness:

5.5.1.1. The Vendor shall submit the procedures for handling, cleaning, and maintaining cleanliness throughout the entire course of this project. Methods and precautions presented in ASTM A380 shall be followed as applicable.

5.5.1.2. Surfaces of each component and its appurtenances shall be visually examined for cleanliness in accordance with ASTM A380, Paragraph 7.2.1. Surfaces not readily accessible to visual examination may be examined by other methods provided in Paragraph 7.2 of ASTM A380 subject to Buyer approval.

5.5.2. Painting:

5.5.2.1. The Vendor shall prepare a painting and inspection procedure for Buyer review.

5.5.2.2. Surfaces shall be prepared for coating in accordance with SSPC-SP-10 and the coating manufacturer's recommendations.

5.5.2.3. Surface finish shall be inspected prior to painting to assure compliance with SSPC-SP-10.

5.5.3. Jigs, Fixtures and Special Tools:

5.5.3.1. Any special tools, jigs, fixtures, tapes, patterns, and tooling prepared for fabrication of the components per this procurement specification for guaranteeing interchangeability or facilitating quantity production shall become the property of the Buyer.

5.5.3.2. The Vendor shall make available to the Buyer during installation and commissioning of the LAW ADS pump, the jigs, fixtures, and special tools used during fabrication and manufacturing of the components.

5.5.3.3. For certifications, implement provisions to ensure that all components used or supplied are not counterfeit or of other suspect origin.

5.5.3.4. Materials and forms of fasteners shall comply with drawings. Any substitutes shall be agreed upon with the Buyer prior to use.

5.5.4. Pipe Thread Sealant:

5.5.4.1. The Vendor shall submit the proposed pipe thread sealant, activator (if necessary) and the applicable Material Safety Data Sheet (MSDS) for each, to the Buyer for review prior to procuring materials.

5.5.4.2. Pipe thread sealant shall be as specified on drawing.

5.5.4.3. The Vendor shall be responsible for submitting materials with properties that meet or exceed those specified. The Vendor shall be responsible for using compatible systems and application methods that are appropriate for the intended service.

5.5.4.4. Pipe thread sealant shall be used as required during assembly of parts in accordance with manufacturer-recommended instructions.

5.5.4.5. All parts to be bonded shall be visually examined for cleanliness in accordance with approved procedures. A report of the inspection results shall be included in the documentation package.

5.5.4.6. Confirm compatibility of sealant with parts to be bonded

5.5.4.7. If aqueous washing systems are used to clean the surfaces before bonding, check for compatibility of washing solution with the adhesive.

5.5.4.8. A determination shall be made as to whether the parts to be bonded are made from an *active* or an *inactive* material.

5.5.4.9. Specific pipe thread sealants will react faster with *active* metals while *inactive* metals will require the use of an activator.

5.5.4.10. If metal is unknown use activator. See pipe thread sealant manufacturer technical data sheet for list of *active* and *inactive* metals.

5.5.4.11. Apply sealant to threads of parts to be bonded following directions for use listed in pipe thread sealant technical data sheet.

6. TESTS AND INSPECTIONS

6.1. General Requirements:

6.1.1. Buyer's representative shall have reasonable access to Vendor's fabrication facilities during normal working hours for source inspection, audit, or surveillance to verify conformance to the specified requirements.

6.2. Personnel Qualifications

6.2.1. Test and inspection personnel qualifications shall be in accordance with National Standards as shown herein.

6.2.2. NDE Personnel Certification: Nondestructive Examination (NDE) personnel performing leak testing and liquid penetrate testing operations shall be certified per the requirements of ASNT SNT-TC-1A. All test reports shall be signed by personnel holding either Level II or Level III certifications that either performed, or witnessed the test. A copy of the individual's current certification(s) shall be provided.

6.3. Non-Destructive Examinations

6.3.1. Visual testing (VT): All welds will be visually inspected to check for absence of cracks, fissures and other surface defects. The Vendor shall submit a VT test procedure for review and approval.

6.3.2. Liquid penetrant testing (PT): Liquid penetrant examination shall be performed on welds as specified in the design drawings and in accordance with ASME BPVC, Section V and accepted to criteria of ASME BPVC, Section VIII, Appendix 8. The Vendor shall submit a PT test procedure for review and approval.

6.4. Shop Tests

6.4.1. The Vendor shall conduct tests in accordance with written procedures approved by the Buyer.

6.4.2. Established (standard/commercial manufacture) items such as fasteners, gearboxes, actuators, and electric motors shall be inspected and tested against manufacturers specifications and industry standards. It shall be supplied with a Certificate of Conformance or test or type certification, unless specified otherwise on drawings or in accompanying contractual documentation.

6.4.3. Prior to acceptance, equipment shall be inspected for leaks of Lubricant and shall be rectified at source.

6.4.4. Hydrostatic Test

The ¾" and ½" pipes including the 6" pipe chamber (items WTP-M-13505-3, -4 and –2) shall be hydrostatically tested to 225 psi per Reference 2.1.5. This can be accomplished by following the steps for hydrostatic test in Attachment 1.

6.4.5. Leak Test

The pump chamber and poppet seat shall be pressure leak tested with the poppet in the lower most position. The test medium shall be potable water and shall be supplied through the quick disconnect fitting to pressurize the chamber. Pressure shall be 35-40 psig and held for a minimum of 10 minutes. Repeat test 3 times and average the leak rate. The acceptable leak rate shall be less than 2 gal/hr. If the leak rate is in excess of this value the Vendor shall consult with Buyer to determine if there is a design or a manufacturing problem that needs correction.

6.4.6. Functional Test

Functionally test the pump actuator assembly by activating the mechanism by hand. All moving parts of the pump and actuator shall work smoothly without binding.

6.4.7. Vertical Balance While Suspended

While suspended vertically by the main bail, the pump shall hang vertically within 5 degrees as measured from the side of the upper tube assembly. The Vendor shall consult with Buyer if counterweights or some other design change is required to meet this requirement.

6.4.8. Load Test of Lifting Bails

Each lifting bail shall be load tested to 125% of the respective component's assembled weight. The bail and connecting hardware shall show no signs of plastic deformation. The Vendor shall consult with Buyer if design changes are required to meet this requirement.

6.5. Site Tests

N/A

6.6. Interpretation of Requirements/Tolerances and Acceptance Criteria

6.6.1. Unless otherwise specifically stated in the detailed drawings, manufacturing and fabrication tolerances for all equipment, accessories, and components shall conform to ASME/ANSI Y14.5M-1994.

6.6.2. Thickness tolerances shall conform to the requirements of the referenced commercial standard. In the absence of such criteria, allowable thickness shall be plus .010 inches, minus .005 inches or as defined on the drawings.

6.6.3. Finishes, thread classes, and edge provisions:

6.6.3.1. Unless otherwise noted, all machined surfaces shall be 125 rms or better in accordance with ASME/ANSI B46.1.

6.6.3.2. Sharp edges and burrs shall be removed from all components, including manufactured assemblies.

6.6.3.3. Internal machined UNC threads shall be class 2B, unless otherwise noted.

6.6.3.4. External machined UNC threads shall be class 2A, unless otherwise noted.

6.6.3.5. All machined thread surface finishes shall be 63 or better in accordance with ANSI B46.1. Burrs shall be removed from the threads.

6.6.4. Fabricated Components

6.6.4.1. Thickness tolerances shall conform to the requirements of the referenced commercial standard applicable to the material being fabricated. When plate thickness is specified herein or in the detailed drawings, it shall be considered to mean minimum thickness.

6.7. Equipment Data Package

On completion of fabrication the Seller shall assemble an equipment data package, which consists of all quality verification documents including but not limited to:

- Welding qualifications verification reports.
- Major repair verification reports (as required).
- Cleaning and coating verification reports.
- Heat-treating reports.
- Material test reports.
- Material certificates of compliance.
- Liquid penetrant examination and verification reports.
- Pressure test reports – hydrostatic and leak tests.
- Visual weld inspection reports.
- Mechanical test reports – functional test.
- Load testing reports

The data package shall be in a three ring binder and include an index of the information contained within. Each pump shall have a separate data package assembled and identified as such. The data package shall be shipped with the applicable pump.

7. ATTACHMENT

7.1. Suggested Assembly ADS Feed Pump

1. Fabricate lower tube assembly (WTP-M-13505-4). NDE and document welds.

2. Check ease of insertion of ¾" feed pipe (WTP-M-13505-13) into socket on cover (WTP-M-13505-6).

3. Weld lower tube assembly to cover. See View H on WTP-M-13500, sheet 3. NDE and document weld.

4. Fabricate tube assembly (WTP-M-13505-3). NDE and document welds.

5. Insert tube assembly into lower tube assembly and ensure that ¾" feed pipe seats in socket on cover assembly. Rotate tube assembly such that, in plan view, the centerline of the ½" vent pipe (WTP-M-13505-24) is centered between two bolt holes (any two) on the cover. Scribe a line on the cover between these two bolt holes. **Verify ¾" feed pipe is still seated in cover socket before welding.** Weld tube assembly to lower tube assembly. See View H on WTP-M-13500, sheet 3. NDE and document weld.

Hydrostatic Test

6. Cut a 1/8" thick rubber disk gasket to 2 7/8" ID x 4 15/16" OD. Position on cover and transfer bolt hole pattern to gasket. Cut 7/16" holes in gasket. Note: holes will cut through the outer edge of the gasket; this is ok.

7. Cut a 12 gauge thick stainless steel disk to 4 1/8" OD.

8. Insert rubber gasket into recess in cover, followed by stainless steel disk. Install housing (WTP-M-13505-33) onto cover and bolt together using studs, lock washers, flat washers and nuts (WTP-M-13500-25, 26, 27 & 28). Uniformly torque in a cross pattern to 7 ft-lb. Note that poppet (WTP-M-13505-14) and screen (WTP-M-13505-10) do not need to be installed at this time.

9. Provide temporary supports for positioning the assembly on an angle with the ¾" and ½" pipes as high as possible. The ½" pipe should be on top. Fit the ¾" pipe for water inlet and ½" pipe for air vent and pressure gauge.

10. Connect the pressure pump and fill with potable water through the ¾" pipe. Continue until all air escapes through the ½" pipe.

11. Install a calibrated 0-250 psig pressure gauge to the ½" pipe.

12. Raise the pressure slowly to 225 psig. Hold the test pressure for at least 10 minutes and view for any areas of deformation. After 10 minutes, visually examine all the pressure containing welds for leaks. (See reference 2.1.5) Note: leaks around the gasket/disk area are acceptable as long as the test pressure is maintained throughout the test duration.

13. Upon successful completion of the test (including retest after repairs, if applicable) document the test results, disassemble and drain the assembly.

14. Fabricate upper tube assembly (WTP-M-13505-31). NDE and document welds.

15. Weld upper tube assembly to lower tube assembly. See elevation view on WTP-M-13500, sheet 2. NDE and document weld.

16. Install nipple (WTP-M-13505-12) into recess in cover.

17. Install poppet (WTP-M-13505-14) into housing. Confirm a smooth sliding fit.

18. Attach rocker arm (WTP-M-13505-21) to housing (capturing poppet) using pivot pin (WTP-M-13505-22) and set screws (WTP-M-13500-19 and WTP-M-13500-15). Attach screen (WTP-M-13505-10) to housing using machine screws and flat washers (WTP-M-13500-23 & 24).

19. Orient housing with cover such that the free end of the rocker arm aligns with the scribe line between the bolt holes on the cover. Attach housing to cover with studs, lock washers, flat washers and nuts (WTP-M-13500-25, 26, 27 & 28).

20. Fabricate flange assembly (WTP-M-13505-1). NDE and document welds.

21. Attach flange assembly to upper tube assembly, sliding the ¾" and ½" pipes through their respective holes in the flange assembly. Seat flange on upper tube assembly. Note: the flange assembly will have to be shifted over about 1" to mate with the upper tube assembly. This will cause the ¾" and ½" pipes to bend slightly. This is ok. However, make sure not to twist the flange assembly relative to the pipes. See Section C-C on WTP-M-13500, sheet 3. TACK WELD ONLY flange assembly to upper tube assembly. (Full welding will be done after lift rod operation is verified).

22. Install bushing (WTP-M-13500-36) in flange assembly.

23. Assemble lift rod assembly (WTP-M-13505-36).

24. Install lift rod assembly through bushing in flange assembly. Slide lift rod guide assembly (WTP-M-13505-40) over lift rod assembly.

25. Attach lift rod assembly to rocker arm using lift rod pin (WTP-M-13505-23), flat washers (WTP-M-13500-20) and roll pin (WTP-M-13500-22).

Functional Test

26. Manually operate the lift rod assembly to check for smooth operation. There should be no binding. Binding will be eliminated with proper orientation of the flange assembly relative to the upper tube assembly.

27. Locate the lift rod guide assembly at the proper elevation and weld to upper tube assembly. NDE and document welds.

28. Weld flange assembly to upper tube assembly. Weld ¾" and ½" pipes to flange assembly. NDE and document welds.

29. Weld round pins to lift rod pin.

30. Attach the lift rod magnet target (WTP-M-13505-20) to the lift rod assembly.

31. Attach the actuator magnet targets (WTP-M-13505-15) to the flange assembly using the threaded studs (WTP-M-13500-11).

32. Attach the vent pipe boot (WTP-M-13505-19) and boot retainer (WTP-M-13505-17) to the flange assembly using the flat washers, lock washers and machine screws (WTP-M-13500-38, 29 & 33).

33. Fabricate the lift bail assembly (WTP-M-13505-5). NDE and document welds.

34. Attach lift bail assembly to flange assembly using shoulder screws, flat washers and nuts (WTP-M-13500-31, 34 & 39).

35. Fabricate the actuator assembly (WTP-M-13510-1).

36. Fabricate the vent valve assembly (WTP-M-13515-1).

Leak Test

37. Attach actuator assembly to magnets on flange assembly.

38. Provide for filling the lower chamber with potable water through the ½" pipe complete with a calibrated pressure gauge 0-60 psig and a valve to regulate pressure up to 40 psig.

39. Cap the ¾" pipe with a stainless steel cap.

40. Position the ADS pump assembly in the vertical position with room at the bottom for a five gallon bucket.

41. Pressurize the air cylinder on the actuator assembly with 35 psig air to push the lift rod into the "down" position (poppet valve in the down position) and pressurize the lower chamber with water to 40 psig.

42. Place the 5 gallon bucket under the pump assembly and begin timing for the leak test per section 6.4.5 of this specification.

43. Drain the test water and disconnect the test apparatus.

44. Attach couplings (WTP-M-13500-37 & 40) to ¾" and ½" pipes.

45. Install O-ring (WTP-M-13500-30) on flange assembly.

46. If leak test is acceptable, tack weld roll pin item (WTP-M-13500-22) to lift rod pin (WTP-M-13505-23).

R10317839

ISSUED BY RPP-WTP PDC
INIT DATE 6/9/04

RIVER PROTECTION PROJECT – WASTE TREATMENT PLANT

ENGINEERING SPECIFICATION

FOR

Vessel-Mounted Vertical Transfer Pumps - LAW Facility

Content applicable to ALARA? ☒ Yes ☐ No

ADR No. 24590-LAW-ADR-M-03-005 **Rev** 0

NOTE: Contents of this document are Dangerous Waste Permit affecting.

Quality Designator
CM
DOE Contract No. DE-AC27-01RV14136

REV	DATE	REASON FOR REVISION	BY	CHECK	REVIEW	QA	APEM/DEM
1	6/8/04 WH 6/7/04	Re-Issued for Purchase. Modified to incorporate WH 6/7/04 resolve SDDRs 24590-WTP-SDDR-PROC-00203 / 00251 / 00340, remove references to Hiltap connectors, and incorporate SCN 24590-WTP-3PN-MPC0-00009.	M. Nielsen	W. Honsaker	M. Hoffmann	G. Warner	G. Duncan
0	10/6/03	Issued for Purchase. Incorporates Addendums 01 through 13	M. Nielsen	W. Honsaker	M. Hoffmann	G. Warner	G. Duncan

SPECIFICATION No. 24590-WTP-3PS-MPC0-T0008 **Rev** 1

Contents

1 Scope 1
1.1 Project Description and Location 1
1.2 Scope Covered by this Specification 1
1.3 Scope Not Covered by this Specification 1
1.4 Definitions 2
2 Applicable Documents 2
2.1 General 2
2.2 Industry Standards 3
2.3 Safety/Quality/Seismic Classifications 3
2.4 Engineering Specifications 3
2.5 Reference Documents and Drawings 3
3 Design Requirements 4
3.1 General 4
3.2 Design Conditions 4
3.3 Conditions of Service 4
3.4 Environmental Conditions 5
3.5 Pump Construction 5
3.6 Operational and Design Requirements 9
3.7 Drivers 10
3.8 Seismic Requirements 10
3.9 Accessibility and Maintenance 11
4 Materials 11
4.1 General 11
4.2 Positive Material Identification 12
4.3 Prohibited Materials 12
5 Fabrication 12
5.1 General 12
5.2 Welding Procedures 12
5.3 Repairs 12
5.4 Painting, Surface Preparation, and Cleaning 13
6 Inspection and Testing 13
6.1 General 13
6.2 Hydrostatic Tests 13
6.3 Performance Tests 13

6.4 Final Dimensional Checks - Semi-Remote Vertical Pumps 14
6.5 Plumb Lift Test 15
7 Packaging, Handling, and Storage 15
7.1 General 15
7.2 Tagging 15
8 Quality Assurance 15
8.1 CM Quality Designation - QA Requirements Specific to LAW Items or Service 15
8.2 Seller Deviation 15
9 Configuration Management 16
10 Documentation and Submittals 16
10.1 General 16
10.2 Submittals 16

Figure

Figure 1 LAW Semi-Remote Vessel-Mounted Vertical Transfer Pumps 20

Appendices

Appendix A Pump Operation Summary ..... A-i
Appendix B Pump Design Parameter Summary ..... B-i
Appendix C Connectors ..... C-i
Appendix D Final Dimensional Measurements of Pumps by Seller ..... D-ii

1 Scope

1.1 Project Description and Location

The River Protection Project - Waste Treatment Plant (WTP) is a complex of waste treatment facilities where the US Department of Energy's (DOE) Hanford Site tank waste will be put into stable glass form. The WTP contractor will design, build, and start up the WTP pretreatment and vitrification facilities for the DOE Office of River Protection (ORP). The waste treatment facilities will pretreat and immobilize the low-activity waste (LAW) and high level waste (HLW) at the Hanford Site. This specification covers only LAW Facility equipment.

The Hanford Site occupies an area of about 560 square miles along the Columbia River, north of the city of Richland, Washington. The WTP facility will be constructed at the east end of the 200 East Area of the Hanford Site. Benton, Franklin, and Grant counties surround the Hanford Site.

1.2 Scope Covered by this Specification

Design, furnish materials, fabricate, package, test and prepare for shipment of complete pump units and appurtenances in accordance with this specification, including the following:

1.2.1 Semi-remote vessel-mounted vertical transfer pumps, complete with motors, wiring and conduit, lifting lugs, eductor primer (if required), nozzle connections, all required piping from pump to nozzle connections, acquisition services documents, and attachments.

1.2.2 Deleted

1.2.3 Deleted

1.2.4 Special tools required for installation and maintenance.

1.2.5 Shop painting of exposed steel surfaces. Stainless steel surfaces shall not be painted.

1.2.6 Operations and maintenance manuals.

1.2.7 Lifting yokes designed to dimensions and configurations supplied by the Buyer.

1.3 Scope Not Covered by this Specification

1.3.1 Pump mounting flange bolt fasteners.

1.3.2 Semi-remote water, slurry, and power jumpers or instrumentation beyond first connection to factory assembled package.

1.3.3 Material unloading, unpacking, inspection, storage and installation labor at the job site.

1.4 Definitions

The equipment covered by this specification will be used in the WTP, where the definitions of terms are:

Cantilevered	Refers to a specific pump configuration where the bearings supporting the rotating pump shaft are positioned at one end of the shaft, leaving the remainder of the shaft unsupported.
Casing	Refers to the volute casing or the bowl assembly, depending on the pump used for these applications.
LAW	Refers to items associated with the Low Activity Waste (LAW) building.
Self-Priming	Refers to the process condition where the impeller will always be in fluid during pumping and the pumps for this application will be of the extended line-shaft bearing type
Semi-Remote	Equipment described as semi-remote in this specification refers to equipment located in the radioactive LAW cell that will normally be accessed from overhead protected levels and minimal human contact.
Vertical Pumps	Refers to equipment that is the subject of this specification, the semi-remote vessel-mounted vertical transfer pumps.

2 Applicable Documents

2.1 General

2.1.1 Work shall be performed in accordance with the referenced codes, standards, and documents listed below, which are an integral part of this specification, and to the extent referenced herein.

2.1.2 When specific chapters, sections, parts, or paragraphs are listed following a code, industry standard, or reference document, only those chapters, sections, parts, or paragraphs of the document are applicable and shall be applied. If a date or revision is not listed, the latest issue, including addenda, at the time of Request for Proposal (RFP) shall apply. When more than one code, standard, or referenced document covers the same topic, the requirements for all must be met with the most stringent governing.

2.1.3 "Seller Surveillance Inspection" is defined in section 5 of the material requisition. Critical steps in manufacturing and testing, such as witness points and hold points, are also defined in section 5 of the material requisition.

2.2 Industry Standards

Unless otherwise specified herein or on drawings, work under this specification shall be performed in accordance with the codes, standards, and publications to the extent indicated by the references herein. The date of issue (or revision) indicated shall apply.

Sponsor	Number	Subject
ABMA	Std. 7	American Bearing Manufacturers Association - Shaft and Housing Fits for Metric Radial Ball and Roller Bearings
ABMA	Std. 9	American Bearing Manufacturers Association - Load Ratings and Fatigue Life for Ball Bearings
ABMA	Std. 20	American Bearing Manufacturers Association - Radial Bearings of Ball, Cylindrical Roller, and Spherical Roller Types Metric Design
ASME BPVC	Sec. IX	American Society of Mechanical Engineers - Qualification Standard for Welding and Brazing Procedures, Welders, Brazers, and Welding and Brazing Operators
ASME/ANSI	Y14.5M	American Society of Mechanical Engineers - Dimensioning and Tolerancing
ASTM	A276	American Society for Testing and Materials - Specification for Stainless Steel Bars and Shapes
ASTM	A802	American Society for Testing and Materials - Standard Practice for Steel Castings, Surface Acceptance Standards, Visual Examination
HI	HI2.6, 2000	Hydraulic Institute Standards-American National Standard for Vertical Pump Tests
NEMA	MG-1	National Electrical Manufacturers Association - Motors and Generators

2.3 Safety/Quality/Seismic Classifications

Safety class, quality level, and seismic category of vertical pumps described in this specification are noted in the individual vertical pump data sheets issued with the material requisition.

2.4 Engineering Specifications

See section 2 of the material requisition for the referencing of engineering specifications.

2.5 Reference Documents and Drawings

See Figure 1 for LAW pump configuration.

3 Design Requirements

3.1 General

The Seller shall control the quality of items and services to ensure that the requirements of this specification, applicable codes and standards, material requisitions, motor and vertical pump data sheets, and other acquisition services documents are met.

3.2 Design Conditions

3.2.1 The equipment and appurtenances will be used in a plant that has a design life of 40 years. Vertical pumps shall be designed for a minimum service life of 20 years when subjected to normal periodic maintenance.

3.2.2 Pumps are generally categorized as semi-remote (as defined in section 1.4), depending on conditions of service as described in this section.

3.2.3 Plant location and environmental conditions are indicated on individual motor and vertical pump data sheets and other attachments to the material requisitions.

3.2.4 To simplify maintenance and spare parts inventory, it is desirable to have two semi-remote pump configurations for the LAW facility (one for cantilever and one for self-priming – described later in this section) for all service conditions shown in the vertical pump data sheets attached to the material requisitions. If one pump configuration for each category is not possible, the Seller shall minimize the number of pump configurations as much as possible. For general configurations see Figure 1 for LAW services.

3.2.5 The semi-remote LAW vertical pumps shall be designed for an exposure life of not less than five years at the specified conditions. Normal maintenance items shall be included, such as bearings, packing, seals, and gaskets, which, due to the semi-remote radioactive environment, shall function with no maintenance required within that period.

3.3 Conditions of Service

3.3.1 Semi-Remote Vertical Pumps

Vertical pumps shall be located in the LAW facility and exposed to a radioactive environment with expected radiation rates as follows.

Operating Dose Rates

Location	
At vessel top mounting flange	0.50 rads/hr
At center of vessel	1.00 rads/hr

Maximum Cumulative Yearly Dose

Location	
At vessel top mounting flange	4.38×10^3 rads
At center of vessel	8.76×10^3 rads

Note: These values are subject to change. Seller shall verify expected radiation levels with Buyer before commencing design.

3.4 Environmental Conditions

3.4.1 The vertical pumps will be located indoors in rooms maintained between 59 °F dry bulb minimum and 113 °F dry bulb maximum temperature during normal operation.

3.4.2 Vertical pumps and components shall not be stored outdoors.

3.5 Pump Construction

3.5.1 General

The vertical pumps are characterized into various groups and classifications for the purposes of design and construction. The following summary outlines the primary classifications, as defined in this specification.

Location	Quality Level	Access	Preferred Design
LAW	CM	Semi-remote	Cantilever
LAW	CM	Semi-remote	Self-priming

Notes:
Quality levels are detailed in section 8.
Semi-remote is defined in section 1.4.
Preferred pump designs are discussed further in the following sections.

3.5.2 Pump Preferred Design Definitions:

3.5.2.1 Cantilever Pumps

Pumps designated as cantilever pumps are defined for the purposes of this specification as pumps with a shaft and impeller that extends below the radial bearing (located above the mounting flange). Cantilever pumps shall have suction tailpipe and eductor priming assemblies. Cantilever pumps shall not have any bearings located within the interior volume of the vessel. See Appendix B, Pump Design Parameter Summary for individual pump designations.

3.5.2.2 Self-Priming Pumps

Self-priming pumps are defined, for the purposes of this specification, as pumps that have the capability of starting from a low liquid level without the use of a priming eductor or any other external priming

fluid. For all self-priming pumps, no external fluid, other than the main process stream, shall be added to the vessel or discharge piping for any purpose including priming or bearing lubrication (see section 3.5.4.4.3 for an exception for pumps using an extended line-shaft bearing configuration). See Appendix B, Pump Design Parameter Summary, for individual pump designations.

3.5.3 Design parameters are given on the vertical pump data sheets included in the material requisition. Additional parameters for pumps in slurry service are shown in Appendix B.

Important: Seller shall propose designs for all pumps considering vessel nozzle diameters as listed in Appendix B.

3.5.3.1 A pump lifting assembly shall be designed and fabricated by Seller to dimensions and configuration supplied by Buyer, with two lifting lugs located as shown in Figure 1. These lifting lugs shall facilitate a two-point lift by a compatible lift yoke that is in turn lifted by a single main crane hook. Lifting lugs shall be designed to lift 1.5 times the total dry pump weight and shall provide a straight plumb lift of a fully equipped dry pump.

3.5.3.2 A plumb lift test as well as a load test for 1.5 times the normal dry load shall be demonstrated on each unit in the Seller's shop, with Buyer to witness (see section 6.5). The pump shall be lifted off the shop floor and held for 10 minutes. Inspections shall be performed for any deformation or stress cracking at the lifting lugs and at the lifting lugs' attachments or reinforcements to the pump. Buyer will review design calculations related to lifting assembly design.

3.5.4 Semi-Remote Vertical Pumps LAW

3.5.4.1 Semi-remote vertical pumps in the LAW building shall be designed in accordance with CM quality designation requirements as detailed in section 8.1.

3.5.4.2 The LAW pumps are designated as either cantilever or self-priming as defined in section 3.5.2.

3.5.4.3 LAW Pumps - Cantilever

3.5.4.3.1 The preferred design for the LAW pumps designated as cantilever shall be as defined in section 3.5.2. Figure 1, LAW Semi-Remote Vessel-Mounted Vertical Transfer Pumps, illustrates the pump setting and vessel configuration with nominal and critical pump dimensions.

3.5.4.3.2 If the Seller proposes a design other than that described herein, the Seller shall include documentation of two or more successful applications, with contact information, in similar radioactive slurry service for the Buyer to review. Other pump designs may include any design with bearings located below the mounting flange and within the interior volume of the vessel such as vertical line-shaft pumps, submersible canned pumps, or any pump that differs fundamentally from a standard vertical cantilever and tailpipe design.

3.5.4.3.3 The Seller shall design all cantilevered pump components, including casing, impeller, tailpipe, eductor piping, and discharge piping, with the necessary structural supports to withstand all the operating forces, including those from slurry agitation, without incurring

plastic deformation or compromising the structural integrity of the pump. Such forces will be determined and quantified during detailed design.

3.5.4.4 LAW Pumps - Self-Priming

3.5.4.4.1 The preferred design for the LAW pumps designated as self-priming shall be as defined in section 3.5.2, Figure 1. LAW Semi-Remote Vessel-Mounted Vertical Transfer Pumps, illustrates the pump setting and vessel configuration with nominal and critical pump dimensions.

3.5.4.4.2 The Seller shall design all pump components, including casing, impeller, and discharge piping, with the necessary structural supports to withstand all the operating forces, including those from slurry agitation, without incurring plastic deformation or compromising the structural integrity of the pump. Such forces will be determined and quantified during detailed design.

3.5.4.4.3 Self-priming pumps using an extended line-shaft bearing configuration shall be designed with a pressurized support column to protect the shaft assembly from slurry intrusion. The pressurizing media shall be 15 psig of water or inert gas. The Seller shall also provide a method of monitoring the sustained pressure.

3.5.4.5 LAW vertical pumps shall be designed to minimize maintenance personnel radiation exposure time. The number of mounting bolts shall be minimized and designed to allow maintenance personnel to loosen the nuts from above with special wrenches supplied with the equipment. Figure 1 illustrates the desired pump configuration and mounting. Refer to 24590-WTP-3PS-M000-T0002, *General Specification for Mechanical Handling Equipment Design & Manufacture*, for more details on semi-remote handling issues.

3.5.4.6 Deleted (See 3.5.3.1, 3.5.3.2 and 6.5)

3.5.4.7 For LAW application, the main coupling between the drive motor shaft and the vertical pump shaft shall be radiation resistant and shall provide for misalignment (from fabrication and assembly) between the mating shafts at all conditions of service. To simplify pump construction, remote disassembly and re-assembly of coupling is not required for LAW pumps.

3.5.4.8 For LAW application, pumps shall be designed such that the motors can be removed from the pumps and stored in a separate place. Interfacing components on the motor and pump shall have tolerances suitable for motor replacement / interchangeability.

3.5.4.9 For all LAW pumps, the Seller is to provide the process connections (that is, discharge, column fluid pressure, and priming connections) located above the pump mounting flanges.

3.5.5 General Pump Requirements - LAW

3.5.5.1 Pump casings shall be hydrostatically tested in accordance with section 6.2. Castings shall be sound and free from cracks, pits, or nodules in accordance with section 5.1.1. Lined casings are not acceptable.

3.5.5.2 Two or more bearings shall support the vertical rotating pump shaft. In order to improve the stability of the rotating assembly, the bearings shall be preloaded, if necessary, according to bearing size. The load on the thrust bearing shall consist of the sum of the weight of the rotating assembly and the hydraulic thrust and moment from radial thrust and the preload. The load on the radial bearing shall consist of radial components and preload only.

3.5.5.3 All bearings shall be cartridge or standard width, single row radial ball, deep groove (Conrad type) or angular contact type, ABMA (Standard 20) Class 3 Internal Clearance, and selected to give 100,000 hours minimum L_{10} rating life in conformance with ABMA Standard 9.

3.5.5.4 Bearings and bearing seals shall withstand all conditions of service as stated in vertical pump data sheets and in section 3.2.5. Bearing seals shall be designed for the least possible drag on the inner race of the bearing to minimize heat build-up and premature failure. Shaft and housing fits shall be in accordance with ABMA Standard 7.

Note: The Seller shall provide in-place re-greasing for the bearings to allow for re-lubrication of the bearings without removing any components of the motor from their installed positions. An in place grease connector would be located on the LAW vertical pumps for semi-remote access. Semi-remote access for LAW re-greasing applications is defined as an accessible, nonradioactive area for plant personnel to apply grease from a shielded platform, located 4 feet to 5 feet directly above the subject pump. It is imperative that the grease connector be located as close to the bearings as possible (that is, 6 inches or less) in order to minimize opportunities for the grease line to clog due to radiation hardening.

3.5.5.5 Bearings shall be lubricated with Chevron SRI Grease 2 (NLGI Grade 2), as detailed in Specification 24590-WTP-3PS-M000-T0002, *General Specification for Mechanical Handling Equipment Design & Manufacture,* or an approved equivalent radiation-resistant grease in an amount determined by bearing manufacturer. If an alternate grease is recommended, all appropriate technical information shall be submitted for Buyer acceptance.

3.5.5.6 Thrust bearings shall provide full load capabilities if the normal rotation direction of the pump is reversed.

3.5.5.7 Shafts of solid construction are preferred and shall be designed to carry their various loadings without exceeding their normal limits of combined stress, taking into account fatigue stress due to change in load or speed. The first lateral critical speed of shafts and impellers shall be at least 20 % above the maximum operating speed.

3.5.5.8 Special attention shall be given to ensure a smooth, even impeller finish, and care shall be taken to ensure uniformity of shape and finish on the vanes and the space between.

3.5.5.9 The bearing frame shall be constructed and bearing centers spaced so that the shaft and impeller assembly shall have proper support to be free of harmful vibration.

3.5.5.10 Maximum Allowable Vibration Limits

3.5.5.10.1 Motor, shaft, and impeller vibration amplitude shall not be more than 0.002 inches peak-to-peak, measured normal to pump shaft axis and not more than 10 inches above the impeller centerline, in air at motor speed, filtered to shaft speed.

3.5.5.10.2 The pump vibration amplitude shall not be more than 0.001 inches peak-to-peak, measured on the surface of the lower bearing housing normal to shaft axis, in air at motor speed, filtered to shaft speed.

3.5.5.10.3 The pump casing vibration amplitude shall not be more than 0.003 inches peak-to-peak measured outside the surface of the casing normal to shaft axis, pumping water at the design rate, filtered to shaft speed.

3.5.5.11 Shaft seals shall be installed to restrict air in-flow at the point of pump shaft entry to the vessel. A low pressure, non-lubricated stuffing box packed with Grafoil or approved equivalent split-ring, with a minimum compressed axial pitch length of 4 inches shall be furnished and installed by the Seller. Additionally, the Seller shall provide a temporary identification tag to caution against adjusting the Grafoil seal after delivery by Seller.

3.5.5.12 For cantilever pumps, an installed priming system is required to permit pump startup when vessel fluid level is below the pump casing. The priming system shall be a water eductor type of the general configuration shown on Figure 1 and shall be capable of starting the pump over the full range of conditions shown on the vertical pump data sheets and described in this specification. The priming system shall be able to start the pump from a vessel fluid level of 6 inches or more above the specified tailpipe intake height as shown on Figure 1. Available water pressure at the primer nozzle shall be as indicated on vertical pump data sheets. The priming system shall be capable of starting pumps without exceeding the maximum priming liquid volume as stated on the vertical pump data sheets. Priming capabilities will be tested and verified as detailed in section 6.3.5.

3.5.5.13 All pumps shall be provided with keyed impellers with separate threaded lock nuts and double (jam) nuts to positively secure the pump impeller.

3.6 Operational and Design Requirements

3.6.1 The pump head capacity curve (see section 6.3.3) shall be continuously rising from maximum flow to shut-off.

3.6.2 Pump design pressure shall be not less than 25 % above the shut-off head at the specified suction pressure.

3.6.3 The pumps shall operate free of cavitation over the entire range of conditions shown on Appendix B, Pump Design Parameter Summary, and the vertical pump data sheets.

3.6.4 The Seller shall minimize rotational speed of shafts and impellers due to wear considerations and head losses encountered when pumping slurries at high speeds.

3.6.5 Frequency and length of operation for each pump is shown on Appendix A, Pump Operation Summary.

3.6.6 Vertical pumps in slurry service shall be designed to withstand sludge or slurry yield stresses of 300 dynes/cm^2 under normal operation. Startup torque shall be based on two times the normal running torque without priming water.

3.7 Drivers

3.7.1 Motors

3.7.1.1 Drive motors shall conform to the requirements of Specification 24590-WTP-3PS-MUMI-T0002, *Low Voltage Induction Motors*. Adjustable speed drives shall conform to the requirements of Specification 24590-WTP-3PS-EVV1-T0001, *Engineering Specification for Low Voltage Adjustable Speed Drives.*

3.7.1.2 The Seller shall provide each pump with a totally enclosed fan-cooled (TEFC), washdown rated, chemical-type motor in accordance with the motor and vertical pump data sheets included with the material requisition.

3.7.1.3 Motor rated horsepower shall not be exceeded by any operating condition that can develop with the impellers.

3.7.1.4 Motors intended for use with adjustable speed drives shall be rated for inverter duty, with corresponding adjustable speed drives, as detailed on low voltage induction motor data sheets and adjustable speed drive data sheets, included with the material requisition package, in order to allow for varying rheologies and liquid levels of the slurries being pumped. The Seller shall make every effort to minimize the number of sizes and configurations of the motors. A single motor size with variable speed capability for all vertical pumps is preferable. Multiple motor configurations and constant speed motors will be considered if warranted.

3.7.1.5 All motors shall be NEMA design C type (in accordance with NEMA MG-1). The motor shall be the weakest link in a high torque event such that the shaft, impeller blades, and so forth do not fail in any event.

3.7.2 Semi-Remote Service

3.7.2.1 Insulation for semi-remote motors in the LAW radioactive environment shall be radiation resistant to meet conditions of service described in section 3.3.

3.7.2.2 The Seller shall install all required conduit with proper wiring from the motor junction box to the electrical connectors. All electrical components shall be waterproof. Cable shall be radiation resistant for levels shown in section 3.3 (see section 6.3.9).

3.8 Seismic Requirements

3.8.1 The semi-remote vertical pump components, including the mounting plates, shall be designed in accordance with the methods and procedures described in Specification 24590-WTP-3PS-FB01-T0001, *Structural Design Loads for Seismic Category III and IV Equipment and Tanks*, attached to the material requisition.

3.9 Accessibility and Maintenance

3.9.1 The Buyer's layout allows for necessary access and space requirements to facilitate maintenance during normal plant operation or scheduled shutdown.

3.9.2 The Seller's recommended accessibility and maintenance requirements for each piece of equipment shall be included in the Seller's submittal.

3.9.3 For the LAW Facility pumps, frequency of inspection and maintenance intervals shall be in accordance with equipment Seller's recommendations and shall not be less than one year. (excluding re-greasing of bearings.)

4 Materials

4.1 General

4.1.1 Pump materials situated above and fastened to the mounting plate (see Figure 1) shall be austenitic stainless steel type 316L. Exceptions will be the pump priming and discharge piping, which shall be constructed of the same material as the respective nozzle, and will extend down to the mounting plate. All piping shall be seamless or welded pipe with 100 % radiographic examination.

Note: The Seller may utilize standard materials of construction for the motor, bearings, and coupling components.

All other components (such as piping, nozzle assemblies, lifting assemblies, main shaft seals, nut retainer, and dutchman) shall be 316L stainless steel unless specified otherwise.

The materials of construction of special components not named herein shall be subject to the Buyer's review.

4.1.2 Pump materials below and including the mounting plate, with the exception of those designated as wet-end components (see section 4.1.4), shall be 316L stainless steel. Stainless steel material shall be in accordance with ASTM A276.

4.1.3 The Seller shall identify, on assembly drawings, all materials (including plate, forging, pipe, bolting) by ASTM material designation, class and UNS number, and shall submit material certificates for the Buyer's review and approval.

4.1.4 Wet-end components, which include the impeller, shaft sleeve, casing, and suction disc, shall be as indicated on vertical pump data sheets.

4.1.5 Gasket selection and configuration shall be based on specific application and performance requirements.

4.1.6 Fasteners shall be as shown on Figure 1.

4.2 Positive Material Identification

4.2.1 All pressure containing parts materials shall be in accordance with 24590-WTP-3PS-G000-T0002, *Specification for Positive Material Identification (PMI).*

4.3 Prohibited Materials

4.3.1 Bronze, copper, lead, zinc, tin, antimony, cadmium, or other low melting point metals, their alloys, or materials containing such metals as their basic constituents or sulfur, and halogens shall not be used in direct contact with stainless steel. This prohibition applies to use of tools, fixtures, paints, coatings and sealing compounds, and any other equipment or materials used by the Seller in handling, assembly, and storage of stainless steel parts or components.

4.3.2 Asbestos, Teflon, and aluminum shall not be used in any component of the vertical pumps.

5 Fabrication

5.1 General

5.1.1 All casting surfaces shall meet severity level-1 visual examination acceptance standards contained in ASTM A-802. Castings shall be free from cracks, tears, voids, or other harmful defects indicative of substandard casting quality.

5.1.2 All vertical pumps shall be neatly finished and free of burrs and fins, and other harmful surface conditions.

5.1.3 Semi-remote vertical pumps shall be designed to minimize crevices that can trap contaminants for ease of decontamination. All surfaces are to be polished smooth (RMS 125 finish). Additionally, all non-machined plate, pipe surfaces, and welds shall be glass beaded to a 112 Ra finish (equivalent to 125 RMS machined finish) or better. Actual surface finishes shall be verified with a Profilometer and recorded in Ra format. Material hold-up points internal to the pump shall be minimized.

5.2 Welding Procedures

All welding on pump components shall be in accordance with ASME Section IX, *Qualification Standard for Welding and Brazing Procedures, Welders, Brazers, and Welding and Brazing Operators*. The Seller shall submit all welding procedures for vertical pumps for review.

5.3 Repairs

The repair welding procedure shall include, as a minimum, the following:

a Type and extent of repairable defects
b Defects removal and nondestructive examination used to ensure complete defect removal
c Weld preparation and treatment, including reference to welding procedures qualified in accordance with ASME Section IX

d Nondestructive examination methods

5.4 Painting, Surface Preparation, and Cleaning

All painting, surface preparation, and cleaning for vertical pumps shall be in accordance with the Seller's standard practices unless superceded by additional requirements by the Buyer during design evaluation stage.

6 Inspection and Testing

6.1 General

The Seller shall supply the Buyer with all test data, certified by the Seller, whether witnessed or not. Pumps shall not be shipped until test data and curves have been reviewed by the Buyer.

6.2 Hydrostatic Tests

6.2.1 Each pressure part of the pump shall be hydrostatically tested at 150% of maximum allowable working pressure (MAWP). Hydrostatic tests shall be maintained for at least 30 minutes.

6.2.2 Before a hydrostatic test procedure is implemented, the Seller shall submit it to the Buyer for review.

6.2.3 Water used in hydrostatic testing shall be of potable quality or better. At no time shall it contain over 50 ppm chlorides.

6.2.4 Systems shall be thoroughly drained and dried by wiping or blotting all accessible areas within 24 hours after testing, rinsing, or flushing operations. Water shall not be left in the system before draining for more than 48 hours.

6.3 Performance Tests

6.3.1 A shop performance test shall be conducted with water on all pumps in accordance with Hydraulic Institute (HI2.6) standards at rated speed over the complete range of flow to maximum capacity to demonstrate fulfillment of efficiency and rating guarantees. Performance tests shall be run using the NPSH available to the pump at the site, including adjustments for all expected liquid levels in vessels (described in this specification and in data sheets) and corrected to shop test conditions.

6.3.2 An NPSH at incipient cavitation test shall be performed in accordance with HI standards on one pump of each type specified. At least three flow points shall be tested as a minimum: design point, run out, and minimum flow. At each point, five or more readings shall be taken at increasingly lowered suction pressure until a 3 % drop in head is noted. Acceptance criteria shall be: NPSH Available minus NPSH Required at normal design capacity shall be three (3) feet or greater.

6.3.3 Water test results shall be plotted, showing head, efficiency, and brake horsepower vs. capacity. Water temperatures shall be recorded, and test results corrected to a design average temperature. For pumps in slurry service, in addition to the water head curve above, the Seller

shall provide an estimated slurry head curve for comparison. The thickest slurry shown in Appendix B, Pump Design Parameter Summary, shall be used; specifically, the highest yield stress (if non-Newtonian) and highest viscosity shall be used.

6.3.4 Additional shop test results shall be plotted showing the eductor primer flow rate vs. pressure at the primer nozzle with an indication of minimum pressure, flow, and total quantity of priming water required to prime the pump at the low liquid level shown on Figure 1.

6.3.5 Shop test results must verify that all pumps are capable of starting from the minimum liquid level without exceeding the maximum priming liquid volume as listed in the vertical pump data sheets.

6.3.6 Unusual vibration and noise shall be corrected and documented for each test point. The cause of the noise as well as all corrective action taken shall also be noted. Shop tests must verify all pumps operate within maximum allowable vibration limits specified in section 3.5.5.10.

6.3.7 Witness tests shall be run after final trim has been calculated and applied to pumps. No final witness test shall be run without the Buyer's supplier quality representative (SQR) present. A satisfactory full-speed test shall be run at final impeller diameter before the Buyer's representative is called in to observe the test. A preliminary curve and test data shall be submitted to the Buyer's SQR immediately after each test. The amount of acceptable plus tolerance on head, capacity, and horsepower shall be within the range of tolerances suggested by the HI standards.

6.3.8 Shop tests must verify that the first lateral critical speed of all pump shafts and impellers is at least 20% above the maximum operating speed.

6.3.9 During testing, each pump tested shall be fully supplied with electrical power supplied by means of the electrical connectors per approved design (see section 3.7.2.2).

6.3.10 After tentative acceptance by the Buyer's SQR, the pumps may be readied for shipment but shall not be released until acceptance by the Buyer of formal submission of curves and data, which shall constitute the performance test report.

6.4 Final Dimensional Checks - Semi-Remote Vertical Pumps

6.4.1 After fabrication and testing, the Seller shall verify the dimensional requirements as given in Figure 1 in accordance with the procedures and precision measuring techniques described in Appendix D.

6.4.2 The Seller shall provide proof that the pump and pump appurtenances are dimensionally correct within the specified tolerances. This shall be accomplished by the completion of dimensional record drawings. These drawings, with details of the critical dimensions added by the Seller, shall be submitted to the Buyer for review prior to shipment.

Note: In addition to pump and pump appurtenances above, as-built shim dimensions of each individual shim required for precision placement of the pump shaft thrust and radial bearings shall be recorded on the dimensional record drawings for each pump.

6.4.3 All final dimensional measurements will be witnessed by the Buyer. No witness tests shall be performed without the Buyer's SQR present.

6.5 Plumb Lift Test

One complete pump of each type shall be tested for single point lift with Seller furnished lift yoke, designed to dimensions and configurations supplied by Buyer, connected to lifting lugs. Variation from vertical shall be 1-inch maximum from plumb. All plumb lift tests will be witnessed by Buyer. No witness tests shall be performed without the Buyer's SQR present.

7 Packaging, Handling, and Storage

7.1 General

Packaging, handling, and storage of the vertical pumps shall be in accordance with 24590-WTP-3PS-G000-T0003, *Engineering Specification for Packaging, Handling and Storage Requirements*.

7.2 Tagging

A stainless steel nameplate shall be attached to each vertical pump showing the manufacturer's name, shop location, date of manufacture, serial number, equipment rating, equipment tag numbers, weight of assembly, and material requisition number. Instruments shall be identified with Buyer-provided tag numbers on stainless steel tags using 1/4 inch tall characters.

8 Quality Assurance

8.1 CM Quality Designation - QA Requirements Specific to LAW Items or Service

8.1.1 The Seller's quality assurance program (QAP) requirements are included in 24590-WTP-3PS-G000-T0001.

8.1.2 The Seller's QAP manual shall be submitted to the Buyer for review in accordance with 24590-WTP-3PS-G000-T0001.

8.1.3 Program QA Elements

The Seller's QAP, as a minimum, shall contain the requirements detailed in the supplier quality assurance program requirements data sheets listed in section 2 of the material requisition.

8.2 Seller Deviation

Each Seller shall be required to identify and promptly document all deviations from the requirements of the acquisition documents. Seller-proposed deviations from acquisition services documents shall be initiated by use of a supplier deviation disposition request (SDDR) form, listed in section 2 of the material requisition and attached thereto. In addition, the Seller shall be required to describe the recommended disposition based on appropriate analysis. Submittals of request for deviations from sub-Sellers shall be through the primary Seller to the Buyer.

9 Configuration Management

Equipment or components covered by this specification are identified with plant item numbers as shown in the motor and vertical pump data sheets. Each item shall be identified in accordance with section 7.2, Tagging.

10 Documentation and Submittals

10.1 General

The Seller shall submit to the Buyer engineering and quality verification documents in the forms and quantities shown in Form G-321-E, *Engineering Document Requirements*, and Form G-321-V, *Quality Verification Document Requirements*, attached to section 3 of the material requisition.

10.2 Submittals

The Seller shall submit the following:

10.2.1 Drawings

Drawings shall show the following information:

10.2.1.1 The outline dimensions of the vertical pumps, including outline and detail drawings for each major component. These drawings shall reflect the "as-shipped" configuration of the equipment and instrumentation.

10.2.1.2 Details of construction

10.2.1.3 Mounting dimensions and information required for the design of supports and foundations

10.2.1.4 Operating weight of each vertical pump

10.2.1.5 Dynamic loading on mounting flange

10.2.1.6 The space required for the removal of components

10.2.1.7 The weight of individual components

10.2.1.8 The locations and identification of parts that are included in the parts list

10.2.1.9 Wiring, schematic diagrams, and connection. Diagrams shall include wire gauges and fuse sizes applicable to the supplied units only.

10.2.1.10 The ASTM or equivalent designation for materials

10.2.1.11 Nameplate lists

10.2.2 Procedures

Procedures shall include the following:

10.2.2.1 Welding procedures

10.2.2.2 Procedures for repairs of rejected items or parts

10.2.2.3 Electrical component performance test procedures

10.2.2.4 Seller's shipping preparation procedures, including initial startup and checkout procedures, instructions for final alignment checks and any other special instructions prior to initial start-up in facility.

10.2.2.5 Startup, shutdown, and idle procedures

10.2.2.6 Special instruction for installing and maintaining any packing and seals for shafts, bearings, or similar items. Include special instructions for extended (up to 3-years) storage or idle conditions prior to initial start-up in facility.

10.2.2.7 Procedure for all priming operations using an eductor or similar item, including special instructions and sequence for pump startup for all liquid level scenarios

10.2.2.8 For in-place re-greasing (see section 3.5.5.4), the Seller shall submit a full procedure for this re-lubrication process, including all materials needed, proper sequence, special remote crane operator instructions, and instructions for semi-remote access.

10.2.2.9 Seller shall submit a written tolerance control procedure to establish and verify horizontal and vertical centerlines, precise horizontal and vertical measurements, flatness, and datum planes for dimensional measurement of vertical pumps.

10.2.3 Inspection and Test Reports

10.2.3.1 Records of repairs and rejected items or parts

10.2.3.2 Electrical component performance test reports

10.2.3.3 Bench test mechanical performance reports

10.2.4 Calculations

Calculations shall be submitted for the Buyer's review and permission to proceed.

10.2.4.1 Seismic analysis

10.2.4.2 Lifting lug stress analysis

10.2.5 Manuals

Manuals and instructions shall be supplied per the G-321-E form and shall include the following:

10.2.5.1 Erection and installation manuals that provide complete, detailed procedures for installing and placing equipment in initial operation. The manuals shall include all erection and installation drawings. A minimum of five (5) sets of each manual type shall be provided.

10.2.5.2 Operation and maintenance manuals that provide complete, detailed descriptions of components and accessories, including data sheets showing design, construction and performance data for equipment. Manuals shall include drawings required for operation, maintenance and repair, maintenance requirements, instructions, and operational troubleshooting guides. Motor to pump alignment criteria shall be provided by the Seller, including any special alignment criteria.

10.2.5.3 Instruction manuals shall cover every item purchased, including materials that the Seller has obtained from a subcontractor. The Seller shall obtain such manuals and lists, and submit them to the Buyer.

10.2.5.4 The Seller shall provide instructions regarding site storage and preparation and protection of equipment after installation and prior to operation.

10.2.6 Certificates of Conformance

10.2.6.1 The Seller shall provide certificates of conformance demonstrating compliance with all applicable standards, specifications, and drawings.

10.2.6.2 The Seller shall certify that lifting eyes or lugs and/or spreader bars are suitable for the safe, balanced lifting and handling of the equipment.

10.2.7 Lists and Schedules

Lists and schedules shall include the following:

10.2.7.1 Schedule of engineering and fabrication

10.2.7.2 Parts list, and cost for parts and items subject to deterioration and replacement

10.2.7.3 List of recommended spare parts

10.2.8 Materials Certificates/Statistics

Material certificates of compliance shall be submitted for components of the vertical pumps. The certificates shall include certified material test reports of chemical and physical properties for all stress components.

10.2.9 Data

Data shall include the following:

10.2.9.1 Buyer's Motor and Vertical Pump Data Sheets, completely filled out by the Seller, showing all information required to determine that the units are of the design and materials specified herein.

10.2.10 Design and Technology Selection Criteria

10.2.10.1 Bearing Grease Selection

If an alternative grease for bearings is recommended other than that specified herein (section 3.5.5.5), all appropriate technical information shall be submitted for Buyer acceptance.

10.2.10.2 Deleted

10.2.11 Material Safety Data Sheets

Material Safety Data Sheets shall be provided for all oils, greases, paints, preservatives, and all other chemicals and chemical products that are shipped with the vertical pumps.

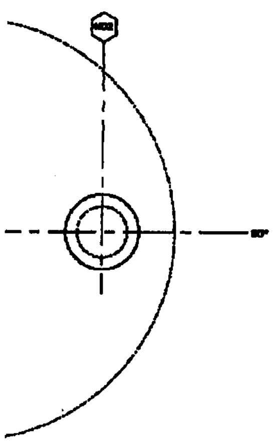

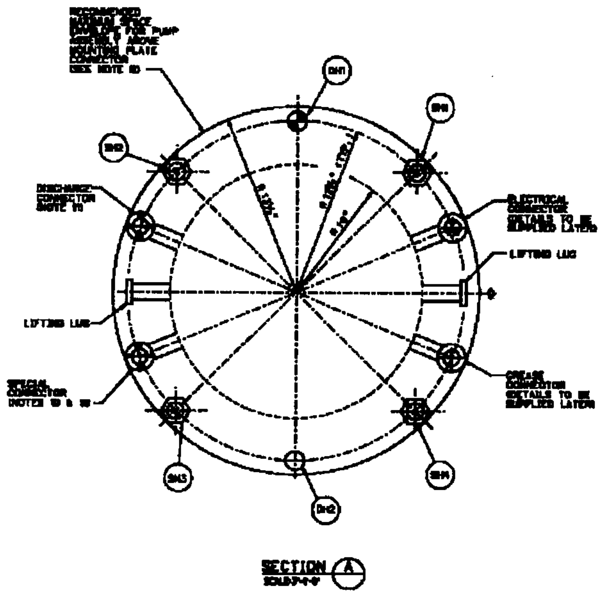

SECTION A

NOTES

1. THE PUMP COMPONENTS IN SLURRY SERVICE SHALL WITHSTAND EMERGENCY STARTUP TORQUES AS PER [illegible] "ENGINEERING SPECIFICATION FOR VESSEL-MOUNTED VERTICAL TRANSFER PUMPS - LAW FACILITY".

2. FOR VERTICAL CANTILEVER CONFIGURATION, DETAILED SHAFT DESIGN SHOULD TAKE INTO ACCOUNT HYDRAULIC FORCES, CRITICAL SPEED, AND [illegible] SHAFT WEIGHT AND SHALL BE BY SELLER.

3. LIFTING LUG LOCATIONS SHOWN MAY BE ALTERED WITH PRIOR APPROVAL IF REQUIRED TO ACCOMMODATE PUMP DRIVE CONFIGURATION.

4. ALL DIM. IN INCHES PER ANSI Y14.5M-1994 UNLESS OTHERWISE INDICATED.

5. ALL BOLTED CONNECTIONS SHALL BE POSITIVELY SECURED.

6. ALL DIMENSIONS APPROXIMATE. BUYER TO APPROVE PRIOR TO FABRICATION.

7. DELETED.

8. MOUNTING PLATE OUTER DIAMETER SHALL MATCH [illegible] FLANGE DIMENSIONS. RECOMMENDED MAXIMUM SPACE ENVELOPE FOR PUMP ASSEMBLY SHALL BE FLANGE OUTER DIAMETER.

9. DELETED.

10. FOR THE LFP, LOP & RLD CONFIGURATIONS THIS CONNECTOR WILL BE A PRIMING CONNECTION. FOR THE LOP SELF-PRIMING CONFIGURATION THIS CONNECTOR WILL BE A SUPPORT COLUMN FLUID PRESSURE CONNECTION.

11. SELLER TO PROVIDE PIPE ENDS PREPARED FOR INSTALLATION OF IMPACT UNION FITTINGS WITH BUTT WELD CONFIGURATION. INSTALLATION AND FITTINGS ARE BY BUYER.

12. DIMENSIONING AND TOLERANCING ARE PER ANSI Y14.5M (STANDARD FOR DIMENSIONING AND TOLERANCING).

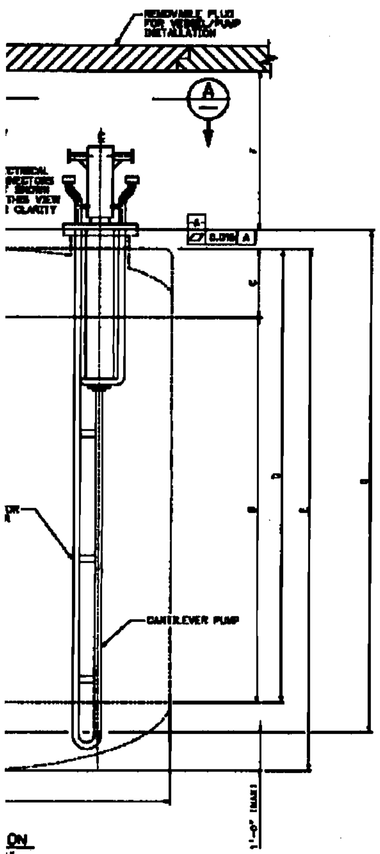

PUMP AND VESSEL DIMENSIONS BY SYSTEM				
	LFP	LOP	LCP	RLD
A	[illegible]	12'-0"	[illegible]	[illegible]
B	[illegible]	[illegible]	[illegible]	N/A
C	[illegible]	[illegible]	2'-3 1/4"	N/A
D	[illegible]	[illegible]	[illegible]	[illegible]
E	[illegible]	12'-0"	[illegible]	[illegible]
F	[illegible]	[illegible]	[illegible]	4'-2"
TANK HEAD TYPE	F & D	F & D	F & D	FLAT

STUD/DOWEL PIN HOLE LOCATIONS AND DIAMETERS					
NOZZ.	X-AXIS	Y-AXIS	⌖ TOLERANCE	HOLE SIZE	⌀ TOLERANCE
SH1	0	0	⌖ [illegible]	[illegible]	[illegible]
SH2	0	[illegible]	⌖ [illegible]	[illegible]	[illegible]
SH1	[illegible]	[illegible]	⌖ [illegible]	[illegible]	[illegible]
SH2	[illegible]	[illegible]	⌖ .125	[illegible]	[illegible]
SH3	[illegible]	-21.330	⌖ .125	[illegible]	[illegible]
SH4	[illegible]	-21.330	⌖ .125	[illegible]	[illegible]

TOLERANCES ON ALL DIMENSIONS UNLESS OTHERWISE NOTED, TO BE

		DECIMALS:
ANGLES ±0° 30'	.X	± .1
FRACTIONS ± 1/8"	.XX	± .05
SURFACE FINISH	.XXX	± .010

FIGURE 1

Appendix A

Pump Operation Summary

#	Pump ID#	Vessel Description	Pump Fi
			(hours betw
1	LCP-PMP-00001A	LAW Concentrate Receipt Pump	
2	LCP-PMP-00001B	LAW Concentrate Receipt Pump	
3	LCP-PMP-00002A	LAW Concentrate Receipt Pump	
4	LCP-PMP-00002B	LAW Concentrate Receipt Pump	
5	LFP-PMP-00001A	Melter 1 Feed Preparation Vessel Pump	
6	LFP-PMP-00001B	Melter 1 Feed Preparation Vessel Pump	
7	LFP-PMP-00002	Melter 1 Feed Vessel Pump	As N
8	LFP-PMP-00003A	Melter 2 Feed Preparation Vessel Pump	
9	LFP-PMP-00003B	Melter 2 Feed Preparation Vessel Pump	
10	LFP-PMP-00004	Melter 2 Feed Vessel Pump	As N
11	LOP-PMP-00001	SBS Condensate Vessel Pump	24 / Co
12	LOP-PMP-00002	SBS Condensate Vessel Pump	24 / Co
13	LOP-PMP-00004	SBS Condensate Vessel Pump	24 / Co
14	LOP-PMP-00005	SBS Condensate Vessel Pump	24 / Co
15	RLD-PMP-00001A	Plant Wash Vessel Pump	6
16	RLD-PMP-00001B	Plant Wash Vessel Pump	6
17	RLD-PMP-00003A	SBS Condensate Collection Vessel Pump	4
18	RLD-PMP-00003B	SBS Condensate Collection Vessel Pump	4

NOTE 1: Finite times shown in this column are for batch transfers only. All pumps shown as recirc. should be designed for continuous service. All other pumps should be designed for intermittent service in addition to transfer durations shown (nom. 30 min. per day)

Appendix B

Pump Design Parameter Summary

ility rel	Access	Preferred Design	Nozzle Size [in]	Vessel ID#	Vessel Description	Mix Descrip	Mix Nature	If Non-Newt	Yield Stress [dynes/cm²]		Consistency [cP]			Density [g/cm³]		Solids Content			Pa
									Max	Min	Max	Design	Min	Max	Min	Total	Dissolved	Undissolved	
	Semi- Remote	Self-priming	20	LCP-VSL-00001	LAW Concentrate Receipt [1]	Homogeneous	Newtonian	N/A	None	None	15	-	0.4	1.47	1	45	45	0	
	Semi- Remote	Self-priming	20	LCP-VSL-00001	LAW Concentrate Receipt [1]	Homogeneous	Newtonian	N/A	None	None	15	-	1	1.47	1	45	45	0	
	Semi- Remote	Self-priming	20	LCP-VSL-00002	LAW Concentrate Receipt [2]	Homogeneous	Newtonian	N/A	None	None	15	-	1	1.47	1	45	45	0	
	Semi- Remote	Self-priming	20	LCP-VSL-00002	LAW Concentrate Receipt [2]	Homogeneous	Newtonian	N/A	None	None	15	-	1	1.47	1	45	45	0	
	Semi- Remote	Cantilever	20	LFP-VSL-00001	Melter 1 Feed Preparation Vessel	Solid Suspension	Non-Newtonian	Thixotropic	150	0	90	-	0.4	1.83	1.67	63.4	33.4	30	2
	Semi- Remote	Cantilever	20	LFP-VSL-00001	Melter 1 Feed Preparation Vessel	Solid Suspension	Non-Newtonian	Thixotropic	150	0	90	-	0.4	1.83	1.67	63.4	33.4	30	2
	Semi- Remote	Cantilever	20	LFP-VSL-00002	Melter 1 Feed Vessel	Solid Suspension	Non-Newtonian	Thixotropic	150	0	90	-	0.4	1.83	1.67	63.4	33.4	30	2
	Semi- Remote	Cantilever	20	LFP-VSL-00003	Melter 2 Feed Preparation Vessel	Solid Suspension	Non-Newtonian	Thixotropic	150	0	90	-	0.4	1.83	1.67	63.4	33.4	30	2
	Semi- Remote	Cantilever	20	LFP-VSL-00003	Melter 2 Feed Preparation Vessel	Solid Suspension	Non-Newtonian	Thixotropic	150	0	90	-	0.4	1.83	1.67	63.4	33.4	30	2
	Semi- Remote	Cantilever	20	LFP-VSL-00004	Melter 2 Feed Vessel	Solid Suspension	Non-Newtonian	Thixotropic	150	0	90	-	0.4	1.83	1.67	63.4	33.4	30	2
	Semi- Remote	Cantilever	20	LOP-VSL-00001	SBS Condensate Vessel	Homogeneous	Newtonian	N/A	N/A	N/A	-	0.66	-	1.025	-	5	2	3	
	Semi- Remote	Cantilever	20	LOP-VSL-00001	SBS Condensate Vessel	Homogeneous	Newtonian	N/A	N/A	N/A	-	0.66	-	1.025	-	5	2	3	
	Semi- Remote	Cantilever	20	LOP-VSL-00002	SBS Condensate Vessel	Homogeneous	Newtonian	N/A	N/A	N/A	-	0.66	-	1.025	-	5	2	3	
	Semi- Remote	Cantilever	20	LOP-VSL-00002	SBS Condensate Vessel	Homogeneous	Newtonian	N/A	N/A	N/A	-	0.66	-	1.025	-	5	2	3	
	Semi- Remote	Cantilever	20	RLD-VSL-00003	Plant Wash Vessel	Homogeneous	Newtonian	N/A	N/A	N/A	-	1	-	1.02	1	1	2	-	
	Semi- Remote	Cantilever	20	RLD-VSL-00003	Plant Wash Vessel	Homogeneous	Newtonian	N/A	N/A	N/A	-	1	-	1.02	1	1	2	-	
	Semi- Remote	Cantilever	20	RLD-VSL-00005	SBS Condensate Collection Vessel	Homogeneous	Newtonian	N/A	N/A	N/A	-	1	-	1.02	1	5	2	-	
	Semi- Remote	Cantilever	20	RLD-VSL-00005	SBS Condensate Collection Vessel	Homogeneous	Newtonian	N/A	N/A	N/A	-	1	-	1.02	1	5	2	-	

Abbreviations for Systems

- LCP LAW Concentrate Receipt Process System
- LFP LAW Melter Feed Process System
- LOP LAW Primary Offgas Process System
- RLD LAW Radioactive Liquid Waste Disposal System

IMPORTANT: These values are subject to change.
Information listed here will be updated as design progresses if required.
Seller shall verify values with Buyer before initiating detailed design.
In the event of a discrepancy between values shown here and the data sheets or elsewhere in this Bid package, Seller shall use the most conservative values.

Typical Chemical Composition of Slurries

LAW SLURRY LEGEND:

LCP Refers to pretreated waste for LCP pumps.
LFP-MFPV Refers to Melter Feed for LFP-PMP-00001A/B, and 00003A/B
LFP-GFC Refers to Glass Forming Chemicals for LFP-PMP-00001A/B, and 00003A/B
LFP-MFV Refers to Melter Feed for LFP-PMP-00002, and 00004

Compound	LCP [wt%]	LFP-MFPV [wt%]	LFP-GFC [wt%]	LFP-MFV [wt%]
Al_2O_3	5.6%	5.3%	5.1%	5.3%
B_2O_3	0.6%	5.4%	8.3%	5.4%
Na_2O	41.0%	17.0%	3.8%	17.0%
Fe_2O_3	0.1%	3.7%	5.7%	3.7%
SiO_2	0.4%	33.1%	51.2%	33.1%
SO_3	0.9%	0.3%	0.005%	0.3%
ZrO_2	0.1%	1.5%	2.3%	1.5%
ZnO	0.1%	1.4%	2.1%	1.4%
Other	51.2%	32.3%	21.5%	32.3%

Appendix C

Connectors

Appendix C

Connectors

1.0 General

Drawings and brief descriptions of the types of connectors proposed for the vertical pumps are detailed in section 3. Certain connectors shown here will be supplied by the Buyer, as described in this specification and in Appendix D, and the Seller shall be responsible for incorporating the proper interfaces and locations into their final designs. The final selection of connector size and type is subject to change and shall be approved by the Buyer prior to fabrication of the pumps.

2.0 Connector Selection

2.1 Semi-Remote Process Connectors - LAW

The semi-remote process connectors will be 150# Raised Face flanges.

Semi-Remote Electrical Connectors - LAW

The semi-remote electrical connectors shall be standard electrical connections sized appropriately for the specific power applications. Semi-remote electrical connectors shall be supplied by the Seller.

3.0 Connector Technology

General

Figure C3.1 DELETED

Appendix D
Final Dimensional Measurements of Pumps by Seller

Appendix D

Final Dimensional Measurements of Pumps by Seller

1.0 Purpose

The Seller shall perform dimensional measurements for all vertical pumps, all nozzles, and all appurtenances at the Seller's shop. All as-built dimensions obtained thereby shall be recorded as required in Paragraph 6.4.1 of Specification 24590-WTP-3PS-MPC0-T00008. The Seller shall give the Buyer opportunity to witness all final dimensional measurements and review all dimensional records prior to shipment.

2.0 Scope

2.1 Items Included

The Seller shall furnish the following:

- Enclosed and/or partitioned separate temperature controlled area
- Level precision floor surface or surfaces
- Instrument supports, platforms, ladders, stairs, and guardrails
- Overhead crane access
- Lighting
- Facility and support drawings
- Vertical pump support stand
- Lifting yokes, fabricated to dimensions and configurations supplied by Buyer
- Optical instruments and scales

3.0 Requirements - Shop Facilities

3.1 The Seller shall provide a measurement area for final dimensional verification. This will require approximately 30 feet of headroom to the bottom of the crane hook. A vertical pump stand with a level, flat surface matching the tolerances of the pump support plates is required for mounting pumps during dimensional check. The measurement area shall be temperature controlled to 70 °F ± 5 °F. The Seller shall supply calibrated thermometers with traceable calibration sheets. This temperature shall be maintained during the dimensional measurement by the Seller.

3.2 The Seller shall make final dimensional measurements using their own equipment, such as calibrated jig transits, tilting levels, and calibrated and certified scales. Scales shall be graduated to 0.01 inch. The optical instruments shall be equipped with micrometers graduated to 0.001 inch.

3.3 The vertical pump support plate face shall be profiled at 15 degree intervals and plotted for record.

3.4 The Seller shall allow adequate time to perform final dimensional measurement of each pump in the presence of the Buyer's representative to witness/observe the Seller's inspection activity. The Seller shall also provide appropriate notification to the Buyer for each witnessed inspection activity. Note that the Seller has sole responsibility for quality control inspections of their products.

3.5 There shall be no visual interference with the optical measurements performed by the Seller. Examples of visual interference are arc welding and equipment movement.

3.6 The Seller shall provide rigid supports for optical transits and levels. These supports shall be freestanding and not touching the remote vertical pumps. Substantial platforms, ladders, stairs, and handrails shall be provided, all meeting OSHA requirements. The instrument supports shall be set up a minimum of 7 feet away from the vertical pump stand and at least 3 feet higher.

3.7 The Seller shall submit the following drawings for the Buyer's review:

a The measurement enclosure area

b The vertical pump stand

c The optical instrument supports

d Substantial platforms, ladders, and handrails

e The crane interface

3.8 The Seller shall furnish one balanced lifting yoke, or one for each lifting lug configuration as necessary, to the dimensions and configurations supplied by the Buyer, for the plumb lift testing of the vertical pumps.

3.9 The Seller shall provide adequate lighting to facilitate the optical dimensional measurements. Lighting should generally be 100-foot candle average where measurements will be made.

Engineering Document Review

EDR No.* 24590- Rev.* Page 1 o

Return to Preparer:	Marshall Nielsen c/o Bill Honsaker	MS6-P2	371-4542
	Name (Print)	*Location*	*Telephone*
	Mechanical Systems, Central Eng.	5/19/04	5/26/04
	Discipline	*Date*	*Comments Due Date*

INTERNAL ENGINEERING DISTRIBUTION ***SEE ATTACHED E-MAIL FOR CHANGES FROM REV. 0***

Reviewer / Recipient	Discipline	Mail Stop	Info Only Recipient	Reviewer / Recipient	Discipline	Mail Stop	Info Only Recipient
[redacted]	Mech. Sys. Central	MS6-P2					
Mac Sanvictores	LAW Systems Eng.	MS12-2B					

EXTERNAL REVIEWING ORGANIZATIONS

Point of Contact	Organization	Mail Stop	Point of Contact	Organization	Mail Stop
☐ Betty Tornow	Project Director	MS14-3C	☐ Karen Vacca	Operations	MS12-B
☐ Betty Tornow	Project Manager	MS14-3C	☐ Amorette Pryor	Project Administrative Services	MS11-B
☐ Earl Duda	Acquisition Services	MS6-P1	☐ Buck Payne	Project Controls	MS4-A2
☐ Liz Hagie	Business Services	MS14-3C	☒ Michelle Mitchell	Quality Assurance	MS14-4B
☐ Paul Petrusha	Construction	MS4-A1	☐ Tamela Michaud	Safety Assurance	MS14-4A
☒ Emmy Sauceda	Environmental & Nuclear Safety	MS4-C1			

Safety screenings are required for some design documents, such as PFDs, P&IDs, MHDs, V&IDs, ITS electrical single line diagrams, Plant Design GA plans, specifications for QL-1/QL-2 items, system descriptions, and DCNs, SCN, FCRs, and SDCNs that affect any of these documents. Refer to **section 3.1 of 24590-WTP-GPP-SREG-002** for a complete list of the design documents requiring safety screenings.

NOTE: This is not intended to be an all-inclusive list of the documents that go to E&NS for review. Engineering documents might also require review by E&NS for purposes other than conducting a safety screening/evaluation.

SAFETY SCREENING (to be completed by E&NS)

Refer to procedure 24590-WTP-GPP-SREG-002, section 3.5 and Appendices 3 and 4 for guidance in answering this question. If the answer to the following question is Yes, perform a safety evaluation in accordance with the procedure, and provide the SE number below. See Appendix 3 for information on minor changes.

Does this change affect the safety envelope (SRD and applicable facility SED[s]), or is it a "broad scope" change?	☐ Yes ☐ No ☐ Minor Only
	SE #

Basis *(Provide basis for both parts of the question, and for both a "Yes" or "No" decision. Provide a brief basis for "minor only" changes.)*:

Print/Type Name of AB Reviewer	*Initial*	*Date*	*Print/Type Name of FNS Supervisor/ Regulatory Safety Manager*	*Initial*	*Date*

DOCUMENTS REVIEWED

Document Number	Next Rev	Document Number	Next Rev
24590-WTP-3PS-MPC0-T0008	1		

Engineering Document Review

EDR No.* 24590- Rev.*

Return to Preparer:	Marshall Nielsen c/o Bill Honsaker	MS6-P2	371-4542
	Name (Print)	*Location*	*Telephone*
	Mechanical Systems, Central Eng.	5/19/04	5/26/04
	Discipline	*Date*	*Comments Due Date*

REVIEW RESULTS

Reviewer: C Morley *Name (Print)* Organization: MS Return Date: 6/1/04

☐ Accepted, no comments. ☐ Accepted, comments not mandatory. ☐ Mandatory comments.

REVIEW STATUS: My organization's review of this document is NOT required for future revisions or changes. ☒ Check only if applicable

Notes/Comments:

Comments Resolved: Chris Morley *Print/Type Name* *Signature* 6/2/04. *Date*

Engineering Document Review

EDR No.* 24590- Rev.*

Return to Preparer:	Marshall Nielsen c/o Bill Honsaker	MS6-P2	371-4542
	Name (Print)	*Location*	*Telephone*
	Mechanical Systems, Central Eng.	5/19/04	5/26/04
	Discipline	*Date*	*Comments Due Date*

INTERNAL ENGINEERING DISTRIBUTION ***SEE ATTACHED E-MAIL FOR CHANGES FROM REV. 0***

Reviewer / Recipient	Discipline	Mail Stop	Info Only Recipient	Reviewer / Recipient	Discipline	Mail Stop	Info Only Recipient
Chris Morley	Mech. Sys. Central	MS6-P2					
[redacted]	LAW Systems Eng.	MS12-2B					

EXTERNAL REVIEWING ORGANIZATIONS

Point of Contact	Organization	Mail Stop	Point of Contact	Organization	Mail Stop
☐ Betty Tornow	Project Director	MS14-3C	☐ Karen Vacca	Operations	MS12-B
☐ Betty Tornow	Project Manager	MS14-3C	☐ Amorette Pryor	Project Administrative Services	MS11-B
☐ Earl Duda	Acquisition Services	MS6-P1	☐ Buck Payne	Project Controls	MS4-A2
☐ Liz Hagie	Business Services	MS14-3C	☒ Michelle Mitchell	Quality Assurance	MS14-4B
☐ Paul Petrusha	Construction	MS4-A1	☐ Tamela Michaud	Safety Assurance	MS14-4A
☒ Emmy Sauceda	Environmental & Nuclear Safety	MS4-C1			

Safety screenings are required for some design documents, such as PFDs, P&IDs, MHDs, V&IDs, ITS electrical single line diagrams, Plant Design GA plans, specifications for QL-1/QL-2 items, system descriptions, and DCNs, SCN, FCRs, and SDCNs that affect any of these documents. Refer to section 3.1 of **24590-WTP-GPP-SREG-002** for a complete list of the design documents requiring safety screenings.

NOTE: This is not intended to be an all-inclusive list of the documents that go to E&NS for review. Engineering documents might also require review by E&NS for purposes other than conducting a safety screening/evaluation.

SAFETY SCREENING (to be completed by E&NS)

Refer to procedure 24590-WTP-GPP-SREG-002, section 3.5 and Appendices 3 and 4 for guidance in answering this question. If the answer to the following question is Yes, perform a safety evaluation in accordance with the procedure, and provide the SE number below. See Appendix 3 for information on minor changes.

Does this change affect the safety envelope (SRD and applicable facility SED[s]), or is it a "broad scope" change?	☐ Yes ☐ No ☐ Minor Only
	SE #

Basis *(Provide basis for both parts of the question, and for both a "Yes" or "No" decision. Provide a brief basis for "minor only" changes.)*:

Print/Type Name of AB Reviewer	*Initial*	*Date*	*Print/Type Name of FNS Supervisor/ Regulatory Safety Manager*	*Initial*	*Date*

DOCUMENTS REVIEWED

Document Number	Next Rev	Document Number	Next Rev
24590-WTP-3PS-MPC0-T0008	1		

 *Assigned by E&NS; only for EDRs that are also safety screenings.

Engineering Document Review

EDR No.* 24590- . . . Rev.*

Return to Preparer:	Marshall Nielsen c/o Bill Honsaker	MS6-P2	371-4542
	Name (Print)	*Location*	*Telephone*
	Mechanical Systems, Central Eng.	5/19/04	5/26/04
	Discipline	*Date*	*Comments Due Date*

REVIEW RESULTS

Reviewer: M. SANJUCTORES (*Name (Print)*) Organization: Mech Sys Return Date: 5/20/04

☐ Accepted, no comments. ☐ Accepted, comments not mandatory. ☒ Mandatory comments.

REVIEW STATUS: My organization's review of this document is NOT required for future revisions or changes. ☐ Check only if applicable

Notes/Comments:

Comments Resolved: M. SANJUCTORES (*Print/Type Name*) (*Signature*) 6/8/04 (*Date*)

Engineering Document Review

RECEIVED
MAY 19 2004
By 56811

EDR No.* 24590- Rev.*

Return to Preparer:	Marshall Nielsen c/o Bill Honsaker	MS6-P2	371-4542
	Name (Print)	*Location*	*Telephone*
	Mechanical Systems, Central Eng.	5/19/04	5/26/04
	Discipline	*Date*	*Comments Due Date*

INTERNAL ENGINEERING DISTRIBUTION ***SEE ATTACHED E-MAIL FOR CHANGES FROM REV. 0***

Reviewer / Recipient	Discipline	Mail Stop	Info Only Recipient	Reviewer / Recipient	Discipline	Mail Stop	Info Only Recipient
Chris Morley	Mech. Sys. Central	MS6-P2					
Mac Sanvictores	LAW Systems Eng.	MS12-2B					

EXTERNAL REVIEWING ORGANIZATIONS

Point of Contact	Organization	Mail Stop	Point of Contact	Organization	Mail Stop
☐ Betty Tornow	Project Director	MS14-3C	☐ Karen Vacca	Operations	MS12-B
☐ Betty Tornow	Project Manager	MS14-3C	☐ Amorette Pryor	Project Administrative Services	MS11-B
☐ Earl Duda	Acquisition Services	MS6-P1	☐ Buck Payne	Project Controls	MS4-A2
☐ Liz Hagie	Business Services	MS14-3C	☒ Michelle Mitchell	Quality Assurance	MS14-4B
☐ Paul Petrusha	Construction	MS4-A1	☐ Tamela Michaud	Safety Assurance	MS14-4A
☒ [redacted]	Environmental & Nuclear Safety	MS4-[redacted]			

Safety screenings are required for some design documents, such as PFDs, P&IDs, MHDs, V&IDs, ITS electrical single line diagrams, Plant Design GA plans, specifications for QL-1/QL-2 items, system descriptions, and DCNs, SCN, FCRs, and SDCNs that affect any of these documents. Refer to **section 3.1 of 24590-WTP-GPP-SREG-002** for a complete list of the design documents requiring safety screenings.

NOTE: This is not intended to be an all-inclusive list of the documents that go to E&NS for review. Engineering documents might also require review by E&NS for purposes other than conducting a safety screening/evaluation.

SAFETY SCREENING (to be completed by E&NS)

Refer to procedure 24590-WTP-GPP-SREG-002, section 3.5 and Appendices 3 and 4 for guidance in answering this question. If the answer to the following question is Yes, perform a safety evaluation in accordance with the procedure, and provide the SE number below. See Appendix 3 for information on minor changes.

Does this change affect the safety envelope (SRD and applicable facility SED[s]), or is it a "broad scope" change?	☐ Yes ☐ No ☐ Minor Only
	SE #

Basis *(Provide basis for both parts of the question, and for both a "Yes" or "No" decision. Provide a brief basis for "minor only" changes.)*:

Print/Type Name of AB Reviewer	*Initial*	*Date*	*Print/Type Name of FNS Supervisor/ Regulatory Safety Manager*	*Initial*	*Date*

DOCUMENTS REVIEWED

Document Number	Next Rev	Document Number	Next Rev
24590-WTP-3PS-MPC0-T0008	1		

Engineering Document Review

EDR No.* 24590- Rev.*

Return to Preparer:	Marshall Nielsen c/o Bill Honsaker	MS6-P2	371-4542
	Name (Print)	*Location*	*Telephone*
	Mechanical Systems, Central Eng.	5/19/04	5/26/04
	Discipline	*Date*	*Comments Due Date*

REVIEW RESULTS

Reviewer: E Saucedo/PDC (*Name (Print)*) Organization: E&NS Return Date: 5/25/04

☒ Accepted, no comments. ☐ Accepted, comments not mandatory. ☐ Mandatory comments.

REVIEW STATUS: My organization's review of this document is NOT required for future revisions or changes. ☐ Check only if applicable

Notes/Comments:

Comments Resolved:

Print/Type Name	*Signature*	*Date*

Engineering Document Review

RECEIVED
MAY 19 2004
BY:

EDR No.* 24590- Rev.*

Return to Preparer:	Marshall Nielsen c/o Bill Honsaker	MS6-P2	371-4542
	Name (Print)	*Location*	*Telephone*
	Mechanical Systems, Central Eng.	5/19/04	5/26/04
	Discipline	*Date*	*Comments Due Date*

INTERNAL ENGINEERING DISTRIBUTION ***SEE ATTACHED E-MAIL FOR CHANGES FROM REV. 0***

Reviewer / Recipient	Discipline	Mail Stop	Info Only Recipient	Reviewer / Recipient	Discipline	Mail Stop	Info Only Recipient
Chris Morley	Mech. Sys. Central	MS6-P2					
Mac Sanvictores	LAW Systems Eng.	MS12-2B					

EXTERNAL REVIEWING ORGANIZATIONS

Point of Contact	Organization	Mail Stop	Point of Contact	Organization	Mail Stop
☐ Betty Tornow	Project Director	MS14-3C	☐ Karen Vacca	Operations	MS12-B
☐ Betty Tornow	Project Manager	MS14-3C	☐ Amorette Pryor	Project Administrative Services	MS11-B
☐ Earl Duda	Acquisition Services	MS6-P1	☐ Buck Payne	Project Controls	MS4-A2
☐ Liz Hagie	Business Services	MS14-3C	☒ Michelle Mitchell	Quality Assurance	MS14-4B
☐ Paul Petrusha	Construction	MS4-A1	☐ Tamela Michaud	Safety Assurance	MS14-4A
☒ Emmy Sauceda	Environmental & Nuclear Safety	MS4-C1			

Safety screenings are required for some design documents, such as PFDs, P&IDs, MHDs, V&IDs, ITS electrical single line diagrams, Plant Design GA plans, specifications for QL-1/QL-2 items, system descriptions, **and** DCNs, SCN, FCRs, and SDCNs that affect any of these documents. Refer to **section 3.1 of 24590-WTP-GPP-SREG-002** for a complete list of the design documents requiring safety screenings.

NOTE: This is not intended to be an all-inclusive list of the documents that go to E&NS for review. Engineering documents might also require review by E&NS for purposes other than conducting a safety screening/evaluation.

SAFETY SCREENING (to be completed by E&NS)

Refer to procedure 24590-WTP-GPP-SREG-002, section 3.5 and Appendices 3 and 4 for guidance in answering this question. If the answer to the following question is Yes, perform a safety evaluation in accordance with the procedure, and provide the SE number below. See Appendix 3 for information on minor changes.

Does this change affect the safety envelope (SRD and applicable facility SED[s]), or is it a "broad scope" change?	☐ Yes ☐ No ☐ Minor Only
	SE #

Basis *(Provide basis for both parts of the question, and for both a "Yes" or "No" decision. Provide a brief basis for "minor only" changes.)*:

Print/Type Name of AB Reviewer	*Initial*	*Date*	*Print/Type Name of FNS Supervisor/ Regulatory Safety Manager*	*Initial*	*Date*

DOCUMENTS REVIEWED

Document Number	Next Rev	Document Number	Next Rev
24590-WTP-3PS-MPC0-T0008	1		

Engineering Document Review

EDR No.* 24590- Rev.*

Return to Preparer:	Marshall Nielsen c/o Bill Honsaker	MS6-P2	371-4542
	Name (Print)	*Location*	*Telephone*
	Mechanical Systems, Central Eng.	5/19/04	5/26/04
	Discipline	*Date*	*Comments Due Date*

REVIEW RESULTS

Reviewer: BILL DEY *Name (Print)* Organization: QA Return Date: 25 May 2004

☐ Accepted, no comments. ☐ Accepted, comments not mandatory. ☒ Mandatory comments.

REVIEW STATUS: My organization's review of this document is NOT required for future revisions or changes. ☐ Check only if applicable

Notes/Comments:

Comments Resolved: BILL DEY *Print/Type Name* [signature] *Signature* 28 May 2004 *Date*

Document reviewed: 24590-WTP-3PS-MPC8-T0008, Rev. 1

Drawings and Documents

Operating Unit Group 10 – Appendix 9.8
Low Activity Waste Building
Engineering Calculations

The documents listed in the following table are incorporated by reference into this permit and are subject to the requirements set forth in Part I Standard Conditions, Part II General Facility Conditions, and Part III Operating Unit Group 10 Conditions. Upon request, copies of the documents can be viewed at the Nuclear Waste Program Resource Center located at 3100 Port of Benton Blvd. Richland, WA. Appointments for viewing can be scheduled by calling (509) 372-7950

Drawing/Document Number	***Description***
24590-LAW-PER-M-02-002, Rev 6	Flooding Volume for LAW Facility
RESERVED	RESERVED

Source documents (which do not include a "P" in the last set of numbers, e.g. "-P0001," or "-TP001") should be used in conjunction with any document change notices issued against them.

We are currently transitioning from permit documents (which do include a "P" in the last set of numbers) to source documents. At the end of the transition period, permit submittals will contain source documents and will be incorporated into the permit as described in Ecology Publication # 07-05-006 (www.ecy.wa.gov/biblio/nwp.html).

Drawings and Documents

Operating Unit Group 10 – Appendix 9.9
Low Activity Waste Building
Material Selection Documentation

The documents listed in the following table are incorporated by reference into this permit and are subject to the requirements set forth in Part I Standard Conditions, Part II General Facility Conditions, and Part III Operating Unit Group 10 Conditions. Upon request, copies of the documents can be viewed at the Nuclear Waste Program Resource Center located at 3100 Port of Benton Blvd. Richland, WA. Appointments for viewing can be scheduled by calling (509) 372-7950.

See Appendix 7.9 for material selection documentation common to the Pretreatment, LAW, HLW, and Laboratory buildings.

Drawing/Document Number	***Description***
24590-LAW-N1D-LCP-P0001, Rev 1	Material Selection Data Sheet for LCP-VSL-00001/2
24590-LAW-N1D-LFP-P0004, Rev 0	Material Selection Data Sheet for LFP-VSL-00001/2/3/4
24590-LAW-N1D-LOP-P0001, Rev 1	Material Selection Data Sheet for LOP-SCB-00001/2
24590-LAW-N1D-LOP-00002, Rev 1	Material Selection Data Sheet for LOP-VSL-00001/2/3
24590-LAW-N1D-LOP-P0003, Rev 0	Material Selection Data Sheet for LOP-WESP-00001/2
24590-LAW-N1D-LOP-P0004, Rev 0	Material Selection Data Sheet: LOP Offgas piping (downstream of film cooler to SBS entry)
24590-LAW-N1D-LVP-P0002, Rev 0	Material Selection Data Sheet for LVP-TK-00001
24590-LAW-N1D-RLD-P0001, Rev 1	Material Selection Data Sheet for RLD-VSL-00004
24590-LAW-N1D-RLD-P0002, Rev 0	Material Selection Data Sheet for RLD-VSL-00005
24590-LAW-N1D-RLD-P0005, Rev 0	Material Selection Data Sheet for RLD-VSL-00003
RESERVED	RESERVED

Source documents (which do not include a "P" in the last set of numbers, e.g. "-P0001," or "-TP001") should be used in conjunction with any document change notices issued against them.

We are currently transitioning from permit documents (which do include a "P" in the last set of numbers) to source documents. At the end of the transition period, permit

submittals will contain source documents and will be incorporated into the permit as described in Ecology Publication # 07-05-006 (www.ecy.wa.gov/biblio/nwp.html).

Drawings and Documents

Operating Unit Group 10 – Appendix 9.10
Critical Systems Equipment/Instrument List

The documents listed in the following table are incorporated by reference into this permit and are subject to the requirements set forth in Part I Standard Conditions, Part II General Facility Conditions, and Part III Operating Unit Group 10 Conditions. Upon request, copies of the documents can be viewed at the Nuclear Waste Program Resource Center located at 3100 Port of Benton Blvd. Richland, WA. Appointments for viewing can be scheduled by calling (509) 372-7950.

Drawing/Document Number	***Description***
	LAW Equipment Room List @ El 3 Rev 2
	LAW Equipment Room List @ El -21 Rev 1
RESERVED	RESERVED

Source documents (which do not include a "P" in the last set of numbers, e.g. "-P0001," or "-TP001") should be used in conjunction with any document change notices issued against them.

We are currently transitioning from permit documents (which do include a "P" in the last set of numbers) to source documents. At the end of the transition period, permit submittals will contain source documents and will be incorporated into the permit as described in Ecology Publication # 07-05-006 (www.ecy.wa.gov/biblio/nwp.html).

Drawings and Documents

Operating Unit Group 10 – Appendix 9.11
Low Activity Waste Building
IQRPE Reports

The documents listed in the following table are incorporated by reference into this permit and are subject to the requirements set forth in Part I Standard Conditions, Part II General Facility Conditions, and Part III Operating Unit Group 10 Conditions. Upon request, copies of the documents can be viewed at the Nuclear Waste Program Resource Center located at 3100 Port of Benton Blvd. Richland, WA. Appointments for viewing can be scheduled by calling (509) 372-7950.

Drawing/Document Number	*Description*
24590-CM-HC4-HXYG-00138-01-05, Rev 00D	IQRPE Integrity Assessment Report for RLD-VSL-00004
24590-CM-HC4-HXYG-00138-01-06, Rev A	IQRPE Integrity Assessment Report for Below Grade Secondary Containment
24590-CM-HC4-HXYG-00138-01-09, Rev 00B	IQRPE Integrity Assessment Report for Below Grade RLD Ancillary Equipment
24590-CM-HC4-HXYG-00138-01-10, Rev 00B	IQRPE Integrity Assessment Report for El. 3 Secondary Containment
24590-CM-HC4-HXYG-00138-01-14, Rev 00B	IQRPE Integrity Assessment Report for LCP and RLD Ancillary Equipment
24590-CM-HC4-HXYG-00138-02-00018, Rev 00A	IQRP Integrity Assessment Report for El. 28 Secondary Containment
24590-CM-HC4-HXYG-00138-02-00029, Rev 00A	IQRPE Integrity Assessment Report (LFP System) for LFP El. 3 Ancillary Equipment
24590-CM-HC4-HXYG-00138-02-00039, Rev 00A	IQRPE Integrity Assessment Report for El. 3 LOP Miscellaneous Unit Subsystem Equipment
24590-CM-HC4-HXYG-00138-02-00052, Rev 00A	IQRPE Integrity Assessment Report for LVP Ancillary Equipment
24590-CM-HC4-HXYG-00138-02-00053, Rev 00A	IQRPE Integrity Assessment Report LVP System) for LVP Miscellaneous Unit Subsystem Equipment
24590-CM-HC4-HXYG-00138-02-07, Rev 00A	IQRPE Integrity Assessment Report for RLD-VSL-00003/5
CCN 139507 / AREVA-IA-100, Rev 0	IQRPE Integrity Assessment Low Activity Waste (LAW) Melter Feed Process (LFP) System; Melter Feed Prep Vessels (LFP-VSL-00001/3) and Melter Feed Vessels (LFP-VSL-00002/4)
CCN 139508 / AREVA-IA-101, Rev 0	IQRPE Integrity Assessment of the LAW Secondary Off-gas/Vessel Vent Process (LVP) System, Caustic Collection Tank (LVP-TK-00001)
CCN 139509 / AREVA-IA-102, Rev 0	IQRPE Integrity Assessment of the LAW Concentrate Receipt Process (LCP) System Concentrate Receipt Vessels (LCP-VSL-00001/2)

CCN 139510 / AREVA-IA-103, Rev 0	IQRPE Integrity Assessment Report for LOP-VSL-00001/2
CCN 186406 / AREVA-IA-105, Rev 1	IQRPE Integrity Assessment Report (LOP System) for El. 3 LOP Ancillary Equipment
CCN 190557 / IA-3001246-001	IQRPE integrity Assessment Report for LAW LMP Ancillary Equipment
RESERVED	RESERVED

Source documents (which do not include a "P" in the last set of numbers, e.g. "-P0001," or "-TP001") should be used in conjunction with any document change notices issued against it.

We are currently transitioning from permit documents (which do include a "P" in the last set of numbers) to source documents. At the end of the transition period, permit submittals will contain source documents and will be incorporated into the permit as described in Ecology Publication # 07-05-006 (www.ecy.wa.gov/biblio/nwp.html).

139508

RPP-WTP
RECEIVED
AUG 1 5 2007
BY PDC

AREVA

R10808603

AREVA-07-080

Ms. Anne Weldon
Subcontracts
Bechtel National, Inc.
2435 Stevens Center Place
Richland, Washington 99354

August 14, 2007

Dear Ms. Weldon:

BECHTEL NATIONAL, INC. CONTRACT NO. 24590-CM-HC4-HXYG-00211 - STRUCTURAL INTEGRITY ASSESSMENT OF LOW-ACTIVITY WASTE (LAW) SECONDARY OFFGAS SYSTEM (LVP) CAUSTIC COLLECTION TANK (LVP-TK-00001) (AREVA-IA-101, REV. 0)

The integrity assessment of the subject tank has been completed per the contract requirements and is enclosed for your use. The assessment found that the design is sufficient to ensure that the tank is adequately designed and has sufficient structural strength, compatibility with the waste(s) to be processed/stored/treated, and corrosion protection to ensure that it will not collapse, rupture, or fail.

If you have any questions, please contact Tarlok Hundal at (509) 373-4438, or via email at tarlok.hundal@areva.com.

Sincerely,

M. D. Rickenbach, Director
Engineering & Services
AREVA NC Inc.
Richland

llm

Enclosure

cc: D. C. Pfluger MS 5-L w/ enclosure (2)

STRUCTURAL INTEGRITY ASSESSMENT OF LOW-ACTIVITY WASTE (LAW) SECONDARY OFFGAS SYSTEM (LVP) CAUSTIC COLLECTION TANK (LVP-TK-00001)

Please note that source, special nuclear and byproduct materials, as defined in the Atomic Energy Act of 1954 (AEA), are regulated at the U.S. Department of Energy (DOE) facilities exclusively by DOE acting pursuant to its AEA authority. DOE asserts, that pursuant to the AEA, it has sole and exclusive responsibility and authority to regulate source, special nuclear, and byproduct materials at DOE-owned nuclear facilities. Information contained herein on radionuclides is provided for process description purposes only.

IQRPE REVIEW
OF
LOW-ACTIVITY WASTE (LAW) SECONDARY OFFGAS SYSTEM (LVP)
CAUSTIC COLLECTION TANK (LVP-TK-00001)

"I, Tarlok Hundal have reviewed, and certified a portion of the design of a new tank system or component located at the Hanford Waste Treatment Plant, owned/operated by Department of Energy, Office of River Protection, Richland, Washington. My duties were independent review of the current design for the Low-Activity Waste (LAW) Secondary Offgas System (LVP) Caustic Collection Tank (LVP-TK-00001) as required by the Washington Administrative Code, *Dangerous Waste Regulations*, Section WAC-173-303-640(3) (a) through (g) applicable components."

"I certify under penalty of law that I have personally examined and am familiar with the information submitted in this document and all attachments and that, based on my inquiry of those individuals immediately responsible for obtaining the information, I believe that the information is true, accurate, and complete. I am aware that there are significant penalties for submitting false information, including the possibility of fine and imprisonment."

The documentation reviewed indicates that the design fully satisfies the requirements of the WAC.

The attached review is six (6) pages numbered one (1) through six (6).

EXPIRES: 02/15/08

T S Hundal

Signature

8/14/07

Date

Scope	Scope of this Integrity Assessment	This Integrity Assessment is for LAW Secondary Offgas/Vessel Vent Process (LVP) System, Caustic Collection Tank (LVP-TK-00001), located in room L-0218, at Elevation 28'-0" of the LAW Vitrification Building.
References	Material Requisition, Specifications, Drawings and Mechanical Data Sheet.	Material Requisition: 24590-CM-MRC-MVA0-00002, Rev. 1(including Supplements S0001 and S0002): Pressure Vessels, Shop Fabricated, Medium (N053). Specifications: The following Specifications with their respective revision and Specification Change Notices (SCNs) are listed in the above listed Material Requisition: 24590-WTP-3PS-G000-T0001, General Specification for Supplier Quality Assurance Program Requirements; 24590-WTP-3PS-G000-T0002, Engineering Specification for Positive Material Identification (PMI) for Shop Fabrication; 24590-WTP-3PS-G000-T0003, General Specification for Packaging, Handling, and Storage Requirements; 24590-WTP-3PS-MV00-T0002, Engineering Specification for Seismic Qualification Criteria for Pressure Vessels; 24590-WTP-3PS-FB01-T0001, Engineering Specification for Structural Design Loads for Seismic Category III & IV Equipment and Tanks; 24590-WTP-3PS-AFPS-T0001, Engineering Specification for Shop Applied Protective Coatings for Steel Items and Equipment; 24590-WTP-3PS-MTSS-T0001, Specification for Tank Welding. Plant Drawings: 24590-LAW-P1-P01T-00002, Rev. 5, LAW Vitrification Building General Arrangement Plan at El. 3'-0"; 24590-LAW-P1-P01T-00004, Rev. 3, LAW Vitrification Building General Arrangement Plan at El. 28'-0"; 24590-LAW-P1-P01T-00009, Rev. 8, LAW Vitrification Building General Arrangement Section G-G, H-H, and J-J; 24590-LAW-M5-V17T-00011, Rev. 5, Process Flow Diagram LAW VIT Secondary Offgas Treatment (System LVP); 24590-LAW-M6-LVP-00002, Rev. 3, P & ID-LAW Secondary Offgas/Vessel Vent Process System and Stack Discharge Monitoring System (Including DCN # 24590-LAW-M6N-LVP-00038 to Rev. 3) Vender Fabrication Drawings (Bechtel Code 1 Drawings = As-Built Drawings: Approved and Accepted by Bechtel): 24590-CM-POA-MVA0-00019-03-00003, Rev. 00C, LAW Caustic Collection Tank (LVP-TK-00001) General Arrangement; 24590-CM-POA-MVA0-00019-03-00015, Rev. 00A, LAW Caustic Collection Tank (LVP-TK-00001) General Notes. Mechanical Data Sheet: 24590-LAW-MTD-LVP-00001, Rev. 0, LAW Caustic Collection Tank (LVP-TK-00001).
Summary of Assessment		For each item of "Information Assessed" (i.e., Criteria) on the following pages, the items listed under "Source of Information" were reviewed and found to furnish adequate design controls and requirements to ensure that the design fully satisfies the requirements of Washington Administrative Code, WAC-173-303-640, *Dangerous Waste Regulations* for Tank Systems.

	Information Assessed	Source of Information	Assessment
Design	Tank design standards are appropriate and adequate for the tank's intended use.	Mechanical Data Sheet, Specifications, and Drawings listed above under References; API-650 Standard, American Petroleum Institute, Welded Steel Tanks for Oil Storage.	The Mechanical Data Sheet requires that the LAW Caustic Collection Tank, LVP-TK-00001 be designed to the API-650 Standard's applicable requirements, which are appropriate for the tank operating with waste liquid within the pressure and temperature ranges specified for this tank. The tank's quality level is commercial (CM) grade and its seismic category (SC) is SC-III. Supplementary requirements are specified in the engineering Specifications. Supplementary requirements address the tank design, positive material identification, lifting attachment design, fabrication tolerances, acceptable welding procedures for the tank, welder qualifications and testing records, NDE inspections and records, and lifting, packaging, shipping, handling and storage requirements. As discussed above, the design standards are appropriate and adequate for the tank's intended use. As shown on the drawings, the LAW Caustic Collection Tank, LVP-TK-00001 is a vertical tank with a 13 ft ID and a height of 14 ft 4 in. with a self supporting cone roof. The cone roof is built with a 1/4" minimum thick plate. The shell and bottom floor are be built of 5/16" minimum thick plates. The tank is anchored to the concrete floor at Elev. 28'-0". Material for the tank's cone roof, shell, and bottom floor is SA-240 316 stainless steel (0.030% maximum carbon content, dual certified), hereafter referred to as 316 stainless steel. The tank has internal piping, spray nozzle, and other appurtenances made of other grades of stainless steel material. Tank's operating volume is to be about 11,910 gallons and the total internal volume is to be about 14,230 gallons.
	If a non-standard tank is to be used, the design calculations demonstrate sound engineering principles of construction.	Mechanical Data Sheet, Specifications, Material Requisition, and Drawings listed above under References; API-650 Standard, American Petroleum Institute, Welded Steel Tanks for Oil Storage; 24590-CM-POA-MVA0-00019-02-00002, Rev. 00C, Design Calculations for LAW Caustic Collection Tank (LVP-TK-00001).	The LAW Caustic Collection Tank, LVP-TK-00001 is a standard API-650 tank. The Mechanical Data Sheet requires that the API-650 tank be delivered after design, fabrication, inspection, and testing per API-650 Standard. This is a shop fabricated tank that is delivered for service in the LAW Facility. Review of the Design Calculations document for this tank shows that it has been designed as a standard tank per applicable requirements of API-650 standard and Specifications and other documents listed in the Material Requisition for the tank. The aforementioned statements and the vendor fabrication drawings of the tank reviewed demonstrate that sound engineering principles of design, construction, and fabrication have been used for the tank.

	Information Assessed	Source of Information	Assessment
Design (cont'd)	Tank has adequate strength, after consideration of the corrosion allowance, to withstand the operating pressure, operating temperature, and seismic loads.	Mechanical Data Sheet , Specifications, Drawings, and Material Requisition listed above under References; API-650 Standard, American Petroleum Institute, Welded Steel Tanks for Oil Storage; UBC 1997, Uniform Building Code, International Conference of Building Officials; 24590-CM-POA-MVA0-00019-02-00002, Rev. 00C, Design Calculations for LAW Caustic Collection Tank (LVP-TK-00001).	The Mechanical Data Sheet identifies tank's operating pressure and temperature ranges, the selected materials, the corrosion allowance, the quality level, and the seismic category. The API-650 Standard and supplement Engineering Specifications for the tank require specific consideration of the operating pressures, temperatures, and seismic loads in the design process. API-650 Standard requires that corrosion allowance thickness be added to the nominal tank design thickness when evaluating the adequacy of the tank components for these loads at the end of life. The Mechanical Data Sheet identifies the tank's Seismic Category as SC-III. For SC-III tanks, the detailed requirements for seismic load determination (per UBC 1997) are furnished in the Specification for Structural Design Loads for Seismic Category III & IV Equipment and Tanks. Review of the Design Calculations document of this tank shows that the tank has adequate strength after consideration of corrosion allowance to withstand the applicable operating pressure, temperature, and seismic loads for the specified design life of the tank. Furthermore, approval and acceptance of the vendor fabrication drawings by Bechtel National Inc. (BNI) is an added assurance that all applicable requirements stated above and as described in the documents (including daughter documents) listed in Material Requisition for the tank have been met.
Foundation	Tank foundation will maintain the load of a full tank.	API-650 Standard, American Petroleum Institute, Welded Steel Tanks for Oil Storage; 24590-CM-POA-MVA0-00019-02-00002, Rev. 00C, Design Calculations for LAW Caustic Collection Tank (LVP-TK-00001). 24590-WTP-DB-ENG-01-001, Rev. 1I, Basis of Design.	The API-650 Standard specifies the requirements for the design of the tank supports and ensures their adequate design. Review of the Design Calculations document of the tank shows that the tank's support components (shell and bottom plate) have adequate strength to maintain the load of the full tank. Furthermore, Chapter 14 of the Basis of Design document requires that the foundation underlying the tank support must be adequate to support the loads from full tank, which is out of scope of this assessment. The assessment of the adequacy of the underlying foundation is part of a separate integrity assessment report for the Secondary Containment of the tank.

	Information Assessed	Source of Information	Assessment
Foundation (cont'd)	If in an area subject to flooding, the tank is anchored.	Drawings listed under References; 24590-LAW-3YD-LOP-00001, Rev. 1, System Description for LAW Primary Offgas Process (LOP) and LAW Secondary Offgas/Vessel Vent Process (LVP) Systems (including SDCN 24590-LAW-3YN-LOP-00006); 24590-CM-POA-MVA0-00019-02-00002, Rev. 00C, Design Calculations for LAW Caustic Collection Tank (LVP-TK-00001).	The drawings show and the System Description document states that the tank overflows to the berm around the tank and the berm in turn drains thru a floor drain to the Plant Wash Tank (RLD-VSL-00003) located at the lower floor (Elev. 3'-0"), therefore, flooding is not a credible event. However, the Design Calculations and drawings show that the tank is anchored to the concrete floor.
	Tank system will withstand the effects of frost heave.	Drawings listed under References; 24590-WTP-DC-ST-01-001, Rev. 11, Structural Design Criteria.	The Structural Design Criteria requires that all outdoor structural foundations shall extend into the surrounding soil below the 30 in. frost line depth; to preclude any frost heave effects. As shown on the drawings, the tank is located inside/interior of the building at above grade (at floor Elev. 28'-0") and the building's lower level floor is at Elevation (-) 21'-0", therefore, tank's foundation is not subject to the frost heave effects.

	Information Assessed	Source of Information	Assessment
Waste Characteristics	Characteristics of the waste to be stored or treated have been identified (ignitable, reactive, toxic, specific gravity, vapor pressure, flash point, storage temperature)	Mechanical Data Sheet listed above under References; 24590-LAW-N1D-LVP-00002, Rev. 2, Corrosion Evaluation - Caustic Collection Tank LVP-TK-00001 (LAW); 24590-WTP-PER-PR-03-002, Rev. 2, Toxic Vapors and Emissions from WTP Tank Systems and Miscellaneous Treatment Unit Systems; 24590-WTP-PER-PR-03-001, Rev. 1, Prevention of Hydrogen Accumulation in WTP Tank Systems and Miscellaneous Treatment Unit Systems.	The Mechanical Data Sheet presents process conditions and design parameters of the tank, such as the waste specific gravity, temperatures, and pressures, etc. The Corrosion Evaluation document addresses the pH range and chemical composition of the waste and selects appropriate tank materials and the corrosion allowance. Waste characteristics that are hazardous, such as ignitability, reactivity, and toxicity are appropriately addressed in the Toxic Vapors and Emissions document and Prevention of Hydrogen Accumulation document. These two aforementioned documents do not specifically list this tank to exhibit any hazardous characteristics. Additionally the tank is grounded to control ignition sources.
	Tank is designed to store or treat the wastes with the characteristics defined above and any treatment reagents.	24590-LAW-N1D-LVP-00002, Rev. 2, Corrosion Evaluation - Caustic Collection Tank LVP-TK-00001 (LAW); 24590-LAW-3YD-LOP-00001, Rev. 1, System Description for LAW Primary Offgas Process (LOP) and LAW Secondary Offgas/Vessel Vent Process (LVP) Systems (including SDCN 24590-LAW-3YN-LOP-00006).	The Corrosion Evaluation document demonstrates that the tank is designed to process the wastes discussed above. The System Description discusses normal and abnormal operations for the LVP tank. To neutralize the collected acid gases, a 5 molar sodium hydroxide solution is added to the Caustic Collection Tank. A spray jet nozzle is provided for washdown during maintenance periods.
	The waste types are compatible with each other.	Drawings listed above under References; 24590-LAW-3YD-LOP-00001, Rev. 1, System Description for LAW Primary Offgas Process (LOP) and LAW Secondary Offgas/Vessel Vent Process (LVP) Systems (including SDCN 24590-LAW-3YN-LOP-00006).	The System Description for the LAW (LVP) does not describe any operations where incompatible wastes are mixed in this tank for processing. The LVP tank receives scrubbing liquid from the Caustic Scrubber (LVP-SCB-00001), located at upper floor (Elev. 48'-0") as shown in drawings and as described in the System Description document. The tank is designed to hold the caustic scrubbing liquid up to 2 days. The collected waste is routinely pumped to the LAW pretreatment facility Alkaline Effluent Tanks (RLD-VSL-00017A/B) via caustic blowdown pumps (LVP-PMP-00002A/B) for further processing.

Information Assessed		Source of Information	Assessment
Corrosion Protection	Tank material and protective coatings ensure the tank structure is adequately protected from the corrosive effects of the waste stream and external environments (expected to not leak or fail for the design life of the system)	Mechanical Data Sheet and Drawings listed above under References; American Petroleum Institute standard, API-650, Welded Steel Tanks for Oil Storage; 24590-LAW-N1D-LVP-00002, Rev. 2, Corrosion Evaluation - Caustic Collection Tank LVP-TK-00001 (LAW).	The Corrosion Evaluation document shows that the LAW Caustic Collection Tank, LVP-VSL-00001 normally operates at atmospheric pressure, a pH of 9 (may be raised to 14), and at a temperature range of 142°F to 149°F. The tank is designed per API-650 standard and for a temperature of 180°F. Other pertinent tank operation and design information is provided in the Mechanical Data Sheet. Washdown of the tank is considered using the internal spray jet nozzle. The material selected is 316 stainless steel and a corrosion allowance of 0.04 in. The LVP tank is located in the LAW facility room L-0218 at Elevation 28'-0" as shown on the drawings. This room has a bermed area surrounding the tank, which in turn drains to the Plant Wash Tank (RLD-VSL-00003) located at lower floor (Elev. 3'-0"). Therefore, the cell should remain dry during normal operations which will limit external corrosion of the tank over the facility's design life.
Corrosion Allowance	Corrosion allowance is adequate for the intended service life of the tank.	Mechanical Data Sheet listed above under References; 24590-LAW-N1D-LVP-00002, Rev. 2, Corrosion Evaluation - Caustic Collection Tank LVP-TK-00001 (LAW); 24590-CM-POA-MVA0-00019-02-00002, Rev. 00C, Design Calculations for LAW Caustic Collection Tank (LVP-TK-00001).	The bases for the LVP tank's material selection and corrosion allowance are furnished in the Corrosion Evaluation document and in the Mechanical Data Sheet. Selection of 316 stainless steel material with a corrosion allowance of 0.04 in. for a service life of 40 years is adequate and appropriate for the intended use of the tank. The Design Calculations appropriately account for the corrosion allowance of 0.04 in. for computing the required thickness of the tank components.
Pressure Relief	Pressure controls (vents and relief valves) are adequately designed to ensure pressure relief if normal operating pressures in the tank are exceeded.	Drawings listed above under References; 24590-LAW-3YD-LOP-00001, Rev. 1, System Description for LAW Primary Offgas Process (LOP) and LAW Secondary Offgas/Vessel Vent Process (LVP) Systems (including SDCN 24590-LAW-3YN-LOP-00006).	The LAW Caustic Collection Tank, LVP-VSL-00001 is provided with an unrestricted overflow through a 4" diameter pipe to the bermed area around the tank and the bermed area in turn drains to the Plant Wash Tank (RLD-VSL-00003) located at lower floor (Elev. 3'-0"), as shown on the drawings and as described in the System Description document. The drawings show that the tank is also vented near the apex of its conical roof to prevent any build up of the gases and/or over pressurization of the tank.

Master Distribution Schedule for WTP Project Subcontract Management Group

SUBMITTAL TRANSMITTAL:	☐ **First Submittal**	☐ **Re-Submittal**	☐ **QVRP Package**
☐ **No Review Required**	☐ **No Review Required Re-Submittal**		☐ **Submittal Supplement**
CORRESPONDENCE:	☒ **With Attachment**	☐ **W/O Attachment (letter only)**	
	☐ **Fax as Original (Letter Only)**	☐ **Fax as Original (With Attachment)**	
☐ **Pre-Award/Award Package**		☐ **Executed Change Order Package**	
☐ **Executed Amendment Package**		☐ **Back Charge**	

Subcontract Number:	24590-CM-HC4-HXYG-00211
Subcontract Title:	Tank Integrity Design Assessments by IQRPE
Subcontractor Name:	AREVA NC, Inc.
Subcontract Administrator:	Jean Renner

PDC Document Number	Rev	Document Title	Rev
139508	0	AREVA-07-080 transmitting AREVA-IA-101, Rev. 0 "Structural Integrity Assessment of Low Activity Waste (LAW) Secondary Offgass System (LVP) Caustic Collection Tank (LVP-TK-00001)	0

INCOMING DISTRIBUTION

Name	MSIN/ E-mail	Original	Copy	Copy of cover sheet / transmittal only	Primary File Index	Alternate File Index	Assigned Action or Remarks
PDC	MS9-A	X		B.8			
Dan Pfluger	MS5-I		x				
			x				

OUTGOING DISTRIBUTION FOR RETURNED STATUSED STICKER SUBMITTALS

Name	MSIN/ E-mail	Original	Copy	Copy of cover sheet / transmittal only	Primary File Index	File Index Alternate	Assigned Action or Remarks
PDC	MS9-A	X					

RPP-WTP
RECEIVED
OCT 1 6 2007
BY PDC

R10833934

AREVA

CCN 139509

AREVA-07-093

Ms. Jean Renner
Subcontracts
Bechtel National, Inc.
MS 14-3A
2435 Stevens Center Place
Richland, Washington 99354

October 15, 2007

Dear Ms. Renner:

BECHTEL NATIONAL, INC. CONTRACT NO. 24590-CM-HC4-HXYG-00211 - STRUCTURAL INTEGRITY ASSESSMENT OF LOW-ACTIVITY WASTE (LAW) CONCENTRATE RECEIPT PROCESS (LCP) SYSTEM CONCENTRATE RECEIPT VESSELS, LCP-VSL-00001/2 (AREVA-IA-102, REV. 0)

The integrity assessment of the subject tank has been completed per the contract requirements and is enclosed for your use. The assessment found that the design is sufficient to ensure that the vessels are adequately designed and will have sufficient structural strength, compatibility with the waste(s) to be processed/stored/treated, and corrosion protection to ensure that it will not collapse, rupture, or fail.

If you have any questions, please contact Ruben Mendoza at (509) 372-2684.

Sincerely,

for M. D. Rickenbach, Director
Engineering & Services
AREVA NC Inc.
Richland

llm

Enclosure

cc: D. C. Pfluger MS 5-L w/ enclosure (2)

AREVA NC INC.

2425 Stevens Center Place, Second Floor, Richland, Washington 99354 - P.O. Box 840, Richland, Washington 99352
Tel.: 509 372 8256 - Fax: 509 372 3169 - www.areva.com

STRUCTURAL INTEGRITY ASSESSMENT OF LOW-ACTIVITY WASTE (LAW) CONCENTRATE RECEIPT PROCESS (LCP) SYSTEM CONCENTRATE RECEIPT VESSELS, LCP-VSL-00001/2

Please note that source, special nuclear and byproduct materials, as defined in the Atomic Energy Act of 1954 (AEA), are regulated at the U.S. Department of Energy (DOE) facilities exclusively by DOE acting pursuant to its AEA authority. DOE asserts, that pursuant to the AEA, it has sole and exclusive responsibility and authority to regulate source, special nuclear, and byproduct materials at DOE-owned nuclear facilities. Information contained herein on radionuclides is provided for process description purposes only.

IQRPE REVIEW
OF
LOW-ACTIVITY WASTE (LAW) CONCENTRATE RECEIPT PROCESS (LCP)
SYSTEM CONCENTRATE RECEIPT VESSELS, LCP-VSL-00001/2

"I, Ruben E. Mendoza, have reviewed, and certified a portion of the design of a new tank system or component located at the Hanford Waste Treatment Plant, owned/operated by Department of Energy, Office of River Protection, Richland, Washington. My duties were independent review of the current design for the Low-Activity Waste (LAW) Concentrate Receipt Process (LCP) System Concentrate Receipt Vessels, LCP-VSL-00001/2 as required by the Washington Administrative Code, *Dangerous Waste Regulations*, Section WAC-173-303-640(3) (a) through (g) applicable components."

"I certify under penalty of law that I have personally examined and am familiar with the information submitted in this document and all attachments and that, based on my inquiry of those individuals immediately responsible for obtaining the information, I believe that the information is true, accurate, and complete. I am aware that there are significant penalties for submitting false information, including the possibility of fine and imprisonment."

The documentation reviewed indicates that the design fully satisfies the requirements of the WAC.

The attached review is nine (9) pages numbered one (1) through nine (9).

Signature

8-15-07
Date

Scope	Scope of this Integrity Assessment	This integrity assessment includes the two LCP Concentrate Receipt Vessels LCP-VSL-00001/2 and their appurtenances, located in cells L-0123/L-0124 respectively, at Elevation 2'-0" in the LAW Vitrification Building.
References	Material Requisition, Specifications, and System Description	Material Requisition (MR): 24590-CM-MRA-MVA0-00002, Rev. 2 (including Supplement Nos. S0013, S0014, S0015, S0016, and S0017 to Rev. 2), Pressure Vessels, Stainless Steel, Shop Fabricated, Medium (N026)(MS005). Specifications: The following Specifications with their respective revision and Specification Change Notices (SCNs) are listed in the above listed Material Requisition: 24590-WTP-3PS-MV00-T0001, Engineering Specification for Pressure Vessel Design and Fabrication; 24590-WTP-3PS-MV00-T0002, Engineering Specification for Seismic Qualification Criteria for Pressure Vessels; 24590-WTP-3PS-MVB2-T0001, Engineering Specification for Welding of Pressure Vessels, Heat Exchangers and Boilers; 24590-WTP-3PS-G000-T0001, General Specification for Supplier Quality Assurance Program Requirements; 24590-WTP-3PS-G000-T0002, Engineering Specification for Positive Material Identification (PMI); 24590-WTP-3PS-G000-T0003, Engineering Specification for Packaging, Handling, and Storage Requirements; 24590-WTP-3PS-FB01-T0001, Engineering Specification for Structural Design Loads for Seismic Category III and IV Equipment and Tanks; 24590-WTP-3PS-MV00-T0003, Engineering Specification for Pressure Vessel Fatigue analysis. System Description: 24590-LAW-3YD-LCP-00001, Rev. 1, System Description for LAW Concentrate Receipt Process (LCP); 24590-LAW-3YN-LCP-00002, SDCN to Rev. 1 of System Description for LAW Concentrate Receipt Process (LCP).
Summary of Assessment		For each item of "Information Assessed" (i.e., Criteria) on the following pages, the items listed under "Source of Information" were reviewed and found to furnish adequate design controls and requirements to ensure that the design fully satisfies the requirements of Washington Administrative Code, WAC-173-303-640, *Dangerous Waste Regulations*.

References (Cont'd)	Mechanical Data Sheets, Facility and Vendor Fabrication Drawings	Mechanical Data Sheets: 24590-LAW-MVD-LCP-00004, Rev.2, LAW Concentrate Receipt Vessel (LCP-VSL-00001); 24590-LAW-MVD-LCP-00005, Rev.2, LAW Concentrate Receipt Vessel (LCP-VSL-00002). Facility Drawings: 24590-LAW-P1-P01T-00002, Rev. 5, LAW Vitrification Building General Arrangement Plan at El. 3'-0"; 24590-LAW-P1-P01T-00001, Rev. 2, LAW Vitrification Building General Arrangement Plan at El (-)21'-0"; 24590-LAW-M5-V17T-00001, Rev. 5, Process Flow Diagram LAW Concentrate Receipt & Melter 1 Feed (System LCP, GFR, and LFP); 24590-LAW-M5-V17T-00002, Rev. 5, Process Flow Diagram LAW Concentrate Receipt & Melter 2 Feed (System LCP, GFR, and LFP); 24590-LAW-M6-LCP-00001, Rev. 5, P & ID-LAW Concentrate Receipt Process System Concentrate Receipt Vessel LCP-VSL-00001; 24590-LAW-M6-LCP-00002, Rev. 5, P & ID-LAW Concentrate Receipt Process System Concentrate Receipt Vessel LCP-VSL-00002. Vendor Fabrication Drawings (* Bechtel Code 1, 2, or 4 Drawings): 24590-CM-POA-MVA0-00002-03-53, Rev.00D, General Arrangement – Vessel LCP-VSL-00001 Concentrate Receipt VSL; 24590-CM-POA-MVA0-00002-03-54, Rev.00F, Plan View – Vessel LCP-VSL-00001 Concentrate Receipt VSL; 24590-CM-POA-MVA0-00002-03-55, Rev.00F, Skirt Details & Anchor Bolt Plan – Vessel LCP-VSL-00001 Concentrate Receipt VSL; 24590-CM-POA-MVA0-00002-03-56, Rev.00D, Lift Lug & Tailing Lug Details – Vessel LCP-VSL-00001 Concentrate Receipt VSL; 24590-CM-POA-MVA0-00002-03-64, Rev.00D, General Arrangement – Vessel LCP-VSL-00002 Concentrate Receipt VSL; 24590-CM-POA-MVA0-00002-03-65, Rev.00F, Plan View – Vessel LCP-VSL-00002 Concentrate Receipt VSL; 24590-CM-POA-MVA0-00002-03-66, Rev.00F, Skirt Details & Anchor Bolt Plan – Vessel LCP-VSL-00002 Concentrate Receipt VSL; 24590-CM-POA-MVA0-00002-03-67, Rev.00D, Lift Lug & Tailing Lug Details – Vessel LCP-VSL-00002 Concentrate Receipt VSL. * Bechtel Code 1 Drawing is an "as fabricated vendor drawing" approved/accepted by Bechtel. Bechtel Code 2 Drawing is an "as fabricated vendor drawing" approved (with comments)/accepted by Bechtel. Bechtel Code 4 Drawing is an "as fabricated vendor drawing" approved/accepted by Bechtel without review.

Information Assessed		Source of Information	Assessment
Design	Vessel design standards are appropriate and adequate for the vessel's intended use.	Specifications, Drawings, and Mechanical Data Sheets, listed above under References; ASME Boiler and Pressure Vessel Code (BPV), Section VIII, Division 1, Rules for Construction of Pressure Vessels, American Society of Mechanical Engineers; UBC 1997, Uniform Building Code, International Conference of Building Officials; AISC Manual of Steel Construction, Allowable Stress Design, American Institute of Steel Construction.	The LAW Concentrate Receipt Process (LCP) tanks will receive LAW concentrate from the Pretreatment facility where the melter feed will be sampled before it is transferred to the Melter Feed Preparation Vessels. The LCP Vessels, LCP-VSL-00001/2 are identical vertical vessels. The drawings show that each vessel has a 168 in. ID and a height of 153 in. from bottom tangent line to top tangent line. The vessel's top and bottom Flanged & Dished (torispherical) heads are built with 1" thick plate (top head) and 3/4" thick plate (bottom head). The shell is made of 3/4" thick plate. Each vessel is supported on a cylindrical skirt (1/2" thick by approx. 2'-6" high) which is supported on a base plate anchored to the concrete floor at Elev. 2'-0". The vessels have internal equipment such as an agitator, pumps, and spray nozzles that are supported from the vessel's top. Material for the shell, top, and bottom heads is SA-240 316 stainless steel (with max. 0.030% carbon content, dual certified) and is hereafter referred to as 316 SS. The supporting skirt is specified as SA-240 304 stainless steel and is hereafter referred to as 304 SS. The total internal volume is to be approximately 18,100 gallons with an operating volume of approximately 15,400 gallons and a normal heel of approximately 4,100 gallons. The Mechanical Data Sheets identify the LCP components as seismic category SC-III and a quality level of Commercial Material. The LCP system vessels are designed to the ASME Section VIII, Division 1 rules (with UBC-97 implemented for seismic loads on the vessels) and the vessel supports are designed to ASME Section VIII, Division 1 and the AISC manual. Supplementary requirements are identified in the Engineering Specifications and include vessel fatigue analysis, positive material identification, seismic load requirements, welding requirements, fabrication tolerances, NDE inspections and records, quality assurance requirements, and packaging, handling and storage requirements. These are appropriate and adequate design codes and standards for pressure vessels operating over the pressure and temperature ranges specified for these vessels.

Information Assessed		Source of Information	Assessment
Design (Cont'd)	If a non-standard vessel is to be used, the design calculations demonstrate sound engineering principles of construction.	Mechanical Data Sheets, Material Requisition, and Drawings listed above under References; ASME Boiler and Pressure Vessel Code (BPV), Section VIII, Division 1, Rules for Construction of Pressure Vessels, American Society of Mechanical Engineers; 24590-CM-POA-MVA0-00002-02-02, Rev. 00E, Design Calculations for LCP-VSL-00001 and LCP-VSL-00002.	The LCP Concentrate Receipt Vessels, LCP-VSL-00001/2 are standard ASME Section VIII vessels. The Mechanical Data Sheets require that the ASME Section VIII, Division 1 vessels be delivered after design, fabrication, inspection and testing with an ASME code stamp and that the vessels be nationally registered. Review of the design calculations and fabrication drawings show that the vessels have been designed as standard vessels per applicable requirements of the ASME Section VIII, Div. 1 code and additional requirements documents listed in the Material Requisition for the vessels demonstrating that sound engineering principles of construction and fabrication have been implemented for the vessels.

Information Assessed		Source of Information	Assessment
Design (Cont'd)	Vessel has adequate strength, after consideration of the corrosion allowance, to withstand the operating pressure, operating temperature, and seismic loads.	Specifications, Material Requisition, Drawings, and Mechanical Data Sheets listed above under References; ASME Boiler and Pressure Vessel Code (BPV), Section VIII, Division 1, Rules for Construction of Pressure Vessels, American Society of Mechanical Engineers; ASME Boiler and Pressure Vessel Code (BPV), Section VIII, Division 2, Rules for Construction of Pressure Vessels – Alternative Rules, American Society of Mechanical Engineers; UBC 1997, Uniform Building Code, International Conference of Building Officials; 24590-CM-POA-MVA0-00002-02-02, Rev. 00E, Design Calculations for LCP-VSL-00001 and LCP-VSL-00002.	The Mechanical Data Sheets identify the vessel's operating pressure and temperature ranges, the materials selected for the vessels, the corrosion/erosion allowance(s), and the vessel quality level which determines the requirements for seismic design. The design specification for the vessels and ASME Section VIII, Div. 1 requires specific consideration of the operating pressures and temperatures and seismic loads in the design process and also requires that the corrosion/erosion allowance thickness be excluded from nominal vessel thickness when evaluating the adequacy of vessel components for these loads through the end of life. The Engineering Specification for Seismic Qualification Criteria for Pressure Vessels adopts ASME Section VIII, Div. 1 as the governing design code to address seismic design and analysis of the vessels with acceptance criteria in accordance with ASME Section VIII, Div. 2. Detailed requirements for seismic load determination are furnished in the Specification for Structural Design Loads for Seismic Category III & IV Equipment and Tanks. This specification specifies that the UBC 1997 code be used for seismic load determination for SC-III components. Design calculations were reviewed and found to appropriately incorporate requirements of ASME Section VIII, Div.1/Div.2 and the design specifications. Calculations use the correct vessel material properties and include multiple configurations and load combinations for the vessels including maximum vessel temperatures and pressures, empty/full vessel, new/corroded walls, and seismic loads. The calculations correctly incorporate the materials, dimensions, corrosion allowances, and configurations identified in the engineering design requirements documents. Calculation results show that the vessels, nozzles, and welds have adequate strength after the appropriate consideration of corrosion allowance to withstand the applicable loads. Additionally, approval and acceptance of the vendor calculations and fabrication drawings by Bechtel National Inc. (BNI) is an added assurance that all applicable requirements pertaining to the design of the vessels have been met.

Information Assessed		Source of Information	Assessment
Foundation	Vessel foundation will maintain the load of a full vessel.	Specifications listed above under References; ASME Boiler and Pressure Vessel Code (BPV), Section VIII, Division 1, Rules for Construction of Pressure Vessels, American Society of Mechanical Engineers; AISC Manual of Steel Construction, Allowable Stress Design, American Institute of Steel Construction; 24590-WTP-DB-ENG-01-001, Rev. 1I, Basis of Design; 24590-CM-POA-MVA0-00002-02-02, Rev. 00E, Design Calculations for LCP-VSL-00001 and LCP-VSL-00002.	The Engineering Specification for Pressure Vessel Design and Fabrication requires the use of ASME Section VIII, Division 1 and the AISC manual for design of the vessel supports. These codes ensure an adequate design for the vessel supports. Design calculations include the vessel skirt, base plate, and anchor bolts. These calculations were reviewed and found to appropriately evaluate the support system of the vessels incorporating the requirements of ASME Section VIII, Div.1 and the design specification documents including vessel support materials, fluid specific gravity, new/corroded vessel weights and seismic loading. The calculations correctly incorporate the dimensions and configurations identified in the vessel support fabrication drawings. Calculation results show acceptable stresses on the tank supports. The Basis of Design document requires that the foundation underlying the vessel support must be adequate to support the loads from the full vessel; however, the adequacy of the underlying foundation is not part of this integrity assessment. The foundation adequacy is part of a separate integrity assessment report for the Secondary Containment of the LCP vessels.
	If in an area subject to flooding, the vessel is anchored.	Specifications and Material Data Sheets listed under References.	The Specification of Pressure Vessel Design and Fabrication requires supports and anchors to secure the buoyant vessel in case the vessel is empty and submerged to the level indicated in the Mechanical Data Sheets. The Mechanical Data Sheets for these vessels do not indicate any such conditions; therefore, the flooding consideration does not apply.
	Vessel system will withstand the effects of frost heave.	24590-WTP-DB-ENG-01-001, Rev. 1I, Basis of Design.	The Basis of Design document requires that all structural foundations extend a distance below grade that exceeds the 30" depth of the frost line. The vessels are located inside/interior of the building at above grade (Elevation 2'-0" level) and the building's lower level floor is at Elevation (-)21'-0", therefore, the vessel system is not subject to frost heave.

Information Assessed		Source of Information	Assessment
Waste Characteristics	Characteristics of the waste to be stored or treated have been identified (ignitable, reactive, toxic, specific gravity, vapor pressure, flash point, storage temperature)	Mechanical Data Sheets listed above under References; Plant Item Material Selection Data Sheet, 24590-LAW-N1D-LCP-P0001, Rev. 1, LCP-VSL-00001/2 (LAW) Concentrate Receipt Vessels; 24590-WTP-PER-PR-03-001, Rev.1, Prevention of Hydrogen Accumulation in WTP Tank Systems and Miscellaneous Treatment Unit Systems; 24590-WTP-PER-PR-03-002, Rev.3, Toxic Vapors and Emissions from WTP Tank Systems and Miscellaneous Treatment Unit Systems.	The Mechanical Data Sheets identify the waste process conditions and design parameters of the vessels including the waste specific gravity, storage temperatures and pressures. The Plant Item Material Selection Data Sheet addresses the pH range and chemical composition of the waste to select appropriate vessel materials and specify the corrosion/erosion allowance. Waste characteristics that are hazardous, such as ignitability, reactivity and toxicity are appropriately addressed in the Toxic Vapors and Emissions document and Prevention of Hydrogen Accumulation document. These two documents do not specifically list these vessels to exhibit any hazardous characteristics.
	Vessel is designed to store or treat the wastes with the characteristics defined above and any treatment reagents.	System Description listed above under References; Plant Item Material Selection Data Sheet, 24590-LAW-N1D-LCP-P0001, Rev. 1, LCP-VSL-00001/2 (LAW) Concentrate Receipt Vessels.	The Plant Item Material Selection Data Sheets demonstrate that the vessels are designed to process the wastes as discussed above. The System Description discusses normal and abnormal operations for the LCP vessels. Compatible fluid (demineralized water) will be used for flushing/rinsing or wash downs of the vessels. The 316 SS material selected for the vessels is appropriate for the waste to be stored and the rinsing fluid.
	The waste types are compatible with each other.	System Description listed above under References.	The System Description for the LAW (LCP) does not describe any operations where incompatible wastes are mixed in these vessels for processing. The LCP vessels function primarily to receive LAW concentrate waste from the Pretreatment Facility (PTF). The waste is stored and sampled to confirm the glass forming recipe before transferring it to the Melter Feed Preparation vessels (LFP-VSL-00001/3) for further processing to produce a vitrified product. No other wastes are used in these vessels.

Information Assessed		Source of Information	Assessment
Corrosion Protection	Vessel material and protective coatings ensure the vessel structure is adequately protected from the corrosive effects of the waste stream and external environments (expected to not leak or fail for the design life of the system)	Drawings and Mechanical Data Sheets listed above under References; Plant Item Material Selection Data Sheet; 24590-LAW-N1D-LCP-P0001, Rev. 1, LCP-VSL-00001/2 (LAW) Concentrate Receipt Vessels.	The Plant Item Material Selection Data Sheet and Mechanical Data Sheets shows that the LAW Concentrate Receipt Vessels, LCP-VSL-00001/2 normally operate at a pH of 11 to 14.5 with an operating temperature range of 77 to 150°F (with a nominal temperature of 122°F) and an operating pressure of 0.07 psig. The vessels are designed for a maximum temperature of 150°F and a maximum pressure of 15 psig. The material selection corrosion considerations include the effects of general corrosion, pitting corrosion, stress corrosion cracking, galvanic corrosion, and erosion. The material selected for the vessels is 316 SS with a corrosion/erosion allowance of 0.04 in which is adequate and appropriate for the waste to be stored. The material for the vessel support is 304 SS. The drawings show that the LCP vessels are located in LAW cells L-0123 and L-0124 at Elevation 2'-0". These cells are equipped with a sump to pump out any leaked fluid. Therefore, the cells should remain dry during normal operations which will limit external corrosion of the vessels and their supports over the facility design life of 40 years.
Corrosion Allowance	Corrosion allowance is adequate for the intended service life of the vessel.	Mechanical Data Sheets listed above under References; Plant Item Material Selection Data Sheet; 24590-LAW-N1D-LCP-P0001, Rev. 1, LCP-VSL-00001/2 (LAW) Concentrate Receipt Vessels.	The bases for the LCP vessel's material selection and corrosion/erosion allowance are furnished in the Plant Item Material Selection Data Sheet. Selection of 316 SS material with a corrosion/erosion allowance of 0.04 in. for a service life of 40 years is adequate and appropriate. The material selections and corrosion allowances are correctly carried forward to the Mechanical Data Sheets and are used in the vessel calculations consistently and correctly. A corrosion allowance for the supports is not identified but as mentioned above, the cells should remain dry preventing corrosion of the supports. Therefore, the 304 SS vessel supports are adequate for this application.

Information Assessed		Source of Information	Assessment
Pressure Relief	Pressure controls (vents and relief valves) are adequately designed to ensure pressure relief if normal operating pressures in the vessel are exceeded.	Drawings and system Description listed above under References.	The drawings and System Description document show and/or describe that the LCP Concentrate Receipt Vessels, LCP-VSL-00001/2 are designed with an unrestricted overflow through a 6" diameter line to the C3/C5 Drains/Sump Collection Vessel (RLD-VSL-00004) located at Elevation (-) 21'-0". A high-high tank level alarm and trip is designed to prevent the contents from reaching the overflow. The vessels are also connected to the LAW vessel vent system which includes backup power if power is lost during normal operations and a backup fan if one of the two ventilation fans fails. A high pressure alarm will alert operations if the headspace pressure is approaching the surrounding process cell pressure. All above listed features will prevent the over pressurization of the LCP vessels.

Master Distribution Schedule for WTP Project Subcontract Management Group

SUBMITTAL TRANSMITTAL:	☐ **First Submittal**	☐ **Re-Submittal**	☐ **QVRP Package**
☐ **No Review Required**	☐ **No Review Required Re-Submittal**		☐ **Submittal Supplement**
CORRESPONDENCE:	☒ **With Attachment**	☐ **W/O Attachment (letter only)**	
	☐ **Fax as Original (Letter Only)**	☐ **Fax as Original (With Attachment)**	
☐ **Pre-Award/Award Package**		☐ **Executed Change Order Package**	
☐ **Executed Amendment Package**		☐ **Back Charge**	

Subcontract Number:	24590-CM-HC4-HXYG-00211
Subcontract Title:	Tank Integrity Design Assessments by IQRPE
Subcontractor Name:	AREVA NC, Inc.
Subcontract Administrator:	Jean Renner

PDC Document Number	Rev	Document Title	Rev
139509	0	AREVA-07-093 transmitting AREVA-IA-102, Rev. 0 "Structural Integrity Assessment of Low Activity Waste (LAW) Concentrate Receipt Process System Concentrate Receipt Vessels, LSCP-VSL-00001/2"	0

INCOMING DISTRIBUTION

Name	MSIN/ E-mail	Original	Copy	Copy of cover sheet / transmittal only	Primary File Index	Alternate File Index	Assigned Action or Remarks
PDC	MS9-A	X		B.8			
Dan Pfluger	MS5-I		x				
			x				

OUTGOING DISTRIBUTION FOR RETURNED STATUSED STICKER SUBMITTALS

Name	MSIN/ E-mail	Original	Copy	Copy of cover sheet / transmittal only	Primary File Index	File Index Alternate	Assigned Action or Remarks
PDC	MS9-A	X					

CCN # 139510
File B.8

R10901101

AREVA

AFS-08-0085

April 23, 2008

RPP-WTP
RECEIVED
APR 30 2008
BY PDC

Ms. Jean Renner
Subcontracts
Bechtel National, Inc.
2435 Stevens Center Place
Richland, Washington 99354

Dear Ms. Renner:

BECHTEL NATIONAL, INC. CONTRACT NO. 24590-CM-HC4-HXYG-00211 - STRUCTURAL INTEGRITY ASSESSMENT OF LOW-ACTIVITY WASTE (LAW) PRIMARY OFFGAS SYSTEM (LOP) PLANT ITEMS (LOP-VSL-00001/2), (LOP-SCB-00001/2), and (LOP-WESP-00001/2) (AREVA-IA-103, REV. 0)

The integrity assessment of the subject Plant Items has been completed per the contract requirements and is enclosed for your use. The assessment found that the design is sufficient to ensure that each Plant Item is adequately designed and has sufficient structural strength, compatibility with the waste(s) to be processed/stored/treated, and corrosion protection to ensure that it will not collapse, rupture, or fail.

If you have any questions, please contact Tarlok Hundal at (509) 373-4438, or via email at tarlok.hundal@areva.com.

Sincerely,

Mark D. Rickenbach
Director, Technical Services
AREVA Federal Services LLC
Richland Office

Enclosure

cc: D. C. Pfluger, MS5-L w/enclosure (2)

AREVA Federal Services LLC
2425 Stevens Center Place, Richland, WA 99354, P.O. Box 840, Richland, WA 99352
Tel.: 509 372 8256 - Fax: 509 372 3169 - www.areva.com

STRUCTURAL INTEGRITY ASSESSMENT OF LOW-ACTIVITY WASTE (LAW) PRIMARY OFFGAS PROCESS SYSTEM (LOP) PLANT ITEMS (LOP-VSL-00001/2), (LOP-SCB-00001/2), and (LOP-WESP-00001/2)

Please note that source, special nuclear and byproduct materials, as defined in the Atomic Energy Act of 1954 (AEA), are regulated at the U.S. Department of Energy (DOE) facilities exclusively by DOE acting pursuant to its AEA authority. DOE asserts, that pursuant to the AEA, it has sole and exclusive responsibility and authority to regulate source, special nuclear, and byproduct materials at DOE-owned nuclear facilities. Information contained herein on radionuclides is provided for process description purposes only.

IQRPE REVIEW
OF
LOW-ACTIVITY WASTE (LAW) PRIMARY OFFGAS PROCESS SYSTEM (LOP)
PLANT ITEMS
(LOP-VSL-00001/2), (LOP-SCB-00001/2), and (LOP-WESP-00001/2)

"I, Tarlok Hundal have reviewed, and certified a portion of the design of a new tank system or component located at the Hanford Waste Treatment Plant, owned/operated by Department of Energy, Office of River Protection, Richland, Washington. My duties were independent review of the current design for the Low-Activity Waste (LAW) Primary Offgas Process System (LOP) Plant Items (LOP-VSL-00001/2), (LOP-SCB-00001/2), and (LOP-WESP-00001/2) as required by the Washington Administrative Code, *Dangerous Waste Regulations*, Section WAC-173-303-640(3) (a) through (g) applicable components."

"I certify under penalty of law that I have personally examined and am familiar with the information submitted in this document and all attachments and that, based on my inquiry of those individuals immediately responsible for obtaining the information, I believe that the information is true, accurate, and complete. I am aware that there are significant penalties for submitting false information, including the possibility of fine and imprisonment."

The documentation reviewed indicates that the design fully satisfies the requirements of the WAC.

The attached review is twenty-one (21) pages numbered one (1) through twenty-one (21).

EXPIRES: 02/15/10

T S Hundal
Signature

4/23/08
Date

Scope	Scope of this Integrity Assessment	This Integrity Assessment includes the following LOP System plant items including their appurtenances are located at Elevation 2'-0" in cells L-0123 and L-0124 of the LAW Vitrification Building as shown on plant general arrangement Drawing 24590-LAW-P1-P01T-00002: 1. Two Melter Submerged Bed Scrubber Condensate Vessels (LOP-VSL-00001/2)--pages 4 thru 9. 2. Two Submerged Bed Scrubbers (LOP-SCB-00001/2)--pages 10 thru 15. 3. Two Wet Electrostatic Precipitators (LOP-WESP-00001/2)--pages 16 thru 21.
References	Material Requisitions and Specifications	Material Requisitions (MRs): 24590-QL-MRD-MVA0-00002, Rev. 2 (including Supplement Nos. S0014 and S0018 to Rev. 2), Pressure Vessels, High Alloy , Shop Fabricated, Medium QL-1 (N116) for Condensate Vessels 24590-QL-MRA-MKAS-00001, Rev. 6, Submerged Bed Scrubbers, Flue or Off-Gas LAW QL-1 (N083) (QOL1). 24590-QL-MRA-MKE0-00001, Rev. 6 (including Supplement No. S007 to Rev. 6), Wet Electrostatic Precipitators (WESP) QL1/2 (QOL5) (MLT001). Specifications: The following Specifications with their respective revision and Specification Change Notices (SCNs) are listed in the above listed Material Requisitions: 24590-WTP-3PS-MV00-T0001, Engineering Specification for Pressure Vessel Design and Fabrication; 24590-WTP-3PS-MV00-T0002, Engineering Specification for Seismic Qualification Criteria for Pressure Vessels; 24590-WTP-3PS-MV00-T0003, Engineering Specification for Pressure Vessel Fatigue Analysis; 24590-WTP-3PS-MVB2-T0001, Engineering Specification for Welding of Pressure Vessels, Heat Exchangers, and Boilers; 24590-WTP-3PS-M000-T0002, General Specification for Mechanical Handling, Equipment Design, and Manufacture; 24590-WTP-3PS-G000-T0001, General Specification for Supplier Quality Assurance Program Requirements; 24590-WTP-3PS-G000-T0002, Engineering Specification for Positive Material Identification (PMI); 24590-WTP-3PS-G000-T0003, Engineering Specification for Packaging, Handling, and Storage Requirements; 24590-WTP-3PS-MKE0-T0001, Engineering Specification for Wet Electrostatic Precipitators (WESPs); 24590-WTP-3PS-FB01-T0001, Engineering Specification for Structural Design Loads for Seismic Category III & IV Equipment and Tanks.
Summary of Assessment		For each item of "Information Assessed" (i.e., Criteria) on the following pages, the items listed under "Source of Information" were reviewed and found to furnish adequate design controls and requirements to ensure that the design fully satisfies the requirements of Washington Administrative Code, WAC-173-303-640, *Dangerous Waste Regulations* for Tank Systems.

References (cont'd)	Drawings	Plant Drawings including Drawing Change Notices (DCNs) listed in the above listed Material Requisitions: 24590-LAW-P1-P01T-00002, Rev. 5, LAW Vitrification Building General Arrangement Plan at El. 3'-0"; 24590-LAW-P1-P01T-00007, Rev. 8, LAW Vitrification Building General Arrangement Section A-A, B-B, C-C, and S-S; 24590-LAW-P1-P01T-00010, Rev. 8, LAW Vitrification Building General Arrangement Section K-K, L-L, and M-M; 24590-LAW-M6-LOP-00001, Rev. 4, P & ID-LAW Primary Offgas Process System Melter 1; 24590-LAW-M6-LOP-00002, Rev. 4, P & ID-LAW Primary Offgas Process System Melter 2. 24590-LAW-M5-V17T-P0007, Rev. 0, Process Flow Diagram LAW Melter 1 Primary Offgas Treatment System (System LOP); 24590-LAW-M5-V17T-P0008, Rev. 0, Process Flow Diagram LAW Melter 2 Primary Offgas Treatment System (System LOP); Vendor Fabrication Drawings (* Bechtel Code 1, 2, or 4 Drawings): 24590-QL-POB-MVA0-00002-01-01, Rev. 00I, LAW Melter 1 SBS Condensate Vessel (LAW-LOP-VSL-00001); 24590-QL-POB-MVA0-00002-01-02, Rev. 00J, LAW Melter 1 SBS Condensate Vessel (LAW-LOP-VSL-00001); 24590-QL-POB-MVA0-00002-01-03, Rev. 00J, LAW Melter 2 SBS Condensate Vessel (LAW-LOP-VSL-00002); 24590-QL-POB-MVA0-00002-01-04, Rev. 00K, LAW Melter 2 SBS Condensate Vessel (LAW-LOP-VSL-00002); 24590-QL-POA-MKAS-00001-01-01, Rev. 00G, Submerged Bed Scrubber Assembly Drawing (LAW-LOP-SCB-00001/2); 24590-QL-POA-MKAS-00001-01-10, Rev. 00G, Submerged Bed Scrubber General Notes (LAW-LOP-SCB-00001/2); 24590-QL-POA-MKE0-00001-06-01, Rev. 00C, LAW-1 WESP Vessel Assembly, LOP-WESP-00001; 24590-QL-POA-MKE0-00001-06-02, Rev. 00C, LAW-1 WESP Vessel Assembly, LOP-WESP-00001; 24590-QL-POA-MKE0-00001-06-03, Rev. 00G, LAW-1 WESP Vessel Subassembly, LOP-WESP-00001; 24590-QL-POA-MKE0-00001-06-04, Rev. 00G, LAW-1 WESP Vessel Details, LOP-WESP-00001; 24590-QL-POA-MKE0-00001-06-06, Rev. 00G, LAW-1 WESP Vessel Details, LOP-WESP-00001 (including S001); 24590-QL-POA-MKE0-00001-06-13, Rev. 00C, LAW-2 WESP Vessel Assembly, LOP-WESP-00002; 24590-QL-POA-MKE0-00001-06-14, Rev. 00C, LAW-2 WESP Vessel Assembly, LOP-WESP-00002; 24590-QL-POA-MKE0-00001-06-15, Rev. 00G, LAW-2 WESP Vessel Subassembly, LOP-WESP-00002 (including S001); 24590-QL-POA-MKE0-00001-06-16, Rev. 00G, LAW-2 WESP Vessel Details, LOP-WESP-00002; 24590-QL-POA-MKE0-00001-06-18, Rev. 00G, LAW-2 WESP Vessel Details, LOP-WESP-00002; 24590-QL-POA-MKE0-00001-06-33, Rev. 00H, P & ID LAW-WESP, LOP-WESP-00001; 24590-QL-POA-MKE0-00001-06-00049, Rev. 00F, P & ID LAW-WESP, LOP-WESP-00002. * Bechtel Code 1 Drawing is an "as fabricated vendor drawing" approved/accepted by Bechtel. Bechtel Code 2 Drawing is an "as fabricated vendor drawing" approved (with comments)/accepted by Bechtel. Bechtel Code 4 Drawing is an "as fabricated vendor drawing" approved/accepted by Bechtel without review.

References (cont'd)	Mechanical Data Sheets and System Description	Mechanical Data Sheets: 24590-LAW-MVD-LOP-00004, Rev. 5, LAW Melter 1 SBS Condensate Vessel (LOP-VSL-00001); 24590-LAW-MVD-LOP-00005, Rev. 5, LAW Melter 2 SBS Condensate Vessel (LOP-VSL-00002); 24590-LAW-MKD-LOP-00008, Rev. 1, LAW Melter 1/2, Submerged Bed Scrubber (LOP-SCB-00001/2). System Description: 24590-LAW-3YD-LOP-00001, Rev. 1, System Description for LAW Primary Offgas Process (LOP) and LAW Secondary Offgas/Vessel Vent Process (LVP) Systems (including SDCN 00006 to Rev. 1)

	Information Assessed	Source of Information	Assessment
Design	Vessel design standards are appropriate and adequate for the vessel's intended use.	Mechanical Data Sheets, Specifications, and Drawings, listed above under References; ASME Boiler and Pressure Vessel Code (BPV), Section VIII, Division 1, Rules for Construction of Pressure Vessels, American Society of Mechanical Engineers.	The Mechanical Data Sheets show that the LAW LOP system Melter 1 and Melter 2 SBS Condensate Vessels, LOP-VSL-00001/2 and their appurtenances are to be designed to the ASME Section VIII, Division 1 rules which are appropriate for pressure vessels operating with mixed waste solutions over the pressure and temperature ranges specified for these vessels. Supplementary requirements are specified in the Engineering Specification for Pressure Vessel Design and Fabrication. Supplementary requirements address pressure vessel, positive material identification, lifting attachment design, equipment drop evaluation, fabrication tolerances, acceptable welding procedures for the vessel and appurtenances, welder qualifications and testing records, NDE inspections and records, and lifting, packaging, shipping, handling and storage requirements. These are adequate and acceptable design standards for the intended use of the vessels. The drawings show that the LOP-VSL-00001/2 are vertical with a 144 in. ID and a height of 98 in. from the bottom tangent line to the top tangent line. The vessels' top and bottom Flanged & Dished (F & D) heads and shells are built with 5/8" thick plate. Each vessel is supported on a cylindrical skirt (1/2" thick plate by approx. 28" high) which in turn is supported on a base plate anchored to the concrete floor at Elev. 2'-0". Each vessel has internal equipment such as an eductor, spay nozzle, and piping that are supported from the vessel's top head. Material for the shell, top and bottom heads, and vessel's internal equipment is Hastelloy C-22 (SB-575 N06022) and is hereafter referred to as C-22. Each vessel's shell and bottom head has an external cooling coil jacket made of SA-312 304 stainless steel half-pipe section and the supporting skirt is specified as SA-240 304 stainless steel plate. Both of these aforementioned stainless steel components have a 0.030% maximum carbon content and this material is hereafter referred to as the 304 stainless steel. The operating volume of each vessel is about 7,400 gallons and the total internal volume is about 9,050 gallons.

	Information Assessed	Source of Information	Assessment
Design (cont'd)	If a non-standard vessel is to be used, the design calculations demonstrate sound engineering principles of construction.	Mechanical Data Sheets, Material Requisition, and Drawings listed above under References; ASME Boiler & Pressure Vessel Code (BPV), Section VIII, Division 1, Rules for Construction of Pressure Vessels, American Society of Mechanical Engineers; 24590-QL-POB-MVA0-00002-03-01, Rev. 00E, Design Calculations for LOP-VSL-00001; 24590-QL-POB-MVA0-00002-03-09, Rev. 00C, Design Calculations for LOP-VSL-00001; 24590-QL-POB-MVA0-00002-03-11, Rev. 00C, Design Calculations for LOP-VSL-00001; 24590-QL-POB-MVA0-00002-03-02, Rev. 00E, Design Calculations for LOP-VSL-00002; 24590-QL-POB-MVA0-00002-03-10, Rev. 00C, Design Calculations for LOP-VSL-00002; 24590-QL-POB-MVA0-00002-03-12, Rev. 00C, Design Calculations for LOP-VSL-00002;	The LOP Melter 1 and Melter 2 SBS Condensate Vessels, LOP-VSL-00001/2 are standard ASME Section VIII, Div. 1 vessels. The Mechanical Data Sheets require that the ASME Section VIII, Division 1 vessels be delivered after design, fabrication, inspection, and testing with an ASME code stamp and that the vessels be nationally registered. These are shop fabricated vessels that are delivered for service in the LAW Facility. Review of the Design Calculations documents of these vessels show that the vessels have been designed as standard vessels per applicable requirements of ASME Section VIII, Division 1 Code and other documents listed in the Material Requisition for the vessels. The aforementioned statements and the vendor fabrication drawings reviewed demonstrate that sound engineering principles of construction and fabrication have been used for the vessels.

	Information Assessed	Source of Information	Assessment
Design (cont'd)	Vessel has adequate strength, after consideration of the corrosion allowance, to withstand the operating pressure, operating temperature, and seismic loads.	Mechanical Data Sheets, Specifications, and Material Requisition, listed above under References; ASME Boiler & Pressure Vessel Code (BPV), Section VIII, Division 1, Rules for Construction of Pressure Vessels, American Society of Mechanical Engineers; UBC 1997, Uniform Building Code, International Conference of Building Officials; 24590-QL-POB-MVA0-00002-03-01, Rev. 00E, Design Calculations for LOP-VSL-00001; 24590-QL-POB-MVA0-00002-03-09, Rev. 00C, Design Calculations for LOP-VSL-00001; 24590-QL-POB-MVA0-00002-03-11, Rev. 00C, Design Calculations for LOP-VSL-00001; 24590-QL-POB-MVA0-00002-03-02, Rev. 00E, Design Calculations for LOP-VSL-00002; 24590-QL-POB-MVA0-00002-03-10, Rev. 00C, Design Calculations for LOP-VSL-00002; 24590-QL-POB-MVA0-00002-03-12, Rev. 00C, Design Calculations for LOP-VSL-00002.	The Mechanical Data Sheets identify each vessel's operating pressure and temperature ranges, the materials selected for the vessel, the corrosion allowance, the vessel quality level, and its seismic category. The Mechanical Data Sheets also require that the vessels be designed to ASME Section VIII, Division 1 rules. This code requires specific consideration of the operating pressures, temperatures, seismic loads, and corrosion allowance in the design process. Supplementary design criteria are specified in the Engineering Specifications for Seismic Qualification Criteria and Structural Design Loads for Seismic Category III & IV Equipment and Tanks to provide for the seismic design analysis. The Mechanical Data Sheets identify the vessels operating pressure and temperature ranges and the requirements for seismic qualification in the design. ASME Section VIII, Div. 1 requires that corrosion allowance thickness shall be excluded from nominal vessel thickness when evaluating the adequacy of vessel components for these loads at end of life. The Engineering Specification for Seismic Qualification Criteria for Pressure Vessels provides pertinent requirements for determination of seismic loads, analysis, and acceptance criteria for the vessels and their supports. The Mechanical Data Sheet identifies the vessels' Seismic Category as SC- III. For SC-III vessels, the detailed requirements for seismic load determination (per UBC 1997) are furnished in the Specification for Structural Design Loads for Seismic Category III & IV Equipment and Tanks. Review of the Design Calculations documents of these vessels show that they have adequate strength after consideration of corrosion allowance to withstand the applicable operating pressure, temperature, and seismic loads for the specified design life of the vessels. Furthermore, approval and acceptance of the vendor fabrication drawings by Bechtel National Inc. (BNI) is an added assurance that all applicable requirements stated above and as described in documents (including daughter documents) listed in Material Requisition for the vessels have been met.

	Information Assessed	Source of Information	Assessment
Foundation	Vessel foundation will maintain the load of a full vessel.	Specifications listed above under References; ASME Boiler & Pressure Vessel Code (BPV), Section VIII, Division 1, Rules for Construction of Pressure Vessels, American Society of Mechanical Engineers; 24590-WTP-DB-ENG-01-001, Rev. 1K, Basis of Design. 24590-QL-POB-MVA0-00002-03-01, Rev. 00E, Design Calculations for LOP-VSL-00001; 24590-QL-POB-MVA0-00002-03-02, Rev. 00E, Design Calculations for LOP-VSL-00002.	The Engineering Specification for Pressure Vessel Design and Fabrication requires the use of ASME Section VIII, Division 1 for the design of the vessel supports. This code ensures an adequate design for the vessel supports. Review of the Design Calculations documents of the vessels show that the vessels' support skirts have adequate strength to maintain the loads of full vessel. Furthermore, Chapter 14 of the Basis of Design document requires that the foundation underlying the vessel support must be adequate to support the loads from full vessel, which is out of scope of this assessment. The assessment of the adequacy of the underlying foundation is part of a separate integrity assessment report for the Secondary Containment of the vessels.
	If in an area subject to flooding, the vessel is anchored..	Specifications and Mechanical Data Sheets listed under References.	Specification for Pressure Vessel Design requires designing the vessel supports and anchors to secure the buoyant vessel in case the vessel is empty and submerged to the level indicated in the Mechanical Data Sheet. The Mechanical Data Sheets for these vessels do not indicate any such conditions; therefore, the flooding consideration does not apply.
	Vessel system will withstand the effects of frost heave.	24590-WTP-DB-ENG-01-001, Rev. 1K, Basis of Design.	The Basis of Design document requires that all structural foundations for outdoor equipment to extend a distance below grade that exceeds the 30" depth of the frost line. The vessels are located inside/interior of the building at Elev. 2'-0" level, and the building's lower level floor is at Elev. (-) 21'-0", therefore, the vessels' foundations are not subject to frost heave.

	Information Assessed	Source of Information	Assessment
Waste Characteristics	Characteristics of the waste to be stored or treated have been identified (dangerous waste characteristics, specific gravity, vapor pressure, flash point, storage temperature)	Mechanical Data Sheets listed above under References; Plant Item Material Selection Data Sheet, 24590-LAW-N1D-LOP-P0002, Rev. 1, LOP-VSL-00001 & LOP-VSL-00002 (LAW) Melter 1 & Melter 2 SBS Condensate Vessel; 24590-WTP-PER-PR-03-002, Rev. 3, Toxic Vapors and Emissions from WTP Tank Systems and Miscellaneous Treatment Unit Systems; 24590-WTP-PER-PR-03-001, Rev. 1, Prevention of Hydrogen Accumulation in WTP Tank Systems and Miscellaneous Treatment Unit Systems.	The Mechanical Data Sheets present process conditions and design parameters of the vessels, such as the waste specific gravity, temperatures, and pressures, etc. The Plant Item Material Selection Data Sheet addresses the pH range and chemical composition of the waste and selects appropriate vessel materials and the corrosion allowance. Waste characteristics that are hazardous, such as ignitability, reactivity, and toxicity are appropriately addressed in the Toxic Vapors and Emissions document and Prevention of Hydrogen Accumulation document. These two documents do not specifically list these vessels to exhibit any hazardous waste characteristics.
	Vessel is designed to store or treat the wastes with the characteristics defined above and any treatment reagents.	System Description listed above under References; Plant Item Material Selection Data Sheet, 24590-LAW-N1D-LOP-P0002, Rev. 1, LOP-VSL-00001 & LOP-VSL-00002 (LAW) Melter 1 & Melter 2 SBS Condensate Vessel.	The Plant Item Material Selection Data Sheet demonstrates that the vessels are designed to process the wastes discussed above. The System Description discusses normal and abnormal operations for the LOP vessels. The solids accumulated in the vessels are suspended by the Eductors (LOP-EDUC-00001/2) powered by a side stream from the recirculation line. The cooled condensate is recycled via purge pumps (LOP-PMP-00001/4) to the SBS column vessels.
	The waste types are compatible with each other.	System Description listed above under References.	The System Description for the LAW (LOP) does not describe any operations where incompatible wastes are mixed in these vessels for processing. These vessels are part of LAW LOP system's purpose of cooling the offgas and removing the aerosols generated by the LAW melters.

	Information Assessed	Source of Information	Assessment
Corrosion Protection	Vessel material and protective coatings ensure the vessel structure is adequately protected from the corrosive effects of the waste stream and external environments (expected to not leak or fail for the design life of the system)	Mechanical Data Sheets and Drawings listed above under References; Plant Item Material Selection Data Sheet, 24590-LAW-N1D-LOP-P0002, Rev. 1, LOP-VSL-00001 & LOP-VSL-00002 (LAW) Melter 1 & Melter 2 SBS Condensate Vessel;	The Plant Item Material Selection Data Sheet shows that the LAW Submerged Bed Scrubber condensate vessels, LOP-VSL-00001/2 normally operate at a pH range of 3 to 8, 2 psig pressure, and at a nominal temperature of 113°F. The vessels are designed for 15 psig pressure and a temperature of 237°F. Other pertinent vessel operation and design information is provided in the Mechanical Data Sheets. The material selected is C-22 and a corrosion allowance of 0.04 in. is recommended, however, Mechanical Data Sheets require conservative corrosion allowance values of 0.08 in. internal plus 0.01 in. external to be used in the design. The external corrosion allowance is used for shell surface under the jacket. The LOP vessels as shown on drawings are located in the LAW facility cells (L-0123/L-0124) at Elevation 2'-0". Each vessel's support skirt material is 304 stainless steel. Each cell is equipped with a sump pump to remove any leakage. Therefore, the cells should remain dry during normal operations which will limit external corrosion of the vessel over the facility design life.
Corrosion Allowance	Corrosion allowance is adequate for the intended service life of the vessel.	Mechanical Data Sheets listed above under References; Plant Item Material Selection Data Sheet, 24590-LAW-N1D-LOP-P0002, Rev. 1, LOP-VSL-00001 & LOP-VSL-00002 (LAW) Melter 1 & Melter 2 SBS Condensate Vessel.	The bases for the LOP vessel's material selection and corrosion allowance are furnished in the Plant Item Material Selection Data Sheet. Selection of C-22 material for the vessels with a corrosion allowance of 0.04 in. for a service life of 40 years is adequate and appropriate; however, conservatively, 0.08 in. internal plus 0.01 in. external corrosion allowance values have been used in the design calculations as required in the Mechanical Data Sheets.
Pressure Relief	Pressure controls (vents and relief valves) are adequately designed to ensure pressure relief if normal operating pressures in the vessel are exceeded.	Drawings and System Description listed above under References.	The LOP Melter 1 and Melter 2 SBS Condensate Vessels, LOP-VSL-00001/2 receive condensate overflow from SBS Column Vessels (LOP-SCB-00001/2) and then continuously pump out the further cooled off condensate back into the SBS, using purge pumps (LOP-PMP-00001/4). All these plant items are located at Elevation 2'-0", as shown on the drawings and described in the System Description document. The vessels are vented via the 2" diameter outlet lines to the SBS Column Vessels (LOP-SCB-00001/2) into the main offgas discharge pipe. These vents prevent the over pressurization of the SBS Condensate Vessels.

Information Assessed		Source of Information	Assessment
Design	Vessel design standards are appropriate and adequate for the vessel's intended use.	Mechanical Data Sheet, Specifications, and Drawings, listed above under References; ASME Boiler and Pressure Vessel Code (BPV), Section VIII, Division 1, Rules for Construction of Pressure Vessels, American Society of Mechanical Engineers. ASME Boiler and Pressure Vessel Code (BPV), Section VIII, Division 2, Alternate Rules, American Society of Mechanical Engineers.	The Mechanical Data Sheets show that the LOP system Submerged Bed Scrubbers, LOP-SCB-00001/2 and their appurtenances are to be designed to the ASME Section VIII, Division 1 rules which are appropriate for pressure vessels operating with mixed waste solutions over the pressure and temperature ranges specified for these plant items. Supplementary requirements are specified in the Engineering Specification for Pressure Vessel Design and Fabrication. Supplementary requirements address pressure vessel, positive material identification, lifting attachment design, equipment drop evaluation, fabrication tolerances, acceptable welding procedures for the vessel and appurtenances, welder qualifications and testing records, NDE inspections and records, and lifting, packaging, shipping, handling and storage requirements. The vessels are subjected to cyclic loading. The Specification for Fatigue Analysis requires the use of ASME Section VIII, Division 2 rules for vessel components with a high number of load cycles. These are adequate and acceptable design standards for the intended use of these SBSs. The drawings show that the LAW Submerged Bed Scrubbers, LOP-SCB-00001/2 are vertical with a 120 in. ID and a height of 78 in. from bottom tangent line to top tangent line. The top and bottom Flanged & Dished (F & D) heads and shell are built with 5/8" thick plate. Each SBS is supported on a cylindrical skirt (1/2" thick plate by approx. 5'-7" high) which in turn is supported on a base plate anchored to the concrete floor at Elev. 2'-0". The SBSs have internal equipment such as coil and scrubber bed supported from the top head. Material for the shell, top and bottom heads, and internal equipment is Hastelloy C-22 (SB-575 N06022) and is hereafter referred to as C-22. The vessel's shell and bottom head has an external cooling coil jacket made of SA-312 304 stainless steel half-pipe section. The supporting skirt is specified as SA-240 304 stainless steel plate (0.030% maximum carbon content) and is hereafter referred to as 304 stainless steel. The operating volume of each vessel is about 3,690 gallons and the total internal volume of each is about 4,950 gallons.

Information Assessed		Source of Information	Assessment
Design (cont'd)	If a non-standard vessel is to be used, the design calculations demonstrate sound engineering principles of construction.	Specifications, Drawings, Mechanical Data Sheet, and Material Requisition listed above under References; ASME Boiler & Pressure Vessel Code (BPV), Section VIII, Division 1, Rules for Construction of Pressure Vessels, American Society of Mechanical Engineers; 24590-QL-POA-MKAS-00001-01-03, Rev. 00C, Design Calculations for (LOP-SCB-00001/2); 24590-QL-POA-MKAS-00001-01-16, Rev. 00C, Design Calculations for (LOP-SCB-00001/2); 24590-QL-POA-MKAS-00001-01-17, Rev. 00C, Design Calculations for (LOP-SCB-00001/2); 24590-QL-POA-MKAS-00001-01-18, Rev. 00C, Design Calculations for (LOP-SCB-00001/2).	The LOP Submerged Bed Scrubbers, LOP-SCB-00001/2 are standard ASME Section VIII vessels. The Mechanical Data Sheet requires that the ASME Section VIII, Division 1 plant items be delivered after design, fabrication, inspection, and testing with an ASME code stamp and are nationally registered. These are shop fabricated vessels that will be delivered for service in the LAW Facility. Review of the Design Calculations documents of these vessels show that they have been designed as standard vessels per applicable requirements of ASME Section VIII, Division 1 Code and other documents listed in the Material Requisition for the vessels. The aforementioned statements and the vendor fabrication drawings reviewed demonstrate that sound engineering principles of construction and fabrication have been used for the vessels.

	Information Assessed	Source of Information	Assessment
Design (cont'd)	Vessel has adequate strength, after consideration of the corrosion allowance, to withstand the operating pressure, operating temperature, and seismic loads.	Specifications, Material Requisition, Drawings, and Mechanical Data Sheet listed above under References; ASME Boiler and Pressure Vessel Code (BPV), Section VIII, Division 1, Rules for Construction of Pressure Vessels, American Society of Mechanical Engineers; UBC 1997, Uniform Building Code, International Conference of Building Officials; 24590-QL-POA-MKAS-00001-01-03, Rev. 00C, Design Calculations for (LOP-SCB-00001/2); 24590-QL-POA-MKAS-00001-01-16, Rev. 00C, Design Calculations for (LOP-SCB-00001/2); 24590-QL-POA-MKAS-00001-01-17, Rev. 00C, Design Calculations for (LOP-SCB-00001/2); 24590-QL-POA-MKAS-00001-01-18, Rev. 00C, Design Calculations for (LOP-SCB-00001/2).	The Mechanical Data Sheet identifies each vessel's operating pressure and temperature ranges, the materials selected for the vessel, the corrosion allowance, the vessel quality level, and its seismic category. The Mechanical Data Sheet also requires that the vessels be designed to ASME Section VIII, Division 1 rules. This code requires specific consideration of the operating pressures, temperatures, seismic loads, and corrosion allowance in the design process. Supplementary design criteria are specified in the Engineering Specifications for Seismic Qualification Criteria and Structural Design Loads for Seismic Category III & IV Equipment and Tanks to provide for the seismic design analysis. The Mechanical Data Sheet identifies the vessels operating pressure and temperature ranges and the requirements for seismic qualification in the design. ASME Section VIII, Div. 1 requires that corrosion allowance thickness shall be excluded from nominal vessel thickness when evaluating the adequacy of vessel components for these loads at end of life. The Engineering Specification for Seismic Qualification Criteria for Pressure Vessels provides pertinent requirements for determination of seismic loads, analysis, and acceptance criteria for the vessels and their supports. The Mechanical Data Sheet identifies the vessels' Seismic Category as SC- III. For SC-III vessels, the detailed requirements for seismic load determination (per UBC 1997) are furnished in the Specification for Structural Design Loads for Seismic Category III & IV Equipment and Tanks. Review of the Design Calculations documents of these vessels show that they have adequate strength after consideration of corrosion allowance to withstand the applicable operating pressure, temperature, and seismic loads for the specified design life of the vessels. Furthermore, approval and acceptance of the vendor fabrication drawings by Bechtel National Inc. (BNI) is an added assurance that all applicable requirements stated above and as described in documents (including daughter documents) listed in Material Requisition for the vessels have been met.

	Information Assessed	Source of Information	Assessment
Foundation	Vessel foundation will maintain the load of a full vessel.	Specifications listed above under References; ASME Boiler & Pressure Vessel Code (BPV), Section VIII, Division 1, Rules for Construction of Pressure Vessels, American Society of Mechanical Engineers; 24590-WTP-DB-ENG-01-001, Rev. 1K, Basis of Design; 24590-QL-POA-MKAS-00001-01-16, Rev. 00C, Design Calculations for (LOP-SCB-00001/2).	The Engineering Specification for Pressure Vessel Design and Fabrication requires the use of ASME Section VIII, Division 1 for the design of the vessel supports. This code ensures an adequate design for the vessel supports. Review of the Design Calculations document of the vessels show that the vessels' support skirts have adequate strength to maintain the loads of full vessel. Furthermore, Chapter 14 of the Basis of Design document requires that the foundation underlying the vessel support must be adequate to support the loads from full vessel, which is out of scope of this assessment. The assessment of the adequacy of the underlying foundation is part of a separate integrity assessment report for the Secondary Containment of the vessels.
	If in an area subject to flooding, the vessel is anchored.	Specifications and Mechanical Data Sheet listed above under References.	Buoyant forces of an empty vessel in a flooded room if identified in the Mechanical Data Sheet (MDS) are a mandatory standard design load case in the Specification for Pressure Vessel Design and Fabrication. There are no such requirements in the MDS and this requirement does not apply here. However, the buoyant forces have been considered in the calculations.
	Vessel system will withstand the effects of frost heave.	Drawings listed above under References; 24590-WTP-DB-ENG-01-001, Rev. 1K, Basis of Design.	The Basis of Design document requires that all structural foundations for outdoor equipment to extend a distance below grade that exceeds the 30" depth of the frost line. The drawings show that the SBSs are located inside/interior of the building at Elev. 2'-0" level, and the building's lower level floor is at Elev. (-) 21'-0", therefore, the foundations are not subject to frost heave.

	Information Assessed	Source of Information	Assessment
Waste Characteristics	Characteristics of the waste to be stored or treated have been identified (dangerous waste characteristics, specific gravity, vapor pressure, flash point, storage temperature)	Mechanical Data Sheet listed above under References; Plant Item Material Selection Data Sheet, 24590-LAW-N1D-LOP-P0001, Rev. 1, LOP-SCB-00001/2 (LAW) Melter 1 and Melter 2 Submerged Bed Scrubbers (SBS); 24590-WTP-PER-PR-03-002, Rev. 3, Toxic Vapors and Emissions from WTP Tank Systems and Miscellaneous Treatment Unit Systems; 24590-WTP-PER-PR-03-001, Rev. 1, Prevention of Hydrogen Accumulation in WTP Tank Systems and Miscellaneous Treatment Unit Systems.	The Mechanical Data Sheet presents process conditions and design parameters of the vessels, such as the waste specific gravity, storage temperatures and pressures, etc. The Plant Item Material Selection Data Sheet addresses the pH range and chemical composition of the waste and selects appropriate vessel materials and the corrosion allowance. Waste characteristics that are hazardous, such as ignitability, reactivity, and toxicity are appropriately addressed in the Toxic Vapors and Emissions document and Prevention of Hydrogen Accumulation document. These two documents do not specifically list these vessels to exhibit any hazardous characteristics. As an added feature, these plant items are grounded to control ignition sources.
	Vessel is designed to store or treat the wastes with the characteristics defined above and any treatment reagents.	System Description listed above under References; Plant Item Material Selection Data Sheet, 24590-LAW-N1D-LOP-P0001, Rev. 1, LOP-SCB-00001/2 (LAW) Melter 1 and Melter 2 Submerged Bed Scrubbers (SBS).	The Plant Item Material Selection Data Sheet demonstrates that the vessel is designed to process the wastes discussed above. The System Description discusses normal and abnormal operations for the SBSs. To help remove the solids the re-circulated stream is pumped through 8 lances that agitate the bottom of the SBS column and consolidate the solids near the pump suction.
	The waste types are compatible with each other.	System Description listed above under References.	The System Description for the LAW (LOP) does not describe any operations where incompatible wastes are mixed in the SBSs for processing. These vessels are part of LAW LOP system's purpose of cooling the offgas and removing the aerosols generated by the LAW melters.

Information Assessed		Source of Information	Assessment
Corrosion Protection	Vessel material and protective coatings ensure the vessel structure is adequately protected from the corrosive effects of the waste stream and external environments (expected to not leak or fail for the design life of the system)	Drawings and Mechanical Data Sheet listed above under References; Plant Item Material Selection Data Sheet, 24590-LAW-N1D-LOP-P0001, Rev. 1, LOP-SCB-00001/2 (LAW) Melter 1 and Melter 2 Submerged Bed Scrubbers (SBS).	Pertinent vessel operation and design information is listed in the Plant Item Material Selection Data Sheet and Mechanical Data Sheet documents. These documents show that the LAW Submerged Bed Scrubbers, LOP-SCB-00001/2 normally operate at a pH range of 3 to 8 and at a temperature of about 122°F and at (-) 2.2 to 0 psig and they are designed for full vacuum (FV) and 15 psig pressure and a temperature of 237 °F. The material selected is C-22 and a corrosion allowance of 0.04 in. The SCBs are located in the LAW cells (L-0123/L-0124) at Elevation 2'-0". The vessel's support skirt material is 304 stainless steel. This cell is equipped with a sump to pump out any leaks. Therefore, the cell should remain dry during normal operations which will limit external corrosion of the vessel over the facility design life.
Corrosion Allowance	Corrosion allowance is adequate for the intended service life of the vessel.	Mechanical Data Sheet listed above under References; Plant Item Material Selection Data Sheet, 24590-LAW-N1D-LOP-P0001, Rev. 1, LOP-SCB-00001/2 (LAW) Melter 1 and Melter 2 Submerged Bed Scrubbers (SBS).	The bases for the SBSs' material selection and corrosion allowance are furnished in the Plant Item Material Selection Data Sheet. Selection of C-22 and 304 stainless steel materials with a corrosion allowance of 0.04 in. for a service life of 40 years is adequate and appropriate. The material selections and corrosion allowances are carried forward to the Mechanical Data Sheet, consistently and correctly.
Pressure Relief	Pressure controls (vents and relief valves) are adequately designed to ensure pressure relief if normal operating pressures in the vessel are exceeded.	Drawings and System Description listed above under References.	The LOP Submerged Bed Scrubbers , LOP-SCB-00001/2 are designed for unrestricted continuous liquid overflow through two 4" diameter lines to the SBS Condensate Vessels (LOP-VSL-00001/2) which are also located at Elevation 2'-0", as shown on the drawings and described in the System Description document. The offgas also flows unrestrictedly via the 10" diameter outlet lines to the LAW Wet Electrostatic Precipitators (LOP-WESP-00001/2). The unrestricted liquid overflow and offgas discharge prevent the over pressurization of the Scrubbers.

	Information Assessed	Source of Information	Assessment
Design	Vessel design standards are appropriate and adequate for the vessel's intended use.	Specifications, Drawings, and System Description, listed above under References; ASME Boiler and Pressure Vessel Code (BPV), Section VIII, Division 1, Rules for Construction of Pressure Vessels, American Society of Mechanical Engineers.	The Engineering Specification for Wet Electrostatic Precipitators (WESPs) requires that the WESPs (LOP-WESP-00001/2) including appurtenances are to be designed to the ASME Section VIII, Division 1 rules which are appropriate for pressure vessels operating with mixed waste solutions over the pressure and temperature ranges specified for these plant items. Supplementary requirements are specified in the Engineering Specification for Pressure Vessel Design and Fabrication. Supplementary requirements address pressure vessel, positive material identification, lifting attachment design, equipment drop evaluation, fabrication tolerances, acceptable welding procedures for the vessel and appurtenances, welder qualifications and testing records, NDE inspections and records, and lifting, packaging, shipping, handling and storage requirements. These are adequate and acceptable design standards for the intended use of these plant items. The Specification for the LAW Wet Electrostatic Precipitators provides the overall dimensions of the vessels and the vendor fabrication drawings show that the LOP-WESP-00001/2 are vertical with a 8'-0" OD and a height of 21'-6" from bottom of skirt base plate to the top. Each vessel's top and bottom Flanged and Dished (F & D) heads are of ellipsoidal shape. The shells are made of 1/2" thick plate and top and bottom head plates are 3/8"thick. Each WESP is supported on a skirt (51" high x 3/8" thick plate) which in turn is supported on a base plate anchored to the concrete floor at Elev. 2'-0". Material specified for the vessels is 6% Molybdenum stainless steel alloy (ASME SB688, UNS-N08367) and is hereafter referred to as 6% Mo. The material for supporting skirt plate is specified as SA-240 304 stainless steel (0.030% maximum carbon content) and is hereafter referred to as 304 stainless steel.

	Information Assessed	Source of Information	Assessment
Design (cont'd)	If a non-standard vessel is to be used, the design calculations demonstrate sound engineering principles of construction.	Specifications, Drawings, and Material Requisition listed above under References; ASME Boiler & Pressure Vessel Code (BPV), Section VIII, Division 1, Rules for Construction of Pressure Vessels, American Society of Mechanical Engineers; 24590-QL-POA-MKE0-00001-07-01, Rev. 00D, Design Calculations for (LOP-WESP-00002); 24590-QL-POA-MKE0-00001-07-02, Rev. 00D, Design Calculations for (LOP-WESP-00001); 24590-QL-POA-MKE0-00001-07-03, Rev. 00H, Design Calculations for (LOP-WESP-00001/2); 24590-QL-POA-MKE0-00001-07-12, Rev. 00A, Design Calculations for (LOP-WESP-00001/2).	The LOP Wet Electrostatic Precipitators, LOP-WESP-00001/2 are standard ASME Section VIII, Division 1 vessels. The Specification for the WESPs requires that the ASME Section VIII, Division 1 plant items be delivered after design, fabrication, inspection and testing with an ASME code stamp and be nationally registered. These are shop fabricated vessels that will be delivered for service in the LAW Facility. Review of the Design Calculations documents of these vessels show that the vessels have been designed as standard vessels per applicable requirements of ASME Section VIII, Division 1 Code and other documents listed in the Material Requisition for the vessels. The aforementioned statements and the vendor fabrication drawings reviewed demonstrate that sound engineering principles of construction and fabrication have been used for the vessels.

	Information Assessed	Source of Information	Assessment
Design (cont'd)	Vessel has adequate strength, after consideration of the corrosion allowance, to withstand the operating pressure, operating temperature, and seismic loads.	Specifications and Drawings listed above under References; ASME Boiler & Pressure Vessel Code (BPV), Section VIII, Division 1, Rules for Construction of Pressure Vessels, American Society of Mechanical Engineers; UBC 1997, Uniform Building Code, International Conference of Building Officials; 24590-QL-POA-MKE0-00001-07-01, Rev. 00D, Design Calculations for (LOP-WESP-00002); 24590-QL-POA-MKE0-00001-07-02, Rev. 00D, Design Calculations for (LOP-WESP-00001); 24590-QL-POA-MKE0-00001-07-03, Rev. 00H, Design Calculations for (LOP-WESP-00001/2); 24590-QL-POA-MKE0-00001-07-12, Rev. 00A, Design Calculations for (LOP-WESP-00001/2).	The Specification for the WESPs identifies their operating pressure and temperature ranges, the materials selected for the vessel, the corrosion allowance, and the vessel quality level which determines the requirements for seismic design. The specification requires specific consideration of the operating pressures and temperatures and seismic loads in the design process. This specification further requires that vessels be designed to ASME Section VIII, Division 1 rules. This code requires specific consideration of the operating pressures, temperatures, seismic loads, and corrosion allowance in the design process. Supplementary design criteria are specified in the Engineering Specifications for Seismic Qualification Criteria and Structural Design Loads for Seismic Category III & IV Equipment and Tanks to provide for the seismic design analysis. ASME Section VIII, Div. 1 requires that corrosion allowance thickness shall be excluded from nominal vessel thickness when evaluating the adequacy of vessel components for these loads at end of life. The Engineering Specification for Seismic Qualification Criteria for Pressure Vessels provides pertinent requirements for determination of seismic loads, analysis, and acceptance criteria for the vessels and their supports. The Specification for the WESPs design identifies the vessels' Seismic Category as SC- III. For SC-III vessels, the detailed requirements for seismic load determination (per UBC 1997) are furnished in the Specification for Structural Design Loads for Seismic Category III & IV Equipment and Tanks. Review of the Design Calculations documents of these vessels show that they have adequate strength after consideration of corrosion allowance to withstand the applicable operating pressure, temperature, and seismic loads for the specified design life of the vessels. Furthermore, approval and acceptance of the vendor fabrication drawings by Bechtel National Inc. (BNI) is an added assurance that all applicable requirements stated above and as described in documents (including daughter documents) listed in Material Requisition for the vessels have been met.

	Information Assessed	Source of Information	Assessment
Foundation	Vessel foundation will maintain the load of a full vessel.	Specifications listed above under References; ASME Boiler & Pressure Vessel Code (BPV), Section VIII, Division 1, Rules for Construction of Pressure Vessels, American Society of Mechanical Engineers; 24590-WTP-DB-ENG-01-001, Rev. 1K, Basis of Design; 24590-QL-POA-MKE0-00001-07-03, Rev. 00H, Design Calculations for (LOP-WESP-00001/2).	The Engineering Specification for Pressure Vessel Design and Fabrication requires the use of ASME BPV Code, Section VIII, Division 1, for the design of the WESP supports. This code ensures an adequate design for the WESP supports. Review of the Design Calculations document of the vessels show that their support skirts have adequate strength to maintain the loads of full vessel. Furthermore, Chapter 14 of the Basis of Design document requires that the foundation underlying the vessel support must be adequate to support the loads from full vessel, which is out of scope of this assessment. The assessment of the adequacy of the underlying foundation is part of a separate integrity assessment report for the Secondary Containment of the vessels.
	If in an area subject to flooding, the vessel is anchored.	Specifications listed above under References; 24590-LAW-PER-M-02-002, Rev. 6, Flooding Volume for LAW Facility; 24590-QL-POA-MKE0-00001-07-03, Rev. 00H, Design Calculations for (LOP-WESP-00001/2).	Buoyant forces consideration on an empty vessel in a flooded room if identified in the design media, is a mandatory standard design load case requirement in the Specification for Pressure Vessel Design and Fabrication. No design document identifies these vessels to be fully submerged under water. The Flooding Volume document for LAW facility shows that the process cells (Rooms L-0123 and L-0124) are constructed with steel liner plate up to 2'-0" height which is anticipated as the maximum design flood height. However, the Design Calculations document shows that the buoyant forces on anchors were conservatively computed by considering a case of fully submerged empty vessels.
	Vessel system will withstand the effects of frost heave.	Drawings listed above under References; 24590-WTP-DB-ENG-01-001, Rev. 1K, Basis of Design.	The Basis of Design document requires that all structural foundations for outdoor equipment to extend a distance below grade that exceeds the 30" depth of the frost line. The drawings show that the WESPs are located inside/interior of the building at Elev. 2'-0" level, and the building's lower level floor is at Elev. (-) 21'-0", therefore, the foundations are not subject to frost heave.

	Information Assessed	Source of Information	Assessment
Waste Characteristics	Characteristics of the waste to be stored or treated have been identified (dangerous waste characteristics, specific gravity, vapor pressure, flash point, storage temperature)	Specification listed above under References; 24590-LAW-N1D-LOP-00003, Rev. 3, Corrosion Evaluation, LOP-WESP-00001 & LOP-WESP-00002 (LAW), Melter 1 and Melter 2 Wet Electrostatic (WESP); 24590-WTP-PER-PR-03-002, Rev. 3, Toxic Vapors and Emissions from WTP Tank Systems and Miscellaneous Treatment Unit Systems; 24590-WTP-PER-PR-03-001, Rev. 1, Prevention of Hydrogen Accumulation in WTP Tank Systems and Miscellaneous Treatment Unit Systems.	The Specification for WESPs and their Corrosion Evaluation document present the temperatures, pressures, and chemical composition, select appropriate materials, and specify the corrosion allowance. Waste characteristics that are hazardous, such as ignitability, reactivity, and toxicity are appropriately addressed in the Toxic Vapors and Emissions document and Prevention of Hydrogen Accumulation document. These two documents do not specifically list these vessels to exhibit any hazardous characteristics. As an added feature, these plant items are grounded to control ignition sources.
	Vessel is designed to store or treat the wastes with the characteristics defined above and any treatment reagents.	System Description listed above under References; 24590-LAW-N1D-LOP-00003, Rev. 3, Corrosion Evaluation, LOP-WESP-00001 & LOP-WESP-00002 (LAW), Melter 1 and Melter 2 Wet Electrostatic (WESP).	The Corrosion Evaluation document demonstrates that the vessel is designed to process the wastes discussed above. The System Description discusses normal and abnormal operations for the WESPs. Demineralized water will be used for flushing/rinsing or wash downs of the vessels.
	The waste types are compatible with each other.	System Description listed above under References.	The System Description for the LAW (LOP) does not describe any operations where incompatible wastes are mixed in the WESPs for processing. These vessels are part of LAW LOP system's purpose of cooling the offgas and removing the aerosols generated by the LAW melters.

	Information Assessed	Source of Information	Assessment
Corrosion Protection	Vessel material and protective coatings ensure the vessel structure is adequately protected from the corrosive effects of the waste stream and external environments (expected to not leak or fail for the design life of the system)	Drawings and Specifications listed above under References; 24590-LAW-N1D-LOP-00003, Rev. 3, Corrosion Evaluation, LOP-WESP-00001 & LOP-WESP-00002 (LAW), Melter 1 and Melter 2 Wet Electrostatic (WESP).	The Engineering Specification for WESPs and Corrosion Evaluation document show that the WESPs (LOP-WESP-00001/2) normally operate at a pH range of 0.71 to 1.57 and at a temperature of 121°F (+/- 15°F). They are designed for a range of (+1) atmospheric to (-1) atmospheric pressure and for 170°F temperature. The material selected is 6% Mo alloy and a corrosion allowance of 0.04 in. The WESPs are located in the LAW cells (L-0123/L-0124) at Elevation 2'-0". The WESPs' support skirt material is 304 stainless steel. Each cell is equipped with a sump to pump out any leaks. Therefore, the cell should remain dry during normal operations which will limit external corrosion of the vessel over the facility design life.
Corrosion Allowance	Corrosion allowance is adequate for the intended service life of the vessel.	Specification listed above under References; 24590-LAW-N1D-LOP-00003, Rev. 3, Corrosion Evaluation, LOP-WESP-00001 & LOP-WESP-00002 (LAW), Melter 1 and Melter 2 Wet Electrostatic (WESP).	The material selection and corrosion allowance are furnished in the Corrosion Evaluation document and Specification for WESPs. Selection of 6% Mo alloy with a corrosion allowance of 0.04 in. for a service life of 40 years, appear to be adequate and appropriate.
Pressure Relief	Pressure controls (vents and relief valves) are adequately designed to ensure pressure relief if normal operating pressures in the vessel are exceeded.	Drawings and System Description listed above under References.	The LOP Wet Electrostatic Precipitators , LOP-WESP-00001/2 are inline vessels designed for unrestricted upward continuous flow of offgas to the HEPA pre-heaters for further processing and for the unrestricted condensate gravity flow down into the C3/C5 drain/sump collection vessel (RLD-VSL-00004), as shown on the drawings and described in the System Description document.

186406

AREVA

AFS-08-0295

RPP-WTP
RECEIVED
OCT 02 2008
BY PDC

September 23, 2008

Ms. Jennifer Broadbent
Subcontract Administrator
Bechtel National, Inc.
2435 Stevens Center Place
Richland, Washington 99354

Dear Ms. Broadbent:

BECHTEL NATIONAL, INC. CONTRACT NO. 24590-CM-HC4-HXYG-00211 IQRPE STRUCTURAL INTEGRITY ASSESSMENT REPORT FOR THE LAW LOP SYSTEM ANCILLARY EQUIPMENT (AREVA-IA-105, Rev. 1)

The structural integrity assessment of the subject ancillary equipment has been completed per the contract requirements and is enclosed for your use. The assessment found that the design is sufficient to ensure that the ancillary equipment is adequately designed and has sufficient structural strength, compatibility with the waste(s) to be processed/stored/treated, and corrosion protection to ensure that it will not collapse, rupture, or fail.

If you have any questions, please contact Tarlok Hundal at (509) 373-4438, or via email at tarlok.hundal@areva.com.

Sincerely,

For Fred R. Renz
Contract Management
AREVA Federal Services LLC
Richland Office

llm

Enclosure (1)

cc: D. C. Pfluger, MS 5-L w/enclosure (2)

AREVA Federal Services LLC
2425 Stevens Center Place, Richland, WA 99354, P.O. Box 840, Richland, WA 99352
Tel.: 509 372 8256 - Fax: 509 372 3169 - www.areva.com

IQRPE STRUCTURAL INTEGRITY ASSESSMENT REPORT FOR THE LAW LOP SYSTEM ANCILLARY EQUIPMENT

Please note that source, special nuclear and byproduct materials, as defined in the Atomic Energy Act of 1954 (AEA), are regulated at the U.S. Department of Energy (DOE) facilities exclusively by DOE acting pursuant to its AEA authority. DOE asserts, that pursuant to the AEA, it has sole and exclusive responsibility and authority to regulate source, special nuclear, and byproduct materials at DOE-owned nuclear facilities. Information contained herein on radionuclides is provided for process description purposes only.

IQRPE STRUCTURAL INTEGRITY ASSESSMENT REPORT FOR THE LAW LOP SYSTEM ANCILLARY EQUIPMENT

"I, Tarlok Hundal have reviewed, and certified a portion of the design of a new tank system or component located at the Hanford Waste Treatment Plant, owned/operated by Department of Energy, Office of River Protection, Richland, Washington. My duties were independent review of the current design for the LAW Facility Primary Offgas Process (LOP) System Ancillary Equipment, as required by the Washington Administrative Code, *Dangerous Waste Regulations*, Section WAC-173-303-640(3) (a) through (g) applicable components."

"I certify under penalty of law that I have personally examined and am familiar with the information submitted in this document and all attachments and that, based on my inquiry of those individuals immediately responsible for obtaining the information, I believe that the information is true, accurate, and complete. I am aware that there are significant penalties for submitting false information, including the possibility of fine and imprisonment."

The documentation reviewed indicates that the design fully satisfies the requirements of the WAC.

The attached review is eleven (11) pages numbered one (1) through eleven (11).

T Hundal

Signature

9/23/08

Date

Scope	Scope of this Integrity Assessment	This Integrity Assessment addresses ancillary equipment associated with the Low Activity Waste (LAW) Primary Offgas Process System (LOP) plant items (LOP-VSL-00001, LOP-VSL-00002, LOP-SCB-00001, LOP-SCB-00002, LOP-WESP-00001, and LOP-WESP-00002) located in the LAW facility. The ancillary equipment such as pipelines, valves, and other items associated with these vessels are conspicuously delineated on the P&ID drawings 24590-LAW-M6-LOP-00001 and -00002. The General Arrangement drawings listed below under References show that the LOP plant items (LOP-VSL-00001, LOP-SCB-00001, LOP-WESP-00001) are located at Elevation 2'-0" in Cell, Room L-0123 and (LOP-VSL-00002, LOP-SCB-00002, LOP-WESP-00002) are located at Elevation 2'-0" in Cell, Room L-0124 of the LAW facility. Ancillary equipment located inside the LOP system vessels is addressed separately in the Integrity Assessments for these plant items.
Summary of Assessment		For each item of "Information Assessed" (i.e., Criteria) on the following pages, the items listed under "Source of Information" were reviewed and found to furnish adequate design requirements and controls to ensure that the design fully satisfies the requirements of Washington Administrative Code (WAC), Chapter 173-303 WAC, *Dangerous Waste Regulations*, WAC-173-303-640, *Tank Systems*.

References	Drawings and System Description	Drawings: 24590-LAW-P1-P01T-00002, Rev. 5, LAW Vitrification Building General Arrangement Plan at El. 3'- 0"; 24590-LAW-P1-P01T-00007, Rev. 8, LAW Vitrification Building General Arrangement Sections A-A, B-B, C-C, and S-S; 24590-LAW-P1-P01T-00010, Rev. 8, LAW Vitrification Building General Arrangement Section K-K, L-L, and M-M; 24590-LAW-M6-LOP-00001, Rev. 4, P&ID –LAW Primary Offgas Process System Melter 1; 24590-LAW-M6-LOP-00002, Rev. 4, P&ID –LAW Primary Offgas Process System Melter 2; 24590-LAW-M5-V17T-00007, Rev. 4, Process Flow Diagram-Melter 1 Primary Offgas Treatment System (System LOP); 24590-LAW-M5-V17T-00008, Rev. 4, Process Flow Diagram-Melter 2 Primary Offgas Treatment System (System LOP); 24590-LAW-P3-LOP-PW01519001, Rev. 2, LAW Vitrification Isometric (Line No. LOP-PW-01519-N11J-4); 24590-LAW-P3-LOP-PW01499001, Rev. 2, LAW Vitrification Isometric (Line No. LOP-PW-01499-N13A-2); 24590-LAW-P3-LOP-PW01224001, Rev. 0, LAW Vitrification Isometric (Line No. LOP-PW-01224-N11V-10); 24590-LAW-P3-LOP-PW01224002, Rev. 0, LAW Vitrification Isometric (Line No. LOP-PW-01224-N11V-10); 24590-LAW-P3-LOP-ZR01505001, Rev. 0, LAW Vitrification Isometric (Line No. LOP-ZR-01505-N11F-2); 24590-LAW-P3-LOP-ZR01505002, Rev. 1, LAW Vitrification Isometric (Line No. LOP-ZR-01505-N11F-2); 24590-LAW-P3-LOP-ZS00005002, Rev. 2, LAW Vitrification Isometric (Line No. LOP-ZS-00005-N13A-2); 24590-LAW-P3-LOP-ZS00005003, Rev. 0, LAW Vitrification Isometric (Line No. LOP-ZS-00005-N13A-2); 24590-LAW-P3-LOP-ZS00028001, Rev. 0, LAW Vitrification Isometric (Line No. LOP-ZS-00028-N13A-3); 24590-LAW-P3-LOP-ZS00028002, Rev. 0, LAW Vitrification Isometric (Line No. LOP-ZS-00028-N13A-3); 24590-LAW-P3-LOP-GR00011001, Rev. 0, LAW Vitrification Isometric (Line No. LOP-GR-00011-S11P-3); 24590-LAW-P3-LOP-GR00011002, Rev. 0, LAW Vitrification Isometric (Line No. LOP-GR-00011-S11P-3); 24590-WTP-PH-50-00003001, Rev. 4, Standard Pipe Support Details Cantilever-Cantilever CC: 24590-WTP-PH-50-00004001, Rev. 3, Standard Pipe Support Details Frame - L Shape FL; 24590-WTP-PH-50-00005001, Rev. 2, Standard Pipe Support Details Frame - Post FP; 24590-WTP-PH-50-00005002, Rev. 1, Standard Pipe Support Details Frame - Post FP; 24590-WTP-PH-50-00012001, Rev. 5, Standard Pipe Support Details Guide - U Bolts GU; 24590-LAW-LOP-H10001, Rev. 0, Pipe Support Drawing; 24590-LAW-LOP-H10091, Rev. 0, Pipe Support Drawing; 24590-LAW-LOP-H10111, Rev. 0, Pipe Support Drawing; 24590-LAW-LOP-H10124, Rev. 0, Pipe Support Drawing; 24590-LAW-LOP-H10179, Rev. 0, Pipe Support Drawing; 24590-LAW-LOP-H10311, Rev. 0, Pipe Support Drawing; 24590-LAW-LOP-H10378, Rev. 0, Pipe Support Drawing. System Description: 24590-LAW-3YD-LOP-00001, Rev. 2, System Description for the LAW Primary Offgas (LOP) and Secondary Offgas/Vessel Vent (LVP) Systems.

Information Assessed		Source of Information	Assessment
Design	Ancillary equipment design standards are appropriate and adequate for the equipment's intended use.	Drawings and System Description listed above under References; 24590-WTP-DC-PS-01-001, Rev. 6, Pipe Stress Design Criteria including "Pipe Stress Criteria" and "Span Method Criteria"; ASME B31.3 Code, Process Piping, 1996 Edition, American Society of Mechanical Engineers; 24590-WTP-3DP-G04T-00905, Rev. 9, Determination of Quality Levels.	The Pipe Stress Design Criteria identifies ASME B31.3 as the design code for piping systems of the WTP. The Process System Description document states that the LOP system does not have any important to safety function. Drawings show that the ancillary equipment is of commercial quality level (CM) grade or quality level Q and is Seismic Category SC-III/IV. Determination of Quality Levels document and Pipe Stress Design Criteria document provide detailed discussion of quality grades and seismic categories, respectively. The codes and standards used are acceptable and adequate for the design of the ancillary piping for the intended service.

Information Assessed		Source of Information	Assessment
Design (cont'd)	If the ancillary equipment to be used is not built to a design standard, the design calculations demonstrate sound engineering principles.	Drawings and listed above under References; 24590-WTP-DC-PS-01-001, Rev. 6, Pipe Stress Design Criteria including "Pipe Stress Criteria" and "Span Method Criteria"; ASME B31.3 Code, Process Piping, 1996 Edition, American Society of Mechanical Engineers; 24590-WTP-VV-PS-01-001, Rev. 5, Verification and Validation Test Plan/Test Report for ME101, Linear Elastic Analysis of Piping; 24590-LAW-P61C-LOP-00002, Rev. B, Richland RPP WTP LAW Main/Standby Offgas Piping (Pipe Stress Analysis); 24590-LAW-P6C-LOP-10001, Rev. C, Pipe Stress Analysis for LAW Primary Offgas (LOP) System; 24590-LAW-P6C-LOP-10002, Rev. D, Richland RPP WTP LAW Plant LOP System (Pipe Stress Analysis); 24590-LAW-P6C-LOP-10011, Rev. B, Richland RPP WTP LAW Plant LOP System (Pipe Stress Analysis); 24590-LAW-P6C-LOP-10019, Rev. B, Richland RPP WTP LAW Plant LOP System (Pipe Stress Analysis); 24590-LAW-P6C-LOP-10022, Rev. C, Richland RPP WTP LAW Plant LOP System (Pipe Stress Analysis); 24590-LAW-P6C-LOP-10024, Rev. C, Richland RPP WTP LAW Plant LOP System (Pipe Stress Analysis); 24590-LAW-PHC-LOP-10016, Rev. B, Pipe Support Calculation (for Support No. 24590-LAW-LOP-H10091); 24590-LAW-PHC-LOP-10026, Rev. B, Pipe Support Calculation (for Support No. 24590-LAW-LOP-H10001); 24590-LAW-PHC-LOP-10071, Rev. A, Pipe Support Calculation (for Support No. 24590-LAW-LOP-H10179; 24590-LAW-PHC-LOP-10074, Rev. A, Pipe Support Calculation (for Support No. 24590-LAW-LOP-H10124); 24590-LAW-PHC-LOP-10069, Rev. 0, RPP-WTP Engineered Support Calculation (for LAW-LOP-H10311, -H10378, -H10379 & -H10380); 24590-LAW-PHC-LOP-10077, Rev. A, Pipe Support Calculation (for Support No. 24590-LAW-LOP-H10111 and –H10382); 24590-WTP-3DP-G04T-00906, Rev. 6A, Isometric Drawings and Associated Calculations; 24590-WTP-3DP-G04B-00037, Rev. 13, Engineering Calculations; 24590-WTP-3PS-PH01-T0002, Rev. 3, Installation of Pipe Supports.	The ancillary equipment is to be built to the design standards. The Pipe Stress Design Criteria specifies that piping is to be designed in accordance with ASME B31.3 Code. The review of the sample isometric and pipe support drawings listed in the References, Pipe Stress Analysis, Pipe Support Calculation, Engineering Specification, and of the design process and controls described in Isometric Drawings and Associated Calculations, Engineering Calculations, and Installation of Pipe Supports documents provides adequate assurance that LOP ancillary equipment are properly designed to meet the requirements of the applicable design criteria established for the project. The review of the aforementioned documents also demonstrates that sound design engineering principles are used for the design of the ancillary equipment.

Information Assessed		Source of Information	Assessment
Design (cont'd)	Ancillary equipment has adequate strength at the end of its design life to withstand the operating pressure, operating temperature, thermal expansion, and seismic loads. Equipment is protected against physical damage and excessive stress due to settlement, vibration, expansion, or contraction.	24590-WTP-DC-PS-01-001, Rev. 6, Pipe Stress Design Criteria including "Pipe Stress Criteria" and "Span Method Criteria"; ASME B31.3 Code, Process Piping, 1996 Edition, American Society of Mechanical Engineers; ASME Boiler and Pressure Vessel Code, Section III, Division 1, Rules for Construction of Nuclear Power Plant Components, American Society of Mechanical Engineers, 1995; Uniform Building Code (UBC), 1997; 24590-WTP-PER-M-02-002, Rev. 1, Materials for Ancillary Equipment; 24590-WTP-GPG-ENG-004, Rev. 2A, Design Guide Pipe Stress, Pipe Layout, and Support Spacing; 24590-WTP-SE-ENS-03-704, Rev. 0, Seismic Evaluation for Design (Seismic Design of Piping and Pipe Supports).	The Pipe Stress Design Criteria requires the use of the ASME B31.3 Code for process piping design. ASME B31.3 requires explicit consideration of operating pressure, operating temperature, thermal expansion/contraction, settlement, vibration, and corrosion allowance in the design of piping. For the seismic design of Seismic Category (SC-III/IV) ancillary equipment, applicable sections of ASME Section III, Division 1, Appendix F, and sections of Uniform Building Code (UBC) are used to supplement the requirements of ASME B31.3. Details of the seismic design methods are discussed in the Pipe Stress Design Criteria and Seismic Evaluation documents. These are appropriate and adequate codes and standards including the Design Guide document, to ensure that the ancillary equipment has adequate strength at the end of its design life to withstand all anticipated loads.

Information Assessed		Source of Information	Assessment
Supports	Ancillary equipment supports are adequately designed.	Drawings listed above under References; 24590-WTP-DC-PS-01-002, Rev. 4, Pipe Support Design Criteria; ASME B31.3 Code, Process Piping, 1996 Edition, American Society of Mechanical Engineers; MSS-SP-58, Pipe Hangers and Supports-Materials, Design, and Manufacture, Manufacturers Standardization Society of the Valve and Fittings Industry, Inc.; AISC Manual of Steel Construction, ASD, 9th Edition, American Institute of Steel Construction; ASME Boiler and Pressure Vessel (B&PV) Code, Section III, Division 1, Rules for Construction of Nuclear Power Plant Components, American Society of Mechanical Engineers, 1995; Uniform Building Code (UBC), 1997; 24590-WTP-PER-PS-02-001, Rev. 4, Ancillary Equipment Pipe Support Design; 24590-WTP-PL-PS-01-001, Rev. 1, Verification and Validation Test Plan for Bechtel's ME150 Pipe Support Family of Programs (PCFAPPS); 24590-LAW-PHC-LOP-10016, Rev. B, Pipe Support Calculation (for Support No. 24590-LAW-LOP-H10091); 24590-LAW-PHC-LOP-10026, Rev. B, Pipe Support Calculation (for Support No. 24590-LAW-LOP-H10001); 24590-LAW-PHC-LOP-10071, Rev. A, Pipe Support Calculation (for Support No. 24590-LAW-LOP-H10179; 24590-LAW-PHC-LOP-10074, Rev. A, Pipe Support Calculation (for Support No. 24590-LAW-LOP-H10124); 24590-LAW-PHC-LOP-10069, Rev. 0, RPP-WTP Engineered Support Calculation (for LAW-LOP-H10311, -H10378, -H10379 & -H10380); 24590-LAW-PHC-LOP-10077, Rev. A, Pipe Support Calculation (for Support No. 24590-LAW-LOP-H10111 and –H10382); 24590-WTP-GPG-ENG-005, Rev. 3E, Engineering Design Guide for Pipe Supports; 24590-WTP-PHC-P50T-00002, Rev. 0, Justification for the use of Standard Supports for RPP-WTP-Project; 24590-WTP-PHC-P50T-00001, Rev. 1, U-Bolt Load Capacity Calculation; 24590-WTP-3DP-G04T-00906, Rev.6A, Isometric Drawings and Associated Calculations; 24590-WTP-3DP-G04B-00037, Rev. 13, Engineering Calculations; 24590-WTP-PHC-P50-00001, Rev. 0, RPP/WTP Support Standards; 24590-WTP-PHC-P50T-00004, Rev. 0, Qualification of Pipe Straps; 24590-WTP-SE-ENS-03-704, Rev. 0, Seismic Evaluation for Design (Seismic Design of Piping and Pipe Supports).	The Pipe Support Design Criteria document considers all loadings identified in ASME B31.3 including MSS-SP-58 and AISC Manual and also utilizes ASME B&PV Code, Section III, Division 1, Appendix F, to supplement the requirements of ASME B31.3 for seismic design of Seismic Category (SC-III/IV) pipe supports. Bounding load cases are passed to the pipe support designers from the results of the ancillary equipment piping stress analyses. Details of the seismic design methodology are discussed in the Pipe Support Design Criteria document. Examples of typical ancillary equipment supports are shown in the Ancillary Equipment Pipe Support Design document. Analysis is by manual calculation or approved computer programs that have been verified and validated. These are appropriate codes and standards for design of ancillary equipment supports for the LOP system. Ancillary equipment supports are to be designed to allow a minimum of heat to be transferred to the building structures such that the temperature of the building structures does not exceed 150°F for the concrete structure and 200°F for the steel structure. The review of the sample isometric drawings, pipe support drawings, Pipe Support Calculations, and that of the design process and controls described in Isometric Drawings and Associated Calculations, Engineering Calculation and other supports associated documents, provides sufficient assurance that LOP ancillary equipment supports are adequately designed to meet the requirements of the applicable design criteria established for the project.

Information Assessed		Source of Information	Assessment
Foundations	The system will withstand the effects of frost heave.	Drawings listed above under References; 24590-WTP-DC-ST-01-001, Rev. 12, Structural Design Criteria.	The Structural Design Criteria requires that all outdoor equipment structural foundations shall extend into the surrounding soil below the 30" frost line to preclude frost heave. The LOP ancillary equipment system considered in this assessment is located inside the LAW facility. The LAW facility structural foundations are well below the grade elevation, therefore, the LOP system is not subjected to any frost heave effects.
Connections	Seams and connections are adequately designed.	24590-WTP-DC-PS-01-001, Rev. 6, Pipe Stress Design Criteria including "Pipe Stress Criteria" and "Span Method Criteria;" ASME B31.3 Code, Process Piping, 1996 Edition, American Society of Mechanical Engineers; ASME B16.5, Piping Flanges and Flanged Fittings, American Society of Mechanical Engineers; ASME Boiler and Pressure Vessel Code (B&PV), Section IX, Welding and Brazing Qualifications, American Society of Mechanical Engineers.	The Pipe Stress Design Criteria specifies the ASME B31.3 Process Piping design code for the piping systems. Welding is to be performed in accordance with the requirements of ASME B31.3 and the ASME B&PV Code, Section IX. ASME B16.5 is specified for flange designs. These are appropriate codes and standards for design and fabrication of the LOP System ancillary equipment.
Waste Characteristics	Characteristics of the waste to be stored or treated have been identified (dangerous waste characteristics, specific gravity, vapor pressure, flash point, temperature)	System Description listed above under References; 24590-WTP-PER-PR-03-001, Rev. 1, Prevention of Hydrogen Accumulation in WTP Tank Systems and Miscellaneous Treatment Unit Systems; 24590-WTP-PER-PR-03-002, Rev. 3, Control of Toxic Vapors and Emissions from WTP Tank and Miscellaneous Unit Systems.	The Prevention of Hydrogen Accumulation in WTP Tank Systems and Miscellaneous Treatment Unit System and System Description documents indicate that flammable or explosive concentrations of hydrogen are not expected in the LAW facility systems ancillary equipment. Similarly, the Control of Toxic Vapors and Emissions from WTP Tank and Miscellaneous Unit Systems document provides a summary of the LAW facility ancillary equipment design features that provide for confinement and treatment of chronically toxic vapors and emissions during normal operations, abnormal operations, and during and after a Design Basis seismic event.
	Ancillary equipment is designed to handle the wastes with the characteristics defined above and any treatment reagents.	Drawings listed above under References; 24590-WTP-PER-M-02-002, Rev. 1, Materials for Ancillary Equipment; 24590-WTP-PER-PL-02-001, Rev. 6, Piping Material Class Description.	The Materials for Ancillary Equipment document specifies that ancillary equipment materials that contact the waste are to be equal to or better than those of the upstream source vessels. Selection of proper material for the LOP piping and equipment as shown on the drawings and Piping Material Class Description document ensures that the ancillary equipment is appropriately designed to handle the waste.

Information Assessed		Source of Information	Assessment
Compatibility	The pH range of the waste, waste temperature and the corrosion behavior of the structural materials are adequately addressed. Ancillary equipment material and protective coatings ensure the ancillary equipment structure is adequately protected from the corrosive effects of the waste stream and external environments. The protection is sufficient to ensure the equipment will not leak or fail for the design life of the system.	Drawings listed above under References; 24590-WTP-DB-ENG-01-001, Rev. 1L, Basis of Design; 24590-WTP-PER-M-02-002, Rev. 1, Materials for Ancillary Equipment; 24590-WTP-PER-PL-02-001, Rev. 6, Piping Material Class Description; 24590-WTP-3PS-NN00-T0001, Rev. 1, Engineering Specification for Thermal Insulation for Mechanical Systems; ASTM Annual Book of ASTM Standards, American Society of Testing and Materials.	The Basis of Design document identifies a service design life of 40 years for the ancillary equipment. Detailed materials selection (corrosion) evaluations are conducted for each vessel in the LAW facility during process design to assure a 40-year service life. The Materials for Ancillary Equipment document requires that the material selection and corrosion/erosion allowances for ancillary equipment in contact with the waste will be equal to or better than the material and corrosion allowance of the waste source vessel. Sample review of the ancillary equipment material specified in the drawings and/or other related documents show that it meets the requirements as described in the Materials for Ancillary Equipment and Piping Material Class documents. The Thermal Insulation specification requires that all insulating materials used on the outside of ancillary equipment be pre-approved for use on austenitic stainless steel in accordance with applicable ASTM standards and tests to preclude external corrosion of ancillary equipment. Therefore, the ancillary equipment will provide the expected design service life.

Information Assessed		Source of Information	Assessment
Corrosion Allowance	Corrosion allowance is adequate for the intended service life of the ancillary equipment.	System Description listed above under References; ASME B31.3 Code, Process Piping, 1996 Edition, American Society of Mechanical Engineers; 24590-WTP-DC-PS-01-001, Rev. 6, Pipe Stress Design Criteria including "Pipe Stress Criteria" and "Span Method Criteria;" 24590-WTP-DB-ENG-01-001, Rev. 1L, Basis of Design; 24590-WTP-PER-M-02-002, Rev. 1, Materials for Ancillary Equipment; 24590-WTP-PER-PL-02-001, Rev. 6, Piping Material Class Description; 24590-LAW-P61C-LOP-00002, Rev. B, Richland RPP WTP LAW Main/Standby Offgas Piping (Pipe Stress Analysis); 24590-LAW-P6C-LOP-10001, Rev. C, Pipe Stress Analysis for LAW Primary Offgas (LOP) System; 24590-LAW-P6C-LOP-10002, Rev. D, Richland RPP WTP LAW Plant LOP System (Pipe Stress Analysis); 24590-LAW-P6C-LOP-10011, Rev. B, Richland RPP WTP LAW Plant LOP System (Pipe Stress Analysis); 24590-LAW-P6C-LOP-10019, Rev. B, Richland RPP WTP LAW Plant LOP System (Pipe Stress Analysis); 24590-LAW-P6C-LOP-10022, Rev. C, Richland RPP WTP LAW Plant LOP System (Pipe Stress Analysis); 24590-LAW-P6C-LOP-10024, Rev. C, Richland RPP WTP LAW Plant LOP System (Pipe Stress Analysis).	ASME B31.3 is the design code for the WTP piping. Consideration of corrosion, including corrosion allowance, is a mandatory requirement of ASME B31.3 and is appropriately supplemented in the Pipe Stress Design Criteria document. A required service life of 40 years is identified in the Basis of Design for ancillary equipment. Detailed materials selection (corrosion) evaluations are conducted for each vessel in the LAW facility during process design to ensure a 40-year service life. The Materials for Ancillary Equipment document requires that downstream ancillary equipment is to be constructed of equal or better materials, and with the same corrosion allowance as the source vessel. Corrosion/Erosion allowances are listed for the ancillary equipment (each piping class and associated valves, fittings, etc.) in the Piping Material Class Description document. Sample review of the Pipe Stress Calculations show that the corrosion allowance has been appropriately used in the design process.
Pressure Controls	Pressure controls (vents and relief valves) are adequately designed to ensure pressure relief if normal operating pressures in the vessels are exceeded.	24590-WTP-DC-PS-01-001, Rev. 6, Pipe Stress Design Criteria including "Pipe Stress Criteria" and "Span Method Criteria;" ASME B31.3 Code, Process Piping, 1996 Edition, American Society of Mechanical Engineers.	The Pipe Stress Design Criteria document specifies ASME B31.3 as the design code for the WTP piping. ASME B31.3 requires provision be made to safely contain or relieve any pressure to which the piping may be subjected. ASME B31.3 piping not protected by a pressure relieving device, or that can be isolated from a pressure relieving device must be designed for at least the highest pressure that can be developed.

Information Assessed		Source of Information	Assessment
Pressure Controls (cont'd)	Maximum flows and any unusual operating stresses are identified	Drawings listed above under References; 24590-WTP-DC-PS-01-001, Rev. 6, Pipe Stress Design Criteria including "Pipe Stress Criteria" and "Span Method Criteria;" ASME B31.3 Code, Process Piping, 1996 Edition, American Society of Mechanical Engineers; 24590-WTP-3PS-P000-T0001, Rev. 6, Engineering Specification for Piping Material Classes General Description and Summary; 24590-WTP-PER-PL-02-001, Rev. 6, Piping Material Class Description; 24590-WTP-3DP-G04T-00906, Rev.6A, Isometric Drawings and Associated Calculations; 24590-WTP-3DP-G04B-00037, Rev. 13, Engineering Calculations.	The expected flow paths for the ancillary equipment are identified on the P&ID drawings. The Pipe Stress Design Criteria specifies the ASME B31.3 Code for piping design. This code requires piping to be designed to the highest pressure that can be developed in a piping system assuring that maximum operating stresses remain within code allowables. Piping material classes are shown on the P&ID drawings, embedded in the item numbers for each ancillary equipment component. Ancillary equipment is designed for the highest anticipated temperature and pressure values which are also within the bounding maximum design temperature and pressure values listed for each piping material class in the Piping Material Class General Description document. ASME B31.3 and the associated standards are appropriate and adequate for the design of the ancillary equipment. Furthermore, the fabrication or isometric drawings released for construction by Bechtel National, Inc. (BNI), and the design process and controls described in the Isometric Drawings and Associated Calculations, and Engineering Calculations documents provides adequate assurance that subject ancillary equipment are properly designed to meet the requirements identified in the applicable design criteria established for the project.

Information Assessed		Source of Information	Assessment
Secondary Containment	Ancillary equipment is designed with secondary containment that is constructed of materials compatible with the waste and of sufficient strength to prevent failure (pressure gradients, waste, climatic conditions, daily operations), provided with a leak-detection system, and designed to drain and remove liquids.	Drawings listed above under References; 24590-LAW-PER-M-02-001, Rev. 5, LAW Facility Sump Data.	The ancillary equipment considered in this assessment is located in and between areas R5/C5 (Room L-0123) and R5/C5 (Room L-0124), within the LAW building. These LAW rooms are secondary containment concrete structures provided with stainless steel liner plates and sumps (RLD-SUMP-00029 and RLD-SUMP-00030 in Room L-0123, and RLD-SUMP-00031 and RLD-SUMP-00032 in Room L-0124, as shown on the general arrangement drawings and in Sump Data document, which are outside the scope of this integrity assessment. The assessment of the secondary containment structures is conducted in a separate document.

WTP PDC

From: Broadbent, Jennifer
Sent: Wednesday, September 24, 2008 11:18 AM
To: WTP PDC
Subject: AREVA SUBCONTRACT NO. 24590-CM-HC4-HXYG-00211 STRUCTURAL INTEGRITY ASSESSMENT REPORT: CCN 186406 : File B.8

Attachments: Structural Assessment Integrity Report Sept 2008.pdf

Please see attached.

This is also to **supercede** CCN 185167 that was issued on September 11, 2008.

Structural
ssessment Integrit..

Thanks, Jennifer

Jennifer L. Broadbent
Bechtel National, Inc.
Subcontracts, Acquisition Services
Phone - 509-371-2175
Fax - 509-371-2286
Mailstop - 14/3a

CONFIDENTIALITY NOTICE

This message is intended for the sole use of the addressee, and may contain information that is privileged, confidential and exempt from disclosure under applicable law. If you are not the addressee you are hereby notified that you may not use, copy, disclose, or distribute to anyone the message or any information contained in the message. If you have received this message in error, please immediately advise the sender by reply email and delete this message.

IA-3001246-001

IQRPE STRUCTURAL INTEGRITY ASSESSMENT REPORT FOR LAW LMP ANCILLARY EQUIPMENT

"I, Tarlok Hundal have reviewed, and certified a portion of the design of a new tank system or component located at the Hanford Waste Treatment Plant, owned/operated by Department of Energy, Office of River Protection, Richland, Washington. My duties were independent review of the current design for the LAW Melter Process System (LMP) Ancillary Equipment, as required by the Washington Administrative Code, *Dangerous Waste Regulations*, Section WAC-173-303-640(3) (a) through (g) applicable components."

"I certify under penalty of law that I have personally examined and am familiar with the information submitted in this document and all attachments and that, based on my inquiry of those individuals immediately responsible for obtaining the information, I believe that the information is true, accurate, and complete. I am aware that there are significant penalties for submitting false information, including the possibility of fine and imprisonment."

The documentation reviewed indicates that the design fully satisfies the requirements of the WAC.

The attached review is fourteen (14) pages numbered one (1) through fourteen (14).

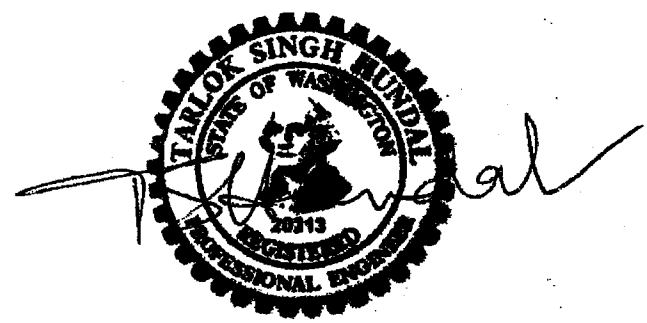

Signature

1/16/09
Date

This page intentionally left blank

Scope	Scope of this Integrity Assessment.	This report consists of Integrity Assessment for the Dangerous Waste Permit (DWP) effecting sub-system equipment (ancillary equipment) associated with the LAW Melter Process System (LMP) two Melters (LMP-MLTR-00001/2) to be located in LAW Melter Gallery (Room L-0112) at Elevation 3'-0" as shown in the General Arrangement drawing 24590-LAW-P1-P01T-00002. Throughout the balance of this report the term ancillary equipment will be used to represent sub-system equipment. The DWP affecting ancillary equipment for the LMP system is shown in the P&ID drawings listed under References below. This report also addresses secondary containment for the Melter Feed Line Encasement Assemblies. Secondary containment for other ancillary equipment and services interfacing with the LAW melters such as sumps, liners, and drains in the melter gallery area is addressed in a separate report. The Integrity Assessment of the LAW Melters (LAW-LMP-00001/2) is not in the scope of this report. Their assessment is included in a separate report.
Summary of Assessment		For each item of "Information Assessed" (i.e., Criteria) on the following pages, the items listed under "Source of Information" were reviewed and found to furnish adequate design requirements and controls to ensure that the design fully satisfies the requirements of Washington Administrative Code (WAC), Chapter 173-303 WAC, *Dangerous Waste Regulations,* WAC-173-303-640, *Tank Systems.*

References	Material Requisition, Specifications, and Drawings.	Material Requisition (MR): 24590-QL-MRA-PF00-00006, Rev. 3, LAW- Melter Spool Connections (ML020). Specifications: The following Specifications with their respective revision and Specification Change Notices (SCNs) are listed in the above listed Material Requisition: 24590-WTP-3PS-M000-T0002, General Specification for Mechanical Handling, Equipment Design, and Manufacture; 24590-WTP-3PS-G000-T0001, General Specification for Supplier Quality Assurance Program Requirements; 24590-WTP-3PS-G000-T0002, Engineering Specification for Positive Material Identification (PMI); 24590-WTP-3PS-G000-T0003, Engineering Specification for Packaging, Handling, and Storage Requirements; 24590-LAW-3PS-PF00-T0001, Engineering Specification for Shop Fabrication of LAW Melter Piping and Components. 24590-LAW-3PS-NWP0-T0001, Engineering Specification for General Welding NDE Requirements for Supplier Fabricated Piping. Drawings: 24590-LAW-P1-P01T-00002, Rev. 5, LAW Vitrification Building General Arrangement Plan at EL. 3'-0"; 24590-LAW-M5-V17T-00004, Rev. 4, Process Flow Diagram LAW Vitrification Melter 1 (System LMP & LOP); 24590-LAW-M5-V17T-00005, Rev. 4, Process Flow Diagram LAW Vitrification Melter 2 (System LMP & LOP); 24590-LAW-M6-LMP-00001, Rev. 2, P&ID LAW Melter Process System Melter 1 Agitation-Zone 1 & Zone 2; 24590-LAW-M6-LMP-00002, Rev. 2, P&ID LAW Melter Process System Melter 1 Agitation Zone 3 & Level Detection System; 24590-LAW-M6-LMP-00003, Rev. 4, P&ID LAW Melter Process System Melter 1 Walls And Floor Panels Cooling System; 24590-LAW-M6-LMP-00005, Rev. 2, P&ID LAW Melter Process System Melter 1 Electrode Extension Cooling & Glass/Plenum Temperatures; 24590-LAW-M6-LMP-00007, Rev. 3, P&ID LAW Melter Process System Melter 1 Glass Pouring And Monitoring Instrumentation; 24590-LAW-M6-LMP-00008, Rev. 3, P&ID LAW Melter Process System Melter 1 Discharge Heaters, Power Controls (1-4) & Air Lift Eastside; 24590-LAW-M6-LMP-00010, Rev. 3, P&ID LAW Melter Process System Melter 1 Discharge Heaters, Power Controls (1-4) & Air Lift Westside; 24590-LAW-M6-LMP-00012, Rev. 5, P&ID LAW Melter Process System Melter 1 Feed Nozzles Cooling System and Feed Nozzles; 24590-LAW-M6-LMP-00013, Rev. 5, P&ID LAW Melter Process System Melter 1 Lid, Plenum And Offgas Ports Cooling System; 24590-LAW-M6-LMP-00031, Rev. 2, P&ID LAW Melter Process System Melter 2 Agitation-Zone 1 & Zone 2; 24590-LAW-M6-LMP-00032, Rev. 2, P&ID LAW Melter Process System Melter 2 Agitation Zone 3 & Level Detection System; 24590-LAW-M6-LMP-00033, Rev. 4, P&ID LAW Melter Process System Melter 2 Walls And Floor Panels Cooling System; 24590-LAW-M6-LMP-00035, Rev. 2, P&ID LAW Melter Process System Melter 2 Electrode Extension Cooling & Glass/Plenum Temperatures; 24590-LAW-M6-LMP-00037, Rev. 3, P&ID LAW Melter Process System Melter 2 Glass Pouring And Monitoring Instrumentation; 24590-LAW-M6-LMP-00038, Rev. 3, P&ID LAW Melter Process System Melter 2 Discharge Heaters, Power Controls (1-4) & Air Lift Eastside; 24590-LAW-M6-LMP-00040, Rev. 3, P&ID LAW Melter Process System Melter 2 Discharge Heaters, Power Controls (1-4) & Air Lift Westside; 24590-LAW-M6-LMP-00042, Rev. 5, P&ID LAW Melter Process System Melter 2 Feed Nozzles Cooling System and Feed Nozzles; 24590-LAW-M6-LMP-00043, Rev. 5, P&ID LAW Melter Process System Melter 2 Lid, Plenum Cooling System Ports Cooling System; 24590-LAW-M61-P23T-00060, Rev. 0, LAW Melter Feed Lines & Encasement Layout/Penetration Locations LMP-MLTR-00001; 24590-LAW-M61-P23T-00061, Rev. 0, LAW LMP-MLTR-00001 Feed Line Encasement Assembly LMP-LBD-00001; 24590-LAW-M61-P23T-00064, Rev. 0, LAW LMP-MLTR-00001 Feed Line Encasement 1 Assembly LMP-LBD-00001; 24590-LAW-M61-P23T-00070, Rev. 0, LAW Melter Feed Lines & Encasement Layout/Penetration Locations LMP-MLTR-00002; 24590-LAW-M61-P23T-00071, Rev. 0, LAW LMP-MLTR-00002 Feed Line Encasement Assembly LMP-LBD-00002; 24590-LAW-M61-P23T-00074, Rev. 0, LAW LMP-MLTR-00002 Feed Line Encasement 1 Assembly LMP-LBD-00002; 24590-LAW-M6-LOP-00004, Rev. 4, P&ID LAW Primary Offgas Process System Melter 1 Offgas Film Coolers; 24590-LAW-M6-LOP-00005, Rev. 4, P&ID LAW Primary Offgas Process System Melter 2 Offgas Film Coolers.

References (cont'd)	Drawings and System Description.	Drawings (cont'd): 24590-LAW-P3-LMP-WS20093001, Rev. 0, LAW Vitrification Building Isometric (Line No. LMP-WS-20093-S11B-1); 24590-LAW-P3-LMP-WS20094001, Rev. 0, LAW Vitrification Building Isometric (Line No. LMP-WS-20094-S11B-1); 24590-LAW-P3-LMP-PB00017001, Rev. 1, LAW Vitrification Building Isometric (Line No. LMP-PB-00017-S12A-0.75); 24590-LAW-P3-LMP-PB00021001, Rev. 1, LAW Vitrification Building Isometric (Line No. LMP-PB-00021-S12A-0.75); 24590-LAW-P3-LMP-PB00023001, Rev. 1, LAW Vitrification Building Isometric (Line No. LMP-PB-00023-S12A-0.75); 24590-LAW-P3-LMP-PB00024001, Rev. 1, LAW Vitrification Building Isometric (Line No. LMP-PB-00024-S12A-0.75); 24590-LAW-P3-LMP-PB00026001, Rev. 1, LAW Vitrification Building Isometric (Line No. LMP-PB-00026-S12A-0.75); 24590-LAW-P3-LMP-PB00028001, Rev. 1, LAW Vitrification Building Isometric (Line No. LMP-PB-00028-S12A-0.75); 24590-WTP-PH-50-00012001, Rev. 6, Standard Pipe Support Details, Guide –U Bolts GU; 24590-WTP-PH-50-00003001, Rev. 4, Standard Pipe Support Details, Cantilever-Cantilever CC; 24590-WTP-PH-50-00004001, Rev. 3, Standard Pipe Support Details, Frames –L Shape FL; 24590-WTP-PH-50-00001001, Rev. 3, Standard Pipe Support Details, Axial Stop –Welded AW; 24590-WTP-PH-50-00014001, Rev. 1, Standard Pipe Support Details, Rods-Hangers RH; 24590-WTP-PH-50-00014002, Rev. 1, Standard Pipe Support Details, Rods-Hangers RH; 24590-LAW-LMP-H10001001, Rev. 1, Pipe Support (LAW-LMP-H10001); 24590-LAW-LMP-H10001002, Rev. 1, Pipe Support (LAW-LMP-H10001); 24590-LAW-LMP-H10535001, Rev. 1, Pipe Support (LAW-LMP-H10535); 24590-LAW-LMP-H10535002, Rev. 1, Pipe Support (LAW-LMP-H10535). System Description: 24590-LAW-3YD-LMP-00001, Rev.2, System Description for the System LMP, Low Activity Waste Melter (including SDCN 00003 to Rev. 2); 24590-LAW-3YD-LOP-00001, Rev. 2, System Description for LAW Primary Offgas Process (LOP) and LAW Secondary Offgas/Vessel Vent Process (LVP) System.

Information Assessed		Source of Information	Assessment
Design	Ancillary equipment design standards are appropriate and adequate for the equipment's intended use.	Drawings and System Description listed above under References; 24590-WTP-DC-PS-01-001, Rev. 6, Pipe Stress Design Criteria including "Pipe Stress Criteria" and "Span Method Criteria;" ASME B31.3 Code, Process Piping, 1996 Edition, American Society of Mechanical Engineers; 24590-WTP-3DP-G04T-00905, Rev. 10, Determination of Quality Levels.	The Pipe Stress Design Criteria identifies ASME B31.3 as the design code for piping systems of the WTP. Drawings show that the ancillary equipment is of commercial quality level (CM) grade or quality level Q and is Seismic Category SC-III/IV. Determination of Quality Levels document and Pipe Stress Design Criteria document provide detailed discussion of quality grades and seismic categories, respectively. The codes, standards, and documents identified and used above are acceptable and adequate for the design of the ancillary equipment's intended service.

Information Assessed		Source of Information	Assessment
Design (cont'd)	If the ancillary equipment to be used is not built to a design standard, the design calculations demonstrate sound engineering principles of construction.	Drawings listed above under References; 24590-WTP-DC-PS-01-001, Rev. 6, Pipe Stress Design Criteria including "Pipe Stress Criteria" and "Span Method Criteria"; ASME B31.3 Code, Process Piping, 1996 Edition, American Society of Mechanical Engineers; 24590-WTP-VV-PS-01-001, Rev. 6, Verification and Validation Test Plan/Test Report for ME101, Linear Elastic Analysis of Piping; 24590-LAW-P6C-RLD-10042, Rev. B, Richland RPP WTP LAW RLD System (Pipe Stress Analysis); 24590-LAW-P6C-LMP-10005, Rev. B, Richland RPP WTP LAW Plant LMP System (Pipe Stress Analysis); 24590-LAW-P61C-LMP-00001, Rev. A, RPP-WTP LAW Melter Feed Line Assembly Calculation-LMP System (including ECCN 00001); 24590-LAW-PHC-LMP-10002, Rev. B, RPP-WTP Engineered Support Calculation for LAW-LMP-H10001 and LAW-LMP-H10535); 24590-WTP-PHC-P50-00001, Rev. 1, RPP/WTP Support Standards (Calculations); 24590-WTP-3DP-G04T-00906, Rev. 7, Isometric Drawings and Associated Calculations; 24590-WTP-3DP-G04B-00037, Rev. 14, Engineering Calculations; 24590-WTP-3PS-PH01-T0002, Rev. 4, Installation of Pipe Supports.	The ancillary equipment is to be built to the design standards. The Pipe Stress Design Criteria specifies that piping is to be designed in accordance with ASME B31.3 Code. The review of the sample isometric and pipe support drawings listed in the References, Pipe Stress Analysis, Pipe Support Calculations, Engineering Specification, and of the design process and controls described in Isometric Drawings and Associated Calculations, Engineering Calculations, and Installation of Pipe Supports documents provides adequate assurance that LMP ancillary equipment are properly designed and will be installed and verified to meet the requirements of the applicable design criteria established for the project. The review of the aforementioned documents also demonstrates that sound design engineering principles are used for the design and construction of the ancillary equipment.

Information Assessed		Source of Information	Assessment
Design (cont'd)	Ancillary equipment has adequate strength at the end of its design life to withstand the operating pressure, operating temperature, thermal expansion, and seismic loads. Equipment is protected against physical damage and excessive stress due to settlement, vibration, expansion, or contraction.	Drawings listed above under References; 24590-WTP-DC-PS-01-001, Rev. 6, Pipe Stress Design Criteria including "Pipe Stress Criteria" and "Span Method Criteria;" ASME B31.3 Code, Process Piping, American Society of Mechanical Engineers (1996); ASME Boiler and Pressure Vessel Code, Section III, Division 1, Rules for Construction of Nuclear Power Plant Components, American Society of Mechanical Engineers, 1995; Uniform Building Code (UBC), 1997; 24590-WTP-PER-M-02-002, Rev. 2, Materials for Ancillary Equipment; 24590-WTP-GPG-ENG-004, Rev. 2A, Design Guide Pipe Stress, Pipe Layout, and Support Spacing; 24590-WTP-SE-ENS-03-704, Rev. 0, Safety Evaluation for Design (Seismic Design of Piping and Pipe Supports); 24590-LAW-P6C-RLD-10042, Rev. B, Richland RPP WTP LAW RLD System (Pipe Stress Analysis); 24590-LAW-P6C-LMP-10005, Rev. B, Richland RPP WTP LAW Plant LMP System (Pipe Stress Analysis); 24590-LAW-P61C-LMP-00001, Rev. A, RPP-WTP LAW Melter Feed Line Assembly Calculation-LMP System (including ECCN 00001); 24590-LAW-PHC-LMP-10002, Rev. B, RPP-WTP Engineered Support Calculation for LAW-LMP-H10001 and LAW-LMP-H10535); 24590-WTP-PHC-P50-00001, Rev. 0, RPP/WTP Support Standards (Calculations).	The Pipe Stress Design Criteria requires the use of the ASME B31.3 Code for process piping design. ASME B31.3 requires explicit consideration of operating pressure, operating temperature, thermal expansion/contraction, settlement, vibration, and corrosion allowance in the design of piping. For the seismic design of Seismic Category (SC-III/IV) ancillary equipment, applicable sections of ASME Section III, Division 1, Appendix F, and sections of Uniform Building Code (UBC) are used to supplement the requirements of ASME B31.3. Details of the seismic design methods are discussed in the Pipe Stress Design Criteria and Seismic Evaluation documents. These are appropriate and adequate codes and standards including the Design Guide document, to ensure that the ancillary equipment has adequate strength at the end of its design life to withstand all anticipated loads. Review of sample ancillary equipment calculations and drawings indicates that they are adequately designed meeting the requirements of the aforementioned applicable code and standards.

Information Assessed		Source of Information	Assessment
Supports	Ancillary equipment supports are adequately designed.	Drawings listed above under References; 24590-WTP-DC-PS-01-002, Rev. 4, Pipe Support Design Criteria; 24590-WTP-PER-PS-02-001, Rev. 4, Ancillary Equipment Pipe Support Design; ASME B31.3 Code, Process Piping, American Society of Mechanical Engineers (1996); ASME Boiler and Pressure Vessel Code, Section III, Division I, Subsection NF, Appendix N and F, Rules for Construction of Nuclear Power Plant Components (2001); 24590-WTP-PL-PS-01-001, Rev. 1, Verification and Validation Test Plan for Bechtel's ME150 Pipe Support Family of Programs (PCFAPPS); 24590-LAW-PHC-LOP-10002, Rev. B, RPP-WTP Engineered Support Calculation for LAW-LMP-H10001 and LAW-LMP-H10535; 24590-WTP-PHC-P50-00001, Rev. 0, RPP/WTP Support Standards (Calculations).	The Pipe Support Design Criteria considers all load types identified in ASME B31.3 and utilizes ASME B&PV Code, Section III, Division 1, Subsection NF and Appendix F to supplement the requirements of ASME B31.3 for seismic design of SC-III/IV pipe supports. Bounding load cases are passed to the pipe support designers from the results of the ancillary equipment piping stress analyses. Details of the seismic design methodology are discussed in the Pipe Support Design Criteria document. Analysis is by manual calculation and computer programs that have been tested and approved as discussed in the Verification and Validation Test Plan for Bechtel's ME150 Pipe Support Family of Programs. The Ancillary Equipment Pipe Support Design document shows examples of typical equipment supports. Ancillary equipment supports are to be designed in such a way that the heat transferred from supports to the building structure does not raise the building structure temperature to exceed 150°F for concrete and 200°F for steel. Review of sample ancillary equipment supports calculations and drawings indicates that they are adequately designed.
Foundation	The system will withstand the effects of frost heave.	Drawings listed above under References; 24590-WTP-DC-ST-01-001, Rev. 12, Structural Design Criteria.	The Structural Design Criteria requires that all structural foundations for outdoor equipment shall extend into the surrounding soil below the 30" frost line depth to preclude frost heave. The LMP melters and ancillary equipment associated with the LMP system considered in this assessment are located inside the LAW Facility at Elev. 3'-0" as shown on General Arrangement Plan drawing. The majority of the LAW building foundation mat is at Elev. (-) 21'-0" level, therefore, the melters and ancillary equipment are not subject to frost heave.

Information Assessed		Source of Information	Assessment
Connections	Seams and connections are adequately designed.	Drawings listed above under References; 24590-WTP-DB-ENG-01-001, Rev. 1M, Basis of Design; 24590-WTP-DC-PS-01-001, Rev. 6, Pipe Stress Design Criteria Including "Pipe Stress Criteria" and "Span Method Criteria"; ASME B31.3 Code, Process Piping, American Society of Mechanical Engineers (1996); ASME Boiler and Pressure Vessel (B&PV) Code, Section IX, Welding and Brazing Qualifications; ASME B16.5 Code, Piping Flanges and Flanged Fittings, (1988); 24590-LAW-P6C-RLD-10042, Rev. B, Richland RPP WTP LAW RLD System (Pipe Stress Analysis); 24590-LAW-P6C-LMP-10005, Rev. B, Richland RPP WTP LAW Plant LMP System (Pipe Stress Analysis); 24590-LAW-P61C-LMP-00001, Rev. A, RPP-WTP LAW Melter Feed Line Assembly Calculation-LMP System (including ECCN 00001).	The Basis of Design document states that in-cell piping that is non-maintainable will be fully welded. The Pipe Stress Design Criteria document requires the use of ASME B31.3 Process Piping design code for piping systems. Welding is performed in accordance with the requirements of ASME B31.3 and ASME B&PV Code, Section IX. Flange connections are to be designed in accordance with ASME B16.5 Code. The aforementioned documents provide appropriate requirements and guidelines to adequately design the seams and connections to sustain the applicable loads. Review of sample ancillary equipment calculations and drawings indicates that they are adequately designed meeting the requirements of the aforementioned applicable code and standards.

Information Assessed		Source of Information	Assessment
Waste Characteristics	Characteristics of low-activity waste have been identified (dangerous waste characteristics, specific gravity, vapor pressure, flash point, temperature)	System Description listed above under references; 24590-WTP-PER-PR-03-001, Rev. 1, Prevention of Hydrogen Accumulation in WTP Tank Systems and Miscellaneous Treatment Unit Systems; 24590-WTP-PER-PR-03-002, Rev. 3, Control of Toxic Vapors and Emissions from WTP Tank and Miscellaneous Unit Systems.	The Prevention of Hydrogen Accumulation in WTP Tank Systems and Miscellaneous Treatment Unit Systems document indicates that flammable or explosive concentrations of hydrogen are not expected in the LAW facility systems ancillary equipment. Similarly, the Control of Toxic Vapors and Emissions from WTP Tank and Miscellaneous Unit Systems document provides a summary of the LAW facility ancillary equipment design features that provide for confinement and treatment of dangerous waste vapors and emissions during normal operations, abnormal operations, and during and after a design level seismic event. The LMP System Description document describes the equipment installed in the LMP system to route acid gases, NOx, SOx, volatile organics, particulates and aerosols, and radioactive gases to offgas system for treatment and release. The LMP systems are designed to treat the offgas so that it conforms to relevant federal, state, and local air emissions requirements at the point of discharge from the facility stack.

Information Assessed		Source of Information	Assessment
Waste Characteristics (cont'd)	Ancillary equipment is designed to handle the wastes with the characteristics defined above and any treatment reagents.	System Description and Drawings listed above under References; 24590-LAW-3PS-AE00-T0001, Rev. 4, Engineering Specification for Low Activity Waste Melters; 24590-WTP-PER-M-02-002, Rev. 2, Materials for Ancillary Equipment; CCN # 191062 (Material Selection Supplement Information); 24590-WTP-PER-PL-02-001, Rev. 6, Piping Material Class Description.	The characteristics of the blended slurry of pretreated liquid low-activity waste and glass former additives supplied to the melters and the molten glass discharged from the melters to form immobilized low-activity waste is described in the LMP System Description document. The Engineering Specification for Low Activity Waste Melters provides performance requirements for all phases of melter life. The characteristics of the LMP melter offgas to be treated and cooled in the LAW Primary Offgas Process (LOP/LVP) System is described in the LOP System Description document. The LOP/LVP System Description identifies the safety functions for ancillary equipment to include maintaining the confinement boundary of the offgas stream and ensuring that the flow path between the melters and stack remains unobstructed during and following a SC-III seismic event. The integrity assessment of LOP system is not in the scope of this assessment, it is provided in a separate report. The Materials for Ancillary Equipment document specifies that ancillary equipment downstream of a waste source vessel or miscellaneous plant items is to be constructed of the same or better material, unless the service seen in the downstream line warrants a different material, corrosion allowance, or other modification. The selection of materials listed in the Piping Material Class Description and CCN documents and as shown on drawings, for the ancillary equipment is compatible with the operating environment for their required design life. This requirement envelops consideration for defined characteristics of waste and any treatment reagents which are added to the plant items only and not to the ancillary equipment.

Information Assessed		Source of Information	Assessment
Compatibility	The pH range of the waste, waste temperature and the corrosion behavior of the structural materials are adequately addressed. Ancillary equipment material and protective coatings ensure the ancillary equipment structure is adequately protected from the corrosive effects of the waste stream and external environments. The protection is sufficient to ensure the equipment will not leak or fail for the design life of the system.	System Description and Drawings listed above under References; 24590-WTP-DB-ENG-01-001, Rev.1M, Basis of Design; 24590-WTP-PER-M-02-002, Rev. 2, Materials for Ancillary Equipment; 24590-WTP-PER-PL-02-001, Rev. 6, Piping Material Class Description; CCN # 191062 (Material Selection Supplement Information); 24590-WTP-3PS-NN00-T0001, Rev. 2, Engineering Specification for Thermal Insulation for Mechanical Systems; Annual Book of ASTM Standards, American Society of Testing and Materials; 24590-LAW-3PS-AE00-T0001, Rev. 4, Engineering Specification for Low Activity Waste Melters.	The LMP System Description document provides pertinent information about various elements of the waste to be processed. The Basis of Design document identifies a service design life of 40 years for the ancillary equipment. All non-maintainable items are designed to last the life of the facility. Detailed material selection (corrosion) analyses are conducted for each vessel and major components in the LMP system in the LAW facility during process design. The Materials for Ancillary Equipment document specifies that ancillary equipment downstream of a waste source vessel or miscellaneous plant items is to be constructed of the same or better material and with the same corrosion allowance as the source vessel or plant items, unless the service seen in the downstream line warrants a different material, corrosion allowance, or other modification. The Thermal Insulation specification requires that all insulating materials used on the outside of ancillary equipment be pre-approved for use on austenitic stainless steel in accordance with applicable ASTM procedures and tests to preclude external corrosion of ancillary equipment. Both internal and external corrosion has been considered for all ancillary equipment, therefore, the ancillary equipment will provide the expected design service life. The Engineering Specification for Low activity Waste Melters specifies each melter, excluding consumable SSCs, shall have a 5 year design life. Materials of construction provided in accordance with the specification for Melters are able to withstand the radioactive, thermal, and corrosive environment caused by the melter feed, molten glass, and offgasses. Corrosion and erosion allowances are included in the design. The selection of materials listed in the Piping Material Class Description and CCN documents and as shown on drawings, for the ancillary equipment is compatible with the operating environment for their required design life.

Information Assessed		Source of Information	Assessment
Corrosion Allowance	Corrosion allowance is adequate for the intended service life of the ancillary equipment.	Drawings listed above under References; 24590-WTP-DC-PS-01-001, Rev. 6, Pipe Stress Design Criteria including "Pipe Stress Criteria" and "Span Method Criteria;" ASME B31.3 Code, Process Piping, American Society of Mechanical Engineers (1996); 24590-WTP-DB-ENG-01-001, Rev. 1M, Basis of Design; 24590-WTP-PER-M-02-002, Rev. 2, Materials for Ancillary Equipment; 24590-WTP-PER-PL-02-001, Rev. 6, Piping Material Class Description; CCN # 191062 (Material Selection Supplement Information); 24590-LAW-P6C-LOP-00002, Rev. B, Richland RPP WTP LAW Main/Standby Offgas Piping (Pipe Stress Analysis); 24590-LAW-P6C-RLD-10042, Rev. B, Richland RPP WTP LAW RLD System (Pipe Stress Analysis); 24590-LAW-P6C-LMP-10005, Rev. B, Richland RPP WTP LAW Plant LMP System (Pipe Stress Analysis).	The Pipe Stress Design Criteria document requires use of the ASME B31.3 Code for ancillary equipment design. Consideration of corrosion, including corrosion allowance, is a mandatory requirement of ASME B31.3. A required service design life of 40 years is identified in the Basis of Design document for ancillary equipment. Detailed material selection (corrosion) analyses are conducted for each vessel and major components in the LMP system in the LAW Facility during process design. The Materials for Ancillary Equipment document specifies that ancillary equipment downstream of a waste source vessel or miscellaneous plant items is to be constructed of the same or better material and with the same corrosion allowance as the source vessel or plant items, unless the service seen in the downstream line warrants a different material, corrosion allowance, or other modification. Bounding corrosion allowances are listed for each piping material class in the Piping Material Class Description document. The selection of materials listed in the Piping Material Class Description and CCN documents and as shown on drawings, for the ancillary equipment is compatible with the operating environment for their required design life. Review of the Pipe Stress Analysis documents shows that appropriate corrosion allowance has been used.

Information Assessed		Source of Information	Assessment
Pressure Controls	Pressure controls (vents and relief valves) are adequately designed to ensure pressure relief if normal operating pressures in are exceeded.	24590-WTP-DC-PS-01-001, Rev. 6, Pipe Stress Design Criteria including "Pipe Stress Criteria" and "Span Method Criteria;" ASME B31.3 Code, Process Piping, American Society of Mechanical Engineers (1996); 24590-WTP-PER-PL-02-001, Rev. 6, Piping Material Class Description.	The Pipe Stress Design Criteria document specifies use of ASME B31.3 as the design code for the WTP piping. ASME B31.3 requires provision be made to safely contain or relieve any pressure to which the piping may be subjected. ASME B31.3 piping not protected by a pressure relieving device, or that can be isolated from a pressure reliving device must be designed for at least the highest pressure that can be developed. Bounding pressure and temperature limits are listed for each of the piping material classes in the Piping Material Class Description document. These requirements are appropriate and adequate for the ancillary equipment design.
	Maximum flows and any unusual operating stresses are identified	Drawings and System Description listed above under References; 24590-WTP-DC-PS-01-001, Rev. 6, Pipe Stress Design Criteria including "Pipe Stress Criteria" and "Span Method Criteria;" ASME B31.3 Code, Process Piping, American Society of Mechanical Engineers (1996); 24590-WTP-PER-PL-02-001, Rev. 6, Piping Material Class Description.	The expected flow paths for molten glass and ancillary systems servicing the melters are identified on the Process Flow and P&ID drawings. The LMP System Description document requires the melter shell design to withstand the effects of full offgas suction. The LOP System Description Document defines normal and off-normal operating conditions for the offgas system. The Pipe Stress Design Criteria document specifies the ASME B31.3 Code for ancillary piping system design. This code requires piping to be designed to the highest pressure that can be developed in a piping system, assuring that maximum operating stresses remain within the code allowable values. The Piping Material Class Description document lists the bounding pressure and temperature limits for each piping material class.

Information Assessed		Source of Information	Assessment
Secondary Containment	Ancillary equipment is designed with secondary containment that is constructed of materials compatible with the waste and of sufficient strength to prevent failure (pressure gradients, waste, climatic conditions, daily operations), provided with a leak-detection system, and designed to drain and remove liquids.	24590-LAW-3PS-AE00-T0001, Rev. 4, Engineering Specification for Low Activity Waste Melters; 24590-WTP-PER-CSA-02-001, Rev. 8, Secondary Containment Design; 24590-WTP-DB-ENG-01-001, Rev. 1M, Basis of Design.	The Engineering Specification document requires the LMP melter shell design to contain the molten glass pool and to prevent leakage of bulk glass to the building cave in the event of refractory failures. The Basis of Design document requires that "Tank system ancillary equipment that manages dangerous waste shall have secondary containment" and "All secondary containments will be provided with drains and leak detection systems for detection of primary containment leaks." The ancillary equipment considered in this assessment is located in melter gallery and process areas inside the LAW facility. The Secondary Containment Design document provides typical standard details of secondary containment equipment for various WTP buildings. This report also addresses secondary containment for the Melter Feed Line Encasement Assemblies. Secondary containment for other ancillary equipment and services interfacing with the LAW melters such as sumps, liners, and drains within the melter gallery area is addressed in a separate report.

Drawings and Documents

Operating Unit Group 10 – Appendix 9.13
Low Activity Waste Building
Instrument Control Logic and Narrative Description

The documents listed in the following table are incorporated by reference into this permit and are subject to the requirements set forth in Part I Standard Conditions, Part II General Facility Conditions, and Part III Operating Unit Group 10 Conditions. Upon request, copies of the documents can be viewed at the Nuclear Waste Program Resource Center located at 3100 Port of Benton Blvd. Richland, WA. Appointments for viewing can be scheduled by calling (509) 372-7950

Drawing/Document Number	***Description***
24590-LAW-PER-J-02-001, Rev 1	System Logic Description for RLD System
24590-LAW-PER-J-03-001, Rev 0	System Logic Description for LFP System
24590-LAW-PER-J-03-002, Rev 0	System Logic Description for LCP System
24590-LAW-PER-J-03-003, Rev 0	System Logic Description for LOP System)
24590-LAW-PER-J-07-0001, Rev 0	System Logic Description for the Low-Activity Waste LAW Melter Process System (LMP)
24590-LAW-PER-J-04-0002, Rev 0	System Logic Description for LVP System
RESERVED	RESERVED

Source documents (which do not include a "P" in the last set of numbers, e.g. "-P0001," or "-TP001") should be used in conjunction with any document change notices issued against it.

We are currently transitioning from permit documents (which do include a "P" in the last set of numbers) to source documents. At the end of the transition period, permit submittals will contain source documents and will be incorporated into the permit as described in Ecology Publication # 07-05-006 (www.ecy.wa.gov/biblio/nwp.html).

This page intentionally left blank.

ISSUED BY
RPP-WTP PDC

R11010812

Document title:

System Logic Description for Low-Activity Waste Facility Melter Process (LMP) System

Contract number: DE-AC27-01RV14136

Department: Controls and Instrumentation

Author(s): Joe Horn

Principal author signature: Joe Horn

Document number: 24590-LAW-PER-J-07-001, Rev 0

Checked by: Mark Friedrich

Mark Friedrich

Checker signature:

Date of issue: 12/23/2008

Issue status: Issued for Permitting Use

Approved by: Wayne Underhill

Approver's position: Discipline Production Engineering Manager

Approver signature: Wayne Underhill 12/23/08

This bound document contains a total of 19 sheets

River Protection Project
Waste Treatment Plant
2435 Stevens Center Place
Richland, WA 99354
United States of America
Tel: 509 371 2000

Notice

Please note that source, special nuclear, and byproduct materials, as defined in the Atomic Energy Act of 1954 (AEA), are regulated at the US Department of Energy (DOE) facilities exclusively by DOE acting pursuant to its AEA authority. DOE asserts that, pursuant to the AEA, it has sole and exclusive responsibility and authority to regulate source, special nuclear, and byproduct materials at DOE-owned nuclear facilities. Information contained herein on radionuclides is provided for process description purposes only.

History Sheet

Rev	Date	Reason for revision	Revised by
0		Issued for Permitting Use	J.J. Horn

Contents

Notice i
History Sheet ii
Acronyms and Abbreviations iv
Glossary v
1 Introduction 1
2 Applicable Documents 1
3 Description 2
3.1 LMP-MLTR-00001 and LMP-MLTR-00002 3
3.2 LMP-BBLR-00055 and LMP-BBLR-00056 3
3.3 LOP-FCLR-00001 through LOP-FCLR-00004 3
3.4 LMP-LDB-00001 and LMP-LDB-00002 4
3.5 LMP-ALFT-00001 through LMP-ALFT-00004 4

Tables

Table 1 Associated Instruments for LAW Melters 5

Figures

Figure 1 Typical Temperature Averaging of a Melter Plenum 7
Figure 2 Typical Glass Pool Level and Density 8
Figure 3 Typical Plenum Differential Pressure 9
Figure 4 Typical IR Cameras 10
Figure 5 Typical Air Lift Valves 11
Figure 6 Typical Melter Lid Thermocouple 12
Figure 7 Typical Melter Feed Leak Detection 13

Acronyms and Abbreviations

Reference the piping and instrumentation diagrams' symbols and legend sheets as listed in the Applicable Documents section, for acronyms and abbreviations used in the Appendix.

ADS	air displacement slurry
AEA	Atomic Energy Act
DI	density indicator
DOE	US Department of Energy
DT	density transmitter
ILAW	immobilized low activity waste
IR	Infrared
LFP	LAW melter feed process system
LAW	low-activity waste/ low-activity waste vitrification facility
LMP	LAW melter process system
LOP	LAW primary offgas process system
LAH	level alarm high
LAHH	level alarm high high
LALL	level alarm low low
LI	level indicator
LSH	level switch high
LT	level transmitter
LVP	LAW secondary offgas/vessel vent process system
P&ID	piping and instrumentation diagram
PDAHH	pressure differential alarm high-high
PDI	pressure differential indicator
PDT	pressure differential transmitter
RLD	radioactive liquid waste disposal system
TALL	temperature alarm low low
TDAH	temperature differential alarm high
TE	Temperature Element
TI	Temperature Indicator
TT	Temperature Transmitter
WTP	Hanford Tank Waste Treatment and Immobilization Plant

Glossary

Control system	Refers to electronic processors that perform regulatory and logical control functions necessary for normal plant operation
High-high	Refers to a notification in the control system that is activated when the applicable variable reaches a point that is significantly higher than that expected during normal operation
Low-low	Refers to a notification in the control system that is activated when the applicable variable reaches a point that is significantly lower than that expected during normal operation

1 Introduction

The document describes the instrument control logic for instruments associated with sub-systems such as the LAW melters and film coolers, and as applicable, sub-system equipment such as piping, pumps, and associated leak detection systems.

2 Applicable Documents

24590-WTP-M6-50-00001, *P&ID Symbols and Legend Sheet 1 of 8*

24590-WTP-M6-50-00002, *P&ID Symbols and Legend Sheet 2 of 8*

24590-WTP-M6-50-00003, *P&ID Symbols and Legend Sheet 3 of 8*

24590-WTP-M6-50-00004, *P&ID Symbols and Legend Sheet 4 of 8*

24590-WTP-M6-50-00005, *P&ID Symbols and Legend Sheet 5 of 8*

24590-WTP-M6-50-00006, *P&ID Symbols and Legend Sheet 6 of 8*

24590-WTP-M6-50-00007, *P&ID Symbols and Legend Sheet 7 of 8*

24590-WTP-M6-50-00008, *P&ID Symbols and Legend Sheet 8 of 8*

24590-LAW-M6-LMP-00002, *P&ID – LAW Melter Process System Melter 1 Agitation Zone 3 & Level Detection System*

24590-LAW-M6-LMP-00005, *P&ID – LAW Melter Process System Melter 1 Electrode Extension Cooling & Glass/Plenum Temperatures*

24590-LAW-M6-LMP-00007, *P&ID – LAW Melter Process System Melter 1 Glass Pouring and Monitoring Instrumentation*

24590-LAW-M6-LMP-00008, *P&ID – LAW Melter Process System Melter 1 Discharge Heaters, Power Controls (1-4) & Air Lift – Eastside*

24590-LAW-M6-LMP-00010, *P&ID – LAW Melter Process System Melter 1 Discharge Heaters, Power Controls (1-4) & Air Lift – Westside*

24590-LAW-M6-LMP-00012, *P&ID – LAW Melter Process System Melter 1feed Nozzles Cooling System and Feed Nozzles*

24590-LAW-M6-LMP-00013, *P&ID – LAW Melter Process System Melter 2 Lid, Plenum and Offgas Ports Cooling System*

24590-LAW-M6-LMP-00032, *P&ID – LAW Melter Process System Melter 2 Agitation Zone 3 & Level Detection System*

24590-LAW-M6-LMP-00035, *P&ID – LAW Melter Process System Melter 2 Electrode Extension Cooling & Glass/Plenum Temperatures*

24590-LAW-M6-LMP-00037, *P&ID – LAW Melter Process System Melter 2 Glass Pouring and Monitoring Instrumentation*

24590-LAW-M6-LMP-00038, *P&ID – LAW Melter Process System Melter 2 Discharge Heaters, Power Controls (1-4) & Air Lift – Eastside*

24590-LAW-M6-LMP-00040, *P&ID – LAW Melter Process System Melter 2 Discharge Heaters, Power Controls (1-4) & Air Lift – Westside*

24590-LAW-M6-LMP-00042, *P&ID – LAW Melter Process System Melter 2 Feed Nozzles Cooling System and Feed Nozzles*

24590-LAW-M6-LMP-00043, *P&ID – LAW Melter Process System Melter 2 Lid, Plenum Cooling System Ports Cooling System*

24590-LAW-M6-LOP-00004, *P&ID – LAW Primary Offgas Process System Melter 1 Offgas Film Coolers*

24590-LAW-M6-LOP-00005, *P&ID – LAW Primary Offgas Process System Melter 2 Offgas Film Coolers*

24590-LAW-3YD-LMP-00001, *System Description for LAW Melter Process System (LMP)*

3 Description

The LMP components and ancillary equipment pertaining to instrumentation included in the dangerous waste permit are the following:

- LMP-MLTR-00001 LAW Melter 1
- LMP-MLTR-00002 LAW Melter 2
- LMP-BBLR-00055 Melter 1 Level Detector
- LMP-BBLR-00056 Melter 2 Level Detector
- LOP-FCLR-00001 Melter 1 Primary Offgas Film Cooler
- LOP-FCLR-00002 Melter 1 Standby Offgas Film Cooler
- LOP-FCLR-00003 Melter 2 Primary Offgas Film Cooler
- LOP-FCLR-00004 Melter 2 Standby Offgas Film Cooler
- LMP-LBD-00001 Melter 1 Feed Line Encasement Assembly
- LMP-LBD-00002 Melter 2 Feed Line Encasement Assembly
- LMP-ALFT-00001 Melter 1 Air Lift Lance – Eastside
- LMP-ALFT-00002 Melter 1 Air Lift Lance – Westside
- LMP-ALFT-00003 Melter 2 Air Lift Lance – Eastside
- LMP-ALFT-00004 Melter 2 Air Lift Lance – Westside

3.1 LMP-MLTR-00001 and LMP-MLTR-00002

The low-activity waste (LAW) melters receive a blend of low-activity waste concentrate and glass former additives from the melter feed process (LFP) system. The melters are fed via air displacement slurry (ADS) pumps. The melters convert the feed into molten glass and deliver it into stainless steel canisters. The pour spout connects the melter discharge chamber to the canister. After the glass is transferred into the canister, it cools to form a durable glass waste form. Immobilized low-activity waste (ILAW) is the resulting product (glass plus canister).

The feed slurry is transferred using six feed pumps, each supplying a separate nozzle on the melter. The slurry will fall from the nozzles, which are located in the melter lid, onto the surface of the glass pool within the melter. The feed material will form a distinct layer, often referred to as the "cold cap," on the surface of the glass pool. This system is also equipped to flush the feed lines with demineralized water, to clean the feed lines and to establish the cold cap prior to transferring waste. This is referred to as melter pre-feeding.

The melters are equipped with several plenum thermocouples, used primarily to determine the coverage of the cold cap. The plenum temperatures are averaged per heating zone as determined by the electrode placement. These zones are then averaged to a single melter plenum temperature. If this temperature falls below acceptable limits pre-feeding to the melter will be terminated. See figure1 for more details on melter plenum temperature.

The LAW melter lid has a closed-loop cooling system operated at a low pressure necessary to meet the structural and thermal limits of the lid. The closed loop system consists of a pump, heat exchanger, and surge tank. The lower plate of the lid constitutes a safety significant pressure boundary. To protect this feature, safety significant TEs are utilized to report the temperature of the cooling water. If this temperature rises above the design limit for the lid the melter feed will be terminated. See figure 6 for details on melter lid temperature.

3.2 LMP-BBLR-00055 and LMP-BBLR-00056

The melter glass level detector functions using three gas purged probes penetrating the glass pool to different depths. By measuring the differential pressure between each of the legs the density and level of the glass pool are calculated. If the level rises above acceptable limits the control system will alarm and terminate slurry feeding. Glass discharge will be terminated if the glass pool level falls below acceptable limits. Operators will be alerted to the low level condition. See figure 2 for details on melter level detection. Section 3.4 discusses glass discharge in more detail.

3.3 LOP-FCLR-00001 through LOP-FCLR-00004

During normal operation the melter generates steam, gases, aerosols, vapors, and particulates, which are handled by the offgas systems LOP and LVP. Each melter has two attached film coolers, a primary and a standby, which serve as the interface between the offgas systems and the melter. The primary film coolers are designed to cool the offgas below the glass sticking temperature to minimize solids deposition on the walls of offgas piping. The standby film coolers are used to supplement the primary film coolers if upset conditions are detected in the melter plenum. The offgas system is designed to maintain a vacuum in the melter plenum for containment of the offgases. This vacuum is measured and controlled in part by

redundant differential pressure detectors between the melter plenum and the melter annulus. If the melter plenum differential pressure rises above acceptable limits the control system will alarm the operator and take the following actions:

- Terminates slurry feeding
- Terminates pre-feeding
- Opens the standby offgas line
- Disables demineralized water to the film coolers
- Disables air supply to the film coolers

For more details on plenum differential pressure detection see figure 3.

3.4 LMP-LDB-00001 and LMP-LDB-00002

The feed lines that transfer waste from the LFP system to the melters are housed in LMP-LDB-00001 and LMP-LDB-00002 as they travel between the process cells and the melter gallery. In each of these assemblies is a conductivity type leak detection cable. This leak detection cable runs throughout the assembly along entire length of the encasement and into the bellows of the encasement assembly. Each of the feed lines will be immediately adjacent to a portion of the leak detection cable. LMP-LDB-00001 drains to RLD sump 30 and LMP-LDB-00002 drains to RLD Sump 32. The control system will alarm the operator when a leak is detected. Once an alarm is activated, the operator will verify if a leak has occurred and if a leak has occurred stop feed to the melter. The leaking feed lines will be flushed and liquids in the encasement assembly will be removed in accordance with the requirements in the DWP permit condition III.10.E.5.j. See figure 7 for details on melter feed line leak detection.

3.5 LMP-ALFT-00001 through LMP-ALFT-00004

Each melter contains two identical, independently operated, discharge chambers located adjacent to each other on the south side of both melters. The glass is discharged by an airlift system which injects air into the discharge riser effectively raising the glass level in the riser. The glass will flow down a trough and through the discharge chamber and into the canisters for cooling, solidification, and storage. The level in the canister will be monitored by an IR camera and a thermal image of the canister will be displayed in the control room. Termination of a pour will generally be controlled by an operator based on this image. Forced cooling air targeted within the IR camera field of view called air knives, and thermally conductive paint will provide better detail of the temperature gradients, and in effect canister level, within the area monitored by the IR camera for LAW canisters. The control system will disable glass pouring from an airlift when any of the following occur:

- Glass pool level falls below acceptable limits
- IR camera thermal image analyzer detects a container level above acceptable limits
- Lift is in progress in the neighboring chamber
- Canister is not in position to receive the waste glass
- Discharge chamber temperature is not in the appropriate range for glass pouring

For more details on the melter airlifts see figures 4 and 5.

Table 1 Associated Instruments for LAW Melters

P&ID	Monitoring/control parameter	Type of instrument/control device	Instrument/control device tag number
24590-LAW-M6-LMP-00005	Melter 1 Plenum Temperature Average	Temperature Element Temperature Transmitter Temperature Indicator	TE-1267C, 1272C, 1280C TT-1267B TI-1267C, 1272C, 1280C
24590-LAW-M6-LMP-00035	Melter 2 Plenum Temperature Average	Temperature Element Temperature Transmitter Temperature Indicator	TE-2267C, 2272C, 2280C TT-2267B TI-2267C, 2272C, 2280C
24590-LAW-M6-LMP-00002	Melter 1 Glass Pool Density	Density Transmitter Density Indicator	DT-1404 DI-1404
24590-LAW-M6-LMP-00032	Melter 2 Glass Pool Density	Density Transmitter Density Indicator	DT-2404 DI-2404
24590-LAW-M6-LMP-00002	Melter 1 Glass Pool Level	Level Transmitter Level Indicator	LT-1405 LI-1405
24590-LAW-M6-LMP-00032	Melter 2 Glass Pool Level	Level Transmitter Level Indicator	LT-2405 LI-2405
24590-LAW-M6-LMP-00002	Melter 1 Plenum Pressure	Pressure Differential Transmitter Pressure Differential Indicator	PDT-1410 / PDI-1410* or PDT-1411 / PDI-1411*
24590-LAW-M6-LMP-00032	Melter 2 Plenum Pressure	Pressure Differential Transmitter Pressure Differential Indicator	PDT-2410 / PDI-2410* or PDT-2411 / PDI-2411*
24590-LAW-M6-LMP-00007	Melter 1 West Canister Level	Level Element (IR Camera) Level Transmitter Level Indication	LE-1466 LT-1466 LI-1466B
24590-LAW-M6-LMP-00007	Melter 1 East Canister Level	Level Element (IR Camera) Level Transmitter Level Indication	LE-1511 LT-1511 LI-1511B

24590-LAW-M6-LMP-00037	Melter 2 West Canister Level	Level Element (IR Camera) Level Transmitter Level Indication	LE-2466 LT-2466 LI-2466B
24590-LAW-M6-LMP-00037	Melter 2 East Canister Level	Level Element (IR Camera) Level Transmitter Level Indication	LE-2511 LT-2511 LI-2511B
24590-LAW-M6-LMP-00010	Melter 1 West Discharge Air Lift	On/Off Plug Valve Valve Control	YV-1125 YC-1125
24590-LAW-M6-LMP-00008	Melter 1 East Discharge Air Lift	On/Off Plug Valve Valve Control	YV-1047 YC-1047
24590-LAW-M6-LMP-00040	Melter 2 West Discharge Air Lift	On/Off Plug Valve Valve Control	YV-2125 YC-2125
24590-LAW-M6-LMP-00038	Melter 2 East Discharge Air Lift	On/Off Plug Valve Valve Control	YV-2047 YC-2047
24590-LAW-M6-LMP-00012	Melter 1 Feed Encasement Assembly Leak Detection	Cable Type Conductivity Element	LE-1632 LAH 1632
24590-LAW-M6-LMP-00042	Melter 2 Feed Encasement Assembly Leak Detection	Cable Type Conductivity Element	LE-2632 LAH-2632
24590-LAW-M6-LMP-00013	Melter 1 Lid Cooling	Temperature Element Temperature Transmitter	TE-1640 TT-1293
24590-LAW-M6-LMP-00005		Temperature Indicator	TI-1640
24590-LAW-M6-LMP-00043	Melter 2 Lid Cooling	Temperature Element Temperature Transmitter	TE-2640 TT-2293
24590-LAW-M6-LMP-00005		Temperature Indicator	TI-2640

* These instrument sets are duplicates. Only one instrument set is required to remain functioning during waste feed operations.

Figure 1 Typical Temperature Averaging of a Melter Plenum

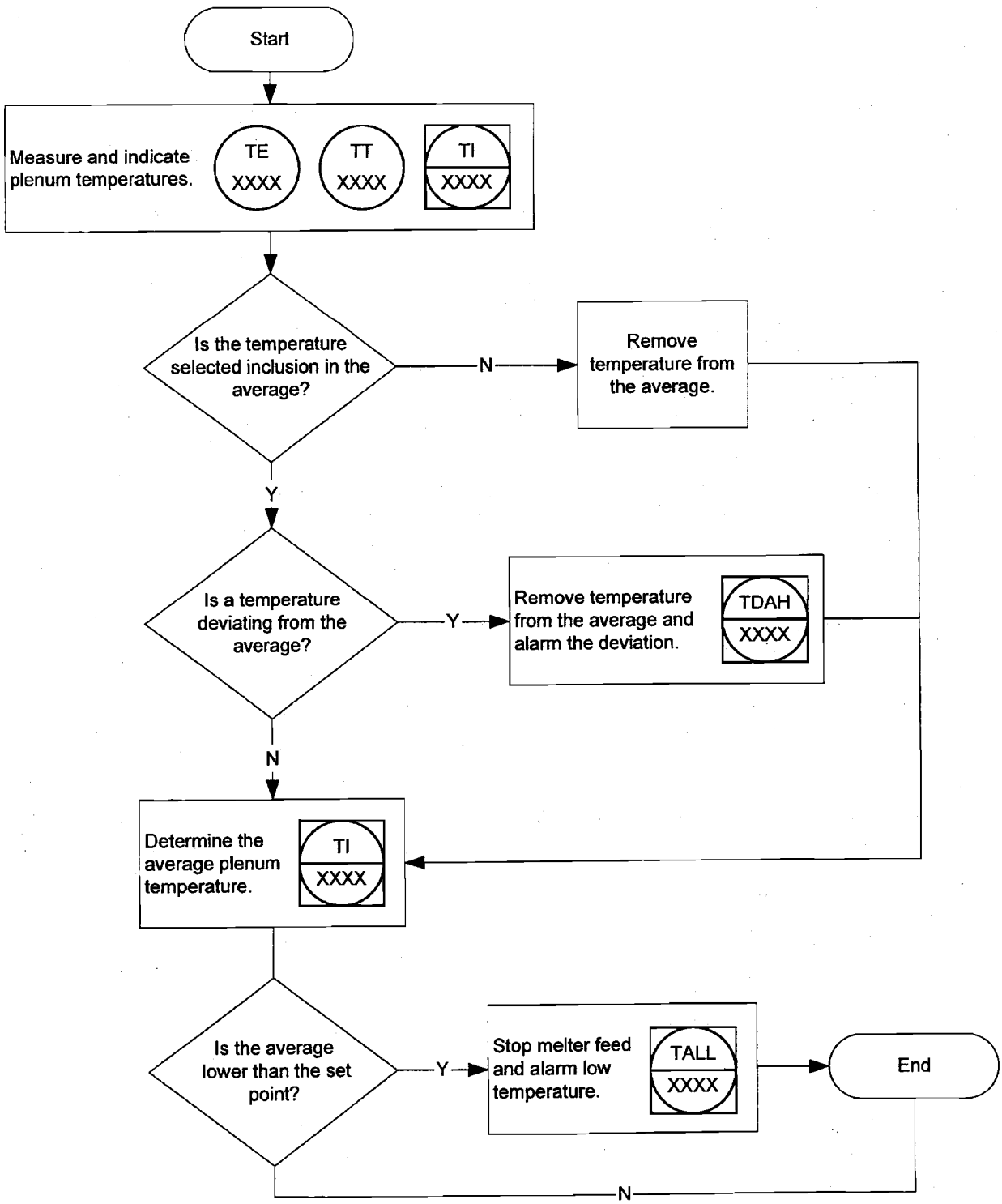

Figure 2 Typical Glass Pool Level and Density

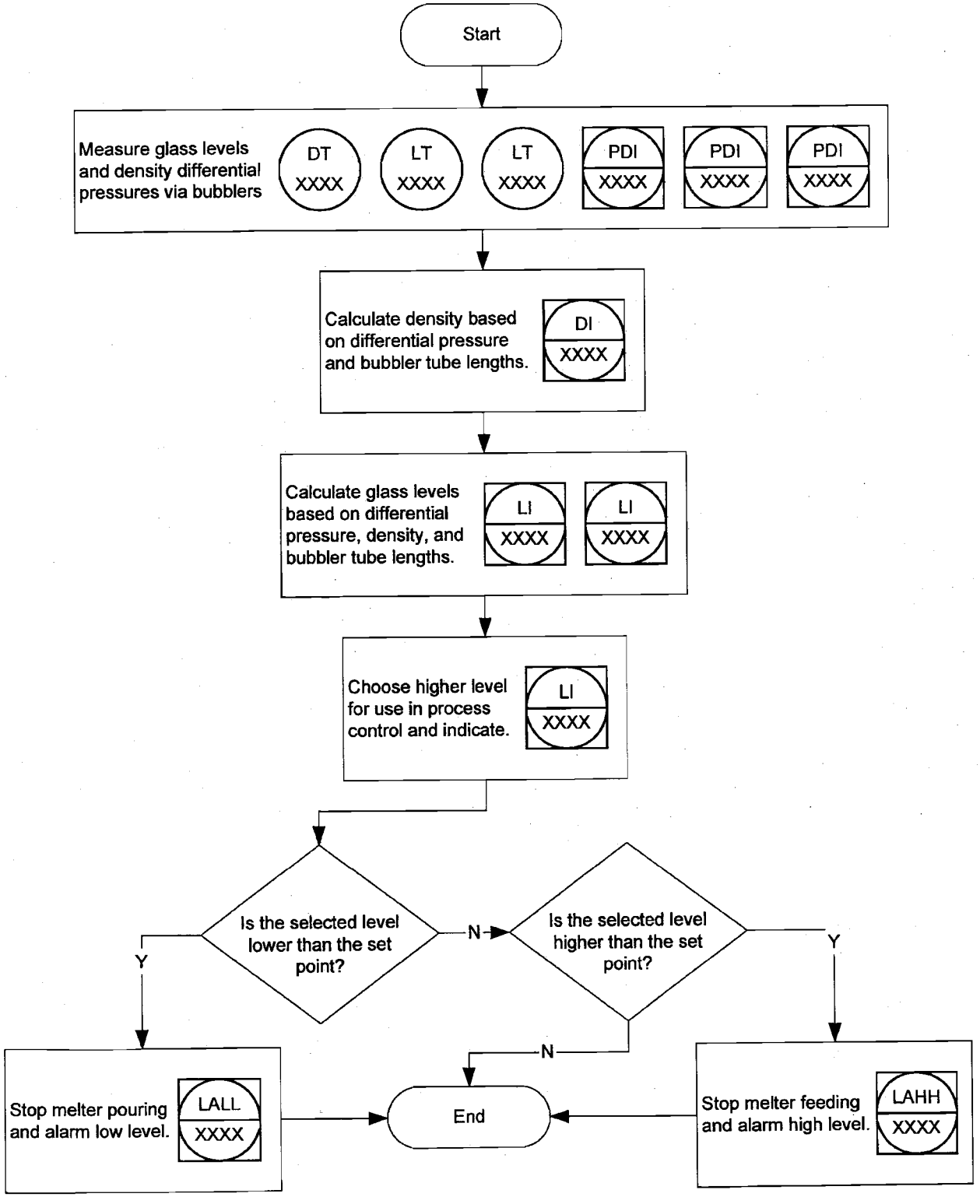

Figure 3 Typical Plenum Differential Pressure

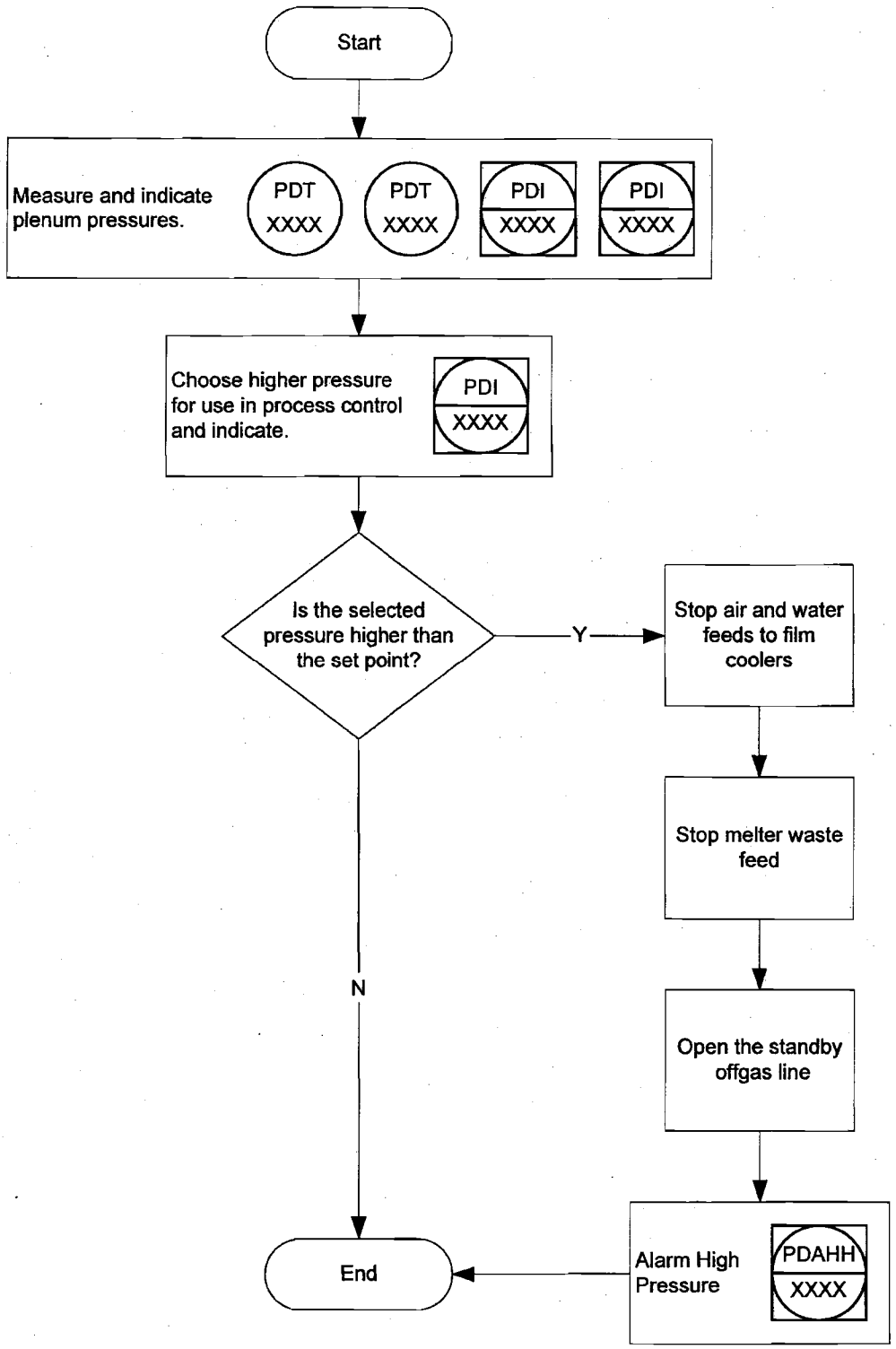

Figure 4 Typical IR Cameras

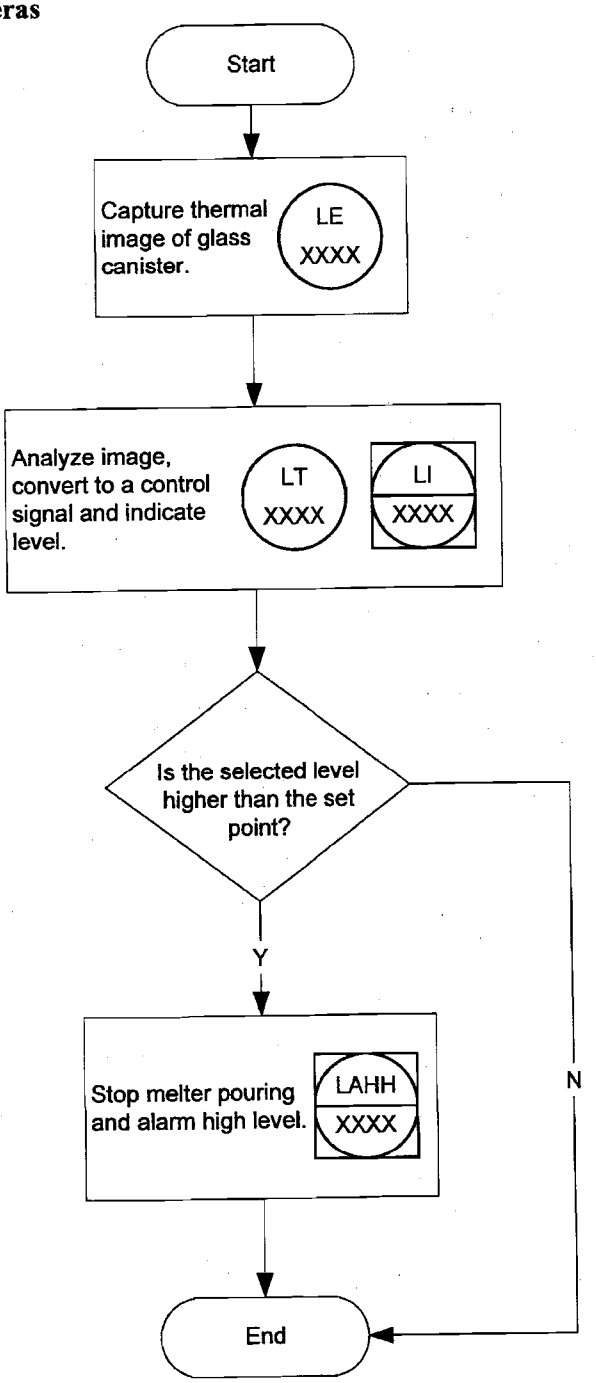

Figure 5 Typical Air Lift Valves

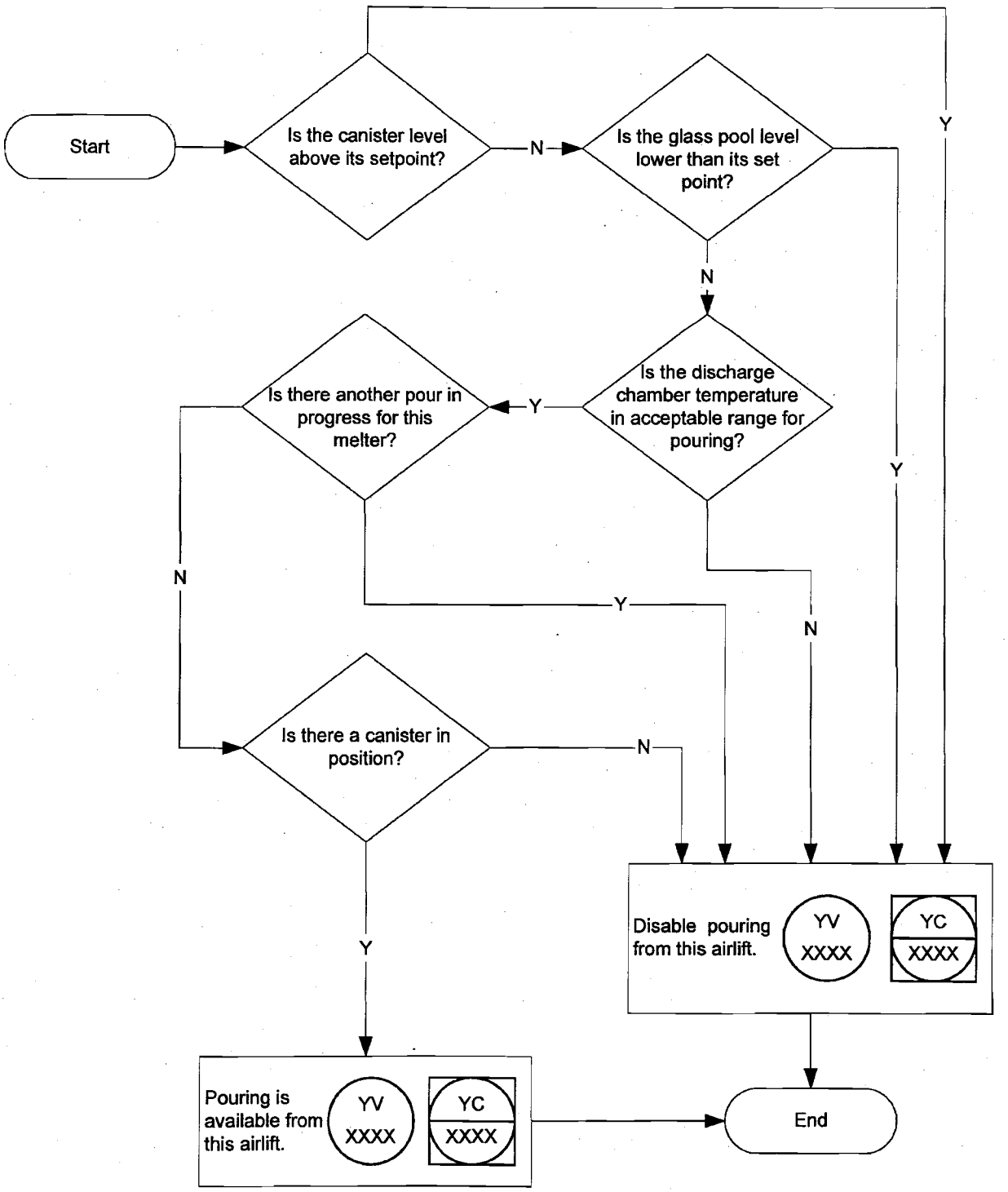

Figure 6 Typical Melter Lid Thermocouple

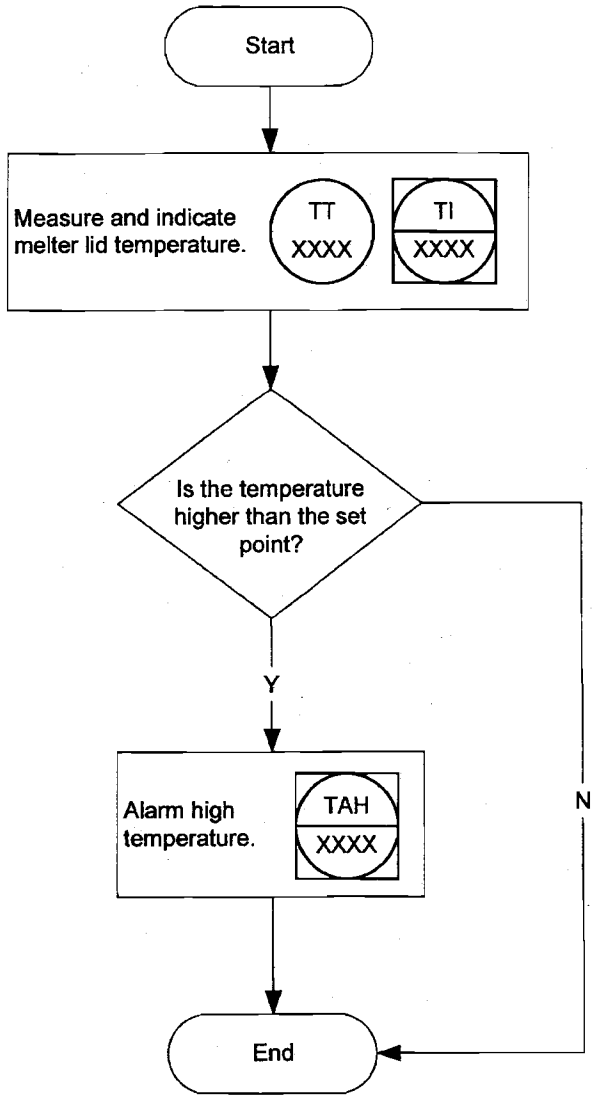

Figure 7 Typical Melter Feed Leak Detection

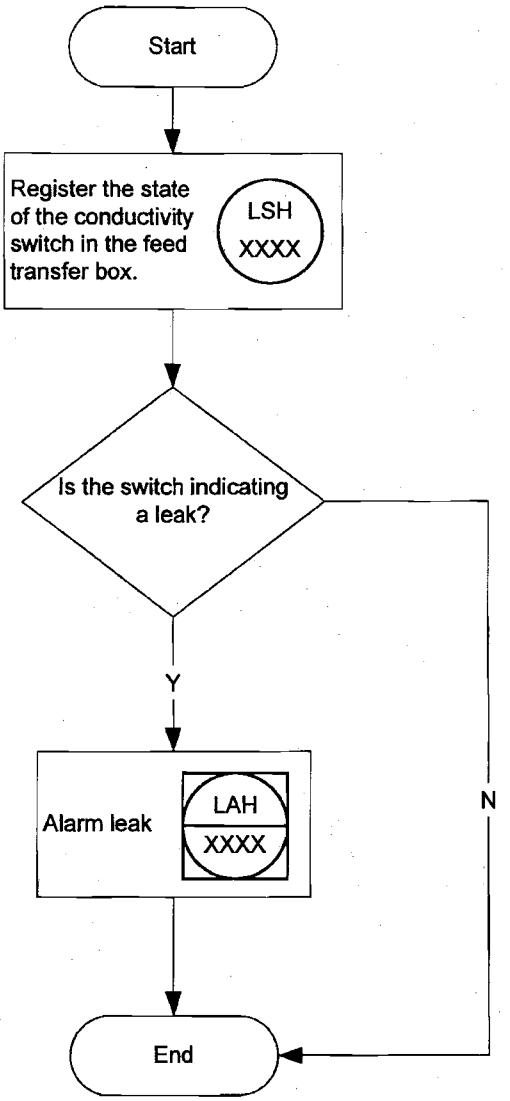

Drawings and Documents

Operating Unit Group 10 – Appendix 9.18
Low Activity Waste Building
Operating Documents

The documents listed in the following table are incorporated by reference into this permit and are subject to the requirements set forth in Part I Standard Conditions, Part II General Facility Conditions, and Part III Operating Unit Group 10 Conditions. Upon request, copies of the documents can be viewed at the Nuclear Waste Program Resource Center located at 3100 Port of Benton Blvd. Richland, WA. Appointments for viewing can be scheduled by calling (509) 372-7950.

Drawing/Document Number	***Description***
24590-LAW-PER-PR-03-001, Rev 2	LAW Vitrification Offgas System Bypass Analysis
24590-LAW-PER-M-05-001, Rev. 0	Waste Removal Capability for LAW Vitrification Facility
24590-LAW-PER-M-05-002, Rev. 2	Leak Detection Capability in the Low Activity Waste Facility
RESERVED	RESERVED

Source documents (which do not include a "P" in the last set of numbers, e.g. "-P0001," or "-TP001") should be used in conjunction with any document change notices issued against it.

We are currently transitioning from permit documents (which do include a "P" in the last set of numbers) to source documents. At the end of the transition period, permit submittals will contain source documents and will be incorporated into the permit as described in Ecology Publication # 07-05-006 (www.ecy.wa.gov/biblio/nwp.html).

R10680050

Document title: **Waste Removal Capability for the LAW Vitrification Facility**

Contract number: DE-AC27-01RV14136

Department: Process and Mechanical Systems

Author(s): R. Hanson

ISSUED BY
RPP-WTP PDC

Principal author signature:

Document number: 24590-LAW-PER-M-05-001, Rev 0

Checked by: L. Han

Checker signature:

Date of issue: 5/6/06

Issue status: Issued for Permitting Use

Approved by: J. Roth

Approver's position: Area Project Engineering Manager

Approver signature:

ERIC B. ISERN
STATE OF WASHINGTON
33449
REGISTERED
PROFESSIONAL ENGINEER

5/4/06

EXPIRES: 07/28/07

This bound document contains a total of 13 sheets

River Protection Project
Waste Treatment Plant
2435 Stevens Center Place
Richland, WA 99354
United States of America
Tel: 509 371 2000

Notice

Please note that source, special nuclear, and byproduct materials, as defined in the Atomic Energy Act of 1954 (AEA), are regulated at the US Department of Energy (DOE) facilities exclusively by DOE acting pursuant to its AEA authority. DOE asserts, that pursuant to the AEA, it has sole and exclusive responsibility and authority to regulate source, special nuclear, and byproduct materials at DOE-owned nuclear facilities. Information contained herein on radionuclides is provided for process description purposes only.

History Sheet

Rev	Date	Reason for revision	Revised by
0	05/06/06	Issued For Permitting Use	R. Hanson

Contents

Notice ii
History Sheet iii
Acronyms v
1 Summary 1
2 Objective 2
3 Description 2
4 Assumptions 3
5 Analysis 3
5.1 Room L-B001B, C3/C5 Drain Collection Cell, -21 ft Elevation 3
5.2 Room L-0123, Process Cell Melter 1, 3 ft Elevation 4
5.3 Room L-0124, Process Cell Melter 2, 3 ft Elevation 4
5.4 Room L-0126, Effluent Cell, 3 ft Elevation 5
6 Sump Removal Rates 5
7 Bounding Calculations 6
7.1 Room L-B001B, C3/C5 Drain Collection Cell, -21 ft Elevation 7
7.2 Room L-0123 7
7.3 Room L-0124 8
7.4 Room L-0126 8
8 References 8

Acronyms

AEA	Atomic Energy Act of 1954
C3/C5	Contamination Zones
DOE	US Department of Energy
LAW	Low Activity Waste
LCP	LAW Concentrate Receipt Process
LFP	LAW Melter Feed Process
LOP	LAW Primary Offgas Process
PTF	Pretreatment Facility
PWD	Plant Wash and Disposal
RLD	Radioactive Liquid Disposal
SBS	Submerged Bed Scrubber
WAC	Washington Administrative Code
WESP	Wet Electrostatic Precipitator

1 Summary

The Low Activity Waste (LAW) Vitrification Facility must satisfy the waste removal criteria of Washington Administrative Code 173-303-640(4) and of Dangerous Waste Permit Number WA7890008967 (Ref. 2), Permit Condition III.10.E.9.e.iii and III.10.H.5.e.iii for LAW Vitrification facility tank and miscellaneous treatment unit, secondary containment systems. This report evaluates the capability for removing, within 24 hours, leaked waste that may accumulate within the regulated process cells within the LAW facility.

The secondary containment areas located at the (-) 21 feet and +3 feet elevations of the LAW facility are provided with sumps. The secondary containment areas within the LAW facility are stainless steel lined. The liners are sloped to direct liquids to dry sumps in the cells. The sumps within the building are emptied by submersible electric sump pumps that can transfer accumulated liquids to process vessels for storage and subsequent processing. The levels in the sumps are detected by radar type level detectors.

Waste removal capability is estimated for four containment areas listed as follows:

1. Room L-B001B, C3/C5 Drain Collection Cell, -21 ft Elevation. The C3/C5 drain collection cell contains the C3/C5 Drains/Sump Collection Vessel (RLD-VSL-00004). There are sprinklers in the cell. The vessel total volume is 1034 ft^3 (Ref. 3) and the volume of in-cell sprinkler firewater system is 246 ft^3 (Ref. 3). Additionally, C3/C5 area firewater drains to this cell. The total firewater accumulation in the room from these drains is 2864 ft^3 (Ref. 3).
2. Room L-0123, Process Cell Melter 1, 3 ft Elevation. The process cell contains six vessels. The largest in the cell is the Melter 1 Concentrate Receipt Vessel (LCP-VSL-00001). The vessel total volume is 2428 ft^3 (Ref. 3). The room has no fire protection sprinklers.
3. Room L-0124, Process Cell Melter 2, 3 ft Elevation. The process cell contains six vessels. The largest in the cell is the Melter 2 Concentrate Receipt Vessel (LCP-VSL-00002). The vessel total volume is 2428 ft^3 (Ref. 3). The room has no fire protection sprinklers.
4. Room L-0126, Effluent Cell, 3 ft Elevation. The effluent cell contains two vessels the Plant Wash Vessel (RLD-VSL-00003) and the SBS Condensate Collection Vessel (RLD-VSL-00005), which are identical in size with a vessel total volume of 3445 ft^3 (Ref. 3). The room has no fire protection sprinklers.

The results of the evaluation of waste removal capacity for each of the containment areas is summarized as follows:

1. Room L-B001B, C3/C5 Drain Collection Cell, -21 ft Elevation. Waste removal is achieved by operation of one submersible electric pump in one sump. Total waste removal capacity is 11.9 hours for firewater drains from other C3/C5 areas and 5.3 hours for the vessel and in-cell firewater sprinklers.
2. Room L-0123, Process Cell Melter 1, 3 ft Elevation. Waste removal is achieved by operation of two submersible electric pumps in two sumps. Total waste removal capacity is 5.0 hours.
3. Room L-0124, Process Cell Melter 2, 3 ft Elevation. Waste removal is achieved by operation of two submersible electric pumps in two sumps. Total waste removal capacity is 5.0 hours

4. Room L-0126, Effluent Cell, 3 ft Elevation. Waste removal is achieved by operation of two submersible electric pumps in two sumps. Total waste removal capacity is 7.2 hours.

These values are within the 24-hour period required by the regulations and stipulated by Permit Condition III.10.E.9.e.iii and III.10.H.5.e.iii (Ref. 2). These values are based on consideration of the total operating volume of a single vessel in its respective containment area, plus the total anticipated volume of firewater (if applicable) that is postulated to accumulate in these cells.

2 Objective

The purpose of this report is to estimate and document the waste removal capabilities for the LAW process cells and other secondary containment areas associated with tank systems and miscellaneous unit systems. General guidance for scoping of this report is documented in Ref. 6.

The LAW Facility must satisfy the waste removal criteria of Dangerous Waste Permit Number WA7890008967, Permit Condition III.10.E.9.e.iii and III.10.H.5.e.iii (Ref. 2) for tank and miscellaneous treatment unit, secondary containment systems. This report evaluates the capability for removing, within 24 hours, leaked waste that may accumulate within the regulated process cells within the facility.

Excluded from the scope of this report are:

- Secondary containment areas where leaks flow directly (via drain systems) to collection tanks
- Transfer line containment systems
- Containment areas that do not include tank or miscellaneous unit systems, e.g., maintenance cells
- Process Cell Melter 3, Room L-0125.

3 Description

The regulatory requirements for the effluent vessel cells are contained in WAC 173-303-640, Tank Systems, Section 4, Containment and Detection of Releases (Ref. 1). The regulatory requirements are restated as follows:

> (b) Secondary containment must be:
>
> > "Sloped or otherwise designed or operated to drain and remove liquids resulting from leaks spills or precipitation. Spilled or leaked waste and accumulated precipitation must be removed from the secondary containment system within twenty-four hours, or in as timely a manner as is possible..." [WAC 173-303-640(4)(c)(iv)}.

In addition, the Waste Treatment Plant Dangerous Waste Permit (Ref. 2), Permit Condition III.10.E.9.e.iii and III.10.H.5.e.iii requires submittal of:

> "Detailed operational plans and descriptions, demonstrating that spilled or leaked waste and accumulated liquids can be removed from the secondary containment system within twenty-four (24) hours" [WAC 173-303-806(4)(c)(vii)]; [WAC 173-303-806(4)(i)(i)(B)

4 Assumptions

Assumptions used in this evaluation of LAW Facility waste removal capabilities are listed as follows.

1. Nominal design flow rates for sump pumps are used to estimate waste removal rates. Purchased equipment will have capacities equal to or exceeding the nominal design flow rates.

2. Operator response times needed for activating transfer pumps or time required for manual alignment of valves and pump priming are ignored for the purposes of this evaluation.

3. Waste removal rate is achieved by simultaneous operation of sump pumps within a waste containment area.

4. The activation of C3/C5 firewater sprinklers in other areas of the building does not occur at the same time as a leak of the C3/C5 Drains/Sump Collection Vessel (RLD-VSL-00004).

5. The capacity to receive and store leaks removed from secondary containment areas is assumed to be available. Adequate space is available in Pretreatment Facility (PTF) vessels to contain the total estimated volume from a leak in the LAW Plant Wash Vessel RLD-VSL-00003. For postulated leaks from other LAW tanks, adequate space is available in RLD-VSL-00003 to contain the total estimated flooding volume for a single event or can be made available in RLD-VSL-00003 by pumping its contents to PTF from this vessel. Pretreatment Plant Wash Vessel (PWD-VSL-00044) has volume available, if required, within 24 hours or in as timely a manner as possible to receive liquid waste from LAW. Delays associated with drawing down liquid level in RLD-VSL-00003 to create adequate space and delays associated with sampling and analysis prior to initiating waste transfers to PTF, are not considered. If the leak cannot be removed from the secondary containment areas within 24 hours, Ecology will be notified and actions taken as required under permit conditions III.10.E.5.j and III.10.H.1.a.xxiv (Ref. 2).

5 Analysis

5.1 Room L-B001B, C3/C5 Drain Collection Cell, -21 ft Elevation

The room L-B001B, C3/C5 Drain Collection Cell is located on the north side of the LAW facility at the (-)21 ft elevation and is identified on the LAW facility general arrangement drawing (Ref. 4). It contains one vessel C3/C5 Drains/Sump Collection Vessel (RLD-VSL-00004). The cell floor and lower portions of the walls have stainless steel liners to provide secondary containment. The cell floor liner is sloped toward a low-point sump (RLD-SUMP-00028) with radar level detection and the sump has a submersible electric sump pump (RLD-PMP-00004) with a nominal flow rate of 30 gpm.

The flooding volume scenario is the failure of the vessel (RLD-VSL-00004) with a total volume of 1034 ft^3 with the in-cell sprinklers volume of 246 ft^3 in the containment area for a total 1280 ft^3, or the maximum postulated flood volume from firewater runoff from higher elevation drains (assumption 4) from other C3/C5 areas of 2864 ft^3 (Ref. 3).

Fluids from the cell sump are pumped by a submersible electric sump pump into the Plant Wash Vessel (RLD-VSL-00003) located at the 3 ft elevation and from there to the Pretreatment Plant Wash Vessel (PWD-VSL-00044) located at the 0 ft elevation in the PTF for subsequent processing.

5.2 Room L-0123, Process Cell Melter 1, 3 ft Elevation

Room L-0123, Process Cell Melter 1 is located in the center of the LAW facility at elevation 3 ft and is identified on the LAW facility general arrangement drawing (Ref. 5). It contains six vessels and associated pumps. The six vessels are:

- Melter 1 Concentrate Receipt Vessel (LCP-VSL-00001)
- Melter 1 Feed Preparation Vessel (LFP-VSL-00001)
- Melter 1 Feed Vessel (LFP-VSL-00002)
- Melter 1 Submerged Bed Scrubber (SBS) Condensate Vessel (LOP-VSL-00001)
- Melter 1 Wet Electrostatic Precipitator (WESP) (LOP-WESP-00001)
- Melter 1 Submerged Bed Scrubber (SBS) (LOP-SCB-00001).

A stainless steel liner provides secondary containment to accommodate the total volume of the largest vessel in the area, the Melter 1 Concentrate Receipt Vessel (LCP-VSL-00001), for a total flooding volume of 2428 ft^3 (Ref. 3). The room has no fire protection sprinklers.

The cell floor liner is sloped toward the low-point sumps RLD-SUMP-00029 and RLD-SUMP-00030, which are provided with radar level detection instruments and submersible electric sump pumps (RLD-PMP-00025 and RLD-PMP-00026) to remove the contained liquid. The pumps have a nominal design flow rate of 30 gpm. Fluid from the cell is pumped into the Plant Wash Vessel (RLD-VSL-00003) located at the 3 ft elevation and from there to the Pretreatment Plant Wash Vessel (PWD-VSL-00044) located at the 0 ft elevation in PTF for subsequent processing.

5.3 Room L-0124, Process Cell Melter 2, 3 ft Elevation

Room L-0124, Process Cell Melter 2 is located in the center of the LAW facility at elevation 3 ft and is identified on the LAW facility general arrangement drawing (Ref. 5). It contains six vessels and associated pumps. The six vessels are:

- Melter 2 Concentrate Receipt Vessel (LCP-VSL-00002)
- Melter 2 Feed Preparation Vessel (LFP-VSL-00003)
- Melter 2 Feed Vessel (LFP-VSL-00004)
- Melter 2 Submerged Bed Scrubber (SBS) Condensate Vessel (LOP-VSL-00002)
- Melter 2 Wet Electrostatic Precipitator (WESP) (LOP-WESP-00002)
- Melter 2 Submerged Bed Scrubber (SBS) (LOP-SCB-00002).

A stainless steel liner provides secondary containment to accommodate the total volume of the largest vessel in the area, the Melter 2 Concentrate Receipt Vessel (LCP-VSL-00002), for a total flooding volume of 2428 ft^3 (Ref. 3). The room has no fire protection sprinklers.

The cell floor liner is sloped toward the low-point sumps RLD-SUMP-00031 and RLD-SUMP-00032, which are provided with radar level detection instruments and submersible electric sump pumps (RLD-PMP-00027 and RLD-PMP-00028) to remove the contained liquid. The pumps have a nominal design flow rate of 30 gpm. Fluid from the cell is pumped into the Plant Wash Vessel (RLD-VSL-00003) located at the 3 ft elevation and from there to the Pretreatment Plant Wash Vessel (PWD-VSL-00044) located at the 0 ft elevation in PTF for subsequent processing.

5.4 Room L-0126, Effluent Cell, 3 ft Elevation

Room L-0126, Effluent Cell is located in the center of the LAW facility at elevation 3 ft and is identified on the LAW facility general arrangement drawing (Ref. 5). It contains two vessels and associated pumps. The two vessels are the Plant Wash Vessel (RLD-VSL-00003) and the SBS Condensate Collection Vessel (RLD-VSL-00005).

A stainless steel liner provides secondary containment to accommodate the total volume of the largest vessel in the area, either the Plant Wash Vessel (RLD-VSL-00003) or the SBS Condensate Collection Vessel (RLD-VSL-00005), for a total flooding volume of 3445 ft^3 (Ref. 3). The room has no fire protection sprinklers.

The cell floor liner is sloped toward the low-point sumps RLD-SUMP-00035 and RLD-SUMP-00036, which are provided with radar level detection instruments and submersible electric sump pumps (RLD-PMP-00031 and RLD-PMP-00032) to remove the contained liquid. The pumps have a nominal design flow rate of 30 gpm. Fluid from the cell is pumped into the Plant Wash Vessel (RLD-VSL-00003) located at the 3 ft elevation and from there to the Pretreatment Plant Wash Vessel (PWD-VSL-00044) located at the 0 ft elevation in PTF for subsequent processing.

The Plant Wash Vessel (RLD-VSL-00003) also has the ability to pump to SBS Condensate Collection Vessel (RLD-VSL-00005) and SBS Condensate Collection Vessel has the ability to pump to the Pretreatment Plant Wash Vessel (PWD-VSL-00044). The Plant Wash Vessel pumps (RLD-PMP-00001A/B) and the SBS Condensate Collection Vessel discharge pumps (RLD-PMP-00003A/B) have a nominal capacity of 175 gpm. Pretreatment Plant Wash Vessel (PWD-VSL-00044) has volume available, if required, within 24 hours or in as timely a manner as possible (Assumption 5).

6 Sump Removal Rates

The results of this evaluation are compiled in the table below based on calculations provided in Section 7.

LAW Facility
Waste Removal Capacity Over 24 Hours

Containment Area Elevation	Containment Area Room Number	Sump Number	Sump Waste Removal Capacity, (US gal/h)	Largest Vessel in Containment Area (Vessel Number and Total Volume)	Largest Vessel Waste Removal Capacity[1], h	Fire Water Volume[2]. (US gal)	Fire Water Removal Capacity[1], h	Total Flooding Volume (US gal)	Total Containment Area Waste Removal Capacity[1], h
-21	L-B001B	RLD-SUMP-00028	1800	RLD-VSL-00004, 7734 gal	4.3	1840	1.0	9574	5.3
-21	L-B001B	RLD-SUMP-00028	1800	NA See Assumption 4	NA	21,423	11.9	21,423	11.9
3	L-0123	RLD-SUMP-00029 RLD-SUMP-00030	3600	LCP-VSL-00001, 18,161gal	5.0	Not applicable. Firewater is not collected in this containment area.		18,161	5.0
3	L-0124	RLD-SUMP-00031 RLD-SUMP-00032	3600	LCP-VSL-00002, 18,161 gal	5.0	Not applicable. Firewater is not collected in this containment area.		18,161	5.0
3	L-0126	RLD-SUMP-00035 RLD-SUMP-00036	3600	RLD-VSL-00005, 25,769	7.2	Not applicable. Firewater is not collected in this containment area.		25,769	7.2

[1] Waste removal capacity is based upon the combined sump removal capacity of all sumps in the containment area.
[2] Firewater volume derived from flooding volume report (Ref. 3)

7 Bounding Calculations

Waste removal capability is estimated for four containment areas based on the bounding calculations presented in this section. The four containment areas are listed as follows:

1. Room L-B001B
2. Room L-0123
3. Room L-0124
4. Room L-0126

7.1 Room L-B001B, C3/C5 Drain Collection Cell, -21 ft Elevation

This containment area contains one vessel, C3/C5 Drains/Sump Collection Vessel (RLD-VSL-00004). The total volume of the vessel is 1034 ft^3 (Ref. 3). The in-cell firewater is 246 ft^3 (Ref. 3). The volume of firewater from other elevations is 2864 ft^3 gallons (Ref. 3). The activation of C3/C5 firewater sprinklers in other areas of the building does not occur at the same time as a leak of the C3/C5 Drains/Sump Collection Vessel (RLD-VSL-00004)(assumption 4). A evaluation is provide for both scenarios below.

Total vessel volume = 1034 ft^3 x 7.48 gallons/ft^3 = 7734 gallons
In-cell firewater = 246 ft^3 x 7.48 gallons/ft^3 = 1840 gallons

Volume of fire water from other elevations = 2864 ft^3 x 7.48 gallons/ft^3 = 21,423 gallons

The sump in this containment area contains one submersible electric sump pump with a nominal design capacity of 30 gpm. The capacity in gallons/hr is:

Pump capacity = 30 gpm x 60 min/hr = 1,800 gal/hr

Waste removal capacity for the largest vessel is:

Vessel removal capacity = 7734 gal/1,800 gal/hr = 4.3 hours

Waste removal capacity for the firewater is:

Fire water removal capacity = 1840 gal/1,800 gal/hr = 1.0 hours

Total containment area waste removal capacity is 4.3 hours + 1.0 hours = 5.3 hours

Waste removal capacity for the firewater from other elevations is:

Fire water removal capacity = 21,423 gal/1,800 gal/hr = 11.9 hours

7.2 Room L-0123

This containment area contains six vessels. The flooding volume 2428 ft^3 (Ref. 3) is based on the total volume of the largest vessel in this area Melter 1 Concentrate Receipt Vessel (LCP-VSL-00001). There is no firewater discharge in this containment area.

Total volume of largest vessel = 2428 ft^3 x 7.48 gallons/ft^3 = 18,161 gallons

The containment area contains two sumps each with a submersible electric sump pump that have a nominal design capacity of 30 gpm. Converting to gal/hr.

Pump capacity = 2 x 30 gpm x 60 min/hr = 3,600 gal/hr

Waste removal capacities are then calculated as follows:

Vessel removal capacity = 18,161 gal/3,600 gal/hr = 5.0 hr

7.3 Room L-0124

This containment area contains six vessels. The flooding volume 2428 ft^3 (Ref. 3) is based on the total volume of the largest vessel in this area Melter 2 Concentrate Receipt Vessel (LCP-VSL-00002). There is no firewater discharge in this containment area.

Total volume of largest vessel = 2428 ft^3 x 7.48 gallons/ft^3 = 18,161 gallons

The containment area contains two sumps each with a submersible electric sump pump that have a nominal design capacity of 30 gpm. Converting to gal/hr.

Pump capacity = 2 x 30 gpm x 60 min/hr = 3,600 gal/hr

Waste removal capacities are then calculated as follows:

Vessel removal capacity = 18,161 gal/3,600 gal/hr = 5.0 hr

7.4 Room L-0126

This containment area contains two vessels. The flooding volume 3445 ft^3 (Ref. 3) is based on the total volume of the largest vessel in this area either the Plant Wash Vessel (RLD-VSL-00003) or the SBS Condensate Collection Vessel (RLD-VSL-00005). There is no firewater discharge in this containment area.

Total volume of largest vessel = 3445 ft^3 x 7.48 gallons/ft^3 = 25,769 gallons
The containment area contains two sumps each with a submersible electric sump pump that have a nominal design capacity of 30 gpm. Converting to gal/hr.

Pump capacity = 2 x 30 gpm x 60 min/hr = 3,600 gal/hr

Waste removal capacities are then calculated as follows:

Vessel removal capacity = 25,769 gal/3,600 gal/hr = 7.2 hr

8 References

1. WAC 173-303, *Dangerous Waste Regulations*, Washington Administrative Code.
2. WA 7890008967, *Dangerous Waste Portion of the Hanford Facility Resource Conservation and Recovery Act Permit for the Treatment, Storage, and Disposal of Dangerous Waste*, Chapter 10 and Attachment 51, "Waste Treatment and Immobilization Plant."
3. 24590-LAW-PER-M-02-002, Appendix A, Rev. 6, Flooding Volume for LAW Facility
4. 24590-LAW-P1-P01T-P0001, Rev 2, LAW Vitrification General Arrangement Plan at EL (-) 21'-0"
5. 24590-LAW-P1-P01T-P0002, Rev 3, LAW Vitrification General Arrangement Plan at EL 3'-0"
6. CCN 097900, Waste Removal Capability Scoping Document, 8/20/2004

R10852863

ISSUED BY
RPP-WTP PDC

Document title: **Leak Detection Capability in the Low Activity Waste Facility**

Contract number: DE-AC27-01RV14136

Department: Process and Mechanical Systems

Author(s): Robert Hanson

Principal author signature:

Document number: 24590-LAW-PER-M-05-002, Rev 2

Checked by: Lisa Han

Checker signature:

Date of issue: 11-12-07

Issue status: Issued for Permitting Use

Approved by: Robert Stevens

Approver's position: Engineering Group Superviser, Process/Mech. Sys.

Approver signature: Robert E. Stevens

ROBERT PAUL KRETZSCHMAR
STATE OF WASHINGTON
32345
REGISTERED
PROFESSIONAL ENGINEER

11/19/07

EXPIRES: 3/14/08

This bound document contains a total of 17 sheets

River Protection Project
Waste Treatment Plant
2435 Stevens Center Place
Richland, WA 99354
United States of America
Tel: 509 371 2000

Notice

Please note that source, special nuclear, and byproduct materials, as defined in the Atomic Energy Act of 1954 (AEA), are regulated at the US Department of Energy (DOE) facilities exclusively by DOE acting pursuant to its AEA authority. DOE asserts, that pursuant to the AEA, it has sole and exclusive responsibility and authority to regulate source, special nuclear, and byproduct materials at DOE-owned nuclear facilities. Information contained herein on radionuclides is provided for process description purposes only.

History Sheet

Rev	Date	Reason for revision	Revised by
0	6-May-06	Issued for Permitting Use	R. Hanson
1	17-July-07	Modified sump depth from 15 inch to 12 inch.	R. Hanson
2	12-Nov-07	Changed diameter description from 24 inch to 30 inch in section 7.2.1.1	R. Hanson

Contents

Notice ii
History Sheet iii
Acronyms v
1 Summary 1
2 Objective 1
3 Description 2
4 Assumptions 2
4.1 Inputs 2
4.2 Evaluation Assumptions 3
5 Analysis 3
6 Detectable Leak Rates 3
7 Bounding Calculations 4
7.1 Methodology 4
7.2 Bounding Calculations 7
7.3 Minimum Flow Rates for the Remaining Sumps 11
8 References 11
8.1 Project Documents 11
8.2 Codes and Standards 11
8.3 Other Documents 12

Acronyms

AEA	Atomic Energy Act of 1954
BNI	Bechtel National, Incorporated
CCN	Correspondence Control Number
CGS	centimeter gram second units of measurement
DOE	US Department of Energy
DWP	Dangerous Waste Permit
LAW	Low Activity Waste
PIN	Plant Item Number
RLD	Radioactive Liquid Waste Disposal System
STD	Standard
WAC	Washington Administrative Code
WTP	River Protection Project-Waste Treatment Plant

1 Summary

The Low Activity Waste (LAW) Vitrification facility secondary containment (includes C3/C5 cell sump, process cell sumps, effluent cell sumps) must satisfy the leak detection criteria of the Washington Administrative Code (WAC) 173-303-640(4) and the Waste Treatment Plant Dangerous Waste Permit (DWP) number 7890008967, Condition No: III.10.E.9.e.ii and III.10.H.5.e.ii for tank and miscellaneous treatment system secondary containment areas. This report evaluates the minimum leak rates that can be detected within 24 hours in the regulated secondary containment sumps.

The LAW facility contains seven regulated sumps within the process/effluent cells. Leaks of vessels or piping within the cells will flow along the floor and are collected in a sump and detected with level instrumentation. All sumps are dry type, that is, the sumps are dry unless there is a leak that reaches the sump. All sumps except one are the same size, nominally 30 inches O.D. x about 12 inches deep. The exception is the sump (RLD-SUMP-00028) in the minus 21 ft elevation C3/C5 cell which is nominally 24 inches O.D. x 30 inches deep. All sumps are provided with radar type leak detection.

The minimum leak flow rate that can be detected in 24 hours is calculated by estimating the volume of two components of the leak, 1) the minimum detectable quantity of liquid in the sump and 2) the volume associated with the leak "rivulet" formed as the leak flows along the floor to the sump. Water is used as the standard fluid for estimating leak rates. The detectable volume of the leak in the sump is related to size and geometry of the sump and the location and sensitivity of the leak detection instrumentation. The volume associated with the leak rivulet is related to the slope of the floor and the flow rate of the leak.

Minimum 24 hour leak detection rates are evaluated for each regulated sump in the LAW facility. The leak detection rate varies with the travel distance of the leak, the longer the travel distance the greater is the 24 hour leak detection rate. The bounding case for the 30-inch diameter round sumps indicates a maximum leak travel distance of 87 ft for the process cell sumps RLD-SUMP-00029/30/31/32. The calculated minimum 24 hour leak detection rate for these sumps is 0.1 gal/hr. Leak detection rates for the remaining two 30-inch diameter sumps (RLD-SUMP-00035/36) is 0.09 gal/hr.

For the C3/C5 cell sump RLD-SUMP-00028 located in the minus 21 ft elevation, the maximum leak travel distance is 80 ft. The minimum 24 hour leak detection rate for this 24-inch diameter round sump is 0.06 gal/hr.

2 Objective

The objective of this report is to document the minimum flow rate that can be detected within a 24 hour period for potential leaks that are collected in sumps in the LAW facility process /effluent cells. The scope of this report includes:

- leaks from vessels, equipment and/or piping that flow by gravity directly to sumps containing leak detection instrumentation
- leaks that flow by gravity to floor drains that are routed to another cell that contains a sump with leak detection instrumentation. This includes process bulges in LAW.

Leaks collected in drain systems that flow to vessels or tanks are not in scope. Leaks that are detected by routine visual inspection are not in scope. Areas within the LAW that employ open floor drains for containment are routinely accessible and leak detection will be provided by daily visual inspection in all cases, and for that reason are not addressed in this report. Leaks from ancillary equipment/piping that are detected by routine visual inspection are not in scope.

3 Description

The LAW facility process/effluent cell sumps must satisfy the leak detection criteria of the WAC and DWP conditions for secondary containment systems. The regulatory requirements for leak detection are contained in WAC-173-303-640 (4), Tank Systems, Section 4, Containment and Detection of Releases (Ref. 8.2.1) and are restated as follows:

> (b) Secondary Containment systems must be:
>
> (ii) Capable of detecting and collecting releases and accumulated liquids until the collected material is removed.
>
> (c) To meet the requirements of (b) of this subsection, secondary containment systems must be at a minimum:
>
> (iii) Provided with a leak detection system that is designed and operated so that it will detect the failure of either the primary or secondary containment structure or the presence of any release of dangerous waste or accumulated liquid in the secondary containment system within twenty-four hours, or at the earliest practicable time if the owner or operator can demonstrate to the department that the existing detection technologies or site conditions will not allow detection of a release within twenty-four hours.

In addition, the Waste Treatment Plant Dangerous Waste Permit (Ref. 8.2.2), Conditions: III.10.E.9.e.ii and III.10.H.5.e.i require submittal of:

> Detailed plans and descriptions, demonstrating the leak detection system is operated so that it will detect the failure of either the primary or secondary containment structure or the presence of any release of dangerous and/or mixed waste, or accumulated liquid in the secondary containment system within twenty-four (24) hours. Detection of a leak of at least 0.1 gallons per hour within twenty-four (24) hours is defined as being able to detect a leak within twenty-four (24) hours. Any exceptions to this criteria must be approved by Ecology [WAC 173-303-640(4)(c)(iii), WAC 173-303-806(4)(c)(vii)];

4 Assumptions

4.1 Inputs

1. Sump type, leak detection type, and nominal sump dimensions are derived from "LAW Facility Sump Data" (Ref. 8.1.1).
2. The stainless steel liners in the vessel cells are sloped at a minimum slope of 1:100 to direct potential leakage in these areas to their respective sump.

4.2 Evaluation Assumptions

1. The following group of assumptions was derived from agreements between BNI, DOE, and the Department of Ecology (Ref. 8.1.2).
    a. The liquid leaking is water at a temperature of 100 °F.
    b. The leak is at a constant rate over the twenty-four hour period.
    c. The leak is assumed to occur at the farthest point from the sump.
    d. No evaporation will occur.
    e. The liquid does not foam in the sumps.
    f. Hold-up will be considered. Hold-up is defined as wetting of the surface.
    g. Level detection instruments will be properly installed and calibrated upon installation. Periodic, normal maintenance and calibration will be performed on level instruments during operation of the facility and the instruments will be maintained in an operable condition.
2. The furthest point from the sump is assumed to be bounded by the furthest corner of the cell which contains the sump. The flow path for each cell is conservatively considered to be along the straight walls rather than diagonally across the cell.
3. There are no obstructions in the flow path. Leaks from any equipment or piping fall directly to the floor at the point of leakage and do not travel along pipes or other equipment.
4. The floor is uniformly sloped and the flow path is in straight lines (no meandering flow).
5. Radar leak detection is stated by the radar instrument supplier to be accurate within $\pm$10 mm, i.e., the minimum level of water in the sump must rise to at least 10 mm before it is detected by the radar instrument. It is not necessary for the liquid level to be within the guide tube before the radar will detect it. LAW sumps are flat bottom, therefore for conservatism, it is assumed that the detectable level in the sump is 15 mm from the bottom of the sump.

5 Analysis

The LAW facility contains seven DWP-regulated sumps within the process/effluent cells (Ref. 8.1.1). All sumps are dry type, that is, the sumps are dry unless there is a leak that reaches the sump. All sumps except one are the same size, nominally 30 inches O.D. x about 12 inches deep. The exception is the sump at the minus 21 ft elevation deep which is nominally 24 inches O.D. x about 30 in deep. All sumps are provided with radar type leak detection.

Leaks of vessels or ancillary equipment/piping within the cells will flow along the floor and will be collected in a sump and detected with level instrumentation.

6 Detectable Leak Rates

Minimum 24 hour leak detection rates are evaluated for each sump in the LAW facility. The leak detection rate varies with the travel distance of the leak, the longer the travel distance, the greater is the 24 hour leak detection rate. The bounding case for the 30-inch diameter round sump indicates a maximum leak travel distance of 87 ft for the process cell sumps RLD-SUMP-00029/30/31/32. The minimum 24 hour leak detection rate for this sump is 0.1 gal/hr. Leak detection rates for the remaining two 30-inch diameter sumps (RLD-SUMP-00035/36) is 0.09 gal/hr.

For the C3/C5 cell sump RLD-SUMP-00028 located in the minus 21 ft elevation, the maximum leak travel distance is 80 ft. The minimum 24 hour leak detection rate for this 24 inch diameter round sump is 0.06 gal/hr.

Results of the evaluation for all LAW facility sumps are provided in Table 6.1 below.

Table 6.1 Minimum Leak Detection Rates for LAW Facility Sumps

Sump Number	Room Number	Diameter	Max. Leak Travel Distance	Volume of Leak to Reach Sump	Volume of Leak for Detection in Sump	Total Volume of Leak Detectable in 24 hours	24-Hour Leak Rate Detected (rounded)
		inches	ft	gal	gal	gal	gal/hr
RLD-SUMP-00028	L-B001B	24	80	0.388	1.08	1.47	0.06
RLD-SUMP-00029	L-0123	30	87	0.690	1.72	2.41	0.10
RLD-SUMP-00030	L-0123	30	87	0.690	1.72	2.41	0.10
RLD-SUMP-00031	L-0124	30	87	0.690	1.72	2.41	0.10
RLD-SUMP-00032	L-0124	30	87	0.690	1.72	2.41	0.10
RLD-SUMP-00035	L-0126	30	70	0.515	1.72	2.23	0.09
RLD-SUMP-00036	L-0126	30	70	0.515	1.72	2.23	0.09

7 Bounding Calculations

7.1 Methodology

The minimum leak flow rate that can be detected in 24 hours is calculated by estimating the volumes of two components of the leak:

1. The minimum detectable quantity of liquid in the sump, V_s (in gallons)
2. The volume associated with the leak "rivulet" as the leak flows along the floor to the sump, V_r (in gallons)

The total volume of the leak is then $V_t = V_r + V_s$

The minimum detectable flow rate is then:

$Q = V_t/24$ hours, in units of gal/hr

7.1.1 Minimum Detectable Volume in the Sump

7.1.1.1 Process/Effluent Sumps

The sumps are nominal 30 inches in diameter and about 12 inches in depth. The sumps are formed from 30-inch STD pipe (3/8" thick, I.D. = 29.25 in). The bottom consists of a flat plate head.

The minimum detectable volume in the sump is determined from the formula for a cylinder

$$V_s = (\pi/4)D^2h$$

Where V_s = volume based on the liquid level h, cubic inches

h = height of liquid in the sump, inches
D = sump inside diameter, inches

V_s in cubic inches is then converted to gallons with a conversion factor

7.1.1.2 C3/C5 Sump

The sump is a nominal 24 inches in diameter and about 30 inches in depth. The sumps are formed from 24-inch STD pipe (3/8" thick, I.D. = 23.25 in). The bottom consists of a flat plate head.

The minimum detectable volume in the sump is determined from the formula for a cylinder

$$V_s = (\pi/4)D^2h$$

Where V_s = volume based on the liquid level h, cubic inches

h = height of liquid in the sump, inches
D = sump inside diameter, inches

V_s in cubic inches is then converted to gallons with a conversion factor

7.1.2 Wetted Volume For Flow of Liquid Across the Floor of the Cell

When a liquid flows down an inclined surface at a low rate, separate rivulets form instead of a continuous film (Ref. 8.3.1). The hydrodynamics of rivulet flow have been empirically measured and mathematically modeled (Ref. 8.3.1). The relationships provided in this reference are used to estimate the wetted volume for flow across the cell floor. In this reference, steady state theoretical solutions are developed for the laminar flow based on the reduced form of the Navier-Stokes equations using special boundary conditions that include contact angle (angle formed by the edge of the rivulet and the surface) and relations between the pressure inside and outside the curved interface. The shape of the interface and the velocity profile in the rivulet are obtained and an integration of this velocity profile gives a relation between the rivulet width and the flow rate. This relation contains the surface inclination (slope), contact angle of the liquid on the surface, and the fluid properties: viscosity, density and interfacial surface tension. In simpler terms, this analysis considers that the flow rate is a balance of gravitational forces which drive the flow and viscous forces which resist the flow.

In Reference 8.3.1, experimental measurements consisting of rivulet width measurements as a function of rivulet flow rate were conducted for a variety of liquids including water. The data were then checked against the models and found to be in good agreement.

Based on the information in Ref. 8.3.1, for the range of flow rates of interest in this calculation, the solution to the flow equations can be simplified by considering the rivulet as a relatively wide and flat rectangular shape. For this shape of rivulet, the maximum flow depth, Y_0 is given by:

$$Y_0 = 2\sin\theta/2 \qquad \text{Equation 1}$$

Where θ = contact angle (angle formed at the edge of the rivulet where it contacts the surface)

The width of the rivulet, l, is determined by Equation 27 in Ref. 8.3.1 as follows:

$$\frac{\mu Q \tan\alpha}{l\gamma}\sqrt{\frac{\rho g \sin\alpha}{\gamma}} = \frac{8}{3}\sin^3\theta/2 \qquad \text{Equation 2}$$

Where:
α = angle of inclination between the surface and vertical (90^0 - slope in degrees)
γ = interfacial surface tension, dynes/cm = g/sec^2
μ = viscosity, g/cm sec
θ = contact angle (measured from the surface), degrees
ρ = density of liquid, g/cm^3
l = rivulet width, cm
Q = flow rate, cm^3/sec
g = acceleration of gravity, cm/sec^2

Note that CGS units are used in this calculation for consistency with the reference. The volume and flow rate results then are converted to English units.

Rearranging and solving for l gives:

$$l = \frac{3\mu Q \tan\alpha}{8\gamma\left(\sin^3\theta/2\right)}\sqrt{\frac{\rho g \sin\alpha}{\gamma}} \qquad \text{Equation 3}$$

The contact angle, θ, is unknown, but according to Table 2, Ref. 8.3.1, at a flow rate of 6.3 cm^3/min (~0.1 gal/hr), the contact angle was measured experimentally at 9-12°. At lower flow rates, the measured contact angle varied from 3 to 8 degrees but did not show proportionality to flow rate possibly due to varying shape of the rivulet and/or the slope of the surface. Low contact angles applied in equations 1 and 3 yield results of disproportionately wide and shallow rivulets (l is very large compared to Y_0). In the experiments, rivulet width varied up to a maximum of about 4 cm with most of the widths in the range of 0.4 to 3 cm for the smallest incline tested. Rivulet widths below 3 cm correspond to a contact angle of about 6 degrees. Below 6 degrees, widths increase greatly and at contact angles of 4 degrees and lower, the solution does not converge. Therefore, for purposes of this calculation, for flow rates <0.05 gal/hr, contact angles between 6 degrees and 12 degrees are considered bounding, with the lower of the two angles yielding the highest flow rate. For flow rates of 0.1 gal/hr and higher, a range of 9 degrees to 12 degrees is used; 9 degrees yields the highest flow rate, so it is the most conservative.

The remainder of the calculation procedure is now iterative by performing the following steps:

Step 1 - Assume a contact angle and assume a starting flow rate, Q
Step 2 - Calculate the volume of the rivulet as follows:

Since the rivulet is approximated as rectangular, the cross-sectional area, A, of the rivulet is:

$A = Y_0 l$, where A is in the units of cm^2.

The total volume of the rivulet, in cm^3, is V_r

$V_r = A$ x flow path length (in cm)

V_r is then converted to gallons by dividing by 3785 cm^3/gal.

Step 3 - Calculate a total volume of liquid collected in 24 hours:

Add the rivulet volume, V_r, (in gallons) to the volume of liquid collected in the sump to get V_t, the total volume of liquid leaked in a 24 hour period.

i.e., $V_t = V_s + V_r$

Step 4 - Calculate an adjusted total 24 hour flow rate, i.e.,

$Q_{adj} = V_t/24$

This new adjusted Q takes the total volume of liquid into account whereas the starting Q only considered the volume of the sump. Therefore, Q_{adj}, may differ from the initial guess for Q if the volume of the rivulet is significant relative to the volume of the sump, so an iterative trial and error is performed by setting the new trial Q = Q_{adj} from the first trial. This is continued until the starting Q matches the final Q_{adj} (i.e., the iteration converges).

7.2 Bounding Calculations

7.2.1 Calculation for the Longest Leak Travel Distance for the Round Sumps

The maximum leak travel distances for each sump in the facility is derived from the cell dimensions and sump locations as provided in the facility general arrangement drawings (Ref. 8.1.3, 8.1.4). As indicated in Assumption 2, the maximum leak travel distance is computed by summing the distance along the walls from the furthest corner of the cell, i.e., adding the north-south wall distance to the east-west wall distance. A summary of distance data for each sump is provided in Table 7.1. The sumps also have gravity drain piping from other floor drains or bulges that terminate in the sumps. Table 7.2 summarizes the longest horizontal pipe run to the sump.

Table 7.1 Maximum Leak Distances along floor for Each Sump

Elev.	Room Number	Room Name	Sump PIN RLD-SUMP-000xx	Sump Location in Cell	N-S Distance	E-W Distance	Total Distance, ft (rounded up)
(-) 21'-0"	L-B001B	C3/C5 Drain Collection Cell	28	NE corner	16'-7"	23'-4"	40
3'-0"	L-0123	Melter 1 Process Cell	29	W wall	38'-4"	48'-4"	87
3'-0"	L-0123	Melter 1 Process Cell	30	E wall	38'-4"	48'-4"	87
3'-0"	L-0124	Melter 2 Process Cell	31	W wall	38'-4"	48'-4"	87
3'-0"	L-0124	Melter 2 Process Cell	32	E wall	38'-4"	48'-4"	87
3'-0"	L-0126	Effluent Cell	35	W wall	38'-4"	31'-4"	70
3'-0"	L-0126	Effluent Cell	36	E wall	38'-4"	31'-4"	70

Table 7.2 Maximum Leak Distances for drain piping for Each Sump

Elev.	Room Number	Room Name	Sump PIN RLD-SUMP-000xx	Sump Location in Cell	Starting Location	Horizontal Travel Distance, ft (rounded up)
(-) 21'-0"	L-B001B	C3/C5 Drain Collection Cell	28	NE corner	Outer pipe drain from ASX-SMPLR-00013 return line	80
3'-0"	L-0123	Melter 1 Process Cell	29	W wall	LCP-BULGE-00002	24
3'-0"	L-0123	Melter 1 Process Cell	30	E wall	LFP-BULGE-00001	43
3'-0"	L-0124	Melter 2 Process Cell	31	W wall	LCP-BULGE-00003	18
3'-0"	L-0124	Melter 2 Process Cell	32	E wall	LFP-BULGE-00002	43
3'-0"	L-0126	Effluent Cell	35	W wall	No hard piped drains	NA
3'-0"	L-0126	Effluent Cell	36	E wall	RLD-BULGE-00004	NA (No Horizontal Piping)

Based on the estimate of travel distances for leaks in each cell, the longest leak flow distance to any round sump was determined to be 87 ft (see table 7.1) for sumps RLD-SUMP-00029, 30, 31, 32 in the melter process cells. The calculation for this bounding case is provided below.

7.2.1.1 Minimum Detectable Volume in the Process Cell Sumps

Minimum detectable volume is determined from:

$$V_s = (\pi/4)D^2 h$$

D = 29.25 in = inside diameter of a 30 inch 3/8' thick pipe.
h = 0.59 inch (15mm = 0.59 inch -Assumption 5)

$$V_s = (\pi/4)(29.25in)^2 (0.59in)$$

V_s = 397 cu in

Multiply by 0.00433 to convert cu in to gallons

V_s = 1.72 gal

7.2.1.2 Wetted Volume For Flow of Liquid Across the Floor of the Cell

Based on the methodology described in Section 7.1.2, the bounding contact angle, θ, is assumed to be 6°

Using Equation 1 (Section 7.1.2), the depth of the rivulet, Y_0, is calculated

$$Y_0 = 2\sin\theta/2$$

$$Y_0 = 2\sin 6\ \text{deg}/2$$

$$Y_0 = 0.105\,cm$$

Next, the width of the rivulet is calculated using Equation 3 (Section 7.1.2)

$$l = \frac{3\mu Q \tan\alpha}{8\gamma(\sin^3\theta/2)}\sqrt{\frac{\rho g \sin\alpha}{\gamma}} \qquad \text{Equation 3}$$

$\alpha = (90° - 0.01(90°)) = 89.1$ degrees
$\gamma = 69.9$ dynes/cm = 69.9 g/sec^2
$\mu = 1$ cP = 0.01 g/cm sec (Note: although viscosity of water at 100F is lower than 1 cP, the 1 cP value is used for conservatism)
$\rho = 1.0$ g/cm^3 (Note: although the density of water at 100F is slightly lower than 1.0 g/cm^3, this value is used for conservatism)
$g = 980.7$ cm/sec^2

The remainder of the calculation procedure is now iterative by performing the following steps:

Step 1 - Assume a starting flow rate, Q, and calculate the rivulet width, l

As a first guess for Q, use the sump volume $V_s/24$ = 1.72 gal/24 hr = 0.072 gal/hr = 0.0754 cm^3/sec

$$l = \frac{3(0.01\ g/cm\sec)(0.0754\,cm^3/\sec)\tan 89.1\deg}{8(69.9\,g/\sec^2)\left(\sin^3(6\deg/2)\right)}\sqrt{\frac{(1\,g/cm^3)(980.7\,cm/\sec^2)\sin 89.1\deg}{(69.9\ g/\sec^2)}}$$

l = 6.72 cm

Step 2 - Calculate the volume of the rivulet as follows:

Since the rivulet is approximated as rectangular, the cross-sectional area, A, of the rivulet is:

$A = Y_0\, l$,

A = 0.105 cm x 6.72 cm = 0.706 cm^2

The total volume of the rivulet, in cm^3, is V_r

V_r = A x flow path length, cm

Path length = 87 ft x 30.48 cm/ft = 2652 cm

V_r = (0.706 cm^2)(2652 cm) = 1872 cm^3

V_r is then converted to gallons by dividing by 3785 cm^3/gal.

V_r = 0.495 gal

Step 3 - Calculate a total volume of liquid collected in 24 hours:

Add the rivulet volume, V_r, (in gallons) to the volume of liquid collected in the sump to get V_t, the total volume of liquid leaked in a 24 hour period.

i.e., $V_t = V_s + V_r$

$$V_t = (1.72\ gal\ + 0.495\,gal) = 2.215\,gal$$

Step 4 - Calculate an adjusted total 24 hour flow rate, i.e.,

$Q_{adj} = V_t/24$

Q_{adj} = (2.215 gal/24 hr) = 0.092 gal/hr

The initial guess for Q was 0.072 gal/hr so an iterative trial and error is performed until the starting Q matches the final Q_{adj} (i.e., the iteration converges).

When the iterations converge, the flow rate is:

Q = 0.1003 gal/hr.

This is rounded to one significant figure:

Q = 0.10 gal/hr

7.3 Minimum Flow Rates for the Remaining Sumps

Calculations for the remaining 6 sumps in the LAW facility are performed using the same methodology described in Section 7.1. The only variable is the leak travel distance to the sump. The results are summarized in Table 6.1.

8 References

8.1 Project Documents

8.1.1 24590-LAW-PER-M-02-001, Rev. 4, "LAW Facility Sump Data," 4/21/05

8.1.2 CCN 097799, Leak Detection Capability Scope Statement, Revision 6, 8/19/04

8.1.3 24590-LAW-P1-P01T-P0001, Rev. 2, LAW Vitrification Building General Arrangement Plan at El. (-) 21'-0"

8.1.4 24590-LAW-P1-P01T-P0002, Rev. 3, LAW Vitrification Building General Arrangement Plan at El. 0'-0"

8.2 Codes and Standards

8.2.1 WAC 173-303, Dangerous Waste Regulations, Washington Administrative Code.

8.2.2 WA 7890008967, *Dangerous Waste Portion of the Hanford Facility Resource Conservation and Recovery Act Permit for the Treatment, Storage, and Disposal of Dangerous Waste*, Chapter 10 and Attachment 51, "Waste Treatment and Immobilization Plant."

8.3 Other Documents

8.3.1 Towell, G.D. and Rothfeld, L.B., "Hydrodynamics of Rivulet Flow," September, 1966, *AIChE Journal,* Vol. 12, No. 5, Pages 972-980

Operating Unit Group 10 – Appendix 10.0

Where information regarding treatment, management, and disposal of the radioactive source, byproduct material, and/or special nuclear components of mixed waste (as defined by the Atomic Energy Act of 1954, as amended) has been incorporated into this permit, it is not incorporated for the purpose of regulating the radiation hazards of such components under the authority of this permit and chapter 70.105 RCW. In the event of any conflict between Permit Condition III.10.A and any statement relating to the regulation of source, special nuclear, and byproduct material contained in portions of the permit application that are incorporated into this permit, Permit Condition III.10.A will prevail.

Operating Unit Group 10 – Appendix 10.0

High Level Waste Building
Index

Appendix 10.1	Process Flow Diagrams
Appendix 10.2	Piping and Instrumentation Diagrams
Appendix 10.3	System Description Documentation (RESERVED)
Appendix 10.4	General Arrangement Drawings
Appendix 10.5	Civil, Structural, and Architectural Criteria and Typical Design Details
Appendix 10.6	Mechanical Drawings
Appendix 10.7	Specifications
Appendix 10.8	Engineering Calculations
Appendix 10.9	Material Selection Documentation
Appendix 10.10	Critical Systems Equipment/Instrument List
Appendix 10.11	IQRPE Reports
Appendix 10.12	Installation Plans (RESERVED)
Appendix 10.13	Instrument Control Logic and Narrative Descriptions
Appendix 10.14	Description of Instrument Installation and Testing Procedures (RESERVED)
Appendix 10.15	Demonstration Test Plan (RESERVED)
Appendix 10.16	Demonstration Test Report (RESERVED)
Appendix 10.17	Treatment Effectiveness Report (RESERVED)
Appendix 10.18	Operating Documents

This page intentionally left blank.

Drawing and Documents

Operating Unit Group 10 – Appendix 10.1
High Level Waste Building
Process Flow Diagrams

The documents listed in the following table are incorporated by reference into this permit and are subject to the requirements set forth in Part I Standard Conditions, Part II General Facility Conditions, and Part III Operating Unit Group 10 Conditions. Upon request, copies of the documents can be viewed at the Nuclear Waste Program Resource Center located at 3100 Port of Benton Blvd. Richland, WA. Appointments for viewing can be scheduled by calling (509) 372-7950.

Drawing/Document	***Description***
24590-HLW-M0-HSH-P0075, Rev 1	Process Flow Diagram HSH System
24590-HLW-M5-V17T-P0001, Rev 4	Process Flow Diagram Receipt & Feed Preparation (HCP/HFP) System
24590-HLW-M5-V17T-P0002, Rev 1	Process Flow Diagram HMP/HOP System Melter 1
24590-HLW-M5-V17T-P0003, Rev 1	Process Flow Diagram HOP System (Melter 1, Primary)
24590-HLW-M5-V17T-P0004, Rev 1	Process Flow Diagram HOP System (Melter 1, Secondary)
24590-HLW-M5-V17T-P0005, Rev 0	Process Flow Diagram PJV System
24590-HLW-M5-V17T-P0006, Rev 3	Process Flow Diagram Canister Decontamination Handling (HDH) System
24590-HLW-M5-V17T-P0007001, Rev 1	Process Flow Diagram RLD System Sheet 1
24590-HLW-M5-V17T-P0007002, Rev 1	Process Flow Diagram RLD System Sheet 2
24590-HLW-M5-V17T-P20002, Rev 1	Process Flow Diagram HMP/HOP Melter 2
24590-HLW-M5-V17T-P20003, Rev 1	Process Flow Diagram HOP System (Melter 2, Primary)
24590-HLW-M5-V17T-P20004, Rev 0	Process Flow Diagram HOP System (Melter 2, Secondary)
RESERVED	RESERVED

Source documents (which do not include a "P" in the last set of numbers, e.g. "-P0001," or "-TP001") should be used in conjunction with any document change notices issued against them.

We are currently transitioning from permit documents (which do include a "P" in the last set of numbers) to source documents. At the end of the transition period, permit submittals will contain source documents and will be incorporated into the permit as described in Ecology Publication # 07-05-006 (www.ecy.wa.gov/biblio/nwp.html).

24590-HLW-M5-V17T-P0001

PLANT ITEM NUMBER
DESCRIPTION

HFP-DMST-00004 MELTER 2 FEED VESSEL DEMISTER
HFP-PMP-00014/15 MELTER 2 FEED AIR DISPLACEMENT SLURRY (ADS) PUMP
HFP-VSL-00006 MELTER 2 FEED VESSEL
GFR-TK-00031 HLW MELTER 2 GLASS FORMER MIXER
HFP-PMP-00018A/B MELTER 2 FEED PREP VESSEL TRANSFER/ SAMPLE PUMP
HFP-VSL-00005 MELTER 2 FEED PREPARATION VESSEL
HFP-DMST-00003 MELTER 2 FEED PREP VESSEL DEMISTER
HFP-DMST-00001 MELTER 1 FEED PREP VESSEL DEMISTER
HFP-VSL-00001 MELTER 1 FEED PREPARATION VESSEL
HFP-PMP-00005A/B MELTER 1 FEED PREP VESSEL TRANSFER/ SAMPLE PUMP
GFR-TK-00025 HLW MELTER 1 GLASS FORMER MIXER
HFP-VSL-00002 MELTER 1 FEED VESSEL
HFP-PMP-00001/2 MELTER 1 FEED AIR DISPLACEMENT SLURRY (ADS) PUMP
HFP-DMST-00002 MELTER 1 FEED VESSEL DEMISTER

BLENDED GLASS FORMERS FROM HLW BLENDING SILO
GFR-TK-00031
GFR-TK-00025
NOTE 21
NOTE 22
GLASS FORMERS TO REJECT BIN
TO ROOM
DIW
LI
WIC
ISA
HFP01-2
HFP01-1
HPS
SYSTEM GFR
SYSTEM HFP
FI
SS
PDI
PWD
PI
DI
TI
PCW
NOTE 13
NOTE 15
NOTE 10
NOTE 16
NOTE 17
NOTE 7
NOTE 20
HFP06-2
HFP06-1
HFP-PMP-00018A/B
HFP-PMP-00005A/B
HFP-DMST-00003
HFP-DMST-00001
HFP-VSL-00005
HFP-VSL-00001
OVERFLOW TO HFP-SUMP-00005
OVERFLOW TO HFP-SUMP-00002
VESSEL WASHINGS TO RLD-VSL-00008 | HLW-P0007002 | 8D
MELTER 2 FEED TO HMP-MLTR-00002 | HLW-P20002 | 8F | HFP03-2
HFP-DMST-00004
HFP-PMP-00014/15
HFP-VSL-00006
MELTER 2 VESSEL VENTS TO HOP-HEME-00002A/B | HLW-P20003 | 8H
MELTER 2 VESSEL VENTS TO HOP-HEME-00001A/B | HLW-P0003 | 8H
PT TO HLW TRANSFER LINE FLUSH TO PWD-VSL-00043 | PTF-P0008 | 2B
HLW CONCENTRATE/FLUSH FROM HLP-VSL-00028 | 2C | PTF-P0008 | HLP09
NOTE 18
MELTER 1 FEED TO HMP-MLTR-00001 | 8F | HLW-P0002 | HFP03-1
HFP-DMST-00002
HFP-PMP-00001/2
HFP-VSL-00002
MELTER 1 VESSEL VENTS TO HOP-HEME-00001A/B | 8H | HLW-P0003
MELTER 1 VESSEL VENTS TO HOP-HEME-00002A/B | 8H | HLW-P20003
SYSTEM HFP
SYSTEM HCP

NOTES:

1. SEE DRAWING 24590-WTP-M5-V17T-P0001 FOR LEGEND AND SYMBOLS.
2. MAJOR INDICATION AND CONTROL INSTRUMENTATION ONLY SHOWN.
3. VALVES SHOWN ONLY TO INDICATE PROCESS INTENT.
4. DELETED.
5. DELETED.
6. DELETED.
7. THE ADS PUMPING RATE WILL BE MANUALLY ADJUSTED TO MAINTAIN APPROPRIATE PLENUM TEMPERATURES AND TO PROVIDE THE DESIRED GLASS PRODUCTION.
8. DELETED.
9. HLP09, HFP06, AND HFP03: PRETREATED HLW CONCENTRATE AND HLW MELTER FEED ARE NON-NEWTONIAN FLUIDS AND BEHAVE AS BINGHAM PLASTIC. REFER TO PHYSICAL AND RHEOLOGICAL PROPERTIES REPORT 24590-101-TSA-W000-0004-99-09, AND CALCULATION 24590-HLW-M4C-HFP-00001, FOR RHEOLOGY INFORMATION.
10. INSTRUMENT AIR ADDED TO VESSELS THROUGH SPARGER FOR HYDROGEN MITIGATION AND BACK-UP MIXING.
11. DELETED.
12. DELETED.
13. VESSEL TEMPERATURE WILL BE INDIRECTLY CONTROLLED VIA A TEMPERATURE CONTROL LOOP ON THE OVERALL COOLING WATER SYSTEM THAT WILL DICTATE THE COOLING WATER INLET TEMPERATURE. BY CONTROLLING THE COOLING WATER INLET TEMPERATURE AND OPERATING THE COOLING JACKETS AT FULL OPERATING CAPACITY, THE TEMPERATURE OF THE VESSEL CONTENTS WILL EFFECTIVELY BE CONTROLLED. AS INDICATED, MANUAL VALVES WILL BE INSTALLED ON EACH COOLING WATER JACKET FOR INITIAL BALANCING.
14. CONTENTS OF THIS DOCUMENT ARE DANGEROUS WASTE PERMIT AFFECTING.
15. VESSEL OVERFLOWS ARE EQUIPPED WITH A FLAPPER VALVE TO PREVENT AIR INLEAKAGE DURING NORMAL OPERATION.
16. EXPLOSIVE GAS (I.E. HYDROGEN) MONITORING CAPABILITY TO BE PROVIDED VIA DISTRIBUTION RACK FOR WASH NOZZLES.
17. ANTIFOAM TO BE ADDED VIA PLANT WASH CONNECTION.
18. PRETREATMENT TO HLW WASTE TRANSFER LINE THREE WAY VALVES SHALL BE CAPABLE OF DIVERTING FLOW IN ALL TWO DIRECTIONS. NORMAL OPERATIONS WILL BE TO DIRECT THE WASTE TRANSFER INTO THE MFPV AND THEN TO DIVERT THE LINE FLUSH BACK TO PRETREATMENT VIA THE OTHER TRANSFER LINE TO MINIMIZE WASTE DILUTION. EITHER OF THE 2 WASTE TRANSFER LINES DEDICATED TO AN MFPV MAY BE USED TO RECEIVE CONCENTRATE FOLLOWED BY A LINE FLUSH WITH THE OTHER WASTE TRANSFER LINE USED TO RETURN THE LINE FLUSH.
19. DELETED.
20. TRANSFERS TO RLD-VSL-00008 ARE COORDINATED TO MAINTAIN THE SOLIDS PERCENT BELOW THE MAXIMUM LEVEL FOR RLD-VSL-00008.
21. GLASS FORMERS ARE WETTED WITH DEMINERALIZED WATER FOR DUST MITIGATION.
22. GLASS FORMERS ARE FED TO A CONVEYOR OR REJECT BIN THROUGH BOMB BAY (TRAP) DOORS.
23. THE COMPONENTS SHOWN ON THIS DRAWING IN PHANTOM DO NOT REQUIRE INDEPENDENT QUALIFIED REGISTERED PROFESSIONAL ENGINEER ASSESSMENTS OF DESIGN OR INSTALLATION INSPECTION BY A QUALIFIED INSTALLATION INSPECTOR IN ACCORDANCE WITH THE DWP AND/OR WASHINGTON ADMINISTRATIVE CODE REQUIREMENTS.
24. THE FOLLOWING CHANGES WERE INCORPORATED: DELETED HOLD 3. ADDED, REVISED, AND CHANGED NOTES, HOLDS, AND REFERENCES. DELETED MHAN EQUIPMENT ITEMS. REVISED GFR TANKS AND CONNECTION INLET. REVISED PRETREATMENT OFFSHEET CONNECTION POINTS AND TEXT. ADDED "NOTE 17" TEXT. DELETED PWD TO OVERFLOWS, ISA TO VESSELS, AND AFR TO VESSELS CONNECTIONS. CHANGED "NOTE 19" IN VESSELS TO "NOTE 10".

HOLDS:

1-4. DELETED.

REFERENCES:

1. DELETED.
2. 24590-HLW-3YD-HFP-00001, SYSTEM DESCRIPTION FOR HLW CONCENTRATE RECEIPT AND MELTER FEED PROCESS SYSTEMS (HCP AND HFP).
3. DELETED.
4. DELETED.
5. DELETED.
6. DELETED.
7. DELETED.
8. DELETED.
9. DELETED.
10. DELETED.
11. DELETED.
12. DELETED.
13. DELETED.
14. DELETED.

JAMES E. ROUSE STATE OF WASHINGTON 19178 REGISTERED PROFESSIONAL ENGINEER
8/22/07
EXPIRES: 3/5/08

REV	DESCRIPTION	ORG	CHKD	RVWD	APVD	DATE
4	ISSUED FOR PERMITTING USE. SEE NOTE 24 FOR CHANGES.					
3	MAJOR REVISION, SEE NOTE 22. ISSUED FOR PERMITTING USE.	RR	NJ	JP	TV	3-22-05
2	ISSUED FOR PERMITTING USE.	RR	NJ	JP	TV	5-3-04
1	PREVIOUS REVISION DID NOT HAVE A PE STAMP	DRH	TJV	AGD	SCF	11-5-02
0	ISSUED FOR PERMITTING USE.	DRH	TJV	JKR	GD	10-29-02

REVISION HISTORY

PLEASE NOTE THAT SOURCE, SPECIAL NUCLEAR AND BYPRODUCT MATERIALS, AS DEFINED IN THE ATOMIC ENERGY ACT OF 1954 (AEA), ARE REGULATED AT THE U.S. DEPARTMENT OF ENERGY (DOE) FACILITIES EXCLUSIVELY BY DOE ACTING PERSUANT TO ITS AEA AUTHORITY. DOE ASSERTS, THAT PERSUANT TO THE AEA, IT HAS SOLE AND EXCLUSIVE RESPONSIBILITY AND AUTHORITY TO REGULATE SOURCE, SPECIAL NUCLEAR, AND BYPRODUCT MATERIALS AT DOE-OWNED NUCLEAR FACILITIES. INFORMATION CONTAINED HEREIN ON RADIONUCLIDES IS PROVIDED FOR PROCESS DESCRIPTION PURPOSES ONLY.

ISSUED BY RPP-WTP PCO — ISSUE STAMP

PROJECT No.	24590	
SITE	HANFORD	
AREA	200E	
BUILDING No.	30	
	BY	DATE
ORIGINATOR	HIRZEL, DAVID	10-28-02
CHECKER	VALENTI, THOMAS	10-28-02
APPROVER	DUNCAN, GARTH	10-29-02
REVIEWER	ROUSE, JAMES	10-29-02

CONTENT APPLICABLE TO ALARA? [X] YES [ ] NO
ADR NO. N/A REV:
SAFETY SCREEN REQUIRED? [ ] YES [X] NO EM6 INITIAL IF YES

BECHTEL
RIVER PROTECTION PROJECT
WASTE TREATMENT PLANT
2435 STEVENS CENTER PLACE
RICHLAND, WA 99354

CONTRACT No: DE-AC27-01RV14136

PROCESS FLOW DIAGRAM HLW RECEIPT & FEED PREPARATION (SYSTEM HCP, GFR, & HFP)

SCALE: NTS
24590-HLW-M5-V17T-P0001
REV 4

SAFETY SCREEN IS REQUIRED FOR DRAWING TYPES IDENTIFIED IN 24590-WTP-GPP-SREG-002

E SIZE - 44x34
COMPUTER GENERATED - MANUAL CHANGES NOT PERMITTED

FORM E_SDN.DGN 02/2003

08/21/2007 12:56:41 PM

PLOTTED BY: dlcoulom
C:\Work\dlcoulom\dms06004\24590-HLW-M5-V17T-P0001.dgn

R1008597

24590-HLW-M5-V17T-P0006

PLANT ITEM NUMBER DESCRIPTION	HDH-TK-00002 CERIUM 4+ ADDITION TANK	HDH-VSL-00001 RINSE TUNNEL CANISTER RINSE VESSEL	HDH-VSL-00004 CANISTER DECON VESSEL	HDH-PMP-00001 BOGIE DECON CANISTER PUMP	HDH-VSL-00002 CANISTER DECON VESSEL	HDH-DMST-00001 CANISTER DECON DEMISTER	HDH-TK-00003 HYDROGEN PEROXIDE ADDITION TANK	HDH-VSL-00003 WASTE NEUTRALIZATION VESSEL

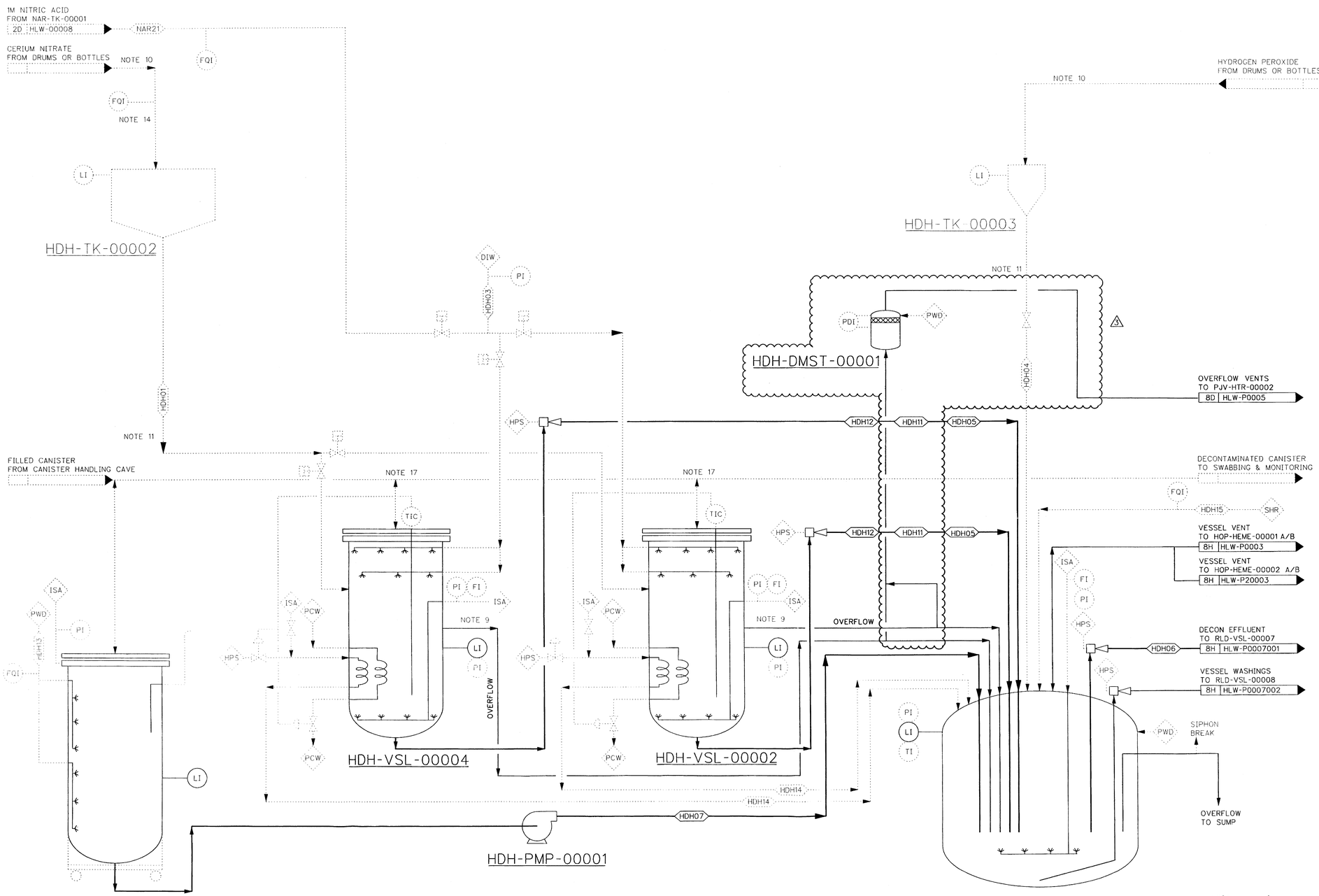

NOTES:

1. SEE DRAWING 24590-WTP-M5-V17T-P0001 FOR SYMBOLS AND LEGEND.
2. MAJOR INDICATION AND CONTROL INSTRUMENTATION ONLY SHOWN.
3. VALVES SHOWN ONLY TO INDICATE PROCESS INTENT.
4. DELETED.
5. DELETED.
6. DELETED.
7. DELETED.
8. DELETED.
9. DURING NORMAL OPERATION, EACH CANISTER DECONTAMINATION VESSELS' OVERFLOW ACTS AS AN INTENTIONAL VENT PATH WHEN THE VESSEL CONTAINMENT LID IS OPEN. THE VENT PATH GENERATES AN AIR SWEEP TO MINIMIZE CONTAMINATION SPREAD DURING CANISTER INSERTION AND REMOVAL. HOWEVER, IT WILL GENERATE A SHORT, BUT SIGNIFICANT, INCREASE IN VESSEL VENTILATION GAS FLOW.
10. CERIUM NITRATE AND 30 WT% HYDROGEN PEROXIDE SOLUTIONS ARE MANUALLY LOADED.
11. HDH01 AND HDH04 ARE GRAVITY TRANSFERS.
12. CONTENTS OF THIS DOCUMENT ARE DANGEROUS WASTE PERMIT AFFECTING.
13. DELETED.
14. LOCAL FLOW TOTALIZER WILL BE INSTALLED ON THE PORTABLE TRANSFER LINE CONNECTING HDH-TK-00002 TO A CERIUM STORAGE DRUM.
15. DELETED.
16. DELETED.
17. EACH CANISTER ENTERS ONLY ONE OF THE CANISTER DECON VESSELS (HDH-VSL-00002/4) DURING THE DECONTAMINATION PROCESS.
18. (3) THE COMPONENTS SHOWN ON THIS DRAWING IN PHANTOM DO NOT REQUIRE INDEPENDENT QUALIFIED REGISTERED PROFESSIONAL ENGINEER ASSESSMENTS OF DESIGN OR INSTALLATION INSPECTION BY A QUALIFIED INSTALLATION INSPECTOR IN ACCORDANCE WITH THE DWP AND/OR WASHINGTON ADMINISTRATIVE CODE REQUIREMENTS.
19. THE FOLLOWING CHANGES WERE INCORPORATED: ADDED AND REVISED NOTES, REFERENCES, AND PLANT ITEM DESCRIPTIONS. ADDED PJV VENT DEMISTER. ADDED SYSTEM DESCRIPTION TO REFERENCES.

REFERENCES:

1. (3) 24590-HLW-3YD-HDH-00002 SYSTEM DESCRIPTION FOR HLW SYSTEM HDH CANISTER DECONTAMINATION HANDLING.
2. DELETED.
3. DELETED.
4. DELETED.
5. DELETED.
6. DELETED.
7. DELETED.
8. DELETED.
9. DELETED.
10. DELETED.
11. DELETED.

JAMES K. ROUSE STATE OF WASHINGTON REGISTERED PROFESSIONAL ENGINEER
8/21/07
EXPIRES: 3/6/08

REV	DESCRIPTION	ORG	CHKD	RVWD	APVD	DATE
3	ISSUED FOR PERMITTING USE, SEE NOTE 19 FOR CHANGES	MC	WJ	MP	JFS	8-21-07
2	ISSUED FOR PERMITTING USE	RR	NJ	JP	JFS	3-22-05
1	ISSUED FOR PERMITTING USE	RR	NJ	JP	JFS	2-5-04
0	ISSUED FOR PERMITTING USE	RR	SC	AD	GD	10-4-02

REVISION HISTORY

PLEASE NOTE THAT SOURCE, SPECIAL NUCLEAR, AND BYPRODUCT MATERIALS, AS DEFINED IN THE ATOMIC ENERGY ACT OF 1954 (AEA), ARE REGULATED AT THE U.S. DEPARTMENT OF ENERGY (DOE) FACILITIES EXCLUSIVELY BY DOE ACTING PURSUANT TO ITS AEA AUTHORITY. DOE ASSERTS, THAT PURSUANT TO THE AEA, IT HAS SOLE AND EXCLUSIVE RESPONSIBILITY AND AUTHORITY TO REGULATE SOURCE, SPECIAL NUCLEAR, AND BYPRODUCT MATERIALS AT DOE-OWNED NUCLEAR FACILITIES. INFORMATION CONTAINED HEREIN ON RADIONUCLIDES IS PROVIDED FOR PROCESS DESCRIPTION PURPOSES ONLY.

ISSUED BY RPP-WTP PDC

ISSUE STAMP

PROJECT No.	24590	
SITE	HANFORD	
AREA	200E	
BUILDING No.	30	
	BY	DATE
ORIGINATOR	R. RUSSELL	10/3/02
CHECKER	S. COLBY	10/3/02
APPROVER	G. DUNCAN	10/4/02
REVIEWER	A. DADA	10/4/02

CONTENT APPLICABLE TO ALARA? [X] YES [ ] NO
ADR NO. N/A REV:
SAFETY SCREEN REQUIRED? [ ] YES [X] NO | EMS INITIAL IF YES

BECHTEL

RIVER PROTECTION PROJECT
WASTE TREATMENT PLANT
2435 STEVENS CENTER PLACE
RICHLAND, WA 99354

CONTRACT No: DE-AC27-01RV14136

PROCESS FLOW DIAGRAM HLW VITRIFICATION HLW CANISTER DECON (SYSTEM HDH)

SCALE: NTS

24590-HLW-M5-V17T-P0006

REV 3

SAFETY SCREEN IS REQUIRED FOR DRAWING TYPES IDENTIFIED IN 24590-WTP-GPP-SREG-002

"E" SIZE - 44x34
COMPUTER GENERATED - MANUAL CHANGES NOT PERMITTED

08/20/2007 03:16:59 PM

PLOTTED BY: akcuium
C:\Work\akcuium\ams86004\24590-HLW-M5-V17T-P0006.dgn

FORM E_SDN.DGN 02/2003

Drawings and Documents

Operating Unit Group 10 – Appendix 10.2
High Level Waste Building
Piping and Instrumentation Diagrams

The documents listed in the following table are incorporated by reference into this permit and are subject to the requirements set forth in Part I Standard Conditions, Part II General Facility Conditions, and Part III Operating Unit Group 10 Conditions. Upon request, copies of the documents can be viewed at the Nuclear Waste Program Resource Center located at 3100 Port of Benton Blvd. Richland, WA. Appointments for viewing can be scheduled by calling (509) 372-7950.

Drawing/Document	***Description***
24590-HLW-M6-HCP-P0001, Rev. 3	Piping & Instrumentation Diagram HLW Concentrate Receipt Process System Melter 1 Transfer Piping
24590-HLW-M6-HCP-P0002, Rev. 3	Piping & Instrumentation Diagram HLW Concentrate Receipt Process System Melter 2 Transfer Piping
24590-HLW-M6-HDH-P0001, Rev. 2	Piping & Instrumentation Diagram HLW Canister Decontamination Handling System
24590-HLW-M6-HDH-P0002, Rev. 2	Piping & Instrumentation Diagram HLW Canister Decontamination Handling System
24590-HLW-M6-HDH-P20001, Rev. 2	Piping & Instrumentation Diagram HLW Canister Decontamination Handling System
24590-HLW-M6-HFP-P0001, Rev. 2	Piping & Instrumentation Diagram HLW Melter Feed Process System Melter Feed Preparation Vessel HFP-VSL-00001
24590-HLW-M6-HFP-P0002, Rev. 2	Piping & Instrumentation Diagram HLW Melter Feed Process System Melter Feed Vessel HFP-VSL-00002
24590-HLW-M6-HFP-P0007, Rev. 1	Piping & Instrumentation Diagram HLW Melter Feed Process System HFP-VSL-00001 Agitation and Sparging
24590-HLW-M6-HFP-P0008, Rev. 1	Piping & Instrumentation Diagram HLW Melter Feed Process System HFP-VSL-00002 Agitation and Sparging
24590-HLW-M6-HFP-P20001, Rev. 2	Piping & Instrumentation Diagram HLW Melter Feed Process System Melter Feed Preparation Vessel HFP-VSL-00005 (Melter 2)
24590-HLW-M6-HFP-P20002, Rev. 2	Piping & Instrumentation Diagram HLW Melter Feed Process System Melter Feed Vessel HFP-VSL-00006 (Melter 2)

24590-HLW-M6-HFP-P20007, Rev. 1	Piping & Instrumentation Diagram HLW Melter Feed Process System HFP-VSL-00005 Agitation and Sparging
24590-HLW-M6-HFP-P20008, Rev. 1	Piping & Instrumentation Diagram HLW Melter Feed Process System HFP-VSL-00006 Agitation and Sparging
24590-HLW-M6-HMP-00001, Rev. 4	Piping & Instrumentation Diagram HLW Melter 1 System Feed and Agitation) Confidential Business Information
24590-HLW-M6-HMP-00002, Rev. 5	Piping & Instrumentation Diagram HLW Melter 1 System Film Cooler and Off Gas Connection
24590-HLW-M6-HMP-00003, Rev. 5	Piping & Instrumentation Diagram HLW Melter Process System HLW Melter 1 Refractory Cooling
24590-HLW-M6-HMP-00004, Rev. 4	Piping & Instrumentation Diagram HLW Melter 1 Electrodes
24590-HLW-M6-HMP-00006, Rev. 4	Piping & Instrumentation Diagram HLW Melter 1 System East Discharge Heaters and Airlift
24590-HLW-M6-HMP-00007, Rev. 4	Piping & Instrumentation Diagram HLW Melter 1 System West Discharge Heater and Airlift
24590-HLW-M6-HMP-00008, Rev. 4	Piping & Instrumentation Diagram HLW Melter Process System Melter 1 Glass Pour Monitoring
24590-HLW-M6-HMP-00012, Rev 4	Piping & Instrumentation Diagram HLW Melter 1 Film Cooler Utilities
24590-HLW-M6-HMP-00013, Rev. 4	Piping & Instrumentation Diagram HLW Melter 1 System Pressure, Density and Level Detection
24590-HLW-M6-HMP-00014, Rev. 4	Piping & Instrumentation Diagram HLW Melter Process System HLW Melter 1 Refractory Cooling
24590-HLW-M6-HMP-20001, Rev. 5	Piping & Instrumentation Diagram HLW Melter 2 System Feed and Agitation) Confidential Business Information
24590-HLW-M6-HMP-20002, Rev. 6	Piping & Instrumentation Diagram HLW Melter 2 System Film Cooler and Off Gas Connection
24590-HLW-M6-HMP-20003, Rev. 6	Piping & Instrumentation Diagram HLW Melter Process System HLW Melter 2 Refractory Cooling

24590-HLW-M6-HMP-20004, Rev. 5	Piping & Instrumentation Diagram HLW Melter 2 Electrodes
24590-HLW-M6-HMP-20006, Rev. 5	Piping & Instrumentation Diagram HLW Melter 2 System East Discharge Heaters and Airlift
24590-HLW-M6-HMP-20007, Rev. 5	Piping & Instrumentation Diagram HLW Melter 2 System West Discharge Heater and Airlift
24590-HLW-M6-HMP-20008, Rev. 5	Piping & Instrumentation Diagram HLW Melter Process System Melter 2 Glass Pour Monitoring
24590-HLW-M6-HMP-20012, Rev 5	Piping & Instrumentation Diagram HLW Melter 2 Film Cooler Utilities
24590-HLW-M6-HMP-20013, Rev. 5	Piping & Instrumentation Diagram HLW Melter 2 System Pressure, Density and Level Detection
24590-HLW-M6-HMP-20014, Rev. 5	Piping & Instrumentation Diagram HLW Melter Process System HLW Melter 2 Refractory Cooling
24590-HLW-M6-HOP-00001, Rev. 5	Piping & Instrumentation Diagram HLW Melter Offgas System Melter 1 Primary Offgas Scrubber
24590-HLW-M6-HOP-00002, Rev. 5	Piping & Instrumentation Diagram Melter 2 Primary Offgas WESP
24590-HLW-M6-HOP-00003, Rev. 2	Piping and Instrumentation Diagram HLW Melter Offgas System Melter 1 Secondary Offgas Treatment Sheet 1 of 3
24590-HLW-M6-HOP-00004, Rev. 4	Piping and Instrumentation Diagram HLW Melter 1 Offgas Fluidic Air Rack (HOP-RK-00025)
24590-HLW-M6-HOP-00006, Rev. 5	Piping and Instrumentation Diagram HLW Melter Offgas System Melter 1 Primary Offgas Scrubber Condensate Vessel
24590-HLW-M6-HOP-00008, Rev. 2	Piping and Instrumentation Diagram HLW Melter Offgas System Melter 1 Secondary Offgas Treatment Sheet 2 of 3
24590-HLW-M6-HOP-00009, Rev. 5	Piping & Instrumentation Diagram HLW Melter Offgas System Melter 1 Primary Offgas HEME
24590-HLW-M6-HOP-00010, Rev. 3	Piping & Instrumentation Diagram HLW Melter Offgas System Melter 1 Primary Offgas HEPA Filters
24590-HLW-M6-HOP-00011, Rev. 0	Piping and Instrumentation Diagram HLW Melter Offgas System Melter 1 Secondary Offgas Treatment Sheet 3 of 3

24590-HLW-M6-HOP-20001, Rev. 6	Piping & Instrumentation Diagram HLW Melter Offgas System Melter 2 Primary Offgas Scrubber
24590-HLW-M6-HOP-20002, Rev. 6	Piping & Instrumentation Diagram HLW Melter Offgas System Melter 2 Primary Offgas WESP
24590-HLW-M6-HOP-20003, Rev. 2	Piping & Instrumentation Diagram HLW Melter Offgas System Melter 2 Secondary Offgas Treatment Sheet 1 of 3
24590-HLW-M6-HOP-20004, Rev. 5	Piping &Instrumentation Diagram HLW Melter 2 Offgas Fluidic Air Rack (HOP-RK-00048)
24590-HLW-M6-HOP-20006, Rev. 6	Piping & Instrumentation Diagram HLW Melter Offgas System Melter 2 Primary Offgas Scrubber Condensate Vessel
24590-HLW-M6-HOP-20008, Rev. 2	Piping & Instrumentation Diagram HLW Melter Offgas System Melter 2 Secondary Offgas Treatment Sheet 2 of 3
24590-HLW-M6-HOP-20009, Rev. 6	Piping & Instrumentation Diagram HLW Melter Offgas System Melter 2 Primary Offgas HEME
24590-HLW-M6-HOP-20010, Rev. 4	Piping & Instrumentation Diagram HLW Melter Offgas System Melter 2 Primary Offgas HEPA Filters
24590-HLW-M6-HOP-20011, Rev. 0	Piping & Instrumentation Diagram HLW Melter Offgas System Melter 2 Secondary Offgas Treatment Sheet 3 of 3
24590-HLW-M6-HSH-P0004, Rev. 0	Piping & Instrument Diagram HLW System HSH Melter Cave 1 Decontamination System
24590-HLW-M6-HSH-P20004, Rev. 0	Piping & Instrument Diagram HLW System HSH Melter Cave 2 Decontamination System
24590-HLW-M6-PJV-00001, Rev. 4	Piping & Instrumentation Diagram HLW Pulse Jet Ventilation System Collection and Conditioning
24590-HLW-M6-PJV-00002, Rev. 4	Piping & Instrumentation Diagram HLW Pulse Jet Ventilation System Filtration and Monitoring
24590-HLW-M6-PVV-00001, Rev. 4	Piping & Instrumentation Diagram HLW Process Vessel Vent Exhaust System
24590-HLW-M6-PVV-20001, Rev. 2	Piping & Instrumentation Diagrams HLW Melter 2 Process Vessel Vent Exhaust System
24590-HLW-M6-RLD-00001, Rev. 3	Piping & Instrumentation Diagram HLW Radioactive Liquid Waste Disposal System Active Effluent Collection
24590-HLW-M6-RLD-00002, Rev. 3	Piping & Instrumentation Diagram HLW Radioactive Liquid Waste Disposal System Plant Wash & Drains Vessel

24590-HLW-M6-RLD-00003, Rev. 5	Piping & Instrumentation Diagrams HLW Radioactive Liquid Waste Disposal System Decontamination Tank & Sumps
24590-HLW-M6-RLD-00004, Rev. 5	Piping & Instrumentation Diagrams HLW Radioactive Liquid Waste Disposal System Fluidics Air Rack RLD-RK-00023
24590-HLW-M6-RLD-00006, Rev. 4	Piping & Instrumentation Diagrams HLW Radioactive Liquid Waste Disposal System Fluidics Air Rack RLD-RK-00024
24590-HLW-M6-RLD-00007, Rev. 4	Piping & Instrumentation Diagrams HLW Radioactive Liquid Waste Disposal System
24590-HLW-M6-RLD-00008, Rev. 5	Piping & Instrumentation Diagrams HLW Radioactive Liquid Waste Disposal System Miscellaneous Sumps
24590-HLW-M6-RLD-00014, Rev. 5	Piping & Instrumentation Diagrams HLW Radioactive Liquid Waste Disposal System Offgas Drains Collection Vessel
24590-HLW-M6-RLD-00015, Rev. 4	Piping & Instrumentation Diagrams HLW Radioactive Liquid Waste Disposal System Miscellaneous Sumps
24590-HLW-M6-RLD-00016, Rev. 4	Piping & Instrumentation Diagrams HLW Radioactive Liquid Waste Disposal System Miscellaneous Sumps
24590-HLW-M6-RLD-00017, Rev. 4	Piping & Instrumentation Diagrams HLW Radioactive Liquid Waste Disposal System Miscellaneous Sumps
24590-HLW-M6-RLD-20003, Rev. 5	Piping & Instrumentation Diagrams HLW Radioactive Liquid Waste Disposal System Decontamination Tank & Sumps – Melter 2
24590-HLW-M6-RLD-20004, Rev. 6	Piping & Instrumentation Diagrams HLW Radioactive Liquid Waste Disposal System Miscellaneous Sumps – Melter 2
24590-HLW-M6-RLD-20005, Rev. 6	Piping & Instrumentation Diagrams HLW Radioactive Liquid Waste Disposal System Miscellaneous Sumps – Melter 2
24590-HLW-MF-HMP-00001, Rev. 0	HLW Melter Assembly HLW-MLTR-00001/00002 Isometric View
24590-HLW-MF-HMP-00002, Rev. 0	HLW Melter Assembly HLW-MLTR-00001/00002 Plan View, West and North Elevation Drawing
24590-HLW-MF-HMP-00003, Rev. 0	HLW Melter Assembly HLW-MLTR-00001/00002 Section A-A
RESERVED	RESERVED

Source documents (which do not include a "P" in the last set of numbers, e.g. "-P0001," or "-TP001") should be used in conjunction with any document change notices issued against them.

We are currently transitioning from permit documents (which do include a "P" in the last set of numbers) to source documents. At the end of the transition period, permit submittals will contain source documents and will be incorporated into the permit as described in Ecology Publication # 07-05-006 (www.ecy.wa.gov/biblio/nwp.html).

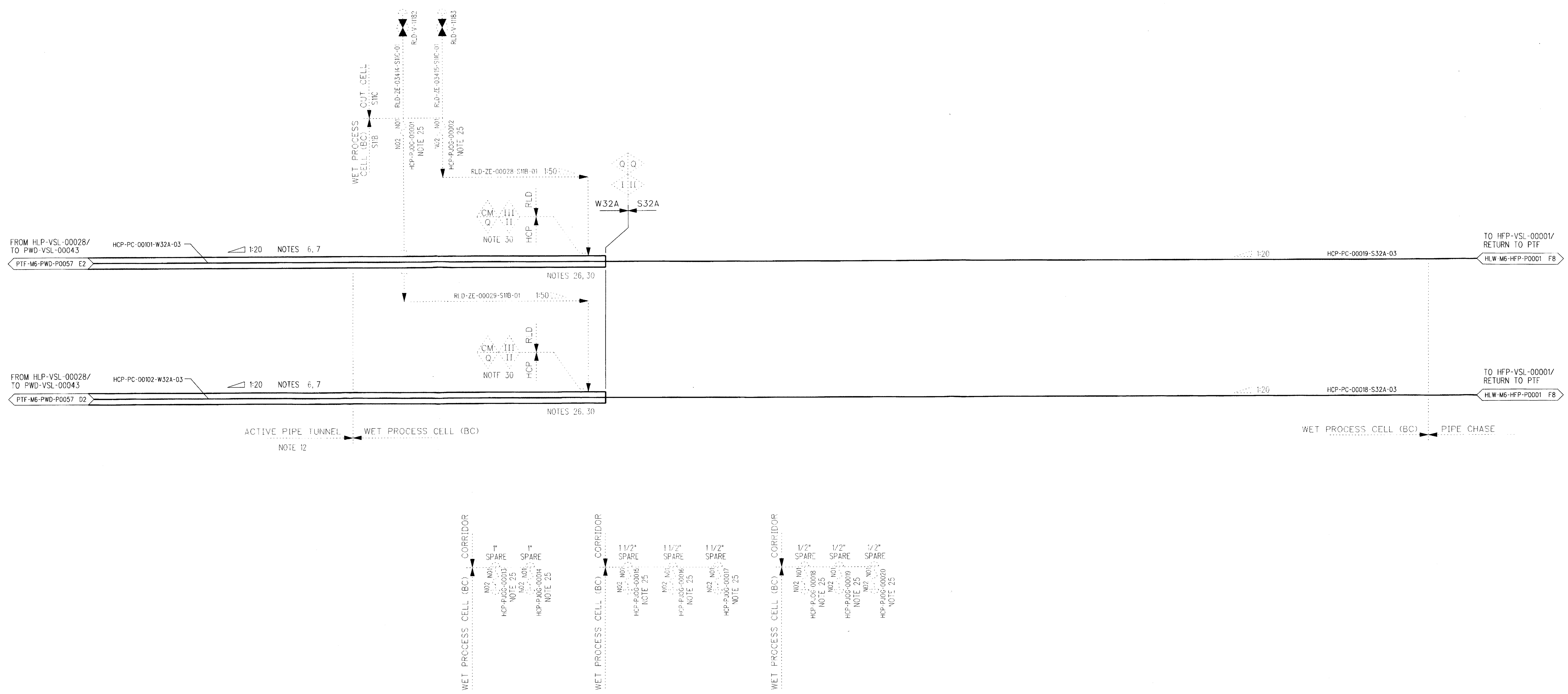

NOTES:

1. SEE DRAWINGS 24590-WTP-M6-50-P0001 THROUGH 24590-WTP-M6-50-P0008 FOR GENERAL NOTES, SYMBOLS AND LEGEND, AND GENERAL SLOPE REQUIREMENTS.

2-5. DELETED

6. BATTERY LIMITS FOR PIPING IS INSIDE OF HLW FACILITY. BOF IS RESPONSIBLE FOR PIPING BETWEEN PRETREATMENT AND HLW. SEE DRAWING 24590-PTF-M6-PWD-P0057.

7. PIPING OUTSIDE OF BUILDING IS DIRECT-BURIED COAXIAL PIPE. PRETREATMENT IS RESPONSIBLE FOR COAXIAL PIPE LEAK DETECTION. SEE DRAWING 24590-PTF-M6-PWD-P0057.

8-11. DELETED

12. A FLANGED SPOOL PIECE IS REQUIRED FOR THE INNER PIPE IN THE ACTIVE PIPE TUNNEL. SPOOL PIECE SHALL BE REMOVED AND PIPING IS TO BE RESTORED TO DOUBLE CONTAINED PIPING AFTER THE PLANT STARTUP PHASE IS COMPLETE.

13-22. DELETED

23. CONTENTS OF THIS DOCUMENT ARE DANGEROUS WASTE PERMIT AFFECTING.

24. DELETED

25. THE GEOMETRY OF JOGGLED (OFFSET) PENETRATIONS IS QUALITY LEVEL Q FOR RADIATION PROTECTION. THE QUALITY LEVEL AND SEISMIC CATEGORY DESIGNATIONS OF PIPING WITHIN JOGGLES ARE THE SAME AS CONNECTING PIPING. PIPING WITHIN SPARE JOGGLES IS QUALITY LEVEL Q AND SEISMIC CATEGORY SC-I.

26. FLUSH LINE CONNECTION OF ENCASEMENT PIPE SHALL BE AT THE HIGHEST POINT (ON TOP) OF OUTER PIPE. THE SAFETY CLASS OF THE FLUSH LINE IS NON-ITS.

27. DELETED

28. REVISION 2: INCORPORATED EDITORIAL CHANGES TO OFFSHEET CONNECTOR TEXT, MODIFIED/RENUMBERED NOTES, ADDED SPARE PENETRATIONS.

29. DELETED

30. THE PRESSURE BOUNDARY FOR THE INNER AND OUTER PIPE OF THE DOUBLE CONTAINMENT LINES ARE QUALITY LEVEL Q. THE INNER PIPE IS SEISMIC CATEGORY SC-I. THE OUTER PIPE IS SEISMIC CATEGORY SC-II.

31. DELETED

32. THE COMPONENTS SHOWN ON THIS DRAWING IN PHANTOM DO NOT REQUIRE INDEPENDENT QUALIFIED REGISTERED PROFESSIONAL ENGINEER ASSESSMENTS OF DESIGN OR INSTALLATION INSPECTIONS BY A QUALIFIED INSTALLATION INSPECTOR IN ACCORDANCE WITH THE DWP AND/OR WASHINGTON ADMINISTRATIVE CODE REQUIREMENTS.

33. REVISED PER 24590-HLW-M6N-HCP-00043, 24590-HLW-M6N-M80T-00004 AND TO INCORPORATE P-JOGGLES. ADDED/REVISED/DELETED NOTES, PIPE SPECIFICATION FROM S12A TO S32A, QUALITY/SEISMIC FLAG AND MINOR EDITORIAL CHANGES.

HOLD/OPEN ITEMS

1-5. DELETED

REFERENCES

1. 24590-HLW-M5-V17T-P0001, "PROCESS FLOW DIAGRAM HLW RECEIPT & FEED PREPARATION (SYSTEM HCP, CFR & HFP)".
2. 24590-HLW-3YD-HFP-00001, "SYSTEM DESCRIPTION FOR HLW CONCENTRATE RECEIPT AND MELTER FEED PROCESS SYSTEMS (HCP AND HFP)".

3-8. DELETED

PLEASE NOTE THAT SOURCE, SPECIAL NUCLEAR AND BYPRODUCT MATERIALS, AS DEFINED IN THE ATOMIC ENERGY ACT OF 1954 (AEA), ARE REGULATED AT THE U.S. DEPARTMENT OF ENERGY (DOE) FACILITIES EXCLUSIVELY BY DOE ACTING PURSUANT TO ITS AEA AUTHORITY. DOE ASSERTS, THAT PURSUANT TO THE AEA, IT HAS SOLE AND EXCLUSIVE RESPONSIBILITY AND AUTHORITY TO REGULATE SOURCE, SPECIAL NUCLEAR, AND BYPRODUCT MATERIAL AT DOE-OWNED NUCLEAR FACILITIES. INFORMATION CONTAINED HEREIN ON RADIONUCLIDES IS PROVIDED FOR PROCESS DESCRIPTION PURPOSES ONLY.

ERIC B. ISERN — STATE OF WASHINGTON — 33449 — REGISTERED PROFESSIONAL ENGINEER — 5/29/08
EXPIRES: 07/28/09

Q
QUALITY DESIGNATOR

REVISION HISTORY

REV	DESCRIPTION	ORG	CHKD	RVWD	APVD	DATE
3	ISSUED FOR PERMITTING USE SEE NOTE 33	LCS		SPK		5/28/08
2	REVISED PER NOTE 28 ISSUED FOR PERMITTING USE	SC	EH	JP	JJ	8/21/06
0	ISSUED FOR PERMITTING USE	TMG	MRG	SJC	TV	12-23-03

ISSUED BY RPP-WTP PDC
INIT ISSUE STAMP DATE

PROJECT No.	24590	
SITE	HANFORD	
AREA	200E	
BUILDING No.	30	
	BY	DATE
ORIGINATOR	THOMAS GALIOTO	12-23-03
CHECKER	M. R. GRINDEL	12-23-03
APPROVER	T. VALENTINO	12-23-03
REVIEWER	STEVEN J. CROSS	12/23/03

CONTENT APPLICABLE TO ALARA? [X] YES [ ] NO
ADR NO. NA REV: NA
SAFETY SCREEN REQUIRED? [ ] YES [X] NO E&NS INITIAL IF YES ____

BECHTEL
RIVER PROTECTION PROJECT
WASTE TREATMENT PLANT
2435 STEVENS CENTER PLACE
RICHLAND, WA 99354

CONTRACT No: DE-AC27-01RV14136

P&ID - HLW CONCENTRATE RECEIPT PROCESS SYSTEM MELTER 1 TRANSFER PIPING

SCALE: NONE
24590-HLW-M6-HCP-P0001
REV 3

SAFETY SCREEN IS REQUIRED FOR DRAWING TYPES IDENTIFIED IN 24590-WTP-GPP-SREG-002

'E' SIZE - 44x34
COMPUTER GENERATED - MANUAL CHANGES NOT PERMITTED

R10921913
05/09/2008 07:05:52 AM

PLOTTED BY: lcsanvic
C:\Work\lcsanvic\dms05070\HLWM6HCPP0001r4.dgn

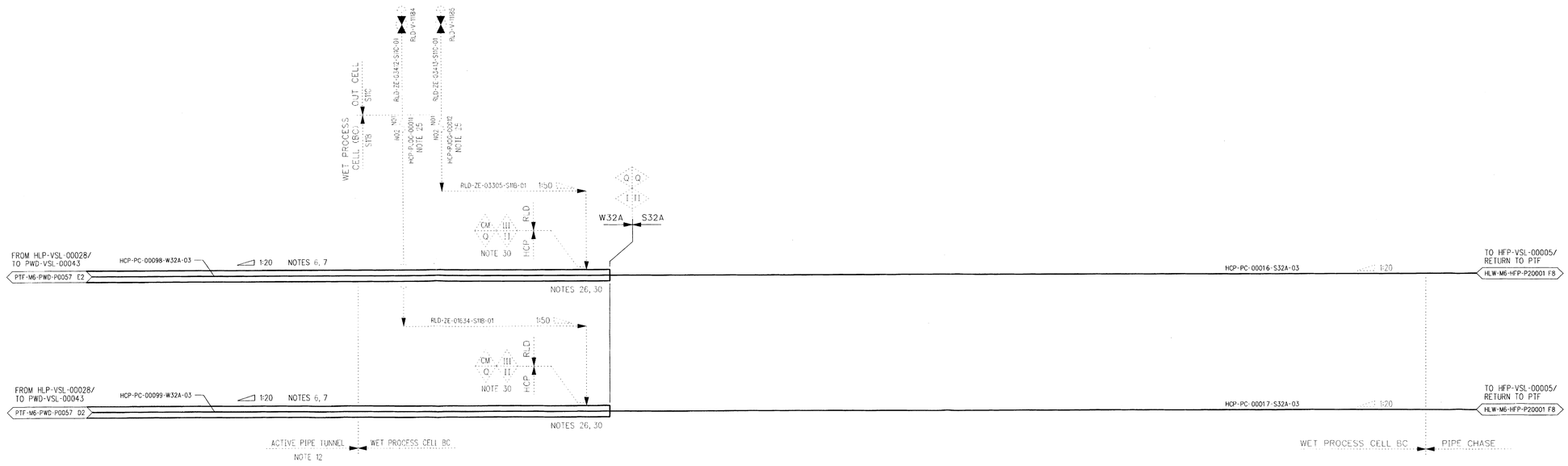

NOTES:

1. SEE DRAWINGS 24590-WTP-M6-50-P0001 THROUGH 24590-WTP-M6-50-P0008 FOR GENERAL NOTES, SYMBOLS AND LEGEND, AND GENERAL SLOPE REQUIREMENTS.

2-5. DELETED

6. BATTERY LIMITS FOR PIPING IS INSIDE OF HLW FACILITY. BOF IS RESPONSIBLE FOR PIPING BETWEEN PRETREATMENT AND HLW. SEE DRAWING 24590-PTF-M6-PWD-P0057.

7. PIPING OUTSIDE OF BUILDING IS DIRECT-BURIED COAXIAL PIPE. PRETREATMENT IS RESPONSIBLE FOR COAXIAL PIPE LEAK DETECTION. SEE DRAWING 24590-PTF-M6-PWD-P0057.

8-11. DELETED

12. A FLANGED SPOOL PIECE IS REQUIRED FOR THE INNER PIPE IN THE ACTIVE PIPE TUNNEL. SPOOL PIECE SHALL BE REMOVED AND PIPING IS TO BE RESTORED TO DOUBLE CONTAINED PIPING AFTER THE PLANT STARTUP PHASE IS COMPLETE.

13-22. DELETED

23. CONTENTS OF THIS DOCUMENT ARE DANGEROUS WASTE PERMIT AFFECTING.

24. DELETED

25. THE GEOMETRY OF JOGGLED (OFFSET) PENETRATIONS IS QUALITY LEVEL Q FOR RADIATION PROTECTION. THE QUALITY LEVEL AND SEISMIC CATEGORY DESIGNATIONS OF PIPING WITHIN JOGGLES ARE THE SAME AS CONNECTING PIPING. PIPING WITHIN SPARE JOGGLES IS QUALITY LEVEL Q AND SEISMIC CATEGORY SC-I.

26. FLUSH LINE CONNECTION OF ENCASEMENT PIPE SHALL BE AT THE HIGHEST POINT (ON TOP) OF OUTER PIPE. THE SAFETY CLASS OF THE FLUSH LINE IS NON-ITS.

27. DELETED

28. REVISION 2: INCORPORATED EDITORIAL CHANGES TO OFFSHEET CONNECTOR TEXT, MODIFIED/RENUMBERED NOTES, ADDED SPARE PENETRATIONS.

29. DELETED

30. THE PRESSURE BOUNDARY FOR THE INNER AND OUTER PIPE OF THE DOUBLE CONTAINMENT TRANSFER LINES ARE QUALITY LEVEL Q. THE INNER PIPE IS SEISMIC CATEGORY SC-I. THE OUTER PIPE IS SEISMIC CATEGORY SC-II.

31. DELETED

32. THE COMPONENTS SHOWN ON THIS DRAWING IN PHANTOM DO NOT REQUIRE INDEPENDENT QUALIFIED REGISTERED PROFESSIONAL ENGINEER ASSESSMENTS OF DESIGN OR INSTALLATION INSPECTIONS BY A QUALIFIED INSTALLATION INSPECTOR IN ACCORDANCE WITH THE DWP AND/OR WASHINGTON ADMINISTRATIVE CODE REQUIREMENTS.

33. REVISED PER 24590-HLW-M6N-HCP-00043, 24590-HLW-M6N-M8OT -00004 AND TO INCORPORATE P-JOGGLES. ADDED/REVISED/DELETED NOTES, PIPE SPECIFICATION FROM S12A TO S32A, QUALITY/SEISMIC FLAG AND MINOR EDITORIAL CHANGES.

HOLD/OPEN ITEMS

1.-5. DELETED

REFERENCES

1. 24590-HLW-M5-V17T-P0001, "PROCESS FLOW DIAGRAM HLW RECEIPT & FEED PREPARATION (SYSTEM HCP, GFR & HFP)".
2. 24590-HLW-3YD-HFP-00001, "SYSTEM DESCRIPTION FOR HLW CONCENTRATE RECEIPT AND MELTER FEED PROCESS SYSTEMS (HCP AND HFP)".

3-8. DELETED

ERIC B. ISERN
STATE OF WASHINGTON
3349
REGISTERED
PROFESSIONAL ENGINEER
EXPIRES: 07/28/09

PLEASE NOTE THAT SOURCE, SPECIAL NUCLEAR AND BYPRODUCT MATERIALS, AS DEFINED IN THE ATOMIC ENERGY ACT OF 1954 (AEA), ARE REGULATED AT THE U.S. DEPARTMENT OF ENERGY (DOE) FACILITIES EXCLUSIVELY BY DOE ACTING PURSUANT TO ITS AEA AUTHORITY. DOE ASSERTS, THAT PURSUANT TO THE AEA, IT HAS SOLE AND EXCLUSIVE RESPONSIBILITY AND AUTHORITY TO REGULATE SOURCE, SPECIAL NUCLEAR, AND BYPRODUCT MATERIAL AT DOE-OWNED NUCLEAR FACILITIES. INFORMATION CONTAINED HEREIN ON RAD|ONUCLIDES IS PROVIDED FOR PROCESS DESCRIPTION PURPOSES ONLY.

REV	DESCRIPTION	ORG	CHKD	RVWD	APVD	DATE
3	ISSUED FOR PERMITTING USE SEE NOTE 33	LCS		CER		4/4/08 5/21/08 5/28/08
2	REVISED PER NOTE 28 ISSUED FOR PERMITTING USE	SC	EH	JP	JJ	8/21/06
0	ISSUED FOR PERMITTING USE	TC	MRG	SJC	TV	12-23-03

REVISION HISTORY

Q
QUALITY DESIGNATOR

ISSUED BY RPP-WTP POC
INIT DATE
ISSUE STAMP

PROJECT No.	24590	
SITE	HANFORD	
AREA	200E	
BUILDING No.	30	

	BY	DATE
ORIGINATOR	THOMAS GALIOTO	12-23-03
CHECKER	M.R. GRINDEL	12-23-03
APPROVER	T. VALENTINO	12-23-03
REVIEWER	STEVE J. CROSS	12/23/03

CONTENT APPLICABLE TO ALARA? [X] YES [ ] NO
ADR NO. NA REV. NA
SAFETY SCREEN REQUIRED? [ ] YES [X] NO EMAIL INITIAL IF YES

RICHLAND, WA 99354
CONTRACT No: DE-AC27-01RV14136

P&ID - HLW CONCENTRATE RECEIPT PROCESS SYSTEM MELTER 2 TRANSFER PIPING

SCALE: NONE
24590-HLW-M6-HCP-P0002
REV 3

R1002101H

05/08/2008 01:45:41 PM

PLOTTED BY: lcsarvic
C:\Work\lcsarvic\dms05070\HLW\M6\HCP\P0002r4.dgn

FORM E_SUN.DGN 02/2003

SAFETY SCREEN IS REQUIRED FOR DRAWING TYPES IDENTIFIED IN 24590-WTP-GPP-SREG-002

"E" SIZE - 44x34
COMPUTER GENERATED - MANUAL CHANGES NOT PERMITTED

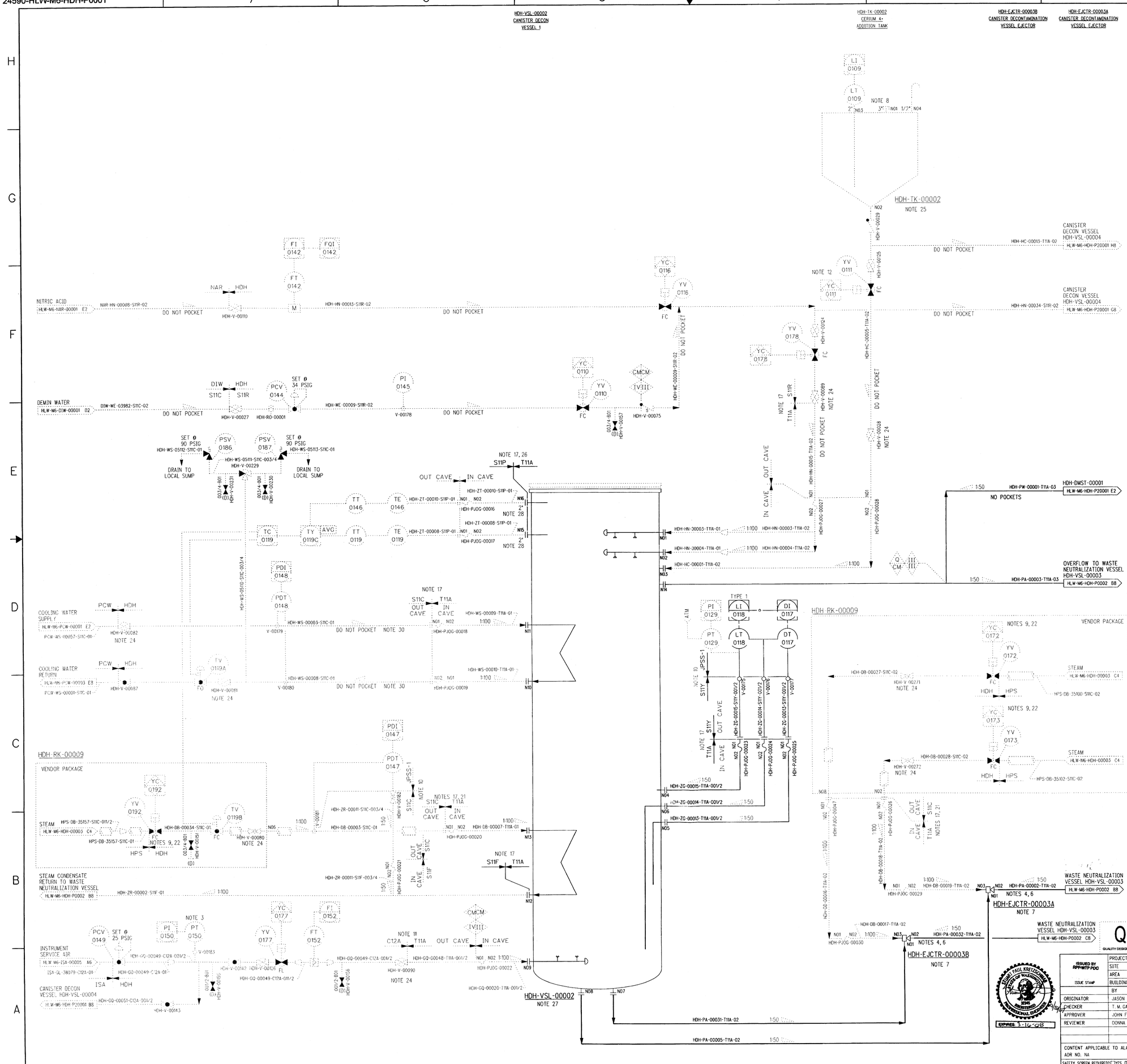

NOTES:

1. SEE DRAWINGS 24590-WTP-M6-50-P0001 THROUGH 24590-WTP-M6-50-P0008 FOR GENERAL NOTES, SYMBOLS AND LEGEND AND GENERAL SLOPE REQUIREMENTS.
2. DELETED
3. LOCATE PRESSURE TRANSMITTER (PT-0150) CLOSE TO PRESSURE REGULATING VALVE (PCV-0149).
4. THE HIGHEST SECTION OF THE EJECTOR DISCHARGE LINES TO BE ABOVE OVERFLOW NOZZLE ELEVATION OF HDH-VSL-00002.
5. CONTENTS OF THIS DOCUMENT ARE DANGEROUS WASTE PERMIT AFFECTING.
6. EJECTOR DISCHARGE PIPING TO HAVE A MINIMUM LENGTH OF STRAIGHT PIPE EQUIVALENT TO 10 TIMES THE PIPE OUTSIDE DIAMETER BEFORE THE FIRST BEND.
7. EJECTOR TO BE LOCATED AT THE LOWEST SECTION OF SUCTION PIPING.
8. CERIUM 4+ ADDITION TANK WILL BE LOADED VIA DRUM PUMP, AS NEEDED.
9. THE VALVE SHALL BE A SLOW OPENING VALVE TO PREVENT STEAM CONDENSATE HAMMER.
10. JPSS-1 SPECIFICATION AS DEFINED IN INSTRUMENT PIPING MATERIAL CLASS, SEE REFERENCE 3. SPECIFICATION CHANGE ALSO DEFINES AREA OF C&I RESPONSIBILITY.
11. A FLANGE KIT IS REQUIRED BETWEEN CARBON STEEL AND TITANIUM FLANGES TO PREVENT GALVANIC CORROSION.
12. MINIMIZE LENGTH OF PIPING BETWEEN HDH-TK-00002 AND YC-0111.
13. DELETED
14. ALL SYSTEMS, STRUCTURES, AND COMPONENTS SHOWN ON THIS DRAWING ARE QUALITY LEVEL CM AND SEISMIC CATEGORY SC-III, UNLESS OTHERWISE NOTED.

15-16. DELETED

17. A HELICOFLEX GASKET IS TO BE UTILIZED AT THE FLANGE INTERFACE BETWEEN STAINLESS STEEL AND TITANIUM.
18. DELETED
19. DELETED
20. DELETED
21. LINES REQUIRE 34FT OF BAROMETRIC HEAD ABOVE THE OVERFLOW. THE BAROMETRIC HEAD REQUIREMENT SHALL BE FULLY CONTAINED IN R5 AREA.
22. ACTUATED STEAM SUPPLY VALVE TO BE LOCATED AT HIGH POINT IN THE LINE.
23. INSTRUMENTS ARE QUALITY LEVEL CM. INSTRUMENT, ROOT VALVE, AND TUBING CONFINEMENT REQUIREMENTS ARE THE SAME AS THE CONNECTING PIPING.
24. LOCATE VALVE AS CLOSE AS POSSIBLE TO THE C5 BOUNDARY.
25. LOCATE A DIW DROP NEAR HDH-TK-00002.
26. LID DESIGN REQUIRES AIR GAP FOR HPAV.
27. THIS IS A CANISTER DECON VESSEL SYMBOL.
28. USE REDUCING FLANGE FOR CONNECTION TO NOZZLES N15 AND N16.
29. THE GEOMETRY OF JOGGLED (OFFSET) PENETRATIONS IS QUALITY LEVEL Q FOR RADIATION PROTECTION. THE QUALITY LEVEL AND SEISMIC CATEGORY DESIGNATIONS OF PIPING WITHIN JOGGLES ARE THE SAME AS CONNECTING PIPING.
30. MAIN HEADER REQUIRES 34 FT OF BAROMETRIC HEAD ABOVE THE MAXIMUM LIQUID LEVEL IN THE VESSEL.
31. DELETED
32. THE COMPONENTS SHOWN ON THIS DRAWING IN PHANTOM DO NOT REQUIRE INDEPENDENT QUALIFIED REGISTERED PROFESSIONAL ENGINEER ASSESSMENTS OF DESIGN OR INSTALLATION INSPECTIONS BY A QUALIFIED INSTALLATION INSPECTOR IN ACCORDANCE WITH THE DWP AND/OR WASHINGTON ADMINISTRATIVE CODE REQUIREMENTS.
33. REVISED PER 24590-HLW-M6N-M80T-00004 AND TO INCORPORATE P-JOGGLES. ADDED/REVISED/DELETED NOTES, INSULATION, LINES, SLOPES, REFERENCES AND MINOR EDITORIAL CHANGES.

HOLD/OPEN ITEMS:

1-3. DELETED

4. PENDING ASSESSMENT OF VESSEL HEATING.

REFERENCES:

1. PROCESS FLOW DIAGRAM HLW VITRIFICATION HLW CANISTER DECON (SYSTEM HDH), 24590-HLW-M5-V17T-P0006.
2. SYSTEM DESCRIPTION FOR HLW SYSTEM HDH CANISTER DECONTAMINATION HANDLING SYSTEM, 24590-HLW-3YD-HDH-00002.
3. ENGINEERING SPECIFICATION FOR INSTRUMENT PIPING MATERIAL CLASSES, 24590-WTP-3PS-JXF0-T0001.
4. DELETED
5. THE REQUIRED BATCH SEQUENCES, PERMISSIVES, INTERLOCKS, ALARMS AND OPERATOR INTERFACE POINTS ARE FULLY DESCRIBED IN THE SOFTWARE FUNCTIONAL SPECIFICATION FOR HLW CANISTER DECONTAMINATION HANDLING (HDH) SYSTEM, 24590-HLW-3PS-HDH-T0001.

PLEASE NOTE THAT SOURCE, SPECIAL NUCLEAR AND BYPRODUCT MATERIALS, AS DEFINED IN THE ATOMIC ENERGY ACT OF 1954 (AEA), ARE REGULATED AT THE U.S. DEPARTMENT OF ENERGY (DOE) FACILITIES EXCLUSIVELY BY DOE ACTING PURSUANT TO ITS AEA AUTHORITY. DOE ASSERTS, THAT PURSUANT TO THE AEA, IT HAS SOLE AND EXCLUSIVE RESPONSIBILITY AND AUTHORITY TO REGULATE SOURCE, SPECIAL NUCLEAR, AND BYPRODUCT MATERIAL AT DOE-OWNED NUCLEAR FACILITIES. INFORMATION CONTAINED HEREIN ON RADIONUCLIDES IS PROVIDED FOR PROCESS DESCRIPTION PURPOSES ONLY.

REV	DESCRIPTION	ORG	CHKD	RVWD	APVD	DATE
2	ISSUED FOR PERMITTING USE	LGS	MK	SMK	EJS	19 Mar 2007
1	ISSUED FOR PERMITTING USE	UO	SC	EI	TV	3-29-05
0	ISSUED FOR PERMITTING USE	JM	TMG	DMY	JFS	2-9-04

REVISION HISTORY

Q QUALITY DESIGNATOR

ISSUED BY RPP-WTP PDC

ISSUE STAMP

STEVEN PAUL KREITZBERG, STATE OF WASHINGTON, 18995, REGISTERED PROFESSIONAL ENGINEER
EXPIRES 3-16-08

	PROJECT No.	24590
	SITE	HANFORD
	AREA	200E
	BUILDING No.	30

	BY	DATE
ORIGINATOR	JASON MEDINA	2/6/04
CHECKER	T. M. GALIOTO	2/6/04
APPROVER	JOHN F. SCHNEIDER	2/9/04
REVIEWER	DONNA YARBROUGH	2/6/04

CONTENT APPLICABLE TO ALARA? [X] YES [ ] NO
ADR NO. NA REV: NA
SAFETY SCREEN REQUIRED? [ ] YES [X] NO EMAS INITIAL IF YES ___

SAFETY SCREEN IS REQUIRED FOR DRAWING TYPES IDENTIFIED IN 24590-WTP-GPP-SREQ-002

BECHTEL

RIVER PROTECTION PROJECT
WASTE TREATMENT PLANT
2435 STEVENS CENTER PLACE
RICHLAND, WA 99354

CONTRACT No: DE-AC27-01RV14136

P&ID HLW CANISTER DECONTAMINATION HANDLING SYSTEM

SCALE: NONE

24590-HLW-M6-HDH-P0001

REV 2

"E" SIZE - 44x34
COMPUTER GENERATED - MANUAL CHANGES NOT PERMITTED

R10830104

09/04/2007 09:55:44 AM

PLOTTED BY: rkstevens
C:\Work\rkstevens\Desktop\570\HLW\M6\HDH\P0001.dgn

FORM E_SDN.DGN 02/2003

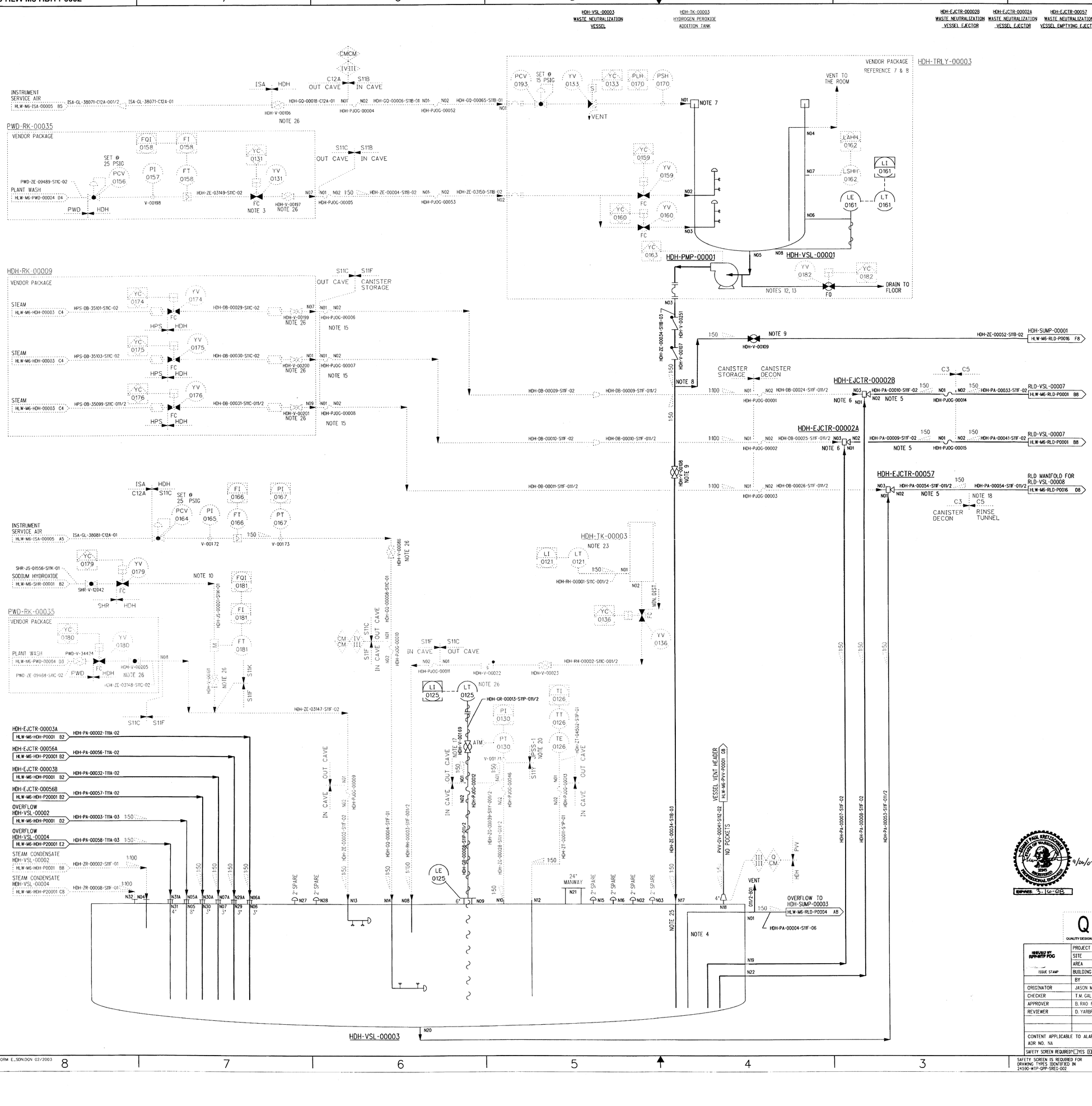

NOTES:

1. SEE DRAWINGS 24590-WTP-M6-50-P0001 THROUGH 24590-WTP-M6-50-P0008 FOR GENERAL NOTES, SYMBOLS AND LEGEND, AND GENERAL SLOPE REQUIREMENTS.
2. DELETED
3. VALVES DOWNSTREAM OF TOTALIZING FLOW INDICATOR FQI-0158 ARE CONTROLLED BY THE FQI. SEE REFERENCE 5.
4. INLET ELEVATION OF OVERFLOW LINE SHALL BE 4" LOWER THAN THAT OF EJECTOR SUCTION FOR HDH-EJCTR-00002A/B.
5. EJECTOR DISCHARGE PIPING TO HAVE A MINIMUM LENGTH OF STRAIGHT PIPE EQUIVALENT TO 10 TIMES OF PIPE OUTSIDE DIAMETER BEFORE THE FIRST BEND.
6. EJECTOR TO BE LOCATED AT THE LOWEST SECTION OF SUCTION PIPING.
7. AN INFLATABLE SEAL IS INSTALLED AT THE TOP OF THE CONTAINER.
8. DRAIN LINE HDH-ZE-00052-S11B-02 TO BE LOCATED AT THE LOWEST POINT OF PUMP DISCHARGE PIPING.
9. VALVE TO BE LOCATED NEAR THE SHIELD DOOR TO ALLOW FOR OPERATOR'S MANUAL OPERATION AT THE SHIELD DOOR OPENING.
10. VALVE UPSTREAM OF TOTALING FLOW INDICATOR FQI-0181 IS CONTROLLED BY THE FQI. SEE REFERENCE 5.
11. CONTENTS OF THIS DOCUMENT ARE DANGEROUS WASTE PERMIT AFFECTING.
12. GRAVITY DRAIN FOR RECOVERY OPERATIONS.
13. LOCATE AT LOWEST POINT POSSIBLE FOR OPTIMUM DRAIN.
14. ALL SYSTEMS, STRUCTURES AND COMPONENTS SHOWN ON THIS DRAWING ARE QUALITY LEVEL CM AND SEISMIC CATEGORY SC-III, UNLESS OTHERWISE NOTED.
15. STEAM SUPPLY LINES REQUIRE 34 FT OF BAROMETRIC HEAD ABOVE OVERFLOW. THE BAROMETRIC HEAD REQUIREMENT SHALL BE FULLY CONTAINED IN RS AREAS.
16. DELETED
17. RADAR GUIDE IS TO BE ROUTED TO TRANSMITTER. A FULL PORT BALL VALVE IS REQUIRED FOR ISOLATION PURPOSE AT TRANSMITTER END OF GUIDE TUBE.
18. THIS IS A STRAIGHT THROUGH WALL PENETRATION.
19. DELETED
20. UPSS-1 SPECIFICATION DEFINED IN INSTRUMENT PIPING MATERIAL CLASSES, SEE REFERENCE 3. SPECIFICATION ALSO DEFINES AREA OF C&I RESPONSIBILITY.

21-22. DELETED

23. THIS IS A HYDROGEN PEROXIDE ADDITION TANK SYMBOL.
24. DELETED
25. DRILL A 3/8 INCH HOLE IN THE PIPE CONNECTED TO NOZZLE 17. THIS HOLE SHALL BE LOCATED ON THE VESSEL HEAD SPACE ABOVE THE OVERFLOW LEVEL OF THE VESSEL. THE HOLE IS TO PREVENT SIPHON BETWEEN HDH-VSL-00003 AND HDH-VSL-00001.
26. LOCATE VALVE AS CLOSE AS POSSIBLE TO THE C5 BOUNDARY.
27. DELETED
28. INSTRUMENTS ARE QUALITY LEVEL CM. INSTRUMENT, ROOT VALVE, AND TUBING CONFINEMENT REQUIREMENTS ARE THE SAME AS THE CONNECTING PIPING.
29. THE GEOMETRY OF JOGGLED (OFFSET) PENETRATIONS IS QUALITY LEVEL Q FOR RADIATION PROTECTION. THE QUALITY LEVEL AND SEISMIC CATEGORY DESIGNATIONS OF PIPING WITHIN JOGGLES ARE THE SAME AS CONNECTING PIPING.
30. DELETED
31. THE COMPONENTS SHOWN ON THIS DRAWING IN PHANTOM DO NOT REQUIRE INDEPENDENT QUALIFIED REGISTERED PROFESSIONAL ENGINEER ASSESSMENTS OF DESIGN OR INSTALLATION INSPECTIONS BY A QUALIFIED INSTALLATION INSPECTOR IN ACCORDANCE WITH THE DWP AND/OR WASHINGTON ADMINISTRATIVE CODE REQUIREMENTS.
32. REVISED PER 24590-HLW-M6N-HDH-00019, 00020, 24590-WTP-SDDR-PROC-05-00521, 24590-HLW-M6N-M80T-00004 AND TO INCORPORATE P-JOGGLES. ADDED/DELETED/REVISED NOTES, INSTRUMENTS, SLOPES, REFERENCES AND MINOR EDITORIAL CHANGES.

HOLD/OPEN ITEMS:

1-3. DELETED

4. ON HOLD PENDING EVALUATION OF HDH-VSL-00002 AND -00004 HEATING.

REFERENCES:

1. PROCESS FLOW DIAGRAM HLW VITRIFICATION HLW CANISTER DECON (SYSTEM HDH), 24590-HLW-M5-V17T-P0006.
2. DELETED
3. ENGINEERING SPECIFICATION FOR INSTRUMENT PIPING MATERIAL CLASSES, 24590-WTP-3PS-JXFO-T0001.
4. DELETED
5. THE REQUIRED BATCH SEQUENCES, PERMISSIVES, INTERLOCKS, ALARMS AND OPERATOR INTERFACE POINTS ARE FULLY DESCRIBED IN THE SOFTWARE FUNCTIONAL SPECIFICATION FOR HLW CANISTER DECONTAMINATION HANDLING (HDH) SYSTEM, 24590-HLW-3PS-HDH-T0001.
6. 24590-HLW-3YD-HDH-00002, SYSTEM DESCRIPTION FOR HLW SYSTEM HDH CANISTER DECONTAMINATION HANDLING.
7. 24590-QL-POA-MQTS-00002-01-127, DRAWING-DECONTAMINATION VESSEL ASSEMBLY.
8. 24590-QL-POA-MQTS-00002-01-00222, DRAWING-CANISTER RINSE BOGIE PNEUMATIC SYSTEM SCHEMATIC.

PLEASE NOTE THAT SOURCE, SPECIAL NUCLEAR AND BYPRODUCT MATERIALS, AS DEFINED IN THE ATOMIC ENERGY ACT OF 1954 (AEA), ARE REGULATED AT THE U.S. DEPARTMENT OF ENERGY (DOE) FACILITIES EXCLUSIVELY BY DOE ACTING PURSUANT TO ITS AEA AUTHORITY. DOE ASSERTS, THAT PURSUANT TO THE AEA, IT HAS SOLE AND EXCLUSIVE RESPONSIBILITY AND AUTHORITY TO REGULATE SOURCE, SPECIAL NUCLEAR, AND BYPRODUCT MATERIAL AT DOE-OWNED NUCLEAR FACILITIES. INFORMATION CONTAINED HEREIN ON RADIONUCLIDES IS PROVIDED FOR PROCESS DESCRIPTION PURPOSES ONLY.

STATE OF WASHINGTON — 21980 — REGISTERED PROFESSIONAL ENGINEER — SCOTT PAUL KRETZSCHMAR — 9/20/07
EXPIRES: 3-16-08

REV	DESCRIPTION	ORG	CHKD	RVWD	APVD	DATE
2	ISSUED FOR PERMITTING USE	LCS	GK	SPK	EWS	9/19/2007
1	ISSUED FOR PERMITTING USE	UO	SC	EI	TV	5-29-05
0	ISSUED FOR PERMITTING USE	JM	TMG	DWY	BR	2-9-04

Q — QUALITY DESIGNATOR

REVISION HISTORY

ISSUED BY RPP-WTP PDC — ISSUE STAMP

	BY	DATE
ORIGINATOR	JASON MEDINA	2/9/04
CHECKER	T.M. GALIOTO	2-9-04
APPROVER	B. RAO for J.S.	2-9-04
REVIEWER	D. YARBROUGH	2-9-04

CONTENT APPLICABLE TO ALARA? [X] YES [ ] NO
ADR NO. NA REV: NA
SAFETY SCREEN REQUIRED? [ ] YES [X] NO EMS INITIAL IF YES ____

PROJECT No.	24590
SITE	HANFORD
AREA	200E
BUILDING No.	30

BECHTEL

RIVER PROTECTION PROJECT
WASTE TREATMENT PLANT
2435 STEVENS CENTER PLACE
RICHLAND, WA 99354

CONTRACT No: DE-AC27-01RV14136

P&ID - HLW CANISTER DECONTAMINATION HANDLING SYSTEM

SCALE: NONE

24590-HLW-M6-HDH-P0002 REV 2

SAFETY SCREEN IS REQUIRED FOR DRAWING TYPES IDENTIFIED IN 24590-WTP-GPP-SREG-002

"E" SIZE - 44x34
COMPUTER GENERATED - MANUAL CHANGES NOT PERMITTED

R1080103

09/04/2007 09:59:50 AM

PLOTTED BY: jcarvic
C:\Work\jcarvic\dms05070\HLW\M6\HDH\P0002.dgn

FORM E_SDK.DGN 02/2003

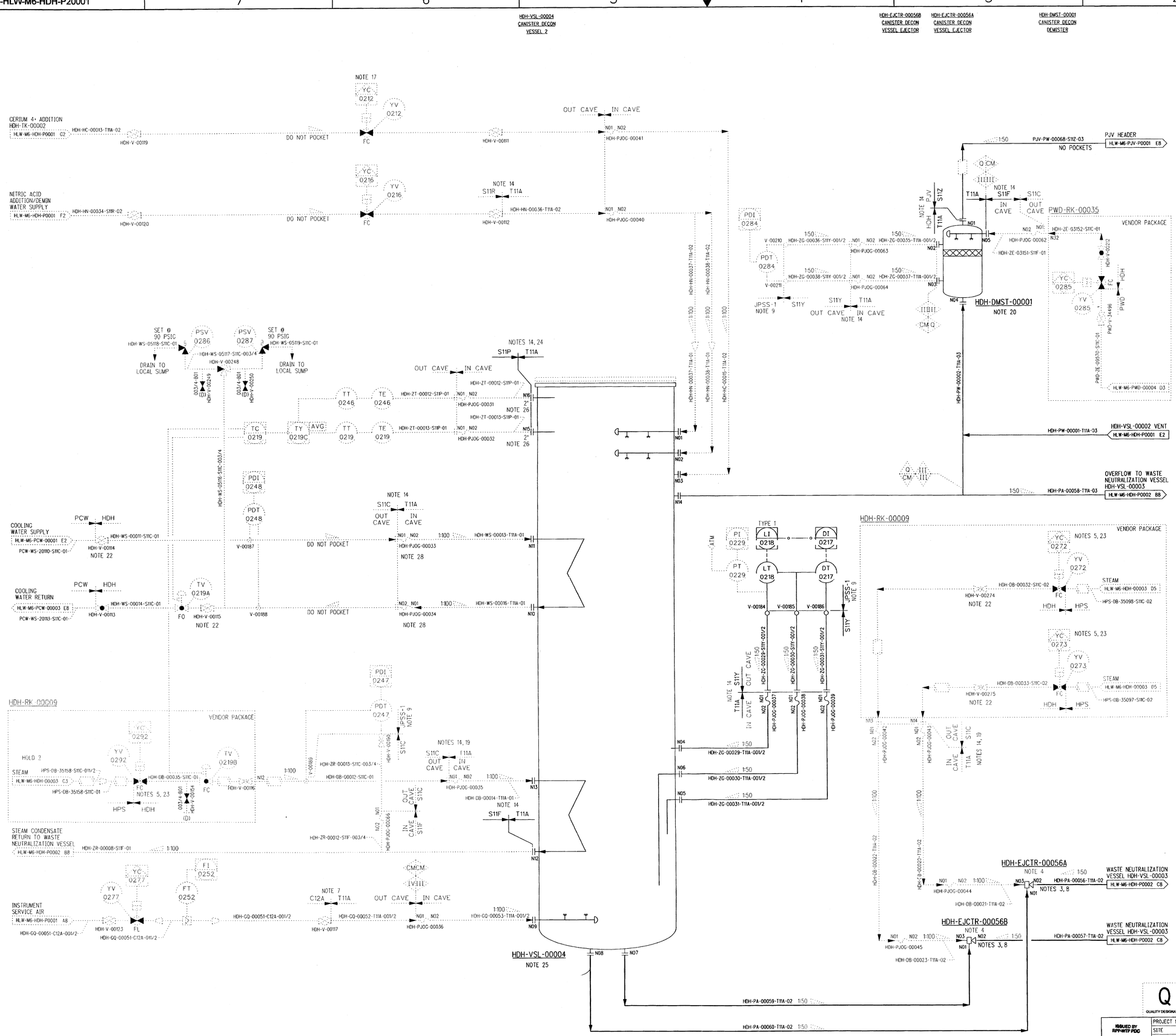

NOTES:

1. SEE DRAWINGS 24590-WTP-M6-50-P0001 THROUGH 24590-WTP-M6-50-P0008 FOR GENERAL NOTES, SYMBOLS AND LEGEND, AND GENERAL SLOPE REQUIREMENTS.
2. DELETED
3. EJECTOR DISCHARGE PIPING TO HAVE A MINIMUM LENGTH OF STRAIGHT PIPE EQUIVALENT TO 10 TIMES THE PIPE OUTSIDE DIAMETER BEFORE FIRST BEND.
4. EJECTOR TO BE LOCATED AT THE LOWEST SECTION OF SUCTION PIPING.
5. THE VALVE SHALL BE A SLOW OPENING VALVE TO PREVENT STEAM CONDENSATE HAMMER.
6. CONTENTS OF THIS DOCUMENT ARE DANGEROUS WASTE PERMIT AFFECTING.
7. A FLANGE KIT IS REQUIRED BETWEEN CARBON STEEL AND TITANIUM FLANGES TO PREVENT GALVANIC CORROSION.
8. THE HIGHEST SECTION OF THE EJECTOR DISCHARGE LINES TO BE ABOVE OVERFLOW NOZZLE ELEVATION OF HDH-VSL-00004.
9. JPSS-1 SPECIFICATION DEFINED IN INSTRUMENT PIPING MATERIAL CLASSES, SEE REFERENCE 3. SPECIFICATION CHANGE ALSO DEFINES AREA OF C&I RESPONSIBILITY.
10. DELETED
11. ALL SYSTEMS, STRUCTURES, AND COMPONENTS SHOWN ON THIS DRAWING ARE QUALITY LEVEL CM AND SEISMIC CATEGORY SC-III, UNLESS OTHERWISE NOTED.

12-13. DELETED

14. A HELICOFLEX GASKET IS TO BE UTILIZED AT THE FLANGE INTERFACE BETWEEN STAINLESS STEEL AND TITANIUM.
15. DELETED
16. DELETED
17. MINIMIZE LENGTH OF PIPING BETWEEN HDH-TK-00002 SHOWN ON 24590-HLW-M6-HDH-P0001 AND YC-0212.
18. DELETED
19. LINES REQUIRE 34FT OF BAROMETRIC HEAD ABOVE THE OVERFLOW. THE BAROMETRIC HEAD REQUIREMENT SHALL BE FULLY CONTAINED IN R5 AREA.
20. THIS IS A DEMISTER SYMBOL.
21. INSTRUMENTS ARE QUALITY LEVEL CM. INSTRUMENT, ROOT VALVE, AND TUBING CONFINEMENT REQUIREMENTS ARE THE SAME AS THE CONNECTING PIPING.
22. LOCATE VALVE AS CLOSE AS POSSIBLE TO THE C5 BOUNDARY.
23. ACTUATED STEAM SUPPLY VALVE TO BE LOCATED AT HIGH POINT IN THE LINE.
24. LID DESIGN REQUIRES AIR GAP FOR HPAV.
25. THIS IS A CANISTER DECON VESSEL SYMBOL.
26. USE REDUCING FLANGE FOR CONNECTIONS TO NOZZLES N15 AND N16.
27. THE GEOMETRY OF JOGGLED (OFFSET) PENETRATIONS IS QUALITY LEVEL Q FOR RADIATION PROTECTION. THE QUALITY LEVEL AND SEISMIC CATEGORY DESIGNATIONS OF PIPING WITHIN JOGGLES ARE THE SAME AS CONNECTING PIPING.
28. MAIN HEADER REQUIRES 34 FT OF BAROMETRIC HEAD ABOVE THE MAXIMUM LIQUID LEVEL IN THE VESSEL.
29. DELETED
30. THE COMPONENTS SHOWN ON THIS DRAWING IN PHANTOM DO NOT REQUIRE INDEPENDENT QUALIFIED REGISTERED PROFESSIONAL ENGINEER ASSESSMENTS OF DESIGN OR INSTALLATION INSPECTIONS BY A QUALIFIED INSTALLATION INSPECTOR IN ACCORDANCE WITH THE DWP AND/OR WASHINGTON ADMINISTRATIVE CODE REQUIREMENTS.
31. REVISED PER 24590-HLW-M6N-M80T-00004 AND TO INCORPORATE P-JOGGLES. ADDED/DELETED/REVISED NOTES, LINES, REFERENCES, SLOPES AND MINOR EDITORIAL CHANGES.

HOLD/OPEN ITEMS:

1. DELETED
2. PENDING ASSESSMENT OF VESSEL HEATING.

REFERENCES:

1. PROCESS FLOW DIAGRAM HLW VITRIFICATION HLW CANISTER DECON (SYSTEM HDH), 24590-HLW-M5-V17T-P0006.
2. SYSTEM DESCRIPTION FOR HLW SYSTEM HDH CANISTER DECONTAMINATION HANDLING SYSTEM, 24590-HLW-3YD-HDH-00002.
3. ENGINEERING SPECIFICATION INSTRUMENT PIPING MATERIAL CLASSES, 24590-WTP-3PS-JXF0-T0001.
4. DELETED
5. THE REQUIRED BATCH SEQUENCES, PERMISSIVES, INTERLOCKS, ALARMS AND OPERATOR INTERFACE POINTS ARE FULLY DESCRIBED IN THE SOFTWARE FUNCTIONAL SPECIFICATION FOR HLW CANISTER DECONTAMINATION HANDLING (HDH) SYSTEM, 24590-HLW-3PS-HDH-T0001.

PLEASE NOTE THAT SOURCE, SPECIAL NUCLEAR AND BYPRODUCT MATERIALS, AS DEFINED IN THE ATOMIC ENERGY ACT OF 1954 (AEA), ARE REGULATED AT THE U.S. DEPARTMENT OF ENERGY (DOE) FACILITIES EXCLUSIVELY BY DOE ACTING PURSUANT TO ITS AEA AUTHORITY. DOE ASSERTS, THAT PURSUANT TO THE AEA, IT HAS SOLE AND EXCLUSIVE RESPONSIBILITY AND AUTHORITY TO REGULATE SOURCE, SPECIAL NUCLEAR, AND BYPRODUCT MATERIAL AT DOE-OWNED NUCLEAR FACILITIES. INFORMATION CONTAINED HEREIN ON RADIONUCLIDES IS PROVIDED FOR PROCESS DESCRIPTION PURPOSES ONLY.

REV	DESCRIPTION	ORG	CHKD	RVWD	APVD	DATE
2	ISSUED FOR PERMITTING USE	LCS	AK	AK	[illegible]	9/28/2007
1	ISSUED FOR PERMITTING USE	UO	SC	EI	TV	3-29-05
0	ISSUED FOR PERMITTING USE	JM	TMG	DMY	JFS	2-9-04

REVISION HISTORY

Q QUALITY DESIGNATOR

ISSUED BY RPP-WTP PDC

ISSUE STAMP

PROJECT No.	24590	
SITE	HANFORD	
AREA	200E	
BUILDING No.	30	

	BY	DATE
ORIGINATOR	JASON MEDINA	2/6/04
CHECKER	T.M. GALIOTO	2-6-04
APPROVER	JOHN F. SCHNEIDER	2-9-04
REVIEWER	D. M. YARBROUGH	2-6-04

CONTENT APPLICABLE TO ALARA? [X] YES [ ] NO
ADR NO.: NA REV: NA
SAFETY SCREEN REQUIRED? [ ] YES [X] NO EMS INITIAL IF YES

SAFETY SCREEN IS REQUIRED FOR DRAWING TYPES IDENTIFIED IN 24590-WTP-GPP-SREG-002

"E" SIZE - 44x34
COMPUTER GENERATED - MANUAL CHANGES NOT PERMITTED

RIVER PROTECTION PROJECT
WASTE TREATMENT PLANT
2435 STEVENS CENTER PLACE
RICHLAND, WA 99354

CONTRACT No: DE-AC27-01RV14136

P&ID - HLW CANISTER DECONTAMINATION HANDLING SYSTEM

SCALE: NONE

24590-HLW-M6-HDH-P20001

REV 2

R10830102

09/04/2007 10:00:25 AM

PLOTTED BY: tcsorvis
C:\Work Versions\24590\TO\tcs\M6\M6HP20001.dgn

FORM E_SDN.DGN 02/2003

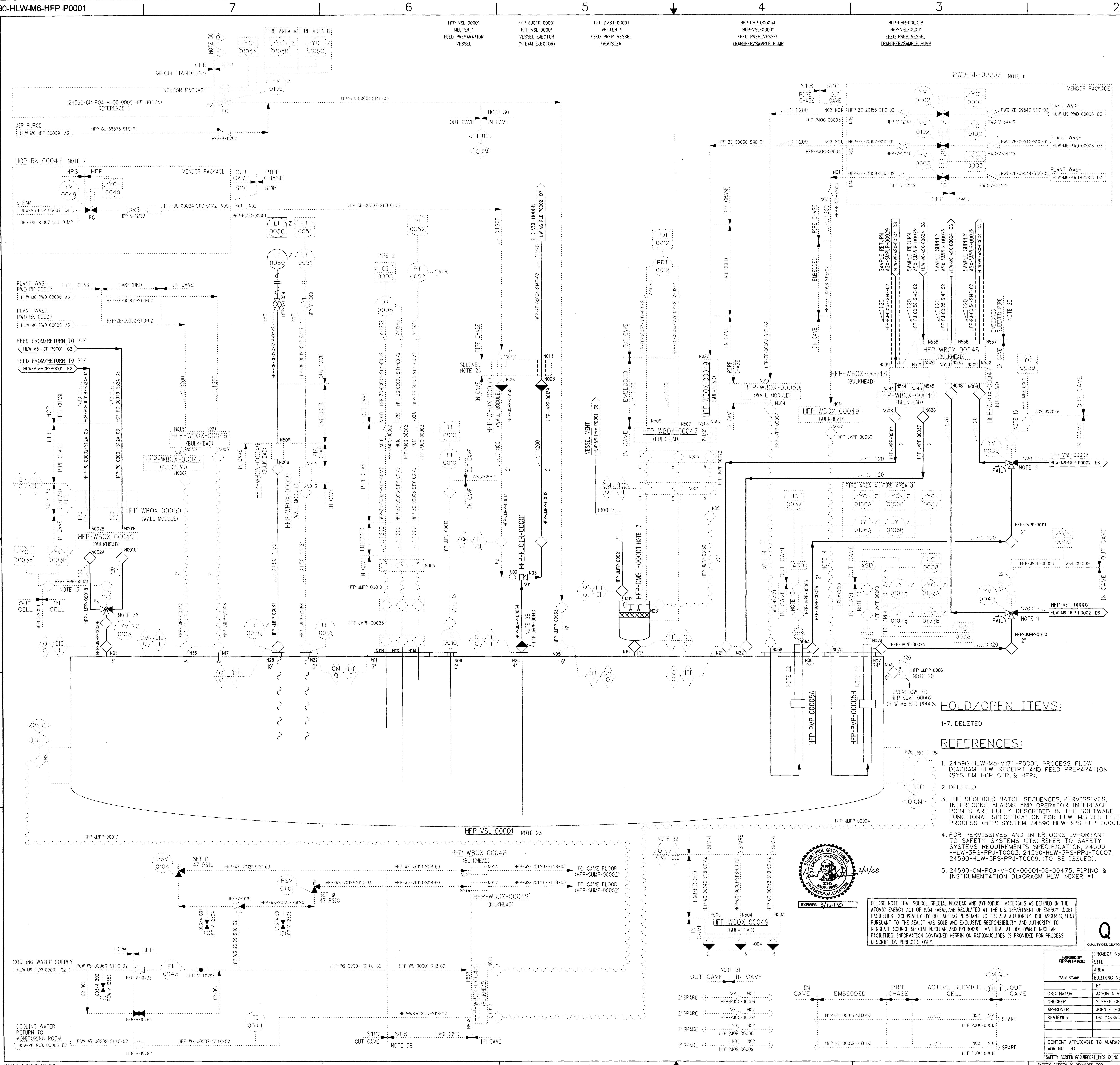

NOTES:

1. SEE DRAWINGS 24590-WTP-M6-50-P0001 THROUGH 24590-WTP-M6-50-P0008 FOR GENERAL NOTES, SYMBOLS AND LEGEND, AND GENERAL SLOPE REQUIREMENTS.

2-5. DELETED

6. SEE P&ID 24590-HLW-M6-PWD-00006 FOR WASH RACK DETAILS. AUTOMATIC VALVES WILL BE SLOW ACTING TO PREVENT WATER HAMMER.

7. SEE P&ID 24590-HLW-M6-HOP-00007 FOR STEAM RACK DETAILS. EJECTOR SUPPLY LINES REQUIRE ONE BAROMETRIC HEAD ABOVE THE EJECTOR LEG MAXIMUM LIQUID LEVEL. THE BAROMETRIC HEAD REQUIREMENT SHALL BE FULLY CONTAINED IN R5 AREAS. AUTOMATIC VALVES WILL BE SLOW ACTING TO PREVENT WATER HAMMER.

8-10. DELETED

11. LOCATE 3-WAY VALVES AS CLOSE TO HFP-VSL-00002 AS POSSIBLE.

12. DELETED

13. ELECTRICAL AND INSTRUMENT JUMPERS ARE SHOWN ON SYSTEM BLOCK DIAGRAMS 24590-HLW-J1-HFP-00001 AND 00002. PNEUMATIC JUMPERS ARE SHOWN ON 24590-HLW-M6-ISA-00007.

14. PLANT WASH USED FOR PUMP PRIMING AND PIPE FLUSH.

15-16. DELETED

17. THIS IS A DEMISTER SYMBOL. DEMISTER IS MOUNTED DIRECTLY TO VESSEL NOZZLE. LOCATE THE NOZZLE IN HIGH POINT OF VESSEL HEAD (AS CLOSE AS POSSIBLE).

18-19. DELETED

20. OVERFLOW JUMPER TO PROVIDE UNRESTRICTED FLOW DIRECTED TOWARD SUMP. FLAPPER TO MINIMIZE AIR IN-LEAKAGE THROUGH OVERFLOW NOZZLE OPENING. OVERFLOW JUMPER IS QUALITY LEVEL Q AND SEISMIC CATEGORY SC-I.

21. CONTENTS OF THIS DOCUMENT ARE DANGEROUS WASTE PERMIT AFFECTING.

22. THE MINIMUM REQUIRED QUALITY LEVELS AND SEISMIC CATEGORIES OF THE PUMP COMPONENTS ARE AS FOLLOWS: PUMP BODY IS QUALITY LEVEL Q AND SEISMIC CATEGORY SC-II (BASED ON SC-II OVER SC-I REQUIREMENTS). PUMP MOTOR IS QUALITY LEVEL CM AND SEISMIC CATEGORY SC-II (BASED ON SC-II OVER SC-I REQUIREMENTS). DISCHARGE PIPING/JUMPERS ARE QUALITY LEVEL Q AND SEISMIC CATEGORY SC-III.

23. AGITATOR AND SPARGERS ARE SHOWN ON P&ID 24590-HLW-M6-HFP-P0007. THE VESSEL INCLUDING PERMANENTLY WELDED ITEMS WITHIN THE VESSEL ARE QUALITY LEVEL Q AND SEISMIC CATEGORY SC-1. THE INSERTED PORTIONS OF JUMPERS WITHIN THE VESSEL ARE QUALITY LEVEL CM AND SEISMIC CATEGORY SC-II UNLESS OTHERWISE NOTED.

24. DELETED

25. SLEEVED PIPE IS INDICATED BY TWO DASHED LINES SURROUNDING A PIPELINE. PIPE SLEEVE IS TO PROVIDE SECONDARY CONTAINMENT PER DWP AND SHALL MATCH S11C PIPE SPEC. SLOPE OF SLEEVE TO MATCH INNER PIPE.

26-27. DELETED

28. VESSEL EMPTYING EJECTOR (HFP-JMPP-00012, 00013 AND 00064) ARE NOT INSTALLED ON/IN VESSEL DURING NORMAL OPERATION. JUMPER COVERS/BLINDS (HFP-JMPP-00138, 00139, AND 00140) ARE INSTALLED DURING NORMAL OPERATION. HFP-JMPP-00138 AND 00139 ARE QUALITY LEVEL CM AND SEISMIC CATEGORY SC-III. HFP-JMPP -00140 IS QUALITY LEVEL Q AND SEISMIC CATEGORY SC-III.

29. COOLING JACKET DISCHARGE (RETURN) NOZZLE SHALL BE INSTALLED SO THERE ARE NO AIR POCKETS IN THE TOP OF THE JACKET.

30. OUT CAVE PORTION OF GLASS FORMER FEED LINE (UP TO AND INCLUDING THE SLIDE VALVE) SHALL BE QUALITY LEVEL Q AND SEISMIC CATEGORY SC-I. MINIMUM REQUIREMENTS FOR THE IN-CAVE PORTION IS QUALITY LEVEL CM AND SEISMIC CATEGORY SC-III. PENETRATION THROUGH FLOOR SHALL HAVE AN OFFSET FOR SHIELDING PURPOSES. SLOPE OF LINE SHALL BE MINIMUM 60°. THE AIR PURGE LINE IS QUALITY LEVEL Q AND SEISMIC CATEGORY SC-I FOR CONFINEMENT PURPOSES.

31. THE GEOMETRY OF JOGGLED (OFFSET) PENETRATIONS IS QUALITY LEVEL Q FOR RADIATION PROTECTION. THE QUALITY LEVEL AND SEISMIC CATEGORY DESIGNATIONS OF PIPING WITHIN JOGGLES ARE THE SAME AS CONNECTING PIPING. PIPING WITHIN SPARE JOGGLES IS QUALITY LEVEL Q AND SEISMIC CATEGORY SC-I.

32. QUALITY LEVEL Q AND SEISMIC CATEGORY SC-I CONFINEMENT IS REQUIRED.

33. INSTRUMENTS ARE QUALITY LEVEL CM UNLESS OTHERWISE NOTED OR ARE AIR PERMIT AFFECTING. INSTRUMENT, ROOT VALVES AND TUBING CONFINEMENT REQUIREMENTS ARE THE SAME AS THE CONNECTING PROCESS PIPE UNLESS OTHERWISE NOTED.

34. THE SEISMIC DESIGNATION SHOWN ON THIS P&ID DO NOT INCLUDE SEISMIC CATEGORY SC-II. DESIGNATIONS OF SEISMIC CATEGORY SC-II IS RELATED TO PORTIONS OF PIPING (OR COMPONENTS) BASED ON SPATIAL INTERACTIONS, WHICH ARE NOT DEPICTED ON THE P&ID. THE SEISMIC CATEGORY SC-II DESIGNATION WILL BE DOCUMENTED BASED ON TOPOGRAPHY REVIEWS.

35. FAIL CLOSE TO VESSEL.

36. DELETED

37. THE PRESSURE BOUNDARY FOR ALL SYSTEMS, STRUCTURES, AND COMPONENTS ON THIS DRAWING IS IDENTIFIED AS SEISMIC CATEGORY SC-III AND QUALITY LEVEL CM, UNLESS OTHERWISE NOTED.

38. MAIN HEADER REQUIRES 34 FEET OF BAROMETRIC HEAD ABOVE VESSEL OVERFLOW NOZZLE.

39. DELETED

40. THE COMPONENTS SHOWN ON THIS DRAWING IN PHANTOM DO NOT REQUIRE INDEPENDENT QUALIFIED REGISTERED PROFESSIONAL ENGINEER ASSESSMENTS OF DESIGN OR INSTALLATION INSPECTIONS BY A QUALIFIED INSTALLATION INSPECTOR IN ACCORDANCE WITH THE DWP AND/OR WASHINGTON ADMINISTRATIVE CODE REQUIREMENTS.

41. REVISED PER 24590-HLW-M6N-HFP-00042, 00051, 00054, 00056, 00073, 24590-HLW-M6PR-HFP-00003, 24590-HLW-M6N-M80T-00001, 00007 AND TO INCORPORATE P-JOGGLES. ADDED/REVISED/DELETED NOTES, HOLDS, REFERENCES, QUALITY/SEISMIC FLAG, PIPE SPECS AND MINOR EDITORIAL CHANGES. CHANGE YV-0049 TO BALL VALVE.

HOLD/OPEN ITEMS:

1-7. DELETED

REFERENCES:

1. 24590-HLW-M5-V17T-P0001, PROCESS FLOW DIAGRAM HLW RECEIPT AND FEED PREPARATION (SYSTEM HCP, GFR, & HFP).
2. DELETED
3. THE REQUIRED BATCH SEQUENCES, PERMISSIVES, INTERLOCKS, ALARMS AND OPERATOR INTERFACE POINTS ARE FULLY DESCRIBED IN THE SOFTWARE FUNCTIONAL SPECIFICATION FOR HLW MELTER FEED PROCESS (HFP) SYSTEM, 24590-HLW-3PS-HFP-T0001.
4. FOR PERMISSIVES AND INTERLOCKS IMPORTANT TO SAFETY SYSTEMS (ITS) REFER TO SAFETY SYSTEMS REQUIREMENTS SPECIFICATION, 24590 -HLW-3PS-PPJ-T0003. 24590-HLW-3PS-PPJ-T0007, 24590-HLW-3PS-PPJ-T0009. (TO BE ISSUED).
5. 24590-CM-POA-MH00-00001-08-00475, PIPING & INSTRUMENTATION DIAGRAGM HLW MIXER *1.

3/31/08

EXPIRES: 3/14/10

PLEASE NOTE THAT SOURCE, SPECIAL NUCLEAR AND BYPRODUCT MATERIALS, AS DEFINED IN THE ATOMIC ENERGY ACT OF 1954 (AEA), ARE REGULATED AT THE U.S. DEPARTMENT OF ENERGY (DOE) FACILITIES EXCLUSIVELY BY DOE ACTING PURSUANT TO ITS AEA AUTHORITY. DOE ASSERTS, THAT PURSUANT TO THE AEA, IT HAS SOLE AND EXCLUSIVE RESPONSIBILITY AND AUTHORITY TO REGULATE SOURCE, SPECIAL NUCLEAR, AND BYPRODUCT MATERIAL AT DOE-OWNED NUCLEAR FACILITIES. INFORMATION CONTAINED HEREIN ON RADIONUCLIDES IS PROVIDED FOR PROCESS DESCRIPTION PURPOSES ONLY.

Q
QUALITY DESIGNATOR

REV	DESCRIPTION	ORG	CHKD	RVWD	APVD	DATE
				CEX	RCA	
2	ISSUED FOR PERMITTING USE	LCS	GA	SPK	NEW	3/31/08
1	ISSUED FOR PERMITTING USE	SC	RR	EI	TV	5/18/05
0	ISSUED FOR PERMITTING USE	JM	SJC	DMY	JFS	5/5/04

REVISION HISTORY

ISSUED BY RPP-WTP PDC

ISSUE STAMP

PROJECT No.	24590
SITE	HANFORD
AREA	200E
BUILDING No.	30

	BY	DATE
ORIGINATOR	JASON A MEDINA	5/5/04
CHECKER	STEVEN CROSS	5/5/04
APPROVER	JOHN F SCHNEIDER	5/5/04
REVIEWER	DM YARBROUGH	5/5/04

CONTENT APPLICABLE TO ALARA? [X] YES [ ] NO
ADR NO. NA REV: NA
SAFETY SCREEN REQUIRED? [ ] YES [X] NO E&NS INITIAL IF YES ____

BECHTEL
RIVER PROTECTION PROJECT
WASTE TREATMENT PLANT
2435 STEVENS CENTER PLACE
RICHLAND, WA 99354

CONTRACT No: DE-AC27-01RV14136

P&ID - HLW MELTER FEED PROCESS SYSTEM MELTER FEED PREPARATION VESSEL HFP-VSL-00001

SCALE: NONE

24590-HLW-M6-HFP-P0001

REV 2

SAFETY SCREEN IS REQUIRED FOR DRAWING TYPES IDENTIFIED IN 24590-WTP-GPP-SREG-002

'E' SIZE - 44x34
COMPUTER GENERATED - MANUAL CHANGES NOT PERMITTED

R10891529

03/25/2008 01:10:48 PM

PLOTTED BY: lcsanvic
C:\Work\lcsanvic\dms05070\HLWM6HFPP0001.dgn

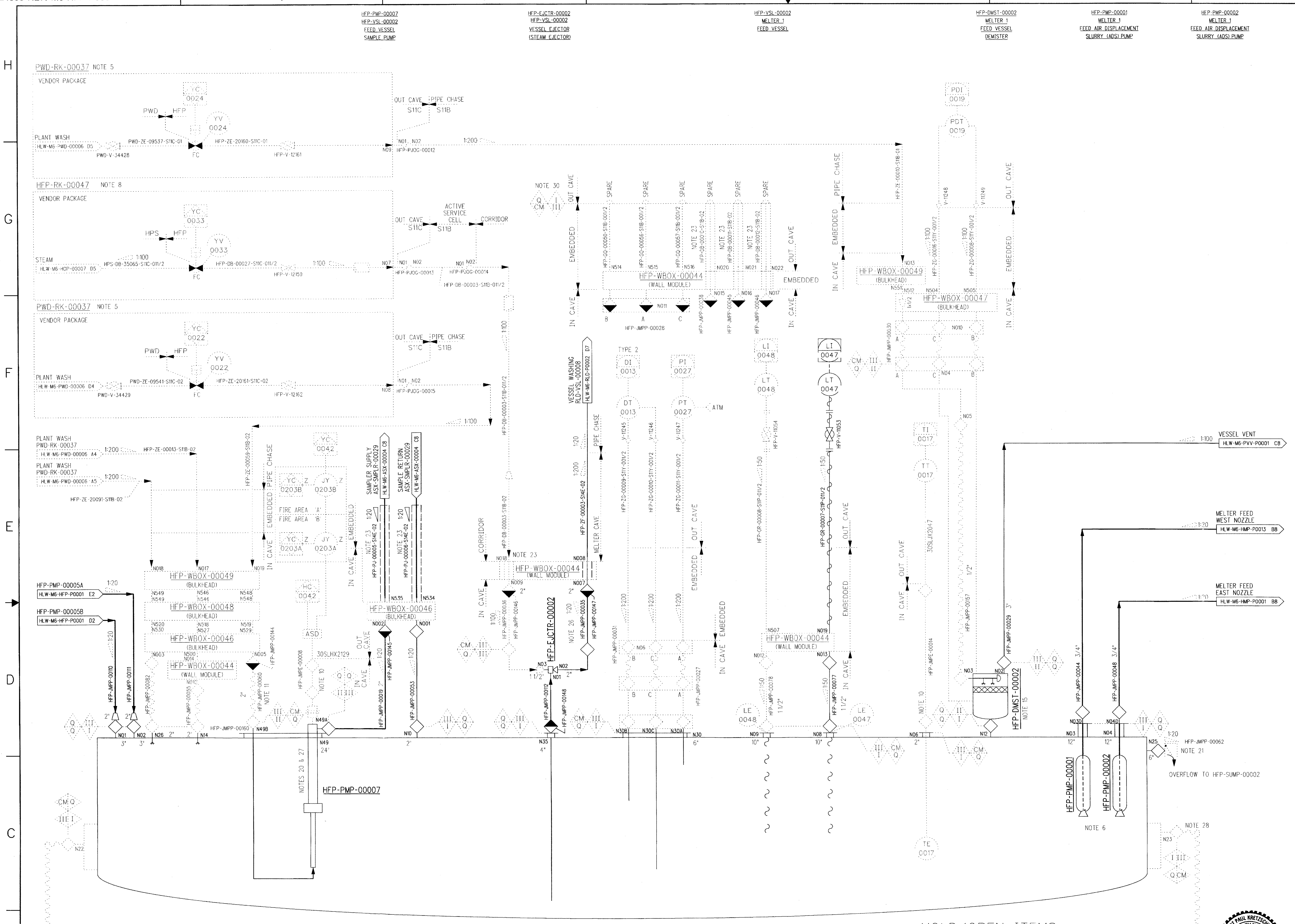

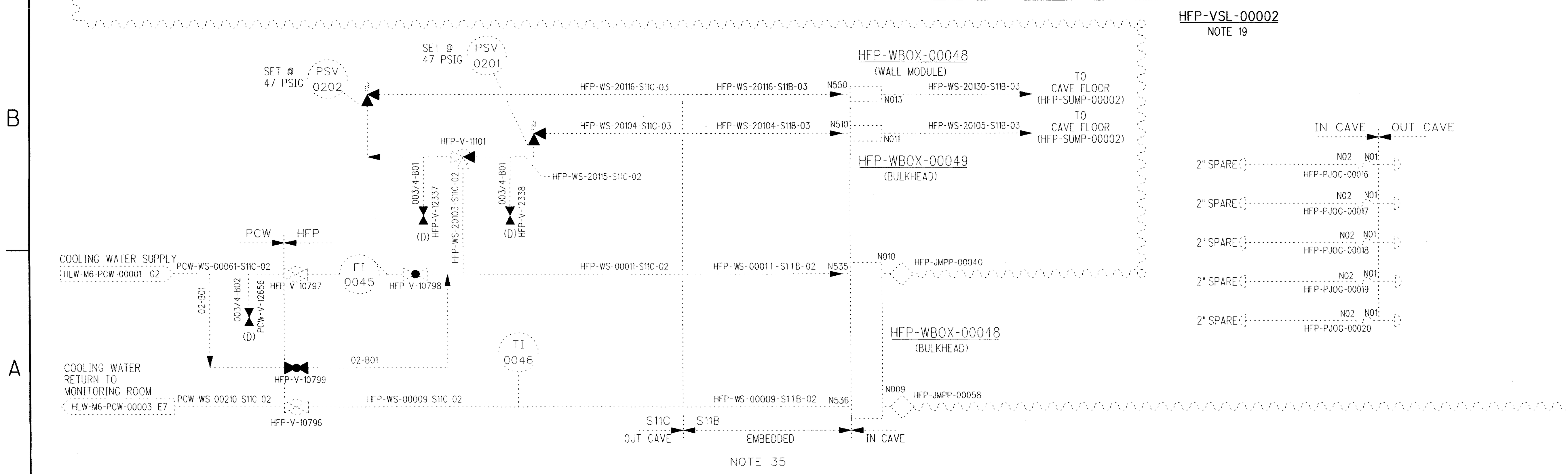

NOTES:

1. SEE DRAWINGS 24590-WTP-M6-50-P0001 THROUGH 24590-WTP-M6-50-P0008 FOR GENERAL NOTES, SYMBOLS AND LEGEND, AND GENERAL SLOPE REQUIREMENTS.

2-4. DELETED

5. SEE P&ID 24590-HLW-M6-PWD-00006 FOR WASH RACK DETAILS. AUTOMATIC VALVES WILL BE SLOW ACTING TO PREVENT WATER HAMMER.

6. SEE P&ID 24590-HLW-M6-HFP-00005 FOR ADS PUMP CONTROLS AND ADDITIONAL INSTRUMENTATION. THE MINIMUM QUALITY LEVELS AND SEISMIC CATEGORIES OF THE PUMP COMPONENTS ARE AS FOLLOWS: PUMP BODY IS QUALITY LEVEL CM AND SEISMIC CATEGORY SC-II (WITHIN THE VESSEL). PUMP DISCHARGE (PRESSURE BOUNDARY OUTSIDE OF VESSEL) IS QUALITY LEVEL Q AND SEISMIC CATEGORY SC-III.

7. DELETED

8. SEE P&ID 24590-HLW-M6-HOP-00007 FOR STEAM RACK DETAILS. EJECTOR SUPPLY LINES REQUIRE ONE BAROMETRIC HEAD ABOVE THE EJECTOR LEG MAXIMUM LIQUID LEVEL. THE BAROMETRIC HEAD REQUIREMENT SHALL BE FULLY CONTAINED IN R5 AREAS. AUTOMATIC VALVES WILL BE SLOW ACTING TO PREVENT WATER HAMMER.

9. DELETED

10. ELECTRICAL AND INSTRUMENT JUMPERS ARE SHOWN ON SYSTEM BLOCK DIAGRAM 24590-HLW-J1-HFP-00001 AND 00002. PNEUMATIC JUMPERS ARE SHOWN ON 24590-HLW-M6-ISA-00007.

11. PLANT WASH USED FOR PUMP PRIMING AND PIPE FLUSH.

12-14. DELETED

15. THIS IS A DEMISTER SYMBOL. DEMISTER IS MOUNTED DIRECTLY TO VESSEL NOZZLE. LOCATE DEMISTER ON HIGH POINT OF VESSEL HEAD (AS CLOSE AS POSSIBLE).

16-17. DELETED

18. CONTENTS OF THIS DOCUMENT ARE DANGEROUS WASTE PERMIT AFFECTING.

19. AGITATOR AND SPARGE LINES ARE SHOWN ON P&ID 24590-HLW-M6-HFP-P0008. THE VESSEL INCLUDING PERMANENTLY WELDED ITEMS WITHIN THE VESSEL ARE QUALITY LEVEL Q AND SEISMIC CATEGORY SC-I. THE INSERTED PORTIONS OF JUMPERS WITHIN THE VESSEL ARE QUALITY LEVEL CM AND SEISMIC CATEGORY SC-II, UNLESS OTHERWISE NOTED.

20. THE MINIMUM QUALITY LEVELS AND SEISMIC CATEGORIES OF THE PUMP COMPONENTS ARE AS FOLLOWS: PUMP BODY IS QUALITY LEVEL Q AND SEISMIC CATEGORY SC-II (BASED ON SC-II OVER SC-I REQUIREMENTS). PUMP MOTOR IS QUALITY LEVEL CM AND SEISMIC CATEGORY SC-II (BASED ON SC-II OVER SC-I REQUIREMENTS). DISCHARGE PIPING/JUMPERS ARE QUALITY LEVEL Q AND SEISMIC CATEGORY SC-III.

21. OVERFLOW JUMPER TO PROVIDE UNRESTRICTED FLOW DIRECTED TOWARD SUMP. FLAPPER TO MINIMIZE AIR IN-LEAKAGE THROUGH NOZZLE OPENING. OVERFLOW JUMPER IS QUALITY LEVEL Q AND SEISMIC CATEGORY SC-I.

22. DELETED

23. SLEEVED PIPE IS INDICATED BY TWO DASHED LINES SURROUNDING A PIPELINE. PIPE SLEEVE IS TO PROVIDE SECONDARY CONTAINMENT PER DWP AND SHALL MATCH S11C PIPE SPEC. SLOPE OF SLEEVE TO MATCH INNER PIPE.

24-25. DELETED

26. VESSEL EMPTYING EJECTOR (HFP-JMPP-00035, 00036, AND 00112) IS NOT INSTALLED ON/IN VESSEL DURING NORMAL OPERATION. JUMPER COVERS/BLINDS (HFP-JMPP-00146, 00147 AND 00148) ARE INSTALLED DURING NORMAL OPERATION. HFP-JMPP-00146 AND 00147 ARE QUALITY LEVEL CM AND SEISMIC CATEGORY SC-III. HFP-JMPP -00148 IS QUALITY LEVEL Q AND SEISMIC CATEGORY SC-III.

27. VESSEL SAMPLE PUMP (HFP-PMP-00007) IS NOT INSTALLED ON/IN VESSEL DURING NORMAL OPERATION. PUREX NOZZLE COVERS/BLINDS (HFP-JMPP-00144 AND 00145) ARE INSTALLED DURING NORMAL OPERATION. VESSEL COVER FOR NOZZLE N49 IS HFP-JMPP-00160. HFP-JMPP-00144 AND 00145 ARE QUALITY LEVEL CM AND SEISMIC CATEGORY SC-III. HFP-JMPP-00160 IS QUALITY LEVEL Q AND SEISMIC CATEGORY SC-III.

28. COOLING JACKET DISCHARGE (RETURN NOZZLE) SHALL BE INSTALLED SO THERE ARE NO AIR POCKETS IN THE TOP OF THE JACKET.

29. THE GEOMETRY OF JOGGLED (OFFSET) PENETRATIONS IS QUALITY LEVEL Q FOR RADIATION PROTECTION. THE QUALITY LEVEL AND SEISMIC CATEGORY DESIGNATIONS OF PIPING WITHIN JOGGLES ARE THE SAME AS CONNECTING PIPING. PIPING WITHIN SPARE JOGGLES IS QUALITY LEVEL Q AND SEISMIC CATEGORY SC-I.

30. QUALITY LEVEL Q AND SEISMIC CATEGORY SC-I CONFINEMENT IS REQUIRED.

31. INSTRUMENTS ARE QUALITY LEVEL CM UNLESS OTHERWISE NOTED OR ARE AIR PERMIT AFFECTING. INSTRUMENT, ROOT VALVES AND TUBING CONFINEMENT REQUIREMENTS ARE THE SAME AS THE CONNECTING PROCESS PIPE UNLESS NOTED OTHERWISE.

32. THE SEISMIC DESIGNATION SHOWN ON THIS P&ID DOES NOT INCLUDE SEISMIC CATEGORY SC-II. DESIGNATIONS OF SEISMIC CATEGORY SC-II IS RELATED TO PORTIONS OF PIPING (OR COMPONENTS) BASED ON SPATIAL INTERACTIONS WHICH ARE NOT DEPICTED ON THE P&ID. THE SEISMIC CATEGORY SC-II DESIGNATION WILL BE DOCUMENTED BASED ON TOPOGRAPHY REVIEWS.

33. DELETED

34. THE PRESSURE BOUNDARY FOR ALL SYSTEMS, STRUCTURES, AND COMPONENTS ON THIS DRAWING IS IDENTIFIED AS SEISMIC CATEGORY SC-III AND QUALITY LEVEL CM, UNLESS OTHERWISE NOTED.

35. MAIN HEADER REQUIRES 34 FEET OF BAROMETRIC HEAD ABOVE VESSEL OVERFLOW NOZZLE.

36. DELETED

37. THE COMPONENTS SHOWN ON THIS DRAWING IN PHANTOM DO NOT REQUIRE INDEPENDENT QUALIFIED REGISTERED PROFESSIONAL ENGINEER ASSESSMENTS OF DESIGN OR INSTALLATION INSPECTIONS BY A QUALIFIED INSTALLATION INSPECTOR IN ACCORDANCE WITH THE DWP AND/OR WASHINGTON ADMINISTRATIVE CODE REQUIREMENTS.

38. REVISED PER 24590-HLW-M6N-M80T-00001, 00007, 24590-HLW-M6PR-HFP-00003 AND TO INCORPORATE P-JOGGLES. ADDED/REVISED/DELETED NOTES, HOLDS, REFERENCES, QUALITY/SEISMIC FLAGS AND MINOR EDITORIAL CHANGES. ADDED CONTROLS FOR HFP-PMP-00007 AND CHANGE YV-0033 TO BALL VALVE.

HOLD/OPEN ITEMS:

1-6. DELETED

REFERENCES:

1. 24590-HLW-M5-V17T-P0001, PROCESS FLOW DIAGRAM, HLW RECEIPT AND FEED PREPARATION (SYSTEM HCP, GFR & HFP).
2. DELETED
3. THE REQUIRED BATCH SEQUENCES, PERMISSIVES, INTERLOCKS, ALARMS AND OPERATOR INTERFACE POINTS ARE FULLY DESCRIBED IN THE SOFTWARE FUNCTIONAL SPECIFICATION FOR HLW MELTER FEED PROCESS (HFP) SYSTEM, 24590-HLW-3PS-HFP-T0001.
4. FOR PERMISSIVES AND INTERLOCKS FOR IMPORTANT TO SAFETY SYSTEMS (ITS) REFER TO SAFETY SYSTEMS REQUIREMENTS SPECIFICATION 24590-HLW-3PS-PPJ-T0009 (TO BE ISSUED).

PLEASE NOTE THAT SOURCE, SPECIAL NUCLEAR AND BYPRODUCT MATERIALS, AS DEFINED IN THE ATOMIC ENERGY ACT OF 1954 (AEA), ARE REGULATED AT THE U.S. DEPARTMENT OF ENERGY (DOE) FACILITIES EXCLUSIVELY BY DOE ACTING PURSUANT TO ITS AEA AUTHORITY. DOE ASSERTS, THAT PURSUANT TO THE AEA, IT HAS SOLE AND EXCLUSIVE RESPONSIBILITY AND AUTHORITY TO REGULATE SOURCE, SPECIAL NUCLEAR, AND BYPRODUCT MATERIAL AT DOE-OWNED NUCLEAR FACILITIES. INFORMATION CONTAINED HEREIN ON RADIONUCLIDES IS PROVIDED FOR PROCESS DESCRIPTION PURPOSES ONLY.

STUART PAUL KRETZSCHMAR
STATE OF WASHINGTON
32345
REGISTERED PROFESSIONAL ENGINEER
3/31/08
EXPIRES: 3/16/10

Q
QUALITY DESIGNATOR

REV	DESCRIPTION	ORG	CHKD	RVWD	APVD	DATE
2	ISSUED FOR PERMITTING USE	LCS	[illegible]	CEK SPK	RLB	3/31/08
1	ISSUED FOR PERMITTING USE	SC	RR	EI	TV	5/18/05
0	ISSUED FOR PERMITTING USE	JM	SJC	DMY	JFS	5/5/04

REVISION HISTORY

ISSUED BY RPP-WTP PDC / ISSUE STAMP		
PROJECT No.	24590	
SITE	HANFORD	
AREA	200E	
BUILDING No.	30	
	BY	DATE
ORIGINATOR	JASON A MEDINA	5/5/04
CHECKER	STEVEN CROSS	5/5/04
APPROVER	JOHN F SCHNEIDER	5/5/04
REVIEWER	DM YARBROUGH	5/5/04

CONTENT APPLICABLE TO ALARA? [X] YES [ ] NO
ADR NO. NA REV: NA
SAFETY SCREEN REQUIRED? [ ] YES [X] NO E&NS INITIAL IF YES ____

BECHTEL
RIVER PROTECTION PROJECT
WASTE TREATMENT PLANT
2435 STEVENS CENTER PLACE
RICHLAND, WA 99354

CONTRACT No: DE-AC27-01RV14136

P&ID - HLW
MELTER FEED PROCESS SYSTEM
MELTER FEED VESSEL
HFP-VSL-00002

SCALE: NONE | 24590-HLW-M6-HFP-P0002 | REV 2

SAFETY SCREEN IS REQUIRED FOR DRAWING TYPES IDENTIFIED IN 24590-WTP-GPP-SREG-002

'E' SIZE - 44x34
COMPUTER GENERATED - MANUAL CHANGES NOT PERMITTED

R10891530
03/25/2008 01:25:41 PM

PLOTTED BY: lcsanvic
C:\Work\lcsanvic\dms05070\HLWM6HFPP0002.dgn

FORM E_SDN.DGN 02/2003

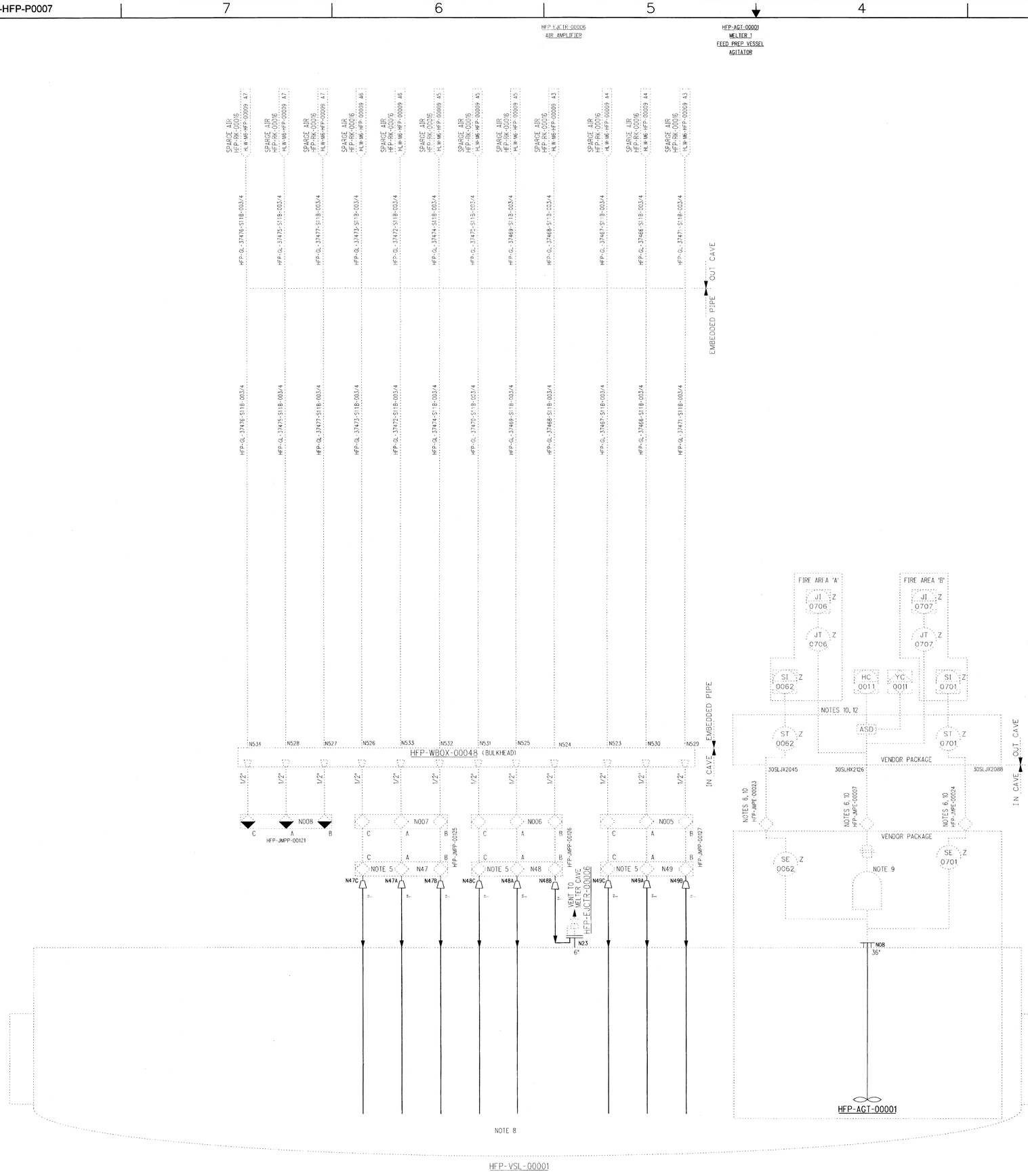

NOTES:

1. SEE DRAWINGS 24590-WTP-M6-50-P0001 THROUGH 24590-WTP-M6-50-P0008 FOR GENERAL NOTES, SYMBOLS AND LEGEND, AND GENERAL SLOPE REQUIREMENTS.
2. DELETED
3. DELETED
4. THE PRESSURE BOUNDARY FOR ALL SYSTEMS, STRUCTURES, AND COMPONENTS ON THIS DRAWING IS QUALITY LEVEL Q AND SEISMIC CATEGORY SC-I, UNLESS OTHERWISE NOTED.
5. 3-WAY CONNECTOR BLOCK TO BE MOUNTED ON VESSEL BULKHEAD. INDIVIDUAL JUMPER CONNECTION SIZE IS 1/2 INCH. 1 INCH SPARGE PIPING WILL BE CONNECTED TO EACH JUMPER LEG (WITH REDUCER) AND ROUTED BY VESSEL FABRICATOR INTO THE VESSEL.
6. ELECTRICAL AND INSTRUMENT JUMPERS ARE SHOWN ON SYSTEM BLOCK DIAGRAMS 24590-HLW-J1-HFP-00001 AND 00002.
7. CONTENTS OF THIS DOCUMENT ARE DANGEROUS WASTE PERMIT AFFECTING.
8. END OF SPARGERS (8 REQ'D) TO BE LOCATED AT A RADIUS OF 36 INCHES FROM VESSEL CENTER AND 1 INCH OFF VESSEL BOTTOM.
9. OIL FILL AND DRAIN CONNECTORS SHALL BE 3/4" STAUBLI RBE VALVED PLUG WITH INTEGRAL VALVE, DUST CAP, AND FIXING RING. GREASE CONNECTORS SHALL BE 3/8" STAUBLI RBE UNVALVED PLUG WITH DUST CAP AND FIXING RING.
10. THE MINIMUM QUALITY LEVELS AND SEISMIC CATEGORIES OF THE AGITATOR COMPONENTS ARE AS FOLLOWS: AGITATOR BODY, MOTOR JUMPER AND MOTOR ARE QUALITY LEVEL CM AND SEISMIC CATEGORY SC-II. HAND CONTROLLERS (HC AND YC), AND ASD ARE QUALITY LEVEL CM AND SEISMIC CATEGORY SC-III. THE SPEED SENSORS (SE/ST/SI), AND POWER SENSORS (JT/JD), ARE QUALITY LEVEL Q AND SEISMIC CATEGORY SC-I. THE JUMPERS FOR THE SPEED SENSORS ARE QUALITY LEVEL CM AND SEISMIC CATEGORY SC-III. QUALIFIED ISOLATION DEVICES NEED TO BE PART OF THE CIRCUIT FOR THE SPEED SENSORS TO PROTECT PPJ FROM JUMPER FAILURES.
11. DELETED
12. LOCATE REDUNDANT POWER/SPEED TRANSMITTERS AND INDICATORS IN SEPARATE FIRE AREAS.
13. INSTRUMENTS ARE QUALITY LEVEL CM, UNLESS DESIGNATED BY A "Z" OR ARE AIR PERMIT AFFECTING. INSTRUMENT, ROOT VALVE AND TUBING CONFINEMENT REQUIREMENTS ARE THE SAME AS THE CONNECTING PROCESS PIPE, UNLESS OTHERWISE NOTED.
14. DELETED
15. DELETED
16. THE COMPONENTS SHOWN ON THIS DRAWING IN PHANTOM DO NOT REQUIRE INDEPENDENT QUALIFIED REGISTERED PROFESSIONAL ENGINEER ASSESSMENTS OF DESIGN OR INSTALLATION INSPECTIONS BY A QUALIFIED INSTALLATION INSPECTOR IN ACCORDANCE WITH THE DWP AND/OR WASHINGTON ADMINISTRATIVE CODE REQUIREMENTS.
17. REVISED PER 24590-HLW-M6N-HFP-00037 AND 00068. REVISED NOZZLE LOCATION TO BE ALIGNED WITH THE VESSEL DRAWINGS. ADDED AGITATOR POWER SENSORS (JT/JI) AND DELETED AGITATOR VIBRATION SENSORS (VE/VT/VI) AND CURRENT SENSORS (IT/II). ADDED/REVISED/DELETED NOTES, HOLDS, REFERENCES, PIPE SPECS, NOZZLE SIZE AND MINOR EDITORIAL CHANGES.

HOLD/OPEN ITEMS:

NONE

REFERENCES:

1. 24590-HLW-M5-V17T-P0001, PROCESS FLOW DIAGRAM, HLW RECEIPT AND FEED PREPARATION (SYSTEMS HCP, GFR AND HFP).
2. DELETED
3. 24590-WTP-3YD-50-00003, "SYSTEM DESCRIPTION FOR PULSE JET MIXERS AND SUPPLEMENTAL MIXING SUBSYSTEMS".
4. FOR PERMISSIVES AND INTERLOCKS FOR IMPORTANT TO SAFETY SYSTEMS (ITS) REFER TO SAFETY SYSTEMS REQUIREMENTS SPECIFICATION, 24590-HLW-3PS-PPJ-T0003 (TO BE ISSUED).
5. THE REQUIRED BATCH SEQUENCES, PERMISSIVES, INTERLOCKS, ALARMS AND OPERATOR INTERFACE POINTS ARE FULLY DESCRIBED IN THE SOFTWARE FUNCTIONAL SPECIFICATION FOR HLW MELTER FEED PROCESS (HFP) SYSTEM, 24590-HLW-3PS-HFP-T0001.

STUART PAUL KRETZSCHMAR — STATE OF WASHINGTON — 21606 — REGISTERED PROFESSIONAL ENGINEER
3/21/08
EXPIRES: 3/10/10

PLEASE NOTE THAT SOURCE, SPECIAL NUCLEAR AND BYPRODUCT MATERIALS, AS DEFINED IN THE ATOMIC ENERGY ACT OF 1954 (AEA), ARE REGULATED AT THE U.S. DEPARTMENT OF ENERGY (DOE) FACILITIES EXCLUSIVELY BY DOE ACTING PURSUANT TO ITS AEA AUTHORITY. DOE ASSERTS, THAT PURSUANT TO THE AEA, IT HAS SOLE AND EXCLUSIVE RESPONSIBILITY AND AUTHORITY TO REGULATE SOURCE, SPECIAL NUCLEAR, AND BYPRODUCT MATERIAL AT DOE-OWNED NUCLEAR FACILITIES. INFORMATION CONTAINED HEREIN ON RADIONUCLIDES IS PROVIDED FOR PROCESS DESCRIPTION PURPOSES ONLY.

Q — QUALITY DESIGNATOR

REVISION HISTORY

REV	DESCRIPTION	ORG	CHKD	RVWD	APVD	DATE
1	ISSUED FOR PERMITTING USE	LCS	[illegible]	CER SAL	TAV [illegible]	3/31/08
0	ISSUED FOR PERMITTING USE	SC	RR	EI	TV	5-17-05

ISSUED BY RPP-WTP PDC — ISSUE STAMP

PROJECT No.	24590	
SITE	HANFORD	
AREA	200E	
BUILDING No.	30	

	BY	DATE
ORIGINATOR	STEVEN CROSS	5/12/05
CHECKER	RONDA RUSSELL	5/12/05
APPROVER	TOM VALENTINO	5-17-05
REVIEWER	F ISERN	5/16/05

CONTENT APPLICABLE TO ALARA? [X] YES [ ] NO
ADR NO. NA REV: NA
SAFETY SCREEN REQUIRED? [ ] YES [X] NO EWS INITIAL IF YES

BECHTEL

RIVER PROTECTION PROJECT
WASTE TREATMENT PLANT
2435 STEVENS CENTER PLACE
RICHLAND, WA 99354

CONTRACT No: DE-AC27-01RV14136

P&ID - HLW MELTER FEED PROCESS SYSTEM HFP-VSL-00001 AGITATION AND SPARGING

SCALE: NONE

24590-HLW-M6-HFP-P0007

REV 1

R1080531

SAFETY SCREEN IS REQUIRED FOR DRAWING TYPES IDENTIFIED IN 24590-WTP-GPP-SREG-002

"E" SIZE - 44x34
COMPUTER GENERATED - MANUAL CHANGES NOT PERMITTED

FORM E_SDNDGN 02/2003

03/25/2008 01:24:57 PM
PLOTTED BY: lcsnvic
C:\Work\lcsnvic\dgn\24590\HLW\M6\HFP\P0007.dgn

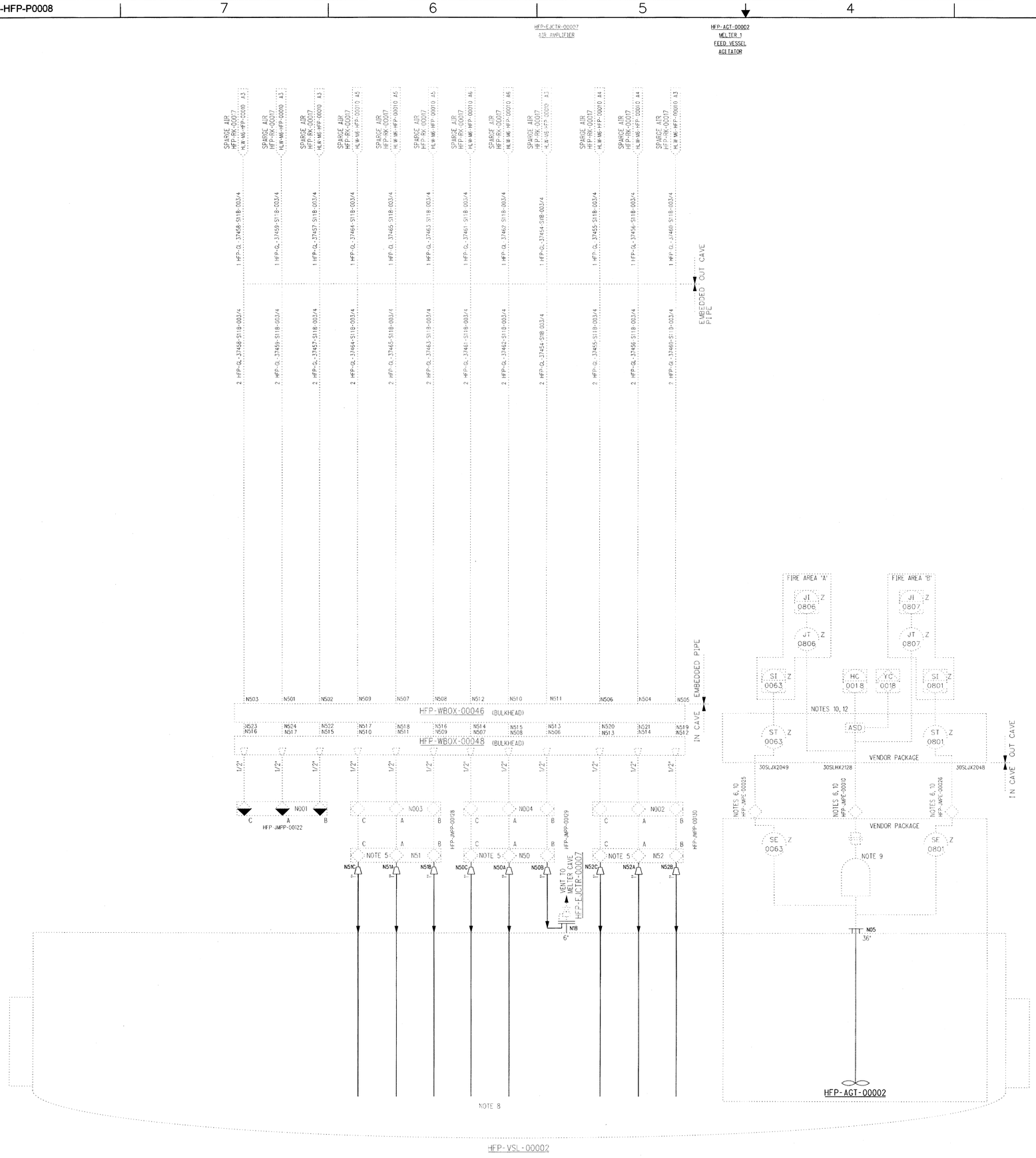

NOTES:

1. SEE DRAWINGS 24590-WTP-M6-50-P0001 THROUGH 24590-WTP-M6-50-P0008 FOR GENERAL NOTES, SYMBOLS AND LEGEND, AND GENERAL SLOPE REQUIREMENTS.
2. DELETED
3. DELETED
4. THE PRESSURE BOUNDARY ALL SYSTEMS, STRUCTURES, AND COMPONENTS ON THIS DRAWING IS QUALITY LEVEL Q AND SEISMIC CATEGORY SC-I, UNLESS OTHERWISE NOTED.
5. 3-WAY CONNECTOR BLOCK TO BE MOUNTED ON VESSEL BULKHEAD. INDIVIDUAL JUMPER CONNECTION SIZE IS 1/2 INCH. 1 INCH SPARGE PIPING WILL BE CONNECTED TO EACH JUMPER LEG (WITH REDUCER) AND ROUTED BY VESSEL FABRICATOR INTO THE VESSEL.
6. ELECTRICAL AND INSTRUMENT JUMPERS ARE SHOWN ON SYSTEM BLOCK DIAGRAMS 24590-HLW-J1-HFP-00001 AND 00002.
7. CONTENTS OF THIS DOCUMENT ARE DANGEROUS WASTE PERMIT AFFECTING.
8. END OF SPARGERS (8 REQ'D) TO BE LOCATED AT A RADIUS OF 36 INCHES FROM VESSEL CENTER AND 1 INCH OFF VESSEL BOTTOM.
9. OIL FILL AND DRAIN CONNECTORS SHALL BE 3/4" STAUBLI RBE VALVED PLUG WITH INTEGRAL VALVE, DUST CAP, AND FIXING RING. GREASE CONNECTORS SHALL BE 3/8" STAUBLI RBE UNVALVED PLUG WITH DUST CAP AND FIXING RING.
10. THE MINIMUM QUALITY LEVELS AND SEISMIC CATEGORIES OF THE AGITATOR COMPONENTS ARE AS FOLLOWS: AGITATOR BODY, MOTOR JUMPER AND MOTOR ARE QUALITY LEVEL CM AND SEISMIC CATEGORY SC-II. HAND CONTROLLERS (HC AND YC), AND ASD ARE QUALITY LEVEL CM AND SEISMIC CATEGORY SC-III. THE SPEED SENSORS (SE/ST/SI), AND POWER SENSORS (JT/JI), ARE QUALITY LEVEL Q AND SEISMIC CATEGORY SC-I. THE JUMPERS FOR THE SPEED SENSORS ARE QUALITY LEVEL CM AND SEISMIC CATEGORY SC-III. QUALIFIED ISOLATION DEVICES NEED TO BE PART OF THE CIRCUIT FOR THE SPEED SENSORS TO PROTECT PPJ FROM JUMPER FAILURES.
11. DELETED
12. LOCATE REDUNDANT POWER/SPEED TRANSMITTERS AND INDICATORS IN SEPARATE FIRE AREAS.
13. INSTRUMENTS ARE QUALITY LEVEL CM, UNLESS DESIGNATED BY A "Z" OR ARE AIR PERMIT AFFECTING. INSTRUMENT, ROOT VALVE AND TUBING CONFINEMENT REQUIREMENTS ARE THE SAME AS THE CONNECTING PROCESS PIPE, UNLESS OTHERWISE NOTED.
14. DELETED
15. DELETED
16. THE COMPONENTS SHOWN ON THIS DRAWING IN PHANTOM DO NOT REQUIRE INDEPENDENT QUALIFIED REGISTERED PROFESSIONAL ENGINEER ASSESSMENTS OF DESIGN OR INSTALLATION INSPECTIONS BY A QUALIFIED INSTALLATION INSPECTOR IN ACCORDANCE WITH THE DWP AND/OR WASHINGTON ADMINISTRATIVE CODE REQUIREMENTS.
17. REVISED PER 24590-HLW-M6N-HFP-00038 AND 00068. REVISED NOZZLE LOCATION TO BE ALIGNED WITH THE VESSEL DRAWINGS. ADDED AGITATOR POWER SENSORS (JT/JI) AND DELETED AGITATOR VIBRATION SENSORS (VE/VT/VI) AND CURRENT SENSORS (IT/II). ADDED/REVISED/DELETED NOTES, HOLDS, REFERENCES, PIPE SPECS, NOZZLE SIZE AND MINOR EDITORIAL CHANGES.

HOLD/OPEN ITEMS:

NONE

REFERENCES:

1. 24590-HLW-M5-V17T-P0001, PROCESS FLOW DIAGRAM, HLW RECEIPT AND FEED PREPARATION (SYSTEMS HCP, GFR AND HFP).
2. DELETED
3. 24590-WTP-3YD-50-00003, "SYSTEM DESCRIPTION FOR PULSE JET MIXERS AND SUPPLEMENTAL MIXING SUBSYSTEMS".
4. FOR PERMISSIVES AND INTERLOCKS FOR IMPORTANT TO SAFETY SYSTEMS (ITS) REFER TO SAFETY SYSTEMS REQUIREMENTS SPECIFICATION, 24590-HLW-3PS-PPJ-T0003 (TO BE ISSUED).
5. THE REQUIRED BATCH SEQUENCES, PERMISSIVES, INTERLOCKS, ALARMS AND OPERATOR INTERFACE POINTS ARE FULLY DESCRIBED IN THE SOFTWARE FUNCTIONAL SPECIFICATION FOR HLW MELTER FEED PROCESS (HFP) SYSTEM, 24590-HLW-3PS-HFP-T0001.

STUART PAUL KRETZSCHMAR, STATE OF WASHINGTON, 9745, REGISTERED PROFESSIONAL ENGINEER
3/21/08
EXPIRES: 3/16/10

PLEASE NOTE THAT SOURCE, SPECIAL NUCLEAR AND BYPRODUCT MATERIALS, AS DEFINED IN THE ATOMIC ENERGY ACT OF 1954 (AEA), ARE REGULATED AT THE U.S. DEPARTMENT OF ENERGY (DOE) FACILITIES EXCLUSIVELY BY DOE ACTING PURSUANT TO ITS AEA AUTHORITY. DOE ASSERTS, THAT PURSUANT TO THE AEA, IT HAS SOLE AND EXCLUSIVE RESPONSIBILITY AND AUTHORITY TO REGULATE SOURCE, SPECIAL NUCLEAR, AND BYPRODUCT MATERIAL AT DOE OWNED NUCLEAR FACILITIES. INFORMATION CONTAINED HEREIN ON RADIONUCLIDES IS PROVIDED FOR PROCESS DESCRIPTION PURPOSES ONLY.

REV	DESCRIPTION	ORG	CHKD	RVWD	APVD	DATE
1	ISSUED FOR PERMITTING USE	LGS	GH	CER KRK RVWD		3/3/08
0	ISSUED FOR PERMITTING USE	SC	RR	EI	TV	5-17-05

REVISION HISTORY

Q
QUALITY DESIGNATOR

ISSUED BY RPP-WTP PDC
ISSUE STAMP

PROJECT No.	24590	
SITE	HANFORD	
AREA	200E	
BUILDING No.	30	

	BY	DATE
ORIGINATOR	STEVEN CROSS	5/13/05
CHECKER	RONDA RUSSELL	5/13/05
APPROVER	T VALENTINO	5-17-05
REVIEWER	E ISERN	5/16/05

CONTENT APPLICABLE TO ALARA? [X] YES [ ] NO
ADR NO. NA REV: NA
SAFETY SCREEN REQUIRED? [ ] YES [X] NO EMAIS INITIAL IF YES

BECHTEL

RIVER PROTECTION PROJECT
WASTE TREATMENT PLANT
2435 STEVENS CENTER PLACE
RICHLAND, WA 99354

CONTRACT No: DE-AC27-01RV14136

P&ID - HLW
MELTER FEED PROCESS SYSTEM
HFP-VSL-00002
AGITATION AND SPARGING

SCALE: NONE

24590-HLW-M6-HFP-P0008

REV 1

SAFETY SCREEN IS REQUIRED FOR DRAWING TYPES IDENTIFIED IN 24590-WTP-GPP-SREG-002

"E" SIZE - 44x34
COMPUTER GENERATED - MANUAL CHANGES NOT PERMITTED

R1089T532

03/25/2008 01:23:46 PM

PLOTTED BY: lcsonic
C:\Work\lcsonic\Gms050710-HLW\24FP00008.dgn

FORM E_SDN.DGN 02/2003

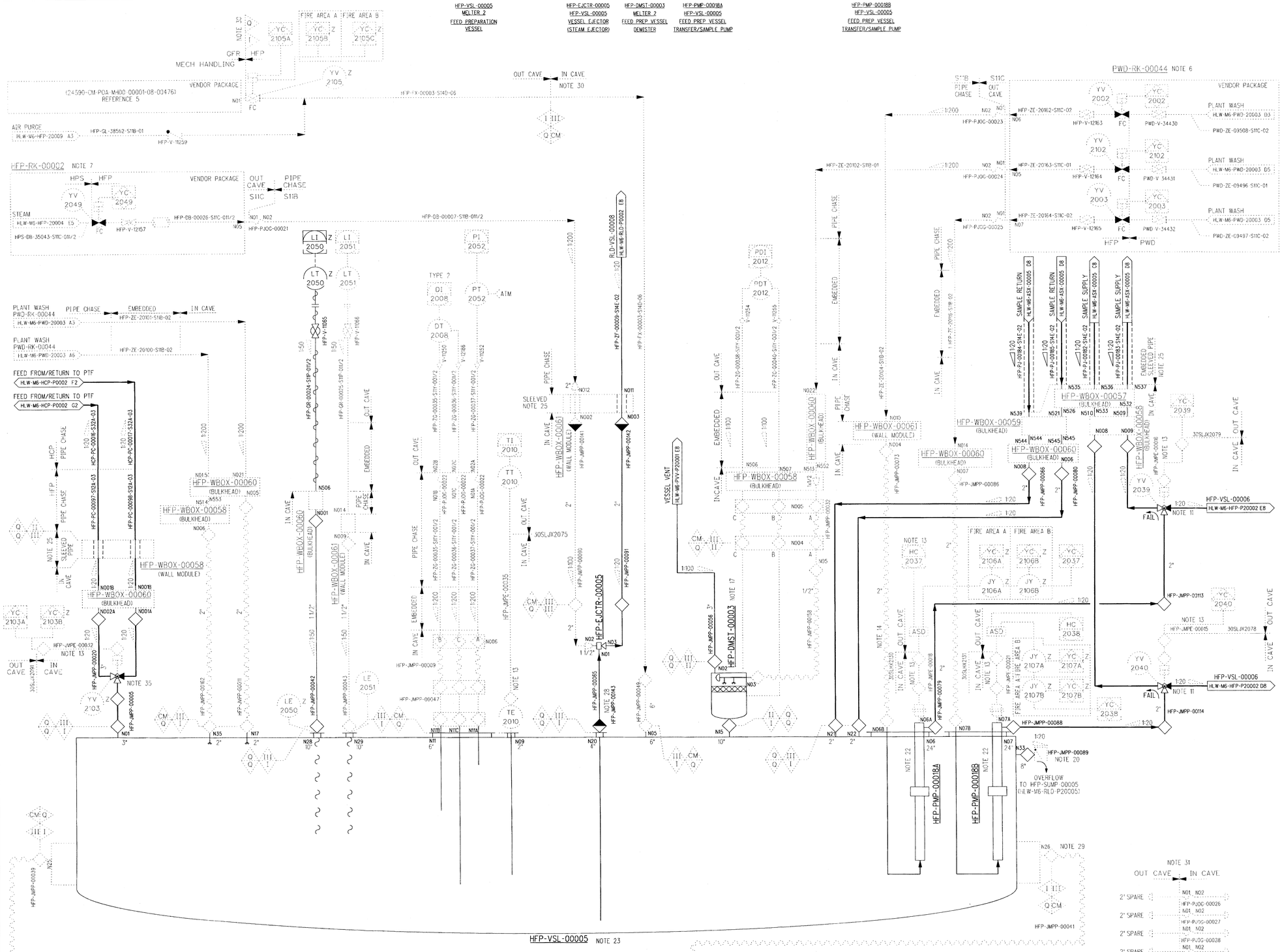

NOTES:

1. SEE DRAWINGS 24590-WTP-M6-50-P0001 THROUGH 24590-WTP-M6-50-P0008 FOR GENERAL NOTES, SYMBOLS AND LEGEND, AND GENERAL SLOPE REQUIREMENTS.

2-5. DELETED

6. SEE P&ID 24590-HLW-M6-PWD-00006 FOR WASH RACK DETAILS. AUTOMATIC VALVES WILL BE SLOW ACTING TO PREVENT WATER HAMMER.

7. SEE P&ID 24590-HLW-M6-HOP-00007 FOR STEAM RACK DETAILS. EJECTOR SUPPLY LINES REQUIRE ONE BAROMETRIC HEAD ABOVE THE EJECTOR LEG MAXIMUM LIQUID LEVEL. THE BAROMETRIC HEAD REQUIREMENT SHALL BE FULLY CONTAINED IN R5 AREAS. AUTOMATIC VALVES WILL BE SLOW ACTING TOPREVENT WATER HAMMER.

8-10. DELETED

11. LOCATE 3-WAY VALVES AS CLOSE TO HFP-VSL-00006 AS POSSIBLE.

12. DELETED

13. ELECTRICAL AND INSTRUMENT JUMPERS ARE SHOWN ON SYSTEM BLOCK DIAGRAMS 24590-HLW-J1-HFP-20001 AND 20002. PNEUMATIC JUMPERS ARE SHOWN ON 24590-HLW-M6-ISA-00007.

14. PLANT WASH USED FOR PUMP PRIMING AND PIPE FLUSH.

15-16. DELETED

17. THIS IS A DEMISTER SYMBOL. DEMISTER IS MOUNTED DIRECTLY TO VESSEL NOZZLE. LOCATE THE NOZZLES IN HIGH POINT OF VESSEL HEAD (AS CLOSE AS POSSIBLE).

18-19. DELETED

20. OVERFLOW JUMPER TO PROVIDE UNRESTRICTED FLOW DIRECTED TOWARD SUMP. FLAPPER TO MINIMIZE AIR IN-LEAKAGE THROUGH OVERFLOW NOZZLE OPENING. OVERFLOW JUMPER IS QUALITY LEVEL Q AND SEISMIC CATEGORY SC-I.

21. CONTENTS OF THIS DOCUMENT ARE DANGEROUS WASTE PERMIT AFFECTING.

22. THE MINIMUM REQUIRED QUALITY LEVELS AND SEISMIC CATEGORIES OF THE PUMP COMPONENTS ARE AS FOLLOWS: PUMP BODY IS QUALITY LEVEL Q AND SEISMIC CATEGORY SC-II (BASED ON SC-II OVER SC-I REQUIREMENTS). PUMP MOTOR IS QUALITY LEVEL CM AND SEISMIC CATEGORY SC-II (BASED ON SC-II OVER SC-I REQUIREMENTS). DISCHARGE PIPING/JUMPERS ARE QUALITY LEVEL Q AND SEISMIC CATEGORY SC-III.

23. AGITATOR AND SPARGERS ARE SHOWN ON P&ID 24590-HLW-M6-HFP-P20007. THE VESSEL INCLUDING PERMANENTLY WELDED ITEMS WITHIN THE VESSEL ARE QUALITY LEVEL Q AND SEISMIC CATEGORY SC-I. THE INSERTED PORTIONS OF JUMPERS WITHIN THE VESSEL ARE QUALITY LEVEL CM AND SEISMIC CATEGORY SC-II, UNLESS OTHERWISE NOTED.

24. DELETED

25. SLEEVED PIPE IS INDICATED BY TWO DASHED LINES SURROUNDING A PIPELINE. PIPE SLEEVE IS TO PROVIDE SECONDARY CONTAINMENT PER DWP AND SHALL MATCH S11C PIPE SPEC. SLOPE OF SLEEVE TO MATCH INNER PIPE.

26-27. DELETED

28. VESSEL EMPTYING EJECTOR (HFP-JMPP-00065, 00090 AND 00091) IS NOT INSTALLED ON/IN VESSEL DURING NORMAL OPERATION. JUMPER COVERS/BLINDS (HFP-JMPP-00141, 00142, AND 00143) ARE INSTALLED DURING NORMAL OPERATION. HFP-JMPP-00141 AND 00142 ARE QUALITY LEVEL CM AND SEISMIC CATEGORY SC-III. HFP-JMPP-00143 IS QUALITY LEVEL Q AND SEISMIC CATEGORY SC-III.

29. COOLING JACKET DISCHARGE (RETURN) NOZZLE SHALL BE INSTALLED SO THERE ARE NO AIR POCKETS IN THE TOP OF THE JACKET.

30. OUT CAVE PORTION OF GLASS FORMER FEED LINE (UP TO AND INCLUDING THE SLIDE VALVE) SHALL BE QUALITY LEVEL Q AND SEISMIC CATEGORY SC-I. MINIMUM REQUIREMENTS FOR THE IN-CAVE PORTION IS QUALITY LEVEL CM AND SEISMIC CATEGORY SC-III. PENETRATION THROUGH FLOOR SHALL HAVE AN OFFSET FOR SHIELDING PURPOSES. SLOPE OF LINE SHALL BE MINIMUM 60°. THE AIR PURGE LINE IS QUALITY LEVEL Q AND SEISMIC CATEGORY SC-I FOR CONFINEMENT PURPOSES.

31. THE GEOMETRY OF JOGGLED (OFFSET) PENETRATIONS IS QUALITY LEVEL Q FOR RADIATION PROTECTION. THE QUALITY LEVEL AND SEISMIC CATEGORY DESIGNATIONS OF PIPING WITHIN JOGGLES ARE THE SAME AS CONNECTING PIPING. PIPING WITHIN SPARE JOGGLES IS QUALITY LEVEL Q AND SEISMIC CATEGORY SC-I.

32. QUALITY LEVEL Q AND SEISMIC CATEGORY SC-I CONFINEMENT IS REQUIRED.

33. INSTRUMENTS ARE QUALITY LEVEL CM UNLESS OTHERWISE NOTED OR ARE AIR PERMIT AFFECTING. INSTRUMENT, ROOT VALVES AND TUBING CONFINEMENT REQUIREMENTS ARE THE SAME AS THE CONNECTING PROCESS PIPE, UNLESS OTHERWISE NOTED.

34. THE SEISMIC DESIGNATION SHOWN ON THIS P&ID DOES NOT INCLUDE SEISMIC CATEGORY SC-II. DESIGNATIONS OF SEISMIC CATEGORY SC-II IS RELATED TO PORTIONS OF PIPING (OR COMPONENTS) BASED ON SPATIAL INTERACTIONS WHICH ARE NOT DEPICTED ON THE P&ID. THE SEISMIC CATEGORY SC-II DESIGNATION WILL BE DOCUMENTED BASED ON TOPOGRAPHY REVIEWS.

35. FAIL CLOSE TO VESSEL.

36. DELETED

37. THE PRESSURE BOUNDARY FOR ALL SYSTEMS, STRUCTURES, AND COMPONENTS ON THIS DRAWING IS IDENTIFIED AS SEISMIC CATEGORY SC-III AND QUALITY LEVEL CM, UNLESS OTHERWISE NOTED.

38. MAIN HEADER REQUIRES 34 FEET OF BAROMETRIC HEAD ABOVE VESSEL OVERFLOW NOZZLE.

39. DELETED

40. THE COMPONENTS SHOWN ON THIS DRAWING IN PHANTOM DO NOT REQUIRE INDEPENDENT QUALIFIED REGISTERED PROFESSIONAL ENGINEER ASSESSMENTS OF DESIGN OR INSTALLATION INSPECTIONS BY A QUALIFIED INSTALLATION INSPECTOR IN ACCORDANCE WITH THE DWP AND/OR WASHINGTON ADMINISTRATIVE CODE REQUIREMENTS.

41. REVISED PER 24590-HLW-M6N-HFP-00042, 00049, 00054, 00056, 24590-HLW-M6N-M8OT-00001, 00007 AND TO INCORPORATE P-JOGGLES. ADDED/REVISED/DELETED NOTES, HOLDS, REFERENCES, INSULATION, LINES, SLOPES, PIPE SPECS AND MINOR EDITORIAL CHANGES. CHANGE YV-2049 TO BALL VALVE.

PLEASE NOTE THAT SOURCE, SPECIAL NUCLEAR AND BYPRODUCT MATERIALS, AS DEFINED IN THE ATOMIC ENERGY ACT OF 1954 (AEA), ARE REGULATED AT THE U.S. DEPARTMENT OF ENERGY (DOE) FACILITIES EXCLUSIVELY BY DOE ACTING PURSUANT TO ITS AEA AUTHORITY. DOE ASSERTS, THAT PURSUANT TO THE AEA, IT HAS SOLE AND EXCLUSIVE RESPONSIBILITY AND AUTHORITY TO REGULATE SOURCE, SPECIAL NUCLEAR, AND BYPRODUCT MATERIAL AT DOE-OWNED NUCLEAR FACILITIES. INFORMATION CONTAINED HEREIN ON RADIONUCLIDES IS PROVIDED FOR PROCESS DESCRIPTION PURPOSES ONLY.

CLIFFORD PAUL KRETZSCHMAR
STATE OF WASHINGTON
21345
REGISTERED
PROFESSIONAL ENGINEER
3/31/08
EXPIRES: 3/14/10

REV	DESCRIPTION	ORG	CHKD	RVWD	APVD	DATE
2	ISSUED FOR PERMITTING USE	LCG	GK	CER	SJK	3/31/08
1	ISSUED FOR PERMITTING USE	SC	RR	EI	TV	5/18/05
0	ISSUED FOR PERMITTING USE	JM	SJC	DMY	JFS	5/5/04

REVISION HISTORY

Q QUALITY DESIGNATOR

ISSUED BY RPP-WTP PDC

PROJECT No.	24590	
SITE	HANFORD	
AREA	200E	
BUILDING No.	30	

	BY	DATE
ORIGINATOR	JASON A MEDINA	5/5/04
CHECKER	STEVEN CROSS	5/5/04
APPROVER	JOHN F SCHNEIDER	5/5/04
REVIEWER	DM YARBROUGH	5/5/04

CONTENT APPLICABLE TO ALARA? [X] YES [ ] NO
ADR NO. NA REV: NA
SAFETY SCREEN REQUIRED? [ ] YES [X] NO EWS INITIAL IF YES

BECHTEL

RIVER PROTECTION PROJECT
WASTE TREATMENT PLANT
2435 STEVENS CENTER PLACE
RICHLAND, WA 99354

CONTRACT No: DE-AC27-01RV14136

P&ID - HLW
MELTER FEED PROCESS SYSTEM
MELTER FEED PREPARATION VESSEL HFP-VSL-00005

SCALE: NONE

24590-HLW-M6-HFP-P20001 REV 2

H10991533

03/25/2008 01:22:58 PM

PLOTTED BY: lcsanvic
C:\Work\lcsanvic\gms\56070\HLW\M6\HFP\P20001.dgn

FORM E_SBN.DGN 02/2003

SAFETY SCREEN IS REQUIRED FOR DRAWING TYPES IDENTIFIED IN 24590-WTP-DPP-SRES-002

"E" SIZE = 44x34
COMPUTER GENERATED - MANUAL CHANGES NOT PERMITTED

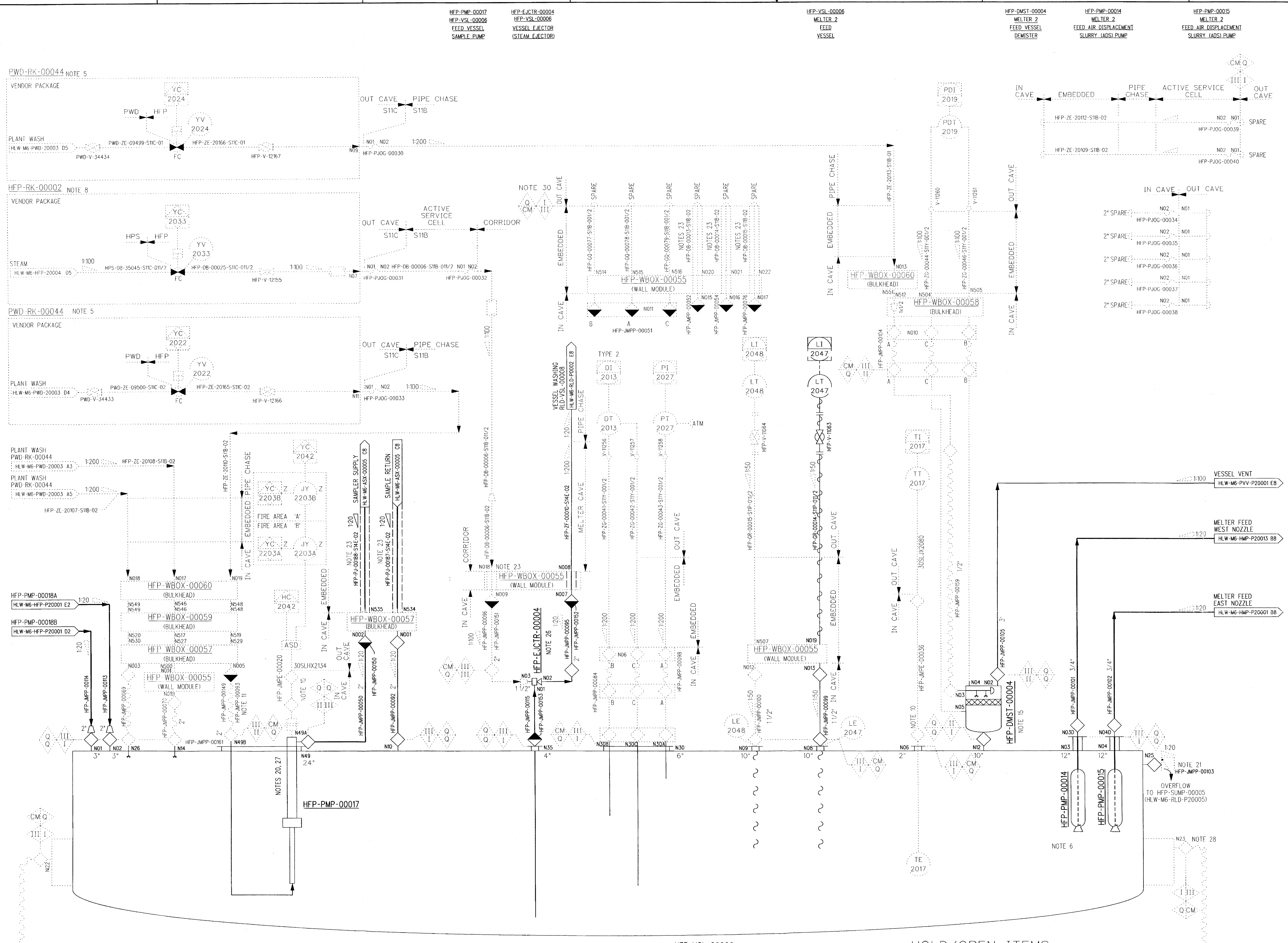

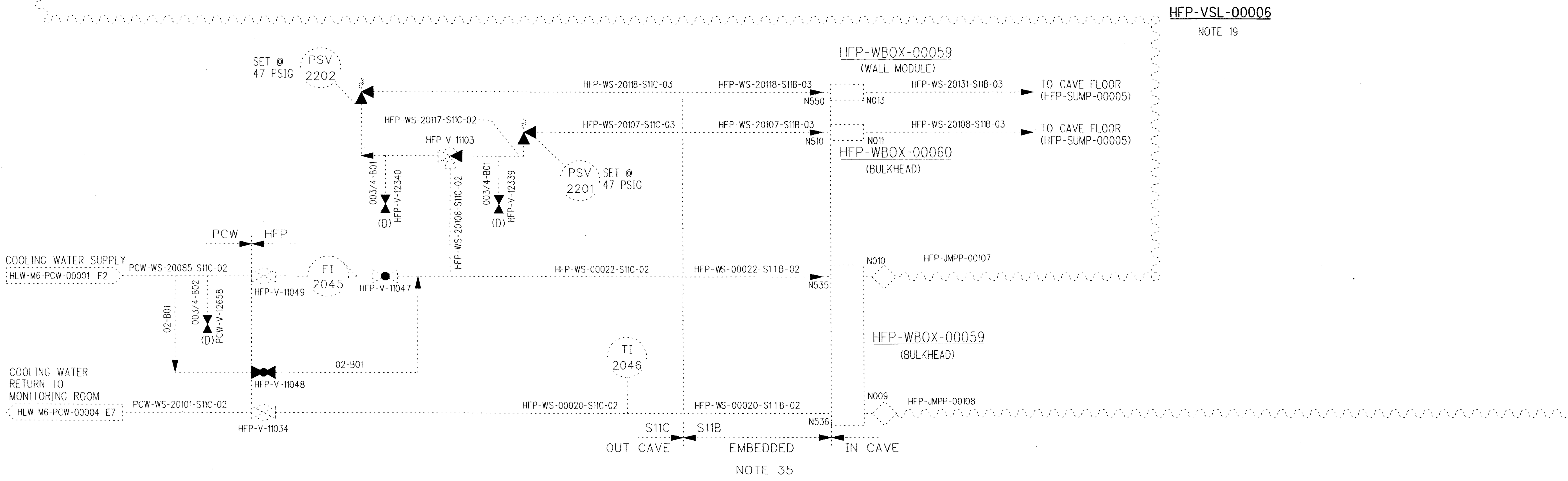

NOTES:

1. SEE DRAWINGS 24590-WTP-M6-50-P0001 THROUGH 24590-WTP-M6-50-P0008 FOR GENERAL NOTES, SYMBOLS AND LEGEND, AND GENERAL SLOPE REQUIREMENTS.

2-4. DELETED

5. SEE P&ID 24590-HLW-M6-PWD-20003 FOR RACK WASH DETAILS. AUTOMATIC VALVES WILL BE SLOW ACTING TO PREVENT WATER HAMMER.

6. SEE P&ID 24590-HLW-M6-HFP-20005 FOR ADS PUMP CONTROLS AND ADDITIONAL INSTRUMENTATION. THE MINIMUM QUALITY LEVELS AND SEISMIC CATEGORIES OF THE PUMP COMPONENTS ARE AS FOLLOWS: PUMP BODY IS QUALITY LEVEL CM AND SEISMIC CATEGORY SC-II (WITHIN THE VESSEL). PUMP DISCHARGE (PRESSURE BOUNDARY OUTSIDE OF VESSEL) IS QUALITY Q SEISMIC CATEGORY SC-III.

7. DELETED

8. SEE P&ID 24590-HLW-M6-HFP-20004 FOR STEAM RACK DETAILS. EJECTOR SUPPLY LINES REQUIRE ONE BAROMETRIC HEAD ABOVE THE EJECTOR LEG MAXIMUM LIQUID LEVEL. THE BAROMETRIC HEAD REQUIREMENT SHALL BE FULLY CONTAINED IN R5 AREAS. AUTOMATIC VALVES WILL BE SLOW ACTING TO PREVENT WATER HAMMER.

9. DELETED

10. ELECTRICAL AND INSTRUMENT JUMPERS DETAILS ARE SHOWN ON SYSTEM BLOCK DIAGRAM 24590-HLW-J1-HFP-20001 AND 20002. PNEUMATIC JUMPERS ARE SHOWN ON 24590-HLW-M6-ISA-00007.

11. PLANT WASH USED FOR PUMP PRIMING AND PIPE FLUSH.

12-14. DELETED

15. THIS IS A DEMISTER SYMBOL. DEMISTER IS MOUNTED DIRECTLY TO VESSEL NOZZLE. LOCATE DEMISTER ON HIGH POINT OF VESSEL HEAD (AS CLOSE AS POSSIBLE).

16-17. DELETED

18. CONTENTS OF THIS DOCUMENT ARE DANGEROUS WASTE PERMIT AFFECTING.

19. AGITATOR AND SPARGE LINES ARE SHOWN ON P&ID 24590-HLW-M6-HFP-P20008. THE VESSEL INCLUDING PERMANENTLY WELDED ITEMS WITHIN THE VESSEL ARE QUALITY LEVEL Q AND SEISMIC CATEGORY SC-I. THE INSERT PORTION OF JUMPERS WITHIN THE VESSEL ARE QUALITY LEVEL CM AND SEISMIC CATEGORY SC-II, UNLESS OTHERWISE NOTED.

20. THE MINIMUM QUALITY LEVELS AND SEISMIC CATEGORIES OF THE PUMP COMPONENTS ARE AS FOLLOWS: PUMP BODY IS QUALITY LEVEL Q AND SEISMIC CATEGORY SC-II (BASED ON SC-II OVER SC-I REQUIREMENTS). PUMP MOTOR IS QUALITY LEVEL CM AND SEISMIC CATEGORY SC-II (BASED ON SC-II OVER SC-I REQUIREMENTS). DISCHARGE PIPING/JUMPERS ARE QUALITY LEVEL Q AND SEISMIC CATEGORY SC-III.

21. OVERFLOW JUMPER TO PROVIDE UNRESTRICTED FLOW DIRECTED TOWARD SUMP. FLAPPER TO MINIMIZE AIR IN-LEAKAGE THROUGH OVERFLOW NOZZLE OPENING. OVERFLOW JUMPER IS QUALITY LEVEL Q AND SEISMIC CATEGORY SC-I.

22. DELETED

23. SLEEVED PIPE IS INDICATED BY TWO DASHED LINES SURROUNDING A PIPELINE. PIPE SLEEVE IS S11C AND PROVIDES SECONDARY CONTAINMENT PER DANGEROUS WASTE PERMIT. SLOPE OF S11C SLEEVE SHALL MATCH SLOPE OF INNER PIPE.

24-25. DELETED

26. VESSEL EMPTYING EJECTOR (HFP-JMPP-00095, 00096, AND 00115) IS NOT INSTALLED ON/IN VESSEL DURING NORMAL OPERATION. JUMPER COVERS/BLINDS (HFP-JMPP-00151, 00152 AND 00153) ARE INSTALLED DURING NORMAL OPERATION. HFP-JMPP-00151 AND -00152 ARE QUALITY LEVEL CM AND SEISMIC CATEGORY SC-III. HFP-JMPP-00153 IS QUALITY LEVEL Q AND SEISMIC CATEGORY SC-III.

27. VESSEL SAMPLE PUMP (HFP-PMP-00017) IS NOT INSTALLED ON/IN VESSEL DURING NORMAL OPERATION. PUREX NOZZLE COVERS/BLINDS (HFP-JMPP-00149 AND 00150) ARE INSTALLED DURING NORMAL OPERATION. VESSEL COVER FOR NOZZLE N49 IS HFP-JMPP-00161. HFP-JMPP-00149 AND -00150 ARE QUALITY LEVEL CM AND SEISMIC CATEGORY SC-III. HFP-JMPP-00160 IS QUALITY LEVEL Q AND SEISMIC CATEGORY SC-III

28. COOLING JACKET DISCHARGE (RETURN NOZZLE) SHALL BE INSTALLED SO THERE ARE NO AIR POCKETS IN THE TOP OF THE JACKET.

29. THE GEOMETRY OF JOGGLED (OFFSET) PENETRATIONS IS QUALITY LEVEL Q FOR RADIATION PROTECTION. THE QUALITY LEVEL AND SEISMIC CATEGORY DESIGNATION OF PIPING WITHIN JOGGLES ARE THE SAME AS CONNECTING PIPING. PIPING WITHIN SPARE JOGGLES IS QUALITY LEVEL Q AND SEISMIC CATEGORY SC-I.

30. QUALITY LEVEL Q AND SEISMIC CATEGORY SC-I CONFINEMENT IS REQUIRED.

31. INSTRUMENTS ARE QUALITY LEVEL CM UNLESS OTHERWISE NOTED OR ARE AIR PERMIT AFFECTING. INSTRUMENT, ROOT VALVES AND TUBING CONFINEMENT REQUIREMENTS ARE THE SAME AS THE CONNECTING PROCESS PIPE UNLESS NOTED OTHERWISE.

32. THE SEISMIC DESIGNATION SHOWN ON THIS P&ID DOES NOT INCLUDE SEISMIC CATEGORY SC-II. DESIGNATIONS OF SEISMIC CATEGORY SC-II IS RELATED TO PORTIONS OF PIPING (OR COMPONENTS) BASED ON SPATIAL INTERACTIONS WHICH ARE NOT DEPICTED ON THE P&ID. THE SEISMIC CATEGORY SC-II DESIGNATION WILL BE DOCUMENTED BASED ON TOPOGRAPHY REVIEWS.

33. DELETED

34. THE PRESSURE BOUNDARY FOR ALL SYSTEMS, STRUCTURES, AND COMPONENTS ON THIS DRAWING IS IDENTIFIED AS QUALITY LEVEL CM AND SEISMIC CATEGORY SC-III, UNLESS OTHERWISE NOTED.

35. MAIN HEADER REQUIRES 34 FEET OF BAROMETRIC HEAD ABOVE VESSEL OVERFLOW NOZZLE.

36. DELETED

37. THE COMPONENTS SHOWN ON THIS DRAWING IN PHANTOM DO NOT REQUIRE INDEPENDENT QUALIFIED REGISTERED PROFESSIONAL ENGINEER ASSESSMENTS OF DESIGN OR INSTALLATION INSPECTIONS BY A QUALIFIED INSTALLATION INSPECTOR IN ACCORDANCE WITH THE DWP AND/OR WASHINGTON ADMINISTRATIVE CODE REQUIREMENTS.

38. REVISED PER 24590-HLW-M6N-M80T-00001, 00007, 24590-HLW-M6N-HFP-00044 AND TO INCORPORATE P-JOGGLES. ADDED/REVISED/DELETED NOTES, QUALITY/SEISMIC FLAGS, HOLDS, REFERENCES, NOZZLES NUMBER AND MINOR EDITORIAL CHANGES. ADDED CONTROLS FOR HFP-PMP-00017 AND CHANGE YV-2033 TO BALL VALVE.

HOLD/OPEN ITEMS:

1-7. DELETED

REFERENCES:

1. 24590-HLW-M5-V17T-P0001, PROCESS FLOW DIAGRAM HLW RECEIPT AND FEED PREPARATION (SYSTEM HCP, GFR, & HFP).
2. DELETED
3. THE REQUIRED BATCH SEQUENCES, PERMISSIVES, INTERLOCKS, ALARMS AND OPERATOR INTERFACE POINTS ARE FULLY DESCRIBED IN THE SOFTWARE FUNCTIONAL SPECIFICATION FOR HLW MELTER FEED PROCESS (HFP) SYSTEM, 24590-HLW-3PS-HFP-T0001.
4. FOR PERMISSIVES AND INTERLOCKS FOR IMPORTANT TO SAFETY SYSTEMS (ITS) REFER TO SAFETY SYSTEMS REQUIREMENTS SPECIFICATION 24590-HLW-3PS-PPJ-T0009 (TO BE ISSUED).

PLEASE NOTE THAT SOURCE, SPECIAL NUCLEAR AND BYPRODUCT MATERIALS, AS DEFINED IN THE ATOMIC ENERGY ACT OF 1954 (AEA), ARE REGULATED AT THE U.S. DEPARTMENT OF ENERGY (DOE) FACILITIES EXCLUSIVELY BY DOE ACTING PURSUANT TO ITS AEA AUTHORITY. DOE ASSERTS, THAT PURSUANT TO THE AEA, IT HAS SOLE AND EXCLUSIVE RESPONSIBILITY AND AUTHORITY TO REGULATE SOURCE, SPECIAL NUCLEAR, AND BYPRODUCT MATERIAL AT DOE-OWNED NUCLEAR FACILITIES. INFORMATION CONTAINED HEREIN ON RADIONUCLIDES IS PROVIDED FOR PROCESS DESCRIPTION PURPOSES ONLY.

STUART PAUL KRETZSCHMAR, STATE OF WASHINGTON, 32345, REGISTERED PROFESSIONAL ENGINEER — 3/31/08
EXPIRES: 3/16/10

Q
QUALITY DESIGNATOR

REV	DESCRIPTION	ORG	CHKD	RVWD	APVD	DATE
2	ISSUED FOR PERMITTING USE	LCS	[illegible]	CEX SPK	[illegible]	3/31/08
1	ISSUED FOR PERMITTING USE	SC	RR	EI	TV	5/18/05
0	ISSUED FOR PERMITTING USE	JM	SJC	DMY	JFS	5/5/04

REVISION HISTORY

ISSUED BY RPP-WTP PDC
ISSUE STAMP

PROJECT No.	24590
SITE	HANFORD
AREA	200E
BUILDING No.	30

	BY	DATE
ORIGINATOR	JASON A MEDINA	5/5/04
CHECKER	STEVEN CROSS	5/5/04
APPROVER	JOHN F SCHNEIDER	5/5/04
REVIEWER	DM YARABROUGH	5/5/04

BECHTEL
RIVER PROTECTION PROJECT
WASTE TREATMENT PLANT
2435 STEVENS CENTER PLACE
RICHLAND, WA 99354

CONTRACT No: DE-AC27-01RV14136

P&ID - HLW MELTER FEED PROCESS SYSTEM MELTER FEED VESSEL HFP-VSL-00006

CONTENT APPLICABLE TO ALARA? [X] YES [ ] NO
ADR NO. NA REV: NA
SAFETY SCREEN REQUIRED? [ ] YES [X] NO E&NS INITIAL IF YES

SCALE: NONE
24590-HLW-M6-HFP-P20002
REV 2

SAFETY SCREEN IS REQUIRED FOR DRAWING TYPES IDENTIFIED IN 24590-WTP-GPP-SREG-002
'E' SIZE - 44x34
COMPUTER GENERATED - MANUAL CHANGES NOT PERMITTED
R10891534
03/25/2008 01:18:40 PM
PLOTTED BY: lcsanvic
C:\Work\lcsanvic\dms05070\HLWM6HFPP20002r1.dgn
FORM E_SDR.DGN 02/2003

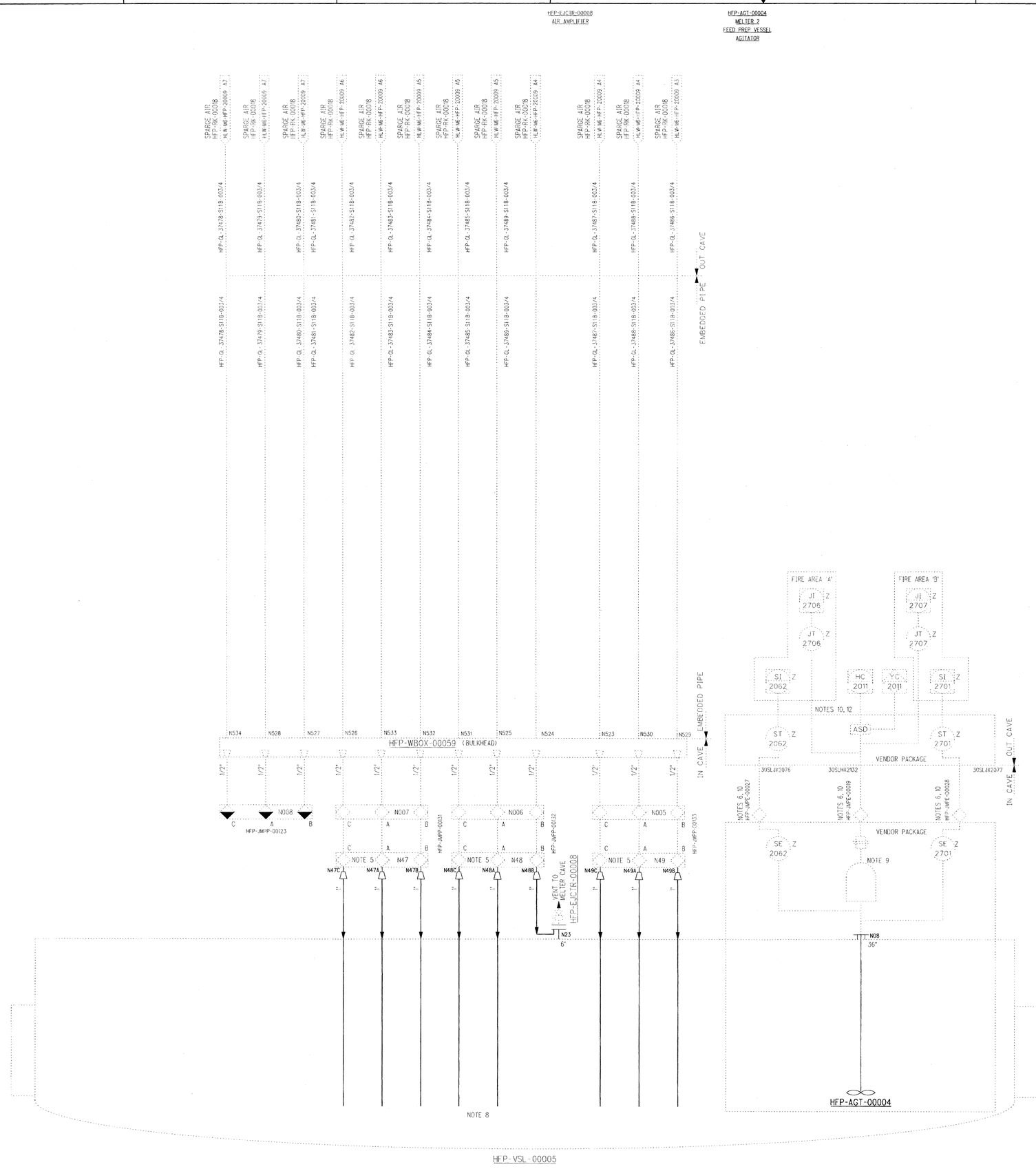

NOTES:

1. SEE DRAWINGS 24590-WTP-M6-50-P0001 THROUGH 24590-WTP-M6-50-P0008 FOR GENERAL NOTES, SYMBOLS AND LEGEND, AND GENERAL SLOPE REQUIREMENTS.
2. DELETED
3. DELETED
4. THE PRESSURE BOUNDARY FOR ALL SYSTEMS, STRUCTURES, AND COMPONENTS ON THIS DRAWING IS QUALITY LEVEL Q AND SEISMIC CATEGORY SC-I, UNLESS OTHERWISE NOTED.
5. 3-WAY CONNECTOR BLOCK TO BE MOUNTED ON VESSEL BULKHEAD. INDIVIDUAL JUMPER CONNECTION SIZE IS 1/2 INCH. 1 INCH SPARGE PIPING WILL BE CONNECTED TO EACH JUMPER LEG (WITH REDUCER) AND ROUTED BY VESSEL FABRICATOR INTO THE VESSEL.
6. ELECTRICAL AND INSTRUMENT JUMPERS ARE SHOWN ON SYSTEM BLOCK DIAGRAMS 24590-HLW-J1-HFP-20001 AND 20002.
7. CONTENTS OF THIS DOCUMENT ARE DANGEROUS WASTE PERMIT AFFECTING.
8. END OF SPARGERS (8 REQ'D) TO BE LOCATED AT A RADIUS OF 36 INCHES FROM VESSEL CENTER AND 1 INCH OFF VESSEL BOTTOM.
9. OIL FILL AND DRAIN CONNECTORS SHALL BE 3/4" STAUBLI RBE VALVED PLUG WITH INTEGRAL VALVE, DUST CAP, AND FIXING RING. GREASE CONNECTORS SHALL BE 3/8" STAUBLI RBE UNVALVED PLUG WITH DUST CAP AND FIXING RING.
10. THE MINIMUM QUALITY LEVELS AND SEISMIC CATEGORIES OF THE AGITATOR COMPONENTS ARE AS FOLLOWS: AGITATOR BODY, MOTOR JUMPER AND MOTOR ARE QUALITY LEVEL CM AND SEISMIC CATEGORY SC-II. HAND CONTROLLERS (HC AND YC), AND ASD ARE QUALITY LEVEL CM AND SEISMIC CATEGORY SC-III. THE SPEED SENSORS (SE/ST/SI), AND POWER SENSORS (JT/JI) ARE QUALITY LEVEL Q AND SEISMIC CATEGORY SC-I. THE JUMPERS FOR THE SPEED SENSORS ARE QUALITY LEVEL CM AND SEISMIC CATEGORY SC-III. QUALIFIED ISOLATION DEVICES NEED TO BE PART OF THE CIRCUIT FOR THE SPEED SENSORS TO PROTECT PPJ FROM JUMPER FAILURES.
11. DELETED
12. LOCATE REDUNDANT POWER/SPEED TRANSMITTERS AND INDICATORS IN SEPARATE FIRE AREAS.
13. INSTRUMENTS ARE QUALITY LEVEL CM, UNLESS DESIGNATED BY A "Z" OR ARE AIR PERMIT AFFECTING. INSTRUMENT, ROOT VALVE AND TUBING CONFINEMENT REQUIREMENTS ARE THE SAME AS THE CONNECTING PROCESS PIPE, UNLESS OTHERWISE NOTED.
14. DELETED
15. DELETED
16. THE COMPONENTS SHOWN ON THIS DRAWING IN PHANTOM DO NOT REQUIRE INDEPENDENT QUALIFIED REGISTERED PROFESSIONAL ENGINEER ASSESSMENTS OF DESIGN OR INSTALLATION INSPECTIONS BY A QUALIFIED INSTALLATION INSPECTOR IN ACCORDANCE WITH THE DWP AND/OR WASHINGTON ADMINISTRATIVE CODE REQUIREMENTS.
17. REVISED PER 24590-HLW-M6N-HFP-00039, WITH CORRECTIONS AND 24590-HLW-M6N-HFP-00069. REVISED NOZZLE LOCATION TO BE ALIGNED WITH THE VESSEL DRAWINGS. DELETED AGITATOR VIBRATION SENSORS (VE/VT/VI) AND CURRENT SENSORS (IT/II). ADDED AGITATOR POWER SENSORS (JT/JI). ADDED/REVISED/DELETED NOTES, HOLDS, REFERENCES, PIPE SPECS AND MINOR EDITORIAL CHANGES.

HOLD/OPENS ITEMS:

NONE

REFERENCES:

1. 24590-HLW-M5-V17T-P0001, PROCESS FLOW DIAGRAM, HLW RECEIPT AND FEED PREPARATION (SYSTEMS HCP, GFR AND HFP).
2. DELETED
3. 24590-WTP-3YD-50-00003, "SYSTEM DESCRIPTION FOR PULSE JET MIXERS AND SUPPLEMENTAL MIXING SUBSYSTEMS".
4. FOR PERMISSIVES AND INTERLOCKS FOR IMPORTANT TO SAFETY SYSTEMS (ITS) REFER TO SAFETY SYSTEMS REQUIREMENTS SPECIFICATION, 24590-HLW-3PS-PPJ-T0003 (TO BE ISSUED).
5. THE REQUIRED BATCH SEQUENCES, PERMISSIVES, INTERLOCKS, ALARMS AND OPERATOR INTERFACE POINTS ARE FULLY DESCRIBED IN THE SOFTWARE FUNCTIONAL SPECIFICATION FOR HLW MELTER FEED PROCESS (HFP) SYSTEM, 24590-HLW-3PS-HFP-T0001.

ROBERT PAUL KRETZSCHMAR STATE OF WASHINGTON 20340 REGISTERED PROFESSIONAL ENGINEER 3/31/08
EXPIRES: 3/16/10

PLEASE NOTE THAT SOURCE, SPECIAL NUCLEAR AND BYPRODUCT MATERIALS, AS DEFINED IN THE ATOMIC ENERGY ACT OF 1954 (AEA), ARE REGULATED AT THE U.S. DEPARTMENT OF ENERGY (DOE) FACILITIES EXCLUSIVELY BY DOE ACTING PURSUANT TO ITS AEA AUTHORITY. DOE ASSERTS, THAT PURSUANT TO THE AEA, IT HAS SOLE AND EXCLUSIVE RESPONSIBILITY AND AUTHORITY TO REGULATE SOURCE, SPECIAL NUCLEAR, AND BYPRODUCT MATERIAL AT DOE-OWNED NUCLEAR FACILITIES. INFORMATION CONTAINED HEREIN ON RADIONUCLIDES IS PROVIDED FOR PROCESS DESCRIPTION PURPOSES ONLY.

REV	DESCRIPTION	ORG	CHKD	RVWD	APVD	DATE
1	ISSUED FOR PERMITTING USE	LCS	[illegible]	CER	[illegible]	3/31/08
0	ISSUED FOR PERMITTING USE	SC	RR	EI	TV	5/17/05

Q QUALITY DESIGNATOR

REVISION HISTORY

ISSUED BY RPP-WTP PDC

ISSUE STAMP

	BY	DATE
PROJECT No.	24590	
SITE	HANFORD	
AREA	200E	
BUILDING No.	30	
ORIGINATOR	STEVE CROSS	5/12/05
CHECKER	RONDA RUSSELL	5/12/05
APPROVER	I VALENTINO	5/17/05
REVIEWER	E ISERN	5/16/05

CONTENT APPLICABLE TO ALARA? [X] YES [ ] NO
ADR NO. NA REV: NA
SAFETY SCREEN REQUIRED? [ ] YES [X] NO EMS INITIAL IF YES ___

SAFETY SCREEN IS REQUIRED FOR DRAWING TYPES IDENTIFIED IN 24590-WTP-GPP-SREG-002

"E" SIZE - 44x34
COMPUTER GENERATED - MANUAL CHANGES NOT PERMITTED

BECHTEL

RIVER PROTECTION PROJECT
WASTE TREATMENT PLANT
2435 STEVENS CENTER PLACE
RICHLAND, WA 99354

CONTRACT No: DE-AC27-01RV14136

P&ID - HLW
MELTER FEED PROCESS SYSTEM
HFP-VSL-00005
AGITATION AND SPARGING

SCALE: NONE

24590-HLW-M6-HFP-P20007

REV 1

R1080193

03/25/2008 01:12:33 PM

PLOTTED BY: lcsavic
C:\Work\lcsavic\ems50070\HLW\M6\HFP\P20007.dgn

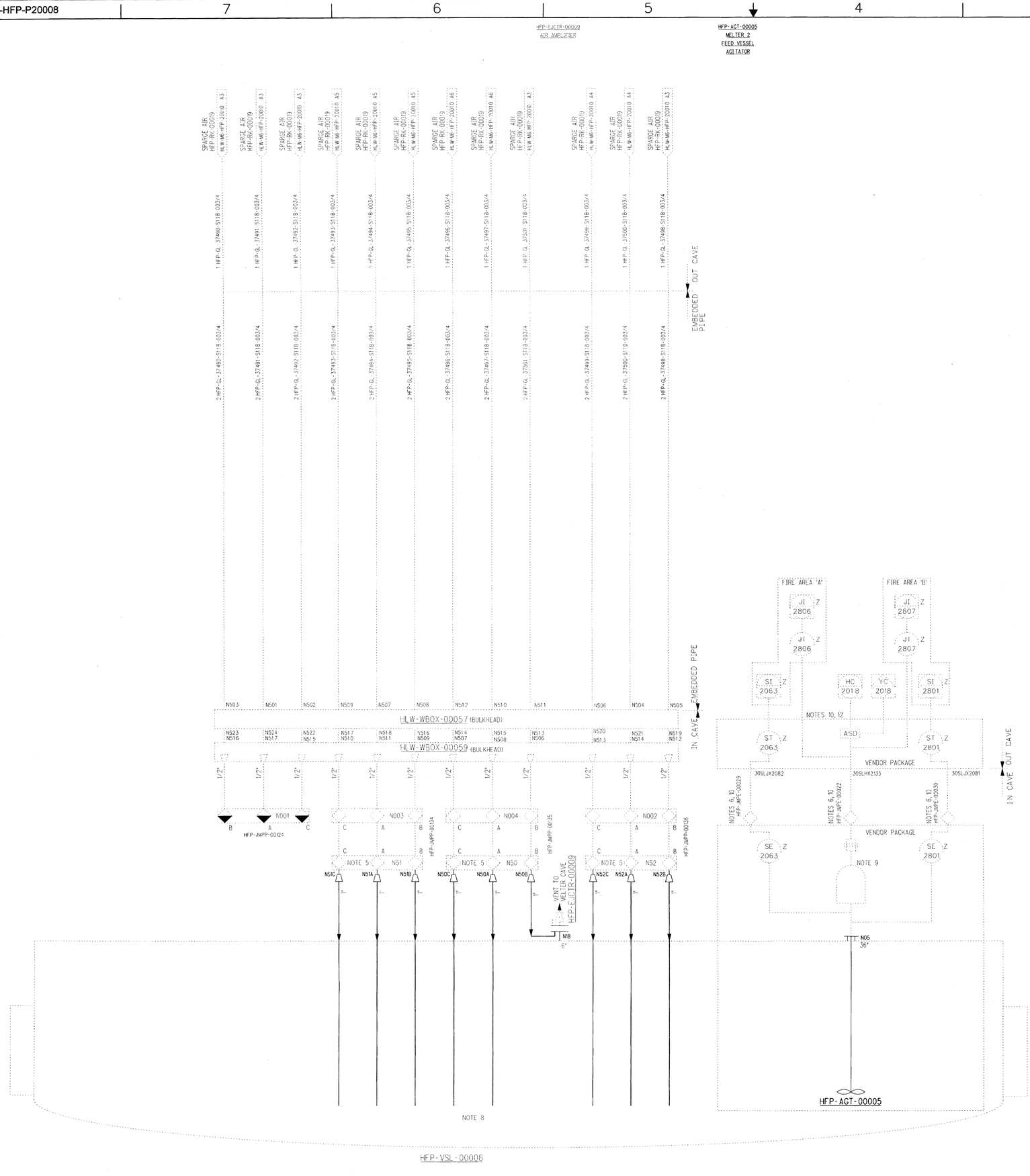

NOTES:

1. SEE DRAWINGS 24590-WTP-M6-50-P0001 THROUGH 24590-WTP-M6-50-P0008 FOR GENERAL NOTES, SYMBOLS AND LEGEND, AND GENERAL SLOPE REQUIREMENTS.
2. DELETED
3. DELETED
4. THE PRESSURE BOUNDARY FOR ALL SYSTEMS, STRUCTURES, AND COMPONENTS ON THIS DRAWING IS QUALITY LEVEL Q AND SEISMIC CATEGORY SC-I, UNLESS OTHERWISE NOTED.
5. 3-WAY CONNECTOR BLOCK TO BE MOUNTED ON VESSEL BULKHEAD. INDIVIDUAL JUMPER CONNECTION SIZE IS 1/2 INCH. 1 INCH SPARGE PIPING WILL BE CONNECTED TO EACH JUMPER LEG (WITH REDUCER) AND ROUTED BY VESSEL FABRICATOR INTO THE VESSEL.
6. ELECTRICAL AND INSTRUMENT JUMPERS ARE SHOWN ON SYSTEM BLOCK DIAGRAMS 24590-HLW-J1-HFP-20001 AND 20002.
7. CONTENTS OF THIS DOCUMENT ARE DANGEROUS WASTE PERMIT AFFECTING.
8. END OF SPARGERS (8 REQ'D) TO BE LOCATED AT A RADIUS OF 36 INCHES FROM VESSEL CENTER AND 1 INCH OFF VESSEL BOTTOM.
9. OIL FILL AND DRAIN CONNECTORS SHALL BE 3/4" STAUBLI RBE VALVED PLUG WITH INTEGRAL VALVE, DUST CAP, AND FIXING RING. GREASE CONNECTORS SHALL BE 3/8" STAUBLI RBE UNVALVED PLUG WITH DUST CAP AND FIXING RING.
10. THE MINIMUM QUALITY LEVELS AND SEISMIC CATEGORIES OF THE AGITATOR COMPONENTS ARE AS FOLLOWS: AGITATOR BODY, MOTOR JUMPER AND MOTOR ARE QUALITY LEVEL CM AND SEISMIC CATEGORY SC-II. HAND CONTROLLERS (HC AND YC), AND ASD ARE QUALITY LEVEL CM AND SEISMIC CATEGORY SC-III. THE SPEED SENSORS (SE/ST/SI), AND POWER SENSORS (JT/JI) ARE QUALITY LEVEL Q AND SEISMIC CATEGORY SC-I. THE JUMPERS FOR THE SPEED SENSORS ARE QUALITY LEVEL CM AND SEISMIC CATEGORY SC-III. QUALIFIED ISOLATION DEVICES NEED TO BE PART OF THE CIRCUIT FOR THE SPEED SENSORS TO PROTECT PPJ FROM JUMPER FAILURES.
11. DELETED
12. LOCATE REDUNDANT POWER/SPEED TRANSMITTERS AND INDICATORS IN SEPARATE FIRE AREAS.
13. INSTRUMENTS ARE QUALITY LEVEL CM, UNLESS DESIGNATED BY A "Z" OR ARE AIR PERMIT AFFECTING. INSTRUMENT, ROOT VALVE AND TUBING CONFINEMENT REQUIREMENTS ARE THE SAME AS THE CONNECTING PROCESS PIPE, UNLESS OTHERWISE NOTED.
14. DELETED
15. DELETED
16. THE COMPONENTS SHOWN ON THIS DRAWING IN PHANTOM DO NOT REQUIRE INDEPENDENT QUALIFIED REGISTERED PROFESSIONAL ENGINEER ASSESSMENTS OF DESIGN OR INSTALLATION INSPECTIONS BY A QUALIFIED INSTALLATION INSPECTOR IN ACCORDANCE WITH THE DWP AND/OR WASHINGTON ADMINISTRATIVE CODE REQUIREMENTS.
17. REVISED PER 24590-HLW-M6N-HFP-00040, WITH CORRECTIONS AND 24590-HLW-M6N-HFP-00069. REVISED NOZZLE LOCATION TO BE ALIGNED WITH THE VESSEL DRAWINGS. DELETED AGITATOR VIBRATION SENSORS (VE/VT/VI) AND CURRENT SENSORS (IT/II). ADDED AGITATOR POWER SENSORS (JT/JI). ADDED/REVISED/DELETED NOTES, HOLDS, REFERENCES, PIPE SPECS AND MINOR EDITORIAL CHANGES.

HOLD/OPEN ITEMS:

NONE

REFERENCES:

1. 24590-HLW-M5-V17T-P0001, PROCESS FLOW DIAGRAM, HLW RECEIPT AND FEED PREPARATION (SYSTEMS HCP, GFR AND HFP).
2. DELETED
3. 24590-WTP-3YD-50-00003, "SYSTEM DESCRIPTION FOR PULSE JET MIXERS AND SUPPLEMENTAL MIXING SUBSYSTEMS".
4. FOR PERMISSIVES AND INTERLOCKS FOR IMPORTANT TO SAFETY SYSTEMS (ITS) REFER TO SAFETY SYSTEMS REQUIREMENTS SPECIFICATION, 24590-HLW-3PS-PPJ-T0003 (TO BE ISSUED).
5. THE REQUIRED BATCH SEQUENCES, PERMISSIVES, INTERLOCKS, ALARMS AND OPERATOR INTERFACE POINTS ARE FULLY DESCRIBED IN THE SOFTWARE FUNCTIONAL SPECIFICATION FOR HLW MELTER FEED PROCESS (HFP) SYSTEM, 24590-HLW-3PS-HFP-T0001.

PLEASE NOTE THAT SOURCE, SPECIAL NUCLEAR AND BYPRODUCT MATERIALS, AS DEFINED IN THE ATOMIC ENERGY ACT OF 1954 (AEA), ARE REGULATED AT THE U.S. DEPARTMENT OF ENERGY (DOE) FACILITIES EXCLUSIVELY BY DOE ACTING PURSUANT TO ITS AEA AUTHORITY. DOE ASSERTS, THAT PURSUANT TO THE AEA, IT HAS SOLE AND EXCLUSIVE RESPONSIBILITY AND AUTHORITY TO REGULATE SOURCE, SPECIAL NUCLEAR, AND BYPRODUCT MATERIAL AT DOE-OWNED NUCLEAR FACILITIES. INFORMATION CONTAINED HEREIN ON RADIONUCLIDES IS PROVIDED FOR PROCESS DESCRIPTION PURPOSES ONLY.

REV	DESCRIPTION	ORG	CHKD	RVWD	APVD	DATE
1	ISSUED FOR PERMITTING USE	LCS	GM	CER JPK	RKF	3/31/08
0	ISSUED FOR PERMITTING USE	SC	RR	EI	TV	5/17/05

REVISION HISTORY

Q
QUALITY DESIGNATOR

ISSUED BY RPP-WTP PDC

ISSUE STAMP

PROJECT No.	24590
SITE	HANFORD
AREA	200E
BUILDING No.	30

	BY	DATE
ORIGINATOR	STEVEN CROSS	5/12/05
CHECKER	RONDA RUSSELL	5/12/05
APPROVER	T VALENTINO	5/17/05
REVIEWER	E ISERN	5/16/05

CONTENT APPLICABLE TO ALARA? [X] YES [ ] NO
ADR NO. NA REV: NA
SAFETY SCREEN REQUIRED? [ ] YES [X] NO EWNS INITIAL IF YES ___

BECHTEL

RIVER PROTECTION PROJECT
WASTE TREATMENT PLANT
2435 STEVENS CENTER PLACE
RICHLAND, WA 99354

CONTRACT No: DE-AC27-01RV14136

P&ID - HLW
MELTER FEED PROCESS SYSTEM
HFP-VSL-00006
AGITATION AND SPARGING

SCALE: NONE

24590-HLW-M6-HFP-P20008

REV 1

R10691536

03/25/2008 01:11:46 PM

PLOTTED BY: tsteinic
C:\Work\steinic\Gems\05070\HLW\M6\HFP20008.dgn

FORM E_SDN.DGN 02/2003

E SIZE - 44x34

SAFETY SCREEN IS REQUIRED FOR DRAWING TYPES IDENTIFIED IN 24590-WTP-GPP-SREG-002

COMPUTER GENERATED - MANUAL CHANGES NOT PERMITTED

This information has been identified as **CONFIDENTIAL BUSINESS INFORMATION**

Per the Department of Ecology's April 1, 2009, letter "Re: Certification of Confidential Business Information for the Waste Treatment Plant," under the criteria of 43.21A.160 RCW and WAC 173-303-810 (15), the following document and associated changes are granted confidentiality and are exempt from public review:

Document Number: 24590-HLW-M6-HMP-00001
Title: Piping & Instrumentation Diagram HLW Melter 1 System Feed and Agitation

HOP-FCLR-00001 MELTER 1 OFFGAS FILM COOLER N/A –

HMP-FCC-00001 FILM COOLER CLEANER – – N/A –

HOP-SPOOL-00001 MELTER 1 STANDBY OFFGAS SPOOL N/A –

HOP-FCLR-00003 MELTER 1 STANDBY OFFGAS INSERT N/A –

INSTRUMENT AIR HLW-M6-HMP-00012 G2

HMP-GL-31172-S10A-001/2

HMP-V-34302 FC HMP-V-09560

HMP-GL-31172-S10A-001/2

OUT CAVE S10A EMBEDDED PIPE S11B IN CAVE

HMP-GL-31172-S11B-001/2

OUT CAVE IN CAVE 30SLJX2028 NOTE 28

N141 (BULKHEAD) HMP-WBOX-00056

HMP-JMPP-00007 N0228

HMP-FCC-00001

OFFGAS/PRIMARY TO SCB-HOP-00001 HLW-M6-HOP-00001 E6

8" HOP-JMPP-00088

INSTRUMENT AIR/ DEMINERALIZED WATER HLW-M6-HMP-00012 D2

HMP-WE-01573-S11C-02

HMP-WE-01573-S11B-02

HMP-V-12102 N162 N034 HMP-JMPP-00011 N91

HMP-WBOX-00056 (BULKHEAD)

HMP-JMPP-00155 N033

HMP-WE-01596-S11C-02 SPARE HMP-V-12219 HMP-WE-01596-S11B-02 N163

OUT CAVE S11C EMBEDDED PIPE S11B IN CAVE

HMP-WE-01574-S11B-02 HMP-WE-01574-S11C-02 HMP-WE-01574-S11C-03

INSTRUMENT AIR/ DEMINERALIZED WATER HLW-M6-HMP-00012 C2

HMP-V-12103 N164 N032

OUT CAVE S11C EMBEDDED PIPE S11B IN CAVE

HMP-JMPP-00012 HOP-JMPP-00088 N03A 2"

HOP-FCLR-00001 P03 12"

HMP-MLTR-00001

TI 0242 TT 0242 30SLJX2056 OUT CAVE IN CAVE

TE 0242 HMP-JMPE-00004

SBS BYPASS HLW-M5-HOP-00002 A8

HOP-PW-20390-N11K-14 NOTE 25 HOP-JMPP-00112 NC NOTE 20 N54 4"

HOP-PW-20390-N11K-02 HOP-PW-20390-N11K-04

HOP-PW-20390-N11K-04

HLW-M5-HOP-00009 E3

HOP-JMPP-00144

EAST DISCHARGE CHAMBER HLW-M5-HMP-00007 B3 HMP-SPOOL-00002 N46 2"

WEST DISCHARGE CHAMBER HLW-M6-HMP-00006 B3 HMP-SPOOL-00001 N47 2"

HOP-SPOOL-00001

YC 0262 YV 0262 FC

YC 0263 YV 0263 FC

HMP-WE-01584-S11C-001/2 HMP-V-12186 N02C HMP-P.OC-00001

HMP-WE-01585-S11C-001/2 SPARE HMP-V-12187 N02A HMP-P.OC-00001

HMP-GQ-01548-S11C-001/2 HMP-V-12188 N02B HMP-P.OC-00001

HMP-WE-01584-S11B-001/2 HMP-WE-01585-S11B-001/2 HMP-GQ-01548-S11B-001/2

N031 N032 N033

HOP-WBOX-00074 (WALL MODULE) N009C N009A N009B

HMP-JMPP-00091

IN CELL IN CAVE

HMP-JMPP-00013 N55 2"

HV 0002 HOP

HOP-FCLR-00003 PIPE INSERT NOTE 19

3/8" SPARE REFERENCE TAP HMP-JMPP-00156 N57

3/8" N56

HMP-JMPP-00157 N03B 2"

VENT TO MELTER CAVE/C5 AREA HOP-JMPP-00140 8"

VENT TO MELTER CAVE/C5 AREA HOP-JMPP-00141 8"

OUT CAVE IN CAVE 30SLJX2056

YC 0227 HMP HOP-JMPE-00011

YD 0222 Z HMP NOTE 26

OFFGAS/STANDBY TO SCB-HOP-00001 HLW-M6-HOP-00001 E6

HOP-JMPP-00087 8"

NC FO

HOP-RK-00027

VENDOR PACKAGE NOTE 13

HMP-JMPP-00087

S11C JPSS-1 HMP HOP

PC 0249 PT 0249 PV 0249 FI 0228 FT 0228 PDI 0251

HMP-WE-01584-S11C-001/2 N01 HOP-V-11850 FO HOP-V-11851 N03 DIW-WE-43582-S11C-001/2 DEMINERALIZED WATER HLW-M6-DIW-00001 C4

PC 0250 PT 0250 PV 0250 PDI 0252

HMP-GQ-01548-S11C-001/2 N02 HOP-V-11852 FO HOP-V-11853 N04 ISA-GL-50933-C12A-001/2 INSTRUMENT AIR HLW-M6-ISA-00009 G8 ISA-V-36102

JPSS-1 S11C HOP DIW

JPSS-1 C12A HOP ISA

HMP-GL-32393-S11C-02 HLW-M6-HMP-00012 B2

FC 0232 PI 0236 FT 0232 FV 0232

WE GL HMP-V-12140 HMP-V-12139 HMP-V-12141 HMP-V-12142 HMP-V-12143 HMP-V-12144 HMP-V-12145

NOTE 30 HV 0253 INSTRUMENT AIR FOR START UP FRIT FUNNEL HLW-M5-HMP-00001 D8

HMP-GL-32395-S11C-001/2

HMP-WE-01588-S11C-02 HMP-WE-01580-S11C-02 HMP-WE-01580-S11C-01

YC 0264 YV 0264 FC

FI 0209 FT 0209 HV 0254 YC 0208 YV 0208

NOTE 30 FC

DEMINERALIZED WATER STANDBY-DUCT WASH HLW-M5-HMP-00012 D8

MELTER PRESSURE REFERENCE TAP PDT-0139 A/B HLW-M6-HMP-00001 C6

HMP-JMPP-00001 - B

NOTES:

1. SEE DRAWINGS 24590-WTP-M6-50-00001 THROUGH 24590-WTP-M6-50-00008 FOR GENERAL NOTES, SYMBOLS AND LEGEND, AND GENERAL SLOPE REQUIREMENTS.

2-12. DELETED

13. JPSS-1 SPECIFICATION DEFINED IN INSTRUMENT PIPING MATERIAL CLASS SPEC NO. 24590-WTP-3PS-JXF0-T0001. SPECIFICATION CHANGE ALSO DEFINES AREA OF C&I RESPONSIBILITY.

14-18. DELETED

19. PIPE INSERT WITH NO ACTIVE AIR COOLING.

20. LOCATE TO ALLOW NUT RUNNER OPERATION VIA OVERHEAD CRANE.

21-24. DELETED

25. HOP-PW-20390-N11K-14 IS AN AIR COOLING CHAMBER AND REQUIRES A MINIMUM VOLUME OF 7 CUBIC FEET.

26. PNEUMATIC ACTUATOR IS IN CAVE. REFER TO P&ID 24590-HLW-M6-ISA-00008 FOR PNEUMATIC LINE WALL PENETRATION DETAILS.

27. REVISION 3: MAJOR REVISION. NO CHANGE CLOUDS REQUIRED. ADDED WALL MODULE HOP-WBOX-00074. REDREW JUMPER ARRANGEMENT FOR HMP-JMPP-00091. CHANGED NOZZLE NUMBER FROM N11 TO N91 ON HOP-JMPP-00088. ADDED HOP-JMPP-00111 AND HOP-JMPP-00112 TO HOP-JMPP-00038. REMOVED VALVE TAG HOP-V-10963 FROM BUTTERFLY VALVE AND RETAGGED WITH HOP-HV-0002. CHANGED VALVE SYMBOL ON HMP-V12141 FROM BALL TO GLOBE. ADDED ROOT VALVE V-12294 TO PI-0236. REPLACED LINE NUMBER HMP-GQ-01546- S11C-02 WITH HMP-GL-32393-S11C-02 AND UPDATED CONTENT CODE BREAK. CHANGED NORMAL POSITION TO CLOSED ON YV-0208. UPDATED QUALITY FLAGS TO SHOW "CM". DELETED WALL BOX SYMBOL ON TT-0242. ADDED NOZZLE NUMBERS N01 THROUGH N04 TO HOP-RK-00027. DELETED TAGS FOR FE-0209, FE-0232, FE-0230, FE-0228. INCORPORATED WALL MODULE DESIGN, INCLUDING PIPE AND BULKHEAD. REVISED/ADDED/DELETED NOTES.

28. SPARE PENETRATION FOR FILM COOLER CLEANER FUTURE INSTRUMENTATION.

29. CONTENTS OF THIS DOCUMENT ARE DANGEROUS WASTE PERMIT AFFECTING.

30. VALVE SIZED TO LIMIT MAXIMUM FLOW TO PREVENT MELTER PRESSURIZATION.

31. REVISION 4: INCORPORATED 24590-HLW-M6N-HMP-00001, 24590-HLW-M6N-HMP-00070 AND 24590-HLW-M6N-M8OT-00004. REVISED SEISMIC AND QUALITY DESIGNATIONS. ADDED REMOTE MANUAL ITS VALVES FOR C5 CONFINEMENT. REVISED MELTER GRAPHICS. REVISED/ADDED/DELETED NOTES AND REFERENCES. SYSTEM REQUIRES DESIGN REVERIFICATION.

32. THE GEOMETRY OF JOGGLED (OFFSET) PENETRATIONS IS QUALITY LEVEL Q FOR RADIATION PROTECTION. THE QUALITY LEVEL AND SEISMIC CATEGORY DESIGNATIONS OF PIPING WITHIN JOGGLES ARE THE SAME AS CONNECTING PIPING.

33. REVISED TO INCORPORATE 24590-HLW-M6N-M8OT-00007. ADDED P-JOGGLES. ADDED/REVISED INSTRUMENT NUMBERS. ADDED VALVE TAGS IN HOP-RK-00027. RE-DREW HOP-SPOOL-00001. ADDED NORMAL POSITION FOR YD-0222. ADDED/DELETED/REVISED NOTES AND HOLDS.

HOLD/OPEN ITEMS:

1-7. DELETED

REFERENCES:

1. DURATEK SUBMITTAL 24590-101-TSA-W000-0010-07-11.
2. 24590-HLW-M5-V17T-00002, "PROCESS FLOW DIAGRAM HLW VITRIFICATION MELTER 1 (SYSTEM HMP AND HOP)".
3. THE REQUIRED BATCH SEQUENCES, PERMISSIVE, INTERLOCKS, ALARMS AND OPERATOR INTERFACE POINTS FOR THE HMP SYSTEM ARE FULLY DESCRIBED IN THE SOFTWARE FUNCTIONAL SPECIFICATION 24590-HLW-3PS-HMP-T0001.
4. FOR ITS PERMISSIVES AND INTERLOCKS, REFER TO SAFETY SYSTEM REQUIREMENT SPECIFICATIONS 24590-HLW-3PS-PPJ-T0016 (TO BE ISSUED).
5. FOR INSTRUMENTATION JUMPERS, REFER TO SYSTEM BLOCK DIAGRAMS 24590-HLW-J1-HMP-00001 THROUGH 00010.

Please note that source, special nuclear, and byproduct materials, as defined in the Atomic Energy Act of 1954 (AEA) are regulated at the U. S. Department of Energy (DOE) facilities exclusively by DOE pursuant to its AEA authority. DOE asserts that pursuant to AEA, it has sole and exclusive responsibility and authority to regulate nuclear safety and radioactive source materials at DOE-owned nuclear facilities. Information contained herein on radionuclides is provided for process description purposes only.

REV	DESCRIPTION	ORG	CHKD	RVWD	APVD	DATE
5	REVISED PER NOTE 33	MF	SJ	CER SPK	CSA JJ	2/8/07
4	REVISED PER NOTE 31	RDP	APP	JP	JJ	8/2/06
3	REVISED PER NOTE 27	RDP	JK	EI	JFS	12/13/04
0	ISSUED FOR CONSTRUCTION	JR	SS	MLW/KLH	SCF	01/31/03

REVISION HISTORY

Q QUALITY DESIGNATOR

ISSUED BY: ORWTP PDC ISSUE STAMP

	PROJECT No.	24590
	SITE	HANFORD
	AREA	200E
	BUILDING No.	30

	BY	DATE
ORIGINATOR	JEFF RAHMING	1/28/03
CHECKER	SID SOURANI	1/28/03
APPROVER	TOM VALENTINO	1/30/03
REVIEWER	SC FOELBER	1/31/03

CONTENT APPLICABLE TO ALARA? [X] YES [ ] NO

ADR NO. 24590-HLW-ADR-M-02-031 REV: 3

SAFETY SCREEN REQUIRED? [X] YES [ ] NO EANS INITIAL IF YES MTL

SAFETY SCREEN IS REQUIRED FOR DRAWING TYPES IDENTIFIED IN 24590-WTP-OPP-SREQ-002

'E' SIZE: - 44x34 COMPUTER GENERATED - MANUAL CHANGES NOT PERMITTED

BECHTEL NATIONAL, INC.

RIVER PROTECTION PROJECT
WASTE TREATMENT PLANT
2435 STEVENS CENTER PLACE
RICHLAND, WA 99354

CONTRACT No: DE-AC27-01RV14136

P&ID - HLW MELTER 1 SYSTEM FILM COOLER AND OFFGAS CONNECTION

SCALE: NONE

24590-HLW-M6-HMP-00002 REV 5

R10745311

02/06/2007 12:30:30 PM

PLOTTED BY: wmcnaney C:\Work\dms03839\HLW\HMP\00002.dgn

FORM E_SDN.DGN 02/2003

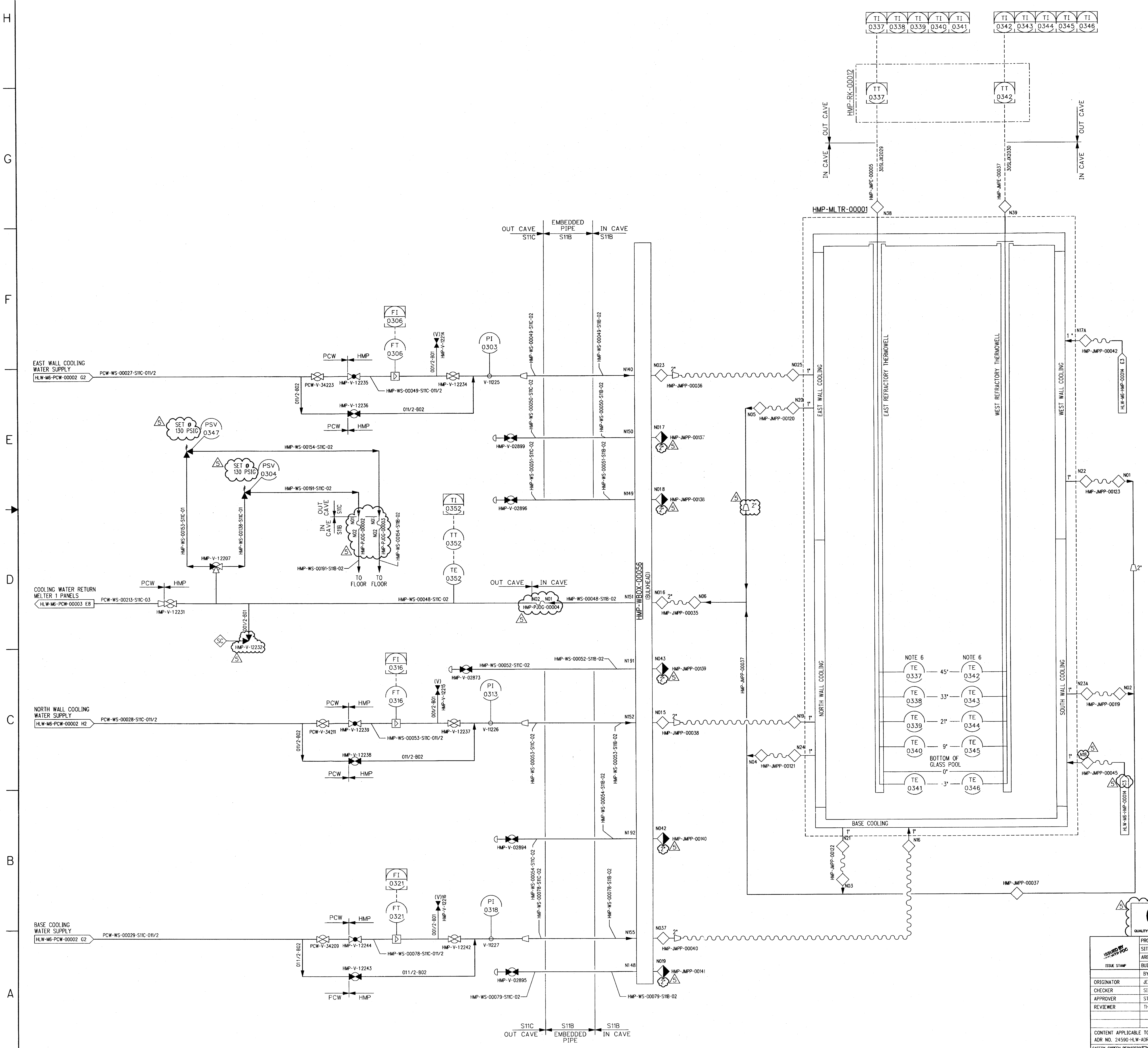

NOTES:

1. SEE DRAWINGS 24590-WTP-M6-50-00001 THROUGH 24590-WTP-M6-50-00008 FOR GENERAL NOTES, SYMBOLS AND LEGEND, AND GENERAL SLOPE REQUIREMENTS.

2-5. DELETED

6. REFRACTORY THERMOCOUPLE LOCATIONS RELATIVE TO BOTTOM OF GLASS POOL.

7-20. DELETED

21. REVISION 3: MAJOR REVISION, NO CHANGE CLOUDS REQUIRED. SEPARATED FLOW AND TEMPERATURE READING CAPABILITIES. TEMPERATURE TRANSMITTER KEPT IN RETURN LINE AND MOVED FLOW TRANSMITTERS TO SUPPLY LINES. RETURN LINES FROM EAST WALL, NORTH WALL AND BASE COMBINED IN A NEW MANIFOLD. ALSO ADDED RETURN LINE FROM P&ID 24590-HLW-M6-HMP-00014 TO THIS MANIFOLD. COMBINED THREE 1 1/2" RETURN LINES INTO ONE 2" RETURN LINE VIA NEW 2" JUMPER HMP-JMPP-00035. THE TWO REMAINING PENETRATIONS WERE CHANGED TO SPARES. DELETED PSV-0349, 0319, 0348 AND 0314 AND ASSOCIATED PIPING AND VALVES. ADDED NEW LINE NUMBERS AND VALVE NUMBERS TO LINES AND VALVES ASSOCIATED WITH REMAINING PSV-0347 AND 0304. ADDED WALLBOX HMP-WBOX-0001, HMP-WBOX-0002 AND HMP-WBOX-0003. DELETED JUMPER HMP-JMPP-00039. MOVED 1 1/2" X 2" REDUCERS ON ALL LINES TO WALLBOX NOZZLE. CONVERTED EXISTING THREE SPARE LINES: HMP-WS-00050-S11C-01 1/2, 00051, 00079 FROM 1 1/2" TO 2" SIZE. DELETED PSV THERMAL RELIEF HEADER COMING FROM P&ID 24590-HLW-M6-HMP-00014. REPLACED THERMAL RELIEF HEADER WITH A RELIEF LINE HMP-WS-00191-S11C-02. DELETED LOCKED OPEN VALVES IN SUPPLY AND RETURN LINES. DELETED RACK HMP-RK-00018. REVISED NOTE 12. CHANGED LINE SIZE ON RLD-WS-20036-S11C-03 FROM 03 TO 02. INCORPORATED NEW WALL MODULE DESIGN INCLUDING EMBEDDED PIPE AND BULKHEAD. ADDED ROOT VALVES TO THE PRESSURE INDICATORS. DISCHARGE FROM PSV-0304 AND PSV-0347 DIRECTED TO THE CAVE FLOOR. ADDED/REVISED/DELETED NOTES.

22. ALL SYSTEM, STRUCTURES, AND COMPONENTS ON THIS DRAWING ARE QUALITY LEVEL CM AND SEISMIC CATEGORY SC-III, UNLESS OTHERWISE NOTED.

23. CONTENTS OF THIS DOCUMENT ARE DANGEROUS WASTE PERMIT AFFECTING.

24. REVISION 4: INCORPORATED 24590-HLW-M6N-HMP-00004, -00010, -00064, AND 24590-HLW-M6N-M80T-00004, ADDED JUMPERS. REVISED MELTER GRAPHIC. REVISED/ADDED/DELETED NOTES AND REFERENCES. REVISED QUALITY AND SEISMIC DESIGNATIONS.

25. THE GEOMETRY OF JOGGLED (OFFSET) PENETRATIONS IS QUALITY LEVEL Q FOR RADIATION PROTECTION. THE QUALITY LEVEL AND SEISMIC CATEGORY DESIGNATIONS OF PIPING WITHIN JOGGLES ARE THE SAME AS CONNECTING PIPING.

26. REVISED TO INCORPORATE 24590-HLW-M6N-M80T-00007. ADDED P-JOGGLES. ADDED NOZZLE N18 TAG. REVISED SAMPLE CONNECTION SYMBOL. REVISED PSV SET PRESSURES. ADDED/REVISED/DELETED NOTES AND HOLD/OPEN ITEMS.

HOLD/OPEN ITEMS:

1-4. DELETED

REFERENCES:

1. DURATEK SUBMITTALS 24590-101-TSA-W000-0010-07-08 AND 24590-101-TSA-W000-0010-07-03.

2. 24590-HLW-M5-V17T-00002 PROCESS FLOW DIAGRAM HLW VITRIFICATION MELTER 1 (SYSTEM HMP AND HOP).

3-4. DELETED

5. THE REQUIRED BATCH SEQUENCES, PERMISSIVES, INTERLOCKS, ALARMS AND OPERATOR INTERFACE POINTS FOR THE HMP SYSTEM ARE DESCRIBED IN THE SOFTWARE FUNCTIONAL SPECIFICATION 24590-HLW-3PS-HMP-T0001.

6. FOR ELECTRICAL JUMPERS, REFER TO SYSTEM BLOCK DIAGRAMS 24590-HLW-JI-HMP-00001 THROUGH 00010.

Please note that source, special nuclear, and byproduct materials, as defined in the Atomic Energy Act of 1954 (AEA) are regulated at the U. S. Department of Energy (DOE) facilities exclusively by DOE acting pursuant to its AEA authority. DOE asserts that pursuant to AEA, it has sole and exclusive responsibility and authority to regulate source, special nuclear, and byproduct materials at DOE-owned nuclear facilities. Information contained herein on radionuclides is provided for process description purposes only.

REVISION HISTORY

REV	DESCRIPTION	ORG	CHKD	RVWD	APVD	DATE
5	REVISED PER NOTE 26	[signature]	SJ	SPK	CGN JJ	2/3/07
4	REVISED PER NOTE 24	RDP	SJ	JP	JJ	8/2/06
3	REVISED PER NOTE 21	RDP	JK	EI	JFS	12/13/04
0	ISSUED FOR CONSTRUCTION	JR	SS	TM	SCF	1/31/03

Q QUALITY DESIGNATOR

ISSUED BY RPP-WTP PDC — ISSUE STAMP

PROJECT No.	24590
SITE	HANFORD
AREA	200E
BUILDING No.	30

BECHTEL

RIVER PROTECTION PROJECT
WASTE TREATMENT PLANT
2435 STEVENS CENTER PLACE
RICHLAND, WA 99354

CONTRACT No: DE-AC27-01RV14136

	BY	DATE
ORIGINATOR	JEFFERY RAHMING	1/28/03
CHECKER	SID SOURANI	1/28/03
APPROVER	STEVEN FOELBER	1/31/03
REVIEWER	THOMAS VALENTINO	1/30/03

P&ID - HLW MELTER 1 REFRACTORY COOLING

CONTENT APPLICABLE TO ALARA? [X] YES [ ] NO
ADR NO. 24590-HLW-ADR-M-02-031 REV: 3
SAFETY SCREEN REQUIRED? [X] YES [ ] NO E&NS INITIAL IF YES [initials]

SCALE: NONE

24590-HLW-M6-HMP-00003 REV 5

SAFETY SCREEN IS REQUIRED FOR DRAWING TYPES IDENTIFIED IN 24590-WTP-GPP-SREG-002

'E' SIZE - 44x34
COMPUTER GENERATED - MANUAL CHANGES NOT PERMITTED

R10748313

01/31/2007 12:49:30 PM

PLOTTED BY: eidorn
C:\Work\dms03839\HLWM6HMP00003.dgn

FORM E_SDN.DGN 02/2003

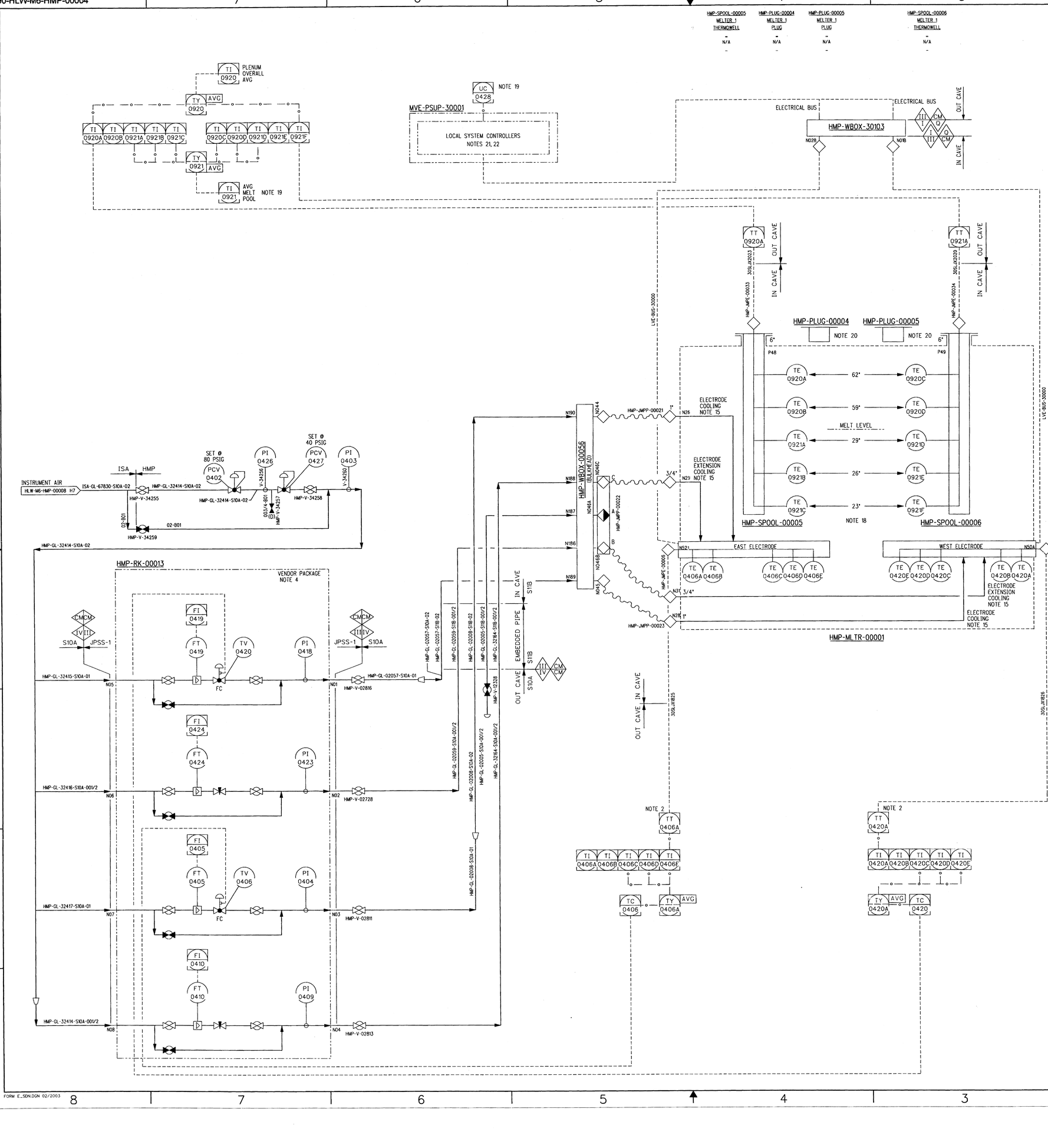

NOTES:

1. SEE DRAWINGS 24590-WTP-M6-50-00001 THROUGH 24590-WTP-M6-50-00008 FOR GENERAL NOTES, SYMBOLS AND LEGEND AND GENERAL SLOPE REQUIREMENTS.
2. FIVE POINT THERMOCOUPLE ASSEMBLY. AVERAGE OF THREE POINTS IS USED FOR ELECTRODE TEMPERATURE CONTROL INPUT, TWO POINTS ARE USED FOR ELECTRODE AND EXTENSION EXHAUST TEMPERATURE ALARM AT HIGH AND LOW TEMPERATURE.
3. DELETED
4. JPSS-1 SPECIFICATION DEFINED IN INSTRUMENT PIPING MATERIAL CLASS SPEC NO. 24590-WTP-3PS-JXF0-T0001. SPECIFICATION CHANGE ALSO DEFINES AREA OF RESPONSIBILITY.

5-14. DELETED

15. COOLING AIR FOR ELECTRODE AND ELECTRODE EXTENSION EXHAUSTS TO CAVE.
16. DELETED
17. SEE ARCHIVED REVISION 2 P&ID FOR REVISION 2 CHANGES.
18. DISTANCE OF TEMPERATURE ELEMENTS FROM BOTTOM OF MELT POOL.
19. POWER SUPPLY OPERATION IS INITIATED AND OPERATIONAL STATUS IS MONITORED FROM THE PCJ. JOULE HEATER POWER SUPPLY CONTROL SIGNAL ORIGINATES FROM MELTER AVERAGE GLASS POOL TEMPERATURE. JOULE HEATING POWER SUPPLY OUTPUT VOLTAGE, CURRENT, POWER AND FAULT DIAGNOSTICS ARE MONITORED BY THE PCJ.
20. PLUGS ARE ALTERNATE INSERTS FOR MELTER PORTS.
21. POWER SUPPLY UNIT CONTROLS INCLUDED IN CONTROL DESCRIPTION 24590-CM-HC4-EBB0-0001-04-00037. POWER SUPPLY MAY BE OPERATED IN "LOCAL" OR "REMOTE" MODE. WHEN IN "LOCAL" MODE, LOSS OF SIGNAL TO POWER SUPPLY FROM PCJ RESULTS IN DEFAULT TO LOCAL SET POINT. WHEN IN "REMOTE" MODE, LOSS OF SIGNAL TO POWER SUPPLY FROM PCJ RESULTS IN DEFAULT TO LAST OUTPUT.
22. FOR POWER SUPPLY SINGLE LINE DIAGRAM SEE DRAWING 24590-HLW-E1-LVE-10001. COOLING WATER FOR POWER SUPPLY IS SHOWN ON 24590-HLW-M6-PCW-00003.
23. REVISION 3: MAJOR REVISION, NO CHANGE CLOUDS REQUIRED. UPDATED QUALITY FLAGS. INCREASED SET POINT ON PCV-0402 FROM 25 PSIG TO80 PSIG. SWAPPED LOCATION OF FLOW CONTROLLERS WITH FLOW ELEMENTS. INCORPORATED WALL MODULE DESIGN INCLUDING EMBEDDED PIPE AND BULKHEAD. ADDED MELT POOL, PLENUM THERMOCOUPLES AND RELATED INSTRUMENTATION. ADDED ELECTRICAL CONNECTIONS TO ELECTRODES. ADDED PORT PLUGS. REVISED/ADDED/DELETED NOTES.
24. CONTENTS OF THIS DOCUMENT ARE DANGEROUS WASTE PERMIT AFFECTING.
25. ALL SYSTEMS, STRUCTURES, AND COMPONENTS ON THIS DRAWING ARE QUALITY LEVEL CM AND SEISMIC CATEGORY SC-III, UNLESS OTHERWISE NOTED.
26. MAJOR REVISION, NO CHANGE CLOUDS REQUIRED. INCORPORATED 24590-HLW-M6N-M80T-00004. MOVED PCV-0402 AND PCV-0427 OFF HMP-RK-00013. REVISED MELTER GRAPHIC. REVISED QUALITY AND SEISMIC DESIGNATIONS. REVISED/ADDED/DELETED NOTES AND REFERENCES. SYSTEM REQUIRES DESIGN REVERIFICATION.

HOLD/OPEN ITEMS:

1-3. DELETED

REFERENCES:

1. DURATEK SUBMITTAL 24590-101-TSA-W000-0010-07-10.
2. 24590-HLW-M5-V17T-00002 PROCESS FLOW DIAGRAM HLW VITRIFICATION MELTER 1 (SYSTEM HMP AND HOP).
3. THE REQUIRED BATCH SEQUENCES, PERMISSIVES, INTERLOCKS, ALARMS AND OPERATOR INTERFACE POINTS FOR THE HMP SYSTEM ARE FULLY DESCRIBED IN THE SOFTWARE FUNCTIONAL SPECIFICATION 24590-HLW-3PS-HMP-T0001.
4. FOR ELECTRICAL JUMPERS, REFER TO SYSTEM BLOCK DIAGRAMS 24590-HLW-J1-HMP-00001 THROUGH 00010.

Please note that source, special nuclear, and byproduct materials, as defined in the Atomic Energy Act of 1954 (as amended), at the U. S. Department of Energy (DOE) facilities are regulated by DOE acting pursuant to its AEA authority. DOE assumes no responsibility for, and declines and exclusive responsibility and authority to regulate source, special nuclear, and byproduct materials at DOE-owned nuclear facilities. Information contained herein on radionuclides is provided for general description purposes only.

REV	DESCRIPTION	ORG	CHKD	RVWD	APVD	DATE
4	REVISED PER NOTE 26	RDP	SS	JK	GEK	8/1/06
3	REVISED PER NOTE 23	RDP	JK	EI	TV	12-16-04
0	ISSUED FOR CONSTRUCTION	JK	SS	MLW/KLH	SCF	1-31-03

Q QUALITY DESIGNATOR

REVISION HISTORY

ISSUED BY RPP-WTP PDC

PROJECT No.	24590
SITE	HANFORD
AREA	200E
BUILDING No.	30

ISSUE STAMP

	BY	DATE
ORIGINATOR	JEFFERY RAHMING	1-28-03
CHECKER	SID SOURANI	1-28-03
APPROVER	STEVE FOELBER	1-31-03
REVIEWER	TOM VALENTINO	1-30-03

CONTENT APPLICABLE TO ALARA? [X] YES [ ] NO
ADR NO. 24590-HLW-ADR-M-02-031 REV: 3
SAFETY SCREEN REQUIRED? [X] YES [ ] NO EM'S INITIAL IF YES: JM

BECHTEL

RIVER PROTECTION PROJECT
WASTE TREATMENT PLANT
2435 STEVENS CENTER PLACE
RICHLAND, WA 99354

CONTRACT No: DE-AC27-01RV14136

P&ID - HLW MELTER 1 ELECTRODES

SCALE: NONE

24590-HLW-M6-HMP-00004 REV 4

E SIZE - 44 x 34

COMPUTER GENERATED - MANUAL CHANGES NOT PERMITTED

SAFETY SCREEN IS REQUIRED FOR DRAWING TYPES IDENTIFIED IN 24590-WTP-GPP-SREG-002

R10702439

07/26/2006 10:15:20 AM

PLOTTED BY: armstrony
C:\Work\Hmp\24590-HLW\M6\HMP00004.dgn

FORM E_SDN.DGN 02/2003

HMP-SKID-00003 ARGON SUPPLY - - N/A

HMP-SPOOL-00008 MELTER 1 THERMOWELL - - N/A

HMP-SPOOL-00003 MELTER 1 DISCHARGE VENT - - N/A

HMP-PLUG-00035 MELTER 1 PLUG - - N/A

HMP-PLUG-00033 MELTER 1 PLUG - - N/A

HMP-ALFT-00001 MELTER 1 AIR LIFT LANCE N/A

HMP-PLUG-00006 MELTER 1 PLUG - - N/A

HMP-PLUG-00032 MELTER 1 PLUG - - N/A

HMP-SPOOL-00007 MELTER 1 THERMOWELL - - N/A

HMP-SPOOL-00001 MELTER 1 DISCHARGE CHAMBER JUMPER N/A

HMP-HTR-00006 MELTER 1 DISCHARGE HEATER ASSEMBLY N/A

INSTRUMENT AIR HLW-M6-ISA-00004 C8

ISA-GL-37909-S10A-001/2

HMP-RK-00020

VENDOR PACKAGE NOTE 15

INSTRUMENT AIR HLW-M6-HMP-00007 E8

NOTE 2

SET @ 80 PSIG PCV 0641 FC 0643 FV 0643 FT 0643 FE 0643 YC 0664 YV 0664

NOTE 17 FC NOTE 28

MINIMUM DISTANCE

FC 0648 FT 0648 FE 0648 FV 0648 FO

ARGON GAS HLW-M6-HMP-00007 D8

ARGON GAS HLW-M6-HMP-00013 G7

HMP-GA-02032-S10A-001/2 HMP-RK-00022 HLW-M6-HMP-20006 C8

HMP-V-02919

HMP-GA-02033-S10A-01

HMP-SKID-00003

NOTE 25

VENDOR PACKAGE NOTE 24

SET @ 50 PSIG PCV 0661

SET @ 150 PSIG PCV 0665 ARGON GAS

SET @ 150 PSIG PCV 0666 ARGON GAS

HMP-RK-00021

VENDOR PACKAGE NOTE 15

HOLD 2

YC Z YV Z YC2

FROM MELTER REDUNDANT LEVEL TRANSMITTER HLW-M6-HMP-00003 F3

PDI 0649 PDT 0649

PI 0645 PT 0645

HMP-GL-02073-S10A-001/2 HMP-V-02826 HMP-GL-02002-S10A-001/2 HMP-V-02579

S10A OUT CAVE S11B EMBEDDED PIPE S11B IN CAVE

HMP-GL-02073-S11B-001/2 HMP-GL-02002-S11B-001/2

IN CAVE, OUT CAVE

REFER TO HLW-M6-HMP-00007

N168 N170 N169

HLW-WBOX-00056 (BULKHEAD)

N052B N052C N052A B C A HMP-JMPP-00025

LVE-PSUP-30002 VENDOR PACKAGE

HMP-RK-00012

TI 0658A 0658B 0658C 0658D 0758A 0758B 0758C 0758D

TT 0658A

WEST DISCHARGE CHAMBER TEMPERATURE FROM HMP-WBOX-00056 HLW-M6-HMP-00007 D2

30SLHX1832 30SLHX1833 30SLHX1834 30SLHX1835 30SLJX2021 30SLJX2022 30SLRX2025 FIXED PLUG

HMP-JMPE-00014 HMP-JMPE-00015 HMP-JMPE-00016 HMP-JMPE-00017 HMP-JMPE-00021 HMP-JMPE-00018 HMP-JMPF-00022

HOP-SPOOL-00001 HLW-M6-HMP-00002 C6 HMP-SPOOL-00001

NOTE 29 HMP-PLUG-00006

NOTE 29 HMP-PLUG-00032

3/8" N12 P12 6" 3" P47B P43 6 1/8" N58 HMP-HTR-00006 N59 N60 N61 1 7/8" P44 P45 1 7/8" 3" P47A

HMP-ALFT-00001 HMP-PLUG-00031 HMP-PLUG-00035 -1 -2 -3 -4 -5 -6 -7 -8 HMP-SPOOL-00008 HMP-SPOOL-00007 HMP-SPOOL-00003 N77

TE 0658A TE 0658C TE 0658B TE 0658D

NON-REPLACEABLE AUXILIARY HEATER NOTE 5

HMP-MLTR-00001

GLASS DISCHARGE

NOTES:

1. SEE DRAWINGS 24590-WTP-M6-50-00001 THROUGH 24590-WTP-M6-50-00008 FOR GENERAL NOTES, SYMBOLS AND LEGEND, AND GENERAL SLOPE REQUIREMENTS.
2. AIRLIFT AIR FLOW INTERLOCKED WITH HIGH-HIGH CANISTER LEVEL DETECTION.
3-4. DELETED
5. DISCHARGE AUXILIARY HEATER PRE-WIRED FOR FUTURE USE. HEATER RATED AT 4 KW, 208 VOLTS AND SINGLE PHASE.
6-14. DELETED
15. JPSS-1 SPECIFICATION IS DEFINED IN INSTRUMENT PIPING MATERIAL CLASS SPEC NO. 24590-WTP-3PS-JXF0-T0001. SPECIFICATION CHANGE ALSO DEFINES AREA OF RESPONSIBILITY.
16. DELETED
17. RACK MOUNTED PRESSURE REGULATORS (PCV) ARE PROVIDED WITH AN INTEGRAL PRESSURE INDICATOR.
18-23. DELETED
24. VENDOR PACKAGE TO INCLUDE ISOLATION VALVES, PCV, PSV, AUTOMATIC SWITCHING DEVICE ETC.
25. VALVE IS LOCATED OUTSIDE THE BUILDING ADJACENT TO HMP-SKID-00003.
26. SEE ARCHIVED REVISION 1 P&ID FOR REVISION 1 CHANGES.
27. SEE ARCHIVED REVISION 2 P&ID FOR REVISION 2 CHANGES.
28. ANGLE BODY PISTON VALVE CONSISTING OF A VALVE BODY, VALVE ACTUATOR AND PILOT SOLENOID.
29. PLUGS ARE ALTERNATE INSERTS FOR MELTER PORTS.
30. REVISION 3: MAJOR REVISION, NO CHANGE CLOUDS REQUIRED. CHANGED SEISMIC REQUIREMENT FOR LVE-PSUP-30002 FROM SC-III TO SC-IV. ADDED ITS DESIGNATION "Z" TO VALVE YV-0644. ADDED HOLD TO REDUCE ITS RATING ON YV-0644. CHANGED YV-0644 ACTUATOR FROM PNEUMATIC TYPE TO A SINGLE SOLENOID ACTUATOR. ALSO CHANGED VALVE TYPE FROM BALL TYPE TO ANGLE PISTON TYPE FOR VALVE YV-0644. CHANGED VALVE TYPE FROM BALL TO GATE TYPE FOR VALVES FV-0643 AND FV-0648. REPLACED SWIRL METER FE/FT-0643 AND FLOW CONTROL VALVE FC/FV-0643 WITH MASS FLOW CONTROLLER TYPE. UPDATED QUALITY FLAGS. CHANGED SET POINT ON PCV-0641 FROM 15 PSIG TO 80 PSIG. CHANGED SET POINT ON PCV-0661 FROM 100 PSIG TO 50 PSIG. DELETED PCV-0646. INCORPORATED WALL MODULE DESIGN INCLUDING EMBEDDED PIPE AND BULKHEAD. ADDED PCV-0665 AND PCV-0666 IN VENDOR PACKAGE HMP-SKID-00003. REVISED/ADDED/DELETED NOTES.
31. CONTENTS OF THIS DOCUMENT ARE DANGEROUS WASTE PERMIT AFFECTING.
32. ALL SYSTEMS, STRUCTURES, AND COMPONENTS ON THIS DRAWING ARE QUALITY LEVEL CM AND SEISMIC CATEGORY SC-III, UNLESS OTHERWISE NOTED.
33. INCORPORATED 24590-HLW-M6N-HMP-00003 AND 24590-HLW-M6NT-00004. DELETED ITS VALVE INTERLOCKED WITH HIGH-HIGH CANISTER LEVEL TO STOP GLASS AIR LIFT. ADDED REMOTE MANUAL ITS VALVES FOR C5 CONFINEMENT. REVISED QUALITY AND SEISMIC DESIGNATIONS. REDREW MELTER FOR CLARIFICATION. REVISED/ADDED/DELETED NOTES AND REFERENCES. SYSTEM REQUIRES DESIGN REVERIFICATION.

HOLD/OPEN ITEMS:

1. DELETED
2. VALVES ARE ON HOLD FOR C5 CONFINEMENT.

REFERENCES:

1. DURATEK SUBMITTAL 24590-101-TSA-W000-0010-07-07.
2. 24590-HLW-M5-V17T-00002, PROCESS FLOW DIAGRAM HLW VITRIFICATION MELTER 1 (SYSTEM HMP AND HOP).
3. THE REQUIRED BATCH SEQUENCES, PERMISSIVES, INTERLOCKS, ALARMS AND OPERATOR INTERFACE POINTS FOR THE HMP SYSTEM ARE FULLY DESCRIBED IN THE SOFTWARE FUNCTIONAL SPECIFICATION 24590-HLW-3PS-HMP-T0001.
4. FOR ITS PERMISSIVES AND INTERLOCKS, REFER TO SAFETY SYSTEM REQUIREMENT SPECIFICATIONS 24590-HLW-3PS-PPJ-T0016 (TO BE ISSUED).
5. FOR ELECTRICAL JUMPERS, REFER TO SYSTEM BLOCK DIAGRAMS 24590-HLW-J1-HMP-00001 THROUGH 00010.
6. FOR DISCHARGE HEATERS CONFIGURATION REFER TO 24590-HLW-E1-LVE-10002 AND 24590-HLW-J0-HMP-00006.

Please note that source, special nuclear, and byproduct materials, as defined in the Atomic Energy Act of 1954 (AEA) are regulated by DOE within pursuant to its AEA authority. Before accepting this document, you have sole and exclusive responsibility, that authority to regulate source, special nuclear, and byproduct materials at DOE-owned or leased facilities. Information contained herein on radionuclides is provided for process description purposes only.

REV	DESCRIPTION	ORG	CHKD	RVWD	APVD	DATE
4	REVISED PER NOTE 33	RDP	JJ	JR	CSH	8/2/06
3	REVISED PER NOTE 30	RDP	JK	EI	JFS	12/10/04
0	ISSUED FOR CONSTRUCTION	JR	SS	MW/KH	SCF	01/31/03

Q QUALITY DESIGNATOR

REVISION HISTORY

ISSUED BY RPP-WTP PDC

PROJECT No.	24590
SITE	HANFORD
AREA	200E
BUILDING No.	30

ISSUE STAMP

	BY	DATE
ORIGINATOR	JEFFERY RAHMING	01/28/03
CHECKER	SID SOURANI	01/28/03
APPROVER	STEVE FOELBER	01/31/03
REVIEWER	TOM VALENTINO	01/30/03

CONTENT APPLICABLE TO ALARA? [X] YES [ ] NO

ADR NO. 24590-HLW-ADR-M-02-031 REV: 3

SAFETY SCREEN REQUIRED? [X] YES [ ] NO EMS INITIAL IF YES

BECHTEL NATIONAL, INC.

RIVER PROTECTION PROJECT
WASTE TREATMENT PLANT
2435 STEVENS CENTER PLACE
RICHLAND, WA 99354

CONTRACT No: DE-AC27-01RV14136

P&ID - HLW MELTER 1 EAST DISCHARGE HEATERS AND AIRLIFT

SCALE: NONE

24590-HLW-M6-HMP-00006 REV 4

SAFETY SCREEN IS REQUIRED FOR DRAWING TYPES IDENTIFIED IN 24590-WTP-GPP-SREG-002

'E' SIZE - 44x34 COMPUTER GENERATED - MANUAL CHANGES NOT PERMITTED

R10702443

07/25/2006 03:45:38 PLOTTED BY: edorn C:\Work\dms03839\HLW\M6\HMP00006.dgn

FORM E_SDN.DGN 02/2003

HMP-PLUG-00027 MELTER 1 PLUG – N/A
HMP-ALFT-00002 MELTER 1 AIR LIFT LANCE – N/A
HMP-PLUG-00033 MELTER 1 PLUG – N/A
HMP-PLUG-00036 MELTER 1 PLUG – N/A
HMP-HTR-00007 MELTER 1 DISCHARGE HEATER ASSEMBLY – N/A
HMP-SPOOL-00010 MELTER 1 THERMOWELL – N/A
HMP-SPOOL-00009 MELTER 1 THERMOWELL – N/A
HMP-SPOOL-00004 MELTER 1 DISCHARGE VENT – N/A
HMP-SPOOL-00002 MELTER 1 DISCHARGE CHAMBER JUMPER – N/A
HMP-PLUG-00034 MELTER 1 PLUG – N/A

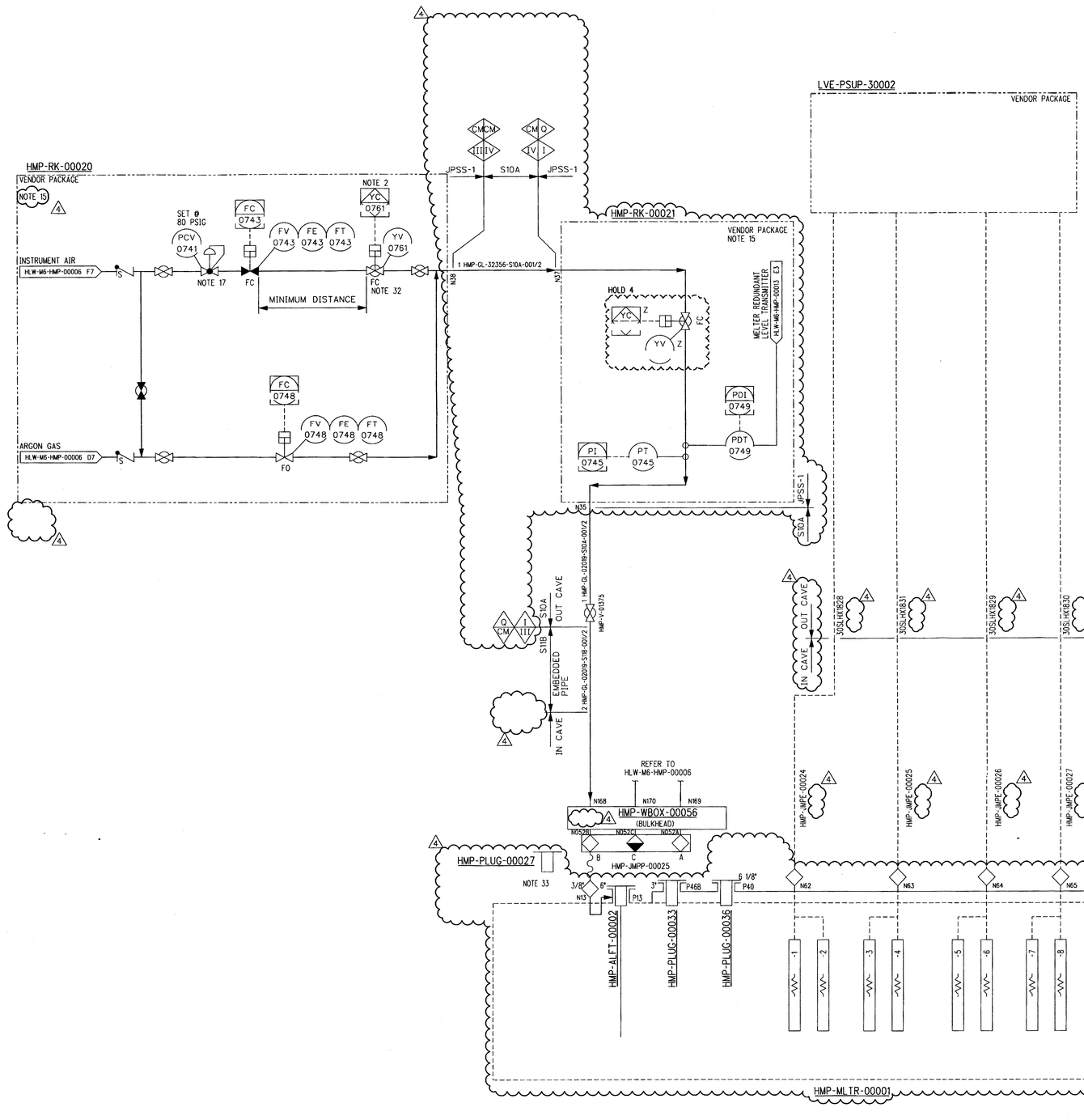

NOTES:

1. SEE DRAWINGS 24590-WTP-M6-50-00001 THROUGH 24590-WTP-M6-50-00008 FOR GENERAL NOTES, SYMBOLS AND LEGEND, AND GENERAL SLOPE REQUIREMENTS.
2. AIRLIFT AIR FLOW INTERLOCKED WITH HIGH HIGH CANISTER LEVEL DETECTION.
3. DELETED
4. DELETED
5. DISCHARGE AUXILIARY HEATER PRE-WIRED FOR FUTURE USE. HEATERS RATED AT 4 KW, 208 VOLTS AND 1 PHASE.

6-14. DELETED

15. JPSS-1 SPECIFICATION IS DEFINED IN INSTRUMENT PIPING MATERIAL CLASS SPEC NO. 24590-WTP-3PS-JXF0-T0001. SPECIFICATION CHANGE ALSO DEFINES AREA OF RESPONSIBILITY.
16. DELETED
17. RACK MOUNTED PRESSURE REGULATORS (PCV) ARE PROVIDED WITH AN INTEGRAL PRESSURE INDICATOR.

18-27. DELETED

28. SEE ARCHIVED REVISION 1 P&ID FOR REVISION 1 CHANGES.
29. DELETED
30. SEE ARCHIVED REVISION 2 P&ID FOR REVISION 2 CHANGES.
31. DELETED
32. ANGLE BODY PISTON VALVE CONSISTING OF A VALVE BODY, VALVE ACTUATOR AND PILOT SOLENOID.
33. PLUGS ARE ALTERNATE INSERTS FOR MELTER PORTS.
34. REVISION 3: MAJOR REVISION, NO CHANGE CLOUDS REQUIRED. CHANGED LVE-PSUP-30003 TAG TO LVE-PSUP-30002. CHANGED SEISMIC REQUIREMENT FOR LVE-PSUP-30002 FROM SC-III TO SC-1V. ADDED ITS DESIGNATION "Z" TO VALVE YV-0744. ADDED HOLD 1 TO REDUCE ITS RATING ON YV-0744. CHANGED YV-0761 ACTUATOR FROM THE PNEUMATIC ACTUATED CYLINDER TO A SINGLE SOLENOID ACTUATOR. ALSO CHANGED VALVE TYPE FROM BALL TO ANGLE BODY PISTON TYPE FOR VALVE YV-0761. REVISED DESCRIPTION FOR HMP-00006 SHEET CONNECTOR. CLARIFIED EMBEDDED SECTION OF LINE 02019. REPLACED SWIRL METER FE/FT-0743 AND FLOW CONTROL VALVE FC/FV-0743 WITH MASS FLOW CONTROLLER TYPE. UPDATED QUALITY FLAGS. ADDED ROOT VALVES TO PT-0745 AND PDT-0749. CHANGED SET POINT ON PCV-0741 FROM 15 PSIG TO 80 PSIG. DELETED PCV-0746. REVISED/ADDED/DELETED NOTES.
35. CONTENTS OF THIS DOCUMENT ARE DANGEROUS WASTE PERMIT AFFECTING.
36. ALL SYSTEMS, AND STRUCTURES, AND COMPONENTS ON THIS ARE QUALITY LEVEL CM AND SEISMIC SC-III, UNLESS OTHERWISE NOTED.
37. INCORPORATED 24590-HLW-M6N-HMP-00003 AND 24590-HLW-M6N-M8OT-00004. DELETED ITS VALVE INTERLOCKED WITH HIGH-HIGH CANISTER LEVEL TO STOP GLASS AIR LIFT. ADDED REMOTE MANUAL ITS VALVES FOR C5 CONFINEMENT. REVISED QUALITY AND SEISMIC DESIGNATIONS. REDREW MELTER FOR CLARIFICATION. REVISED/ADDED/DELETED NOTES AND REFERENCES. SYSTEM REQUIRES DESIGN REVERIFICATION.

HOLD/OPEN ITEMS:

1-3. DELETED
4. VALVES ARE ON HOLD FOR C5 CONFINEMENT.

REFERENCES:

1. DURATEK SUBMITTAL 24590-101-TSA-W000-0010-07-07.
2. 24590-HLW-M5-V17T-00002, PROCESS FLOW DIAGRAM HLW VITRIFICATION MELTER 1 (SYSTEM HMP AND HOP).
3. THE REQUIRED BATCH SEQUENCES, PERMISSIVES, INTERLOCKS, ALARMS AND OPERATOR INTERFACE POINTS FOR THE HMP SYSTEM ARE DESCRIBED IN THE SOFTWARE FUNCTIONAL SPECIFICATION 24590-HLW-3PS-HMP-T0001.
4. FOR ITS PERMISSIVES AND INTERLOCKS, REFER TO SAFETY SYSTEM REQUIREMENT SPECIFICATIONS 24590-HLW-3PS-PPJ-T0016 (TO BE ISSUED).
5. FOR ELECTRICAL JUMPERS, REFER TO SYSTEM BLOCK DIAGRAMS 24590-HLW-J1-HMP-00001 THROUGH 00010.
6. FOR DISCHARGE HEATERS CONFIGURATION REFER TO 24590-HLW-E1-LVE-10002 AND 24590-HLW-J0-HMP-00007.

Please note that source, special nuclear, and byproduct materials, as defined in the Atomic Energy Act of 1954 (AEA) are regulated at the U. S. Department of Energy (DOE) facilities exclusively by the DOE contractor. Bechtel National, Inc. (BNI), as the DOE contractor in AEA, it has sole and exclusive responsibility and authority to regulate source, special nuclear, and byproduct materials at DOE-owned nuclear facilities. Information contained herein on radionuclides is provided for process description purposes only.

REV	DESCRIPTION	ORG	CHKD	RVWD	APVD	DATE
4	REVISED PER NOTE 37	RDP	SJ	JP	CEA	8/2/06
3	REVISED PER NOTE 34	RDP	JK	SC	FS	12/10/04
0	ISSUED FOR CONSTRUCTION	JR	SS	MLW/KLH	SCF	01/31/03

REVISION HISTORY

Q — QUALITY DESIGNATOR

ISSUED BY RPP-WTP PDC — ISSUE STAMP

PROJECT No.	24590	
SITE	HANFORD	
AREA	200E	
BUILDING No.	30	

	BY	DATE
ORIGINATOR	JEFFERY RAHMING	1/28/03
CHECKER	SID SOURANI	1/28/03
APPROVER	TOM VALENTINO	1/30/03
REVIEWER	STEVEN FOELBER	1/31/03

CONTENT APPLICABLE TO ALARA? [X] YES [ ] NO
ADR NO. 24590-HLW-ADR-M-02-031 REV: 3
SAFETY SCREEN REQUIRED? [X] YES [ ] NO EMS INITIAL IF YES CM

BECHTEL NC
RIVER PROTECTION PROJECT
WASTE TREATMENT PLANT
2435 STEVENS CENTER PLACE
RICHLAND, WA 99354

CONTRACT No: DE-AC27-01RV14136

P&ID - HLW MELTER 1 WEST DISCHARGE HEATERS AND AIRLIFT

SCALE: NONE

24590-HLW-M6-HMP-00007 REV 4

SAFETY SCREEN IS REQUIRED FOR DRAWING TYPES IDENTIFIED IN 24590-WTP-OPP-SREQ-002

"E" SIZE - 44x34
COMPUTER GENERATED - MANUAL CHANGES NOT PERMITTED

R10702445

07/25/2006 03:41:42 PM

PLOTTED BY: eaborn
C:\Work\dm03839\HLW\M6\HMP00007.dgn

HMP-MPS-00002	HMP-PLUG-00011	HMP-MPS-00001
MELTER 1 POUR SPOUT WEST CHAMBER	MELTER 1 PLUG	MELTER 1 POUR SPOUT EAST CHAMBER
N/A	N/A	N/A
-	-	-

ISA-GL-67830-S10A-02 INSTRUMENT AIR HLW-M6-HMP-00004 E8

CMCM IVIII S10A JPSS-1 ISA HMP

HMP-RK-00013 VENDOR PACKAGE NOTE 13

INSTRUMENT AIR CAMERA PURGE COOLING HLW-M6-ISA-00004 C8 ISA-GL-37912-S10A-02 N38

PI 0829 FI 0825 PCV 0809 SET @ 48 PSIG PI 0830

ISA-GL-37778-S10A-01/2 ISA-V-34048

CMCM IVIII JPSS-1 S10A NOTE 13

CMCM IVIII OUT CAVE S10A EMBEDDED PIPE S11B IN CAVE S11B

HMP-GL-00005-S10A-001/2 HMP-V-02834 N10 HMP-GL-00005-S11B-001/2 N157

PI 0831 FI 0833 HMP-GL-02065-S10A-001/2 HMP-V-02838 N11 HMP-GL-02065-S11B-001/2 N156

PI 0832 FI 0834 HMP-GL-02086-S10A-001/2 HMP-V-02839 N12 HMP-GL-02086-S11B-001/2 N158

PI 0839 FI 0838 HMP-GL-31173-S10A-001/2 HMP-V-09561 N13 HMP-GL-31173-S11B-001/2 N159

HMP-WBOX-00056 (BULKHEAD) N036A N036B N036C A B C

HMP-JMPP-00026 A C B HMP-JMPP-00009

NOTE 13 JPSS-1 S10A III IV CM CM

OUT CAVE IN CAVE

Y1 0815D Y1 0815C Y1 0815B Y1 0815A JOSLJX1041 NOTE 16 4 3 2 1 HMP-JMPE-00023

IN CAVE OUT CAVE

Y1 0819A Y1 0819B Y1 0819C Y1 0819D JOSLJX1042 NOTE 16 4 3 2 1 HMP-JMPE-00013

HMP-JMPP-00161 1/2" N36 HMP-PLUG-00011 10" P36 HMP-MLTR-00001

N71 N74 N66 N75 N81 N80

XT 3150 PTJ NOTE 20 YS 0815A YS 0815B YS 0815C YS 0815D NOTE 21

XT 3149 PTJ NOTE 20 YS 0819A YS 0819B YS 0819C YS 0819D NOTE 21

HMP-MPS-00002 HMP-MPS-00001

WEST POUR SPOUT ASSEMBLY N65 N70 EAST POUR SPOUT ASSEMBLY N69 N68

WEST CANISTER EAST CANISTER

GAMMA DETECTOR LE 0817 LE 0818 LT 0817 LT 0818 LI 0817 LI 0818 IN CAVE OUT CAVE CM CM III IV JPSS-1 NOTE 13 S10A HMP-V-12279

IN CAVE OUT CAVE IR CAMERA NOTE 17 LE 0820 LT 0820 LI 0820B LI 0820A CM CM III IV JPSS-1 NOTE 13 S10A HMP-V-12278

ISA-GL-37410-S10A-011/2 BACKUP INSTRUMENT AIR HLW-M6-HMP-20008 G8

ISA-V-34050 OUTSIDE BLDG INSIDE BLDG ISA-V-34049 NOTE 22

HMP-GL-32380-S10A-001/2

CMCM IVIII S10A JPSS-1 NOTE 13 OUT CAVE IN CAVE

HMP-V-09545 FI 0828 HMP-V-09546 001/2-B01 HMP-V-09547 HMP-GL-02022-S10A-001/2 HMP-V-12277

IR CAMERA NOTE 17 LE 0816 LI 0816B LT 0816 LI 0816A

HMP-GL-02079-S10A-001/2

HMP-V-09539 FI 0827 HMP-V-09540 001/2-B01 HMP-V-09541

HMP-V-09526 FI 0835 HMP-V-09527 001/2-B01 HMP-V-09528

NOTES:

1. SEE DRAWINGS 24590-WTP-M6-50-00001 THROUGH 24590-WTP-M6-50-00008 FOR GENERAL NOTES, SYMBOLS AND LEGEND, AND GENERAL SLOPE REQUIREMENTS.
2. 2-12. DELETED
13. JPSS-1 SPECIFICATION IS DEFINED IN INSTRUMENT PIPING MATERIAL CLASS SPEC NO. 24590-WTP-3PS-JXFO-T0001. SPECIFICATION CHANGE ALSO DEFINES AREA OF RESPONSIBILITY.
14. DELETED
15. DELETED
16. CCTV CAMERA POWER/VIDEO/CONTROL CABLES TO CONNECT TO PTJ SYSTEM ENCLOSURE.
17. EAST AND WEST IR CAMERA MOUNTED IN THE CANISTER POUR TUNNEL WALL. IR CAMERA IN-WALL ASSEMBLY IS QUALITY LEVEL Q AND SEISMIC CATEGORY SC-II FOR SHIELDING.
18. DELETED
19. DELETED
20. DRIP PAN POSITION SWITCHES DETECT PRESENCE AND POSITION OF PRODUCT CANISTER.
21. PNEUMATIC LINEAR ACTUATOR FOR DRIP PAN.
22. LOCATION OUTSIDE OF BUILDING TO BE DETERMINED BY PLANT DESIGN.
23. SEE ARCHIVED REVISION 1 P&ID FOR REVISION 1 CHANGES.
24. DELETED
25. SEE ARCHIVED REVISION 2 P&ID FOR REVISION 2 CHANGES.
26. DELETED
27. DELETED
28. REVISION 3: MAJOR REVISION, NO CHANGE CLOUDS REQUIRED. UPDATED QUALITY FLAGS. REMOVED EQUIPMENT TAGS FROM IR AND CCTV CAMERAS. ADDED HOLD 1 PENDING RESOLUTION OF ITS REQUIREMENT AND QUALITY DESIGNATION. INCORPORATED WALL MODULE DESIGN INCLUDING EMBEDDED PIPE AND BULKHEAD. REVISED/ADDED/DELETED NOTES.
29. CONTENTS OF THIS DOCUMENT ARE DANGEROUS WASTE PERMIT AFFECTING.
30. ALL SYSTEMS, STRUCTURES, AND COMPONENTS ON THIS DRAWING ARE QUALITY LEVEL CM AND SEISMIC CATEGORY SC-III, UNLESS OTHERWISE NOTED.
31. MAJOR REVISION: NO CHANGE CLOUDS REQUIRED. REVISED MELTER GRAPHIC. INCORPORATED 24590-HLW-M6N-M80T-00004. ADDED SEPARATE AIR CONNECTIONS FOR POUR SPOUT CAMERAS AND PNEUMATIC ACTUATORS. ADDED HMP-GL-31173-S10A-001/2 AND HMP-GL-31173-S11B-001/2. REVISED SEISMIC AND QUALITY DESIGNATIONS. REVISED/ADDED/DELETED NOTES AND REFERENCES. SYSTEM REQUIRES DESIGN REVERIFICATION.

HOLD/OPEN ITEMS:

1. DELETED

REFERENCE:

1. DURATEK SUBMITTAL 24590-101-TSA-W000-0010-07-12.
2. 24590-HLW-M5-V17T-00002, PROCESS FLOW DIAGRAM HLW VITRIFICATION MELTER 1 (SYSTEM HMP AND HOP).
3. DESIGN PROPOSAL DRAWING 24590-HLW-M0-HMP-00137.
4. THE REQUIRED BATCH SEQUENCES, PERMISSIVES, INTERLOCKS, ALARMS AND OPERATOR INTERFACE POINTS FOR THE HMP SYSTEM ARE FULLY DESCRIBED IN THE SOFTWARE FUNCTIONAL SPECIFICATION 24590-HLW-3PS-HMP-T0001.
5. FOR ELECTRICAL JUMPERS, REFER TO SYSTEM BLOCK DIAGRAMS 24590-HLW-J1-HMP-00001 THROUGH 00010.

Please note that source, special nuclear, and byproduct materials, as defined in the Atomic Energy Act of 1954 (AEA) are regulated at the U.S. Department of Energy (DOE) facilities exclusively by DOE and its contractors. As the owner/operator, DOE asserts that pursuant to AEA, it has sole and exclusive responsibility and authority to regulate source, special nuclear, and byproduct materials at DOE-owned nuclear facilities. Information contained herein for radionuclides is provided for process description purposes only.

REV	DESCRIPTION	ORG	CHKD	RVWD	APVD	DATE
4	REVISED PER NOTE 31	RDP	SJ	JP	GEK	8/2/06
3	REVISED PER NOTE 28	RDP	JK	SC	JFS	12/10/04
0	ISSUED FOR CONSTRUCTION	JR	SS	MLW/KLH	SCF	1/31/03

REVISION HISTORY

Q QUALITY DESIGNATOR

ISSUED BY RPP-WTP PDC

ISSUE STAMP

PROJECT No.	24590
SITE	HANFORD
AREA	200E
BUILDING No.	30

	BY	DATE
ORIGINATOR	JEFFERY RAHMING	1/28/03
CHECKER	SID SOURANI	1/28/03
APPROVER	STEVEN FOELBER	1/31/03
REVIEWER	TOM VALENTINO	1/30/03

CONTENT APPLICABLE TO ALARA? [X] YES [ ] NO

ADR NO. 24590-HLW-ADR-M-02-031 REV: 3

SAFETY SCREEN REQUIRED? [X] YES [ ] NO E&MS INITIAL IF YES CM

SAFETY SCREEN IS REQUIRED FOR DRAWING TYPES IDENTIFIED IN 24590-WTP-GPP-SREG-002

BECHTEL

RIVER PROTECTION PROJECT
WASTE TREATMENT PLANT
2435 STEVENS CENTER PLACE
RICHLAND, WA 99354

CONTRACT No: DE-AC27-01RV14136

P&ID - HLW MELTER 1 GLASS POUR MONITIRING

SCALE: NONE

24590-HLW-M6-HMP-00008

REV 4

"E" SIZE - 44x34

COMPUTER GENERATED - MANUAL CHANGES NOT PERMITTED

R10702447

07/25/2006 03:35:55 PM

PLOTTED BY: eidsonr
C:\Work\dms03835\HLW\M6\HMP00008.dgn

FORM E_SDN.DGN 02/2003

24590-HLW-M6-HMP-00012

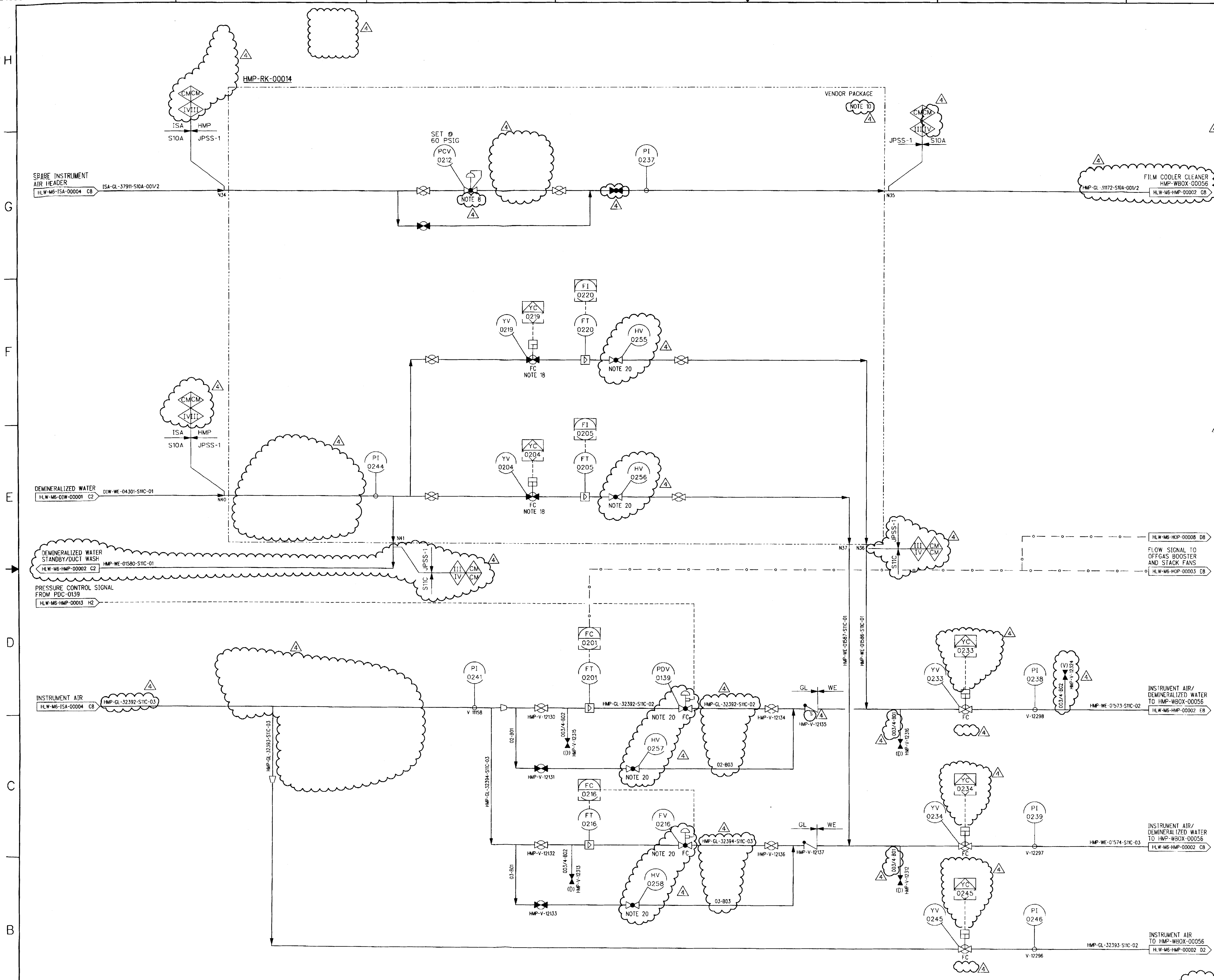

NOTES:

1. SEE DRAWINGS 24590-WTP-M6-50-00001 THROUGH 24590-WTP-M6-50-00008 FOR GENERAL NOTES, SYMBOLS AND LEGEND, AND GENERAL SLOPE REQUIREMENTS.

2-7. DELETED

8. RACK MOUNTED PRESSURE REGULATORS (PCV) ARE PROVIDED WITH AN INTEGRAL PRESSURE INDICATOR.

9. DELETED

10. JPSS-1 SPECIFICATION IS DEFINED IN INSTRUMENT PIPING MATERIALCLASS SPEC NO. 24590-WTP-3PS-JXF0-T0001. SPECIFICATION CHANGE ALSO DEFINES AREA OF RESPONSIBILITY.

11-15. DELETED

16. SEE ARCHIVED REVISION 1 P&ID FOR REVISION 1 CHANGES.

17. SEE ARCHIVED REVISION 1 P&ID FOR REVISION 1 CHANGES.

18. ANGLE BODY PISTON VALVE CONSISTING OF A VALVE BODY, VALVE ACTUATOR AND PILOT SOLENOID.

19. REVISION 3: MAJOR REVISION, NO CHANGE CLOUDS REQUIRED. MOVED DEMIN WATER SUPPLY FROM HMP-RK-00014 TO P&ID HMP-00002. ADDED PI-0244 AND PI-0246. MODIFIED VALVE OPERATOR TO PILOT SOLENOID WITHOUT TRAVEL SWITCHES FOR YV-0204 AND YV-0219. ALSO CHANGED VALVE TYPE FROM BALL TO ANGLE BODY PISTON VALVE TYPE FOR YV-0204 AND YV-0219. CHANGED YV-0204 AND YV-0219 FROM NORMALLY OPEN TO NORMALLY CLOSED. CHANGED PDV-0139 AND FV-0216 FROM BALL TO GLOBE. UPDATED QUALITY FLAGS. ADDED YV/YC/-0245 TO LINE 32393. ADDED ROOT VALVES TO VARIOUS INSTRUMENTS. REVISED/ADDED/DELETED NOTES.

20. VALVE SIZED TO LIMIT MAXIMUM FLOW TO PREVENT MELTER PRESSURIZATION.

21. ALL SYSTEMS, STRUCTURES, AND COMPONENTS ON THIS DRAWING ARE QUALITY LEVEL CM AND SEISMIC CATEGORY SC-IV, UNLESS OTHERWISE NOTED.

22. INCORPORATED 24590-HLW-M6N-HMP-00001, -00005, -00016, AND 24590-HLW-M6N-M80T-00004. REVISED LINE NUMBER. DELETED PCV-0240, PCV-0217 AND ASSOCIATED BYPASS BRANCHES. ADDED HAND VALVES TO LIMIT MAXIMUM AIR/WATER FLOW TO MELTER PLENUM. CHANGED YV-0233, YV-0234, YV-0245 AND CONTROLS FROM PPJ TO PCJ. REVISED/ADDED/DELETED NOTES AND REFERENCES. REVISED SEISMIC AND QUALITY DESIGNATIONS.

REFERENCES:

1. DURATEK SUBMITTAL 24590-101-TSA-W000-0010-07-11.
2. 24590-HLW-M5-V17T-00002, PROCESS FLOW DIAGRAM HLW VITRIFICATION MELTER 1 (SYSTEM HMP AND HOP).
3. DELETED
4. THE REQUIRED BATCH SEQUENCES, PERMISSIVE, INTERLOCKS, ALARMS AND OPERATOR INTERFACE POINTS FOR THE HMP SYSTEM ARE FULLY DESCRIBED IN THE SOFTWARE FUNCTIONAL SPECIFICATION 24590-HLW-3PS-HMP-T0001

Please note that source, special nuclear, and byproduct materials, as defined in the Atomic Energy Act of 1954 (AEA) are regulated at the U. S. Department of Energy (DOE) facilities exclusively by DOE acting pursuant to its AEA authority. DOE asserts that pursuant to AEA, it has sole and exclusive responsibility and authority to regulate source, special nuclear, and byproduct materials at DOE-owned nuclear facilities. Information contained herein on radionuclides is provided for process description purposes only.

CM
QUALITY DESIGNATOR

REV	DESCRIPTION	ORG	CHKD	RVWD	APVD	DATE
4	REVISED PER NOTE 22	RDP	SJ	CER		8/2/06
3	REVISED PER NOTE 19	RDP	JK	EI	JFS	12-13-04
0	ISSUED FOR CONSTRUCTION	JR	SCS	TV	SCF	1-31-03

REVISION HISTORY

ISSUED BY RPP-WTP PDC
ISSUE STAMP

PROJECT No.	24590
SITE	HANFORD
AREA	200E
BUILDING No.	30

RIVER PROTECTION PROJECT
WASTE TREATMENT PLANT
2435 STEVENS CENTER PLACE
RICHLAND, WA 99354

CONTRACT No: DE-AC27-01RV14136

	BY	DATE
ORIGINATOR	JEFFERY RAHMING	1-28-03
CHECKER	SCS	1-28-03
APPROVER	STEVEN FOELBER	1-31-03
REVIEWER	TOM VALENTINO	1-30-03

P&ID - HLW MELTER 1 FILM COOLER UTILITIES

CONTENT APPLICABLE TO ALARA? [X] YES [ ] NO
ADR NO. 24590-HLW-ADR-M 02-031 REV: 3
SAFETY SCREEN REQUIRED? [X] YES [ ] NO E&NS INITIAL IF YES

SCALE: NONE

24590-HLW-M6-HMP-00012 REV 4

SAFETY SCREEN IS REQUIRED FOR DRAWING TYPES IDENTIFIED IN 24590-WTP-GPP-SREG 002

'E' SIZE - 44x34
COMPUTER GENERATED - MANUAL CHANGES NOT PERMITTED

R10702449

07/27/2006 01:18:49 PM

PLOTTED BY: eisern

FORM E_SDM3ION 02/2003

24590-HLW-M6-HMP-00013

HMP-PLUG-00009 MELTER 1 PLUG – N/A

HMP-PLUG-00007 MELTER 1 PLUG – N/A

HMP-SPOOL-00021 MELTER 1 PLENUM PRESSURE TAP N/A

HMP-PLUG-00003 MELTER 1 PLUG – N/A

HMP-NOZ-00002 FEED NOZZLE – N/A

HMP-RK-00020

ISA S10A HMP JPSS-1

INSTRUMENT AIR HLW-M6-ISA-00004 C8 — ISA-GL-37910-S10A-001/2 — N10

ARGON GAS HLW-M6-HMP-00006 D7

INSTRUMENT AIR HLW-M6-ISA-00004 C8 — ISA-GL-37908-S10A-001/2 — N09

VENDOR PACKAGE NOTE 13

FI 0130 NOTE 26 — FI 0129 NOTE 26 — FI 0138 NOTE 26 — FI 0142 NOTE 26 — FI 0147 NOTE 26

FI 0151 NOTE 26

HMP-GL-32425-S10A-001/2 — HMP-GL-32426-S10A-001/2 — HMP-GL-32427-S10A-001/2 — HMP-GL-32428-S10A-001/2 — HMP-GL-32429-S10A-001/2

N12 N13 N14 N15 N16 N17 N18

HOLD 4

PRESSURE CONTROL SIGNAL TO PDV-0139 HLW-M6-HMP-00012 D8

PDC 0139

LI 0131 — LT 0131

PDT-0649 HMP-RK-00020 HLW-M6-HMP-00006 E5

PDT-0749 HMP-RK-00020 HLW-M6-HMP-00007 E5

PDY 0139A C — PDI 0139B — PDI 0139A

PDT 0139B PLENUM SECONDARY

PDT 0139A PLENUM PRIMARY

PDI 0143 — PDT 0143 BACKUP SHELL PRESSURE

LI 0144 — LT 0144 SHELL LEAK DETECTION

HMP-RK-00021 VENDOR PACKAGE NOTE 13

PDI 0152 — PDT 0152

DI 0132 — DT 0132

N11 N13 N10

HMP-GL-32424-S10A-001/2

JPSS-1 S10A — III IV CM CM — IV I CM O

N23 N22 N25 N26 N27

HMP-GL-32375-S10A-001/2

HMP-WBOX-00056, N177 HLW-M6-HMP-00001 F8

HMP-WBOX-00056, N179 HLW-M6-HMP-00001 F8

HMP-GA-02014-S10A-001/2

HMP-GL-32391-S10A-001/2

HMP-V-02738 — HMP-V-02740 — HMP-V-02742 — HMP-V-02743

HMP-GA-02041-S10A-001/2 — HMP-GL-02041-S10A-001/2 — HMP-GL-02043-S10A-001/2

HMP-WE-01536-S11C-001/2

HMP-V-02825

DEMIN WATER FROM HFP-RK-00010 HLW-M6-HFP-00005 D5

HMP-WE-01536-S11C-01

HMP-WE-01536-S11C-001/2

HOLD 4

HMP-GL-02011-S10A-001/2 — HMP-GL-02043-S10A-001/2

OUT CAVE S10A/S11C — EMBEDDED PIPE S11B — IN CAVE

HMP-GL-32391-S11B-001/2 — HMP-GA-02041-S11B-001/2 — HMP-WE-01536-S11B-001/2 — HMP-GL-02011-S11B-001/2 — HMP-GL-02043-S11B-001/2

SPARE — HMP-V-02830 — HMP-V-02831 — HMP-V-02829 — HMP-V-02824 — HMP-V-02959

HMP-GL-02077-S10A-001/2 — HMP-GL-32341-S10A-001/2 — HMP-GL-02076-S10A-001/2 — HMP-WE-01600-S11C-001/2

HMP-GL-02077-S11B-001/2 — HMP-GL-32341-S11B-001/2 — HMP-GL-02076-S11B-001/2 — HMP-WE-01600-S11B-001/2

REFER TO 24590-HLW-M6-HMP-00002

REFER TO 24590-HLW-M6-HMP-00008

HMP-WBOX-00056 (BULKHEAD) — N021A N021B N021C — HMP-JMPP-00006

HMP-WBOX-00056 (BULKHEAD) — N022A N022C N022B — HMP-JMPP-00007

HMP-WBOX-00056 (BULKHEAD) — N182 N180 N181 — HMP-JMPP-00008

HMP-WBOX-00056 (BULKHEAD) — N160 N161 — HMP-JMPP-00009

CAVE REFERENCE PRESSURE

SLURRY FEED FROM HFP-PMP-00001 HLW-M6-HFP-00002 E2 — HFP-JMPP-00044 — HFP HMP

HMP-JMPP-00106

HMP-PLUG-00003 NOTE 27

HMP-PLUG-00007 NOTE 27

HMP-JMPP-00151 — 10" P11 — 1/2" N11 — HMP-PLUG-00009

HMP-JMPP-00152 — 10" P10 — N10A — 1/2" N10 — HMP-SPOOL-00021

6" P34 — 3/8" N34B — 3/8" N028 — 3/4" — HMP-NOZ-00002 P02

3/8" N33

HMP-BBLR-00006

GLASS LEVEL

REFER TO HLW-M6-HMP-00001

HMP-MLTR-00001

NOTES:

1. SEE DRAWINGS 24590-WTP-M6-50-00001 THROUGH 24590-WTP-M6-50-00008 FOR GENERAL NOTES, SYMBOLS AND LEGEND, AND GENERAL SLOPE REQUIREMENTS.
2-12. DELETED
13. JPSS-1 SPECIFICATION IS DEFINED IN INSTRUMENT PIPING MATERIAL CLASS SPEC NO. 24590-WTP-3PS-JXF0-T0001. SPECIFICATION CHANGE ALSO DEFINES AREA OF RESPONSIBILITY.
14-21. DELETED
22. SEE ARCHIVED REVISION 1 P&ID FOR REVISION 1 CHANGES.
23. DELETED
24. SEE ARCHIVED REVISION 2 P&ID FOR REVISION 2 CHANGES.
25. DELETED
26. VARIABLE AREA FLOW METER WITH INTEGRAL FLOW CONTROL VALVE AND PRESSURE REGULATOR.
27. PLUGS ARE ALTERNATE INSERTS FOR MELTER PORTS. MELTER PLUGS ARE QUALITY LEVEL CM AND SEISMIC CATEGORY SC-III.
28. REVISION 3: MAJOR REVISION, NO CHANGE CLOUDS REQUIRED. UPDATED QUALITY FLAGS TO SHOW "CM". ADDED ROOT VALVES TO VARIOUS INSTRUMENTS. REVISED MELTER NOZZLE N10 TO N10A. ADDED NEW SPARE NOZZLES N11 AND N10 TO MELTER. DELETED JUMPER HMP-JMPP-00006. DELETED PCVS PCV-0125, 0134 AND PCV-0150. DELETED PCV-0135 AND PI-0126. INCORPORATED WALL MODULE DESIGN INCLUDING EMBEDDED PIPE & BULKHEAD. REVISED/ADDED/DELETED NOTES.
29. CONTENTS OF THIS DOCUMENT ARE DANGEROUS WASTE PERMIT AFFECTING.
30. INCORPORATED 24590-HLW-M6N-HMP-00002, -00065 AND 24590-HLW-M6N-M8OT-00004. ADDED REMOTE MANUAL VALVES FOR C5 CONFINEMENT. REVISED QUALITY AND SESMIC DESIGNATIONS. MODIFIED MELTER GRAPHIC. REVISED/ADDED/DELETED NOTES AND REFERENCES. SYSTEM REQUIRES DESIGN REVERIFICATION.

HOLD/OPEN ITEMS:

1-3. DELETED
4. VALVES ON HOLD FOR C5 CONFINEMENT.

REFERENCES:

1. 24590-HLW-M5-V17T-00002, PROCESS FLOW DIAGRAM HLW VITRIFICATION MELTER 1 (SYSTEM HMP AND HOP).
2. DURATEK SUBMITTAL 24590-101-TSA-W000-0010-07-06.
3. THE REQUIRED BATCH SEQUENCES, PERMISSIVES, INTERLOCKS, ALARMS AND OPERATOR INTERFACE POINTS FOR THE HMP SYSTEM ARE DESCRIBED IN THE SOFTWARE FUNCTIONAL SPECIFICATION 24590-HLW-3PS-HMP-T0001.
4. FOR ITS PERMISSIVES AND INTERLOCKS, REFER TO SAFETY SYSTEM REQUIREMENT SPECIFICATIONS 24590-HLW-3PS-PPJ-T0016 (TO BE ISSUED).

Please note that source, special nuclear, and byproduct materials as defined by the Atomic Energy Act of 1954 (AEA) are regulated at the U. S. Department of Energy (DOE) facilities exclusively by DOE acting pursuant to its AEA authority. DOE asserts that pursuant to AEA, it has sole and exclusive authority and responsibility over source, special nuclear, and byproduct materials at DOE-owned nuclear facilities. Information provided herein on radionuclides is provided for process description purposes only.

REV	DESCRIPTION	ORG	CHKD	RVWD	APVD	DATE
4	REVISED PER NOTE 30	RPP	SJ	JP	CER	8/2/06
3	REVISED PER NOTE 28	RDP	JK	JFS	SC	12-10-04
0	ISSUED FOR CONSTRUCTION	JR	SS	MLW/KLH	SCF	1-31-03

Q QUALITY DESIGNATOR

REVISION HISTORY

ISSUED BY RPP-WTP PDC — ISSUE STAMP

PROJECT No.	24590
SITE	HANFORD
AREA	200E
BUILDING No.	30

	BY	DATE
ORIGINATOR	JK FOR JEFFERY RAHMING	1-28-03
CHECKER	SID SOURANI	1-28-03
APPROVER	STEVE FOELBER	1-31-03
REVIEWER	TOM VALENTINO	1-30-03

CONTENT APPLICABLE TO ALARA? [X] YES [ ] NO
ADR NO. 24590-HLW-ADR-M-02-031 REV: 3
SAFETY SCREEN REQUIRED? [X] YES [ ] NO E&NS INITIAL IF YES JK

SAFETY SCREEN IS REQUIRED FOR DRAWING TYPES IDENTIFIED IN 24590-WTP-GPP-SREQ-002

BECHTEL — RIVER PROTECTION PROJECT WASTE TREATMENT PLANT 2435 STEVENS CENTER PLACE RICHLAND, WA 99354

CONTRACT No: DE-AC27-01RV14136

P&ID - HLW MELTER 1 PRESSURE, DENSITY AND LEVEL DETECTION

SCALE: NONE

24590-HLW-M6-HMP-00013 REV 4

'E' SIZE - 44x34 COMPUTER GENERATED - MANUAL CHANGES NOT PERMITTED

R1070245I

08/01/2006 03:50:00 PM

PLOTTED BY: eAaron
C:\Work\dms03839\HLW\M6\HMP00013.dgn

FORM E_SDN.DGN 02/2003

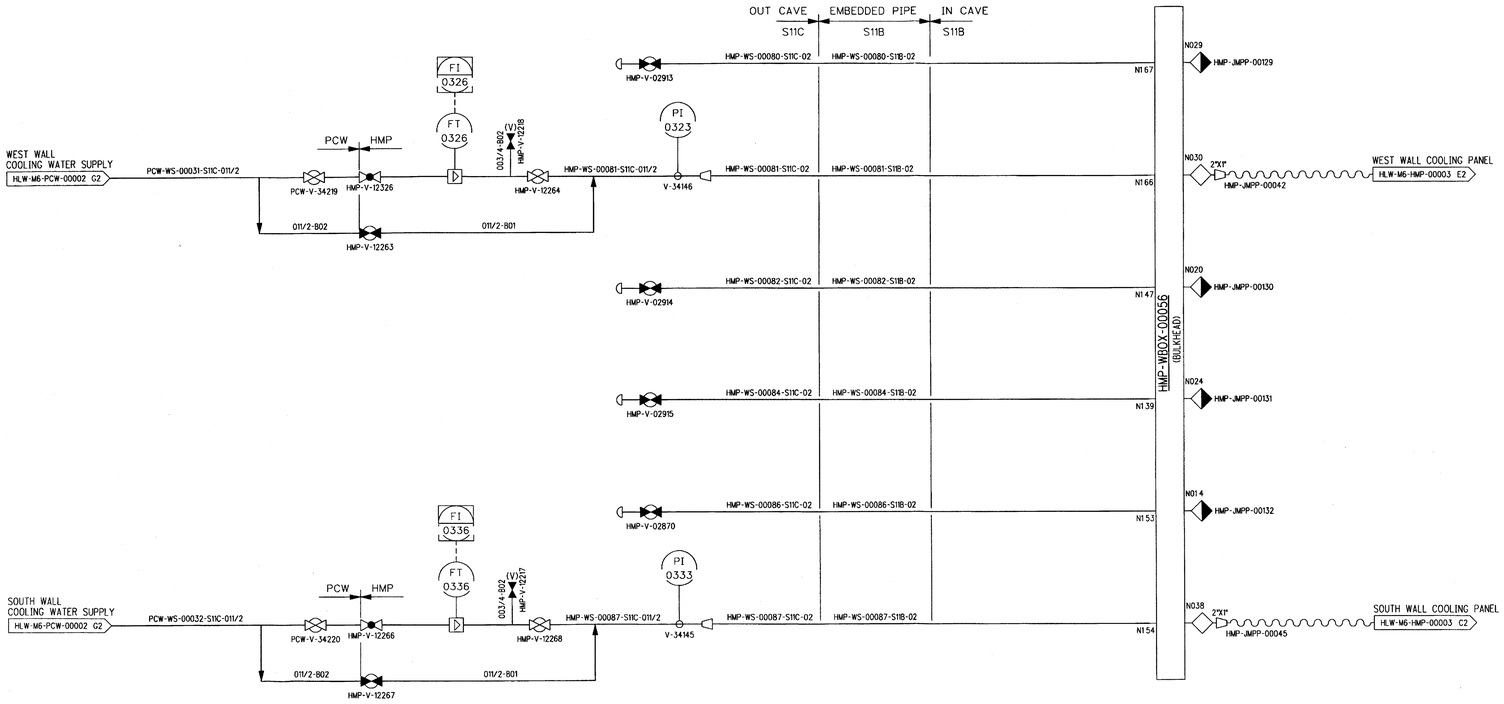

NOTES:

1. SEE DRAWINGS 24590-WTP-M6-50-00001 THROUGH 24590-WTP-M6-50-00008 FOR GENERAL NOTES, SYMBOLS AND LEGEND, AND GENERAL SLOPE REQUIREMENTS.

2-16. DELETED

17. SEE ARCHIVED REVISION 1 P&ID FOR REVISION 1 CHANGES.

18. DELETED

19. SEE ARCHIVED REVISION 2 P&ID FOR REVISION 2 CHANGES.

20. DELETED

21. REVISION 3: MAJOR REVISION, NO CHANGE CLOUDS REQUIRED. SEPARATED FLOW AND TEMPERATURE READING CAPABILITIES. TEMPERATURE TRANSMITTER KEPT IN RETURN LINE (SHOWN ON HMP-00003) AND MOVED FLOW TRANSMITTERS TO SUPPLY LINES. COMBINED RETURN LINES FROM WEST WALL AND SOUTH WALL IN A NEW MANIFOLD. DELETED PSV-0334, 0351, 0324, AND 0350 AND ASSOCIATED PIPING AND VALVES. DELETED JUMPERS JMPP-00041 AND 00043. CONVERTED EXISTING TWO SPARE LINES 00082 AND 00084 FROM 1 1/2" TO 2" SIZE. DELETED COOLING WATER RETURN LINES COMING FROM WEST PANEL AND SOUTH PANEL. CHANGED THESE PENETRATIONS TO SPARES. ALSO DELETED LINE 00213, GOING TO P&ID 24590-HLW-M6-PCW-00003. DELETED THERMAL RELIEF HEADER. DELETED LOCKED OPEN VALVES IN THE SUPPLY LINE. DELETED RACK HMP-RK-00018. INCORPORATED NEW WALL MODULE DESIGN INCLUDING EMBEDDED PIPE AND BULKHEAD. REVISED/ADDED/DELETED NOTES.

22. CONTENTS OF THIS DOCUMENT ARE DANGEROUS WASTE PERMIT AFFECTING

23. ALL SYSTEMS, STRUCTURES, AND COMPONENTS ON THIS DRAWING ARE QUALITY LEVEL CM AND SEISMIC CATEGORY SC-III, UNLESS OTHERWISE NOTED.

24. MAJOR REVISION, NO CHANGE CLOUDS REQUIRED. INCORPORATED 24590-HLW-M6N-HMP-00010, 24590-HLW-M6N-HMP-00066 AND 24590-HLW-M6N-M80T-00004. REVISED/ADDED/DELETED NOTES AND REFERENCES. REVISED SEISMIC AND QUALITY DESIGNATIONS.

HOLD/OPEN ITEMS:

1-3. DELETED

REFERENCES:

1. DURATEK SUBMITTALS 24590-101-TSA-W000-0010-08-03 AND 24590-101-TSA-W000-0010-07-03.

2. 24590-HLW-M5-V17T-00002, PROCESS FLOW DIAGRAM HLW VITRIFICATION MELTER 1 (SYSTEM HMP AND HOP).

3. THE REQUIRED BATCH SEQUENCES, PERMISSIVES, INTERLOCKS, ALARMS AND OPERATOR INTERFACE POINTS FOR THE HMP SYSTEM ARE DESCRIBED IN THE SOFTWARE FUNCTIONAL SPECIFICATION 24590-HLW-3PS-HMP-T0001.

Please note that source, special nuclear, and byproduct materials as defined in the Atomic Energy Act of 1954 (AEA) are regulated at the U. S. Department of Energy (DOE) facilities exclusively by DOE acting pursuant to its AEA authority. DOE asserts that regulation of the AEA materials is within its exclusive authority and authority to regulate source, special nuclear, and byproduct materials at DOE-owned nuclear facilities. Information contained herein on radionuclides is provided for process description purposes only.

REV	DESCRIPTION	ORG	CHKD	RVWD	APVD	DATE
4	REVISED PER NOTE 24	RDP	SJ	JP	CER	8/2/06
3	REVISED PER NOTE 21	RDP	JK	EI	BS	12-13-04
0	ISSUED FOR CONSTRUCTION	JR	SCS	MW/KLH	SCF	1-31-03

REVISION HISTORY

CM
QUALITY DESIGNATOR

ISSUED BY RPP-WTP PDC

ISSUE STAMP

PROJECT No.	24590	
SITE	HANFORD	
AREA	200E	
BUILDING No.	30	
	BY	DATE
ORIGINATOR	JEFFERY RAHMING	1-28-03
CHECKER	SCS	1-28-03
APPROVER	SC FOELBER	1-31-03
REVIEWER	TOM VALENTINO	1-30-03

CONTENT APPLICABLE TO ALARA? [X] YES [ ] NO
ADR NO. 24590-HLW-ADR-M-02-031 REV: 3
SAFETY SCREEN REQUIRED? [X] YES [ ] NO EM&S INITIAL IF YES

SAFETY SCREEN IS REQUIRED FOR DRAWING TYPES IDENTIFIED IN 24590-WTP-GPP-SREG-002

RIVER PROTECTION PROJECT
WASTE TREATMENT PLANT
2435 STEVENS CENTER PLACE
RICHLAND, WA 99354

CONTRACT No: DE-AC27-01RV14136

P&ID - HLW MELTER 1 REFRACTORY COOLING

SCALE: NONE

24590-HLW-M6-HMP-00014

REV 4

D SIZE - 44 x 34

COMPUTER GENERATED - MANUAL CHANGES NOT PERMITTED

R10702453

07/26/2006 03:58:36 PM

PLOTTED By: eldorn
C:\WorkArea\03839\HLW\M6\HMP00014.dgn

FORM E_SDN.DGN 02/2003

This information has been identified as **CONFIDENTIAL BUSINESS INFORMATION**

Per the Department of Ecology's April 1, 2009, letter "Re: Certification of Confidential Business Information for the Waste Treatment Plant," under the criteria of 43.21A.160 RCW and WAC 173-303-810 (15), the following document and associated changes are granted confidentiality and are exempt from public review:

Document Number: 24590-HLW-M6-HMP-20001 Title: Piping & Instrumentation Diagram HLW Melter 2 System Feed and Agitation

HOP-FCLR-00002 MELTER 2 OFFGAS FILM COOLER – – –

HMP-FCC-00002 FILM COOLER CLEANER – – N/A –

HOP-SPOOL-00002 MELTER 2 STANDBY OFFGAS SPOOL N/A –

HOP-FCLR-00004 MELTER 2 STANDBY OFFGAS INSERT N/A –

INSTRUMENT AIR HLW-M6-HMP-20012 G2 — HMP-GL-32240-S10A-001/2 — HMP-V-34303 — FC — HMP-V-09645

YC 2259 Z, YV 2259 Z, IV I, CM Q

HMP-GL-32240-S10A-001/2 — OUT CAVE S10A — EMBEDDED PIPE — S11B — IN CAVE — HMP-GL-32240-S10B-001/2

OUT CAVE — IN CAVE — 30SLJX2041 NOTE 36

HMP-GL-32240-S10B-001/2 — N141 — HMP-WBOX-00057 (BULKHEAD)

HMP-JMPP-00082 — N022B — A C B

YC 2260 Z, YV 2260 Z, IV I, CM Q

HMP-WE-01562-S11C-02 — INSTRUMENT AIR/ DEMINERALIZED WATER HLW-M6-HMP-20012 D2 — FC — IV I, CM Q

OUT CAVE — EMBEDDED PIPE — IN CAVE — S11C — S11B — Q CM, I III

HMP-V-09673 — N162 — HMP-WE-01562-S11C-02 — HMP-WE-01562-S11B-02

HMP-JMPP-00060 — N034 — N91 — III III, CM Q

HMP-WBOX-00057 (BULKHEAD)

HMP-WE-01595-S11C-02 — SPARE — HMP-V-12220 — HMP-WE-01595-S11B-02 — N163 — HMP-JMPP-00158 — N033

OUT CAVE — EMBEDDED PIPE — IN CAVE — S11C — S11B — III III, Q CM

YC 2261 Z, YV 2261 Z, IV I, CM Q

HMP-WE-01563-S11C-03 — INSTRUMENT AIR/ DEMINERALIZED WATER HLW-M6-HMP-20012 C2 — FC HMP-V-34301 — HMP-WE-01563-S11C-03 — N164 — HMP-WE-01563-S11B-02 — HMP-WE-01563-S11C-02

N032 — HMP-JMPP-00161 — 2" — N03A

OUT CAVE — EMBEDDED PIPE — IN CAVE — S11C — S11B — I III, Q CM

HMP-FCC-00002 — III III, CM Q

8" HMP-JMPP-00096 — OFFGAS/PRIMARY TO SCB-HOP-00002 HLW-M6-HOP-20001 E6

HOP-JMPP-00096

TI 2242, TT 2242 — 30SLJX2065 — OUT CAVE — IN CAVE

HOP-FCLR-00002 — III Q — 12" — P03

HMP-MLTR-00002

VENT TO MELTER CAVE/C5 AREA — V — HOP-JMPP-00142 — 8"

VENT TO MELTER CAVE/C5 AREA — V — HOP-JMPP-00143 — 8"

IN CAVE — OUT CAVE — YC 2222 Z — 30SLJX2065 — YD 2222 HMP — HOP-JMPF-00031 — NOTE 33 — III III, CM Q

HOP-JMPP-00097 — 8" — OFFGAS/STANDBY TO SCB-HOP-00002 HLW-M6-HOP-20001 E6

NC/FO

HOP-RK-00028 — VENDOR PACKAGE — NOTE 14

CMCM, IV III, S11C JPSS-1 HMP HOP

PC 2249, PT 2249, PV 2249, FI 2228, FT 2228, PDI 2251, HOP-V-11870, V-11850, HOP-V-11857, FO, V-11859, V-11860

HMP-WE-01591-S11C-001/2 — N01 — DIW-WE-43583-S11C-001/2 — DEMINERALIZED WATER HLW-M5-DIW-00001 E4

PC 2250, PT 2250, PV 2250, PDI 2252, HOP-V-11865, V-11863, HOP-V-11865, FO, V-11867, V-11868

HMP-GQ-01553-S11C-001/2 — N02 — ISA-GL-50932-C12A-001/2 — INSTRUMENT AIR HLW-M5-ISA-00003 B2 — ISA-V-36113

JPSS-1 HOP S11C DIW — IIIIV CMCM

JPSS-1 HOP C12A ISA — IIIIV CMCM

YC 2262 Z, YV 2262 Z, FC, I IV, Q CM

YC 2263 Z, YV 2263 Z, FC, I IV, Q CM

SPARE

HMP-WE-01591-S11C-001/2 — HMP-V-09682 — HMP-WE-01592-S11C-001/2 — HMP-V-09684 — HMP-GQ-01553-S11C-001/2 — HMP-V-09683

HMP-P-00C-00005 N02C N01C — HMP-P-00C-00005 N02A N01A — HMP-P-00C-00005 N02B N01B

HMP-WE-01591-S11B-001/2 — HMP-WE-01592-S11B-001/2 — HMP-GQ-01553-S11B-001/2

HMP-WBOX-00057 (BULKHEAD) — N031 — N53 — 8"

HOP-WBOX-00076 (WALL MODULE) — N009C N009A N009B — HMP-JMPP-00101 — HMP-JMPP-00062 — HOP-SPOOL-00002

IN CELL — S11B — IN CAVE — OUT CAVE — S11C — EMBEDDED PIPE — S11B

HMP-WE-01590-S11B-02 — N031 N032 N033 — N055 — 2"

HMP-WE-01590-S11C-02 — HMP-V-09580 — HMP-GL-32388-S11C-02 — WE GL

TE 2242 — HMP-JMPE-00054 — HV 2002 Z (HOP) — 4"

SBS BYPASS HLW-M5-HOP-20002 A8 — HOP-PW-20391-N11K-14 — NOTE 32 — HOP-PW-20391-N11K-04 — HOP-PW-20391-N11K-02 — HOP-JMPP-00145 — 2" — HOP-JMPP-00114 — NC NOTE 27 — N54

LOW POINT DRAIN HLW-M6-HOP-20009 E3

WEST DISCHARGE CHAMBER HLW-M6-HMP-20007 B3 — HMP-SPOOL-00012 — 2" N46

EAST DISCHARGE CHAMBER HLW-M6-HMP-20006 B3 — HMP-SPOOL-00011 — 2" N47

3/8" N057 — SPARE REFERENCE TAP — HMP-JMPP-00159

3/8" N056 — HMP-JMPP-00160 — 2" N038

HOP-FCLR-00004 PIPE INSERT — III Q — 12" — P04 — NOTE 26

PI 2236, FC 2232, FT 2232, FV 2232, HMP-V-12146, HMP-V-12147, HMP-V-12148, HMP-V-12287, NOTE 37, HMP-V-12149, HMP-GL-32388-S11C-002, INSTRUMENT AIR STANDBY DUCT PURGE HLW-M6-HMP-20012 B2

003/4-802, HMP-V-12318 (S), 02-801, 02-803, HMP-V-12150, NOTE 37, HV 2253, INSTRUMENT AIR FOR START UP FRIT TUNNEL HLW-M5-HMP-20001 D8, HMP-GL-32396-S11C-001/2

YC 2264 Z, YV 2264 Z, FC, I IV, Q CM

HMP-WE-01589-S11C-02 — HMP-V-12151 — FI 2209, FT 2209, HV 2254, NOTE 37, YC 2208, YV 2208, FC

HMP-WE-01589-S11C-01 — DEMINERALIZED WATER STANDBY/DUCT WASH HLW-M6-HMP-20012 D8

003/4-801 (D), HMP-V-12317 — MELTER PRESSURE REFERENCE TAP PDT-2139 A/B — HMP-JMPP-00055 — HLW-M6-HMP-20001 C7

NOTES:

1. SEE DRAWINGS 24590-WTP-M6-50-00001 THROUGH 24590-WTP-M6-50-00008 FOR GENERAL NOTES, SYMBOLS AND LEGEND, AND GENERAL SLOPE REQUIREMENTS.
2-13. DELETED
14. JPSS-1 SPECIFICATION DEFINED IN INSTRUMENT PIPING MATERIAL CLASS SPEC NO. 24590-WTP-3PS-JXF0-T0001. SPECIFICATION CHANGE ALSO DEFINES AREA OF C&I RESPONSIBILITY.
15-25. DELETED
26. PIPE INSERT WITH NO ACTIVE AIR COOLING.
27. LOCATE TO ALLOW NUT RUNNER OPERATION VIA OVERHEAD CRANE.
28-31. DELETED
32. HOP-PW-20391-N11K-14 IS AN AIR COOLING CHAMBER AND REQUIRES A MINIMUM VOLUME OF 7 CUBIC FEET.
33. PNEUMATIC ACTUATOR IS IN CAVE. REFER TO P&ID 24590-HLW-M6-ISA-00008 FOR PNEUMATIC LINE WALL PENETRATION DETAILS.
34. REVISION 4: MAJOR REVISION. NO CHANGE CLOUDS REQUIRED. ADDED WALL MODULE HOP-WBOX-00076. REDREW JUMPER ARRANGEMENT FOR HMP-JMPP-00101. CHANGED NOZZLE NUMBER FROM N11 TO N91 ON HOP-JMPP-00096. ADDED HOP-JMPP-00113 AND HOP-JMPP-00114 TO HOP-JMPP-00086. REMOVED VALVE TAG HOP-V-11043 FROM BUTTERFLY VALVE AND RETAGGED WITH HOP-HV-2002. CHANGED VALVE SYMBOL ON HMP-V12148 FROM BALL TO GLOBE. ADDED ROOT VALVE V-12287 TO PI-2236. REPLACED LINE NUMBER HMP-GQ-01554-S11C-02 WITH HMP-GL-32388-S11C-02 AND UPDATED CONTENT CODE BREAK. CHANGED NORMAL POSITION TO CLOSED ON YV-2208. UPDATED QUALITY FLAGS TO SHOW "CM". DELETED WALL BOX SYMBOL ON TT-2242. ADDED NOZZLE NUMBERS N01 THROUGH N04 TO HOP-RK-00028. DELETED TAGS FOR FE-2209, FE-2232, FE-2230, FE-2228. INCORPORATED WALL MODULE DESIGN INCLUDING EMBEDDED PIPE AND BULKHEAD. REVISED/ADDED/DELETED NOTES.
35. CONTENTS OF THIS DOCUMENT ARE DANGEROUS WASTE PERMIT AFFECTING.
36. SPARE PENETRATION FOR FILM COOLER CLEANER FUTURE INSTRUMENTATION.
37. VALVE SIZED TO LIMIT MAXIMUM FLOW TO PREVENT MELTER PRESSURIZATION.
38. REVISION 5: INCORPORATED 24590-HLW-M6N-HMP-00001, 24590-HLW-M6N-HMP-00070 AND 24590-HLW-M6N-M8OT-00004 REVISED SEISMIC AND QUALITY DESIGNATIONS. ADDED REMOTE MANUAL ITS VALVES FOR C5 CONFINEMENT. REVISED MELTER GRAPHIC. REVISED/ADDED/ DELETED NOTES AND REFERENCES. SYSTEM REQUIRES DESIGN REVERIFICATION.
39. THE GEOMETRY OF JOGGLED (OFFSET) PENETRATIONS IS QUALITY LEVEL Q FOR RADIATION PROTECTION. THE QUALITY LEVEL AND SEISMIC CATEGORY DESIGNATIONS OF PIPING WITHIN JOGGLES ARE THE SAME AS CONNECTING PIPING.
40. REVISED TO INCORPORATE 24590-HLW-M6N-M8OT-00007. ADDED P-JOGGLES. ADDED VALVE TAGS IN HOP-RK-00028. ADDED/ REVISED INSTRUMENT NUMBERS. REDREW HOP-SPOOL-00002. ADDED NORMAL POSITION FOR YD-2222. ADDED/DELETED/REVISED NOTES AND HOLDS.

HOLD/OPEN ITEMS:

1-4. DELETED

REFERENCES:

1. DURATEK SUBMITTAL 24590-101-TSA-W000-0010-07-11.
2. 24590-HLW-M5-V17T-20002, PROCESS FLOW DIAGRAM HLW VITRIFICATION MELTER 2 (SYSTEM HMP AND HOP).
3. THE REQUIRED BATCH SEQUENCES, PERMISSIVE, INTERLOCKS, ALARMS AND OPERATOR INTERFACE POINTS FOR THE HMP SYSTEM ARE FULLY DESCRIBED IN THE SOFTWARE FUNCTIONAL SPECIFICATION 24590-HLW-3PS-HMP-T0001.
4. FOR ITS PERMISSIVES AND INTERLOCKS, REFER TO SAFETY SYSTEM REQUIREMENT SPECIFICATIONS 24590-HLW-3PS-PPJ-T0016 (TO BE ISSUED).
5. FOR INSTRUMENTATION JUMPERS, REFER TO SYSTEM BLOCK DIAGRAMS 24590-HLW-J1-HMP-00001 THROUGH 00010.

Please note that source, special nuclear, and byproduct materials as defined in the Atomic Energy Act of 1954 (AEA) are regulated by the U.S. Department of Energy (DOE) facilities exclusively by DOE acting pursuant to its AEA authority. DOE asserts that pursuant to AEA, it has exclusive responsibility and authority to regulate source, special nuclear, and byproduct materials at DOE-owned nuclear facilities. Information regarding non-radiologicalities is provided for process description purposes only.

REV	DESCRIPTION	ORG	CHKD	RVWD	APVD	DATE
6	REVISED PER NOTE 40	MK	SS	CEK 4PK	CCH JJ	2/6/07
5	REVISED PER NOTE 38	RDP	APP	JP	JJ	8/2/06
4	REVISED PER NOTE 34	RDP	JK	GZL	JM	12/13/04
0	ISSUED FOR CONSTRUCTION	JR	SS	MW/KLH	SCF	1/31/03

Q QUALITY DESIGNATOR

REVISION HISTORY

ISSUED BY WTP PDC — ISSUE STAMP

PROJECT No.	24590
SITE	HANFORD
AREA	200E
BUILDING No.	30

	BY	DATE
ORIGINATOR	JEFF RAHMING	1/28/03
CHECKER	SID SOURANI	1/28/03
APPROVER	TOM VALENTINO	1/30/03
REVIEWER	SC FOELBER	1/31/03

CONTENT APPLICABLE TO ALARA? [X] YES [ ] NO
ADR NO. 24590-HLW-ADR-M-02-031 REV: 3
SAFETY SCREEN REQUIRED? [X] YES [ ] NO EMS INITIAL IF YES

SAFETY SCREEN IS REQUIRED FOR DRAWING TYPES IDENTIFIED IN 24590-WTP-GPP-SREG-002

BECHTEL

RIVER PROTECTION PROJECT
WASTE TREATMENT PLANT
2435 STEVENS CENTER PLACE
RICHLAND, WA 99354

CONTRACT No: DE-AC27-01RV14136

P&ID-HLW MELTER 2 FILM COOLER AND OFFGAS CONNECTION

SCALE: NONE

24590-HLW-M6-HMP-20002 REV 6

E-SIZE - 44x34
COMPUTER GENERATED - MANUAL CHANGES NOT PERMITTED

R10748312

02/05/2007 07:34:57

PLOTTED BY: mcritter
C:\Work\dms03839\HLW\M6\HMP20002.dgn

FORM E_SDN.DGN 02/2003

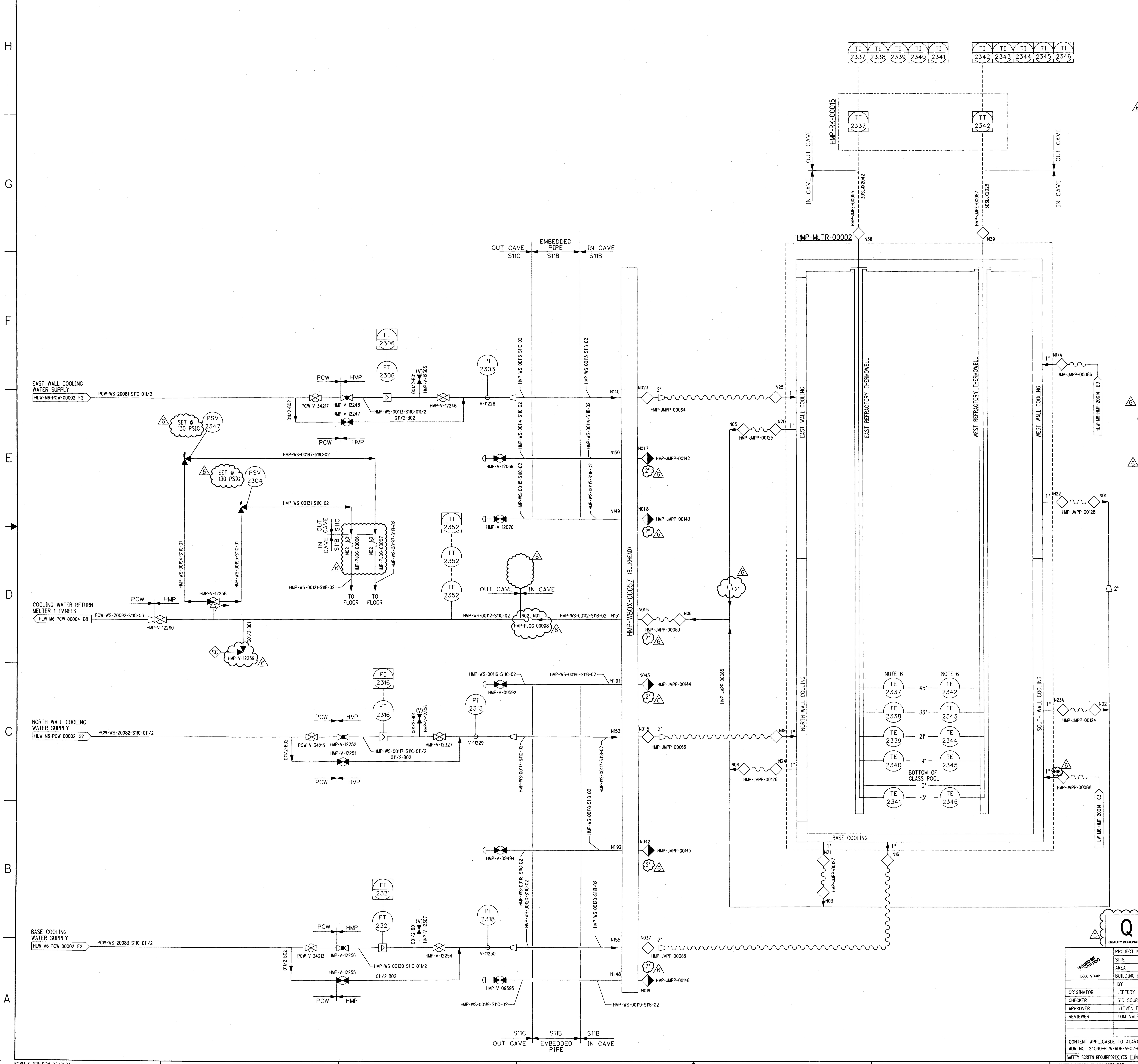

NOTES:

1. SEE DRAWINGS 24590-WTP-M6-50-00001 THROUGH 24590-WTP-M6-50-00008 FOR GENERAL NOTES, SYMBOLS AND LEGEND, AND GENERAL SLOPE REQUIREMENTS.

2-5. DELETED

6. REFRACTORY THERMOCOUPLE LOCATIONS RELATIVE TO BOTTOM OF GLASS POOL.

7-14. DELETED

15. LOCATE OUT CAVE ISOLATION VALVES AS CLOSE AS POSSIBLE TO IN CAVE-OUT CAVE BOUNDARY.

6 16-24. DELETED

25. REVISION 4: MAJOR REVISION, NO CHANGE CLOUDS REQUIRED. SEPARATED FLOW AND TEMPERATURE READING CAPABILITIES. TEMPERATURE TRANSMITTER KEPT IN RETURN LINE AND MOVED FLOW TRANSMITTERS TO SUPPLY LINES. RETURN LINES FROM EAST WALL, NORTH WALL AND BASE COMBINED IN A NEW MANIFOLD LOCATED INSIDE VENDOR PACKAGE. ALSO ADDED RETURN LINE FROM P&ID 24590-HLW-M6-HMP-20014 TO THIS MANIFOLD. COMBINED THREE 11/2" RETURN LINES INTO ONE 2" RETURN LINE FROM P&ID 24590-HLW-M6-HMP-20014 TO THIS MANIFOLD. COMBINED THREE 1 1/2" RETURN LINES INTO ONE 2" RETURN LINE VIA NEW 2" JUMPER HMP-JMPP-00063. THE TWO REMAINING PENETRATIONS WERE CHANGED TO SPARES. DELETED PSV 2349, 2319, 2348 AND 2314 AND ASSOCIATED PIPING AND VALVES. ADDED NEW LINE NUMBERS AND VALVE NUMBERS TO LINES AND AND VALVES ASSOCIATED WITH REMAINING PSV-2347 AND 2304. DELETED JUMPER HMP-JMPP-00067. MOVED 11/2" X 2" REDUCERS ON ALL LINES TO WALLBOX NOZZLE. CONVERTED EXISTING THREE SPARE LINES: HMP-WS-00114-S11C-011/2, 00115, 00119 FROM 11/2" TO 2" SIZE. DELETED PSV THERMAL RELIEF HEADER COMING FROM P&ID 24590-HLW-M6-HMP-20014. REPLACED THERMAL RELIEF HEADER WITH A RELIEF LINE HMP-WS-00121-S11C-02. DELETED LOCKED OPEN VALVES IN SUPPLY AND RETURN LINES. DELETED RACK HMP-RK-00019.REVISED NOTE 12. CHANGED LINE SIZE ON RLD -WS-00002-S11C-03 FROM 03 TO 02. INCORPORATED NEW WALL MODULE DESIGN, INCLUDING EMBEDDED PIPE AND BULKHEAD. ADDED ROOT VALVES TO THE PRESSURE INDICATORS. DISCHARGE FROM PSV-2304 AND PSV-2347 DIRECTED TO THE CAVE FLOOR. ADDED/REVISED/DELETED NOTES.

26. ALL SYSTEMS, STRUCTURES, AND COMPONENTS ON THIS DRAWING ARE QUALITY LEVEL CM AND SEISMIC CATEGORY SC-III, UNLESS OTHERWISE NOTED.

27. CONTENTS OF THIS DOCUMENT ARE DANGEROUS WASTE PERMIT AFFECTING.

28. REVISION 5: INCORPORATED 24590-HLW-M6N-HMP-00004, -00010, -00064 AND 24590-HLW-M6N-M80T-00004. ADDED JUMPERS. REVISED QUALITY AND SEISMIC DESIGNATIONS. REVISED/ADDED/DELETED NOTES AND REFERENCES.

29. THE GEOMETRY OF JOGGLED (OFFSET) PENETRATIONS IS QUALITY LEVEL Q FOR RADIATION PROTECTION. THE QUALITY LEVEL AND SEISMIC CATEGORY DESIGNATIONS OF PIPING WITHIN JOGGLES ARE THE SAME AS CONNECTING PIPING.

6 30. REVISED TO INCORPORATE 24590-HLW-M6N-M80T-00007. ADDED P-JOGGLES. DELETED QUALITY FLAG. ADDED NOZZLE N18 TAG. REVISED SAMPLE CONNECTION SYMBOL. REVISED PSV SET PRESSURES. ADDED/REVISED/DELETED NOTES AND HOLD/OPEN ITEMS.

HOLD/OPEN ITEMS:

6 1-3. DELETED

REFERENCES:

1. DURATEK SUBMITTALS 24590-101-TSA-W000-0010-07-08 AND 24590-101-TSA-W000-0010-07-03.
2. 24590-HLW-M5-V17T-20002, PROCESS FLOW DIAGRAM HLW VITRIFICATION MELTER 2 (SYSTEM HMP AND HOP).
3. THE REQUIRED BATCH SEQUENCES, PERMISSIVES, INTERLOCKS, ALARMS AND OPERATOR INTERFACE POINTS FOR THE HMP SYSTEM ARE DESCRIBED IN THE SOFTWARE FUNCTIONAL SPECIFICATION 24590-HLW-3PS-HMP-T0001.
4. FOR ELECTRICAL JUMPERS, REFER TO SYSTEM BLOCK DIAGRAMS 24590-HLW-J1-HMP-00011 THROUGH -00020.

Please note that source, special nuclear, and byproduct materials, as defined in the Atomic Energy Act of 1954 (AEA) are regulated at the U. S. Department of Energy (DOE) facilities exclusively by DOE acting pursuant to its AEA authority. DOE asserts that pursuant to AEA, it has sole and exclusive responsibility and authority to regulate source, special nuclear, and byproduct materials at DOE-owned nuclear facilities. Information contained herein on radionuclides is provided for process description purposes only.

6 Q QUALITY DESIGNATOR

REV	DESCRIPTION	ORG	CHKD	RVWD	APVD	DATE
6	REVISED PER NOTE 30	[signature]	SJ	CER SPK	[signature]	2/3/07
5	REVISED PER NOTE 28	RDP	SJ	CER	JJ	08/02/06
4	REVISED PER NOTE 25	RDP	JK	EI	JFS	12/13/04
0	ISSUED FOR CONSTRUCTION	JR	SS	MLW/KLH	SCF	01/31/03

REVISION HISTORY

ISSUED BY WTP PDC
ISSUE STAMP

PROJECT No.	24590
SITE	HANFORD
AREA	200E
BUILDING No.	30

BECHTEL
RIVER PROTECTION PROJECT
WASTE TREATMENT PLANT
2435 STEVENS CENTER PLACE
RICHLAND, WA 99354

	BY	DATE
ORIGINATOR	JEFFERY RAHMING	1/28/03
CHECKER	SID SOURANI	1/28/03
APPROVER	STEVEN FOELBER	1/31/03
REVIEWER	TOM VALENTINO	1/30/03

CONTRACT No: DE-AC27-01RV14136

P&ID - HLW MELTER 2 REFRACTORY COOLING

CONTENT APPLICABLE TO ALARA? [X] YES [ ] NO
ADR NO. 24590-HLW-ADR-M-02-031 REV: 3
SAFETY SCREEN REQUIRED? [X] YES [ ] NO E&NS INITIAL IF YES [initials]

SCALE: NONE

24590-HLW-M6-HMP-20003 REV 6

SAFETY SCREEN IS REQUIRED FOR DRAWING TYPES IDENTIFIED IN 24590-WTP-GPP-SREG-002

'E' SIZE - 44x34
COMPUTER GENERATED - MANUAL CHANGES NOT PERMITTED

R10748314 01/31/2007 12:51:33 PM

PLOTTED BY: eidorn
C:\Work\dms03839\HLWM6HMP20003.dgn

FORM E_SON.DGN 02/2003

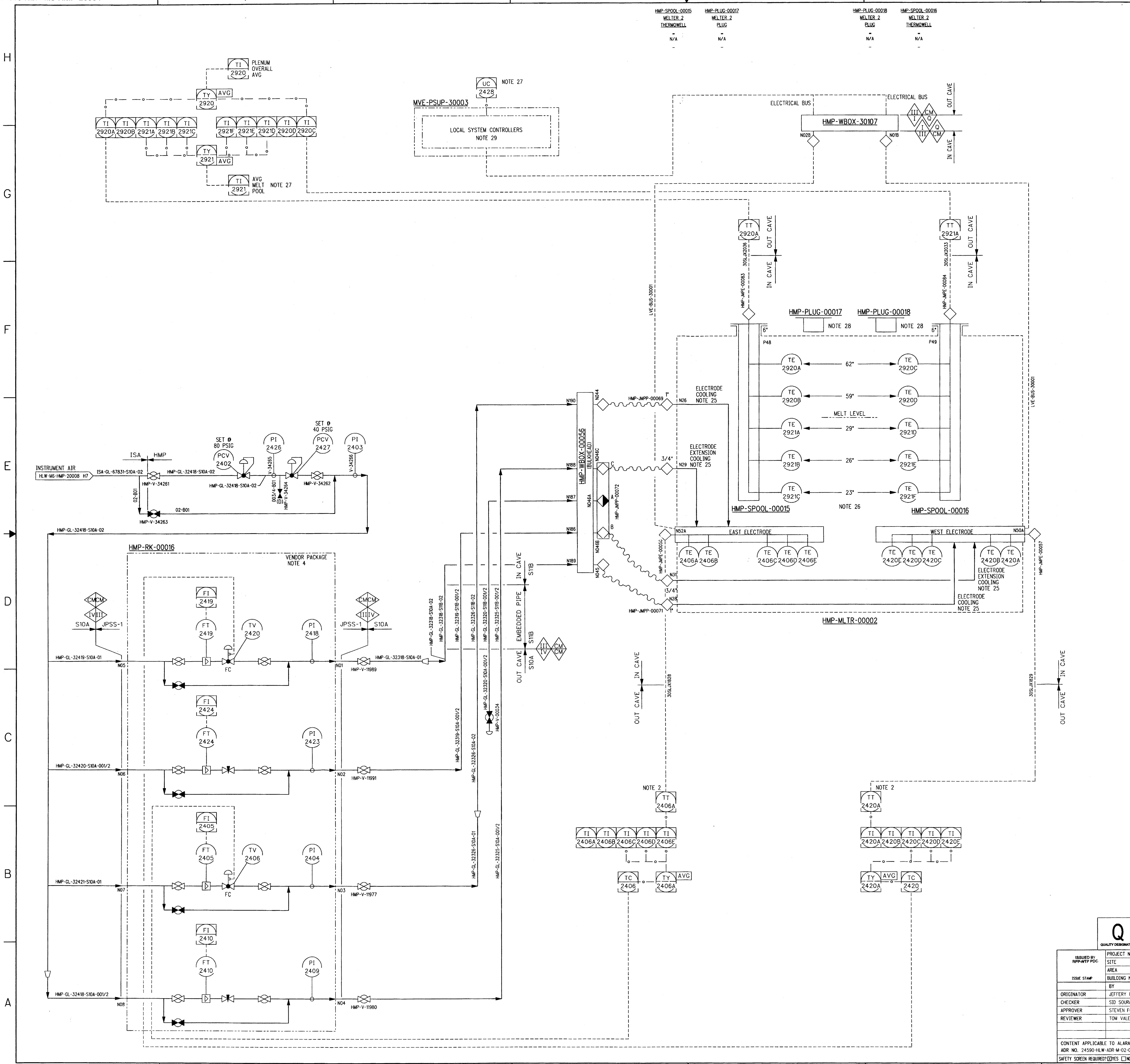

NOTES:

1. SEE DRAWINGS 24590-WTP-M6-50-00001 THROUGH 24590-WTP-M6-50-00008 FOR GENERAL NOTES, SYMBOLS AND LEGEND, AND GENERAL SLOPE REQUIREMENTS.
2. FIVE POINT THERMOCOUPLE ASSEMBLY, AVERAGE OF THREE POINTS IS USED FOR ELECTRODE TEMPERATURE CONTROL INPUT, TWO POINTS ARE USED FOR ELECTRODE AND EXTENSION EXHAUST TEMPERATURE ALARM AT HIGH AND LOW TEMPERATURE.
3. DELETED
4. JPSS-1 SPECIFICATION DEFINED IN INSTRUMENT PIPING MATERIAL CLASS SPEC NO. 24590-WTP-3PS-JXF0-T0001. SPECIFICATION CHANGE ALSO DEFINES AREA OF RESPONSIBILITY.

5-20. DELETED

21. SEE ARCHIVED REVISION 2 P&ID FOR REVISION 2 CHANGES.
22. DELETED
23. SEE ARCHIVED REVISION 3 P&ID FOR REVISION 3 CHANGES.
24. DELETED
25. COOLING AIR FOR ELECTRODE AND ELECTRODE EXTENSION EXHAUSTS TO CAVE.
26. DISTANCE OF TEMPERATURE ELEMENTS FROM BOTTOM OF MELT POOL.
27. POWER SUPPLY OPERATION IS INITIATED AND OPERATIONAL STATUS IS MONITORED FROM PCJ. JOULE HEATER POWER SUPPLY CONTROL SIGNAL ORIGINATES FROM MELTER AVERAGE GLASS POOL TEMPERATURE. JOULE HEATING POWER SUPPLY OUTPUT VOLTAGE, CURRENT, POWER AND FAULT DIAGNOSTICS ARE MONITORED BY THE PCJ.
28. PLUGS ARE ALTERNATE INSERTS FOR MELTER PORTS.
29. POWER SUPPLY UNIT CONTROLS INCLUDED IN CONTROL DESCRIPTION 24590-CM-HC4-EBB0-0001-04-00037. POWER SUPPLY MAY BE OPERATED IN "LOCAL" OR "REMOTE" MODE. WHEN IN "LOCAL" MODE, LOSS OF SIGNAL TO POWER SUPPLY FROM PCJ. PCJ RESULTS IN DEFAULT TO LOCAL SET POINT. WHEN IN "REMOTE" MODE, LOSS OF SIGNAL TO POWER SUPPLY FROM PCJ RESULTS IN DEFAULT TO LAST OUTPUT.
30. DELETED
31. REVISION 4: MAJOR REVISION, NO CHANGE CLOUDS REQUIRED. UPDATED QUALITY FLAGS. INCREASED SET POINT ON PCV-2402 FROM 25 PSIG TO 80 PSIG. SWAPPED LOCATION OF FLOW CONTROLLERS WITH FLOW ELEMENTS. INCORPORATED WALL MODULE DESIGN INCLUDING EMBEDDED PIPE AND BULKHEAD. ADDED MELT POOL, PLENUM THERMOCOUPLES AND RELATED INSTRUMENTATION. ADDED ELECTRICAL CONNECTIONS TO ELECTRODES. ADDED PORT PLUGS. REVISED/ADDED/DELETED NOTES.
32. CONTENTS OF THIS DOCUMENT ARE DANGEROUS WASTE PERMIT AFFECTING.
33. ALL SYSTEMS, STRUCTURES, AND COMPONENTS ON THIS DRAWING ARE QUALITY LEVEL CM AND SEISMIC CATEGORY SC-III, UNLESS OTHERWISE NOTED.
34. MAJOR REVISION, NO CHANGE CLOUDS REQUIRED. INCORPORATED 24590-HLW-M6N-M80T-00004. MOVED PCV-2402 AND PCV-2427 OFF HMP-RK-00016. REVISED MELTER GRAPHIC. REVISED QUALITY AND SEISMIC DESIGNATIONS. REVISED/ADDED/DELETED NOTES AND REFERENCES. SYSTEM REQUIRES DESIGN REVERIFICATION.

HOLD/OPEN ITEM:

1. DELETED
2. DELETED

REFERENCES:

1. DURATEK SUBMITTAL 24590-101-TSA-W000-0010-07-10.
2. 24590-HLW-M5-V17T-20002 PROCESS FLOW DIAGRAM HLW VITRIFICATION MELTER 2 (SYSTEM HMP AND HOP).
3. THE REQUIRED BATCH SEQUENCES, PERMISSIVES, INTERLOCKS, ALARMS AND OPERATOR INTERFACE POINTS FOR THE HMP SYSTEM ARE FULLY DESCRIBED IN THE SOFTWARE FUNCTIONAL SPECIFICATION 24590-HLW-3PS-HMP-T0001.
4. FOR ELECTRICAL JUMPERS, REFER TO SYSTEM BLOCK DIAGRAMS 24590-HLW-J1-HMP-00011 THROUGH 00020.

Please note that source, special nuclear, and byproduct materials, as defined in the Atomic Energy Act of 1954 (AEA) are regulated at the U. S. Department of Energy (DOE) facilities exclusively by DOE acting pursuant to its AEA authority. DOE asserts that pursuant to AEA, it has sole and exclusive responsibility and authority to regulate source, special nuclear, and byproduct materials at DOE-owned nuclear facilities. Information contained herein on radionuclides is provided for process description purposes only.

REV	DESCRIPTION	ORG	CHKD	RVWD	APVD	DATE
5	REVISED PER NOTE 34	RDP	SJ	JP / CER	CJ2	8/2/06
4	REVISED PER NOTE 31	RDP	JK	CER	TV	12/16/04
0	ISSUED FOR CONSTRUCTION	JR	SS	MLW/KLH	SCF	1/31/03

REVISION HISTORY

Q QUALITY DESIGNATOR

ISSUED BY RPP-WTP PDC	PROJECT No.	24590
	SITE	HANFORD
	AREA	200E
ISSUE STAMP	BUILDING No.	30

	BY	DATE
ORIGINATOR	JEFFERY RAHMING	1-28-03
CHECKER	SID SOURANI	1-28-03
APPROVER	STEVEN FOELBER	1-31-03
REVIEWER	TOM VALENTINO	1-30-03

BECHTEL

RIVER PROTECTION PROJECT
WASTE TREATMENT PLANT
2435 STEVENS CENTER PLACE
RICHLAND, WA 99354

CONTRACT No: DE-AC27-01RV14136

P&ID - HLW MELTER 2 ELECTRODES

CONTENT APPLICABLE TO ALARA? [X] YES [ ] NO
ADR NO. 24590-HLW-ADR-M-02-031 REV: 3
SAFETY SCREEN REQUIRED? [X] YES [ ] NO E&NS INITIAL IF YES

SCALE: NONE

24590-HLW-M6-HMP-20004 REV 5

HMP-ALFT-00003 MELTER 2 AIR LIFT LANCE – N/A –

HMP-PLUG-00019 MELTER 2 PLUG – N/A –

HMP-PLUG-00037 MELTER 2 PLUG – N/A –

HMP-PLUG-00041 MELTER 2 PLUG – N/A –

HMP-HTR-00013 MELTER 2 DISCHARGE HEATER ASSEMBLY N/A

HMP-SPOOL-00018 MELTER 2 THERMOWELL – N/A –

HMP-SPOOL-00017 MELTER 2 THERMOWELL – N/A –

HMP-SPOOL-00013 MELTER 2 DISCHARGE VENT – N/A –

HMP-SPOOL-00011 MELTER 2 DISCHARGE CHAMBER JUMPER – –

HMP-PLUG-00038 MELTER 2 PLUG – N/A –

INSTRUMENT AIR HLW-M6-ISA-00004 B3

ISA-GL-37956-S10A-001/2

CM III CM IV ISA S10A HMP JPSS-1

HMP-RK-00022

VENDOR PACKAGE NOTE 30

INSTRUMENT AIR HLW-M6-HMP-20007 E8 NOTE 2

SET @ 80 PSIG

PCV 2641 NOTE 18 FC 2643 FV 2643 FE 2643 FT 2643 FC NOTE 42 YC 2664 YV 2664

MINIMUM DISTANCE

FC 2648 FV 2648 FE 2648 FT 2648 FO

ARGON GAS HLW-M6-HMP-20007 D8

ARGON GAS HLW-M6-HMP-20013 G7

CM III CM IV JPSS-1 S10A N50

HMP-GA-02032-S10A-001/2

ARGON GAS HLW-M6-HMP-00006 C7

CM III CM IV JPSS-1 S10A N29

HMP-GL-32248-S10A-001/2

HMP-RK-00023

VENDOR PACKAGE NOTE 16

3/8" MASS

HOLD 2 YC Z FC Z YV

PDI 2649 PDT 2649 PI 2645 PT 2645

FROM MELTER REDUNDANT LEVEL TRANSMITTER HLW-M6-HMP-20013 F3

N31 PSS-1 S10A

HMP-GL-32222-S10A-001/2 HMP-V-09813 HMP-GL-32385-S10A-001/2 HMP-V-09855

Q CM I III OUT CAVE S10A EMBEDDED PIPE S11B IN CAVE S11B

HMP-GL-32222-S11B-001/2 HMP-GL-32385-S11B-001/2

REFER TO HLW-M6-HMP-20007

N168 N170 N169 HMP-WBOX-00057 (BULKHEAD) N052B N052C N052A B C A HMP-JMPP-00078

LVE-PSUP-30009

VENDOR PACKAGE

HMP-RK-00015

TI 2658A 2658B 2658C 2658D 2758A 2758B 2758C 2758D TT 2658A

WEST DISCHARGE CHAMBER TEMPERATURE HLW-M6-HMP-20007 D2

IN CAVE OUT CAVE

30SLHX1846 30SLHX1848 30SLHA1847 30SLHA1845 30SLJX2034 30SLJX2035 30SLRX2125

FIXED PLUG

HMP-JMPE-00064 HMP-JMPE-00065 HMP-JMPE-00066 HMP-JMPE-00067 HMP-JMPE-00071 HMP-JMPE-00068 HMP-JMPE-00072

HOP SPOOL 00002 HLW-M6-HMP-20002 C6

HMP-SPOOL-00011

NOTE 43 HMP-PLUG-00038

NOTE 43 HMP-PLUG-00019

3/8" N12 6" P12 3" P47B 6 1/8" P43 N58 HMP-HTR-00013 N59 N60 N61 17/8" P44 P45 3" 17/8" P47A

HMP-ALFT-00003 HMP-PLUG-00037 HMP-PLUG-00041 -1 -2 -3 -4 -5 -6 -7 -8 HMP-SPOOL-00018 HMP-SPOOL-00017 HMP-SPOOL-00013 N77

TE 2658A TE 2658C TE 2658B TE 2658D

NON-REPLACEABLE AUXILIARY HEATER NOTE 5

HMP-MLTR-00002

GLASS DISCHARGE

NOTES:

1. SEE DRAWINGS 24590-WTP-M6-50-00001 THROUGH 24590-WTP-M6-50-00008 FOR GENERAL NOTES, SYMBOLS AND LEGEND, AND GENERAL SLOPE REQUIREMENTS.
2. AIRLIFT AIR FLOW INTERLOCKED WITH HIGH-HIGH CANISTER LEVEL DETECTION.
3-4. DELETED
5. DISCHARGE AUXILIARY HEATER PRE-WIRED FOR FUTURE USE. HEATER RATED AT 4 KW, 208 VOLTS AND SINGLE PHASE.
6-15. DELETED
16. JPSS-1 SPECIFICATION IS DEFINED IN INSTRUMENT PIPING MATERIAL CLASS SPEC NO. 24590-WTP-3PS-JXF0-T0001. SPECIFICATION CHANGE ALSO DEFINES AREA OF RESPONSIBILITY.
17. DELETED
18. RACK MOUNTED PRESSURE REGULATORS (PCV) ARE PROVIDED WITH AN INTEGRAL PRESSURE INDICATOR.
19-37. DELETED
38. SEE ARCHIVED REVISION 2 P&ID FOR REVISION 2 CHANGES.
39. DELETED
40. SEE ARCHIVED REVISION 3 P&ID FOR REVISION 3 CHANGES.
41. DELETED
42. ANGLE BODY PISTON VALVE CONSISTING OF A VALVE BODY, VALVE ACTUATOR AND PILOT SOLENOID.
43. PLUGS ARE ALTERNATE INSERTS FOR MELTER PORTS.
44. REVISION 4: MAJOR REVISION, NO CHANGE CLOUDS REQUIRED. CHANGED SEISMIC REQUIREMENT FOR LVE-PSUP-30009 FROM SC-III TO SC-IV. ADDED ITS DESIGNATION "Z" TO VALVE YV-2644. ADDED HOLD TO REDUCE ITS RATING ON YV-2644. CHANGED YV-2664 ACTUATOR FROM PNEUMATIC TYPE TO A SINGLE SOLENOID ACTUATOR. ALSO CHANGED VALVE TYPE FROM BALL TYPE TO ANGLE BODY PISTON TYPE FOR VALVE YV-2644. CHANGED VALVE TYPE FROM BALL TO GATE TYPE FOR VALVES FV-2643 AND FV-2648. REPLACED SWIRL METER FE/FT-2643 AND FLOW CONTROL VALVE FC/FV-2643 WITH MASS FLOW CONTROLLER TYPE. UPDATED QUALITY FLAGS. CHANGED SET POINT ON PCV-2641 FROM 15 PSIG TO 80 PSIG. DELETED PCV-2646. INCORPORATED WALL MODULE DESIGN INCLUDING EMBEDDED PIPE AND BULKHEAD. REVISED/ADDED/DELETED NOTES.
45. CONTENTS OF THIS DOCUMENT ARE DANGEROUS WASTE PERMIT AFFECTING.
46. ALL SYSTEMS, STRUCTURES, AND COMPONENTS ON THIS DRAWING ARE QUALITY LEVEL CM AND SEISMIC CATEGORY SC-III, UNLESS OTHERWISE NOTED.
47. INCORPORATED 24590-HLW-M6N-HMP-00003 AND 24590-HLW-M6N-M8OT-00004. DELETED ITS VALVE INTERLOCKED WITH HIGH-HIGH CANISTER LEVEL TO STOP GLASS AIR LIFT. ADDED REMOTE MANUAL ITS VALVES FOR C5 CONFINEMENT. REVISED QUALITY AND SEISMIC DESIGNATIONS. REDREW MELTER FOR CLARIFICATION. REVISED/ADDED/DELETED NOTES AND REFERENCES. SYSTEM REQUIRES DESIGN REVERIFICATION.

HOLD/OPEN ITEMS:

1. DELETED
2. VALVES ON HOLD FOR C5 CONFINEMENT.

REFERENCES:

1. DURATEK SUBMITTAL 24590-101-TSA-W000-0010-07-07.
2. 24590-HLW-M5-V17T-20002, PROCESS FLOW DIAGRAM HLW VITRIFICATION MELTER 2 (SYSTEM HMP AND HOP).
3. THE REQUIRED BATCH SEQUENCES, PERMISSIVES, INTERLOCKS, ALARMS AND OPERATOR INTERFACE POINTS FOR THE HMP SYSTEM ARE DESCRIBED IN THE SOFTWARE FUNCTIONAL SPECIFICATION 24590-HLW-3PS-HMP-T0001.
4. FOR ITS PERMISSIVES AND INTERLOCKS, REFER TO SAFETY SYSTEM REQUIREMENT SPECIFICATIONS 24590-HLW-3PS-PPJ-T0016 (TO BE ISSUED).
5. FOR ELECTRICAL JUMPERS, REFER TO SYSTEM BLOCK DIAGRAMS 24590-HLW-J1-HMP-00011 THROUGH 00020
6. FOR DISCHARGE HEATERS CONFIGURATION REFER TO 24590-HLW-E1-LVE-10004 AND 24590-HLW-J0-HMP-20006.

Please note that source, special nuclear, and byproduct materials, as defined in the Atomic Energy Act of 1954 (AEA) are regulated at the U. S. Department of Energy (DOE) facilities exclusively pursuant to its AEA authority. DOE asserts that pursuant to the AEA it has sole and exclusive responsibility and authority to regulate source, special nuclear, and byproduct materials at DOE-owned nuclear facilities. Information contained herein on radionuclides is provided for process description purposes only.

REV	DESCRIPTION	ORG	CHKD	RVWD	APVD	DATE
5	REVISED PER NOTE 47	RDP	MS	JK	DEA	8/2/06
4	REVISED PER NOTE 44	RDP	JK	SS	SF	12/10/04
0	ISSUED FOR CONSTRUCTION	JR	SS	MLW/KLH	SCF	01/31/03

REVISION HISTORY

Q QUALITY DESIGNATOR

ISSUED BY RPP-WTP PDC

ISSUE STAMP

PROJECT No.	24590	
SITE	HANFORD	
AREA	200E	
BUILDING No.	30	

	BY	DATE
ORIGINATOR	JEFFERY RAHMING	01/28/03
CHECKER	SID SOURANI	01/28/03
APPROVER	STEVE FOELBER	01/31/03
REVIEWER	TOM VALENTINO	01/30/03

CONTENT APPLICABLE TO ALARA? [X] YES [ ] NO

ADR NO. 24590-HLW-ADR-M-02-031 REV: 3

SAFETY SCREEN REQUIRED? [X] YES [ ] NO EANS INITIAL IF YES

SAFETY SCREEN IS REQUIRED FOR DRAWING TYPES IDENTIFIED IN 24590-WTP-GPP-SREG-002

"E" SIZE - 44x34

COMPUTER GENERATED - MANUAL CHANGES NOT PERMITTED

BECHTEL

RIVER PROTECTION PROJECT
WASTE TREATMENT PLANT
2435 STEVENS CENTER PLACE
RICHLAND, WA 99354

CONTRACT No: DE-AC27-01RV14136

P&ID - HLW MELTER 2 EAST DISCHARGE HEATERS AND AIRLIFT

SCALE: NONE

24590-HLW-M6-HMP-20006

REV 5

R10702444

07/25/2006 03:44:03

PLOTTED BY: eidorn

C:\Work\Gms03839\HLW\HMP\20006.dgn

FORM E_SDN.DGN 02/2003

24590-HLW-M6-HMP-20007

HMP-PLUG-00029 MELTER 2 PLUG - N/A
HMP-ALFT-00004 MELTER 2 AIR LIFT LANCE - N/A
HMP-PLUG-00039 MELTER 2 PLUG - N/A
HMP-PLUG-00042 MELTER 2 PLUG - N/A

HMP-HTR-00014 MELTER 2 DISCHARGE HEATER ASSEMBLY N/A
HMP-SPOOL-00020 MELTER 2 THERMOWELL - N/A
HMP-SPOOL-00019 MELTER 2 THERMOWELL - N/A
HMP-SPOOL-00014 MELTER 2 DISCHARGE VENT - N/A
HMP-SPOOL-00012 MELTER 2 DISCHARGE CHAMBER JUMPER N/A

HMP-PLUG-00040 MELTER 2 PLUG - N/A

NOTES:

1. SEE DRAWINGS 24590-WTP-M6-50-00001 THROUGH 24590-WTP-M6-50-00008 FOR GENERAL NOTES, SYMBOLS AND LEGEND, AND GENERAL SLOPE REQUIREMENTS.
2. AIRLIFT AIR FLOW INTERLOCKED WITH HIGH HIGH CANISTER LEVEL DETECTION.
3. DELETED
4. DELETED
5. DISCHARGE AUXILIARY HEATER PRE-WIRED FOR FUTURE USE. HEATERS RATED AT 4 KW, 208 VOLTS AND 1 PHASE.

6-14. DELETED

15. JPSS-1 SPECIFICATION IS DEFINED IN INSTRUMENT PIPING MATERIAL CLASS SPEC NO. 24590-WTP-3PS-JXF0-T0001. SPECIFICATION CHANGE ALSO DEFINES AREA OF RESPONSIBILITY.
16. DELETED
17. RACK MOUNTED PRESSURE REGULATORS (PCV) ARE PROVIDED WITH AN INTEGRAL PRESSURE INDICATOR.

18-35. DELETED

36. SEE ARCHIVED REVISION 2 P&ID FOR REVISION 2 CHANGES.
37. DELETED
38. SEE ARCHIVED REVISION 3 P&ID FOR REVISION 3 CHANGES.
39. DELETED
40. ANGLE BODY PISTON VALVE CONSISTING OF A VALVE BODY, VALVE ACTUATOR AND PILOT SOLENOID.
41. PLUGS ARE ALTERNATE INSERTS FOR MELTER PORTS.
42. REVISION 4: MAJOR REVISION, NO CHANGE CLOUDS REQUIRED. INCORPORATED 24590-HLW-M6N-HMP-00028, -00043 AND -00053. INCORPORATED WALL MODULE DESIGN. CHANGED LVE-PSUP-30010 TAG TO LVE-PSUP-30009. ADDED ITS DESIGNATION "Z" TO VALVE YV-2744. ADDED HOLD 1 TO REDUCE ITS RATING ON YV-2744. CHANGED YV-2761 ACTUATOR FROM THE PNEUMATIC ACTUATED CYLINDER TO A SINGLE SOLENOID ACTUATOR. ALSO CHANGED VALVE TYPE FROM BALL TO ANGLE BODY PISTON TYPE FOR VALVE YV-2761. REVISED DESCRIPTION FOR HMP-20006 SHEET CONNECTOR. CLARIFIED EMBEDDED SECTION OF LINE 00025. REPLACED SWIRL METER FE/FT-2743 AND FLOW CONTROL VALVE FC/FV-2743 WITH MASS FLOW CONTROLLER TYPE. UPDATED QUALITY FLAGS. CHANGED SET POINT ON PCV-2741 FROM 15 PSIG TO 80 PSIG. DELETED PCV-0746 REVISED/ADDED/DELETED NOTES.
43. CONTENTS OF THIS DOCUMENT ARE DANGEROUS WASTE PERMIT AFFECTING.
44. ALL SYSTEMS, STRUCTURES, AND COMPONENTS ON THIS DRAWING ARE QUALITY LEVEL CM AND SEISMIC CATEGORY SC-III, UNLESS OTHERWISE NOTED.
45. INCORPORATED 24590-HLW-M6N-HMP-00003 AND 24590-HLW-M6N-M8OT-00004. DELETED ITS VALVE INTERLOCKED WITH HIGH-HIGH CANISTER LEVEL TO STOP GLASS AIR LIFT. ADDED REMOTE MANUAL ITS VALVES FOR C5 CONFINEMENT. REVISED SEISMIC AND QUALITY DESIGNATIONS. REDREW MELTER FOR CLARIFICATION. REVISED/ADDED/DELETED NOTES AND REFERENCES. SYSTEM REQUIRES DESIGN REVERIFICATION.

HOLD/OPEN ITEMS:

1-2. DELETED
3. VALVES ARE ON HOLD FOR C5 CONFINEMENT.

REFERENCES:

1. DURATEK SUBMITTAL 24590-101-TSA-W000-0010-07-07.
2. 24590-HLW-M5-V17T-20002, PROCESS FLOW DIAGRAM HLW VITRIFICATION MELTER 2 (SYSTEM HMP AND HOP).
3. THE REQUIRED BATCH SEQUENCES, PERMISSIVES, INTERLOCKS, ALARMS AND OPERATOR INTERFACE POINTS FOR THE HMP SYSTEM ARE DESCRIBED IN THE SOFTWARE FUNCTIONAL SPECIFICATION 24590-HLW-3PS-HMP-T0001.
4. FOR ITS PERMISSIVES AND INTERLOCKS, REFER TO SAFETY SYSTEM REQUIREMENT SPECIFICATIONS 24590-HLW-3PS-PPJ-T0016 (TO BE ISSUED).
5. FOR ELECTRICAL JUMPERS, REFER TO SYSTEM BLOCK DIAGRAMS 24590-HLW-J1-HMP-00011 THROUGH 00020.
6. FOR DISCHARGE HEATERS CONFIGURATION REFER TO 24590-HLW-E1-LVE-10004 AND 24590-HLW-J0-HMP-20007.

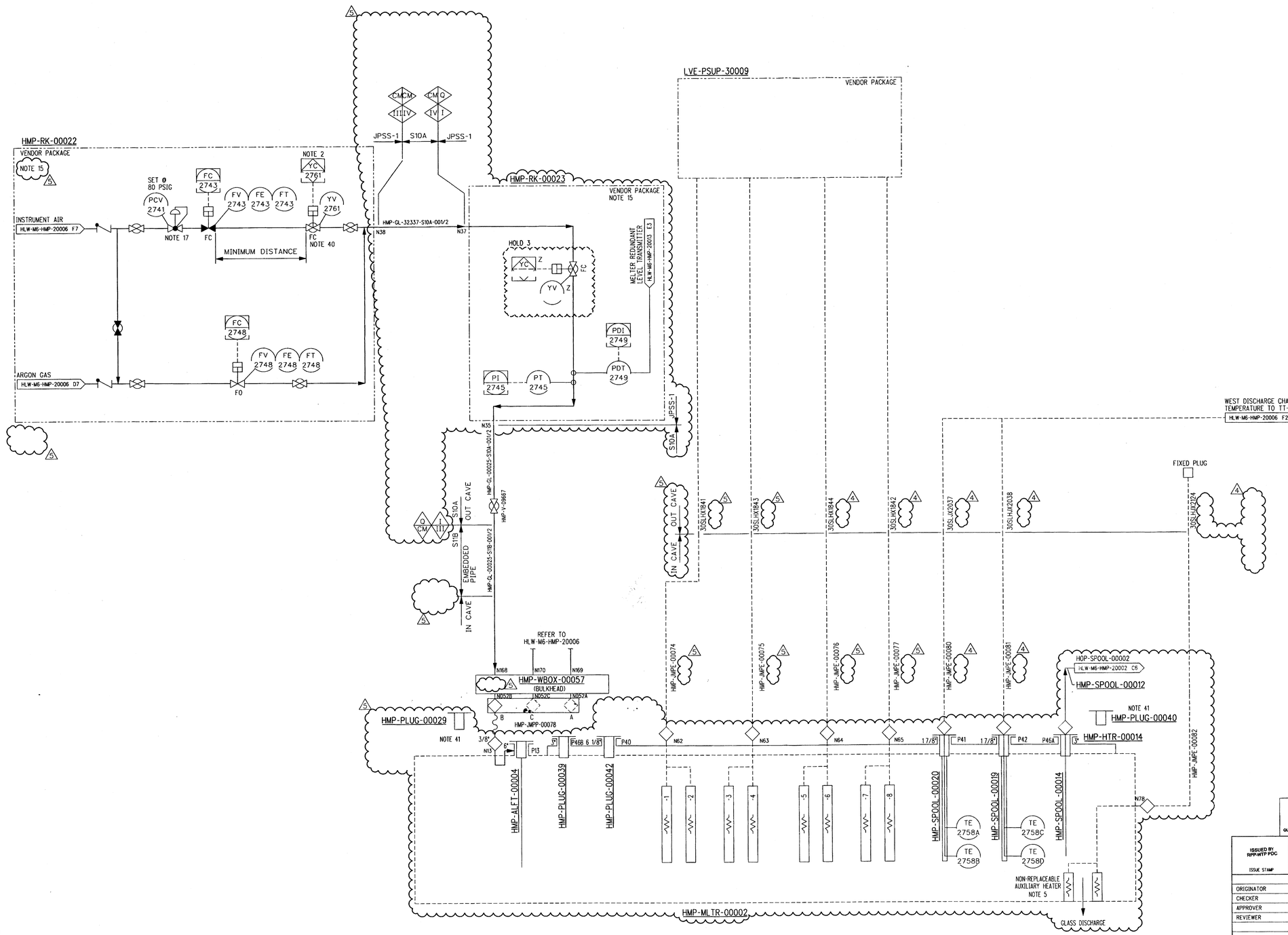

Please note that source, special nuclear, and byproduct materials, as defined in the Atomic Energy Act of 1954 (AEA) are regulated at the U. S. Department of Energy (DOE) facilities exclusively by DOE acting pursuant to its AEA authority. DOE asserts that pursuant to AEA, it has sole and exclusive regulatory authority over such materials at DOE facilities. Information contained herein on radionuclides is provided for process description purposes only.

REV	DESCRIPTION	ORG	CHKD	RVWD	APVD	DATE
5	REVISED PER NOTE 45	RDP	SJ	JR	CER	3/2/06
4	REVISED PER NOTE 42	RDP	JK	SC	JFS	12/10/04
0	ISSUED FOR CONSTRUCTION	JR	SS	MLW/KLH	SCF	01/31/03

REVISION HISTORY

Q QUALITY DESIGNATOR

ISSUED BY RPP-WTP PDC / ISSUE STAMP

PROJECT No.	24590
SITE	HANFORD
AREA	200E
BUILDING No.	30

	BY	DATE
ORIGINATOR	JEFFERY RAHMING	01/28/03
CHECKER	SID SOURANI	01/28/03
APPROVER	STEVEN FOELBER	01/31/03
REVIEWER	TOM VALENTINO	01/30/03

CONTENT APPLICABLE TO ALARA? [X] YES [ ] NO
ADR NO. 24590-HLW-ADR-M-02-031 REV: 3
SAFETY SCREEN REQUIRED? [X] YES [ ] NO EMS INITIAL IF YES

SAFETY SCREEN IS REQUIRED FOR DRAWING TYPES IDENTIFIED IN 24590-WTP-GPP-SREG-002

BECHTEL NATIONAL, INC.

RIVER PROTECTION PROJECT
WASTE TREATMENT PLANT
2435 STEVENS CENTER PLACE
RICHLAND, WA 99354

CONTRACT No: DE-AC27-01RV14136

P&ID - HLW MELTER 2 WEST DISCHARGE HEATERS AND AIRLIFT

SCALE: NONE
24590-HLW-M6-HMP-20007
REV 5

E SIZE - 44x34
COMPUTER GENERATED - MANUAL CHANGES NOT PERMITTED

R10702446

07/25/2006 03:39:51 PM

PLOTTED BY: rahmi
C:\WORK\24590\101\HLW\HMP\20007.dgn

FORM E_SDN.DGN 02/2003

HMP-MPS-00004	HMP-PLUG-00024	HMP-MPS-00003
MELTER 2 POUR SPOUT WEST CHAMBER	MELTER 2 PLUG	MELTER 2 POUR SPOUT EAST CHAMBER
N/A	N/A	N/A
-	-	-

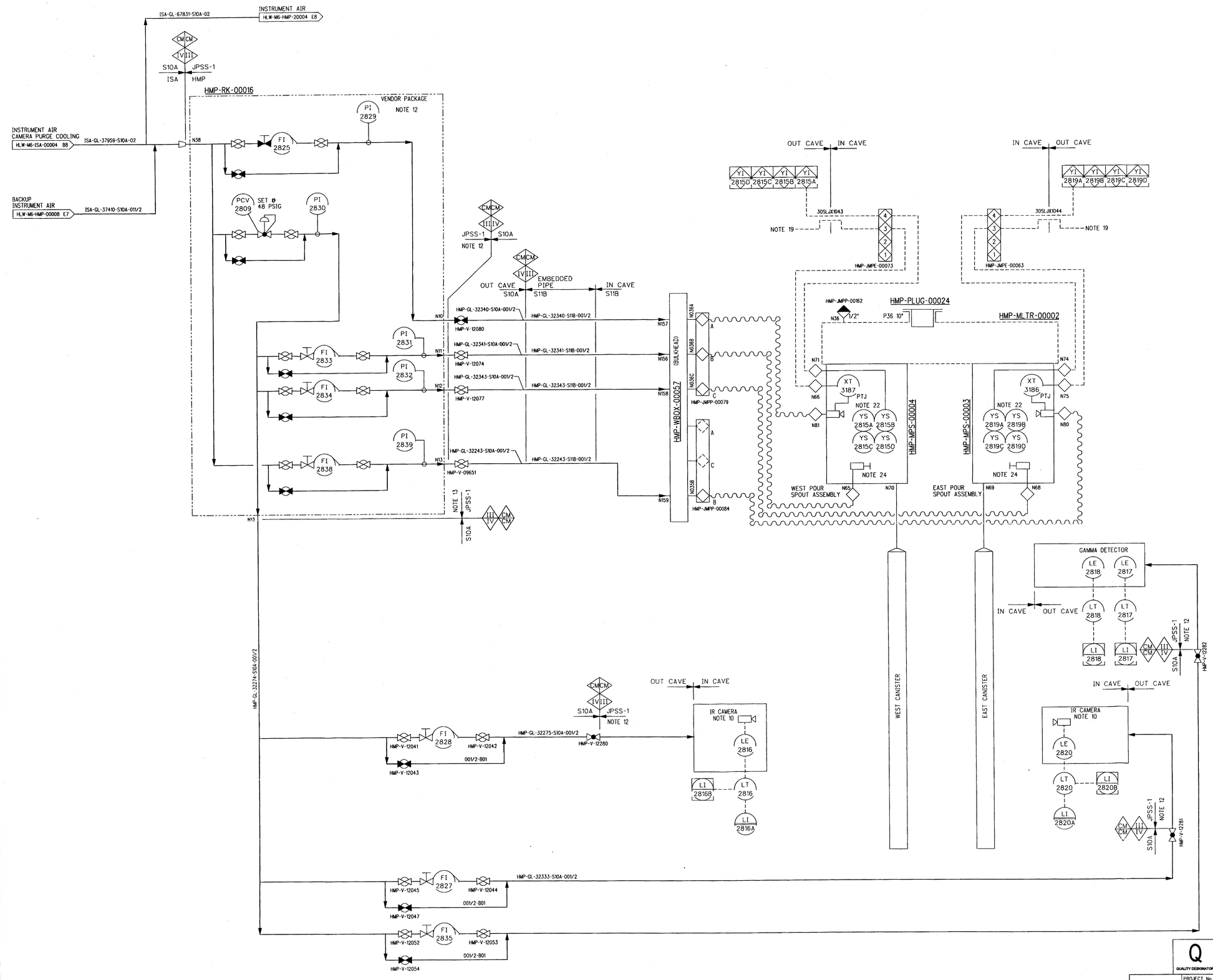

NOTES:

1. SEE DRAWINGS 24590-WTP-M6-50-00001 THROUGH 24590-WTP-M6-50-00008 FOR GENERAL NOTES, SYMBOLS AND LEGEND AND GENERAL SLOPE REQUIREMENTS.

2-9. DELETED

10. EAST AND WEST IR CAMERA MOUNTED IN THE CANISTER POUR TUNNEL WALL. IR CAMERA IN-WALL ASSEMBLY IS QUALITY LEVEL Q AND SEISMIC CATEGORY SC-II FOR SHIELDING.

11. DELETED

12. JPSS-1 SPECIFICATION IS DEFINED IN INSTRUMENT PIPING MATERIAL CLASS SPEC NO. 24590-WTP-3PS-JXF0-T0001. SPECIFICATION CHANGE ALSO DEFINES AREA OF RESPONSIBILITY.

13-18. DELETED

19. CCTV CAMERA POWER/VIDEO/CONTROL CABLES TO CONNECT TO PTJ SYSTEM ENCLOSURE.

20. DELETED

21. DELETED

22. DRIP PAN POSITION SWITCHES DETECT PRESENCE AND POSITION OF PRODUCT CANISTER.

23. DELETED

24. PNEUMATIC LINEAR ACTUATOR FOR DRIP PAN.

25. SEE ARCHIVED REVISION 2 P&ID FOR REVISION 2 CHANGES.

26. DELETED

27. SEE ARCHIVED REVISION 3 P&ID FOR REVISION 3 CHANGES.

28. DELETED

29. DELETED

30. REVISION 4: MAJOR REVISION, NO CHANGE CLOUDS REQUIRED. UPDATED QUALITY FLAGS. REMOVED EQUIPMENT TAGS FROM IR AND CCTV CAMERAS. RETAGGED VALVE HCP-V-12080 WITH HMP-V-12080. ADDED HOLD 1 PENDING RESOLUTION OF ITS REQUIREMENTS AND QUALITY DESIGNATION. INCORPORATED WALL MODULE DESIGN INCLUDING EMBEDDED PIPE AND BULKHEAD. REVISED/ADDED/DELETED NOTES.

31. CONTENTS OF THIS DOCUMENT ARE DANGEROUS WASTE PERMIT AFFECTING.

32. ALL SYSTEMS, STRUCTURES, AND COMPONENTS ON THIS DRAWING ARE QUALITY LEVEL CM AND SEISMIC CATEGORY SC-III, UNLESS OTHERWISE NOTED.

33. MAJOR REVISION: NO CHANGE CLOUDS REQUIRED. REVISED MELTER GRAPHIC. INCORPORATED 24590-HLW-M6N-M80T-00004. ADDED SEPARATE AIR CONNECTIONS FOR POUR SPOUT CAMERAS AND PNEUMATIC ACTUATORS. ADDED HMP-GL-32243-S10A-001/2 AND HMP-GL-32243-S11B-001/2. REVISED SEISMIC AND QUALITY DESIGNATIONS. REVISED/ADDED/DELETED NOTES AND REFERENCES. SYSTEM REQUIRES DESIGN REVERIFICATION.

HOLD/OPEN ITEMS:

1. DELETED

REFERENCE:

1. DURATEK SUBMITTAL 24590-101-TSA-W000-0010-07-12.
2. 24590-HLW-M5-V17T-20002, PROCESS FLOW DIAGRAM HLW VITRIFICATION MELTER 2 (SYSTEM HMP AND HOP).
3. DRAWING NUMBER 24590-HLW-M0-HMP-00137, HLW VITRIFICATION SYSTEM HMP, DESIGN PROPOSAL DRAWING, POUR TUNNEL 1 & 2 INFRARED AND GAMMA CANISTER LEVEL DETECTION SYSTEM.
4. THE REQUIRED BATCH SEQUENCES, PERMISSIVES, INTERLOCKS, ALARMS AND OPERATOR INTERFACE POINTS FOR THE HMP SYSTEM ARE FULLY DESCRIBED IN THE SOFTWARE FUNCTIONAL SPECIFICATION 24590-HLW-3PS-HMP-T0001.
5. FOR ELECTRICAL JUMPERS, REFER TO SYSTEM BLOCK DIAGRAMS 24590-HLW-J1-HMP-00011 THROUGH 00020.

Please note that source, special nuclear, and byproduct materials, as defined in the Atomic Energy Act of 1954 (AEA) are regulated by the U.S. Department of Energy (DOE) facilities exclusively by DOE acting pursuant to its AEA authority. DOE asserts that pursuant to AEA, it has sole and exclusive responsibility to regulate source, special nuclear, and byproduct materials at DOE-owned nuclear facilities. Information contained herein on radionuclides is provided for process description purposes only.

REV	DESCRIPTION	ORG	CHKD	RVWD	APVD	DATE
5	REVISED PER NOTE 33	RDP	SS	CER JR	MJ	8/2/06
4	REVISED PER NOTE 30	RDP	JK	SC	JFS	12/10/04
0	ISSUED FOR CONSTRUCTION	JR	SS	MLW/KLH	SCF	01/31/03

REVISION HISTORY

Q QUALITY DESIGNATOR

ISSUED BY RPP-WTP PDC

ISSUE STAMP

PROJECT No.	24590
SITE	HANFORD
AREA	200E
BUILDING No.	30

	BY	DATE
ORIGINATOR	JEFF RAHMING	01/28/03
CHECKER	SID SOURANI	1/28/03
APPROVER	SC FOELBER	1/31/03
REVIEWER	TOM VALENTINO	1/30/03

CONTENT APPLICABLE TO ALARA? [X] YES [ ] NO

ADR NO. 24590-HLW-ADR-M-02-031 REV. 3

SAFETY SCREEN REQUIRED? [X] YES [ ] NO EM&S INITIAL IF YES

SAFETY SCREEN IS REQUIRED FOR DRAWING TYPES IDENTIFIED IN 24590-WTP-GPP-SREG-002

BECHTEL

RIVER PROTECTION PROJECT
WASTE TREATMENT PLANT
2435 STEVENS CENTER PLACE
RICHLAND, WA 99354

CONTRACT No: DE-AC27-01RV14136

P&ID - HLW MELTER 2 GLASS POUR MONITORING

SCALE: NONE

24590-HLW-M6-HMP-20008

REV 5

E SIZE - 44x34
COMPUTER GENERATED - MANUAL CHANGES NOT PERMITTED

R1070244B

07/27/2006 01:13:13 PM

PLOTTED BY: eidsrm
C:\Work Files\24590\HLW\M6\HMP\20008.dgn

FORM E_SDN.DGN 02/2003

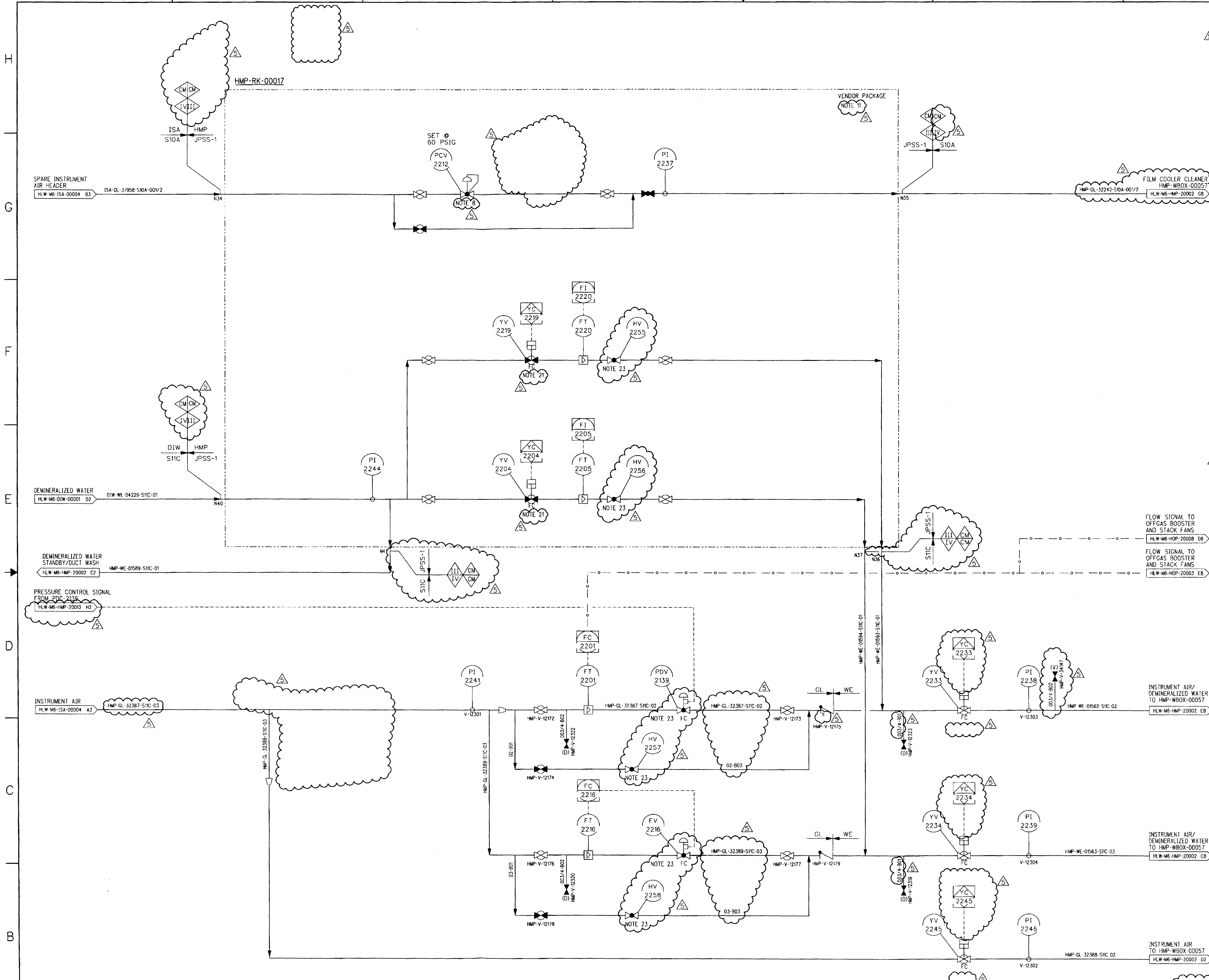

NOTES:

1. SEE DRAWINGS 24590-WTP-M6-50-00001 THROUGH 24590-WTP-M6-50-00008 FOR GENERAL NOTES, SYMBOLS AND LEGEND, AND GENERAL SLOPE REQUIREMENTS.

2-7. DELETED

8. RACK MOUNTED PRESSURE REGULATORS (PCV) ARE PROVIDED WITH AN INTEGRAL PRESSURE INDICATOR.

9. DELETED

10. DELETED

11. JPSS-1 SPECIFICATION IS DEFINED IN INSTRUMENT PIPING MATERIAL CLASS SPECIFICATION 24590-WTP-3PS-JXF0-T0001. SPECIFICATION CHANGE ALSO DEFINES AREA OF RESPONSIBILITY.

12-18. DELETED

19. SEE ARCHIVED REVISION 2 P&ID FOR REVISION 2 CHANGES.

20. SEE ARCHIVED REVISION 3 P&ID FOR REVISION 3 CHANGES.

21. ANGLE BODY PISTON VALVE CONSISTING OF A VALVE BODY, VALVE ACTUATOR AND PILOT SOLENOID.

22. REVISION 4: MAJOR REVISION, NO CHANGE CLOUDS REQUIRED. MOVED DEMIN WATER SUPPLY FROM HMP-RK-00017 TO P&ID HMP-20002. ADDED PI-2244 AND PI-2246. MODIFIED VALVE OPERATOR TO PILOT SOLENOID WITHOUT TRAVEL SWITCHES FOR YV-2204 AND YV-2219. ALSO CHANGED VALVE TYPE FROM BALL TO ANGLE BODY PISTON VALVE TYPE FOR YV-2204 AND YV-2219 CHANGED YV-2204 AND YV-2219 FROM NORMALLY OPEN TO NORMALLY CLOSED. CHANGED PDV-2139 AND FV-2216 FROM BALL TO GLOBE. UPDATED QUALITY FLAGS TO SHOW "CM". ADDED YV/YC/-2245 TO LINE 32388. ADDED ROOT VALVES TO VARIOUS INSTRUMENTS. REVISED/ADDED/DELETED NOTES.

23. VALVE SIZED TO LIMIT MAXIMUM FLOW TO PREVENT MELTER PRESSURIZATION.

24. ALL SYSTEMS, STRUCTURES, AND COMPONENTS ON THIS DRAWING ARE QUALITY LEVEL CM AND SEISMIC CATEGORY SC-IV, UNLESS OTHERWISE NOTED.

25. INCORPORATED 24590-HLW-M6N-HMP-00001, -00005, -00016, AND 24590-HLW-M6N-M80T-00004. REVISED LINE NUMBER. DELETED PCV-2240, PCV-2217 AND ASSOCIATED BYPASS BRANCHES. ADDED HAND VALVES TO LIMIT MAXIMUM AIR/WATER FLOW TO MELTER PLENUM. CHANGED YV-2233, YV-2234, YV-2245 AND CONTROLS FROM PPJ TO PCJ. REVISED/ADDED/DELETED NOTES AND REFERENCES.

REFERENCES:

1. DURATEK SUBMITTAL 24590-101-TSA-W000-0010-07-11.
2. 24590-HLW-M5-V17T-20002, PROCESS FLOW DIAGRAM HLW VITRIFICATION MELTER 2 (SYSTEM HMP AND HOP).
3. DELETED
4. THE REQUIRED BATCH SEQUENCES, PERMISSIVES, INTERLOCKS, ALARMS AND OPERATOR INTERFACE POINTS FOR THE HMP SYSTEM ARE FULLY DESCRIBED IN THE SOFTWARE FUNCTIONAL SPECIFICATION 24590-HLW-3PS-HMP-T0001.

Please note that source, special nuclear, and byproduct materials, as defined in the Atomic Energy Act of 1954 (AEA) are regulated at the U. S. Department of Energy (DOE) facilities exclusively by DOE acting pursuant to its AEA authority. DOE asserts that pursuant to AEA, it has sole and exclusive responsibility and authority to regulate source, special nuclear, and byproduct materials at DOE-owned nuclear facilities. Information contained herein on radionuclides is provided for process description purposes only.

CM
QUALITY DESIGNATOR

REV	DESCRIPTION	ORG	CHKD	RVWD	APVD	DATE
5	REVISED PER NOTE 25	RDP	SJ	CER	CGR	8/2/06
4	REVISED PER NOTE 22	RDP	JK	EI	JFS	12/13/04
0	ISSUED FOR CONSTRUCTION	JR/JR	SCS	IV	SCF	2/10/03

REVISION HISTORY

ISSUED BY RPP-WTP PDC
ISSUE STAMP

PROJECT No.	24590
SITE	HANFORD
AREA	200E
BUILDING No.	30

RIVER PROTECTION PROJECT
WASTE TREATMENT PLANT
2435 STEVENS CENTER PLACE
RICHLAND, WA 99354

CONTRACT No: DE-AC27-01RV14136

	BY	DATE
ORIGINATOR	JK/JEFFERY RAHMING	2/10/03
CHECKER	SCS	2/10/03
APPROVER	STEVEN FOELBER	2/10/03
REVIEWER	TOM VALENTINO	2/10/03

P&ID - HLW MELTER 2 FILM COOLER UTILITIES

CONTENT APPLICABLE TO ALARA? [X] YES [ ] NO
ADR NO. 24590-HLW-ADR-M-02-031 REV: 3
SAFETY SCREEN REQUIRED? [X] YES [ ] NO E&NS INITIAL IF YES

SCALE: NONE

24590-HLW-M6-HMP-20012 REV 5

SAFETY SCREEN IS REQUIRED FOR DRAWING TYPES IDENTIFIED IN 24590-WTP-GPP-SREG-002

'E' SIZE - 44x34
COMPUTER GENERATED - MANUAL CHANGES NOT PERMITTED

R10702450

07/27/2006 01:14:23 PM

FORM C_SON.DGN 02/2003

24590-HLW-M6-HMP-20013

HMP-PLUG-00022 MELTER 2 PLENUM PRESSURE TAP N/A

HMP-PLUG-00020 MELTER 2 PLUG N/A

HMP-SPOOL-00022 MELTER 2 PLENUM PRESSURE TAP N/A

HMP-PLUG-00016 MELTER 2 PLUG N/A

HMP-NOZ-00004 FEED NOZZLE N/A

HMP-RK-00022

INSTRUMENT AIR HLW-M6-ISA-00004 B2 ISA-GL-37957-S10A-001/2

ARGON GAS HLW-M6-HMP-20006 D7

INSTRUMENT AIR HLW-M6-ISA-00004 B8 ISA-GL-37955-S10A-001/2

FI 2130 NOTE 31 · FI 2129 NOTE 31 · FI 2138 NOTE 31 · FI 2142 NOTE 31 · FI 2147 NOTE 31 · FI 2151 NOTE 31

VENDOR PACKAGE NOTE 13

HOLD 3

PRESSURE CONTROL SIGNAL TO PDV-2139 HLW-M6-HMP-20012 D8

PDC 2139

PDT-2649 HMP-RK-00022 HLW-M6-HMP-20006 E5

PDT-2749 HMP-RK-00022 HLW-M6-HMP-20007 E5

LI 2131 · LT 2131 · PDI 2143 · PDT 2143 BACKUP SHELL PRESSURE · PDT 2139B PLENUM SECONDARY · PDT 2139A PLENUM PRIMARY · LI 2144 · LT 2144 SHELL LEAK DETECTION

HMP-RK-00023 VENDOR PACKAGE NOTE 13

PDI 2152 · PDT 2152 · DI 2132 · DT 2132

HMP-WBOX-00057, N177 HLW-M6-HMP-20001 F8 · HMP-WBOX-00057, N179 HLW-M6-HMP-20001 F8

DEMIN WATER FROM HFP-RK-00011 HLW-M6-HFP-20005 D5

REFER TO HLW-M6-HMP-20002

REFER TO 24590-HLW-M6-HMP-20008

HMP-WBOX-00057 (BULKHEAD) · HMP-JMPP-00031 · HMP-JMPP-00082 · HMP-JMPP-00083 · HMP-JMPP-00084

CAVE REFERENCE PRESSURE

SLURRY FEED FROM HFP-PMP-00014 HLW-M6-HFP-20002 E2

HFP-JMPP-00101 · HMP-JMPP-00107 · HMP-JMPP-00153 · HMP-JMPP-00154

HMP-PLUG-00020 NOTE 32 · HMP-PLUG-00016 NOTE 32 · HMP-NOZ-00004

HMP-PLUG-00022 · HMP-SPOOL-00022 · HMP-BBLR-00013 · HMP-MLTR-00002

GLASS LEVEL

REFER TO HLW-M6-HMP-20001

NOTES:

1. SEE DRAWINGS 24590-WTP-M6-50-00001 THROUGH 24590-WTP-M6-50-00008 FOR GENERAL NOTES, SYMBOLS AND LEGEND, AND GENERAL SLOPE REQUIREMENTS.
2-12. DELETED
13. JPSS-1 SPECIFICATION IS DEFINED IN INSTRUMENT PIPING MATERIAL CLASS SPEC NO. 24590-WTP-3PS-JXF0-T0001. SPECIFICATION CHANGE ALSO DEFINES AREA OF RESPONSIBILITY.
14-26. DELETED
27. SEE ARCHIVED REVISION 2 P&ID FOR REVISION 2 CHANGES.
28. DELETED
29. SEE ARCHIVED REVISION 3 P&ID FOR REVISION 3 CHANGES.
30. DELETED
31. VARIABLE AREA FLOW METER WITH INTEGRAL FLOW CONTROL VALVE AND PRESSURE REGULATOR.
32. PLUGS ARE ALTERNATE INSERTS FOR MELTER PORTS. MELTER PLUGS ARE QUALITY LEVEL CM AND SEISMIC CATEGORY SC-III.
33. REVISION 4: MAJOR REVISION, NO CHANGE CLOUDS REQUIRED. UPDATED QUALITY FLAGS TO SHOW "CM". ADDED ROOT VALVES TO VARIOUS INSTRUMENTS. REVISED MELTER NOZZLE N10 TO N10A. ADDED NEW SPARE NOZZLES N11 AND N10 TO MELTER. DELETED JUMPER HMP-JMPP-00081. DELETED PCVS PCV-2125, 2134 AND PCV-2150. DELETED PCV-2125 AND PI-2126. INCORPORATED WALL MODULE DESIGN INCLUDING EMBEDDED PIPE & BULKHEAD. REVISED/ADDED/DELETED NOTES.
34. CONTENTS OF THIS DOCUMENT ARE DANGEROUS WASTE PERMIT AFFECTING.
35. INCORPORATED 24590-HLW-M6N-HMP-00002, -00065 AND 24590-HLW-M6N-M8OT-00004. ADDED REMOTE MANUAL VALVES FOR C5 CONFINEMENT. REVISED QUALITY AND SESMIC DESIGNATIONS. MODIFIED MELTER GRAPHIC. REVISED/ADDED/DELETED NOTES AND REFERENCES. SYSTEM REQUIRES DESIGN REVERIFICATION.

HOLD/OPEN ITEMS:

1-2. DELETED
3. VALVES ON HOLD FOR C5 CONFINEMENT.

REFERENCES:

1. 24590-HLW-M5-V17T-20002, PROCESS FLOW DIAGRAM HLW VITRIFICATION MELTER 2 (SYSTEM HMP AND HOP).
2. DURATEK SUBMITTAL 24590-101-TSA-W000-0010-07-06.
3. THE REQUIRED BATCH SEQUENCES, PERMISSIVES, INTERLOCKS, ALARMS AND OPERATOR INTERFACE POINTS FOR THE HMP SYSTEM ARE DESCRIBED IN THE SOFTWARE FUNCTIONAL SPECIFICATION 24590-HLW-3PS-HMP-T0001.
4. FOR ITS PERMISSIVES AND INTERLOCKS, REFER TO SAFETY SYSTEM REQUIREMENT SPECIFICATIONS 24590-HLW-3PS-PPJ-T0016 (TO BE ISSUED).

Please note that source, special nuclear, and byproduct materials, as defined in the Atomic Energy Act of 1954 (AEA) are regulated by DOE acting pursuant to its AEA DOE) facilities exclusively by pursuant to AEA, it was sole and exclusive authority. DOE asserts that certain information regulate source, special nuclear, and byproduct materials at DOE-owned nuclear facilities. Information disclosed herein on radionuclides is provided for process description purposes only.

REV	DESCRIPTION	ORG	CHKD	RVWD	APVD	DATE
5	REVISED PER NOTE 35	RDP	SJ	JP	CER	8/26/06
4	REVISED PER NOTE 33	ROP	JK	SC	DFS	12/10/04
0	ISSUED FOR CONSTRUCTION	JK	SS	MLW/KLH	SCF	1/31/03

REVISION HISTORY

Q QUALITY DESIGNATOR

ISSUED BY RPP-WTP PDC

ISSUE STAMP

PROJECT No.	24590
SITE	HANFORD
AREA	200E
BUILDING No.	30

	BY	DATE
ORIGINATOR	JAY KHANDHAR	1/29/03
CHECKER	SCS	1/29/03
APPROVER	SC FOELBER	1/31/03
REVIEWER	TOM VALENTINO	1/30/03

CONTENT APPLICABLE TO ALARA? [X] YES [ ] NO
ADR NO. 24590-HLW-ADR-M-02-031 REV: 3
SAFETY SCREEN REQUIRED? [X] YES [ ] NO EMMS INITIAL IF YES CWK

SAFETY SCREEN IS REQUIRED FOR DRAWING TYPES IDENTIFIED IN 24590-WTP-GPP-SREG-002

BECHTEL

RIVER PROTECTION PROJECT
WASTE TREATMENT PLANT
2435 STEVENS CENTER PLACE
RICHLAND, WA 99354

CONTRACT No: DE-AC27-01RV14136

P&ID - HLW MELTER 2 SYSTEM PRESSURE, DENSITY AND LEVEL DETECTION

SCALE: NONE

24590-HLW-M6-HMP-20013

REV 5

"E" SIZE - 44 x 34
COMPUTER GENERATED - MANUAL CHANGES NOT PERMITTED

R1107G2452

07/25/2006 03:29:17 PM

PLOTTED BY: adam
C:\Work\dms03839\HLW\M6\HMP\20013.dgn

FORM E_SDN.DGN 02/2003

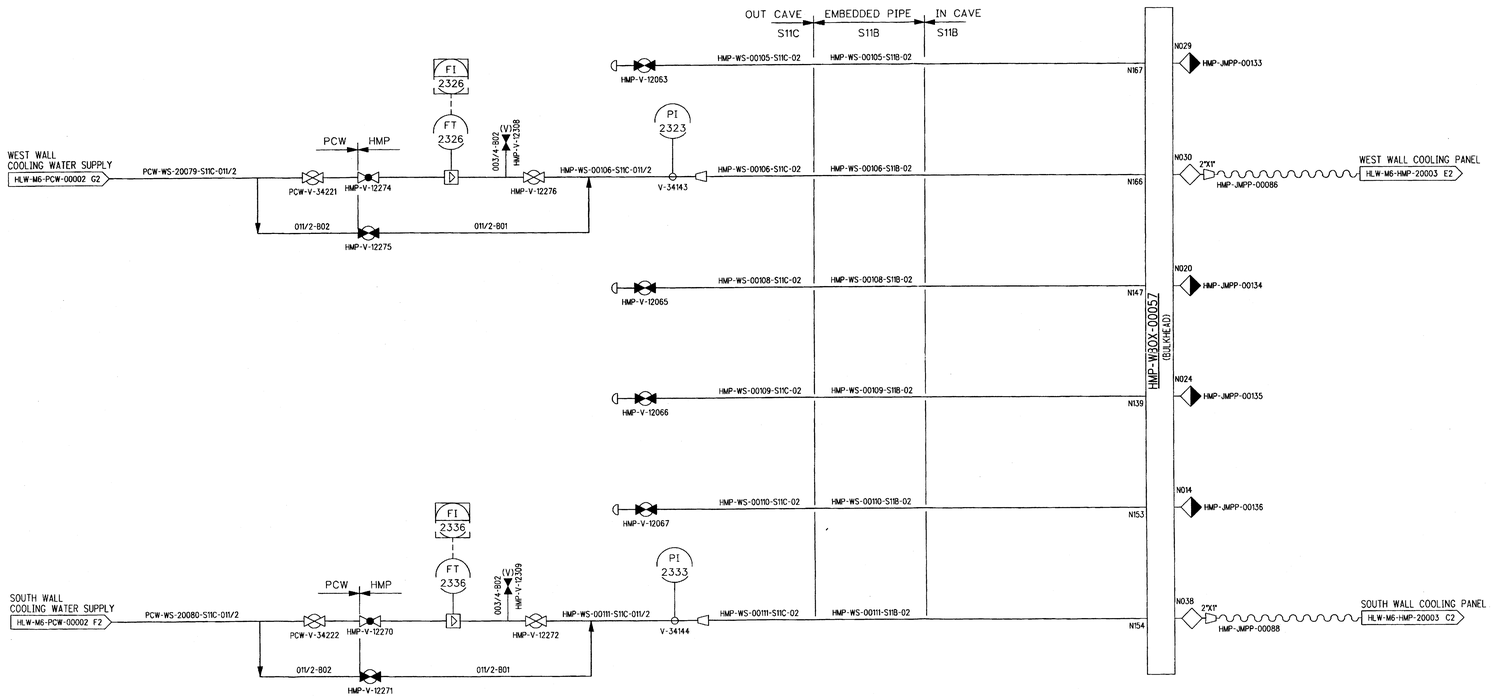

NOTES:

1. SEE DRAWINGS 24590-WTP-M6-50-00001 THROUGH 24590-WTP-M6-50-00008 FOR GENERAL NOTES, SYMBOLS AND LEGEND, AND GENERAL SLOPE REQUIREMENTS.

2-21. DELETED

22. SEE ARCHIVED REVISION 2 P&ID FOR REVISION 2 CHANGES.

23. DELETED

24. SEE ARCHIVED REVISION 3 P&ID FOR REVISION 3 CHANGES.

25. DELETED

26. REVISION 4: MAJOR REVISION, NO CHANGE CLOUDS REQUIRED. SEPARATED FLOW AND TEMPERATURE READING CAPABILITIES. TEMPERATURE TRANSMITTER KEPT IN RETURN LINE (SHOWN ON P&ID HMP-20003) AND MOVED FLOW TRANSMITTERS TO SUPPLY LINES. COMBINED RETURN LINES FROM WEST WALL AND SOUTH WALL IN A NEW MANIFOLD. DELETED PSV-2334, 2351, 2324 AND 2350 AND ASSOCIATED PIPING AND VALVES. DELETED JUMPERS JMPP-00085, AND 00087. CONVERTED EXISTING TWO SPARE LINES 00108 AND 00109 FROM 1 1/2" TO 2" SIZE. DELETED COOLING WATER RETURN LINES COMING FROM WEST PANEL AND SOUTH PANEL. CHANGED THESE PENETRATIONS TO SPARES. ALSO DELETED LINE 20092 GOING TO P&ID 24590-HLW-M6-PCW-00004. DELETED THERMAL RELIEF HEADER. DELETED LOCKED OPEN VALVES IN THE SUPPLY LINES. DELETED RACK HMP-RK-00019. INCORPORATED NEW WALL MODULE DESIGN INCLUDING EMBEDDED PIPE AND BULKHEAD. REVISED/ADDED/DELETED NOTES.

27. CONTENTS OF THIS DOCUMENT ARE DANGEROUS WASTE PERMIT AFFECTING.

28. ALL SYSTEMS, STRUCTURES, AND COMPONENTS ON THIS DRAWING ARE QUALITY LEVEL CM AND SEISMIC CATEGORY SC-III, UNLESS OTHERWISE NOTED.

29. MAJOR REVISION, NO CHANGE CLOUDS REQUIRED. INCORPORATED 24590-HLW-M6N-HMP-00010, 24590-HLW-M6N-HMP-00066 AND 24590-HLW-M6N-M8OT-00004. REVISED/ADDED/DELETED NOTES AND REFERENCES. REVISED SEISMIC AND QUALITY DESIGNATIONS.

HOLD/OPEN ITEMS:

1-2. DELETED

REFERENCES:

1. DURATEK SUBMITTALS 24590-101-TSA-W000-0010-08-03 AND 24590-101-TSA-W000-0010-07-03.
2. 24590-HLW-M5-V17T-20002, PROCESS FLOW DIAGRAM, HLW VITRIFICATION MELTER 2 (SYSTEM HMP AND HOP).
3. THE REQUIRED BATCH SEQUENCES, PERMISSIVES, INTERLOCKS, ALARMS AND OPERATOR INTERFACE POINTS FOR THE HMP SYSTEM ARE DESCRIBED IN THE SOFTWARE FUNCTIONAL SPECIFICATION 24590-HLW-3PS-HMP-T0001.

Please note that source, special nuclear, and byproduct materials, as defined by the Atomic Energy Act of 1954 (AEA) are regulated at the U.S. Department of Energy (DOE) facilities exclusively by DOE acting pursuant to its AEA authority. When acting pursuant to AEA, it has sole and exclusive responsibility and authority to regulate source, special nuclear, and byproduct materials at DOE-owned nuclear facilities. Information contained herein on radionuclides is provided for process description purposes only.

REV	DESCRIPTION	ORG	CHKD	RVWD	APVD	DATE
5	REVISED PER NOTE 29	RDP	SJ	CEK	DJP	8/2/06
4	REVISED PER NOTE 10	RDP	JK	EI	JFS	12-13-04
0	ISSUED FOR CONSTRUCTION	JR	SS	MLW/KLH	SCF	1-31-03

REVISION HISTORY

CM — QUALITY DESIGNATOR

ISSUED BY RPP-WTP PDC

PROJECT No.	24590
SITE	HANFORD
AREA	200E
BUILDING No.	30

ISSUE STAMP

	BY	DATE
ORIGINATOR	JEFFERY RAHMING	1-28-03
CHECKER	SCS	1-28-03
APPROVER	SC FOELBER	1-31-03
REVIEWER	TOM VALENTINO	1-30-03

CONTENT APPLICABLE TO ALARA? [X] YES [ ] NO
ADR NO. 24590-HLW-ADR-M-02-031 REV: 3
SAFETY SCREEN REQUIRED? [X] YES [ ] NO EMS INITIAL IF YES

BECHTEL

RIVER PROTECTION PROJECT
WASTE TREATMENT PLANT
2435 STEVENS CENTER PLACE
RICHLAND, WA 99354

CONTRACT No: DE-AC27-01RV14136

P&ID - HLW MELTER 2 REFRACTORY COOLING

SCALE: NONE

24590-HLW-M6-HMP-20014

REV 5

"E" SIZE - 44x34
COMPUTER GENERATED - MANUAL CHANGES NOT PERMITTED

SAFETY SCREEN IS REQUIRED FOR DRAWING TYPES IDENTIFIED IN 24590-WTP-GPP-SREG-002

R1702454

07/26/2006 04:00:28 PM

PLOTTED BY: eidorn
C:\Work\dms0839\HLW\M6\HMP20014.dgn

FORM E_SDN.DGN 02/2003

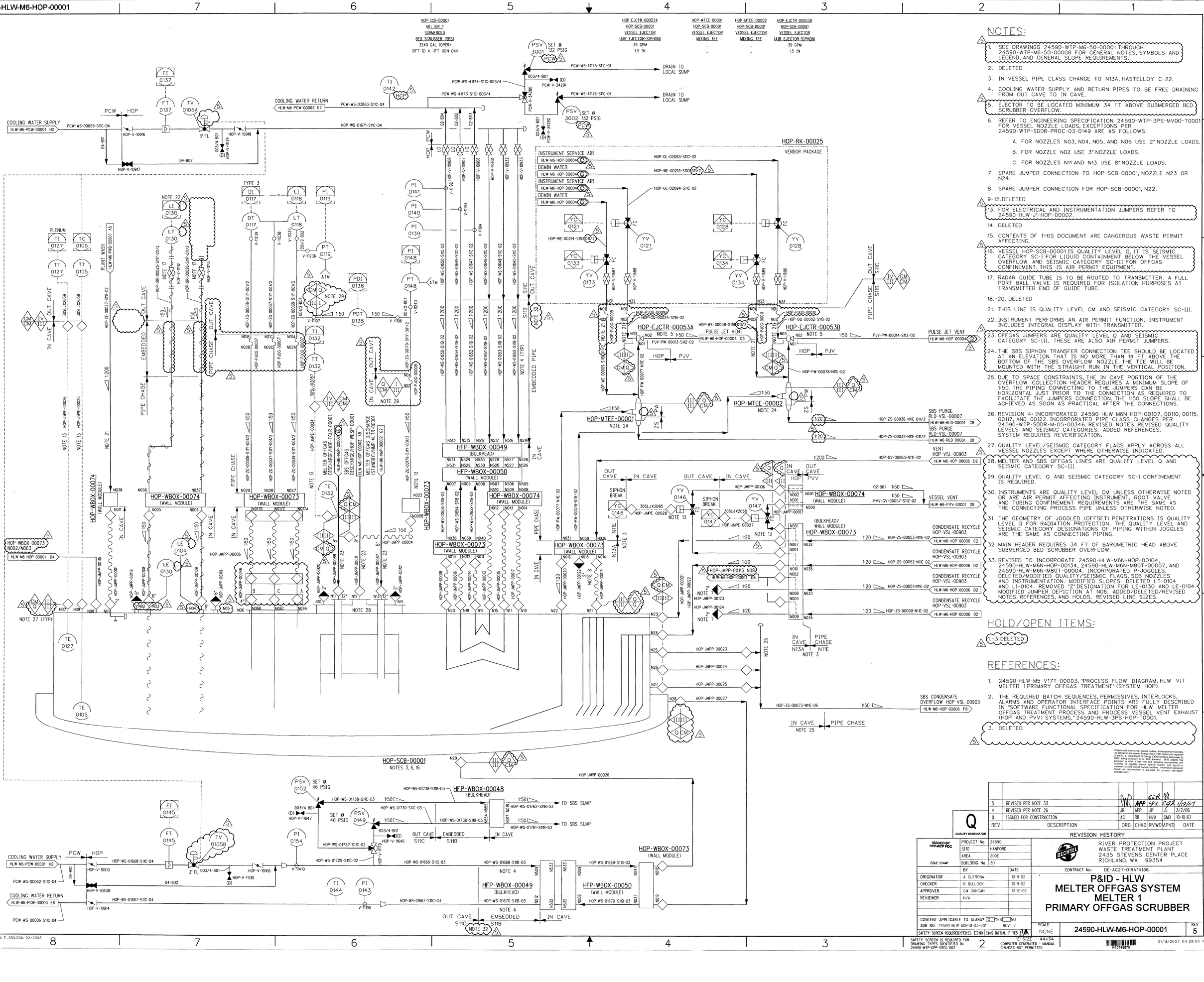

NOTES:

1. SEE DRAWINGS 24590-WTP-M6-50-00001 THROUGH 24590-WTP-M6-50-00008 FOR GENERAL NOTES, SYMBOLS AND LEGEND, AND GENERAL SLOPE REQUIREMENTS.
2. DELETED
3. IN VESSEL PIPE CLASS CHANGE TO N13A, HASTELLOY C-22.
4. COOLING WATER SUPPLY AND RETURN PIPES TO BE FREE DRAINING FROM OUT CAVE TO IN CAVE.
5. EJECTOR TO BE LOCATED MINIMUM 34 FT ABOVE SUBMERGED BED SCRUBBER OVERFLOW.
6. REFER TO ENGINEERING SPECIFICATION 24590-WTP-3PS-MV00-T0001 FOR VESSEL NOZZLE LOADS, EXCEPTIONS PER 24590-WTP-SDDR-PROC-03-0149 ARE AS FOLLOWS:
   A. FOR NOZZLES N03, N04, N05, AND N06 USE 2" NOZZLE LOADS.
   B. FOR NOZZLE N02 USE 3" NOZZLE LOADS.
   C. FOR NOZZLES N11 AND N13 USE 8" NOZZLE LOADS.
7. SPARE JUMPER CONNECTION TO HOP-SCB-00001, NOZZLE N23 OR N24.
8. SPARE JUMPER CONNECTION FOR HOP-SCB-00001, N22.

9-12. DELETED

13. FOR ELECTRICAL AND INSTRUMENTATION JUMPERS REFER TO 24590-HLW-J1-HOP-00002.

14. DELETED

15. CONTENTS OF THIS DOCUMENT ARE DANGEROUS WASTE PERMIT AFFECTING.

16. VESSEL HOP-SCB-00001 IS QUALITY LEVEL Q. IT IS SEISMIC CATEGORY SC-I FOR LIQUID CONTAINMENT BELOW THE VESSEL OVERFLOW AND SEISMIC CATEGORY SC-III FOR OFFGAS CONFINEMENT. THIS IS AIR PERMIT EQUIPMENT.

17. RADAR GUIDE TUBE IS TO BE ROUTED TO TRANSMITTER. A FULL PORT BALL VALVE IS REQUIRED FOR ISOLATION PURPOSES AT TRANSMITTER END OF GUIDE TUBE.

18.-20. DELETED

21. THIS LINE IS QUALITY LEVEL CM AND SEISMIC CATEGORY SC-III.

22. INSTRUMENT PERFORMS AN AIR PERMIT FUNCTION. INSTRUMENT INCLUDES INTEGRAL DISPLAY WITH TRANSMITTER.

23. OFFGAS JUMPERS ARE QUALITY LEVEL Q AND SEISMIC CATEGORY SC-III. THESE ARE ALSO AIR PERMIT JUMPERS.

24. THE SBS SIPHON TRANSFER CONNECTION TEE SHOULD BE LOCATED AT AN ELEVATION THAT IS NO MORE THAN 14 FT ABOVE THE BOTTOM OF THE SBS OVERFLOW NOZZLE. THE TEE WILL BE MOUNTED WITH THE STRAIGHT RUN IN THE VERTICAL POSITION.

25. DUE TO SPACE CONSTRAINTS, THE IN CAVE PORTION OF THE OVERFLOW COLLECTION HEADER REQUIRES A MINIMUM SLOPE OF 1:50. THE PIPING CONNECTING TO THE JUMPERS CAN BE HORIZONTAL JUST PRIOR TO THE CONNECTION AS REQUIRED TO FACILITATE THE JUMPERS CONNECTION. THE 1:50 SLOPE SHALL BE ACHIEVED AS SOON AS PRACTICAL AFTER THE CONNECTIONS.

26. REVISION 4: INCORPORATED 24590-HLW-M6N-HOP-00107, 00110, 00115, 00117, AND 00122. INCORPORATED PIPE CLASS CHANGES PER 24590-WTP-SDDR-M-05-00346. REVISED NOTES. REVISED QUALITY LEVELS AND SEISMIC CATEGORIES. ADDED REFERENCES. SYSTEM REQUIRES REVERIFICATION.

27. QUALITY LEVEL/SEISMIC CATEGORY FLAGS APPLY ACROSS ALL VESSEL NOZZLES EXCEPT WHERE OTHERWISE INDICATED.

28. MELTER AND SBS OFFGAS LINES ARE QUALITY LEVEL Q AND SEISMIC CATEGORY SC-III.

29. QUALITY LEVEL Q AND SEISMIC CATEGORY SC-I CONFINEMENT IS REQUIRED.

30. INSTRUMENTS ARE QUALITY LEVEL CM UNLESS OTHERWISE NOTED OR ARE AIR PERMIT AFFECTING INSTRUMENT. ROOT VALVE AND TUBING CONFINEMENT REQUIREMENTS ARE THE SAME AS THE CONNECTING PROCESS PIPE UNLESS OTHERWISE NOTED.

31. THE GEOMETRY OF JOGGLED (OFFSET) PENETRATIONS IS QUALITY LEVEL Q FOR RADIATION PROTECTION. THE QUALITY LEVEL AND SEISMIC CATEGORY DESIGNATIONS OF PIPING WITHIN JOGGLES ARE THE SAME AS CONNECTING PIPING.

32. MAIN HEADER REQUIRES 34 FT OF BAROMETRIC HEAD ABOVE SUBMERGED BED SCRUBBER OVERFLOW.

33. REVISED TO INCORPORATE 24590-HLW-M6N-HOP-00104, 24590-HLW-M6N-HOP-00134, 24590-HLW-M6N-M8OT-00007, AND 24590-HLW-M6N-M8OT-00004. INCORPORATED P-JOGGLES. DELETED/MODIFIED QUALITY/SEISMIC FLAGS, SCB NOZZLES AND INSTRUMENTATION. MODIFIED SLOPES. DELETED LT-0104 AND LI-0104. REMOVED "Z" DESIGNATION FOR LE-0130 AND LE-0104. MODIFIED JUMPER DEPICTION AT N06. ADDED/DELETED/REVISED NOTES, REFERENCES, AND HOLDS. REVISED LINE SIZES.

HOLD/OPEN ITEMS:

1.-3. DELETED

REFERENCES:

1. 24590-HLW-M5-V17T-00003, "PROCESS FLOW DIAGRAM, HLW VIT MELTER 1 PRIMARY OFFGAS TREATMENT" (SYSTEM HOP).
2. THE REQUIRED BATCH SEQUENCES, PERMISSIVES, INTERLOCKS, ALARMS AND OPERATOR INTERFACE POINTS ARE FULLY DESCRIBED IN "SOFTWARE FUNCTIONAL SPECIFICATION FOR HLW MELTER OFFGAS TREATMENT PROCESS AND PROCESS VESSEL VENT EXHAUST (HOP AND PVV) SYSTEMS," 24590-HLW-3PS-HOP-T0001.
3. DELETED

Please note that source, special nuclear, and byproduct materials, as defined in the Atomic Energy Act of 1954 (AEA) are regulated at the U. S. Department of Energy (DOE) facilities by DOE acting pursuant to its AEA authority. DOE asserts that pursuant to AEA, it has sole and exclusive responsibility and authority for regulating the hazards, clean, and byproduct materials at DOE-owned nuclear facilities. Information contained herein on radionuclides is provided for process description purposes only.

REV	DESCRIPTION	ORG	CHKD	RVWD	APVD	DATE
5	REVISED PER NOTE 33		APP	SPK	CGA	1/9/07
4	REVISED PER NOTE 26	JR	APP	JP	JJ	3/2/06
0	ISSUED FOR CONSTRUCTION	AC	RB	N/A	GMD	10-10-02

Q — QUALITY DESIGNATOR

REVISION HISTORY

ISSUED BY RPP-WTP PDC — ISSUE STAMP

PROJECT No.	24590	
SITE	HANFORD	
AREA	200E	
BUILDING No.	30	
	BY	DATE
ORIGINATOR	A. CUTRONA	10-9-02
CHECKER	R. BULLOCK	10-9-02
APPROVER	GM DUNCAN	10-10-02
REVIEWER	N/A	

CONTENT APPLICABLE TO ALARA? [X] YES [ ] NO
ADR NO. 24590-HLW-ADR-M-03-001 REV: 2
SAFETY SCREEN REQUIRED? [X] YES [ ] NO EWNS INITIAL IF YES

BECHTEL

RIVER PROTECTION PROJECT
WASTE TREATMENT PLANT
2435 STEVENS CENTER PLACE
RICHLAND, WA 99354

CONTRACT No: DE-AC27-01RV14136

P&ID - HLW MELTER OFFGAS SYSTEM MELTER 1 PRIMARY OFFGAS SCRUBBER

SCALE: NONE

24590-HLW-M6-HOP-00001 — REV 5

R10745875

01/11/2007 04:29:04 PM

PLOTTED BY: mcarter
C:\Work\dms\03839\HLW\M6\HOP00001.dgn

FORM E_SDN.DGN 02/2003

SAFETY SCREEN IS REQUIRED FOR DRAWING TYPES IDENTIFIED IN 24590-WTP-GPP-SREQ-002

"E" SIZE - 44x34
COMPUTER GENERATED - MANUAL CHANGES NOT PERMITTED

HOP-HTR-00003
MELTER 1
WESP BULGE
INLET AIR HEATER
35 KW (MAXIMUM)
80 IN L BY 18 IN D

HOP-WESP-00001
MELTER 1
WET ELECTROSTATIC
PRECIPITATOR (WESP)
2000 ACFM (MAX)
141IN D X 21FT 9.5IN H

NOTES:

1. SEE DRAWINGS 24590-WTP-M6-50-00001 THROUGH 24590-WTP-M6-50-00008 FOR GENERAL NOTES, SYMBOLS AND LEGEND, AND GENERAL SLOPE REQUIREMENTS.
2. DELETED
3. REFER TO ENGINEERING SPECIFICATION 24590-WTP-3PS-MV00-T0001 FOR VESSEL NOZZLE LOADS.
4. POWER CONTROLLER MALFUNCTION INDICATOR INCLUDES THE FOLLOWING ALARMS: GROUND FAULT, XFMR HIGH TEMPERATURE, HIGH OIL TEMPERATURE, HIGH OIL PRESSURE, POWER SUPPLY TRIP, SECONDARY AMPS HIGH, SECONDARY VOLTAGE LOW, SPARK RATE HIGH AND COMMUNICATION FAILURE.
5. DELETED
6. HEATER UNIT SHALL BE EQUIPPED WITH OVER-TEMPERATURE PROTECTION (SUPPLIED BY VENDOR).
7. -8. DELETED
9. CONTENTS OF THIS DOCUMENT ARE DANGEROUS WASTE PERMIT AFFECTING.
10. POWER SUPPLY SPARK RATE FREQUENCY IS AUTOMATICALLY CONTROLLED AND MONITORED BY VENDOR PROVIDED CONTROLLER.
11. REVISION 3: REVISED QUALITY LEVELS AND SEISMIC CATEGORIES AND OTHER CHANGES AS MARKED.
12. DELETED
13. SLEEVED PIPE IS INDICATED BY TWO DASHED LINES SURROUNDING A PIPELINE. SLOPE SLEEVE INTO CAVE WITH SAME SLOPE AS PIPELINE.
14. DELETED
15. WESP VESSEL IS QUALITY LEVEL Q AND SEISMIC CATEGORY SC-III FOR CONFINEMENT OF OFFGAS.
16. THIS INSTRUMENT PERFORMS AN AIR PERMIT FUNCTION. THE WESP POWER SUPPLY CONTROLLER ALSO PERFORMS AN AIR PERMIT FUNCTION.
17. WESP VESSEL IS LOCATED IN ACTIVE SERVICES CELL.
18. THESE JUMPERS ARE AIR PERMIT AFFECTING.
19. REVISION 4: REVISED QUALITY LEVELS AND SEISMIC CATEGORIES. ADDED LINE AND VALVE NUMBERS TO RACK PIPING. REVISED NOTES. DELETED NOTE 2. ADDED REFERENCE NOTE 2. SYSTEM REQUIRES REVERIFICATION.
20. INSTRUMENTS ARE QUALITY LEVEL CM UNLESS OTHERWISE NOTED OR ARE AIR PERMIT AFFECTING INSTRUMENT, ROOT VALVE AND TUBING CONFINEMENT REQUIREMENTS ARE THE SAME AS THE CONNECTING PROCESS PIPE UNLESS NOTED OTHERWISE.
21. THE GEOMETRY OF JOGGLED (OFFSET) PENETRATIONS IS QUALITY LEVEL Q FOR RADIATION PROTECTION. THE QUALITY LEVEL AND SEISMIC CATEGORY DESIGNATIONS OF PIPING WITHIN JOGGLES ARE THE SAME AS CONNECTING PIPING.
22. REVISED TO INCORPORATE 24590-HLW-M6N-M8OT-00004 AND -00007. INCORPORATED P-JOGGLES. REVISED QUALITY/SEISMIC FLAGS. ADDED LINE NUMBERS. ADDED SLOPES. ADDED JUMPER SIZES. REVISED/ADDED NOTES AND HOLDS.

HOLD/OPEN ITEMS:

1-4. DELETED

REFERENCES:

1. 24590-HLW-M5-V17T-00003, "PROCESS FLOW DIAGRAM, HLW VIT MELTER 1 PRIMARY OFFGAS TREATMENT" (SYSTEM HOP).
2. THE REQUIRED BATCH SEQUENCES, PERMISSIVES, INTERLOCKS, ALARMS AND OPERATOR INTERFACE POINTS ARE FULLY DESCRIBED IN "SOFTWARE FUNCTIONAL SPECIFICATION FOR HLW MELTER OFFGAS TREATMENT PROCESS AND PROCESS VESSEL VENT EXHAUST (HOP AND PVV) SYSTEMS", 24590-HLW-3PS-HOP-T0001.

Please note that source, special nuclear, and byproduct materials, as defined by the Atomic Energy Act of 1954 (AEA) are regulated by DOE acting through its Office of Environmental Security. DOE asserts that pursuant to AEA, it has sole and exclusive responsibility and authority to regulate source, special nuclear, and byproduct materials at DOE-owned nuclear facilities. Information contained herein on radionuclides is provided for process description purposes only.

REV	DESCRIPTION	ORG	CHKD	RVWD	APVD	DATE
5	REVISED PER NOTE 22	MK	SJ	GER	GD	12/22/06
4	REVISED PER NOTE 19	JR	SJ	JP	JJ	3/2/06
3	REVISED PER NOTE 11	JR	SC	EI	TV	1/7/05
0	ISSUED FOR CONSTRUCTION	AC	RB	N/A	GD	10-10-02

REVISION HISTORY

Q QUALITY DESIGNATOR

ISSUED BY RPP-WTP PDC

	BY	DATE
ORIGINATOR	A CUTRONA	10-09-02
CHECKER	R BULLOCK	10-09-02
APPROVER	GARTH DUNCAN	10-10-02
REVIEWER	N/A	

PROJECT No. 24590 | SITE HANFORD | AREA 200E | BUILDING No. 30 | ISSUE STAMP

CONTENT APPLICABLE TO ALARA? [X] YES [ ] NO
ADR NO. 24590-HLW-ADR-M-03-001 REV: 2
SAFETY SCREEN REQUIRED? [X] YES [ ] NO EWS INITIAL IF YES

SAFETY SCREEN IS REQUIRED FOR DRAWING TYPES IDENTIFIED IN 24590-WTP-GPP-SREG-002

"E" SIZE - 44x34 COMPUTER GENERATED - MANUAL CHANGES NOT PERMITTED

RIVER PROTECTION PROJECT
WASTE TREATMENT PLANT
2435 STEVENS CENTER PLACE
RICHLAND, WA 99354

CONTRACT No: DE-AC27-01RV14136

P&ID - HLW MELTER OFFGAS SYSTEM MELTER 1 PRIMARY OFFGAS WESP

SCALE: NONE | 24590-HLW-M6-HOP-00002 | REV 5

R1074375B

12/20/2006 02:29:34 PM

PLOTTED BY: ebarn
P:\Work\24590\HLW\M6\HOP\00002.dgn

FORM E_SDN.DGN 02/2003

HOP-FAN-00001A BOOSTER EXTRACTION FAN — 1600 ACFM, 84 INWG
HOP-FAN-00001B BOOSTER EXTRACTION FAN — 1600 ACFM, 84 INWG
HOP-FAN-00001C BOOSTER EXTRACTION FAN — 1600 ACFM, 84 INWG
HOP-DPR-00004A BACKDRAFT DAMPER FOR BOOSTER FAN — N/A
HOP-DPR-00004B BACKDRAFT DAMPER FOR BOOSTER FAN — N/A
HOP-DPR-00004C BACKDRAFT DAMPER FOR BOOSTER FAN — N/A
HOP-BFP-00001 BACKFLOW PREVENTER — 19 IN L X 5.6 IN D
HOP-BFP-00002 BACKFLOW PREVENTER — 19 IN L X 5.6 IN D
HOP-HX-00002 SILVER MORDENITE PREHEATER — 465,201 BTU/HR, 174IN L X 56IN W X 72IN H

HOP-HEPA-00001A/B
HOP-HEPA-00002A/B
HLW-M6-HOP-00010 E2

HOP-PW-00020-S11V-10 — HOP-V-11567 — V-11308, V-11309, V-11310 — HOP-FAN-00001C NOTES 5,10 — V-11311, V-11312, V-11313 — HOP-PW-00138-S11V-10 — HOP-DPR-00004C — HOP-V-11570

HOP-PW-00019-S11V-10 — HOP-V-11568 — V-11302, V-11303, V-11304 — HOP-FAN-00001B NOTES 5,10 — V-11305, V-11306, V-11307 — HOP-PW-00136-S11V-10 — HOP-DPR-00004B — HOP-V-11571

HOP-PW-00018-S11V-10 — HOP-V-11569 — V-11296, V-11297, V-11298 — HOP-FAN-00001A NOTES 5,10 — V-11299, V-11300, V-11301 — HOP-PW-00134-S11V-10 — HOP-DPR-00004A — HOP-V-11572

HOP-PW-00026-S11V-14 — HOP-ADBR-00001A/B — HLW-M6-HOP-00011 F8

FLOW SIGNAL FROM MELTER PRESSURE CONTROL AIR
HLW-M6-HMP-00012 D2

INSTRUMENT AIR
HLW-M6-ISA-00003 G8 — ISA-GL-37859-C12A-01 — HOP-V-09419 — HOP-DO-00045-S11B-01 — HOP-V-11557 — V-11708 — HOP-V-09418 — HOP-V-09420 — HOP-V-09421

DEMIN WATER
HLW-M6-DIW-00001 C8 — DIW-WE-03980-S11C-01 — HOP-V-11176 — HOP-WE-00102-S11B-01 — HOP-V-11558 — V-11707 — HOP-V-09423

HOP-HX-00001
HLW-M6-HOP-00008 E8 — HOP-PW-00028-S11V-16

HOP-ADBR-00001A/B
HLW-M6-HOP-00011 F2 — HOP-PW-20248-S11V-14

HOP-HX-00002 — V-11294 — V-11292 — HOP-V-11098 — V-11293 — V-11295 — HOP-V-11097 (NC)

HOP-BFP-00001 VENDOR PACKAGE — HOP-V-11711 — HOP-V-11712 — HOP-WE-00227-S11B-01
HOP-BFP-00002 VENDOR PACKAGE — HOP-V-11713 — HOP-V-11714 — HOP-DO-00279-S11B-01
HOP-MISTR-00007 NOTE 12

HOP-PW-00025-S11V-14 — HOP-ABS-00002 — HLW-M6-HOP-00008 F8
HOP-PW-00211-S11V-14 — HOP-FAN-00008A/B/C — HLW-M6-HOP-00008 C8
HOP-V-11099
HOP-PW-00244-S11V-14

NOTES:

1. SEE DRAWINGS 24590-WTP-M6-50-00001 THROUGH 24590-WTP-M6-50-00006 FOR GENERAL NOTES, SYMBOLS AND LEGEND.
2. DELETED
3. DELETED
4. DELETED
5. FAN-00001A/B/C ARE 50% CAPACITY EACH, AND WILL BE OPERATED ON A ROTATING BASIS, 2 OPERATING AND 1 IN STAND-BY. THE ACTUATED DISCHARGE VALVE FOR THE FAN IN STAND-BY WILL BE HELD NORMALLY CLOSED.
6. DELETED
7. ALL EQUIPMENT, PIPING AND PIPING COMPONENTS ON THIS DRAWING ARE QUALITY LEVEL QL-2 AND SEISMIC CATEGORY SC-III UNLESS NOTED OTHERWISE.
8. CONTENTS OF THIS DOCUMENT ARE DANGEROUS WASTE PERMIT AFFECTING.
9. DELETED
10. HOP FANS ARE TO BE FED BY EMERGENCY DIESEL GENERATOR (EDG) ON LOSS OF OFFSITE POWER.
11. LOCATE MISTER ON COLD DISCHARGE OF HOP-HX-00002. ATOMIZING SPRAY NOZZLE SHALL BE MOUNTED ON A MINIMUM 15 FT. STRAIGHT SECTION OF PIPE. SPRAY SHALL BE AIMED PARALLEL TO DIRECTION OF FLOW.
12. INSTRUMENTS ARE COMMERCIAL GRADE CM UNLESS DESIGNATED BY A "Z" OR ARE AIR PERMIT AFFECTING. INSTRUMENT, ROOT VALVE AND TUBING CONFINEMENT REQUIREMENTS ARE THE SAME AS THE CONNECTING PROCESS PIPE UNLESS NOTED OTHERWISE.
13. REVISION 1: THE INFORMATION IN 24590-HLW-M6N-HOP-00022 IS ADDRESSED BY REV 1 OF THIS P&ID. INCORPORATED CHANGES PER 24590-HLW-DCA-PR-03-003. REVISED VALVE TYPES TO CONFORM TO PIPE SPEC. S11V. DEFINED FAN VENDOR BOUNDARY.
14. INCORPORATED 24590-HLW-M6N-HOP-00004. REVISED QUALITY/SEISMIC FLAGS. MOVED CARBON UNITS HOP-ADBR-00001A AND HOP-ADBR-00001B AND ASSOCIATED PIPING TO DRAWING 24590-HLW-M6-HOP-00011. DELETED NOTES 2, 3, 4, 6, AND 9. ADDED NOTES 11 - 17. MODIFIED NOTE 10. DELETED HOLDS 1 AND 2. ADDED REFERENCES 2 AND 3. SYSTEM REQUIRES REVERIFICATION.
15. INSTRUMENT PERFORMS AN AIR PERMIT FUNCTION.
16. THIS IS A LOUVER DAMPER SYMBOL.
17. ISOLATING CONTACTOR (JY) PROVIDES ITS INTERRUPTION OF THE480V POWER TO THE ASD.

HOLD/OPEN ITEMS:

1. DELETED
2. DELETED

REFERENCES:

1. 24590-HLW-M5-V17T-00004 "PROCESS FLOW DIAGRAM HLW VITRIFICATION MELTER 1 SECONDARY OFFGAS TREATMENT (SYSTEM HOP)".
2. THE REQUIRED BATCH SEQUENCES, PERMISSIVES, INTERLOCKS, ALARM AND OPERATOR INTERFACE POINTS ARE DESCRIBED IN "SOFTWARE FUNCTIONAL SPECIFICATION FOR HLW MELTER OFFGAS TREATMENT PROCESS AND PROCESS VESSEL VENT EXHAUST (HOP AND PVV) SYSTEMS", 24590-HLW-3PS-HOP-T0001.
3. FOR ITS PERMISSIVES AND INTERLOCKS, REFER TO SAFETY SYSTEM REQUIREMENTS SPECIFICATION, 24590-HLW-3PS-PPJ-T0008 (TO BE ISSUED).

Please note that source, special nuclear, and byproduct materials as defined in the Atomic Energy Act of 1954 (AEA) are regulated by the U.S. Department of Energy (DOE) facilities exclusively by DOE acting pursuant to its AEA authority. DOE asserts that pursuant to AEA, it has exclusive authority and responsibility to regulate source, special nuclear, and byproduct materials at DOE-owned nuclear facilities. Information contained on these radionuclides is provided for process description purposes only.

REV	DESCRIPTION	ORG	CHKD	RVWD	APVD	DATE
2	REVISED PER NOTE 14					3.2.06
1	REVISED PER NOTE 13	AC	RB	DMY	IV	11-11-03
0	ISSUED FOR CONSTRUCTION	AC	RB	N/A	GMD	10-10-02

REVISION HISTORY

Q — QUALITY DESIGNATOR

ISSUED BY RPP-WTP PDO — ISSUE STAMP

PROJECT No.	24590
SITE	HANFORD
AREA	200E
BUILDING No.	30

	BY	DATE
ORIGINATOR	A. CUTRONA	10-09-02
CHECKER	R. BULLOCK	10-9-02
APPROVER	GM DUNCAN	10-10-02
REVIEWER	N/A	

CONTENT APPLICABLE TO ALARA? [X] YES [ ] NO
ADR NO. 24590-HLW-ADR-M-03.001 REV: 1
SAFETY SCREEN REQUIRED? [X] YES [ ] NO EANS INITIAL IF YES

SAFETY SCREEN IS REQUIRED FOR DRAWING TYPES IDENTIFIED IN 24590-WTP-GPP-SREG-002

RIVER PROTECTION PROJECT
WASTE TREATMENT PLANT
2435 STEVENS CENTER PLACE
RICHLAND, WA 99354

CONTRACT No: DE-AC27-01RV14136

P&ID - HLW MELTER OFFGAS SYSTEM MELTER 1 SECONDARY OFFGAS TREATMENT SHEET 1 OF 3

SCALE: NONE
24590-HLW-M6-HOP-00003
REV 2

'E' SIZE - 44x34
COMPUTER GENERATED - MANUAL CHANGES NOT PERMITTED

03/02/2006 02:22:36 PM
PLOTTED BY: mdriller
C:\Work\ams\03839\HLW\M6\HOP00003.dgn

FORM E_SDN.DGN 02/2003

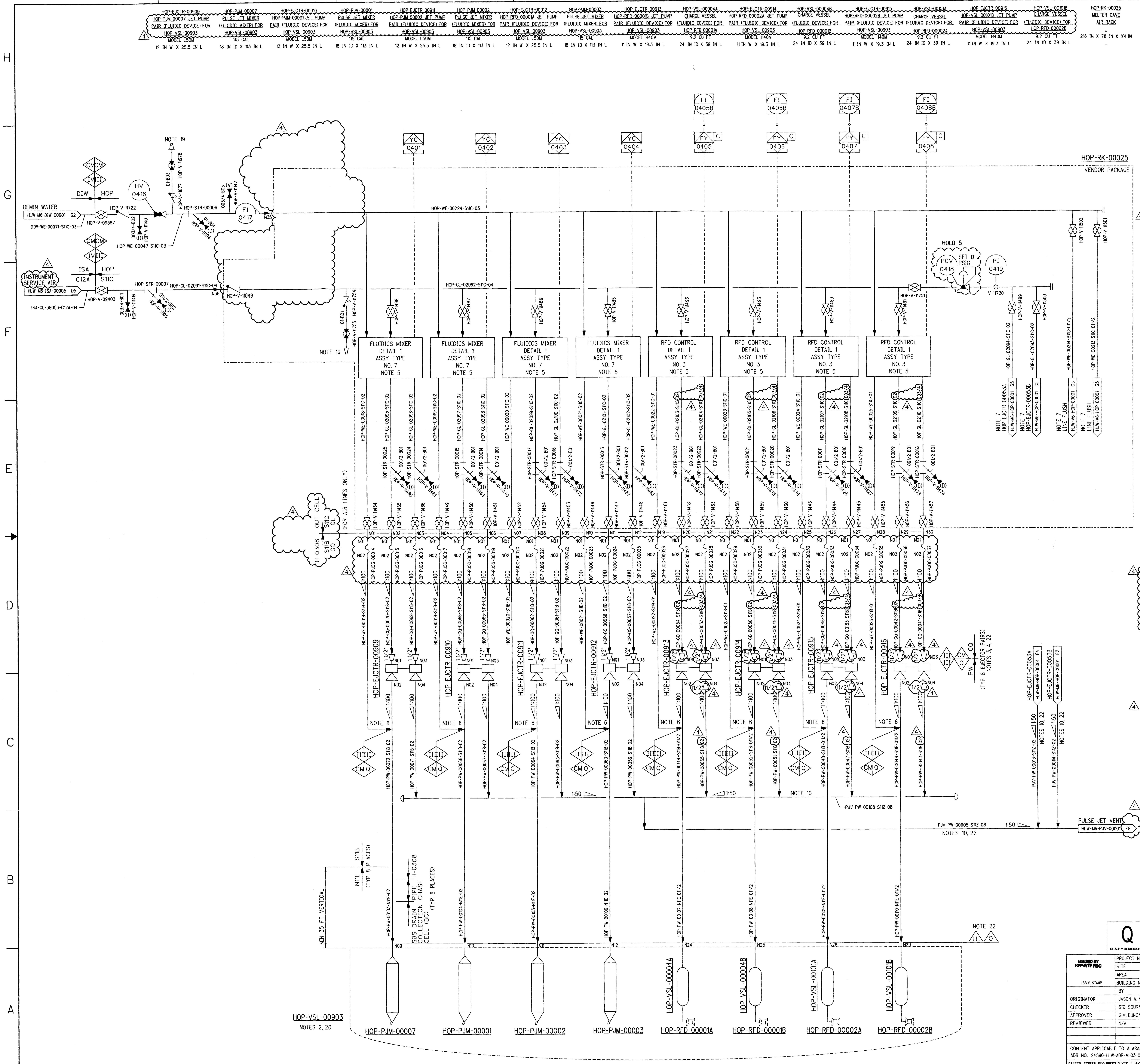

NOTES:

1. SEE DRAWING 24590-WTP-M6-50-00001 THROUGH 24590-WTP-M6-50-00008 FOR GENERAL NOTES, SYMBOLS AND LEGEND, AND GENERAL SLOPE REQUIREMENTS.
2. FOR VESSEL DETAILS SEE DRAWING 24590-HLW-M6-HOP-00006.
3. EJECTORS SHALL BE LOCATED 15' OR LESS BELOW THE BOTTOM OF THE 58' ELEVATION FLOOR.
4. ALL JET PUMP PAIRS ARE TO BE POSITIONED VERTICALLY.
5. FLUIDICS CONTROLLER DETAIL SHOWN ON P&ID SYMBOLS AND LEGEND SHEET 6 OF 8 24590-WTP-M6-50-00006. SYSTEM FUNCTIONALITY OF THE FLUIDICS CONTROLLER ONLY NEEDS TO MEET QUALITY LEVEL CM AND SEISMIC CATEGORY SC-III.
6. A LATERAL FITTING IS TO BE USED AT THIS LOCATION TO ACCOMMODATE CLEANING OF PIPE AND EQUIPMENT.
7. PORTION OF HOP-RK-00025 IS LOCATED ON 24590-HLW-M6-HOP-00001.

8.-9. DELETED

10. THIS LINE IS QUALITY LEVEL Q AND SEISMIC CATEGORY SC-III.
11. DELETED
12. CONTENTS OF THIS DOCUMENT ARE DANGEROUS WASTE PERMIT AFFECTING.

13.-18. DELETED

19. FLUSH CONNECTION PROVIDED FOR PLANT WASH/REAGENT/ AIR SERVICES.
20. PJM VESSELS AND RFD CHARGE VESSELS ARE QUALITY LEVEL CM AND SEISMIC CATEGORY SC-III.
21. REVISION 2: CHANGED PIPING MATERIAL CLASSIFICATION N13A TO N11E. REVISED NOTE 10, ADDED QUALITY LEVEL CM. CHANGED QL-2 TO CM AND ADDED QUALITY LEVELS AT THE VESSEL NOZZLES. CHANGED FLOORBOX TO JOGGLED PENETRATIONS. ADDED ROOT VALVES. CHANGED LINE SIZES FOR HOP-GQ-00041-S11B-01 1/2, HOP-GQ-00049-S11B-01 1/2, HOP-GQ-00053-S11B-011/2, AND HOP-GQ-00183-S11B-01 1/2, FROM 1 1/2" TO 1/2". CHANGED OFF SHEET CONNECTORS AND SYSTEM BREAK FROM PLANT SERVICE AIR TO INSTRUMENT SERVICE AIR. ADDED NOTE 18 FOR PIPE SLOPE. REVISED NOTE 15. CHANGED LINE SIZES FOR HOP-PW-00055-S11B-01, HOP-PW-00051-S11B-01, HOP-PW-00043-S11B-01, HOP-PW-00047-S11B-01, HOP-GQ-00054-S11B-01, HOP-GQ-00050-S11B-01 HOP-GQ-00042-S11B-01, HOP-GQ-00046-S11B-01, FROM 1" TO 1 1/2". REVISED NOTE 3. ADDED REDUCERS AS MARKED AT THE JPPs FOR PJMs. CORRECTED NOTE NUMBERS INDICATED AT THE VESSEL. REVISED NOTE 11.
22. ALL PIPING WITH FLUID SERVICE PW IS AIR PERMIT AFFECTING.
23. THE PRESSURE BOUNDARY FOR ALL SYSTEMS, STRUCTURES AND COMPONENTS ON THIS DRAWING ARE QUALITY LEVEL CM AND SEISMIC CATEGORY SC-III, UNLESS OTHERWISE NOTED.
24. ALL LINES ON THIS PIPING AND INSTRUMENTATION DIAGRAM SHALL BE FREE DRAINING, UNLESS OTHERWISE NOTED. PROVIDE VENTS AND DRAINS AS NEEDED. VENTS AND DRAINS SHALL BE DESIGNED PER 24590-WTP-3PB-P000-T0001.
25. REVISION 3: MAJOR REVISION. NO REVISION CLOUDS REQUIRED. REVISED TO INCORPORATE 24590-HLW-M6N-HOP-00108 AND 24590-HLW-M6N-M80T-00002 AND -00004. REVISED, ADDED AND DELETED NOTES. MODIFIED QUALITY AND SEISMIC SYSTEM BREAK FLAGS. DELETED HOP-V-11141 ON DEMIN WATER HEADER. ADDED STRAINER AND FLUSH CONNECTION ON DIW AND ISA HEADERS. HOLD 1 DELETED. ADDED SLOPES TO PIPELINES. REMOVED PCV AND PI ON DIW HEADER AND REPLACED WITH DYNAMIC BALANCE GLOBE VALVE AND FLOW INDICATOR. RESEQUENCED JET PUMP PAIRS RELATIVE TO THE PULSE JET VENT LINES. MODIFIED FLUID CODE IN RACK FROM GQ TO GL. TAGGED LINES, VALVES AND STRAINERS IN RACK. ADDED PLANT WASH REAGENT HOSE CONNECTION. REMOVED BALL VALVES FROM DIW LINES. REMOVED PRESSURE CONTROL VALVE, PRESSURE INDICATOR, AND DRAIN LINE ON DEMIN WATER LINE. ADDED PRESSURE CONTROL VALVE AND PRESSURE INDICATOR TO INSTRUMENT SERVICES AIR HEADER. ADDED CONTROL VALVES TO ISA AND DEMIN WATER HEADER FOR C5 CONFINEMENT. SYSTEM REQUIRES DESIGN REVERIFICATION.
26. THE GEOMETRY OF JOGGLED (OFFSET) PENETRATIONS IS QUALITY LEVEL Q FOR RADIATION PROTECTION. THE QUALITY LEVEL AND SEISMIC CATEGORY DESIGNATIONS OF PIPING WITHIN JOGGLES ARE THE SAME AS CONNECTING PIPING.
27. REVISED TO INCORPORATE P-JOGGLES AND 24590-HLW-M6N-M80T-00007 REVISED EQUIPMENT DESCRIPTIONS. DELETED SEISMIC/QUALITY FLAGS. REVISED LINE SIZES. ADDED CHECK VALVE HOP-V-11849 INSIDE RACK. ADDED/DELETED/REVISED NOTES AND HOLDS.

HOLD/OPEN ITEMS:

1-4. DELETED

5. SET PRESSURE WILL BE DETERMINED WHEN EJECTOR DATA IS RECEIVED FROM VENDOR.

6-7. DELETED

REFERENCES:

1. 24590-HLW-M5-V17T-00003, "PROCESS FLOW DIAGRAM, HLW VIT MELTER 1 PRIMARY OFFGAS TREATMENT" (SYSTEM HOP).
2. THE REQUIRED BATCH SEQUENCES, PERMISSIVES, INTERLOCKS, ALARMS AND OPERATOR INTERFACE POINTS ARE FULLY DESCRIBED IN THE SOFTWARE FUNCTIONAL SPECIFICATION FOR HOP MELTER OFFGAS TREATMENT PROCESS SYSTEM 24590-HLW-3PS-HOP-T0001.

Please note that source, special nuclear, and byproduct materials, as defined in the Atomic Energy Act of 1954 (AEA) are regulated at the U. S. Department of Energy (DOE) facilities exclusively by DOE acting pursuant to its AEA authority. DOE asserts that pursuant to AEA, it has sole and exclusive responsibility and authority to regulate source, special nuclear, and byproduct materials at DOE-owned nuclear facilities. Information contained herein on radionuclides is provided for process description purposes only.

REV	DESCRIPTION	ORG	CHKD	RVWD	APVD	DATE
4	REVISED PER NOTE 27	[signature]	APP	CEX [signature]	[signature]	12/22/06
3	REVISED PER NOTE 25	MG	APP	JP	JJ	7/7/06
2	REVISED PER NOTE 21	JR	SC	EI	TV	10/21/04
0	ISSUED FOR CONSTRUCTION	JM	SS	N/A	GD	10/10/02

REVISION HISTORY

Q
QUALITY DESIGNATOR

ISSUED BY RPP-WTP PDC
ISSUE STAMP

PROJECT No.	24590	
SITE	HANFORD	
AREA	200E	
BUILDING No.	30	
	BY	DATE
ORIGINATOR	JASON A. MEDINA	10-09-02
CHECKER	SID SOURANI	10-09-02
APPROVER	G.M. DUNCAN	10-10-02
REVIEWER	N/A	

RIVER PROTECTION PROJECT
WASTE TREATMENT PLANT
2435 STEVENS CENTER PLACE
RICHLAND, WA 99354

CONTRACT No: DE-AC27-01RV14136

P&ID - HLW MELTER 1 OFFGAS FLUIDICS AIR RACK HOP-RK-00025

CONTENT APPLICABLE TO ALARA? [X] YES [ ] NO
ADR NO. 24590-HLW-ADR-M-03-001 REV: 2
SAFETY SCREEN REQUIRED? [X] YES [ ] NO E&NS INITIAL IF YES [initials]

SCALE: NONE

24590-HLW-M6-HOP-00004 REV 4

SAFETY SCREEN IS REQUIRED FOR DRAWING TYPES IDENTIFIED IN 24590-WTP-GPP-SREG-002

'E' SIZE - 44x34
COMPUTER GENERATED - MANUAL CHANGES NOT PERMITTED

R10743754 12/20/2006 06:58:57 AM

PLOTTED BY: eewebb
C:\Work\dms03839\HLWM6HOP00004.dgn

FORM E_SDN.DGN 02/2003

HOP-VSL-00903
MELTER 1
SBS CONDENSATE RECEIVER VESSEL
8199 GAL OP VOL
12FT I.D. 7FT 9IN T TO T

HOP-EJCTR-00003A
HOP-VSL-00903
VESSEL EJECTOR
(STEAM EJECTOR)
44 GPM
3 IN

HOP-RFD-00002B
HOP-VSL-00903
REVERSE FLOW DIVERTER
(FLUIDIC PUMP)
80 GPM (PEAK)
-

HOP-RFD-00001A
HOP-VSL-00903
REVERSE FLOW DIVERTER
(FLUIDIC PUMP)
80 GPM (PEAK)

HOP-RFD-00001B
HOP-VSL-00903
REVERSE FLOW DIVERTER
(FLUIDIC PUMP)
80 GPM (PEAK)
-

HOP-EJCTR-00003B
HOP-VSL-00903
VESSEL EJECTOR
(STEAM EJECTOR)
44 GPM
3 IN

HOP-RFD-00002A
HOP-VSL-00903
REVERSE FLOW DIVERTER
(FLUIDIC PUMP)
80 GPM (PEAK)
-

HOP-RK-00047

SEE DRAWING 24590-HLW-M6-HOP-00007 — VENDOR PACKAGE

S11C S11B

HOP-V-11682 — HOP-DB-00025-S11C-02 — N16 — N01 N02 — HOP-PJOG-00038 — HOP-DB-00015-S11B-02 — 1:50 — NOTE 21

HOP-V-11683 — HOP-DB-00026-S11C-02 — N17 — N01 N02 — HOP-PJOG-00039 — HOP-DB-00014-S11B-02 — 1:50 — NOTE 21

PIPE CHASE — SBS DRAIN COLLECTION CELL (BC)

WESP DRAIN/HOP-WESP-00001 — HLW-M6-HOP-00002 A3 — HOP-ZS-00010-N11K-06 — 1:50

HOP-HEME-00001B DRAIN — HLW-M6-HOP-00009 D2 — HOP-ZS-00076-N11K-02 — 1:50

HOP-HEME-00001A DRAIN — HLW-M6-HOP-00009 D2 — HOP-ZS-00009-N11K-02 — 1:50

PIPE CHASE — SBS DRAIN COLLECTION CELL (BC)

SBS CONDENSATE OVERFLOW — HLW-M6-HOP-00001 C2 — HOP-ZS-00073-N11E-06 — 1:50 — 1:20

PLANT WASH — HLW-M6-PWD-00007 A5 — HOP-ZE-00025-S11B-02 — 1:200

PLANT WASH — HLW-M6-PWD-00007 A5 — HOP-ZE-00026-S11B-02 — 1:200

TC 0113 — TT 0113 — LI 0110 — LT 0110 — TYPE 3 — DI 0122 — DT 0122 — LI 0123 — LT 0123 — PI 0124 — PT 0124

SPARE — HOP-TT-11115 — HOP-TT-11116 — HOP-TT-11117 — HOP-GR-00032-S11P-01V/2 — HOP-GR-00033-S11P-01V/2 — HOP-GR-00034-S11P-01V/2 — 1:50 — NOTE 18

V-11245 — V-11246 — V-11247 — 001/2-B01 — V-11214

SPARE THERMOWELL

SBS DRAIN COLLECTION CELL (BC) OUT CELL — HOP-ZT-00006-S11P-01 — HOP-ZT-00023-S11P-01 — HOP-P-00C-00001 — HOP-P-00C-00002 — HOP-P-00C-00040 — HOP-P-00C-00041 — HOP-P-00C-00042 — HOP-P-00C-00043 — HOP-P-00C-00044 — HOP-P-00C-00045 — HOP-P-00C-00046 — HOP-P-00C-00047 — HOP-P-00C-00048 — HOP-P-00C-00049 — HOP-GR-00001-S11P-01V/2 — HOP-GR-00002-S11P-01V/2 — HOP-GR-00003-S11P-01V/2 — HOP-ZO-00172-S11V-001/2 — HOP-ZO-00173-S11V-001/2 — HOP-ZO-00174-S11V-001/2 — HOP-PW-00082-S11B-02 — HOP-PW-00083-S11B-02 — HOP-PW-00085-S11B-02 — HOP-PW-00084-S11B-02 — HOP-ZO-00025-S11B-001/2 — HOP-ZO-00027-S11B-001/2 — HOP-ZO-00028-S11B-001/2

LE 0604 — LE 0110 — LE 0136 — HOP-GR-00001-S11P-01V/2 — HOP-GR-00002-S11P-01V/2 — HOP-GR-00003-S11P-01V/2

MANWAY 24"

N13 N42 N14 N18 N18A N35 N35A N30 N37 N37B N37C N37A N37B N05 N06 N04 N20 N02 N01 N19 N15 N43 N15 N03 N40 N07 N41 N27 N22 N23 N28 N08

HOP-EJCTR-00003A — HOP-EJCTR-00003B — NOTE 15

HOP-RFD-00002A — HOP-RFD-00002B — HOP-RFD-00001A — HOP-RFD-00001B

N32 — 03-B01 — N39 — 03-B02 — N34

TE 0113 — N17 — 03-B03

HOP-VSL-00903 — N21 — NOTE 8 — 1:50 — NOTE 3

SBS DRAIN COLLECTION CELL (BC) OUT CELL — 1" SPARE — 1" SPARE — N01 — N02 — HOP-PJOC-00050 — HOP-PJOC-00051

SBS DRAIN COLLECTION CELL (BC) — PIPE CHASE

SBS CONDENSATE PURGE/RLD-VSL-00007 — HLW-M6-RLD-00001 C8	1:50	HOP-ZS-00013-N11E-02	
SBS CONDENSATE PURGE/RLD-VSL-00007 — HLW-M6-RLD-00001 C8	1:50	HOP-ZS-00014-N11E-02	
VENT TO HOP-SCB-00001 — HLW-M6-HOP-00001 E2	1:200	HOP-GV-00063-N11E-02	
CONDENSATE RECYCLE TO HOP-SCB-00001 — HLW-M6-HOP-00001 C2	1:20	HOP-ZS-00050-N11E-02	
CONDENSATE RECYCLE TO HOP-SCB-00001 — HLW-M6-HOP-00001 D2	1:20	HOP-ZS-00051-N11E-02	
CONDENSATE RECYCLE TO HOP-SCB-00001 — HLW-M6-HOP-00001 D2	1:20	HOP-ZS-00052-N11E-02	
CONDENSATE RECYCLE TO HOP-SCB-00001 — HLW-M6-HOP-00001 D2	1:20	HOP-ZS-00053-N11E-02	

IN CAVE S11B — EMBEDDED S11B — OUT CAVE S11C

SET @ 36 PSIG — PSV 0605 — HOP-WS-01734-S11B-03 — HOP-WS-01734-S11C-03 — 1:50 — TO SBS SUMP — HOP-WS-01756-S11B-03 — N016 — HFP-WBOX-00048 (BULKHEAD) — N553

(D) 003/4-B01 — HOP-V-11659

SET @ 36 PSIG — PSV 0603 — HOP-WS-01742-S11B-03 — HOP-WS-01742-S11C-03 — 1:50 — TO SBS SUMP — HOP-WS-01755-S11B-03 — N015 — N552 — HOP-WS-01741-S11C-02

(D) 003/4-B01 — HOP-V-11660 — HOP-V-11683

FI 0135 — FT 0135 — TV 0113 — 2" FO — 003/4-B01 — HOP-V-11138

PCW — HOP — COOLING WATER SUPPLY — HLW-M6-PCW-00001 H2 — HOP-WS-01724-S11C-03 — HOP-V-11083 — HOP-V-11084 — PCW-WS-00063-S11C-03 — 03-B01 — 03-B02 — HOP-V-11085

HOP-WS-01659-S11B-03 — HOP-WS-01724-S11B-03 — HOP-WS-01658-S11B-03 — HFP-WBOX-00049 (BULKHEAD) — N508 — N556 — 03-B03

COOLING WATER RETURN — HLW-M6-PCW-00003 E6 — HOP-WS-01658-S11C-03 — V-11213 — HOP-V-11086 — PCW-WS-00008-S11C-03 — TI 0602 — PI 0601

S11C S11B — N511 — N557 — EMBEDDED — IN CAVE — NOTE 22 — SBS DRAIN COLLECTION CELL (BC)

HOP-WS-01660-S11B-03 — 1:50 — NOTE 3

NOTES:

1. SEE DRAWINGS 24590-WTP-M6-50-00001 THROUGH 24590-WTP-M6-50-00008 FOR GENERAL NOTES, SYMBOLS AND LEGEND, AND GENERAL SLOPE REQUIREMENTS.
2. DELETED
3. COOLING WATER SUPPLY AND RETURN PIPES TO SLOPE FROM WALLBOX LOCATED ABOVE PROCESS VESSEL.

4-7. DELETED

8. SEE 24590-HLW-M6-HOP-00004 FOR DETAILS ON PULSE JET MIXER AND CHARGE VESSELS.
9. CONTENTS OF THIS DRAWING ARE DANGEROUS WASTE PERMIT AFFECTING.
10-13. DELETED
14. RADAR GUIDE TUBE IS TO BE ROUTED TO TRANSMITTER. A FULL PORT BALL VALVE IS REQUIRED FOR ISOLATION PURPOSES AT TRANSMITTER END OF GUIDE TUBE.
15. EJECTORS AND RFD'S INSIDE VESSEL ARE COMMERCIAL GRADE CM AND SEISMIC CATEGORY SC-III.
16. REVISION 3: REVISED QUALITY LEVELS AND SEISMIC CATEGORIES AND OTHER CHANGES AS MARKED.
17. THE GEOMETRY OF JOGGLED (OFFSET) PENETRATION IS QUALITY LEVEL Q FOR RADIATION PROTECTION. THE QUALITY LEVEL AND SEISMIC CATEGORY DESIGNATIONS OF PIPING WITHIN JOGGLES ARE THE SAME AS CONNECTING PIPING. PIPING WITHIN SPARE JOGGLES IS QUALITY LEVEL Q AND SEISMIC CATEGORY SC-I.
18. DELETED
19. REVISION 4: INCORPORATED 24590-HLW-M6N-HOP-00102, 00115, 00116, AND 24590-HLW-M6N-M8OT-00002. REVISED NOTES. ADDED REFERENCES. SYSTEM REQUIRES REVERIFICATION.
20. INSTRUMENTS ARE QUALITY LEVEL CM UNLESS OTHERWISE NOTED OR ARE AIR PERMIT AFFECTING. INSTRUMENT, ROOT VALVE AND TUBING CONFINEMENT REQUIREMENTS ARE THE SAME AS THE CONNECTING PROCESS PIPE UNLESS NOTED OTHERWISE.
21. LINES REQUIRE 34 FT OF BAROMETRIC HEAD ABOVE THE TOP OF THE VESSEL. THE BAROMETRIC HEAD REQUIREMENT SHALL BE FULLY CONTAINED IN THE R5 AREA.
22. MAIN HEADER REQUIRES 34 FT OF BAROMETRIC HEAD ABOVE TOP OF VESSEL.
23. REVISED TO INCORPORATE 24590-HLW-M6N-M8OT-00004. INCORPORATED P-JOGGLES. DELETED LT-0136 AND LI-0136. ADDED/REVISED/DELETED NOTES AND REFERENCES.

HOLD/OPEN ITEMS:

1-2. DELETED

REFERENCES:

1. 24590-HLW-M5-V17T-00003, "PROCESS FLOW DIAGRAM, HLW VIT MELTER 1 PRIMARY OFFGAS TREATMENT" (SYSTEM HOP).
2. THE REQUIRED BATCH SEQUENCES, PERMISSIVES, INTERLOCKS, ALARMS AND OPERATOR INTERFACE POINTS ARE FULLY DESCRIBED IN SOFTWARE FUNCTIONAL SPECIFICATION FOR HLW MELTER OFFGAS TREATMENT PROCESS AND PROCESS VESSEL VENT EXHAUST (HOP & PVV) SYSTEMS, 24590-HLW-3PS-HOP-T0001.
3. DELETED
4. REFER TO ENGINEERING SPECIFICATION 24590-WTP-3PS-MV00-T0001 FOR VESSEL NOZZLE LOADS.

Please note that source, special nuclear, and byproduct materials, as defined in the Atomic Energy Act of 1954 (AEA) are regulated at the U. S. Department of Energy (DOE) facilities exclusively by DOE acting pursuant to its AEA authority. DOE asserts that pursuant to AEA, it has sole and exclusive jurisdiction over source, special nuclear, and byproduct materials at DOE-owned nuclear facilities. Information contained herein on opportunities is provided for process description purposes only.

REV	DESCRIPTION	ORG	CHKD	RVWD	APVD	DATE
5	REVISED PER NOTE 23	MR	APP	CER	GH	12/7/06
4	REVISED PER NOTE 19	MR	SJ	JP	JO	03-02-06
3	REVISED PER NOTE 16	JR	SC	EI	SN	01-05-05
0	ISSUED FOR CONSTRUCTION	AC	RB	N/A	GMD	10-10-02

REVISION HISTORY

Q — QUALITY DESIGNATOR

ISSUED BY RPP-WTP PDC — ISSUE STAMP

PROJECT No.	24590
SITE	HANFORD
AREA	200E
BUILDING No.	30

	BY	DATE
ORIGINATOR	A. CUTRONA	10-09-02
CHECKER	R BULLOCK	10-09-02
APPROVER	GM DUNCAN	10-10-02
REVIEWER	N/A	

CONTENT APPLICABLE TO ALARA? [X] YES [ ] NO
ADR NO. 24590-HLW-ADR-M-03-001 REV: 2
SAFETY SCREEN REQUIRED? [X] YES [ ] NO EAMS INITIAL IF YES

BECHTEL

RIVER PROTECTION PROJECT
WASTE TREATMENT PLANT
2435 STEVENS CENTER PLACE
RICHLAND, WA 99354

CONTRACT No: DE-AC27-01RV14136

P&ID - HLW MELTER OFFGAS SYSTEM MELTER 1 PRIMARY OFFGAS SCRUBBER CONDENSATE VESSEL

SCALE: NONE

24590-HLW-M6-HOP-00006

REV 5

"E" SIZE - 44x34
COMPUTER GENERATED - MANUAL CHANGES NOT PERMITTED

SAFETY SCREEN IS REQUIRED FOR DRAWING TYPES IDENTIFIED IN 24590-WTP-GPP-SREG-002

R10740579

12/07/2006 07:40:16 AM

PLOTTED BY: edorn
C:\Work\dms\D839\HLW\M6\HOP00006.dgn

FORM E_SDN.DGN 02/2003

24590-HLW-M6-HOP-00008

NOTES:

1. SEE DRAWINGS 24590-WTP-M6-50-00001 THROUGH 24590-WTP-M6-50-00006 FOR GENERAL NOTES, SYMBOLS AND LEGEND.
2. DELETED
3. CATALYTIC OXIDIZER SKID (HOP-SCO-00002) HOUSES THE PREHEATER (HOP-HX-00001) ELECTRIC HEATER (HOP-HTR-00001), NOX SELECTIVE CATALYTIC REDUCER (HOP-SCR-00001) AND THE THERMAL CATALYTIC OXIDIZER (HOP-SCO-00001).
4. DELETED
5. FAN-00008A/B/C ARE 50% CAPACITY EACH, AND WILL BE OPERATED ON A ROTATING BASIS, 2 OPERATING AND 1 IN STAND-BY. THE ACTUATED DISCHARGE DAMPER FOR THE FAN IN STAND-BY WILL BE NORMALLY CLOSED.
6. HEATER UNIT SHALL BE EQUIPPED WITH OVER-TEMPERATURE PROTECTION (SUPPLIED BY VENDOR).
7. RADIATION MONITORS SHALL BE PROVIDED TO MONITOR ALPHA/BETA. RECORD SAMPLER FOR RETROSPECTIVE ANALYSIS SHALL BE PROVIDED.
8. RECORD SAMPLER.
9. ANALYZERS FOR CO, O2, NOX AND VOC ARE PROVIDED FOR AIR AND DANGEROUS WASTE PERMITS MONITORING. ANALYZERS FOR HF, HCL, F2, AND CL2 ARE PROVIDED FOR PROCESS INDICATION. THE VOC AND NOX ANALYZERS ALSO PROVIDE PROCESS INDICATION.
10. DELETED
11. TEST PORT PAIRS PLACED AT 90° ORIENTATION TO EACH OTHER.
12. THE 3000 SERIES INSTRUMENTS ARE SDJ SYSTEM, AND THE 0300 SERIES INSTRUMENTS AND PIPE REMAIN HOP SYSTEM. THE 3000 (SDJ) INSTRUMENTS ARE AIR PERMIT AFFECTING.
13. ALL EQUIPMENT, PIPING AND PIPING COMPONENTS ON THIS DRAWING ARE QUALITY LEVEL QL-2 AND SEISMIC CATEGORY SC-III UNLESS NOTED OTHERWISE.
14. CONTENTS OF THIS DOCUMENT ARE DANGEROUS WASTE PERMIT AFFECTING.
15. REQUIRED RUN OF STRAIGHT PIPE FOR THE SDJ SYSTEM TEST AND INSTRUMENT TAPS (REF LINE HOP-PW-00036-S11V-12):
    - LAST BEND TO 03-B03/B04 - 10D.
    - 03-B03/B04 TO 03-B05/B06 - 8D.
    - 03-B05/B06 TO 03-B07/B08 - 2D.
    - 03-B07/B08 TO 03-B09/B10 - 2D.
    - 03-B09/B10 TO UPSTREAM AE TAP - 2D.
    - AE TAP TO RE TAP - 8D.
    - 03-B11/B12 TO UPSTREAM RE TAP - 2 FT.
    - UPSTREAM RE TAP TO FE-3113 - 8D.
    - 03-B13/B14 TO FE-3113 - 4 IN.
16. ALLOW 1 DIA +36" CLEARANCE FROM TEST PORTS OUTWARD FOR PROBE INSERTION AND EXTRACTION.
17. INSTALL BLIND FLANGE AS CLOSE AS POSSIBLE TO MAIN LINE.
18. LOCATE INJECTION PORT AFTER STACK FANS, AND BEFORE LAST BEND TO SDJ SAMPLE PORTS (NO MINIMUM STRAIGHT PIPE RUN FROM INJECTION PORT TO LAST BEND REQUIRED).
19. LOCATE STACK DRAIN AT HEIGHT TO ALLOW PLACEMENT OF 55 GAL DRUM ON TROLLY UNDERNEATH.
20. BOF/HLW BOUNDARY IS AT THE HLW FACILITY FLOOR (AT TOP OF SLAB).
21. HOP FANS ARE TO BE FED BY EMERGENCY DIESEL GENERATOR (EDG) ON LOSS OF OFFSITE POWER.
22. INSTRUMENTS ARE COMMERCIAL GRADE CM UNLESS DESIGNATED BY A "Z" OR ARE AIR PERMIT AFFECTING. INSTRUMENT, ROOT VALVE AND TUBING CONFINEMENT REQUIREMENTS ARE THE SAME AS THE CONNECTING PROCESS PIPE UNLESS NOTED OTHERWISE.
23. FLOWMETER TO BE INSTALLED A MINIMUM OF TEN (10) PIPE DIAMETERS (ID) FROM UPSTREAM FLOW DISTURBANCES AND FIVE (5) PIPE DIAMETERS (ID) FROM DOWNSTREAM DISTURBANCES. VENDOR PROVIDED AND INSTALLED INSTRUMENTS LOCATED OUTSIDE OF VENDOR PACKAGE.
24. VENDOR SHALL INCLUDE A LENGTH OF 54" SECTION OF STRAIGHT PROCESS PIPE ON DISCHARGE.
25. LOCATE CHALLENGE GAS INJECTION PORT AT A MINIMUM OF 10 PIPE DIAMETERS, INCLUDING ELBOWS, UP STREAM OF THE INLET OF THE SILVER MORDENITE COLUMN.
26. SOFTWARE IS BUYER SCOPE OF SUPPLY BASED ON VENDOR CONTROL LOGIC.
27. REVISION 1: THE INFORMATION IN 24590-HLW-M6N-HOP-00025 IS ADDRESSED BY REVISION 1 OF THE P&ID. INCORPORATED CHANGES PER 24590-HLW-DCA-PR-03-003. UPDATED HEATER CONTROL & SDJ SYSTEM INSTRUMENTATION. REVISED FAN INSTRUMENTATION PER UPDATED SIPD REQUIREMENT. DEFINED FAN VENDOR PACKAGE.
28. INCORPORATED 24590-HLW-M6N-HOP-00004, 36, 77, 81, 99, 109, 24590-WTP-SDDR-PROC-04-00882. ADDED AP CLASSIFICATION. ADDED ISA TO CATALYST SKID. UPDATED INSTRUMENTATION, AND ADDED VENDOR DETAILS TO CATALYST SKID. RELEASED HOLD 5. ADDED, DELETED, AND REVISED NOTES. ADDED REFERENCES. SYSTEM REQUIRES REVERIFICATION.
29. HOP-RO-00004 ORIFICE LIMITS AMMONIA FLOW RATE INTO HLW FACILITY.
30. VALVE SHALL BE ACCESSIBLE TO THE OPERATOR.
31. INSTRUMENT PERFORMS AN AIR PERMIT FUNCTION.
32. THIS IS A LOUVER DAMPER SYMBOL.
33. ISOLATING CONTACTOR (JY) PROVIDES ITS INTERRUPTION OF 480V POWER TO THE ADJUSTABLE SPEED DRIVE.

REFERENCES:

1. 24590-HLW-M5-V17T-00004 "PROCESS FLOW DIAGRAM HLW VITRIFICATION MELTER 1 SECONDARY OFFGAS TREATMENT (SYSTEM HOP)".
2. THE REQUIRED BATCH SEQUENCES, PERMISSIVES, INTERLOCKS, ALARMS AND OPERATOR INTERFACE POINTS ARE FULLY DESCRIBED IN "SOFTWARE FUNCTIONAL SPECIFICATION FOR HLW MELTER OFFGAS TREATMENT PROCESS AND PROCESS VESSEL VENT EXHAUST (HOP AND PVV SYSTEMS", 24590-HLW-3PS-HOP-T0001.
3. FOR ITS PERMISSIVES AND INTERLOCKS REFER TO SAFETY SYSTEM REQUIREMENTS SPECIFICATION 24590-HLW-3PS-PPJ-T0008 (TO BE ISSUED).

HOLD/OPEN ITEMS:

1. DELETED
2. DELETED
3. DELETED
4. SDJ SYSTEM INSTRUMENTATION AND TEST PORTS PENDING VENDOR INPUT.
5. DELETED
6. DELETED

Please note that source, special nuclear, and byproduct materials as defined in the Atomic Energy Act of 1954 (AEA) are regulated by DOE acting pursuant to its AEA authority. DOE asserts that pursuant to AEA, it has sole and exclusive jurisdiction over materials at DOE owned nuclear facilities. Information contained herein on radionuclides is provided for process description purposes only.

REV	DESCRIPTION	ORG	CHKD	RVWD	APVD	DATE
2	REVISED PER NOTE 28					
1	REVISED PER NOTE 27	AC	RB	DMY	TV	11-11-03
0	ISSUED FOR CONSTRUCTION	AC	RB	N/A	GMD	10-10-02

Q — QUALITY DESIGNATOR

REVISION HISTORY

ISSUED BY RPP-WTP PDO

PROJECT No.	24590
SITE	HANFORD
AREA	200E
BUILDING No.	30

ISSUE STAMP

	BY	DATE
ORIGINATOR	A. CUTRONA	10-09-02
CHECKER	R. BULLOCK	10-09-02
APPROVER	G.M. DUNCAN	10-10-02
REVIEWER	N/A	

CONTENT APPLICABLE TO ALARA? [X] YES [ ] NO
ADR NO. 24590-HLW-ADR-M-03-001 REV: 1
SAFETY SCREEN REQUIRED? [X] YES [ ] NO EXMS INITIAL IF YES

SAFETY SCREEN IS REQUIRED FOR DRAWING TYPES IDENTIFIED IN 24590-WTP-GPP-SREG-002

BECHTEL

RIVER PROTECTION PROJECT
WASTE TREATMENT PLANT
2435 STEVENS CENTER PLACE
RICHLAND, WA 99354

CONTRACT No: DE-AC27-01RV14136

P&ID - HLW MELTER OFFGAS SYSTEM MELTER 1 SECONDARY OFFGAS TREATMENT SHEET 2 OF 3

SCALE: NONE | 24590-HLW-M6-HOP-00008 | REV 2

E-SIZE - 44x34
COMPUTER GENERATED - MANUAL CHANGES NOT PERMITTED

R1091492

02/27/2006 11:45:14 AM

PLOTTED BY: mdcutler
C:\Work\dms\03839\HLW\M6\HOP\00008.dgn

FORM E_SDN.DGN 02/2003

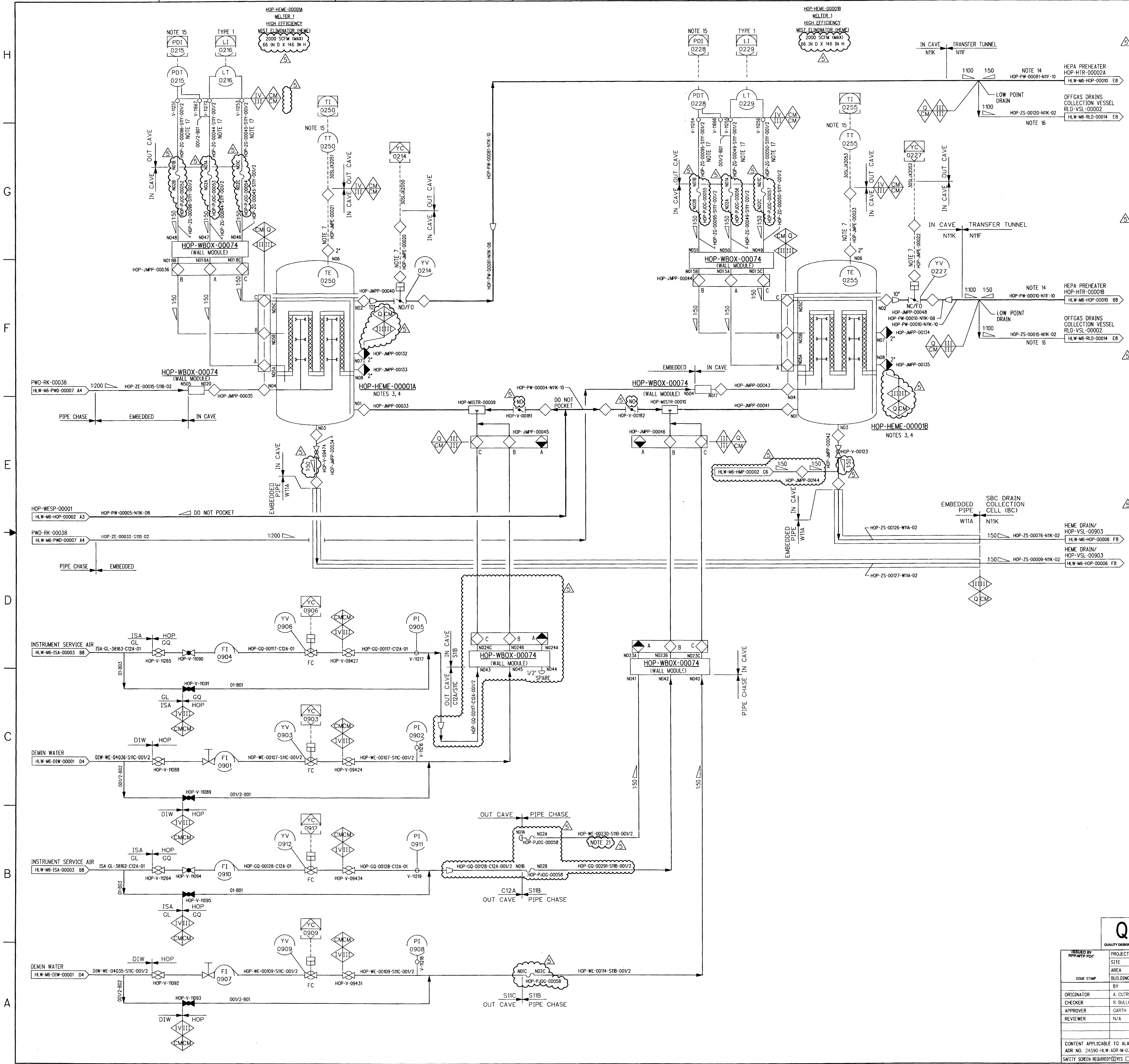

NOTES:

1. SEE DRAWINGS 24590-WTP-M6-50-00001 THROUGH 24590-WTP-M6-50-00008 FOR GENERAL NOTES, SYMBOLS AND LEGEND, AND GENERAL SLOPE REQUIREMENTS.
2. DELETED
3. EACH HEME (HOP-HEME-00001A/B) CONTAINS FIVE (5) MULTI-SECTION FILTER ASSEMBLIES DESIGNED FOR REMOTE REPLACEMENT.
4. REFER TO ENGINEERING SPECIFICATION 24590-WTP-3PS-MV00-T0001 FOR VESSEL NOZZLE LOADS WITH THE EXCEPTION OF NOZZLES N01 AND N02 AS DESCRIBED IN 24590-WTP-SDDR-PROC-05-00235.
5. DELETED
6. DELETED
7. FOR ELECTRICAL AND INSTRUMENTATION JUMPERS REFER TO 24590-HLW-J1-HOP-00002 AND 24590-HLW-M6-ISA-00007.
8. CONTENTS OF THIS DRAWING ARE DANGEROUS WASTE PERMIT AFFECTING.
9. DELETED
10. DELETED
11. REVISION 3: REVISED QUALITY LEVELS AND SEISMIC CATEGORIES AND OTHER CHANGES AS MARKED.
12. DELETED
13. DELETED
14. PIPING IN THE TRANSFER TUNNEL WILL HAVE WELDED CONNECTIONS ONLY.
15. INSTRUMENT PERFORMS AN AIR PERMIT FUNCTION.
16. DRIP PAN PROVIDED BELOW DRAIN LINES FOR SECONDARY CONTAINMENT.
17. THIS LINE/SECTION IS ONLY TO SUPPLY CIS INFORMATION FOR THE VALVE.
18. REVISION 4: INCORPORATED 24590-HLW-M6N-HOP-00100 (NO. 1 IS SUPERCEDED), 00113 AND 24590-HLW-M6N-M80T-00002. REVISED NOTES, DELETED NOTE 2. ADDED NOTES 17, 18, AND REFERENCE NOTE 2. REVISED QUALITY LEVELS AND SEISMIC CATEGORIES. DELETED NOTE 13. SYSTEM REQUIRES REVERIFICATION.
19. INSTRUMENTS ARE QUALITY LEVEL CM UNLESS OTHERWISE NOTED OR ARE AIR PERMIT AFFECTING. INSTRUMENT, ROOT VALVE AND TUBING CONFINEMENT REQUIREMENTS ARE THE SAME AS THE CONNECTING PROCESS PIPE UNLESS NOTED OTHERWISE.
20. THE GEOMETRY OF JOGGLED (OFFET) PENETRATIONS IS QUALITY LEVEL Q FOR RADIATION PROTECTION. THE QUALITY LEVEL AND SEISMIC CATEGORY DESIGNATIONS OF PIPING WITHIN JOGGLES ARE THE SAME AS CONNECTING PIPING.
21. PIPING REFERENCED TO THIS NOTE SHALL BE QUALITY LEVEL CM AND SEISMIC CATEGORY SC-III.
22. REVISED TO INCORPORATE 24590-HLW-M6N-M80T-00004, 24590-HLW-M6N-M80T-00007, AND P-JOGGLES. CHANGED HOP-JMPP-00032 TO HOP-JMPP-00144. ADDED/DELETED/REVISED NOTES, HOLDS, SLOPES, QUALITY/SEISMIC FLAGS AND BUTTERFLY VALVES NORMAL POSITION.

HOLD/OPEN ITEMS:

1-3. DELETED

REFERENCES:

1. 24590-HLW-M5-V17T-00003 "PROCESS FLOW DIAGRAM, HLW VIT MELTER 1 PRIMARY OFFGAS TREATMENT" (SYSTEM HOP).
2. THE REQUIRED BATCH SEQUENCES, PERMISSIVES, INTERLOCKS, ALARMS AND OPERATOR INTERFACE POINTS ARE FULLY DESCRIBED IN "SOFTWARE FUNCTIONAL SPECIFICATION FOR HLW MELTER OFFGAS TREATMENT PROCESS AND PROCESS VESSEL VENT EXHAUST (HOP AND PVV) SYSTEMS", 24590-HLW-3PS-HOP-T0001.

Please note that source, special nuclear, and byproduct materials, as defined in the Atomic Energy Act of 1954 (AEA) are regulated at the U. S. Department of Energy (DOE) facilities exclusively by DOE acting pursuant to its AEA authority. DOE asserts that pursuant to AEA, it has sole and exclusive responsibility and authority to regulate source, special nuclear, and byproduct materials at DOE-owned nuclear facilities. Information contained herein on radionuclides is provided for process description purposes only.

Q
QUALITY DESIGNATOR

REV	DESCRIPTION	ORG	CHKD	RVWD	APVD	DATE
5	REVISED PER NOTE 22	[illegible]	APP	CEX SPK	CQW JJ	1/19/07
4	REVISED PER NOTE 18	JR	APP	JP	JJ	3/2/06
3	REVISED PER NOTE 11	REP	SC	SN	EI	1/7/05
0	ISSUED FOR CONSTRUCTION	AC	REB	N/A	GD	10/10/02

REVISION HISTORY

ISSUED BY RPP-WTP PDC
ISSUE STAMP

PROJECT No.	24590
SITE	HANFORD
AREA	200E
BUILDING No.	30

RIVER PROTECTION PROJECT
WASTE TREATMENT PLANT
2435 STEVENS CENTER PLACE
RICHLAND, WA 99354

CONTRACT No: DE-AC27-01RV14136

	BY	DATE
ORIGINATOR	A. CUTRONA	10/9/02
CHECKER	R. BULLOCK	10/9/02
APPROVER	GARTH DUNCAN	10/10/02
REVIEWER	N/A	

P&ID - HLW MELTER OFFGAS SYSTEM MELTER 1 PRIMARY OFFGAS HEME

CONTENT APPLICABLE TO ALARA? [X] YES [ ] NO
ADR NO. 24590-HLW-ADR-M-03-001 REV: 2
SAFETY SCREEN REQUIRED? [X] YES [ ] NO E&NS INITIAL IF YES CM

SCALE: NONE

24590-HLW-M6-HOP-00009 REV 5

SAFETY SCREEN IS REQUIRED FOR DRAWING TYPES IDENTIFIED IN 24590-WTP-GPP-SREG-002

'E' SIZE - 44x34
COMPUTER GENERATED - MANUAL CHANGES NOT PERMITTED

R10745876

01/03/2007 12:42:33 PM

PLOTTED BY: eidorn
C:\Work\dms03839\HLWM6HOP00009.dgn

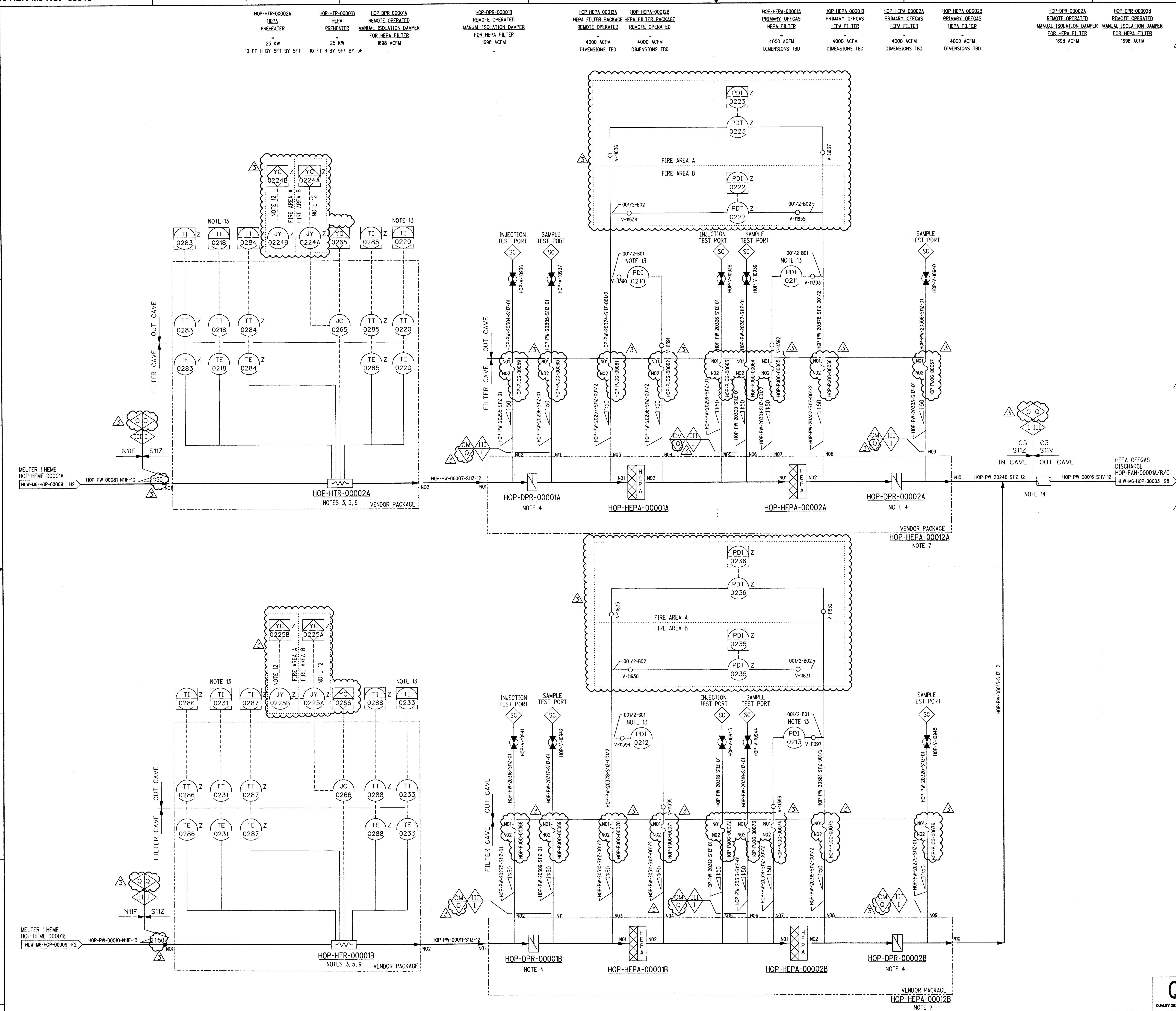

NOTES:

1. SEE DRAWINGS 24590-WTP-M6-50-00001 THROUGH 24590-WTP-M6-50-00008 FOR GENERAL NOTES, SYMBOLS AND LEGEND, AND GENERAL SLOPE REQUIREMENTS..
2. DELETED
3. HEPA PRE-HEATERS (HOP-HTR-00002A/1B) ARE MULTI-ELEMENT UNITS WITH STANDBY ELEMENTS. THE HEATER ASSEMBLY IS INSET IN THE FILTER CAVE WALL AND THE TEMPERATURE ELEMENTS AND HEATER CONTROLLER PENETRATE THROUGH A STEEL SHIELDING PLATE. HEATER UNIT SHALL BE EQUIPPED WITH OVER-TEMPERATURE PROTECTION (SUPPLIED BY VENDOR).
4. DAMPERS ARE REMOTE MANUAL MANIPULATOR ACTUATED.
5. HEPA PRE-HEATER IN-CAST LINER, MOUNTING FRAME, R5/C5 TO R2/C2 RADIATION SHIELDING ARE PART OF THE FILTER CAVE C5 CELL CONFINEMENT BOUNDARY. THESE PRE-HEATER COMPONENTS ARE DESIGNATED QUALITY LEVEL Q AND SEISMIC CATEGORY SC-I.
6. CONTENTS OF THIS DOCUMENT ARE DANGEROUS WASTE PERMIT AFFECTING.
7. VENDOR PACKAGE INCLUDES THE HEPA FILTER HOUSING, ISOLATION DAMPERS, TEST PORT CONNECTION POINTS, AND INTERCONNECTING PIPING. THE PACKAGE IS IDENTIFIED BY THE HEPA HOUSING COMPONENT ID NUMBERS FOR PROCUREMENT AND MEETS ASME AG-1 REQUIREMENTS.
8. DELETED
9. ON LOSS OF OFFSITE POWER, THE PRE-HEATER CONTROLLER WILL HOLD TO LAST SET POINT VALUE. PRE-HEATER WILL BE FED FROM THE EMERGENCY DIESEL GENERATOR (EDG).
10. REVISION 1: CHANGES INCLUDE: REORGANIZED THE WALL/FLOORBOX CONFIGURATIONS, MOVED THE SEISMIC CATEGORY AND QUALITY LEVEL BREAKS,AND UPDATED THE CONTROL STRATEGY TO THE PRE-HEATERS.
11. REVISION 2: REVISED QUALITY/SEISMIC FLAGS. ADDED ITS TEMPERATURE INSTRUMENT. REVISED, DELETED, ADDED NOTES, AND ADDED REFERENCES 2 AND 3. SYSTEM REQUIRES REVERIFICATION.
12. ISOLATING CONTACTOR (JY) PROVIDES INTERRUPTION OF THE 480V POWER TO THE HEPA PREHEATER.
13. INSTRUMENT PERFORMS AN AIR PERMIT FUNCTION.
14. SEAL PIPE PENETRATION IN CAVE WALL TO MINIMIZE AIRFLOW FROM C3 TO C5 AREA.
15. INSTRUMENTS ARE QUALITY LEVEL Q UNLESS OTHERWISE NOTED OR ARE AIR PERMIT AFFECTING. INSTRUMENT, ROOT VALVE AND TUBING CONFINEMENT REQUIREMENTS ARE THE SAME AS THE CONNECTING PROCESS PIPE UNLESS NOTED OTHERWISE.
16. THE GEOMETRY OF JOGGLED (OFFSET) PENETRATIONS IS QUALITY LEVEL Q FOR RADIATION PROTECTION. THE QUALITY LEVEL AND SEISMIC CATEGORY DESIGNATIONS OF PIPING WITHIN JOGGLES ARE THE SAME AS CONNECTING PIPING.
17. REVISED TO INCORPORATE 24590-HLW-M6N-M80T-00004 AND -00007. INCORPORATED P-JOGGLES. REVISED QUALITY/SEISMIC FLAGS. ADDED FIRE AREAS. REVISED SLOPE. ADDED/REVISED NOTES AND HOLDS.

HOLD/OPEN ITEMS:

1. DELETED

REFERENCES:

1. 24590-HLW-M5-V17T-00003 "PROCESS FLOW DIAGRAM, HLW VIT MELTER 1 PRIMARY OFFGAS TREATMENT" (SYSTEM HOP).
2. THE REQUIRED BATCH SEQUENCES, PERMISSIVES, INTERLOCKS, ALARMS AND OPERATOR INTERFACE POINTS ARE FULLY DESCRIBED IN THE SOFTWARE FUNCTIONAL SPECIFICATION FOR HLW MELTER OFFGAS TREATMENT PROCESS AND PROCESS VESSEL VENT EXHAUST (HOP AND PVV) SYSTEMS, 24590-HLW-3PS-HOP-T0001.
3. FOR ITS PERMISSIVES AND INTERLOCKS, REFER TO SAFETY SYSTEM REQUIREMENTS SPECIFICATIONS, 24590-HLW-3PS-PPJ-T0008 (TO BE ISSUED).

Please note that source, special nuclear, and byproduct materials, as defined in the Atomic Energy Act of 1954 (AEA) are regulated at the U. S. Department of Energy (DOE) facilities exclusively by DOE acting pursuant to its AEA authority. DOE asserts that pursuant to AEA, it has sole and exclusive responsibility and authority to regulate source, special nuclear, and byproduct materials at DOE-owned nuclear facilities. Information contained herein on radionuclides is provided for process description purposes only.

REV	DESCRIPTION	ORG	CHKD	RVWD	APVD	DATE
3	REVISED PER NOTE 17	[signature]	APP	CER SPK	JJ CGN	12/22/06
2	REVISED PER NOTE 11	JR	APP	JJ	JP	3/2/06
1	REVISED PER NOTE 10	JM	DY	MLW	TV	11-18-03
0	ISSUED FOR CONSTRUCTION	AC	RB	N/A	GD	10-10-02

REVISION HISTORY

Q
QUALITY DESIGNATOR

ISSUED BY RPP-WTP PDC
ISSUE STAMP

PROJECT No.	24590
SITE	HANFORD
AREA	200E
BUILDING No.	30

RIVER PROTECTION PROJECT
WASTE TREATMENT PLANT
2435 STEVENS CENTER PLACE
RICHLAND, WA 99354

CONTRACT No: DE-AC27-01RV14136

	BY	DATE
ORIGINATOR	A. CUTRONA	10-09-02
CHECKER	R. BULLOCK	10-09-02
APPROVER	G. M. DUNCAN	10-10-02
REVIEWER	N/A	

P&ID - HLW MELTER OFFGAS SYSTEM MELTER 1 PRIMARY OFFGAS HEPA FILTERS

CONTENT APPLICABLE TO ALARA? [X] YES [ ] NO
ADR NO. 24590-HLW-ADR-M-03-001 REV: 2
SAFETY SCREEN REQUIRED? [X] YES [ ] NO E&NS INITIAL IF YES CM

SCALE: NONE

24590-HLW-M6-HOP-00010 REV 3

SAFETY SCREEN IS REQUIRED FOR DRAWING TYPES IDENTIFIED IN 24590-WTP-GPP-SREG-002

'E' SIZE - 44x34
COMPUTER GENERATED - MANUAL CHANGES NOT PERMITTED

R10743341

12/18/2006 07:31:13 AM

PLOTTED BY: eidorn
C:\Work\dms03839\HLWM6HOP00010.dgn

FORM E_SON.DGN 02/2003

HOP-ADBR-00001
ACTIVATED CARBON ADSORBER SKID
2000 SCFM
25FT L X 19FT W X 39FT H

HOP-ADBR-00001A
ACTIVATED CARBON ADSORBER
2000 SCFM
12FT L X 10FT W X 13FT H

HOP-ADBR-00001B
ACTIVATED CARBON ADSORBER
2000 SCFM
12FT L X 10FT W X 13FT H

ANALYZER SIGNAL TO FLOW CONTROL VALVE
HLW-M6-HOP-00008 G3

FIRE PROTECTION WATER
HLW-M6-FPW-00002 D8
FPW-WF-34007-C12E-02

FIRE PROTECTION WATER
HLW-M6-FPW-00002 D8
FPW-WF-34008-C12E-02

HOP FAN 00001A/B/C
HLW-M6-HOP-00003 D2
HOP-PW-00026-S11V-14

HOP-ADBR-00001

HOP-ADBR-00001A

HOP-ADBR-00001B

VENDOR PACKAGE NOTES 2, 5
24590-QL-POA-MWKO-00001-05-00004, PIPING & INSTRUMENTATION DRAWING SCHEMATIC

SET @ 5 PSIG

FIRE WATER DRAIN

HOP-PW-20248-S11V-14
HOP-HX-00002
HLW-M6-HOP-00003 B8

HOP-PW-20283-S11V-14

NOTES:

1. SEE DRAWINGS 24590-WTP-M6-50-00001 THROUGH 24590-WTP-M6-50-00006 FOR GENERAL NOTES, SYMBOLS AND LEGEND.
2. HOP-ADBR-00001 CONSISTS OF TWO 100% CAPACITY, SULFUR IMPREGNATED ACTIVATED CARBON UNITS NORMALLY OPERATED IN SERIES. EACH UNIT CAN BE OPERATED INDEPENDENTLY TO FACILITATE CARBON REPLACEMENT DURING MELTER OPERATION. EACH CARBON BED WILL BE EQUIPPED WITH 3 FILL AND 2 WITHDRAWAL PORTS.
3. ALL EQUIPMENT, PIPING AND PIPING COMPONENTS ON THIS DRAWING ARE QUALITY LEVEL QL-2 AND SEISMIC CATEGORY SC-III, UNLESS NOTED OTHERWISE.
4. CONTENTS OF THIS DOCUMENT ARE DANGEROUS WASTE PERMIT AFFECTING.
5. SOFTWARE IS BUYER SCOPE OF SUPPLY BASED ON VENDOR CONTROL LOGIC.
6. VALVE WILL HAVE METAL TO METAL SEATS AND A MINIMUM LEAK TIGHTNESS CLASSIFICATION OF CLASS IV.
7. INSTRUMENTS ARE COMMERCIAL GRADE CM UNLESS DESIGNATED BY A "Z" OR ARE AIR PERMIT AFFECTING. INSTRUMENT, ROOT VALVE AND TUBING CONFINEMENT REQUIREMENTS ARE THE SAME AS THE CONNECTING PROCESS PIPE UNLESS NOTED OTHERWISE.
8. ALTERNATING SAMPLING BY ALIGNMENT OF YV0814 OR YV0819.
9. SYSTEM REQUIRES REVERIFICATION.

HOLD/OPEN ITEMS:

NONE

REFERENCES:

1. 24590-HLW-M5-V17T-00004 "PROCESS FLOW DIAGRAM HLW VITRIFICATION MELTER 1 SECONDARY OFFGAS TREATMENT (SYSTEM HOP)".
2. THE REQUIRED BATCH SEQUENCES, PERMISSIVES, INTERLOCKS, ALARM AND OPERATOR INTERFACE POINTS ARE FULLY DESCRIBED IN "SOFTWARE FUNCTIONAL SPECIFICATION FOR HLW MELTER OFFGAS TREATMENT PROCESS AND PROCESS VESSEL VENT EXHAUST (HOP AND PVV) SYSTEMS," 24590-HLW-3PS-HOP-T0001.
3. FOR ITS PERMISSIVES AND INTERLOCKS, REFER TO SAFETY SYSTEM REQUIREMENTS SPECIFICATION, 24590-HLW-3PS-PPJ-T0008 (TO BE ISSUED).

Please note that source, special nuclear, and byproduct materials, as set out in the Atomic Energy Act of 1954 (AEA) are regulated at the U.S. Department of Energy (DOE) facilities exclusively by DOE acting pursuant to its AEA authority. DOE asserts that pursuant to AEA, it has sole and exclusive responsibility and authority to regulate source, special nuclear, and byproduct materials at DOE-owned nuclear facilities. Information contained herein on commodities is provided for process description purposes only.

Q QUALITY DESIGNATOR	REV	DESCRIPTION	ORG	CHKD	RVWD	APVD	DATE
	0	ISSUED FOR CONSTRUCTION AND SEE NOTE 9		APD	CEK	TWM	3/2/06

REVISION HISTORY

ISSUED BY TWRS-M/P PDC

PROJECT No.	24590	
SITE	HANFORD	
AREA	200E	
BUILDING No.	30	
ISSUE STAMP		
	BY	DATE
ORIGINATOR	Tim House	3/2/06
CHECKER	Pat Pinto APD	3/2/06
APPROVER		3/2/06
REVIEWER	Jeff Peppin	3/2/06
	Calvin Kelly	3/2/06

CONTENT APPLICABLE TO ALARA? [X] YES [ ] NO
ADR NO. 24590-HLW-ADR-M-03-001 REV: 1
SAFETY SCREEN REQUIRED? [X] YES [ ] NO ENMS INITIAL IF YES CMK

BECHTEL NATIONAL, INC.
RIVER PROTECTION PROJECT
WASTE TREATMENT PLANT
2435 STEVENS CENTER PLACE
RICHLAND, WA 99354

CONTRACT No: DE-AC27-01RV14136

P&ID - HLW MELTER OFFGAS SYSTEM MELTER 1 SECONDARY OFFGAS TREATMENT SHEET 3 OF 3

SCALE: NONE
24590-HLW-M6-HOP-00011
REV 0

SAFETY SCREEN IS REQUIRED FOR DRAWING TYPES IDENTIFIED IN 24590-WTP-GPP-SREQ-002

"E" SIZE - 44x34
COMPUTER GENERATED - MANUAL CHANGES NOT PERMITTED

RTD614864

03/02/2006 07:25:51 AM

PLOTTED BY: tabarnes
C:\Work\dms03839\HLW\M6\HOP00011.dgn

FORM E_SDN.DGN 02/2003

HOP-SCB-00002
MELTER 2
SUBMERGED
BED SCRUBBER (SBS)
3249 GAL (OPER)
10FT ID X 1FT 10IN OAH

HOP-EJCTR-00918A
HOP-SCB-00002
VESSEL EJECTOR
(AIR EJECTOR-SIPHON)
39 GPM
1.5 IN

HOP-MTEE-00003
HOP-SCB-00002
VESSEL EJECTOR
MIXING TEE
–
–

HOP-MTEE-00004
HOP-SCB-00002
VESSEL EJECTOR
MIXING TEE
–
–

HOP-EJCTR-00918B
HOP-SCB-00002
VESSEL EJECTOR
(AIR EJECTOR-SIPHON)
39 GPM
1.5 IN

NOTES:

1. SEE DRAWINGS 24590-WTP-M6-50-00001 THROUGH 24590-WTP-M6-50-00008 FOR GENERAL NOTES, SYMBOLS AND LEGEND, AND GENERAL SLOPE REQUIREMENTS.
2. DELETED
3. IN VESSEL PIPE CLASS CHANGE TO N13A, HASTELLOY C-22.
4. COOLING WATER SUPPLY AND RETURN PIPES TO BE FREE DRAINING FROM OUT CAVE TO IN CAVE.
5. EJECTOR TO BE LOCATED MINIMUM 34 FT ABOVE SUBMERGED BED SCRUBBER OVERFLOW.
6. REFER TO ENGINEERING SPECIFICATION 24590-WTP-3PS-MV00-T0001 FOR VESSEL NOZZLE LOADS, EXCEPTIONS PER 24590-WTP-SDDR-PROC-03-0149 ARE AS FOLLOWS:
   A. FOR NOZZLES N03, N04, N05, AND N06 USE 2" NOZZLE LOADS.
   B. FOR NOZZLE N02 USE 3" NOZZLE LOADS.
   C. FOR NOZZLES N11 AND N13 USE 8" NOZZLE LOADS.
7. SPARE JUMPER CONNECTION TO HOP-SCB-00002, NOZZLE N23 OR N24.
8. SPARE JUMPER CONNECTION FOR HOP-SCB-00002, N22.

9-12. DELETED

13. FOR ELECTRICAL AND INSTRUMENTATION JUMPERS REFER TO 24590-HLW-JH-HOP-00002.

14. DELETED

15. CONTENTS OF THIS DOCUMENT ARE DANGEROUS WASTE PERMIT AFFECTING.

16. VESSEL HOP-SCB-00002 IS QUALITY LEVEL Q IT IS SEISMIC CATEGORY SC-I FOR LIQUID CONTAINMENT BELOW THE VESSEL OVERFLOW AND SEISMIC CATEGORY SC-III FOR OFFGAS CONFINEMENT. THIS IS AIR PERMIT EQUIPMENT.

17. RADAR GUIDE TUBE IS TO BE ROUTED TO TRANSMITTER. A FULL PORT BALL VALVE IS REQUIRED FOR ISOLATION PURPOSES AT TRANSMITTER END OF GUIDE TUBE.

18.-20. DELETED

21. THIS LINE IS QUALITY LEVEL CM AND SEISMIC CATEGORY SC-III.

22. INSTRUMENT PERFORMS AN AIR PERMIT FUNCTION. INSTRUMENT INCLUDES INTEGRAL DISPLAY WITH TRANSMITTER.

23. OFFGAS JUMPERS ARE QUALITY LEVEL Q AND SEISMIC CATEGORY SC-III. THESE ARE ALSO AIR PERMIT JUMPERS.

24. THE SBS SIPHON TRANSFER CONNECTION TEE SHOULD BE LOCATED AT AN ELEVATION THAT IS NO MORE THAN 14 FT ABOVE THE BOTTOM OF THE SBS OVERFLOW NOZZLE. THE TEE WILL BE MOUNTED WITH THE STRAIGHT RUN IN THE VERTICAL POSITION.

25. DUE TO SPACE CONSTRAINTS, THE IN CAVE PORTION OF THE OVERFLOW COLLECTION HEADER REQUIRES A MINIMUM SLOPE OF 1:50. THE PIPING CONNECTING TO THE JUMPERS CAN BE HORIZONTAL JUST PRIOR TO THE CONNECTION AS REQUIRED TO FACILITATE THE JUMPERS CONNECTION. THE 1:50 SLOPE SHALL BE ACHIEVED AS SOON AS PRACTICAL AFTER THE CONNECTIONS.

26. REVISION 5: INCORPORATED 24590-HLW-M6N-HOP-00107, 00111, 00115, 00117, AND 00122. INCORPORATED PIPE CLASS CHANGES PER 24590-WTP-SDDR-M-05-00346. REVISED NOTES. REVISED QUALITY LEVELS AND SEISMIC CATEGORIES. ADDED REFERENCES. SYSTEM REQUIRES REVERIFICATION.

27. QUALITY LEVEL/SEISMIC CATEGORY FLAGS APPLY ACROSS ALL VESSEL NOZZLES EXCEPT WHERE OTHERWISE INDICATED.

28. MELTER AND SBS OFFGAS LINES ARE QUALITY LEVEL Q AND SEISMIC CATEGORY SC-III.

29. QUALITY LEVEL Q AND SEISMIC CATEGORY SC-I CONFINEMENT IS REQUIRED.

30. INSTRUMENTS ARE QUALITY LEVEL CM UNLESS OTHERWISE NOTED OR ARE AIR PERMIT AFFECTING. INSTRUMENT, ROOT VALVE AND TUBING CONFINEMENT REQUIREMENTS ARE THE SAME AS THE CONNECTING PROCESS PIPE UNLESS OTHERWISE NOTED.

31. THE GEOMETRY OF JOGGLED (OFFSET) PENETRATIONS IS QUALITY LEVEL Q FOR RADIATION PROTECTION. THE QUALITY LEVEL AND SEISMIC CATEGORY DESIGNATIONS OF PIPING WITHIN JOGGLES ARE THE SAME AS CONNECTING PIPING.

32. MAIN HEADER REQUIRES 34 FT OF BAROMETRIC HEAD ABOVE SUBMERGED BED SCRUBBER OVERFLOW.

33. REVISED TO INCORPORATE 24590-HLW-M6N-HOP-00104, 24590-HLW-M6N-HOP-00134, 24590-HLW-M6N-M8OT-00004, AND 24590-HLW-M6N-M8OT-00007. INCORPORATED P-JOGGLES, DELETED/ MODIFIED QUALITY/SEISMIC FLAGS, SCB NOZZLES AND INSTRUMENTATION; MODIFIED SLOPES. DELETED LT-2104 AND LI-2104. REMOVED "Z" DESIGNATION FOR LE-2130 AND LE-2104. MODIFIED JUMPER DEPICTION AT N06. ADDED/DELETED/REVISED NOTES, REFERENCES, AND HOLDS. REVISED LINE SIZES.

HOLD/OPEN ITEMS:

1.-4. DELETED

REFERENCES:

1. 24590-HLW-M5-V17T-20003, "PROCESS FLOW DIAGRAM, HLW VIT MELTER 2 PRIMARY OFFGAS TREATMENT" (SYSTEM HOP).
2. THE REQUIRED BATCH SEQUENCES, PERMISSIVES, INTERLOCKS, ALARMS AND OPERATOR INTERFACE POINTS ARE FULLY DESCRIBED IN "SOFTWARE FUNCTIONAL SPECIFICATION FOR HLW MELTER OFFGAS TREATMENT PROCESS AND PROCESS VESSEL VENT EXHAUST (HOP AND PVV) SYSTEMS", 24590-HLW-3PS-HOP-T0001.
3. DELETED

Please note that source, special nuclear, and byproduct materials, as defined in the Atomic Energy Act of 1954 (AEA) are regulated by U.S. Department of Energy (DOE) facilities exclusively by DOE orders rather than by NRC regulations. Likewise, pursuant to AEA, it has sole and exclusive (NOE) statutory authority to regulate source, special nuclear, and byproduct materials at DOE-owned nuclear facilities. Information contained herein for radionuclides is provided for process description purposes only.

REV	DESCRIPTION	ORG	CHKD	RVWD	APVD	DATE
6	REVISED PER NOTE 33		APP		CER	11/19/07
5	REVISED PER NOTE 26	JR	APP	JP	JO	3/2/06
0	ISSUED FOR CONSTRUCTION	KE	RB	N/A	GMD	10-10-02

Q — QUALITY DESIGNATOR

REVISION HISTORY

ISSUED BY RPP-WTP PDC — ISSUE STAMP

PROJECT No.	24590	
SITE	HANFORD	
AREA	200E	
BUILDING No.	30	
	BY	DATE
ORIGINATOR	KEITH EBBERS	10-9-02
CHECKER	R. BULLOCK	10-9-02
APPROVER	GM DUNCAN	10-10-02
REVIEWER	N/A	

CONTENT APPLICABLE TO ALARA? [X] YES [ ] NO
ADR NO. 24590-HLW-ADR-M-03-001 REV: 2
SAFETY SCREEN REQUIRED? [X] YES [ ] NO EWS INITIAL IF YES GM

BECHTEL

RIVER PROTECTION PROJECT
WASTE TREATMENT PLANT
2435 STEVENS CENTER PLACE
RICHLAND, WA 99354

CONTRACT No: DE-AC27-01RV14136

P&ID - HLW
MELTER OFFGAS SYSTEM
MELTER 2
PRIMARY OFFGAS SCRUBBER

SCALE: NONE

24590-HLW-M6-HOP-20001 — REV 6

FORM E_SDN.DGN 02/2003

SAFETY SCREEN IS REQUIRED FOR DRAWING TYPES IDENTIFIED IN 24590-WTP-GPP-SRED-002

'E' SIZE - 44x34
COMPUTER GENERATED - MANUAL CHANGES NOT PERMITTED

R1074877

01/10/2007 01:02:03 PM

PLOTTED BY: ekern
C:\Work Items\24590-HLW\M6\HOP20001.dgn

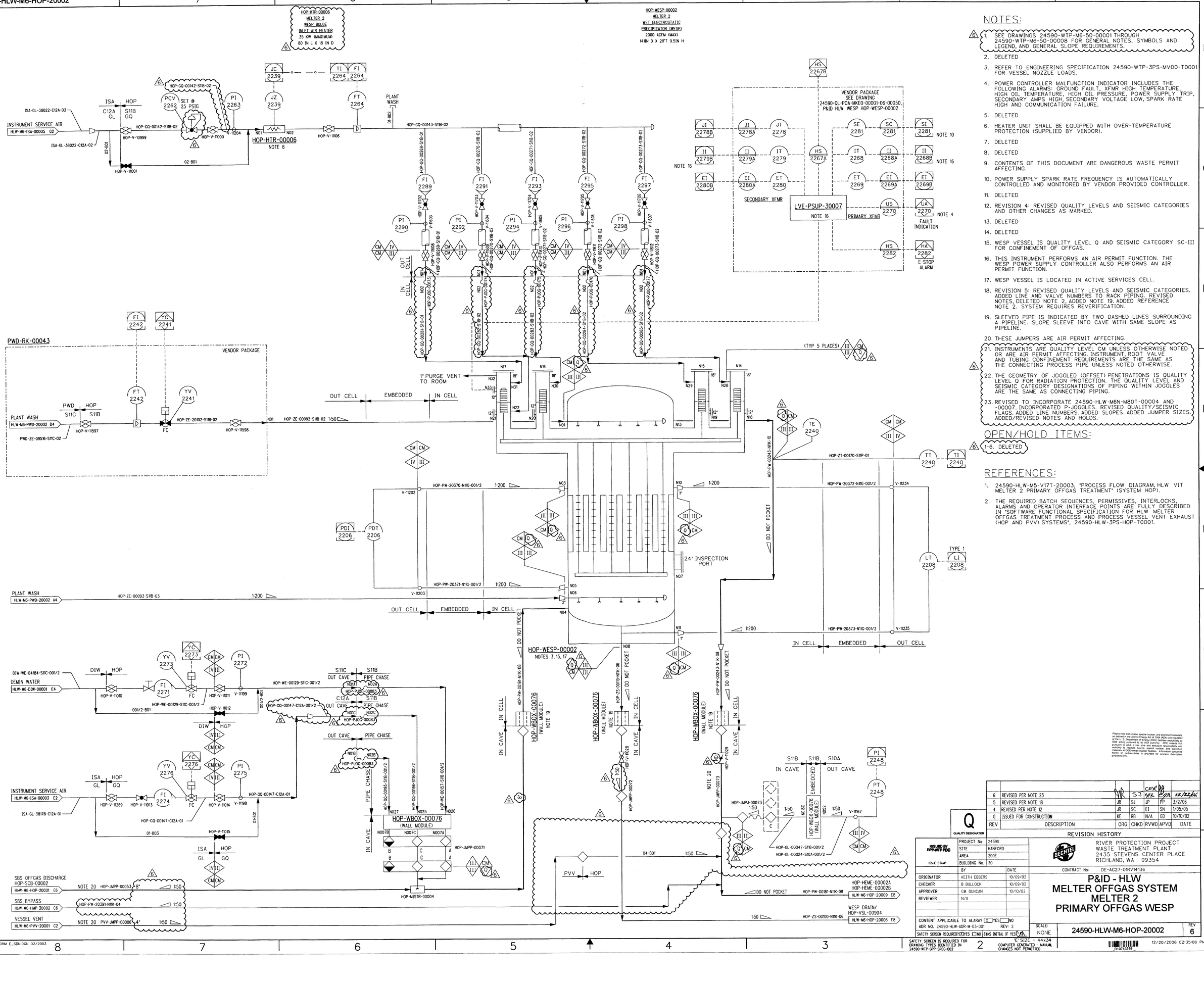

NOTES:

1. SEE DRAWINGS 24590-WTP-M6-50-00001 THROUGH 24590-WTP-M6-50-00008 FOR GENERAL NOTES, SYMBOLS AND LEGEND, AND GENERAL SLOPE REQUIREMENTS.
2. DELETED
3. REFER TO ENGINEERING SPECIFICATION 24590-WTP-3PS-MV00-T0001 FOR VESSEL NOZZLE LOADS.
4. POWER CONTROLLER MALFUNCTION INDICATOR INCLUDES THE FOLLOWING ALARMS: GROUND FAULT, XFMR HIGH TEMPERATURE, HIGH OIL TEMPERATURE, HIGH OIL PRESSURE, POWER SUPPLY TRIP, SECONDARY AMPS HIGH, SECONDARY VOLTAGE LOW, SPARK RATE HIGH AND COMMUNICATION FAILURE.
5. DELETED
6. HEATER UNIT SHALL BE EQUIPPED WITH OVER-TEMPERATURE PROTECTION (SUPPLIED BY VENDOR).
7. DELETED
8. DELETED
9. CONTENTS OF THIS DOCUMENT ARE DANGEROUS WASTE PERMIT AFFECTING.
10. POWER SUPPLY SPARK RATE FREQUENCY IS AUTOMATICALLY CONTROLLED AND MONITORED BY VENDOR PROVIDED CONTROLLER.
11. DELETED
12. REVISION 4: REVISED QUALITY LEVELS AND SEISMIC CATEGORIES AND OTHER CHANGES AS MARKED.
13. DELETED
14. DELETED
15. WESP VESSEL IS QUALITY LEVEL Q AND SEISMIC CATEGORY SC-III FOR CONFINEMENT OF OFFGAS.
16. THIS INSTRUMENT PERFORMS AN AIR PERMIT FUNCTION. THE WESP POWER SUPPLY CONTROLLER ALSO PERFORMS AN AIR PERMIT FUNCTION.
17. WESP VESSEL IS LOCATED IN ACTIVE SERVICES CELL.
18. REVISION 5: REVISED QUALITY LEVELS AND SEISMIC CATEGORIES. ADDED LINE AND VALVE NUMBERS TO RACK PIPING. REVISED NOTES, DELETED NOTE 2, ADDED NOTE 19. ADDED REFERENCE NOTE 2. SYSTEM REQUIRES REVERIFICATION.
19. SLEEVED PIPE IS INDICATED BY TWO DASHED LINES SURROUNDING A PIPELINE. SLOPE SLEEVE INTO CAVE WITH SAME SLOPE AS PIPELINE.
20. THESE JUMPERS ARE AIR PERMIT AFFECTING.
21. INSTRUMENTS ARE QUALITY LEVEL CM UNLESS OTHERWISE NOTED OR ARE AIR PERMIT AFFECTING. INSTRUMENT, ROOT VALVE AND TUBING CONFINEMENT REQUIREMENTS ARE THE SAME AS THE CONNECTING PROCESS PIPE UNLESS NOTED OTHERWISE.
22. THE GEOMETRY OF JOGGLED (OFFSET) PENETRATIONS IS QUALITY LEVEL Q FOR RADIATION PROTECTION. THE QUALITY LEVEL AND SEISMIC CATEGORY DESIGNATIONS OF PIPING WITHIN JOGGLES ARE THE SAME AS CONNECTING PIPING.
23. REVISED TO INCORPORATE 24590-HLW-M6N-M8OT-00004 AND -00007. INCORPORATED P-JOGGLES. REVISED QUALITY/SEISMIC FLAGS. ADDED LINE NUMBERS. ADDED SLOPES. ADDED JUMPER SIZES. ADDED/REVISED NOTES AND HOLDS.

OPEN/HOLD ITEMS:

1-6. DELETED

REFERENCES:

1. 24590-HLW-M5-V17T-20003, "PROCESS FLOW DIAGRAM, HLW VIT MELTER 2 PRIMARY OFFGAS TREATMENT" (SYSTEM HOP).
2. THE REQUIRED BATCH SEQUENCES, PERMISSIVES, INTERLOCKS, ALARMS AND OPERATOR INTERFACE POINTS ARE FULLY DESCRIBED IN "SOFTWARE FUNCTIONAL SPECIFICATION FOR HLW MELTER OFFGAS TREATMENT PROCESS AND PROCESS VESSEL VENT EXHAUST (HOP AND PVV) SYSTEMS", 24590-HLW-3PS-HOP-T0001.

Please note that source, special nuclear, and byproduct materials, as defined by the Atomic Energy Act of 1954 (AEA) are regulated at the U.S. Department of Energy (DOE) facilities exclusively by DOE acting pursuant to AEA. DOE does not, nor does it intend pursuant to AEA, it has sole and exclusive responsibility and authority to regulate source, special nuclear, and byproduct materials at privately-owned nuclear facilities. Information contained herein on radionuclides is provided for process description purposes only.

REV	DESCRIPTION	ORG	CHKD	RVWD	APVD	DATE
6	REVISED PER NOTE 23	JR	SJ	GEK	PP	12/22/06
5	REVISED PER NOTE 18	JR	SJ	JP	PP	3/2/06
4	REVISED PER NOTE 12	JR	SC	EI	SN	1/05/05
0	ISSUED FOR CONSTRUCTION	KE	RB	N/A	GD	10/10/02

REVISION HISTORY

Q — QUALITY DESIGNATOR

ISSUED BY RPP-WTP PDC

ISSUE STAMP

PROJECT No.	24590	
SITE	HANFORD	
AREA	200E	
BUILDING No.	30	
	BY	DATE
ORIGINATOR	KEITH EBBERS	10/09/02
CHECKER	B BULLOCK	10/09/02
APPROVER	GM DUNCAN	10/10/02
REVIEWER	N/A	

CONTENT APPLICABLE TO ALARA? [X] YES [ ] NO
ADR NO. 24590-HLW-ADR-M-03-001 REV: 2
SAFETY SCREEN REQUIRED? [X] YES [ ] NO EMS INITIAL IF YES

SAFETY SCREEN IS REQUIRED FOR DRAWING TYPES IDENTIFIED IN 24590-WTP-GPP-SREG-002

"E" SIZE - 44 x 34
COMPUTER GENERATED - MANUAL CHANGES NOT PERMITTED

BECHTEL

RIVER PROTECTION PROJECT
WASTE TREATMENT PLANT
2435 STEVENS CENTER PLACE
RICHLAND, WA 99354

CONTRACT No: DE-AC27-01RV14136

P&ID - HLW MELTER OFFGAS SYSTEM MELTER 2 PRIMARY OFFGAS WESP

SCALE: NONE

24590-HLW-M6-HOP-20002 REV 6

R10743706

12/20/2006 02:35:06 PM

PLOTTED BY: eidsonn
C:\Work\dms03839\HLW\HOP20002.dgn

FORM E_SDN.DGN 02/2003

HOP-FAN-00009A BOOSTER EXTRACTION FAN — 1600 ACFM, 84 INWG
HOP-FAN-00009B BOOSTER EXTRACTION FAN — 1600 ACFM, 84 INWG
HOP-FAN-00009C BOOSTER EXTRACTION FAN — 1600 ACFM, 84 INWG
HOP-DPR-00020A BACKDRAFT DAMPER FOR BOOSTER FAN — N/A
HOP-DPR-00020B BACKDRAFT DAMPER FOR BOOSTER FAN — N/A
HOP-DPR-00020C BACKDRAFT DAMPER FOR BOOSTER FAN — N/A
HOP-BFP-00003 BACKFLOW PREVENTER — 19 IN L X 5.6 IN D
HOP-BFP-00004 BACKFLOW PREVENTER — 19 IN L X 5.6 IN D
HOP-HX-00004 SILVER MORDENITE PREHEATER — 465.201 BTU/HR, 174IN L X 52IN W X 72IN H

HOP-HEPA-00008A/B
HOP-HEPA-00007A/B
HLW-M6-HOP-20010 E2

FLOW SIGNAL FROM MELTER PRESSURE CONTROL AIR
HLW-M6-HMP-20012 D2

INSTRUMENT AIR
HLW-M6-ISA-00003 G8
ISA-GL-37860-C12A-01

DEMIN WATER
HLW-M6-DIW-00001 B8
DIW-WE-04185-S11C-01

HOP-ADBR-00002A/B
HLW-M6-HOP-20011 F2
HOP-PW-20247-S11V-14

HOP-HX-00003
HLW-M6-HOP-20008 E8
HOP-PW-20028-S11V-16

HOP-ADBR-00002A/B
HLW-M6-HOP-20011 E8
HOP-PW-20259-S11V-14

HOP-ABS-00003
HLW-M6-HOP-20008 F8
HOP-PW-20025-S11V-14

HOP-FAN-00008A/B/C
HLW-M6-HOP-20008 D8
HOP-PW-20211-S11V-14

HOP-DPR-00020C
HOP-DPR-00020B
HOP-DPR-00020A
HOP-FAN-00009C
HOP-FAN-00009B
HOP-FAN-00009A
HOP-MISTR-00008 NOTE 12

NOTES:

1. SEE DRAWINGS 24590-WTP-M6-50-00001 THROUGH 24590-WTP-M6-50-00006 FOR GENERAL NOTES, SYMBOLS AND LEGEND.
2. DELETED
3. DELETED
4. DELETED
5. FAN-00009A/B/C ARE 50% CAPACITY EACH, AND WILL BE OPERATED ON A ROTATING BASIS, 2 OPERATING AND 1 IN STAND-BY. THE ACTUATED DISCHARGE VALVE FOR THE FAN IN STAND-BY WILL BE HELD NORMALLY CLOSED.
6. DELETED
7. ALL EQUIPMENT, PIPING AND PIPING COMPONENTS ON THIS DRAWING ARE QUALITY LEVEL QL-2 AND SEISMIC CATEGORY SC-III UNLESS NOTED OTHERWISE.
8. CONTENTS OF THIS DOCUMENT ARE DANGEROUS WASTE PERMIT AFFECTING.
9. DELETED
10. DELETED
11. HOP FANS ARE TO BE FED BY EMERGENCY DIESEL GENERATOR (EDG) ON LOSS OF OFFSITE POWER.
12. LOCATE MISTER ON COLD DISCHARGE OF HOP-HX-00004, ATOMIZING SPRAY NOZZLE SHALL BE MOUNTED ON A MINIMUM 15 FT. STRAIGHT SECTION OF PIPE. SPRAY SHALL BE AIMED PARALLEL TO DIRECTION OF FLOW.
13. INSTRUMENTS ARE COMMERCIAL GRADE CM UNLESS DESIGNATED BY A "Z" OR ARE AIR PERMIT AFFECTING. INSTRUMENT, ROOT VALVE AND TUBING CONFINEMENT REQUIREMENTS ARE THE SAME AS THE CONNECTING PROCESS PIPE UNLESS NOTED OTHERWISE.
14. REVISION 1: THE INFORMATION IN 24590-HLW-M6N-HOP-00022 IS ADDRESSED BY REV OF THIS P&ID. INCORPORATED CHANGES PER 245900-HLW-DCA-PR-03-003. REVISED VALVE TYPE TO CONFORM TO PIPE SPEC S11V. DEFINED FAN VENDOR BOUNDARY.
15. INCORPORATED 24590-HLW-M6N-HOP-00004, AND 00047, REVISED QUALITY/SEISMIC FLAGS. MOVED CARBON UNITS HOP-ADBR-00002A AND HOP-ADBR-00002B, AND ASSOCIATED PIPING TO DRAWING 24590-HLW-M6-HOP-20011. DELETED NOTES 2, 3, 4, 6, AND 10. ADDED NOTES 11-18. DELETED HOLDS 1, 2, AND 3. ADDED REFERENCES 2 AND 3. MODIFIED NOTES 5 AND 7. SYSTEM REQUIRES REVERIFICATION.
16. INSTRUMENT PERFORMS AN AIR PERMIT FUNCTION.
17. THIS IS A LOUVER DAMPER SYMBOL.
18. ISOLATING CONTACTOR (JY) PROVIDES ITS INTERRUPTION OF THE 480V POWER TO THE ASD.

HOLD/OPEN ITEMS:

1. DELETED
2. DELETED
3. DELETED

REFERENCES:

1. 24590-HLW-M5-V17T-20004 "PROCESS FLOW DIAGRAM HLW VITRIFICATION MELTER 2 SECONDARY OFFGAS TREATMENT (SYSTEM HOP)".
2. THE REQUIRED BATCH SEQUENCES, PERMISSIVES, INTERLOCKS, ALARM AND OPERATOR INTERFACE POINTS ARE DESCRIBED IN "SOFTWARE FUNCTIONAL SPECIFICATION FOR HLW MELTER OFFGAS TREATMENT PROCESS AND PROCESS VESSEL VENT EXHAUST (HOP AND PVV) SYSTEM", 24590-HLW-3PS-HOP-T0001.
3. FOR ITS PERMISSIVES AND INTERLOCKS, REFER TO SAFETY SYSTEM REQUIREMENTS SPECIFICATION, 24590-HLW-3PS-PPJ-T0008 (TO BE ISSUED).

Please note that source, special nuclear, and byproduct materials, as defined in the Atomic Energy Act of 1954 (AEA) are regulated by the U.S. Department of Energy (DOE) facilities exclusively by DOE acting pursuant to its AEA authority. DOE asserts that pursuant to AEA, it is not subject to regulation by any other authority to regulate source, special nuclear, and byproduct materials at DOE-owned nuclear facilities. Information contained herein on radionuclides is provided for process description purposes only.

REV	DESCRIPTION	ORG	CHKD	RVWD	APVD	DATE
2	REVISED PER NOTE 15		APP		CEK	3.2.06
1	REVISED PER NOTE 14	AC	RB	DMY	TV	11-12-03
0	ISSUED FOR CONSTRUCTION	AC	RB	N/A	GMD	10-10-02

REVISION HISTORY

Q — QUALITY DESIGNATOR

ISSUED BY WPS-WTP PMC — ISSUE STAMP

PROJECT No.	24590	
SITE	HANFORD	
AREA	200E	
BUILDING No.	30	

	BY	DATE
ORIGINATOR	A. CUTRONA	10-09-02
CHECKER	R. BULLOCK	10-9-02
APPROVER	GM DUNCAN	10-10-02
REVIEWER	N/A	

CONTENT APPLICABLE TO ALARA? [X] YES [ ] NO
ADR NO. 24590-HLW-ADR-M-03-001 REV: 1
SAFETY SCREEN REQUIRED? [X] YES [ ] NO EWS INITIAL IF YES CAK

SAFETY SCREEN IS REQUIRED FOR DRAWING TYPES IDENTIFIED IN 24590-WTP-GPP-SREQ-002

BECHTEL

RIVER PROTECTION PROJECT
WASTE TREATMENT PLANT
2435 STEVENS CENTER PLACE
RICHLAND, WA 99354

CONTRACT No: DE-AC27-01RV14136

P&ID - HLW MELTER OFFGAS SYSTEM MELTER 2 SECONDARY OFFGAS TREATMENT SHEET 1 OF 3

SCALE: NONE

24590-HLW-M6-HOP-20003 — REV 2

E SIZE - 44x34
COMPUTER GENERATED - MANUAL CHANGES NOT PERMITTED

RT0614860

03/02/2006 02:22:37 PM

PLOTTED BY: mcritter
C:\Work\Documents\24590-HLW-M6-HOP-20003.dgn

FORM E_SDN.DGN 02/2003

24590-HLW-M6-HOP-20004

HOP-EJCTR-00928	HOP-VSL-009068	HOP-EJCTR-00927	HOP-VSL-00906A	HOP-EJCTR-00926	HOP-VSL-00905B	HOP-EJCTR-00925	HOP-VSL-00905A	HOP-EJCTR-00924	HOP-PJM-00011	HOP-EJCTR-00923	HOP-PJM-00010	HOP-EJCTR-00922	HOP-PJM-00009	HOP-EJCTR-00921	HOP-PJM-00008	HOP-RK-00048
HOP-RFD-00004B JET PUMP PAIR (FLUIDIC DEVICE) FOR HOP-VSL-00904	CHARGE VESSEL (FLUIDIC DEVICE) FOR HOP-RFD-00004B	HOP-RFD-00004A JET PUMP PAIR (FLUIDIC DEVICE) FOR HOP-VSL-00904	CHARGE VESSEL (FLUIDIC DEVICE) FOR HOP-RFD-00004A	HOP-RFD-00003B JET PUMP PAIR (FLUIDIC DEVICE) FOR HOP-VSL-00904	CHARGE VESSEL (FLUIDIC DEVICE) FOR HOP-RFD-00003B	HOP-RFD-00003A JET PUMP PAIR (FLUIDIC DEVICE) FOR HOP-VSL-00904	CHARGE VESSEL (FLUIDIC DEVICE) FOR HOP-RFD-00003A	HOP-PJM-00011 JET PUMP PAIR (FLUIDIC DEVICE) FOR HOP-VSL-00904	PULSE JET MIXER (FLUIDIC MIXER) FOR HOP-VSL-00904	HOP-PJM-00010 JET PUMP PAIR (FLUIDIC DEVICE) FOR HOP-VSL-00904	PULSE JET MIXER (FLUIDIC MIXER) FOR HOP-VSL-00904	HOP-PJM-00009 JET PUMP PAIR (FLUIDIC DEVICE) FOR HOP-VSL-00904	PULSE JET MIXER (FLUIDIC MIXER) FOR HOP-VSL-00904	HOP-PJM-00008 JET PUMP PAIR (FLUIDIC DEVICE) FOR HOP-VSL-00904	PULSE JET MIXER (FLUIDIC MIXER) FOR HOP-VSL-00904	MELTER 2 CAVE AIR RACK
MODEL H40M	9.2 CU FT	MODEL H40M	9.2 CU FT	MODEL H40M	9.2 CU FT	MODEL H40M	9.2 CU FT	MODEL L50M	115 GAL	MODEL L50M	115 GAL	MODEL L50M	115 GAL	MODEL L50M	115 GAL	-
11 IN W X 19.3 IN L	24 IN ID X 39 IN L	11 IN W X 19.3 IN L	24 IN ID X 39 IN L	11 IN W X 19.3 IN L	24 IN ID X 39 IN L	11 IN W X 19.3 IN L	24 IN ID X 39 IN L	12 IN W X 25.5 IN L	18 IN ID X 113 IN L	12 IN W X 25.5 IN L	18 IN ID X 113 IN L	12 IN W X 25.5 IN L	18 IN ID X 113 IN L	12 IN W X 25.5 IN L	18 IN ID X 113 IN L	216 IN X 78 IN X 101 IN

NOTES:

1. SEE DRAWING 24590-WTP-M6-50-00001 THROUGH 24590-WTP-M6-50-00008 FOR GENERAL NOTES, SYMBOLS AND LEGEND, AND GENERAL SLOPE REQUIREMENTS.
2. FOR VESSEL DETAILS SEE DRAWING 24590-HLW-M6-HOP-20006.
3. EJECTORS SHALL BE LOCATED 15' OR LESS BELOW THE BOTTOM OF THE 58' ELEVATION FLOOR.
4. ALL JET PUMP PAIRS ARE TO BE POSITIONED VERTICALLY.
5. FLUIDICS CONTROLLER DETAIL SHOWN ON P&ID SYMBOLS AND LEGEND SHEET 6 OF 8, 24590-WTP-M6-50-00008, SYSTEM FUNCTIONALITY OF THE FLUIDICS CONTROLLER ONLY NEEDS TO MEET QUALITY LEVEL CM AND SEISMIC CATEGORY SC-III.
6. A LATERAL FITTING IS TO BE USED AT THIS LOCATION TO ACCOMMODATE CLEANING OF PIPE AND EQUIPMENT.
7. PORTION OF HOP-RK-00048 IS LOCATED ON 24590-HLW-M6-HOP-20001.

8-11. DELETED

12. THIS LINE IS QUALITY LEVEL Q AND SEISMIC CATEGORY SC-III.
13. DELETED
14. CONTENTS OF THIS DOCUMENT ARE DANGEROUS WASTE PERMIT AFFECTING.

15-20. DELETED

5 21. REVISION 3: CHANGED PIPING MATERIAL CLASSIFICATION N13A TO N11E. REVISED NOTE 10, ADDED QUALITY LEVEL CM AND INCORPORATED DCN 24590-HLW-M6N-HOP-00051. CHANGED QL-2 TO CM AND ADDED QUALITY LEVELS AT THE VESSEL NOZZLES. CHANGED FLOORBOX TO JOGGLED PENETRATIONS. ADDED ROOT VALVES. CHANGED OFF SHEET CONNECTOR AND SYSTEM BREAK FROM PLANT SERVICE AIR TO INSTRUMENT SERVICE AIR. ADDED NOTE 20 FOR PIPE SLOPE. REVISED NOTE 15. CHANGED LINE SIZES FOR HOP-PW-00232-S11B-01, HOP-PW-00235-S11B-01, HOP-PW-00229-S11B-01, HOP-PW-00226-S11B-01, HOP-GQ-00171-S11B-01, HOP-GQ-00173-S11B-01, HOP-GQ-00169-S11B-01, HOP-GQ-00167-S11B-01 FROM 1" TO 1 1/2". REVISED NOTE 3. ADDED REDUCERS AS MARKED AT THE JPPs FOR PJMs. REVISED NOTE 11.

22. FLUSH CONNECTION PROVIDED FOR PLANT WASH/REAGENT/ AIR SERVICES.
23. PJM VESSELS AND RFD CHARGE VESSELS ARE QUALITY LEVEL CM AND SEISMIC CATEGORY SC-III.
24. ALL LINES ON THIS PIPING AND INSTRUMENTATION DIAGRAM SHALL BE FREE DRAINING, UNLESS OTHERWISE NOTED. PROVIDE VENTS AND DRAINS AS NEEDED. VENTS AND DRAINS SHALL BE DESIGNED PER 24590-WTP-3PB-P000-T0001.
25. THE PRESSURE BOUNDARY FOR ALL SYSTEMS, STRUCTURES AND COMPONENTS ON THIS DRAWING ARE QUALITY LEVEL CM AND SEISMIC CATEGORY SC-III, UNLESS OTHERWISE NOTED.
26. ALL PIPING WITH FLUID SERVICE PW IS AIR PERMIT AFFECTING.
27. REVISION 4: MAJOR REVISION. NO REVISION CLOUDS REQUIRED. REVISED TO INCORPORATE 24590-HLW-M6N-HOP-00108 AND 24590-HLW-M6N-M8OT-00002 AND -00004. REVISED, ADDED AND DELETED NOTES. MODIFIED QUALITY AND SEISMIC SYSTEM BREAK FLAGS. DELETED HOP-V-11144 ON DEMIN WATER HEADER. ADDED STRAINER AND FLUSH CONNECTION ON DIW AND ISA HEADERS. HOLD 1 DELETED. ADDED SLOPES TO PIPELINES. REMOVED PCV AND PI ON DIW HEADER AND REPLACED WITH DYNAMIC BALANCE GLOBE VALVE AND FLOW INDICATOR. RESEQUENCED JET PUMP PAIRS RELATIVE TO THE PULSE JET VENT LINES. MODIFIED FLUID CODE IN RACK FROM GQ TO GL. TAGGED LINES, VALVES AND STRAINERS IN RACK. ADDED PLANT WASH REAGENT HOSE CONNECTION. REMOVED BALL VALVES FROM DIW LINES. REMOVED PRESSURE CONTROL VALVE, PRESSURE INDICATOR, AND DRAIN LINE ON DEMIN WATER LINE. ADDED PRESSURE CONTROL VALVE AND PRESSURE INDICATOR TO INSTRUMENT SERVICES AIR HEADER. ADDED CONTROL VALVES TO ISA AND DEMIN WATER HEADER FOR C5 CONFINEMENT. SYSTEM REQUIRES DESIGN REVERIFICATION.
28. THE GEOMETRY OF JOGGLED (OFFSET) PENETRATIONS IS QUALITY LEVEL Q FOR RADIATION PROTECTION. THE QUALITY LEVEL AND SEISMIC CATEGORY DESIGNATIONS OF PIPING WITHIN JOGGLES ARE THE SAME AS CONNECTING PIPING.
5 29. REVISED TO INCORPORATE P-JOGGLES AND 24590-HLW-M6N-M8OT-00007. REVISED EQUIPMENT DESCRIPTIONS. DELETED QUALITY/SEISMIC FLAGS. REVISED LINE SIZES. ADDED CHECK VALVE HOP-V-11848 INSIDE RACK. ADDED/DELETED/REVISED NOTES AND HOLDS.

HOLD/OPEN ITEMS:

1-5. DELETED

6. SET PRESSURE WILL BE DETERMINED WHEN EJECTOR DATA IS RECEIVED FROM VENDOR.

5 7-8. DELETED

REFERENCES:

1. 24590-HLW-M5-V17T-20003, "PROCESS FLOW DIAGRAM, HLW VIT MELTER 2 PRIMARY OFFGAS TREATMENT" (SYSTEM HOP).
2. THE REQUIRED BATCH SEQUENCES, PERMISSIVES, INTERLOCKS, ALARMS AND OPERATOR INTERFACE POINTS ARE FULLY DESCRIBED IN THE SOFTWARE FUNCTIONAL SPECIFICATION FOR HOP MELTER OFFGAS TREATMENT PROCESS SYSTEM, 24590-HLW-3PS-HOP-T0001.

Please note that source, special nuclear, and byproduct materials, as defined in the Atomic Energy Act of 1954 (AEA) are regulated by the U.S. Department of Energy (DOE) facilities exclusively by DOE and not pursuant to its AEA authority. DOE asserts that pursuant to the AEA, it has exclusive regulatory authority to regulate source, special nuclear, and byproduct materials at DOE-owned nuclear facilities. Information contained herein on radionuclides is provided for process description purposes only.

REV	DESCRIPTION	ORG	CHKD	RVWD	APVD	DATE
5	REVISED PER NOTE 29	JR	APP	JP	JJ	7/7/06
4	REVISED PER NOTE 27	JR	APP	JP	JJ	7/7/06
3	REVISED PER NOTE 21	JR	SC	EI	TV	10/21/04
0	ISSUED FOR CONSTRUCTION	JM	SS	N/A	GMD	10/10/02

REVISION HISTORY

Q — QUALITY DESIGNATOR

ISSUED BY RPP-WTP-PDC

ISSUE STAMP

	BY	DATE
ORIGINATOR	JASON A. MEDINA	10-09-02
CHECKER	SID SOURANI	10-09-02
APPROVER	G.M. DUNCAN	10-10-02
REVIEWER	N/A	

PROJECT No.	24590
SITE	HANFORD
AREA	200E
BUILDING No.	30

CONTENT APPLICABLE TO ALARA? [X] YES [ ] NO
ADR NO. 24590-HLW-ADR-M-03-001 REV: 2

SAFETY SCREEN REQUIRED? [X] YES [ ] NO E&MS INITIAL IF YES

SAFETY SCREEN IS REQUIRED FOR DRAWING TYPES IDENTIFIED IN 24590-WTP-GPP-SREG-002

2

"E" SIZE - 44x34
COMPUTER GENERATED - MANUAL CHANGES NOT PERMITTED

BECHTEL

RIVER PROTECTION PROJECT
WASTE TREATMENT PLANT
2435 STEVENS CENTER PLACE
RICHLAND, WA 99354

CONTRACT No: DE-AC27-01RV14136

P&ID - HLW MELTER 2 OFFGAS FLUIDICS AIR RACK HOP-RK-00048

SCALE: NONE

24590-HLW-M6-HOP-20004

REV 5

R10743753

12/20/2006 07:01:17 AM

PLOTTED BY: ewesto
C:\Work\ims\38539-HLW\M6\HOP20004.dgn

FORM E_SDNDGN 02/2003

HOP-VSL-00904
MELTER 2
SBS CONDENSATE RECEIVER VESSEL
8199 GAL OP VOL
12FT 1.D. 7FT 9IN T TO T

HOP-EJCTR-00929A
HOP-VSL-00904
VESSEL EJECTOR
(STEAM EJECTOR)
44 CFM
2 IN

HOP-RFD-00003B
HOP-VSL-00904
REVERSE FLOW DIVERTER
(FLUIDIC PUMP)
80 GPM (PEAK)

HOP-RFD-00004A
HOP-VSL-00904
REVERSE FLOW DIVERTER
(FLUIDIC PUMP)
80 GPM (PEAK)

HOP-RFD-00004B
HOP-VSL-00904
REVERSE FLOW DIVERTER
(FLUIDIC PUMP)
80 GPM (PEAK)
-

HOP-EJCTR-00929B
HOP-VSL-00904
VESSEL EJECTOR
(STEAM EJECTOR)
44 CFM
2 IN

HOP-RFD-00003A
HOP-VSL-00904
REVERSE FLOW DIVERTER
(FLUIDIC PUMP)
80 GPM (PEAK)
-

HFP-RK-00002
SEE DRAWING 24590-HLW-M6-HFP-20004
VENDOR PACKAGE

S11C S11B

HOP-DB-00027-S11C-02 HOP-V-11684 N01 N02 N18 HOP-PJOG-00108
HOP-DB-00022-S11B-02 1:50 NOTE 22

HOP-DB-00028-S11B-02 HOP-V-11685 N01 N02 N17 HOP-PJOG-00109
HOP-DB-00021-S11B-02 1:50 NOTE 22

PIPE CHASE
SBS DRAIN COLLECTION CELL (BC)

WESP DRAIN/HOP-WESP-00002 HLW-M6-HOP-20002 A3 HOP-ZS-00100-N11K-06 1:50
HOP-HEME-00002B DRAIN HLW-M6-HOP-20009 D2 HOP-ZS-00101-N11K-02 1:50
HOP-HEME-00002A DRAIN HLW-M6-HOP-20009 D2 HOP-ZS-00102-N11K-02 1:50

PIPE CHASE
SBS DRAIN COLLECTION CELL (BC)

SBS CONDENSATE OVERFLOW HLW-M6-HOP-20001 C2 HOP-ZS-00089-N11E-06 1:50 1:20
PLANT WASH HLW-M6-PWD-20002 A5 HOP-ZE-00098-S11B-02 1:200
PLANT WASH HLW-M6-PWD-20002 A4 HOP-ZE-00099-S11B-02 1:200

TC 2113 TT 2113
LI 2110 LT 2110
TYPE 3
DI 2122 LI 2123 PI 2124
DT 2122 LT 2123 PT 2124
SPARE
HOP-V-11118 HOP-V-11119 HOP-V-11124
V-10248 V-10249 V-10250
001/2-B01 V-10215
SPARE THERMOWELL

OUT CELL
SBS DRAIN COLLECTION CELL (BC)
HOP-P-00C-00003 HOP-P-00C-00004 HOP-P-00C-00010 HOP-P-00C-00011 HOP-P-00C-00012 HOP-P-00C-00013 HOP-P-00C-00014 HOP-P-00C-00015 HOP-P-00C-00016 HOP-P-00C-00017 HOP-P-00C-00018 HOP-P-00C-00019
HOP-GR-00021-S11P-001/2 HOP-GR-00022-S11P-001/2 HOP-GR-00023-S11P-001/2 HOP-GR-00035-S11P-001/2 HOP-GR-00036-S11P-001/2 HOP-GR-00037-S11P-001/2
NOTE 14
HOP-ZT-00228-S11P-01 HOP-ZT-00229-S11P-01
HOP-ZG-00135-S11B-002/2 HOP-ZG-00136-S11B-002/2 HOP-ZG-00137-S11B-002/2 HOP-ZG-00175-S11I-002/2 HOP-ZG-00176-S11I-002/2 HOP-ZG-00177-S11I-002/2
HOP-PIW-00239-S11B-02 HOP-PIW-00240-S11B-02 HOP-PIW-00241-S11B-02 HOP-PIW-00242-S11B-02
LE 2604 LE 2110 LE 2136
MANWAY 24"
TE 2113
HOP-VSL-00904 NOTE 8
HOP-EJCTR-00929A HOP-EJCTR-00929B
NOTE 15
HOP-RFD-00003A HOP-RFD-00003B HOP-RFD-00004A HOP-RFD-00004B
N13 N42 N14 N44 N18 N84 N35 N34 N30 N37 N78 N37C N37A N05 N06 N04 N20 N02 N01 N19 N15 N43 N16 N03 N40 N07 N41 N27 N22 N23 N28 N08 N31 N38 N33 N17 N32 N39 N34 N21

SBS DRAIN COLLECTION CELL (BC) OUT CELL
1" SPARE 1" SPARE
N01 N02 HOP-P-00C-00100 N02 N01 HOP-P-00C-00101

SBS DRAIN COLLECTION CELL (BC) PIPE CHASE
SBS CONDENSATE PURGE/RLD-VSL-00007 HLW-M6-RLD-00001 C3 HOP-ZS-00117-N11E-02 1:50
SBS CONDENSATE PURGE/RLD-VSL-00007 HLW-M6-RLD-00001 C3 HOP-ZS-00118-N11E-02 1:50
VENT TO HOP-SCB-00002 HLW-M6-HOP-20001 E2 HOP-GV-00083 N11E-02 1:200
CONDENSATE RECYCLE TO HOP-SCB-00002 HLW-M6-HOP-20001 C2 HOP-ZS-00093-N11E-02 1:20
CONDENSATE RECYCLE TO HOP-SCB-00002 HLW-M6-HOP-20001 D2 HOP-ZS-00094-N11E-02 1:20
CONDENSATE RECYCLE TO HOP-SCB-00002 HLW-M6-HOP-20001 D2 HOP-ZS-00095-N11E-02 1:20
CONDENSATE RECYCLE TO HOP-SCB-00002 HLW-M6-HOP-20001 D2 HOP-ZS-00096-N11E-02 1:20

IN CAVE S11B | EMBEDDED S11B | OUT CAVE S11C
SET @ 36 PSIG PSV 2605
SET @ 36 PSIG PSV 2603
TO SBS SUMP 1:50 HOP-WS-01760-S11B-03
TO SBS SUMP 1:50 HOP-WS-01759-S11B-03
HOP-WS-01736-S11B-03 HOP-WS-01736-S11C-03
HOP-WS-01744-S11B-03 HOP-WS-01744-S11C-03
HOP-WS-01743-S11C-02
003/4-B01 (D) HOP-V-11661
003/4-B01 (D) HOP-V-11662
HFP-WBOX-00059 (BULKHEAD)
N16 N15 N53 N52
HOP-V-11665
FI 2135 FT 2135 TV 2113
PCW HOP
COOLING WATER SUPPLY HLW-M6-PCW-00001 F2
HOP-WS-01714-S11C-03 HOP-V-10909 2" FO HOP-V-10910
003/4-B01 (D) HOP-V-11132
PCW-WS-20087-S11C-03
003-B01
003-B02 HOP-V-10911
COOLING WATER RETURN HLW-M6-PCW-00004 E6
HOP-WS-01715-S11C-03 HOP-V-10912 V-11208
PCW-WS-20103-S11C-03
TI 2602 PI 2601
HOP-WS-01716-S11B-03 HOP-WS-01714-S11B-03 HOP-WS-01715-S11B-03
HFP-WBOX-00060 (BULKHEAD)
N508 N556 N511 N557
S11C S11B EMBEDDED IN CAVE NOTE 23 SBS DRAIN COLLECTION CELL (BC)
HOP-WS-01717-S11B-03 1:50 NOTE 3
003-B03 1:50 NOTE 3

NOTES:

1. SEE DRAWINGS 24590-WTP-M6-50-00001 THROUGH 24590-WTP-M6-50-00008 FOR GENERAL NOTES, SYMBOLS AND LEGEND, AND GENERAL SLOPE REQUIREMENTS.
2. DELETED
3. COOLING WATER SUPPLY AND RETURN PIPES TO SLOPE FROM WALLBOX LOCATED ABOVE PROCESS VESSEL.

4-7. DELETED

8. SEE 24590-HLW-M6-HOP-00004 FOR DETAILS ON PULSE JET MIXER AND CHARGE VESSELS.
9. CONTENTS OF THIS DRAWING ARE DANGEROUS WASTE PERMIT AFFECTING.

10-13. DELETED

14. RADAR GUIDE TUBE IS TO BE ROUTED TO TRANSMITTER. A FULL PORT BALL VALVE IS REQUIRED FOR ISOLATION PURPOSES AT TRANSMITTER END OF GUIDE TUBE.
15. EJECTORS AND RFD'S INSIDE VESSEL ARE QUALITY LEVEL CM AND SEISMIC CATEGORY SC-III.
16. DELETED
17. THE GEOMETRY OF JOGGLED (OFFSET) PENETRATIONS IS QUALITY LEVEL Q FOR RADIATION PROTECTION. THE QUALITY LEVEL AND SEISMIC CATEGORY DESIGNATIONS OF PIPING WITHIN JOGGLES ARE THE SAME AS CONNECTING PIPING. PIPING WITHIN SPARE JOGGLES IS QUALITY LEVEL Q AND SEISMIC CATEGORY SC-I.
18. REVISION 4: REVISED QUALITY LEVELS AND SEISMIC CATEGORIES AND OTHER CHANGES AS MARKED.
19. DELETED
20. REVISION 5: INCORPORATED 24590-HLW-M6N-HOP-00106, 00115, 00116, 24590-WTP-FCN-M-05-0005 AND 24590-HLW-M6N-M8OT-00002. REVISED NOTES. ADDED REFERENCES. SYSTEM REQUIRES REVERIFICATION.
21. INSTRUMENTS ARE QUALITY LEVEL CM UNLESS OTHERWISE NOTED OR ARE AIR PERMIT AFFECTING. INSTRUMENT, ROOT VALVE AND TUBING CONFINEMENT REQUIREMENTS ARE THE SAME AS THE CONNECTING PROCESS PIPE UNLESS NOTED OTHERWISE.
22. LINES REQUIRE 34 FT OF BAROMETRIC HEAD ABOVE THE TOP OF THE VESSEL. THE BAROMETRIC HEAD REQUIREMENT SHALL BE FULLY CONTAINED IN THE R5 AREA.
23. MAIN HEADER REQUIRES 34 FT OF BAROMETRIC HEAD ABOVE THE TOP OF VESSEL.
24. REVISED TO INCORPORATE 24590-HLW-M6N-M8OT-00004. INCORPORATED P-JOGGLES. REVISED QUALITY/SEISMIC FLAGS. ADDED/REVISED/DELETED NOTES AND REFERENCES. DELETED LT-2136, LI-2136.

HOLD/OPEN ITEMS:

1-3. DELETED

REFERENCES:

1. 24590-HLW-M5-V17T-20003, "PROCESS FLOW DIAGRAM, HLW VIT MELTER 2 PRIMARY OFFGAS TREATMENT" (SYSTEM HOP).
2. THE REQUIRED BATCH SEQUENCES, PERMISSIVES, INTERLOCKS, ALARMS AND OPERATOR INTERFACE POINTS ARE FULLY DESCRIBED IN SOFTWARE FUNCTIONAL SPECIFICATION FOR HLW MELTER OFFGAS TREATMENT PROCESS AND PROCESS VESSEL VENT EXHAUST (HOP & PVV) SYSTEMS, 24590-HLW-3PS-HOP-T0001.
3. DELETED
4. REFER TO ENGINEERING SPECIFICATION 24590-WTP-3PS-MV00-T0001 FOR VESSEL NOZZLE LOADS.

Please note that source, special nuclear, and byproduct materials as defined in the Atomic Energy Act of 1954, as amended (AEA) are regulated by the U.S. Department of Energy (DOE) in the DOE exclusively by DOE, acting pursuant to its AEA authority. The DOE, pursuant to its AEA authority, has sole and exclusive responsibility and authority to regulate source, special nuclear, and byproduct materials at DOE-owned nuclear facilities. Information contained herein on radionuclides is provided for process description purposes only.

REV	DESCRIPTION	ORG	CHKD	RVWD	APVD	DATE
6	REVISED PER NOTE 24	WR	ARV	SEK	MA	11/30/06
5	REVISED PER NOTE 20	JR	SJ	JP	JJ	3/2/06
4	REVISED PER NOTE 18	JR	SC	EI	SN	01/05/05
0	ISSUED FOR CONSTRUCTION	AC	RB	N/A	GMO	10/10/02

REVISION HISTORY

Q QUALITY DESIGNATOR

ISSUED BY RPP-WTP PDC ISSUE STAMP

PROJECT No.	24590	
SITE	HANFORD	
AREA	200E	
BUILDING No.	30	

	BY	DATE
ORIGINATOR	KEITH EBBERS	10/09/02
CHECKER	R BULLOCK	10/09/02
APPROVER	GM DUNCAN	10/10/02
REVIEWER	N/A	

CONTENT APPLICABLE TO ALARA? [X] YES [ ] NO
ADR NO. 24590-HLW-ADR-M-03-001 REV: 2
SAFETY SCREEN REQUIRED? [X] YES [ ] NO | EN'S INITIAL IF YES UM

SAFETY SCREEN IS REQUIRED FOR DRAWING TYPES IDENTIFIED IN 24590-WTP-GPP-SREQ-002

"E" SIZE - 44x34
COMPUTER GENERATED - MANUAL CHANGES NOT PERMITTED

BECHTEL

RIVER PROTECTION PROJECT
WASTE TREATMENT PLANT
2435 STEVENS CENTER PLACE
RICHLAND, WA 99354

CONTRACT No: DE-AC27-01RV14136

P&ID - HLW MELTER OFFGAS SYSTEM MELTER 2 PRIMARY OFFGAS SCRUBBER CONDENSATE VESSEL

SCALE: NONE

24590-HLW-M6-HOP-20006

REV 6

FORM E_SDNDGN 02/2003

PLOTTED BY: edarn
C:\Work\oms\3839\HLW\M6\HOP20006.dgn

11/29/2006 02:57:53 PM

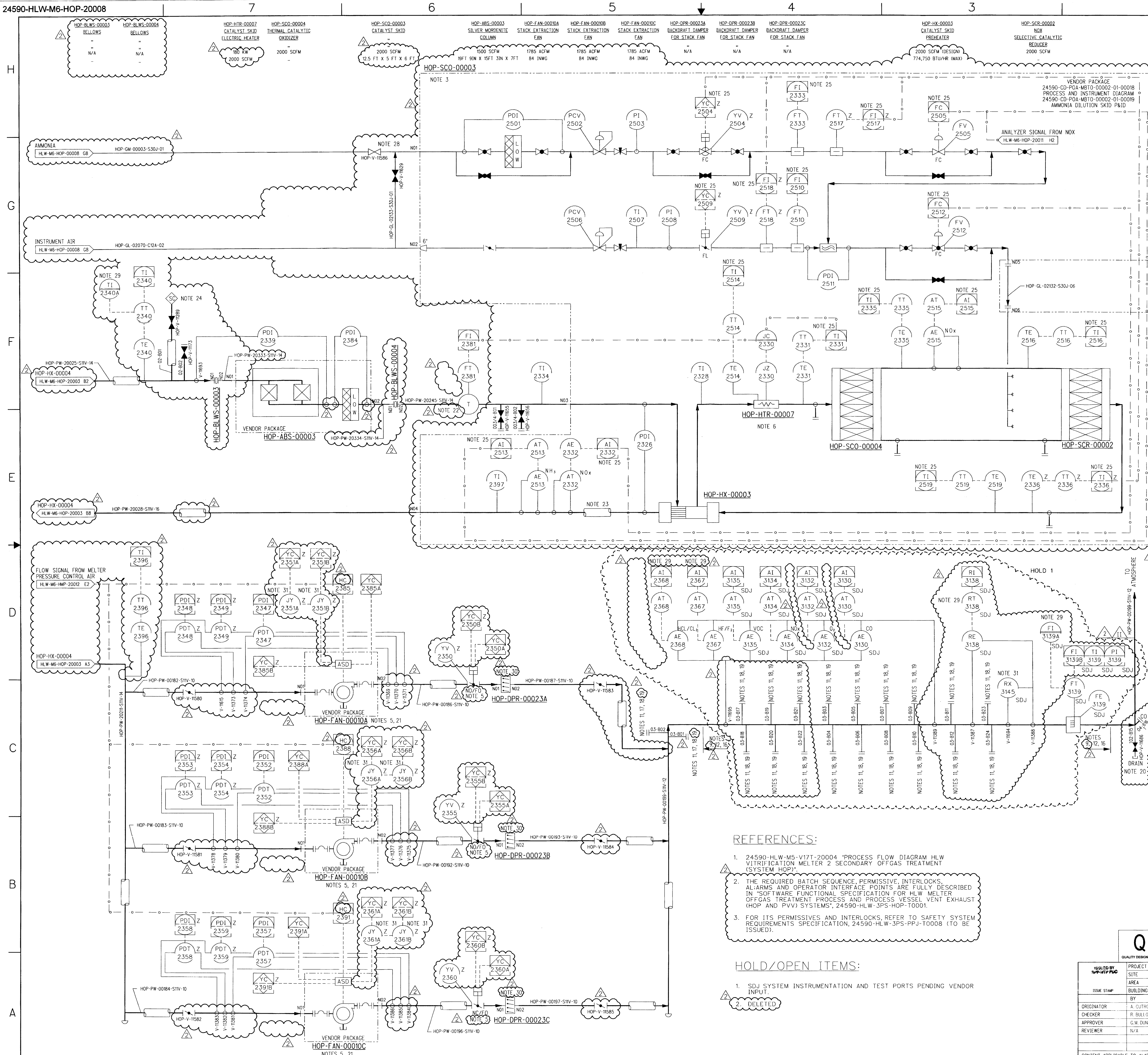

NOTES:

1. SEE DRAWINGS 24590-WTP-M6-50-00001 THROUGH 24590-WTP-M6-50-00006 FOR GENERAL NOTES, SYMBOLS AND LEGEND.
2. DELETED
3. CATALYTIC OXIDIZER SKID (HOP-SCO-00003) HOUSES THE PREHEATER (HOP-HX-00003), ELECTRIC HEATER (HOP-HTR-00007), NOX SELECTIVE CATALYTIC REDUCER (HOP-SCR-00002) AND THE THERMAL CATALYTIC OXIDIZER (HOP-SCO-00004).
4. DELETED
5. FAN-00010A/B/C ARE 50% CAPACITY EACH, AND WILL BE OPERATED ON A ROTATING BASIS, 2 OPERATING AND 1 IN STAND-BY. THE ACTUATED DISCHARGE DAMPER FOR THE FAN IN STAND-BY WILL BE NORMALLY CLOSED.
6. HEATER UNIT SHALL BE EQUIPPED WITH OVER-TEMPERATURE PROTECTION (SUPPLIED BY VENDOR).
7. RADIATION MONITORS SHALL BE PROVIDED TO MONITOR ALPHA/BETA. RECORD SAMPLER FOR RETROSPECTIVE ANALYSIS SHALL BE PROVIDED.
8. RECORD SAMPLER.
9. ANALYZERS FOR CO, O2, NOX AND VOC ARE PROVIDED FOR AIR AND DANGEROUS WASTE PERMITS MONITORING. ANALYZERS FOR HF, HCL, F2, AND CL2 ARE PROVIDED FOR PROCESS INDICATION. THE VOC AND NOX ANALYZERS ALSO PROVIDE PROCESS INDICATION.
10. DELETED
11. TEST PORT PAIRS PLACED AT 90° ORIENTATION TO EACH OTHER.
12. THE 3000 SERIES INSTRUMENTS ARE SDJ SYSTEM, AND THE 2300 SERIES INSTRUMENTS AND PIPE REMAIN HOP SYSTEM. THE 3000 (SDJ) INSTRUMENTS ARE AIR PERMIT AFFECTING.
13. ALL EQUIPMENT, PIPING, AND PIPING COMPONENTS, ON THIS DRAWING ARE QUALITY LEVEL QL-2 AND SEISMIC CATEGORY SC-III, UNLESS NOTED OTHERWISE.
14. CONTENTS OF THIS DOCUMENT ARE DANGEROUS WASTE PERMIT AFFECTING.
15. INSTRUMENTS ARE COMMERCIAL GRADE CM UNLESS DESIGNATED BY A "Z" OR AIR PERMIT AFFECTING. INSTRUMENT, ROOT VALVE AND TUBING CONFINEMENT REQUIREMENTS ARE THE SAME AS THE CONNECTING PROCESS PIPE UNLESS NOTED OTHERWISE.
16. REQUIRED RUN OF STRAIGHT PIPE FOR THE SDJ SYSTEM TEST AND INSTRUMENT TAPS (REF LINE HOP-PW-00199-S11V-12):
    * LAST BEND TO 03-B03/B04 = 10D.
    * 03-B03/B04 TO 03-B05/B06 = 8D.
    * 03-B05/B06 TO 03-B07/B08 = 2D.
    * 03-B07/B08 TO 03-B09/B10 = 2D.
    * 03-B09/B10 TO UPSTREAM AE TAP - 2D.
    * AE TAP TO RE TAP = 8D.
    * 03-B11/B12 TO UPSTREAM RE TAP = 2 FT.
    * UPSTREAM RE TAP TO FE-3139 = 8D.
    * 03-B13/B14 TO FE-3139 = 4 IN.
17. ALLOW 1 DIA+36" IN CLEARANCE FROM TEST PORTS OUTWARD FOR PROBE INSERTION AND EXTRACTION.
18. INSTALL BLIND FLANGE AS CLOSE AS POSSIBLE TO MAIN LINE.
19. LOCATE INJECTION PORT AFTER STACK FANS AND BEFORE LAST BEND TO SDJ SAMPLE PORTS (NO MINIMUM STRAIGHT PIPE FROM INJECTION PORT TO LAST BEND REQUIRED).
20. LOCATE STACK DRAIN AT HEIGHT TO ALLOW PLACEMENT OF 55 GAL DRUM ON TROLLY UNDERNEATH.
21. HOP FANS ARE TO BE FED BY EMERGENCY DIESEL GENERATOR (EDG) ON LOSS OF OFFSITE POWER.
22. FLOW METER TO BE INSTALLED A MINIMUM OF TEN (10) PIPE DIAMETERS(ID) FROM UPSTEAM FLOW DISTURBANCE AND FIVE (5) PIPE DIAMETERS (ID) FROM DOWNSTREAM DISTURBANCES. VENDOR PROVIDED AND INSTALLED INSTRUMENTS LOCATED OUTSIDE OF VENDOR PACKAGE.
23. VENDOR SHALL INCLUDE A LENGTH OF 54" SECTION OF STRAIGHT PIPE ON DISCHARGE.
24. LOCATE CHALLENGE GAS INJECTION PORT AT A MINIMUM OF 10 PIPE DIAMETERS, INCLUDING ELBOWS, UPSTREAM OF THE INLET OF THE SILVER MORDENITE COLUMN.
25. SOFTWARE IS BUYER SCOPE OF SUPPLY BASED ON VENDOR CONTROL LOGIC.
26. REVISION 1: ISSUED FOR DRN, INCLUDE MELTER 2 SCOPE PER 24590-HLW-DCA-PR-02-021. INCORPORATED CHANGES PER 24590-HLW-DCA-PR-03-003. UPDATED HEATER CONTROL & SDJ SYSTEM PER UPDATED SIPD REQUIREMENT. DEFINED FAN VENDOR PACKAGE.
27. INCORPORATED 24590-HLW-M6N-HOP-00004, 37, 47, 77, 85, 109, 24590-WTP-SDDR-PROC-04-00882, ADDED AP CLASSIFICATION. ADDED ISA TO CATALYST SKID. ADDED NOTES, UPDATED INSTRUMENTATION AND ADDED VENDOR DETAILS TO CATALYST SKID. RELEASED HOLD 2. ADDED REFERENCES. DELETED NOTES 2, 4, AND 10. SYSTEM REQUIRES REVERIFICATION.
28. VALVE SHALL BE ACCESSIBLE TO THE OPERATOR.
29. INSTRUMENT PERFORMS AN AIR PERMIT FUNCTION.
30. THIS IS A LOUVER DAMPER SYMBOL.
31. ISOLATING CONTACTOR (JY) PROVIDES ITS INTERRUPTION OF 480V POWER TO ADJUSTABLE SPEED DRIVE.

REFERENCES:

1. 24590-HLW-M5-V17T-20004 "PROCESS FLOW DIAGRAM HLW VITRIFICATION MELTER 2 SECONDARY OFFGAS TREATMENT (SYSTEM HOP)".
2. THE REQUIRED BATCH SEQUENCE, PERMISSIVE, INTERLOCKS, AL;ARMS AND OPERATOR INTERFACE POINTS ARE FULLY DESCRIBED IN "SOFTWARE FUNCTIONAL SPECIFICATION FOR HLW MELTER OFFGAS TREATMENT PROCESS AND PROCESS VESSEL VENT EXHAUST (HOP AND PVV) SYSTEMS", 24590-HLW-3PS-HOP-T0001.
3. FOR ITS PERMISSIVES AND INTERLOCKS, REFER TO SAFETY SYSTEM REQUIREMENTS SPECIFICATION, 24590-HLW-3PS-PPJ-T0008 (TO BE ISSUED).

HOLD/OPEN ITEMS:

1. SDJ SYSTEM INSTRUMENTATION AND TEST PORTS PENDING VENDOR INPUT.
2. DELETED

Please note that source, special nuclear, and byproduct materials, as defined in the Atomic Energy Act of 1954 (AEA) are regulated at the U. S. Department of Energy (DOE) facilities exclusively by DOE acting pursuant to its AEA authority. DOE asserts that pursuant to AEA, it has sole and exclusive responsibility and authority to regulate source, special nuclear, and byproduct materials at DOE-owned nuclear facilities. Information contained herein on radionuclides is provided for process description purposes only.

Q
QUALITY DESIGNATOR

REV	DESCRIPTION	ORG	CHKD	RVWD	APVD	DATE
2	REVISED PER NOTE 27	[signature]	APP	CER [initials]	[initials]	3/2/06
1	REVISED PER NOTE 26	AC	RB	DMY	TV	11-11-03
0	ISSUED FOR CONSTRUCTION	AC	RB	N/A	GMD	10-10-02

REVISION HISTORY

ISSUED BY RPP-WTP PDC
ISSUE STAMP

PROJECT No.	24590
SITE	HANFORD
AREA	200E
BUILDING No.	30

	BY	DATE
ORIGINATOR	A. CUTRONA	10-09-02
CHECKER	R. BULLOCK	10-09-02
APPROVER	G.M. DUNCAN	10-10-02
REVIEWER	N/A	

CONTENT APPLICABLE TO ALARA? [X] YES [ ] NO
ADR NO. 24590-HLW-ADR-M-03-001 REV: 1
SAFETY SCREEN REQUIRED? [X] YES [ ] NO E&NS INITIAL IF YES CM

RIVER PROTECTION PROJECT
WASTE TREATMENT PLANT
2435 STEVENS CENTER PLACE
RICHLAND, WA 99354

CONTRACT No: DE-AC27-01RV14136

P&ID - HLW MELTER OFFGAS SYSTEM MELTER 2 SECONDARY OFFGAS TREATMENT SHEET 2 OF 3

SCALE: NONE
24590-HLW-M6-HOP-20008
REV 2

HOP-HEME-00002A
MELTER 2
HIGH EFFICIENCY
MIST ELIMINATOR (HEME)
2000 SCFM (MAX)
66 IN D X 146 IN H

HOP-HEME-00002B
MELTER 2
HIGH EFFICIENCY
MIST ELIMINATOR (HEME)
2000 SCFM (MAX)
66 IN D X 146 IN H

HOP-WBOX-00076
(WALL MODULE)

HOP-HEME-00002A
NOTES 3, 4

HOP-HEME-00002B
NOTES 3, 4

NOTES:

1. SEE DRAWINGS 24590-WTP-M6-50-00001 THROUGH 24590-WTP-M6-50-00008 FOR GENERAL NOTES, SYMBOLS AND LEGEND, AND GENERAL SLOPE REQUIREMENTS.
2. DELETED
3. EACH HEME (HOP-HEME-00002A/B) CONTAINS FIVE (5) MULTI-SECTION FILTER ASSEMBLIES DESIGNED FOR REMOTE REPLACEMENT
4. REFER TO ENGINEERING SPECIFICATION 24590-WTP-3PS-MV00-T0001 FOR VESSEL NOZZLE LOADS WITH THE EXCEPTION OF NOZZLES N01 AND N02 AS DESCRIBED IN 24590-WTP-SDDR-PROC-05-00235.
5. DELETED
6. DELETED
7. FOR ELECTRIC AND INSTRUMENTATION JUMPERS REFER TO 24590-HLW-J1-HOP-00007 AND 24590-HLW-M6-ISA-00008.
8. CONTENTS OF THIS DRAWING ARE DANGEROUS WASTE PERMIT AFFECTING.
9. DELETED
10. DELETED
11. DELETED
12. REVISION 4: REVISED QUALITY LEVELS AND SEISMIC CATEGORIES AND OTHER CHANGES AS MARKED.
13. DELETED
14. DELETED
15. PIPING IN THE TRANSFER TUNNEL WILL HAVE WELDED CONNECTIONS ONLY.
16. INSTRUMENT PERFORMS AN AIR PERMIT FUNCTION.
17. DRIP PAN PROVIDED BELOW DRAIN LINES FOR SECONDARY CONTAINMENT.
18. THIS LINE/SECTION IS ONLY TO SUPPLY CIS INFORMATION FOR THE VALVE.
19. REVISION 5: INCORPORATED 24590-HLW-M6N-HOP-00101 (NO. 1 IS SUPERCEDED), 00113, AND 24590-HLW-M6N-M8OT-00002. DELETED NOTES 2, 6, 9, AND 14. REVISED NOTES, ADDED NOTES 18, 19, AND REFERENCE NOTE 2. REVISED QUALITY LEVELS AND SEISMIC CATEGORIES. SYSTEM REQUIRES REVERIFICATION.
20. INSTRUMENTS ARE QUALITY LEVEL CM UNLESS OTHERWISE NOTED OR ARE AIR PERMIT AFFECTING. INSTRUMENT, ROOT VALVE AND TUBING CONFINEMENT REQUIREMENTS ARE THE SAME AS THE CONNECTING PROCESS PIPE UNLESS NOTED OTHERWISE.
21. THE GEOMETRY OF JOGGLED (OFFET) PENETRATIONS IS QUALITY LEVEL Q FOR RADIATION PROTECTION. THE QUALITY LEVEL AND SEISMIC CATEGORY DESIGNATIONS OF PIPING WITHIN JOGGLES ARE THE SAME AS CONNECTING PIPING.
22. PIPING REFERENCED TO THIS NOTE SHALL BE QUALITY LEVEL CM AND SEISMIC CATEGORY SC-III.
23. REVISED TO INCORPORATE 24590-HLW-M6N-M8OT-00004, 24590-HLW-M6N-M8OT-00007, AND P-JOGGLES. REVISED HOLD 6 TO HOLD 3. CHANGED HOP-JMPP-00073 TO HOP-JMPP-00145. ADDED/DELETED/REVISED NOTES, HOLDS, SLOPES, QUALITY/SEISMIC FLAGS AND ADDED BUTTERFLY VALVES NORMAL POSITION.

HOLD/OPEN ITEMS:

1-3. DELETED

REFERENCES:

1. 24590-HLW-M5-V17T-20003 "PROCESS FLOW DIAGRAM, HLW VIT MELTER 2 PRIMARY OFFGAS TREATMENT" (SYSTEM HOP).
2. THE REQUIRED BATCH SEQUENCES, PERMISSIVES, INTERLOCKS, ALARMS AND OPERATOR INTERFACE POINTS ARE FULLY DESCRIBED IN "SOFTWARE FUNCTIONAL SPECIFICATION FOR HLW MELTER OFFGAS TREATMENT PROCESS SYSTEM AND PROCESS VESSEL VENT EXHAUST (HOP AND PVV) SYSTEMS", 24590-HLW-3PS-HOP-T0001.

Please note that source, special nuclear, and byproduct materials, as defined in the Atomic Energy Act of 1954 (AEA) are regulated at the U. S. Department of Energy (DOE) facilities exclusively by DOE pursuant to the AEA authority. DOE asserts that pursuant to AEA, it is sole and exclusive responsibility and authority to regulate source, special nuclear, and byproduct materials at DOE-owned nuclear facilities. Information contained hereon on radionuclides is provided for process description purposes only.

REV	DESCRIPTION	ORG	CHKD	RVWD	APVD	DATE
6	REVISED PER NOTE 23		APP	CEX SPK	CGH	1/19/07
5	REVISED PER NOTE 19	JR	AAP	JP	JJ	3/2/06
4	REVISED PER NOTE 12	REP	SC	EI	SN	1/5/05
0	ISSUED FOR CONSTRUCTION	KE	RB	N/A	GD	10/10/02

REVISION HISTORY

Q — QUALITY DESIGNATOR

ISSUED BY RPP-WTP PDC — ISSUE STAMP

PROJECT No.	24590
SITE	HANFORD
AREA	200E
BUILDING No.	30

	BY	DATE
ORIGINATOR	KEITH EBBERS	10/09/02
CHECKER	R. BULLOCK	10/09/02
APPROVER	GARTH DUNCAN	10/09/02
REVIEWER	N/A	

CONTENT APPLICABLE TO ALARA? [X] YES [ ] NO
ADR NO. 24590-HLW-ADR-M-03-001 REV: 2
SAFETY SCREEN REQUIRED? [X] YES [ ] NO EMS INITIAL IF YES

SAFETY SCREEN IS REQUIRED FOR DRAWING TYPES IDENTIFIED IN 24590-WTP-GPP-SREG-002

"E" SIZE - 44x34
COMPUTER GENERATED - MANUAL CHANGES NOT PERMITTED

RIVER PROTECTION PROJECT
WASTE TREATMENT PLANT
2435 STEVENS CENTER PLACE
RICHLAND, WA 99354

CONTRACT No: DE-AC27-01RV14136

P&ID - HLW
MELTER OFFGAS SYSTEM
MELTER 2
PRIMARY OFFGAS HEME

SCALE: NONE

24590-HLW-M6-HOP-20009

REV 6

R10745878

01/03/2007 12:42:49 PM

PLOTTED BY: wmshonkey
C:\Work Files\24590\HLW\M6\HOP20009.dgn

FORM E_SDN.DGN 02/2003

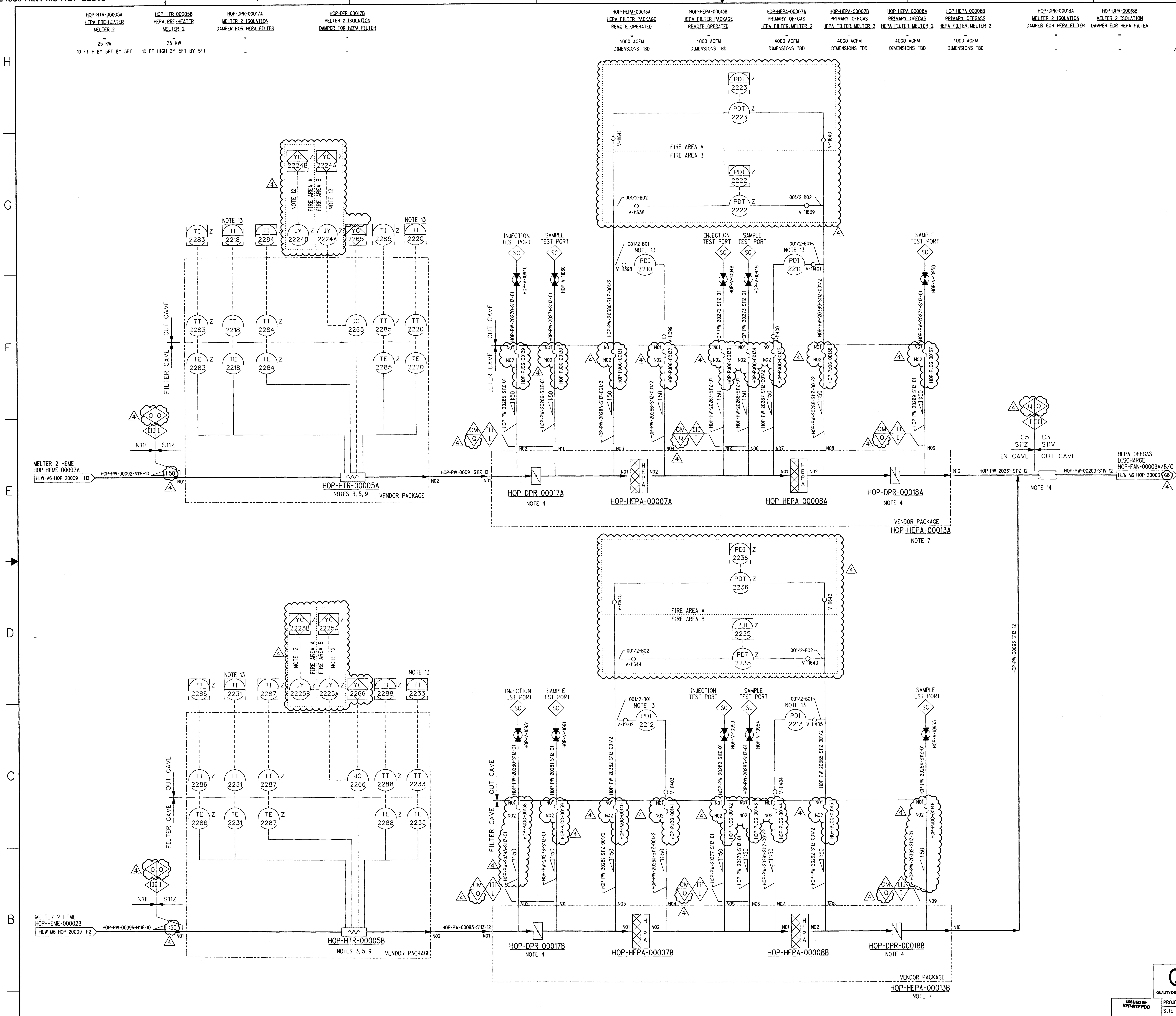

NOTES:

1. SEE DRAWINGS 24590-WTP-M6-50-00001 THROUGH 24590-WTP-M6-50-00008 FOR GENERAL NOTES, SYMBOLS AND LEGEND AND GENERAL SLOPE REQUIREMENTS.
2. DELETED
3. HEPA PRE-HEATERS (HOP-HTR-00005A/B) ARE MULTI-ELEMENT UNITS WITH STANDBY ELEMENTS. THE HEATER ASSEMBLY IS INSET IN THE FILTER CAVE WALL AND THE TEMPERATURE ELEMENTS AND HEATER CONTROLLER PENETRATE THROUGH A STEEL SHIELDING PLATE. HEATER UNIT SHALL BE EQUIPPED WITH OVER-TEMPERATURE PROTECTION (SUPPLIED BY VENDOR).
4. DAMPERS ARE REMOTE MANUAL MANIPULATOR ACTUATED.
5. HEPA PRE-HEATER IN-CAST LINER, MOUNTING FRAME, R5/C5 TO R2/C2 RADIATION SHIELDING ARE PART OF THE FILTER CAVE C5 CELL CONFINEMENT BOUNDARY. THESE PRE-HEATER COMPONENTS ARE DESIGNATED QUALITY LEVEL Q AND SEISMIC CATEGORY SC-I.
6. CONTENTS OF THIS DOCUMENT ARE DANGEROUS WASTE PERMIT AFFECTING.
7. VENDOR PACKAGE INCLUDES THE HEPA FILTER HOUSING, ISOLATION DAMPERS, TEST PORT CONNECTION POINTS, AND INTERCONNECTING PIPING. THE PACKAGE IS IDENTIFIED BY THE HEPA HOUSING COMPONENT ID NUMBERS FOR PROCUREMENT AND MEETS ASME AG-1 REQUIREMENTS.
8. DELETED
9. ON LOSS OF OFFSITE POWER, THE PRE-HEATER CONTROLLER WILL HOLD TO LAST SETPOINT VALUE. PRE-HEATER WILL BE FED FROM THE EMERGENCY DIESEL GENERATOR (EDG).
10. REVISION 2: CHANGES INCLUDE: DELETED HOLD 2 AND UPDATED INFORMATION ON PRE-HEATERS.
11. REVISION 3: INCORPORATED 24590-HLW-M6N-HOP-00055 AND REVISED QUALITY/SEISMIC FLAGS. ADDED ITS TEMPERATURE INSTRUMENT. REVISED, DELETED, ADDED NOTES, AND ADDED REFERENCES 2 AND 3. DELETED HOLD 1. SYSTEM REQUIRES REVERIFICATION.
12. ISOLATING CONTACTOR (JY) PROVIDES ITS INTERRUPTION OF THE 480V POWER TO THE HEPA PREHEATER.
13. INSTRUMENT PERFORMS AN AIR PERMIT FUNCTION.
14. SEAL PIPE PENETRATION IN CAVE WALL TO MINIMIZE AIRFLOW FROM C3 TO C5 AREA.
15. INSTRUMENTS ARE QUALITY LEVEL Q UNLESS OTHERWISE NOTED OR ARE AIR PERMIT AFFECTING. INSTRUMENT, ROOT VALVE AND TUBING CONFINEMENT REQUIREMENTS ARE THE SAME AS THE CONNECTING PROCESS PIPE UNLESS NOTED OTHERWISE.
16. THE GEOMETRY OF JOGGLED (OFFSET) PENETRATIONS IS QUALITY LEVEL Q FOR RADIATION PROTECTION. THE QUALITY LEVEL AND SEISMIC CATEGORY DESIGNATIONS OF PIPING WITHIN JOGGLES ARE THE SAME AS CONNECTING PIPING.
17. REVISED TO INCORPORATE 24590-HLW-M6N-M80T-00004 AND -00007. INCORPORATED P-JOGGLES. REVISED QUALITY/SEISMIC FLAGS. ADDED FIRE AREAS. REVISED SLOPE. ADDED/REVISED NOTES AND HOLDS.

HOLD/OPEN ITEMS:

1. DELETED
2. DELETED
3. DELETED

REFERENCES:

1. 24590-HLW-M5-V17T-20003 "PROCESS FLOW DIAGRAM, HLW VIT MELTER 2 PRIMARY OFFGAS TREATMENT" (SYSTEM HOP).
2. THE REQUIRED BATCH SEQUENCES, PERMISSIVES, INTERLOCKS, ALARMS AND OPERATOR INTERFACE POINTS ARE FULLY DESCRIBED IN THE SOFTWARE FUNCTIONAL SPECIFICATION FOR HLW MELTER OFFGAS TREATMENT PROCESS AND PROCESS VESSEL VENT EXHAUST (HOP AND PVV) SYSTEMS, 24590-HLW-3PS-HOP-T0001
3. FOR ITS PERMISSIVES AND INTERLOCKS, REFER TO SAFETY SYSTEM REQUIREMENTS SPECIFICATIONS, 24590-HLW-3PS-PPJ-T0008 (TO BE ISSUED).

Please note that source, special nuclear, and byproduct materials, as defined in the Atomic Energy Act of 1954 (AEA) are regulated at the U. S. Department of Energy (DOE) facilities exclusively by DOE acting pursuant to its AEA authority. DOE asserts that pursuant to AEA, it has sole and exclusive responsibility and authority to regulate source, special nuclear, and byproduct materials at DOE-owned nuclear facilities. Information contained herein on radionuclides is provided for process description purposes only.

REVISION HISTORY

REV	DESCRIPTION	ORG	CHKD	RVWD	APVD	DATE
4	REVISED PER NOTE 17	JR	APP	CER SPK	JJ CGM	12/22/06
3	REVISED PER NOTE 11	JR	APP	JJ	JP	3/2/06
2	REVISED PER NOTE 10	JM	DMY	MLW	TV	11-18-03
0	ISSUED FOR CONSTRUCTION	KE	RB	N/A	GD	10/10/02

Q
QUALITY DESIGNATOR

ISSUED BY RPP-WTP PDC
ISSUE STAMP

PROJECT No.	24590
SITE	HANFORD
AREA	200E
BUILDING No.	30

RIVER PROTECTION PROJECT
WASTE TREATMENT PLANT
2435 STEVENS CENTER PLACE
RICHLAND, WA 99354

CONTRACT No: DE-AC27-01RV14136

	BY	DATE
ORIGINATOR	KEITH EBBERS	10/09/02
CHECKER	R. BULLOCK	10/09/02
APPROVER	G. M. DUNCAN	10/10/02
REVIEWER	N/A	

P&ID - HLW MELTER OFFGAS SYSTEM MELTER 2 PRIMARY OFFGAS HEPA FILTERS

CONTENT APPLICABLE TO ALARA? [X] YES [ ] NO
ADR NO. 24590-HLW-ADR-M-03-001 REV: 2
SAFETY SCREEN REQUIRED? [X] YES [ ] NO E&NS INITIAL IF YES CM

SCALE: NONE
24590-HLW-M6-HOP-20010
REV 4

SAFETY SCREEN IS REQUIRED FOR DRAWING TYPES IDENTIFIED IN 24590-WTP-GPP-SREG-002

'E' SIZE - 44x34
COMPUTER GENERATED - MANUAL CHANGES NOT PERMITTED

R10743340
12/19/2006 11:11:35 AM

PLOTTED BY: wmahoney
C:\Work\dms03839\HLWM6HOP20010.dgn

FORM E_SDN.DGN 02/2003

HOP-ADBR-00002 ACTIVATED CARBON ADSORBER SKID = 2000 SCFM 25FT L X 11FT W X 31FT H

HOP-ADBR-00002A ACTIVATED CARBON ADSORBER = 2000 SCFM 12FT L X 10FT W X 13FT H

HOP-ADBR-00002B ACTIVATED CARBON ADSORBER = 2000 SCFM 12FT L X 10FT W X 13FT H

ANALYZER SIGNAL TO FLOW CONTROL VALVE HLW-M6-HOP-20008 G3

FIRE PROTECTION WATER HLW-M5-FPW-00002 C8 FPW-WF-34009-C12E-02

FIRE PROTECTION WATER HLW-M5-FPW-00002 C8 FPW-WF-34010-C12E-02

HOP-ADBR-00002

HOP-ADBR-00002A

HOP-ADBR-00002B

VENDOR PACKAGE NOTES 2, 5 24590-QL-POA-MWKO-00001-05-00004, PIPING & INSTRUMENTATION DRAWING SCHEMATIC

HOP FAN 00009A/B/C HLW-M6-HOP-20003 D2 HOP-PW-20259-S11V-14

HOP-PW-20247-S11V-14 HLW-M6-HOP-20003 B8 HOP-HX-00004

HOP-PW-20262-S11V-14

SET @ 5 PSIG

FIRE WATER DRAIN

NOTES:

1. SEE DRAWINGS 24590-WTP-M6-50-00001 THROUGH 24590-WTP-M6-50-00006 FOR GENERAL NOTES, SYMBOLS AND LEGEND.
2. HOP-ADBR-00002 CONSISTS OF TWO 100% CAPACITY, SULFUR IMPREGNATED ACTIVATED CARBON UNITS NORMALLY OPERATED IN SERIES. EACH UNIT CAN BE OPERATED INDEPENDENTLY TO FACILITATE CARBON REPLACEMENT DURING MELTER OPERATION. EACH CARBON BED WILL BE EQUIPPED WITH 3 FILL AND 2 WITHDRAWAL PORTS.
3. ALL EQUIPMENT, PIPING AND PIPING COMPONENTS ON THIS DRAWING ARE QUALITY LEVEL QL-2 AND SEISMIC CATEGORY SC-III, UNLESS NOTED OTHERWISE.
4. CONTENTS OF THIS DOCUMENT ARE DANGEROUS WASTE PERMIT AFFECTING.
5. SOFTWARE IS BUYER SCOPE OF SUPPLY BASED ON VENDOR CONTROL LOGIC.
6. VALVE WILL HAVE METAL TO METAL SEATS AND A MINIMUM LEAK TIGHTNESS CLASSIFICATION OF CLASS IV.
7. INSTRUMENTS ARE COMMERCIAL GRADE CM UNLESS DESIGNATED BY A "Z" OR ARE AIR PERMIT AFFECTING. INSTRUMENT, ROOT VALVE AND TUBING CONFINEMENT REQUIREMENTS ARE THE SAME AS THE CONNECTING PROCESS PIPE UNLESS NOTED OTHERWISE.
8. ALTERNATING SAMPLING BY ALIGNMENT OF YV2814 OR YV2819.
9. SYSTEM REQUIRES REVERIFICATION.

HOLD/OPEN ITEMS:

NONE

REFERENCES:

1. 24590-HLW-M5-V17T-20004 "PROCESS FLOW DIAGRAM HLW VITRIFICATION MELTER 2 SECONDARY OFFGAS TREATMENT (SYSTEM HOP)".
2. THE REQUIRED BATCH SEQUENCES, PERMISSIVES, INTERLOCKS, ALARM AND OPERATOR INTERFACE POINTS ARE FULLY DESCRIBED IN "SOFTWARE FUNCTIONAL SPECIFICATION FOR HLW MELTER OFFGAS TREATMENT PROCESS AND PROCESS VESSEL VENT EXHAUST (HOP AND PVV) SYSTEMS," 24590-HLW-3PS-HOP-T0001.
3. FOR ITS PERMISSIVES AND INTERLOCKS, REFER TO SAFETY SYSTEM REQUIREMENTS SPECIFICATION, 24590-HLW-3PS-PPJ-T0008 (TO BE ISSUED).

Please note that source, special nuclear, and byproduct materials, as defined in the Atomic Energy Act of 1954, as amended, at the U. S. Department of Energy (DOE) facilities exclusively by DOE, acting pursuant to its AEA authority. DOE asserts that it has sole AEA authority to require and enclosure responsibility and authority to regulate source, special nuclear, and byproduct materials at DOE-owned nuclear facilities. Any reference herein on radionuclides is provided for process description purposes only.

REV	DESCRIPTION	ORG	CHKD	RVWD	APVD	DATE
0	ISSUED FOR CONSTRUCTION AND SEE NOTE 9					3/2/06

Q QUALITY DESIGNATOR

REVISION HISTORY

ISSUED BY RPP-WTP PMO		
	PROJECT No.	24590
	SITE	HANFORD
	AREA	200E
ISSUE STAMP	BUILDING No.	30

	BY	DATE
ORIGINATOR	John Rouse	3/2/06
CHECKER	Pat Pinto	3/2/06
APPROVER		3/2/06
REVIEWER	Jeff Powell	3/2/06
	Cabrina Rasby	3/2/06

CONTENT APPLICABLE TO ALARA? [X] YES [ ] NO
ADR NO. 24590-HLW-ADR-M-03-001 REV: 1
SAFETY SCREEN REQUIRED? [X] YES [ ] NO EMS INITIAL IF YES

SAFETY SCREEN IS REQUIRED FOR DRAWING TYPES IDENTIFIED IN 24590-WTP-GPP-SREG-002

BECHTEL

RIVER PROTECTION PROJECT
WASTE TREATMENT PLANT
2435 STEVENS CENTER PLACE
RICHLAND, WA 99354

CONTRACT No: DE-AC27-01RV14136

P&ID - HLW MELTER OFFGAS SYSTEM MELTER 2 SECONDARY OFFGAS TREATMENT SHEET 3 OF 3

SCALE	24590-HLW-M6-HOP-20011	REV
NONE		0

E-SIZE - 44x34 COMPUTER GENERATED - MANUAL CHANGES NOT PERMITTED

R10514865

03/02/2006 07:27:47 AM

PLOTTED BY: tdaynes
C:\Work\dms03535\HLW\M6\HOP20011.dgn

FORM E_SDN.DGN 02/2003

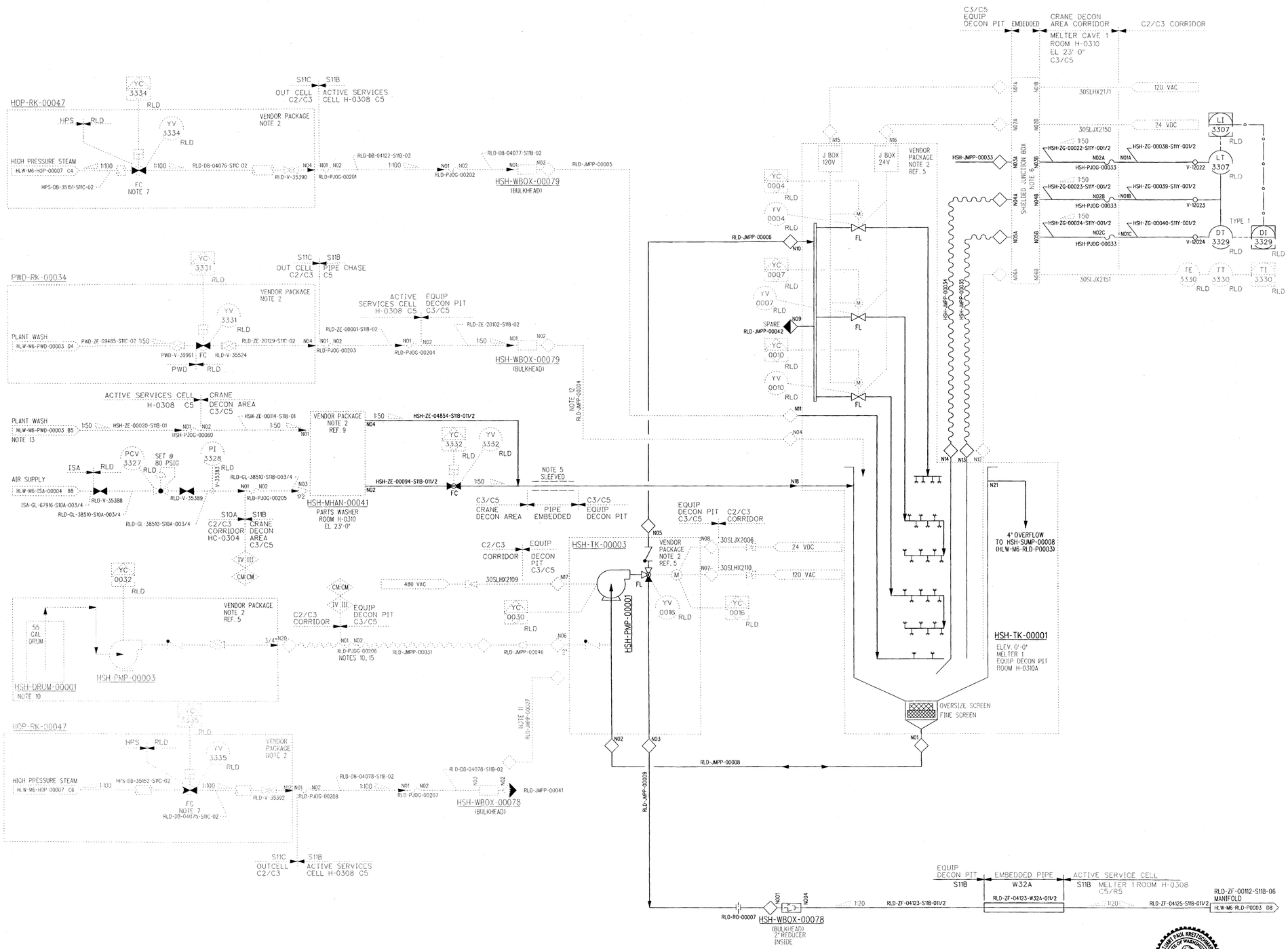

NOTES:

1. SEE DRAWINGS 24590-WTP-M6-50-P0001 THROUGH 24590-WTP-M6-50-P0008 FOR GENERAL NOTES, SYMBOLS AND LEGEND, AND GENERAL SLOPE REQUIREMENTS.
2. VENDOR PACKAGE IS FOR INFORMATION ONLY AND WILL BE SUPERSEDED BY VENDOR SUBMITTALS.
3. THE GEOMETRY OF JOGGLED (OFFSET) PENETRATION IS QUALITY LEVEL Q FOR RADIATION PROTECTION. THE QUALITY LEVEL AND SEISMIC CATEGORY DESIGNATIONS OF PIPING WITHIN JOGGLES ARE THE SAME AS CONNECTING PIPING. PIPING WITHIN SPARE JOGGLES IS QUALITY LEVEL Q AND SEISMIC CATEGORY SC-I. JOGGLED PENETRATIONS FOR THREAD THROUGH HOSES ARE DESIGNATED AS QUALITY LEVEL Q SEISMIC CATEGORY SC-I.
4. ALL SYSTEMS, STRUCTURES, AND COMPONENTS ON THIS DRAWING ARE QUALITY LEVEL CM AND SEISMIC CATEGORY SC-III, UNLESS OTHERWISE NOTED.
5. SLEEVED PIPE IS INDICATED BY TWO DASHED LINES SURROUNDING A PIPE LINE. SLOPE SLEEVE INTO CAVE WITH SAME SLOPE AS PIPELINE.
6. 12" X 18" SHIELDED JUNCTION BOX (NUMBER H-0310AS-EL0001) IS REQUIRED FOR ACCESS TO FLEXIBLE HOSES.
7. STEAM SUPPLY LINES REQUIRE A MINIMUM OF 34 FEET OF BAROMETRIC HEAD ABOVE THE HSH-TK-00001 OVERFLOW LEVEL. THE BAROMETRIC HEAD REQUIREMENT SHALL BE CONTAINED IN R5 AREAS. STEAM SUPPLY ACTUATED VALVES SHALL BE LOCATED AT THE HIGH POINT IN THE STEAM RACK.
8. CONTENTS OF THIS DOCUMENT ARE DANGEROUS WASTE PERMIT AFFECTING.
9. ELECTRICAL AND INSTRUMENT JUMPERS ARE SHOWN ON SYSTEM BLOCK DIAGRAM 24590-HLW-J1-RLD-00014.
10. HSH-DRUM-00001 AND RLD-PJOG-0206 SHALL BE LOCATED ABOVE THE FLOOD LEVEL FOR HSH-TK-00001.
11. CHEMICAL INJECTION JUMPER RLD-JMPP-00031 AND RLD-JMPP-00046 MUST BE REMOVED PRIOR TO TEMPORARY HOOKUP OF STEAM CLEANOUT JUMPER RLD-JMPP-00007. RLD-JMPP-00007 CONNECTS UP TO HSH-TK-00003 NOZZLE N06 AND HSH-WBOX-00078 NOZZLE N02.
12. ENTRY ELEVATION OF PLANT WASH ADDITION JUMPER RLD-JMPP-00004 TO HSH-TANK-00001 SHALL BE ABOVE TANK OVERFLOW LEVEL.
13. PLANT WASH SUPPLY LINE TO PARTS WASHER HSH-MHAN-00041 SHALL BE LOCATED ABOVE OVERFLOW LEVEL OF PARTS WASHER.
14. INSTRUMENTS ARE QUALITY LEVEL CM UNLESS DESIGNATED BY A "Z" OR ARE AIR PERMIT AFFECTING. INSTRUMENT, ROOT VALVES AND TUBING CONFINEMENT REQUIREMENTS ARE THE SAME AS THE CONNECTING PROCESS PIPE UNLESS NOTED OTHERWISE.
15. PENETRATION TO BE 3" SS SCHEDULE 40S JOGGLE PIPE TO ALLOW THREAD THROUGH HOSE.
16. DELETED
17. THE COMPONENTS SHOWN ON THIS DRAWING IN PHANTOM DO NOT REQUIRE INDEPENDENT QUALIFIED REGISTERED PROFESSIONAL ENGINEER ASSESSMENTS OF DESIGN OR INSTALLATION INSPECTIONS BY A QUALIFIED INSTALLATION INSPECTOR IN ACCORDANCE WITH THE DWP AND/OR WASHINGTON ADMINISTRATIVE CODE REQUIREMENTS.

HOLD/OPEN ITEMS:

NONE

REFERENCES:

1. 24590-HLW-3YD-HSH-00001, SYSTEM DESCRIPTION FOR HSH-HLW MELTER CAVE SUPPORT HANDLING.
2. 24590-WTP-3PS-HD00-TP001, ENGINEERING SPECIFICATION FOR MAINTENANCE DECONTAMINATION EQUIPMENT.
3. 24590-HLW-MO-HSH-00071, HLW VITRIFICATION SYSTEM HSH MELTER CAVES 1& 2 DESIGN PROPOSAL DRAWING DECONTAMINATION TANK ASSEMBLY.
4. 24590-HLW-MO-HSH-00040001, HLW VITRIFICATION SYSTEM HSH DESIGN PROPOSAL DRAWING CRANE DECON AREA PARTS WASHER.
5. 24590-CM-POA-HDYR-00001-01-00231, P&ID HSH DECON TANK MT-HSH-TK-00001.
6. THE REQUIRED BATCH SEQUENCES, PERMISSIVES, INTERLOCKS, ALARMS AND OPERATOR INTERFACE POINTS ARE DESCRIBED IN THE SOFTWARE FUNCTIONAL SPECIFICATION 24590-HLW-3PS-HSH-T0001, SOFTWARE FUNCTIONAL SPECIFICATION FOR HLW MELTER CAVE SUPPORT HANDLING (HSH) SYSTEM.
7. 24590-HLW-MO-HSH-00073, HLW VITRIFICATION SYSTEM HSH DESIGN PROPOSAL DRAWING DECONTAMINATION TANK SPRAY AND SPARGE SYSTEM.
8. 24590-HLW-MO-HSH-P0075, HLW VITRIFICATION SYSTEM HSH MELTER CAVES 1& 2 DESIGN PROPOSAL DRAWING DECONTAMINATION TANK PROCESS FLOW DIAGRAM.
9. 24590-HLW-MOD-HSH-00150, MECHANICAL HANDLING DATA SHEET: PARTS WASHER, MELTER 1.

PLEASE NOTE THAT SOURCE, SPECIAL NUCLEAR AND BYPRODUCT MATERIALS, AS DEFINED IN THE ATOMIC ENERGY ACT OF 1954 (AEA), ARE REGULATED AT THE U.S. DEPARTMENT OF ENERGY (DOE) FACILITIES EXCLUSIVELY BY DOE ACTING PURSUANT TO ITS AEA AUTHORITY. DOE ASSERTS, THAT PURSUANT TO THE AEA, IT HAS SOLE AND EXCLUSIVE RESPONSIBILITY AND AUTHORITY TO REGULATE SOURCE, SPECIAL NUCLEAR, AND BYPRODUCT MATERIAL AT DOE-OWNED NUCLEAR FACILITIES. INFORMATION CONTAINED HEREIN ON RADIONUCLIDES IS PROVIDED FOR PROCESS DESCRIPTION PURPOSES ONLY.

ELAINE PAUL KRETZSCHMAR
STATE OF WASHINGTON
13295
REGISTERED
PROFESSIONAL ENGINEER
EXPIRES: 3/16/08
12/11/07

REV	DESCRIPTION	ORG	CHKD	RVWD	APVD	DATE
0	ISSUED FOR PERMITTING USE	VJ	MK	CER	RPK	12/11/07

Q QUALITY DESIGNATOR

REVISION HISTORY

ISSUED BY RPP-WTP PDC		
ISSUE STAMP	PROJECT No.	24590
	SITE	HANFORD
	AREA	200E
	BUILDING No.	30

	BY	DATE
ORIGINATOR		10/31/07
CHECKER		11/6/07
APPROVER		11/11/07
REVIEWER		11/9/07
		12/11/07

CONTENT APPLICABLE TO ALARA? [X] YES [ ] NO
ADR NO. N/A REV: N/A
SAFETY SCREEN REQUIRED? [ ] YES [X] NO EM'S INITIAL IF YES

SAFETY SCREEN IS REQUIRED FOR DRAWING TYPES IDENTIFIED IN 24590-WTP-GPP-SREC-002

BECHTEL

RIVER PROTECTION PROJECT
WASTE TREATMENT PLANT
2435 STEVENS CENTER PLACE
RICHLAND, WA 99354

CONTRACT No: DE-AC27-01RV14136

P&ID - HLW SYSTEM HSH MELTER CAVE 1 DECONTAMINATION SYSTEM

SCALE: NONE

24590-HLW-M6-HSH-P0004

REV. 0

E SIZE - 44 x 34
COMPUTER GENERATED - MANUAL CHANGES NOT PERMITTED

CCD1980LN

10/31/2007 02:04:45 PM

PLOTTED BY: cjones
C:\WorkSpaces\dms259270\HLW\M6\HSH\P0004.dgn

FORM E_SDN.DGN 02/2003

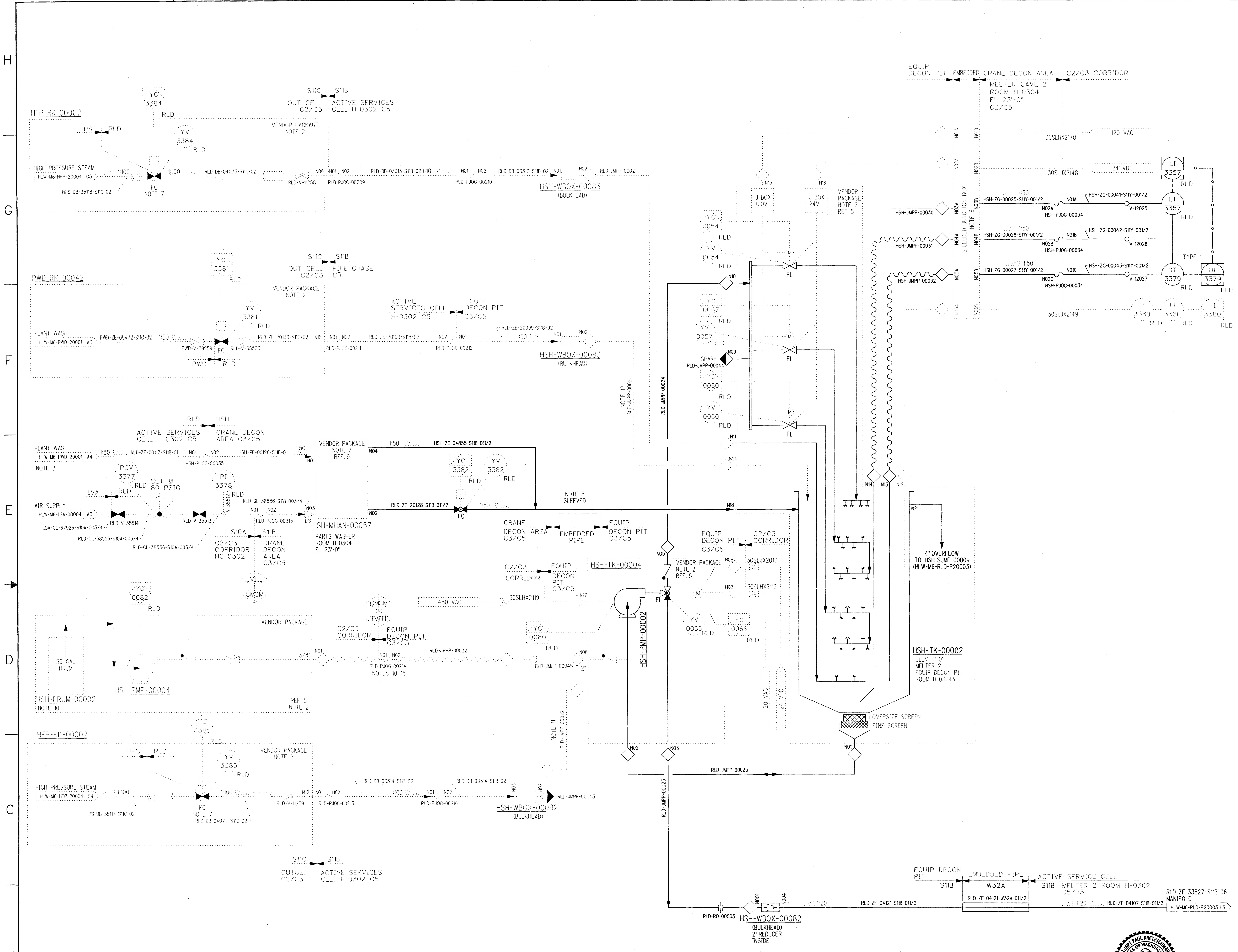

NOTES:

1. SEE DRAWINGS 24590-WTP-M6-50-P0001 THROUGH 24590-WTP-M6-50-P0008 FOR GENERAL NOTES, SYMBOLS AND LEGEND, AND GENERAL SLOPE REQUIREMENTS.
2. VENDOR PACKAGE IS FOR INFORMATION ONLY AND WILL BE SUPERSEDED BY VENDOR SUBMITTALS.
3. PLANT WASH SUPPLY LINE TO PARTS WASHER HSH-MHAN-00057 SHALL BE LOCATED ABOVE OVERFLOW LEVEL OF PARTS WASHER.
4. ALL SYSTEMS, STRUCTURES, AND COMPONENTS ON THIS DRAWING ARE QUALITY LEVEL CM AND SEISMIC CATEGORY SC-III, UNLESS OTHERWISE NOTED.
5. SLEEVED PIPE IS INDICATED BY TWO DASHED LINES SURROUNDING A PIPE LINE. SLOPE SLEEVE INTO CAVE WITH SAME SLOPE AS PIPELINE.
6. 12" X 18" SHIELDED JUNCTION BOX (NUMBER H-0310AS-EL001) IS REQUIRED FOR ACCESS TO FLEXIBLE HOSES.
7. STEAM SUPPLY LINES REQUIRE A MINIMUM OF 34 FEET OF BAROMETRIC HEAD ABOVE THE HSH-TK-00002 OVERFLOW LEVEL. THE BAROMETRIC HEAD REQUIREMENT SHALL BE CONTAINED IN R5 AREAS. STEAM SUPPLY ACTUATED VALVES SHALL BE LOCATED AT THE HIGH POINT IN THE STEAM RACK.
8. CONTENTS OF THIS DOCUMENT ARE DANGEROUS WASTE PERMIT AFFECTING.
9. ELECTRICAL AND INSTRUMENT JUMPERS ARE SHOWN ON SYSTEM BLOCK DIAGRAM 24590-HLW-J1-RLD-00014.
10. HSH-DRUM-00002 AND RLD-PJOG-00214 SHALL BE LOCATED ABOVE THE FLOOD LEVEL FOR HSH-TK-00002.
11. CHEMICAL INJECTION JUMPERS RLD-JMPP-00032 AND -00045 MUST BE REMOVED PRIOR TO TEMPORARY HOOKUP OF STEAM CLEANOUT JUMPER RLD-JMPP-00022. RLD-JMPP-00022 CONNECTS UP TO HSH-TK-00004 NOZZLE N06 AND HSH-WBOX-00082 NOZZLE N02.
12. ENTRY ELEVATION OF PLANT WASH ADDITION JUMPER RLD-JMPP-00020 TO HSH-TANK-00002 SHALL BE ABOVE TANK OVERFLOW LEVEL.
13. INSTRUMENTS ARE QUALITY LEVEL CM UNLESS DESIGNATED BY A "Z" OR ARE AIR PERMIT AFFECTING. INSTRUMENT, ROOT VALVES AND TUBING CONFINEMENT REQUIREMENTS ARE THE SAME AS THE CONNECTING PROCESS PIPE, UNLESS OTHERWISE NOTED.
14. THE GEOMETRY OF JOGGLED (OFFSET) PENETRATIONS IS QUALITY LEVEL Q FOR RADIATION PROTECTION. THE QUALITY LEVEL AND SEISMIC CATEGORY DESIGNATIONS OF PIPING WITHIN JOGGLES ARE THE SAME AS CONNECTING PIPING. JOGGLED PENETRATIONS FOR THREAD THROUGH HOSES ARE DESIGNATED AS QUALITY LEVEL Q AND SEISMIC CATEGORY SC-I.
15. PENETRATION TO BE 3" SS SCHEDULE 40S JOGGLE PIPE TO ALLOW THREAD THROUGH HOSE.
16. DELETED
17. THE COMPONENTS SHOWN ON THIS DRAWING IN PHANTOM DO NOT REQUIRE INDEPENDENT QUALIFIED REGISTERED PROFESSIONAL ENGINEER ASSESSMENTS OF DESIGN OR INSTALLATION INSPECTIONS BY A QUALIFIED INSTALLATION INSPECTOR IN ACCORDANCE WITH THE DWP AND/OR WASHINGTON ADMINISTRATIVE CODE REQUIREMENTS.

HOLD/OPEN ITEMS:

1. DELETED

REFERENCES:

1. 24590-HLW-3YD-HSH-00001, SYSTEM DESCRIPTION FOR HSH-HLW MELTER CAVE SUPPORT HANDLING.
2. 24590-WTP-3PS-HD00-TP001, ENGINEERING SPECIFICATION FOR MAINTENANCE DECONTAMINATION EQUIPMENT.
3. 24590-HLW-M0-HSH-00071, HLW VITRIFICATION SYSTEM HSH MELTER CAVES 1 & 2 DESIGN PROPOSAL DRAWING DECONTAMINATION TANK ASSEMBLY.
4. 24590-HLW-M0-HSH-00040001, HLW VITRIFICATION SYSTEM HSH DESIGN PROPOSAL DRAWING CRANE DECON AREA PARTS WASHER.
5. 24590-CM-POA-HDYR-00001-01-00252, P&ID HSH DECON TANK MT-HSH-TK-00002.
6. THE REQUIRED BATCH SEQUENCES, PERMISSIVES, INTERLOCKS, ALARMS AND OPERATOR INTERFACE POINTS ARE DESCRIBED IN THE SOFTWARE FUNCTIONAL SPECIFICATION 24590-HLW-3PS-HSH-T0001, SOFTWARE FUNCTIONAL SPECIFICATION FOR HLW MELTER CAVE SUPPORT HANDLING (HSH) SYSTEM.
7. 24590-HLW-M0-HSH-00073, HLW VITRIFICATION SYSTEM HSH DESIGN PROPOSAL DRAWING DECONTAMINATION TANK SPRAY AND SPARGE SYSTEM.
8. 24590-HLW-M0-HSH-P0075, HLW VITRIFICATION SYSTEM HSH MELTER CAVES 1 & 2 DESIGN PROPOSAL DRAWING DECONTAMINATION TANK PROCESS FLOW DIAGRAM.
9. 24590-HLW-M0D-HSH-00212, MECHANICAL HANDLING DATA SHEET: PARTS WASHER, MELTER 2.

PLEASE NOTE THAT SOURCE, SPECIAL NUCLEAR AND BYPRODUCT MATERIALS, AS DEFINED IN THE ATOMIC ENERGY ACT OF 1954 (AEA), ARE REGULATED AT THE U.S. DEPARTMENT OF ENERGY (DOE) FACILITIES EXCLUSIVELY BY DOE ACTING PURSUANT TO ITS AEA AUTHORITY. DOE ASSERTS, THAT PURSUANT TO THE AEA, IT HAS SOLE AND EXCLUSIVE RESPONSIBILITY AND AUTHORITY TO REGULATE SOURCE, SPECIAL NUCLEAR, AND BYPRODUCT MATERIAL AT DOE-OWNED NUCLEAR FACILITIES. INFORMATION CONTAINED HEREIN ON RADIONUCLIDES IS PROVIDED FOR PROCESS DESCRIPTION PURPOSES ONLY.

EXPIRES: 3/4/08

12/11/07

Q
QUALITY DESIGNATOR

REV	DESCRIPTION	ORG	CHKD	RVWD	APVD	DATE
0	ISSUED FOR PERMITTING USE					12/11/07

REVISION HISTORY

ISSUED BY RPP-WTP PDC
ISSUE STAMP

PROJECT No.	24590
SITE	HANFORD
AREA	200E
BUILDING No.	30

RIVER PROTECTION PROJECT
WASTE TREATMENT PLANT
2435 STEVENS CENTER PLACE
RICHLAND, WA 99354

CONTRACT No: DE-AC27-01RV14136

	BY	DATE
ORIGINATOR		10/31/07
CHECKER		11/1/07
APPROVER		12/11/07
REVIEWER		11/9/07
		12/11/07

P&ID - HLW SYSTEM HSH MELTER CAVE 2 DECONTAMINATION SYSTEM

CONTENT APPLICABLE TO ALARA? [X] YES [ ] NO
ADR NO. N/A REV: N/A
SAFETY SCREEN REQUIRED? [ ] YES [X] NO ENNS INITIAL IF YES

SCALE: NONE

24590-HLW-M6-HSH-P20004 REV 0

SAFETY SCREEN IS REQUIRED FOR DRAWING TYPES IDENTIFIED IN 24590-WTP-GPP-SREG-002

"E" SIZE - 44x34
COMPUTER GENERATED - MANUAL CHANGES NOT PERMITTED

10/31/2007 02:05:24 PM

PJV-HTR-00002
PULSE VENTILATION HEPA
ELECTRIC
PREHEATER
20.5 KW
4 109.5IN H 51IN W 60IN D

NOTES:

4 1. SEE DRAWINGS 24590-WTP-M6-50-00001 THROUGH 24590-WTP-M6-50-00008 FOR GENERAL NOTES, SYMBOLS, AND LEGEND, AND GENERAL SLOPE REQUIREMENTS.

2-10. DELETED

11. A LATERAL FITTING SHALL BE USED TO CONNECT THE BRANCH LINE TO THE COLLECTION HEADER.

12. CONTENTS OF THIS DOCUMENT ARE DANGEROUS WASTE PERMIT AFFECTING.

4 13. DELETED

14. REVISION 2 CHANGES: DELETED - VENT CONNECTIONS FROM HCP-VSL-00001 AND 00002, CONTROL VALVE AND ISOLATION VALVE ON PJV-PW-00068-S11Z-03; TEMPERATURE MONITOR ON PJV-PW-00006-S11Z-20, PIPELINE PJV-PW-00007-S11Z-20, AND HOLDS 3 & 4. REVISED - PIPELINE DIAMETERS AS SHOWN; THE TIE-IN POINT BETWEEN PJV-PW-00093-S11Z-03 AND PJV-PW-00006-S11Z-08; WALL/FLOOR PENETRATIONS AS SHOWN; QUALITY/SEISMIC BREAKS ON PJV-ZG-00002-S11Y-001/2, PJV-PW-00092-S11Z-03, AND PJV PREHEATER; HEATING DUTY FOR PJV-HTR-00002; AND NOTE 2. ADDED HOLDS 5 & 6, NOTES 6, 7 & 8, AND "COLLECTION & CONDITIONING" TO THE TITLE FOR CONSISTENCY WITH THE NAMING CONVENTIONS. CHANGED REFERENCE 2 INTO NOTE 8 FOR CONSISTENCY WITH PROJECT CONVENTION.

15. THE MINIMUM SLOPE FOR PIPELINES LOCATED UPSTREAM OF PREHEATER PJV-HTR-00002 SHOULD BE AS SHOWN ON THE DRAWING, UNLESS PRECLUDED BY LAYOUT RESTRAINTS. HOWEVER, IN NO CASE SHOULD THE SLOPES BE LESS THAN 1% OR POCKETED. THERE ARE NO MINIMUM SLOPE REQUIREMENTS FOR PIPELINES DOWNSTREAM OF THE PREHEATER, BUT POCKETS ARE TO BE AVOIDED.

16. DELETED

17. INSTRUMENT PERFORMS AN AIR PERMIT FUNCTION.

18. HEPA PRE-HEATER IN-CAST LINER, MOUNTING FRAME, R5/C5 TO R2/C2 RADIATION SHIELDING ARE PART OF THE FILTER CAVE C5 CELL CONFINEMENT BOUNDARY. THESE PRE-HEATER COMPONENTS ARE DESIGNATED QUALITY LEVEL Q AND SEISMIC CATEGORY SC-I.

19. ISOLATING CONTACTOR (JY) PROVIDES INTERRUPTION OF THE 480V POWER TO THE HEPA PREHEATER.

20. INSTRUMENTS ARE QUALITY LEVEL CM, UNLESS DESIGNATED BY A "Z" OR ARE PERMIT AFFECTING.

21. REVISION 3: REVISED TO INCORPORATE 24590-HLW-M6N-M8OT-00002, 24590-HLW-M6N-PJV-00007, AND -00009. UPDATED QUALITY LEVEL AND SEISMIC CATEGORY FLAGS. ADDED ROOM NUMBERS ON EITHER SIDE OF EMBEDDED PIPE. DELETED/MODIFED/ADDED NOTES. REVISED SLOPES. ADDED ROOM DESIGNATION TO PT-3004. REVISED PREHEATER INSTRUMENTATION: DELETED YC-3002B, ADDED JY-3101, YC-3101, ADDED ITS TE/TT/TI-3102 & TE/TT/TI-3103. ADDED SECONDARY CONTAINMENT TO LINE PJV-PW-00092-W32A-03. RELOCATED VESSEL HDH-VSL-00002 VENT TO DRAWING 24590-HLW-M6-HDH-20001. SYSTEM REQUIRES DESIGN REVERIFICATION.

22. HEPA PRE-HEATER (PJV-HTR-00002) IS A MULTI-ELEMENT UNIT WITH STANDBY ELEMENTS. THE HEATER ASSEMBLY IS INSET IN THE FILTER CAVE WALL AND THE TEMPERATURE ELEMENTS AND HEATER CONTROLLER PENETRATE THROUGH A STEEL SHIELDING PLATE. HEATER UNIT SHALL BE EQUIPPED WITH OVER-TEMPERATURE PROTECTION (SUPPLIED BY VENDOR).

4 23. OUTER SHELL OF COAXIAL PIPE SHALL DRAIN TO A LINED CELL.

4 24. DELETED

25. THE GEOMETRY OF JOGGLED (OFFSET) PENETRATIONS IS QUALITY LEVEL Q FOR RADIATION PROTECTION. THE QUALITY LEVEL AND SEISMIC CATEGORY DESIGNATIONS OF PIPING WITHIN JOGGLES ARE THE SAME AS CONNECTING PIPING.

26. REVISED TO INCORPORATE 24590-HLW-M6N-M8OT-00004 AND 24590-HLW-M6N-M8OT-00007. INCORPORATED PIPE JOGGLES. DELETED/REVISED/ADDED QUALITY LEVEL/SEISMIC FLAGS. ADDED/DELETED/REVISED NOTES, REFERENCES, AND HOLDS.

HOLD/OPEN ITEMS:

4 1-7. DELETED

REFERENCE:

1. 24590-HLW-3YD-PJV-00001, SYSTEM DESCRIPTION FOR THE HLW PULSE JET VENTILATION SYSTEM (SYSTEM PJV).
4 2. THE REQUIRED BATCH SEQUENCES, PERMISSIVES, INTERLOCKS, ALARMS AND OPERATOR INTERFACE POINTS ARE FULLY DESCRIBED IN THE SOFTWARE FUNCTIONAL SPECIFICATION FOR HLW PULSE JET VENTILATION (PJV) SYSTEM, 24590-HLW-3PS-PJV-T0001.
3. FOR PERMISSIVES AND INTERLOCKS TO IMPORTANT TO SAFETY SYSTEM (ITS), REFER TO SAFETY SYSTEMS REQUIREMENTS SPECIFICATIONS 24590-HLW-3PS-PPJ-T0016. (TO BE ISSUED).
4 4. 24590-HLW-M5-V17T-00005, PROCESS FLOW DIAGRAM HLW VITRIFICATION PULSE JET VENTILATION TREATMENT (PJV) SYSTEM.

HOP-RK-00048
HOP-VSL-00904
HLW-M6-HOP-20004 B2
PJV-PW-00007-S11Z-08 1:50
PIPE CHASE | FILTER CAVE

HOP-RK-00025
HOP-VSL-00903
HLW-M6-HOP-00004 B2
PJV-PW-00005-S11Z-08 1:50
ACTIVE SERVICES CELL | WET PROCESS CELL (BC)

RLD-RK-00024
RLD-VSL-00008
HLW-M6-RLD-00007 B2
PJV-PW-00004-S11Z-08 1:50

RLD-RK-00023
RLD-VSL-00007
HLW-M6-RLD-00006 B2
PJV-PW-00003-S11Z-08 1:50

CANISTER DECON (S11Z, W32A) | CORRIDOR | WET PROCESS CELL (BC) (W32A, S11Z)

HDH-DMST-00001
HLW-M6-HDH-20001 G2
PJV-PW-00068-S11Z-03 1:50
PJV-PJOG-00001
PJV-PW-00092-W32A-03 1:50
PJV-PJOG-00002
PJV-PW-00093-S11Z-03
NOTE 23

PJV-PW-00006-S11Z-08 1:50
NOTE 11
PJV-PW-00006-S11Z-20
WET PROCESS CELL (BC) S11Z | EMBEDDED PIPE S11V | FILTER CAVE S11Z
PJV-PW-00006-S11V-20
LOW POINT DRAIN

ATM
PT 3004
V-13384
1:50
FAN CONTROL SIGNAL
HLW-M6-PJV-00002 H8

IN-CAVE OUT CAVE
PJV-ZG-00002-S11Y-001/2
PJV-ZG-00002-S11Y-003
PJV-PW-00006-S11Z-20 1:50
NO1 NO2 NO3 NO4 NO5 NO6
PJV-HTR-00002
NOTE 18, 22
PJV-PW-00008-S11Z-20
PJV-HEPA-00004A/B
HLW-M6-PJV-00002 F8

VENDOR PACKAGE
NOTE 17
TI 3001 | TI 3102 Z | YC 3002 | YC 3101 Z | TI 3003 | TI 3103 Z
TT 3001 | TT 3102 Z | JC 3002 | JY 3101 Z NOTE 19 | TT 3003 | TT 3103 Z
TE 3102 Z
TE 3001 | TE 3003 | TE 3103 Z

PJV-PW-00006-S11Z-20 1:50
PJV-ZS-66957-S11Z-03
RLD-VSL-00002
HLW-M6-RLD-00014 C8

Please note that source, special nuclear, and byproduct materials, as defined in the Atomic Energy Act of 1954 (AEA) are regulated by the U.S. Department of Energy (DOE) in connection with its activities pursuant to AEA. It has sole and exclusive responsibility and authority to regulate its own use of source, special nuclear, and byproduct material at DOE owned nuclear facilities. Information contained herein on radionuclides is provided for process description purposes only.

REV	DESCRIPTION	ORG	CHKD	RVWD	APVD	DATE
4	REVISED PER NOTE 26	MK	WD	CER PRL	SGW	1/29/07
3	REVISED PER NOTE 21	SR	NJ	JJ	JP	5/18/06
2	REVISED PER NOTE 14	RB	JR	TV	EI	9/01/04
0	ISSUED FOR CONSTRUCTION	PDN	DS	N/A	GD	9/30/02

REVISION HISTORY

Q QUALITY DESIGNATOR

ISSUED BY RPP-WTP PDC

ISSUE STAMP

	BY	DATE
PROJECT No.	24590	
SITE	HANFORD	
AREA	200E	
BUILDING No.	30	
ORIGINATOR	PHONG NGUYEN	9/26/02
CHECKER	DAVE SKEATH	9/26/02
APPROVER	GM DUNCAN	9/30/07
REVIEWER	N/A	

CONTENT APPLICABLE TO ALARA? [X] YES [ ] NO
ADR NO. 24590-HLW-ADR-M-02-041 REV: 2
SAFETY SCREEN REQUIRED? [ ] YES [ ] NO EMS INITIAL IF YES

SAFETY SCREEN IS REQUIRED FOR DRAWING TYPES IDENTIFIED IN 24590-WTP-GPP-SREG-002

BECHTEL
RIVER PROTECTION PROJECT
WASTE TREATMENT PLANT
2435 STEVENS CENTER PLACE
RICHLAND, WA 99354

CONTRACT No: DE-AC27-01RV14136

P&ID - HLW PULSE JET VENTILATION SYSTEM COLLECTION & CONDITIONING

SCALE: NONE
E SIZE - 44x34
COMPUTER GENERATED - MANUAL CHANGES NOT PERMITTED

24590-HLW-M6-PJV-00001 REV 4

R10746933

01/24/2007 08:20:20 AM

PLOTTED BY: emahoney
C:\Work\24xx\24539\HLW\M6P-JV00001.dgn

FORM E_SDN.DGN 02/2003

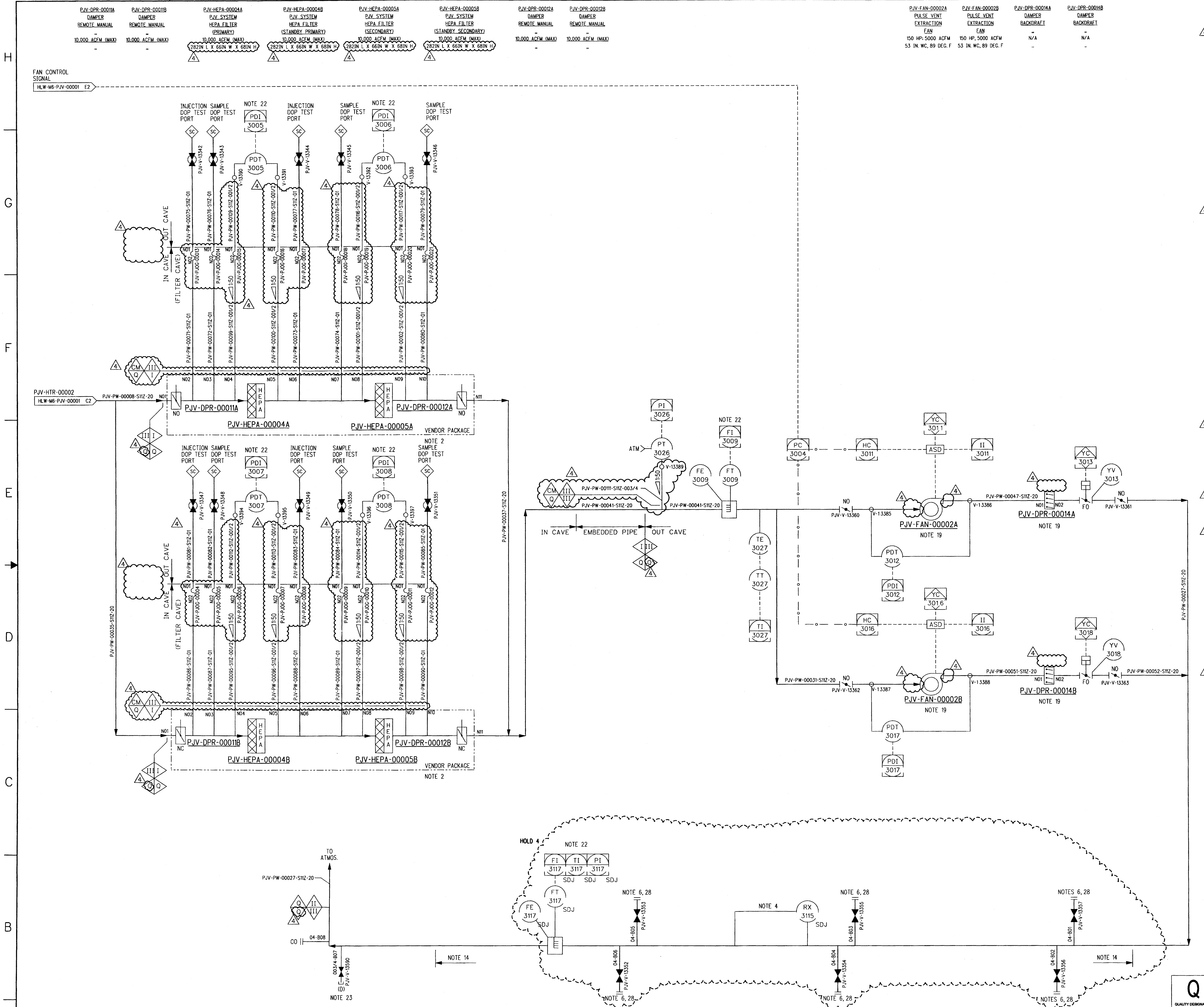

NOTES:

1. SEE DRAWINGS 24590-WTP-M6-50-00001 THROUGH 24590-WTP-M6-50-00008 FOR GENERAL NOTES, SYMBOLS AND LEGEND, AND GENERAL SLOPE REQUIREMENTS.
2. VENDOR PACKAGE INCLUDES THE HEPA FILTER HOUSING, ISOLATION DAMPERS, TEST PORT CONNECTION POINTS AND INTERCONNECT PIPING. THE PACKAGE IS IDENTIFIED BY THE HEPA HOUSING COMPONENT ID NUMBER FOR PROCUREMENT.
3. DELETED
4. RECORD SAMPLER FOR RETROSPECTIVE ANALYSIS SHALL BE PROVIDED.
5. DELETED
6. TEST PORTS PLACED AT 90° ORIENTATION TO EACH OTHER.

7-13. DELETED

14. INSTRUMENTATION AND TEST PORTS ARE SDJ SYSTEM; 20" DIAMETER HEADER REMAINS PJV SYSTEM.
15. CONTENTS OF THIS DOCUMENT ARE DANGEROUS WASTE PERMIT AFFECTING.
16. DELETED
17. DELETED
18. REVISION 2: INCORPORATED 24590-HLW-M6N-PJV-00005. REVISED WALLBOX PENETRATIONS FOR IMPULSE AND SAMPLE LINES ON HEPA FILTERS TO JOGGLED PENETRATIONS, FLOOR PENETRATION FOR PIPELINE PJV-PW-00033-S11Z-20, LOCATION OF FAN BACKDRAFT DAMPERS, PIPELINE QUALITY/SEISMIC BREAKS AND NOTE 5 & HOLD 2. ADDED PIPELINE NO'S TO HEPA PDT IMPULSE LINES, STACK DISCHARGE MONITORING SYSTEM INITIALS, INSTRUMENTATION QUALITY/SEISMIC BREAKS, NO/NC DESIGNATION TO HEPA ISOLATION DAMPERS, CURRENT MONITOR FOR FAN DRIVERS, "FILTRATION & MONITORING" TO THE TITLE FOR CONSISTENCY WITH THE NAMING CONVENTIONS, AND NOTES 14, 15, AND 16. DELETED INSULATION ON FAN DISCHARGE PIPELINES, AND ITS INSTRUMENTION AND REDUNDANT FLOW MONITORS.
19. THE PJV FANS ARE 100% CAPACITY UNITS AND WILL BE OPERATED ON A ROTATING BASIS, ONE OPERATING AND ONE STANDBY. THE ACTUATED DISCHARGE DAMPER WILL BE CLOSED WHEN THE ASSOCIATED FAN IS IN STANDBY MODE.
20. DELETED
21. DELETED
22. INSTRUMENT PERFORMS AN AIR PERMIT FUNCTION.
23. LOCATE STACK DRAIN TO ALLOW PLACEMENT OF 55 GALLON DRUM ON TROLLEY UNDERNEATH.
24. INSTRUMENTS ARE QUALITY LEVEL CM UNLESS DESIGNATED AIR PERMIT AFFECTING.
25. DELETED
26. REVISION 3: REVISED TO INCORPORATE 24590-HLW-M6N-PJV-00008 AND -00009. UPDATED QUALITY AND SEISMIC FLAGS. ADDED EMBEDDED PIPE DESIGNATION. REVISED FAN CONTROLS. CHANGED YD-3013 TO YV-3013, AND YD-3018 TO YV-3018. CHANGED II-3011 AND II-3016 FROM DISCRETE TO CONTINUOUS. ADDED/REVISED/DELETED NOTES AND REFERENCES. ADDED STACK DRAIN. PUT SDJ SYSTEM ON HOLD. SYSTEM REQUIRES DESIGN REVERIFICATION.
27. DELETED
28. LOCATE INJECTION PORT IN COMMON HEADER AFTER THE EXTRACTON FANS. (NO MINIMUM STRAIGHT PIPE RUN FROM INJECTION PORT TO LAST BEND REQUIRED.)
29. THE GEOMETRY OF JOGGLED (OFFSET) PENETRATIONS IS QUALITY LEVEL Q FOR RADIATION PROTECTION. THE QUALITY LEVEL AND SEISMIC CATEGORY DESIGNATIONS OF PIPING WITHIN JOGGLES ARE THE SAME AS CONNECTING PIPING.
30. REVISED TO INCORPORATE 24590-HLW-M6N-M80T-00004 AND 24590-HLW-M6N-M80T-00007. INCORPORATED PIPE JOGGLES. REVISED QUALITY LEVEL/SEISMIC FLAGS. CLARIFIED DIMENSIONS FOR HEPA FILTERS. DELETED REDUCERS. ADDED SLOPE ON INSTRUMENT LINE. ADDED/DELETED/REVISED NOTES AND HOLDS.

HOLD/OPEN ITEMS:

1-3. DELETED

4. SDJ SYSTEM INSTRUMENTATION AND TEST PORTS ON HOLD PENDING VENDOR INPUT.
5. DELETED

REFERENCES:

1. 24590-HLW-3YD-PJV-00001, SYSTEM DESCRIPTION FOR THE HLW PULSE JET VENTILATION SYSTEM (SYSTEM PJV).
2. THE REQUIRED BATCH SEQUENCES, PERMISSIVES, INTERLOCKS, ALARMS AND OPERATOR INTERFACE POINTS FOR SDJ ARE FULLY DESCRIBED IN THE SOFTWARE FUNCTIONAL SPECIFICATION FOR HLW STACK DISCHARGE MONITORING (RAD AND NON-RAD) (SDJ) SYSTEM, 24590-HLW-3PS-SDJ-T0001.
3. THE REQUIRED BATCH SEQUENCES, PERMISSIVES, INTERLOCKS, ALARMS AND OPERATOR INTERFACE POINTS FOR PJV ARE FULLY DESCRIBED IN THE SOFTWARE FUNCTIONAL SPECIFICATION FOR HLW PULSE JET VENTILATION (PJV) SYSTEM, 24590-HLW-3PS-PJV-T0001.
4. 24590-WTP-3YD-SDJ-00001, SYSTEM DESCRIPTION FOR STACK DISCHARGE MONITORING.
5. 24590-HLW-M5-V17T-00005, PROCESS FLOW DIAGRAM HLW VITRIFICATION PULSE JET VENTILATION TREATMENT (PJV).

Please note that source, special nuclear, and byproduct materials, as defined in the Atomic Energy Act of 1954 (AEA) are regulated at the U. S. Department of Energy (DOE) facilities exclusively by DOE acting pursuant to its AEA authority. DOE asserts that pursuant to AEA, it has sole and exclusive responsibility and authority to regulate source, special nuclear, and byproduct materials at DOE-owned nuclear facilities. Information contained herein on radionuclides is provided for process description purposes only.

REV	DESCRIPTION	ORG	CHKD	RVWD	APVD	DATE
4	REVISED PER NOTE 30	[signature]	[signature]	CEK / SPK	[signature]	1/29/07
3	REVISED PER NOTE 26	SR	NJ	JP	JJ	5/18/06
2	REVISED PER NOTE 18	RB	JCR	EI	TV	09/01/04
0	ISSUED FOR CONSTRUCTION	PDN	DS	N/A	GD	09/29/02

REVISION HISTORY

Q
QUALITY DESIGNATOR

ISSUED BY RPP-WTP PDC
ISSUE STAMP

PROJECT No.	24590	
SITE	HANFORD	
AREA	200E	
BUILDING No.	30	
	BY	DATE
ORIGINATOR	P. D. NGUYEN	9/26/02
CHECKER	D. SKEATH	9/26/02
APPROVER	G. M. DUNCAN	9/29/02
REVIEWER	N/A	

CONTENT APPLICABLE TO ALARA? [X] YES [ ] NO
ADR NO. 24590-HLW-ADR-M-02-041 REV: 2
SAFETY SCREEN REQUIRED? [X] YES [ ] NO E&NS INITIAL IF YES [signature]

RIVER PROTECTION PROJECT
WASTE TREATMENT PLANT
2435 STEVENS CENTER PLACE
RICHLAND, WA 99354

CONTRACT No: DE-AC27-01RV14136

P&ID - HLW PULSE JET VENTILATION SYSTEM FILTRATION & MONITORING

SCALE: NONE
24590-HLW-M6-PJV-00002
REV 4

SAFETY SCREEN IS REQUIRED FOR DRAWING TYPES IDENTIFIED IN 24590-WTP-GPP-SREG-002

'E' SIZE - 44x34
COMPUTER GENERATED - MANUAL CHANGES NOT PERMITTED

R10746934
01/09/2007 10:40:54 AM
PLOTTED BY: wmahoney
C:\Work\dms03839\HLWM6PJV00002.dgn

FORM E_SDN.DGN 02/2003

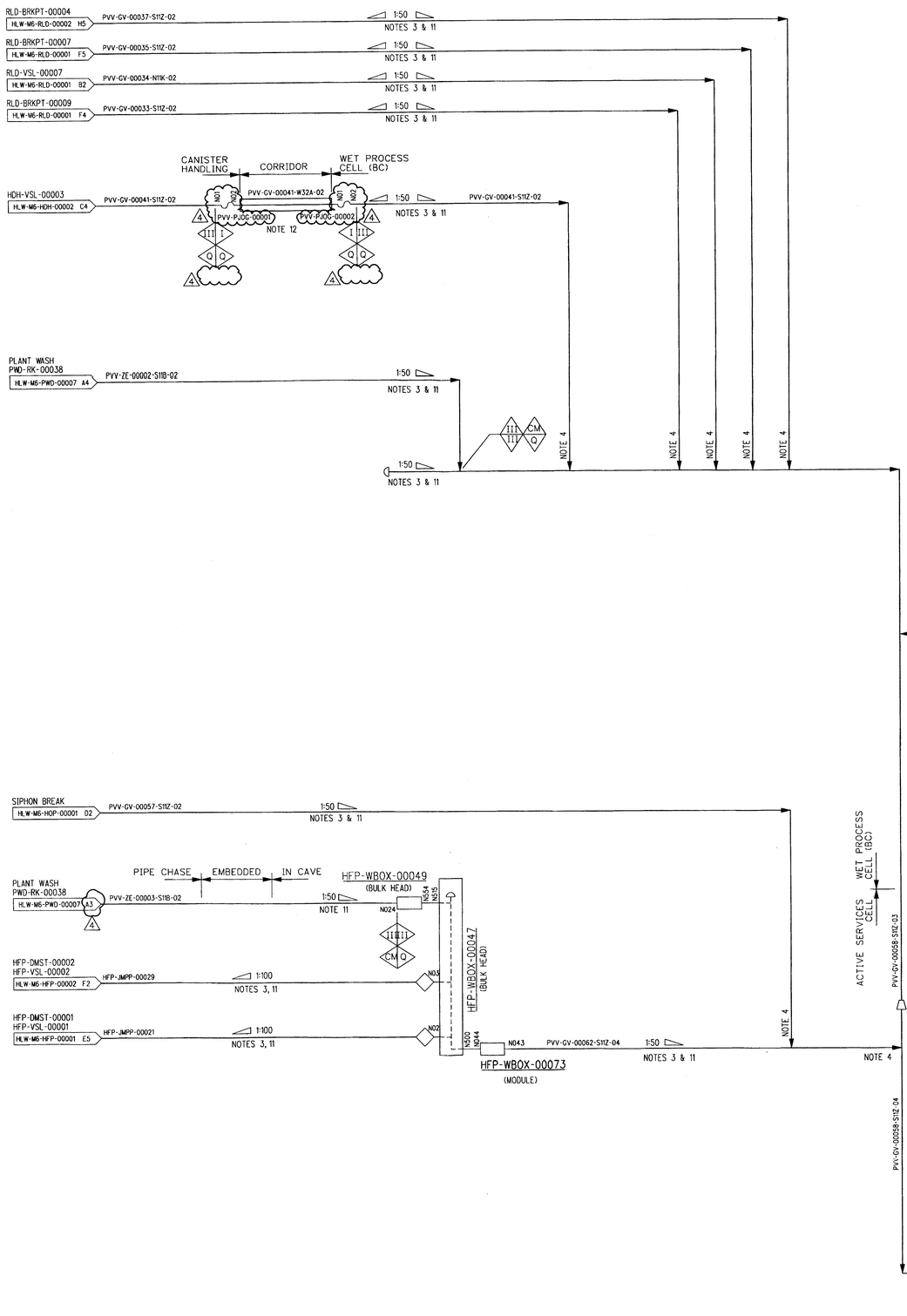

NOTES:

1. SEE DRAWINGS 24590-WTP-M6-50-00001 THROUGH 24590-WTP-M6-50-00008 FOR GENERAL NOTES, SYMBOLS AND LEGEND, AND GENERAL SLOPE REQUIREMENTS.
2. DELETED
3. ALL PIPELINES ON THIS DRAWING ARE QUALITY LEVEL Q AND SEISMIC CATEGORY SC- III, UNLESS OTHERWISE NOTED.
4. A LATERAL FITTING SHALL BE USED TO CONNECT THE BRANCH LINE TO THE COLLECTION HEADER.
5. CONTENTS OF THIS DOCUMENT ARE DANGEROUS WASTE PERMIT AFFECTING.

4 6. DELETED

7. FOR ELECTRICAL AND INSTRUMENTATION JUMPERS REFER TO 24590-HLW-J1-PVV-00001 AND 24590-HLW-M6-ISA-00008. FOR JOGGLED PENETRATIONS THAT SUPPORT PNEUMATIC EQUIPMENT SEE 24590-HLW-M6-ISA-00008.
8. DELETED
9. SHIELDING REQUIREMENTS FOR PIPELINE PVV-GV-00085-W32A-03 ARE SHOWN BELOW:

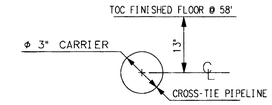

10. DELETED
11. AS A MINIMUM, ALL PIPELINES ON THIS DRAWING SHALL BE FREE DRAINING WITH NO POCKETS. IN ADDITION, PIPELINES WITHIN C5/R5 AREAS SHALL BE SLOPED AT 2% UNLESS CONSTRAINED BY LAYOUT LIMITATIONS. IF A PORTION/SECTION OF A PIPELINE'S SLOPE MUST BE LIMITED, THE SLOPE MAY BE REDUCED WITHIN THE AFFECTED SECTION AS NECESSARY, PROVIDED THAT THE MINIMUM SLOPE IS 1% OR GREATER.
12. OUTER SHELL OF COAXIAL PIPE SHALL DRAIN TO A LINED CELL.
13. REVISION 3: INCORPORATED 24590-HLW-M6N-M8OT-00002. ADDED WALL MODULES AND BULKHEADS. DELETED NOTES 2, 8, AND 10. CHANGED PIPE LINE PVV-GV-00062-S11Z SIZE TO 4 INCH. REVISED/ADDED QUALITY LEVEL/SEISMIC CATEGORY BREAKS. DELETED LINE PVV-GV-00056. REVISED SLOPE. ADDED COAXIAL PIPE TO EMBEDDED SECTION OF HDH-VSL-00003 VENT LINE. CHANGED FLUID CODE AND PIPE SPEC ON LINES TO PRESSURE TRANSMITTERS. ADDED PRESSURE CONTROLS. ADDED NOTES AND REFERENCE 2. SYSTEM DESIGN REVERIFICATION IS REQUIRED.

4 14. DELETED

15. INSTRUMENTS ARE QUALITY LEVEL CM AND SEISMIC CATEGORY SC-III UNLESS OTHERWISE NOTED.

4 16. THE GEOMETRY OF JOGGLED (OFFSET) PENETRATIONS IS QUALITY LEVEL Q FOR RADIATION PROTECTION. THE QUALITY LEVEL AND SEISMIC CATEGORY DESIGNATIONS OF PIPING WITHIN JOGGLES ARE THE SAME AS CONNECTING PIPING.

17. REVISED TO INCORPORATE 24590-HLW-M6N-M8OT-00007 AND P-JOGGLES. DELETED THE QUALITY LEVEL/SEISMIC CATEGORY FLAG ON PT-3005 INSTRUMENT SENSING LINE. ADDED/DELETED NOTES, HOLDS, AND REFERENCES.

HOLD/OPEN ITEMS:

4 1-5. DELETED

REFERENCES:

1. 24590-HLW-3YD-HOP-00001, SYSTEMS DESCRIPTION FOR HLW MELTER OFFGAS TREATMENT PROCESS AND PROCESS VESSEL VENT EXTRACTION (HOP AND PVV SYSTEMS).

4 2. THE REQUIRED BATCH SEQUENCES, PERMISSIVES, INTERLOCKS, ALARMS AND OPERATOR INTERFACE POINTS ARE FULLY DESCRIBED IN THE SOFTWARE FUNCTIONAL SPECIFICATION FOR HLW MELTER OFFGAS TREATMENT PROCESS AND PROCESS VESSEL VENT EXHAUST (HOP AND PVV) SYSTEMS, 24590-HLW-3PS-HOP-T0001.

Please note that source, special nuclear, and byproduct materials, as defined in the Atomic Energy Act of 1954 (AEA) are regulated at the U. S. Department of Energy (DOE) facilities exclusively by DOE pursuant to AEA. As the AEA authority, DOE asserts that pursuant to AEA, it has sole and exclusive responsibility and authority to regulate source, special nuclear, and byproduct materials at DOE-owned nuclear facilities. Information contained herein on radionuclides is provided for process description purposes only.

REV	DESCRIPTION	ORG	CHKD	RVWD	APVD	DATE
4	REVISED PER NOTE 17				CER	12/27/06
3	REVISED PER NOTE 13	SR	NJ	JP	JJ	6/21/06
0	ISSUED FOR CONSTRUCTION	AC	RB	N/A	GMD	10-10-02

REVISION HISTORY

Q — QUALITY DESIGNATOR

ISSUED BY RPP-WTP PDC — ISSUE STAMP

PROJECT No.	24590
SITE	HANFORD
AREA	200E
BUILDING No.	30

	BY	DATE
ORIGINATOR	A. CUTRONA	10-9-02
CHECKER	R. BULLOCK	10-9-02
APPROVER	GM DUNCAN	10-10-02
REVIEWER	N/A	

CONTENT APPLICABLE TO ALARA? [X] YES [ ] NO
ADR NO. 24590-HLW-ADR-M-04-0004 REV: 0
SAFETY SCREEN REQUIRED? [X] YES [ ] NO EMS INITIAL IF YES OK

BECHTEL
RIVER PROTECTION PROJECT
WASTE TREATMENT PLANT
2435 STEVENS CENTER PLACE
RICHLAND, WA 99354

CONTRACT No: DE-AC27-01RV14136

P&ID - HLW PROCESS VESSEL VENT EXHAUST SYSTEM SHEET 1 OF 2

SCALE: NONE

24590-HLW-M6-PVV-00001

REV 4

SAFETY SCREEN IS REQUIRED FOR DRAWING TYPES IDENTIFIED IN 24590-WTP-GPP-SREQ-002

"E" SIZE - 44 x 34
COMPUTER GENERATED - MANUAL CHANGES NOT PERMITTED

12/19/2006 10:50:03

PLOTTED BY: eldorn
C:\Work\dms03839\HLW\M6\PVV00001.dgn

FORM E_SDN.DGN 02/2003

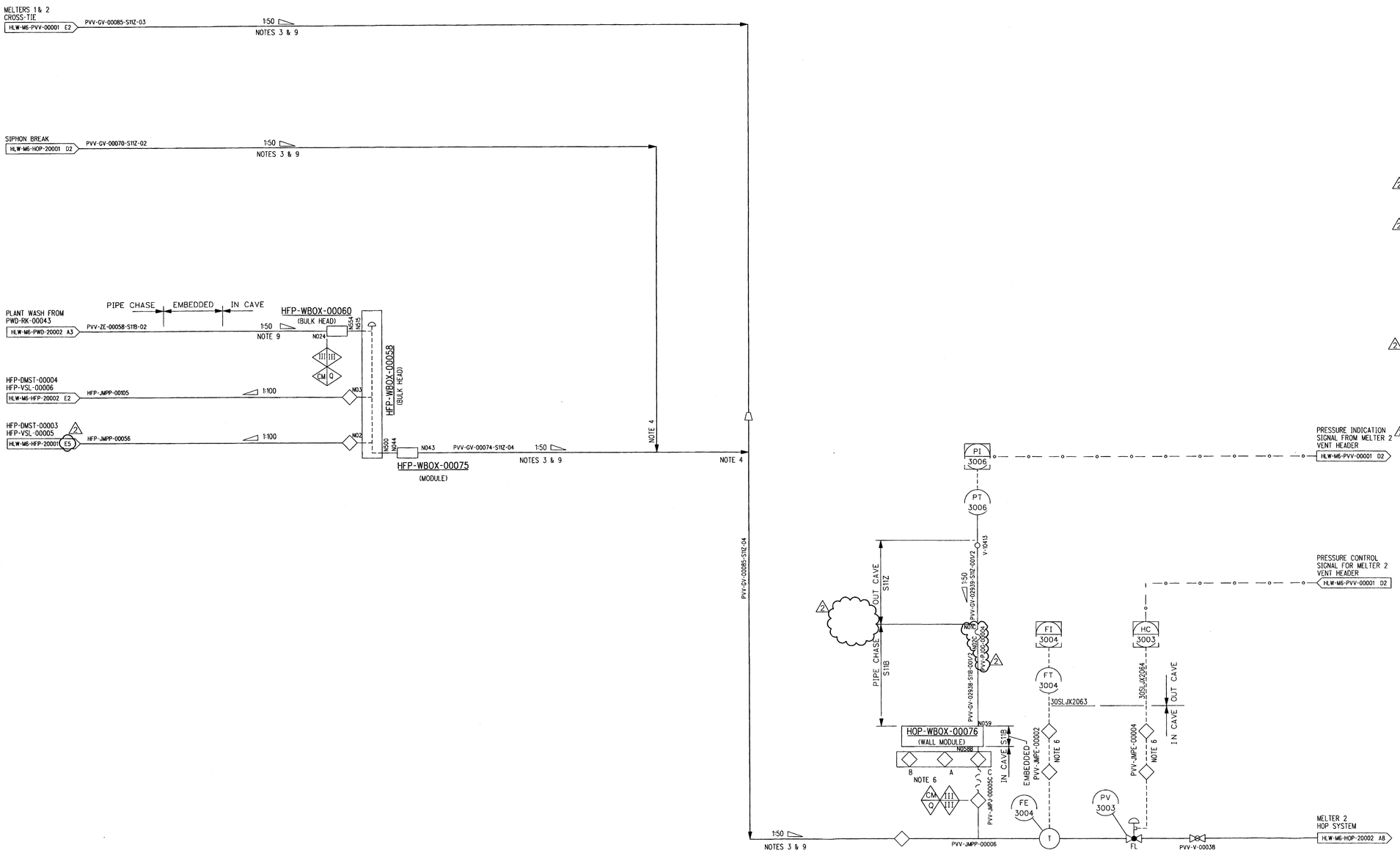

NOTES:

1. SEE DRAWINGS 24590-WTP-M6-50-00001 THROUGH 24590-WTP-M6-50-00008 FOR GENERAL NOTES, SYMBOLS AND LEGEND, AND GENERAL SLOPE REQUIREMENTS.
2. DELETED
3. ALL PIPELINES ON THIS DRAWING ARE QUALITY LEVEL Q AND SEISMIC CATEGORY SC-III, UNLESS OTHERWISE NOTED.
4. A LATERAL FITTING SHALL BE USED TO CONNECT THE BRANCH LINE TO THE COLLECTION HEADER .
5. CONTENTS OF THIS DOCUMENT ARE DANGEROUS WASTE PERMIT AFFECTING.
6. FOR ELECTRICAL AND INSTRUMENTATION JUMPERS REFER TO 24590-HLW-J1-PVV-00001 AND 24590-HLW-M6-ISA-00008. FOR JOGGLED PENETRATIONS THAT SUPPORT PNEUMATIC EQUIPMENT SEE 24590-HLW-M6-ISA-00008.
7. DELETED
8. DELETED
9. AS A MINIMUM ALL PIPELINES ON THIS DRAWING SHALL BE FREE DRAINING WITH NO POCKETS. IN ADDITION, PIPELINES WITHIN C5/R5 AREAS SHALL BE SLOPED AT 2% UNLESS CONSTRAINED BY LAYOUT LIMITATIONS. IF A PORTION/SECTION OF A PIPELINE'S SLOPE MUST BE LIMITED, THE SLOPE MAY BE REDUCED WITHIN THE AFFECTED SECTION AS NECESSARY, PROVIDED THAT THE MINIMUM SLOPE IS 1% OR GREATER.
10. REVISION 1: ADDED WALL MODULES AND BULKHEADS. DELETED NOTE 2, 7, AND 8. ADDED NOTES. ADDED REFERENCE 2. CHANGED LINE SIZE OF PVV-GV-00074 TO 4 INCH. DELETED LINE PVV-GV-00070. REVISED/ADDED QUALITY LEVEL/SEISMIC CATEGORY BREAKS. REVISED SLOPES. CHANGED FLUID CODE AND PIPE SPEC ON LINES TO PRESSURE TRANSMITTERS. ADDED PRESSURE CONTROLS. SYSTEM DESIGN REVERIFICATION REQUIRED.
2. 11. DELETED
12. INSTRUMENTS ARE QUALITY LEVEL CM UNLESS DESIGNATED BY A "Z" OR ARE AIR PERMIT AFFECTING.
2. 13. THE GEOMETRY OF JOGGLED (OFFSET) PENETRATIONS IS QUALITY LEVEL Q FOR RADIATION PROTECTION. THE QUALITY LEVEL AND SEISMIC CATEGORY DESIGNATIONS OF PIPING WITHIN JOGGLES ARE THE SAME AS CONNECTING PIPING.
14. REVISED TO INCORPORATE 24590-HLW-M6N-M80T-00007 AND P-JOGGLES. DELETED THE QUALITY LEVEL/SEISMIC CATEGORY FLAG ON PT-3006 INSTRUMENT SENSING LINE. ADDED/DELETED/REVISED NOTES, HOLDS, AND REFERENCES.

HOLD/OPEN ITEMS:

2. 1. DELETED

REFERENCES:

1. 24590-HLW-3YD-HOP-00001, SYSTEMS DESCRIPTION FOR HLW MELTER OFFGAS TREATMENT PROCESS AND PROCESS VESSEL VENT EXTRACTION (HOP AND PVV SYSTEMS).
2. 2. THE REQUIRED BATCH SEQUENCES, PERMISSIVES, INTERLOCKS, ALARMS AND OPERATOR INTERFACE POINTS ARE FULLY DESCRIBED IN THE SOFTWARE FUNCTIONAL SPECIFICATION FOR HLW MELTER OFFGAS TREATMENT PROCESS AND PROCESS VESSEL VENT EXHAUST (HOP AND PVV) SYSTEMS, 24590-HLW-3PS-HOP-T0001.

Please note that source, special nuclear, and byproduct materials, as defined in the Atomic Energy Act of 1954 (AEA) are regulated at the U. S. Department of Energy (DOE) facilities by the DOE acting pursuant to its AEA authority. DOE asserts that pursuant to AEA, it has sole and exclusive responsibility and authority regarding regulation of source, special nuclear, and byproduct materials at DOE owned nuclear facilities. Any information contained herein on radionuclides is provided for process description purposes only.

REV	DESCRIPTION	ORG	CHKD	RVWD	APVD	DATE
2	REVISED PER NOTE 14			CDR	JJ	12/22/06
1	REVISED PER NOTE 10	SR	NJ	JP	JJ	6/21/06
0	ISSUED FOR CONSTRUCTION	JCR	JKR	EI	TV	9-23-04

REVISION HISTORY

Q — QUALITY DESIGNATOR

ISSUED BY RPP-WTP PDC — ISSUE STAMP

PROJECT No.	24590	
SITE	HANFORD	
AREA	200E	
BUILDING No.	30	
	BY	DATE
ORIGINATOR	JC REWARI	9/21/04
CHECKER	J ROUSE	9/23/04
APPROVER	T VALENTINO	9/24/04
REVIEWER	E ISERN	9/23/04

CONTENT APPLICABLE TO ALARA? [X] YES [ ] NO
ADR NO. 24590-HLW-ADR-M-04-0004 REV: 0
SAFETY SCREEN REQUIRED? [X] YES [ ] NO EANS INITIAL IF YES: MK

BECHTEL

RIVER PROTECTION PROJECT
WASTE TREATMENT PLANT
2435 STEVENS CENTER PLACE
RICHLAND, WA 99354

CONTRACT No: DE-AC27-01RV14136

P&ID - HLW PROCESS VESSEL VENT EXHAUST SYSTEM SHEET 2 OF 2

SCALE: NONE

24590-HLW-M6-PVV-20001

REV 2

R10743752

12/16/2006 06:44:05 AM

PLOTTED BY: mdsm
C:\Work\dms03833\HLW\M6PVV20001.dgn

SAFETY SCREEN IS REQUIRED FOR DRAWING TYPES IDENTIFIED IN 24590-WTP-GPP-SREG-002

E SIZE - 44x34
COMPUTER GENERATED - MANUAL CHANGES NOT PERMITTED

FORM E_SDN.DGN 02/2003

24590-HLW-M6-RLD-00001

RLD-EJCTR-00056	RLD-EJCTR-00050	RLD-EJCTR-00008	RLD-VSL-00007	RLD-EJCTR-00059
RLD-VSL-00007	RLD-VSL-00007	RLD-VSL-00007	ACIDIC WASTE VESSEL	RLD-VSL-00007
VESSEL EJECTOR	VESSEL EJECTOR	VESSEL EJECTOR	-	VESSEL EJECTOR
(STEAM EJECTOR)	(STEAM EJECTOR)	(STEAM EJECTOR)	-	(STEAM EJECTOR)
48 GPM	48 GPM	48 GPM	15,758 GAL MOV	48 GPM
3 IN	3 IN	3 IN	13FT ID X 15FT 6IN (T-T)	3 IN

RLD-BRKPT-00007	RLD-BRKPT-00009	RLD-RFD-00162A	RLD-RFD-00162B
ACIDIC WASTE	ACIDIC WASTE	RLD-VSL-00007	RLD-VSL-00007
TRANSFER BREAKPOT	TRANSFER BREAKPOT	REVERSE FLOW DIVERTER	REVERSE FLOW DIVERTER
-	-	(FLUIDIC PUMP)	(FLUIDIC PUMP)
15 GAL MOV	15 GAL MOV	17 GPM	17 GPM
18 IN ID X 68 IN T-T	18 IN ID X 68 IN T-T	@ 41 PSI TDH	@ 41 PSI TDH

NOTES:

1. SEE DRAWINGS 24590-WTP-M6-50-00001 THROUGH 24590-WTP-M6-50-00008 FOR GENERAL NOTES, SYMBOLS AND LEGEND, AND GENERAL SLOPE REQUIREMENTS.
2. DELETED
3. SODIUM HYDROXIDE ADDITION TO VESSELS IS VIA PLANT WASH CONNECTION.
4. THE PRESSURE BOUNDARY FOR ALL SYSTEMS, STRUCTURES, AND COMPONENTS IS QUALITY LEVEL CM AND SEISMIC CATEGORY SC-III, UNLESS OTHERWISE NOTED.
5. SEE DRAWING 24590-HLW-M6-RLD-00006 FOR DETAILS OF PULSE JET MIXERS AND CHARGE VESSELS ASSOCIATED WITH RLD-VSL-00007.
6. DELETED
7. COAXIAL PIPE SLOPES TO PRETREATMENT AT 1:50. PRETREATMENT IS RESPONSIBLE FOR COAXIAL PIPE LEAK DETECTION.
8. SPARE LINE PROVIDED TO ACCOMMODATE POTENTIAL MODIFICATIONS DURING COMMISSIONING.
9. A 24" LONG FLANGED SPOOL PIECE (S11C SPECIFICATION) IS REQUIRED FOR THE INNER PIPE IN THE ACTIVE PIPE TUNNEL. SPOOL PIECE SHALL BE REMOVED AND PIPING IS TO BE RESTORED TO DOUBLE CONTAINED PIPING AFTER THE STARTUP PHASE IS COMPLETE.
10. REDUCER IN BREAKPOT DRAIN LINE SHALL BE LOCATED DOWNSTREAM OF THE FIRST HORIZONTAL BEND.
11. OUT CELL STEAM SUPPLY LINES TO BE 34 FT ABOVE VESSEL OVERFLOW.
12. ITEMS WITH THIS NOTE ARE QUALITY LEVEL Q AND SEISMIC CATEGORY SC II.
13. FLUSH INLET TO BE 20 FEET MINIMUM BELOW BREAKPOT OUTLET.

14-16. DELETED

17. MINIMIZE DISTANCE BETWEEN FLOW ELEMENT FE-3155 AND CONTROL VALVE YV-3156.
18. DELETED
19. DELETED
20. CONTENTS OF THIS DOCUMENT ARE DANGEROUS WASTE PERMIT AFFECTING.
21. OVERFLOW LINE IS LOCATED LOWER THAN ALL INCOMING LINES TO THE MANIFOLD/BREAK POT.
22. HIGH POINT OF EJECTOR DISCHARGE PIPING SHALL BE A MINIMUM OF 35 FT ABOVE RLD-VSL-00007 OVERFLOW NOZZLE.
23. HIGH POINT OF EJECTOR DISCHARGE PIPING SHALL BE A MINIMUM OF 35 FT ABOVE RLD-VSL-00008 OVERFLOW NOZZLE.
24. THE VESSEL INTERNALS ARE QUALITY LEVEL CM AND SEISMIC CATEGORY SC-III.
25. OVERFLOW LINE ALSO USED FOR RLD-VSL-00008 PURGE HYDROGEN PATH TO RLD-VSL-00007.
26. REVISION 2: INCORPORATED 24590-HLW-M6N-RLD-00136, -00151 (NOTE 14 IS DELEIED), 24590-HLW-M6N-RLD-00154 (NOTE 12 IS REVISED), 24590-HLW-M6N-RLD-00161. INCORPORATED 24590-HLW-M6N-M8OT-00002. CONVERTED WALL AND FLOOR BOXES TO JOGGLED PENETRATIONS. INCREASED SIZE OF PLANT WASH LINES FROM 1/2" TO 1 1/2" AND 2". DELETED NOZZLES N24, N25, N29, N30, N45, AND N46 FROM RLD-VSL-00007. DELETED LI-3154 AND ASSOCIATED WAVE GUIDE. DELETED Y-STRAINERS. DELETED LINES RLD-ZE-00046, -00048. CHANGED PIPE SPECIFICATION OF SBS PURGE AND SBS CONDENSATE PURGE LINES FROM N13A TO N11E. ADDED LINE/VALVE NUMBERS TO RACK PIPING. ADDED BACKFLOW PREVENTORS. REVISED QUALITY LEVELS AND SEISMIC DESIGNATIONS. REVISED/ADDED/DELETED NOTES AND HOLDS. CHANGED PIPE SPEC OF EJECTOR DISCHARGE LINES FROM N11F TO N11K. SYSTEM REQUIRES DESIGN REVERIFICATION.
27. LINE INSIDE VESSEL SHALL HAVE 3/8-INCH HOLE ABOVE THE TOP OF OVERFLOW DISCHARGE PORT TO PREVENT BACK SIPHON.
28. SLOW OPENING VALVE REQUIRED.
29. LOCATE ACTUATED VALVE AT THE HIGH POINT IN LINE ABOVE RACK HEADER.
30. DELETED
31. ITEMS WITH THIS NOTE ARE QUALITY LEVEL Q AND SEISMIC CATEGORY SC-III.
32. THE GEOMETRY OF JOGGLED (OFFSET) PENETRATIONS IS QUALITY LEVEL Q FOR RADIATION PROTECTION. THE QUALITY LEVEL AND SEISMIC CATEGORY DESIGNATIONS OF PIPING WITHIN JOGGLES ARE THE SAME AS CONNECTING PIPING.
33. REVISED TO INCORPORATE P-JOGGLES. DELETED BACKFLOW PREVENTER. REVISED QUALITY CLASS DESIGNATIONS. DELETED FE-3155. ADDED/DELETED/REVISED NOTES AND REFERENCES.

HOLD/OPEN ITEMS:

1-5. DELETED

REFERENCES:

1. 24590-HLW-M5-V17T-00007001, PROCESS FLOW DIAGRAM, "HLW VITRIFICATION LIQUID WASTE EFFLUENT (SYSTEM RLD) (SHEET 1)."

2-7. DELETED

8. THE REQUIRED BATCH SEQUENCES, PERMISSIVES, INTERLOCKS, ALARMS AND OPERATOR INTERFACE POINTS ARE FULLY DESCRIBED IN THE SOFTWARE FUNCTIONAL SPECIFICATION FOR HANFORD LIQUID WASTE DISPOSAL (RLD) SYSTEM,24590-HLW-3PS-RLD-T0001.
9. FOR RADAR INSTALLATION DETAILS, SEE DRAWINGS 24590-WTP-J8-50-00001 AND 24590-WTP-J8-50-00003.

Please note that source, special nuclear, and byproduct materials as defined in the Atomic Energy Act of 1954 (AEA) are regulated at the U. S. Department of Energy (DOE) facilities exclusively by DOE, acting pursuant to its AEA authority. DOE asserts that pursuant to AEA, it has sole and exclusive authority and responsibility regarding source, special nuclear, and byproduct materials at DOE-owned nuclear facilities. Information contained herein on commodities is provided for process description purposes only.

REV	DESCRIPTION	ORG	CHKD	RVWD	APVD	DATE
3	REVISED PER NOTE 33	MK	SJ	CER MK	MK	11/30/06
2	REVISED PER NOTE 26	RJP	SJ	JP	JJ	5/31/06
0	ISSUED FOR CONSTRUCTION	MRG	DKR	N/A	TFV	12-19-02

REVISION HISTORY

Q — QUALITY DESIGNATOR

ISSUED BY RPP-WTP PDC — ISSUE STAMP

PROJECT No.	24590
SITE	HANFORD
AREA	200E
BUILDING No.	30

	BY	DATE
ORIGINATOR	M. R. GRINDEL	12/19/02
CHECKER	D. K. REDDY	12/19/02
APPROVER	TOM VALENTINO	12/19/02
REVIEWER	N/A	

CONTENT APPLICABLE TO ALARA? [X] YES [ ] NO
ADR NO. 24590-HLW-ADR-M-02-016 REV: 2
SAFETY SCREEN REQUIRED? [X] YES [ ] NO EMS INITIAL IF YES DA

SAFETY SCREEN IS REQUIRED FOR DRAWING TYPES IDENTIFIED IN 24590-WTP-GPP-SREG-002

RIVER PROTECTION PROJECT
WASTE TREATMENT PLANT
2435 STEVENS CENTER PLACE
RICHLAND, WA 99354

CONTRACT No: DE-AC27-01RV14136

P&ID - HLW RADIOACTIVE LIQUID WASTE DISPOSAL SYSTEM ACTIVE EFFLUENT COLLECTION

SCALE: NONE

24590-HLW-M6-RLD-00001

REV 3

"E" SIZE - 44x34
COMPUTER GENERATED - MANUAL CHANGES NOT PERMITTED

R1070581 11/29/2006 07:09:21 AM

PLOTTED BY: eidorn
C:\Work\dms03839\HLW\M6\RLD00001.dgn

FORM E_SDN.DGN 02/2003

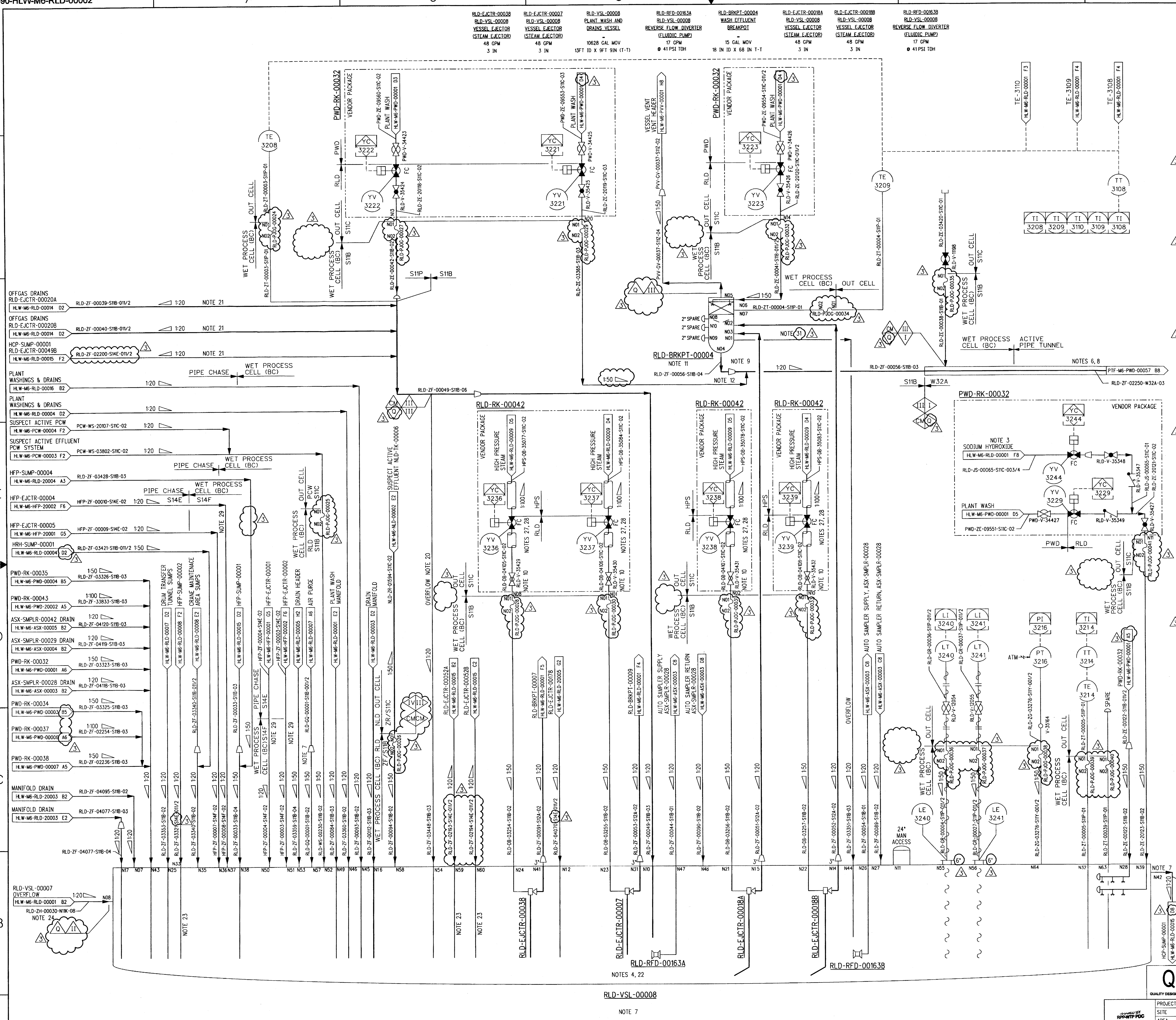

NOTES:

1. SEE DRAWINGS 24590-WTP-M6-50-00001 THROUGH 24590-WTP-M6-50-00008 FOR GENERAL NOTES, SYMBOLS AND LEGEND, AND GENERAL SLOPE REQUIREMENTS.
2. DELETED
3. SODIUM HYDROXIDE ADDITION TO VESSEL RLD-VSL-00008 IS VIA PLANT WASH CONNECTION.
4. SEE DRAWING 24590-HLW-M6-RLD-00007 FOR DETAILS OF PULSE JET MIXERS AND CHARGE VESSELS ASSOCIATED WITH RLD-VSL-00008.
5. DELETED
6. COAXIAL PIPE SLOPES TO PRE-TREATMENT AT 1:50, PRE-TREATMENT IS RESPONSIBLE FOR COAXIAL PIPE LEAK DETECTION.
7. ITEMS WITH THIS NOTE ARE QUALITY LEVEL Q AND SEISMIC CATEGORY SC-I. (3)
8. A 24" LONG FLANGED SPOOL PIECE (S11C SPECIFICATION) IS REQ'D FOR THE INNER PIPE IN THE ACTIVE PIPE TUNNEL. SPOOL PIECE SHALL BE REMOVED AND PIPING IS TO BE RESTORED TO DOUBLE CONTAINED PIPING AFTER THE STARTUP PHASE IS COMPLETE.
9. REDUCER IN BREAKPOT DRAIN LINE SHALL BE LOCATED DOWNSTREAM OF THE FIRST HORIZONTAL BEND.
10. OUT CELL STEAM SUPPLY LINES TO BE 34 FEET ABOVE VESSEL OVERFLOW.
11. ITEMS WITH THIS NOTE ARE QUALITY LEVEL Q AND SEISMIC CATEGORY SC-II. (3)
12. FLUSH INLET TO BE 20 FEET MINIMUM BELOW BREAKPOT OUTLET.

13.-17. DELETED

18. REVISION 1: SODIUM HYDROXIDE FEED INCORPORATED, HOLDS 1 & 2 REMOVED. RLD-WBOX-00040 DELETED. DIP TUBES ADDED TO 16 NOZZLES. FOUR SPARE NOZZLES WITH DIP TUBES ADDED. ADDED HOLDS 3, 4, 5, AND 6.
19. CONTENTS OF THIS DOCUMENT ARE DANGEROUS WASTE PERMIT AFFECTING.
20. DELETED (3)
21. HIGH POINT OF EJECTOR DISCHARGE PIPING SHALL BE A MINIMUM OF 34 FEET ABOVE RLD-VSL-00008 OVERFLOW NOZZLE.
22. THE VESSEL INTERNALS ARE QUALITY LEVEL CM AND SEISMIC CATEGORY SC-III.
23. LINE INSIDE VESSEL SHALL HAVE 3/8-INCH HOLE ABOVE TOP OF OVERFLOW DISCHARGE PORT TO PREVENT BACK SIPHON.
24. ACIDIC WASTE VESSEL OVERFLOW LINE ALSO USED FOR VESSEL RLD-VSL-00008 PURGE HYDROGEN PATH TO VESSEL RLD-VSL-00007.
25. THE PRESSURE BOUNDARY FOR ALL SYSTEM, STRUCTURES, AND COMPONENTS IS QUALITY LEVEL CM AND SEISMIC CATEGORY SC-III, UNLESS OTHERWISE NOTED. (3)
26. REVISION 2: INCORPORATED 24590-HLW-M6N-RLD-00034, 00137, 00142, 00155, 00162 AND 24590-HLW-M6N-M80T-00002. REVISED NOTE 11. DELETED WATER/SODIUM HYDROXIDE INJECTION NOZZLES N18 & N19 AND REARRANGED WATER/SODIUM HYDROXIDE ADDITION TO N28 & N39. CONVERTED WALL AND FLOOR BOXES TO JOGGLED PENETRATIONS. ADDED HRH-SUMP-00001 LINE TO RLD-VSL-00008. DELETED NOZZLES N13, N29, N30, N34, N61, N62 FROM RLD-VSL-00008. DELETED LINES RLD-ZF-03310, 03449, 03450, 04103, 04117, 04128, 04129. DELETED LINES RLD-ZE-03410, 00016. DELETED LI-3242 AND ASSOCIATED WAVE GUIDE. INCREASED SIZE OF PLANT WASH WATER SUPPLY LINES FROM 1/2" TO 1 1/2" AND 2". DELETED Y-STRAINERS. REVISED QUALITY LEVELS AND SEISMIC DESIGNATIONS. ADDED LINE/ VALVE NUMBERS TO RACKS REVISED/ADDED/DELETED NOTES, AND REFERENCES..
27. SLOW OPENING VALVE REQUIRED.
28. LOCATE ACTUATED VALVE AT HIGH POINT IN LINE ABOVE RACK HEADER.
29. ITEMS WITH THIS NOTE ARE QUALITY LEVEL Q AND SEISMIC CATEGORY SC-III. (3)
30. DELETED
31. OVERFLOW LINE IS LOCATED LOWER THAN ALL INCOMING LINES TO THE MANIFOLD/BREAKPOT.
32. THE GEOMETRY OF JOGGLED (OFFSET) PENETRATIONS IS QUALITY LEVEL Q FOR RADIATION PROTECTION. THE QUALITY LEVEL AND SEISMIC CATEGORY DESIGNATIONS OD PIPING WITHIN JOGGLES ARE THE SAME AS CONNECTING PIPING.
33. REVISED TO INCORPORATE P-JOGGLES. REVISED QUALITY LEVEL DESIGNATIONS. REVISED PIPE SPEC. FROM S11B TO S14E. REVISED/ADDED/DELETED NOTES.

HOLD/OPEN ITEMS:

1.-6. DELETED

REFERENCES:

1. DELETED
2. 24590-HLW-M5-V17T-00007002, PROCESS FLOW DIAGRAM, "HLW VITRIFICATION LIQUID WASTE EFFLUENT (SYSTEM RLD) (SHEET 2)."
3. DELETED
4. THE REQUIRED BATCH SEQUENCES, PERMISSIVES, INTERLOCKS, ALARMS AND OPERATOR INTERFACE POINTS ARE FULLY DESCRIBED IN THE SOFTWARE FUNCTIONAL SPECIFICATION FOR RADIOACTIVE LIQUID WASTE DISPOSAL (RLD) SYSTEM, 24590-HLW-3PS-RLD-T0001.
5. FOR RADAR INSTALLATION DETAILS, SEE DRAWINGS 24590-WTP-J8-50-00001 AND 24590-WTP-J8-50-00003.

Please note that source, special nuclear, and byproduct materials, as defined in the Atomic Energy Act of 1954 (AEA) are regulated at the U. S. Department of Energy (DOE) facilities exclusively by DOE acting pursuant to its AEA authority. DOE asserts that pursuant to AEA, it has sole and exclusive responsibility and authority to regulate source, special nuclear, and byproduct materials at DOE-owned nuclear facilities. Information contained herein on radionuclides is provided for process description purposes only.

REVISION HISTORY

REV	DESCRIPTION	ORG	CHKD	RVWD	APVD	DATE
3	REVISED PER NOTE 33	[illegible]	APP	CER [illegible]	CJZ	11/30/06
2	REVISED PER NOTE 26	RDP	SJ	JP	JJ	5/31/06
1	INCORPORATED DCN 24590-HLW-M6N-RLD-00010 AND MELTER 2 SCOPE, REVISED PER NOTE 18	MRG	TG	DMY	JFS	02/09/04
0	ISSUED FOR CONSTRUCTION	MRG	DKR	N/A	TV	12/19/02

Q
QUALITY DESIGNATOR

ISSUED BY RPP-WTP PDC
ISSUE STAMP

PROJECT No.	24590
SITE	HANFORD
AREA	200E
BUILDING No.	30

	BY	DATE
ORIGINATOR	M.R. GRINDEL	12/19/02
CHECKER	D.K. REDDY	12/19/02
APPROVER	TOM VALENTINO	12/19/02
REVIEWER	N/A	

CONTENT APPLICABLE TO ALARA? [X] YES [ ] NO
ADR NO. 24590-HLW-ADR-M-02-016 REV: 2
SAFETY SCREEN REQUIRED? [X] YES [ ] NO E&NS INITIAL IF YES CM

BECHTEL
RIVER PROTECTION PROJECT
WASTE TREATMENT PLANT
2435 STEVENS CENTER PLACE
RICHLAND, WA 99354

CONTRACT No: DE-AC27-01RV14136

P&ID - HLW RADIOACTIVE LIQUID WASTE DISPOSAL SYSTEM PLANT WASH & DRAINS VESSEL

SCALE: NONE
24590-HLW-M6-RLD-00002
REV 3

24590-HLW-M6-RLD-00003

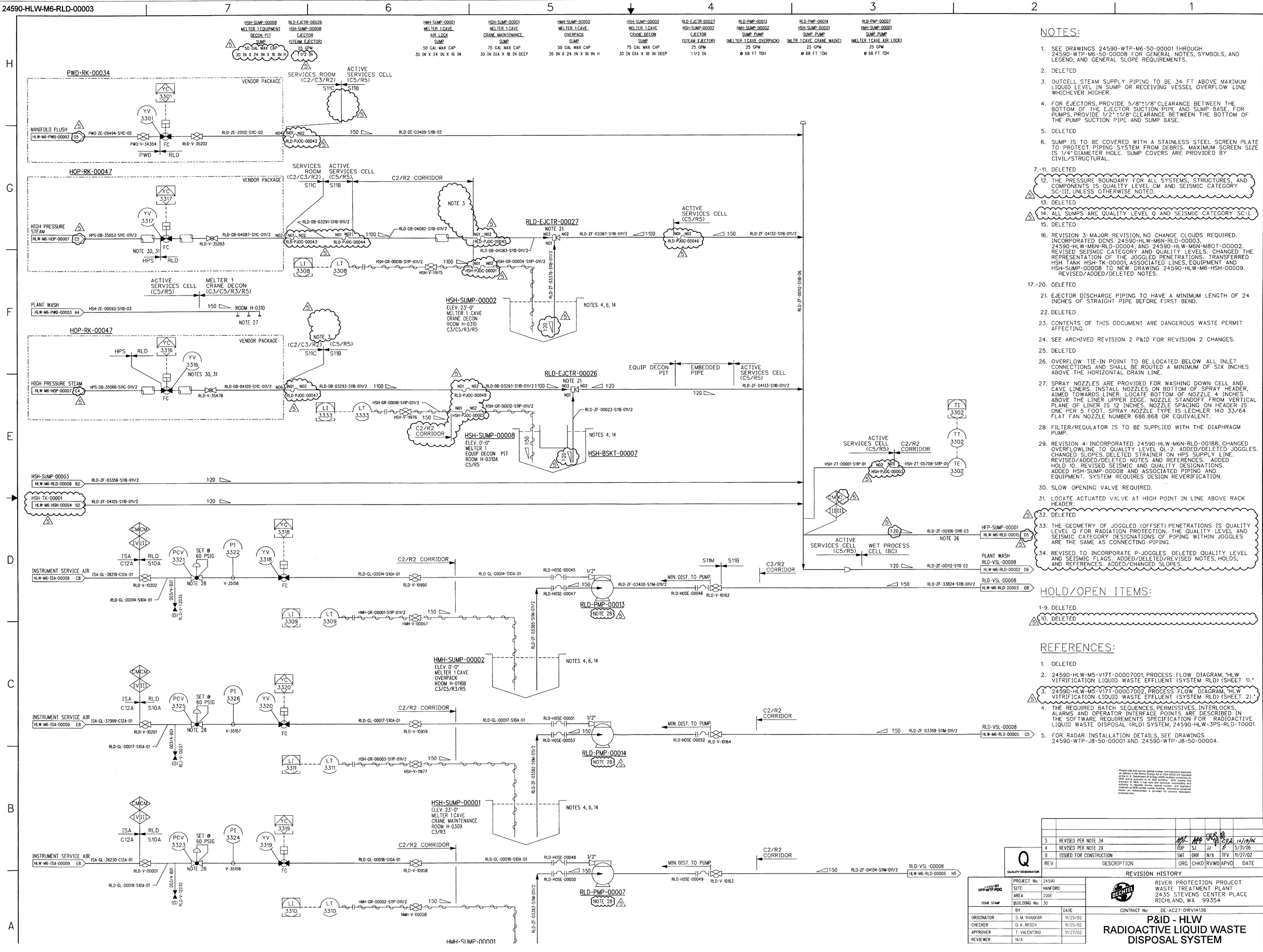

NOTES:

1. SEE DRAWINGS 24590-WTP-M6-50-00001 THROUGH 24590-WTP-M6-50-00008 FOR GENERAL NOTES, SYMBOLS, AND LEGEND, AND GENERAL SLOPE REQUIREMENTS.
2. DELETED
3. OUTCELL STEAM SUPPLY PIPING TO BE 34 FT ABOVE MAXIMUM LIQUID LEVEL IN SUMP OR RECEIVING VESSEL OVERFLOW LINE WHICHEVER HIGHER.
4. FOR EJECTORS, PROVIDE 5/8"±1/8" CLEARANCE BETWEEN THE BOTTOM OF THE EJECTOR SUCTION PIPE AND SUMP BASE. FOR PUMPS, PROVIDE 1/2"±1/8" CLEARANCE BETWEEN THE BOTTOM OF THE PUMP SUCTION PIPE AND SUMP BASE.
5. DELETED
6. SUMP IS TO BE COVERED WITH A STAINLESS STEEL SCREEN PLATE TO PROTECT PIPING SYSTEM FROM DEBRIS. MAXIMUM SCREEN SIZE IS 1/4" DIAMETER HOLE. SUMP COVERS ARE PROVIDED BY CIVIL/STRUCTURAL.

7.-11. DELETED

12. THE PRESSURE BOUNDARY FOR ALL SYSTEMS, STRUCTURES, AND COMPONENTS IS QUALITY LEVEL CM AND SEISMIC CATEGORY SC-III, UNLESS OTHERWISE NOTED.

13. DELETED

14. ALL SUMPS ARE QUALITY LEVEL Q AND SEISMIC CATEGORY SC-I.

15. DELETED

16. REVISION 3: MAJOR REVISION, NO CHANGE CLOUDS REQUIRED. INCORPORATED DCNS 24590-HLW-M6N-RLD-00003, 24590-HLW-M6N-RLD-00004, AND 24590-HLW-M6N-MBOT-00002. REVISED SEISMIC CATEGORY AND QUALITY LEVELS. CHANGED THE REPRESENTATION OF THE JOGGLED PENETRATIONS. TRANSFERRED HSH TANK HSH-TK-00001, ASSOCIATED LINES, EQUIPMENT AND HSH-SUMP-00008 TO NEW DRAWING 24590-HLW-M6-HSH-00009. REVISED/ADDED/DELETED NOTES.

17.-20. DELETED

21. EJECTOR DISCHARGE PIPING TO HAVE A MINIMUM LENGTH OF 24 INCHES OF STRAIGHT PIPE BEFORE FIRST BEND.

22. DELETED

23. CONTENTS OF THIS DOCUMENT ARE DANGEROUS WASTE PERMIT AFFECTING.

24. SEE ARCHIVED REVISION 2 P&ID FOR REVISION 2 CHANGES.

25. DELETED

26. OVERFLOW TIE-IN POINT TO BE LOCATED BELOW ALL INLET CONNECTIONS AND SHALL BE ROUTED A MINIMUM OF SIX INCHES ABOVE THE HORIZONTAL DRAIN LINE.

27. SPRAY NOZZLES ARE PROVIDED FOR WASHING DOWN CELL AND CAVE LINERS. INSTALL NOZZLES ON BOTTOM OF SPRAY HEADER, AIMED TOWARDS LINER. LOCATE BOTTOM OF NOZZLE 4 INCHES ABOVE THE LINER UPPER EDGE. NOZZLE STANDOFF FROM VERTICAL PLANE OF LINER IS 12 INCHES. NOZZLE SPACING ON HEADER IS ONE PER 5 FOOT. SPRAY NOZZLE TYPE IS LECHLER 140 33/64 FLAT FAN NOZZLE NUMBER 686.868 OR EQUIVALENT.

28. FILTER/REGULATOR IS TO BE SUPPLIED WITH THE DIAPHRAGM PUMP.

29. REVISION 4: INCORPORATED 24590-HLW-M6N-RLD-00188, CHANGED OVERFLOWLINE TO QUALITY LEVEL QL-2. ADDED/DELETED JOGGLES. CHANGED SLOPES. DELETED STRAINER ON HPS SUPPLY LINE. REVISED/ADDED/DELETED NOTES AND REFERENCES. ADDED HOLD 10. REVISED SEISMIC AND QUALITY DESIGNATIONS. ADDED HSH-SUMP-00008 AND ASSOCIATED PIPING AND EQUIPMENT. SYSTEM REQUIRES DESIGN REVERIFICATION.

30. SLOW OPENING VALVE REQUIRED.

31. LOCATE ACTUATED VALVE AT HIGH POINT IN LINE ABOVE RACK HEADER.

32. DELETED

33. THE GEOMETRY OF JOGGLED (OFFSET) PENETRATIONS IS QUALITY LEVEL Q FOR RADIATION PROTECTION. THE QUALITY LEVEL AND SEISMIC CATEGORY DESIGNATIONS OF PIPING WITHIN JOGGLES ARE THE SAME AS CONNECTING PIPING.

34. REVISED TO INCORPORATE P-JOGGLES. DELETED QUALITY LEVEL AND SEISMIC FLAGS. ADDED/DELETED/REVISED NOTES, HOLDS, AND REFERENCES. ADDED/CHANGED SLOPES.

HOLD/OPEN ITEMS:

1-9. DELETED

10. DELETED

REFERENCES:

1. DELETED
2. 24590-HLW-M5-V17T-00007001, PROCESS FLOW DIAGRAM, "HLW VITRIFICATION LIQUID WASTE EFFLUENT (SYSTEM RLD) (SHEET 1)."
3. 24590-HLW-M5-V17T-00007002, PROCESS FLOW DIAGRAM, "HLW VITRIFICATION LIQUID WASTE EFFLUENT (SYSTEM RLD) (SHEET 2)."
4. THE REQUIRED BATCH SEQUENCES, PERMISSIVES, INTERLOCKS, ALARMS AND OPERATOR INTERFACE POINTS ARE DESCRIBED IN THE SOFTWARE REQUIREMENTS SPECIFICATION FOR RADIOACTIVE LIQUID WASTE DISPOSAL (RLD) SYSTEM, 24590-HLW-3PS-RLD-T0001.
5. FOR RADAR INSTALLATION DETAILS, SEE DRAWINGS 24590-WTP-J8-50-00001 AND 24590-WTP-J8-50-00004.

Please note that source, special nuclear, and byproduct materials, as defined in the Atomic Energy Act of 1954 (AEA) are regulated by the U.S. Department of Energy (DOE) facilities exclusively by DOE acting pursuant to its AEA authority. DOE asserts that pursuant to AEA, it has sole and exclusive responsibility and authority to regulate source, special nuclear, and byproduct materials at DOE-owned nuclear facilities. Information contained in this document, nevertheless is provided for process description purposes only.

REV	DESCRIPTION	ORG	CHKD	RVWD	APVD	DATE
5	REVISED PER NOTE 34	MK	APP	CEK	MA	12/15/06
4	REVISED PER NOTE 29	RDP	SJ	JJ	JP	5/31/06
0	ISSUED FOR CONSTRUCTION	SMT	DKR	N/A	TFV	11/27/02

REVISION HISTORY

Q — QUALITY DESIGNATOR

ISSUED BY RPP-WTP PDC — ISSUE STAMP

PROJECT No.	24590
SITE	HANFORD
AREA	200E
BUILDING No.	30

	BY	DATE
ORIGINATOR	S. M. THAKKAR	11/25/02
CHECKER	D. K. REDDY	11/25/02
APPROVER	T. VALENTINO	11/27/02
REVIEWER	N/A	

BECHTEL

RIVER PROTECTION PROJECT
WASTE TREATMENT PLANT
2435 STEVENS CENTER PLACE
RICHLAND, WA 99354

CONTRACT No: DE-AC27-01RV14136

P&ID - HLW RADIOACTIVE LIQUID WASTE DISPOSAL SYSTEM

HMSRLD00003.dgn

HPH-SUMP-00002 CRANE DECON AREA SUMP	HPH-SUMP-00005 CANISTER HANDLING CAVE SUMP	HRH-SUMP-00001 CANISTER IMPORT TUNNEL SUMP	HDH-SUMP-00003 CANISTER DECON CAVE SUMP	RLD-EJCTR-00054 HDH-SUMP-00003 EJECTOR (STEAM EJECTOR)	RLD-EJCTR-00029 HPH-SUMP-00005 EJECTOR (STEAM EJECTOR)	RLD-PMP-00189 HPH-SUMP-00002 SUMP PUMP CRANE DECON	RLD-PMP-00188 HRH-SUMP-00001 SUMP PUMP (CANISTER IMPORT TUNNEL)
75 GAL MAX CAP	75 GAL MAX CAP	75 GAL MAX CAP	75 GAL MAX CAP	33 GPM	25 GPM	25 GPM	25 GPM
30 IN DIA X 18 IN DEEP	30 IN DIA X 18 IN DEEP	30 IN DIA X 18 IN DEEP	30 IN DIA X 18 IN DEEP	1 1/2 IN	1 1/2 IN	@ 68 FT TDH	@ 68 FT TDH

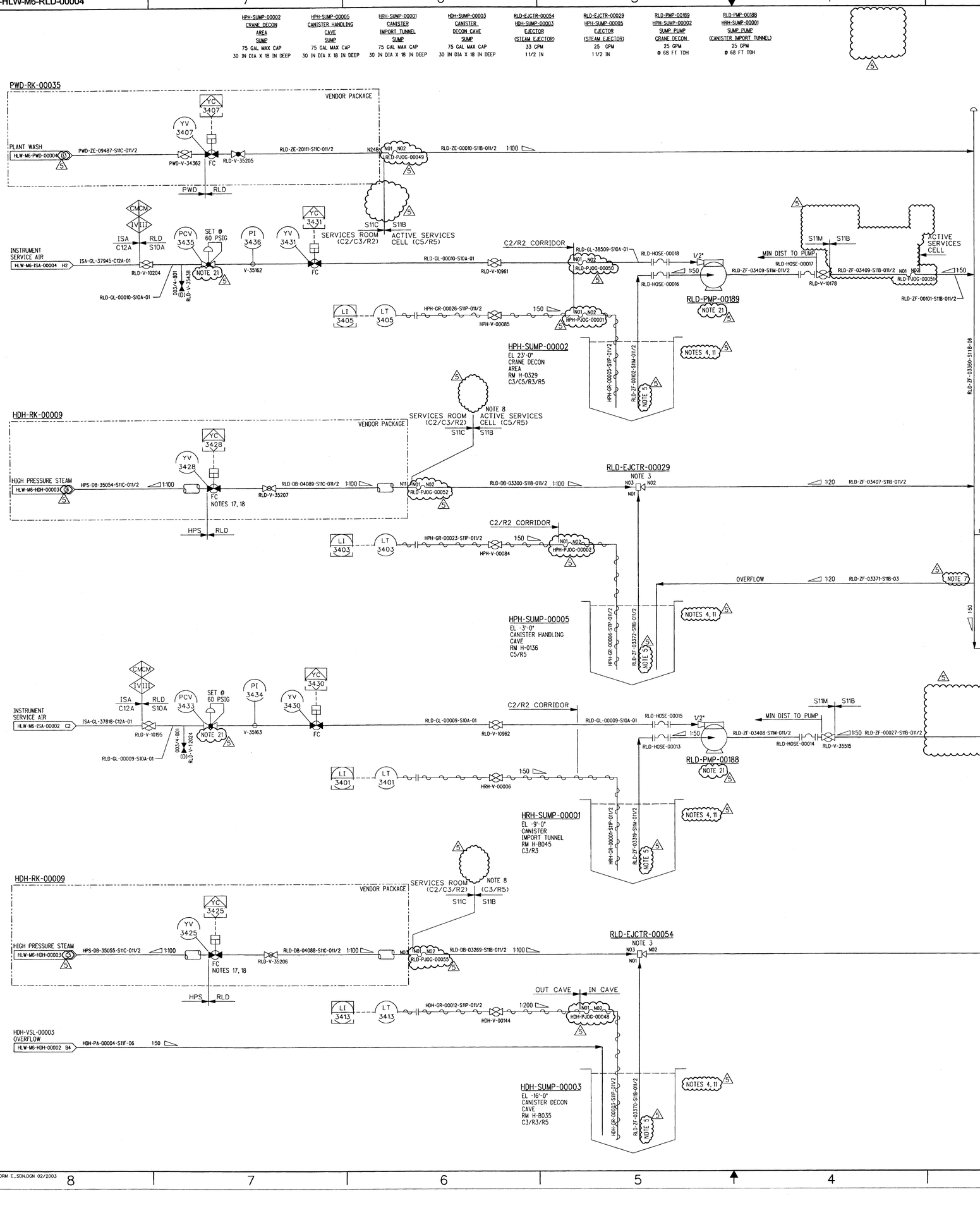

NOTES:

1. SEE DRAWINGS 24590-WTP-M6-50-00001 THROUGH 24590-WTP-M6-50-00008 FOR GENERAL NOTES, SYMBOLS, AND LEGEND, AND GENERAL SLOPE REQUIREMENTS.
2. DELETED
3. EJECTOR DISCHARGE PIPING TO HAVE A MINIMUM LENGTH OF 24 INCHES OF STRAIGHT PIPE BEFORE FIRST BEND.
4. ALL SUMPS ARE QUALITY LEVEL Q AND SEISMIC CATEGORY SC-1.
5. FOR EJECTORS, PROVIDE 5/8"±1/8" CLEARANCE BETWEEN THE BOTTOM OF THE EJECTOR SUCTION PIPE AND SUMP BASE. FOR PUMPS, PROVIDE 1/2" ±1/8" CLEARANCE BETWEEN THE BOTTOM OF THE PUMP SUCTION PIPE AND SUMP BASE.
6. CONTENTS OF THIS DOCUMENT ARE DANGEROUS WASTE PERMIT AFFECTING.
7. OVERFLOW TIE-IN POINT TO BE LOCATED BELOW ALL INLET CONNECTIONS AND SHALL BE ROUTED A MINIMUM OF SIX INCHES ABOVE THE HORIZONTAL DRAIN LINE.
8. OUT CELL STEAM SUPPLY PIPING TO BE 34 FT ABOVE MAXIMUM LIQUID LEVEL IN SUMP OR RECEIVING VESSEL OVERFLOW LINE WHICHEVER IS HIGHER.

9.-10. DELETED

11. SUMP IS TO BE COVERED WITH A STAINLESS STEEL SCREEN PLATE TO PROTECT PIPING SYSTEM FROM DEBRIS. MAXIMUM SCREEN SIZE IS 1/4" DIAMETER HOLE. SUMP COVERS ARE TO BE PROVIDED BY CIVIL/STRUCTURAL.
12. THE PRESSURE BOUNDARY FOR ALL PIPING AND COMPONENTS IS QUALITY LEVEL CM AND SEISMIC CATEGORY SC-III, UNLESS OTHERWISE NOTED.

13.-14. DELETED

15. REVISION 3: MAJOR REVISION, NO CHANGE CLOUDS REQUIRED. INCORPORATED DCNS 24590-HLW-M6N-RLD-00002, 24590-HLW-M6N-RLD-00005, 24590-HLW-M6N-RLD-00124, AND 24590-HLW-M6N-M80T-00002. REVISED SEISMIC CATEGORY AND QUALITY LEVELS. CHANGED THE REPRESENTATION OF THE JOGGLED PENETRATIONS. TRANSFERRED HSH TANK HSH-TK-00001, ASSOCIATED LINES, EQUIPMENT AND HSH-SUMP-00008 TO NEW DRAWING 24590-HLW-M6-HSH-00009. REVISED/ADDED/DELETED NOTES.
16. REVISION 4: ADDED HDH-WBOX-00026. REVISED/ADDED/DELETED NOTES, REVISED AND ADDED REFERENCES. DELETED STRAINERS. ADDED SLOPES TO STEAM LINES IN RACKS. CHANGED SLOPE ON STEAM LINES OUTSIDE RACKS. REVISED SEISMIC AND QUALITY DESIGNATIONS. ADDED BACKFLOW PREVENTERS ON OUT CAVE/OUT CELL PIPING FOR C5 CONFINEMENT. SYSTEM REQUIRES DESIGN REVERIFICATION.
17. SLOW OPENING VALVE REQUIRED.
18. LOCATE ACTUATED VALVE AT HIGH POINT INLINE ABOVE RACK HEADER.
19. DELETED
20. THE GEOMETRY OF JOGGLED (OFFSET) PENETRATIONS IS QUALITY LEVEL Q FOR RADIATION PROTECTION. THE QUALITY LEVEL AND SEISMIC CATEGORY DESIGNATIONS OF PIPING WITHIN JOGGLES ARE THE SAME AS CONNECTING PIPING.
21. FILTER/REGULATOR IS TO BE SUPPLIED WITH THE DIAPHRAGM PUMP.
22. REVISED TO INCORPORATE P-JOGGLES. DELETED BACKFLOW PREVENTERS ON PUMP DISCHARGE LINES. REVISED QUALITY/SEISMIC FLAGS. ADDED/DELETED/REVISED NOTES AND HOLDS. REVISED/DELETED LINE NUMBERS.

HOLD/OPEN ITEMS:

1-7. DELETED

REFERENCES:

1. DELETED
2. THE REQUIRED BATCH SEQUENCES, PERMISSIVES, INTERLOCKS, ALARMS AND OPERATOR INTERFACE POINTS ARE DESCRIBED IN THE SOFTWARE REQUIREMENTS SPECIFICATION FOR RLD RADIOACTIVE LIQUID WASTE DISPOSAL SYSTEM, 24590-HLW-3PS-RLD-T0001.
3. FOR RADAR INSTALLATION DETAILS, SEE DRAWINGS 24590-WTP-J8-50-00001 AND 24590-WTP-J8-50-00004.
4. 24590-HLW-M5-V17T-00007001, PROCESS FLOW DIAGRAM, "HLW VITRIFICATION LIQUID WASTE EFFLUENT (SYSTEM RLD) (SHEET 1)."
5. 24590-HLW-M5-V17T-00007002, PROCESS FLOW DIAGRAM, "HLW VITRIFICATION LIQUID WASTE EFFLUENT (SYSTEM RLD) (SHEET 2)."

Please note that source, special nuclear, and byproduct materials, as defined by the Atomic Energy Act of 1954 (AEA) are regulated at the U.S. Department of Energy (DOE) facilities exclusively by DOE, acting pursuant to its AEA authority. The Contractor, pursuant to AEA, it has sole and exclusive responsibility and authority to regulate source, special nuclear, and byproduct materials within DOE-owned nuclear facilities. Information contained herein on radionuclides is provided for process description purposes only.

REV	DESCRIPTION	ORG	CHKD	RVWD	APVD	DATE
5	REVISED PER NOTE 22	MT	MP	CEK SPK	MT	11/30/06
4	REVISED PER NOTE 16	RDP	SJ	JP	JJ	5/31/06
3	REVISED PER NOTE 15	PLJ	APP	TV	EI	6-23-05
0	ISSUED FOR CONSTRUCTION	SMT	NRR	N/A	TFV	11-27-02

REVISION HISTORY

Q QUALITY DESIGNATOR

ISSUED BY RPP-WTP PDC — ISSUE STAMP

PROJECT No.	24590	
SITE	HANFORD	
AREA	200E	
BUILDING No.	30	
	BY	DATE
ORIGINATOR	S. M. THAKKAR	10-24-02
CHECKER	RAO RAVULA	10-25-02
APPROVER	TFV FOR SCF	11-27-02
REVIEWER	N/A	

CONTENT APPLICABLE TO ALARA? [X] YES [ ] NO
ADR NO. 24590-HLW-ADR-M-02-016 REV: 2
SAFETY SCREEN REQUIRED? [X] YES [ ] NO EMS INITIAL IF YES OK

SAFETY SCREEN IS REQUIRED FOR DRAWING TYPES IDENTIFIED IN 24590-WTP-GPP-SREG-002

RIVER PROTECTION PROJECT
WASTE TREATMENT PLANT
2435 STEVENS CENTER PLACE
RICHLAND, WA 99354

CONTRACT No: DE-AC27-01RV14136

P&ID - HLW RADIOACTIVE LIQUID WASTE DISPOSAL SYSTEM MISCELLANEOUS SUMPS

SCALE: NONE

24590-HLW-M6-RLD-00004

REV 5

"E" SIZE - 44x34
COMPUTER GENERATED - MANUAL CHANGES NOT PERMITTED

R1070588

11/29/2006 07:05:07 AM

PLOTTED BY: ebdorn
C:\Work Items\3319\HLW\M6\RLD00004.dgn

FORM E_SDN.DGN 02/2003

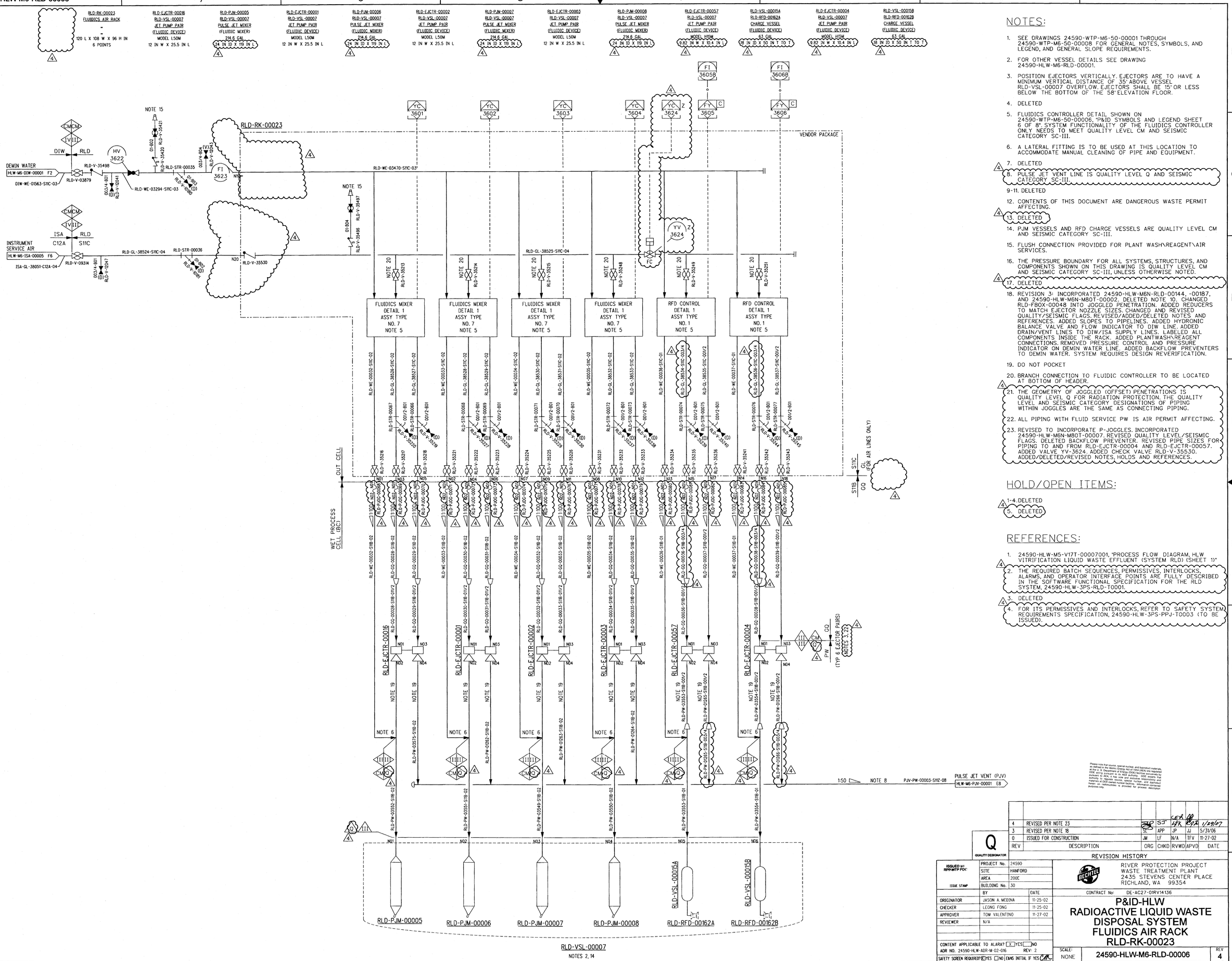

NOTES:

1. SEE DRAWINGS 24590-WTP-M6-50-00001 THROUGH 24590-WTP-M6-50-00008 FOR GENERAL NOTES, SYMBOLS, AND LEGEND, AND GENERAL SLOPE REQUIREMENTS.
2. FOR OTHER VESSEL DETAILS SEE DRAWING 24590-HLW-M6-RLD-00001.
3. POSITION EJECTORS VERTICALLY. EJECTORS ARE TO HAVE A MINIMUM VERTICAL DISTANCE OF 35' ABOVE VESSEL RLD-VSL-00007 OVERFLOW. EJECTORS SHALL BE 15' OR LESS BELOW THE BOTTOM OF THE 58' ELEVATION FLOOR.
4. DELETED
5. FLUIDICS CONTROLLER DETAIL SHOWN ON 24590-WTP-M6-50-00006. "P&ID SYMBOLS AND LEGEND SHEET 6 OF 8". SYSTEM FUNCTIONALITY OF THE FLUIDICS CONTROLLER ONLY NEEDS TO MEET QUALITY LEVEL CM AND SEISMIC CATEGORY SC-III.
6. A LATERAL FITTING IS TO BE USED AT THIS LOCATION TO ACCOMMODATE MANUAL CLEANING OF PIPE AND EQUIPMENT.
7. DELETED
8. PULSE JET VENT LINE IS QUALITY LEVEL Q AND SEISMIC CATEGORY SC-III.

9-11. DELETED

12. CONTENTS OF THIS DOCUMENT ARE DANGEROUS WASTE PERMIT AFFECTING.
13. DELETED
14. PJM VESSELS AND RFD CHARGE VESSELS ARE QUALITY LEVEL CM AND SEISMIC CATEGORY SC-III.
15. FLUSH CONNECTION PROVIDED FOR PLANT WASH\REAGENT\AIR SERVICES.
16. THE PRESSURE BOUNDARY FOR ALL SYSTEMS, STRUCTURES, AND COMPONENTS SHOWN ON THIS DRAWING IS QUALITY LEVEL CM AND SEISMIC CATEGORY SC-III, UNLESS OTHERWISE NOTED.
17. DELETED
18. REVISION 3: INCORPORATED 24590-HLW-M6N-RLD-00144, -00187, AND 24590-HLW-M6N-M8OT-00002. DELETED NOTE 10. CHANGED RLD-FBOX-00048 INTO JOGGLED PENETRATION. ADDED REDUCERS TO MATCH EJECTOR NOZZLE SIZES. CHANGED AND REVISED QUALITY/SEISMIC FLAGS. REVISED/ADDED/DELETED NOTES AND REFERENCES. ADDED SLOPES TO PIPELINES. ADDED HYDRONIC BALANCE VALVE AND FLOW INDICATOR TO DIW LINE. ADDED DRAIN/VENT LINES TO DIW/ISA SUPPLY LINES. LABELED ALL COMPONENTS INSIDE THE RACK. ADDED PLANTWASH\REAGENT CONNECTIONS. REMOVED PRESSURE CONTROL AND PRESSURE INDICATOR ON DEMIN WATER LINE. ADDED BACKFLOW PREVENTERS TO DEMIN WATER. SYSTEM REQUIRES DESIGN REVERIFICATION.
19. DO NOT POCKET
20. BRANCH CONNECTION TO FLUIDIC CONTROLLER TO BE LOCATED AT BOTTOM OF HEADER.
21. THE GEOMETRY OF JOGGLED (OFFSET) PENETRATIONS IS QUALITY LEVEL Q FOR RADIATION PROTECTION. THE QUALITY LEVEL AND SEISMIC CATEGORY DESIGNATIONS OF PIPING WITHIN JOGGLES ARE THE SAME AS CONNECTING PIPING.
22. ALL PIPING WITH FLUID SERVICE PW IS AIR PERMIT AFFECTING.
23. REVISED TO INCORPORATE P-JOGGLES. INCORPORATED 24590-HLW-M6N-M8OT-00007. REVISED QUALITY LEVEL/SEISMIC FLAGS. DELETED BACKFLOW PREVENTER. REVISED PIPE SIZES FOR PIPING TO AND FROM RLD-EJCTR-00004 AND RLD-EJCTR-00057. ADDED VALVE YV-3624. ADDED CHECK VALVE RLD-V-35530. ADDED/DELETED/REVISED NOTES, HOLDS AND REFERENCES.

HOLD/OPEN ITEMS:

1-4. DELETED
5. DELETED

REFERENCES:

1. 24590-HLW-M5-V17T-00007001, "PROCESS FLOW DIAGRAM, HLW VITRIFICATION LIQUID WASTE EFFLUENT (SYSTEM RLD) (SHEET 1)"
2. THE REQUIRED BATCH SEQUENCES, PERMISSIVES, INTERLOCKS, ALARMS, AND OPERATOR INTERFACE POINTS ARE FULLY DESCRIBED IN THE SOFTWARE FUNCTIONAL SPECIFICATION FOR THE RLD SYSTEM, 24590-HLW-3PS-RLD-T0001.
3. DELETED
4. FOR ITS PERMISSIVES AND INTERLOCKS, REFER TO SAFETY SYSTEM REQUIREMENTS SPECIFICATION, 24590-HLW-3PS-PPJ-T0003 (TO BE ISSUED).

Please note that source, special nuclear, and byproduct materials, as defined in the Atomic Energy Act of 1954 (AEA) are regulated by DOE acting pursuant to its AEA authorities exclusively to the exclusion of the NRC. DOE has sole and exclusive responsibility and authority to regulate such source, special nuclear, and byproduct materials at DOE owned nuclear facilities. Information contained herein on radionuclides is provided for process description purposes only.

REV	DESCRIPTION	ORG	CHKD	RVWD	APVD	DATE
4	REVISED PER NOTE 23	SJ	SJ	CER	BSK	1/29/07
3	REVISED PER NOTE 18	SJ	APP	JP	JJ	5/31/06
0	ISSUED FOR CONSTRUCTION	JM	LF	N/A	TFV	11-27-02

REVISION HISTORY

Q — QUALITY DESIGNATOR

ISSUED BY RPP-WTP PDC — ISSUE STAMP

	BY	DATE
ORIGINATOR	JASON A. MEDINA	11-25-02
CHECKER	LEONG FONG	11-25-02
APPROVER	TOM VALENTINO	11-27-02
REVIEWER	N/A	

CONTENT APPLICABLE TO ALARA? [X] YES [ ] NO
ADR NO. 24590-HLW-ADR-M-02-016 REV: 2
SAFETY SCREEN REQUIRED? [X] YES [ ] NO EMS INITIAL IF YES CMK
SAFETY SCREEN IS REQUIRED FOR DRAWING TYPES IDENTIFIED IN 24590-WTP-GPP-SREQ-002

PROJECT No. 24590
SITE HANFORD
AREA 200E
BUILDING No. 30

BECHTEL
RIVER PROTECTION PROJECT
WASTE TREATMENT PLANT
2435 STEVENS CENTER PLACE
RICHLAND, WA 99354

CONTRACT No: DE-AC27-01RV14136

P&ID-HLW RADIOACTIVE LIQUID WASTE DISPOSAL SYSTEM FLUIDICS AIR RACK RLD-RK-00023

SCALE: NONE
24590-HLW-M6-RLD-00006
REV 4

"E" SIZE - 44x34
COMPUTER GENERATED - MANUAL CHANGES NOT PERMITTED

R10745840

01/22/2007 01:23:48

PLOTTED BY: erkoch
C:\Work\dms0383\HLW\M6\RLD00006.dgn

FORM E_SDN.DGN 02/2003

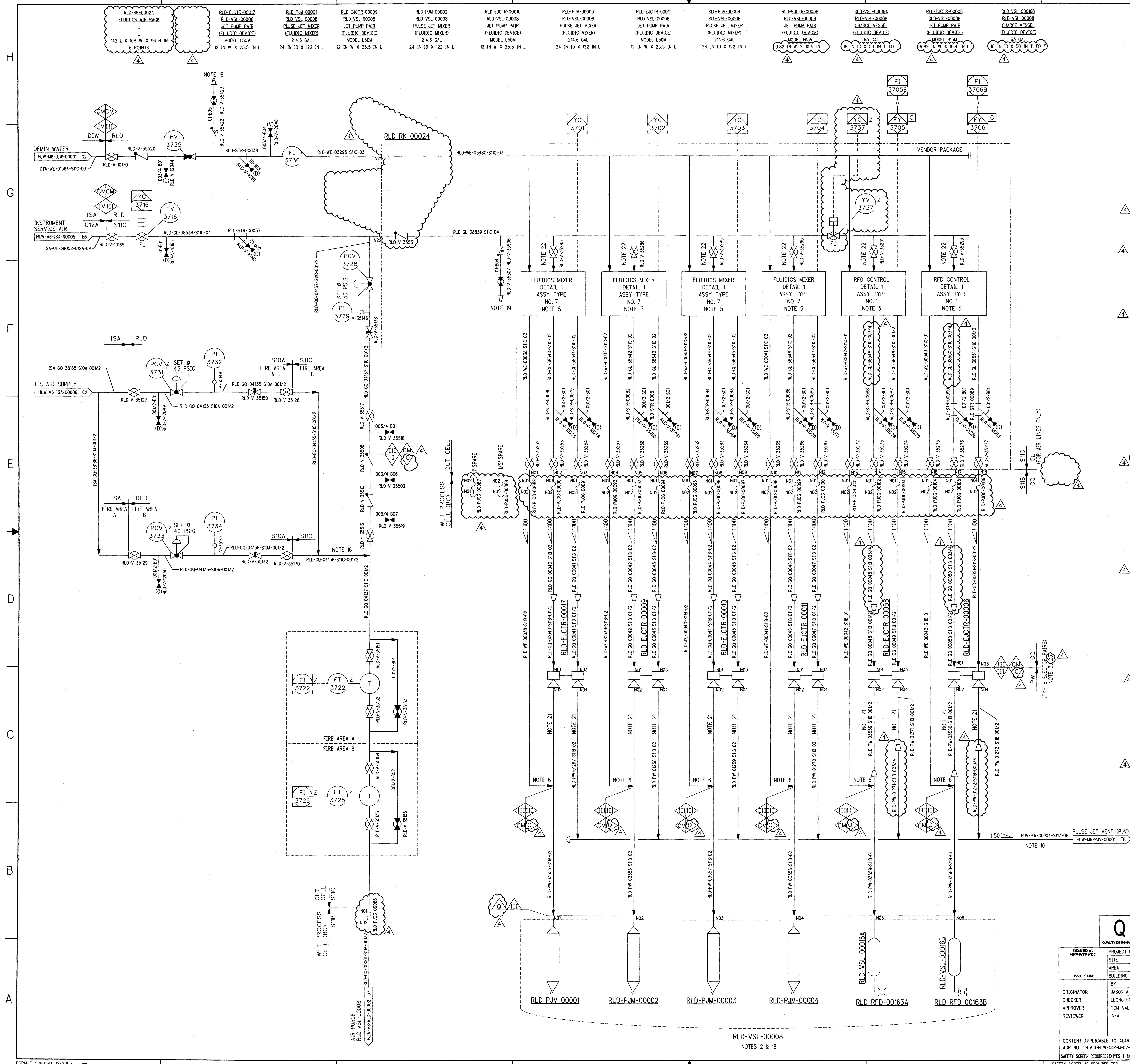

NOTES:

1. SEE DRAWINGS 24590-WTP-M6-50-00001 THROUGH 24590-WTP-M6-50-00008 FOR GENERAL NOTES, SYMBOLS, AND LEGEND, AND GENERAL SLOPE REQUIREMENTS.
2. SEE 24590-HLW-M6-RLD-00002 FOR RLD-VSL-00008 DETAILS.
3. POSITION EJECTORS VERTICALLY. EJECTORS ARE TO HAVE A MINIMUM VERTICAL DISTANCE OF 35 FEET ABOVE VESSEL RLD-VSL-00008 OVERFLOW. EJECTORS SHALL BE LOCATED 15' OR LESS BELOW THE BOTTOM OF THE 58' ELEVATION FLOOR.
4. DELETED
5. FOR FLUIDICS CONTROLLER DETAIL, REFER TO DRAWING 24590-WTP-M6-50-00006. "P&ID SYMBOLS AND LEGEND SHEET 6 OF 8". SYSTEM FUNCTIONALITY OF THE FLUIDICS CONTROLLER ONLY NEEDS TO MEET QUALITY LEVEL CM AND SEISMIC CATEGORY SC-III.
6. A LATERAL FITTING IS TO BE USED AT THIS LOCATION TO ACCOMMODATE MANUAL CLEANING OF PIPE AND EQUIPMENT.
7. DELETED
8. DELETED
9. DELETED
10. PULSE JET VENT LINE IS QUALITY LEVEL Q AND SEISMIC CATEGORY SC-III. (4)
11. DELETED
12. DELETED
13. THE GEOMETRY OF JOGGLED (OFFSET) PENETRATIONS IS QUALITY LEVEL Q FOR RADIATION PROTECTION. THE QUALITY LEVEL AND SEISMIC CATEGORY DESIGNATIONS OF PIPING WITHIN JOGGLES ARE THE SAME AS CONNECTING PIPING. PIPING WITHIN SPARE JOGGLE IS QUALITY LEVEL Q AND SEISMIC CATEGORY SC-I (4)
14. CONTENTS OF THIS DOCUMENT ARE DANGEROUS WASTE PERMIT AFFECTING.
15. THE PRESSURE BOUNDARY FOR ALL SYSTEMS, STRUCTURES, AND COMPONENTS ON THIS DRAWING IS QUALITY LEVEL CM AND SEISMIC CATEGORY SC-III, UNLESS OTHERWISE NOTED. (4)
16. LOCATE TIE IN POINT FOR LINES RLD-GQ-04137 AND RLD-GQ-04136 AS CLOSE AS POSSIBLE TO THE JOGGLED PENETRATION RLD-FBOX-0055-01.
17. REVISION 2: MAJOR REVISION, NO CHANGE CLOUDS REQUIRED. INCORPORATED DCN 24590-HLW-M6N-RLD-00132, DCN 24590-HLW-M6N-RLD-00145, AND DCN 24590-HLW-M6N-RLD-00147. ADDED ITS SUPPLY TO RLD-VSL-00008. DELETED EJECTORS HCP-EJCTR-00031 AND HCP-EJCTR-00032. ALSO DELETED LINES ASSOCIATED WITH THESE TWO EJECTORS. REVISED QUALITY/SEISMIC FLAGS. DELETED HOLD 1. REVISED/ADDED/DELETED NOTES. (THIS IS NOTE 11 ON THE ARCHIVED COPY OF REVISION 2 OF THIS P&ID).
18. PJM VESSELS AND RFD CHARGE VESSELS ARE QUALITY LEVEL CM AND SEISMIC CATEGORY SC-III.
19. FLUSH CONNECTION PROVIDED FOR PLANT WASH\REAGENT\AIR SERVICES.
20. REVISION 3: INCORPORATED 24590-HLW-M6N-RLD-00033 (NOTE 7 WAS SUBSEQUENTLY REVISED TO NOTE 18) AND 24590-HLW-M6N-M80T-00002. TAGGED PIPE LINES AND VALVES INSIDE RACK. ADD SLOPES TO PIPELINES. ADDED ASSEMBLY NUMBER TYPE TO FLUIDICS CONTROLLERS. ADDED HYDRONIC BALANCING VALVE AND FLOW INDICATOR TO DEMIN WATER HEADER. MODIFIED FLUID CODE IN RACK FROM GQ TO GL. ADDED PLANT WASH/REAGENT HOSE CONNECTIONS. ADDED BACKFLOW PREVENTERS TO DEMIN WATER AND ISA SUPPLY. REVISED/ADDED/DELETED NOTES AND REFERENCES. DELETED CHECK VALVE ON ISA LINE. MODIFIED QUALITY AND SEISMIC FLAGS. REMOVED PRESSURE CONTROL VALVE AND PRESSURE INDICATOR ON DEMIN WATER LINE. SYSTEM REQUIRES DESIGN REVERIFICATION. (4)
21. DO NOT POCKET
22. BRANCH CONNECTION TO FLUDIC CONTROLLER TO BE LOCATED AT BOTTOM OF HEADER.
23. ALL PIPING WITH FLUID SERVICE PW IS AIR PERMIT AFFECTING. (4)
24. REVISED TO INCORPORATE P-JOGGLES. INCORPORATED 24590-HLW-M6N-M80T-00007. REVISED QUALITY LEVEL/SEISMIC FLAGS. DELETED BACKFLOW PREVENTER. REVISED PIPE SIZES FOR PIPING TO AND FROM RLD-EJCTR-00058 AND RLD-EJCTR-00006. ADDED VALVE YV-3737. ADDED CHECK VALVE RLD-V-35531. ADDED/REVISED/DELETED NOTES, REFERENCES AND HOLDS.

HOLD/OPEN ITEMS:

1-5. DELETED
6. DELETED (4)

REFERENCES:

1. DELETED
2. 24590-HLW-M5-V17T-00007002, "PROCESS FLOW DIAGRAM HLW VITRIFICATION LIQUID WASTE EFFLUENT (SYSTEM RLD) (SHEET 2).
3. DELETED
4. THE REQUIRED BATCH SEQUENCES, PERMISSIVES, INTERLOCKS, ALARMS, AND OPERATOR INTERFACE POINTS ARE FULLY DESCRIBED IN THE SOFTWARE FUNCTIONAL SPECIFICATION FOR THE RLD SYSTEM, 24590-HLW-3PS-RLD-T0001. (4)
5. FOR ITS PERMISSIVES AND INTERLOCKS, REFER TO SAFETY SYSTEM REQUIREMENT SPECIFICATION, 24590-HLW-3PS-PPJ-T0003 (TO BE ISSUED).

Please note that source, special nuclear, and byproduct materials, as defined in the Atomic Energy Act of 1954 (AEA) are regulated at the U. S. Department of Energy (DOE) facilities exclusively by DOE acting pursuant to its AEA authority. DOE asserts that pursuant to AEA, it has sole and exclusive responsibility and authority to regulate source, special nuclear, and byproduct materials at DOE-owned nuclear facilities. Information contained herein on radionuclides is provided for process description purposes only.

Q
QUALITY DESIGNATOR

REV	DESCRIPTION	ORG	CHKD	RVWD	APVD	DATE
4	REVISED PER NOTE 24	[signature]	SJ	CER APK	[signature]	1/29/07
3	REVISED PER NOTE 20	SL	APP	JP	JJ	5/31/06
2	REVISED PER NOTE 17	PLJ	SJ	EI	TV	3/8/05
0	ISSUE FOR CONSTRUCTION	JM	LEF	N/A	TV	11-27-03

REVISION HISTORY

ISSUED BY RPP-WTP PDC

ISSUE STAMP

PROJECT No.	24590
SITE	HANFORD
AREA	200E
BUILDING No.	30

RIVER PROTECTION PROJECT
WASTE TREATMENT PLANT
2435 STEVENS CENTER PLACE
RICHLAND, WA 99354

CONTRACT No: DE-AC27-01RV14136

	BY	DATE
ORIGINATOR	JASON A. MEDINA	11-25-03
CHECKER	LEONG FONG	11-25-03
APPROVER	TOM VALENTINO	11-27-03
REVIEWER	N/A	

P&ID - HLW RADIOACTIVE LIQUID WASTE DISPOSAL SYSTEM FLUIDICS AIR RACK RLD-RK-00024

CONTENT APPLICABLE TO ALARA? [X] YES [ ] NO
ADR NO. 24590-HLW-ADR-M-02-016 REV: 2
SAFETY SCREEN REQUIRED? [X] YES [ ] NO E&NS INITIAL IF YES [initials]

SCALE: NONE

24590-HLW-M6-RLD-00007 REV 4

SAFETY SCREEN IS REQUIRED FOR DRAWING TYPES IDENTIFIED IN 24590-WTP-GPP-SREG-002

'E' SIZE - 44x34
COMPUTER GENERATED - MANUAL CHANGES NOT PERMITTED

R10746941

01/22/2007 03:49:56 PM

PLOTTED BY: wmahoney
C:\Work\dms03839\HLWM6RLD00007.dgn

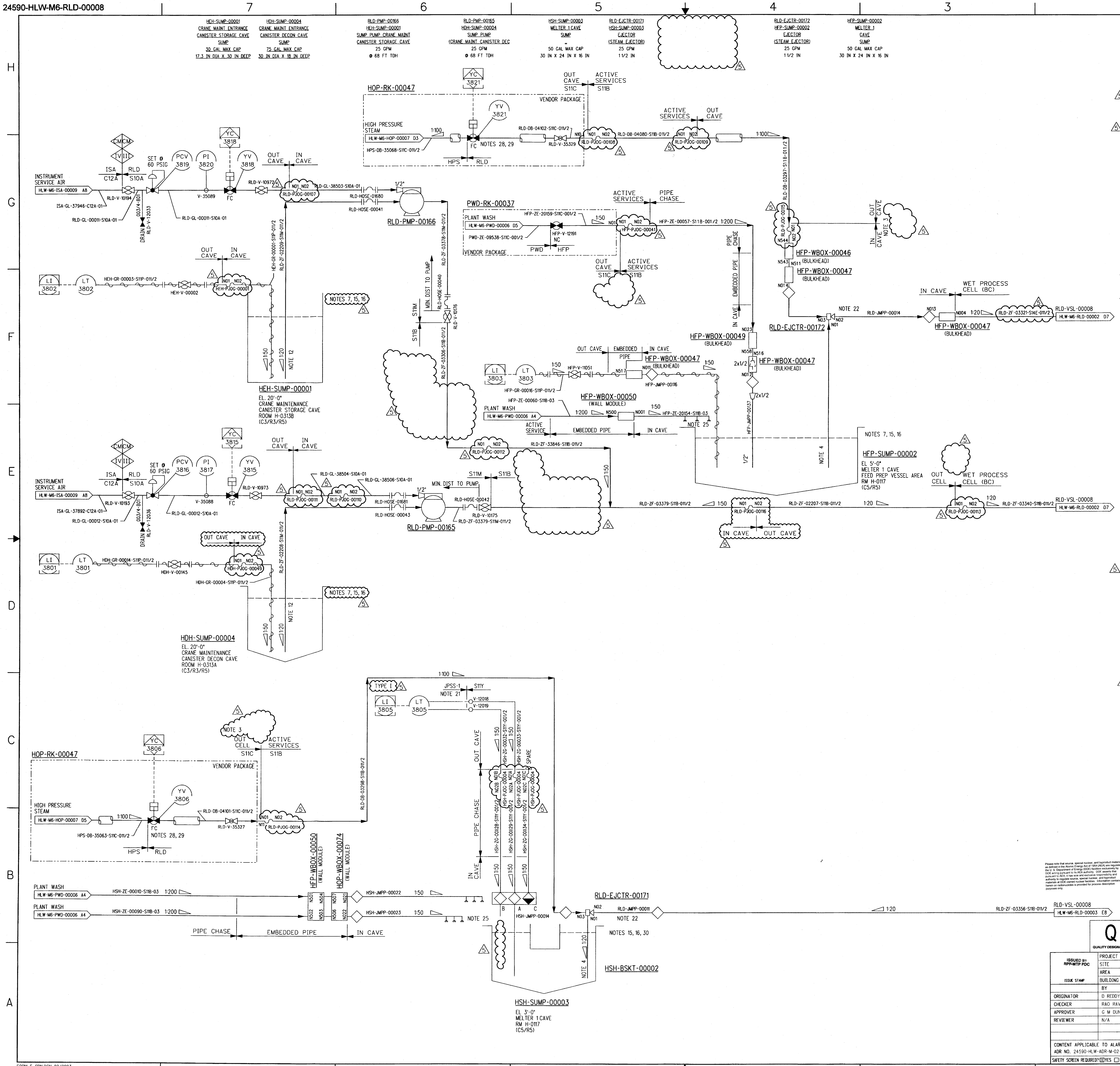

NOTES:

1. SEE DRAWINGS 24590-WTP-M6-50-00001 THROUGH 24590-WTP-M6-50-00008 FOR GENERAL NOTES, SYMBOLS, AND LEGEND, AND GENERAL SLOPE REQUIREMENTS.
2. DELETED
3. OUT CELL STEAM SUPPLY PIPING MUST BE A MINIMUM OF 34'-0" ABOVE THE SUMP LIQUID LEVEL.
4. PROVIDE 5/8" ±1/8" CLEARANCE BETWEEN BOTTOM OF EJECTOR SUCTION PIPE AND SUMP LINER.
5. THE PRESSURE BOUNDARY FOR ALL SYSTEMS, STRUCTURES, AND COMPONENTS ON THIS DRAWING IS QUALITY LEVEL CM AND SEISMIC CATEGORY SC-III, UNLESS OTHERWISE NOTED.
6. DELETED
7. SUMP COVERED WITH STAINLESS STEEL SCREEN PLATE TO PROTECT PIPING SYSTEM FROM DEBRIS. MAXIMUM SCREEN SIZE IS 1/4" DIAMETER HOLE. SUMP AND SUMP COVERS ARE PROVIDED BY CIVIL/STRUCTURAL.
8. DELETED
9. CONTENTS OF THIS DOCUMENT ARE DANGEROUS WASTE PERMIT AFFECTING.

10-11. DELETED

12. PROVIDE 1/2" ±1/8" CLEARANCE BETWEEN BOTTOM OF SUCTION PIPE AND SUMP BASE.

13-14. DELETED

15. SUMPS SHOWN WITH CONE BOTTOM ARE PROVIDED WITH STAINLESS STEEL LINERS. SUMPS SHOWN WITH FLAT BOTTOM HAVE NO LINERS.
16. ALL SUMPS ARE QUALITY LEVEL Q AND SEISMIC CATEGORY SC-I.

17-20. DELETED

21. JPSS-1 SPECIFICATION AS DEFINED IN INSTRUMENT PIPING MATERIAL CLASS, SEE REFERENCE 6. SPECIFICATION CHANGE ALSO DEFINES AREA OF C&I RESPONSIBILITY.
22. EJECTOR DISCHARGE PIPING HAS A MINIMUM LENGTH OF 24 INCHES OF STRAIGHT PIPE BEFORE FIRST BEND.

23-24. DELETED

25. SPRAY NOZZLES ARE PROVIDED FOR WASHING DOWN CELL AND CAVE LINERS. INSTALL NOZZLES ON BOTTOM OF SPRAY HEADER, AIMED TOWARDS LINER. LOCATE BOTTOM OF NOZZLE 4 INCHES ABOVE THE LINER UPPER EDGE. NOZZLE STANDOFF FROM VERTICAL PLANE OF LINER IS 12 INCHES. NOZZLE SPACING ON HEADER IS ONE PER 5 FOOT. SPRAY NOZZLE TYPE IS LECHLER 140 33/64 FLAT FAN NOZZLE NUMBER 686.868 OR EQUIVALENT.
26. REVISION 3: MAJOR REVISION, NO CHANGE CLOUDS REQUIRED. INCORPORATE DCNS 24590-HLW-M6N-RLD-00007, 24590-HLW-M6N-RLD-00125, 24590-HLW-M6N-RLD-00152. ALL WALL/FLOORBOXES DELETED; NEW FORMAT FOR JOGGLED WALL/FLOOR PENETRATIONS; CLARIFICATION OF SEISMIC CATEGORY AND QUALITY LEVEL FOR ALL PIPING; ADDITION OF WALL MODULES; ADDED DESIGNATION BETWEEN PIPE CHASE, EMBEDDED PIPE, IN CELL AND IN/OUT CAVE AREAS; ADDED JUMPERS AND ROOT VALVES; ADDED NOTES 2, 5, 17, 20, 21, 23; DELETED NOTES 6, 8; EDITED NOTES 18, 23, 24, 25; ADDED REFERENCES 4, 5.
27. REVISION 4: INCORPORATED 24590-HLW-M6N-M80T-00002, 24590-HLW-M6N-RLD-00148, -00170, -00175, 24590-WTP-FCR-M-05-0044, AND 24590-WTP-NCR-CON-05-0027. ADDED JOGGLE PENETRATIONS. CHANGED PCV-3819 FROM GATE TO PLUG. ADDED 1 X 1/2 REDUCER ON AIR SUPPLY LINE TO RLD-PMP-165, -166. REVISED SEISMIC AND QUALITY DESIGNATIONS. ADDED BACKFLOW PREVENTERS ON OUT CAVE/OUT CELL PIPING FOR C5 CONFINEMENT. REVISED/ADDED/DELETED NOTES AND REFERENCES. SYSTEM REQUIRES DESIGN REVERIFICATION.
28. SLOW OPENING VALVE REQUIRED.
29. LOCATE ACTUATED VALVE AT HIGH POINT IN LINE ABOVE RACK HEADER.
30. SUMP FITTED WITH REMOVABLE BASKET TO COLLECT DEBRIS.
31. DELETED
32. THE GEOMETRY OF JOGGLED (OFFSET) PENETRATIONS IS QUALITY LEVEL Q FOR RADIATION PROTECTION. THE QUALITY LEVEL AND SEISMIC CATEGORY DESIGNATIONS OF PIPING WITHIN JOGGLES ARE THE SAME AS CONNECTING PIPING.
33. REVISED TO INCORPORATE P-JOGGLES. INCORPORATED 24590-HLW-M6N-M80T-00007. DELETED QUALITY/SEISMIC FLAGS. DELETED BACKFLOW PREVENTERS. REVISED PIPE SPEC FROM S11B TO S14E. REVISED/ADDED CAVE BOUNDARIES. ADDED LEVEL INSTRUMENT TYPE AT LI-3805. REVISED/ADDED/DELETED NOTES, HOLDS, AND REFERENCES.

HOLD/OPEN ITEMS:

1-6. DELETED

REFERENCES:

1. DELETED
2. 24590-HLW-M5-V17T-00007001, PROCESS FLOW DIAGRAM, "HLW VITRIFICATION LIQUID WASTE EFFLUENT (SYSTEM RLD) (SHEET 1)."
3. 24590-HLW-M5-V17T-00007002, PROCESS FLOW DIAGRAM, "HLW VITRIFICATION LIQUID WASTE EFFLUENT (SYSTEM RLD) (SHEET 2)."
4. FOR RADAR INSTALLATION DETAILS, SEE DRAWINGS 24590-WTP-J8-50-00001 AND 24590-WTP-J8-50-00004.
5. DELETED
6. 24590-WTP-3PS-JXF0-T0001, INSTRUMENT PIPING MATERIAL CLASS.
7. THE REQUIRED BATCH SEQUENCES, PERMISSIVES, INTERLOCKS, ALARMS AND OPERATOR INTERFACE POINTS ARE FULLY DESCRIBED IN THE SOFTWARE FUNCTIONAL SPECIFICATION FOR RLD RADIOACTIVE LIQUID WASTE DISPOSAL SYSTEM, 24590-HLW-3PS-RLD-T0001

Please note that source, special nuclear, and byproduct materials, as defined in the Atomic Energy Act of 1954 (AEA) are regulated at the U. S. Department of Energy (DOE) facilities exclusively by DOE acting pursuant to its AEA authority. DOE asserts that pursuant to AEA, it has sole and exclusive responsibility and authority to regulate source, special nuclear, and byproduct materials at DOE-owned nuclear facilities. Information contained herein on radionuclides is provided for process description purposes only.

Q
QUALITY DESIGNATOR

REVISION HISTORY

REV	DESCRIPTION	ORG	CHKD	RVWD	APVD	DATE
5	REVISED PER NOTE 33	[illegible]	APP	CEK SPK	JJ CGR	1/29/07
4	REVISED PER NOTE 27	RDP	APP	JP	JJ	5/31/06
3	REVISED PER NOTE 26	UO	SCJ	EI	TV	12/23/04
0	ISSUED FOR CONSTRUCTION	DR	NR	N/A	GD	10/8/02

ISSUED BY RPP-WTP PDC

ISSUE STAMP

PROJECT No.	24590
SITE	HANFORD
AREA	200E
BUILDING No.	30

	BY	DATE
ORIGINATOR	D REDDY	10/6/02
CHECKER	RAO RAVULA	10/6/02
APPROVER	G M DUNCAN	10/8/02
REVIEWER	N/A	

CONTENT APPLICABLE TO ALARA? [X] YES [ ] NO
ADR NO. 24590-HLW-ADR-M-02-016 REV: 2
SAFETY SCREEN REQUIRED? [X] YES [ ] NO E&NS INITIAL IF YES

BECHTEL
RIVER PROTECTION PROJECT
WASTE TREATMENT PLANT
2435 STEVENS CENTER PLACE
RICHLAND, WA 99354

CONTRACT No: DE-AC27-01RV14136

P&ID - HLW RADIOACTIVE LIQUID WASTE DISPOSAL SYSTEM MISCELLANEOUS SUMPS

SCALE: NONE
24590-HLW-M6-RLD-00008
REV 5

SAFETY SCREEN IS REQUIRED FOR DRAWING TYPES IDENTIFIED IN 24590-WTP-GPP-SREG-002

'E' SIZE - 44x34
COMPUTER GENERATED - MANUAL CHANGES NOT PERMITTED

R10746935

01/22/2007 01:06:51 PM

PLOTTED BY: erkoch
C:\Work\dms03839\HLWM6RLD00008.dgn

RLD-VSL-00002
OFFGAS DRAINS
COLLECTION VESSEL
—
292 GAL MOV
3FT 6IN ID X 4 FT (T-T)

RLD-EJCTR-00180
RLD-VSL-00002 VESSEL
EJECTOR (STEAM EJECTOR)
5
8 GPM
1 IN

RLD-EJCTR-00020B
RLD-VSL-00002
VESSEL EJECTOR
(STEAM EJECTOR)
25 GPM
1 1/2 IN

RLD-RK-00042

VENDOR PACKAGE

YC 3021 — YV 3021

HIGH PRESSURE STEAM
HLW-M6-RLD-00009 C4
HPS-DB-35082-S11C-011/2
NOTES 23, 24
1:100
FC
RLD-V-35366
HPS
RLD
RLD-DB-04112-S11C-011/2
N01 N02 RLD-PJOG-00176 N03
5

YC 3022 — YV 3022

HIGH PRESSURE STEAM
HLW-M6-RLD-00009 C5
HPS-DB-35079-S11C-011/2
NOTES 23, 24
1:100
FC
RLD-V-35369
HPS
RLD
RLD-DB-04113-S11C-011/2
N01 N02 RLD-PJOG-00177 N03
5

NOTE 6
5
OUT CELL S11C
WET PROCESS CELL (BC) S11B

DRUM TRANSFER TUNNEL
WET PROCESS CELL (BC)

OFF GAS LINE DRAINS
HOP-HEME-00002B
HLW-M6-HOP-20009 F2
HOP-ZS-00017-N11K-02 1:100
NOTE 22

OFF GAS LINE DRAINS
HOP-HEME-00002A
HLW-M6-HOP-20009 H2
HOP-ZS-00016-N11K-02 1:100
NOTE 22

OFF GAS LINE DRAINS
HOP-HEME-00001B
HLW-M6-HOP-00009 F2
HOP-ZS-00015-N11K-02 1:100
NOTE 22

OFF GAS LINE DRAINS
HOP-HEME-00001A
HLW-M6-HOP-00009 H2
HOP-ZS-00120-N11K-02 1:100
NOTE 22

PWD-RK-00032

VENDOR PACKAGE

YC 3023 — YV 3023

PLANT WASH
5
HLW-M6-PWD-00001 D5
PWD-ZE-09550-S11C-011/2
PWD-V-34495
FC
RLD-V-35400
PWD
RLD
RLD-ZE-20125-S11C-011/2
N01 N02 RLD-PJOG-00178 N03
5

5
OUT CELL S11C
WET PROCESS CELL (BC) S11B

RLD-ZE-00053-S11B-011/2
1:50

PJV DRAIN LINE
5
HLW-M6-PJV-00001 C2
PJV-ZS-66857-S11Z-03
1:50
N21

LI 3024 — LT 3024 — RLD-V-00014
RLD-DB-00029-S11P-011/2

TI 3025 — TT 3025 — TE 3025
RLD-ZT-00037-S1P-01

PI 3026 — PT 3026
ATM
V-35015
RLD-ZG-03276-S11Y-001/2

5
OUT CELL S11Y
WET PROCESS CELL (BC) S11B
RLD-PJOG-00182
N01 N02 N03
RLD-ZG-03276-S11B-001/2
RLD-DB-03266-S11B-011/2
1:50

RLD-EJCTR-00180
RLD-DB-03267-S11B-011/2
1:50
N03 N02 N01

1:20
NOTE 7
RLD-ZF-00039-S11B-011/2
RLD-VSL-00008
PLANT WASH & DRAINS
HLW-M6-RLD-00002 F8

RLD-EJCTR-00020B
N03 N02 N01
1:20
NOTE 7
RLD-ZF-00040-S11B-011/2
RLD-VSL-00008
PLANT WASH & DRAINS
HLW-M6-RLD-00002 F8

OUT CELL
WET PROCESS CELL (BC)
RLD-PJOG-00179
N01 N02
1:50

OUT CELL
WET PROCESS CELL (BC)
RLD-PJOG-00180
N01 N02

SPARE
OUT CELL
WET PROCESS CELL (BC)
RLD-PJOG-00181
N01 N02

LE 3024
RLD-DB-00025-S1P-011/2
RLD-ZT-00037-S1P-01
RLD-ZT-00038-S1P-01
RLD-ZG-03276-S11B-001/2
RLD-ZF-00043-S11B-011/2
RLD-ZF-00042-S11B-011/2

2" SPARE N18
2" SPARE N19
6" N20
1 1/2" SPARE N14
6" INSPECTION /CLEANOUT PORT N12
2" SPARE N07

N08 N01 N02 N03 N04 N09 N10 N11 N06 N16

1:20
NOTE 11
N17
RLD-ZS-00041-S11B-04
OVERFLOW
RLD-SUMP-00001
HLW-M6-RLD-00015 A8

RLD-VSL-00002

NOTES:

1. SEE DRAWINGS 24590-WTP-M6-50-00001 THROUGH 24590-WTP-M6-50-00008 FOR GENERAL NOTES, SYMBOLS AND LEGEND, AND GENERAL SLOPE REQUIREMENTS.

2-5. DELETED

6. OUT CELL STEAM PIPING MUST BE A MINIMUM OF 34 FEET ABOVE THE VESSEL OVERFLOW LEVEL.

7. EJECTOR DISCHARGE PIPING TO HAVE A MINIMUM LENGTH OF 24 INCHES OF STRAIGHT PIPE BEFORE 1ST BEND.

8-9. DELETED

10. CONTENTS OF THIS DOCUMENT ARE DANGEROUS WASTE PERMIT AFFECTING.

11. VESSEL VENTS THROUGH THE OVERFLOW TO THE C5 HVAC SYSTEM.

5
12-16. DELETED

17. THE PRESSURE BOUNDARY FOR ALL SYSTEMS, STRUCTURES, AND COMPONENTS ON THIS DRAWING IS QUALITY LEVEL CM AND SEISMIC CATEGORY SC-III, UNLESS OTHERWISE NOTED.

18-19. DELETED

20. REVISION 3: REVISED SEISMIC CATEGORY AND QUALITY LEVEL DESIGNATIONS. ADDED DOUBLE CONTAINED PIPE (SPECIFICATION W11A) FOR HOP LINES IN DRUM TRANSFER TUNNEL. CHANGED REFERENCE PRESSURE FOR PT-3026. DELETED FLOOR BOX RLD-FBOX-0039-02. REVISED NOTES.

21. REVISION 4: INCORPORATED 24590-HLW-M6N-M8OT-00002 AND 24590-HLW-M6N-RLD-00186, -00189. DELETED SPARE PIPE JOGGLE RLD-FBOX-0089-02. REVISED SEISMIC AND QUALITY DESIGNATIONS. ADDED N11K SEGMENTS TO OFF GAS DRAIN LINES. DELETED SPARE DIP LEG. REVISED/ADDED/DELETED NOTES. DELETED STRAINERS. ADDED PIPELINE NUMBERS IN RLD-RK-00032 AND RLD-RK-00042. ADDED AND REVISED REFERENCES.

22. DRIP PAN PROVIDED BELOW DRAIN LINES FOR SECONDARY CONTAINMENT.

23. SLOW OPENING VALVE REQUIRED.

24. LOCATE ACTUATED VALVE AT HIGH POINT IN LINE ABOVE RACK HEADER.

25. DELETED

5
26. THE GEOMETRY OF JOGGLED (OFFSET) PENETRATIONS IS QUALITY LEVEL Q FOR RADIATION PROTECTION. THE QUALITY LEVEL AND SEISMIC CATEGORY DESIGNATIONS OF PIPING WITHIN JOGGLES ARE THE SAME AS CONNECTING PIPING.

27. REVISED TO INCORPORATE 24590-HLW-M6N-M8OT-00007 AND P-JOGGLES. DELETED QUALITY/SEISMIC FLAGS. REVISED LINE NUMBER. REVISED RLD-EJCTR-00020A TO RLD-EJCTR-00180. ADDED/DELETED/REVISED NOTES AND HOLDS.

5 HOLD/OPEN ITEMS:

1-2. DELETED

REFERENCES:

1. 24590-HLW-M5-V17T-00007001, PROCESS FLOW DIAGRAM, "HLW VITRIFICATION LIQUID WASTE EFFLUENT (SYSTEM RLD) (SHEET 1)."
2. 24590-HLW-M5-V17T-00007002, PROCESS FLOW DIAGRAM, "HLW VITRIFICATION LIQUID WASTE EFFLUENT (SYSTEM RLD) (SHEET 2)."
3. DELETED
4. FOR RADAR INSTALLATION DETAILS, SEE DRAWINGS 24590-WTP-J8-50-00003 AND 24590-WTP-J8-50-00001.
5. THE REQUIRED BATCH SEQUENCES, PERMISSIVES, INTERLOCKS, ALARMS AND OPERATOR INTERFACE POINTS ARE FULLY DESCRIBED IN THE SOFTWARE FUNCTIONAL SPECIFICATION FOR RADIOACTIVE LIQUID WASTE DISPOSAL (RLD) SYSTEM, 24590-HLW-3PS-RLD-T0001.

Please note that source, special nuclear, and byproduct materials, as defined in the Atomic Energy Act of 1954 (AEA) are regulated at the U. S. Department of Energy (DOE) facilities exclusively by the DOE contractor pursuant to the AEA. The Price-Anderson Act, pursuant to AEA, 11 xxx sole and exclusive responsibility and authority to regulate source, special nuclear, and byproduct materials at DOE-owned nuclear facilities. Information contained herein on radionuclides is provided for process description purposes only.

REV	DESCRIPTION	ORG	CHKD	RVWD	APVD	DATE
5	REVISED PER NOTE 27	MRG	BWS	CER	SJC	1/11/07
4	REVISED PER NOTE 21	RDP	APP	JP	SJC	5/31/06
3	REVISED PER NOTE 20	APP	SJC	EI	TV	3-24-05
0	ISSUED FOR CONSTRUCTION	MRG	DKR	N/A	TFV	12-19-02

REVISION HISTORY

Q QUALITY DESIGNATOR

ISSUED BY RPP-WTP PDC
ISSUE STAMP

PROJECT No.	24590
SITE	HANFORD
AREA	200E
BUILDING No.	30

	BY	DATE
ORIGINATOR	MR GRINDEL	12/19/02
CHECKER	DK REDDY	12/19/02
APPROVER	TOM VALENTINO	12/19/02
REVIEWER	N/A	

CONTENT APPLICABLE TO ALARA? [X] YES [ ] NO
ADR NO. 24590-HLW-ADR-M-02-016 REV: 2
SAFETY SCREEN REQUIRED? [X] YES [ ] NO EMS INITIAL IF YES

SAFETY SCREEN IS REQUIRED FOR DRAWING TYPES IDENTIFIED IN 24590-WTP-GPP-SREG-002

BECHTEL
RIVER PROTECTION PROJECT
WASTE TREATMENT PLANT
2435 STEVENS CENTER PLACE
RICHLAND, WA 99354

CONTRACT No: DE-AC27-01RV14136

P&ID - HLW RADIOACTIVE LIQUID WASTE DISPOSAL SYSTEM OFFGAS DRAINS COLLECTION VESSEL

SCALE: NONE
24590-HLW-M6-RLD-00014
REV 5

2" SIZE - 44x34
COMPUTER GENERATED - MANUAL CHANGES NOT PERMITTED

12/21/2006 02:19:53 PM
PLOTTED BY: edorn
C:\Work\dms03839\HLW\M6\RLD_000014.dgn

FORM E_SDN.DGN 02/2003

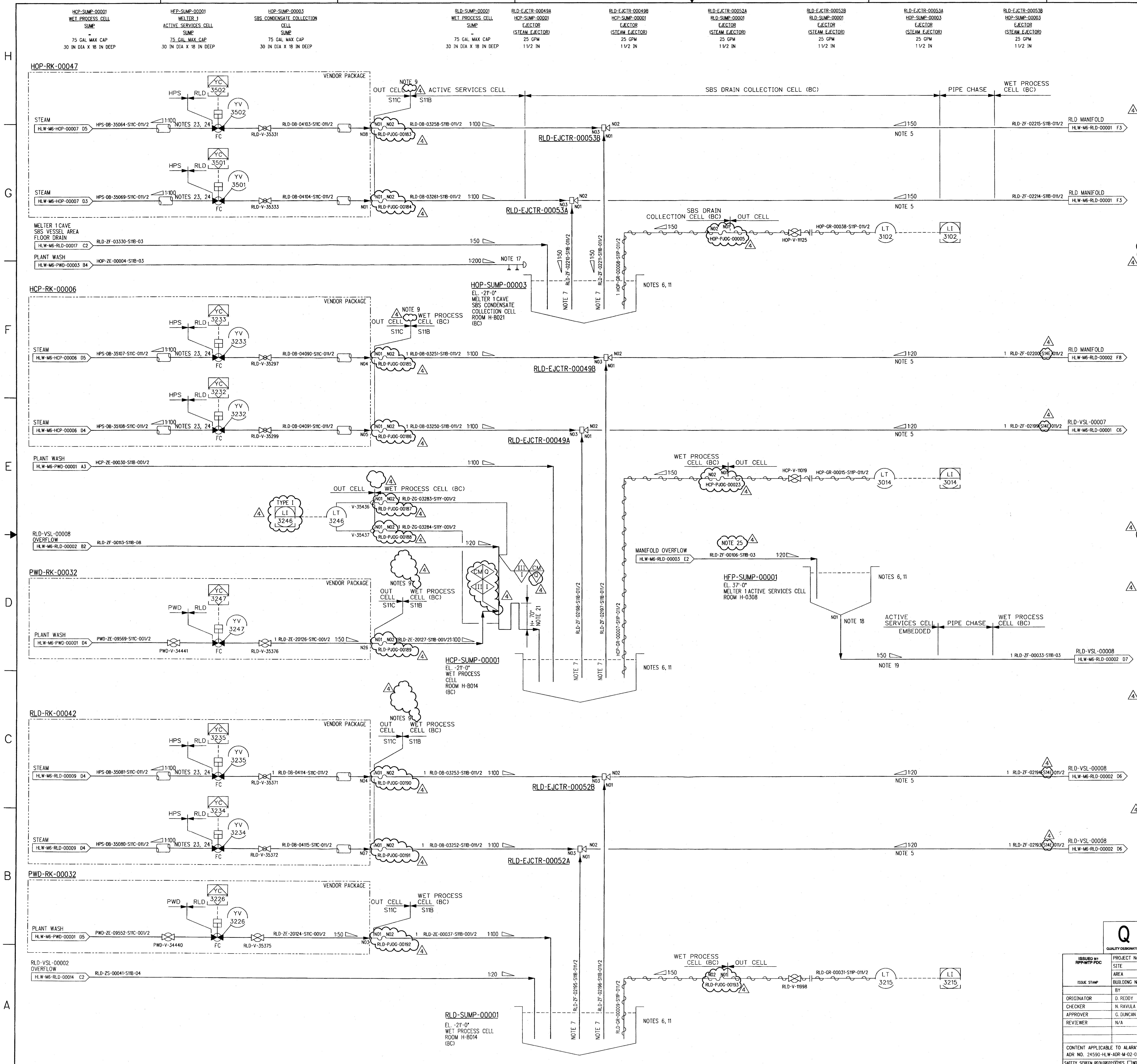

NOTES:

1. SEE DRAWINGS 24590-WTP-M6-50-00001 THROUGH 24590-WTP-M6-50-00008 FOR GENERAL NOTES, SYMBOLS, AND LEGEND, AND GENERAL SLOPE REQUIREMENTS.
2. DELETED
3. DELETED
4. DELETED
5. EJECTOR DISCHARGE PIPING TO HAVE A MINIMUM LENGTH OF 24 INCHES OF STRAIGHT PIPE BEFORE FIRST BEND.
6. ALL SUMPS ARE QUALITY LEVEL Q AND SEISMIC CATEGORY SC-I.
7. PROVIDE 5/8"±1/8" CLEARANCE BETWEEN BOTTOM OF EJECTOR SUCTION PIPE AND SUMP LINER.
8. CONTENTS OF THIS DOCUMENT ARE DANGEROUS WASTE PERMIT AFFECTING.
9. OUT CELL STEAM SUPPLY PIPING TO BE 34FT ABOVE MAXIMUM LIQUID LEVEL IN SUMP OR RECEIVING VESSEL OVERFLOW LINE. WHICHEVER IS HIGHER.
10. DELETED
11. SUMP COVERED WITH A STAINLESS STEEL SCREEN PLATE TO PROTECT PIPING SYSTEM FROM DEBRIS. MAXIMUM SCREEN SIZE IS 1/4" DIAMETER HOLE. SUMP COVERS ARE PROVIDED BY CIVIL/STRUCTURAL.
12. DELETED
13. THE PRESSURE BOUNDARY FOR ALL SYSTEMS, STRUCTURES AND COMPONENTS ON THIS DRAWING IS QUALITY LEVEL CM AND SEISMIC CATEGORY SC-III, UNLESS OTHERWISE NOTED.
14. DELETED
15. DELETED
16. DELETED
17. SPRAY NOZZLES ARE PROVIDED FOR WASHING DOWN CELL AND CAVE LINERS. INSTALL NOZZLES ON BOTTOM OF SPRAY HEADER, AIMED TOWARDS LINER. LOCATE BOTTOM OF NOZZLE 4 INCHES ABOVE THE LINER UPPER EDGE. NOZZLE STANDOFF FROM VERTICAL PLANE OF LINER IS 12 INCHES. NOZZLE SPACING ON HEADER IS ONE PER 5 FOOT. SPRAY NOZZLE TYPE IS LECHLER 140° FLAT FAN NOZZLE NUMBER 686.868 OR EQUIVALENT.
18. THE COMPONENT UTILIZED FOR THE SUMP TO PIPING INTERFACE WILL BE PROVIDED BY CIVIL/STRUCTURAL.
19. THE DRAIN PIPE IS EMBEDDED TO PROVIDE SHIELDING FROM RADIATION.
20. REVISION 2: MAJOR REVISION, NO CHANGE CLOUDS REQUIRED. INCORPORATED DCNS 24590-HLW-M6N-RLD-00047, 24590-HLW-M6N-RLD-00052, 24590-HLW-M6N-RLD-00087, 24590-HLW-M6N-RLD-00091, 24590-HLW-M6N-RLD-00139, 24590-HLW-M6N-RLD-00140 AND 24590-HLW-M6N-RLD-00146. CHANGED FLOOR BOXES PWD-FBOX-0132, RLD-FBOX-0039, RLD-FBOX-0043, HCP-FBOX-0020 AND HCP-FBOX-0050, INTO JOGGLED PENETRATIONS. SLOPE ON ALL PLANT WASH LINES CHANGED TO 1:200. DELETED YV-3224. DELETED PWD SPRAY RING HEADERS LOCATED IN SUMPS HCP-SUMP-00001 AND HFP-SUMP-00001. DELETED RACK PWD-RK-00036. DELETED TWO HCP LINES, HCP-PC-00057 AND HCP-PC-00061. REVISED QUALITY LEVEL AND SEISMIC CATEGORY. REVISED/ADDED/DELETED NOTES. REMOVED HOLDS 3, 4, AND 5.
21. OVERFLOW LINE ACHIEVES HYDRAULIC ISOLATION BY MEANS OF A LOOP SEAL. LOOP SEAL WATER LEVEL SHALL BE MAINTAINED.
22. REVISION 3: INCORPORATED 24590-HLW-M6N-M80T-00002 AND 24590-WTP-NCR-CON-05-0027. DELETED SEISMIC AND QUALITY FLAGS AT EJECTORS. REVISED QUALITY AND SEISMIC DESIGNATIONS. ADDED LOOP SEAL WITH PLANT WASH AND BUBBLER LEVEL DETECTION TO RLD-VSL-00008 OVERFLOW. ADDED ROOT VALVES. REVISED/ADDED/DELETED NOTES. ADDED REFERENCES.
23. SLOW OPENING VALVE REQUIRED.
24. LOCATE ACTUATED VALVE AT HIGH POINT IN LINE ABOVE RACK HEADER.
25. ITEMS WITH THIS NOTE ARE QUALITY LEVEL Q AND SEISMIC CATEGORY SC-III.
26. THE GEOMETRY OF JOGGLED (OFFSET) PENETRATIONS IS QUALITY LEVEL Q FOR RADIATION PROTECTION. THE QUALITY LEVEL AND SEISMIC CATEGORY DESIGNATIONS OF PIPING WITHIN JOGGLES ARE THE SAME AS CONNECTING PIPING.
27. REVISED TO INCORPORATE P-JOGGLES AND 24590-HLW-M6N-M80T-00007. REVISED/ADDED/DELETED NOTES, HOLDS, AND REFERENCES. CHANGED PIPE SPECIFICATION FROM S11B TO S14E. REVISED QUALITY/SEISMIC BREAKS.

HOLD/OPEN ITEMS:

1.-6. DELETED

REFERENCES:

1. DELETED
2. 24590-HLW-M5-V17T-00007001, "PROCESS FLOW DIAGRAM HLW VITRIFICATION LIQUID WASTE EFFLUENT (SYSTEM RLD) (SHEET 1)."
3. 24590-HLW-M5-V17T-00007002, "PROCESS FLOW DIAGRAM HLW VITRIFICATION LIQUID WASTE EFFLUENT (SYSTEM RLD) (SHEET 2)."
4. THE REQUIRED BATCH SEQUENCES, PERMISSIVES, INTERLOCKS, ALARMS AND OPERATOR INTERFACE POINTS ARE FULLY DESCRIBED IN THE SOFTWARE FUNCTIONAL SPECIFICATION FOR RADIOACTIVE LIQUID WASTE DISPOSAL (RLD) SYSTEM, 24590-HLW-3PS-RLD-T0001.
5. FOR RADAR INSTALLATION DETAILS, SEE DRAWINGS 24590-WTP-J8-50-00001 AND 24590-WTP-J8-50-00004.

Please note that source, special nuclear, and byproduct materials, as defined in the Atomic Energy Act of 1954 (AEA) are regulated at the U. S. Department of Energy (DOE) facilities exclusively by DOE acting pursuant to its AEA authority. DOE asserts that pursuant to AEA, it has sole and exclusive responsibility and authority to regulate source, special nuclear, and byproduct materials at DOE-owned nuclear facilities. Information contained herein on radionuclides is provided for process description purposes only.

REV	DESCRIPTION	ORG	CHKD	RVWD	APVD	DATE
4	REVISED PER NOTE 27	[illegible]	APP	CEK SPIL	[illegible]	1/29/07
3	REVISED PER NOTE 22	RDP	APP	JP	JJ	5/31/06
2	REVISED PER NOTE 20	SJ	PLJ	EI	TV	3/3/05
0	ISSUED FOR CONSTRUCTION	DR	NR	N/A	GD	10/8/02

REVISION HISTORY

Q
QUALITY DESIGNATOR

ISSUED BY RPP-WTP PDC
ISSUE STAMP

PROJECT No.	24590
SITE	HANFORD
AREA	200E
BUILDING No.	30

	BY	DATE
ORIGINATOR	D. REDDY	10/6/02
CHECKER	N. RAVULA	10/6/02
APPROVER	G. DUNCAN	10/8/02
REVIEWER	N/A	

CONTENT APPLICABLE TO ALARA? [X] YES [ ] NO
ADR NO. 24590-HLW-ADR-M-02-016 REV: 2
SAFETY SCREEN REQUIRED? [X] YES [ ] NO E&NS INITIAL IF YES CM

BECHTEL
RIVER PROTECTION PROJECT
WASTE TREATMENT PLANT
2435 STEVENS CENTER PLACE
RICHLAND, WA 99354

CONTRACT No: DE-AC27-01RV14136

P&ID - HLW RADIOACTIVE LIQUID WASTE DISPOSAL SYSTEM MISCELLANEOUS SUMPS

SCALE: NONE
24590-HLW-M6-RLD-00015
REV 4

SAFETY SCREEN IS REQUIRED FOR DRAWING TYPES IDENTIFIED IN 24590-WTP-GPP-SREG-002

'E' SIZE - 44x34
COMPUTER GENERATED - MANUAL CHANGES NOT PERMITTED

R10746936
01/18/2007 03:58:00 PM
PLOTTED BY: erkoch
C:\Work\dms03839\HLWM6RLD00015.dgn

FORM E_SDN.DCN 02/2003

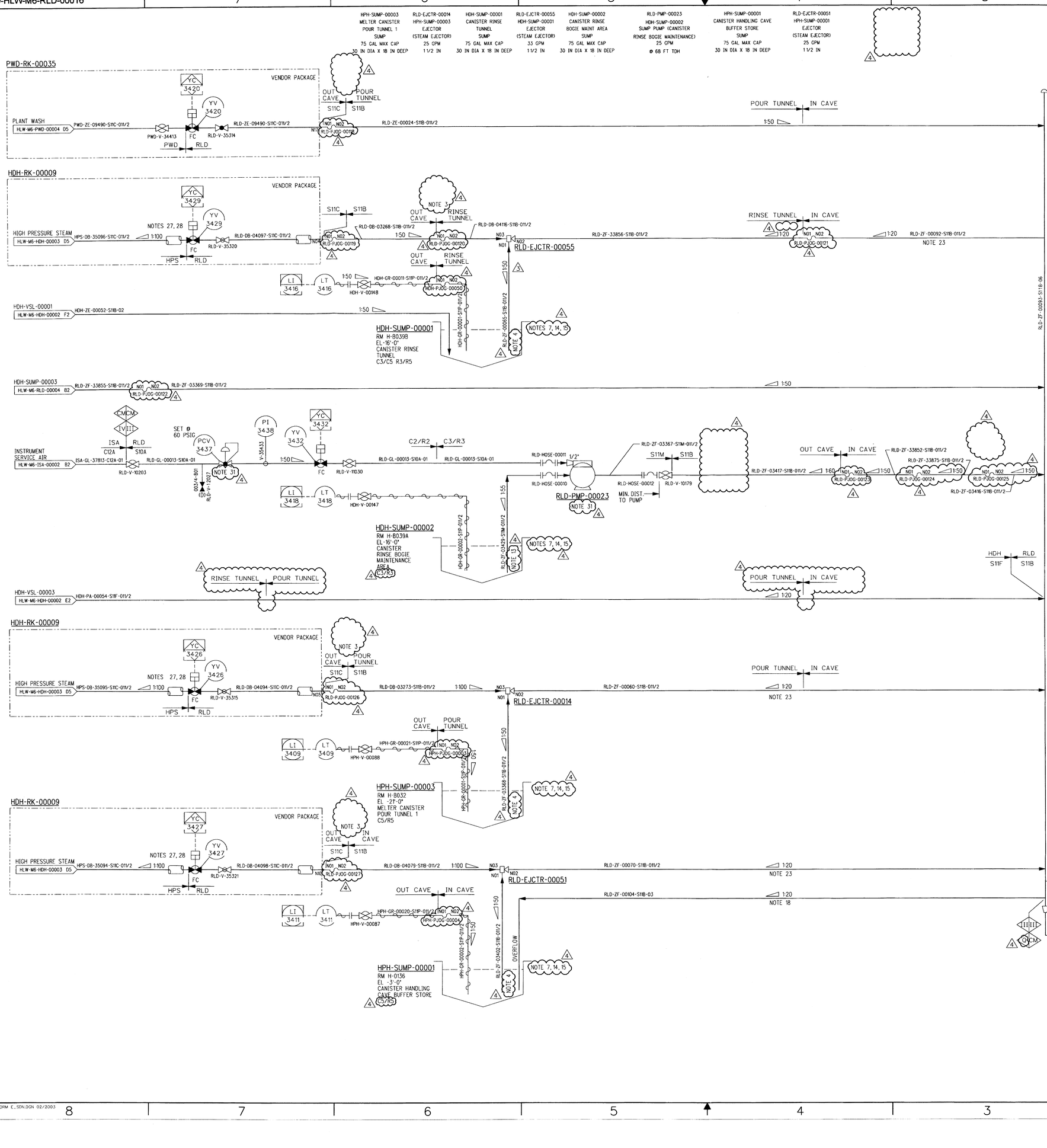

NOTES:

1. SEE DRAWINGS 24590-WTP-M6-50-00001 THROUGH 24590-WTP-M6-50-00008 FOR GENERAL NOTES, SYMBOLS AND LEGEND, AND GENERAL SLOPE REQUIREMENTS.
2. DELETED
3. OUT CAVE STEAM SUPPLY PIPING MUST BE A MINIMUM OF 34'-0" ABOVE THE SUMP LIQUID LEVEL.
4. PROVIDE 5/8" ±1/8" CLEARANCE BETWEEN BOTTOM OF EJECTOR SUCTION PIPE AND SUMP LINER.
5. DELETED
6. DELETED
7. SUMP WILL BE COVERED WITH STAINLESS STEEL REMOVABLE SCREEN PLATE TO PROTECT PIPING SYSTEM FROM DEBRIS. MAX SCREEN SIZE 1/4" DIAMETER HOLE. SUMP COVERS TO BE PROVIDED BY CIVIL/STRUCTURAL.
8. CONTENTS OF THIS DOCUMENT ARE DANGEROUS WASTE PERMIT AFFECTING.
9. THE PRESSURE BOUNDARY FOR ALL SYSTEMS, STRUCTURES, AND COMPONENTS ON THIS DRAWING IS QUALITY LEVEL CM AND SEISMIC CATEGORY SC-III, UNLESS OTHERWISE NOTED.
10. DELETED
11. DELETED
12. DELETED
13. PROVIDE 1/2" ±1/8" CLEARANCE BETWEEN BOTTOM OF PUMP SUCTION PIPE AND SUMP BASE.
14. SUMPS SHOWN WITH CONE BOTTOM ARE PROVIDED WITH STAINLESS STEEL LINERS.
15. ALL SUMPS ARE QUALITY LEVEL Q AND SEISMIC CATEGORY SC-1.
16. DELETED
17. DELETED
18. OVERFLOW LINE IS LOCATED LOWER THAN ALL INCOMING LINES TO THE MANIFOLD.
19. DELETED
20. DELETED
21. DELETED
22. DELETED
23. EJECTOR DISCHARGE PIPING TO HAVE A MINIMUM LENGTH OF 24 INCHES OF STRAIGHT PIPE BEFORE 1ST BEND.
24. DELETED
25. REVISION 2: SEE ARCHIVED FOR REVISION 2 CHANGES.
26. REVISION 3: ADDED BACKFLOW PREVENTERS ON OUT CAVE/OUT CELL PIPING FOR CS CONFINEMENT. INCORPORATED 24590-HLW-M6N-RLD-00163. REVISED SEISMIC AND QUALITY DESIGNATIONS, ADDED ROOM BREAKS, ADDED FLOORBOXES, WALLBOXES. DELETED STRAINERS FROM STEAM SUPPLY LINES. CHANGED PIPE LINE RLD-ZE-00024-S11B-001/2 TO -011/2. TE-3421 MOVED DOWN STREAM OF INCOMING DISCHARGE LINES. REVISED/ADDED/DELETED NOTES.
27. SLOW OPENING VALVE.
28. LOCATE ACTUATED VALVE HEADER AT HIGH POINT IN LINE ABOVE RACK.
29. DELETED
30. THE GEOMETRY OF JOGGLED (OFFSET) PENETRATIONS IS QUALITY LEVEL Q FOR RADIATION PROTECTION. THE QUALITY LEVEL AND SEISMIC CATEGORY DESIGNATIONS OF PIPING WITHIN JOGGLES ARE THE SAME AS CONNECTING PIPING.
31. FILTER/REGULATOR IS TO BE SUPPLIED WITH THE DIAPHRAGM PUMP.
32. REVISED TO INCORPORATE P-JOGGLES. DELETED QUALITY/SEISMIC FLAGS. DELETED BACKFLOW PREVENTER. ADDED BOUNDARIES FOR HDH PIPING. ADDED/DELETED/REVISED NOTES. REVISED/DELETED LINES.

HOLD/OPEN ITEMS:

1-7. DELETED

REFERENCES:

1. DELETED
2. 24590-HLW-M6-V17T-00007001, PROCESS FLOW DIAGRAM, "HLW VITRIFICATION LIQUID WASTE EFFLUENT (SYSTEM RLD) (SHEET 1)."
3. 24590-HLW-M5-V17T-00007002, PROCESS FLOW DIAGRAM "HLW VITRIFICATION LIQUID WASTE EFFLUENT (SYSTEM RLD) (SHEET 2)."
4. FOR RADAR INSTALLATION DETAILS, SEE DRAWINGS 24590-WTP-J8-50-00001 AND 24590-WTP-J8-50-00004.
5. THE REQUIRED BATCH SEQUENCES, PERMISSIVES, INTERLOCKS, ALARMS AND OPERATOR INTERFACE POINTS ARE FULLY DESCRIBED IN THE SOFTWARE FUNCTIONAL SPECIFICATION FOR HLW RADIOACTIVE LIQUID WASTE DISPOSAL (RLD) SYSTEM, 24590-HLW-3PS-RLD-T0001.

Please note that source, special nuclear, and byproduct materials, as defined in the Atomic Energy Act of 1954 (AEA) are regulated at the U. S. Department of Energy (DOE) facilities exclusively by DOE pursuant to authority in the AEA. As a DOE contractor pursuant to AEA, it has sole and exclusive responsibility and authority to regulate source, special nuclear, and byproduct materials at DOE-owned nuclear facilities. Information contained herein on radionuclides is provided for process description purposes only.

REV	DESCRIPTION	ORG	CHKD	RVWD	APVD	DATE
4	REVISED PER NOTE 32	MHL	APP	GEA	MG	11/30/06
3	REVISED PER NOTE 26	RDP	SJ	JP	JJ	5/31/06
2	REVISED PER NOTE 25	UO	MG	EL	JFS	7/2/04
0	ISSUED FOR CONSTRUCTION	SMT	NR	N/A	IV	11-27-02

REVISION HISTORY

Q — QUALITY DESIGNATOR

ISSUED BY RPP-WTP PDC — ISSUE STAMP

PROJECT No.	24590	
SITE	HANFORD	
AREA	200E	
BUILDING No.	30	

	BY	DATE
ORIGINATOR	S.M. THAKKAR	10/24/02
CHECKER	RAO RAVULA	10/25/02
APPROVER	T.VALENTINO FOR SCF	11/27/02
REVIEWER	N/A	

CONTENT APPLICABLE TO ALARA? [X] YES [ ] NO
ADR NO. 24590-HLW-ADR-M-02-016 REV: 2
SAFETY SCREEN REQUIRED? [X] YES [ ] NO E&NS INITIAL IF YES

RIVER PROTECTION PROJECT
WASTE TREATMENT PLANT
2435 STEVENS CENTER PLACE
RICHLAND, WA 99354

CONTRACT No: DE-AC27-01RV14136

P&ID - HLW RADIOACTIVE LIQUID WASTE DISPOSAL SYSTEM MISCELLANEOUS SUMPS

SCALE: NONE

24590-HLW-M6-RLD-00016 REV 4

SAFETY SCREEN IS REQUIRED FOR DRAWING TYPES IDENTIFIED IN 24590-WTP-CPP-SREQ-002

"E" SIZE - 44x34
COMPUTER GENERATED - MANUAL CHANGES NOT PERMITTED

R10740589

11/29/2006 07:56:02 AM

PLOTTED BY: eldorn
C:\Work\dms03839\HLW\M6RLD00016.dgn

FORM E_SDN.DGN 02/2003

RWH-SUMP-00001
DRUM TRANSFER TUNNEL SUMP
75 GAL MAX CAP
30 IN DIA X 18 IN DEEP

RLD-EJCTR-00030
RWH-SUMP-00001 EJECTOR
(STEAM EJECTOR)
25 GPM
1 1/2 IN

RWH-SUMP-00005
DRUM TRANSFER TUNNEL SUMP
75 GAL MAX CAP
30 IN DIA X 18 IN DEEP

RLD-EJCTR-00061
RWH-SUMP-00005 EJECTOR
(STEAM EJECTOR)
25 GPM
1 1/2 IN

RWH-SUMP-00006
DRUM TRANSFER TUNNEL SUMP
75 GAL MAX CAP
30 IN DIA X 18 IN DEEP

RLD-EJCTR-00163
RWH-SUMP-00006 EJECTOR
(STEAM EJECTOR)
25 GPM
1 1/2 IN

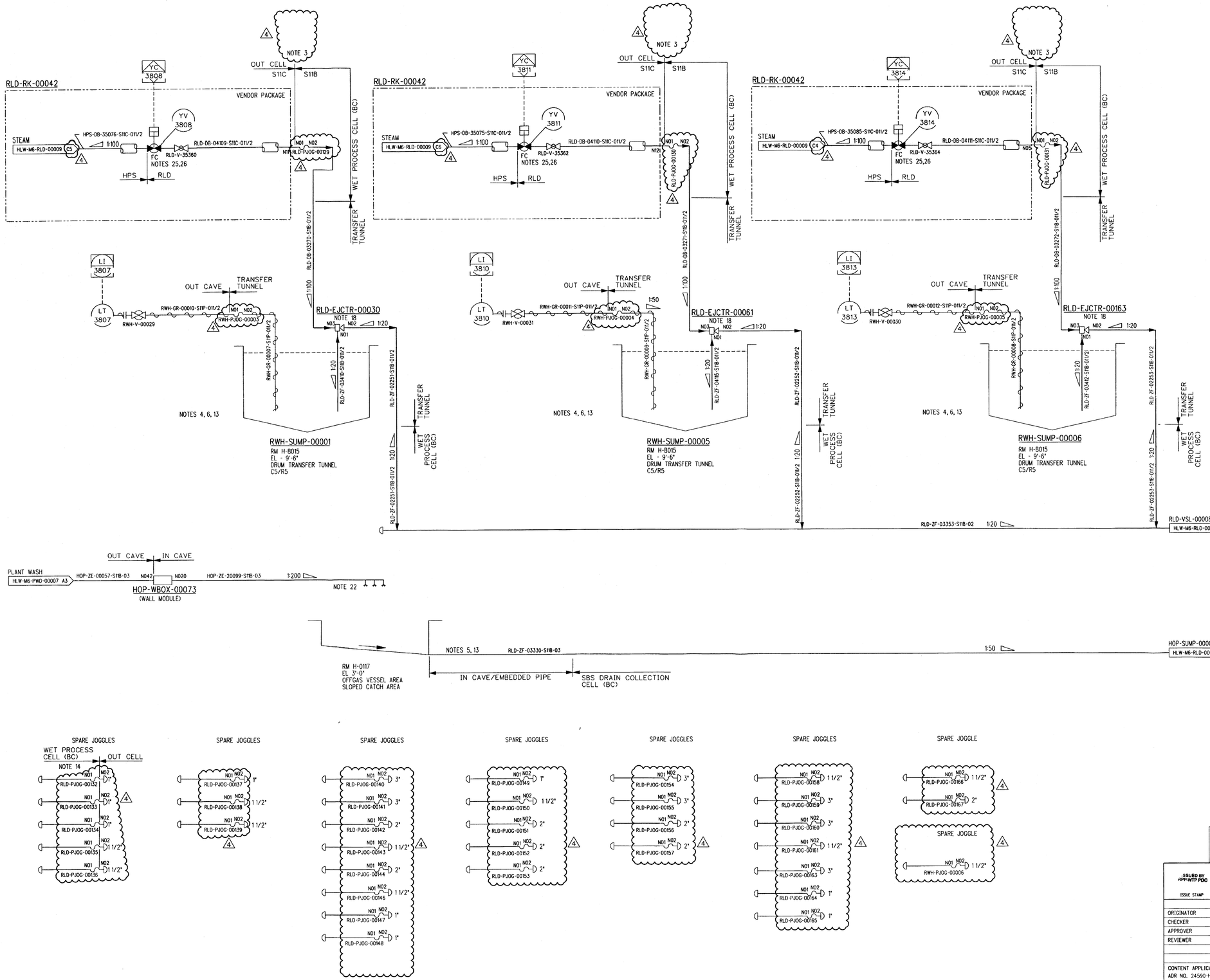

NOTES:

1. SEE DRAWINGS 24590-WTP-M6-50-00001 THROUGH 24590-WTP-M6-50-00008 FOR GENERAL NOTES, SYMBOLS, AND LEGEND, AND GENERAL SLOPE REQUIREMENTS.
2. DELETED
3. OUT CELL STEAM SUPPLY PIPING TO BE 34FT ABOVE MAXIMUM LIQUID LEVEL IN SUMP OR RECEIVING VESSEL OVERFLOW LINE, WHICHEVER IS HIGHER.
4. PROVIDE 5/8" ±1/8" CLEARANCE BETWEEN BOTTOM OF EJECTOR SUCTION PIPE AND SUMP BOTTOM.
5. THE DRAIN PIPE IS EMBEDDED TO PROVIDE SHIELDING FROM RADIATION.
6. SUMP COVERED WITH STAINLESS STEEL SCREEN PLATE TO PROTECT PIPING SYSTEM FROM DEBRIS. MAXIMUM SCREEN SIZE IS 1/4" DIA. HOLE. SUMP AND SUMP COVERS ARE PROVIDED BY CIVIL/ STRUCTURAL.
7. DELETED
4 8. THE PRESSURE BOUNDARY FOR ALL SYSTEMS, STRUCTURES, AND COMPONENTS ON THIS DRAWING IS QUALITY LEVEL CM AND SEISMIC CATEGORY SC-III, UNLESS OTHERWISE NOTED.

9-12. DELETED

4 13. ALL SUMPS ARE QUALITY LEVEL Q AND SEISMIC CATEGORY SC-I.
14. THE GEOMETRY OF JOGGLED (OFFSET) PENETRATIONS IS QUALITY LEVEL Q FOR RADIATION PROTECTION. THE QUALITY LEVEL AND SEISMIC CATEGORY DESIGNATIONS OF PIPING WITHIN JOGGLES ARE THE SAME AS CONNECTING PIPING. PIPING WITHIN SPARE JOGGLES IS QUALITY LEVEL Q AND SEISMIC CATEGORY SC-1.

15-17. DELETED

18. EJECTOR DISCHARGE PIPING HAS A MINIMUM LENGTH OF 24 INCHES OF STRAIGHT PIPE BEFORE FIRST BEND.

19.-20. DELETED

21. CONTENTS OF THIS DOCUMENT ARE DANGEROUS WASTE PERMIT AFFECTING.
22. SPRAY NOZZLES ARE PROVIDED FOR WASHING DOWN CELL AND CAVE LINERS. INSTALL NOZZLES ON BOTTOM OF SPRAY HEADER, AIMED TOWARDS LINER. LOCATE BOTTOM OF NOZZLE 4 INCHES ABOVE THE LINER UPPER EDGE. NOZZLE STANDOFF FROM VERTICAL PLANE OF LINER IS 12 INCHES. NOZZLE SPACING ON HEADER IS ONE PER 5 FOOT. SPRAY NOZZLE TYPE IS LECHLER 140 33/64 FLAT FAN NOZZLE NUMBER 686.868 OR EQUIVALENT.
23. REVISION 2: MAJOR REVISION, NO CHANGE CLOUDS REQUIRED. THIS DRAWING IS REVISED TO INCORPORATE THE FOLLOWING CHANGES: DCNS 24590-HLW-M6N-RLD-00018, 24590-HLW-M6N-RLD-00149, AND 24590-HLW-M6N-M8OT-00002. ALL/FLOORBOXES DELETED; NEW FORMAT FOR JOGGLED WALL/FLOOR PENETRATIONS; CLARIFICATION OF SEISMIC CATEGORY AND QUALITY LEVEL FOR ALL PIPING; ADDITION OF WALL MODULE; ADDED DESIGNATION BETWEEN IN/OUT CAVE AREAS; DELETED LEVEL ELEMENTS FROM SUMPS; DELETED NOTES 7, 10, AND 17; ADDED NOTES 2, 11, 14, 16; EDITED NOTES 5, 6, 15, 18, 19, 20, 22; ADDED REFERENCES 4 & 5.
24. REVISION 3: INCORPORATED 24590-HLW-M6N-M8OT-00002, 24590-HLW-M6N-RLD-00159. ADDED SPARE JOGGLES. REVISED QUALITY AND SEISMIC DESIGNATIONS. REVISED/ADDED/DELETED NOTES, DELETED STRAINERS. REVISED SLOPES.
25. SLOW OPENING VALVE REQUIRED.
26. LOCATE ACTUATED VALVE AT HIGH POINT IN LINE ABOVE RACK HEADER.

4 27. DELETED
4 28. REVISED TO INCORPORATE P-JOGGLES. REVISED/ADDED/DELETED NOTES AND REFERENCES. DELETED QUALITY/SEISMIC FLAGS.

HOLD/OPEN ITEMS:

1.-2. DELETED

REFERENCES:

1. DELETED
2. 24590-HLW-M5-V17T-00007001, PROCESS FLOW DIAGRAM, "HLW VITRIFICATION LIQUID WASTE EFFLUENT (SYSTEM RLD) (SHEET 1)."
3. 24590-HLW-M5-V17T-00007002, PROCESS FLOW DIAGRAM, "HLW VITRIFICATION LIQUID WASTE EFFLUENT(SYSTEM RLD) (SHEET 2)."
4. FOR RADAR INSTALLATION DETAILS, SEE DRAWINGS 24590-WTP-J8-50-00001 AND 24590-WTP-J8-50-00004.

4 5. DELETED
4 6. THE REQUIRED BATCH SEQUENCES, PERMISSIVES, INTERLOCKS, ALARMS AND OPERATOR INTERFACE POINTS ARE FULLY DESCRIBED IN THE SOFTWARE FUNCTIONAL SPECIFICATION FOR RADIOACTIVE LIQUID WASTE DISPOSAL (RLD) SYSTEM, 24590-HLW-3PS-RLD-T0001.

Please note that source, special nuclear, and byproduct materials, as defined in the Atomic Energy Act of 1954 (AEA) are regulated at the U.S. Department of Energy (DOE) facilities exclusively by DOE acting pursuant to the AEA. Please also note that pursuant to AEA, it has sole and exclusive responsibility and authority to regulate source, special nuclear, and byproduct materials at DOE-owned nuclear facilities. Information contained herein on applicable codes is provided for process description purposes only.

REV	DESCRIPTION	ORG	CHKD	RVWD	APVD	DATE
4	REVISED PER NOTE 28	MM	SJ	CER JJ	MS CTK	11/30/06
3	REVISED PER NOTE 24	RDP	SJ	JJ	JFS	5/31/06
2	REVISED PER NOTE 23	UO	SJ	JFS	EI	12-23-04
0	ISSUED FOR CONSTRUCTION	DKR	NRR	N/A	GD	10-08-02

REVISION HISTORY

Q QUALITY DESIGNATOR

ISSUED BY /RPP-WTP PDC — ISSUE STAMP

PROJECT No.	24590	
SITE	HANFORD	
AREA	200E	
BUILDING No.	30	

	BY	DATE
ORIGINATOR	D. K. REDDY	10/6/02
CHECKER	N. R. RAVULA	10/6/02
APPROVER	G. M. DUNCAN	10/8/02
REVIEWER	N/A	

CONTENT APPLICABLE TO ALARA? [X] YES [ ] NO
ADR NO. 24590-HLW-ADR-M-02-016 REV: 2
SAFETY SCREEN REQUIRED? [X] YES [ ] NO EMS INITIAL IF YES

SAFETY SCREEN IS REQUIRED FOR DRAWING TYPES IDENTIFIED IN 24590-WTP-GPP-SREG-002

BECHTEL

RIVER PROTECTION PROJECT
WASTE TREATMENT PLANT
2435 STEVENS CENTER PLACE
RICHLAND, WA 99354

CONTRACT No: DE-AC27-01RV14136

P&ID - HLW
RADIOACTIVE LIQUID WASTE DISPOSAL SYSTEM MISCELLANEOUS SUMPS

SCALE: NONE

24590-HLW-M6-RLD-00017 REV 4

'E' SIZE - 44x34
COMPUTER GENERATED - MANUAL CHANGES NOT PERMITTED

R10740560

11/29/2006 07:01:44 AM

PLOTTED BY: edorn
C:\Work\Jobs\83939\HLW\M6\RLD00017.dgn

FORM E_SDN.DGN 02/2003

24590-HLW-M6-RLD-20003

HSH-SUMP-00009 SUMP MELTER 2 EQUIPMENT DECON AREA MINIMUM 40 GAL N/A

RLD-EJCTR-00173 MELTER 2 SUMP EJECTOR 25 GPM

HSH-SUMP-00005 MELTER 2 CAVE CRANE DECON ROOM SUMP 75 GAL MAX CAP 30 IN DIA X 18 IN DEEP

RLD-EJCTR-00174 HSH-SUMP-00005 EJECTOR (STEAM EJECTOR) 25 GPM 1 1/2 IN

HSH-SUMP-00006 SUMP MELTER 2 CAVE CRANE MAINTENANCE ROOM 75 GAL MAX CAP 30 IN DIA X 18 IN DEEP

RLD-PMP-00193 HSH-SUMP-00006 SUMP PUMP (MELTER2 CAVE CRANE MAIN) 25 GPM @ 30 FT TDH

HMH-SUMP-00003 MELTER 2 CAVE OVERPACK ROOM SUMP 50 GAL MAX CAP 30 IN X 24 IN X 16 IN

RLD-PMP-00195 HMH-SUMP-00003 SUMP PUMP (MELTER 2 CAVE OVERPACK ROOM) 25 GPM @ 68 FT TDH

HMH-SUMP-00004 MELTER 2 CAVE OVERPACK AIR LOCK ROOM SUMP 50 GAL MAX CAP 30 IN X 24 IN X 16 IN

RLD-PMP-00194 HMH-SUMP-00004 SUMP PUMP (MELTER 2 CAVE OVERPACK AIR LOCK) 25 GPM @ 68 FT TDH

NOTES:

1. SEE DRAWINGS 24590-WTP-M6-50-00001 THROUGH 24590-WTP-M6-50-00008 FOR GENERAL NOTES, SYMBOLS, AND LEGEND, AND GENERAL SLOPE REQUIREMENTS.
2. DELETED
3. EJECTOR DISCHARGE PIPING TO HAVE A MINIMUM LENGTH OF 24 INCHES OF STRAIGHT PIPE BEFORE FIRST BEND.
4. ALL SUMPS ARE QUALITY LEVEL Q AND SEISMIC CATEGORY SC-I.
5. FOR EJECTORS, PROVIDE 5/8"±1/8" CLEARANCE BETWEEN THE BOTTOM OF THE EJECTOR SUCTION PIPE AND SUMP BASE. FOR PUMPS, PROVIDE 1/2" ±1/8" CLEARANCE BETWEEN THE BOTTOM OF THE PUMP SUCTION PIPE AND SUMP BASE.
6. CONTENTS OF THIS DOCUMENT ARE DANGEROUS WASTE PERMIT AFFECTING.
7. OVERFLOW TIE-IN POINT TO BE LOCATED BELOW ALL INLET CONNECTIONS AND SHALL BE ROUTED A MINIMUM OF SIX INCHES ABOVE THE HORIZONTAL DRAIN LINE.
8. OUT CELL STEAM SUPPLY PIPING TO EJECTOR TO BE LOCATED 34'-0" MINIMUM ABOVE MAXIMUM LIQUID LEVEL IN SUMP.

9.-10. DELETED

11. SUMP IS TO BE COVERED WITH A STAINLESS STEEL SCREEN PLATE TO PROTECT PIPING SYSTEM FROM DEBRIS. MAXIMUM SCREEN SIZE IS 1/4" DIAMETER HOLE. SUMP COVERS ARE PROVIDED BY CIVIL/STRUCTURAL.
12. THE PRESSURE BOUNDARY FOR ALL SYSTEMS, STRUCTURES, AND COMPONENTS ON THIS DRAWING IS QUALITY LEVEL CM AND SEISMIC CATEGORY SC-III UNLESS OTHERWISE NOTED.

13.-14. DELETED

15. SPRAY NOZZLES ARE PROVIDED FOR WASHING DOWN CELL AND CAVE LINERS. INSTALL NOZZLES ON BOTTOM OF SPRAY HEADER, AIMED TOWARDS LINER. LOCATE BOTTOM OF NOZZLE 4 INCHES ABOVE THE LINER UPPER EDGE. NOZZLE STANDOFF FROM VERTICAL PLANE OF LINER IS 12 INCHES. NOZZLE SPACING ON HEADER IS ONE PER 5 FOOT. SPRAY NOZZLE TYPE IS LECHLER 140° FLAT FAN NOZZLE NUMBER 686.868 OR EQUIVALENT.
16. DELETED
17. REVISION 4: REARRANGED INCOMING PIPE LINES TO MANIFOLD RLD-ZF-33827-S11B-06 AND HEADER RLD-ZF-04096-S11B-02. CHANGED RLD-V-35197 FROM BALL TO GLOBE VALVE; YV-3367 FROM PLUG TO BALL VALVE; PCV-3371, -3373 AND -3375 FROM GATE TO PLUG VALVE. DELETED RLD-WBOX-0111-01. REVISED/CLARIFIED SLOPES. PLACED OFF SHEET CONNECTOR FROM 24590-HLW-M6-HSH-20004 ON HOLD (SEE HOLD 6). ADDED 1X1/2" REDUCER ON AIR SUPPLY TO DIAPHRAGM PUMPS. REVISED/ADDED/DELETED NOTES AND REFERENCES. REVISED SEISMIC AND QUALITY DESIGNATIONS. ADDED BACKFLOW PREVENTERS ON OUT CAVE/OUT CELL PIPING FOR C5 CONFINEMENT. ADDED HSH-SUMP-00009 AND ASSOCIATED PIPING AND EQUIPMENT.
18. SLOW OPENING VALVE REQUIRED.
19. LOCATE ACTUATED VALVE AT HIGH POINT IN LINE ABOVE RACK HEADER.
20. DELETED
21. THE GEOMETRY OF JOGGLED (OFFSET) PENETRATIONS IS QUALITY LEVEL Q FOR RADIATION PROTECTION. THE QUALITY LEVEL AND SEISMIC CATEGORY DESIGNATIONS OF PIPING WITHIN JOGGLES ARE THE SAME AS CONNECTING PIPING.
22. FILTER REGULATOR IS TO BE SUPPLIED WITH THE DIAPHRAGM PUMP.
23. REVISED TO INCORPORATE P-JOGGLES. REVISED QUALITY/SEISMIC FLAGS. REMOVED BACKFLOW PREVENTERS ON PUMP DISCHARGE LINES. ADDED/DELETED/REVISED NOTES, HOLDS, AND REFERENCES. CHANGED RLD-V-35511 TO PLUG VALVE, CHANGED YV-3366 TO BALL VALVE AND ADDED FC FOR FAIL POSITION. REVISED/DELETED LINE NUMBERS.

HOLD/OPEN ITEMS:

1-6. DELETED

REFERENCES:

1. DELETED
2. THE REQUIRED BATCH SEQUENCES, PERMISSIVES, INTERLOCKS, ALARMS AND OPERATOR INTERFACE POINTS ARE FULLY DESCRIBED IN THE SOFTWARE REQUIREMENTS SPECIFICATION FOR RLD RADIOACTIVE LIQUID WASTE DISPOSAL SYSTEM, 24590-HLW-3PS-RLD-T0001.
3. FOR RADAR INSTALLATION DETAILS, SEE DRAWINGS 24590-WTP-J8-50-00001 AND 24590-WTP-J8-50-00004.
4. 24590-HLW-M5-V17T-00007001, PROCESS FLOW DIAGRAM, "HLW VITRIFICATION LIQUID WASTE EFFLUENT (SYSTEM RLD) (SHEET 1)."
5. 24590-HLW-M5-V17T-00007002, PROCESS FLOW DIAGRAM, "HLW VITRIFICATION LIQUID WASTE EFFLUENT (SYSTEM RLD) (SHEET 2)."

Please note that source, special nuclear, and byproduct materials, as defined by the Atomic Energy Act of 1954 (AEA) are regulated at the U.S. Department of Energy (DOE) facilities exclusively by DOE acting pursuant to its AEA authority. The NRC, acting pursuant to AEA, has sole and exclusive responsibility and authority to regulate source, special nuclear, and byproduct materials at DOE-owned nuclear facilities. Information contained herein on radionuclides is provided for process description purposes only.

REV	DESCRIPTION	ORG	CHKD	RVWD	APVD	DATE
5	REVISED PER NOTE 23					12/15/06
4	REVISED PER NOTE 17	RDP	APP	JJ		5/31/06
0	ISSUED FOR CONSTRUCTION	ST	DR	N/A	TFV	11/27/02

REVISION HISTORY

Q QUALITY DESIGNATOR

ISSUED BY RPP-WTP PDC

ISSUE STAMP

PROJECT No.	24590
SITE	HANFORD
AREA	200E
BUILDING No.	30

	BY	DATE
ORIGINATOR	SUREN THAKKAR	11/25/02
CHECKER	DEVENDER REDDY	11/25/02
APPROVER	T. VALENTINO	11/27/02
REVIEWER	N/A	

CONTENT APPLICABLE TO ALARA? [X] YES [ ] NO
ADR NO. 24590-HLW-ADR-W-02-016 REV: 2

SAFETY SCREEN REQUIRED? [X] YES [ ] NO EWS INITIAL IF YES

SAFETY SCREEN IS REQUIRED FOR DRAWING TYPES IDENTIFIED IN 24590-WTP-GPP-SREG-002

RIVER PROTECTION PROJECT
WASTE TREATMENT PLANT
2435 STEVENS CENTER PLACE
RICHLAND, WA 99354

CONTRACT No: DE-AC27-01RV14136

P&ID - HLW RADIOACTIVE LIQUID WASTE DISPOSAL SYSTEM DECONTAMINATION TANK & SUMP - MELTER 2

SCALE: NONE

24590-HLW-M6-RLD-20003

REV 5

"E" SIZE - 44x34
COMPUTER GENERATED - MANUAL CHANGES NOT PERMITTED

R10741122

12/12/2006 12:54:44 PM

PLOTTED BY: rdern
C:\Work Area\24590-HLW\M6\RLD20003.dgn

FORM E_SDN.DGN 02/2003

HPH-SUMP-00004 CANISTER POUR TUNNEL 2 SUMP	RLD-EJCTR-00175 HPH-SUMP-00004 EJECTOR (STEAM EJECTOR)	HOP-SUMP-00008 MELTER 2 CAVE SBS CONDENSATE COLLECTION CELL SUMP	RLD-EJCTR-00176A HOP-SUMP-00008 EJECTOR (STEAM EJECTOR)	RLD-EJCTR-00176B HOP-SUMP-00008 EJECTOR (STEAM EJECTOR)	HFP-SUMP-00004 MELTER 2 ACTIVE SERVICE PIPE CHASE SUMP
75 GAL MAX CAP 30 IN DIA X 18 IN DEEP	25 GPM 1 1/2 IN	75 GAL MAX CAP 30 IN DIA X 18 IN DEEP	25 GPM 1 1/2 IN	25 GPM 1 1/2 IN	75 GAL MAX CAP 30 IN DIA X 18 IN DEEP

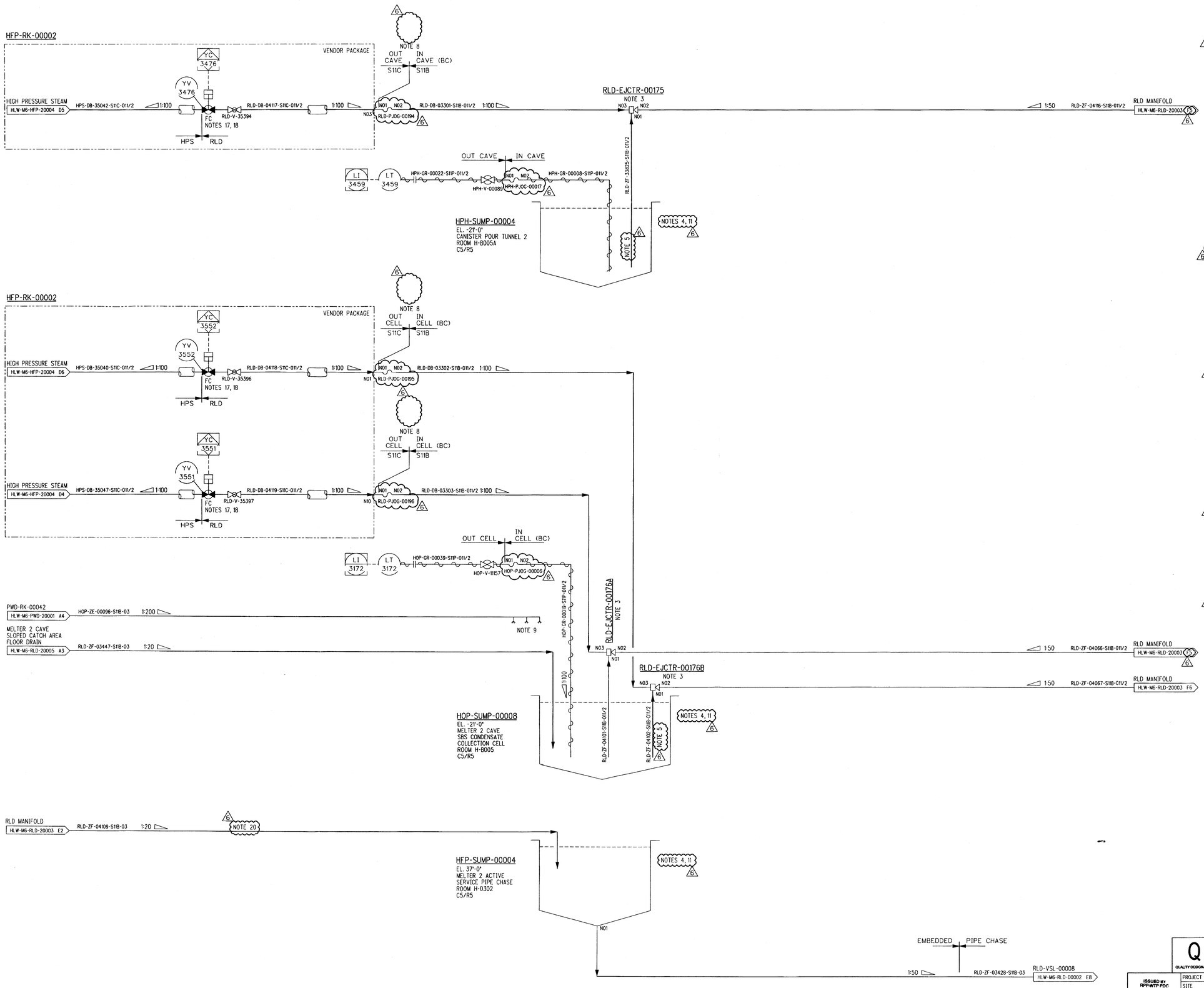

NOTES:

1. SEE DRAWINGS 24590-WTP-M6-50-00001 THROUGH 24590-WTP-M6-50-00008 FOR GENERAL NOTES, SYMBOLS, AND LEGEND, AND GENERAL SLOPE REQUIREMENTS.
2. DELETED
3. EJECTOR DISCHARGE PIPING TO HAVE A MINIMUM LENGTH OF 24 INCHES OF STRAIGHT PIPE BEFORE FIRST BEND.
4. ALL SUMPS ARE QUALITY LEVEL Q AND SEISMIC CATEGORY SC-I.
5. PROVIDE 5/8"±1/8" CLEARANCE BETWEEN BOTTOM OF EJECTOR SUCTION PIPE AND SUMP BASE.
6. CONTENTS OF THIS DOCUMENT ARE DANGEROUS WASTE PERMIT AFFECTING.
7. DELETED
8. OUT CELL STEAM SUPPLY PIPING MUST BE 34 FT ABOVE THE OVERFLOW LINE IN RLD-VSL-00008.
9. SPRAY NOZZLES ARE PROVIDED FOR WASHING DOWN CELL AND CAVE LINERS. INSTALL NOZZLES ON BOTTOM OF SPRAY HEADER, AIMED TOWARDS LINER. LOCATE BOTTOM OF NOZZLE 4 INCHES ABOVE THE LINER UPPER EDGE. NOZZLE STANDOFF FROM VERTICAL PLANE OF LINER IS 12 INCHES. NOZZLE SPACING ON HEADER IS ONE PER 5 FOOT. SPRAY NOZZLE TYPE IS LECHLER 140° FLAT FAN NOZZLE NUMBER 686.868 OR EQUIVALENT.
10. DELETED
11. SUMP COVERED WITH A STAINLESS STEEL SCREEN PLATE TO PROTECT PIPING SYSTEM FROM DEBRIS. MAXIMUM SCREEN SIZE IS 1/4" DIAMETER HOLE. SUMP COVERS ARE PROVIDED BY CIVIL/STRUCTURAL.
12. DELETED
13. THE PRESSURE BOUNDARY FOR ALL SYSTEMS, STRUCTURES, AND COMPONENTS ON THIS DRAWING IS QUALITY LEVEL CM AND SEISMIC CATEGORY SC-III, UNLESS OTHERWISE NOTED.
14. DELETED
15. REVISION 4: MAJOR REVISION, NO CHANGE CLOUDS REQUIRED. INCORPORATED 24590-HLW-M6N-RLD-00127 AND 24590-HLW-M6N-RLD-00150. DELETED LEVEL ELEMENT SYMBOL LE. REVISED SEISMIC CATEGORY AND QUALITY LEVELS. CHANGED THE REPRESENTATION OF THE JOGGLED PENETRATIONS. REVISED/ADDED/DELETED NOTES.
16. REVISION 5: DELETED STRAINERS ON STEAM RACKS. REVISED QUALITY AND SEISMIC DESIGNATIONS. REVISED/ADDED/DELETED NOTES AND ADDED REFERENCES. TAGGED COMPONENTS IN STEAM RACK. REVISED SLOPES.
17. SLOW OPENING VALVE REQUIRED.
18. LOCATE ACTUATED VALVE AT HIGH POINT IN LINE ABOVE RACK HEADER.
19. DELETED
20. THIS LINE IS QUALITY LEVEL Q AND SEIMIC CATEGORY SC-III.
21. THE GEOMETRY OF JOGGLED (OFFSET) PENETRATIONS IS QUALITY LEVEL Q FOR RADIATION PROTECTION. THE QUALITY LEVEL AND SEISMIC CATEGORY DESIGNATIONS OF PIPING WITHIN JOGGLES ARE THE SAME AS CONNECTING PIPING.
22. REVISED TO INCORPORATE P-JOGGLES AND 24590-HLW-M6N-M8OT-00007. ADDED/REVISED/DELETED NOTES, HOLDS, AND REFERENCES. REVISED QUALITY/SEISMIC BREAKS.

HOLD/OPEN ITEMS:

1-3. DELETED

REFERENCES:

1. DELETED
2. 24590-HLW-M5-V17T-00007001, PROCESS FLOW DIAGRAM, "HLW VITRIFICATION LIQUID WASTE EFFLUENT (SYSTEM RLD) (SHEET 1)".
3. 24590-HLW-M5-V17T-00007002, PROCESS FLOW DIAGRAM, "HLW VITRIFICATION LIQUID WASTE EFFLUENT (SYSTEM RLD) (SHEET 2)."
4. THE REQUIRED BATCH SEQUENCES, PERMISSIVES, INTERLOCKS, ALARMS AND OPERATOR INTERFACE POINTS ARE FULLY DESCRIBED IN THE SOFTWARE REQUIREMENTS SPECIFICATION FOR RADIOACTIVE LIQUID WASTE DISPOSAL (RLD) SYSTEM, 24590-HLW-3PS-RLD-T0001.
5. FOR RADAR INSTALLATION SEE DRAWINGS 24590-WTP-J8-50-00001 AND 24590-WTP-J8-50-00004.

Please note that source, special nuclear, and byproduct materials, as defined in the Atomic Energy Act of 1954 (AEA) are regulated at the U.S. Department of Energy (DOE) facilities exclusively by DOE acting pursuant to its AEA authority. DOE has not authority to regulate source, special nuclear, and byproduct materials at DOE-owned facilities. Information contained herein on radionuclides is provided for process description purposes only.

REV	DESCRIPTION	ORG	CHKD	RVWD	APVD	DATE
6	REVISED PER NOTE 22	MK	AAP	CEK	MA	1/11/07
5	REVISED PER NOTE 16	RDP	SJ	JJ	JP	5/31/06
4	REVISED PER NOTE 15	JK	RR	EI	SN	4/7/05
0	ISSUED FOR CONSTRUCTION	DR	RR	GMD	N/A	10/8/02

REVISION HISTORY

Q
QUALITY DESIGNATOR

ISSUED BY RPP-WTP PDC

ISSUE STAMP

PROJECT No.	24590	
SITE	HANFORD	
AREA	200E	
BUILDING No.	30	

	BY	DATE
ORIGINATOR	DEVENDER REDDY	10/6/02
CHECKER	RAO RAVULA	10/6/02
APPROVER	GM DUNCAN	10/8/02
REVIEWER	N/A	

CONTENT APPLICABLE TO ALARA? [X] YES [ ] NO
ADR NO. 24590-HLW-ADR-M-02-016 REV: 2
SAFETY SCREEN REQUIRED? [X] YES [ ] NO EM'S INITIAL IF YES CMK

SAFETY SCREEN IS REQUIRED FOR DRAWING TYPES IDENTIFIED IN 24590-WTP-GPP-SREQ-002

RIVER PROTECTION PROJECT
WASTE TREATMENT PLANT
2435 STEVENS CENTER PLACE
RICHLAND, WA 99354

CONTRACT No: DE-AC27-01RV14136

P&ID - HLW RADIOACTIVE LIQUID WASTE DISPOSAL SYSTEM MISCELLANEOUS SUMPS MELTER 2

SCALE: NONE

24590-HLW-M6-RLD-20004

REV 6

"E" SIZE - 44x34
COMPUTER GENERATED - MANUAL CHANGES NOT PERMITTED

12/21/2006 02:29:17 PM

PLOTTED BY: edavis
C:\Work\5m\03839\HLW\M6RLD20004.dgn

FORM E...SDN.DGN 02/2003

HFP-SUMP-00005
MELTER 2 CAVE
FEED PREP VESSEL AREA
SUMP
50 GAL MAX CAP
30 IN X 24 IN X 16 IN

HSH-SUMP-00007
MELTER 2 CAVE
MELTER AREA
SUMP
50 GAL MAX CAP
30 IN X 24 IN X 16 IN

RLD-EJCTR-00178
HFP-SUMP-00005
EJECTOR
(STEAM EJECTOR)
25 GPM
1 1/2 IN

RLD-EJCTR-00179
HSH-SUMP-00007
EJECTOR
(STEAM EJECTOR)
25 GPM
1 1/2 IN

HFP-RK-00002
VENDOR PACKAGE
YC 3871
YV 3871
HIGH PRESSURE STEAM
HLW-M6-HFP-20004 D5
HPS-DB-35041-S11C-011/2
RLD-DB-04069-S11C-011/2
RLD-V-35323
FC
NOTES 21, 22
HPS
RLD
OUT CAVE
ACTIVE SERVICES CELL
S11C
S11B
RLD-PJOG-00197
RLD-DB-03304-S11B-011/2
RLD-PJOG-00198
RLD-DB-03304-S11C-011/2
NOTE 9
IN CAVE
S14E
RLD-PJOG-00199
HFP-WBOX-00057 (BULKHEAD)
HFP-WBOX-00058 (BULKHEAD)
RLD-JMPP-00015
RLD-EJCTR-00178
NOTE 25
HFP-WBOX-00055
(WALL MODULE)
WET PROCESS CELL (BC)
RLD-ZF-04070-S14E-011/2
RLD-VSL-00008
HLW-M6-RLD-00002 D5

PWD-RK-00044
VENDOR PACKAGE
PLANT WASH
HLW-M6-PWD-20003 D4
PWD-ZE-09504-S11C-001/2
HFP-V-12168
HFP-ZE-20167-S11C-001/2
HFP-PJOG-00042
HFP-ZE-20115-S11B-001/2
EMBEDDED
HFP-WBOX-00060 (BULKHEAD)
HFP-WBOX-00058 (BULKHEAD)
RLD-JMPP-00030
2"
1/2"

PLANT WASH
HLW-M6-PWD-20003 A4
HFP-ZE-20098-S11B-03
HFP-ZE-20155-S11B-03
HFP-WBOX-00061
(WALL MODULE)
NOTES 15, 18
HFP-WBOX-00058
(BULKHEAD)
HFP-JMPP-00009
HFP-GR-00010-S11P-011/2
HFP-V-11052
LT 3853
LI 3853
NOTES 6, 11
HFP-SUMP-00005
EL 5'-0"
MELTER 2 CAVE
FEED PREP VESSEL AREA
ROOM H-0115
C5/R5

HFP-RK-00002
VENDOR PACKAGE
YV 3856
HIGH PRESSURE STEAM
HLW-M6-HFP-20004 C4
HPS-DB-35048-S11C-011/2
RLD-DB-04100-S11C-011/2
RLD-V-35325
FC
NOTES 21, 22
HPS
RLD
RLD-PJOG-00200
RLD-DB-03305-S11B-011/2
RLD-EJCTR-00179
NOTE 5
RLD-JMPP-00016
RLD MANIFOLD
HLW-M6-RLD-20003 F5
RLD-ZF-04071-S11B-011/2
TYPE I
LI 3855
LT 3855
V-12020
V-12021
HSH-ZG-00036-S11Y-001/2
HSH-ZG-00037-S11Y-001/2

PLANT WASH
HLW-M6-PWD-20003 A4
HSH-ZE-00121-S11B-03
HSH-ZE-00122-S11B-03
HOP-WBOX-00061
(WALL MODULE)
HOP-WBOX-00076
(WALL MODULE)
HSH-JMPP-00024
HSH-JMPP-00025
NOTES 17, 18
NOTE 6
HSH-SUMP-00007
EL 3'-0"
MELTER 2 CAVE
MELTER AREA
ROOM H-0106
C5/R5
IN CAVE OUT CAVE
HSH-PJOG-00008
HSH-ZE-00033-S11Y-001/2
HSH-ZE-00035-S11Y-001/2
HSH-JMPP-00015
HSH-BSKT-00005

PLANT WASH
HLW-M6-PWD-20003 A4
HOP-ZE-00097-S11B-03
HOP-WBOX-00075
(WALL MODULE)
HOP-ZE-20100-S11B-03
NOTES 16, 18
EL 3'-0"
MELTER 2 CAVE
SLOPED CATCH AREA
(EMBEDDED) TO COLLECTION
BASIN ROOM H-0106
C5/R5
RLD-ZF-03447-S11B-03
CELL DRAIN COLLECTION
HOP-SUMP-00008
HLW-M6-RLD-20004 D8

NOTES:

1. SEE DRAWINGS 24590-WTP-M6-50-00001 THROUGH 24590-WTP-M6-50-00008 FOR GENERAL NOTES, SYMBOLS, AND LEGEND, AND GENERAL SLOPE REQUIREMENTS.
2. DELETED
3. DELETED
4. DELETED
5. EJECTOR DISCHARGE PIPING TO HAVE A MINIMUM LENGTH OF 24 INCHES OF STRAIGHT PIPE BEFORE FIRST BEND.
6. ALL SUMPS ARE QUALITY LEVEL Q AND SEISMIC CATEGORY SC-1.
7. PROVIDE 5/8"±1/8" CLEARANCE BETWEEN BOTTOM OF EJECTOR SUCTION PIPE AND SUMP LINER.
8. CONTENTS OF THIS DOCUMENT ARE DANGEROUS WASTE PERMIT AFFECTING.
9. OUT CELL STEAM SUPPLY PIPING MUST BE 34 FT ABOVE THE MAXIMUM LIQUID LEVEL IN THE SUMP.
10. DELETED
11. SUMP COVERED WITH A STAINLESS STEEL SCREEN PLATE TO PROTECT PIPING SYSTEM FROM DEBRIS. MAXIMUM SCREEN SIZE IS 1/4" DIAMETER HOLE. SUMP COVERS ARE PROVIDED BY CSA.
12. DELETED.
13. THE PRESSURE BOUNDARY FOR ALL PIPING AND COMPONENTS IS QUALITY LEVEL CM AND SEISMIC CATEGORY SC-III, UNLESS OTHERWISE NOTED.
14. THE DRAIN PIPE IS EMBEDDED TO PROVIDE SHIELDING FROM RADIATION. SLOPE THE EMBEDDED PIPE AT 1:20 UNLESS CONSTRAINED BY PHYSICAL LIMITATIONS. IF CONSTRAINED BY PHYSICAL LIMITATIONS THE SLOPE MAY BE REDUCED TO 1:50.
15. ONE SPRAY RING HEADER IS PROVIDED TO WASH THE MELTER 2 CAVE FEED PREPARATION VESSEL AREA LINER. REFER TO NOTE 18 FOR DETAILS.
16. ONE SPRAY RING HEADER IS PROVIDED TO WASH THE MELTER 2 CAVE SBS VESSEL AREA LINER. REFER TO NOTE 18 FOR DETAILS
17. TWO SPRAY RING HEADERS ARE PROVIDED TO WASH THE MELTER 2 CAVE AREA LINER. REFER TO NOTE 18 FOR DETAILS.
18. SPRAY NOZZLES ARE PROVIDED FOR WASHING DOWN CELL AND CAVE LINERS. INSTALL NOZZLES ON BOTTOM OF SPRAY HEADER, AIMED TOWARDS LINER. LOCATE BOTTOM OF NOZZLE 4 INCHES ABOVE THE LINER UPPER EDGE. NOZZLE STANDOFF FROM VERTICAL PLANE OF LINER IS 12 INCHES. NOZZLE SPACING ON HEADER IS ONE PER 5 FOOT. SPRAY NOZZLE TYPE IS LECHLER 140° FLAT FAN NOZZLE NUMBER 686.868 OR EQUIVALENT.
19. REVISION 4: INCORPORATED 24590-HLW-M6N-RLD-00138 AND WALL MODULE DESIGN. MAJOR REVISION, NO CHANGE CLOUDS REQUIRED. ADDED JUMPER RLD-JMPP-00030. ADDED WALL MODULES HFP-WBOX-00055, 00061, HOP-WBOX-00075, AND HOP-WBOX-00076. DELETED WALL MODULES HFP-WBOX-00024. ADDED BULKHEADS HFP-WBOX-00057, 00058, AND 00060. CHANGED FLOOR/WALL BOXES PWD-FBOX-00189, HFP-FBOX-00037, AND HSH-WBOX-0043 INTO JOGGLED PENETRATIONS. INCORPORATED NEW WALL MODULE DESIGN INCLUDING EMBEDDED PIPE AND BULKHEAD. SLOPE ON ALL PLANT WASH LINES CHANGED TO 1:200. DELETED LINES 00180 AND 00181. DELETED YV-3859. REVISED QUALITY LEVEL AND SEISMIC CATEGORY. REVISED/ADDED/DELETED NOTES.
20. REVISION 5: INCORPORATED 24590-HLW-M6N-RLD-00158, -00175 AND 24590-HLW-M6N-M8OT-00002. REVISED SEISMIC AND QUALITY DESIGNATIONS. REVISED/ADDED/DELETED NOTES AND ADDED REFERENCES. DELETED STRAINERS. ADDED AND REVISED SLOPES.
21. SLOW OPENING VALVE REQUIRED.
22. LOCATE ACTUATED VALVE AT HIGH POINT IN LINE ABOVE RACK HEADER.
23. DELETED
24. THE GEOMETRY OF JOGGLED (OFFSET) PENETRATIONS IS QUALITY LEVEL Q FOR RADIATION PROTECTION. THE QUALITY LEVEL AND SEISMIC CATEGORY DESIGNATIONS OF PIPING WITHIN JOGGLES ARE THE SAME AS CONNECTING PIPING.
25. REVISED TO INCORPORATE 24590-HLW-M6N-M8OT-00007 AND PIPE-JOGGLES. CHANGED PIPE SPEC FROM S11B TO S14E. REVISED SLOPES. DELETED SEISMIC/QUALITY BREAKS. ADDED/DELETED/REVISED NOTES.

HOLD/OPEN ITEMS:

1-5. DELETED

REFERENCES:

1. DELETED
2. 24590-HLW-M5-V17T-00007001, PROCESS FLOW DIAGRAM, "HLW VITRIFICATION LIQUID WASTE EFFLUENT (SYSTEM RLD) (SHEET 1)."
3. 24590-HLW-M5-V17T-00007002, PROCESS FLOW DIAGRAM, "HLW VITRIFICATION LIQUID WASTE EFFLUENT (SYSTEM RLD) (SHEET 2)."
4. THE REQUIRED BATCH SEQUENCES, PERMISSIVES, INTERLOCKS, ALARMS AND OPERATOR INTERFACE POINTS ARE DESCRIBED IN THE SOFTWARE REQUIREMENTS SPECIFICATION FOR RADIOACTIVE LIQUID WASTE DISPOSAL (RLD) SYSTEM, 24590-HLW-3PS-RLD-T0001.
5. FOR RADAR INSTALLATION SEE DRAWINGS 24590-WTP-J8-50-00001 AND 24590-WTP-J8-50-00004. HLW INSTRUMENT INSTALLATION DETAIL RADAR PIPE ANTENNA SUMP ASSEMBLY.

Please note that source, special nuclear, and byproduct materials, as defined in the Atomic Energy Act of 1954 (AEA) are regulated at the U. S. Department of Energy (DOE) facilities exclusively by DOE pursuant to the AEA. Bechtel National, Inc. (BNI), pursuant to AEA, it has sole and exclusive responsibility and authority to regulate source, special nuclear, and byproduct materials at DOE owned nuclear facilities. Information contained herein on radionuclides is provided for process description purposes only.

REV	DESCRIPTION	ORG	CHKD	RVWD	APVD	DATE
6	REVISED PER NOTE 25	MK	APP	CER SJC	MK	1/29/07
5	REVISED PER NOTE 20	RDP	SJ	JJ	SP	5/31/06
4	REVISED PER NOTE 19	SJ	PLJ	EI	JFS	12/23/04
0	ISSUED FOR CONSTRUCTION	DR	JK	NA	GMD	10/8/02

REVISION HISTORY

Q
QUALITY DESIGNATOR

ISSUED BY: RPP-WTP PDC
ISSUE STAMP

PROJECT No.	24590
SITE	HANFORD
AREA	200E
BUILDING No.	30

	BY	DATE
ORIGINATOR	DEVENDER REDDY	10/6/02
CHECKER	RAO RAVULA	10/6/02
APPROVER	GM DUNCAN	10/8/02
REVIEWER	NA	

CONTENT APPLICABLE TO ALARA? [X] YES [ ] NO
ADR NO. 24590-HLW-ADR-M-02-016 REV: 2
SAFETY SCREEN REQUIRED? [X] YES [ ] NO EWNS INITIAL IF YES: MK

RIVER PROTECTION PROJECT
WASTE TREATMENT PLANT
2435 STEVENS CENTER PLACE
RICHLAND, WA 99354

CONTRACT No: DE-AC27-01RV14136

P&ID - HLW
RADIOACTIVE LIQUID WASTE DISPOSAL SYSTEM MISCELLANEOUS SUMPS MELTER 2

SCALE: NONE

24590-HLW-M6-RLD-20005

REV 6

SAFETY SCREEN IS REQUIRED FOR DRAWING TYPES IDENTIFIED IN 24590-WTP-GPP-SREQ-002

"E" SIZE - 44x34
COMPUTER GENERATED - MANUAL CHANGES NOT PERMITTED

R1074693?

01/22/2007 03:05:28 PM

PLOTTED BY: wmcshane
C:\Work Items\3539*HLW\M6\RLD\20005.dgn

FORM E_SDN.DGN 02/2003

PLEASE NOTE THAT SOURCE, SPECIAL NUCLEAR AND BYPRODUCT MATERIALS, AS DEFINED IN THE ATOMIC ENERGY ACT OF 1954 (AEA), ARE REGULATED AT THE U.S. DEPARTMENT OF ENERGY (DOE) FACILITIES EXCLUSIVELY BY DOE ACTING PURSUANT TO ITS AEA AUTHORITY. DOE ASSERTS, THAT PURSUANT TO THE AEA, IT HAS SOLE AND EXCLUSIVE RESPONSIBILITY AND AUTHORITY TO REGULATE SOURCE, SPECIAL NUCLEAR, AND BYPRODUCT MATERIAL AT DOE-OWNED NUCLEAR FACILITIES. INFORMATION CONTAINED HEREIN ON RADIONUCLIDES IS PROVIDED FOR PROCESS DESCRIPTION PURPOSES ONLY.

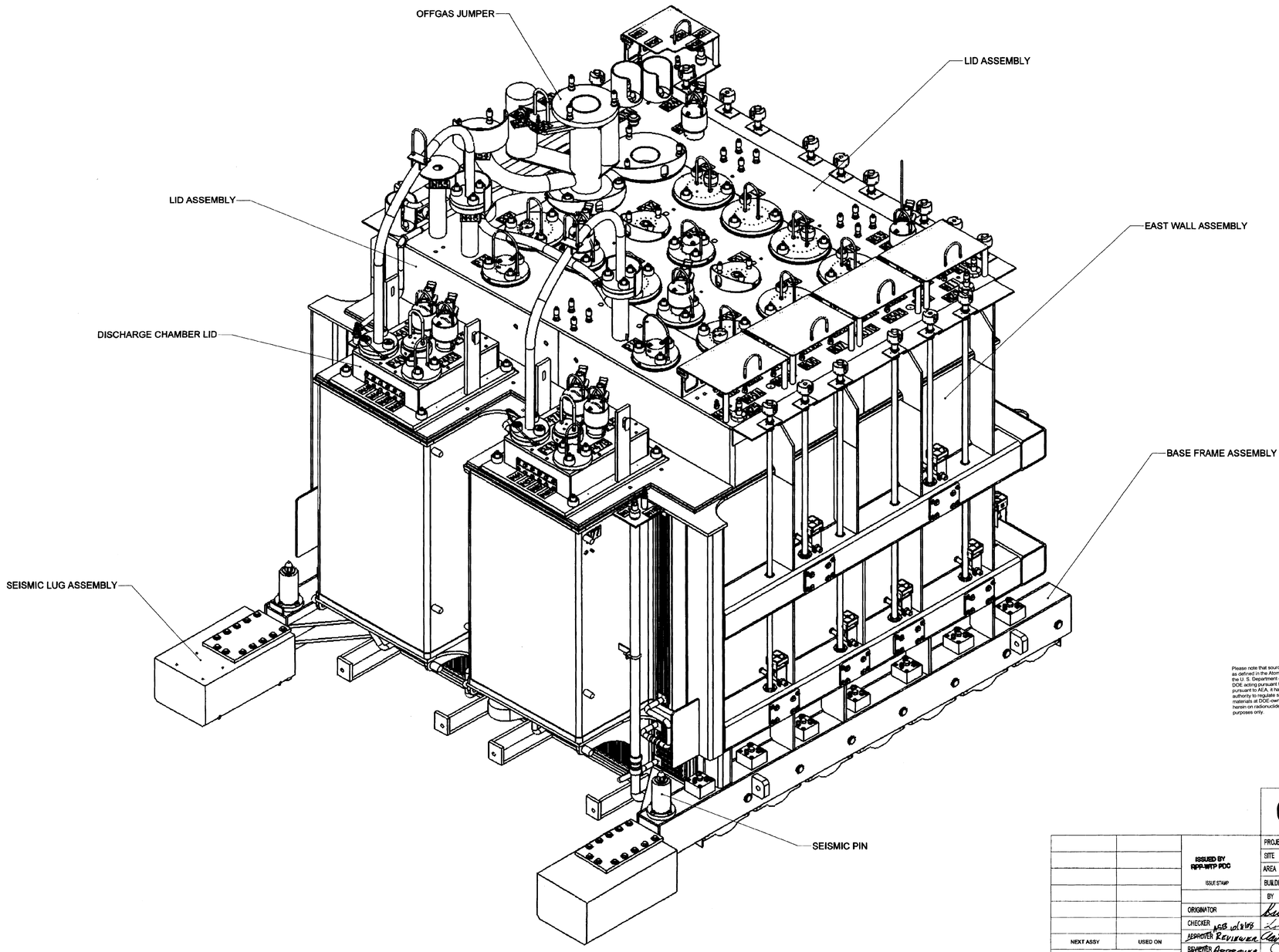

ISOMETRIC VIEW
SCALE 1:15

CONTENTS OF THIS DOCUMENT ARE DANGEROUS WASTE PERMIT AFFECTING

REFERENCE DRAWINGS	
DRAWING NUMBER	TITLE
24590-QL-HC4-W000-00011-04-00103	HLW MELTER ASSEMBLY

Please note that source, special nuclear, and byproduct materials, as defined in the Atomic Energy Act of 1954 (AEA) are regulated at the U. S. Department of Energy (DOE) facilities exclusively by DOE acting pursuant to its AEA authority. DOE asserts that pursuant to AEA, it has sole and exclusive responsibility and authority to regulate source, special nuclear, and byproduct materials at DOE-owned nuclear facilities. Information contained herein on radionuclides is provided for process description purposes only.

Q

REV	DESCRIPTION	ORG	CHKD	RVWD	APVD	DATE
0	ISSUED FOR DESIGN	KLC	LD	ASB	JJ	10/8/08

REVISION HISTORY

ISSUED BY RPP-WTP PDC	PROJECT No.	24590	
ISSUE STAMP	SITE	HANFORD	
	AREA	200E	
	BUILDING No.	30	

	BY	DATE
ORIGINATOR	Krista Corbin	07/07/08
CHECKER	Loyd Brown	07/07/08
REVIEWER (ASB 10/8/08)	Reviewer Carlos A Brown	08 OCT 08
REVIEWER (ASB 10/8/08)	Approver	10/8/08

NEXT ASSY | USED ON

APPLICATION

UNLESS OTHERWISE SPECIFIED DIMENSIONS ARE IN INCHES, TOLERANCES ARE: DECIMALS .X ± .1, .XX ± .06, .XXX ± .005; ANGLES ± .5°. DO NOT SCALE DRAWING

CONTENT APPLICABLE TO ALARA? YES [X] NO [ ]

ADR NO. 24590-HLW-ADR-MIL-05-0001 REV: 1

SAFETY SCREEN REQUIRED? YES [ ] NO [X] | EANG INITIAL IF YES N/A

BECHTEL

RIVER PROTECTION PROJECT
WASTE TREATMENT PLANT
2435 STEVENS CENTER PLACE
RICHLAND, WA 99354

CONTRACT No: DE-AC27-01RV14136

HLW MELTER ASSEMBLY HLW-MLTR-00001/00002 ISOMETRIC VIEW

SCALE: AS SHOWN

24590-HLW-MF-HMP-00001

REV 0

'D' SIZE - 34x22

COMPUTER GENERATED - MANUAL CHANGES NOT PERMITTED

10/6/2008 10:08:41 AM

R10972519

PLOTTED BY:
FILE NAME:
Bechtel National, Inc.
24590-HLW-MF-HMP-00001

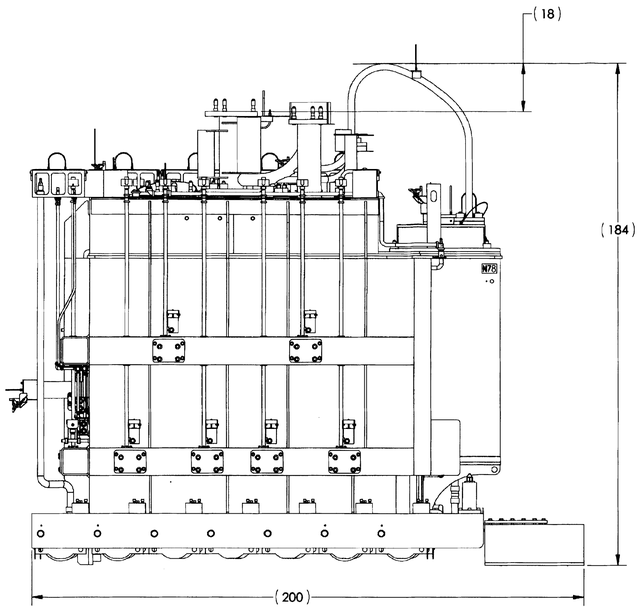

WEST ELEVATION
SCALE 1:25

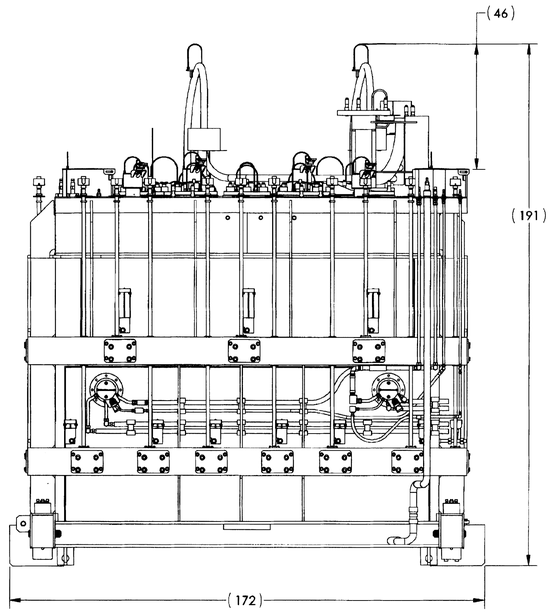

NORTH ELEVATION
SCALE 1:25

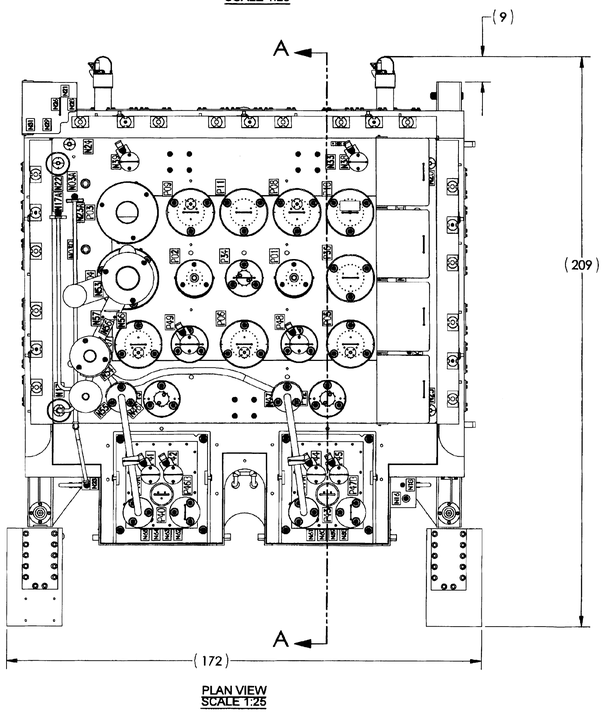

PLAN VIEW
SCALE 1:25

PLEASE NOTE THAT SOURCE, SPECIAL NUCLEAR AND BYPRODUCT MATERIALS, AS DEFINED IN THE ATOMIC ENERGY ACT OF 1954 (AEA), ARE REGULATED AT THE U.S. DEPARTMENT OF ENERGY (DOE) FACILITIES EXCLUSIVELY BY DOE ACTING PURSUANT TO ITS AEA AUTHORITY. DOE ASSERTS, THAT PURSUANT TO THE AEA, IT HAS SOLE AND EXCLUSIVE RESPONSIBILITY AND AUTHORITY TO REGULATE SOURCE, SPECIAL NUCLEAR, AND BYPRODUCT MATERIAL AT DOE-OWNED NUCLEAR FACILITIES. INFORMATION CONTAINED HEREIN ON RADIONUCLIDES IS PROVIDED FOR PROCESS DESCRIPTION PURPOSES ONLY.

CONTENTS OF THIS DOCUMENT ARE DANGEROUS WASTE PERMIT AFFECTING

REFERENCE DRAWINGS	
DRAWING NUMBER	TITLE
24590-QL-HC4-W000-00011-04-00103	HLW MELTER ASSEMBLY

Please note that source, special nuclear, and byproduct materials, as defined in the Atomic Energy Act of 1954 (AEA) are regulated at the U. S. Department of Energy (DOE) facilities exclusively by DOE acting pursuant to its AEA authority. DOE asserts that pursuant to AEA, it has sole and exclusive responsibility and authority to regulate source, special nuclear, and byproduct materials at DOE-owned nuclear facilities. Information contained herein on radionuclides is provided for process description purposes only.

REV	DESCRIPTION	ORG	CHKD	RVWD	APVD	DATE
0	ISSUED FOR DESIGN	KLC	[illegible]	ASD	[illegible]	10/8/08

REVISION HISTORY

Q

ISSUED BY RPP-WTP PDC
ISSUE STAMP

	BY	DATE
PROJECT No. 24590		
SITE HANFORD		
AREA 200E		
BUILDING No. 30		
ORIGINATOR	[illegible]	07 OCT 08
CHECKER ASD 10/8/08	[illegible]	07 OCT 08
APPROVER REVIEWER	[illegible]	08 OCT 08
REVIEWER Approved ASD 10/8/08	[illegible]	10/8/08

NEXT ASSY | USED ON

APPLICATION

UNLESS OTHERWISE SPECIFIED DIMENSIONS ARE IN INCHES. TOLERANCES ARE:
DECIMALS .X ± .1 .XX ± .05 .XXX ± .005
ANGLES ± .5°
DO NOT SCALE DRAWING

CONTENT APPLICABLE TO ALARA? YES [X] NO [ ]
ADR NO. 24590-HLW-ADR-MIL-05-0001 REV: 1
SAFETY SCREEN REQUIRED? YES [ ] NO [X] EBNS INITIAL IF YES N/A

'D' SIZE - 34x22
COMPUTER GENERATED - MANUAL CHANGES NOT PERMITTED

BECHTEL
RIVER PROTECTION PROJECT
WASTE TREATMENT PLANT
2435 STEVENS CENTER PLACE
RICHLAND, WA 99354

CONTRACT No: DE-AC27-01RV14136

HLW MELTER ASSEMBLY
HLW-MLTR-00001/00002
PLAN VIEW, WEST AND NORTH ELEVATION DRAWING

SCALE:		REV
AS SHOWN	24590-HLW-MF-HMP-00002	0

10/6/2008 10:14:07 AM

R10872520

PLOTTED BY:
FILE NAME:

Bechtel National, Inc. 24590-HLW-MF-HMP-00002

PLEASE NOTE THAT SOURCE, SPECIAL NUCLEAR AND BYPRODUCT MATERIALS, AS DEFINED IN THE ATOMIC ENERGY ACT OF 1954 (AEA), ARE REGULATED AT THE U.S. DEPARTMENT OF ENERGY (DOE) FACILITIES EXCLUSIVELY BY DOE ACTING PURSUANT TO ITS AEA AUTHORITY. DOE ASSERTS, THAT PURSUANT TO THE AEA, IT HAS SOLE AND EXCLUSIVE RESPONSIBILITY AND AUTHORITY TO REGULATE SOURCE, SPECIAL NUCLEAR, AND BYPRODUCT MATERIAL AT DOE-OWNED NUCLEAR FACILITIES. INFORMATION CONTAINED HEREIN ON RADIONUCLIDES IS PROVIDED FOR PROCESS DESCRIPTION PURPOSES ONLY.

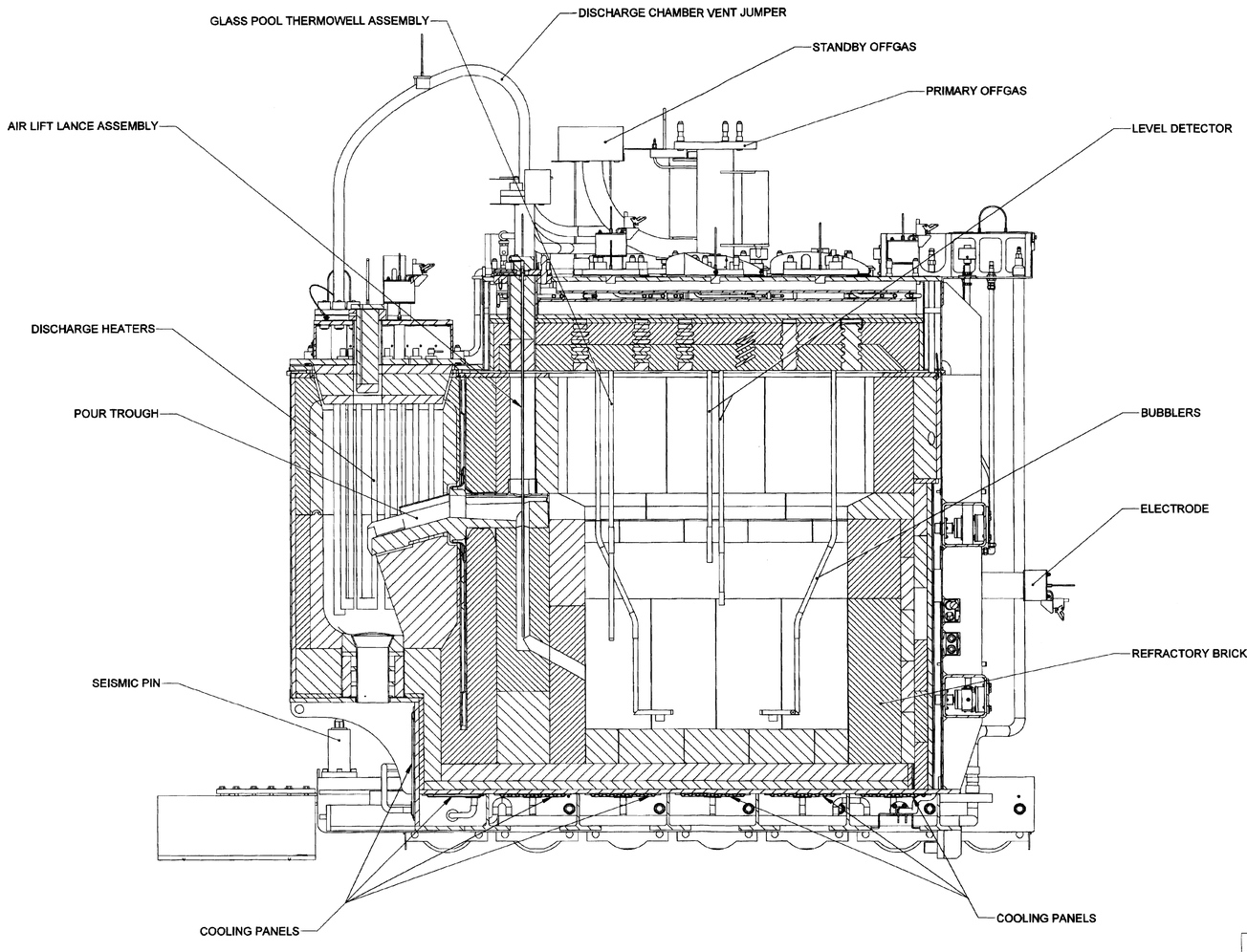

SECTION A-A
SEE DWG 24590-HLW-MF-HMP-00002
SCALE 1:15

CONTENTS OF THIS DOCUMENT ARE DANGEROUS WASTE PERMIT AFFECTING

REFERENCE DRAWINGS

DRAWING NUMBER	TITLE
24590-QL-HC4-W000-00011-04-00105	HLW MELTER ASSEMBLY

Please note that source, special nuclear, and byproduct materials, as defined in the Atomic Energy Act of 1954 (AEA) are regulated at the U. S. Department of Energy (DOE) facilities exclusively by DOE acting pursuant to its AEA authority. DOE asserts that pursuant to AEA, it has sole and exclusive responsibility and authority to regulate source, special nuclear, and byproduct materials at DOE-owned nuclear facilities. Information contained herein on radionuclides is provided for process description purposes only.

Q

REV	DESCRIPTION	ORG	CHKD	RVWD	APVD	DATE
0	ISSUED FOR DESIGN	KLC	[illegible]	ASE	[illegible]	10/8/08

REVISION HISTORY

ISSUED BY RPP-WTP PDC	PROJECT No.	24590
ISSUE STMP	SITE	HANFORD
	AREA	200E
	BUILDING No.	30

	BY	DATE
ORIGINATOR	[illegible]	07OCT08
CHECKER	[illegible]	07OCT08
APPROVER	[illegible]	10/8/08
REVIEWER	[illegible]	08OCT08

CONTENT APPLICABLE TO ALARA? YES [X] NO [ ]
ADR NO. 24590-HLW-ADR-MIL-05-0001 REV: 1
SAFETY SCREEN REQUIRED? YES [ ] NO [X] EERS INITIAL IF YES N/A

BECHTEL
RIVER PROTECTION PROJECT
WASTE TREATMENT PLANT
2435 STEVENS CENTER PLACE
RICHLAND, WA 99354
CONTRACT No: DE-AC27-01RV14136

HLW MELTER ASSEMBLY HLW-MLTR-00001/00002 SECTION A-A

NEXT ASSY	USED ON

APPLICATION

UNLESS OTHERWISE SPECIFIED DIMENSIONS ARE IN INCHES. TOLERANCES ARE:
DECIMALS: .X ± .1, .XX ± .05, .XXX ± .005
ANGLES: ± 5°
DO NOT SCALE DRAWING

SCALE: AS SHOWN
24590-HLW-MF-HMP-00003
REV 0

"D" SIZE - 34x22
COMPUTER GENERATED - MANUAL CHANGES NOT PERMITTED
10/8/2008 10:19:13 AM
R10972521

PLOTTED BY: Bechtel National, Inc.
FILE NAME: 24590-HLW-MF-HMP-00003

Drawings and Documents

Operating Unit Group 10 – Appendix 10.4
High Level Waste Building
General Arrangement Drawings

The documents listed in the following table are incorporated by reference into this permit and are subject to the requirements set forth in Part I Standard Conditions, Part II General Facility Conditions, and Part III Operating Unit Group 10 Conditions. Upon request, copies of the documents can be viewed at the Nuclear Waste Program Resource Center located at 3100 Port of Benton Blvd. Richland, WA. Appointments for viewing can be scheduled by calling (509) 372-7950.

Drawing/Documents	***Description***
24590-HLW-P1-P01T-00001, Rev 7	General Arrangement Plan El. -21
24590-HLW-P1-P01T-00002, Rev 6	General Arrangement Plan El. 0
24590-HLW-P1-P01T-00004, Rev 6	General Arrangement Plan El. 37
24590-HLW-P1-P01T-00005, Rev 5	General Arrangement Plan El. 58
24590-HLW-P1-P01T-00008, Rev 11	General Arrangement Sections A-A, B-B, C-C
24590-HLW-P1-P01T-00009, Rev 11	General Arrangement Sections D-D, E-E, F-F
24590-HLW-P1-P01T-00010, Rev 11	General Arrangement Sections G-G, H-H
24590-HLW-P1-P01T-00011, Rev 11	General Arrangement Sections J-J, K-K
RESERVED	RESERVED

Source documents (which do not include a "P" in the last set of numbers, e.g. "-P0001," or "-TP001") should be used in conjunction with any document change notices issued against them.

We are currently transitioning from permit documents (which do include a "P" in the last set of numbers) to source documents. At the end of the transition period, permit submittals will contain source documents and will be incorporated into the permit as described in Ecology Publication # 07-05-006 (www.ecy.wa.gov/biblio/nwp.html).

1
2
3
4
5 This page intentionally left blank.

24590-HLW-P1-P01T-00001

322'-10"

3 EQ SPACES AT 20'-0" = 60'-0" | 18'-6" | 25'-3" | 23'-9" | 23'-9" | 21'-0" | 28'-0" | 25'-6" | 18'-0" | 18'-0" | 17'-6" | 28'-0" | 16'-0" | 16'-0" | 20'-3" | 20'-3" | 21'-7" | 12'-8" | 24'-0"

236'-2"

VERTICAL CHASE HCH01 | FREIGHT ELEV HCH02 | STAIRWELL NO. 1 HST01 | VERTICAL CHASE HCH04 | VERTICAL CHASE HCH05 | STAIRWELL NO. 2 HST02 | VERTICAL CHASE HCH06

N3927.00 E9869.00

HOP-FAN-00001A
HOP-FAN-00001B
HOP-FAN-00001C
INSTRUMENT RACK (TYP.)
HOP-FAN-00009A
HOP-FAN-00009B
HOP-FAN-00009C
NLD-SUMP-00013
NLD-PMP-00007
C5 AIR DUCT (BELOW FLOOR EL-21'-0")
NLD-SUMP-00017
NLD-PMP-00031
PCW-PMP-00003A
PCW-PMP-00003B
PCW-PMP-00003C
PCW-HX-00003A
PCW-HX-00003B
STAIRWELL NO. 4 HST04
ELEV. CHASE HCH10
VERTICAL CHASE HCH09

HOP-SUMP-00002
HOP-ABS-00002
HOP-ABS-00003
RLD-VSL-00002
EL-9'-6" C5/R5 H-B015
C5 AIR DUCTS (UNDER TRANSFER TUNNEL)
RLD-SUMP-00001
RWH-SUMP-00006
PASSAGEWAY BELOW/ACROSS TRANSFER TUNNEL FLOOR EL-21'-0"
RWH-SUMP-00001
MVE-PSUP-30003
HCP-SUMP-00001
RLD-VSL-00006
RLD-VSL-00007
HOP-SUMP-00008
LVE-XFMR-30304
LVE-XFMR-30303
HPH-SUMP-00004
HOP-VSL-00904
C5/R5 H-B005
PCW-VSL-00026
MVE-PSUP-30001
LVE-XFMR-30301
HOP-SUMP-00003
HOP-VSL-00903
HPH-SUMP-00003
HRH-SUMP-00001
C5/R5 H-B032
RWH-SUMP-00007
RWH-SUMP-00008
EL-9'-0" C2/R3 H-B028
SUB CHANGE H-B029
C3/R3 H-B029A
EL -9'-0" HPB029A
RWH-SUMP-00004
H-B030
RWH-SUMP-00005
LVE-XFMR-30302
EL-31'-0" SUB CHANGE H-B033A
SUB CHANGE H-B033
HDH-SUMP-00003
HDH-VSL-00003
EL -16'-0" C3/C5/R3/R5 H-B035
EL-16'-6" C3/C5/R3/R5 H-B039B
EL -16'-0" C3/R3 H-B039A
HDH-SUMP-00001
HDH-VSL-00001
HDH-SUMP-00002
EL-9'-0" C3/R3 H 8045
VERTICAL CHASE HCH08
ELEV. CHASE HCH07
STAIRWELL NO. 3 HST03
EL-9'-6" C2/C3/R3/R5 H-B028A
EL-23'-2" HPB033A
EL-9'-6" HPB033B
EL-31'-0" C2/C3/R3/R5 H-B033B
EL-31'-0" C3/R3/R5 H-B037B
EL-15'-10¾" HPB037B
EL-31'-0" C3/R3/R5 H-B037C
EL-20'-0" HPB037A
EL-12'-0" HPB037C
SUB CHANGE H-B039
EL -15'-0" HPB039
REMOVABLE STAIRS
NLD-PMP-00001
NLD-TK-00006
EL -12'-0" HPB036
(SEE DETAIL 1 FOR PLAN AT EL -31'-0")

PCW-PMP-00002A
PCW-PMP-00002B
NLD-SUMP-00011
NLD-PMP-00021
PCW-HX-00002B
PCW-HX-00002A
PCW-VSL-00028

KEY PLAN (NTS)

SUB CHANGE EL -31'-0" H-B035A | EL-31'-0" C3/R3/R5 H-B037B | EL-31'-0" C2/C3/R3/R5 H-B033B | EL-31'-0" C3/R3/R5 H-B037C | NLD-SUMP-00002 | NLD-PMP-00017 | EL-31'-0" H-B038 | SUB CHANGE EL-31'-0" H-B037A | EL-31'-0" H-B037

DETAIL 1
EL-31'-0" DETAIL

NOTES:

1. ALL OPERATING AREAS ARE DESIGNATED C2/R2 UNLESS NOTED OTHERWISE.
2. ALL SUB CHANGE ROOMS ARE DESIGNATED C2/C3/R2 UNLESS NOTED OTHERWISE.
3. REFER TO DRAWING 24590-HLW-P1-P01T-00008, SECTION "A" FOR CONVERSIONS FROM HLW FACILITY ELEVATIONS TO SITE ELEVATIONS. (HLW FACILITY ELEVATION 0'-0" = SITE ELEVATION 682'-0" MSL).
4. FOR SITE REFERENCE SEE PLOT PLAN DRAWING 24590-BOF-P1-50-00001.
5. CONTENTS OF THIS DOCUMENT ARE DANGEROUS WASTE PERMIT AFFECTING.
6. ADDITIONAL WALLS FOR COMMODITY ITS SEPARATION WILL BE ADDED AS REQUIRED BASED ON FINAL COMMODITY ROUTING.
7. FLOOR/LINER SLOPE IS REQUIRED IN ROOMS WITH SUMPS. SLOPE IS A MINIMUM OF 1% TOWARD THE SUMP.
8. ALL PLATFORMS HAVE THE SAME RADIOLOGICAL CLASSIFICATION AS THE ROOM THEY RESIDE IN UNLESS OTHERWISE NOTED.

LEGEND:

CA	CONTROLLED ACCESS
EE	EMERGENCY EXIT
H-0101	ROOMS, CELLS, CAVES (VAULTS) AND TUNNELS
HC0102	CORRIDORS & CONNECTING VESTIBULES
HM0103	MEZZANINES
HP0104	PLATFORMS
HCH01	CHASES
H-A101	ANNEX
HST01	STAIRWELL
	EQUIPMENT REMOVAL/PULL SPACE OR LAYDOWN AREA
	CONCRETE
	CHECKERED PLATE
	GRATING SPAN
	CONSTRUCTION ACCESS

K 00011 | J 00011 | H 00010 | G 00010 | A 00008 | B 00008 | C 00008 | D 00009 | E 00009 | F 00009

PLAN AT EL -21'-0"
(FROM EL -31'-0" TO EL -9'-0")

Please note that source, special nuclear, and byproduct materials, as defined in the Atomic Energy Act of 1954 (AEA) are regulated at the U. S. Department of Energy (DOE) facilities exclusively by DOE acting pursuant to its AEA authority. DOE asserts that pursuant to the AEA, it has sole and exclusive responsibility and authority to regulate source, special nuclear, and byproduct materials at DOE-owned nuclear facilities. Information contained herein on radionuclides is provided for process description purposes only.

REVISION HISTORY

REV	DESCRIPTION	ORG	CHKD	RVWD	APVD	DATE
7	REMOVED PUMP PCW-00002C. REVISED ADR. REVISED RADIOLOGICAL CLASSIFICATIONS. ADDED NOTE 7 AND 8.	KAC	NML	DSS	Keith JK TV	2/5/2008
6	INCORPORATED DCN'S 24590-HLW-P1N-P01T-00118, 00124, 00156.	KAC	NML	JC	DJ	2/14/06
5	INCORPORATED DCN'S 24590-HLW-P1N-P01T-00008, 00038, 00044, 00081, 00097, 00105 AND 00114. DELETED EQUIPMENT. ADDED BOUNDIING AREA AROUND HOP FANS.	KAC	NML	WM	JS	10/14/04
4	INCORPORATED DCN 24590-HLW-P1N-P01T-00048, REVISED PLATFORMS, DELETED EQUIPMENT. REMOVED SUBCHANGE ROOM B007. MOVED WALL BETWEEN ROOMS H-B007A AND 007B. ADDED NEW EQUIPMENT, REVISED ROOM H-B0020. REMOVED ROOM H-B019, INCORPORATED FCR 24590-WTP-FCR-C-03-348. REVISED ROOM CLASSIFICATIONS, REVISED WALLS, REMOVED HOLD 3, ADDED HOLDS 4 & 5. REVISED RAIL SUPPORT.	KAC	BAN	DG	DNP	11/25/03
0	ISSUED FOR DESIGN-SUPERSEDES 24590-HLW-P1-G01T-00001	TL	DG		MM SCF	4/18/02

ISSUED BY: RPP-WTP PDC

ISSUE STAMP

	BY	DATE
ORIGINATOR	T. LOGAN	4/18/02
CHECKER	D. GOTT	4/18/02
APPROVER	MARK WYATT/S C FOELBER	4/18/02
REVIEWER	N/A	

CONTENT APPLICABLE TO ALARA? [X] YES [ ] NO
ADR NO. 24590-HLW-ADR-PL-02-001 REV 6
SAFETY SCREEN REQUIRED? [X] YES [ ] NO EMS INITIAL IF YES

PROJECT No. 24590
SITE HANFORD
AREA 200E
BUILDING No. 30

BECHTEL

RIVER PROTECTION PROJECT
WASTE TREATMENT PLANT
2435 STEVENS CENTER PLACE
RICHLAND, WA 99354

CONTRACT No: DE-AC27-01RV14136

HLW VITRIFICATION BUILDING GENERAL ARRANGEMENT PLAN AT EL -21'-0"

SCALE: 1/16"=1'-0"

24590-HLW-P1-P01T-00001

REV 7

R10882478

FORM E...SDN.DGN 02/2003

"E" SIZE - 44x34

SAFETY SCREEN IS REQUIRED FOR

work\documents\ems\05512\24590hwp1p01t00001 rev 7.dgn

24590-HLW-P1-P01T-00002

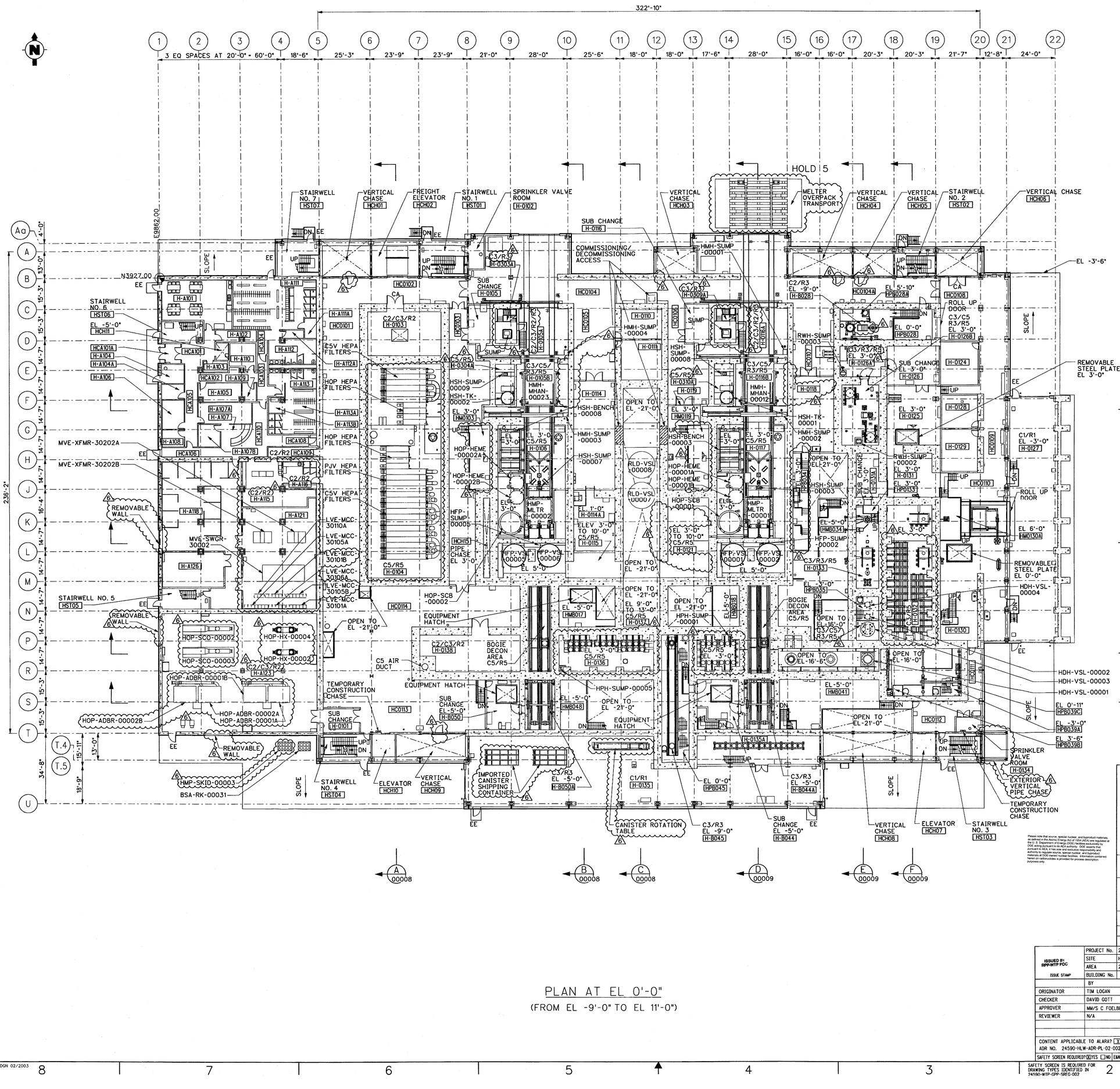

PLAN AT EL 0'-0"

(FROM EL -9'-0" TO EL 11'-0")

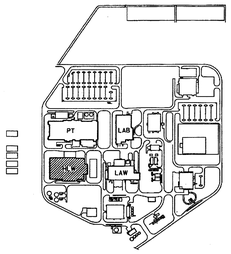

KEY PLAN
(NTS)

NOTES:

1. ALL OPERATING AREAS ARE DESIGNATED C2/R2 UNLESS NOTED OTHERWISE. ANNEX ROOMS (B-T/1-5) ARE C1/R1 UNLESS NOTED OTHERWISE.
2. ALL SUB CHANGE ROOMS ARE DESIGNATED C2/C3/R2 UNLESS NOTED OTHERWISE.
3. REFER TO DRAWING 24590 HLW P1 P01T 00008, SECTION "A" FOR CONVERSIONS FROM HLW FACILITY ELEVATIONS TO SITE ELEVATIONS. (HLW FACILITY ELEVATION 0'-0" = SITE ELEVATION 682'-0" MSL).
4. FOR REFERENCE SEE PLOT PLAN DRAWING 24590-BOF-P1-50-00001.
5. CONTENTS OF THIS DOCUMENT ARE DANGEROUS WASTE PERMIT AFFECTING.
6. ADDITIONAL WALLS FOR COMMODITY ITS SEPARATION WILL BE ADDED AS REQUIRED BASED ON FINAL COMMODITY ROUTING.
7. FLOOR/LINER SLOPE IS REQUIRED IN ROOMS WITH SUMPS. SLOPE IS A MINIMUM OF 1% TOWARD THE SUMP. 6
8. ALL PLATFORMS HAVE THE SAME RADIOLOGICAL CLASSIFICATION AS THE ROOM THEY RESIDE IN UNLESS OTHERWISE NOTED.

HOLDS:

1. NOT USED.
5. HOLD PENDING MH EQUIPMENT DEVELOPMENT 6
11. DELETED.
12. NOT USED.
13. NOT USED.
14. NOT USED.
15. NOT USED.
16. NOT USED.
17. NOT USED.
18. DELETED. 6
19. NOT USED.
20. NOT USED.
21. NOT USED.

LEGEND:

CA	CONTROLLED ACCESS
EE	EMERGENCY EXIT
H-0101	ROOMS, CELLS, CAVES (VAULTS) AND TUNNELS
HC0102	CORRIDORS & CONNECTING VESTIBULES
HM0103	MEZZANINES
HP0104	PLATFORMS
HCH01	CHASES
H-A101	ANNEX
HST01	STAIRWELL
	EQUIPMENT REMOVAL/PULL SPACE OR LAYDOWN AREA
	CONCRETE
	CHECKERED PLATE
	GRATING SPAN
	CONSTRUCTION ACCESS

REV	DESCRIPTION	ORG	CHKD	RVWD	APVD	DATE
6	REMOVED HOLDS 18 & 11. ADDED CORBELS. REVISED PLATFORMS HM0103 AND HM0119. REVISED ROOMS H-0303A AND H-0309A. REMOVED HCP-VSL-00021 AND HCP-VSL-00022. REVISED HEPA FILTERS. ADDED DOORS TO CHASES. REVISED EQUIPMENT. ADDED REMOVABLE WALLS IN ANNEX. ADDED HMP-SKID-00003, ADDED PLATFORM HPB034. REVISED ROOM RAD/LOLOGICAL CLASSIFICATIONS. ADDED EXTERIOR VERTICAL PIPE CHASE. MOVED WALLS. REMOVED WALLS CAUSING ROOMS H-A117 AND H-A119 TO BE REMOVED. REVISED MCC CALLOUTS. REVISED ADR. ADDED NOTES 7 AND 8.	KAC	NML	DSS	RWS GJC	2/5/2008
5	INCORPORATED DCN 24590-HLW-P1N-P01T-00073, -00096, -00098, -00102, -00114, -00125, -00155 & -00159. REVISED ADR REV.	BAN	NML	WTM	SN	4/01/05
4	INCORPORATED DCN'S 24590-HLW-P1N-P01T -00021, 00042, 00056, 00059, 00067, 00072, 00078, 00086 AND 00089. ADDED OBSERVATION DOORS TO CHASES 1, 5 AND 9. ADDED LVE-MCC-30110A.	KAC	NML	WTM	MBR	7/13/04
0	ISSUED FOR DESIGN - SUPERSEDES DRAWING DWG-W375HV-PL00016 REV. G	TL	DG		MM SCF	5/17/02

REVISION HISTORY

Please note that source, special nuclear, and byproduct materials, as defined by the Atomic Energy Act of 1954 (AEA), are regulated at the U.S. Department of Energy (DOE) facilities exclusively by DOE acting pursuant to its AEA authority. The Contractor, pursuant to AEA, it has sole and exclusive responsibility and authority to regulate source, special nuclear, and byproduct materials at DOE-owned nuclear facilities. Information contained herein on radionuclides is provided for process description purposes only.

ISSUED BY RPP-WTP PDC	PROJECT No.	24590
	SITE	HANFORD
	AREA	200E
ISSUE STAMP	BUILDING No.	

	BY	DATE
ORIGINATOR	TIM LOGAN	5/17/02
CHECKER	DAVID GOTT	5/17/02
APPROVER	MM/S C FOELBER	5/17/02
REVIEWER	N/A	

CONTENT APPLICABLE TO ALARA? [X] YES [ ] NO 6
ADR NO. 24590-HLW-ADR-PL-02-002 REV 33
SAFETY SCREEN REQUIRED? [X] YES [ ] NO EMS INITIAL IF YES

BECHTEL

RIVER PROTECTION PROJECT
WASTE TREATMENT PLANT
2435 STEVENS CENTER PLACE
RICHLAND, WA 99354

CONTRACT No: DE-AC27-01RV14136

HLW VITRIFICATION BUILDING GENERAL ARRANGEMENT PLAN AT EL 0'-0"

SCALE: 1/16"=1'-0"

24590-HLW-P1-P01T-00002

REV 6

"E" SIZE - 44x34
COMPUTER GENERATED - MANUAL CHANGES NOT PERMITTED

SAFETY SCREEN IS REQUIRED FOR DRAWING TYPES IDENTIFIED IN 24590-WTP-GPP-SREG-002

R10882479

01/23/2008 09:10:16 AM

FORM E_SDN.DGN 02/2003

\\work\documents\dms\05212\24590\hwp\p0100002 rev 6.dgn

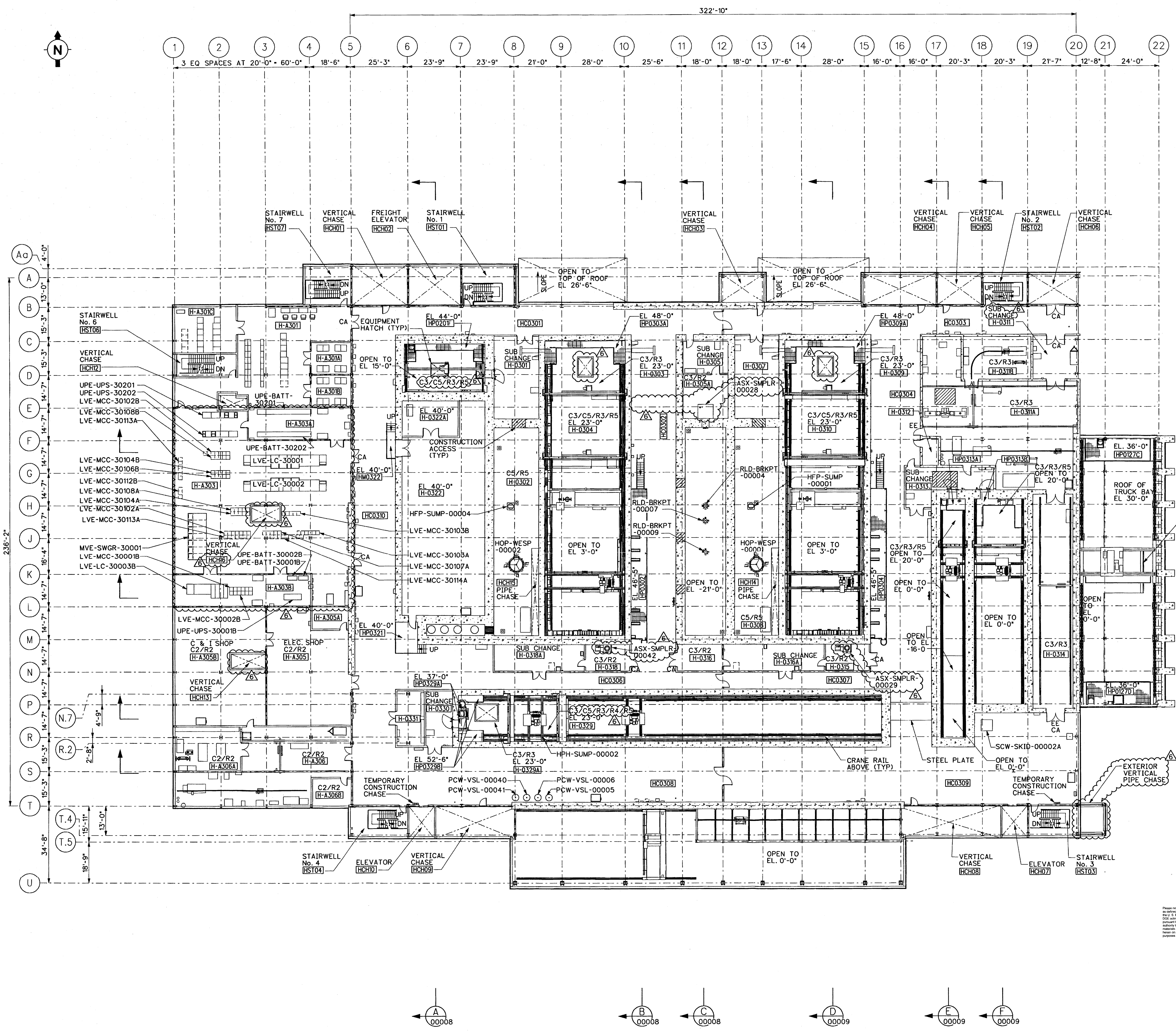

PLAN AT EL 37'-0"
(FROM EL 33'-0 TO EL 54'-0")

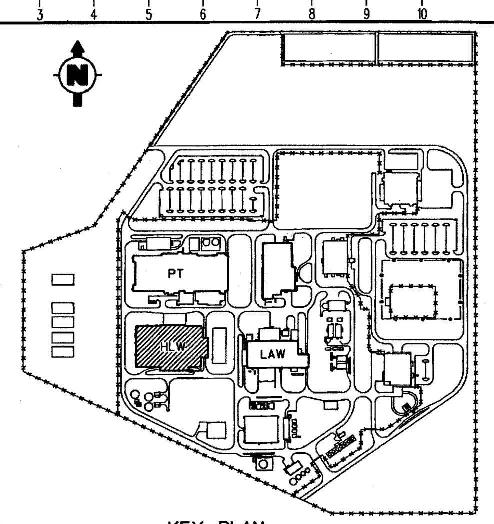

KEY PLAN
(NTS)

NOTES:

1. ALL OPERATING AREAS ARE DESIGNATED C2/R2 UNLESS NOTED OTHERWISE. ANNEX ROOMS (B-T/1-5) ARE C1/R1 UNLESS NOTED OTHERWISE.
2. ALL SUB CHANGE ROOMS ARE DESIGNATED C2/C3/R2 UNLESS NOTED OTHERWISE.
3. REFER TO DRAWING 24590-HLW-P1-P01T-00008, SECTION "A" FOR CONVERSIONS FROM HLW FACILITY ELEVATIONS TO SITE ELEVATIONS. (HLW FACILITY ELEVATION 0'-0" = SITE ELEVATION 682'-0" MSL).
4. FOR REFERENCE SEE PLOT PLAN DRAWING 24590-BOF-P1-50-00001.
5. ADDITIONAL WALLS FOR COMMODITY ITS SEPARATION WILL BE ADDED AS REQUIRED BASED ON FINAL COMMODITY ROUTING.
6. FLOOR/LINER SLOPE IS REQUIRED IN ROOMS WITH SUMPS. SLOPE IS A MINIMUM OF 1% TOWARD THE SUMP.
7. ALL PLATFORMS HAVE THE SAME RADIOLOGICAL CLASSIFICATION AS THE ROOM THEY RESIDE IN UNLESS OTHERWISE NOTED.
8. CONTENTS OF THIS DOCUMENT ARE DANGEROUS WASTE PERMIT AFFECTING.

HOLDS:

1. NOT USED.
2. NOT USED.
3. DELETED
4. NOT USED.
5. NOT USED.
6. NOT USED.
7. NOT USED.
8. DELETED

LEGEND:

CA	CONTROLLED ACCESS
EE	EMERGENCY EXIT
H-0101	ROOMS, CELLS, CAVES (VAULTS) AND TUNNELS
HC0102	CORRIDORS & CONNECTING VESTIBULES
HM0103	MEZZANINES
HP0104	PLATFORMS
HCH01	CHASES
H-A101	ANNEX
HST01	STAIRWELL
	EQUIPMENT REMOVAL/PULL SPACE OR LAYDOWN AREA
	CONCRETE
	CHECKERED PLATE
	GRATING SPAN
	CONSTRUCTION ACCESS

REVISION HISTORY

REV	DESCRIPTION	ORG	CHKD	RVWD	APVD	DATE
6	REVISED EQUIPMENT LAYOUT IN ROOMS H-A303, H-A303A, H-A303B. REVISED CALLOUT HCH14 TO HCH16. REVISED ROOM RADIOLOGICAL CLASSIFICATIONS. ADDED SUB CHANGE CALLOUT. REMOVED HOLD 3 AND 8. INCORPORATED DCN 24590-HLW-P1N-P01T-00173. REVISED ADR. ADDED NOTES 6, 7 AND 8. ADDED EXTERIOR PIPE CHASE. REMOVED ASX-SMPLR-00041. CHANGED HATCH ORIENTATION IN ROOMS H-0303 AND H-0309.	KAC	NML	OSS	JK	2/5/2008
5	INCORPORATED DCN 24590-HLW-P1N-P01T-00106, 00127, 00135, 00139 AND 00147.	KAC	NML	JC	TV DJ	2/14/06
4	INCORPORATED DCN 24590-HLW-P1N-P01T-00052, 00080, 00085, 00091. 00111 AND 00114. ADDED HOLD 3 AND 8. REVISED PLATFORM ELEVATIONS. MOVED DOORS. DELETED PLATFORMS AND EQUIPMENT. REMOVED HOLD 1 & 2. ADDED DOORS. ADDED CONSTRUCTION ACCESSES. ADDED CHASE CALLOUTS. REVISE ROOF ELEVATION. REVISED ROOM CLASSIFICATIONS.	KAC	NML	WM	JS	10/13/04
3	REMOVED HOLD 4, 5, 6 AND 7. ADDED PLATFORM, REVISED TRUCK BAY, REMOVED DIM NUMBER, REVISED H-0329A PLATFORMS. DELETED EQUIPMENT, ADDED HOLDS 2.	KAC	BAN	DG	DNP	11/25/03
0	ISSUED FOR DESIGN, SUPERSEDES DRAWING DWG-W375HV-PL00018, REV G.	TL	DG		MM SCF	8/27/02

ISSUED BY RPP-WTP PDC		
	PROJECT No.	24590
	SITE	HANFORD
	AREA	200E
ISSUE STAMP	BUILDING No.	30
	BY	DATE
ORIGINATOR	TIM LOGAN	8/26/02
CHECKER	DAVID GOTT	8/26/02
APPROVER	MARK MYATT/S C FOELBER	8/26/02
REVIEWER	N/A	

CONTENT APPLICABLE TO ALARA? [X] YES [ ] NO
ADR NO. 24590-HLW-ADR-PL-02-004 REV: 3
SAFETY SCREEN REQUIRED? [X] YES [ ] NO E&NS INITIAL IF YES BLO

RIVER PROTECTION PROJECT
WASTE TREATMENT PLANT
2435 STEVENS CENTER PLACE
RICHLAND, WA 99354

CONTRACT No: DE-AC27-01RV14136

HLW VITRIFICATION BUILDING GENERAL ARRANGEMENT PLAN AT EL 37'-0"

SCALE: 1/16"=1'-0" | 24590-HLW-P1-P01T-00004 | REV 6

'E' SIZE - 44x34

R10882481

01/30/2008 01:36:17 PM

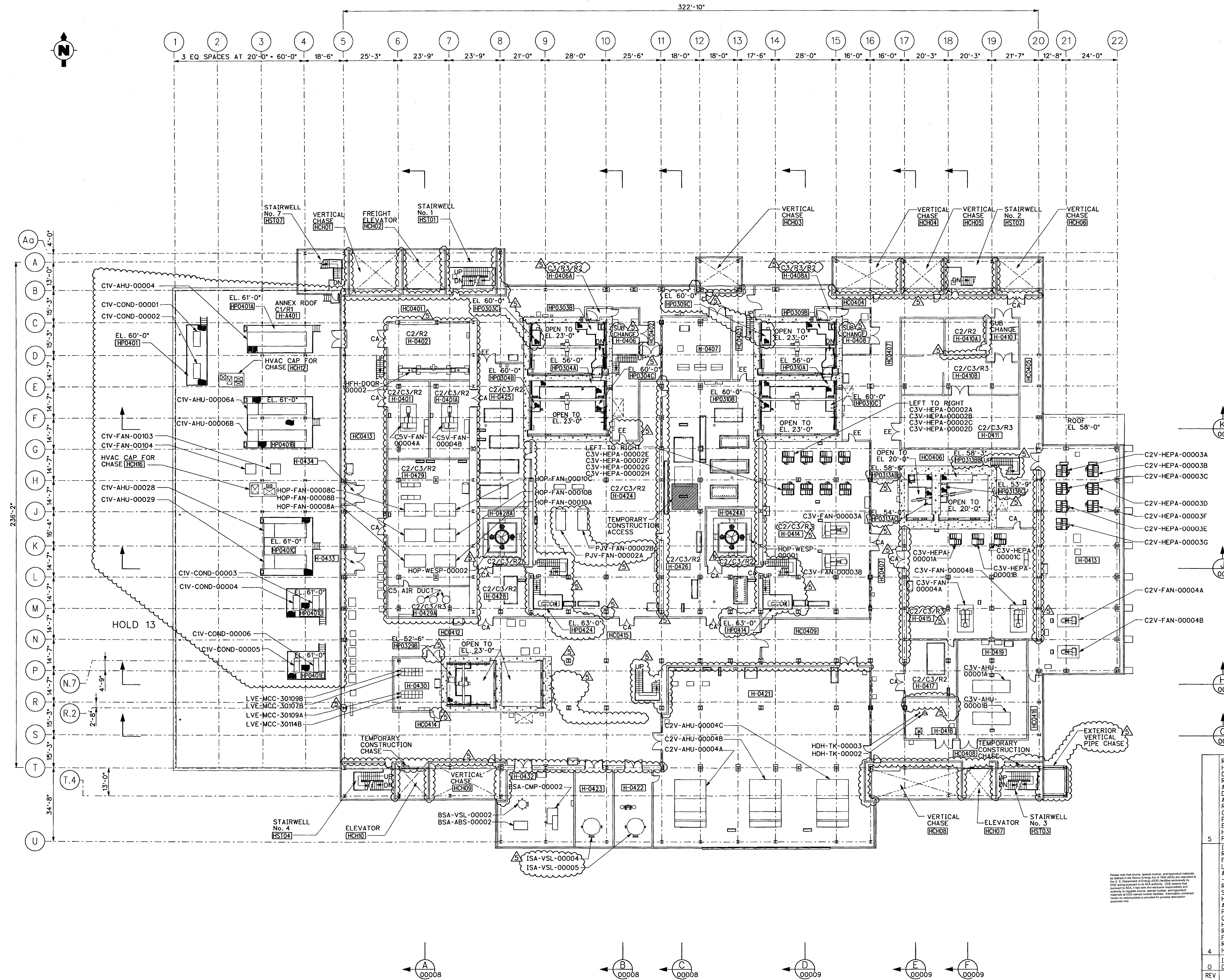

PLAN AT EL 58'-0"

(FROM EL 54'-0" TO EL 68'-0")

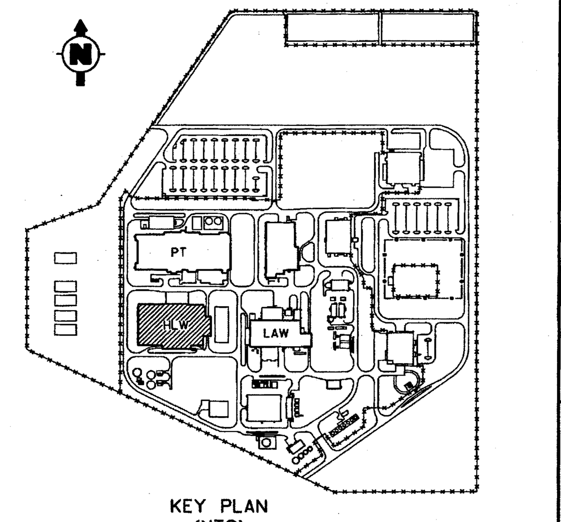

KEY PLAN
(NTS)

NOTES:

1. ALL OPERATING AREAS ARE DESIGNATED C2/R2 UNLESS NOTED OTHERWISE. ANNEX ROOMS (B-T/1-5) ARE C1/R1 UNLESS NOTED OTHERWISE.
2. ALL SUB CHANGE ROOMS ARE DESIGNATED C2/C3/R2 UNLESS NOTED OTHERWISE.
3. REFER TO DRAWING 24590 HLW P1 P01T 00008, SECTION "A" FOR CONVERSIONS FROM HLW FACILITY ELEVATIONS TO SITE ELEVATIONS. (HLW FACILITY ELEVATION 0'-0" = SITE ELEVATION 682'-0" MSL).
4. FOR REFERENCE SEE PLOT PLAN DRAWING 24590-BOF-P1-50-00001.
5. NOT USED.
6. CONTENTS OF THIS DOCUMENT ARE DANGEROUS WASTE PERMIT AFFECTING.
7. ALL PLATFORMS HAVE THE SAME RADIOLOGICAL CLASSIFICATION AS THE ROOM THEY RESIDE IN UNLESS OTHERWISE NOTED.

HOLDS:

1. NOT USED.
2. NOT USED.
3. NOT USED.
4. NOT USED.
5. NOT USED.
6. NOT USED.
7. NOT USED.
8. NOT USED.
9. NOT USED.
10. NOT USED.
11. NOT USED.
12. DELETED
13. HOLD PENDING CSA SEISMIC CALCULATION AND HVAC LAYOUT.

LEGEND:

CA	CONTROLLED ACCESS
EE	EMERGENCY EXIT
H-0101	ROOMS, CELLS, CAVES (VAULTS) AND TUNNELS
HC0102	CORRIDORS & CONNECTING VESTIBULES
HM0103	MEZZANINES
HP0104	PLATFORMS
HCH01	CHASES
H-A101	ANNEX
HST01	STAIRS
	EQUIPMENT REMOVAL/PULL SPACE OR LAYDOWN AREA
	CONCRETE
	CHECKERED PLATE
	GRATING SPAN
	CONSTRUCTION ACCESS

REVISION HISTORY

REV	DESCRIPTION	ORG	CHKD	RVWD	APVD	DATE
5	REMOVED HOLD 12 . REMOVED PLATFORM HPCH08 AND HP0418. REVISED STAIRS. REMOVED DOW-SKID-00004. MOVED PJV AND HOP FANS. REVISED PLATFORM CALLOUTS. ADDED NOTES 6 AND 7. REVISED CALLOUTS. MOVED WALLS AND DOORS. ADDED PLATFORMS HP0424 AND HP0414. ADDED RADIOLOGICAL CLASSIFICATIONS TO ROOMS H-0406A AND H-0408A. ADDED SUB-CHANGE CALLOUTS. ADDED EXTERIOR VERTICAL PIPE CHASE. ADDED NEW COLUMNS PER RGM EFFORT. ADDED WALL IN SOUTH END OF ROOM H-0429. INCORPORATED DCN 24590-HLW-P1N-P01T-00171. REVISED ADR.	KAC	NML	DSS	[illegible]	2/5/2008
4	INCORPORATED DCN 24590-HLW-P1N-P01T-00114. REVISED C2V AHU FANS, C3V HEPA'S, AND FANS. REVISED ROOM H-0424. ADDED CRANE AND LVE-MCC-00114B. REVISED PLATFORM HP0401. ADDED ROOMS H-0425, 0426, 0428, 0433, AND -0434 FOR SEPARATION REQUIREMENTS. ADDED ROOMS 0406, 0406A, 0408 AND 0408A FOR SUBCHANGE REQUIREMENTS. REVISED ROOM H-0407. REMOVED DOOR FROM ROOM H-0401. ADDED DOOR TO ROOM H-0401A. ADDED PLATFORMS HP0304B, 0304C, 0310B, 0310C, 0313AB, 0313AC, 0313BB AND 0313BC. ADDED HOLD 12 AND 13. REMOVED HOLDS 5 AND 11. REMOVED CONSTRUCTION ACCESS DEPICTION FROM ROOM H-0402. REMOVED NOTE 5. REMOVED HVAC LOUVER DEPICTION. REVISED HVAC LOUVER DEPICTION ON SOUTH WALL.	NML	KAC	WTM	SN	04/18/05
0	ISSUED FOR DESIGN, SUPERSEDES DRAWING DWG-W375HV-PL00019, REV G.	BN	DG		MM GD	10/1/02

ISSUED BY RPP-WTP PDC

ISSUE STAMP

PROJECT No.	24590	
SITE	HANFORD	
AREA	200E	
BUILDING No.	30	
	BY	DATE
ORIGINATOR	BRIAN A NANCE	10/1/02
CHECKER	DAVID GOTT	10/1/02
APPROVER	MARK MYATT/G M DUNCAN	10/1/02
REVIEWER	N/A	

RIVER PROTECTION PROJECT
WASTE TREATMENT PLANT
2435 STEVENS CENTER PLACE
RICHLAND, WA 99354

CONTRACT No: DE-AC27-01RV14136

HLW VITRIFICATION BUILDING GENERAL ARRANGEMENT PLAN AT EL 58'-0"

CONTENT APPLICABLE TO ALARA? [X] YES [ ] NO
ADR NO. 24590-HLW-ADR-PL-02-005 REV 2

SAFETY SCREEN REQUIRED? [X] YES [ ] NO E&NS INITIAL IF YES

SCALE: 1/16"=1'-0"

24590-HLW-P1-P01T-00005

REV 5

SAFETY SCREEN IS REQUIRED FOR DRAWING TYPES IDENTIFIED IN 24590-WTP-GPP-SREG-002

'E' SIZE - 44x34
COMPUTER GENERATED - MANUAL CHANGES NOT PERMITTED

R10882482

01/30/2008 01:44:46 PM

C:\Work\kacunnin\dms06512\24590HLWP1P01T00005 (WORKING).dgn

FORM E_SDN.DGN 02/2003

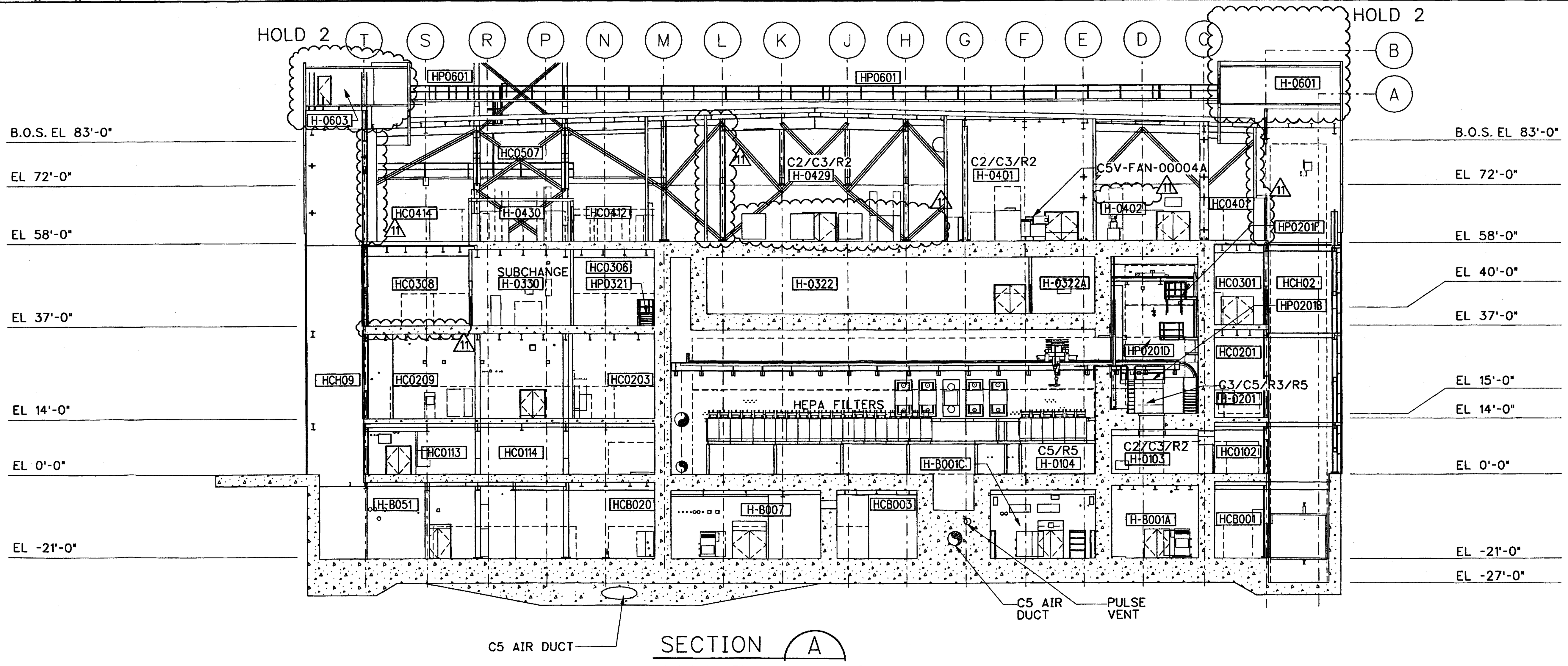

SECTION (A)
00001 THRU 00007

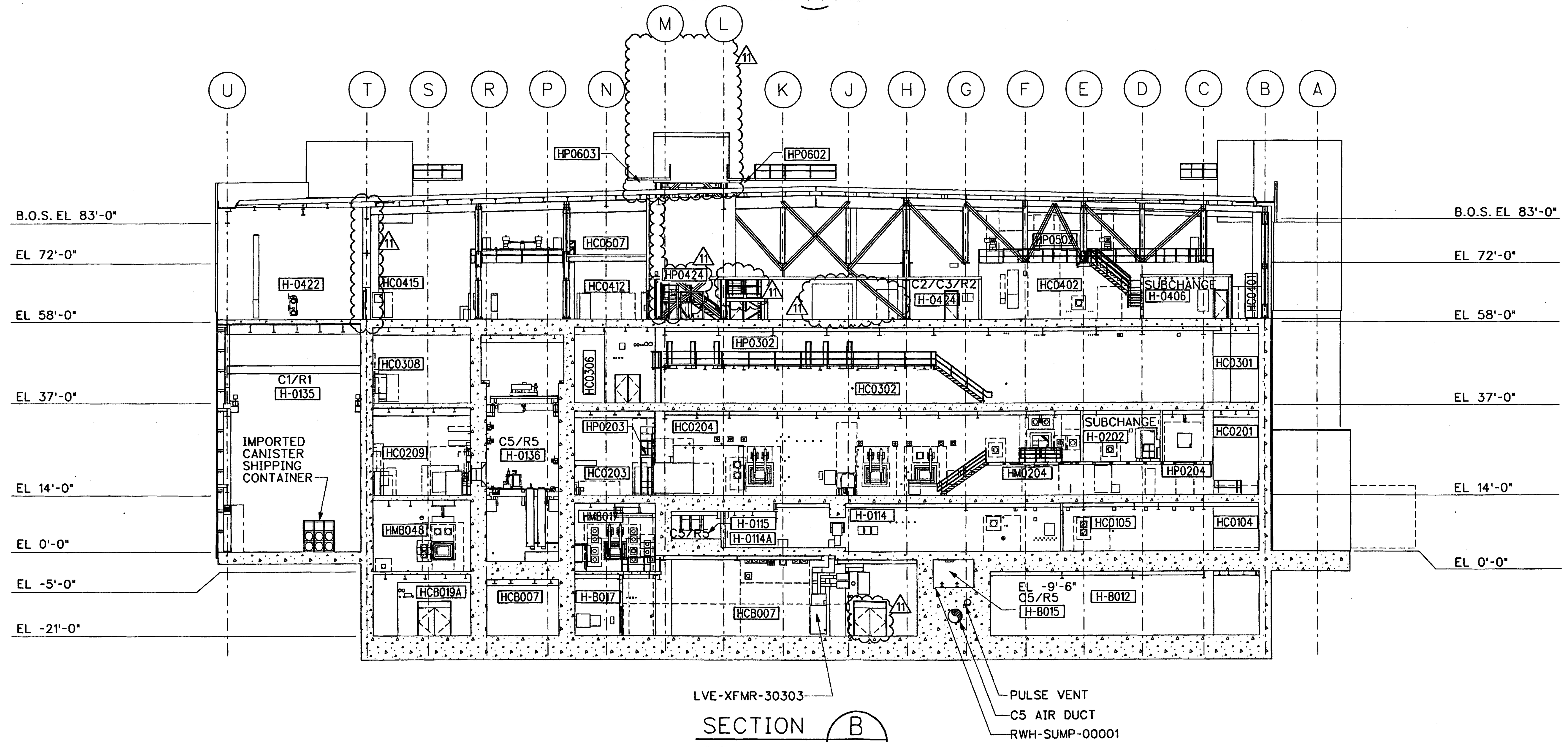

SECTION (B)
00001 THRU 00007

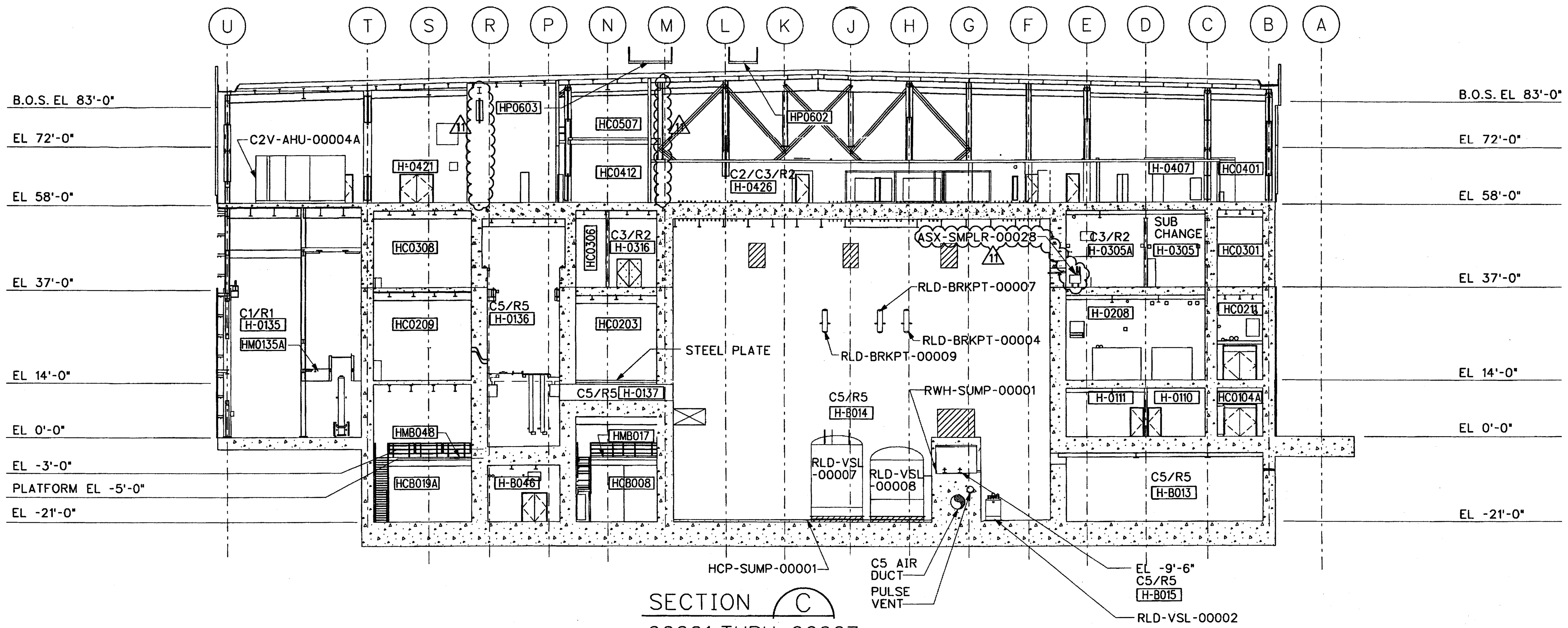

SECTION (C)
00001 THRU 00007

HOLDS:

1. DELETED.
2. HOLD FOR ARCHITECTURAL DESIGN OF ELEVATOR MACHINE ROOMS, AND RADIOLOGICAL ISSUES.
3. NOT USED
4. NOT USED.
5. NOT USED
6. NOT USED
7. NOT USED
8. NOT USED
9. NOT USED
10. NOT USED
11. NOT USED
12. DELETED.

NOTES:

1. FOR GENERAL NOTES, SEE 24590-HLW-P1-P01T-00001.
2. ADDITIONAL WALLS FOR COMMODITY ITS SEPARATION WILL BE ADDED AS REQUIRED BASED ON FINAL COMMODITY ROUTING.
3. ADR'S FOR ELEVATIONS ARE AS FOLLOWS:
   24590-HLW-ADR-PL-02-001 FOR ELEVATION -21'-0"
   24590-HLW-ADR-PL-02-002 FOR ELEVATION 0'-0"
   24590-HLW-ADR-PL-02-003 FOR ELEVATION 14'-0"
   24590-HLW-ADR-PL-02-004 FOR ELEVATION 37'-0"
   24590-HLW-ADR-PL-02-005 FOR ELEVATION 58'-0"
   24590-HLW-ADR-PL-02-008 FOR ELEVATION 72'-0"
   24590-HLW-ADR-PL-03-001 FOR ELEVATION 91'-0"
4. NOT USED.
5. CONTENTS OF THIS DOCUMENT ARE DANGEROUS WASTE PERMIT AFFECTING.

REVISION HISTORY

REV	DESCRIPTION	ORG	CHKD	RVWD	APVD	DATE
11	REVISED EQUIPMENT IN ROOM H-0429. ADDED PLATFORM HP0424. ADDED STAIRS. REVISED NOTE 3. REMOVED HOLD 1. MOVED DOOR. REMOVED HOLD 12. ADDED COLUMNS DUE TO RGM STEEL EFFORT. REVISED WALLS.	KAC	NML	DSS	JLC	2/5/2008
10	INCORPORATED DCN'S 24590-HLW-P1N-P01T-00136, -00140, AND -00157. REVISED C5V FANS AND PIPE RACKS. REVISED SLAB THICKNESS. REVISED HOLD 1. ADDED ROOM H-0406. REVISED STAIRS. ADDED WALL IN ROOM H-0424 TO CREATE ROOM H-0426. REVISED NOTE 3. REVISED DOOR. REVISED HOP FANS. MOVED H-0202 TO EAST WALL OF MELTER 2. REVISED HM0204, AND HP0204 ELEVATIONS. CORRECTED CALLOUT FOR ASX SAMPLER	NML	KAC	WM	JS	04/15/05
9	INCORPORATED DCN'S 24590-HLW-P1N-P01T-00016, 00051, 00054, 00068, 00079, 00099 AND 00112. REVISED PLATFORM ELEVATION. ADDED HOLD 12. ADDED EQUIPMENT. REMOVED BREAKPOT RLD-BRKPT-00006. REMOVED ASX-SMPLR-00026. REVISE ROOF ELEVATION. ADD CONSTRUCTION ACCESS. REVISED RADIATION CLASSIFICATION.	KAC	NML	WM	JS	10/13/04
8	MOVED SHIELD WALL, ADDED ELEVATION 15'. REVISED HOLD 1. ADDED HOLD 10. REVISED ASX-SMPLR CALLOUT. ADDED AND REVISED ROOM NUMBERS, ADDED PLATFORM. REMOVED HOLD 8. REVISED NOTE 3.	KAC	BAN	DG	DNP	11/25/03
7	INCORPORATED DCN 24590-HLW-P1N-P01T-00028. REMOVED HOLDS 4, 5, 7, & 9. REVISED NOTE 3. REVISED ROOM NUMBERS AND CLASSIFICATIONS. REVISED FLOOR ELEVATIONS. ADDED HOLD 1. DELETED NOTE 4, ADDED NOTE 2.	KAC	NML	DG	DNP	8/06/03
6	ADDED WINDOW, DELETED NOTE 2, ADDED NOTE 4. REMOVED HOLDS 3 AND 6, ADDED SUMP TEXT, REMOVED HVAC DUCT WORK, ADDED MAJOR EQUIPMENT CALL OUTS.	KAC	NML	DG	DNP	4/18/03
5	REMOVED HOLD 2, REVISED NOTE 3.	NML	DG		JM SCF	12/13/02
4	REVISED HOLD 2 AND INCORPORATED DCN 24590-HLW-P1N-P01T-00006.	BN	DG		MM GD	10/1/02
3	REVISED HOLD 2, ADDED HOLD 3.	TL	DG		MM SCF	8/27/02
2	REVISED HOLD 2 AND COOLING WATER ROOM.	TL	DG		MM SCF	7/30/02
1	REVISED HOLD 2, RELOCATED REAGENT TANK ROOM, REMOVED HOLDS, ADDED ELEVATION IDENTIFIERS.	TL	DG		MM SCF	5/17/02
0	ISSUED FOR DESIGN-SUPERSEDES 24590-HLW-P1-G01T-00008	TL	DG		MM SCF	4/18/02

ISSUED BY RPP-WTP PDC	PROJECT No.	24590
	SITE	HANFORD
	AREA	200E
ISSUE STAMP	BUILDING No.	30
	BY	DATE
ORIGINATOR	TIM LOGAN	4/18/02
CHECKER	DAVE GOTT	4/18/02
APPROVER	MARK MYATT	4/18/02
REVIEWER	N/A	

CONTENT APPLICABLE TO ALARA? [X] YES [ ] NO
ADR NO. SEE NOTE 3 REV:
SAFETY SCREEN REQUIRED? [ ] YES [X] NO E&NS INITIAL IF YES

RIVER PROTECTION PROJECT
WASTE TREATMENT PLANT
2435 STEVENS CENTER PLACE
RICHLAND, WA 99354

CONTRACT No: DE-AC27-01RV14136

HLW VITRIFICATION BUILDING GENERAL ARRANGEMENT SECTIONS A-A, B-B & C-C

SCALE: 1/16"=1'-0" | 24590-HLW-P1-P01T-00008 | REV 11

SAFETY SCREEN IS REQUIRED FOR DRAWING TYPES IDENTIFIED IN 24590-WTP-GPP-SREG-002

'E' SIZE - 44x34
COMPUTER GENERATED - MANUAL CHANGES NOT PERMITTED

R10882485

01/23/2008 09:10:27 AM

c:\work\kacunnin\dms06512\24590hlwp1p01t00008 rev 11.dgn

FORM E_SDN.DGN 02/2003

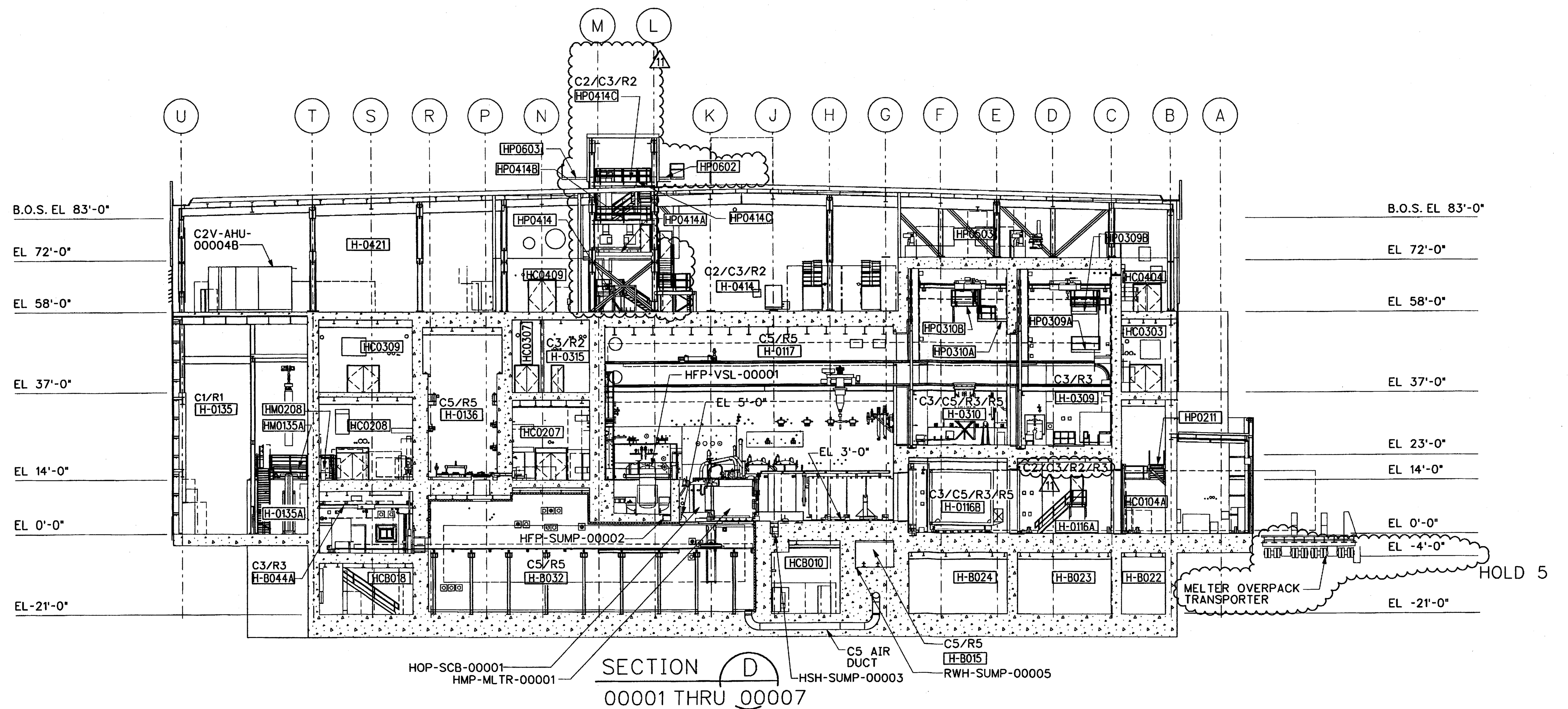

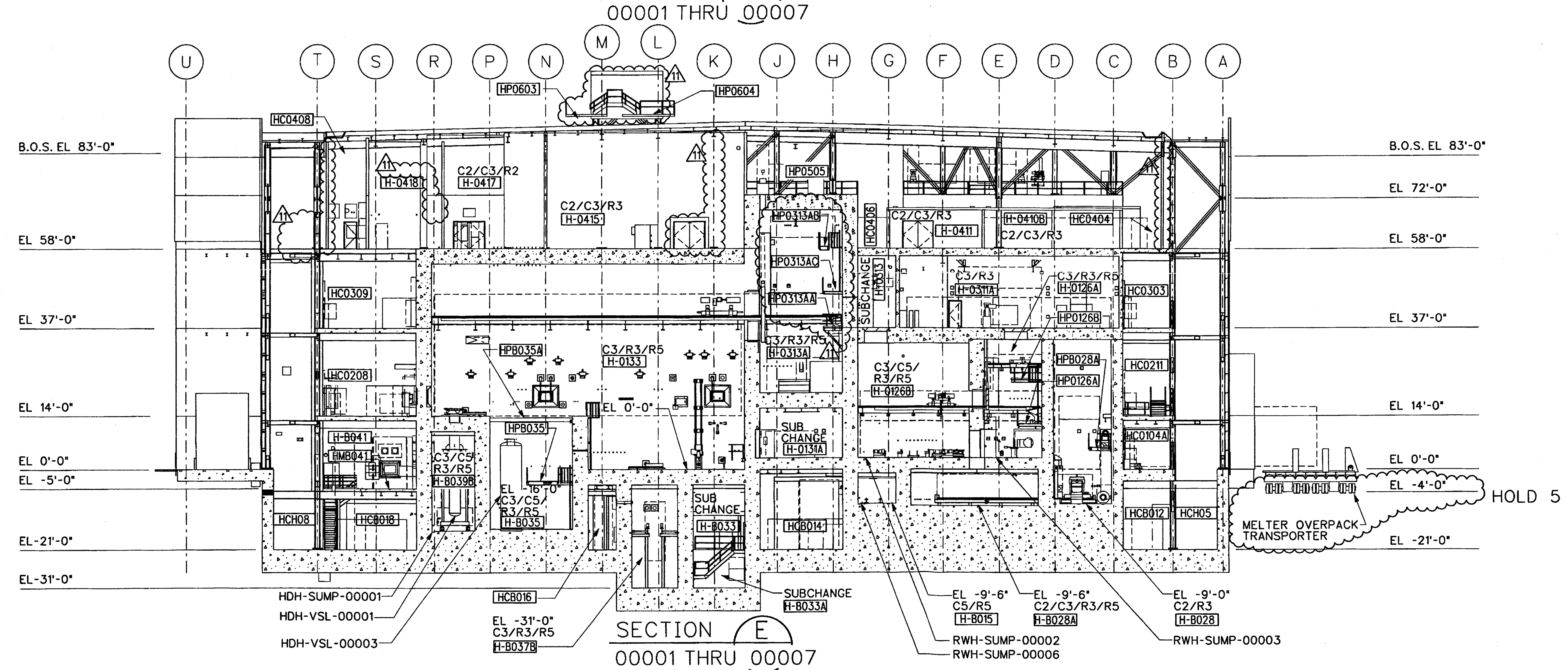

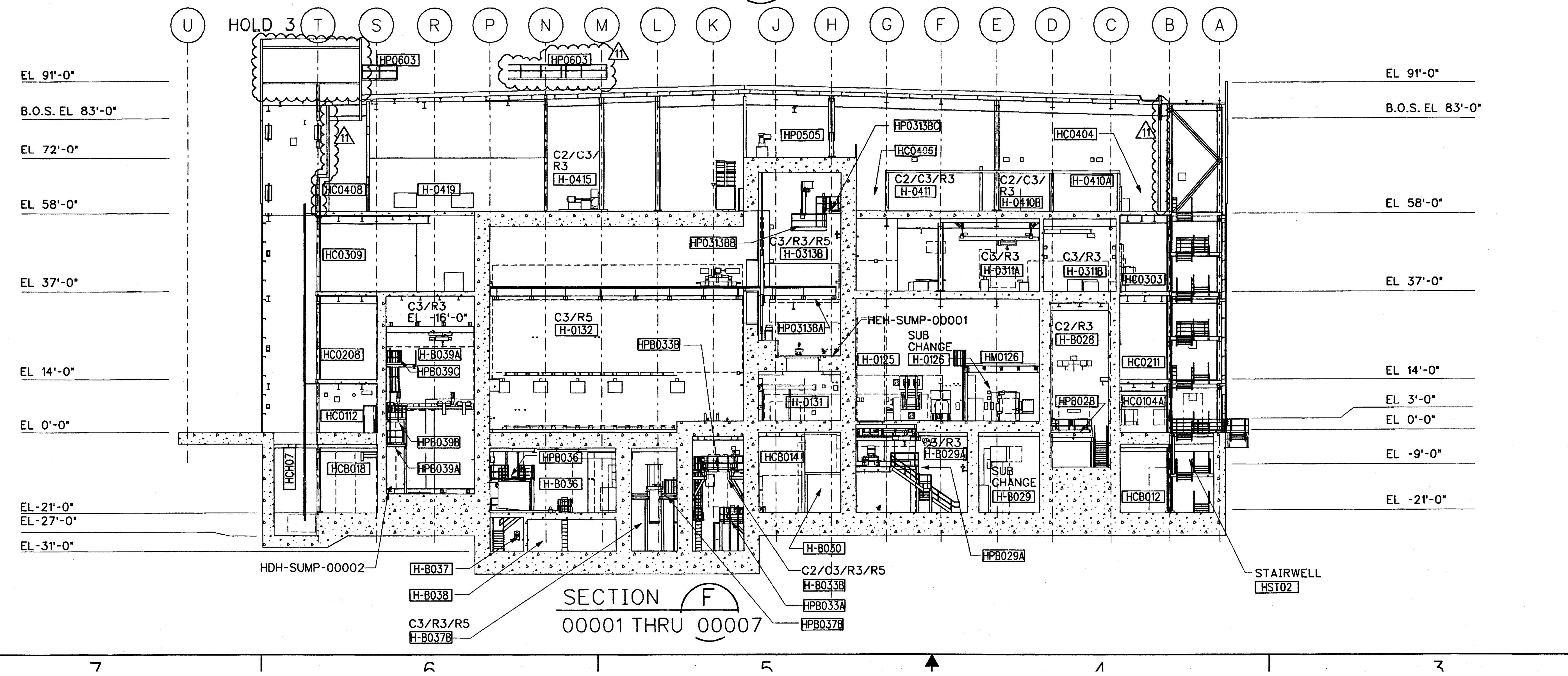

HOLDS:

1. DELETED.
2. NOT USED.
3. HOLD FOR ARCHITECTURAL DESIGN OF ELEVATOR MACHINE ROOM AND RADIOLOGICAL ISSUES.
4. NOT USED.
5. HOLD PENDING MH EQUIPMENT LAYOUT.
6. NOT USED.
7. NOT USED.
8. NOT USED.
9. NOT USED.
10. NOT USED.
11. NOT USED

NOTES:

1. FOR GENERAL NOTES, SEE 24590-HLW-P1-P01T-00001.
2. ADDITIONAL WALLS FOR COMMODITY ITS SEPARATION WILL BE ADDED AS REQUIRED BASED ON FINAL COMMODITY ROUTING.
3. ADR'S FOR ELEVATIONS ARE AS FOLLOWS:
   - 24590-HLW-ADR-PL-02-001(6) FOR ELEVATION -21'-0"
   - 24590-HLW-ADR-PL-02-002(3) FOR ELEVATION 0'-0"
   - 24590-HLW-ADR-PL-02-003(4) FOR ELEVATION 14'-0"
   - 24590-HLW-ADR-PL-02-004(3) FOR ELEVATION 37'-0"
   - 24590-HLW-ADR-PL-02-005(2) FOR ELEVATION 58'-0"
   - 24590-HLW-ADR-PL-02-008(1) FOR ELEVATION 72'-0"
   - 24590-HLW-ADR-PL-03-001(1) FOR ELEVATION 91'-0"
4. NOT USED.
5. CONTENTS OF THIS DOCUMENT ARE DANGEROUS WASTE PERMIT AFFECTING.

REV	DESCRIPTION	ORG	CHKD	RVWD	APVD	DATE
11	REVISED PLATFORMS. ADD STAIRS. REMOVED DOOR AND PLATFORM IN CHASE. REVISED NOTE 3. REMOVED HOLD 1. REMOVED PLATFORM HP0418. REVISED RADIOLOGICAL CLASSIFICATION. ADDED COLUMNS PER RGM STEEL EFFORT. MOVED DOOR.	KAC	NMK	DSS	GW / JCC	2/5/2008
10	INCORPORATED DCN 24590-HLW-P1N-P01T-00094. REVISED C2V AHU, C3V FANS. ADDED DOOR. ADDED PLATFORMS HP0313BB AND 0313BC. REVISED SLAB THICKNESS. REVISED HOLD 1. REVISED NOTE 3. REVISED PLATFORM LAYOUT IN H-0313A. REVISED H-0126A CLASSIFICATION PER E&NS.	NML	KAC	WTM	JS	04/15/05
9	INCORPORATED DCN 24590-HLW-P1N-P01T-00020, 00030, 00055, 00058, 00062, 00076, 00083 AND 00088. REMOVE HOLDS 4, 9 AND 10. REVISED PLATFORMS. REVISED EQUIPMENT. REVISED ROOF ELEVATION. REVISED RADIATION CALSSIFICATION.	KAC	NML	WM	JS	10/13/04
8	INCORPORATED DCN 24590-HLW-P1N-P01T-00040, REMOVED HOLD 2, AND 11. ADDED CALLOUT TO EQUIPMENT, PLATFORM NUMBERS. REVISED ROOM AND CLASSIFICATION CALLOUTS. MOVED DOOR. REVISED HOLD 9, ADDED ELEVATION CALLOUT. ADDED HOLD 3 & 4. REVISED NOTE 3.	KAC	BAN	DG	DNP	11/25/03
7	REMOVED HOLDS 6 AND 7. REVISED NOTE 3. REVISED FLOOR ELEVATIONS. REVISED ROOM CLASSIFICATIONS. CHANGED ROOF CONFIGURATION. REMOVED AND ADDED PLATFORMS. ADDED CORRIDOR HC0211. DELETED NOTE 4, ADDED NOTE 2.	KAC	NML	DG	DNP	8/06/03
6	REMOVED WINDOW; DELETED HOLD 8; DELETED NOTE 2; ADDED NOTE 4, ADDED CALLOUTS TO MAJOR EQUIPMENT AND SUMPS, REMOVED EQUIPMENT FROM ROOMS H-0309, 0310, REMOVED WALLBOX. ADDED A PENETRATION PER DCN:24590-HLW-P1N-P01T-00026, ADDED A PENETRATION PER DCN:24590-HLW-P1N-P01T-00022	KAC	NML	DG	DNP	4/18/03
5	REMOVED HOLD 2, REVISED NOTE 3.	NML	DG		JM SCF	12/13/02
4	REVISED HOLD 2, ADDED HOLDS 6, 7 & 8.	BN	DG		MM GD	10/1/02
3	REVISED HOLD 2.	TL	DG		MM SCF	8/27/02
2	REVISED HOLD 2 AND REMOVED HOLDS 1& 3.	TL	DG		MM SCF	7/30/02
1	REVISED HOLD 2, ADDED ELEVATION IDENTIFIERS, ADDED LADDER INCORPORATED DCN-24590-HLW-PIN-P01T-00004	TL	DG		MM SCF	5/17/02
0	ISSUED FOR DESIGN-SUPERSEDES 24590-HLW-P1-G01T-00009	TL	DG		MM SCF	4/18/02

REVISION HISTORY

PROJECT No.	24590
SITE	HANFORD
AREA	200E
BUILDING No.	30

	BY	DATE
ORIGINATOR	TIM LOGAN	4/18/02
CHECKER	DAVE GOTT	4/18/02
APPROVER	MARK MYATT	4/18/02
REVIEWER	N/A	

ISSUED BY RPP-WTP PDC — ISSUE STAMP

RIVER PROTECTION PROJECT
WASTE TREATMENT PLANT
2435 STEVENS CENTER PLACE
RICHLAND, WA 99354

CONTRACT No: DE-AC27-01RV14136

HLW VITRIFICATION BUILDING GENERAL ARRANGEMENT SECTIONS D-D, E-E & F-F

CONTENT APPLICABLE TO ALARA? [X] YES [ ] NO
ADR NO. SEE NOTE 3 REV:
SAFETY SCREEN REQUIRED? [ ] YES [X] NO E&NS INITIAL IF YES

SCALE: 1/16"=1'-0"
24590-HLW-P1-P01T-00009
REV 11

'E' SIZE - 44x34 COMPUTER GENERATED - MANUAL

R10882486

01/23/2008 09:10:36 AM

FORM E_SDK.DGN 02/2003

\work\kacunnin\dms06512\24590hlwp1p01t00009 rev 11.dgn

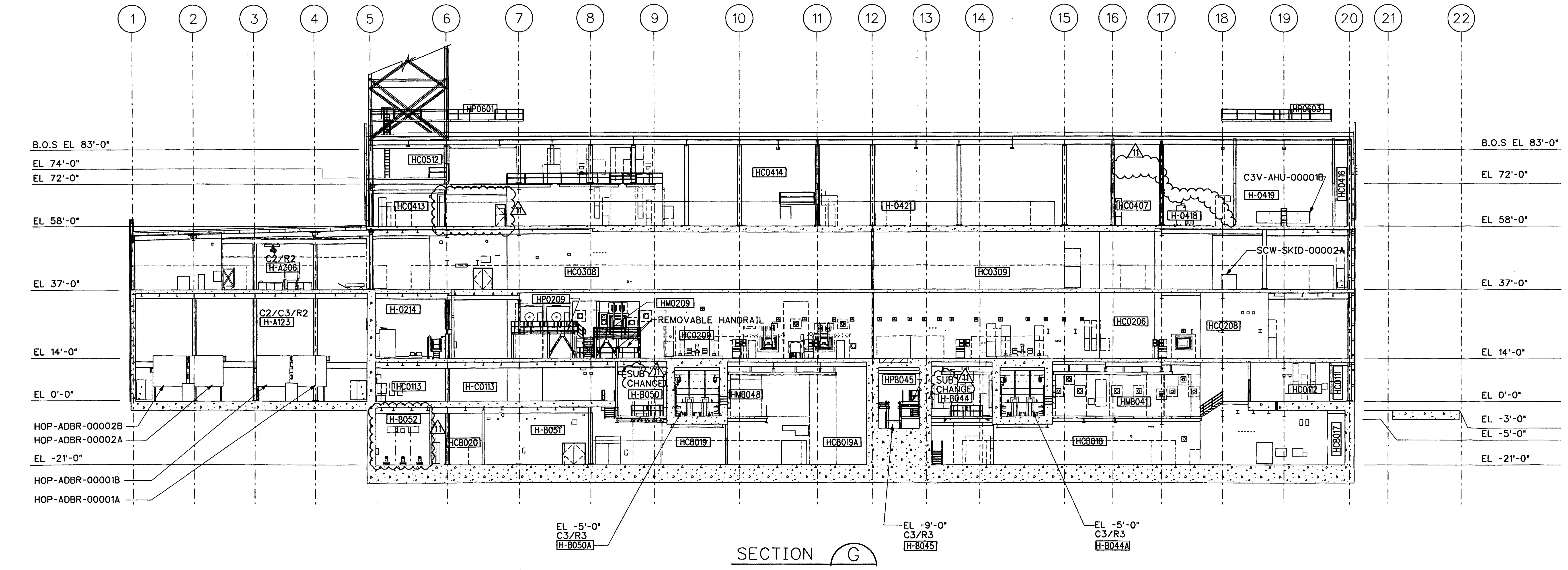

SECTION G
00001 THRU 00007

HOLDS:

1. NOT USED
2. NOT USED
3. NOT USED
4. NOT USED
5. NOT USED
6. NOT USED
7. NOT USED
8. NOT USED
9. DELETED
10. NOT USED
11. DELETED
12. NOT USED

NOTES:

1. FOR GENERAL NOTES, SEE 24590-HLW-P1-P01T-00001.
2. ADDITIONAL WALLS FOR COMMODITY ITS SEPARATION WILL BE ADDED AS REQUIRED BASED ON FINAL COMMODITY ROUTING.
3. ADR'S FOR ELEVATIONS ARE AS FOLLOWS:
   24590-HLW-ADR-PL-02-001 (6) FOR ELEVATION -21'-0"
   24590-HLW-ADR-PL-02-002 (3) FOR ELEVATION 0'-0"
   24590-HLW-ADR-PL-02-003 (4) FOR ELEVATION 14'-0"
   24590-HLW-ADR-PL-02-004 (3) FOR ELEVATION 37'-0"
   24590-HLW-ADR-PL-02-005 (2) FOR ELEVATION 58'-0"
   24590-HLW-ADR-PL-02-008 (1) FOR ELEVATION 72'-0"
   24590-HLW-ADR-PL-03-001 (1) FOR ELEVATION 91'-0"
4. DELETED.
5. CONTENTS OF THIS DOCUMENT ARE DANGEROUS WASTE PERMIT AFFECTING.

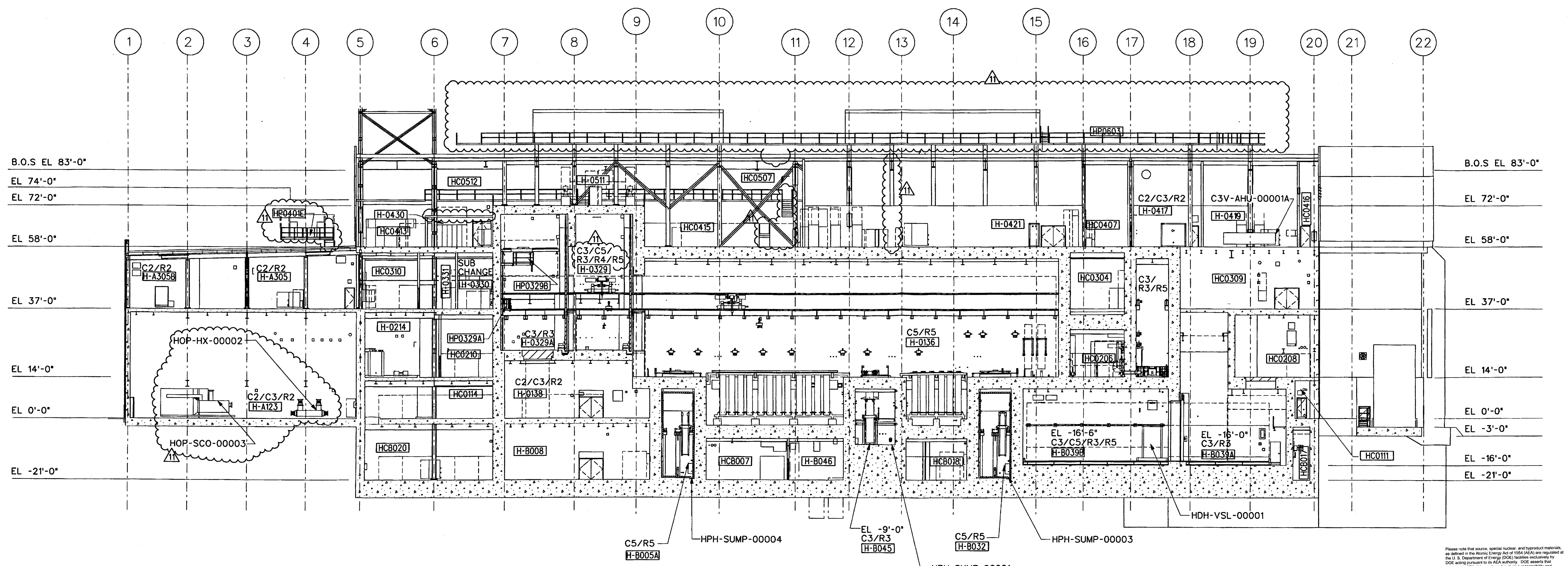

SECTION H
00001 THRU 00007

REV	DESCRIPTION	ORG	CHKD	RVWD	APVD	DATE
11	REMOVED PLATFORM HP0418. REVISED NOTE 3. REMOVED HOLD 9. REVISED ELEVATIN 91'-0". REVISED STAIRS. REVISED ROOM DEPICTION OF H-B052 TO MATCH MODEL. REVISED PLATFORMS ON ROOF OF ELEVATION 58'-0". ADDED SUB CHANGE CALLOUTS. REVISED RADIOLOGICAL CLASSIFICATION. ADDED COLUMN PER RGM STEEL EFFORTS. REMOVED HOLD 11.	KAC	NML	DSS	[illegible]	2/5/2008
10	INCORPORATED DCN 24590-HLW-P1N-P01T-00101, 00122 AND 00158. REMOVED HOLD 5. REVISED STAIRS. REVISED HOLDS 9, 11, AND NOTE 3. REVISED SECTION DEPICTIONS TO MATCH CURRENT DESIGN.	NML	KAC	WM	JS	04/15/05
9	INCORPORATED DCN 24590-HLW-P1N-P01T-00019, 00060, 00066, 00069 AND 00115. REVISED PLATFORMS. REVISED CONCRETE. REVISED RADIATION CLASSIFICATION.	KAC	NML	WM	JS	10/13/04
8	INCORPORATED DCN 24590-HLW-P1N-P01T-00045, DELETED SUMP CALLOUT, REVISED HP0209 TO HM0209, HP0512 TO HC0512 & HP0507 TO HC0507. REVISED NOTE 10. ADDED NEW ELEVATION CALLOUT, REVISED PLATFORM CALLOUTS. REMOVED HOLD 8 & 10. ADDED HOLD 12, ADDED DOOR, ROOM & EQUIPMENT CALLOUT. DELETED DOOR, REVISE HOLD 9, REMOVE HOLD ON STACK, ADDED HOLD 11. REVISED HOLD 5. REVISED NOTE 3.	KAC	BAN	DG	DNP	11/25/03
7	INCORPORATED DCN 24590-HLW-P1N-P01T-00029, REVISED NOTE 3, REVISED FLOOR ELEVATIONS, REMOVED HOLDS 4, 6 & 7, ADDED EQUIPMENT TO ANNEX, ADDED HOLD 10, DELETED NOTE 4, ADDED NOTE 2.	KAC	NML	DG	DNP	8/06/03
6	DELETED HOLD 3 AND NOTE 2, ADDED NOTE 4, MOVED EQUIPMENT, ADDED SUMP CALL OUT.	KAC	NML	DG	DNP	4/18/03
5	REMOVED HOLD 2, REVISED NOTE 3.	NML	DG		JM SCF	12/13/02
4	REVISED HOLD 2, ADDED HOLDS 5, 6 & 7.	BN	DG		MM GD	10/1/02
3	REVISED HOLD 2, ADDED HOLDS 3 AND 4.	TL	DG		MM SCF	8/27/02
2	REVISED HOLD 2, AND COOLING WATER ROOM ADDED ELEVATION DESCRIPTIONS	TL	DG		MM SCF	7/30/02
1	REVISED HOLD 2, RELOCATED REAGENT TANK ROOM, REMOVED HOLDS	TL	DG		MM SCF	5/17/02
0	ISSUED FOR DESIGN- SUPERSEDES 24590-HLW-P1-G01T-00010	TL	DG		MM SCF	4/18/02

REVISION HISTORY

ISSUED BY RPP-WTP PDC

ISSUE STAMP

PROJECT No.	24590	
SITE	HANFORD	
AREA	200E	
BUILDING No.	30	
	BY	DATE
ORIGINATOR	TIM LOGAN	4/18/02
CHECKER	DAVE GOTT	4/18/02
APPROVER	MARK MYATT	4/18/02
REVIEWER	N/A	

CONTENT APPLICABLE TO ALARA? [X] YES [ ] NO
ADR NO. SEE NOTE 3 REV:
SAFETY SCREEN REQUIRED? [ ] YES [X] NO E&NS INITIAL IF YES
SAFETY SCREEN IS REQUIRED FOR

RIVER PROTECTION PROJECT
WASTE TREATMENT PLANT
2435 STEVENS CENTER PLACE
RICHLAND, WA 99354

CONTRACT No: DE-AC27-01RV14136

HLW VITRIFICATION BUILDING GENERAL ARRANGEMENT SECTION G-G & H-H

SCALE: 1/16"=1'-0"

24590-HLW-P1-P01T-00010

REV 11

'E' SIZE - 44x34

FORM E_SDN.DGN 02/2003

R10882487

01/23/2008 09:10:43 AM

work\kacunnin\dms06512\24590hlwp1p01t00010 rev 11.dgn

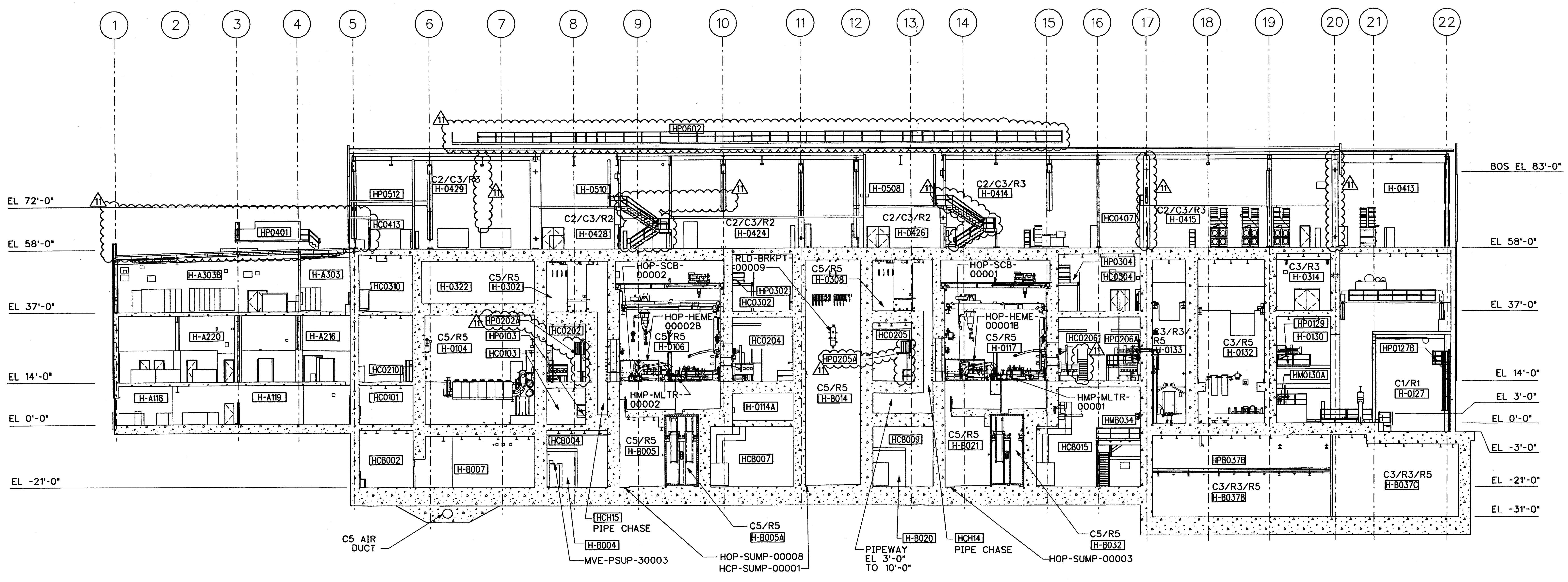

J
00001 THRU 00007

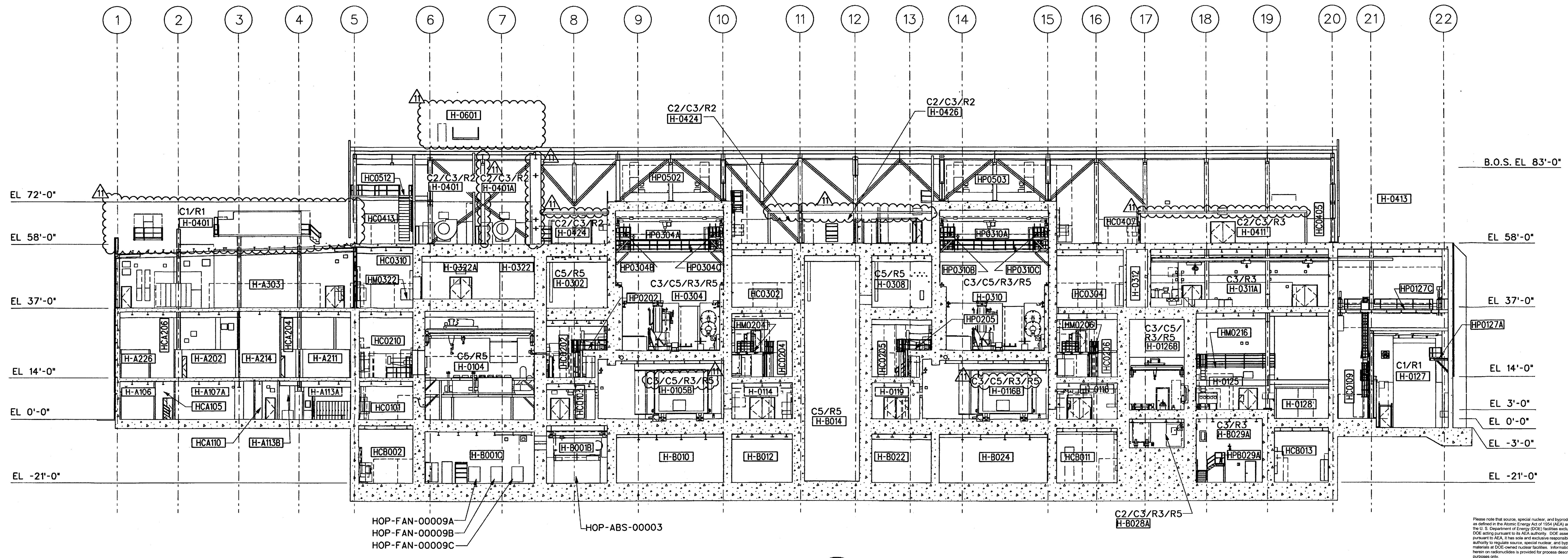

SECTION K
00001 THRU 00007

HOLDS:

1. NOT USED.

11. DELETED.

NOTES:

1. FOR GENERAL NOTES, SEE 24590-HLW-P1-P01T-00001.
2. ADDITIONAL WALLS FOR COMMODITY ITS SEPERATION WILL BE ADDED AS REQUIRED BASED ON FINAL COMMODITY ROUTING.
3. ADR'S FOR ELEVATIONS ARE AS FOLLOWS:
   24590-HLW-ADR-PL-02-001 6 FOR ELEVATION -21'-0"
   24590-HLW-ADR-PL-02-002 3 FOR ELEVATION 0'-0"
   24590-HLW-ADR-PL-02-003 4 FOR ELEVATION 14'-0"
   24590-HLW-ADR-PL-02-004 3 FOR ELEVATION 37'-0"
   24590-HLW-ADR-PL-02-005 2 FOR ELEVATION 58'-0"
   24590-HLW-ADR-PL-02-008 1 FOR ELEVATION 72'-0"
   24590-HLW-ADR-PL-03-001 1 FOR ELEVATION 91'-0"
4. DELETED.
5. CONTENTS OF THIS DOCUMENT ARE DANGEROUS WASTE PERMIT AFFECTING.

REV	DESCRIPTION	ORG	CHKD	RVWD	APVD	DATE
11	REVISED EQUIPMENT AND PLATFORMS ON ANNEX ROOF. REVISED NOTE 3. REVISED STAIRS. REVISED ELEVATION 91'-0" PLATFORM. ADDED PLATFORMS HP0202A AND HP0205A. DELETED HOLD 11. REVISED RADIOLOGICAL CLASSIFICATIONS. ADDED COLUMNS PER RGM STEEL EFFORTS. REVISED WALLS.	KAC	NML	DSS	[illegible]	2/5/2008
10	INCORPORATED DCN'S 24590-HLW-P1N-P01T-00137 AND -00148. MOVED C2V AND C3V FANS. REVISED PLATFORMS HP0401, HP0304A AND HP0310A. REVISED NOTE 3. REVISED SECTION DEPICTION TO MATCH CURRENT DESIGN. ADDED HOLD 11.	NML	KAC	WM	JS	04/15/05
9	INCORPORATED DCN 24590-HLW-P1N-P01T-00013, 00063, 00074, 00082, 00100 00113 AND 00117. REVISED WALL. REMOVED EQUIPMENT. REMOVED HOLDS 8 & 9. REVISED SLAB. REVISED STEEL. ADDED PIPE CHASE CALL OUT. REVISED PLATFORMS. REVISED RADIATION CLASSIFICATION. ADDED BOUNDING AREA FOR HOP FANS	KAC	NML	WM	JS	10/13/04
8	INCORPORATED DCN'S 24590-HLW-P1N-P01T-00041 AND 00047, REMOVED HOLDS 1, 2, 10. REVISED TEXT. CHANGED SOME SLAB THICKNESS, DELETED EQUIPMENT. REVISED ROOM CLASSIFICATION AND ROOM NUMBERS. MOVED DOOR. ADDED PLATFORM, ADDED HOLD 8. REVISED NOTE 3.	KAC	BAN	DG	DNP	11/25/03
7	ADDED HOLD 3, REVISED NOTE 3. REMOVED HOLDS 1, 2, 4, 5, 6 AND 8. REVISED FLOOR ELEVATIONS. MOVED EQUIPMENT. REVISED ROOM NUMBERS. DELETED H-0406, H-0414, H-0426, H-0422, H-0422A. REVISED ROOM CLASSIFICATIONS, DELETED NOTE 4. ADDED NOTE 2.	KAC	NML	DG	DNP	8/06/03
6	ADDED PLATFORMS, DELETED HOLDS 3 AND 7, ADDED NOTE 4, DELETED NOTE 2. ADDED SUMP CALL OUT.	KAC	NML	DG	DNP	4/18/03
5	REMOVED HOLD 2, REVISE NOTE 3.	NML	DG		JM SCF	12/13/02
4	REVISED HOLD 2, ADDED HOLDS 5 & 6, INCORPORATED DCN 24590-HLW-P1N-P01T-00006 AND 24590-HLW-P1N-P01T-00009.	BN	DG		MM GD	10/1/02
3	REVISED HOLD 2, ADDED HOLDS 3 AND 4.	TL	DG		MM SCF	8/27/02
2	REVISED HOLD 2.	TL	DG		MM SCF	7/30/02
1	REVISED HOLD 2, REMOVED HOLD, ADDED ELEVATION IDENTIFIERS, INCORPORATED DCN-HLW-P1N-P01T-00002	TL	DG		MM SCF	5/17/02
0	ISSUED FOR DESIGN - SUPERSEDES 24590-HLW-P1-G01T-00011	TL	DG		MM SCF	4/18/02

REVISION HISTORY

PROJECT No.	24590	
SITE	HANFORD	
AREA	200E	
BUILDING No.	30	
	BY	DATE
ORIGINATOR	TIM LOGAN	4/18/02
CHECKER	DAVE GOTT	4/18/02
APPROVER	MARK MYATT	4/18/02
REVIEWER	N/A	

ISSUED BY RPP-WTP PDC
ISSUE STAMP

RIVER PROTECTION PROJECT
WASTE TREATMENT PLANT
2435 STEVENS CENTER PLACE
RICHLAND, WA 99354

CONTRACT No: DE-AC27-01RV14136

HLW VITRIFICATION BUILDING GENERAL ARRANGEMENT SECTION J-J & K-K

CONTENT APPLICABLE TO ALARA? [X] YES [ ] NO
ADR NO. SEE NOTE 3 REV:
SAFETY SCREEN REQUIRED? [ ] YES [X] NO E&NS INITIAL IF YES

SCALE: 1/16"=1'-0"

24590-HLW-P1-P01T-00011 REV 11

k:\kacunnin\dms06512\24590hlwp1p01t00011 rev 11.dgn

Drawings and Documents

Operating Unit Group 10 – Appendix 10.5
High Level Waste Building
Civil, Structural, and Architectural Criteria and Typical Design Details

The documents listed in the following table are incorporated by reference into this permit and are subject to the requirements set forth in Part I Standard Conditions, Part II General Facility Conditions, and Part III Operating Unit Group 10 Conditions. Upon request, copies of the documents can be viewed at the Nuclear Waste Program Resource Center located at 3100 Port of Benton Blvd. Richland, WA. Appointments for viewing can be scheduled by calling (509) 372-7950.

Drawing/Documents	***Description***
24590-HLW-PER-M-02-001, Rev 3	HLW Facility Sump Data
RESERVED	RESERVED

Source documents (which do not include a "P" in the last set of numbers, e.g. "-P0001," or "-TP001") should be used in conjunction with any document change notices issued against them.

We are currently transitioning from permit documents (which do include a "P" in the last set of numbers) to source documents. At the end of the transition period, permit submittals will contain source documents and will be incorporated into the permit as described in Ecology Publication # 07-05-006 (www.ecy.wa.gov/biblio/nwp.html).

1
2
3
4
5

This page intentionally left blank.

Drawings and Documents

Operating Unit Group 10 – Appendix 10.6
High Level Waste Building
Mechanical Drawings

The documents listed in the following table are incorporated by reference into this permit and are subject to the requirements set forth in Part I Standard Conditions, Part II General Facility Conditions, and Part III Operating Unit Group 10 Conditions. Upon request, copies of the documents can be viewed at the Nuclear Waste Program Resource Center located at 3100 Port of Benton Blvd. Richland, WA. Appointments for viewing can be scheduled by calling (509) 372-7950.

Drawing/Document	***Description***
24590-HLW-M0D-HDH-00021, Rev 3	Mechanical Handling Data Sheet: HDH-CRN-00005
24590-HLW-M0D-HEH-00021, Rev 5	Mechanical Handling Data Sheet: HEH-CRN-00001
24590-HLW-M0D-HEH-00025, Rev 4	Mechanical Handling Data Sheet: HEH-CRN-00003
24590-HLW-M0D-HMP-P0001, Rev 1	Mechanical Data Sheet: HLW Melter 1
24590-HLW-M0D-HMP-P0002, Rev 0	Mechanical Data Sheet: HLW Melter 2
24590-HLW-M0D-HPH-00063, Rev 3	Mechanical Handling Data Sheet: HPH-CRN-00002
24590-HLW-M0D-HPH-00064, Rev 3	Mechanical Handling Data Sheet: HPH-CRN-00001
24590-HLW-M0D-HSH-00013, Rev 4	Mechanical Handling Data Sheet: HSH-CRN-00001
24590-HLW-M0D-HSH-00181, Rev 4	Mechanical Handling Data Sheet: HSH-CRN-00014
24590-HLW-M0-HDH-P0012001, Rev 1	Equipment Assembly Drawing for HDH Canister Rinse Bogie
24590-HLW-M0-HDH-P0012002, Rev 1	Equipment Assembly Drawing for HDH Canister Rinse Bogie
24590-HLW-M0-HSH-P0072, Rev 1	Equipment Assembly Drawing: HLW-HSH-Design Proposal Drawing Decontamination Tank
24590-HLW-M7-HDH-00001005, Rev 2	HLW Vitrification System HDH Mechanical Handling Diagram Canister Decontamination Handling System
24590-HLW-M7-HEH-00001004, Rev 2	HLW Vitrification System HEH Mechanical Handling Diagram Canister Export Handling System

24590-HLW-M7-HEH-00001005, Rev 2	HLW Vitrification System HEH Mechanical Handling Diagram Canister Export Handling System
24590-HLW-M7-HPH-00001001, Rev 1	HLW Vitrification System HPH Mechanical Handling Diagram Canister Pour Handling Canister Handling Cave
24590-HLW-M7-HPH-00001002, Rev 1	HLW Vitrification System HPH Mechanical Handling Diagram Canister Pour Handling Canister Handling Cave
24590-HLW-M7-HSH-00001002, Rev 1	HLW Vitrification System HSH Mechanical Handling Diagram Melter Cave Support Handling Melter Cave 1
24590-HLW-M7-HSH-00002002, Rev 0	HLW Vitrification System HSH Mechanical Handling Diagram Melter Cave Support Handling Melter Cave 2
24590-HLW-MAD-HOP-P0010, Rev 0	Mechanical Data Sheet: HOP-HEPA-00001A
24590-HLW-MAD-HOP-P0011, Rev 0	Mechanical Data Sheet: HOP-HEPA-00002A
24590-HLW-MAD-HOP-P0012, Rev 0	Mechanical Data Sheet: HOP-HEPA-00001B
24590-HLW-MAD-HOP-P0013, Rev 0	Mechanical Data Sheet: HOP-HEPA-00002B
24590-HLW-MAD-HOP-P0014, Rev 0	Mechanical Data Sheet: HOP-HEPA-00007A
24590-HLW-MAD-HOP-P0015, Rev 0	Mechanical Data Sheet: HOP-HEPA-00008A
24590-HLW-MAD-HOP-P0016, Rev 0	Mechanical Data Sheet: HOP-HEPA-00007B
24590-HLW-MAD-HOP-P0017, Rev 0	Mechanical Data Sheet: HOP-HEPA-00008B
24590-HLW-MAD-HOP-P0018, Rev 2	Centrifugal Blower Data Sheets for HOP-FAN-00001A/B/C and HOP-FAN-00009A/B/C
24590-HLW-MAD-HOP-P0038, Rev 0	Centrifugal Blower Data Sheet: HOP-FAN-00008A/8B/8C/10A/10B/10C
24590-HLW-MAD-PJV-P0004, Rev 0	Mechanical Data Sheet for PJV-HEPA-00004A
24590-HLW-MAD-PJV-P0005, Rev 0	Mechanical Data Sheet for PJV-HE;A-00005A
24590-HLW-MAD-PJV-P0006, Rev 0	Mechanical Data Sheet for PJV-HEPA-00004B
24590-HLW-MAD-PJV-P0007, Rev 0	Mechanical Data Sheet for PJV-HEPA-00005B

24590-HLW-MED-HOP-P0012, Rev 1	Mechanical Data Sheet for HOP-HX-00002
24590-HLW-MED-HOP-P0013, Rev 0	Mechanical Data Sheet for HOP-HTR-00001B/2A/5A/5B
24590-HLW-MED-HOP-P0017, Rev 1	Mechanical Data Sheet for HOP-HX-00004
24590-HLW-MED-PJV-P0002, Rev 0	Mechanical Data Sheet for PJV-HTR-00002
24590-HLW-MKD-HOP-00014, Rev 6	Mechanical Data Sheet for HOP-ABS-00002
24590-HLW-MKD-HOP-00017, Rev 6	Mechanical Data Sheet for HOP-ABS-00003
24590-HLW-MKD-HOP-P0016, Rev 0	Mechanical Data Sheet for HOP-SCB-00001/2
24590-HLW-MKD-HOP-P0019, Rev 0	Mechanical Data Sheet for HOP-SCO-00002
24590-HLW-MKD-HOP-P0020, Rev 0	Mechanical Data Sheet for HOP-SCO-00003
24590-HLW-MK-HOP-P0001001, Rev 0	Equipment Assembly Drawing for HOP-SCB-00001/2 Sheet 1 of 4
24590-HLW-MK-HOP-P0001002, Rev 0	Equipment Assembly Drawing for HOP-SCB-00001/2 Sheet 2 of 4
24590-HLW-MK-HOP-P0001003, Rev 0	Equipment Assembly Drawing for HOP-SCB-00001/2 Sheet 3 of 4
24590-HLW-MK-HOP-P0001004, Rev 0	Equipment Assembly Drawing for HOP-SCB-00001/2 Sheet 4 of 4
24590-HLW-MVD-HDH-P0003, Rev 2	Mechanical Data Sheet for HDH-VSL-00003
24590-HLW-MVD-HDH-P0006, Rev 2	Mechanical Data Sheet for HDH-VSL-00002
24590-HLW-MVD-HDH-P0009, Rev 0	Mechanical Data Sheet for HDH-VSL-00001
24590-HLW-MVD-HDH-P0012, Rev 1	Mechanical Data Sheet for HDH-VSL-00004
24590-HLW-MVD-HOP-00007, Rev 5	Mechanical Data Sheet for HOP-HEME-00001A/1B/2A/2B
24590-HLW-MVD-HOP-00015, Rev 1	Mechanical Data Sheet for HOP-ADBR-00001A/B

24590-HLW-MVD-HOP-00016, Rev 1	Mechanical Data Sheet for HOP-ADBR-00002A/B
24590-HLW–MVD-HOP-P0001, Rev 2	Mechanical Data Sheet for HOP-VSL-00903
24590-HLW–MVD-HOP-P0012, Rev 1	Mechanical Data Sheet for HOP-VSL-00904
24590-HLW-MVD-RLD-P0005, Rev 0	Mechanical Data Sheet for RLD-VSL-00007
24590-HLW-MVD-RLD-P0007, Rev 1	Mechanical Data Sheet for RLD-VSL-00008
24590-HLW-MVD-RLD-P0008, Rev 1	Mechanical Data Sheet for RLD-VSL-00002
24590-HLW-MV-HDH-P0003, Rev 1	Equipment Assembly Drawing for HDH-VSL-00003
24590-HLW-MV-HDH-P0004, Rev 1	Equipment Assembly Drawing for HDH-VSL-00002, Sheet 1 of 2
24590-HLW-MV-HDH-P0005, Rev 1	Equipment Assembly Drawing for HDH-VSL-00002, Sheet 2 of 2
24590-HLW-MV-HDH-P0006, Rev 0	Equipment Assembly Drawing for HDH-VSL-00004, Sheet 1 of 2
24590-HLW-MV-HDH-P0007, Rev 0	Equipment Assembly Drawing for HDH-VSL-00004, Sheet 2 of 2
24590-HLW–MV-HOP-P0001, Rev 2	Equipment Assembly Drawing for HOP-VSL-00903
24590-HLW-MV-HOP-P0002001, Rev 0	Equipment Assembly Drawing for HOP-HEME-00001A/1B Sheet 1 of 3
24590-HLW-MV-HOP-P0002002, Rev 0	Equipment Assembly Drawing for HOP-HEME-00001A/1B Sheet 2 of 3
24590-HLW-MV-HOP-P0002003, Rev 0	Equipment Assembly Drawing for HOP-HEME-00001A/1B Sheet 3 of 3
24590-HLW–MV-HOP-P0003, Rev 2	Equipment Assembly Drawing for HOP-VSL-00904
24590-HLW-MV-RLD-00002, Rev 2	Equipment Assembly Drawing for RLD-VSL-00002
24590-HLW-MV-RLD-P0003, Rev 0	Equipment Assembly Drawing for RLD-VSL-00007

24590-HLW-MV-RLD-P0004, Rev 0	Equipment Assembly Drawing for RLD-VSL-00008
RESERVED	RESERVED

Source documents (which do not include a "P" in the last set of numbers, e.g. "-P0001," or "-TP001") should be used in conjunction with any document change notices issued against them.

We are currently transitioning from permit documents (which do include a "P" in the last set of numbers) to source documents. At the end of the transition period, permit submittals will contain source documents and will be incorporated into the permit as described in Ecology Publication # 07-05-006 (www.ecy.wa.gov/biblio/nwp.html).

1
2
3
4
5

This page intentionally left blank.

Mechanical Handling Data Sheet

Top Running, Double Girder

CM (3)

Data Sheet No. 24590-HLW-M0D-HDH-00021

Plant Item No. 24590-HLW-MJ-HDH-CRN-00005 | Rev. 3

Project	RPP-WTP	Description	Decontamination Swabbing and Monitoring Crane
Project No.	24590	Supporting Calculation No.	N/A (3)
Planning Area		Associated Drawing No.	N/A
System No.	HDH	Associated Specification No.	24590-WTP-3PS-MJKG-T0003
Building No.	30	Associated MR No.	24590-QL-MRA-MJKG-00002
Quality Level	▶CM (3)		
Seismic Criteria	SC-II		
Function	Canister Handling and Maintenance Activities		

R10704039

ISSUED BY RPP-WTP PDC

DESIGN CRITERIA

Design Life	40 years	Safety Classification (3)	▶APC

OPERATING ENVIRONMENT			In-Cave Rm # H-0133		Out-Cave Rm # H-313A		List All Special
			Min	Max	Min	Max	Conditions
Temperature		deg F	59	113	59	113	
Relative Humidity		%	0	70	0	70	
Radiological Equip. Dose	gamma	mrad/hr	▶4.0*E+4 (3)		▶100 (3)		
	neutron	mrad/hr	Negligible		Negligible		
Radiological Classification			▶R3/R5 (3)		▶R3/R5 (3)		
Contamination Classification			C3		▶C3 (3)		

CRANE REQUIREMENTS

Type of Crane	Top Running Double Girder Electric Overhead Traveling Crane		Tons
Service Information	CMAA 70-2000, Class E	Capacity	6 Ton
Crane Operation Indoors?	Yes, In-Cave	Main Hoist	6 Ton
Material Handled	Canisters and Ancillary Equipment	Auxiliary Hoist	N/A
Class Information	Class E	Trolley	6 Ton
No. of Cranes Required	1	Bridge	6 Ton
ASCE Rail Type or Beam Size	▶ 104 lb/yd Crane Rail (3)		

OPERATING CHARACTERISTICS - FREQUENCY OF MOVEMENT

Hoist- Range of Lift	(F) - (G)	No. lifts/day	6
Average Moves - Bridge	1/2 Runway Length	Moves/day	12
Average Moves - Trolley	3/4 Bridge Length	Moves/day	6

CRANE DIMENSIONS AND ELEVATIONS	Symbol	ft - in.
Lowest Obstruction Elevation	(A)	46-6"
Shield Door Corner Obstruction Elevation	(B)	46'-0"
Trolley Rail Elevation	(C)	41'-11" NOMINAL
Bridge Rail Elevation	(D)	40'-3.5"
Lowest Point of Crane Elevation	(E)	39'-9"
High Hook Elevation	(F)	38'-6"
Low Hook Elevation	(G)	-9'-0"
Side Approach - hoist center line to West Rails	(H)	3'-4"
Side Approach - hoist center line to East Rails	(I)	3'-4"
Distance from Grid line "17" to Inside face of West Wall	(J)	-1'-9"
Distance from hoist center line to end-truck South bumper	(K) (3)	▶5'-9"
Distance from hoist center line to end-truck North bumper	(L) (3)	▶7'-2"
Distance from hoist center line to In-Cave South Wall	(M) (3)	▶5'-9"
Distance from hoist center line to CMA North Wall	(N) (3)	▶7'-2"
Distance from Grid Line "R" to inside face of South Wall	(0)	0'-8"
Total distance between inside wall faces of CMA and Cave	(P)	107'-0"
Range of Lift	(R)	47'-6"
Runway Rails Span	(S)	9'-8"
Shield Door Corner Obstruction	(T)	0'-6"

Date	REV	Revisions	By	Checked	Supervisor	Approved
8/10/06	3	See note 13	N J Darwen	A. Whitford CT	P. Snider SLW	D. Wilsey FOR
09/08/03	2	See note 12	A. Whitford	L. Harrison	G. Marr	D. Wilsey
11/27/02	1	See note 11	David Horton	Paul Carter	Joni Weamer/ Jim Brower	Dave Wilsey
02/26/02	0	Issued for Procurement	Joeseph Roach	Andy Whitford	Jim Brower	Dave Wilsey
Doc Number		24590-HLW-M0D-HDH-00021	REV	3	Page 1 of 3	

BECHTEL	**Mechanical Handling Data Sheet** Top Running, Double Girder	Data Sheet No. 24590-HLW-M0D-HDH-00021 Plant Item No.: 24590-HLW-MJ-HDH-CRN-00005 Rev. 3

DRIVE TYPE SPEED AND HORSEPOWER

Drives	Drive Type	Speed	Horsepower		Slow	Fast
Main Hoist Drive Type	Flux Vector	Variable 0 - 25	12 HP	Nominal Speed (ft/m):	5	25
Recovery Hoist Drive Type	Single Speed	Single Speed	7 HP	Nominal Speed (ft/m):	5	
Main Bridge Drive Type	VFD	Variable 0 - 50	4 HP	Nominal Speed (ft/m):	5	50
Recovery Bridge Drive Type	Single Speed	Single Speed	1 HP	Nominal Speed (ft/m):	5	
Main Trolley Drive Type	VFD	Variable 0-25	1.5 HP	Nominal Speed (ft/m):	5	25
Recovery Trolley Drive Type	Single Speed	Single Speed	0.75 HP	Nominal Speed (ft/m):	5	
Powered Hook	DC Motor	Fixed	0.05 HP	Nominal Speed (rpm):	1-2	

CONDUCTOR TYPE

Bridge	Cable Reel
Trolley	Cable Track

CONTROLS

Method of Control	Manual
Location of Control	Dedicated Crane Control Room/ Window Station/ Crane Maintenance Area
Type of Control Enclosure	NEMA 4X or IP 66

ELECTRICAL REQUIREMENTS

Item	Volts Phase Hertz
Motor	480 VAC / 3 Phase / 60 HZ
Special Wiring Conditions	National Electric Code

MAINTENANCE REQUIREMENTS

Construction	Modular for ease of assembly / dismantling
Modularization	Heaviest Modular item except bridge beams / end trucks / must be < 5 tons.
Retrieval	Crane must be retrievable / Hoist must be retrievable
Decontamination	Crane and hoist needs to be decontaminable and minimize cracks and crevices that can trap debris

ADDITIONAL REQUIREMENTS (NOTES):

1. Motors and electrical cabinets etc. to be sealed to withstand occasional washdown during decontamination.
2. Four crane mounted cameras capable of pan, zoom, iris and tilt and one hook deployed camera including lighting, pan, tilt, zoom and iris to view cave floors. The Buyer supplies the cameras, Seller provides mounts.
3. All cranes shall be designed to allow operator positioning to within +/- 3/8".
4. Two crane mounted lights as well as light supplied by cameras.
5. Must be able to hold and control suspended payload without mechanical braking for sustained periods.
6. Must not drop load during any single random or common mode electrical failure.
7. Must be recoverable by remote means after any specified single random or common mode failure by use of redundant drives in conjunction with cable reel where necessary.
8. Power supply is required at hook for crane held tools.
9. Motor horsepower estimated for plant electrical load sizing. Seller to provide.
10. This drawing provided basic outlines, design objectives, and bounding dimensions to contracted design or fabrication supplier(s) and shall not be used to confirm the as built WTP structure, system or component identified herein. See vendor information for final configuration provided in conformance to purchase order QL-POA-MJKG-00002.

►11. Revision 1 changes: Changed additional requirements, number of lifts per day, drives, and description △3

►12. Revision 2 changes: Revised based on IAW 24590-HLW-DCA-PL-03-002 Rev 0 and editorial changes. Changed recovery drive type; was VFD. Added note to sketch on configuration. △3

► 13. Revision 3 changes: Safety Classification changed to APC; Quality Level changed to CM; Calc ref deleted; Dimension K & M ammended to include bumper extensions that allow bumpers to engage on cave wall, IAW 24590-HLW-ACA-M-05-00031 △3

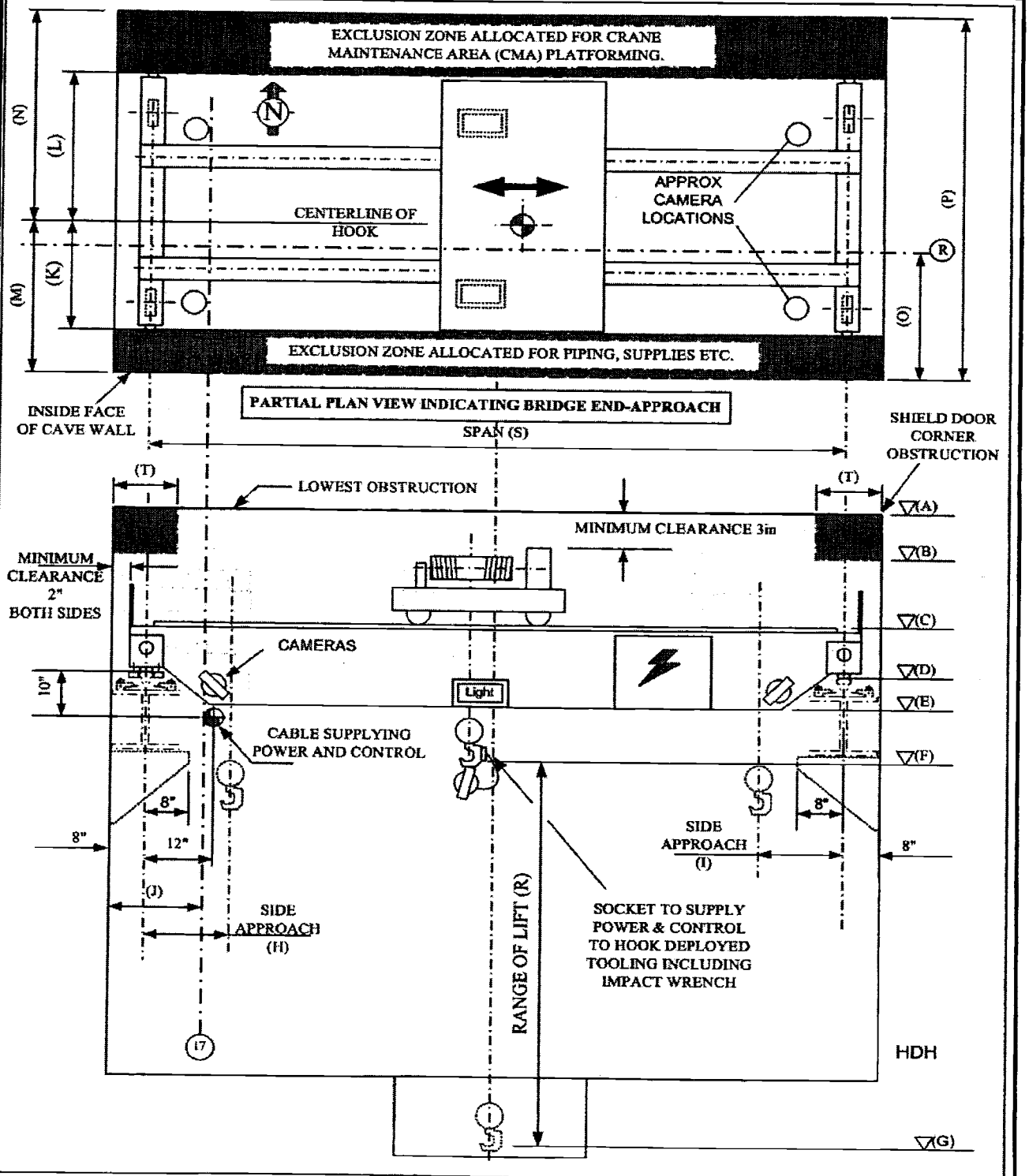
EXCLUSION ZONE ALLOCATED FOR CRANE MAINTENANCE AREA (CMA) PLATFORMING.
(N)
(L)
(M)
(K)
CENTERLINE OF HOOK
APPROX CAMERA LOCATIONS
(P)
(R)
(O)
EXCLUSION ZONE ALLOCATED FOR PIPING, SUPPLIES ETC.
INSIDE FACE OF CAVE WALL
PARTIAL PLAN VIEW INDICATING BRIDGE END-APPROACH
SPAN (S)
SHIELD DOOR CORNER OBSTRUCTION
(T)
LOWEST OBSTRUCTION
MINIMUM CLEARANCE 3in
MINIMUM CLEARANCE 2" BOTH SIDES
CAMERAS
10"
Light
CABLE SUPPLYING POWER AND CONTROL
8"
12"
(J)
SIDE APPROACH (H)
SIDE APPROACH (I)
RANGE OF LIFT (R)
SOCKET TO SUPPLY POWER & CONTROL TO HOOK DEPLOYED TOOLING INCLUDING IMPACT WRENCH
HDH
(A)
(B)
(C)
(D)
(E)
(F)
(G)

Mechanical Handling Data Sheet

Top Running, Double Girder

CM

Data Sheet No. 24590-HLW-M0D-HEH-00021

Tag No. 24590-HLW-MJ-HEH-CRN-00001 | Rev. 5

R10864330

Project	RPP-WTP	Description	Cask Handling Crane
[redacted]ct No	24590	Supporting Calculation No.	CCN 068118
Planning Area	9B	Associated Drawing No.	24590-HLW-M0K-340-00001002,24590-HLW-M7-HEH-00001005
System No.	HEH	Associated Specification No.	24590-HLW-3PS-MJKG-T0001
Building No.	30	Associated MR No.	24590-QL-MRA-MJKH-00001
Quality Level	Commercial (CM)		~~ISSUED BY RPP-WTP PDC~~
Seismic Criteria	SC-II		
Function	Transfer product canister cask to/from cask transporter and SSW cask to/from transporter; support HLW facility.		

DESIGN CRITERIA

Design Life	40 years	Safety Classification	Additional Protection Class (APC)

OPERATING ENVIRONMENT			In-Cave	Rm #	N/A	Out-Cave	Rm #	H-0127	List All Special Conditions
Temperature		deg F	N/A	N/A		59	101		N/A
Relative Humidity		%	N/A	N/A		10	85		
Radiological Equip. Dose	gamma	rad/ 40 yrs	N/A	N/A		87.5	175		
	neutron	rad/ 40 yrs	N/A	N/A		Negligible	Negligible		
Radiological Classification			N/A	N/A		R1	R2		
Contamination Classification			N/A	N/A		C1	C2		

CRANE REQUIREMENTS

Type of Crane	Top Running, Double Girder, IWRC & Powered rotate hook for main hoist.		Tons
Service Information	Heavy Service	Capacity	60/15
Crane Operation Indoors?	Yes	Main Hoist	60
Material Handled	Filled product canister cask	Auxiliary Hoist	15
Class Information	CMAA Class 70 Type D, HST-H4 or See Note 1	Trolley	60
No of Cranes Required	1	Bridge	60
[redacted]E Rail Type or Beam Size	Bethlehem 175# Crane Rail [Buyer (CSA) supplied]		

[redacted]	Symbol	(ft)	(in)		Quantity	Main Speed		Creep Speed	
Maximum Lift - Main Hoist	A	46	9	Lifts/day	2	10-12	(ft/min)	1-4	(ft/min)
Maximum Lift - Aux. Hoist	K	40	3	Lifts/day	2	10-12	(ft/min)	1-4	(ft/min)
Average Moves - Bridge	N/A	90	0	Moves/day	4	1-40	(ft/min)	1-4	(ft/min)
Average Moves - Trolley	N/A	34	0	Moves/day	4	1-40	(ft/min)	1-4	(ft/min)

Rail Lengths	Symbol	(ft)	(in)
Runway Length	B	114	3
Hook Approach - hook C/L to end walls (Maximum)	C	See note 9	See note 9
Span	D	32	4 5
Hook Approach - hook C/L to Rail C/L (Maximum)	E	See note 10	See note 10

1/18/06	5	TN-24590-06-03113--Mod to HLW Cranes to Meet OSHA 2" Running Clearance. Added EN&S safety screening note.	WA Frier	D. Adams	S. Winsel	J. Hancock	J. Cook
N/A	0-4	See Page 3	N/A	N/A	N/A	N/A	
Date	REV	Revisions	By	Checked	Supervisor	Approved	E&NS
Doc Number		24590-HLW-M0D-HEH-00021	REV	5	Page	1 of	4

BECHTEL	**Mechanical Handling Data Sheet** Top Running, Double Girder	Data Sheet No. 24590-HLW-M0D-HEH-00021 Tag No. 24590-HLW-MJ-HEH-CRN-00001 Rev. 5

Rail Positions	Symbol	(ft)	(in)
Top of Rail to Ceiling	F	16	0
Floor to Top of Rail	G	43	0
Rail Centerline to side wall	H	1'-1" (E)	1'-0" (W) 5
Bridge end to wall	N/A	N/A	N/A
Top of Rail to Lowest Obstruction	J	12	0

Drives	Volts	Phase	Hz	Control Type
Hook Rotate Drive Type	460	3	60	2-spd multi-step variable frequency drive
Main Hoist Drive Type	460	3	60	5-spd multi-step flux vector drive, closed loop
Aux. Hoist Drive Type	460	3	60	5-spd multi-step flux vector drive, closed loop
Bridge Drive Type	460	3	60	5-spd multi-step variable frequency drive
Trolley Drive Type	460	3	60	5-spd multi-step variable frequency drive
Slewing Drive Type	N/A	N/A	N/A	N/A

CONDUCTOR TYPE

Bridge	Festoon
Trolley	Festoon

CONTROLS

Method of Control	Digital radio
Location of Control	Provide all controls in electrical panel that is to be mounted on the wall or at floor level by the buyer in a C2 (clean) environment
Type of Control Enclosure	NEMA Type 12
Main Hoist	Digital radio
Auxiliary Hoist	Digital radio
Bridge	Digital radio
Trolley	Digital radio
Slewing Drive	N/A
Rotating Hook	Digital radio

MATERIALS

Item	Material	Grade/Type
N/A	Carbon Steel	N/A
.	.	.

ELECTRICAL REQUIREMENTS

Item		HP		HP		HP		HP		HP
Motor	Main Hoist	50	Aux. Hoist	15	Bridge	(2) 3	Trolley	(2) 2	Slewing	N/A
	Hook Rotate	2								

Special Wiring Conditions or Codes	National Electric Code (NEC)

Motor horsepower estimated for plant electrical load sizing. Seller to provide.

Mechanical Handling Data Sheet Top Running, Double Girder	Data Sheet No. 24590-HLW-M0D-HEH-00021	
	Tag No. 24590-HLW-MJ-HEH-CRN-00001	Rev. 5

MAINTENANCE REQUIREMENTS

Retrieval	N/A
Decontamination	N/A

ADDITIONAL REQUIREMENTS

1. Bridge and trolley bearings shall be CMAA70, Class F. This note supersedes 24590-WTP-3PS-M000-T0002 Sec. 4.3.3.
2. Provide shank hook with swivel for auxiliary hoist
3. Provide emergency stop switch, pull to reset.
4. Provide high-high limit switch for main and auxiliary hoist with keyed over-ride switch located in control panel.
5. Provide bridge and trolley slowdown travel limit switches.
6. Main hoist hook shall move to -9'-0" elevation.
7. Main hoist hook shall be a Crosby/McKissick Duplex Hook Assembly.
8. Omit important to safety requirements from auxiliary hoist unless noted otherwise.
9. C1 =10'-2"; C2 = 10'-2"
10. E1 = 2'-3" ; E2 = 9'-8" (For Main hoist); E1 = 8'-3" (For Aux Hoist); E2 = 3'-8" (For Aux hoist) 5
11. The 175# crane rail will be acceptable provided that seller can provide calculations that the crane frequency in the transverse direction (i.e., perpendicular to the runway) will be 16 Hz. minimum.
12. This data sheet provides basic outlines design objectives and bounding dimensions to contracted design or fabrication supplier(s) and shall not be used to confirm the as built WTP structure system or component identified herein. See vendor information for final configuration provided in conformance to purchase order 24590-QL-POA-MJKH-00001.
13. Seller shall provide a second high speed brake on the auxiliary hoist.
14. Power feed shall be supplied at the north end to Seller supplied festoon junction boxes.
15. 24590-HLW-M0D-HEH-00021 is a lead document in accordance with 24590-WTP-GPP-SANA-001 and 24590-WTP-RPT-ENS-07-001; requires a safety screening. 5

Date	REV	Revisions	By	Checked	Supervisor	Approved
6/12/2007	4	24590-HLW-P1-P01T-00002	WA Frier	D. Adams	S. Winsel	P. Snider
10/27/2005	3	24590-WTP-SE-ENS-04-0127 revised safety classification to APC and QL to CM. Corrected dimension IAW 24590-CM-POA-MJKH-00001-05-00003.	WA Frier	N. Darwen	S. Winsel/P. Snider	D. Wilsey
6/21/2005	2	24590-HLW-SS-S15T-00418; (2) Revised Aux Hoist Drive IAW vendor standard policy; (3) Revised HP, C dim & main hook	WA Frier	N. Darwen	S. Winsel/P. Snider	D. Wilsey
4/22/2004	1	accordance with CCN 091566	WA Frier	G. Marr	L. Harrison/P. Snide	D. Wilsey
2/2/2004	0	Issue for Procurement	WA Frier	E. Szavay	J. Weamer/J. Browe	D. Wilsey

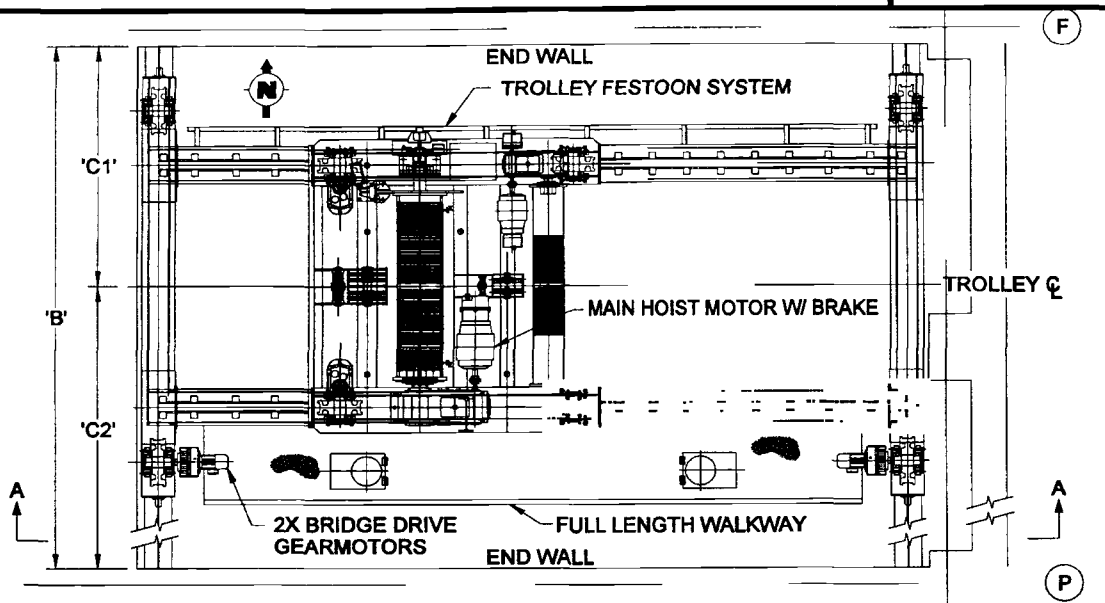

PLAN VIEW AT EL. 44'-0"

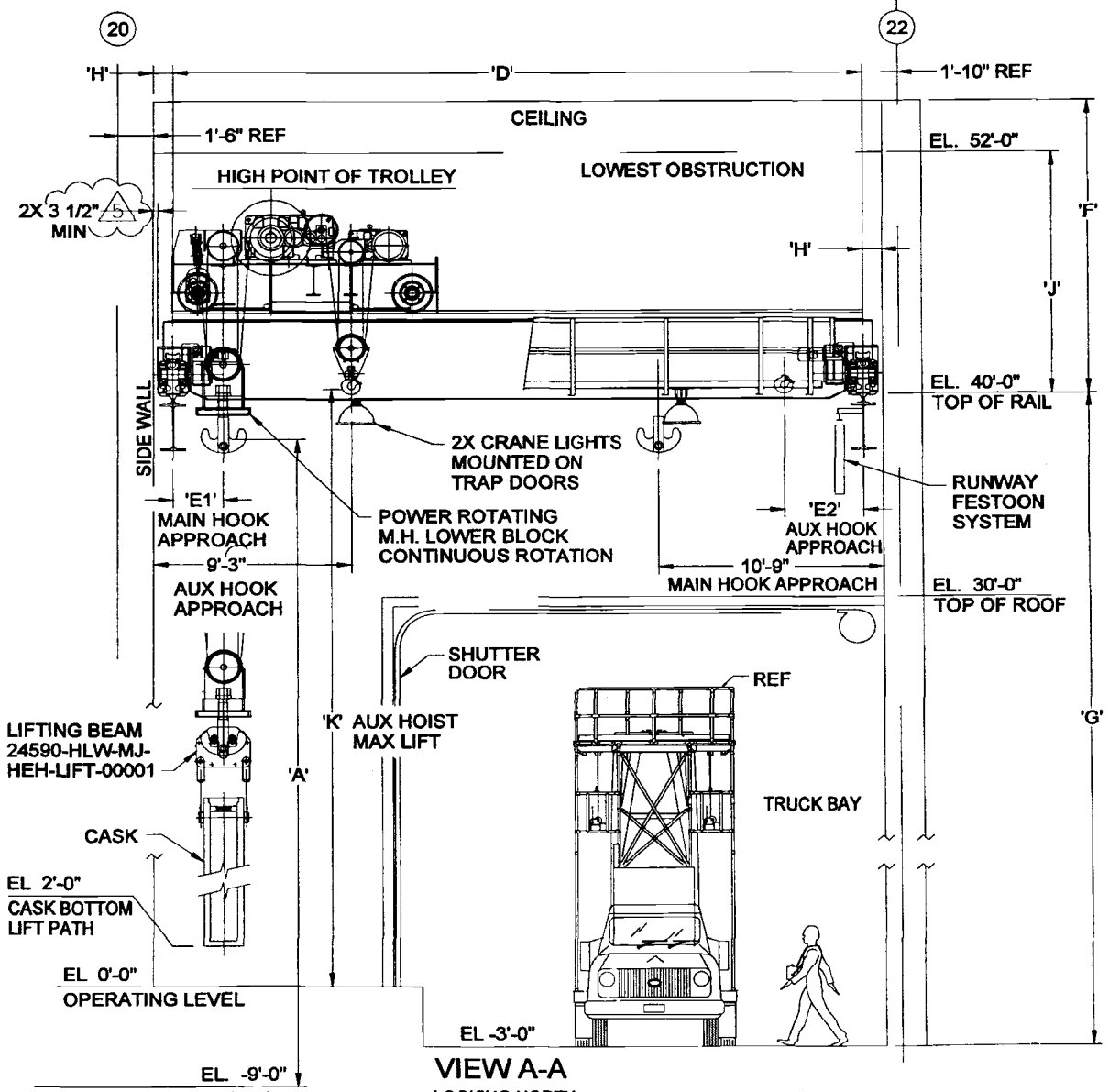

VIEW A-A

LOOKING NORTH

Mechanical Handling Data Sheet

Top Running, Double Girder

CM (4)

Data Sheet No. 24590-HLW-M0D-HEH-00025

Plant Item No. 24590-HLW-MJ-HEH-CRN-00003 | Rev. 4

Project	RPP-WTP	Description	Canister Storage Crane
Project No.	24590	Supporting Calculation No.	N/A (4)
Planning Area		Associated Drawing No.	N/A
System No.	HEH	Associated Specification No.	24590-WTP-3PS-MJKG-T0003
Building No.	30	Associated MR No.	24590-QL-MRA-MJKG-00002
Quality Level	► CM (4)		
Seismic Criteria	SC-II		
Function	Canister Handling, Storage, and Maintenance Activities		

R10704040

ISSUED BY RPP-WTP PDC

DESIGN CRITERIA

Design Life	40 years	Safety Classification	► APC (4)

OPERATING ENVIRONMENT			In-Cave Rm # H-0132		Out-Cave Rm # H-313B		List All Special
			Min	Max	Min	Max	Conditions
Temperature		deg F	59	113	59	113	
Relative Humidity		%	0	70	0	70	
Radiological Equip. Dose	gamma	mrad/hr	►4.0*E+4 (4)		►100 (4)		
	neutron	mrad/hr	Negligible		Negligible		
Radiological Classification			R5		►R3/R5 (4)		
Contamination Classification			C3		►C3 (4)		

CRANE REQUIREMENTS

Type of Crane	Top Running Double Girder Electric Overhead Traveling Crane		Tons
Service Information	CMAA 70-2000, Class E	Capacity	6 Ton
Crane Operation Indoors?	Yes, In-Cave	Main Hoist	6 Ton
Material Handled	Canisters	Auxiliary Hoist	N/A
Class Information	Class E	Trolley	6 Ton
No. of Cranes Required	1	Bridge	6 Ton
ASCE Rail Type or Beam Size	► 104 lb/yd Crane Rail (4)		

OPERATING CHARACTERISTICS AND FREQUENCY OF MOVEMENT

Hoist- Range of Lift	(F) - (G)	No. lifts/day	6
Average Moves - Bridge	1/2 Runway Length	Moves/day	6
Average Moves - Trolley	3/4 Bridge Length	Moves/day	6

CRANE DIMENSIONS AND ELEVATIONS	Symbol	ft - in.
Lowest Obstruction Elevation	(A)	45'-0"
Shield Door Corner Obstruction Elevation	(B)	44'-6"
Trolley Rail Elevation	(C)	39'-11" NOMINAL
Bridge Rail Elevation	(D)	38'-3 1/2"
Lowest Point of Crane Elevation	(E)	37'-9"
High Hook Elevation	(F)	35'-7.5"
Low Hook Elevation	(G)	-9'-0"
Side Approach - hoist center line to West Rails	(H)	3'-4" MAXIMUM
Side Approach - hoist center line to East Rails	(I)	3'-4" MAXIMUM
Distance from Grid line "18" to Inside face of West Wall	(J)	3'-6"
Distance from hoist center line to end-truck South bumper	(K) (4)	►5'-3 1/2"
Distance from hoist center line to end-truck North bumper	(L) (4)	►7'-2"
Distance from hoist center line to In-Cave South Wall	(M) (4)	►5'-3 1/2"
Distance from hoist center line to CMA North Wall	(N) (4)	►7'-2"
Distance from Grid Line "P" to inside face of South Wall	(0)	0'-0"
Total distance between inside wall faces of CMA and Cave	(P)	91'-9"
Range of Lift	(R)	44'-7.5"
Runway Rails Span	(S)	20'-8"
Shield Door Corner Obstruction	(T)	0'-6"

Date	REV	Revisions	By	Checked	Supervisor	Approved
8/10/06	4	See note 14	N J Darwen	A. Whitford	P. Snider SLW	D. Wilsey
9/8/2003	3	See note 13	A. Whitford	L. Harrison	G. Marr	D. Wilsey
01/24/03	2	See note 12	David Horton	Paul Carter	Joni Weamer	Dave Wilsey
12/27/02	1	See note 11	David Horton	Paul Carter	Brower	Dave Wilsey
02/26/02	0	Issued for Procurement	Joseph Roach	Andy Whitford	Jim Brower	Dave Wilsey

Doc Number 24590-HLW-M0D-HEH-00025 | REV 4 | Page 1 of 3

BECHTEL	**Mechanical Handling Data Sheet** Top Running, Double Girder	Data Sheet No. 24590-HLW-M0D-HEH-00025 Plant Item No. 24590-HLW-MJ-HEH-CRN-00003 Rev. 4

DRIVE TYPE SPEED AND HORSEPOWER

Drives	Drive Type	Speed	Horsepower		Slow	Fast
Main Hoist Drive Type	Flux Vector	Variable 0 - 25	12 HP	Nominal Speed (ft/m):	5	25
Recovery Hoist Drive Type	Single Speed	Single Speed	7 HP	Nominal Speed (ft/m):	5	
Main Bridge Drive Type	VFD	Variable 0 - 50	4 HP	Nominal Speed (ft/m):	5	50
Recovery Bridge Drive Type	Single Speed	Single Speed	1 HP	Nominal Speed (ft/m):	5	
Main Trolley Drive Type	VFD	Variable 0-25	1.5 HP	Nominal Speed (ft/m):	5	25
Recovery Trolley Drive Type	Single Speed	Single Speed	0.75 HP	Nominal Speed (ft/m):	5	
Powered Hook	DC Motor	Fixed	0.05 HP	Nominal Speed (rpm):	1-2	

CONDUCTOR TYPE

Bridge	Cable Reel
Trolley	Cable Track

CONTROLS

Method of Control	Manual
Location of Control	Dedicated Crane Control Room/ Window Station/ Crane Maintenance Area
Type of Control Enclosure	NEMA 4X or IP 66

ELECTRICAL REQUIREMENTS

Item	Volts / Phase / Hertz
Motor	480 VAC / 3 Phase / 60 HZ
Special Wiring Conditions	National Electric Code

MAINTENANCE REQUIREMENTS

Construction	Modular for ease of assembly / dismantling
Modularization	Heaviest Modular item except bridge beams / end trucks / must be < 5 tons.
Retrieval	Crane must be retrievable / Hoist must be retrievable
Decontamination	Crane and hoist needs to be decontaminable and minimize cracks and crevices that can trap debris

ADDITIONAL REQUIREMENTS (NOTES):

1. Motors and electrical cabinets etc. to be sealed to withstand occasional washdown during decontamination.
2. Four bridge mounted and two trolley mounted cameras capable of pan, zoom, iris and tilt and one hook deployed camera including lighting, pan, tilt, zoom and iris to view cave floors. The Buyer supplies the cameras, Seller provides mounts.
3. All cranes shall be designed to allow operator positioning to within +/- 3/8".
4. Four crane mounted lights as well as light supplied by cameras.
5. Must be able to hold and control suspended payload without mechanical braking for sustained periods.
6. Must not drop load during any single random or common mode electrical failure.
7. Must be recoverable by remote means after any specified single random or common mode failure by use of redundant drives in conjunction with cable reel where necessary.
8. Power supply is required at hook for crane held tools.
9. Motor horsepower estimated for plant electrical load sizing. Seller to provide.
10. This drawing provided basic outlines, design objectives, and bounding dimensions to contracted design or fabrication supplier(s) and shall not be used to confirm the as built WTP structure, system or component identified herein. See vendor information for final configuration provided in conformance to purchase order QL-POA-MJKG-00002.

► 11. Revision 1 changes: Changed additional requirements, drives, and description △4

► 12. Revision 2 changes: Changed low hook height and range of lift △4

► 13. Revision 3 changes: Changed rad levels, drive types and editorial changes. △4

► 14. Revision 3 changes: Safety Classification changed to APC; Quality Level changed to CM; Calc ref deleted; Dimension K & M ammended to include bumper extensions that allow bumpers to engage on cave wall, IAW 24590-HLW-ACA-M-05-00031 △4

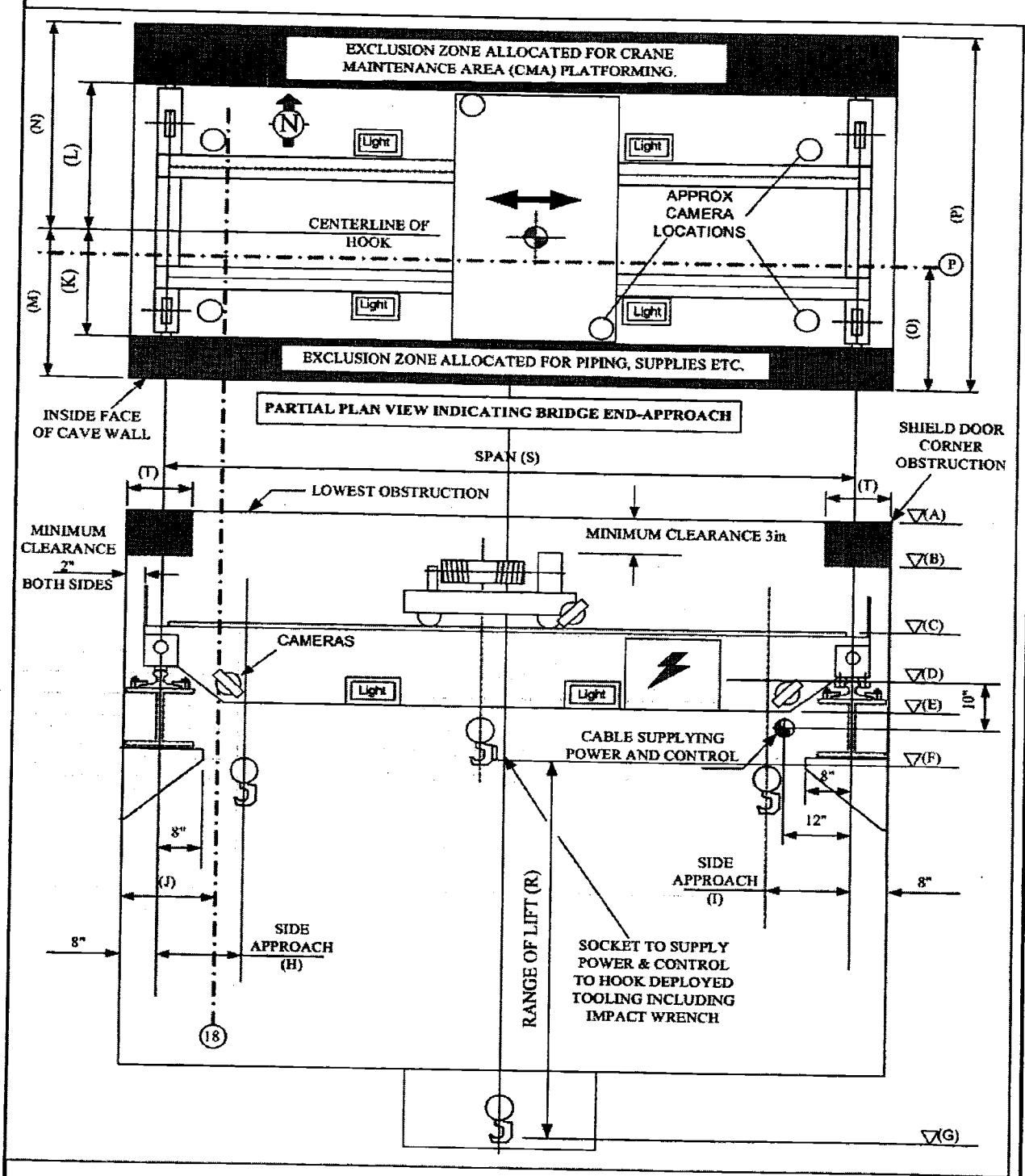
EXCLUSION ZONE ALLOCATED FOR CRANE MAINTENANCE AREA (CMA) PLATFORMING.
Light
Light
Light
Light
CENTERLINE OF HOOK
APPROX CAMERA LOCATIONS
EXCLUSION ZONE ALLOCATED FOR PIPING, SUPPLIES ETC.
(N)
(L)
(M)
(K)
(P)
(O)
INSIDE FACE OF CAVE WALL
PARTIAL PLAN VIEW INDICATING BRIDGE END-APPROACH
SHIELD DOOR CORNER OBSTRUCTION
SPAN (S)
(T)
(T)
LOWEST OBSTRUCTION
MINIMUM CLEARANCE 3in
MINIMUM CLEARANCE 2" BOTH SIDES
(A)
(B)
(C)
(D)
(E)
10"
CAMERAS
Light
Light
CABLE SUPPLYING POWER AND CONTROL
(F)
8"
12"
8"
(J)
SIDE APPROACH (I)
8"
SIDE APPROACH (H)
RANGE OF LIFT (R)
SOCKET TO SUPPLY POWER & CONTROL TO HOOK DEPLOYED TOOLING INCLUDING IMPACT WRENCH
18
(G)

BECHTEL	**Mechanical Handling Data Sheet** Top Running, Double Girder	CM △3	Data Sheet No. 24590-HLW-M0D-HPH-00063 Plant Item No. 24590-HLW-MJ-HPH-CRN-00002 Rev. 3

Project	RPP-WTP	Description	Canister Handling Crane (Upper)
Project No.	24590	Supporting Calculation No.	N/A △3
Planning Area		Associated Drawing No.	N/A
System No.	HPH	Associated Specification No.	24590-WTP-3PS-MJKG-T0003
Building No.	30	Associated MR No.	24590-QL-MRA-MJKG-00002
Quality Level	► CM △3		
Seismic Criteria	SC-II		
Function	Canister Handling and Maintenance Activities		

R10704041

ISSUED BY RPP-WTP PDC

DESIGN CRITERIA

Design Life	40 years	Safety Classification	► APC △3

OPERATING ENVIRONMENT			In-Cave Rm # H-0136		Out-Cave Rm # H-329A		List All Special
			Min	Max	Min	Max	Conditions
Temperature		deg F	59	113	59	113	
Relative Humidity		%	0	70	0	70	
Radiological Equip. Dose	gamma	mrad/hr	►4.0*E+4 △3		►10 △3		
	neutron	mrad/hr	Negligible		Negligible		
Radiological Classification			R5		►R3 △3		
Contamination Classification			►C5 △3		►C3 △3		

CRANE REQUIREMENTS

Type of Crane	Top Running Double Girder Electric Overhead Traveling Crane		Tons
Service Information	CMAA 70-2000, Class E	Capacity	6 Ton
Crane Operation Indoors?	Yes, In-Cave	Main Hoist	6 Ton
Material Handled	Canisters	Auxiliary Hoist	N/A
Class Information	Class E	Trolley	6 Ton
No. of Cranes Required	1	Bridge	6 Ton
ASCE Rail Type or Beam Size	► 104 lb/yd Crane Rail △3		

OPERATING CHARACTERISTICS AND FREQUENCY OF MOVEMENT

Hoist- Range of Lift	(F) - (G)	No. lifts/day	6
Average Moves - Bridge	1/2 Runway Length	Moves/day	6
Average Moves - Trolley	3/4 Bridge Length	Moves/day	6

CRANE DIMENSIONS AND ELEVATIONS	Symbol	ft - in.
Lowest Obstruction Elevation	(A)	48'-0"
Shield Door Corner Obstruction Elevation	(B)	47'-6"
Trolley Rail Elevation	(C)	44'-0" NOMINAL
Bridge Rail Elevation	(D)	42'-4.5"
Lowest Point of Crane Elevation	(E)	42'-4.5"
High Hook Elevation	(F)	42'-4.5"
Low Hook Elevation	(G)	-3-0"
Side Approach - hoist center line to South Rails	(H)	3'-4" MAXIMUM
Side Approach - hoist center line to North Rails	(I)	3'-4" MAXIMUM
Distance from Grid line "R" to Inside face of South Wall	(J) △3	►2'-0" IN/OUT CAVE
Distance from hoist center line to end-truck East bumper	(K) △3	►5'-7"
Distance from hoist center line to end-truck West bumper	(L) △3	►6'-10 1/2"
Distance from hoist center line to In-Cave East Wall	(M) △3	►5'-7"
Distance from hoist center line to CMA West Wall	(N) △3	►6'-10 1/2"
Distance from Grid Line "15" to inside face of East Wall	(0)	7'-6"
Total distance between inside wall faces of CMA and Cave	(P)	188'-7"
Range of Lift	(R)	45'-4.5"
Runway Rails Span	(S)	19'-4"
Shield Door Corner Obstruction	(T)	0-6"

8/10/06	3	See note 13	N J Darwen	A. Whitford RT	P. Snider SLW	D. Wilsey FOR
09/08/03	2	See note 12	A. Whitford	L. Harrison	G. Marr	D. Wilsey
11/27/02	1	See note 11	David Horton	Paul Carter	Brower	Dave Wilsey
02/26/02	0	Issued for Procurement	Joseph Roach	Andy Whitford	Jim Brower	Dave Wilsey
Date	REV	Revisions	By	Checked	Supervisor	Approved
Doc Number		24590-HLW-M0D-HPH-00063	REV	3	Page 1 of 3	

BECHTEL	**Mechanical Handling Data Sheet** Top Running, Double Girder	Data Sheet No. 24590-HLW-M0D-HPH-00063 Plant Item No. 24590-HLW-MJ-HPH-CRN-00002 Rev. 3

DRIVE TYPE SPEED AND HORSEPOWER

Drives	Drive Type	Speed	Horsepower		Slow	Fast
Main Hoist Drive Type	Flux Vector	Variable 0 - 25	12 HP	Nominal Speed (ft/m):	5	25
Recovery Hoist Drive Type	Single Speed	Single Speed	7 HP	Nominal Speed (ft/m):	5	
Main Bridge Drive Type	VFD	Variable 0 - 50	4 HP	Nominal Speed (ft/m):	5	50
Recovery Bridge Drive Type	Single Speed	Single Speed	1 HP	Nominal Speed (ft/m):	5	
Main Trolley Drive Type	VFD	Variable 0-25	1.5 HP	Nominal Speed (ft/m):	5	25
Recovery Trolley Drive Type	Single Speed	Single Speed	0.75 HP	Nominal Speed (ft/m):	5	
Powered Hook	DC Motor	Fixed	0.05 HP	Nominal Speed (rpm):	1-2	

CONDUCTOR TYPE

Bridge	Cable Reel
Trolley	Cable Track

CONTROLS

Method of Control	Manual
Location of Control	Dedicated Crane Control Room/ Window Station/ Crane Maintenance Area
Type of Control Enclosure	NEMA 4X or IP 66

ELECTRICAL REQUIREMENTS

Item	Volts / Phase / Hertz
Motor	480 VAC / 3 Phase / 60 HZ
Special Wiring Conditions	National Electric Code

MAINTENANCE REQUIREMENTS

Construction	Modular for ease of assembly / dismantling
Modularization	Heaviest Modular item except bridge beams / end trucks / must be < 5 tons.
Retrieval	Crane must be retrievable / Hoist must be retrievable
Decontamination	Crane and hoist needs to be decontaminable and minimize cracks and crevices that can trap debris

ADDITIONAL REQUIREMENTS

1. Motors and electrical cabinets etc. to be sealed to withstand occasional washdown during decontamination.
2. Four bridge mounted and two trolley mounted cameras capable of pan, zoom, iris and tilt and one hook deployed camera including lighting, pan, tilt, zoom and iris to view cave floors. The Buyer supplies the cameras, Seller provides mounts.
3. All cranes shall be designed to allow operator positioning to within +/- 3/8".
4. Four crane mounted lights as well as light supplied by cameras.
5. Must be able to hold and control suspended payload without mechanical braking for sustained periods.
6. Must not drop load during any single random or common mode electrical failure.
7. Must be recoverable by remote means after any specified single random or common mode failure by use of redundant drives in conjunction with cable reel where necessary.
8. Power supply is required at hook for crane held tools.
9. Motor horsepower estimated for plant electrical load sizing. Seller to provide.
10. This drawing provided basic outlines, design objectives, and bounding dimensions to contracted design or fabrication supplier(s) and shall not be used to confirm the as built WTP structure, system or component identified herein. See vendor information for final configuration provided in conformance to purchase order QL-POA-MJKG-00002.
- ► 11. Revision 1 changes: Changed additional requirements, drives, and description △3
- ► 12. Revision 2 changes: Revised based on 24590-HLW-DCA-PL-03-002 Rev 0, and editorial changes. Changed recovery drive type; was VFD. △3
- ► 13. Revision 3 changes: Safety Classification changed to APC; Quality Level changed to CM; Calc ref deleted; Dimension K & M ammended to include bumper extensions that allow bumpers to engage on cave wall, IAW 24590-HLW-ACA-M-05-00031 △3

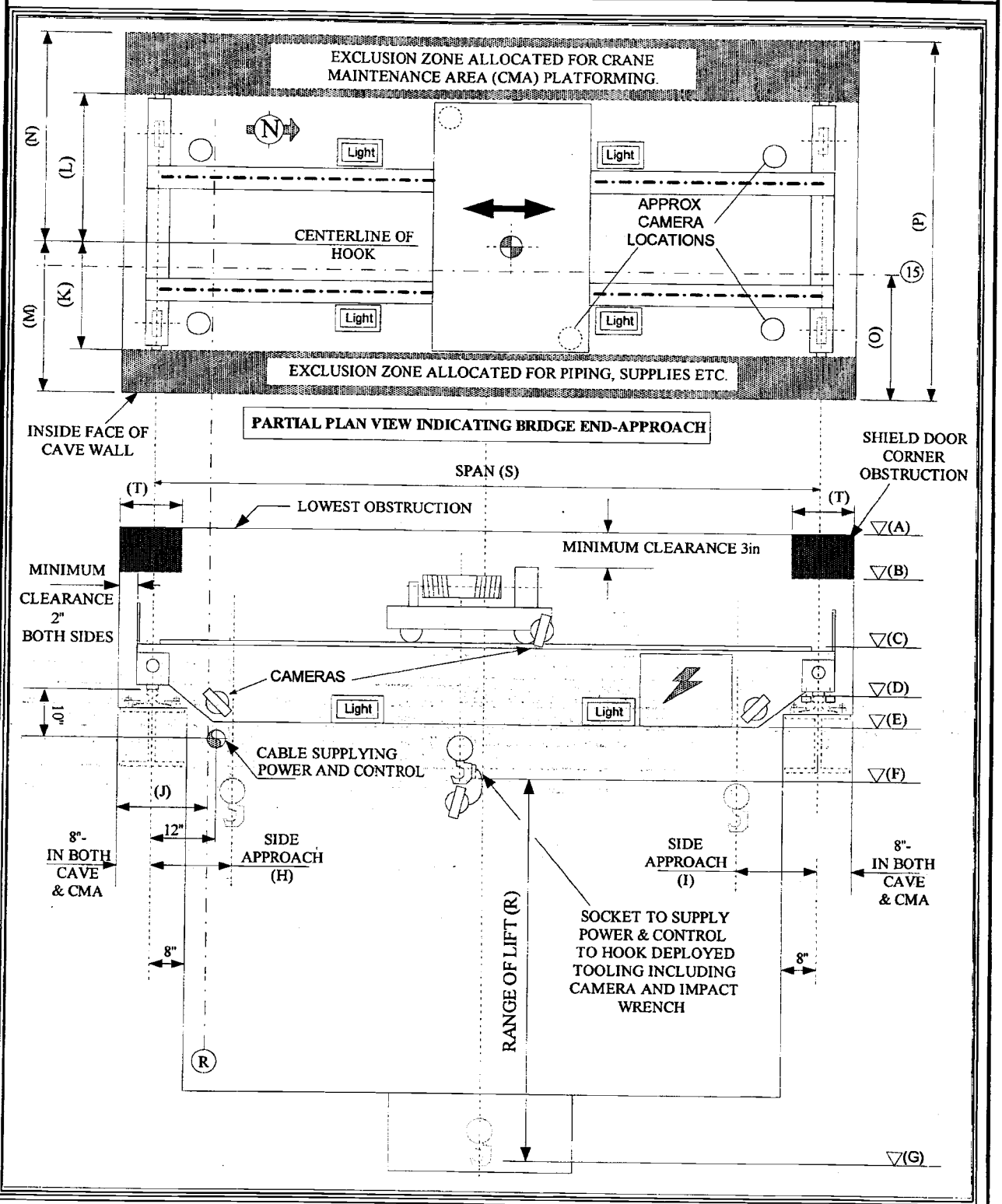
EXCLUSION ZONE ALLOCATED FOR CRANE MAINTENANCE AREA (CMA) PLATFORMING.
N
Light
Light
Light
Light
APPROX CAMERA LOCATIONS
CENTERLINE OF HOOK
(N)
(L)
(M)
(K)
(P)
(O)
15
EXCLUSION ZONE ALLOCATED FOR PIPING, SUPPLIES ETC.
INSIDE FACE OF CAVE WALL
PARTIAL PLAN VIEW INDICATING BRIDGE END-APPROACH
SHIELD DOOR CORNER OBSTRUCTION
SPAN (S)
(T)
(T)
LOWEST OBSTRUCTION
MINIMUM CLEARANCE 3in
▽(A)
▽(B)
▽(C)
▽(D)
▽(E)
▽(F)
▽(G)
MINIMUM CLEARANCE 2" BOTH SIDES
CAMERAS
10"
CABLE SUPPLYING POWER AND CONTROL
(J)
12"
8"- IN BOTH CAVE & CMA
SIDE APPROACH (H)
SIDE APPROACH (I)
8"- IN BOTH CAVE & CMA
8"
8"
RANGE OF LIFT (R)
SOCKET TO SUPPLY POWER & CONTROL TO HOOK DEPLOYED TOOLING INCLUDING CAMERA AND IMPACT WRENCH
R

Mechanical Handling Data Sheet

Top Running, Double Girder

CM (3)

Data Sheet No. 24590-HLW-M0D-HPH-00064

Plant Item No. 24590-HLW-MJ-HPH-CRN-00001 | Rev. 3

Project	RPP-WTP	Description	Canister Handling Crane (Lower)
Project No.	24590	Supporting Calculation No.	N/A (3)
Planning Area		Associated Drawing No.	N/A
System No.	HPH	Associated Specification No.	24590-WTP-3PS-MJKG-T0003
Building No.	30	Associated MR No.	24590-QL-MRA-MJKG-00002
Quality Level	▶ CM (3)		
Seismic Criteria	SC-II		
Function	Canister Handling and Maintenance Activities		

R10704042

~~ISSUED BY RPP-WTP PDC~~

DESIGN CRITERIA

Design Life	40 years	Safety Classification	▶ APC (3)

OPERATING ENVIRONMENT			In-Cave Rm # H-0136		Out-Cave Rm # H-329A		List All Special
			Min	Max	Min	Max	Conditions
Temperature		deg F	59	113	59	113	
Relative Humidity		%	0	70	0	70	
Radiological Equip. Dose	gamma	mrad/hr	4.0°E+4 (3)		▶10 (3)		
	neutron	mrad/hr	Negligible		Negligible		
Radiological Classification			R5		▶R3 (3)		
Contamination Classification			C3		▶C3 (3)		

CRANE REQUIREMENTS

Type of Crane	Top Running Double Girder Electric Overhead Traveling Crane		Tons
Service Information	CMAA 70-2000, Class E	Capacity	6 Ton
Crane Operation Indoors?	Yes, In-Cave	Main Hoist	6 Ton
Material Handled	Canisters	Auxiliary Hoist	N/A
Class Information	Class E	Trolley	6 Ton
No. of Cranes Required	1	Bridge	6 Ton
ASCE Rail Type or Beam Size	▶ 104 lb/yd Crane Rail (3)		

OPERATING CHARACTERISTICS AND FREQUENCY OF MOVEMENT

Hoist- Range of Lift	(F) - (G)	No. lifts/day	6
Average Moves - Bridge	1/2 Runway Length	Moves/day	6
Average Moves - Trolley	3/4 Bridge Length	Moves/day	6

CRANE DIMENSIONS AND ELEVATIONS	Symbol	ft - in.
Lowest Obstruction Elevation	(A)	42'-4.25"
Shield Door Corner Obstruction Elevation	(B)	N/A
Trolley Rail Elevation	(C)	38'-6.5" NOMINAL
Bridge Rail Elevation	(D)	36'-11"
Lowest Point of Crane Elevation	(E)	36'-4.5"
High Hook Elevation	(F)	36'-4.5"
Low Hook Elevation	(G)	-3-0"
Side Approach - hoist center line to South Rails	(H)	3'-4" MAXIMUM
Side Approach - hoist center line to North Rails	(I)	3'-4" MAXIMUM
Distance from Grid line "R" to Inside face of South Wall	(J) (3)	▶8" IN CAVE, 2'-0" OUT CAVE
Distance from hoist center line to end-truck East bumper	(K) (3)	▶5'-7"
Distance from hoist center line to end-truck West bumper	(L)	5'-11 3/4" MAXIMUM
Distance from hoist center line to In-Cave East Wall	(M) (3)	▶5'-7"
Distance from hoist center line to CMA West Wall	(N) (3)	▶9'-6.5"
Distance from Grid Line "15" to inside face of East Wall	(0)	7'-6"
Total distance between inside wall faces of CMA and Cave	(P)	188'-7"
Range of Lift	(R)	39'-4.5"
Runway Rails Span	(S)	15'-9.5"
Shield Door Corner Obstruction	(T)	N/A

Date	REV	Revisions	By	Checked	Supervisor	Approved
08/10/06	3	See note 13	N J Darwen	A. Whitford RT	P. Snider SCS	D. Wilsey
09/08/03	2	See note 12	A. Whitford	L. Harrison	G. Marr	D. Wilsey
11/28/02	1	See note 11	David Horton	Paul Carter	Jim Brower	Dave Wilsey
02/26/02	0	Issued for Procurement	Joseph Roach	Andy Whitford	Jim Brower	Dave Wilsey

Doc Number 24590-HLW-M0D-HPH-00064 REV 3 Page 1 of 3

BECHTEL	**Mechanical Handling Data Sheet** Top Running, Double Girder	Data Sheet No. 24590-HLW-M0D-HPH-00064 Plant Item No. 24590-HLW-MJ-HPH-CRN-00001 Rev. 3

DRIVE TYPE SPEED AND HORSEPOWER

Drives	Drive Type	Speed	Horsepower		Slow	Fast
Main Hoist Drive Type	Flux Vector	Variable 0 - 25	12 HP	Nominal Speed (ft/m):	5	25
Recovery Hoist Drive Type	Single Speed	Single Speed	7 HP	Nominal Speed (ft/m):	5	
Main Bridge Drive Type	VFD	Variable 0 - 50	4 HP	Nominal Speed (ft/m):	5	50
Recovery Bridge Drive Type	Single Speed	Single Speed	1 HP	Nominal Speed (ft/m):	5	
Main Trolley Drive Type	VFD	Variable 0-25	1.5 HP	Nominal Speed (ft/m):	5	25
Recovery Trolley Drive Type	Single Speed	Single Speed	0.75 HP	Nominal Speed (ft/m):	5	
Powered Hook	DC Motor	Fixed	0.05 HP	Nominal Speed (rpm):	1-2	

CONDUCTOR TYPE

Bridge	Cable Reel
Trolley	Cable Track

CONTROLS

Method of Control	Manual
Location of Control	Dedicated Crane Control Room/ Window Station/ Crane Maintenance Area
Type of Control Enclosure	NEMA 4X or IP 66

ELECTRICAL REQUIREMENTS

Item	Volts / Phase / Hertz
Motor	480 VAC / 3 Phase / 60 HZ
Special Wiring Conditions	National Electric Code

MAINTENANCE REQUIREMENTS

Construction	Modular for ease of assembly / dismantling
Modularization	Heaviest Modular item except bridge beams / end trucks / must be < 5 tons.
Retrieval	Crane must be retrievable / Hoist must be retrievable
Decontamination	Crane and hoist needs to be decontaminable and minimize cracks and crevices that can trap debris

ADDITIONAL REQUIREMENTS (NOTES):

1. Motors and electrical cabinets etc. to be sealed to withstand occasional washdown during decontamination.
2. Four bridge mounted and two trolley mounted cameras capable of pan, zoom, iris and tilt and one hook deployed camera including lighting, pan, tilt, zoom and iris to view cave floors. The Buyer supplies the cameras, Seller provides mounts.
3. All cranes shall be designed to allow operator positioning to within +/- 3/8".
4. Four crane mounted lights as well as light supplied by cameras.
5. Must be able to hold and control suspended payload without mechanical braking for sustained periods.
6. Must not drop load during any single random or common mode electrical failure.
7. Must be recoverable by remote means after any specified single random or common mode failure by use of redundant drives in conjunction with cable reel where necessary.
8. Power supply is required at hook for crane held tools.
9. Motor horsepower estimated for plant electrical load sizing. Seller to provide.
10. This drawing provided basic outlines, design objectives, and bounding dimensions to contracted design or fabrication supplier(s) and shall not be used to confirm the as built WTP structure, system or component identified herein. See vendor information for final configuration provided in conformance to purchase order QL-POA-MJKG-00002.

► 11. Revision 1 changes: Changed additional requirements, drives, and description △3

► 12. Revision 2 changes: Revised based on 24590-HLW-DCA-PL-03-002 Rev 0, and editorial changes. Changed recovery drives to single speed, was VFD. △3

► 13. Revision 3 changes: Safety Classification changed to APC; Quality Level changed to CM; Calc ref deleted; Dimension K & M ammended to include bumper extensions that allow bumpers to engage on cave wall, IAW 24590-HLW-ACA-M-05-00031 △3

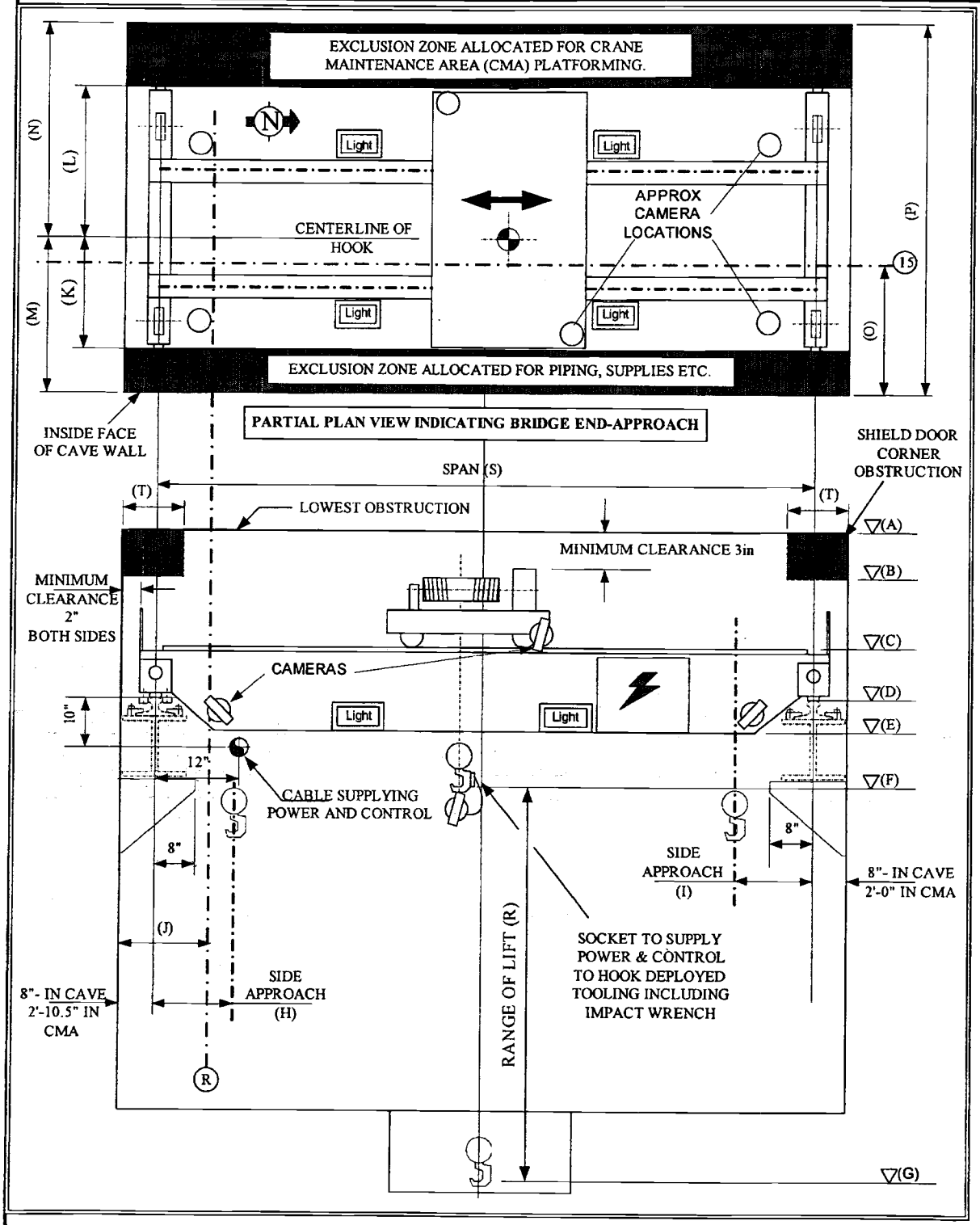
EXCLUSION ZONE ALLOCATED FOR CRANE MAINTENANCE AREA (CMA) PLATFORMING.
Light
Light
Light
Light
CENTERLINE OF HOOK
APPROX CAMERA LOCATIONS
(N)
(L)
(M)
(K)
(P)
(O)
15
EXCLUSION ZONE ALLOCATED FOR PIPING, SUPPLIES ETC.
INSIDE FACE OF CAVE WALL
PARTIAL PLAN VIEW INDICATING BRIDGE END-APPROACH
SHIELD DOOR CORNER OBSTRUCTION
SPAN (S)
(T)
(T)
LOWEST OBSTRUCTION
MINIMUM CLEARANCE 3in
MINIMUM CLEARANCE 2" BOTH SIDES
CAMERAS
10"
12"
CABLE SUPPLYING POWER AND CONTROL
8"
8"
SIDE APPROACH (I)
8"- IN CAVE 2'-0" IN CMA
(J)
8"- IN CAVE 2'-10.5" IN CMA
SIDE APPROACH (H)
R
RANGE OF LIFT (R)
SOCKET TO SUPPLY POWER & CONTROL TO HOOK DEPLOYED TOOLING INCLUDING IMPACT WRENCH
▽(A)
▽(B)
▽(C)
▽(D)
▽(E)
▽(F)
▽(G)

Mechanical Handling Data Sheet
Top Running, Double Girder

CM ⚠4

Data Sheet No.	Rev.
24590-HLW-M0D-HSH-00013	4
Plant Item No.	
24590-HLW-MJ-HSH-CRN-00001	

R10704043

Project	RPP-WTP	Description	Melter 1 Cave Main Crane
Project No.	24590	Supporting Calculation No.	N/A
Planning Area		Associated Drawing No.	N/A
System No.	HSH	Associated Specification No.	24590-WTP-3PS-MJKG-T0003
Building No.	30	Associated MR No.	24590-QL-MRA-MJKG-00002
Quality Level	▶ CM ⚠4	Associated MHD No.	24590-HLW-M7-HSH-00001002
Seismic Category	SC-II		
Function	Melter Cave 1 Support		

ISSUED BY RPP-WTP PDC

DESIGN CRITERIA

Design Life	40 years	Safety Classification	▶ APC ⚠4

OPERATING ENVIRONMENT			In-Cave Rm # H-0117		CMA Rm # H-0309		List All Special Conditions
			Min	Max	Min	Max	
Temperature		deg F	59	113	59	113	TID is derived using maximum local exposure assumed full time, ie multiplied by 24x365x40
Relative Humidity		%	0	70	0	70	
Radiological	gamma	rad/ 40 yrs	▶ 7.0*E+6 TID ⚠4		▶3.5*E+3 ⚠4		
	neutron	rad/ 40 yrs	Negligible		Negligible		
Radiological Classification			R5		▶R3 ⚠4		
Contamination Classification			C5		▶C3 ⚠4		

CRANE REQUIREMENTS

Type of Crane	Top Running Double Girder Electric Overhead Traveling Crane		
Service Information	CMAA 70-2000, Class E	Capacity	25 Ton
Crane Operation Indoors?	Yes, In-Cave	Main Hoist	25 Ton
Material Handled	Melter Cave Components	Auxiliary Hoist	N/A
Class Information	Class E	Trolley	25 Ton
No. of Cranes Required	1	Bridge	25 Ton
ASCE Rail Type	175 lb/yd		
Max Wheel Load	42,000 lbs		

OPERATING CHARACTERISTICS AND FREQUENCY OF MOVEMENT

Hoist- Range of Lift	41'-9"	No. lifts/day	1
Average Moves - Bridge	1/2 Runway Length	Moves/day	1
Average Moves - Trolley	3/4 Bridge Length	Moves/day	1

CRANE DIMENSIONS AND ELEVATIONS		ft - in.
Lowest Obstruction Elevation		52'-0"
Uppermost bridge feature	⚠4	▶ (47'-7" MAXIMUM) BY VENDOR
Bridge Rail Elevation		45'-1"
Lowest Point of Crane Elevation		44'-10"
High Hook Elevation		44'-9"
Low Hook Elevation		3'-0"
Side Approach - hoist center line to West Rails		3'-9" MAXIMUM
Side Approach - hoist center line to East Rails		3'-9" MAXIMUM
Distance from Grid line "14" to Inside face of West Wall	⚠4	▶ 7'-7" (REF) - SEE SKETCH (pg 3)
Distance from hoist center line to end-truck South bumper		5'-0" MAXIMUM
Distance from hoist center line to end-truck North bumper		6'-6" MAXIMUM
Distance from hoist center line to In-Cave South Wall	⚠4	▶ 6'-9" MAXIMUM (REF)
Distance from hoist center line to CMA North Wall		10'-6" MAXIMUM (REF)
Distance from Grid Line "L" to inside face of South Wall	⚠4	▶ 13'-0"
Total distance between inside wall faces of CMA and Cave		131'-10" (REF)
Runway Rails Span		34'-4"

Date	REV	Revisions	By	Checked	Supervisor	Approved
8/10/06	4	See note 17	N J Darwen	A. Whitford	P. Snider	D. Wilsey
02/09/05	3	See note 13	Matt Robinson	Andy Whitford	Phil Snider	Dave Wilsey
09/08/03	2	See note 15	Andy Whitford	Lawrnel Harrison	Grant Marr	Dave Wilsey
11/27/02	1	See note 14	David Horton	Paul Carter	Joni Weamer/ Jim	Dave Wilsey
02/26/02	0	Issued for Procurement	Joeseph Roach	Andy Whitford	Jim Brower	Dave Wilsey

Mechanical Handling Data Sheet Top Running, Double Girder	Data Sheet No. 24590-HLW-M0D-HSH-00013	Rev. 4
	Plant Item No. 24590-HLW-MJ-HSH-CRN-00001	

DRIVE TYPE SPEED AND HORSEPOWER

				Nominal Speed (ft/m):	
Drives	Drive Type	Speed	Horsepower	Slow	Fast
Main Hoist Drive Type	Flux Vector	Variable 0 - 25	30 HP	5	20
Recovery Hoist Drive Type	Single Speed	Single Speed	15 HP	4	
Main Bridge Drive Type	VFD	Variable 0 - 50	4 HP	5	50
Recovery Bridge Drive Type	Single Speed	Single Speed	1 HP	5	
Main Trolley Drive Type	VFD	Variable 0-25	1.5 HP	5	25
Recovery Trolley Drive Type	Single Speed	Single Speed	0.75 HP	5	
Powered Hook	DC Motor	Fixed	0.05 HP	1-2	

CONDUCTOR TYPE

Bridge	Cable Reel
Trolley	Cable Track

CONTROLS

Method of Control	Integrated control network (remote) or panel pushbuttons (local)
Location of Control	Operating corridor or facility control room (remote) or panel (local)
Type of Control Enclosure	NEMA 4X or IP 66

ELECTRICAL REQUIREMENTS

Item	Volts / Phase / Hertz
Motor	480 VAC / 3 Phase / 60 HZ
Special Wiring Conditions	National Electric Code

MAINTENANCE REQUIREMENTS

Construction	Modular for ease of assembly / dismantling
Modularization	Heaviest modular item (excludes bridge beams and end trucks) shall be < 5 tons.
Retrieval	Crane must be retrievable
Decontamination	Crane-mounted equipment to withstand occasional washdown during decontamination.

ADDITIONAL REQUIREMENTS

1. Crane-mounted motors, electrical cabinets, etc. to be sealed to withstand occasional washdown during decontamination.
2. Deleted
3. All cranes shall be designed to allow operator positioning to within +/- 3/8".
4. Deleted
5. Must be able to hold and control suspended payload without mechanical braking for sustained periods.
6. Deleted
7. Deleted
8. Power supply is required at hook for crane held tools.
9. Motor horsepower estimated for plant electrical load sizing. Seller to provide.
10. This drawing provided basic outlines, design objectives, and bounding dimensions to contracted design or fabrication supplier(s) and shall not be used to confirm the as built WTP structure, system or component identified herein. See vendor information for final configuration provided in conformance to purchase order 24590-QL-POA-MJKG-00002.
11. The crane will infrequently be subject to operating temperatures near 150°F for up to 12 hours.
12. The full range of hoist speed is not required for all loads.
13. Revision 3 removed calculation reference, symbols column, shield door corner obstruction information, duplicate "range of lift" dimension, gridline distance requirements, and several notes; changed outcell room name, units of dose, outcell room contamination and radiation classification, capacity, range of lift, uppermost bridge feature callout, bridge rail elevation, lowest point of crane, low hook elevation, side approaches, end approaches, maximum crane dimensions, hoist speeds, and several notes; and added MHD reference, rail type, and maximum wheel load.
- ▶ 14. Revision 1 changes: Changed additional requirements, drives, and description ⚠4
- ▶ 15. Revision 2 changes: Revised based on 24590-HLW-DCA-PL-03-002 Rev 0, and editorial changes. Changed recovery drive type; was VFD ⚠4
- ▶ 16. Trolley may not extend past fully compressed end truck bumper. ⚠4
- ▶ 17. Revised sketch on page 3, changed Safety Classification from SDS to APC; Quality Level changed from QL to CM ⚠4 and revised environmental conditions ⚠4

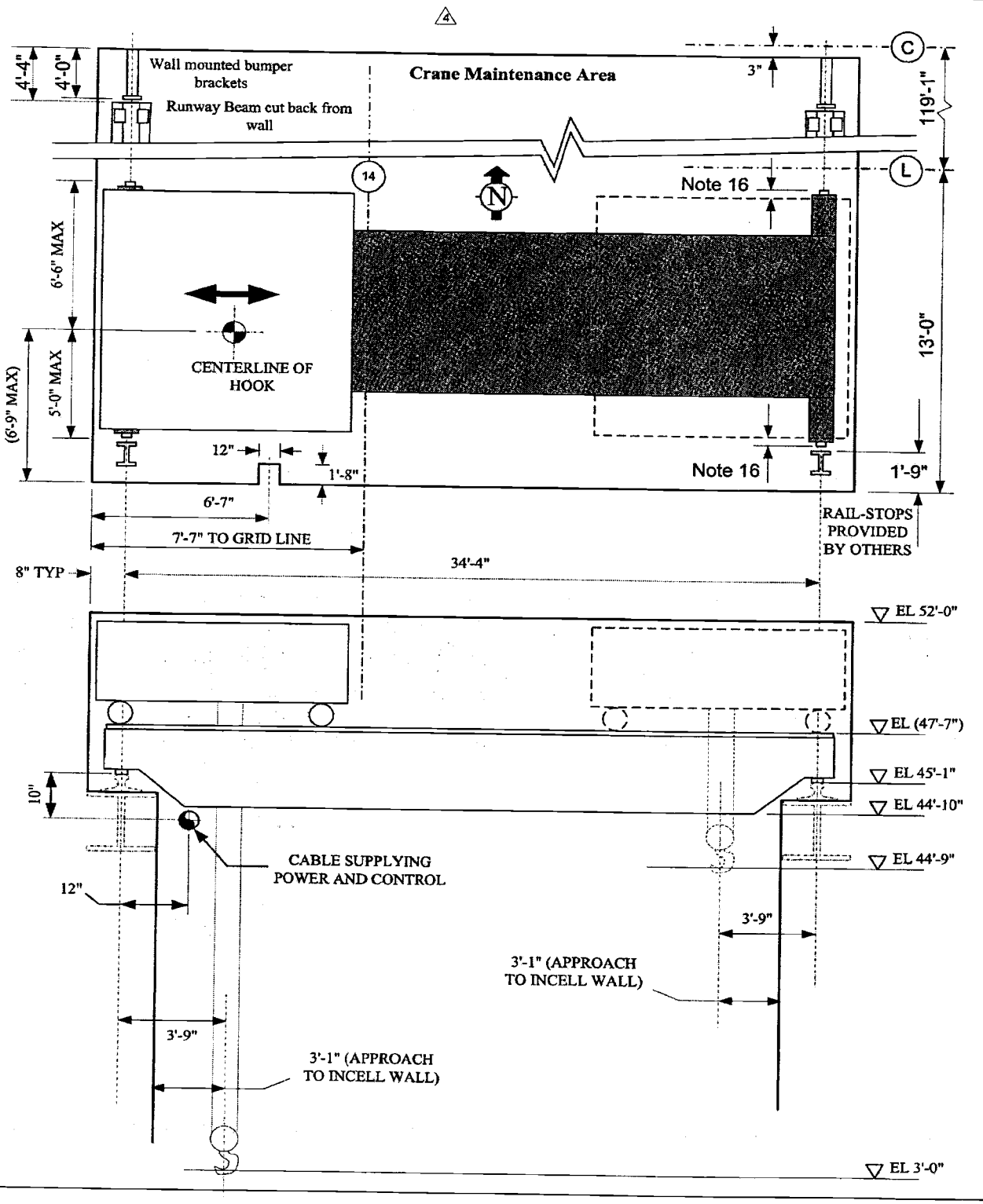
4
Wall mounted bumper brackets
Runway Beam cut back from wall
Crane Maintenance Area
4'-4"
4'-0"
3"
C
119'-1"
L
14
N
Note 16
6'-6" MAX
5'-0" MAX
(6'-9" MAX)
CENTERLINE OF HOOK
13'-0"
12"
1'-8"
Note 16
1'-9"
6'-7"
7'-7" TO GRID LINE
RAIL-STOPS PROVIDED BY OTHERS
8" TYP
34'-4"
EL 52'-0"
EL (47'-7")
EL 45'-1"
EL 44'-10"
EL 44'-9"
10"
CABLE SUPPLYING POWER AND CONTROL
12"
3'-9"
3'-1" (APPROACH TO INCELL WALL)
3'-9"
3'-1" (APPROACH TO INCELL WALL)
EL 3'-0"

BECHTEL	Mechanical Handling Data Sheet Top Running, Double Girder	▲4 CM	Data Sheet No. 24590-HLW-M0D-HSH-00181	Rev. 4
			Plant Item No. 24590-HLW-MJ-HSH-CRN-00014	

Project	RPP-WTP	Description	Melter 2 Cave Main Crane
Project No.	24590	Supporting Calculation No.	N/A
Planning Area		Associated Drawing No.	N/A
System No.	HSH	Associated Specification No.	24590-WTP-3PS-MJKG-T0003
Building No.	30	Associated MR No.	24590-QL-MRA-MJKG-00002
Quality Level	▶CM ▲4	Associated MHD No.	24590-HLW-M7-HSH-00002002
Seismic Category	SC-II		
Function	Melter Cave 2 Support		

R10704044

DESIGN CRITERIA

ISSUED BY RPP-WTP PDC

Design Life	40 years	Safety Classification	▶APC ▲4

OPERATING ENVIRONMENT			In-Cave Rm # H-0106		CMA Rm # H-0303		List All Special
			Min	Max	Min	Max	Conditions
Temperature		deg F	59	113	59	113	TID is derived using maximum local exposure assumed full time, ie multiplied by 24x365x40
Relative Humidity		%	0	70	0	70	
Radiological	gamma	rad/ 40 yrs	▶ 7.0*E+6 TID ▲4		▶3.5*E+3 ▲4		
	neutron	rad/ 40 yrs	Negligible		Negligible		
Radiological Classification			R5		▶R3 ▲4		
Contamination Classification			C5		▶C3 ▲4		

CRANE REQUIREMENTS

Type of Crane	Top Running Double Girder Electric Overhead Traveling Crane		
Service Information	CMAA 70-2000, Class E	Capacity	25 Ton
Crane Operation Indoors?	Yes, In-Cave	Main Hoist	25 Ton
Material Handled	Melter Cave Components	Auxiliary Hoist	N/A
Class Information	Class E	Trolley	25 Ton
No. of Cranes Required	1	Bridge	25 Ton
ASCE Rail Type	175 lb/yd		
Max Wheel Load	42,000 lbs		

OPERATING CHARACTERISTICS AND FREQUENCY OF MOVEMENT

Hoist- Range of Lift	41'-9"	No. lifts/day	1
Average Moves - Bridge	1/2 Runway Length	Moves/day	1
Average Moves - Trolley	3/4 Bridge Length	Moves/day	1

CRANE DIMENSIONS AND ELEVATIONS		ft - in.
Lowest Obstruction Elevation		52'-0"
Uppermost bridge feature	▲4	▶ (47'-7" MAXIMUM) BY VENDOR
Bridge Rail Elevation		45'-1"
Lowest Point of Crane Elevation		44'-10"
High Hook Elevation		44'-9"
Low Hook Elevation		3'-0"
Side Approach - hoist center line to West Rails		3'-9" MAXIMUM
Side Approach - hoist center line to East Rails		3'-9" MAXIMUM
Distance from Grid line "9" to Inside face of West Wall	▲4	▶ 6'-3" (REF) - SEE SKETCH (pg 3)
Distance from hoist center line to end-truck South bumper		5'-0" MAXIMUM
Distance from hoist center line to end-truck North bumper		6'-6" MAXIMUM
Distance from hoist center line to In-Cave South Wall	▲4	▶ 6'-9" MAXIMUM (REF)
Distance from hoist center line to CMA North Wall		10'-6" MAXIMUM (REF)
Distance from Grid Line "L" to inside face of South Wall	▲4	▶ 13'-0"
Total distance between inside wall faces of CMA and Cave		131'-10" (REF)
Runway Rails Span		34'-4"

Date	REV	Revisions	By	Checked	Supervisor	Approved
8/10/06	4	See note 17	N J Darwen	A. Whitford	P. Snider	D. Wilsey
02/10/05	3	See note 13	Matt Robinson	Andy Whitford	Phil Snider	Dave Wilsey
09/08/03	2	See note 15	Andy Whitford	Lawrnel Harrison	Grant Marr	Dave Wilsey
11/27/02	1	See note 14	David Horton	Paul Carter	Joni Weamer/ Jim	Dave Wilsey
02/26/02	0	Issued for Procurement	Joeseph Roach	Andy Whitford	Jim Brower	Dave Wilsey

Mechanical Handling Data Sheet Top Running, Double Girder	Data Sheet No. 24590-HLW-M0D-HSH-00181	Rev. 4
	Plant Item No. 24590-HLW-MJ-HSH-CRN-00014	

DRIVE TYPE SPEED AND HORSEPOWER

Drives	Drive Type	Speed	Horsepower	Nominal Speed (ft/m): Slow	Fast
Main Hoist Drive Type	Flux Vector	Variable 0 - 25	30 HP	5	20
Recovery Hoist Drive Type	Single Speed	Single Speed	15 HP	4	
Main Bridge Drive Type	VFD	Variable 0 - 50	4 HP	5	50
Recovery Bridge Drive Type	Single Speed	Single Speed	1 HP	5	
Main Trolley Drive Type	VFD	Variable 0-25	1.5 HP	5	25
Recovery Trolley Drive Type	Single Speed	Single Speed	0.75 HP	5	
Powered Hook	DC Motor	Fixed	0.05 HP	1-2	

CONDUCTOR TYPE

Bridge	Cable Reel
Trolley	Cable Track

CONTROLS

Method of Control	Integrated control network (remote) or panel pushbuttons (local)
Location of Control	Operating corridor or facility control room (remote) or panel (local)
Type of Control Enclosure	NEMA 4X or IP 66

ELECTRICAL REQUIREMENTS

Item	Volts / Phase / Hertz
Motor	480 VAC / 3 Phase / 60 HZ
Special Wiring Conditions	National Electric Code

MAINTENANCE REQUIREMENTS

Construction	Modular for ease of assembly / dismantling
Modularization	Heaviest modular item (excludes bridge beams and end trucks) shall be < 5 tons.
Retrieval	Crane must be retrievable
Decontamination	Crane-mounted equipment to withstand occasional washdown during decontamination.

ADDITIONAL REQUIREMENTS (NOTES):

1. Crane-mounted motors, electrical cabinets, etc. to be sealed to withstand occasional washdown during decontamination.
2. Deleted
3. All cranes shall be designed to allow operator positioning to within +/- 3/8".
4. Deleted
5. Must be able to hold and control suspended payload without mechanical braking for sustained periods.
6. Deleted
7. Deleted
8. Power supply is required at hook for crane held tools.
9. Motor horsepower estimated for plant electrical load sizing. Seller to provide.
10. This drawing provided basic outlines, design objectives, and bounding dimensions to contracted design or fabrication supplier(s) and shall not be used to confirm the as built WTP structure, system or component identified herein. See vendor information for final configuration provided in conformance to purchase order 24590-QL-POA-MJKG-00002.
11. The crane will infrequently be subject to operating temperatures near 150°F for up to 12 hours.
12. The full range of hoist speed is not required for all loads.
13. Revision 3 removed calculation reference, symbols column, shield door corner obstruction information, duplicate "range of lift" dimension, gridline distance requirements, and several notes; changed outcell room name, units of dose, outcell room contamination and radiation classification, capacity, range of lift, uppermost bridge feature callout, bridge rail elevation, lowest point of crane, low hook elevation, side approaches, end approaches, maximum crane dimensions, hoist speeds, and several notes; and added MHD reference, rail type, and maximum wheel load.
14. ▶ Revision 1 changes: Changed additional requirements, drives, and description △4
15. ▶ Revision 2 changes: Revised based on 24590-HLW-DCA-PL-03-002 Rev 0, and editorial changes. Changed recovery drive type; was VFD △4
16. ▶ Trolley may not extend past fully compressed end truck bumper. △4
17. ▶ Revised sketch on page 3, changed Safety Classification from SDS to APC; Quality Level changed from QL to CM and revised environmental conditions △4

4

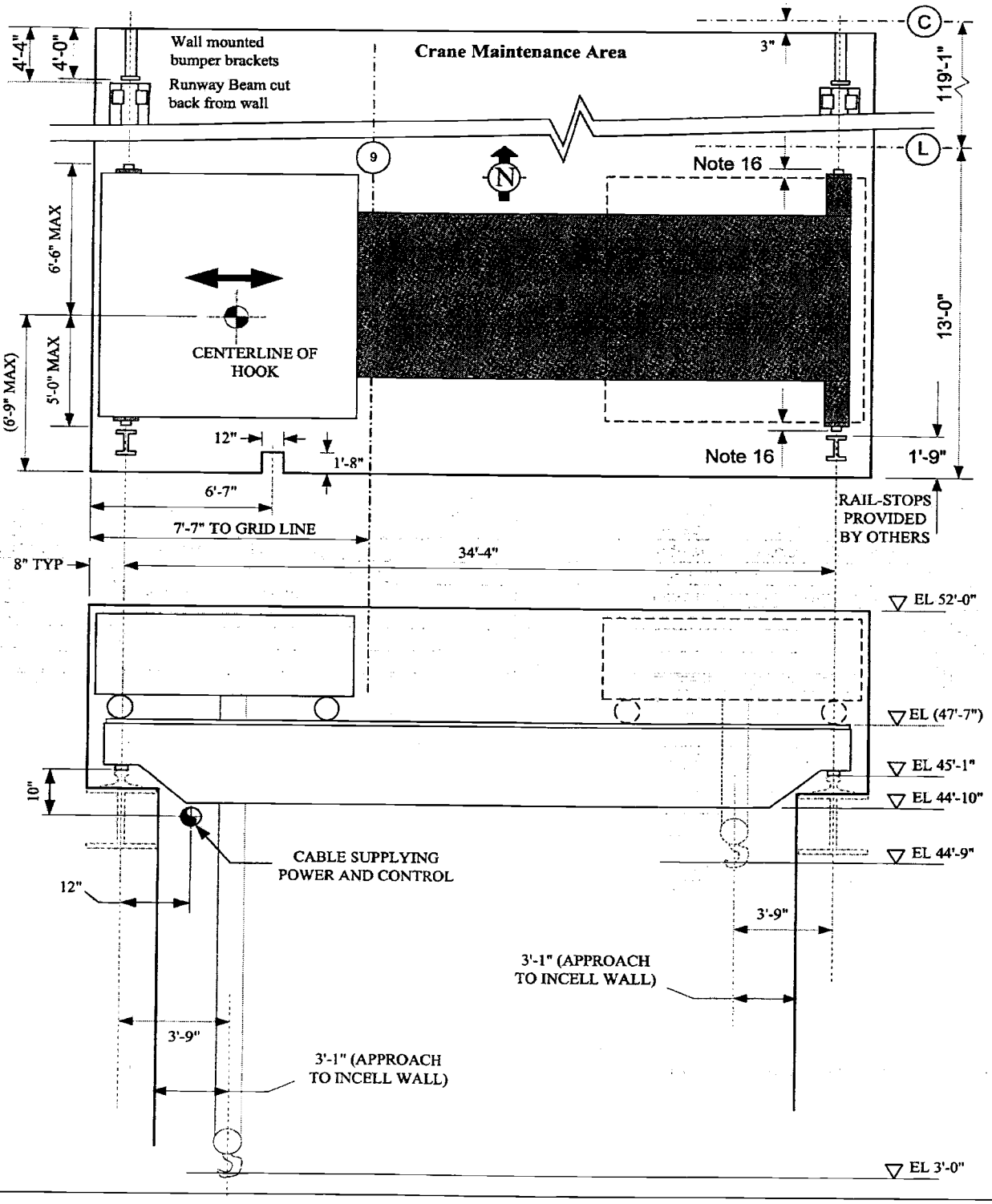
4'-4"
4'-0"
Wall mounted bumper brackets
Runway Beam cut back from wall
Crane Maintenance Area
3"
C
119'-1"
L
9
N
Note 16
6'-6" MAX
(6'-9" MAX)
5'-0" MAX
CENTERLINE OF HOOK
13'-0"
12"
1'-8"
Note 16
1'-9"
6'-7"
7'-7" TO GRID LINE
RAIL-STOPS PROVIDED BY OTHERS
8" TYP
34'-4"
EL 52'-0"
EL (47'-7")
EL 45'-1"
EL 44'-10"
10"
CABLE SUPPLYING POWER AND CONTROL
EL 44'-9"
12"
3'-9"
3'-1" (APPROACH TO INCELL WALL)
3'-9"
3'-1" (APPROACH TO INCELL WALL)
EL 3'-0"

DECONTAMINATION CAVE CRANE
24590-HLW-MJ-HDH-CRN-00005 6
24590-QL-POA-MJKG-00002 18
24590-HLW-JC-HDH-PNL-00017

BRIDGE TRAVEL
- JZ 3101 PFB FWD/RVS (VSPDR)
- TS 3172A DI HI TEMP (MTR)
- TS 3172B DI HI TEMP (MTR)
- ZS 3103 DI SKCA (OVER)
- ZS 3104 DI SKCA (UNDER)
- ZS 3105 DI POSN
- ZS 3106 DI ULTN
- ZS 3107 DI ULTS
- JZ 3108 PFB RSE/LWR (DR) (RSYS)
- ZS 3110 DI RETRD (RSYS)
- ZS 3111 DI ENGAD (RSYS)

BRIDGE TRAVEL (CONT)
- JZ 3155 PFB FWD/RVS (VSPDR) (RSYS)
- TS 3173A DI HI TEMP (MTR) (RSYS)
- TS 3173B DI HI TEMP (MTR) (RSYS)
- ZS 3174 DI POSN
- YS 3175 DI CW
- YS 3176 DI CCW
- TS 3177A DI HI TEMP (MTR) (RCVY)
- TS 3177B DI HI TEMP (MTR) (RCVY)
- TS 3177C DI HI TEMP (MTR) (RCVY)
- TS 3177D DI HI TEMP (MTR) (RCVY)
- TS 3181 DI HI TEMP (MTR)

HOIST
- JZ 3112 PFB RSE/LWR (VSPRD)
- TS 3113 DI HI TEMP (MTR)
- YY 3114 DO ENGA (BK)
- ZS 3115 DI ENGAD (BK)
- JZ 3116 PFB RSE/LWR (DR) (RSYS)
- TS 3117 DI HI TEMP (MTR)
- ZS 3119 DI ENGAD (BK) (RSYS)
- YY 3120 DO ENGA (BK)
- ZS 3121 DI ENGAD (BK)
- ZS 3133 FLT (REEVING)
- JZ 3143 PFB MULTF (TQLM)

HOIST (CONT)
- YY 3122 DO ENGA (BK) (RSYS)
- ZS 3123 DI ENGAD (BK) (RSYS)
- WS 3182 90% LOAD
- WS 3183 110% LOAD
- ZE 3128 PFB POSN
- SS 3160 DI OVSP (SCTRL)
- ZS 3130 DI GEAR SWITCH SEE NOTE 2
- ZS 3131 DI ULTRSD
- YS 3184 DI UNBALANCE
- JZ 3141 PFB ROT (DR)
- ZS 3136 DI HOIST RCVY POSN

TROLLEY TRAVEL
- JZ 3145 PFB FWD/RVS (VSPDR)
- TS 3178 DI HI TEMP (MTR)
- ZS 3147 DI POSN A&B
- ZS 3148 DI ULTW
- ZS 3149 DI ULTE
- JZ 3150 PFB FWD/RVS (VSPDR) (RSYS)
- ZS 3153 DI RETRD (RSYS) A TO D
- FS 3179 DI HI TEMP (MTR) (RSYS)
- JZ 3151 PFB RSE/LWR (RSYS)
- ZS 3154 DI (RSYS)

TROLLEY TRAVEL (CONT)
- TS 3180A DI HI TEMP (MTR) (RSYS)
- TS 3180B DI HI TEMP (MTR) (RSYS)
- TS 3180C DI HI TEMP (MTR) (RSYS)
- TS 3180D DI HI TEMP (MTR) (RSYS)

TRANSMITTER/RECEIVER
- XY 3155 TX/RX

HOLD#1 14

DECONTAMINATION CAVE CRANE MAINTENANCE AREA VERTICAL SHIELD DOOR
24590-HLW-AD-HDH-DOOR-00002 18
24590-QL-POA-ADDH-00007
24590-HLW-JC-HDH-PNL-00025

OUTCAVE
SCREW DRIVE BRAKE ASSYS
- YY 3204 DO ENGA (BK1)
- ZS 3206 DI DISENGD (BK1)
- YY 3205 DO ENGA (BK2)
- ZS 3207 DI DISENGD (BK2)
- SY 3215 DI OVSP (BK1)
- SY 3216 OVSP (BK2)

DOOR TRAVEL
- JZ 3201 PFB OPEN/CLS (VSPDR)
- QT 3217 PFB MOTOR DIAGNOSTIC
- YY 3218 DO ENGA (MTR BK)

INCAVE DOOR TRAVEL
- ZS 3210 DI OPND
- ZS 3211 DI CLSD

HOLD#2 14

DECONTAMINATION CAVE CRANE MAINTENANCE AREA EAST JIB CRANE (LOCATED ON OPPOSITE WALL)
24590-HLW-MJ-HDH-CRN-00007
24590-CM-POA-MJKH-00002
(LOCALLY CONTROLED)
- JZ 5101 RSE/LWR
- JZ 5105 ROT (DR)
- JZ 5111 TROLLEY (DR)
- YY 5114 HST ENGA (BK)
- YY 5115 TROLLEY ENGA (BK)
- YY 5116 ROT ENGA (BK)
- ZS 5103 ULTRSD
- ZS 5104 ULT LWRD
- WS 5107 WT
- TS 5108 HST HI TEMP (MTR)
- TS 5109 ROT HI TEMP (MTR)

DECONTAMINATION CAVE CRANE MAINTENANCE AREA WEST JIB CRANE
24590-HLW-MJ-HDH-CRN-00006
24590-CM-POA-MJKH-00002
(LOCALLY CONTROLED)
- JZ 5001 RSE/LWR
- JZ 5011 TROLLEY (DR)
- JZ 5005 ROT (DR)
- YY 5013 HST ENGA (BK)
- YY 5014 TROLLEY ENGA (BK)
- YY 5015 ROT ENGA (BK)
- ZS 5002 FWD
- ZS 5003 ULTRSD
- ZS 5004 ULT LWRD
- WS 5007 WT
- TS 5008 HST HI TEMP (MTR)
- TS 5009 ROT HI TEMP (MTR)
- ZS 5012 REV

NOTES

FOR GENERAL NOTES AND REFERENCES SEE 24590-HLW-M7-HDH-00001001

1. DRAWING REVISION IS EXTENSIVE, INCORPORATION OF VENDOR CODE 1 & 2 INFORMATION, REMOVAL OF BOLD AND UNDERLINE AND LT DESIGNATIONS.
2. 4 DI's GEARED LIMIT SWITCH WITH 4 POSITIONS (ZS-3130)
   - ULTRSD
   - RSD
   - SLOWDOWN
   - LWRD

SHIELD DOOR MAINT AREA C2/R2/R3 HP0505

EL. 72'-0"

CORRIDOR C2/R2 HC0418

DECONTAMINATION CAVE CRANE MAINTENANCE AREA C3/R3/R5

EL. 58'-0"

TRANSMITTER/RECEIVER XY 5113

DECONTAMINATION CAVE CRANE MAINTENANCE AREA 3" SPA DOOR
24590-HLW-AD-HDH-DOOR-00005
24590-QL-POA-ADDB-00001

SUB-CHANGE C2/C3/R2 H-0313

EL. 37'-0"

H-0313A

DECONTAMINATION CAVE SHIELD WINDOW 24590-WTP-AD-30-SWIN-00032

DECONTAMINATION CAVE SHIELD WINDOW 24590-WTP-AD-30-SWIN-00031

HC0208

DECONTAMINATION VESSELS

DECONTAMINATION CAVE SHIELD WINDOW 24590-WTP-AD-30-SWIN-00030

EL. 14'-0"

NEUTRALIZATION VESSEL

CANISTER RINSE TUNNEL C3/C5/R3/R5 H-B039B

PLATFORM EL. (-)5-0

EL. (-)16'-6"

EL. (-)21'-0"

FOR DECON VESSEL INSTRUMENTS SEE 24590-HLW-M6-HDH-00001

CANISTER DECONTAMINATION SYSTEM C3/C5/R3/R5 H-B035

CANISTER STORAGE TRANSFER TUNNEL C3/R3/R5 H-B037B

CANISTER DECONTAMINATION CAVE C3/R3/R5 H-0133

P1 P2 P3 P4

SUB-CHANGE C2/C3/R2 H-0131A

EL. 20'-0"

EL. 3'-0"

EL. 0'-0"

CORRIDOR C2/R2 HC0014

SUB-CHANGE C2/C3/R2 H-B033A

CORRIDOR C2/R2 HC0016

EL. (-)31'-0"

DECONTAMINATION CAVE 12" SPA DOOR
24590-HLW-AD-HDH-DOOR-00006
24590-QL-POA-ADDB-00001

SECTION C-C
24590-HLW-M7-HDH-00001002

DECONTAMINTION CAVE CRANE MAINTENANCE AREA CABLE REELING UNIT
24590-HLW-MH-HDH-RCVY-00004
24590-QL-POA-MJKG-00002
24590-HLW-JC-HDH-PNL-00017 18

HOLD#3 4

(OUTCAVE)
- JZ 3501 PFB FWD/RVS (VSPDR)
- ZS 3508 DI ENGAD (BK)
- YY 3509 DO ENGA (BK)
- ZS 3507 DI ROTATION SENSOR

(INCAVE)
- YS 3510 DI PRES
- ZS 3506 DI SKCA

Please note that source, special nuclear, and byproduct materials, as defined in the Atomic Energy Act of 1954 (AEA) are regulated at the U. S. Department of Energy (DOE) facilities exclusively by DOE acting pursuant to its AEA authority. DOE asserts that pursuant to AEA, it has sole and exclusive responsibility and authority to regulate source, special nuclear, and byproduct materials at DOE-owned nuclear facilities. Information contained herein on radionuclides is provided for process description purposes only.

REV	DESCRIPTION	ORG	CHKD	RVWD	APVD	DATE
2	ISSUED FOR CONSTRUCTION - REVISED TO INCORPORATE CHANGES IDENTIFIED IN NOTE 1 INCORPORATION OF DCN 24590-HLW-WTN-HDH-00002	DRB	CEK	SCW	AM	9/24/03
1	ISSUED FOR PROCUREMENT - SEE 24590-HLW-M7-HDH-00001002, REV 1, NOTE 15	JSL	AC	NM/JBTV PS		9/11/03
0	ISSUED FOR PROCUREMENT	JSI	MSL	NA	JB/DW RV	9/25/02

Q QUALITY DESIGNATOR

REVISION HISTORY

ISSUED BY: TFNWFP/DOE
ISSUE STAMP

	PROJECT No.	24590
	SITE	HANFORD
	AREA	200E
	BUILDING No.	30

	BY	DATE
ORIGINATOR	JS LEAM	9/24/02
CHECKER	MS LEONARD	9/24/02
APPROVER	JB/DW/R VOKE	9/25/02
REVIEWER	NA	

CONTENT APPLICABLE TO ALARA? [X] YES [ ] NO
ADR NO.: 24590-HLW-ADR-W-02-002 REV: 1
SAFETY SCREEN REQUIREMENTS: [ ] NO EMS IMPACT [X] YES

SAFETY SCREEN IS REQUIRED FOR DRAWING TYPES IDENTIFIED IN

BECHTEL

RIVER PROTECTION PROJECT
WASTE TREATMENT PLANT
2435 STEVENS CENTER PLACE
RICHLAND, WA 99354

CONTRACT No: DE-AC27-01RV14136

HLW VITRIFICATION SYSTEM HDH MECHANICAL HANDLING DIAGRAM CANISTER DECONTAMINATION HANDLING SYSTEM

SCALE: NONE

24590-HLW-M7-HDH-00001005 REV 2

SIZE - 44x34

COMPUTER GENERATED - MANUAL CHANGES ARE PROHIBITED

FORM 6.10-1 (REVISION 10/17/2003)

STORAGE CAVE CRANE MAINTENANCE AREA EAST JIB CRANE 24590-HLW-MJ-HEH-CRN-00006 24590-CM-POA-MJKH-00002 (LOCALY CONTROLED)

STORAGE CAVE CRANE MAINTENANCE AREA WEST JIB CRANE (NOT SHOWN - LOCATED ON OPPOSITE WALL) 24590-HLW-MJ-HEH-CRN-00005 24590-CM-POA-MJKH-00002 (LOCALY CONTROLED)

STORAGE CAVE CRANE 24590-HLW-MJ-HEH-CRN-00003 24590-QL-POA-MJKG-00002 24590-HLW-JC-HEH-PNL-00005 <13>

BRIDGE TRAVEL DRIVE: JZ 2801 RSE/LWR; JZ 2802 ROT (DR); JZ 2807 FWD/RVS; YY 2803 HST ENGA (BK); YY 2814 TRLY ENGA (BK); YY 2815 ROT ENGA (BK); WS 2811 WT; ZS 2805 ULTRSD; ZS 2806 ULTLWRD; ZS 2809 POSN FWD; ZS 2810 POSN RVS; TS 2808 HI TEMP MTR

JZ 2901 RSE/LWR; JZ 2902 ROT (DR); JZ 2907 FWD/REV; YY 2903 HST ENGA (BK); YY 2915 TRLY ENGA (BK); YY 2916 ROT ENGA (BK); WS 2911 WT; ZS 2905 ULTRSD; ZS 2906 ULTLWRD; ZS 2909 POSN FWD; ZS 2910 POSN RVS; TS 2908 HI TEMP MTR

HOLD <3>

TRANSMITTER/RECEIVER: XY 2914 TR/RX

BRIDGE TRAVEL DRIVE: JZ 2501 FWD/RVS (VSPDR); ZS 2504 SKCA (UNDER); ZS 2505A POSN; ZS 2505B POSN; ZS 2506 ULTN; ZS 2507 ULTS; JZ 2508 RSE/LWR (DR); JZ 2509 FWD/RVS (RSYS)

BRIDGE TRAVEL DRIVE (CONT): TS 2567 HI TEMP MTR; TS 2568 HI TEMP MTR; TS 2569 HI TEMP MTR; TS 2570 HI TEMP MTR; TS 2571 HI TEMP MTR (RSYS); TS 2572 HI TEMP MTR (RSYS); TS 2573 HI TEMP MTR (RSYS); TS 2574 HI TEMP MTR (RSYS); ZS 2545 ENGAD (RSYS); ZS 2546 ENGAD (RSYS); ZS 2510 ENGAD (RSYS); ZS 2511 ENGAD (RSYS); SEE NOTE 2

HOIST: JZ 2512 RSE/LWR (VSPDR); TS 2513 HI TEMP MTR; ZS 2515 ENGAD (BK); JZ 2516 RSE/LWR (RSYS); TS 2517 HI TEMP MTR (RSYS); ZS 2519 POSN (RSYS); ZS 2521 ENGAD (BK); ZS 2523 ENGAD (BK) (RSYS); SS 2547 OVSP (SCTRL); ZS 2530 SEE NOTE 3; ZS 2531 ULTRSD

HOIST (CONT): ZS 2532 UNBALANCED; ZS 2533A FLT (REEVING); ZS 2533B FLT (REEVING); WS 2526 90% LOAD; WS 2524 110% LOAD; ZS 2536 ENGAD (RSYS); ZS 2539 CCW; ZS 2540 CW; JZ 2558 FWD/RVS (TCOL); JZ 2541 ROT (DR); ZE 2502A POSN; ZE 2502B POSN

TROLLEY TRAVEL DRIVE: JZ 2548 FWD/RVS (VSPDR); TS 2579 HI TEMP (MTR); ZS 2550A POSN; ZS 2550B POSN; ZS 2551 ULTW; ZS 2552 ULTE; JZ 2553 FWD/RVS (RSYS); JZ 2554 RSE/LWR (DR)

TROLLEY TRAVEL DRIVE (CONT): TS 2575 HI TEMP (MTR); TS 2576 HI TEMP (MTR); TS 2577 HI TEMP (MTR); TS 2578 HI TEMP (MTR); TS 2580 HI TEMP (MTR) (RSYS); ZS 2556 ENGAD (RSYS); ZS 2557 ENGAD (RSYS); ZS 2561 ENGAD (RSYS); ZS 2562 ENGAD (RSYS)

TRANSMITTER/RECEIVER: XY 2563 TX/RX; A1; A0

HOLD <3>

SHIELD DOOR MAINT AREA C2/C3/R2 EL 72'-0" HP0505

STORAGE CAVE CRANE MAINTENANCE AREA C3/R3/R5 EL 20'-0"

SUB CHANGE C2/C3/R2 EL 58'-0" H-0422

EL. 58'-0"

SUB CHANGE C2/C3/R2 EL 37'-0" H-0313 H-0313B

EXPORT CAVE CRANE MAINTENANCE AREA 3" SPA DOOR 24590-HLW-AD-HEH-DOOR-00003 24590-QL-POA-ADDB-00001

EL. 37'-0"

CORRIDOR C2/R2 EL 37'-0" HC0309

EL. 37'-0"

CANISTER STORAGE CAVE C3/R5 EL 0'-0" H-0132

STORAGE CAVE SHIELD WINDOW 24590-HLW-AD-30-SWIN-00034

RINSE BOGIE MAINTENANCE AREA C3/R3 EL (-)16'-0" H-B039A

EL. 20'-0"

OPERATION AREA C2/R2 EL 3'-0" H-0131

EL. 3'-0"

EL. 0'-0"

CORRIDOR C2/R2 EL (-)21'-0" HCB014

CASK HANDLING TUNNEL C2/C3/R3/R5 EL (-)33'-0" H-B033B

CANISTER STORAGE TRANSFER TUNNEL C2/C3/R3/R5 EL (-)33'-0" H-B037B

NON-ACTIVE DRAIN COLLECTION AREA C2/R2 EL (-)2'-0" H-B036

FIRE WATER COLLECTION AREA C2/R2 EL (-)33'-0" H-B038

EL (-)33'-0" H-B037

EL. -16'-0"

EL. -21'-0"

EL. -31'-0"

SEE 24590-HLW-M7-HEH-00001006

SECTION A-A
24590-HLW-M7-HEH-00001001

SYSTEM HDH - CANISTER DECONTAMINATION HANDLING, SEE DRAWING 24590-HLW-M7-HDH-00001001

NOTES

FOR GENERAL NOTES AND REFERENCES SEE 24590-HLW-M7-HEH-00001001

1. DRAWING REVISION 2
   - DRAWING REVISION IS EXTENSIVE, INCORPORATION OF VENDOR CODE 2 INFORMATION. REMOVAL OF BOLD AND UNDERLINE AND LT DESIGNATIONS.
   - ADDED NOTE 4.
   - BROUGHT INLINE WITH THE SED24590-WTP-ENS-03-002-04.
2. 2 DI's - 1) RECOVERY ENGA
   2) RECOVERY RETRACTED
3. 4 DI's, GEARED LIMIT SWITCH WITH 4 POSITIONS
   - ULTRSD
   - RSD
   - SLOWDOWN
   - LWRD
4. ALIGNMENT TRIGGERS FOR HEH-CRN-00003

   15 BRIDGE TRAVEL TRIGGERS AND 5 TROLLEY TRAVEL TRIGGERS ARE PROVIDED TO INDICATE THE FOLLOWING POSITIONS:
   - END OF TRAVEL/STOP.
   - SHIELD DOOR PASSAGE POSITION.
   - IMPORT/EXPORT HATCHES.
   - CANISTER RACK ALIGNMENT POSITIONS.

Please note that source, special nuclear, and byproduct materials, as defined in the Atomic Energy Act of 1954 (AEA) are regulated at the U. S. Department of Energy (DOE) facilities exclusively by DOE acting pursuant to its AEA authority. DOE asserts that pursuant to AEA, it has sole and exclusive responsibility and authority to regulate source, special nuclear, and byproduct materials at DOE-owned nuclear facilities. Information contained herein on radionuclides is provided for process description purposes only.

REV	DESCRIPTION	ORG	CHKD	RVWD	APVD	DATE
2	ISSUED FOR CONSTRUCTION - REVISED TO INCORPORATE CHANGES IDENTIFIED IN NOTE 1 INCORPORATION OF DCN'S 24590-HLW M7N-HEH-00002 24590-HLW M7N-HEH-00003					
1	ISSUED FOR PROCUREMENT- SEE 24590-HLW-M7-HEH-00001001, REV 1, NOTE 10	JSL	BKS	NM/JSL PS	TV	9/11/03
0	ISSUED FOR PROCUREMENT	JSL	MSL	NA	JB/DW RV	9/25/02

Q QUALITY DESIGNATOR

REVISION HISTORY

ISSUED BY RPP-WTP PBC	PROJECT No. 24590
	SITE HANFORD
	AREA 200E
ISSUE STAMP	BUILDING No. 30

	BY	DATE
ORIGINATOR	JS LEAM	9/24/02
CHECKER	MS LEONARD	9/24/02
APPROVER	JB/DW/R VOKE	9/25/02
REVIEWER	NA	

CONTENT APPLICABLE TO ALARA? [X] YES [ ] NO
ADR NO. 24590 HLW-ADR-M-02-002 REV: 3
SAFETY SCREEN REQUIRED? [X] YES [ ] NO EMS INITIAL IF "YES"

SAFETY SCREEN IS REQUIRED FOR DRAWING TYPES IDENTIFIED IN 24590-WTP-GPP-SREQ-002

2 COMPUTER GENERATED - MANUAL CHANGES NOT PERMITTED

RIVER PROTECTION PROJECT
WASTE TREATMENT PLANT
2435 STEVENS CENTER PLACE
RICHLAND, WA 99354

CONTRACT No: DE-AC27-01RV14136

HLW VITRIFICATION SYSTEM HEH MECHANICAL HANDLING DIAGRAM CANISTER EXPORT HANDLING SYSTEM

SCALE: NONE

24590-HLW-M7-HEH-00001004

REV 2

B-SIZE - 44434

BORE/FEED

04/18/2007 12:48:29 PM

P:\Drawn\rev44228\HLWM7HEH00001004.dgn

FORM F_SDNJOB 02/2003

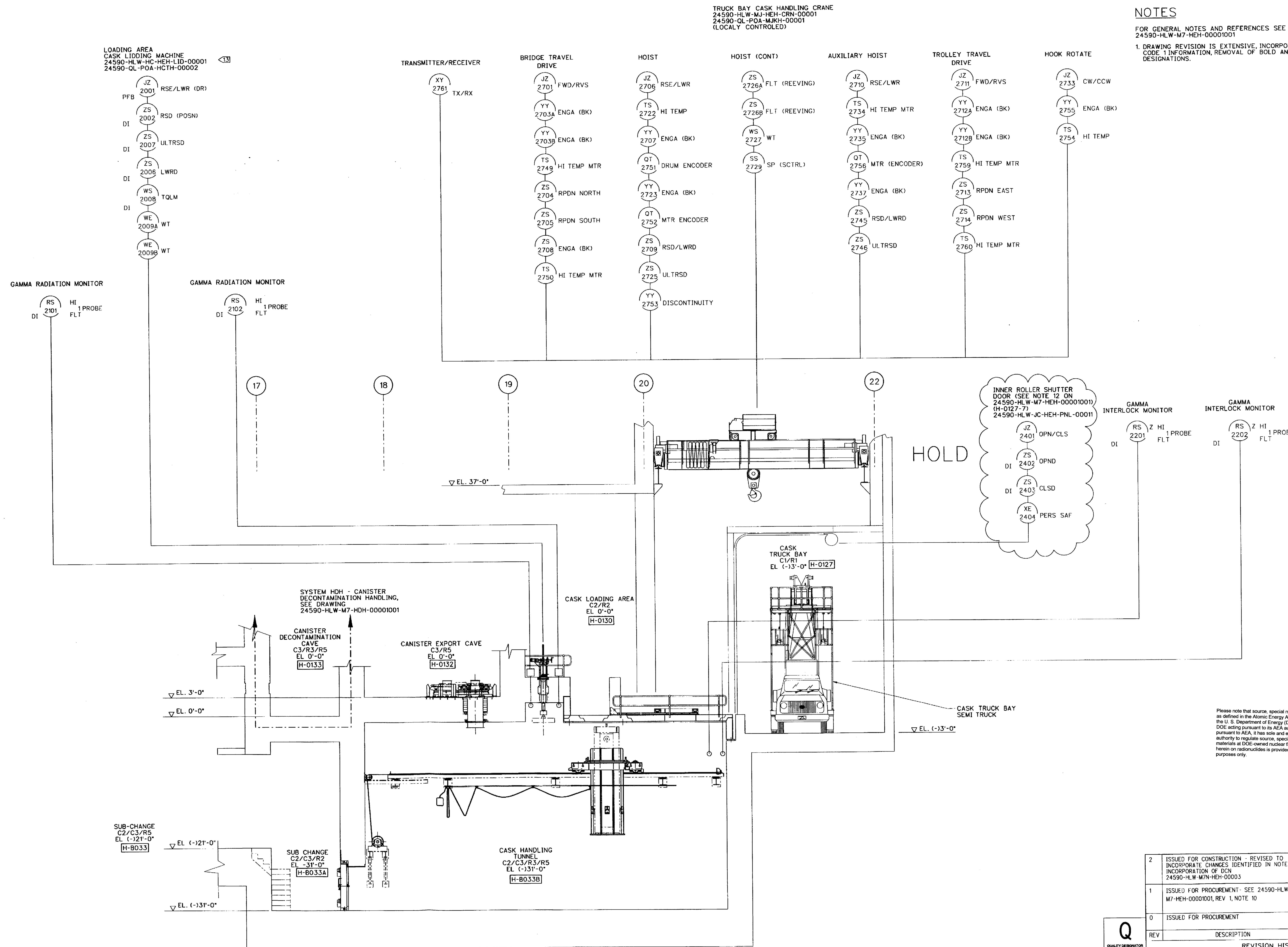

SECTION B-B
24590-HLW-M7-HEH-00001002

NOTES

FOR GENERAL NOTES AND REFERENCES SEE 24590-HLW-M7-HEH-00001001

1. DRAWING REVISION IS EXTENSIVE, INCORPORATION OF VENDOR CODE 1 INFORMATION, REMOVAL OF BOLD AND UNDERLINE AND LT DESIGNATIONS.

Please note that source, special nuclear, and byproduct materials, as defined in the Atomic Energy Act of 1954 (AEA) are regulated at the U. S. Department of Energy (DOE) facilities exclusively by DOE acting pursuant to its AEA authority. DOE asserts that pursuant to AEA, it has sole and exclusive responsibility and authority to regulate source, special nuclear, and byproduct materials at DOE-owned nuclear facilities. Information contained herein on radionuclides is provided for process description purposes only.

REV	DESCRIPTION	ORG	CHKD	RVWD	APVD	DATE
2	ISSUED FOR CONSTRUCTION - REVISED TO INCORPORATE CHANGES IDENTIFIED IN NOTE 1 INCORPORATION OF DCN 24590-HLW-M7N-HEH-00003	DEB	RJ	SLW		10th May 2007
1	ISSUED FOR PROCUREMENT- SEE 24590-HLW-M7-HEH-00001001, REV 1, NOTE 10	JSL	BKS	NM/JB PS	TV	9/11/03
0	ISSUED FOR PROCUREMENT	JSL	MSL	NA	JB/DW RV	9/25/02

REVISION HISTORY

Q
QUALITY DESIGNATOR

ISSUED BY RPP-WTP PDC
ISSUE STAMP

PROJECT No.	24590
SITE	HANFORD
AREA	200E
BUILDING No.	30

	BY	DATE
ORIGINATOR	JS LEAM	9/24/02
CHECKER	MS LEONARD	9/24/02
APPROVER	JB/DW/R VOKE	9/25/02
REVIEWER	NA	

CONTENT APPLICABLE TO ALARA? [X] YES [ ] NO
ADR NO. 24590-HLW-ADR-M-02-002 REV: 3
SAFETY SCREEN REQUIRED? [X] YES [ ] NO E&NS INITIAL IF YES AC 5/9/07

RIVER PROTECTION PROJECT
WASTE TREATMENT PLANT
2435 STEVENS CENTER PLACE
RICHLAND, WA 99354

CONTRACT No: DE-AC27-01RV14136

HLW VITRIFICATION SYSTEM HEH MECHANICAL HANDLING DIAGRAM CANISTER EXPORT HANDLING SYSTEM

SCALE: NONE
24590-HLW-M7-HEH-00001005
REV 2

SAFETY SCREEN IS REQUIRED FOR DRAWING TYPES IDENTIFIED IN 24590-WTP-GPP-SREG-002

'E' SIZE - 44x34
COMPUTER GENERATED - MANUAL CHANGES NOT PERMITTED

R10773937
05/07/2007 04:36:19 PM
PLOTTED BY: dbartor
C:\Work\dms04228\HLWM7HEH00001005.dgn

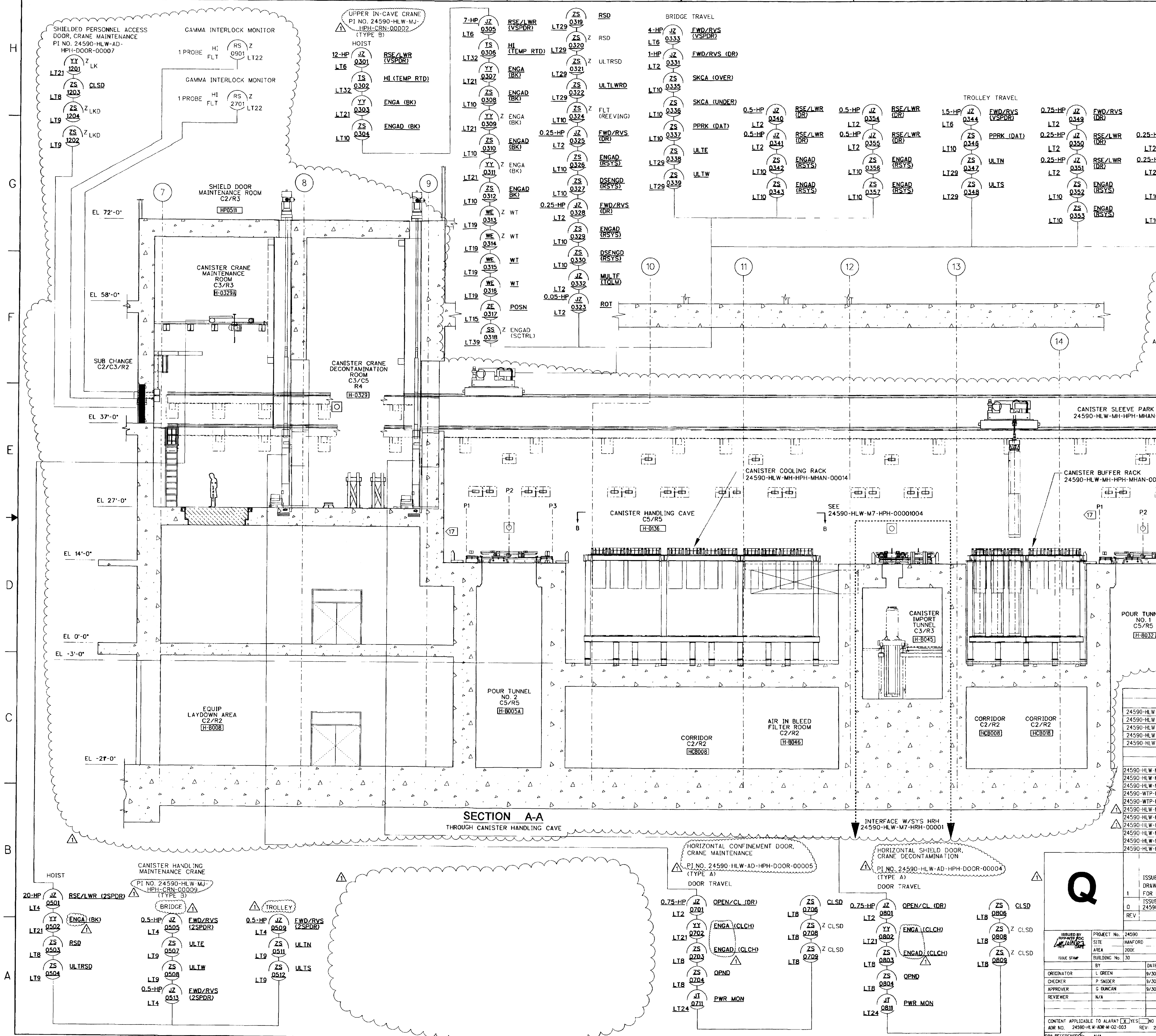

NOTES:

1. DEVICE POSITIONS SHOWN ARE NOTATIONAL. REFER TO RELEVANT DPD FOR TRUE POSITIONS
2. THE DRIVE MOTORS AND BRAKE INSTRUMENTATION FOR THE CABLE REELING SYSTEM ARE LOCATED OUT-CELL.
3. SEE 24590-HLW-M7-HPH-00001002 FOR ADDITIONAL NOTES 4-12, 24590-HLW-M7-HPH-00001003 FOR ADDITIONAL NOTES 13-19, 24590-HLW-M7-HPH-00001004 FOR ADDITIONAL NOTES 20-22, 24590-HLW-M7-HPH-00001005 FOR ADDITIONAL NOTES 23-27

Please note that source, special nuclear, and byproduct materials, as defined in the Atomic Energy Act of 1954 (AEA) are regulated at the U. S. Department of Energy (DOE) facilities exclusively by DOE acting pursuant to its AEA authority. DOE asserts that pursuant to AEA, it has sole and exclusive responsibility and authority to regulate source, special nuclear, and byproduct materials at DOE-owned nuclear facilities. Information contained herein on radionuclides is provided for process description purposes only.

DRAWING INDEX

DWG NO	REV	TITLE
24590-HLW-M7-HPH-00001001	1	HLW VIT SYS HPH MHD CSTR POUR HDLG
24590-HLW-M7-HPH-00001002	1	HLW VIT SYS HPH MHD CSTR POUR HDLG
24590-HLW-M7-HPH-00001003	1	HLW VIT SYS HPH MHD CSTR POUR HDLG
24590-HLW-M7-HPH-00001004	1	HLW VIT SYS HPH MHD CSTR POUR HDLG
24590-HLW-M7-HPH-00001005	1	HLW VIT SYS HPH MHD CSTR POUR HDLG

REFERENCE DRAWINGS

DWG NO	REV	TITLE
24590-HLW-M5-HPH-00001001	0	HLW VIT SYS HPH MFD LVL 2 CSTR POUR HDLG
24590-HLW-M7-HRH-00001	2	HLW VIT SYSTEM HRH MHD CANISTER RECEIPT HDL
24590-HLW-M7-HDH-00001001	0	HLW SYS HDH MHD CANISTER DECONTN HDLG
24590-WTP-M0-50-00012	A	MECH HDLG SYMBOLS AND LEGENDS SH 1 OF 2
24590-WTP-M0-50-00013	A	MECH HDLG SYMBOLS AND LEGENDS SH 2 OF 2
24590-HLW-M6-HPH-00002		P&ID - HLW SHIELD GAS SUPPLY SYSTEM HPH
24590-HLW-M6-ASX-00002	B	P&ID - HLW AUTOSAMPLING SYS PNEUMATIC TRANS
24590-HLW-M6-HPH-00001		P&ID - HLW PLANT SERVICE AIR SYSTEM HPH
24590-HLW-M6-HMP-00008	0	P&ID - HLW MELTER PROCESS SYSTEM
24590-HLW-M7-HSH-00002001		HLW VIT SYS HSH MHD MELTER CAVE 2
24590-HLW-M7-HSH-00001001	0	HLW VIT SYS HSH MHD MELTER CAVE 1

Q

REV	DESCRIPTION	ORG	CHKD	RVWD	APVD	DATE
1	ISSUED FOR PROCUREMENT. SEE NOTE 22 ON DRAWING 24590-HLW-M7-HPH-00001004 REV 1 FOR REVISION DETAILS	CG	BKS	[illegible]	[illegible]	9.23.03
0	ISSUED FOR PROCUREMENT- SUPERCEDES 24590-HLW-M7-310-00001001, REV B	LG	PS	N/A	GD	9/30/02

REVISION HISTORY

ISSUED BY RPP-WTP PDC
INIT DATE
ISSUE STAMP

PROJECT No.	24590
SITE	HANFORD
AREA	200E
BUILDING No.	30

	BY	DATE
ORIGINATOR	L GREEN	9/30/02
CHECKER	P SNIDER	9/30/02
APPROVER	G DUNCAN	9/30/02
REVIEWER	N/A	

CONTENT APPLICABLE TO ALARA? [X] YES [ ] NO
ADR NO. 24590-HLW-ADR-M-02-003 REV: 2
DIM REFERENCE No. N/A N/A

BECHTEL
RIVER PROTECTION PROJECT
WASTE TREATMENT PLANT
2435 STEVENS CENTER PLACE
RICHLAND, WA 99352

CONTRACT No: DE-AC27-01RV14136

HLW VITRIFICATION SYSTEM HPH MECHANICAL HANDLING DIAGRAM CANISTER POUR HANDLING CANISTER HANDLING CAVE

SCALE: NONE
24590-HLW-M7-HPH-00001001
REV 1

'E' SIZE - 44x34
COMPUTER GENERATED - MANUAL CHANGES NOT PERMITTED

WHEN REFERENCING DRAWING AND DIM NUMBERS IN DOCUMENTS, BE SURE TO INCLUDE DASHES BETWEEN ELEMENTS

09/23/2003 01:54:51 PM

FORM E_SEMDGN 02/2003

PLOTTED BY: lvgreen
C:\Work\dms04233\HLWM7HPH00001001.dgn

LOWER IN-CAVE CRANE
PI NO. 24590-HLW-MJ-HPH-CRN-00001
(TYPE B)

TROLLEY TRAVEL

1.5-HP	LT6	JZ 0444	FWD/RVS (VSPDR)	
	LT10	ZS 0446	PPRK (DAT)	
	LT29	ZS 0447	ULTN	
	LT29	ZS 0448	ULTS	
0.75-HP	LT2	JZ 0449	FWD/RVS (DR)	
0.25-HP	LT2	JZ 0450	RSE/LWR (DR)	
0.25-HP	LT2	JZ 0451	RSE/LWR (DR)	
	LT10	ZS 0452	ENGAD (RSYS)	
	LT10	ZS 0453	ENGAD (RSYS)	

0.25-HP	LT2	JZ 0458	RSE/LWR (DR)	
0.25-HP	LT2	JZ 0459	RSE/LWR (DR)	
	LT10	ZS 0460	ENGAD (RSYS)	
	LT10	ZS 0461	ENGAD (RSYS)	

BRIDGE TRAVEL

4-HP	LT6	JZ 0433	FWD/RVS (VSPDR)	
	LT10	ZS 0435	SKCA (OVER)	
	LT10	ZS 0436	SKCA (UNDER)	
	LT10	ZS 0437	PPRK (DAT)	
	LT29	ZS 0438	ULTE	
	LT29	ZS 0439	ULTW	
0.5-HP	LT2	JZ 0440	RSE/LWR (DR)	
0.5-HP	LT2	JZ 0441	RSE/LWR (DR)	
	LT10	ZS 0442	ENGAD (RSYS)	
	LT10	ZS 0443	ENGAD (RSYS)	

1-HP	LT2	JZ 0431	FWD/RVS (DR)	
0.5-HP	LT2	JZ 0454	RSE/LWR (DR)	
0.5-HP	LT2	JZ 0455	RSE/LWR (DR)	
	LT10	ZS 0456	ENGAD (RSYS)	
	LT10	ZS 0457	ENGAD (RSYS)	

	LT10	ZS 0426	ENGAD (RSYS)	
	LT10	ZS 0427	DSENGD (RSYS)	
0.25-HP	LT2	JZ 0428	FWD/RVS (DR)	
	LT10	ZS 0429	ENGAD (RSYS)	
	LT10	ZS 0430	DSENGD (RSYS)	
	LT2	JZ 0432	MULTF (TQLM)	
0.05-HP	LT2	JZ 0423	ROT	

HOIST

	LT19	WE 0413 Z	WT	
	LT19	WE 0414 Z	WT	
	LT19	WE 0415	WT	
	LT19	WE 0416	WT	
	LT15	ZE 0417	POSN	
	LT39	SS 0418 Z	ENGAD (SCTRL)	
	LT29	ZS 0419	RSD	
	LT29	ZS 0420 Z	RSD	
	LT29	ZS 0421 Z	ULTRSD	
	LT29	ZS 0422	ULTLWRD	
	LT10	ZS 0424 Z	FLT (REEVING)	
0.25-HP	LT2	JZ 0425	FWD/RVS (DR)	

12-HP	LT6	JZ 0401	RSE/LWR (VSPDR)	
	LT32	IS 0402	HI (TEMP RTD)	
	LT21	YY 0403	ENGA (BK)	
	LT10	ZS 0404	ENGAD (BK)	
7-HP	LT6	JZ 0405	RSE/LWR (VSPDR)	
	LT32	IS 0406	HI (TEMP RTD)	
	LT21	YY 0407	ENGA (BK)	
	LT10	ZS 0408	ENGAD (BK)	
	LT21	YY 0409 Z	ENGA (BK)	
	LT10	ZS 0410	ENGAD (BK)	
	LT21	YY 0411 Z	ENGA (BK)	
	LT10	ZS 0412	ENGAD (BK)	

GAMMA INTERLOCK MONITOR
1 PROBE HI FLT RS 3601 Z LT22

GAMMA INTERLOCK MONITOR
1 PROBE HI FLT RS 1001 Z LT22

CABLE REELING SYSTEM
UPPER IN-CAVE CRANE
PI NO. 24590-HLW-MH-HPH-RCVY-00009
(TYPE B)

2	0.5-HP	LT26 JZ 0201	FWD/RVS (VSPDR)	
2		LT9 ZS 0202	ENGAD (BK)	
2		LT21 YY 0203	ENGA (BK)	
		LT9 ZS 0204	SKCA (OVER)	
		LT9 ZS 0205	SKCA (UNDER)	

NOTES:

4. DELETED
5. THIS P&ID INDICATES INSTALLATION OF PROXIMITY SWITCH AT POUR SPOUT DRIP PAN SUPPLIED AS PART OF DURATEK MELTER PACKAGE
6. REFER TO DRAWING 24590-HLW-M7-HPH-00001001 FOR DRAWING INDEX AND REFERENCE DRAWINGS
7. THE REQUIRED BATCH SEQUENCES, PERMISSIVES, INTERLOCKS, ALARMS AND OPERATOR INTERFACE POINTS ARE FULLY DESCRIBED IN THE SOFTWARE FUNCTIONAL SPECIFICATION FOR CANISTER POUR HANDLING, 24590-HLW-3PS-HPH-00001
8. FOR PERMISSIVE AND INTERLOCKS IMPORTANT TO SAFETY (ITS) REFER TO SOFTWARE FUNCTIONAL SPECIFICATION 24590-HLW-3PS-PPJ-T00001
9. DELETED
10. POUR TUNNEL 1& 2 BOGIE POSITIONS
    P1 - POUR TUNNEL HATCH
    P2 - RAMP DOWN FOR P1
    P3 - DELETED
    P4 - DELETED
    P5 - DELETED
    P6 - RAMP DOWN FOR P7
    P7 - POUR SPOUT
    P8 - DELETED
11. LOCATION FOR DOOR RETRIEVAL COMPONENTS TO BE DETERMINED AT A LATER DATE
12. DELETED

SHIELD DOOR MAINTENANCE ROOM C2/R3 H-0511
CANISTER CRANE DECONTAMINATION ROOM C3/C5 R4 H-0329
CANISTER CRANE MAINTENANCE ROOM C3/R3 H-0329A
SUB CHANGE C2/C3/R2
EL 72'-0"
EL 58'-0"
EL 37'-0"
EL 23'-0"
EL -3'-0"

CANISTER HANDLING CAVE C5/R5 H-0136
MSM 24590-HLW-MJ-HPH-MANIP-00010
MSM 24590-HLW-MJ-HPH-MANIP-00011
MSM 24590-HLW-MJ-HPH-MANIP-00009
MSM 24590-HLW-MJ-HPH-MANIP-00013
MSM 24590-HLW-MJ-HPH-MANIP-00008
MSM 24590-HLW-MJ-HPH-MANIP-00012
SHIELD WINDOW 24590-WTP-AD-30-SWIN-00025
SHIELD WINDOW 24590-WTP-AD-30-SWIN-00024
SHIELD WINDOW, CRANE MAINTENANCE 24590-WTP-AD-30-SWIN-00003
WELD STATION TABLE 24590-HLW-MZ-HPH-BENCH-00004
INTERFACE W/SYS HDH 24590-HLW-M7-HDH-00001002
POUR TUNNEL NO. 1 C5/R5 H-8032
CANISTER IMPORT TUNNEL C3/R3 H-8045
POUR TUNNEL NO. 2 C5/R5 H-8005A
INTERFACE W/SYS HRH 24590-HLW-M7-HRH-00001

SECTION F-F
THROUGH CANISTER HANDLING CAVE
FROM 24590-HLW-M7-HPH-00001001

VERTICAL SHIELD DOOR, CRANE DECONTAMINATION
PI NO. 24590-HLW-AD-HPH-DOOR-00001 (TYPE A)

VERTICAL CONFINEMENT DOOR, CRANE MAINTENANCE
PI NO. 24590-HLW-AD-HPH-DOOR-00008 (TYPE A)

OUT-CAVE SCREW		YY 1109	ENGA (BK)	
		ZS 1110	ENGAD (BK)	
		YY 1111	ENGA (BK)	
		ZS 1112	ENGAD (BK)	
OUT-CAVE DOOR TRAVEL	15-HP	JZ 1101	OPEN/CL (DR)	
	LT24	JT 1115	PWR MON	
IN-CAVE DOOR TRAVEL		ZS 1102	OPND	
		ZS 1104	CLSD	
		ZS 1106	Z CLSD	
		ZS 1107	Z CLSD	
IN-CAVE DOOR RETRIEVAL SYSTEM	11	ZS 1113	ENGAD	
	11	ZS 1114	ENGAD	

OUT-CAVE SCREW		YY 1309	ENGA (BK)	
		ZS 1310	ENGAD (BK)	
		YY 1311	ENGA (BK)	
		ZS 1312	ENGAD (BK)	
OUT-CAVE DOOR TRAVEL	15-HP	JZ 1301	OPEN/CL (DR)	
	LT24	JT 1315	PWR MON	
IN-CAVE DOOR TRAVEL		ZS 1302	OPND	
		ZS 1304	CLSD	
		ZS 1306	Z CLSD	
		ZS 1307	Z CLSD	
IN-CAVE DOOR RETRIEVAL SYSTEM	11	ZS 1313	ENGAD	
	11	ZS 1314	ENGAD	

CABLE REELING SYSTEM
LOWER IN-CAVE CRANE
PI NO. 24590-HLW-MH-HPH-RCVY-00007
(TYPE B)

2	0.5-HP	LT26 JZ 0101	FWD/RVS (VSPDR)	
2		LT9 ZS 0102	ENGAD (BK)	
2		LT21 YY 0103	ENGA (BK)	
		LT9 ZS 0104	SKCA (OVER)	
		LT9 ZS 0105	SKCA (UNDER)	

AREA COVERED BY THIS MHD

KEY PLAN AT EL 14'-0"

Please note that source, special nuclear, and byproduct materials, as defined in the Atomic Energy Act of 1954 (AEA) are regulated at the U. S. Department of Energy (DOE) facilities exclusively by DOE acting pursuant to its AEA authority. DOE asserts that pursuant to AEA, it has sole and exclusive responsibility and authority to regulate source, special nuclear, and byproduct materials at DOE-owned nuclear facilities. Information contained herein on radionuclides is provided for process description purposes only.

Q

REV	DESCRIPTION	ORG	CHKD	RVWD	APVD	DATE
1	ISSUED FOR PROCUREMENT. SEE NOTE 22 ON DRAWING 24590-HLW-M7-HPH-00001004 REV 1 FOR REVISION DETAILS	LG	DKS	YMH	RV	9.23.03
0	ISSUED FOR PROCUREMENT - SUPERCEDES 24590-HLW-M7-STD-00001007,REV B	LG	PS	N/A	RV	9/23/02

ISSUED BY APPROVED FOR CONSTRUCTION ISSUE STAMP

	BY	DATE
ORIGINATOR	L GREEN	9/18/02
CHECKER	P SNIDER	9/18/02
APPROVER	R YOKE	9/23/02
REVIEWER	N/A	

CONTENT APPLICABLE TO ALARA? [X] YES [ ] NO
ADR NO. 24590-HLW-ADR-M-02-003 REV: 2
DM REFERENCE No. N/A

PROJECT No.	24590
SITE	HANFORD
AREA	200E
BUILDING No.	30

BECHTEL

RIVER PROTECTION PROJECT
WASTE TREATMENT PLANT
2435 STEVENS CENTER PLACE
RICHLAND, WA 99352

CONTRACT No: DE-AC27-01RV14136

HLW VITRIFICATION SYSTEM HPH MECHANICAL HANDLING DIAGRAM CANISTER POUR HANDLING CANISTER HANDLING CAVE

SCALE: NONE
24590-HLW-M7-HPH-00001002
REV 1

E-SIZE - 44x34
COMPUTER GENERATED - MANUAL CHANGES NOT PERMITTED

WHEN REFERENCING DRAWING AND DM NUMBERS IN DOCUMENTS, BE SURE TO INCLUDE DASHES BETWEEN ELEMENTS

09/09/2003 02:48:36 PM

FILE: E:\Mydocs\cad-t\233\HLW\M7_H0100001002.dgn

FORM E_SDN.DGN 02/2003

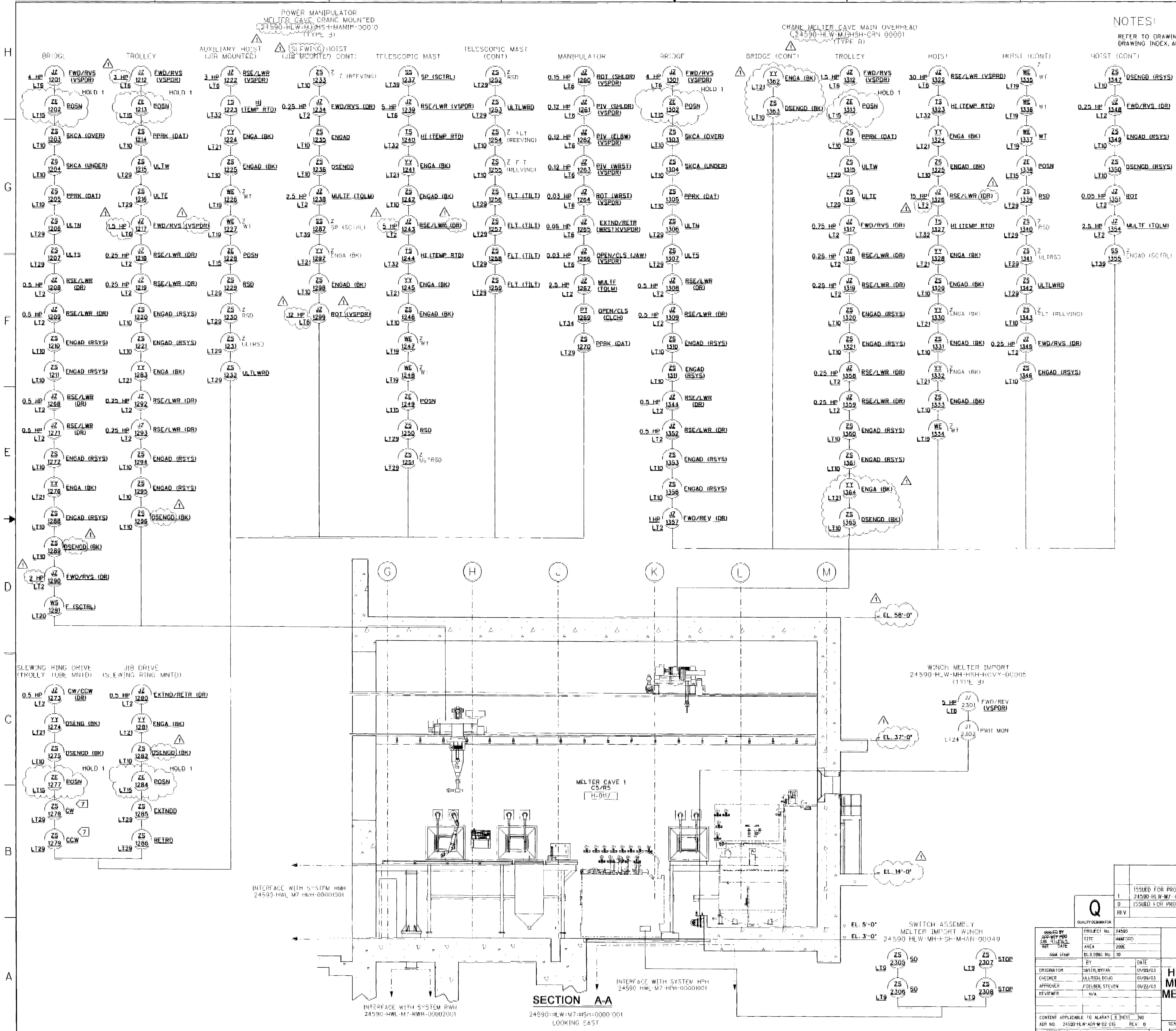

NOTES:

REFER TO DRAWING 24590-HLW-M7-HSH-00001001 FOR NOTES, DRAWING INDEX, AND REFERENCE DRAWINGS

Please note that source, special nuclear, and byproduct materials, as defined in the Atomic Energy Act of 1954 (AEA) are regulated at the U. S. Department of Energy (DOE) facilities exclusively by DOE acting pursuant to its AEA authority. DOE asserts that pursuant to AEA, it has sole and exclusive responsibility and authority to regulate source, special nuclear, and byproduct materials at DOE-owned nuclear facilities. Information contained herein on radionuclides is provided for process description purposes only.

Q
QUALITY DESIGNATOR

REV	DESCRIPTION	ORG	CHKD	RVWD	APVD	DATE
1	ISSUED FOR PROCUREMENT - SEE NOTE 9 ON 24590-HLW-M7-HSH-00001001 REV 1					09-17-03
0	ISSUED FOR PROCUREMENT	BRS	DJU	N/A	SF	07/22/03

REVISION HISTORY

PROJECT No.	24590
SITE	HANFORD
AREA	200E
BUILDING No.	30

RIVER PROTECTION PROJECT
WASTE TREATMENT PLANT
2435 STEVENS CENTER PLACE
RICHLAND, WA 99352

CONTRACT No: DE-AC27-01RV14136

	BY	DATE
ORIGINATOR	SMITH, BRYAN	01/09/03
CHECKER	ULLRICH, DOUG	01/09/03
APPROVER	FOELBER, STEVEN	01/22/03
REVIEWER	N/A	

CONTENT APPLICABLE TO ALARA? X YES NO
ADR NO. 24590-HLW-ADR-M-02-015 REV: 0
DIM REFERENCE No. N/A

HLW VITRIFICATION SYSTEM HSH MECHANICAL HANDLING DIAGRAM MELTER CAVE SUPPORT HANDLING MELTER CAVE 1

SCALE: NONE
24590-HLW-M7-HSH-00001002 REV 1

'E' SIZE - 44x34
COMPUTER GENERATED - MANUAL CHANGES NOT PERMITTED
WHEN REFERENCING DRAWING AND DIM NUMBERS IN DOCUMENTS, BE SURE TO INCLUDE DASHES BETWEEN ELEMENTS
09/18/2003 03:30:00 PM

POWER MANIPULATOR
MELTER CAVE CRANE MOUNTED
24590-HLW-MJ-HSH-MANIP-00023
(TYPE A)

BRIDGE
- 4 HP LT6 JZ 4701 FWD/RVS (VSPDR)
- HOLD 1
- LT15 ZE 4702 POSN
- LT10 ZS 4703 SKCA (OVER)
- LT10 ZS 4704 SKCA (UNDER)
- LT10 ZS 4705 PPRK (DAT)
- LT29 ZS 4706 ULTN
- LT29 ZS 4707 ULTS
- 0.5 HP LT2 JZ 4708 RSE/LWR (DR)
- 0.5 HP LT2 JZ 4709 RSE/LWR (DR)
- LT10 ZS 4710 ENGAD (RSYS)
- LT10 ZS 4711 ENGAD (RSYS)
- 0.5 HP LT2 JZ 4712 RSE/LWR (DR)
- 0.5 HP LT2 JZ 4713 RSE/LWR (DR)
- LT10 ZS 4714 ENGAD (RSYS)
- LT10 ZS 4715 ENGAD (RSYS)
- LT21 YY 4716 ENGA (BK)
- LT10 ZS 4717 OSENGD (BK)
- 2 HP LT2 JZ 4718 FWD/RVS (DR)
- LT20 WS 4719 E (SCTRL)

TROLLEY
- 3 HP LT6 JZ 4720 FWD/RVS (VSPDR)
- HOLD 1
- LT15 ZE 4721 POSN
- LT10 ZS 4722 PPRK (DAT)
- LT29 ZS 4723 ULTW
- LT29 ZS 4724 ULTE
- 1.5 HP LT6 JZ 4725 FWD/RVS (VSPDR)
- 0.25 HP LT2 JZ 4726 RSE/LWR (DR)
- 0.25 HP LT2 JZ 4727 RSE/LWR (DR)
- LT10 ZS 4728 ENGAD (RSYS)
- LT10 ZS 4729 ENGAD (RSYS)
- 0.25 HP LT2 JZ 4730 RSE/LWR (DR)
- 0.25 HP LT2 JZ 4731 RSE/LWR (DR)
- LT10 ZS 4732 ENGAD (RSYS)
- LT10 ZS 4733 ENGAD (RSYS)
- LT21 YY 4734 ENGA (BK)
- LT10 ZS 4754 OSENGD (BK)

AUXILIARY HOIST
(JIB MOUNTED)
- 3 HP LT6 JZ 4735 RSE/LWR (VSPDR)
- LT32 TS 4736 HI (TEMP)
- LT21 YY 4737 ENGA (BK)
- LT10 ZS 4738 ENGAD (BK)
- LT19 WE 4739 Z WT
- LT19 WE 4740 Z WT
- LT10 ZE 4741 POSN
- LT29 ZS 4742 RSD
- LT29 ZS 4743 Z RSD
- LT29 ZS 4744 Z ULTRSD
- LT29 ZS 4745 ULTLWRD

SLEWING HOIST
(JIB MOUNTED CONT)
- LT10 ZS 4746 FLT (REEVING)
- 0.25 HP LT2 JZ 4747 FWD/RVS (DR)
- LT10 ZS 4748 ENGAD
- LT10 ZS 4749 OSENGD
- 2.5 HP LT2 JZ 4750 MULTF (TQLM)
- LT39 SS 4751 Z SP (SCTRL)
- LT21 YY 4752 Z ENGA (BK)
- LT10 ZS 4753 ENGAD (BK)
- .12 HP LT6 JZ 4755 ROT (VSPDR) 7

TELESCOPIC MAST
- 5 HP LT2 JZ 4756 RSE/LWR (VSPDR)
- LT32 TS 4757 HI (TEMP RTD)
- LT21 YY 4758 ENGA (BK)
- LT10 ZS 4759 ENGAD (BK)
- 5 HP LT2 JZ 4760 RSE/LWR (DR)
- LT32 TS 4761 HI (TEMP RTD)
- LT21 YY 4762 ENGA (BK)
- LT10 ZS 4763 ENGAD (BK)
- LT19 WE 4764 Z WT
- LT19 WE 4765 Z WT
- LT15 ZE 4766 POSN
- LT29 ZS 4767 RSD
- LT29 ZS 4768 Z ULTRSD
- LT29 ZS 4769 Z RSD

TELESCOPIC MAST
(CONT)
- LT39 SS 4770 SP (SCTRL)
- LT29 ZS 4771 ULTLWRD
- LT10 ZS 4772 Z FLT (REEVING)
- LT10 ZS 4773 Z FLT (REEVING)
- LT29 ZS 4774 FLT (TILT)
- LT29 ZS 4775 FLT (TILT)
- LT29 ZS 4776 FLT (TILT)
- LT29 ZS 4777 FLT (TILT)

MANIPULATOR
- 0.15 HP LT6 JZ 4778 ROT (SHLDR) (VSPDR)
- 0.12 HP LT6 JZ 4779 ELV (SHLDR) (VSPDR)
- 0.12 HP LT6 JZ 4780 ELV (ELBW) (VSPDR)
- 0.12 HP LT6 JZ 4781 ELV (WRST) (VSPDR)
- 0.03 HP LT6 JZ 4782 ROT (WRST) (VSPDR)
- 0.05 HP LT6 JZ 4783 EXTND/RETR (WRST) (VSPDR)
- 0.03 HP LT6 JZ 4784 OPEN/CLS (JAW) (VSPDR)
- LT34 ET 4785 OPEN/CLS (CLCH)
- LT29 ZS 4786 PPRK (DAT)
- 2.5 HP LT2 JZ 4787 MULTF (TQLM)

SLEWING RING DRIVE
(TROLLEY TUBE MNTD)
- 0.5 HP LT2 JZ 4788 CW/CCW (DR)
- LT21 YY 4789 OSENG (BK)
- LT10 ZS 4790 OSENGD (BK)
- HOLD 1
- LT15 ZE 4791 POSN
- LT29 ZS 4792 CW 7
- LT29 ZS 4793 CCW 7

JIB DRIVE
(SLEWING RING MNTD)
- 0.5 HP LT2 JZ 4794 EXTND/RETR (DR)
- LT21 YY 4795 ENGA (BK)
- LT10 ZS 4796 OSENGD (BK)
- HOLD 1
- LT15 ZE 4797 POSN
- LT29 ZS 4798 EXTND
- LT29 ZS 4799 RETRD

CRANE MELTER CAVE MAIN OVERHEAD
24590 HLW MJ-HSH-CRN-00014
(TYPE B)

BRIDGE
- 4 HP LT6 JZ 4801 FWD/RVS (VSPDR)
- HOLD 1
- LT15 ZE 4802 POSN
- LT10 ZS 4803 SKCA (OVER)
- LT10 ZS 4804 SKCA (UNDER)
- LT10 ZS 4805 PPRK (DAT)
- LT29 ZS 4806 ULTN
- LT29 ZS 4807 ULTS
- 0.5 HP LT2 JZ 4808 RSE/LWR (DR)
- 0.5 HP LT2 JZ 4809 RSE/LWR (DR)
- LT10 ZS 4810 ENGAD (RSYS)
- LT10 ZS 4811 ENGAD (RSYS)
- 0.5 HP LT2 JZ 4812 RSE/LWR (DR)
- 0.5 HP LT2 JZ 4813 RSE/LWR (DR)
- LT10 ZS 4814 ENGAD (RSYS)
- LT10 ZS 4815 ENGAD (RSYS)
- 1 HP LT2 JZ 4816 FWD/REV (DR)

BRIDGE (CONT)
- LT21 YY 4862 ENGAD (BK)
- LT10 ZS 4863 OSENGD (BK)

TROLLEY
- 1.5 HP LT6 JZ 4817 FWD/RVS (VSPDR)
- HOLD 1
- LT15 ZE 4818 POSN
- LT10 ZS 4819 PPRK (DAT)
- LT29 ZS 4820 ULTW
- LT29 ZS 4821 ULTE
- 0.75 HP LT2 JZ 4822 FWD/RVS (DR)
- 0.25 HP LT2 JZ 4823 RSE/LWR (DR)
- 0.25 HP LT2 JZ 4824 RSE/LWR (DR)
- LT10 ZS 4825 ENGAD (RSYS)
- LT10 ZS 4826 ENGAD (RSYS)
- 0.25 HP LT2 JZ 4827 RSE/LWR (DR)
- 0.25 HP LT2 JZ 4828 RSE/LWR (DR)
- LT10 ZS 4829 ENGAD (RSYS)
- LT10 ZS 4830 ENGAD (RSYS)
- LT21 YY 4864 ENGAD (BK)
- LT10 ZS 4865 OSENGD (BK)

HOIST
- 30 HP LT6 JZ 4831 RSE/LWR (VSPDR)
- LT32 TS 4832 HI (TEMP RTD)
- LT21 YY 4833 ENGA (BK)
- LT10 ZS 4834 ENGAD (BK)
- 15 HP LT2 JZ 4835 RSE/LWR (DR)
- LT32 TS 4836 HI (TEMP RTD)
- LT21 YY 4837 ENGA (BK)
- LT10 ZS 4838 ENGAD (BK)
- LT21 YY 4839 Z ENGA (BK)
- LT10 ZS 4840 ENGAD (BK)
- LT21 YY 4841 Z ENGA (BK)
- LT10 ZS 4842 ENGAD (BK)
- LT19 WE 4843 Z WT
- LT19 WE 4844 Z WT
- LT19 WE 4845 WT
- LT19 WE 4846 WT

HOIST (CONT)
- LT30 ZS 4855 OSENGD (RSYS)
- 0.25 HP LT2 JZ 4856 FWD/RVS (DR)
- LT10 ZS 4857 ENGAD (RSYS)
- LT10 ZS 4858 OSENGD (RSYS)
- 0.05 HP LT2 JZ 4859 ROT
- 2.5 HP LT2 JZ 4860 MULTF (TQLM)
- LT39 SS 4861 Z ENGAD (SCTRL)
- LT15 ZE 4847 POSN
- LT29 ZS 4848 RSD
- LT29 ZS 4849 Z RSD
- LT29 ZS 4850 Z ULTRSD
- LT29 ZS 4851 ULTLWRD
- LT10 ZS 4852 Z FLT (REEVING)
- 0.25 HP LT2 JZ 4853 FWD/RVS (DR)
- LT10 ZS 4854 ENGAD (RSYS)

HOLD 2

WINCH MELTER IMPORT
24590 HLW MH-HSH-HCVY-00022
(TYPE B)
- 3 HP LT6 JZ 4901 FWD/REV (VSPDR)
- LT24 JI 4902 FWR MON

SWITCH ASSEMBLY
MELTER IMPORT WINCH
24590-HLW-MH-HSH-MAN-00088
- LT9 ZS 4903 SO
- LT9 ZS 4904 SO
- LT9 ZS 4905 STOP
- LT9 ZS 4906 STOP

MELTER CAVE 2
CS/RS
H-0105

EL. 58'-0"
EL. 37'-0"
EL. 14'-0"
EL. 5'-0"
EL. 3'-0"

INTERFACE WITH SYSTEM HMH
24590-HLW-M7-HMH-00002001

INTERFACE WITH SYSTEM RWH
24590-HLW-M7-RWH-00002001

INTERFACE WITH SYSTEM RPH
24590-HLW-M7-HPH-00001901

SECTION A-A
24590-HLW-M7-HSH-00002001
LOOKING EAST

NOTE:
FOR NOTES, DRAWING INDEX, AND REFERENCE DRAWINGS SEE 24590-HLW-M7-HSH-00002001

Please note that source, special nuclear, and byproduct materials, as defined in the Atomic Energy Act of 1954 (AEA) are regulated at the U. S. Department of Energy (DOE) facilities exclusively by DOE acting pursuant to its AEA authority. DOE asserts that pursuant to AEA, it has sole and exclusive responsibility and authority to regulate source, special nuclear, and byproduct materials at DOE-owned nuclear facilities. Information contained herein on radionuclides is provided for process description purposes only.

REV	DESCRIPTION	ORG	CHKD	RVWD	APVD	DATE
0	ISSUED FOR PROCUREMENT					9-9-03

Q

REVISION HISTORY

DESIGNED BY: BNFL Inc. (USA) — NOT TO SCALE

	BY	DATE
ORIGINATOR		9-8-03
CHECKER		9/8/03
APPROVER		9-8-03
REVIEWER		9-16-03

CONTENT APPLICABLE TO A-E/AP? (X) YES ( ) NO
ADR NO. 24590-HLW-ADR-W-02-005 REV. 0
DRM REFERENCE No. N/A

PROJECT No. 24590
SITE HANFORD
ARK 2002
BUILDING No. 30
CONTRACT No. DE-AC27-01RV14136

RIVER PROTECTION PROJECT
WASTE TREATMENT PLANT
2435 STEVENS CENTER PLACE
RICHLAND, WA 99352

HLW VITRIFICATION SYSTEM HSH
MECHANICAL HANDLING DIAGRAM
MELTER CAVE SUPPORT HANDLING
MELTER CAVE 2

SCALE: NONE

24590-HLW-M7-HSH-00002002 REV 0

T. SIZE: 44x36 COMPUTER GENERATED - MANUAL CHANGES NOT PERMITTED

WHEN REFERENCING DRAWING AND DRM NUMBERS IN DOCUMENTS, BE SURE TO INCLUDE LEADING ZEROES BETWEEN ELEMENTS

03/10/2003 02:21:50 PM

H-M-E-SHN2GN 02/2003

R10803467

MECHANICAL SYSTEMS DATA SHEET: VESSEL

PLANT ITEM No. ***24590-HLW-MV-HOP-ABS-00002***

ISSUED BY RPP-WTP PDC

Project:	***RPP-WTP***	P&ID.	***24590-HLW-M6-HOP-00008***
Project No:	***24590***	Process Calculation:	***24590-HLW-M4C-HOP-00011*** 6
Project Site:	***Hanford***	Vessel Drawing	***24590-HLW-3PS-MBT0-T0001 (Vendor Supplied Dwg's TBD)***
Description:	***Melter 1 Silver Mordenite Column***		

Reference Data

Charge Vessels (Tag Numbers)	***None***
Pulsejet Mixers / Agitators (Tag Numbers)	***None***
RFDs/Pumps (Tag Numbers)	***None***

Design Data

Quality Level	***QL-2***		Fabrication Specs	***24590-HLW-3PS-MBT0-T0001***		
Seismic Category	***SC-III***		Design Code	***ASME AG-1/1a & ASME Section VIII, Div. 1***		
Service/Contents	***Filtered Radioactive Gas***		Code Stamp	***No***		
Design Specific Gravity	***0.588***		NB Registration	***No***		
Maximum Operating Volume gal	***N/A***		Weights (lbs)	Empty	Operating	Test
Total Volume gal	***N/A***		Estimated	***14,200***	***35,200***	***35,200***
Environmental Qualification	***None***		Actual *	***39,600***	***55,900***	***55,900***

Inside Diameter	inch	***N/A***			Wind Design	***Not Required***	
Length/Height (TL-TL)	inch	***See note 1***			Snow Design	***Not Required***	
		Vessel Operating	Vessel Design	Coil/Jacket Design	Seismic Design	***24590-WTP-3PS-FB01-T0001 & 24590-HLW-3PS-MBT0-T0001***	
Internal Pressure	psig	***0***	***3***	***N/A***	Seismic Base Moment *	ft*lb	***0***
External Pressure	psig	***1.3 (see note 3)***	***3***	***N/A***	Postweld Heat Treat	***Not Required***	
Temperature	°F	***330***	***330***	***N/A***	Corrosion Allowance	Inch	***0.04***
Min. Design Metal Temp	°F	***59***			Hydrostatic Test Pressure *	psig	***See note 2***
Max Operating Pressure Drop	in-WG	***10***					

Materials of Construction

Component	Material	Minimum Thickness / Size	Containment
Top Head	***N/A***	***N/A***	***N/A***
Shell	***316L***	***1/4" Plate***	***Primary***
Bottom Head	***N/A***	***N/A***	***N/A***
Support	***316L***	***1/4" 3 x 3 angle***	***N/A***
Jacket/Coils/Half-Pipe Jacket	***N/A***	***N/A***	***N/A***
Internals	***316L***	***1/4" Plate***	***N/A***
Pipe	***316L***	***SCH 40***	***N/A***
Forgings/ Bar stock	***N/A***	***N/A***	***N/A***
Gaskets	***Silicone HT***	***N/A***	***N/A***
Bolting	***Varies - See DWGs***	***N/A***	***N/A***

Miscellaneous Data

Orientation	***Horizontal***	Support Type	***20" x 2 7/16" x 1/4" Fabricated Flange 304L***
Insulation Function	***Personnel protection and process temperature control***	Insulation Material	***Calcium Silicate w/0.024" thk, 304 SST Jacket***
Insulation Thickness (inch)	***6"***	Internal Finish	***N/A***
		External Finish	***N/A***

Remarks

* To be determined by the Vendor.

	MECHANICAL SYSTEMS DATA SHEET: VESSEL	PLANT ITEM No. 24590-HLW-MV-HOP-ABS-00002

Equipment Cyclic Data Sheet

Component Plant Item Number:	***24590-HLW-MV-HOP-ABS-00002***
Component Description	***Silver Mordenite Column containment housing***

The information below is provisional and envelopes operational duty for fatigue assessment. It is not to be used as operational data.

Materials of Construction	***316L***
Design Life	***40 yr***
Component Function and Life Cycle Description	***Removal of Iodine-129 and other halogens***

Load Type		Min	Max	Number of Cycles	Comment
Design Pressure (-ve/+ve)	psig	***-3***	***+3***	***1***	***Based on 3 yr melter life***
Operating Pressure (-ve/+ve)	psig	***-1.3***	***+1.5***	***13***	***Based on 3 yr melter life***
Operating Temperature	°F	***59***	***330***	***13***	***Based on 3 yr melter life***
Contents Specific Gravity		***0.588***	***0.588***	***N/A***	
Contents Level	inch	***N/A***	***N/A***	***N/A***	***Gas service, flow through operation***
Localized Features					
Nozzles		***Sampling & Testing Connections***		***3/4" - 150 lb WNF x3***	
Air Inlet		***Flange***			
Delivery		***Flange***			
Supports		****TBD***			

Notes

1. *Maximum outside dimensions: 19'-9 1/4" L (w/o insulation) x 15'-3 1/4" W (w/insulation) x 7'-0" H (bottom of column to top of column grating). Dimensions are ±1/2".*
2. *Pneumatic Test of Housing Pressure Boundary per ASME Section VIII, Div 1. All other testing per ASME AG-1/1a & N509*
3. *Normal operating pressure will be 1.3 psig External. The other pressures shown are design, off-normal conditions.*
4. *The information contained in revision 2 data sheet supercedes the information contained in SDDR 24590-WTP-SDDR-PROC-03-0003.*
5. *Contents of this document are Dangerous Waste Permit affecting.* △6

Safety Screening required?: Yes _X_ No ___ (If yes per 24590-WTP-GPP-SREG-002, E&NS signature required below)

Approval

Rev	Description	System Eng.	Equip. Eng.	Checked	Reviewed/ E&NS	Approved	Date
0	Issued for Purchase	Anthony Cutrona	N/A	David Evans	N/A/N/A	Suzanne Kirk	8/14/02
1	Updated Process datasheet number, revised Vessel Drawing reference (added equipment spec no , & Vendor dwg's are TBD), corrected seismic category from II to III, revised seismic specification number, and added 1a supplement to design code ASME AG-1	Anthony Cutrona	N/A	David Evans	N/A/N/A	Mark Hoffman	11/14/02
2	Secondary offgas rearrangement: Revised operating and design pressure, and operating temperature per 24590-HLW-M6C-HOP-00011 R/C. Added max operating pressure drop. Added note 4 Revised Approval block.	Anthony Cutrona	David Pease	Pat Harrigan	Donna Yarbrough/ N/A	Marla Wright	10/3/03

	MECHANICAL SYSTEMS DATA SHEET: VESSEL	PLANT ITEM No. 24590-HLW-MV-HOP-ABS-00002

3	Updated actual weights, materials of construction, and insulation thickness based on Vendor submittal. Revised norm/max/design temperature per 24590-WTP-SDDR-PROC-03-0411	Anthony Cutrona	David Pease	Pat Harrigan	Donna Yarbrough/ N/A	Marla Wright	12/16/03
4	Revised to comply with CODE 1 vendor submittal 24590-QL-POA-MBT0-00001-11-02, in accordance with CAR: 24590-WTP-CAR-QA-05-120. Incorporated DCN 24590-HLW-MKN-HOP-00007	Jim Rouse	David Pease	Anthony Cutrona	Chris Morley/ N/A	John Julyk	11/27/05
5	Revised note 1: Changed width from 15'-3 1/8" to 15'-3 1/4", added tolerance Added E&NS to Approval section.	Jim Rouse	Anthony Cutrona	Satish Jain	Grant Goolsby/ Chris Meng	John Julyk	11/22/06
6	Revised Process Data Sheet reference to Process Calculation, the data sheet was cancelled. Added Note 5.	Tom Galioto	Anthony Cutrona	Suren Thakkar	Grant Goolsby/ Chris Meng	John Juyk	7/12/07

MECHANICAL SYSTEMS DATA SHEET: VESSEL

PLANT ITEM No. R10803468

24590-HLW-MV-HOP-ABS-00003

ISSUED BY RPP-WTP PDC

Project:	RPP-WTP	P&ID:	24590-HLW-M6-HOP-20008
Project No:	24590	Process Calculation.	24590-HLW-M4C-HOP-00011 / 6
Project Site.	Hanford	Vessel Drawing	24590-HLW-3PS-MBT0-T0001 (Vendor Supplied Dwg's TBD)
Description:	Melter 2 Silver Mordenite Column		

Reference Data

Charge Vessels (Tag Numbers)	None
Pulsejet Mixers / Agitators (Tag Numbers)	None
RFDs/Pumps (Tag Numbers)	None

Design Data

Quality Level		QL-2	Fabrication Specs	24590-HLW-3PS-MBT0-T0001		
Seismic Category		SC-III	Design Code	ASME AG-1/1a & ASME Section VIII, Div. 1		
Service/Contents		Filtered Radioactive Gas	Code Stamp	No		
Design Specific Gravity		0.588	NB Registration	No		
Maximum Operating Volume	gal	N/A	Weights (lbs)	Empty	Operating	Test
Total Volume	gal	N/A	Estimated	14,200	35,200	35,200
Environmental Qualification		None	Actual *	39,600	55,900	55,900

Inside Diameter	inch	N/A			Wind Design	Not Required	
Length/Height (TL-TL)	inch	See note 1			Snow Design	Not Required	
		Vessel Operating	Vessel Design	Coil/Jacket Design	Seismic Design	24590-WTP-3PS-FB01-T0001 & 24590-HLW-3PS-MBT0-T0001	
Internal Pressure	psig	0	3	N/A	Seismic Base Moment *	ft*lb	0
External Pressure	psig	1.3 (see note 3)	3	N/A	Postweld Heat Treat	Not Required	
Temperature	°F	330	330	N/A	Corrosion Allowance	Inch	0.04
Min. Design Metal Temp.	°F	59			Hydrostatic Test Pressure *	psig	See note 2
Max Operating Pressure Drop	in-WG	10					

Materials of Construction

Component	Material	Minimum Thickness / Size	Containment
Top Head	N/A	N/A	N/A
Shell	316L	1/4" Plate	Primary
Bottom Head	N/A	N/A	N/A
Support	316L	1/4" 3 x 3 angle	N/A
Jacket/Coils/Half-Pipe Jacket	N/A	N/A	N/A
Internals	316L	1/4" Plate	N/A
Pipe	316L	SCH 40	N/A
Forgings/ Bar stock	N/A	N/A	N/A
Gaskets	Silicone HT	N/A	N/A
Bolting	Varies - See DWGs	N/A	N/A

Miscellaneous Data

Orientation	Horizontal	Support Type	20" x 2 7/16" x 1/4" Fabricated Flange 304L
Insulation Function	Personnel protection and process temperature control	Insulation Material	Calcium Silicate w/0.024" thk, 304 SST Jacket
Insulation Thickness (inch)	6"	Internal Finish	N/A
		External Finish	N/A

Remarks

* To be determined by the Vendor.

	MECHANICAL SYSTEMS DATA SHEET: VESSEL	PLANT ITEM No.
BECHTEL		24590-HLW-MV-HOP-ABS-00003

Equipment Cyclic Data Sheet

Component Plant Item Number:	24590-HLW-MV-HOP-ABS-00003 6
Component Description	Silver Mordenite Column containment housing

The information below is provisional and envelopes operational duty for fatigue assessment. It is not to be used as operational data.

Materials of Construction	316L
Design Life	40 yr
Component Function and Life Cycle Description	Removal of Iodine-129 and other halogens

Load Type		Min	Max	Number of Cycles	Comment
Design Pressure (-ve/+ve)	psig	-3	+3	1	Based on 3 yr melter life
Operating Pressure (-ve/+ve)	psig	-1.3	+1.5	13	Based on 3 yr melter life
Operating Temperature	°F	59	330	13	Based on 3 yr melter life
Contents Specific Gravity		0.588	0.588	N/A	
Contents Level	inch	N/A	N/A	N/A	Gas service, flow through operation
Localized Features					
Nozzles		Sampling & Testing Connections		3/4" - 150 lb WNF x3	
Air Inlet		Flange			
Delivery		Flange			
Supports		*TBD			

Notes

1. *Maximum outside dimensions: 19'-9 1/4" L (w/o insulation) x 15'-3 1/4" W (w/insulation) x 7'-0" H (bottom of column to top of column grating). Dimensions are ±1/2".*
2. *Pneumatic Test of Housing Pressure Boundary per ASME Section VIII, Div 1. All other testing per ASME AG-1/1a & N509*
3. *Normal operating pressure will be 1.3 psig External. The other pressures shown are design, off-normal conditions.*
4. *The information contained in revision 2 data sheet supercedes the information contained in SDDR 24590-WTP-SDDR-PROC-03-0003.*
5. *Contents of this document are Dangerous Waste Permit affecting.* 6

Safety Screening required?: Yes X No ___ (If yes per 24590-WTP-GPP-SREG-002, E&NS signature required below)

Approval

Rev	Description	System Eng.	Equip. Eng.	Checked	Reviewed/ E&NS	Approved	Date
0	Issued for Purchase	Anthony Cutrona	N/A	David Evans	N/A / N/A	Suzanne Kirk	8/14/02
1	Updated Process datasheet number, revised Vessel Drawing reference (added equipment spec no., & Vendor dwg's are TBD), corrected seismic category from II to III, revised seismic specification number, and added 1a supplement to design code ASME AG-1.	Anthony Cutrona	N/A	David Evans	N/A / N/A	Mark Hoffman	11/14/02
2	Secondary offgas rearrangement: Revised operating and design pressure, and operating temperature per 24590-HLW-M6C-HOP-00011 R/C. Added max operating pressure drop. Added note 4. Revised Approval block	Anthony Cutrona	David Pease	Pat Harrigan	Donna Yarbrough/ N/A	Marla Wright	10/3/03

	MECHANICAL SYSTEMS DATA SHEET: VESSEL	PLANT ITEM No. 24590-HLW-MV-HOP-ABS-00003

3	Updated actual weights, materials of construction, and insulation thickness based on Vendor submittal. Revised norm/max/design temperature per 24590-WTP-SDDR-PROC-03-0411	Anthony Cutrona	David Pease	Pat Harrigan	Donna Yarbrough/ N/A	Marla Wright	12/16/03
4	Revised to comply with CODE 1 vendor submittal 24590-QL-POA-MBT0-00001-11-01, in accordance with CAR: 24590-WTP-CAR-QA-05-120. Incorporated DCN 24590-HLW-MKN-HOP-00008	Jim Rouse	David Pease	Anthony Cutrona	Chris Morley/ N/A	John Julyk	11/27/05
5	Revised note 1: Changed width from 15'-3 1/8" to 15'-3 1/4", added tolerance. Added E&NS to Approval section.	Jim Rouse	Anthony Cutrona	Satish Jain	Grant Goolsby/ Chris Meng	John Julyk	11/22/06
6	Revised Process Data Sheet reference to Process Calculation, the data sheet is cancelled Corrected plant item number in Cyclic Data section. Added Note 5.	Tom Galioto	Anthony Cutrona	Suren Thakkar	Grant Goolsby/ Chris Meng	John Julyk	7/12/07

R10977392

MECHANICAL DATA SHEET: HEME

ISSUED BY RPP-WTP PDC

PLANT ITEM No.
24590-HLW-MV-HOP-HEME-00001 (A&B); 24590-HLW-MV-HOP-HEME-00002 (A&B)

Project:	***RPP-WTP***	P&ID:	***24590-HLW-M6-HOP-00009, 20009***
Project No:	***24590***	Process Data Sheet:	***Deleted*** 5
Project Site:	***Hanford***	Vessel Drawing:	***24590-HLW-MV-HOP-00002001, 2002, 2003***
		Calculation:	***HLW-M4C-HOP-00011, HLW-M4C-30-00003, HLW-MKC-HOP-00011*** 5
Description:	***HLW Primary Offgas HEME***		

Reference Data

Charge Vessels (Tag Numbers)	***None***
Pulsejet Mixers / Agitators (Tag Numbers)	***None***
RFDs/Pumps (Tag Numbers)	***None***

Design Data

Quality Level		***Q (Note 6)***	Fabrication Specs	***24590-WTP-3PS-MV00-T0001; See Notes 9 & 10*** 5		
Seismic Category		***SC III***	Design Code	***ASME VIII Div 1, (See Notes 3 & 4)***		
Service/Contents		***Radioactive Mist & Particulate***	Code Stamp	***Yes***		
Design Specific Gravity		***1***	NB Registration	***Yes***		
Maximum Operating Volume	gal	***0***	Weights (lbs)	Empty	Operating	Test
Total Volume	gal	***2349***	Estimated	***37,690***	***37,690***	***57,615***
Environmental Qualification		***See Attachment 1***	Actual *			

Inside Diameter	inch	***66***			Wind Design	***N/A***	
Length/Height (TL-TL)	inch	***146***			Snow Design	***N/A***	
		Vessel Operating	Vessel Design	Coil/Jacket Design	Seismic Design	***24590-WTP-3PS-MV00-T0002***	
Internal Pressure	psig	***ATM***	***15***	***N/A***	Seismic Base Moment *	ft*lb	
External Pressure	psig	***4***	***FV***	***N/A***	Postweld Heat Treat	***Not Required***	
Temperature	°F	***117***	***200***	***N/A***	Corrosion Allowance	Inch	***0.04***
Min. Design Metal Temp.	°F	***32***			Hydrostatic Test Pressure *	psig	
Dangerous Waste Permit Affecting		***Yes*** 5					

Materials of Construction

Component	Material	Minimum Thickness / Size	Containment
Top Head	***SB 688 (N08367)***	***See Drawing***	***Primary***
Shell	***SB 688 (N08367)***	***See Drawing***	***Primary***
Bottom Head	***SB 688 (N08367)***	***See Drawing***	***Primary***
Support	***SA 240 304 (Note 2)***	***See Drawing***	***N/A***
Jacket/Coils/Half-Pipe Jacket	***N/A***	***N/A***	***N/A***
Internals	***SB 688/SB 462/SB 690 (N08367)***	***See Drawing***	***N/A***
Pipe *	***SB 690 or SB 675 (N08367)***	***See Drawing***	***Primary***
Forgings/ Bar stock	***SB 564 or SB 366 (N08367)***	***See Drawing***	***N/A***
Gaskets	***EPDM***	***N/A***	***N/A***
Bolting	***See drawing***	***N/A***	***N/A***

* 10" diameter pipe can be procured as SB688-86 with dimensional specifications in accordance with SA358-83 per 24590-WTP-SDDR-M-05-00446. 5

Miscellaneous Data

Orientation	***Vertical***	Support Type	***Skirt***
Insulation Function	***None***	Insulation Material	***None***
Insulation Thickness (inch)	***None***	Internal Finish	***Welds descaled as laid***
		External Finish	***Welds descaled as laid***

	MECHANICAL DATA SHEET: HEME	PLANT ITEM No. 24590-HLW-MV-HOP-HEME-00001 (A&B); 24590-HLW-MV-HOP-HEME-00002 (A&B)

Remarks

* To be determined by the vendor.

Note 1: Deleted.

Note 2: SA 240 304 stainless steel material shall have carbon content of 0.030% maximum. Non-welded items are excluded from this requirement.

Note 3: PUREX nozzles are excluded from the scope of ASME Code Section VIII, Division 1 in accordance with paragraph U-1 (e)(1).

Note 4: Piping systems connected to the SBS will meet leakage requirements per ASME B31.3 paragraph 319.1.1(b).

Note 5: Deleted.

Note 6: Vessel to be designed and fabricated to L-2 requirements defined in 24590-WTP-3PS-MV00-T0001.

Note 7: Please note that source, special nuclear and byproduct materials, as defined in the Atomic Energy Act of 1954 (AEA), are regulated at the US Department of Energy (DOE) facilities exclusively by DOE acting pursuant to its AEA authority. DOE asserts, that pursuant to the AEA, it has sole and exclusive responsibility and authority to regulate source, special nuclear, and byproduct materials at DOE-owned nuclear facilities. Information contained herein on radionuclides is provided for process description purposes only.

Note 8: Renumbered Note 8 in Rev. 4 to describe changes, deleted reference to process data sheets, added calculation numbers, added dangerous waste affecting block, provided references for Notes 9 & 10, added revision triangle to footnote for Materials of Construction, added reference for vendor submittal affected by 24590-WTP-SDDR-PROC-05-00235, and updated reference for safety function on EQ data sheet.

**** Note 9: The nozzle loads for N01 and N02 are as follows per 24590-WTP-SDDR-PROC-05-00235 and included in vendor submittal 24590-QL-POA-MV00-00005-04-00005:*** 5

Jumper Pipe Size	Load Type	Forces			Moments		
		Fx (lb)	Fy (lb)	Fz (lb)	Mx (ft -lb)	My (ft-lb)	Mz (ft-lb)
N01 & N02	Weight	361	578	361	2210	1380	1380
	Seismic	513	656	1109	2655	1932	1626
	Thermal @ 200 °F	519	622	859	2540	2180	1540
	Thermal @ 117 °F	186	166	250	915	788	554

**** Note 10: Use the following nozzle loads in lieu of the nozzle loads specified in 24590-WTP-3PS-MV00-T0001 per CCN 172654 (see 24590-WTP-3PS-MV00-T0001 for axis orientation):*** 5

Minimum Nozzle Forces and Moments Due to HLW Jumpers at Jumper Connection (CCN172654):

Jumper Pipe Size	Load Type	Forces			Moments		
		Fx (lb)	Fy (lb)	Fz (lb)	Mx (ft -lb)	My (ft-lb)	Mz (ft-lb)
2 in	Weight	30	150	30	100	20	100
	Seismic	100	140	100	225	200	225
	Thermal	200	80	200	250	200	250

Equipment Cyclic Data Sheet

Plant Item Number:	***24590-HLW-MV-HOP-HEME-00001 (A&B); 24590-HLW-MV-HOP-HEME-00002 (A&B)***
Component Description	***Vessel***

The information below is provisional and envelopes operational duty for fatigue assessment. It is not to be used as operational data.

Materials of Construction	***SB 688 N08367 (6% Mo alloy)***
Design Life	***40 Years***

BECHTEL	MECHANICAL DATA SHEET: HEME	PLANT ITEM No. *24590-HLW-MV-HOP-HEME-00001 (A&B); 24590-HLW-MV-HOP-HEME-00002 (A&B)*

Component Function and Life Cycle Description	***The HEME is a semi-passive device designed for removal of radioactive mists and dissolved solids from the melter offgas. Removal is accomplished by flowing the offgas through a glass fiber filter bed. The operation is basically steady state with the exception of routine maintenance periods. Routine maintenance would be the change out of a Melter. This is expected to occur every 5 years. During the change out the HEME's would be isolated and allowed to remain at ambient temperature (59 - 113 ° F). Cyclic data included herein is more conservative and bounding than data included in 24590-HLW-MVC-30-00001.***

Load Type		Min	Max	Number of Cycles	Comment
Design Pressure	psig	***FV***	***15***	***0***	***No known mechanism to pressurize***
Operating Pressure	psig	***-4***	***0***	***50***	***Maximum pressure excursion in 5 years (isolating and opening up vessel)***
Operating Temperature	°F	***70***	***200***	***50***	***Maximum temperature excursions in 5 years (switch over to bypass line). Normal operating temperature is 117 °F.***
Contents Specific Gravity		***1***	***1***	***10***	***Maximum fill and drain events in 5 years.***
Contents Level	inch	***0***	***169***	***20***	
Localized Features		**Temperature Range (°F)**		**Number of Cycles / Comment**	
N/A					

Notes

- ***Cycle increase: The Seller must increase the numbers of operational cycles given above by 10% to account for commissioning duty unless otherwise noted.***
  The total volume is approximate and does not account for manufacturing tolerances, nozzles, and displacement of internals.

Safety Screening/Evaluation Required? If yes per 24590-WTP-GPP-SREG-002, E&NS Signature below	Yes	X	No	

Approval

Rev	Description	System Engr	Vessel Engr	Checked	E&NS	Approved	Date
0	***Issued for Purchase***	M.S.	M.A.	W.D. C.S.	N/A	W.E. M.H.	4/18/03
1	***Issued for Purchase***	R. Peters	M. Arampalam	M. Studd	N/A	J. Pullen	4/1/04
2	***Issued for Purchase; Incorporates 24590-WTP-SDDR-PROC-05-00316***	R. Peters	M. Arampalam	R. Casassa	N/A	J. Pullen	6/24/05
3	***Issued for Purchase; added EEQ data, DWP affecting, NDE requirements***	M. O'Neil	R. Peters	S. Jain	C. Meng	J. Julyk	1/29/08
4	***Added jumper loads for 2" diameter nozzles, Notes 7 & 8 and incorporated SDDR 24590-WTP-SDDR-PROC-05-00235***	M. O'Neil	R. Peters	M. Seed	C. Meng	J. Julyk	6/16/08
5	***See Note 8.***	A. Coulam	R. Peters	M. Seed	C. Meng	J. Julyk	10/21/08

RIVER PROTECTION PROJECT – WASTE TREATMENT PLANT

EQUIPMENT QUALIFICATION DATA SHEET

FOR

HLW High Efficiency Mist Eliminators (HEMEs)

Attachment 1

EQUIPMENT QUALIFICATION DATA SHEET (from 24590-HLW-UOD-W16T-00001 Rev. 0 and as noted)

Equipment Identification

Tag Numbers	24590-HLW-MV-HOP-HEME-00001 (A&B); 24590-HLW-MV-HOP-HEME-00002 (A&B)	Safety Classification	☐ SC ☐ SDC ☒ SS ☐ SDS ☐ RRC ☐ APC
Manufacturer	GE-Hitachi		
Model	N/A		
Description	The High Efficiency Mist Eliminators (HEMEs) are particulate removal filters located at column lines J - 9 and J - 14 at El. 0' - 0".	Seismic Category	☐ SC-I ☐ SC-II ☒ SC-III ☐ SC-IV
Safety Function(s)	The HEME is safety significant for confinement only (24590-WTP-PSAR-ESH-01-002-04 Rev. 4, page 4.4-7). 5		

Seismic Safety Function ☒ Yes ☐ No Maintenance Accessible ☒ Yes ☐ No

Operability Requirements (DBE): ☐ During DBE ☐ After DBE ☒ None

Passive Mechanical ☒ Active Mechanical ☐ Electrical ☐

Equipment Environmental Qualification (EEQ)

(EEQ data is bounding for HEMEs located in Melter Cave No. 1 (Room No. H-0117) and Melter Cave No. 2 (Room No. H-0106))

Environment					Design Life (yrs)
	☒ Mild	☐ Harsh	☒ Accessible	☐ Inaccessible	☒ 40 ☐ Other ____

Parameter	Specified (BUYER)	Design (SELLER)	Report Number (SELLER)	WTP Document Number (BUYER)
Normal (Design Life)				
Normal High Temperature (°F)	113	200	24590-QL-POA-MV00-00005-04-00006 Rev. 00D	24590-WTP-DB-ENG-01-001 Rev. 01I
Normal Low Temperature (°F)	59	32	24590-QL-POA-MV00-00005-04-00006 Rev. 00D	24590-WTP-DB-ENG-01-001 Rev. 01I
Normal High Relative Humidity (%RH)	100	N/A	N/A	Note 1
Normal Low Relative Humidity (%RH)	5	N/A	N/A	Note 1
Normal High Pressure (in - w.c.)[8] 5	0	415.2	24590-QL-POA-MV00-00005-04-00006 Rev. 00D	24590-WTP-DB-ENG-01-001 Rev. 01I
Normal Low Pressure (in - w.c.)[8] 5	-1.4	FV	24590-QL-POA-MV00-00005-04-00006 Rev. 00D	24590-WTP-DB-ENG-01-001 Rev. 01I

Equipment Environmental Qualification (EEQ) (cont.)

Parameter	Specified (BUYER)	Design (SELLER)	Report Number (SELLER)	WTP Document Number (BUYER)
Normal Radiation Dose Rate (mRad/hr)	Note 4	4.54E+04	N/A	2X the dose rate at 20 ft. in Table 7-5 of 24590-HLW-Z0C-30-00011 Rev. C since there are two vessels.
Vibration Magnitude (g)	N/A	N/A	N/A	N/A
Vibration Frequency (Hz)	N/A	N/A	N/A	N/A
Abnormal				
Abnormal High Temperature (°F)	170	200	24590-QL-POA-MV00-00005-04-00006 Rev. 00D	24590-HLW-MAE-C5V-00001 Rev. N/A
Abnormal Low Temperature (°F)	40	32	24590-QL-POA-MV00-00005-04-00006 Rev. 00D	24590-HLW-MAE-C5V-00001 Rev. N/A
Duration Temperature (hr/yr)	8	Note 5	N/A	24590-HLW-Z0C-30-00016 Rev. 00B
Abnormal High Relative Humidity (%RH)	100	N/A	N/A	24590-HLW-MAE-C5V-00001 Rev. N/A
Abnormal Low Relative Humidity (%RH)	2	N/A	N/A	24590-HLW-MAE-C5V-00001 Rev. N/A
Duration Relative Humidity (hr/yr)	438	N/A	N/A	24590-HLW-Z0C-30-00016 Rev. 00B
Abnormal High Pressure (in - w.c.)[8] 5	4	415.2	24590-QL-POA-MV00-00005-04-00006 Rev. 00D	24590-HLW-MAE-C5V-00001 Rev. N/A
Abnormal Low Pressure (in - w.c.)[8] 5	-6.7	FV	24590-QL-POA-MV00-00005-04-00006 Rev. 00D	24590-HLW-MAE-C5V-00001 Rev. N/A
Duration Pressure (hr)	N/A	Note 6	N/A	N/A
Abnormal Radiation Dose Rate (mRad/hr)	Note 4	4.54E+04	N/A	2X the dose rate at 20 ft. in Table 7-5 of 24590-HLW-Z0C-30-00011 Rev. C since there are two vessels.
Duration Radiation Dose Rate (yr)	Note 4	40	N/A	24590-HLW-MVD-HOP-00007 Rev.3
Fire Sprinkler Exposure	Note 2	N/A	N/A	24590-WTP-SRD-ESH-01-001-02 Rev. 04K

Design Basis Events (DBE)				
DBE High Temperature (°F)	165	200	24590-QL-POA-MV00-00005-04-00006 Rev.	24590-HLW-MAE-C5V-00001 Rev. N/A
DBE Low Temperature (°F)	40	32	24590-QL-POA-MV00-00005-04-00006 Rev.	24590-HLW-MAE-C5V-00001 Rev. N/A
Duration Temperature (hr)	1,000	Note 5	N/A	24590-SE-ENS-07-0113 Rev. 0
DBE High Relative Humidity (%RH)	100	N/A	N/A	24590-HLW-MAE-C5V-00001 Rev. N/A
DBE Low Relative Humidity (%RH)	2	N/A	N/A	24590-HLW-MAE-C5V-00001 Rev. N/A
Duration Relative Humidity (hr)	1,000	N/A	N/A	24590-SE-ENS-07-0113 Rev. 0
DBE High Pressure (in - w.c.)[8] 5	4	415.2	24590-QL-POA-MV00-00005-04-00006 Rev. 00D	24590-HLW-MAE-C5V-00001 Rev. N/A
DBE Low Pressure (in - w.c.)[8] 5	-6.7	FV	24590-QL-POA-MV00-00005-04-00006 Rev. 00D	24590-HLW-MAE-C5V-00001 Rev. N/A
Duration Pressure (hr)	1,000	Note 6	N/A	24590-SE-ENS-07-0113 Rev. 0
DBE Duration Radiation Dose Rate (mR/hr)	Note 4	4.54E+04	N/A	2X the dose rate at 20 ft. in Table 7-5 of 24590-HLW-Z0C-30-00011 Rev. C since there are two vessels.
Submergence Depth (ft)	1.8	N/A	N/A	24590-HLW-M0C-30-00023 Rev. A
Spray Exposure	Note 3	N/A	N/A	N/A

Chemical Exposure Details	
Chemicals and Concentration	o Nitric line used for maintenance only and normally inactive. o HEMEs unaffected by glass formers since they are 20 ft. from feed vessel.

Interfaces (Electrical)	
Power Supply Voltage (VAC, VDC)	N/A
Power Supply Frequency (Hz)	N/A
Power Connection Method	N/A
I/O Signals to/from Equipment	N/A
I/O Connection Method	N/A

Interfaces (Mechanical)	
Mounting Configuration (orientation)	N/A
Mounting Method (bolts, welds, etc.)	Anchor bolts.
Auxiliary Devices	N/A

Equipment Seismic Qualification (ESQ)

Parameter	Title	Version	Reference	Remarks
WTP Seismic Design Specification (BUYER)	Engineering Specification for Seismic Qualification Criteria for Pressure Vessels	Rev. 2	24590-WTP-3PS-MV00-T0002	
Specified Seismic Load (BUYER)	Structural Design Loads for Seismic Category III & IV Equipment & Tanks	Rev. 2	24590-WTP-3PS-FB01-T0001	
Design Seismic Load (SELLER)	W_{total}= -37415 lbs. (max. down) = +1344 lbs. (max. up) $M_{tipping}$ (total) = 3.722 x 10^6 in.-lbs	N/A	24590-QL-POA-MV00-00005-06-01 Rev. 00E	See p. 22.
Qualification Method (SELLER)	Uniform Building Code	UBC-97	N/A	
Qualification Report Number (SELLER)	1.) HEME Pressure Vessel Seismic Data Report 2.) Structural Integrity Calculation for HEME Mounting Base	1.) Rev. 00C 2.) Rev. 00E	1.) 24590-QL-POA-MV00-00005-04-02 2.) 24590-QL-POA-MV00-00005-06-01	

Notes and Additional Information

Note 1: Normal relative humidity not controlled.
Note 2: App. K. Automatic fire suppression not required.
Note 3: There is no spray source present normally.
Note 4: The vessel components and fiberglass media must be compatible with the dose rate. The EPDM gaskets may be replaced as needed on a maintenance plan basis.
Note 5: The temperature duration for the abnormal temperature is bounded by the vessel design temperature (200°F).
Note 6: The pressure duration for the abnormal pressure is bounded by the vessel design pressure (415.2 in-wc).
Note 7: BNI (BUYER) shall perform Equipment Environmental Qualification in accordance with 24590-WTP-DC-ENG-06-001, Design Criteria for Equipment Seismic and Environmental Qualification.
Note 8: Where pressure is given in inches of water column (in.-w.c.) in the source document, it is generally assumed that this is in reference to atmospheric pressure and is therefore equivalent to inches of water gage (in.-w.g.). 5

NOZZLE	SIZE	SCHED/WALL	SERVICE/REMARKS	"Z" DIM	REF DWG/DET	CONN PIPE SIZE/SCHED
N01	2"	160S	INLET - HOP-HEME-00001A	5'-1½"	24590-WTP-MV-M59T-00016001 DETAIL 4	2" SCH. 40S
N02	2"	160S	INLET - HOP-HEME-00001B	5'-1½"	24590-WTP-MV-M59T-00016001 DETAIL 4	2" SCH. 40S
N03	2"	160S	INLET - HOP-HEME-00002B	5'-1½"	24590-WTP-MV-M59T-00016001 DETAIL 4	2" SCH. 40S
N04	2"	160S	INLET - HOP-HEME-00002A (2)	5'-1½"	24590-WTP-MV-M59T-00016001 DETAIL 4	2" SCH. 40S
N06	1½"	160S	OUTLET TO RLD-EJCTR-00020A	5'-1½"	24590-WTP-MV-M59T-00016001 DETAIL 4	1½" SCH. 40S
N07	2"	80S	SPARE (2)	5'-1½"	24590-WTP-MV M59T-00016001 DETAIL 1	CAPPED
N08	1½"	80S	INLET TO WASH RING	5'-1½"	24590-WTP-MV-M59T-00016001 DETAIL 3	1½" SCH. 40S
N09	2"O.D.	160S	THERMOWELL	5'-1½"	24590-WTP-MV-M59T-00007 DETAIL 5	1" SCH. 10S
N10	2"O.D.	160S	THERMOWELL	5'-1½"	24590-WTP-MV-M59T-00007 DETAIL 5	1" SCH. 10S
N11	2"O.D.	SEE DETAIL	INSTRUMENT (PRESSURE)	5'-1½"	24590-WTP-MV-M59T-00016001 DETAIL 5	½" SCH. 40S
N12	6"	40S	INSPECTION/CLEANOUT PORT	5'-1½"	24590-WTP-MV-M59T-00017 DETAIL 1	CAPPED
N14	1½"	40S	SPARE (2)	5'-1½"	24590-WTP-MV-M59T-00016001 DETAIL 2	CAPPED (2)
N16	1½"	160S	OUTLET TO RLD-EJCTR-00020B	5'-1½"	24590-WTP-MV-M59T-00016001 DETAIL 4	1½" SCH. 40S
N17	4"	40S	OVERFLOW	3'-6"	24590-WTP-MV-M59T-00016001 DETAIL 1	4" SCH. 40S
N18	2"	160S	SPARE (2)	5'-1½"	24590-WTP-MV-M59T-00016001 DETAIL 2 (2)	CAPPED
N19	2"	80S	SPARE	5'-1½"	24590-WTP-MV-M59T-00016001 DETAIL 2	CAPPED
N20	6"	40S	INSTRUMENT (RADAR)	5'-9⅞"	24590-WTP-MV-M59T-00016003 DETAIL 24	N/A
N21	3"	80S	PJV DRAIN LINE	3'-6"	24590-WTP-MV-M59T-00016001 DETAIL 1	3" SCH. 40S (2)

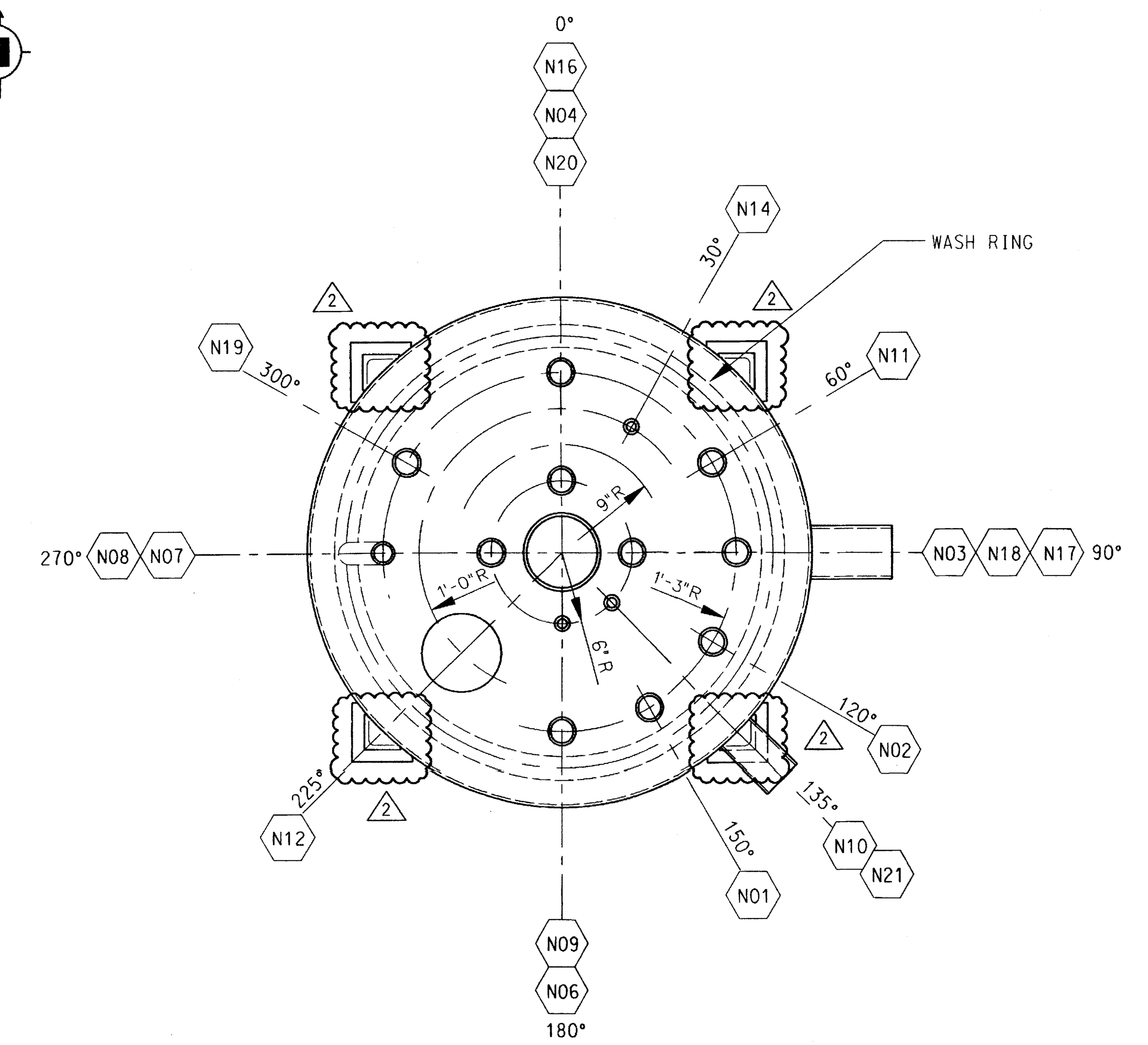

PLAN

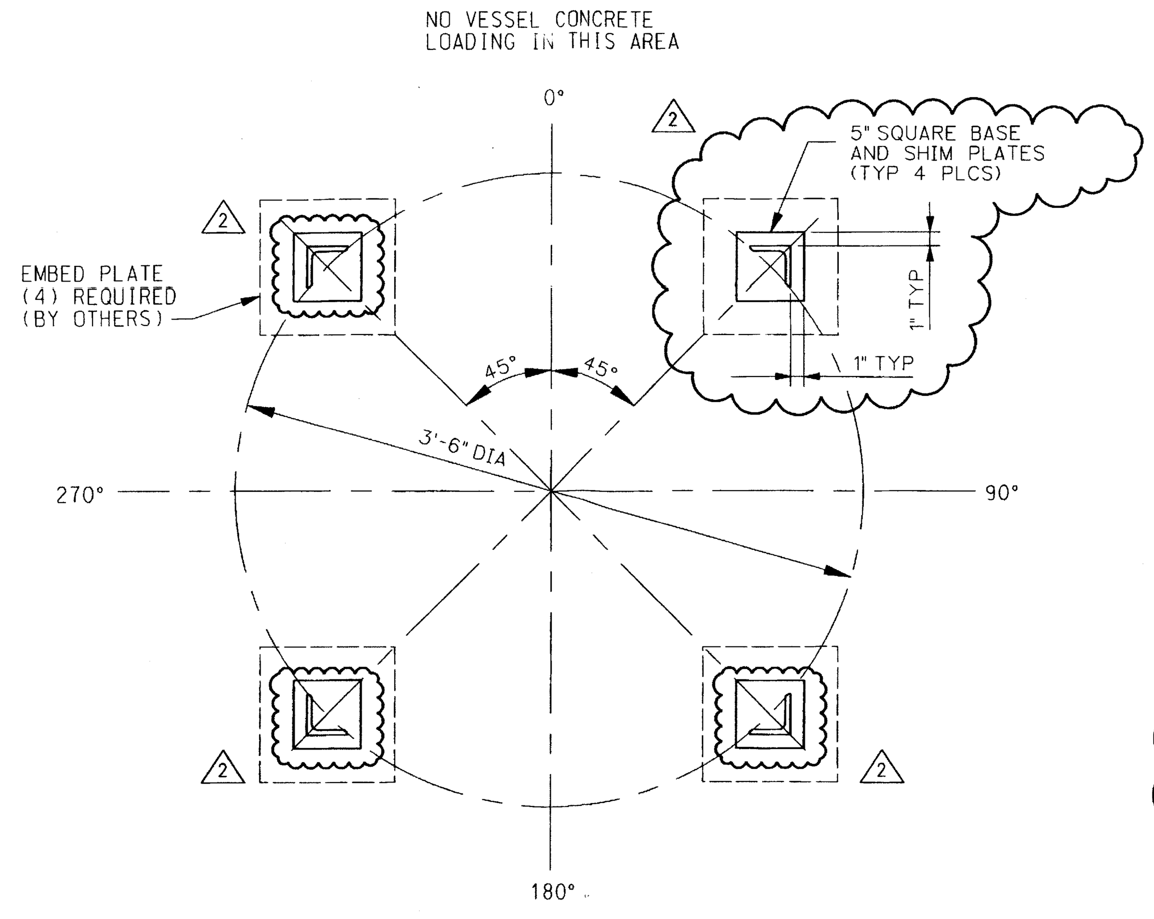

EMBED PLATE PLAN VIEW

GENERAL NOTES:

1. FOR DIP LEG USE 2" CLEARANCE FROM BOTTOM UNLESS OTHERWISE NOTED.
2. "Z" DIMENSION MEASURE FROM BOTTOM TANGENT LINE TO THE STUB END / CENTER LINE OF NOZZLE.
3. SELLER SHALL SIZE ANCHOR BOLTS AND CHAIRS PER REFERENCE DRAWING No. 24590-WTP-MV-M59T-00026. BUYER SHALL PROVIDE AND WELD ANCHOR BOLTS TO A240 304L PLATES EMBEDDED IN CONCRETE FLOOR. SELLER SHALL SIZE ANCHOR BOLTS USING MATERIAL PROPERTIES OF THE EMBEDDED PLATE.
4. LIFTING LUGS DESIGN BY VENDOR.
5. SELLER SHALL PROVIDE (4) SHIM PACK 5" SQUARE IN 304 SS, EACH COMPRISING OF:

   (2) ¼" THICK PLATE
   (1) ⅛" THICK PLATE
   (2) 1/16" THICK PLATE

6. VESSEL SHALL BE 100% RADIOGRAPHED.
7. ADDED/REVISED/DELETED:
   ADDED DETAIL 1 FOR NOZZLE N14.
   ADDED NOZZLE N21
   DELETED NOZZLE N13
   REVISED REF. DETAILS FOR N09 & N10
8. THIS NOTE RELATES ONLY TO STEAM EJECTORS/NOZZLES N06 AND N16 OF THIS DRAWING: THIS DRAWING IS A LEAD DOCUMENT FOR DESIGN BASIS EVENT CALCULATIONS. DRAWING MODIFICATIONS THAT ALTER (OR ADD TO) THE MAXIMUM SINGLE STEAM EJECTOR MASS FLOWRATE (655 LBS/HR) FOR RLD-VSL-00002 OR ALTER THE MAXIMUM SINGLE STEAM EJECTOR MASS FLOWRATE (1192 LBS/HR) FOR RLD-VSL-00007 OR -00008 (REFERENCE 24590-HLW-M6C-RLD-00008) REQUIRE AB REVIEW BY THE E&NS DISCIPLINE. CHANGES TO THE TEXT OF THIS NOTE REQUIRE AB REVIEW BY THE E&NS DISCIPLINE AS WELL. IF THE CHANGES BEING MADE DO NOT ALTER (OR ADD TO) THE FLOW RATE OF THE STEAM EJECTORS, OR THE TEXT OF THIS NOTE, AB REVIEW IS NOT REQUIRED.
9. CONTENTS OF THIS DOCUMENT ARE DANGEROUS WASTE PERMIT AFFECTING.
10. REVISED TO INCORPORATE 24590-HLW-MVN-RLD-00010, 24590-HLW-MVN-RLD-00015 & 24590-HLW-MVN-RLD-00016. UPDATED NOZZLE TABLE. REPLACED VESSEL SKIRT WITH FOUR VESSEL SUPPORT LEGS. REVISED SHIM PLATE DETAIL. DELETED DETAIL 1. ADDED NOTES 9 & 10. DELETED HOLD 2.

HOLDS:

1. DELETED
2. DELETED

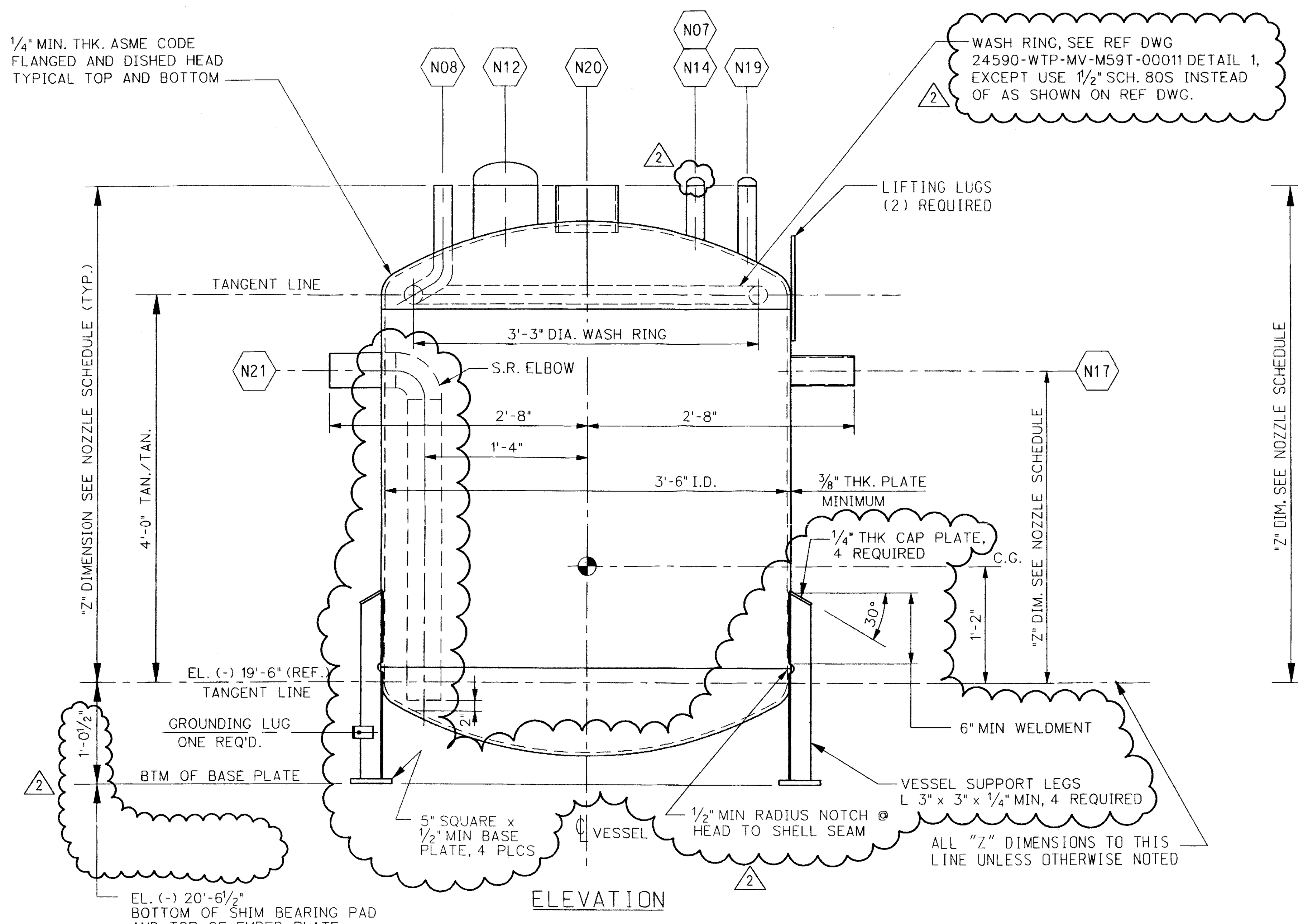

ELEVATION

SEE PLAN FOR TRUE ORIENTATION

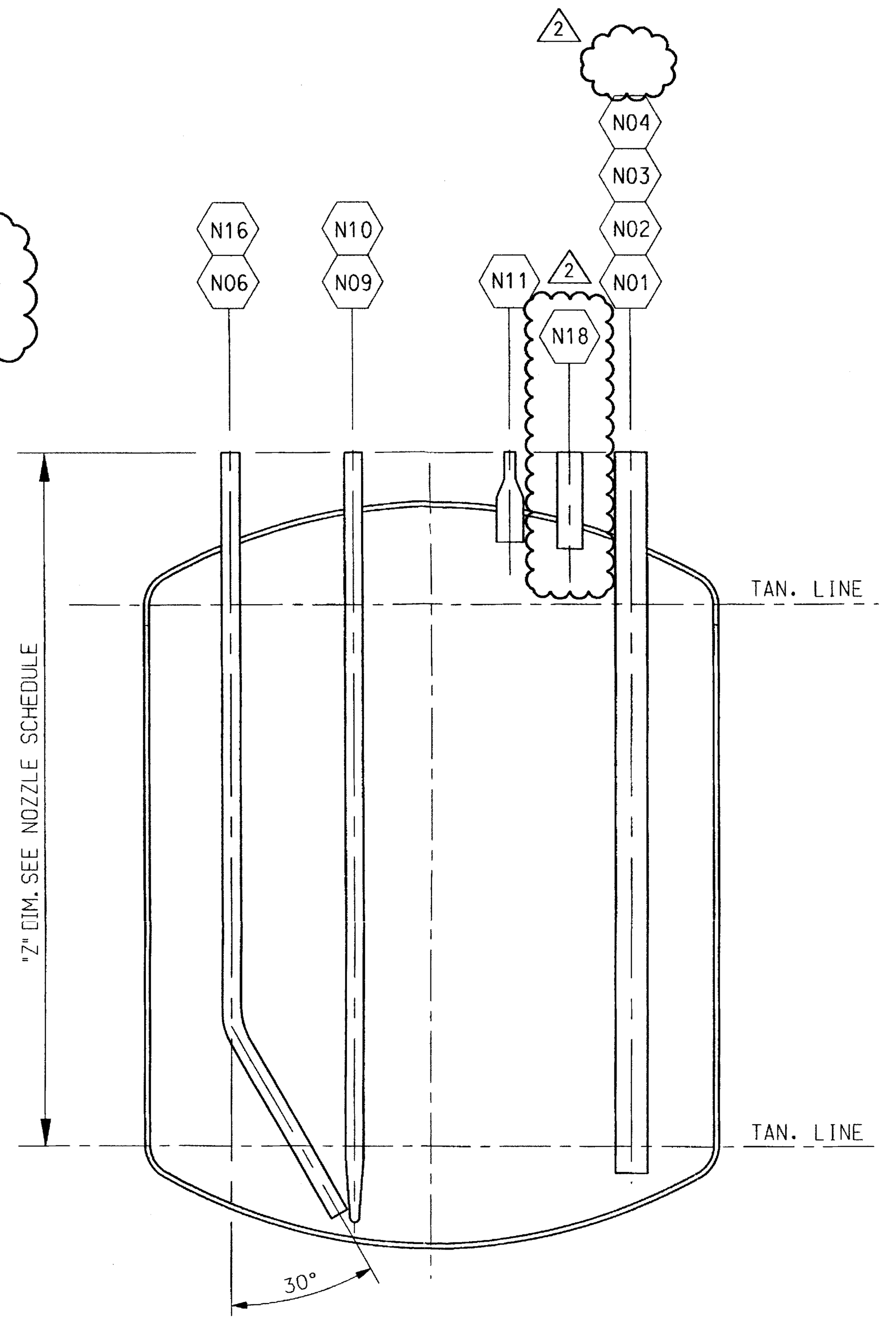

PARTIAL ELEVATION

SEE PLAN FOR TRUE ORIENTATION

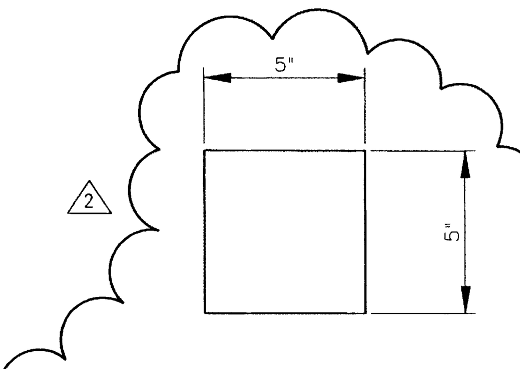

SHIM OR SPACER PLATE DETAIL
(SEE NOTE 5)

VESSEL COMPONENT QUALITY LEVELS	
COMPONENTS	QUALITY LEVEL
MAIN VESSEL, SKIRT, ALL NOZZLES	CM
ALL INTERNAL SUPPORTS	CM
LEVEL INSTRUMENT / THERMOWELL	CM
WASH RING AND PIPING	CM

THIS DRAWING TO BE READ IN CONJUNCTION WITH THE MECHANICAL DATA SHEET NO 24590-HLW-MVD-RLD-00008

REFERENCE DRAWINGS

DWG NO	REV	TITLE
24590-HLW-M6-RLD-00014	5	P&ID-HLW RADIOACTIVE LIQUID WASTE DISPOSAL SYSTEM
24590-WTP-MV-M59T-00001	4	PRESSURE VESSEL TOLERANCES STANDARD DETAILS
24590-WTP-MV-M59T-00012	1	GROUNDING LUG STANDARD DETAILS
24590-WTP-MV-M59T-00016001	3	VESSEL CONNECTIONS STANDARD DETAILS SHEET 1 OF 3
24590-WTP-MV-M59T-00016002	2	VESSEL CONNECTIONS STANDARD DETAILS SHEET 2 OF 3
24590-WTP-MV-M59T-00016003	1	VESSEL CONNECTIONS STANDARD DETAILS SHEET 3 OF 3
24590-WTP-MV-M59T-00011	2	WASH RINGS STANDARD DETAILS
24590-WTP-MV-M59T-00007	3	THERMOWELL CONNECTIONS STANDARD DETAILS
24590-WTP-MV-M59T-00018	3	VESSEL NAME PLATE STANDARD DETAILS
24590-WTP-PW-P30T-00001	1	WTP END PREP DETAIL FOR FIELD BUTT WELDS
24590-WTP-MV-M59T-00017	1	VESSEL INSPECTION MANWAY STANDARDS DETAILS

Please note that source, special nuclear, and byproduct materials, as defined in the Atomic Energy Act of 1954 (AEA) are regulated at the U. S. Department of Energy (DOE) facilities exclusively by DOE acting pursuant to its AEA authority. DOE asserts that pursuant to AEA, it has sole and exclusive responsibility and authority to regulate source, special nuclear, and byproduct materials at DOE-owned nuclear facilities. Information contained herein on radionuclides is provided for process description purposes only.

CM

REV	DESCRIPTION	ORG	CHKD	RVWD	APVD	DATE
2	REVISED PER NOTE 10	[signature]	[signature]	[signature]	[signature]	5/3/07
1	REVISED PER NOTE 7 & REISSUED FOR PURCHASE	MRG	TG	DY	MH	6/26/04
0	ISSUED FOR PURCHASE	MA	CS	DY	MH	1/28/04

REVISION HISTORY

ISSUED BY RPP-WTP PDC
ISSUE STAMP

PROJECT No.	24590
SITE	HANFORD
AREA	200E
BUILDING No.	30

RIVER PROTECTION PROJECT
WASTE TREATMENT PLANT
2435 STEVENS CENTER PLACE
RICHLAND, WA 99354

CONTRACT No: DE-AC27-01RV14136

	BY	DATE
ORIGINATOR	M. ARULAMPALAM	1/28/04
CHECKER	C. SLATER	1/28/04
APPROVER	M. HOFFMAN	1/28/04
REVIEWER	D. YARBROUGH	1/28/04

EQUIPMENT ASSEMBLY HLW OFFGAS DRAINS COLLECTION VESSEL RLD-VSL-00002

CONTENT APPLICABLE TO ALARA? [X] YES [ ] NO
ADR NO. 24590-WTP-ADR-M-03-008 REV: 1
SAFETY SCREEN REQUIRED? [X] YES [ ] NO E&NS INITIAL IF YES CM

SCALE: NTS

24590-HLW-MV-RLD-00002 REV 2

SAFETY SCREEN IS REQUIRED FOR DRAWING TYPES IDENTIFIED IN 24590-WTP-GPP-SREG-002

'E' SIZE - 44x34
COMPUTER GENERATED - MANUAL CHANGES NOT PERMITTED

R10772727

04/24/2007 05:13:02 PM

PLOTTED BY: bameyer
C:\Work\dms04110\HLWRLDVSL00002.dgn

FORM E_SDN.DGN 02/2003

Drawings and Documents

Operating Unit Group 10 – Appendix 10.7
High Level Waste Building
Specifications

The documents listed in the following table are incorporated by reference into this permit and are subject to the requirements set forth in Part I Standard Conditions, Part II General Facility Conditions, and Part III Operating Unit Group 10 Conditions. Upon request, copies of the documents can be viewed at the Nuclear Waste Program Resource Center located at 3100 Port of Benton Blvd. Richland, WA. Appointments for viewing can be scheduled by calling (509) 372-7950.

Drawing/Document Number	***Description***
24590-HLW-3PS-AE00-TP001, Rev 0	Engineering Specification for HLW Melters
24590-HLW-3PS-MBT0-TP001, Rev 2	Engineering Specification for Silver Mordenite Column Design and Fabrication
24590-HLW-3PS-MEE0-TP001, Rev 1	Engineering Specification for HEPA Filter Preheaters
24590-HLW-3PS-MPC0-TP009, Rev 1	Engineering Specification for Vessel Mounted Vertical Transfer Pumps *Export Controlled Information*
24590-HLW-3PS-MQR0-TP002, Rev 2	Engineering Specification for HLW System HDH Canister Rinse Bogie
24590-QL-HC4-W000-00011-04-00266, Rev 00B	HLW ADS Pump Procurement Specification
RESERVED	RESERVED

Source documents (which do not include a "P" in the last set of numbers, e.g. "-P0001," or "-TP001") should be used in conjunction with any document change notices issued against them.

We are currently transitioning from permit documents (which do include a "P" in the last set of numbers) to source documents. At the end of the transition period, permit submittals will contain source documents and will be incorporated into the permit as described in Ecology Publication # 07-05-006 (www.ecy.wa.gov/biblio/nwp.html).

1
2
3
4
5

This page intentionally left blank.

24590-QL-HC4-W000-00011	- 04 - 00266	00B
PO/SCT	Submittal	Rev

Job No. 24590

Bechtel National, Inc.

SUPPLIER DOCUMENT STATUS

1. ☑ **Work may proceed.**
2. ☐ **Revise and resubmit. Work may proceed subject to resolution of indicated comments.**
3. ☐ **Revise and resubmit. Work may not proceed.**
4. ☐ **Review not required. Work may proceed.**

Permission to proceed does not constitute acceptance or approval of design details, calculations, analyses, test methods, or materials developed or selected by the supplier and does not relieve supplier from full compliance with contractual obligations.

REVIEWED	RL MS									

G-321 Document Category 8.0
[From Supplement A to G-321-E (E) or G-321-V (V), as applicable, or "N/A" if SSRS is used]

Supersedes BNI Document No. N/A Rev. _____
[When applicable]

Accepted by ROBERT VANCE (Print Name) Robert Vance (Signature) 11/30/04 (Date)

Released by N/A (Print Name) _____ (Signature) _____ (Date)
[When applicable]

TP0406_34 7-04

SUBCONTRACT SUBMITTAL

Approvals Page

River Protection Project – Waste Treatment Plant

HLW ADS Pump Procurement Specification

Originator: Theresa A Bartl — Date: 10-7-04

Reviewed by: [signature] — Date: 10/7/04

Approved by: R Barnow — QA Manager — Date: 10/11/04

Approved by: Theresa A Bartl for R. Meiss — Design Authority — Date: 10-7-04

Approved by: [signature] — Engineering Manager — Date: 10/7/04

Revision History

Revision	Date	Comments/Description
0	4/28/03	Original Release.
1	8/4/03	Incorporate customer's 90% design review comments.
2	8/25/04	Incorporate customer's final design review comments.
3	10/7/04	Incorporated customer's comments

TABLE OF CONTENTS

1. SCOPE 4
2. REFERENCES 5
3. DESIGN REQUIREMENTS 6
4. MATERIALS 6
5. FABRICATION 7
6. TESTS AND INSPECTIONS 15
7. ATTACHMENT 19

1. SCOPE

1.1. Project Description and Location

The River Protection Project-Waste Treatment Plant (RPP-WTP) is a facility located on the Department of Energy's Hanford Reservation in southeast Washington State. The facility's purpose is to vitrify radioactive tank waste for permanent disposal.

1.2. Equipment, Material, and Services Required

1.2.1. The purpose of this specification is to provide information for the Vendor to fabricate the Air Displacement Slurry (ADS) pump for the HLW melter feed system. This specification, used along with the attached design drawings, will provide all necessary information for the vendor to procure all required materials, fabricate parts and provide assemblies. Guidance will be given for non-vendor specific materials such as fasteners and piping.

1.2.2. The Vendor is not responsible for the design of these components.

1.2.3. This specification covers the supply of materials for fabrication, inspection, assembly, disassembly, packing, and delivery to the site.

1.2.4. The Vendor shall be responsible to perform all activities necessary to provide a complete product as specified herein and in the design drawings. If any information contained on the drawings or other contractual documents conflicts with the information contained in this specification, then it must be resolved with the Buyer in writing before commencing work.

1.2.5. The quantity of assemblies shall be identified on the purchase order.

1.2.6. The vendor may subcontract any portion of the fabrication, manufacturing, or inspections provided it meets the quality assurance requirements of this specification.

1.2.7. The Vendor shall provide any special tools required for assembly, disassembly and reassembly of the components. The latest revision of the drawings shall be listed and controlled by the Buyer documents.

1.3. Work by Others

Vendor's responsibility will terminate with shipment of the assemblies, unless otherwise specified.

1.4. Definitions

HLW Melter	High Level Waste Melter
Vitrification	The process of joining a waste stream with glass formers at high temperature to produce a stable waste form.
Buyer	Bechtel National, Inc.
Vendor	Company selected by Buyer to fabricate the HLW ADS Pump.
ADS	Air Displacement Slurry

2. REFERENCES

2.1. Codes

The items covered by this specification shall be fabricated in accordance with this specification, the codes and standards listed below and the drawings. The applicable edition of each code and standard shall be the edition in effect at the time of contract. Vendor shall submit a list of codes and standards including year of edition four weeks after contract award.

2.1.1. ASME Boiler and Pressure Vessel Code, Section V, Nondestructive Examination.

2.1.2. ASME Boiler and Pressure Vessel Code, Section VIII, Design & Fabrication of Pressure Vessels.

2.1.3. ASME Boiler and Pressure Vessel Code, Section IX, Qualification Standard For Welding and Brazing Procedures, Welders, Brazers, and Welding and Brazing Operators.

2.1.4. ASME B31.3-1996, Process Piping.

2.2. Industry Standards

2.2.1. SSPC-SP NO. 10 NACE NO.2, Joint Surface Preparation Standard Near-White Blast Cleaning.

2.2.2. ANSI/ASME B46.1, Surface Texture.

2.2.3. ANSI/ASME Y14.5M

2.2.4. ASNT SMT-TC-1A

2.2.5. AWS A2.4, Symbols for Welding and Nondestructive Testing.

2.2.6. AWS A3.0, Standard Welding Terms and Definitions.

2.2.7. ASTM A-380, Standard Practice for Cleaning, Descaling, and Passivation of Stainless Steel Parts, Equipment, and Systems.

2.2.8. AWS D1.6, Structural Welding Code, Stainless Steel, 1999.

2.3. Engineering Standards

N/A

2.4. Reference Documents/Drawings

2.4.1. 24590-WTP-3PS-NW00-T0002, Chemical Requirements for Materials Used in Contact with Austenitic Stainless Steel and Nickel-Base Alloys

3. DESIGN REQUIREMENTS

N/A

4. MATERIALS

4.1. Construction

4.1.1. All materials shall be as specified on the relevant drawings and shall be provided by the vendor. Any proposed substitutes or concessions shall be agreed to by the Buyer prior to procurement or incorporation into the work. Materials shall be standard products of established manufacturers who have produced the type specified.

4.1.2. If no references are made in the drawings, provide all materials to complete the work.

4.1.3. All materials provided by the Vendor shall be new and free of defects or mechanical damage.

4.1.4. The Vendor shall submit Certified Material Test Reports (CMTRs) for all base metals and filler materials, and shall certify that the test results and materials conform to the applicable specification.

4.1.5. Traceability must be maintained to assure material compatibility.

4.1.6. The Vendor shall submit Certificates of Compliance (COC) certifying that the materials conform to the applicable specification.

4.1.7. The Vendor shall submit shop detail drawings for review and approval.

4.1.8. Stainless steel and similar corrosion resistance materials not suitable for standard thermal cutting means may be cut by plasma arc, water jet, laser, mechanical, or equivalent methods. All flame cut and rough edges shall be dressed by grinding or other mechanical methods to remove oxidized materials, burrs, scale, and other impurities that could affect weld quality or subsequent manufacturing operations and/or painting. Stainless steel tooling shall be new or not have been used on carbon steel.

4.1.9. The limits of size and form, including surface texture requirements, of mill stock material (plate, sheet, pipe, tube, etc.) shall, either directly or indirectly, be in accordance with the national standards identified on the drawings. Where stock materials are specified without condition, finish, or temper, the Vendor shall select a commercial grade that is readily available.

4.2. Prohibited Materials

4.2.1. Materials use in contact with Austenitic stainless steel and nickel-based alloys shall meet the requirements of 24590-WTP-3PS-NW00-T0002, Ref. 2.4.1.

4.3. Special Requirements

N/A

4.4. Storage of Special Materials Prior to Work

4.4.1. The Vendor shall handle and store materials indoors in a locked controlled area to prevent misappropriation and damage or deterioration of the materials. The Vendor shall protect shipping tags and other identifying objects on delivered material for establishing identification and traceability. Heat numbers removed by cutting material shall be transferred to the unused material to maintain traceability.

5. FABRICATION

5.1. Welding

5.1.1. The Vendor shall identify each weld with a unique weld number, providing the following information. In addition the Vendor shall provide weld map format

for Buyer approval. A system of control such as "weld travelers" or packages shall be established by the Vendor to control welding activities.

- Purchase Order number
- Weld number
- Welder's name
- Filler metal heat number
- Weld and NDE symbols
- Applicable weld procedure
- Applicable weld inspection procedure(s)

5.1.2. Weld inspection to include:

- Inspector's name
- Accept/Reject statement
- Non-conforming conditions, if any
- Date of Inspection

5.1.3. Welders, Welding Procedure Specifications (WPS) and Procedure Qualification Records (PQR), Qualification of Base Metal, Welding, Inspection, and Inspection Personnel shall be in accordance with AWS D1.6 or ASME BPVC, Section IX. The Vendor shall submit Welding Procedure Specifications and Procedure Qualification Records for Buyer approval.

5.1.4. The Vendor shall be responsible for all welds meeting the requirements of the applicable code, including proper filler metal selection.

5.1.4.1. All structural welds shall be in accordance with AWS D1.6.

5.1.4.2. All pipe welds shall be in accordance with ASME B31.3.

5.1.5. The Vendor shall also have available for review Welder Qualification Records for all welders who will perform welding.

5.1.6. The Vendor shall maintain a record of welds employed at each weld joint, the filler metal heat number and applicable WPS utilized on a weld map, and include in Vendor's data package.

5.1.7. The Vendor shall be responsible for conducting the examination and tests required to qualify the performance of the welders and welding operations and procedures. Welding machines and welding operators shall be currently certified before welding.

5.1.8. Vendor shall use controlled welding techniques to meet final product dimensions and tolerances as provided in the drawings.

5.1.9. Welders shall be requalified when the Buyer determines their work does not meet the performance qualification requirements. Requalification tests shall be the Vendor's responsibility. Welders failing a requalification test shall be removed from work under this specification.

5.1.10. Weld joint symbols shall be interpreted in accordance with AWS A2.4 and AWS A3.0.

5.1.11. Temporary tack-welded attachments: All areas of material where temporary welded attachments have been removed shall be repaired with weld overlay, ground flush, and penetrant inspected to the same acceptance criteria as for VT on welds.

5.2. Assembly

5.2.1. The Vendor shall submit the fabrication plan for Buyer approval. As a minimum the Vendor's fabrication plan shall include the following information.

- Purchase order number
- Sequence of Operation
- Fabrication Techniques
- In-process Inspection
- Handling Techniques

5.2.2. A suggested assembly procedure has been provided as Attachment 1 that has been used to fabricate previous ADS pumps. The Vendor should use this as a basis for the fabrication plan listed in 5.2.1 above.

5.2.3. The Vendor shall inform the Buyer if any aspect of the drawing or specification content is incorrect, or if the application could have an adverse effect on ADS pump life or reliability.

5.2.4. Controls are to be exercised during all stages of fabrication to minimize exposure of stainless steel to contaminants and in particular any chlorides that

might cause stress-corrosive cracking. Chloride and halide bearing compounds shall be avoided, however, if used, they must be completely removed by thorough cleaning. Furnace atmosphere for open heating should be slightly reducing to prevent excessive oxidation of material.

5.2.5. All materials used shall be assembled in a clean condition and provisions to maintain this condition shall be outlined as a part of the fabrication plan.

5.2.6. The Vendor shall assemble components of the ADS pump at the vendor's facility. The Vendor shall ship the components to the Hanford site in approved shipping containers.

5.2.7. When equipment must be disassembled into multiple pieces for shipment, the components shall be initially assembled at the Vendor's shop to ensure compatibility. As many components as possible should be fit checked at the Vendor's location first to assure that potential interference and fit up problems are resolved prior to shipment. All items that have been disassembled for shipment should be clearly labeled and tagged.

5.2.8. Where sub-assemblies erected at the shop have to be dismantled for transport to site, then the fasteners holding them together shall be inspected. Fasteners exhibiting distortion, galling, permanent set, or other damage shall, at the discretion of the Buyer, be replaced.

5.2.9. Fasteners shall be tightened in accordance with the torque values in the following table titled "Schedule of Un-Lubricated Bolt Torque" unless otherwise stated on the drawings. ACME nuts and studs shall be lubricated with Bostik Pure Nickel Never-Seez®, Nuclear Grade unless otherwise approved by the Buyer. Torque values for this application are per the drawing requirement. Anti galling compound shall be applied to mating stainless steel threads prior to assembly.

Schedule of Un-Lubricated Bolt Torque

Size	Thds/In		Tensile Stress Area (in2)	50% Yield Load (lbs.)	Torque (ft-lbs)
¼	20	UNC	0.0318	1288	5
3/8	16	UNC	0.0775	3137	20
½	13	UNC	0.1418	5744	48
5/8	11	UNC	0.2259	9148	95
¾	10	UNC	0.3343	13539	169
1	8	UNC	0.6054	24520	409
1-1/8	7	UNC	0.7629	30897	579
1-1/4	7	UNC	0.9686	39229	817
Yield Strength 81000 PSI, Nut Factor – 0.2					

Size	Thds/In		Tensile Stress Area (in2)	50% Yield Load (lbs.)	Torque (ft-lbs)
¼	20	UNC	0.0318	477	2
3/8	16	UNC	0.0775	1162	7
½	13	UNC	0.1418	2127	18
5/8	11	UNC	0.2259	3388	35
¾	10	UNC	0.3343	5014	63
1	8	UNC	0.6054	9082	151
1-1/8	7	UNC	0.7629	11443	215
1-1/4	7	UNC	0.9686	14529	303
Yield Strength 30000 PSI, Nut Factor -0.2					

Size	Thds/In		Tensile Stress Area (in2)	50% Yield Load (lbs.)	Torque (ft-lbs)
¼	20	UNC	0.0318	2385	10
3/8	16	UNC	0.0775	5809	36
½	13	UNC	0. 1418	10637	89
5/8	11	UNC	0.2259	16942	176
¾	10	UNC	0.3343	25072	313
1	8	UNC	0.6054	45408	757
1-1/8	7	UNC	0.7629	57216	1073
1-1/4	7	UNC	0.9686	72646	1513
Yield Strength 150000 PSI, Nut Factor -0.2					

5.3. Fabrication Hold Points

5.3.1. The Vendor shall provide necessary access to facilities, equipment, records, and personnel to allow performance of required Buyer verifications/inspections. Accomplishment of Buyer source verifications/inspections does not indicate Buyer's final acceptance of the supplied item.

5.4. Heat Treatment

5.4.1. The Vendor shall develop and implement a procedure for heat treatment.

5.4.2. The following components listed in WTP-M-23502 shall be heat treated either before or after machining to meet condition H900 in accordance with ASTM A-564:

5.4.2.1. Item 12, nipple

5.4.2.2. Item14, poppet

5.4.2.3. Item 21, rocker arm

5.4.2.4. Item 22, pivot pin

5.4.2.5. Item 23, lift rod pin

5.4.2.6. Item 33, housing

5.4.2.7. Item 36, lift rod assembly comprising of upper (Item 35) and lower lift rods (Item 11)

5.4.3. The following components listed in WTP-M-23502 also shall be heat-treated.

5.4.3.1. Item 15, actuator magnet target

5.4.3.2. Item 20, lift rod magnet target

5.4.4. The heat treatment process shall include annealing in a wet hydrogen atmosphere at a temperature of 1,550 to 1,600 degrees Fahrenheit for two to four hours and cooled at a rate of 100 to 200 degrees Fahrenheit per hour down to 1,000 degrees Fahrenheit and any rate thereafter.

5.4.5. The Vendor shall maintain heat treatment reports and furnace charts. These shall include the procedure used for heat treatment and annealing, serial numbers of the temperature measuring devices used to control temperature, and the name of the person responsible for heat treatment and annealing.

5.4.6. The Vendor shall include the heat treatment reports and furnace charts in the documentation package.

5.5. Other Processes

5.5.1. Handling, Cleaning and Maintaining Cleanliness:

5.5.1.1. The Vendor shall submit the procedures for handling, cleaning, and maintaining cleanliness throughout the entire course of this project. Methods and precautions presented in ASTM A380 shall be followed as applicable.

5.5.1.2. Surfaces of each component and its appurtenances shall be visually examined for cleanliness in accordance with ASTM A380, Paragraph 7.2.1. Surfaces not readily accessible to visual examination may be examined by other methods provided in Paragraph 7.2 of ASTM A380 subject to Buyer approval.

5.5.2. Painting:

5.5.2.1. The Vendor shall prepare a painting and inspection procedure for Buyer review.

5.5.2.2. Surfaces shall be prepared for coating in accordance with SSPC-SP-10 and the coating manufacturer's recommendations.

5.5.2.3. Surface finish shall be inspected prior to painting to assure compliance with SSPC-SP-10.

5.5.3. Jigs, Fixtures and Special Tools:

5.5.3.1. Any special tools, jigs, fixtures, tapes, patterns, and tooling prepared for fabrication of the components per this procurement specification

for guaranteeing interchangeability or facilitating quantity production shall become the property of the Buyer.

5.5.3.2. For certifications, implement provisions to ensure that all components used or supplied are not counterfeit or of other suspect origin.

5.5.3.3. Materials and forms of fasteners shall comply with drawings. Any substitutes shall be agreed upon with the Buyer prior to use.

5.5.4. Pipe Thread Sealant:

5.5.4.1. The Vendor shall submit the proposed pipe thread sealant, activator (if necessary) and the applicable Material Safety Data Sheet (MSDS) for each, to the Buyer for review prior to procuring materials.

5.5.4.2. Pipe thread sealant shall be as specified on drawing.

5.5.4.3. The Vendor shall be responsible for submitting materials with properties that meet or exceed those specified. The Vendor shall be responsible for using compatible systems and application methods that are appropriate for the intended service.

5.5.4.4. Pipe thread sealant shall be used as required during assembly of parts in accordance with manufacturer-recommended instructions.

5.5.4.5. All parts to be bonded shall be visually examined for cleanliness in accordance with approved procedures. A report of the inspection results shall be included in the documentation package.

5.5.4.6. Confirm compatibility of sealant with parts to be bonded.

5.5.4.7. If aqueous washing systems are used to clean the surfaces before bonding, check for compatibility of washing solution with the adhesive.

5.5.4.8. A determination shall be made as to whether the parts to be bonded are made from an *active* or an *inactive* material.

5.5.4.9. Specific pipe thread sealants will react faster with *active* metals while *inactive* metals will require the use of an activator.

5.5.4.10. If metal is unknown, use activator. See pipe thread sealant manufacturer technical data sheet for list of *active* and *inactive* metals.

5.5.4.11. Apply sealant to threads of parts to be bonded following directions for use listed in pipe thread sealant technical data sheet.

6. TESTS AND INSPECTIONS

6.1. General Requirements:

6.1.1. Buyer's representative shall have reasonable access to Vendor's fabrication facilities during normal working hours for source inspection, audit, or surveillance to verify conformance to the specified requirements.

6.2. Personnel Qualifications

6.2.1. Test and inspection personnel qualifications shall be in accordance with National Standards as shown herein.

6.2.2. NDE Personnel Certification: Nondestructive Examination (NDE) personnel performing leak testing and liquid penetrate testing operations shall be certified per the requirements of ASNT SNT-TC-1A. All test reports shall be signed by personnel holding either Level II or Level III certifications that either performed, or witnessed the test. A copy of the individual's current certification(s) shall be provided.

6.3. Non-Destructive Examinations

6.3.1. Visual testing (VT): All welds will be visually inspected to check for absence of cracks, fissures and other surface defects. The Vendor shall submit a VT test procedure for review and approval.

6.3.2. Liquid penetrant testing (PT): Liquid penetrant examination shall be performed on welds as specified in the design drawings and in accordance with ASME BPVC, Section V and accepted to criteria of ASME BPVC, Section VIII, Appendix 8. The Vendor shall submit a PT test procedure for review and approval.

6.4. Shop Tests

6.4.1. The Vendor shall conduct tests in accordance with written procedures approved by the Buyer.

6.4.2. Established (standard/commercial manufacture) items such as fasteners and actuators shall be inspected and tested against manufacturers specifications and industry standards. It shall be supplied with a Certificate of Conformance or test or type certification, unless specified otherwise on drawings or in accompanying contractual documentation.

6.4.3. Prior to acceptance, equipment shall be inspected for leaks of Lubricant and shall be rectified at source.

6.4.4. Hydrostatic Test

The 3/4" and 1/2" pipes including the 6" pipe chamber shall be hydrostatically tested to 225 psi per ASME B31.3-1996, Process Piping (Reference 2.1.4). This can be accomplished by following the steps for hydrostatic test in Attachment 1.

6.4.5. Leak Test

The pump chamber and poppet seat shall be pressure leak tested with the poppet in the lower most position. The test medium shall be potable water and shall be supplied through the quick connect fitting (item 36 on WTP-M-23500) to pressurize the chamber. Pressure shall be 35 to 40 psig and held for a minimum of 10 minutes. Repeat the test 3 times and average the leak rate. The acceptable leak rate shall be less than 2 gal/hr. If the leak rate is in excess of this value the vendor shall consult with Buyer to determine if there is a design or a manufacturing problem that needs correction.

6.4.6. Functional Test

Functionally test the pump actuator assembly by activating the mechanism by hand. All moving parts of the pump and actuator shall work smoothly without binding.

6.4.7. Pump Vertical Balance While Suspended

While suspended vertically by two lift trunnions, the pump shall hang vertically within 5 degree as measured from the side of the upper tube assembly. The reference location of the lift trunnions is shown on WTP-M-23500, sht. 2 and is the best estimate of the required location. The vendor shall verify the 5-degree requirement and position the trunnions as required prior to final welding of the trunnions. Refer to note 21 on WTP-M-23500.

6.4.8. Vent Valve Vertical Balance While Suspended

After completion of assembly, position the hoses and balance per notes 16 and 20 on WTP-M-23508.

6.4.9. Actuator Vertical Balance While Suspended

After completion of assembly, position the hoses and balance per notes 16 and 17 on WTP-M-23504.

6.4.10. Load Test of Lifting Bails

All lifting bails and trunnions shall be load tested to 125% of the respective component's assembled weight. The bail and connecting hardware shall show no signs of plastic deformation.

6.5. Site Tests

N/A

6.6. Interpretation of Requirements/Tolerances and Acceptance Criteria

6.6.1. Unless otherwise specifically stated in the detailed drawings, manufacturing and fabrication tolerances for all equipment, accessories, and components shall conform to ASME/ANSI Y14.5M.

6.6.2. Thickness tolerances shall conform to the requirements of the referenced commercial standard. In the absence of such criteria, allowable thickness shall be plus .010 inches, minus .005 inches or as defined on the drawings.

6.6.3. Finishes, thread classes, and edge provisions:

6.6.3.1. Unless otherwise noted, all machined surfaces shall be 125 rms or finer in accordance with ASME/ANSI B46.1.

6.6.3.2. Sharp edges and burrs shall be removed from all components, including manufactured assemblies.

6.6.3.3. Internal machined UNC threads shall be class 2B, unless otherwise noted.

6.6.3.4. External machined UNC threads shall be class 2A, unless otherwise noted.

6.6.3.5. All machined thread surface finishes shall be 63 or finer in accordance with ANSI B46.1. Burrs shall be removed from the threads.

6.6.4. Fabricated Components

6.6.4.1. Thickness tolerances shall conform to the requirements of the referenced commercial standard applicable to the material being fabricated. When plate thickness is specified herein or in the detailed drawings, it shall be considered to mean minimum thickness.

6.7. Equipment Data Package

On completion of fabrication the Seller shall assemble an equipment data package, which consists of all quality verification documents including but not limited to:

- Welding qualifications verification reports.
- Major repair verification reports (as required).
- Cleaning and coating verification reports.
- Heat-treating reports.
- Material test reports.
- Material certificates of compliance.
- Liquid penetrant examination and verification reports.
- Pressure test reports – hydrostatic and leak tests.
- Visual weld inspection reports.
- Mechanical test reports – functional test.
- Load testing reports

The data package shall be in a three ring binder and include an index of the information contained within. Each pump shall have a separate data package assembled and identified as such. The data package shall be shipped with the applicable pump.

7. ATTACHMENT 1

7.1. Suggested Assembly ADS Feed Pump

1. Fabricate lower tube assembly (WTP-M-23502-4). NDE and document welds.

2. Check ease of insertion of ¾" feed pipe (WTP-M-23502-13) into socket on cover (WTP-M-23502-6).

3. Weld lower tube assembly to cover. See View H on WTP-M-23500, sheet 2. NDE and document weld.

4. Fabricate tube assembly (WTP-M-23502-3). NDE and document welds.

5. Insert tube assembly into lower tube assembly and ensure that ¾" feed pipe seats in socket on cover assembly. Rotate tube assembly such that, in plan view, the centerline of the ½" vent pipe (WTP-M-23502-24) is centered between two bolt holes (any two) on the cover. Scribe a line on the cover between these two bolt holes. **Verify ¾" feed pipe is still seated in cover socket before welding.** Weld tube assembly to lower tube assembly. See View H on WTP-M-23500, sheet 3. NDE and document weld.

Hydrostatic Test

6. Cut a 1/8" thick rubber disk gasket to 2 7/8" ID x 4 15/16" OD. Position on cover and transfer bolt hole pattern to gasket. Cut 7/16" holes in gasket. Note: holes will cut through the outer edge of the gasket; this is ok.

7. Cut a 12 gauge thick stainless steel disk to 4 1/8" OD.

8. Insert rubber gasket into recess in cover, followed by stainless steel disk. Install housing (WTP-M-23502-33) onto cover and bolt together using studs, lock washers, flat washers and nuts (WTP-M-23500-25, 26, 27 & 28). Uniformly torque in a cross pattern to 7 ft-lb. Note that poppet (WTP-M-23502-14) and screen (WTP-M-23502-10) do not need to be installed at this time.

9. Provide temporary supports for positioning the assembly on an angle with the ¾" and ½" pipes as high as possible. The ½" pipe should be on top. Fit the ¾" pipe for water inlet and ½" pipe for air vent and pressure gauge.

10. Connect the pressure pump and fill with potable water through the ¾" pipe. Continue until all air escapes through the ½" pipe.

11. Install a calibrated 0-250 psig pressure gauge to the ½" pipe.

12. Raise the pressure slowly to 225 psig. Hold the test pressure for at least 10 minutes and view for any areas of deformation. After 10 minutes, visually examine all the pressure containing welds for leaks. (See reference 2.1.4) Note: leaks around the gasket/disk area are acceptable as long as the test pressure is maintained throughout the test duration.

13. Upon successful completion of the test (including retest after repairs, if applicable) document the test results, disassemble and drain the assembly.

14. Fabricate upper tube assembly (WTP-M-23502-31). NDE and document welds.

15. Weld upper tube assembly to lower tube assembly. See elevation view on WTP-M-23500, sheet 2. NDE and document weld.

16. Install nipple (WTP-M-23502-12) into recess in cover.

17. Attach rocker arm (WTP-M-23502-21) to housing (capturing poppet) using pivot pin (WTP-M-23502-22) and setscrews (WTP-M-23500-19 and WTP-M-23500-41) per section D-D, WTP-M-23500, sht. 4. Attach screen (WTP-M-23502-10) to housing using machine screws and flat washers (WTP-M-23500-23 & 24).

18. Orient housing with cover such that the free end of the rocker arm aligns with the scribe line between the bolt holes on the cover. Attach housing to cover with studs, lock washers, flat washers and nuts (WTP-M-23500-25, 26, 27 & 28).

19. Fabricate flange assembly (WTP-M-23502-1). NDE and document welds.

20. Attach flange assembly to upper tube assembly, sliding the ¾" and ½" pipes through their respective holes in the flange assembly. Seat flange on upper tube assembly. Note: the flange assembly will have to be shifted over about 1" to mate with the upper tube assembly. This will cause the ¾" and ½" pipes to bend slightly. This is ok. However, make sure not to twist the flange assembly relative to the pipes. See Section C-C on WTP-M-23500, sheet 2. TACK WELD ONLY flange assembly to upper tube assembly. (Full welding will be done after lift rod operation is verified).

21. Install bushing (WTP-M-23500-35) in flange assembly.

22. Assemble lift rod assembly (WTP-M-23502-36).

23. Install lift rod assembly through bushing in flange assembly. Slide lift rod guide assembly (WTP-M-23502-30) over lift rod assembly.

24. Attach lift rod assembly to rocker arm using lift rod pin (WTP-M-23502-23), flat washers (WTP-M-23500-20) and roll pin (WTP-M-23500-22). Lift rod pin is a press fit into lift rod.

Functional Test

25. Manually operate the lift rod assembly to check for smooth operation. There should be no binding. Binding will be eliminated with proper orientation of the flange assembly relative to the upper tube assembly.

26. Locate the lift rod guide assembly at the proper elevation and weld to upper tube assembly. NDE and document welds.

27. Weld flange assembly to upper tube assembly. Weld ¾" and ½" pipes to flange assembly. NDE and document welds.

28. Attach the lift rod magnet target (WTP-M-23502-20) to the lift rod assembly.

29. Attach the actuator magnet targets (WTP-M-23502-15) to the flange assembly using the threaded studs (WTP-M-23500-11).

30. Attach the vent pipe boot (WTP-M-23502-19) and boot retainer (WTP-M-23502-17) to the flange assembly using the flat washers, lock washers and machine screws (WTP-M-23500-29 & 32).

31. Fabricate the lift trunnion assemblies (WTP-M-23502-7). NDE and document welds.

32. Check balance of pump then tack lift trunnion assemblies to flange assembly. Verify pump hangs within 1 degree of vertical, then complete the lift trunnion to flange welds. NDE and document welds.

33. Fabricate the actuator assembly (WTP-M-23504-1).

34. Place hoses in clips on actuator and check level. Adjust by bending bail as required.

35. Fabricate the vent valve assembly (WTP-M-23508-1).

36. Place hoses in clips on vent valve and check level. Adjust by bending bail as required or sliding laterally in the slots provided.

Leak Test

37. Attach actuator assembly to magnets on flange assembly.

38. Provide for filling the lower chamber with potable water through the ½" pipe complete with a calibrated pressure gauge 0-60 psig and a valve to regulate pressure up to 40 psig.

39. Cap the ¾" pipe with a stainless steel cap.

40. Position the ADS pump assembly in the vertical position with room at the bottom for a 5-gallon bucket.

41. Pressurize the air cylinder on the actuator assembly with 35 psig air to push the lift rod into the "down" position (poppet valve in the down position) and pressurize the lower chamber with water to 40 psig.

42. Place the 5 gallon bucket under the pump assembly and begin timing for the leak test per section 6.4.5 of this specification.

43. Drain the test water and disconnect the test apparatus.

44. If leak test is acceptable, tack weld roll pin item (WTP-M-23500-22) to lift rod pin (WTP-M-23502-23).

Drawings and Documents

Operating Unit Group 10 – Appendix 10.8
High Level Waste Building
Engineering Calculations

The documents listed in the following table are incorporated by reference into this permit and are subject to the requirements set forth in Part I Standard Conditions, Part II General Facility Conditions, and Part III Operating Unit Group 10 Conditions. Upon request, copies of the documents can be viewed at the Nuclear Waste Program Resource Center located at 3100 Port of Benton Blvd. Richland, WA. Appointments for viewing can be scheduled by calling (509) 372-7950.

Drawing/Document	***Description***
24590-HLW-PER-M-02-003, Rev 3	Flooding Volume Calculation for the HLW Facility
RESERVED	RESERVED

Source documents (which do not include a "P" in the last set of numbers, e.g. "-P0001," or "-TP001") should be used in conjunction with any document change notices issued against them.

We are currently transitioning from permit documents (which do include a "P" in the last set of numbers) to source documents. At the end of the transition period, permit submittals will contain source documents and will be incorporated into the permit as described in Ecology Publication # 07-05-006 (www.ecy.wa.gov/biblio/nwp.html).

This page intentionally left blank.

Drawings and Documents

Operating Unit Group 10 – Appendix 10.9
High Level Waste Building
Material Selection and Corrosion Evaluation Documentation

The documents listed in the following table are incorporated by reference into this permit and are subject to the requirements set forth in Part I Standard Conditions, Part II General Facility Conditions, and Part III Operating Unit Group 10 Conditions. Upon request, copies of the documents can be viewed at the Nuclear Waste Program Resource Center located at 3100 Port of Benton Blvd. Richland, WA. Appointments for viewing can be scheduled by calling (509) 372-7950.

See Appendix 7.9 for material selection documentation common to the Pretreatment, LAW, HLW, and Laboratory buildings.

Drawing/Document	*Description*
24590-HLW-N1D-HDH-P0003, Rev 1	Material Selection Data Sheet for HDH-VSL-00002/4
24590-HLW-N1D-HDH-P0005, Rev 1	Material Selection Data Sheet for HDH-VSL-00003
24590-HLW-N1D-HDH-P0007, Rev 1	Material Selection Data Sheet for HDH-VSL-00001
24590-HLW-N1D-HMP-P0001, Rev 0	Material Selection Data Sheet for HLW HMP-MLTR-00001 & 2
24590-HLW-N1D-HOP-P0001, Rev 0	Material Selection Data Sheet for HOP-HEME-00001A/1B/2A/2B
24590-HLW-N1D-HOP-P0002, Rev 0	Selection Data Sheet for HOP-WESP-00001/2
24590-HLW-N1D-HOP-P0003, Rev 0	Material Selection Data Sheet for HOP-ADBR-00001A/1B / 2A/2B
24590-HLW-N1D-HOP-P0004, Rev 1	Material Selection Data Sheet for HOP-SCO-00001/4
24590-HLW-N1D-HOP-P0005, Rev 1	Material Selection Data Sheet for HOP-SCR-00001/2
24590-HLW-N1D-HOP-P0006, Rev 1	Material Selection Data Sheet for HOP-ABS-00002/3
24590-HLW-N1D-HOP-P0007, Rev 0	Material Data Sheet for HOP-HX-00002/4
24590-HLW-N1D-HOP-P0009, Rev 2	Material Selection Data Sheet for HOP-VSL-00903/4
24590-HLW-N1D-HOP-P0010, Rev 0	Material Selection Data Sheet for HOP-SCB-00001/2
24590-HLW-N1D-HSH-P0001, Rev 0	Material Selection Data Sheet for HSH-TK-00001/2
24590-HLW-N1D-RLD-P0001, Rev 0	Material Selection Data Sheet for RLD-VSL-00007
24590-HLW-N1D-RLD-P0002, Rev 0	Material Selection Data Sheet for RLD-BRKPT-00007/9

24590-HLW-N1D-RLD-P0006, Rev 0	Material Selection Data Sheet for RLD-VSL-00008
24590-HLW-N1D-RLD-P0009, Rev 0	Material Selection Data Sheet for RLD-BRKPT-00004
24590-HLW-N1D-RLD-P0013, Rev 0	Material Selection Data Sheet for RLD-VSL-00002
RESERVED	RESERVED

Source documents (which do not include a "P" in the last set of numbers, e.g. "-P0001," or "-TP001") should be used in conjunction with any document change notices issued against them.

We are currently transitioning from permit documents (which do include a "P" in the last set of numbers) to source documents. At the end of the transition period, permit submittals will contain source documents and will be incorporated into the permit as described in Ecology Publication # 07-05-006 (www.ecy.wa.gov/biblio/nwp.html).

Drawings and Documents

Operating Unit Group 10 – Appendix 10.10
High Level Waste Building
Critical Systems Equipment/Instrument List

The documents listed in the following table are incorporated by reference into this permit and are subject to the requirements set forth in Part I Standard Conditions, Part II General Facility Conditions, and Part III Operating Unit Group 10 Conditions. Upon request, copies of the documents can be viewed at the Nuclear Waste Program Resource Center located at 3100 Port of Benton Blvd. Richland, WA. Appointments for viewing can be scheduled by calling (509) 372-7950.

Drawing/Documents	***Description***
Rev 01-17-2007	Room and Equipment List for EL.-21
Rev 01-17-2007	Room and Equipment List for EL. 0
Rev 01-17-2007	Room and Equipment List for EL. 37
Rev 01-17-2007	Room and Equipment List for EL. 58
RESERVED	RESERVED

Source documents (which do not include a "P" in the last set of numbers, e.g. "-P0001," or "-TP001") should be used in conjunction with any document change notices issued against them.

We are currently transitioning from permit documents (which do include a "P" in the last set of numbers) to source documents. At the end of the transition period, permit submittals will contain source documents and will be incorporated into the permit as described in Ecology Publication # 07-05-006 (www.ecy.wa.gov/biblio/nwp.html).

This page intentionally left blank.

Drawings and Documents

Operating Unit Group 10 – Appendix 10.11
High Level Waste Building
IQRPE Reports

The documents listed in the following table are incorporated by reference into this permit and are subject to the requirements set forth in Part I Standard Conditions, Part II General Facility Conditions, and Part III Operating Unit Group 10 Conditions. Upon request, copies of the documents can be viewed at the Nuclear Waste Program Resource Center located at 3100 Port of Benton Blvd. Richland, WA. Appointments for viewing can be scheduled by calling (509) 372-7950.

Drawing/Document	***Description***
24590-101-SC-HXYG-0074-03-00003, Rev 00A	IQRPE Integrity Assessment Report for HOP-ABS-00002/3
24590-CM-HC4-HXYG-00138-01-00021, Rev 00B	IQRPE Integrity Assessment Report for HOP Miscellaneous Unit Sub-systems
24590-CM-HC4-HXYG-00138-01-08, Rev 00B	IQRPE Integrity Assessment Report for Below Grade Secondary Containment
24590-CM-HC4-HXYG-00138-01-11, Rev 00B	IQRPE Integrity Assessment Report for El. 0 Secondary Containment
24590-CM-HC4-HXYG-00138-01-15, Rev 00B	IQRPE Integrity Assessment Report for HLW Portion of Below Grade Transfer Lines, Secondary Containment, Ancillary Equipment, and Corrosion Assessment, Rev. 1
24590-CM-HC4-HXYG-00138-01-17, Rev 00A	IQRPE Integrity Assessment Report for HOP-VSL-00903/4
24590-CM-HC4-HXYG-00138-02-08, Rev 00B	IQRPE Integrity Assessment Report for El. -21 HOP Ancillary Equipment

24590-CM-HC4-HXYG-00138-02-00010, Rev 00A	IQRPE Integrity Assessment Reports PVV System Ancillary Equipment
24590-CM-HC4-HXYG-00138-02-00024, Rev 00A	IQRPE Integrity Assessment Report for HDH-VSL-00001/2/3/4
24590-CM-HC4-HXYG-00138-02-00025, Rev 00B	IQRPE Integrity Assessment Report for El. 0 to 58 HOP Ancillary Equipment
24590-CM-HC4-HXYG-00138-02-00026, Rev 00A	IQRPE Integrity Assessment Report for El. 0 HOP Miscellaneous Unit Subsystems
24590-CM-HC4-HXYG-00138-02-00030, Rev 00A	IQRPE Integrity Assessment Report for El. 0 HFP Ancillary Equipment
24590-CM-HC4-HXYG-00138-02-00042, Rev 00A	IQRPE Integrity Assessment Report for El. 37 Secondary Containment
24590-CM-HC4-HXYG-00138-02-00043, Rev 00A	IQRPE Integrity Assessment Report for RLD-VSL-00002/7/8
24590-CM-HC4-HXYG-00138-02-00044, Rev 00A	IQRPE Integrity Assessment Report for El. 21 RLD Ancillary Equipment
24590-CM-HC4-HXYG-00138-02-00048, Rev 00A	IQRPE Integrity Assessment Report for PJV Ancillary Equipment
24590-CM-HC4-HXYG-00138-02-00049, Rev 00A	IQRPE Integrity Assessment Report for PJV-HEPA-00004A/4B/5A/5B and PJV-HTR-00002
24590-CM-HC4-HXYG-00138-02-00050, Rev 00A	IQRPE Integrity Assessment Report for HSH-TK-00001/2
24590-CM-HC4-HXYG-00138-02-00055 Rev. 00A	IQRPE Integrity Assessment Report for HDH Ancillary Equipment
AREVA-IA-084, Rev. 0	IQRPE Integrity Assessment Report for Melter Process HMP System Miscellaneous Treatment Unit
AREVA-IA-082, Rev. 1	IQRPE Integrity Assessment Report for Melter Process HMP System Miscellaneous Treatment Unit Subsystem Equipment Ancillary Equipment

RESERVED	RESERVED

Source documents (which do not include a "P" in the last set of numbers, e.g. "-P0001," or "-TP001") should be used in conjunction with any document change notices issued against them.

We are currently transitioning from permit documents (which do include a "P" in the last set of numbers) to source documents. At the end of the transition period, permit submittals will contain source documents and will be incorporated into the permit as described in Ecology Publication # 07-05-006 (www.ecy.wa.gov/biblio/nwp.html).

Drawings and Documents

Operating Unit Group 10 – Appendix 10.13
High Level Waste Building
Instrument Control Logic and Narrative Descriptions

The documents listed in the following table are incorporated by reference into this permit and are subject to the requirements set forth in Part I Standard Conditions, Part II General Facility Conditions, and Part III Operating Unit Group 10 Conditions. Upon request, copies of the documents can be viewed at the Nuclear Waste Program Resource Center located at 3100 Port of Benton Blvd. Richland, WA. Appointments for viewing can be scheduled by calling (509) 372-7950.

Drawing/Document Number	***Description***
24590-HLW-PER-J-02-001, Rev 2	System Logic Description for HOP and PVV Systems
24590-HLW-PER-J-02-002, Rev 1	System Logic Description for HDH System
24590-HLW-PER-J-02-003, Rev 0	System Logic Description for RLD System
24590-HLW-PER-J-04-0001, Rev 0	System Logic Description for HFP System
24590-HLW-PER-J-04-0002, Rev 0	System Logic Description for PJV System
24590-HLW-PER-J-04-0003, Rev 0	System Logic Description for HSH System
RESERVED	RESERVED

Source documents (which do not include a "P" in the last set of numbers, e.g. "-P0001," or "-TP001") should be used in conjunction with any document change notices issued against them.

We are currently transitioning from permit documents (which do include a "P" in the last set of numbers) to source documents. At the end of the transition period, permit submittals will contain source documents and will be incorporated into the permit as described in Ecology Publication # 07-05-006 (www.ecy.wa.gov/biblio/nwp.html).

1
2
3
4
5 This page intentionally left blank.

Drawings and Documents

Operating Unit Group 10 – Appendix 10.18
High Level Waste Building
Operating Documents

The documents listed in the following table are incorporated by reference into this permit and are subject to the requirements set forth in Part I Standard Conditions, Part II General Facility Conditions, and Part III Operating Unit Group 10 Conditions. Upon request, copies of the documents can be viewed at the Nuclear Waste Program Resource Center located at 3100 Port of Benton Blvd. Richland, WA. Appointments for viewing can be scheduled by calling (509) 372-7950.

See Appendix 7.18 for operating documents common to the Pretreatment, LAW, HLW, and Laboratory buildings.

Drawing/Document Number	***Description***
24590-HLW-PER-PR-03-001, Rev 0	Description of HLW Vitrification System Bypass Events
24590-HLW-PER-M-04-002, Rev 3	Leak Detection Capability in the HLW Facility
24590-HLW-PER-M-04-0001, Rev 0	HLW Facility Waste Removal Capability
RESERVED	RESERVED

Source documents (which do not include a "P" in the last set of numbers, e.g. "-P0001," or "-TP001") should be used in conjunction with any document change notices issued against them.

We are currently transitioning from permit documents (which do include a "P" in the last set of numbers) to source documents. At the end of the transition period, permit submittals will contain source documents and will be incorporated into the permit as described in Ecology Publication # 07-05-006 (www.ecy.wa.gov/biblio/nwp.html).

This page intentionally left blank.

R10864016

ISSUED BY
RPP-WTP PDC

Document title: **Leak Detection Capability in the HLW Facility**

Contract number: DE-AC27-01RV14136

Department: Mechanical Systems

Author(s): Y. Nurdogan

Principal author signature: Yahya Nurdogan

Document number: 24590-HLW-PER-M-04-002, Rev 3

Checked by: A. Moretta

Checker signature: Angelo A. Moretta

Date of issue: 7 January 2008

Issue status: Issued for Permitting Use

Approved by: R. Stevens

Approver's position: Engineering Group Supervisor

Approver signature: Robert E. Stevens

JAMES K. ROUSE
STATE OF WASHINGTON
33910
REGISTERED
PROFESSIONAL ENGINEER

EXPIRES: 3/5/08

This bound document contains a total of 18 sheets

River Protection Project
Waste Treatment Plant
2435 Stevens Center Place
Richland, WA 99354
United States of America
Tel: 509 371 2000

Notice

Please note that source, special nuclear, and byproduct materials, as defined in the Atomic Energy Act of 1954 (AEA), are regulated at the U.S. Department of Energy (DOE) facilities exclusively by DOE acting pursuant to its AEA authority. DOE asserts that pursuant to the AEA, it has sole and exclusive responsibility and authority to regulate source, special nuclear, and byproduct materials at DOE-owned nuclear facilities. Information contained herein on radionuclides is provided for process description purposes only.

History Sheet

Rev	Date	Reason for revision	Revised by
0	01/27/05	Issued for Permitting Use	K. Chandrasekaran
1	03/09/05	Completely Revised according to the WTP Style Manual. Revisions bars are not shown.	Y. Nurdogan
2	03/14/05	Re-issued with PE certification.	Y. Nurdogan
3	01/07/08	Revised to incorporate comment from Washington State Department of Ecology.	Y. Nurdogan

Contents

Notice ii
History Sheet iii
Acronyms v
1 Summary 1
2 Objective 2
3 Description 2
4 Assumptions 3
4.1 Inputs 3
4.2 Assumptions 3
5 Analysis 4
6 Detectable Leak Rates 4
7 Calculations 5
7.1 Methodology 5
7.2 Calculations 8
8 References 13
8.1 Project Documents 13
8.2 Codes and Standards 13
8.3 Other Documents 13

Acronyms

AEA	Atomic Energy Act of 1954
BNI	Bechtel National, Incorporated
CGS	centimeter gram second units of measurement
DOE	US Department of Energy
DWP	Dangerous Waste Permit
HCP	HLW concentrate receipt process system
HDH	HLW canister decontamination handling system
HFP	HLW melter feed process system
HLW	high-level waste
HOP	melter offgas treatment process system
HPH	HLW canister pour handling system
HSH	HLW melter cave support handling system
RLD	radioactive liquid waste disposal system
WAC	Washington Administrative Code
WTP	Hanford Tank Waste Treatment and Immobilization Plant

1 Summary

The High Level Waste (HLW) facility secondary containment sumps must satisfy the leak detection criteria of the Washington Administrative Code (WAC) and the Hanford Tank Waste Treatment and Immobilization Plant (WTP) Dangerous Waste Permit (DWP), Permit Conditions III.10.E.9.e.ii and III.10.J.5.e.ii for secondary containment systems. This report evaluates the minimum leak rates that the cell and cave sumps can detect within 24 hours.

The HLW facility contains 15 secondary containment sumps. Six of them are rectangular and the remaining nine are round sumps. These sumps are evaluated in this report. Leaks from vessels or piping within the cells and caves will flow along the floor and collect in a sump and be detected with level instrumentation. All sumps are dry type, that is, the sumps are dry unless there is a leak that reaches the sump. All round sumps are the same size (30 in. outside diameter by 18 in. depth). All the rectangular sumps are the same size (31.5 in. length by 25.5 in. width by 16 in. depth). All sumps, except the Melter Cave 1 and 2 central sumps (HSH-SUMP-00003 and HSH-SUMP-00007), are provided with radar type leak detection. The Melter Cave 1 and 2 central sumps use conventional pneumatic bubblers and a level transmitter to detect leaks.

The minimum leak flow rate that can be detected in 24 hours is calculated by estimating the volumes of two components of the leak: 1) the minimum detectable quantity of liquid in the sump and 2) the volume associated with the leak "rivulet" formed as the leak flows along the floor to the sump. Water is used as the standard fluid for estimating leak rates. The detectable volume of the leak in the sump is related to size and geometry of the sump and the location and sensitivity of the leak detection instrumentation. The volume associated with the leak rivulet is related to the slope of the floor and the flow rate of the leak.

Minimum 24-hour detectable leak rates are evaluated for each sump in the HLW facility. The leak detection rate varies with the travel distance of the leak. The longer the travel distance, the greater is the 24-hour leak detection rate. The bounding case for the smaller 30-inch diameter sumps (HCP-SUMP-00001) indicates a maximum leak travel distance of 82 ft. The calculated minimum 24-hour leak detection rate for this sump is 0.021 gal/hr. Leak detection rates for the remaining 30-inch diameter sumps range from 0.018 to 0.020 gal/hr.

For the larger rectangular sumps (HSH-SUMP-00003 and HSH-SUMP-00007) located in the melter cave, the maximum leak travel distance is 88 ft. The minimum 24-hour leak detection rate for these sumps is 0.207 gal/hr. Leak detection rate for the remaining rectangular sumps ranges from 0.060 to 0.061 gal/hr.

2 Objective

The objective of this report is to document the minimum flow rate that can be detected within a 24-hour period for potential leaks collected in the HLW facility secondary containment area sumps. The scope of this report includes:

- Leaks from inaccessible vessels, equipment, and piping containing DWP regulated waste that flows by gravity directly to sumps containing leak detection instrumentation.
- Leaks that flow by gravity to floor drains that are routed to another cell that contains a sump with leak detection instrumentation.

The scope does not include leaks collected in drain systems that flow to vessels or tanks and leaks detected by routine visual inspection.

3 Description

The HLW facility secondary containment area sumps must satisfy the leak detection criteria of the WAC and the DWP conditions for tank and miscellaneous units' secondary containment systems.

The regulatory requirements for leak detection are contained in WAC-173-303-640 (4), Tank Systems, Containment and Detection of Releases and are stated as follows:

"(b)Secondary Containment systems must be:
(ii) Capable of detecting and collecting releases and accumulated liquids until the collected material is removed.

(c) To meet the requirements of (b) of this subsection, secondary containment systems must be at a minimum:
(iii) Provided with a leak detection system that is designed and operated so that it will detect the failure of either the primary or secondary containment structure or the presence of any release of dangerous waste or accumulated liquid in the secondary containment system within twenty-four hours, or at the earliest practicable time if the owner or operator can demonstrate to the department that the existing detection technologies or site conditions will not allow detection of a release within twenty-four hours."

In addition, the WTP DWP (WA 7890008967), Conditions III.10.E.9.e.ii and III.10.J.5.e.ii require submittal of:

"Detailed plans and descriptions, demonstrating the leak detection system is operated so that it will detect the failure of either the primary or secondary containment structure or the presence of any release of dangerous and/or mixed waste, or accumulated liquid in the secondary containment system within twenty-four (24) hours. Detection of a leak of at least 0.1 gallons per hour within twenty-four (24) hours is defined as being able to detect a leak within twenty-four (24) hours. Any exceptions to this criteria must be approved by Ecology [WAC 173-303-640 (4) (c) (iii), WAC 173-303-806 (4) (c) (vii)]"

4 Assumptions

4.1 Inputs

1. Sump type, leak detection type, and nominal sump dimensions are derived from "Sump Data for HLW Facility" (24590-HLW-PER-M-02-001, Table 1).
2. The stainless steel liners in the vessel cells and caves are sloped at a minimum slope of 1:100 (1%) to direct potential leakage in these areas to their respective sump.
3. The selection of rectangular sumps and their design is largely governed by the physical layout and associated constraints. The Melter Cave Central rectangular sumps (HSH-SUMP-00003 and HSH-SUMP-00007) are located at the center of drainage trenches; sumps have same width as trenches to achieve better flow into sump and to minimize dead spots for flow. The physical design of these sumps is largely dictated by minimum volume requirements, containment of equipment, instrument lines and pipes, constructability, common design and configuration of melter rails in the Melter Cave. Radar level detection is not feasible for Melter Cave Central sumps, as the radar guide tube path would require several turns and bends to avoid physical constraints.

4.2 Assumptions

1. The following (a through g) were derived from agreements between BNI, DOE, and the Department of Ecology:
   a. The liquid leaking is water at a temperature of 100 °F.
   b. The leak is at a constant rate over the twenty-four hour period.
   c. The leak is assumed to occur at the farthest point from the sump.
   d. No evaporation will occur.
   e. The liquid does not foam in the sumps.
   f. Hold-up is defined as wetting of the surface.
   g. Level detection instruments will be properly installed and calibrated upon installation. Periodic, normal maintenance and calibration will be performed on level instruments during operation of the facility and the instruments will be maintained in an operable condition.
2. The furthest point from the sump is assumed to be bounded by the furthest corner of the cell, which contains the sump. The flow path for each cell is conservatively considered to be along the straight walls rather than diagonally across the cell.
3. There will be no hold-up of the leakage on its way to the floor due to obstructions. The floors of the facility are properly sloped so that the leakage will flow into the low-point sumps and cause a level increase in sump. Obstructions in the flow path that may cause deviation from an idealized flow path, but do not cause temporary accumulation of liquid, may be neglected.
4. The floor is uniform (no undulations or low spots) and the flow path is in straight lines (no meandering flow).
5. Radar leak detection is stated by the radar instrument supplier to be accurate within $\pm$10 mm (0.4 inch), i.e., the minimum level of water in the sump must rise to at least 10 mm (0.4 inch) before it is detected by the radar instrument. The radar guide tube is located 1/2 inch from the bottom of the sump. It is not necessary for the liquid level to be within the guide tube before the radar will detect it. Because the bottom of the round sump is dished (it is formed from an

ellipsoidal head), and the radar guide tube is offset from the center of the sump by about 4 inches, the level as measured from the center of the sump must rise slightly higher in the sump to be within the radar's 10 mm (0.4 inch) detection specification. Therefore, for conservatism, it is assumed that the detectable level in the round sump is one inch from the bottom of the sump measured in the center. However, for rectangular sumps, it is assumed that the detectable level in the sump is 10 mm (0.4 inch) from the bottom of the sump.

6. The pneumatic bubbler leak detection instrument in the melter cave rectangular sump uses a 1/2-inch Schedule 40 pipe dip pipe with a straight end (not slanted). The bottom of the dip pipe is located 1/4 inch from the bottom of the sump. The leak detection instrumentation includes a pneumatic level transmitter that can detect a level that is 1 inch above the bottom of the dip tube. Therefore, added to the 1/4-inch dip tube clearance, the liquid must rise to a total depth in the sump of at least 1.25 inches before it can be detected.

5 Analysis

The HLW facility contains 15 secondary containment sumps. All round sumps are the same size (30 in. outside diameter by 18 in. depth). All the rectangular sumps are the same size, 31.5 in. length by 25.5 in. width by 16 in. depth. All sumps except the Melter Cave 1 and 2 central sumps (HSH-SUMP-00003 and HSH-SUMP-00007) are provided with radar type leak detection. The Melter Cave 1 and 2 central sumps use conventional pneumatic bubblers and level transmitter to detect leaks.

Leaks of vessels or piping within the cells will flow along the floor and will be collected in a sump and detected with level instrumentation.

6 Detectable Leak Rates

Minimum 24-hour leak detection rates are evaluated for each sump in the HLW facility. The leak detection rate varies with the travel distance of the leak, the sump size and leak detection instrument type. Longer the travel distance, the greater is the 24-hour leak detection rate. The bounding case for the smaller 30-inch diameter sumps (HCP-SUMP-00001) indicates a maximum leak travel distance of 82 ft. The minimum 24-hour leak detection rate for this sump is 0.021 gal/hr. Leak detection rates for the remaining eight 30-inch diameter sumps range from 0.018 to 0.020 gal/hr.

For the larger rectangular sumps (HSH-SUMP-00003 and HSH-SUMP-00007) located in the melter cave, the maximum leak travel distance is 88 ft. The minimum 24-hour leak detection rate for this sump is 0.207 gal/hr (0.21 gal/hr). Leak detection rate for the remaining four rectangular sumps range from 0.060 to 0.061 gal/hr.

Results of the evaluation for all HLW facility sumps are provided in Table 6.1.

Table 6.1 Minimum Leak Detection Rates for HLW Facility Sumps

Sump Number	Max. Leak Travel Distance ft*	Volume of Leak to Reach Sump gal	Volume of Leak for Detection in Sump gal	Total Volume of Leak Detectable in 24 hours gal	24-Hour Leak Rate Detected (rounded) gal/hr
HCP-SUMP-00001	82	0.130	0.380	0.510	0.02
RLD-SUMP-00001	74	0.112	0.380	0.492	0.02
HDH-SUMP-00001	61	0.092	0.380	0.472	0.02
HDH-SUMP-00002	58	0.083	0.380	0.463	0.02
HDH-SUMP-00003	33	0.045	0.380	0.425	0.02
HOP-SUMP-00003	77**	0.122	0.380	0.502	0.02
HOP-SUMP-00008	77**	0.122	0.380	0.502	0.02
HFP-SUMP-00002	46	0.094	1.370	1.464	0.06
HFP-SUMP-00005	46	0.094	1.370	1.464	0.06
HSH-SUMP-00008	39	0.078	1.370	1.448	0.06
HSH-SUMP-00009	39	0.078	1.370	1.448	0.06
HSH-SUMP-00003	88	0.610	4.350	4.960	0.21
HSH-SUMP-00007	88	0.610	4.350	4.960	0.21
HPH-SUMP-00001	36	0.049	0.380	0.429	0.02
HPH-SUMP-00005	63	0.095	0.380	0.475	0.02

* Total distance is rounded up the nearest ft.

** Leak distance includes HEME/SBS bermed area distance to the floor drain and the leak travel distance inside SBS drain collection cell (32 + 45 = 77 ft). This distance is still less than the bounding distance 82 ft used for round sumps. Melter Cave 1 and Melter Cave 2 configuration and distances are identical.

7 Calculations

7.1 Methodology

The minimum leak flow rate that can be detected in 24 hours is calculated by estimating the volumes of two components of the leak:

1. The minimum detectable quantity of liquid in the sump, V_s (in gallons)
2. The volume associated with the leak "rivulet" as the leak flows along the floor to the sump, V_r (in gallons)

The total volume of the leak: $V_t = V_r + V_s$

The minimum detectable flow rate: $Q = V_t/24$ in gal/hr

7.1.1 Minimum Detectable Volume in the Sump

7.1.1.1 Round Sumps

The round sumps are nominally 30 inches in diameter and about 18 inches in depth. The round sumps are formed from 30-inch Schedule 10S pipe with an inside diameter of 29.376 inches. The bottom consists of a 2:1 ellipsoidal head.

The minimum detectable volume in the sump is determined using the following formula that relates depth in the ellipsoidal head to volume (24590-WTP-GPG-019, p 5).

$$V_s = \pi D h^2 \left[1 - \frac{4h}{3D}\right]$$

Where:

V_s: volume based on the liquid level h, in^3
h: height of liquid in the sump, in.
D: sump inside diameter, in,
V_s: in^3 is then converted to gallons.

7.1.1.2 Rectangular Sump

The rectangular sump size is 31.5 in. long by 25.5 in. wide by 16 in. deep (24590-HLW-PER-M-02-001, Table 1). The minimum detectable volume in the sump is

$$V_s = L \times W \times h$$

Where:

L: length, in
W: width, in.
h: depth of liquid in sump, in.
V_s: in^3 is then converted to gallons.

7.1.2 Wetted Volume for Flow of Liquid Across the Floor of the Cell

When a liquid flows down an inclined surface at a low rate, separate rivulets form instead of a continuous film (Towell and Rothfeld 1966, p 972). The hydrodynamics of rivulet flow have been empirically measured and mathematically modeled (Towell and Rothfeld 1966, p 972-980). The relationships provided in this reference are used to estimate the wetted volume for flow across the cell floor. In this reference, steady state theoretical solutions are developed for the laminar flow based on the reduced form of the Navier-Stokes equations using special boundary conditions that include contact angle (angle formed by the edge of the rivulet and the surface) and relations between the pressure inside and outside the curved interface. First the shape of the interface and the velocity profile in the rivulet is obtained. Then, a relationship between the rivulet width and the flow rate is produced by an integration of the velocity profile. This relationship equation contains the surface inclination (slope), contact angle of the liquid on the surface, and the fluid properties: viscosity,

density and interfacial surface tension. In simpler terms, this analysis considers that the flow rate is a balance of gravitational forces, which drive the flow, and viscous forces, which resist the flow.

Experimental measurements consisting of rivulet width measurements as a function of rivulet flow rate were conducted for a variety of liquids including water. The data were then checked against the models and found to be in good agreement (Towell and Rothfeld 1966, p 979).

For the range of flow rates of interest in this calculation, the solution to the flow equations can be simplified by considering the rivulet as a relatively wide and flat rectangular shape (Towell and Rothfeld 1966, p 972). For this shape of rivulet, the maximum flow depth, Y_0 is given by:

$$Y_0 = 2\sin\theta/2 \qquad \text{Equation 1}$$

Where:

Y_o: Maximum flow depth, cm
θ : Contact angle (angle formed at the edge of the rivulet where it contacts the surface)

The width of the rivulet, l, is determined by Equation 27 (Towell and Rothfeld 1966, p 975) as follows:

$$\frac{\mu Q \tan\alpha}{l\gamma}\sqrt{\frac{\rho g \sin\alpha}{\gamma}} = \frac{8}{3}\sin^3\theta/2 \qquad \text{Equation 2}$$

Where:

α: Angle of inclination between the surface and vertical (90^0 - slope in degrees)
γ: Interfacial surface tension, dynes/cm = g/sec^2
μ: Viscosity, g/cm sec
θ: Contact angle (measured from the surface), degrees
ρ: Density of liquid, g/cm^3
l: Rivulet width, cm
Q: Flow rate, cm^3/sec
g: Acceleration of gravity, cm/sec^2

Note that CGS units are used in this calculation for consistency with the reference. The volume and flow rate results then are converted to English units.

Rearranging and solving for l gives:

$$l = \frac{3\mu Q \tan\alpha}{8\gamma\left(\sin^3\theta/2\right)}\sqrt{\frac{\rho g \sin\alpha}{\gamma}} \qquad \text{Equation 3}$$

The contact angle (θ) is unknown, but according to Table 2 (Towell and Rothfeld 1966, p 978), at a flow rate of 6.2 cm^3/min (~ 0.1 gal/hr), the contact angles ranging from 9 to 12 degrees were measured experimentally. At lower flow rates, the measured contact angle varied from 3 to 8 degrees but did not show proportionality to flow rate possibly due to varying shape of the rivulet and/or the slope of the

surface. Low contact angles applied in equations 1 and 3 yield results of disproportionately wide and shallow rivulets (l is very large compared to Y_0). In the experiments, rivulet width varied up to a maximum of about 4 cm with most of the widths in the range of 0.4 to 3 cm for the smallest incline tested. Rivulet widths below 3 cm correspond to a contact angle of about 6 degrees. Below 6 degrees, widths increase greatly and at contact angles of 4 degrees and lower, the solution does not converge. Therefore, for purposes of this calculation, for flow rates < 0.05 gal/hr, contact angles between 6 degrees and 12 degrees are considered bounding, with the lower of the two angles yielding the highest flow rate. For flow rates of 0.1 gal/hr and higher, a range of 9 degrees to 12 degrees is used; 9 degrees yields the highest flow rate needed for detection in 24 hours, so it is the most conservative.

The remainder of the calculation procedure is now iterative by performing the following steps:

Step 1 - Assume a contact angle and assume a starting flow rate, Q.

Step 2 - Calculate the volume of the rivulet.

Since the rivulet is approximated as rectangular, the cross-sectional area of the rivulet, A, in cm^2:

$A = Y_0 l$

The total volume of the rivulet, V_r, in cm^3:

$V_r = A$ x flow path length (in cm)

V_r is then converted to gallons by dividing by 3,785 cm^3/gal.

Step 3 - Calculate a total volume of liquid leaked in 24 hours.

Add the rivulet volume, V_r, (in gallons) to the volume of liquid leaked in the sump to get V_t, the total volume of liquid leaked in a 24-hour period.

$V_t = V_s + V_r$

Step 4 - Calculate an adjusted total 24-hour flow rate.

$Q_{adj} = V_t / 24$

This new adjusted Q takes the total volume of liquid into account whereas the starting Q only considered the volume of liquid in the sump. Therefore, Q_{adj}, may differ from the initial guess for Q if the volume of the rivulet is significant relative to the volume of the sump, so an iterative trial and error is performed by setting the new trial $Q = Q_{adj}$ from the first trial. This is continued until the starting Q matches the final Q_{adj} (i.e., the iteration converges).

7.2 Calculations

7.2.1 Calculation for the Longest Leak Travel Distance for the Sumps

The maximum leak travel distances for each sump in the facility is derived from the cell dimensions and sump locations as provided in the facility general arrangement drawings (24590-HLW-P1-P01T-

P0001 and 24590-HLW-P1-P01T-P0002). As indicated in Assumption 2, the maximum leak travel distance is computed by summing the distance along the walls from the furthest corner of the cell, i.e., adding the north-south wall distance to the east-west wall distance. A summary of distance data for each sump is provided in Table 7.1.

Table 7.1 Maximum Leak Distances for Each Sump

Elev. (ft)	Room Number	Room Name	Sump Number	Sump Type	Sump Location in Cell	N-S Distance (ft)	E-W Distance (ft)	Total* Distance (ft)
-21	H-B014	Wet Process Cell - South	HCP-SUMP-00001	Round	W wall	64	18	82
-21	H-B014	Wet Process Cell - North	RLD-SUMP-00001	Round	SE corner	3.9	69.2	74
-21	H-B021	SBS Drain Collection Cell No. 1	HOP-SUMP-00003	Round	NW corner	17.1	14.8	32
-21	H-B005	SBS Drain Collection Cell No. 2	HOP-SUMP-00008	Round	NW corner	17.1	14.8	32
-16.5	H-B039B	Canister Rinse Tunnel	HDH-SUMP-00001	Round	S wall	11.3	49.3	61
-16	H-B035	Canister Decon Cave	HDH-SUMP-00003	Round	NE corner	21.5	11	33
-16	H-B039A	Bogie Maintenance Room	HDH-SUMP-00002	Round	SW corner	34	23.3	58
-3	H-0136	Canister Handling Cave	HPH-SUMP-00001	Round	NE corner	17.8	17.3	36
-3	H-0136	Canister Handling Cave	HPH-SUMP-00005	Round	SW corner	45.3	17.3	63
0	H-0310A	Melter 1 Equipment Decon Pit	HSH-SUMP-00008	Rectangular	North	9.2	29.1	39
0	H-0304A	Melter 2 Equipment Decon Pit	HSH-SUMP-00009	Rectangular	North	9.2	29.1	39
0	H-0117	Melter Cave No.1 HEME/SBS Bermed Area	HOP-SUMP-00003	Round	NW corner	31.8	12.8	45**
0	H-0106	Melter Cave No.2 HEME/SBS Bermed Area	HOP-SUMP-00008	Round	NW corner	31.8	12.8	45**
3	H-0117	Melter Cave No.1	HFP-SUMP-00002	Rectangular	N wall	14.8	30.5	46
3	H-0106	Melter Cave No. 2	HFP-SUMP-00005	Rectangular	N wall	14.8	30.5	46
3	H-0117	Melter Cave No. 1	HSH-SUMP-00003	Rectangular	Center	54.1	33	88
3	H-0106	Melter Cave No. 2	HSH-SUMP-00007	Rectangular	Center	54.1	33	88

* Total distance is rounded up the nearest ft.

** Leak distance includes HEME/SBS bermed area distance to the floor drain and the leak travel distance inside SBS drain collection cell (32 + 45 = 77 ft). This distance is still less than the bounding distance 82 ft used for round sumps. Melter Cave 1 and Melter Cave 2 configuration and distances are identical.

7.2.2 Calculation for the Round Sump

Based on the estimate of travel distances for leaks in each cell, the longest leak flow distance to any round sump was determined to be 82 ft for sump HCP-SUMP-00001 in the Wet Process Cell-South. The calculation for this bounding case is provided below.

7.2.2.1 Minimum Detectable Volume in the Sump

Minimum detectable volume is determined using the following equation (24590-WTP-GPG-M-019, p 5):

$$V_s = \pi D h^2 \left[1 - \frac{4h}{3D}\right]$$

Where:

D: 29.376 in (I.D. of a 30-inch Schedule 10S pipe)
h: 1 inch (Assumption 5)

$$V_s = \pi(29.376\,in)(1\,in)^2\left[1 - \frac{4(1\,in)}{3(29.376\,in)}\right]$$

$V_s = 88.1$ in^3

Multiply by 0.00433 to convert in^3 to gallons.

$V_s = 0.38$ gal

7.2.2.2 Wetted Volume for Flow of Liquid Across the Floor of the Cell

Based on the methodology described in Section 7.1.2 (CCN 101514), the bounding contact angle (θ) is assumed to be 6°.

Using Equation 1 in Section 7.1.2, the depth of the rivulet, Y_0, is calculated

$$Y_0 = 2\sin(\theta/2)$$

$$Y_0 = 2\sin(6\,\text{deg}/2)$$

$Y_o = 0.105$ cm

Next, the width of the rivulet is calculated using Equation 3 in Section 7.1.2.

$$l = \frac{3\mu Q \tan\alpha}{8\gamma(\sin^3\theta/2)}\sqrt{\frac{\rho g \sin\alpha}{\gamma}}$$

For water at 100 °F and a floor slope of 1%, the following values can be used in this equation (CCN 101514, Attachment 1):

α: [90°- 0.01(90°)] = 89.1 degrees

γ: 69.9 dynes/cm = 69.9 g/sec^2

μ: 1 cP = 0.01 g/cm sec (viscosity of water at 100 °F is lower than 1 cP, but this value is used to be conservative).

ρ: 1.0 g/cm^3 (density of water at 100 °F is slightly lower than 1.0 g/cm^3, but this value is used to be conservative).

g: 980.7 cm/sec^2

The remainder of the calculation procedure is now iterative by performing the following steps:

Step 1 - Assume a starting flow rate, Q, and calculate the rivulet width, l

As a first guess for Q, use the sump volume $V_s/24$ = 0.38 gal/24 hr = 0.016 gal/hr = 0.017 cm^3/sec

$$l = \frac{3(0.01\ g/cm\,\text{sec})(0.017\,cm^3/\text{sec})\tan 89.1\text{deg}}{8(69.9 g/\text{sec}^2)\left(\sin^3(6\text{deg}/2)\right)} \sqrt{\frac{(1 g/cm^3)(980.7\,cm/\text{sec}^2)\sin 89.1\text{deg}}{(69.9\ g/\text{sec}^2)}}$$

l = 1.52 cm

Step 2 - Calculate the volume of the rivulet.

Since the rivulet is approximated as rectangular, the cross-sectional area, A, of the rivulet is:

$A = Y_0\, l$

A = 0.105 cm x 1.52 cm = 0.16 cm^2

The total volume of the rivulet, in cm^3, is V_r

$V_r = A$ x flow path length, cm

Path length = 82 ft x 30.48 cm/ft = 2,499 cm

V_r = (0.16 cm^2) (2,499 cm) = 399.8 cm^3

V_r is then converted to gallons by dividing by 3,785 cm^3/gal.

V_r = 0.10 gal

Step 3 - Calculate a total volume of liquid collected in 24 hours.

Add the rivulet volume, V_r, (in gallons) to the volume of liquid collected in the sump to get V_t, the total volume of liquid leaked in a 24-hour period.

$V_t = V_s + V_r$

$V_t = (0.38\ gal\ + 0.10\,gal) = 0.48\,gal$

Step 4 - Calculate an adjusted total 24-hour flow rate.

$Q_{adj} = V_t/24$

Q_{adj} = (0.48 gal/24 hr) = 0.02 gal/hr

The initial guess for Q was 0.016 gal/hr so an iterative trial and error is performed until the starting Q matches the final Q_{adj} (i.e., the iteration converges).

When the iterations converge, the flow rate is:

Q = 0.021 gal/hr.

This is rounded to one significant figure:

Q = 0.02 gal/hr

7.2.3 Calculation for the Rectangular Sump

7.2.3.1 Minimum Detectable Volume in the Sump

Minimum detectable volume of the rectangular sump is determined as follows:

V_s = L x W x h

Where:

L: 31.5 in.
W: 25.5 in.
H: 1.25 in. (Assumption 6)

V_s = (31.5 in) (25.5 in) (1.25 in) = 1004 in^3 = 4.35 gal

7.2.3.2 Wetted Volume for Flow of Liquid Across the Floor of the Cell

The same calculation process as performed in Section 7.2.1.2 is used to calculate the wetted volume for flow of liquid across the floor of the cell. All input parameters are the same except:

- The longest flow path length to the sump is 88 ft.
- Contact angle is 9 degrees and starting flow rate for the iterations is 4.35 gal/24 hr = 0.181 gal/hr.

Q is iterated until convergence is achieved. At convergence, the following are determined:

l: 5.46 cm
Y_0: 0.157 cm
A: 0.86 cm^2
V_r: 0.60 gal

V_t: 4.95 gal
Q: 0.206 gal/hr

Q value would be 0.21 gal/hr after rounding to two significant figures.

7.2.4 Minimum Leak Flow Rates for the Remaining Sumps

Calculations for the remaining 13 sumps in the HLW facility are performed using the same methodology described in Section 7. The only variable is the leak travel distance to the sump. The results are summarized in Table 6.1.

8 References

8.1 Project Documents

24590-HLW-PER-M-02-001, *HLW Facility Sump Data.*

24590-HLW-P1-P01T-P0001, *HLW Vitrification Building General Arrangement Plan at El. -21 ft - 0 in.*

24590-HLW-P1-P01T-P0002, *HLW Vitrification Building General Arrangement Plan at El. 0 ft - 0 in.*

24590-WTP-GPG-M-019, *Mechanical Systems Design Guide: Vessel Sizing.*

CCN 097799, *Leak Detection Capability Scoping Statement*, Rev. 6.

CCN 101514, *24-Hour Leak Detection.*

8.2 Codes and Standards

WAC 173-303. *Dangerous Waste Regulations*. Washington Administrative Code.

WA 7890008967. Dangerous Waste Permit. *Dangerous Waste Portion of the Resource Conservation and Recovery Act Permit for the Treatment, Storage, and Disposal of Dangerous Waste at the Hanford Waste Treatment and Immobilization Plant.*

8.3 Other Documents

Towell, G.D and Rothfeld, L.B. 1966. "Hydrodynamics of Rivulet Flow", *AIChE Journal,* Vol. 12, No. 5, Pages 972-980.

Operating Unit Group 10 – Appendix 11.0

Where information regarding treatment, management, and disposal of the radioactive source, byproduct material, and/or special nuclear components of mixed waste (as defined by the Atomic Energy Act of 1954, as amended) has been incorporated into this permit, it is not incorporated for the purpose of regulating the radiation hazards of such components under the authority of this permit and chapter 70.105 RCW. In the event of any conflict between Permit Condition III.10.A and any statement relating to the regulation of source, special nuclear, and byproduct material contained in portions of the permit application that are incorporated into this permit, Permit Condition III.10.A will prevail.

Operating Unit Group 10 – Appendix 11.0

Laboratory Building
Index

Appendix 11.1	Process Flow Diagrams
Appendix 11.2	Piping and Instrumentation Diagrams
Appendix 11.3	System Description Documentation (RESERVED)
Appendix 11.4	General Arrangement Drawings
Appendix 11.5	Civil, Structural, and Architectural Criteria and Typical Design Details
Appendix 11.6	Mechanical Drawings
Appendix 11.7	Specifications (RESERVED)
Appendix 11.8	Engineering Calculations
Appendix 11.9	Material Selection Documentation
Appendix 11.10	Laboratory Building Critical Systems Equipment/Instrument List
Appendix 11.11	IQRPE Reports
Appendix 11.12	Installation Plans (RESERVED)
Appendix 11.13	Instrument Control Logic and Narrative Descriptions
Appendix 11.14	Description of Instrument Installation and Testing Procedures (RESERVED)
Appendix 11.15	Demonstration Test Plan (RESERVED)
Appendix 11.16	Demonstration Test Report (RESERVED)
Appendix 11.17	Treatment Effectiveness Report (RESERVED)
Appendix 11.18	Operating Documents

Drawings and Documents

Operating Unit Group 10 – Appendix 11.1
Laboratory Building
Process Flow Diagrams

The documents listed in the following table are incorporated by reference into this permit and are subject to the requirements set forth in Part I Standard Conditions, Part II General Facility Conditions, and Part III Operating Unit Group 10 Conditions. Upon request, copies of the documents can be viewed at the Nuclear Waste Program Resource Center located at 3100 Port of Benton Blvd. Richland, WA. Appointments for viewing can be scheduled by calling (509) 372-7950.

Drawing/Document	***Description***
24590-LAB-M5-V17T-P0029, Rev 1	Process Flow Diagram (RLD System)
RESERVED	RESERVED

Source documents (which do not include a "P" in the last set of numbers, e.g. "-P0001," or "-TP001") should be used in conjunction with any document change notices issued against them.

We are currently transitioning from permit documents (which do include a "P" in the last set of numbers) to source documents. At the end of the transition period, permit submittals will contain source documents and will be incorporated into the permit as described in Ecology Publication # 07-05-006 (www.ecy.wa.gov/biblio/nwp.html).

Drawings and Documents

Operating Unit Group 10 – Appendix 11.2
Laboratory Building
Piping and Instrumentation Diagrams

The documents listed in the following table are incorporated by reference into this permit and are subject to the requirements set forth in Part I Standard Conditions, Part II General Facility Conditions, and Part III Operating Unit Group 10 Conditions. Upon request, copies of the documents can be viewed at the Nuclear Waste Program Resource Center located at 3100 Port of Benton Blvd. Richland, WA. Appointments for viewing can be scheduled by calling (509) 372-7950.

Drawing/Document	***Description***
24590-LAB-M6-RLD-P0001, Rev 2	Piping & Instrument Diagram Radioactive Liquid Waste Disposal System - C5 Collection and Transfer
24590-LAB-M6-RLD-P0002, Rev 1	Piping & Instrument Diagram Radioactive Liquid Waste Disposal System – C3 Collection & Transfer
24590-LAB-M6-RLD-P0006, Rev 1	Piping & Instrument Diagram Radioactive Liquid Waste Disposal System C3 Rad Lab Collection
24590-LAB-M6-RLD-P0007, Rev 1	Piping & Instrument Diagram Radioactive Liquid Waste Disposal System – C3 Collection & Leak Detection
24590-LAB-M6-RLD-P0008, Rev 1	Piping & Instrument Diagram Radioactive Liquid Waste Disposal System – C5 Collection & Leak Detection
RESERVED	RESERVED

Source documents (which do not include a "P" in the last set of numbers, e.g. "-P0001," or "-TP001") should be used in conjunction with any document change notices issued against them.

We are currently transitioning from permit documents (which do include a "P" in the last set of numbers) to source documents. At the end of the transition period, permit submittals will contain source documents and will be incorporated into the permit as described in Ecology Publication # 07-05-006 (www.ecy.wa.gov/biblio/nwp.html).

Drawings and Documents

Operating Unit Group 10 – Appendix 11.4
Laboratory Building
General Arrangement Drawings

The documents listed in the following table are incorporated by reference into this permit and are subject to the requirements set forth in Part I Standard Conditions, Part II General Facility Conditions, and Part III Operating Unit Group 10 Conditions. Upon request, copies of the documents can be viewed at the Nuclear Waste Program Resource Center located at 3100 Port of Benton Blvd. Richland, WA. Appointments for viewing can be scheduled by calling (509) 372-7950.

Drawing/Document	***Description***
24590-LAB-P1-60-P0007, Rev 2	General Arrangement Plan at El. -19'-2" and Sections E-E, F-F, G-G
24590-LAB-P1-60-P0008, Rev 2	General Arrangement Plan at El. 0'-0"
24590-LAB-P1-60-P0010, Rev 1	General Arrangement Sections A-A, B-B, C-C, D-D
RESERVED	RESERVED

Source documents (which do not include a "P" in the last set of numbers, e.g. "-P0001," or "-TP001") should be used in conjunction with any document change notices issued against them.

We are currently transitioning from permit documents (which do include a "P" in the last set of numbers) to source documents. At the end of the transition period, permit submittals will contain source documents and will be incorporated into the permit as described in Ecology Publication # 07-05-006 (www.ecy.wa.gov/biblio/nwp.html).

Drawings and Documents

Operating Unit Group 10 – Appendix 11.5
Laboratory Building
Civil, Structural, and Architectural Criteria and Typical Design Details

The documents listed in the following table are incorporated by reference into this permit and are subject to the requirements set forth in Part I Standard Conditions, Part II General Facility Conditions, and Part III Operating Unit Group 10 Conditions. Upon request, copies of the documents can be viewed at the Nuclear Waste Program Resource Center located at 3100 Port of Benton Blvd. Richland, WA. Appointments for viewing can be scheduled by calling (509) 372-7950.

Drawing/Document	***Description***
24590-LAB-PER-M-02-002, Rev 2	Sump Data for LAB Facility
RESERVED	RESERVED

Source documents (which do not include a "P" in the last set of numbers, e.g. "-P0001," or "-TP001") should be used in conjunction with any document change notices issued against them.

We are currently transitioning from permit documents (which do include a "P" in the last set of numbers) to source documents. At the end of the transition period, permit submittals will contain source documents and will be incorporated into the permit as described in Ecology Publication # 07-05-006 (www.ecy.wa.gov/biblio/nwp.html).

Drawings and Documents

Operating Unit Group 10 – Appendix 11.6
Laboratory Building
Mechanical Drawings

The documents listed in the following table are incorporated by reference into this permit and are subject to the requirements set forth in Part I Standard Conditions, Part II General Facility Conditions, and Part III Operating Unit Group 10 Conditions. Upon request, copies of the documents can be viewed at the Nuclear Waste Program Resource Center located at 3100 Port of Benton Blvd. Richland, WA. Appointments for viewing can be scheduled by calling (509) 372-7950.

Drawing/Document	***Description***
24590-LAB-MVD-RLD-P0164, Rev 1	Mechanical Data Sheet for RLD-VSL-00164
24590-LAB-MVD-RLD-P0165, Rev 1	Mechanical Data Sheet for RLD-VSL-00165
24590-LAB-MV-RLD-P0001, Rev 0	Equipment Assembly Drawing for RLD-VSL-00164
24590-LAB-MV-RLD-P0003, Rev 0	Equipment Assembly Drawing for RLD-VSL-00165; Hot Cell Drain Collection Vessel
RESERVED	RESERVED

Source documents (which do not include a "P" in the last set of numbers, e.g. "-P0001," or "-TP001") should be used in conjunction with any document change notices issued against them.

We are currently transitioning from permit documents (which do include a "P" in the last set of numbers) to source documents. At the end of the transition period, permit submittals will contain source documents and will be incorporated into the permit as described in Ecology Publication # 07-05-006 (www.ecy.wa.gov/biblio/nwp.html).

Drawings and Documents
Operating Unit Group 10 – Appendix 11.8
Laboratory Building
Engineering Calculations

The documents listed in the following table are incorporated by reference into this permit and are subject to the requirements set forth in Part I Standard Conditions, Part II General Facility Conditions, and Part III Operating Unit Group 10 Conditions. Upon request, copies of the documents can be viewed at the Nuclear Waste Program Resource Center located at 3100 Port of Benton Blvd. Richland, WA. Appointments for viewing can be scheduled by calling (509) 372-7950.

Drawing/Document	***Description***
24590-LAB-PER-M-02-001, Rev 0	Flooding Volume for LAB Facility Calculations
RESERVED	RESERVED

Source documents (which do not include a "P" in the last set of numbers, e.g. "-P0001," or "-TP001") should be used in conjunction with any document change notices issued against them.

We are currently transitioning from permit documents (which do include a "P" in the last set of numbers) to source documents. At the end of the transition period, permit submittals will contain source documents and will be incorporated into the permit as described in Ecology Publication # 07-05-006 (www.ecy.wa.gov/biblio/nwp.html).

Drawings and Documents

Operating Unit Group 10 – Appendix 11.9
Laboratory Building
Material Selection Documentation

The documents listed in the following table are incorporated by reference into this permit and are subject to the requirements set forth in Part I Standard Conditions, Part II General Facility Conditions, and Part III Operating Unit Group 10 Conditions. Upon request, copies of the documents can be viewed at the Nuclear Waste Program Resource Center located at 3100 Port of Benton Blvd. Richland, WA. Appointments for viewing can be scheduled by calling (509) 372-7950.

Drawing/Document Number	***Description***
24590-LAB-N1D-RLD-P0002, Rev 1	Material Selection Data Sheet for RLD-VSL-00164
24590-LAB-N1D-RLD-P0003, Rev 1	Material Selection Data Sheet for RLD-VSL-00165
RESERVED	RESERVED

Source documents (which do not include a "P" in the last set of numbers, e.g. "-P0001," or "-TP001") should be used in conjunction with any document change notices issued against them.

We are currently transitioning from permit documents (which do include a "P" in the last set of numbers) to source documents. At the end of the transition period, permit submittals will contain source documents and will be incorporated into the permit as described in Ecology Publication # 07-05-006 (www.ecy.wa.gov/biblio/nwp.html).

Drawings and Documents

Operating Unit Group 10 – Appendix 11.10
Laboratory Building
Critical Systems Equipment/Instrument List

The documents listed in the following table are incorporated by reference into this permit and are subject to the requirements set forth in Part I Standard Conditions, Part II General Facility Conditions, and Part III Operating Unit Group 10 Conditions. Upon request, copies of the documents can be viewed at the Nuclear Waste Program Resource Center located at 3100 Port of Benton Blvd. Richland, WA. Appointments for viewing can be scheduled by calling (509) 372-7950.

Drawing/Document	***Description***
	Analytical Laboratory Below Grade Room & Equipment Room List
RESERVED	RESERVED

Source documents (which do not include a "P" in the last set of numbers, e.g. "-P0001," or "-TP001") should be used in conjunction with any document change notices issued against them.

We are currently transitioning from permit documents (which do include a "P" in the last set of numbers) to source documents. At the end of the transition period, permit submittals will contain source documents and will be incorporated into the permit as described in Ecology Publication # 07-05-006 (www.ecy.wa.gov/biblio/nwp.html).

Drawings and Documents

Operating Unit Group 10 – Appendix 11.11
Laboratory Building
IQRPE Reports

The documents listed in the following table are incorporated by reference into this permit and are subject to the requirements set forth in Part I Standard Conditions, Part II General Facility Conditions, and Part III Operating Unit Group 10 Conditions. Upon request, copies of the documents can be viewed at the Nuclear Waste Program Resource Center located at 3100 Port of Benton Blvd. Richland, WA. Appointments for viewing can be scheduled by calling (509) 372-7950.

Drawing/Document	***Description***
24590-CM-HC4-HXYG-00138-01-16, Rev 00B	IQRPE Review of the LAB Facility Below Grade Level Secondary Containment
24590-CM-HC4-HXYG-00138-01-00020, Rev 00A	IQRPE Integrity Assessment Report for RLD-VSL-00164 and RLD-VSL-00165
24590-CM-HC4-HXYG-00138-02-00016, Rev 00A	IQRPE Integrity Assessment Report for El. 0 RLD Ancillary Equipment
RESERVED	RESERVED

Source documents (which do not include a "P" in the last set of numbers, e.g. "-P0001," or "-TP001") should be used in conjunction with any document change notices issued against them.

We are currently transitioning from permit documents (which do include a "P" in the last set of numbers) to source documents. At the end of the transition period, permit submittals will contain source documents and will be incorporated into the permit as described in Ecology Publication # 07-05-006 (www.ecy.wa.gov/biblio/nwp.html).

Drawings and Documents

Operating Unit Group 10 – Appendix 11.13
Laboratory Building
Instrument Control Logic and Narrative Descriptions

The documents listed in the following table are incorporated by reference into this permit and are subject to the requirements set forth in Part I Standard Conditions, Part II General Facility Conditions, and Part III Operating Unit Group 10 Conditions. Upon request, copies of the documents can be viewed at the Nuclear Waste Program Resource Center located at 3100 Port of Benton Blvd. Richland, WA. Appointments for viewing can be scheduled by calling (509) 372-7950.

Drawing/Document Number	***Description***
24590-LAB-PER-J-03-001, Rev 0	System Logic Description for Laboratory RLD System
RESERVED	RESERVED

Source documents (which do not include a "P" in the last set of numbers, e.g. "-P0001," or "-TP001") should be used in conjunction with any document change notices issued against them.

We are currently transitioning from permit documents (which do include a "P" in the last set of numbers) to source documents. At the end of the transition period, permit submittals will contain source documents and will be incorporated into the permit as described in Ecology Publication # 07-05-006 (www.ecy.wa.gov/biblio/nwp.html).

Drawings and Documents

Operating Unit Group 10 – Appendix 11.18
Laboratory Building
Operating Documents

The documents listed in the following table are incorporated by reference into this permit and are subject to the requirements set forth in Part I Standard Conditions, Part II General Facility Conditions, and Part III Operating Unit Group 10 Conditions. Upon request, copies of the documents can be viewed at the Nuclear Waste Program Resource Center located at 3100 Port of Benton Blvd. Richland, WA. Appointments for viewing can be scheduled by calling (509) 372-7950.

Drawing/Document Number	***Description***
24590-LAB-PER-M-04-0001, Rev 0	LAB Minimum Leak Rate Detection Capabilities for Leak Detection Boxes, Cell Sumps, and Pit Sumps
24590-LAB-PER-M-04-0002, Rev 0	LAB Waste Removal Capability for the Effluent Vessels Cells
RESERVED	RESERVED

Source documents (which do not include a "P" in the last set of numbers, e.g. "-P0001," or "-TP001") should be used in conjunction with any document change notices issued against them.

We are currently transitioning from permit documents (which do include a "P" in the last set of numbers) to source documents. At the end of the transition period, permit submittals will contain source documents and will be incorporated into the permit as described in Ecology Publication # 07-05-006 (www.ecy.wa.gov/biblio/nwp.html).

Operating Unit Group 10 – Appendix 12.0

Where information regarding treatment, management, and disposal of the radioactive source, byproduct material, and/or special nuclear components of mixed waste (as defined by the Atomic Energy Act of 1954, as amended) has been incorporated into this permit, it is not incorporated for the purpose of regulating the radiation hazards of such components under the authority of this permit and chapter 70.105 RCW. In the event of any conflict between Permit Condition III.10.A and any statement relating to the regulation of source, special nuclear, and byproduct material contained in portions of the permit application that are incorporated into this permit, Permit Condition III.10.A will prevail.

Operating Unit Group 10 –Appendix 12.0

Balance of Facilities
Index

Appendix 12.1	Process Flow Diagrams (RESERVED)
Appendix 12.2	Piping and Instrumentation Diagrams
Appendix 12.3	System Description Documentation (RESERVED)
Appendix 12.4	General Arrangement Drawings (RESERVED)
Appendix 12.5	Civil, Structural, and Architectural Criteria and Typical Design Details
Appendix 12.6	Mechanical Drawings (RESERVED)
Appendix 12.7	Specifications (RESERVED)
Appendix 12.8	Engineering Calculations (RESERVED)
Appendix 12.9	Material Selection Documentation (RESERVED)
Appendix 12.10	Critical Systems Equipment/Instrument List (RESERVED)
Appendix 12.11	IQRPE Reports (RESERVED)
Appendix 12.12	Installation Plans (RESERVED)
Appendix 12.13	Instrument Control Logic and Narrative Descriptions (RESERVED)
Appendix 12.14	Descriptions of Instrument Installation and Testing Procedures (RESERVED)
Appendix 12.15	(RESERVED)
Appendix 12.16	(RESERVED)
Appendix 12.17	(RESERVED)
Appendix 12.18	Operating Documents

This page intentionally left blank.

Drawings and Documents

Operating Unit Group 10 – Appendix 12.2
Balance of Facilities
Piping and Instrumentation Diagrams

The documents listed in the following table are incorporated by reference into this permit and are subject to the requirements set forth in Part I Standard Conditions, Part II General Facility Conditions, and Part III Operating Unit Group 10 Conditions. Upon request, copies of the documents can be viewed at the Nuclear Waste Program Resource Center located at 3100 Port of Benton Blvd. Richland, WA. Appointments for viewing can be scheduled by calling (509) 372-7950.

Drawing/Document Number	***Description***
24590-PTF-M6-PWD-P0057, Rev 2	Piping & Instrumentation Diagram Plant Wash & Disposal System Underground Transfer Lines
24590-PTF-M6-PWD-P0058, Rev 3	Piping & Instrumentation Diagram Plant Wash & Disposal System Underground Transfer Lines
RESERVED	RESERVED

Source documents (which do not include a "P" in the last set of numbers, e.g. "-P0001," or "-TP001") should be used in conjunction with any document change notices issued against them.

We are currently transitioning from permit documents (which do include a "P" in the last set of numbers) to source documents. At the end of the transition period, permit submittals will contain source documents and will be incorporated into the permit as described in Ecology Publication # 07-05-006 (www.ecy.wa.gov/biblio/nwp.html).

This page intentionally left blank.

Drawings and Documents

Operating Unit Group 10 – Appendix 12.5
Pretreatment Building
Civil, Structural, and Architectural Criteria and Typical Design Details

The documents listed in the following table are incorporated by reference into this permit and are subject to the requirements set forth in Part I Standard Conditions, Part II General Facility Conditions, and Part III Operating Unit Group 10 Conditions. Upon request, copies of the documents can be viewed at the Nuclear Waste Program Resource Center located at 3100 Port of Benton Blvd. Richland, WA. Appointments for viewing can be scheduled by calling (509) 372-7950.

Drawing/Document Number	***Description***
24590-PTF-PER-M-02-003, Rev 1	Underground Pipe Protection
RESERVED	RESERVED

Source documents (which do not include a "P" in the last set of numbers, e.g. "-P0001," or "-TP001") should be used in conjunction with any document change notices issued against them.

We are currently transitioning from permit documents (which do include a "P" in the last set of numbers) to source documents. At the end of the transition period, permit submittals will contain source documents and will be incorporated into the permit as described in Ecology Publication # 07-05-006 (www.ecy.wa.gov/biblio/nwp.html).

This page intentionally left blank.

Drawings and Documents

Operating Unit Group 10 – Appendix 12.18
Pretreatment Building
Operating Documents

The documents listed in the following table are incorporated by reference into this permit and are subject to the requirements set forth in Part I Standard Conditions, Part II General Facility Conditions, and Part III Operating Unit Group 10 Conditions. Upon request, copies of the documents can be viewed at the Nuclear Waste Program Resource Center located at 3100 Port of Benton Blvd. Richland, WA. Appointments for viewing can be scheduled by calling (509) 372-7950.

Drawing/Document Number	***Description***
24590-PTF-PER-M-04-0006, Rev 0	Leak Detection for Underground Transfer Lines
RESERVED	RESERVED

Source documents (which do not include a "P" in the last set of numbers, e.g. "-P0001," or "-TP001") should be used in conjunction with any document change notices issued against them.

We are currently transitioning from permit documents (which do include a "P" in the last set of numbers) to source documents. At the end of the transition period, permit submittals will contain source documents and will be incorporated into the permit as described in Ecology Publication # 07-05-006 (www.ecy.wa.gov/biblio/nwp.html).

This page intentionally left blank.