0033336

Mr. John Grantham
State of Washington
Department of Ecology
Nuclear & Mixed Waste Program
P. O. Box 47600
Olympia, WA 98504-7600

FLUOR DANIEL, INC.

Date: August 30, 1993

Reference: Hanford Waste Vitrification Plant
DOE Contract DE-AC06-86RL10838
Fluor Contract 8457

Transmittal No.: WDOE- 588

Dear Mr. Grantham:

TRANSMITTAL

We enclose 2 copy of the items listed below. These are issued per US-DOE request.

Response due to Fluor: N/A
Responds to: E350 PACKAGE

NUMBER	REV	DATE	TITLE
DCN NUMBER - 0100	0	08/30/93	DCN TITLE - THIS DCN -0100 SUPERSEDES "DCN-0096 & 0096R1 "APPROVED FOR CONSTRUCTION" THE ADDITIONAL REINFORCING TIE CHANGES WERE MADE ON THIS DCN-0100: SEE TIES ON SECTION F & 7, SECTION G & DET 27 PAGE 8, SECTION Y & Z PAGE 9, SECRION CA PAGE 10 AND SECTION CH PAGE 11

SEP 1993 RECEIVED EDMC

Distribution:
Reference: FRP-1156, FUP-608
R. L. Long: DOE-RL, w/0
TWP/AME Corresp Cntrl Cntr, MSIN A5-10 (E350 PACKAGE), w/0
P. Felise, WHC-RL (MSIN G6-06), w/1
Environmental Data Management Center (MSIN H6-08), w/1
D. Duncan, US EPA, Region X, w/0

Very truly yours,

Rosalie Cadenas for

R. S. Poulter
Project Director

RSP:MV:lh

FLUOR DANIEL

US DEPARTMENT OF ENERGY
HANFORD WASTE VITRIFICATION PLANT

DESIGN CHANGE NOTICE

DCN -0100 | REV 0 | PAGE 1 OF 18

DCN TITLE: THIS DCN-0100 SUPERSEDES "DCN-0096" & "DCN-0096 REV 1"

DATE INITIATED: 8/30/93

PACKAGE NO.: E350

SECTION 1: DESCRIPTION OF CHANGE

THIS DCN-0100 REV 0 SUPERSEDES "DCN-0096 REV 0" DATED 8/16/93 AND "DCN-0096 REV 1/REV 0" DATED 8/26/93. THIS DCN-0100 REV 0 ALSO REMOVES TBD/HOLDS HWVP-FD-364, HWVP-FD-372, REVISES REINFORCING TO CANISTER STORAGE BUILDING WALLS, OPERATING FLOOR AND INTAKE STRUCTURES AS INDICATED BY PREVIOUSLY SUBMITTED SKETCHES AND INCORPORATES REINFORCING CHANGES NOT PREVIOUSLY SUBMITTED.

FOR LIST OF AFFECTED DOCUMENTS, SEE SECTIONS 6 AND 7.

CAUSE OF CHANGE:

- ☐ Field Change Request
- ☐ Supplier Disposition
- ☐ Deficiency Report
- ☐ Design Development
- ☒ Change Request
- ☐ Other _____

CR-1025
Initiating Document(s)

SECTION 2: EVALUATION

ARE ANY OF THE FOLLOWING AFFECTED?			IF "YES", REVIEW REQUIRED BY:	REVIEWER COMMENTS/SIGNATURE/DATE
WAPA	☒ NO	☐ YES		
QUALITY LEVEL I	☐ NO	☒ YES	D. TAYLOR	No change D. Taylor 8/30/93
SAFETY CLASS 1 OR 2	☐ NO	☒ YES	D. TAYLOR	No change D. Taylor 8/30/93
SYSTEMS ANALYSES	☒ NO	☐ YES		
MULTI-DISCIPLINE	☒ NO	☐ YES		

DCN Evaluated by: Systems D. Taylor 8/30/93 ADM M.H. 8/30/93 Others _____

SECTION 3: APPROVED FOR CONSTRUCTION

Armando Villegas 8/30/93
Originator Date

Edward Jacobs 8-30-93
Project/Resident Engineer Date

SECTION 4: CONCURRENCE

Project Management _____ Date

Systems _____ Date

Independent Safety _____ Date

Quality Assurance _____ Date

Configuration Management _____ Date

SECTION 5: RELEASED FOR CONSTRUCTION

PE STAMP REQUIRED? ☐ NO ☐ YES

WHC _____ Date

UCAT _____ Date

DOE _____ Date

COMMENTS:

FLUOR DANIEL US DEPARTMENT OF ENERGY HANFORD WASTE VITRIFICATION PLANT **DESIGN CHANGE NOTICE**	DCN -0100	REV 0	DISCIPLINE STRUCT	PKG. NO. E350	PAGE 2
	PREPARED BY: A. VILLEGAS			Date: 8/30/93	
	DISCIPLINE ENGINEER: R. GRUBER			Date: 8/30/93	

SECTION 6: CONSTRUCTION DOCUMENTS AFFECTED

DOCUMENT NUMBER	SHT/ PAGE	REV NO	DOCUMENT NAME	INCLD Y/N	DESCRIPTION OF CHANGE
E350-03200	3	1	SECTION 03200 CONCRETE REINFORCEMENT	Y	REVISE REINFORCING MATERIAL SPECIFICATION. SEE PAGE 4.
H-2-119275	1	1	CSB GENERAL NOTES & TYP DETS.	Y	REVISE IV CAST IN PLACE CONC. NOTE # 3. SEE PAGE 5.
H-2-119279	1	1	CSB VAULT OPER FLR REINF PLAN	Y	REMOVE HOLD HWVP-FD-372 SEE PAGE 6.
H-2-119280	1	1	CSB VAULT OPER FLR REINF DETS	Y	REMOVE HOLD HWVP-FD-372 SEE PAGES 7 & 8.
H-2-119280	2	1	CSB VAULT OPER FLR REINF DETS	Y	REMOVE HOLD HWVP-FD-372 SEE PAGES 9 & 10.
H-2-119280	3	1	CSB OPER FLR REINF DETS AND INTAKE STRUCT DETS	Y	REMOVE HOLD HWVP-FD-372 SEE PAGES 11 & 12.
H-2-119281	1	2	CSB VAULT WALL REINF DETS	Y	REMOVE HOLD HWVP-FD-364 SEE PAGES 13 & 14.
H-2-119281	2	0	CSB REINF @ MAT COLUMN, AIRFOILS & MISC DETS	Y	REMOVE HOLD HWVP-FD-364 SEE PAGE 15
H-2-119285	1	2	CSB VAULT REINF CROSS SECT J	Y	REMOVE HOLD HWVP-FD-364, SEE PAGE 16, REVISE LAP SPLICE SEE PAGE 17.
H-2-119286	1	2	CSB VAULT REINF CROSS SECT K	Y	REVISE LAP SPLICE SEE PAGE 18.

FLUOR DANIEL US DEPARTMENT OF ENERGY HANFORD WASTE VITRIFICATION PLANT **DESIGN CHANGE NOTICE**	DCN - 0100	REV 0	DISCIPLINE STRUCT	PKG. NO. E350	PAGE 3
	PREPARED BY: A. VILLEGAS			Date: 8/30/93	
	DISCIPLINE ENGINEER: R. GRUBER			Date: 8/30/93	

SECTION 6: CONSTRUCTION DOCUMENTS AFFECTED

DOCUMENT NUMBER	SHT/ PAGE	REV NO	DOCUMENT NAME	INCLD Y/N	DESCRIPTION OF CHANGE

SEE PAGE 2

SECTION 7: NON-CONSTRUCTION DOCUMENTS AFFECTED

This section references affected items such as P&IDs or calculations/analyses, but they are generally not included in DCN package.

DOCUMENT NUMBER	SHT/ PAGE	REV NO	DOCUMENT NAME	DESCRIPTION OF CHANGE

N/A

IV. CAST-IN-PLACE CONCRETE:

1. IMMEDIATELY PRIOR TO PLACING THE OPTIONAL MUD MAT OR FORMING AND REINFORCING, THE SUB-GRADE SHALL BE INSPECTED AND APPROVED BY THE BUYER. SUBGRADE SHALL CONFORM TO THE REQUIREMENTS OF SPECIFICATION B-595-C-B200, SECTION 02220.

2. ALL PIPING, ELECTRICAL, CONTROL SYSTEMS, AND OTHER ITEMS EMBEDDED IN OR UNDER THE CONCRETE SHALL BE IN PLACE PRIOR TO PLACING CONCRETE.

3. EXCEPT AS NOTED ON THE DRAWINGS, USE OF MECHANICAL SPLICES SHALL BE AS REQUIRED TO SUPPORT THE SELLERS WORK PLAN AND PLACEMENT SCHEDULE. LOCATIONS AND DETAILS SHALL BE SUBMITTED FOR THE BUYERS APPROVAL. MECHANICAL COUPLERS SHALL BE STAGGERED A MINIMUM OF 36". NO MORE THAN 50% OF THE BARS SHALL BE SPLICED IN THE SAME LOCATION. — DCN-0100

4. SPLICE LENGTHS SHALL BE AS INDICATED ON THE DESIGN DRAWINGS.

5. UNLESS SPECIFIED OTHERWISE ALL HOOKS SHALL BE STANDARD HOOKS AS DETAILED ON DRAWING H-2-119275, SHEET 4.

6. GROUND ONE ANCHOR BOLT FOR EACH STRUCTURAL STEEL BASE PLATE PER DETAIL DRAWING H-2-119275 SH 3. FOR ELECTRICAL GROUNDING DETAILS SEE DRAWING H-2-122732 SH 1.

FLUOR DANIEL	U.S. DEPARTMENT OF ENERGY HANFORD WASTE VITRIFICATION PLANT	DESIGN CHANGE NOTICE
DESCRIPTION OF CHANGE: REVISE CAST-IN-PLACE CONCRETE NOTE 3.		BASE DOC. NO. H-2-119275 SHT/PG. 1 REV. 1 CR NO. CR-HWVP-1025 DISCIPLINE: STRUCTURAL/TMP275A1
PREPARED BY: Armando Villegas	DATE: 8/30/93	DCN -0100 REV. 0 PAGE 4
DISCIPLINE ENGINEER: Kate A Gruber	DATE: 8/30/93	

ACAD REM

2.1.1.1 **Reinforcing Steel: ASTM A615, Grade 60; deformed billet steel bars, plain finish.** Actual Yield Strength shall not exceed 78,000 psi and the actual ultimate tensile strength shall not exceed the actual tensile yield strength by more than 25 percent of the actual tensile yield strength.

DCN-0100

FLUOR DANIEL	U.S. DEPARTMENT OF ENERGY HANFORD WASTE VITRIFICATION PLANT	DESIGN CHANGE NOTICE
DESCRIPTION OF CHANGE: REVISE REINFORCING MATERIAL SPECIFICATION		BASE DOC. NO. E350-03200 SHT/PG. 3 REV. 1 CR NO. CR-HWVP-1025 DISCIPLINE: STRUCTURAL
PREPARED BY: Armando Villegas	DATE: 8/30/93	DCN - 0100 REV. 0 PAGE 5
DISCIPLINE ENGINEER: Robert J. Gruber	DATE: 8/30/93	

ACAD REM 08/30/93

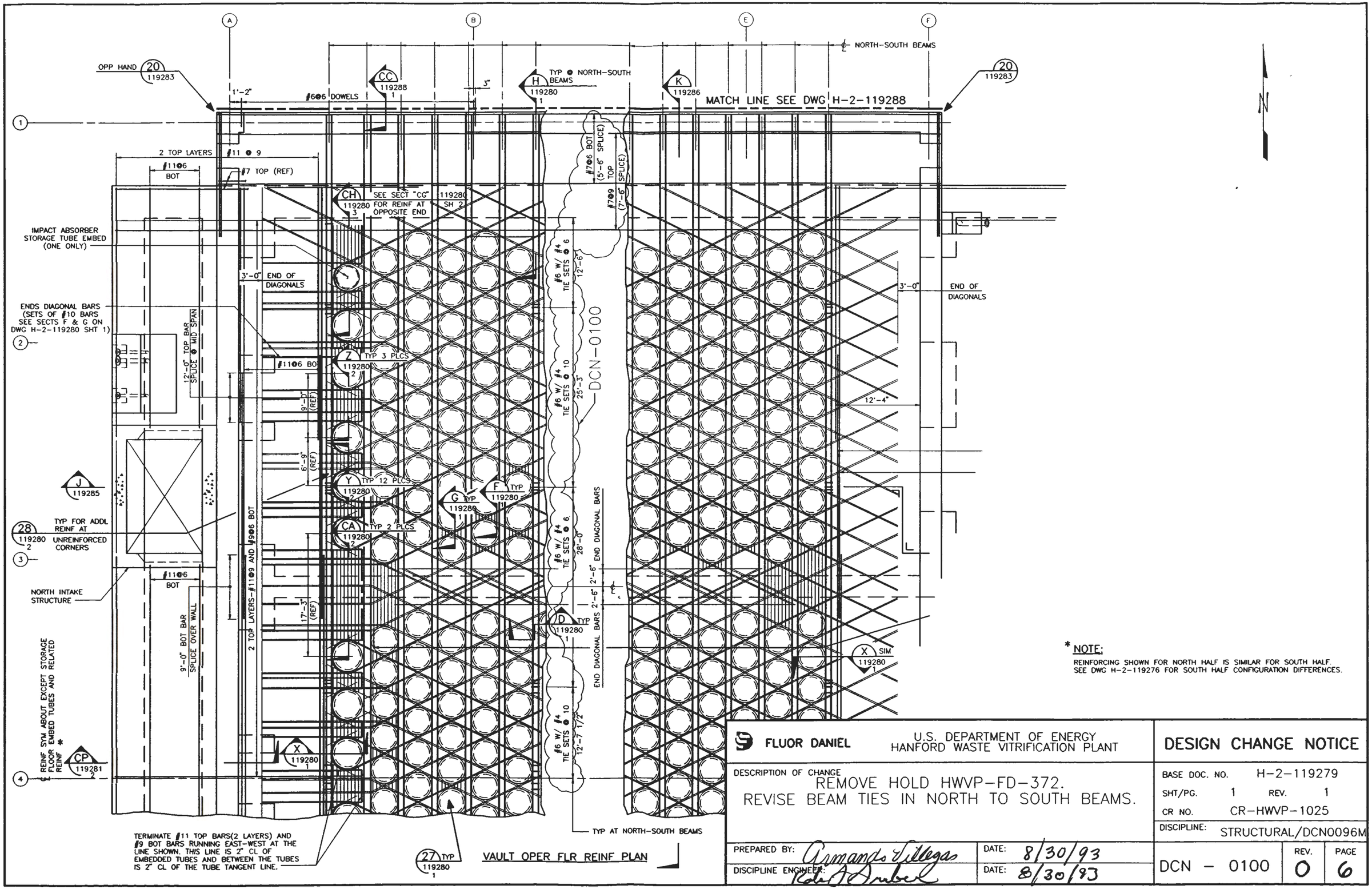

* NOTE:
REINFORCING SHOWN FOR NORTH HALF IS SIMILAR FOR SOUTH HALF.
SEE DWG H-2-119276 FOR SOUTH HALF CONFIGURATION DIFFERENCES.

FLUOR DANIEL	U.S. DEPARTMENT OF ENERGY HANFORD WASTE VITRIFICATION PLANT	DESIGN CHANGE NOTICE
DESCRIPTION OF CHANGE REMOVE HOLD HWVP-FD-372. REVISE BEAM TIES IN NORTH TO SOUTH BEAMS.		BASE DOC. NO. H-2-119279 SHT/PG. 1 REV. 1 CR NO. CR-HWVP-1025 DISCIPLINE: STRUCTURAL/DCN0096M
PREPARED BY: Armands Villegas	DATE: 8/30/93	DCN - 0100 REV. 0 PAGE 6
DISCIPLINE ENGINEER: Robert Imbert	DATE: 8/30/93	

ACAD REM 08/30/93

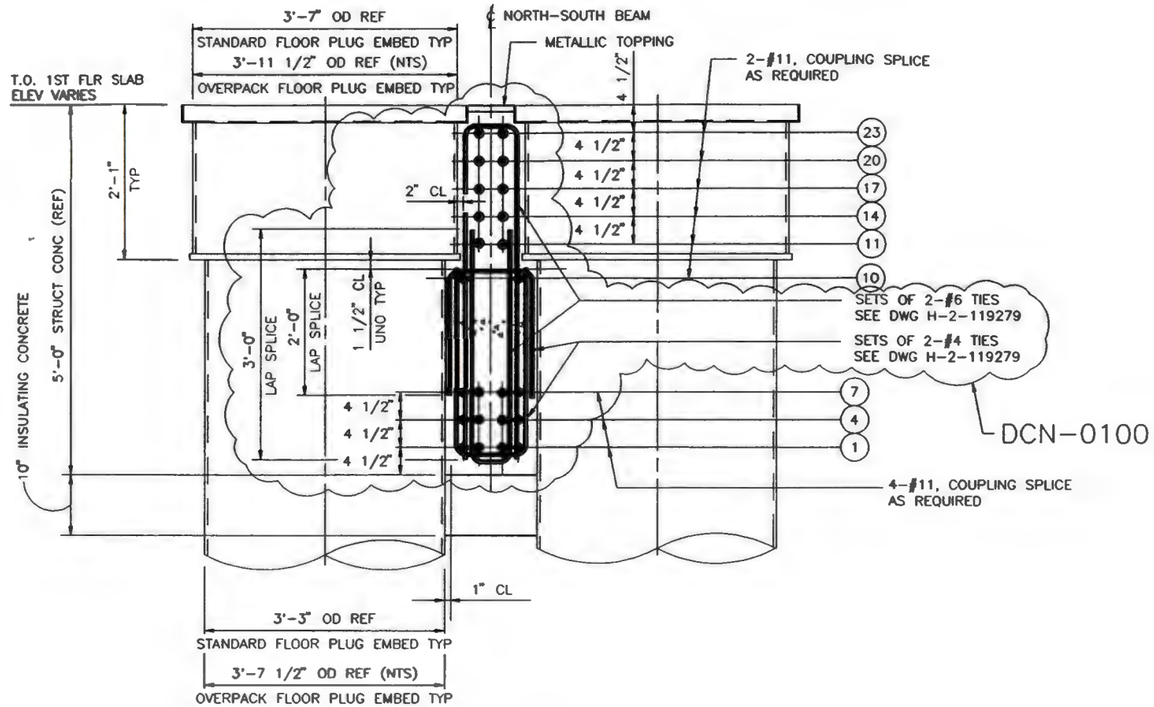

SECTION D 119279

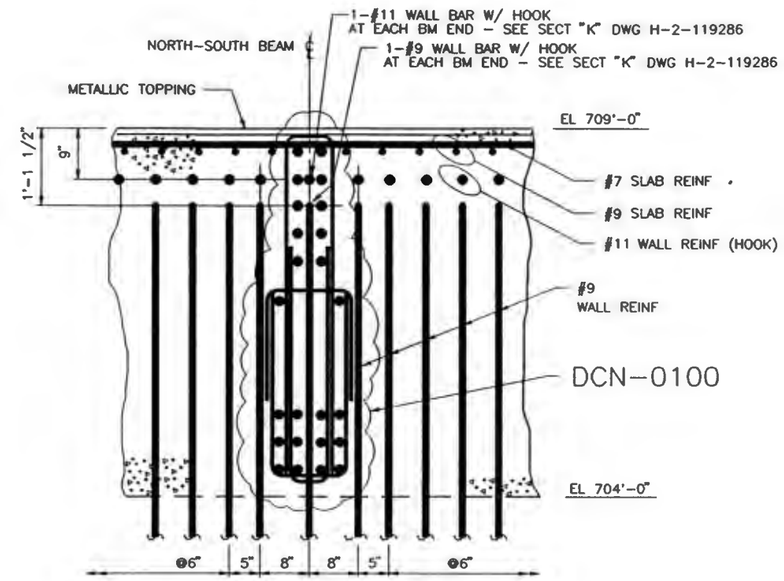

SECTION E 119286

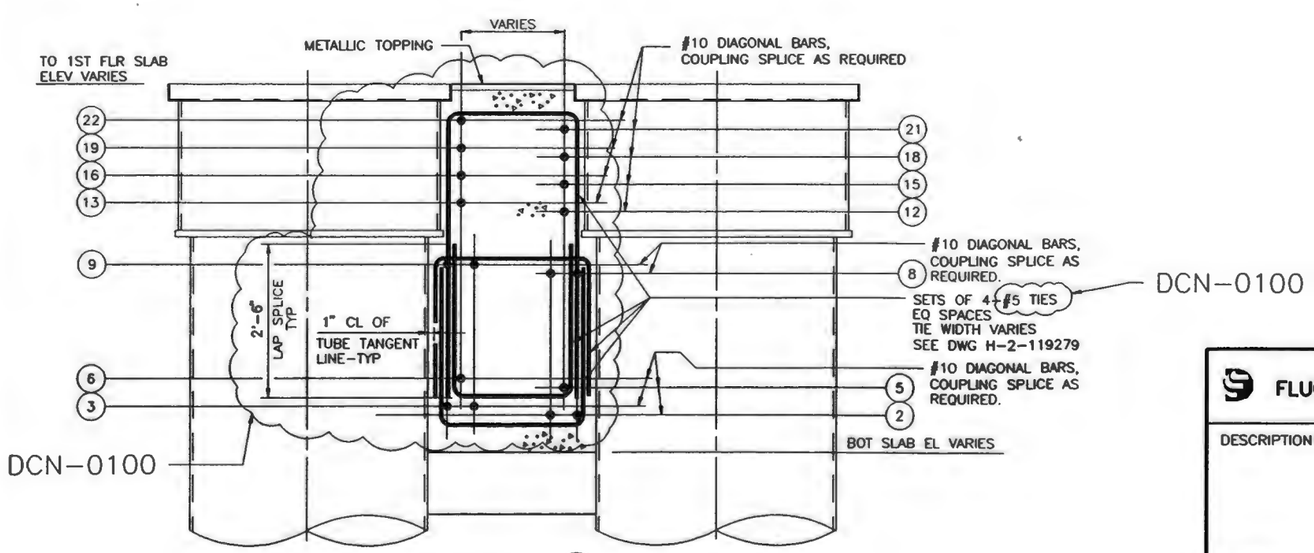

SECTION F 119279

FLUOR DANIEL	U.S. DEPARTMENT OF ENERGY HANFORD WASTE VITRIFICATION PLANT	DESIGN CHANGE NOTICE
DESCRIPTION OF CHANGE: REMOVE HOLD HWVP-FD-372. REVISE REINFORCING TIES.		BASE DOC. NO. H-2-119280; SHT/PG. 1 REV. 1; CR NO. CR-HWVP-1025; DISCIPLINE: STRUCTURAL/DCN0096N
PREPARED BY: Armando Villegas	DATE: 8/30/93	DCN - 0100 REV. 0 PAGE 7
DISCIPLINE ENGINEER: Rob A. Jubb	DATE: 8-30-93	

ACAD REM 08/30/93

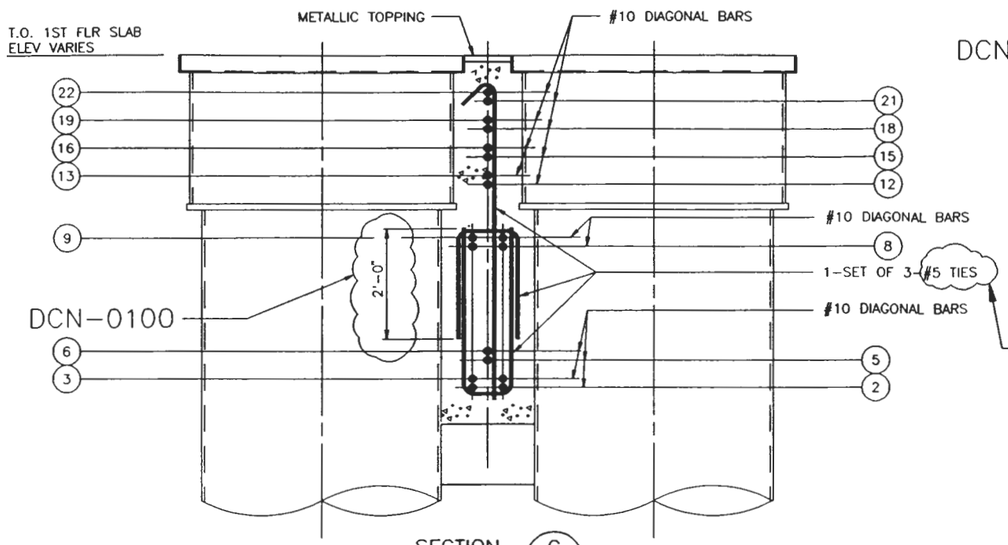

SECTION G
119279

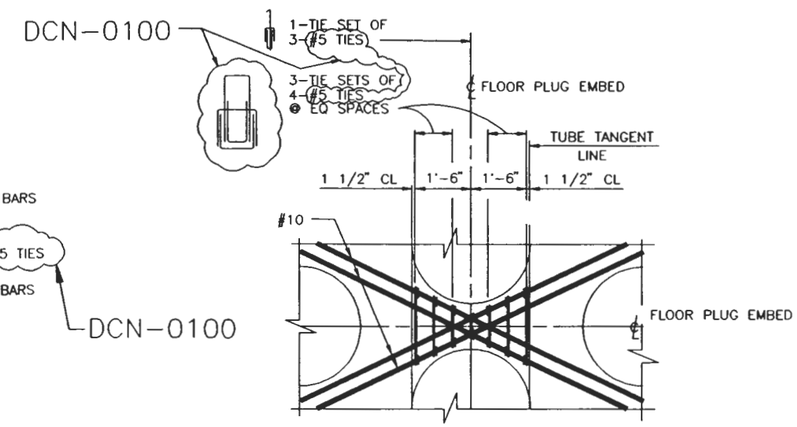

DETAIL SHOWN AT PLACEMENT LAYERS 8 AND 9
NORTH-SOUTH BEAMS OMITTED FOR CLARITY

DETAIL 27
119279

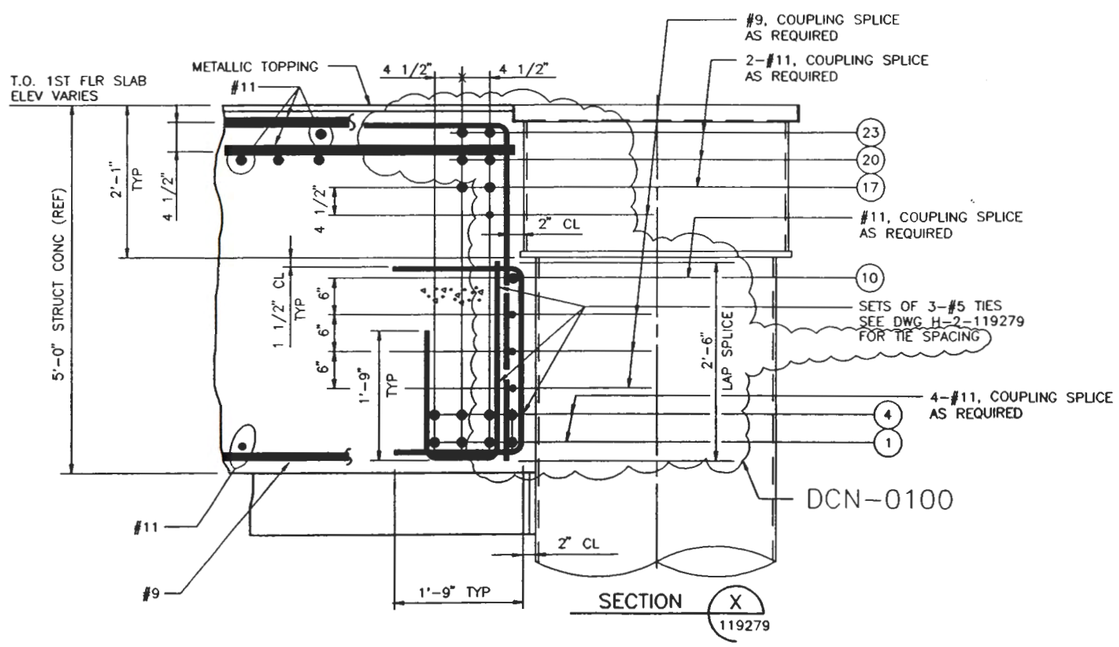

SECTION X
119279

FLUOR DANIEL	U.S. DEPARTMENT OF ENERGY HANFORD WASTE VITRIFICATION PLANT	DESIGN CHANGE NOTICE
DESCRIPTION OF CHANGE REMOVE HOLD HWVP-FD-372. REVISE REINFORCING TIES.		BASE DOC. NO. H-2-119280 SHT/PG. 1 REV. 1 CR NO. CR-HWVP-1025 DISCIPLINE: STRUCTURAL/DCN00960
PREPARED BY: Armando Villegas	DATE: 8/30/93	DCN - 0100 REV. 0 PAGE 8
DISCIPLINE ENGINEER: Rale J. Snuler	DATE: 8-30-93	

ACAD REM 08/30/93

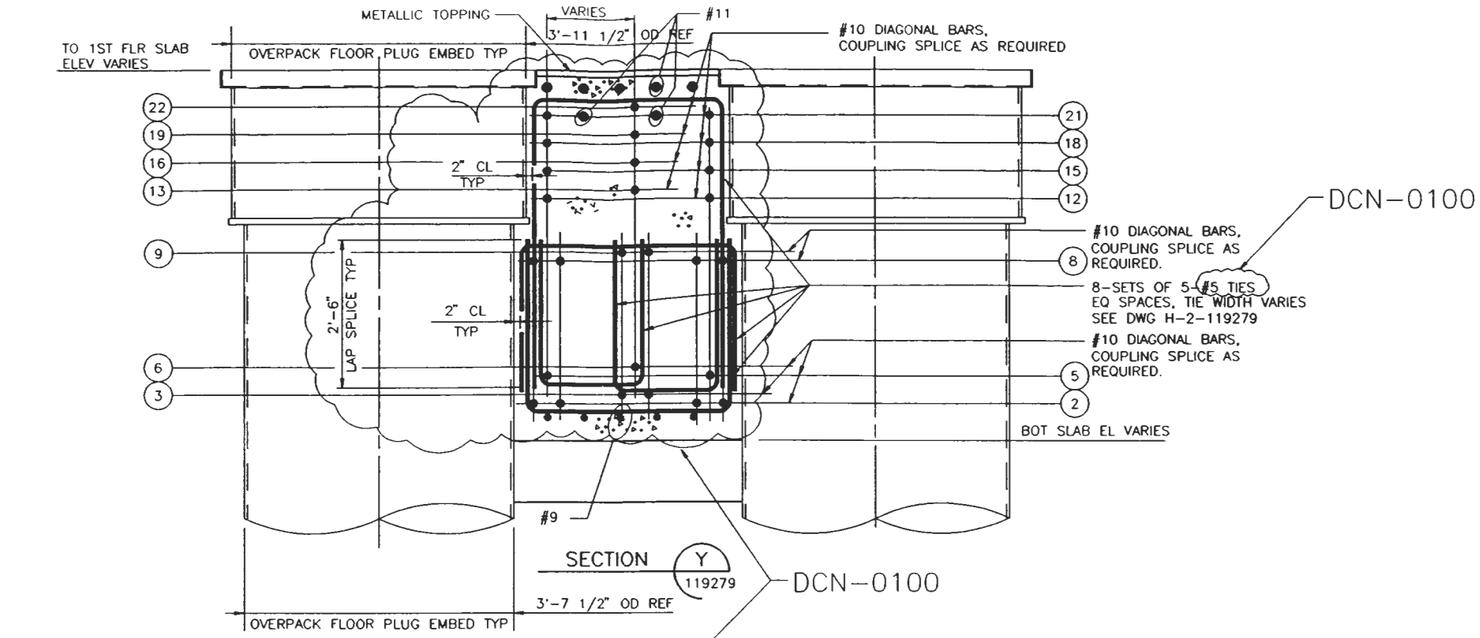

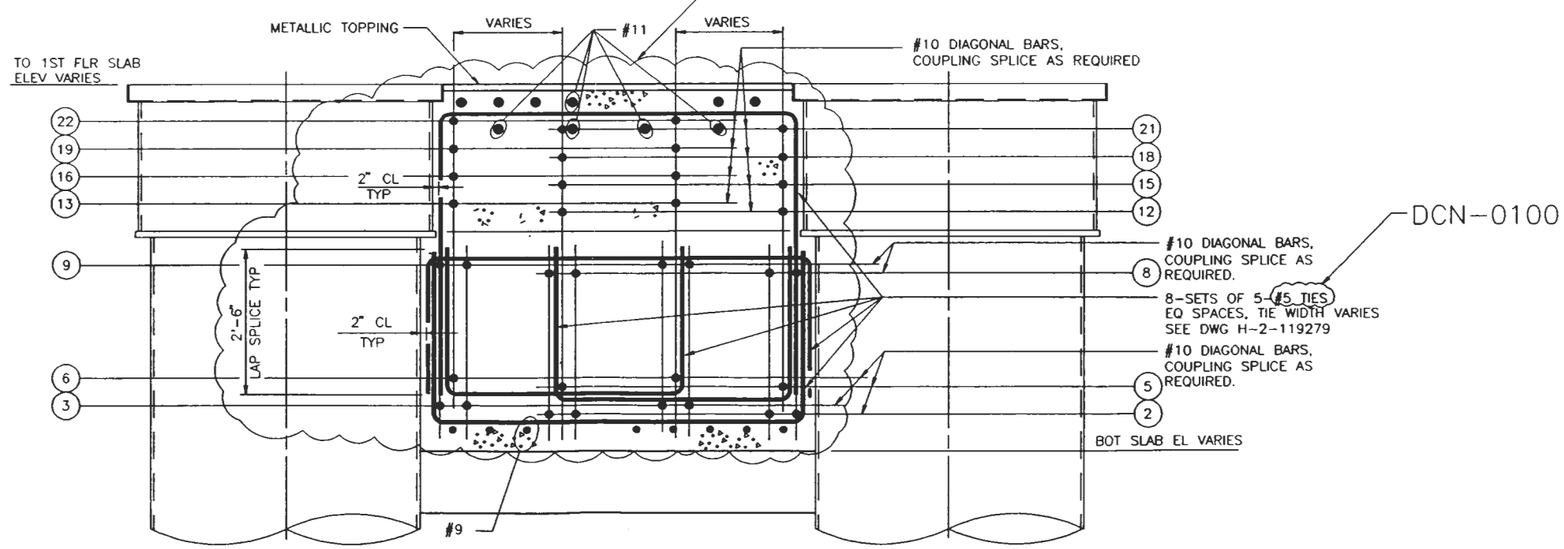

FLUOR DANIEL	U.S. DEPARTMENT OF ENERGY HANFORD WASTE VITRIFICATION PLANT	DESIGN CHANGE NOTICE
DESCRIPTION OF CHANGE REMOVE HOLD HWVP-FD-372. REVISE REINFORCING TIES.		BASE DOC. NO. H-2-119280 SHT/PG. 2 REV. 1 CR NO. CR-HWVP-1025 DISCIPLINE: STRUCTURAL/DCN0096P
PREPARED BY: Armando Villegas	DATE: 8/30/93	DCN - 0100 REV. 0 PAGE 9
DISCIPLINE ENGINEER: Robert J. Gruber	DATE: 8-30-93	

ACAD

REM 08/30/93

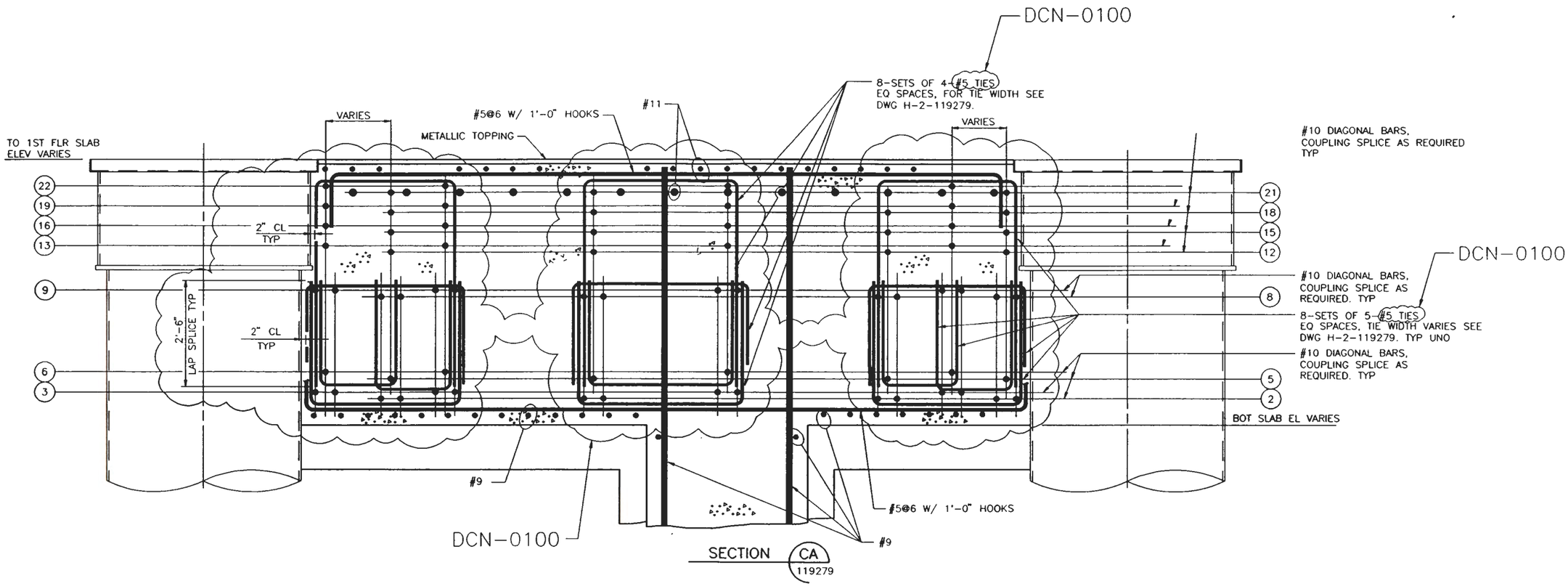

FLUOR DANIEL	U.S. DEPARTMENT OF ENERGY HANFORD WASTE VITRIFICATION PLANT	DESIGN CHANGE NOTICE
DESCRIPTION OF CHANGE REMOVE HOLD HWVP-FD-372. REVISE REINFORCING TIES.		BASE DOC. NO. H-2-119280 SHT/PG. 2 REV. 1 CR NO. CR-HWVP-1025 DISCIPLINE: STRUCTURAL/DCN0096Q
PREPARED BY: Armando Villegas	DATE: 8/30/93	DCN - 0100 REV. 0 PAGE 10
DISCIPLINE ENGINEER: Robert A. Gruber	DATE: 8-30-93	

ACAD

REM 08/30/93

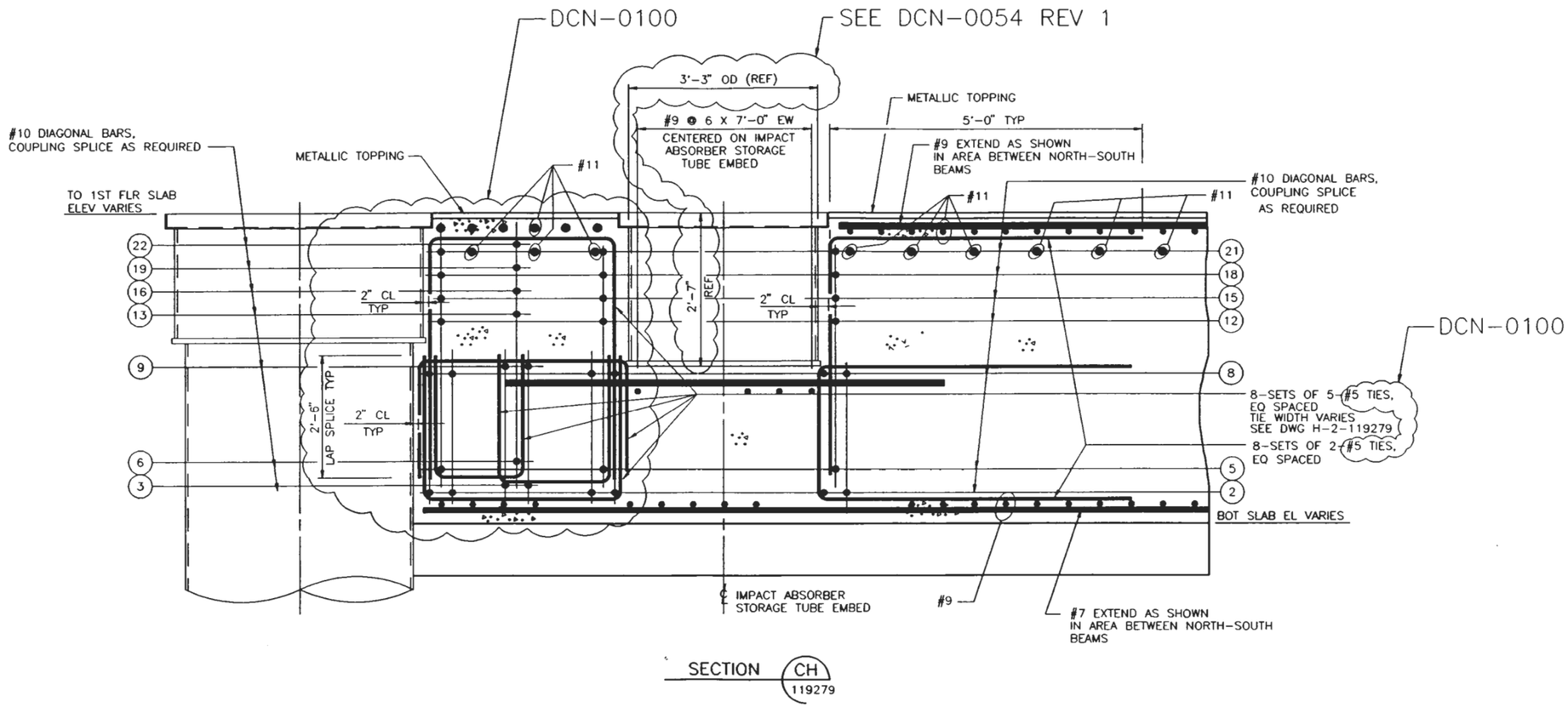

FLUOR DANIEL	U.S. DEPARTMENT OF ENERGY HANFORD WASTE VITRIFICATION PLANT	DESIGN CHANGE NOTICE
DESCRIPTION OF CHANGE: REMOVE HOLD HWVP-FD-372. REVISE REINFORCING TIES. REVISE IMPACT ABSORBER STORAGE TUBE EMBED DIMENSIONS.		BASE DOC. NO. H-2-119280 SHT/PG. 3 REV. 1 CR NO. CR-HWVP-1025 DISCIPLINE: STRUCTURAL/DCN0096R
PREPARED BY: Armando Villegas	DATE: 8/30/93	DCN - 0100 REV. 0 PAGE 11
DISCIPLINE ENGINEER: Rale J. Amber	DATE: 8-30-93	

ACAD REM 08/30/93

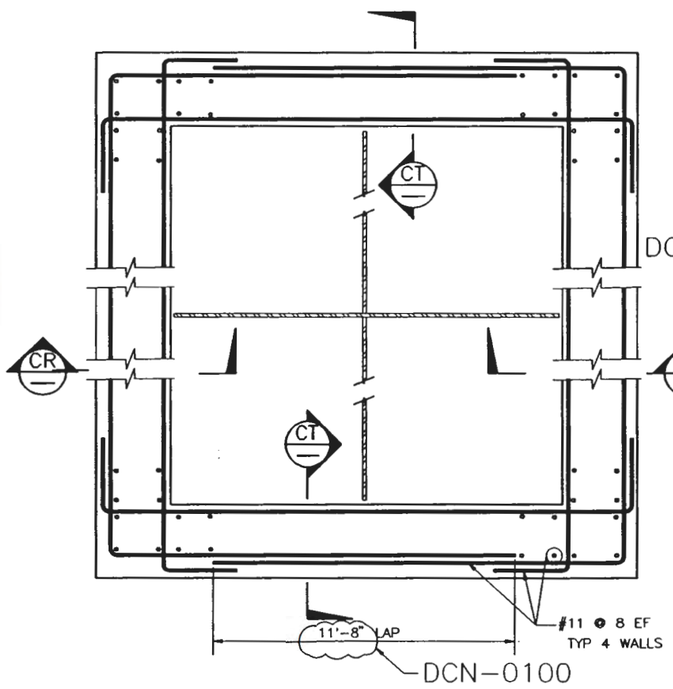

TYP SECTION THRU INTAKE STRUCTURES

DETAIL 98 / 119276

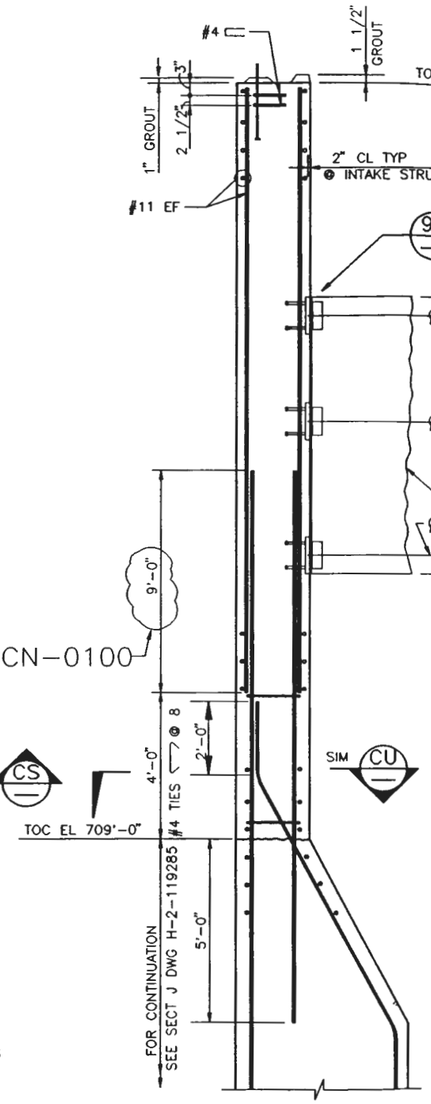

SECTION CR
NTS

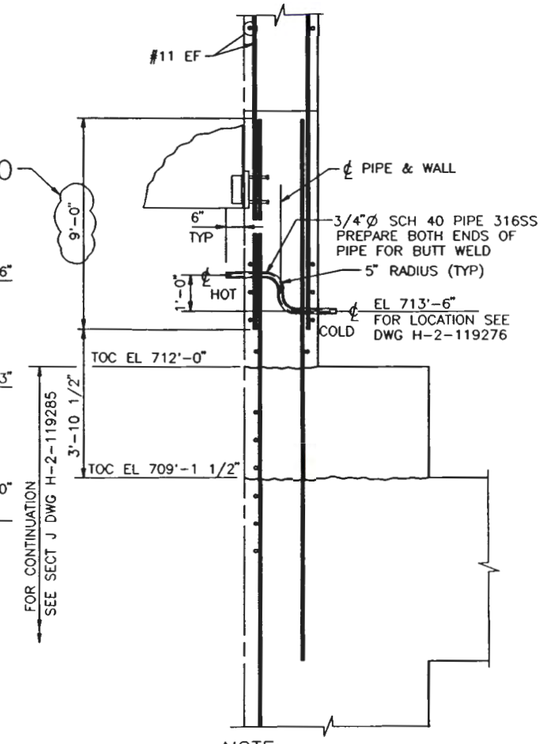

NOTE:
FOR INFORMATION NOT
SHOWN SEE SECT CR THIS DWG

SECTION CS
NTS

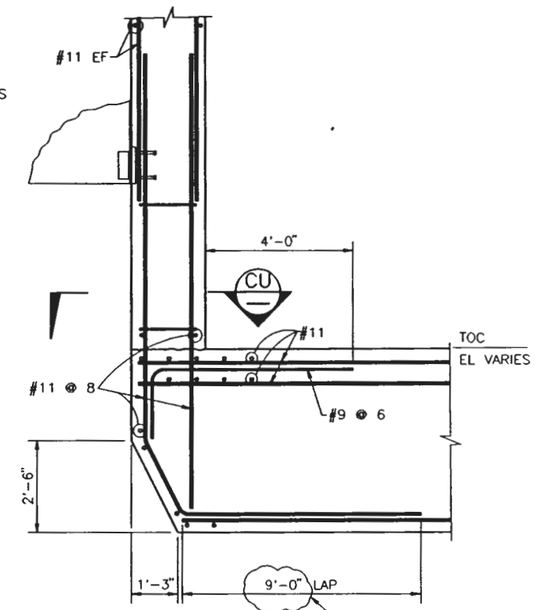

NOTE:
FOR INFORMATION NOT
SHOWN SEE SECT CR THIS DWG

SECTION CT
NTS

FLUOR DANIEL — U.S. DEPARTMENT OF ENERGY, HANFORD WASTE VITRIFICATION PLANT		DESIGN CHANGE NOTICE
DESCRIPTION OF CHANGE: REMOVE HOLD HWVP-FD-372. REVISE REINFORCING LAPS.		BASE DOC. NO. H-2-119280; SHT/PG. 3; REV. 1; CR NO. CR-HWVP-1025; DISCIPLINE: STRUCTURAL/DCN0096S
PREPARED BY: Armando Villegas	DATE: 8/30/93	DCN - 0100 · REV. 0 · PAGE 12
DISCIPLINE ENGINEER: Robert J. Imber	DATE: 8-30-93	

ACAD REM 08/30/93

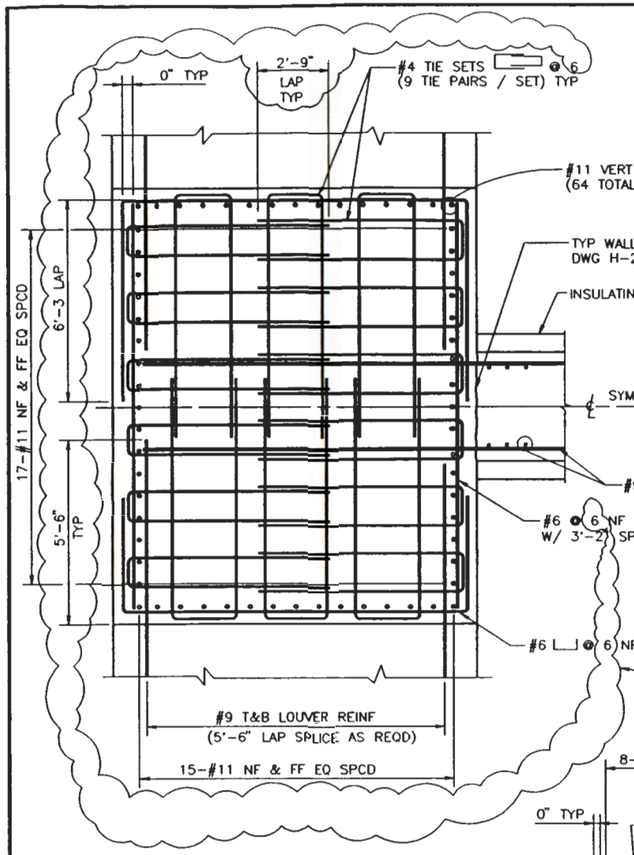

PLAN
DETAIL 16 / 119277

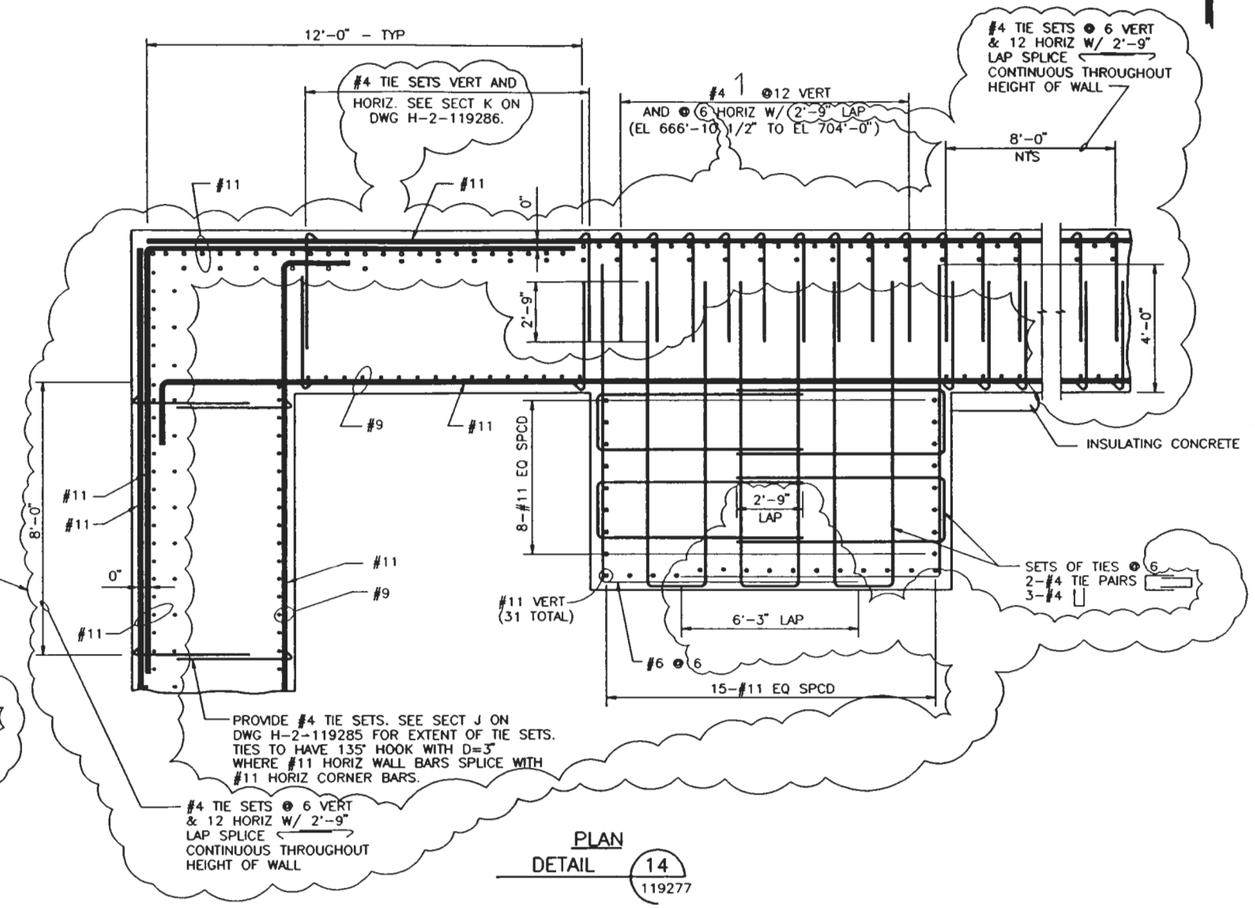

PLAN
DETAIL 14 / 119277

DCN-0100

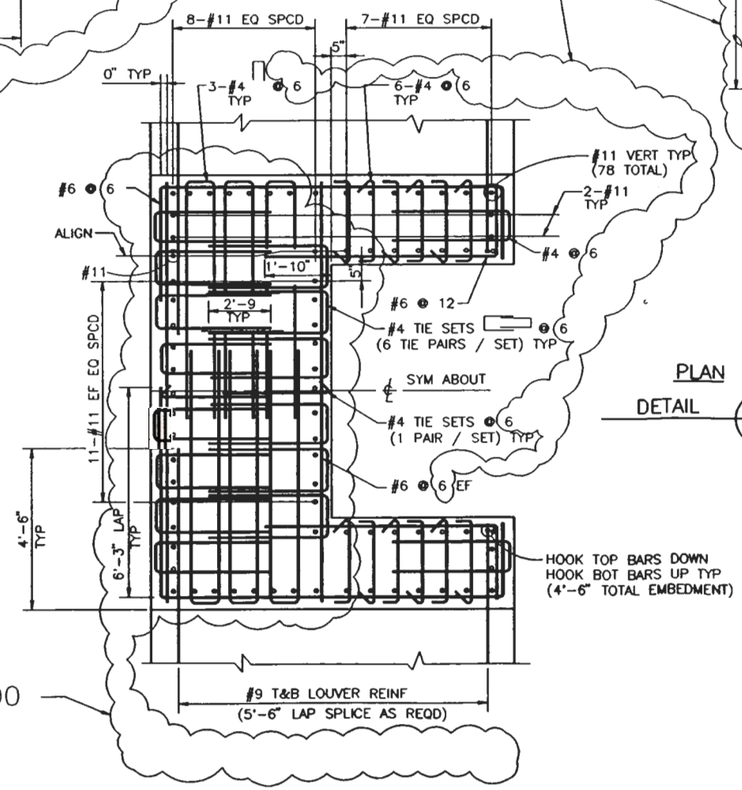

PLAN
DETAIL 32 / 119277

DCN-0100

FLUOR DANIEL	U.S. DEPARTMENT OF ENERGY HANFORD WASTE VITRIFICATION PLANT	DESIGN CHANGE NOTICE		
DESCRIPTION OF CHANGE REMOVE HOLD HWVP-FD-364. REVISE REINFORCING AS NOTED AND REMOVE LENTON COUPLER NOTES.		BASE DOC. NO. H-2-119281 SHT/PG. 1 REV. 2 CR NO. CR-HWVP-1025 DISCIPLINE: STRUCTURAL/DCN0096J		
PREPARED BY: Armando Villegas	DATE: 8/30/93	DCN - 0100	REV. 0	PAGE 13
DISCIPLINE ENGINEER: Robert J. Gruber	DATE: 8-30-93			

ACAD

REM
08/30/93

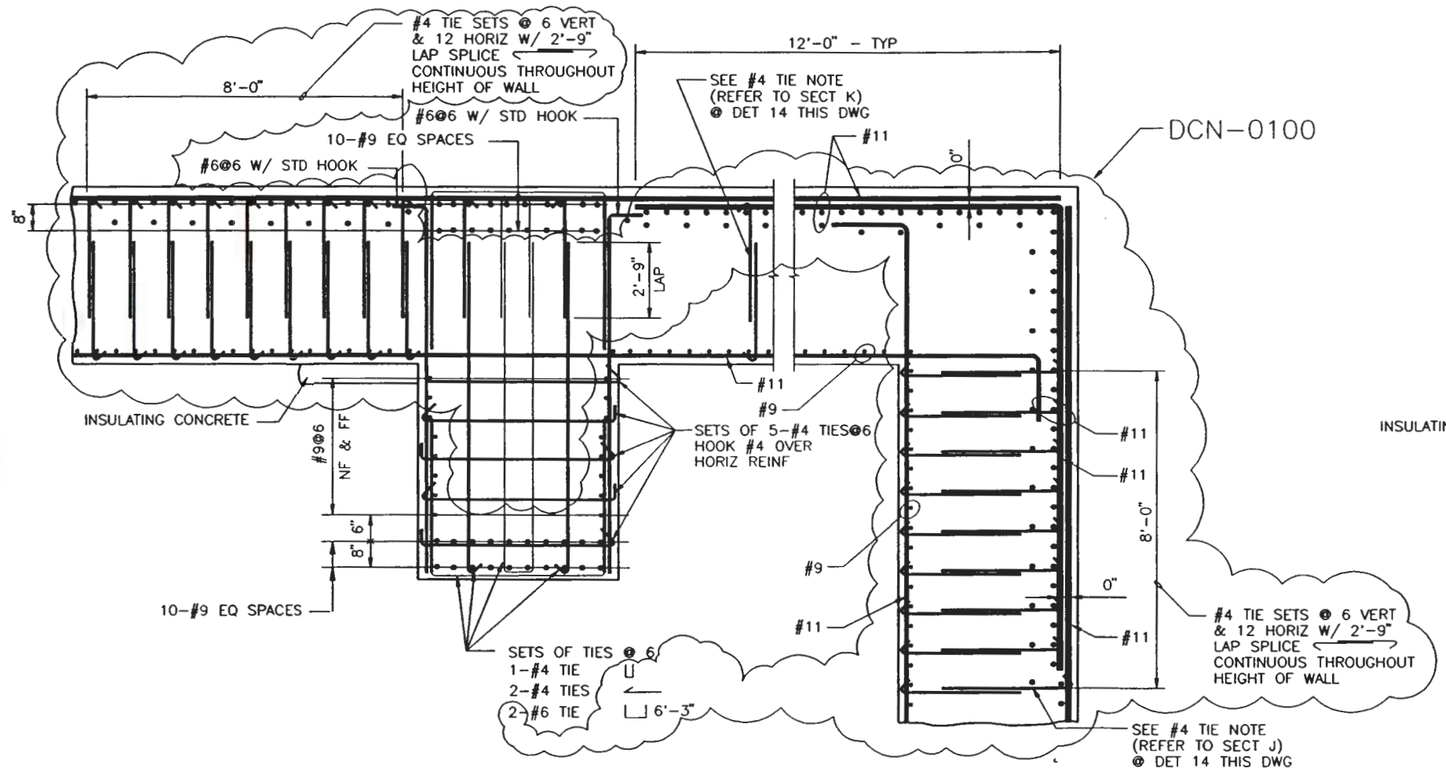

PLAN

DETAIL 15 / 119277

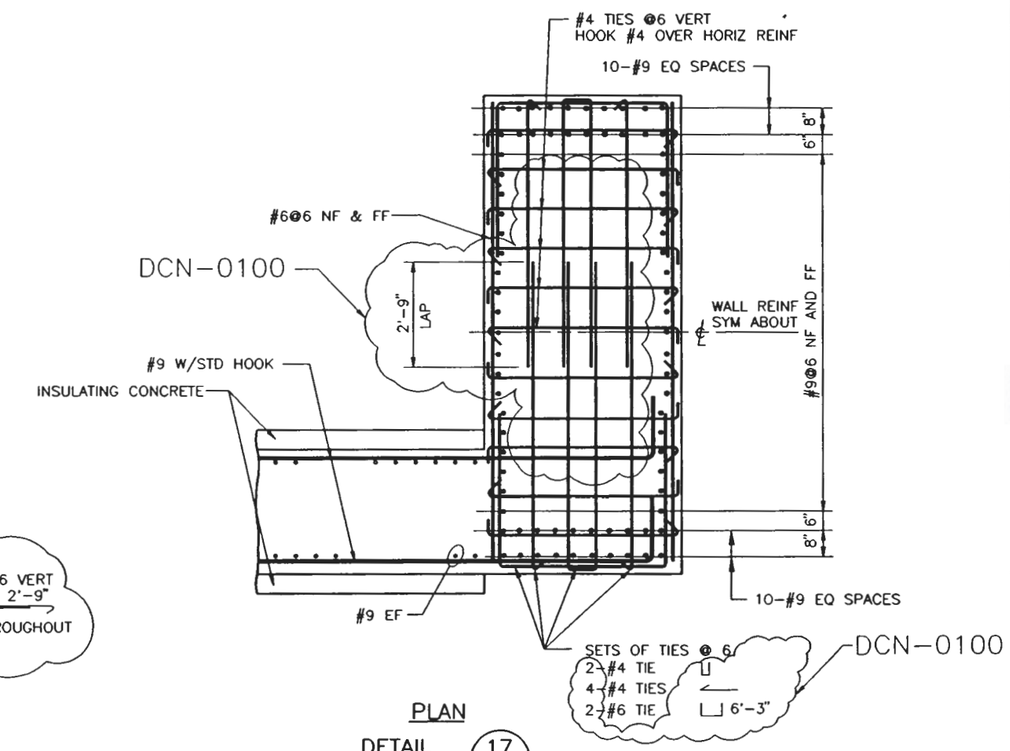

PLAN

DETAIL 17 / 119277

FLUOR DANIEL	U.S. DEPARTMENT OF ENERGY HANFORD WASTE VITRIFICATION PLANT	DESIGN CHANGE NOTICE	
DESCRIPTION OF CHANGE: REMOVE HOLD HWVP-FD-364. REVISE REINFORCING AS NOTED.		BASE DOC. NO. H-2-119281	
		SHT/PG. 1	REV. 2
		CR NO. CR-HWVP-1025	
		DISCIPLINE: STRUCTURAL/DCN0096K	
PREPARED BY: Armando Villega	DATE: 8/30/93	DCN - 0100	REV. 0 / PAGE 14
DISCIPLINE ENGINEER: Rob Drueber	DATE: 8-30-93		

ACAD REM 08/30/93

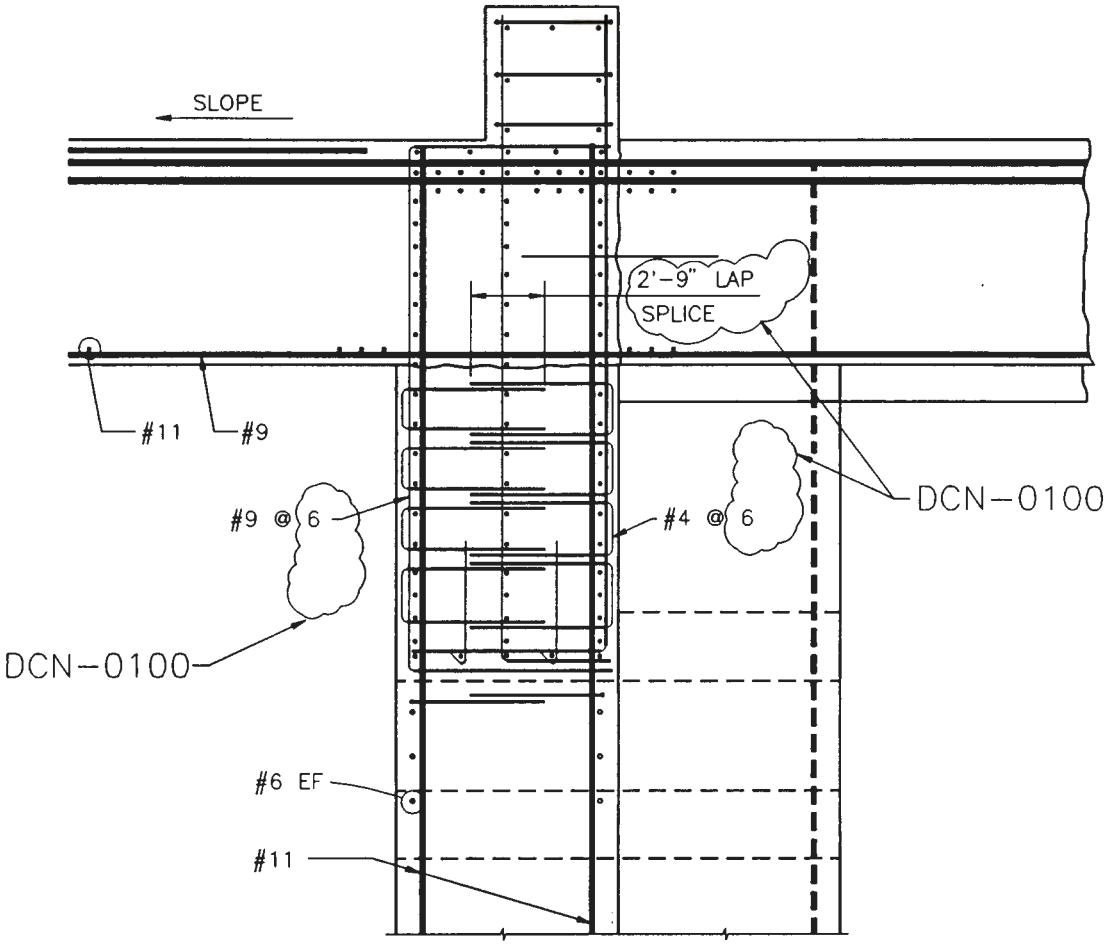

SECTION CP 119279

FLUOR DANIEL	U.S. DEPARTMENT OF ENERGY HANFORD WASTE VITRIFICATION PLANT	DESIGN CHANGE NOTICE
DESCRIPTION OF CHANGE: REMOVE HOLD HWVP-FD-364. REVISE REINFORCING SPACING AND TIE LAP AS NOTED.		BASE DOC. NO. H-2-119281 SHT/PG. 2 REV. 0 CR NO. CR-HWVP-1025 DISCIPLINE: STRUCTURAL/DCN0096H
PREPARED BY: Armando Villega	DATE: 8/30/93	DCN - 0100 REV. 0 PAGE 15
DISCIPLINE ENGINEER: Robert Fowler	DATE: 8-30-93	

ACAD REM 08/30/93

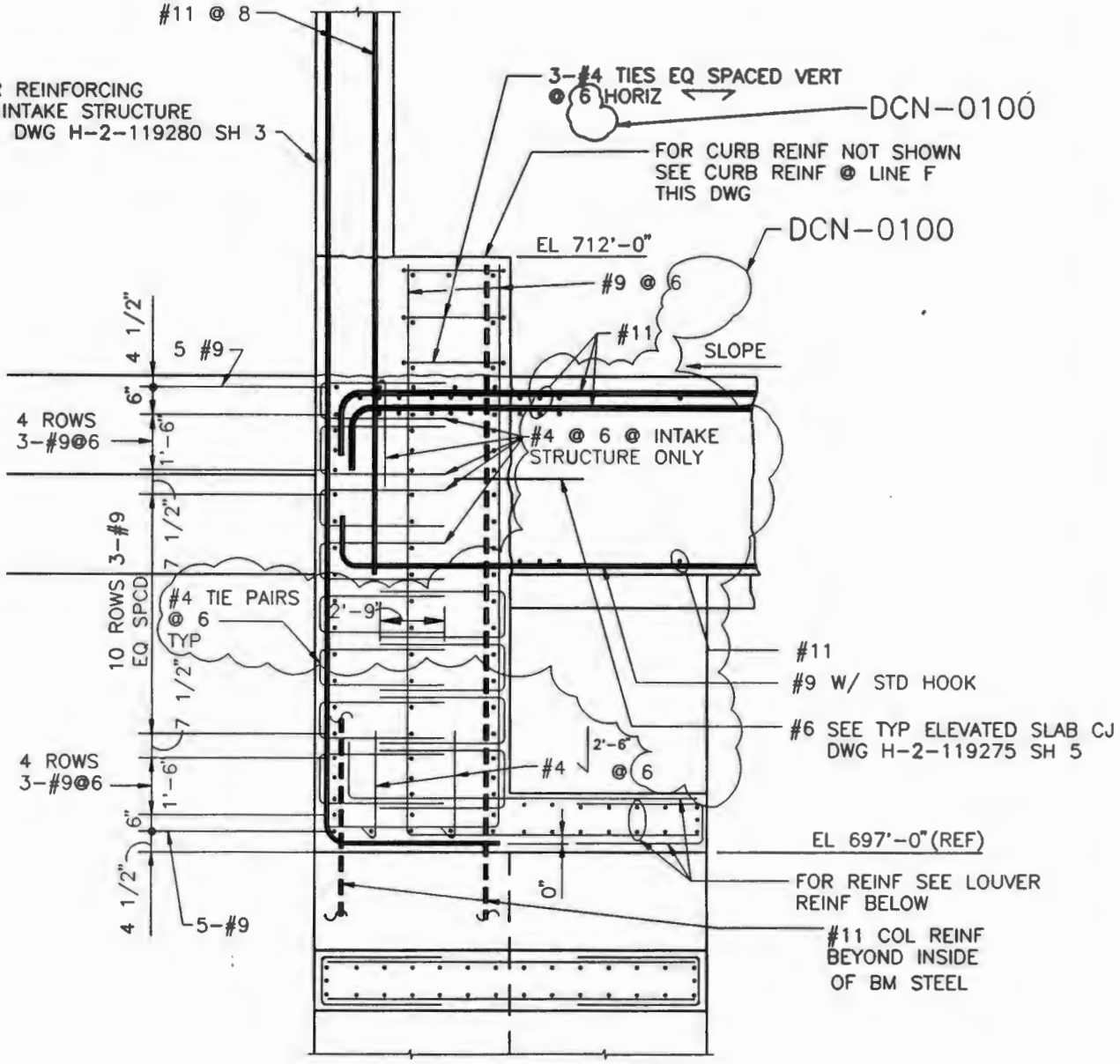

DETAIL J 119279

FLUOR DANIEL	U.S. DEPARTMENT OF ENERGY HANFORD WASTE VITRIFICATION PLANT	DESIGN CHANGE NOTICE
DESCRIPTION OF CHANGE: REMOVE HOLD HWVP-FD-364. REVISE REINFORCING SPACING AND TIE LAP DIMENSION		BASE DOC. NO. H-2-119285 SHT/PG. 1 REV. 2 CR NO. CR-HWVP-1025 DISCIPLINE: STRUCTURAL/DCN0096E
PREPARED BY: Armando Villegas	DATE: 8/30/93	DCN - 0100 REV. 0 PAGE 16
DISCIPLINE ENGINEER: Robert A. Dunbar	DATE: 8-30-93	

ACAD REM 08/30/93

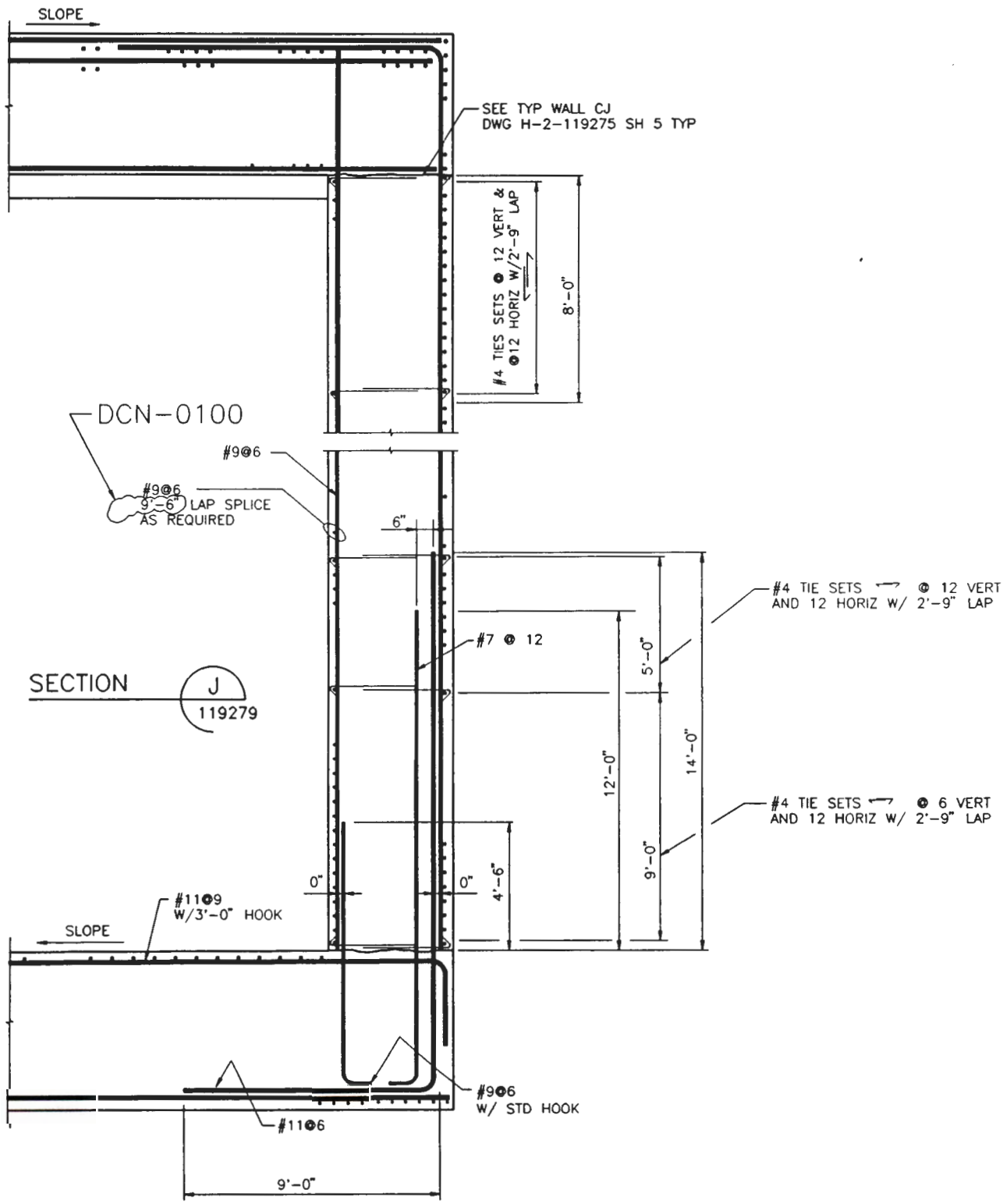

FLUOR DANIEL	U.S. DEPARTMENT OF ENERGY HANFORD WASTE VITRIFICATION PLANT	DESIGN CHANGE NOTICE

DESCRIPTION OF CHANGE: REVISE LAP SPLICE

BASE DOC. NO. H-2-119285
SHT/PG. 1 REV. 2
CR NO. CR-HWVP-1025
DISCIPLINE: STRUCTURAL/DCN0096L

PREPARED BY: Armando Villegas	DATE: 8/30/93	DCN - 0100	REV. 0	PAGE 17
DISCIPLINE ENGINEER: Robert A Drucker	DATE: 8-30-93			

ACAD REM 08/30/93

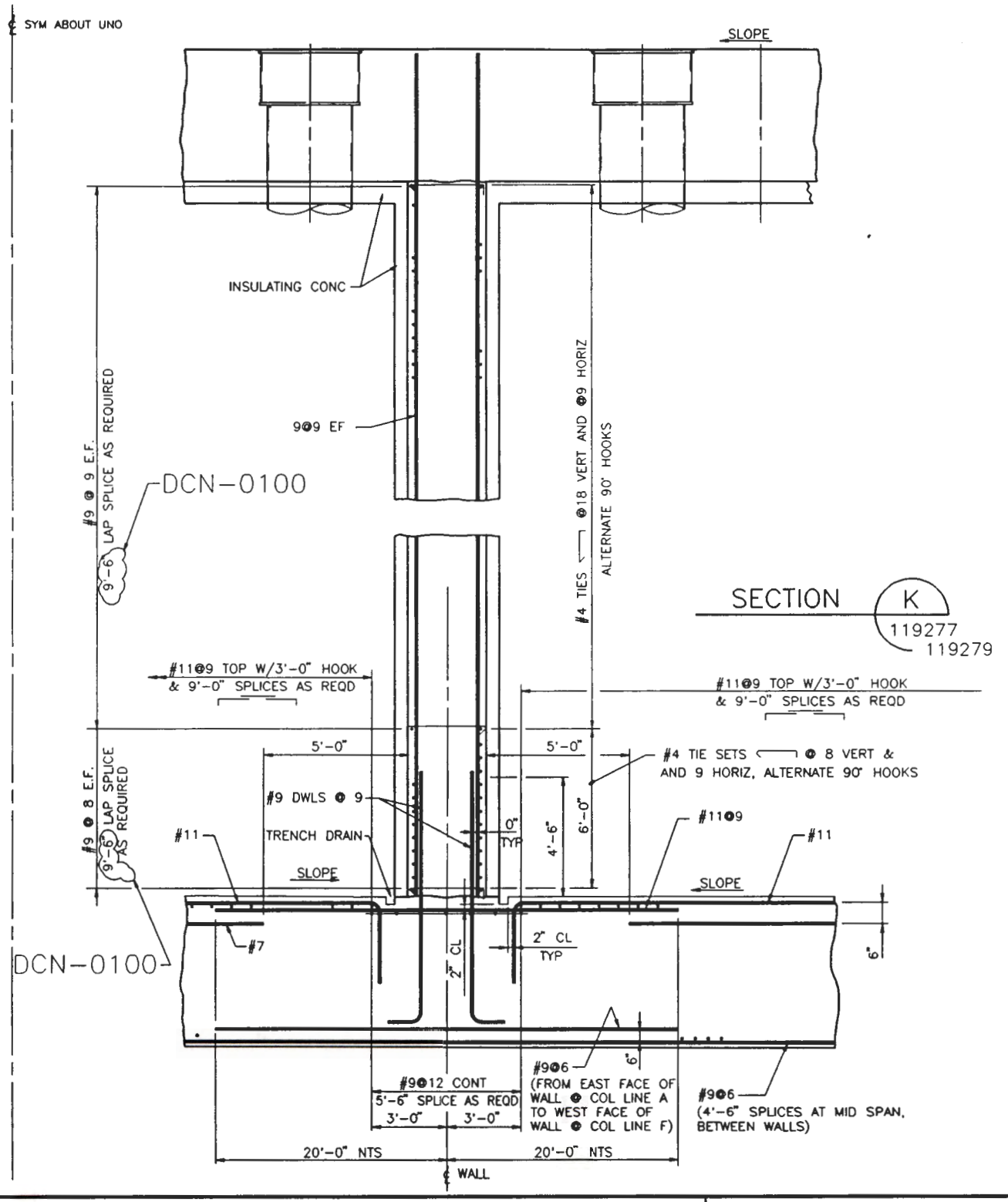

FLUOR DANIEL	U.S. DEPARTMENT OF ENERGY HANFORD WASTE VITRIFICATION PLANT	DESIGN CHANGE NOTICE

DESCRIPTION OF CHANGE:

REVISE LAP SPLICE

BASE DOC. NO.	H-2-119286		
SHT/PG.	1	REV.	2
CR NO.	1025		
DISCIPLINE:	STRUCTURAL/DCN0081F		

PREPARED BY: Armando Villegas	DATE: 8/30/93	DCN - 0100	REV. 0	PAGE 18
DISCIPLINE ENGINEER: Rale A. Amber	DATE: 8-30-93			

ACAD

REM
08/30/93