START

0018002
1 of 2

445
394
839

WHC-EP-0440
Volume 1

Facility Effluent Monitoring Plan Determinations for the 200 Area Facilities

9413136.0541

RECEIVED
DEC 27 1991
R. E. LERCH
EDMC

BEST AVAILABLE COPY

Prepared for the U.S. Department of Energy
Assistant Secretary for Environment,
Safety and Health

Westinghouse
Hanford Company Richland, Washington

Hanford Operations and Engineering Contractor for the
U.S. Department of Energy under Contract DE-AC06-87RL10930

JAN 1992
RECEIVED
EDMC

Approved for Public Release

LEGAL DISCLAIMER

This report was prepared as an account of work sponsored by an agency of the United States Government. Neither the United States Government nor any agency thereof, nor any of their employees, nor any of their contractors, subcontractors or their employees, makes any warranty, express or implied, or assumes any legal liability or responsibility for the accuracy, completeness, or any third party's use or the results of such use of any information, apparatus, product, or process disclosed, or represents that its use would not infringe privately owned rights. Reference herein to any specific commercial product, process, or service by trade name, trademark, manufacturer, or otherwise, does not necessarily constitute or imply its endorsement, recommendation, or favoring by the United States Government or any agency thereof or its contractors or subcontractors. The views and opinions of authors expressed herein do not necessarily state or reflect those of the United States Government or any agency thereof.

This report has been reproduced from the best available copy. Available in paper copy and microfiche.

Available to the U.S. Department of Energy
and its contractors from
Office of Scientific and Technical Information
P.O. Box 62
Oak Ridge, TN 37831
(615) 576-8401

Available to the public from the U.S. Department of Commerce
National Technical Information Service
5285 Port Royal Road
Springfield, VA 22161
(703) 487-4650

Printed in the United States of America

DISCLM-1.CHP (1-91)

WHC-EP-0440
Volume 1

UC-630

Facility Effluent Monitoring Plan Determinations for the 200 Area Facilities

Environmental Assurance

Date Published
November 1991

Prepared for the U.S. Department of Energy
Assistant Secretary for Environment,
Safety and Health

Westinghouse
Hanford Company
P.O. Box 1970
Richland, Washington 99352

Hanford Operations and Engineering Contractor for the
U.S. Department of Energy under Contract DE-AC06-87RL10930

Approved for Public Release

U.S. GPO* 1991 691-926

APPROVAL

Prepared by: _____ 9/25/91
J. M. Nickels
Principal Engineer
Date

Approved by: _____ 9-26-91
L. P. Diediker 200 Area
Manager, Environmental
Protection
Date

_____ 9/27/91
G. D. Carpenter
Manager, Environmental
Assurance
Date

ewd 9/26/91 _____ 9/26/91
D. G. Farwick
Manager, Environmental
Quality Assurance
Date

_____ 10-23-91
W. G. Ruff
Acting Director
Facility Operations
Date

9413136.1944

FACILITY EFFLUENT MONITORING PLAN DETERMINATION FOR THE 200 AREA FACILITIES

ABSTRACT

The following facility effluent monitoring plan determinations document the evaluations conducted for the Westinghouse Hanford Company 200 Area facilities (chemical processing, waste management, 222-S Laboratory, and laundry) on the Hanford Site in south central Washington State. These evaluations determined the need for facility effluent monitoring plans for the 200 Area facilities. The facility effluent monitoring plan determinations have been prepared in accordance with A Guide for Preparing Hanford Site Facility Effluent Monitoring Plans, *WHC-EP-0438 (WHC 1991).*

The Plutonium/Uranium Extraction Plant and UO_3 *facility effluent monitoring plan determinations were prepared by Los Alamos Technical Associates, Richland, Washington. The Plutonium Finishing Plant, Transuranic Waste Storage and Assay Facility, T Plant, Tank Farms, Low Level Burial Grounds, and 222-S Laboratory determinations were prepared by Science Applications International Corporation of Richland, Washington. The B Plant Facility Effluent Monitoring Plan Determination was prepared by ERCE Environmental Services of Richland, Washington.*

Forty-three Westinghouse 200 Area facilities were evaluated. Facility effluent monitoring plans need to be prepared for 15 facilities. The following list summarizes the result of the facility effluent monitoring plan determinations.

Facility	FEMP Required
B Plant	yes
PUREX	yes
UO_3	yes
U Plant	no
PFP	yes
T Plant	no
222-S Laboratory	yes
233-S	no
Laundry	yes
GROUT facilities	no
244-T TRUSAF	no
Central Waste Complex	no
Low Level Burial Grounds	no
E/W Tank Farms	
241-A	yes
241-AX	no
241-B	no
241-BX	no
241-BY	no
241-C	yes
241-S	no
241-SX	yes
241-U	no
241-TX	no
241-TY	no
241-U	no
241-AN	no
241-AP	yes
241-AW	yes
241-SY	yes
244-A	no
244-TX	no
244-U	no
244-S	no
244-BX	no
241-AY	yes
241-AZ	yes

Vaults	*FEMP Required*
204-AR	*no*
244-AR	*no*
244-CR	*no*
Evaporators	
242-A	*yes*
242-S	*no*
242-T	*no*

This page intentionally left blank.

9451.9341.46

CONTENTS

PART 1 B PLANT FACILITY EFFLUENT MONITORING PLAN DETERMINATION

PART 2 PLUTONIUM/URANIUM EXTRACTION PLANT IN STANDBY STATUS FACILITY EFFLUENT MONITORING PLAN DETERMINATION

PART 3 URANIUM TRIOXIDE PLANT STANDBY STATUS FACILITY EFFLUENT MONITORING PLAN DETERMINATION

PART 4 SURPLUS U PLANT FACILITY EFFLUENT MONITORING PLAN DETERMINATION

PART 5 PLUTONIUM FINISHING PLANT FACILITY EFFLUENT MONITORING PLAN DETERMINATION

PART 6 222-S LABORATORY AND ANCILLARY BUILDINGS FACILITY EFFLUENT MONITORING PLAN DETERMINATION

PART 7 SURPLUS S PLANT (REDOX) COMPLEX FACILITY EFFLUENT MONITORING PLAN DETERMINATION

PART 8 SURPLUS 233-S COMPLEX FACILITY EFFLUENT MONITORING PLAN DETERMINATION

PART 9 PROTECTIVE EQUIPMENT DECONTAMINATION FACILITY FACILITY EFFLUENT MONITORING PLAN DETERMINATION

PART 10 GROUT TREATMENT FACILITY FACILITY EFFLUENT MONITORING PLAN DETERMINATION

This page intentionally left blank.

9413175.1550

9413136.0951

PART 1

B PLANT

FACILITY EFFLUENT MONITORING PLAN DETERMINATION

This page is intentionally left blank.

9413136.0552

CONTENTS

1.0 INTRODUCTION 1-1

2.0 FACILITY DESCRIPTION/STATUS OF OPERATION 2-1
2.1 PHYSICAL DESCRIPTION 2-1
2.2 THE 221-B BUILDING 2-1
2.3 THE 271-B BUILDING 2-6
2.4 THE 225-B BUILDING 2-7

3.0 BRIEF PROCESS DESCRIPTION 3-1

4.0 SOURCE TERMS 4-1
4.1 LIQUID EFFLUENTS 4-1
4.2 SUMMARY OF GASEOUS EFFLUENTS 4-1

5.0 SUMMARY 5-1

6.0 REFERENCES 6-1

ATTACHMENTS

ATTACHMENT 1 DETERMINATION OF FACILITY EFFLUENT MONITORING PLAN REQUIREMENT A1-1

ATTACHMENT 2 PROJECTED EMISSIONS BASED ON THE MEAN VALUE OF ATTACHMENT 1 . . . . . A2-1

ATTACHMENT 3 POTENTIAL EMISSIONS - ASSUMING NO FILTRATION A3-1

LIST OF FIGURES

2-1 Location of B Plant Within the 200 East Area of the Hanford Site . . 2-2

2-2 B Plant and Related Facilities 2-3

2-3 B Plant Schematic (221-B and 271-B Cut-away) 2-6

LIST OF TABLES

2-1 B Plant Structures and Their Functions 2-4

4-1 Alpha and Beta Emissions for the Five B Plant/Waste Encapsulation Storage Facility Stacks (1983 through 1984) 4-3

4-2 Projected Emissions Based on the Mean Value of Attachment 1 4-4

4-3 Potential Emissions - Assuming No Filtration 4-5

LIST OF TERMS

DST	double-shell tank
DCG	Derived Concentration Guidelines
EPA	U.S. Environmental Protection Agency
EP	Environmental Protection
FEMP	Facility Effluent Monitoring Plan
HVAC	heating, ventilation, and air conditioning
MSL	mean sea level
NCAW	neutralized current acid waste
PUREX	Plutonium Uranium Extraction
WESF	Waste Encapsulation and Storage Facility
Westinghouse Hanford	Westinghouse Hanford Company

9413161.0555

This page intentionally left blank.

9513.0596

B PLANT FACILITY EFFLUENT MONITORING PLAN DETERMINATION

1.0 INTRODUCTION

This report presents material required for the facility effluent monitoring plan (FEMP) determination for B Plant. This report was prepared in accordance with *A Guide for Preparing Hanford Site Facility Effluent Monitoring Plans*, WHC-EP-0438 (WHC 1991a). This report includes a brief facility/process description, characterization of potential source terms, and a description of effluent paths.

9413216.1659

This page intentionally left blank.

9413160.0159

2.0 FACILITY DESCRIPTION/STATUS OF OPERATION

The B Plant facility is located in the 200 East Area of the Hanford Site, which is located in the south-central region of Washington State (Figure 2-1).

B Plant was originally designed to chemically process spent nuclear fuels. Radiological containment and confinement features were incorporated into the various facilities and support systems to prevent exposure of plant personnel and the general public to excessive radiation. After this initial mission was completed, the plant was modified to provide for the separation of strontium and cesium, individually, from the fission-product waste stream following plutonium and uranium recovery from irradiated reactor fuels in the Plutonium Uranium Extraction (PUREX) Plant. The recovered, purified, and concentrated strontium and cesium solutions were then transferred to the Waste Encapsulation and Storage Facility (WESF) for conversion to solid compounds, encapsulation, and interim storage. After strontium and cesium removal, the remaining waste was transferred from B Plant to the Tank Farms.

B Plant is an operating facility that is required to ensure safe storage and management of the WESF cesium and strontium capsules, as well as a substantial radiological inventory remaining in the plant from previous campaigns. There are currently no production activities at B Plant, but several operating systems are required to accomplish the current B Plant mission. B Plant receives and stores various chemicals from commercial suppliers for treatment of low-level waste generated at WESF and B Plant, generation of demineralized water, and conditioning of water used in heating, ventilation, and air conditioning (HVAC) units. B Plant is the reference facility for pretreatment of selected double-shell tank (DST) wastes into low-level and high-level waste streams. This pretreatment is in support of the final DST waste stabilization.

2.1 PHYSICAL DESCRIPTION

B Plant's main and supporting structures are shown in Figure 2-2, and their functions are listed in Table 2-1.

B Plant contains three main buildings--the 221-B Processing Building, the 271-B Service and Office Building, and the 225-B Building WESF--and various support buildings. The 221-B Building and its attached service building, 271-B, were constructed in 1943. Construction of the WESF was completed in 1974.

2.2 THE 221-B BUILDING

The 221-B Building is a reinforced-concrete structure. The processing portion of the 221-B Building consists of a canyon and craneway, 40 process cells, a hot pipe trench, and a ventilation tunnel. The service and operating portion of the building consists of an operating gallery, a pipe gallery, and an electrical gallery (Figure 2-3). The canyon deck elevation is 711 ft 6 in.

Figure 2-1. Location of B Plant Within the 200 East Area of the Hanford Site.

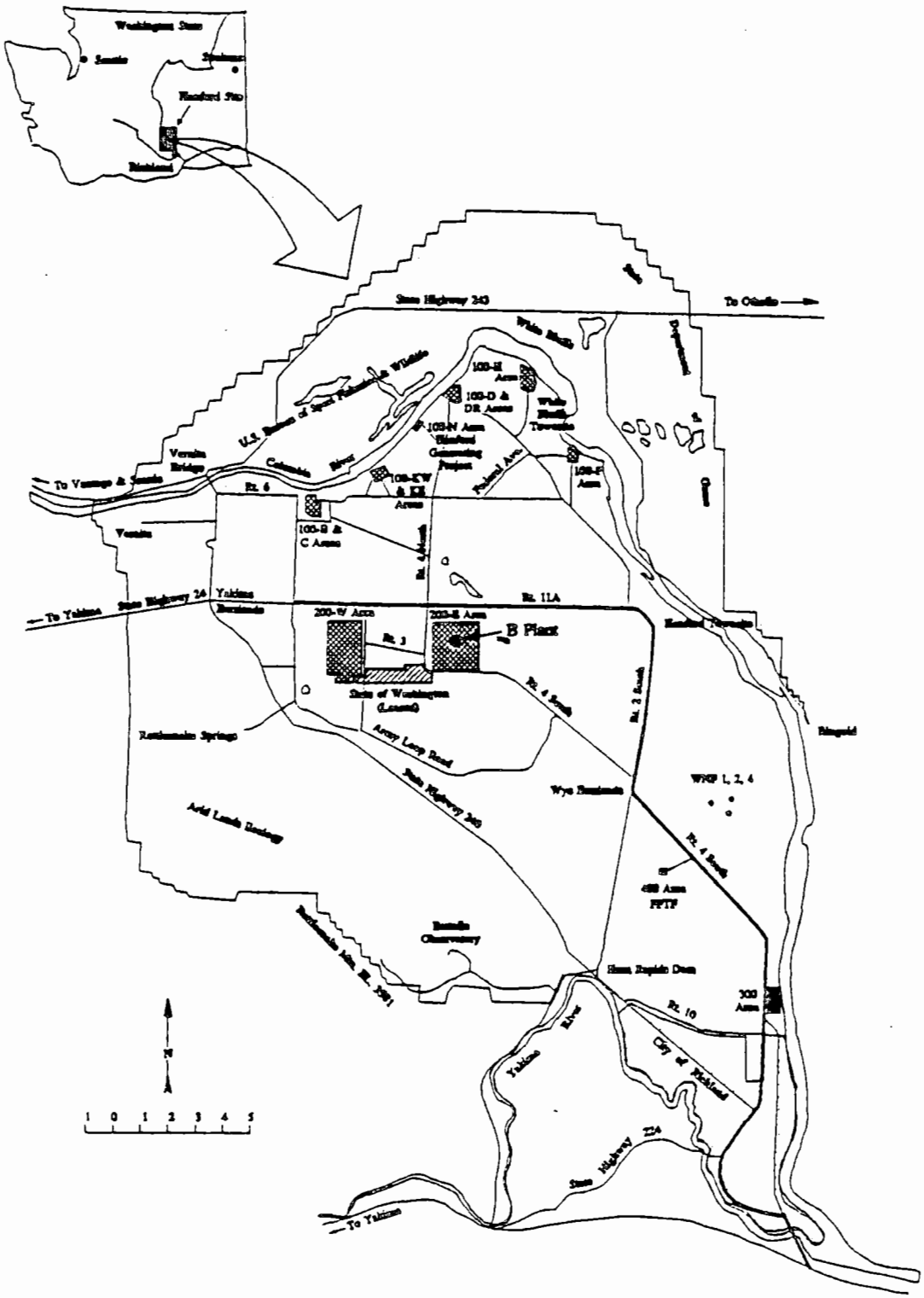

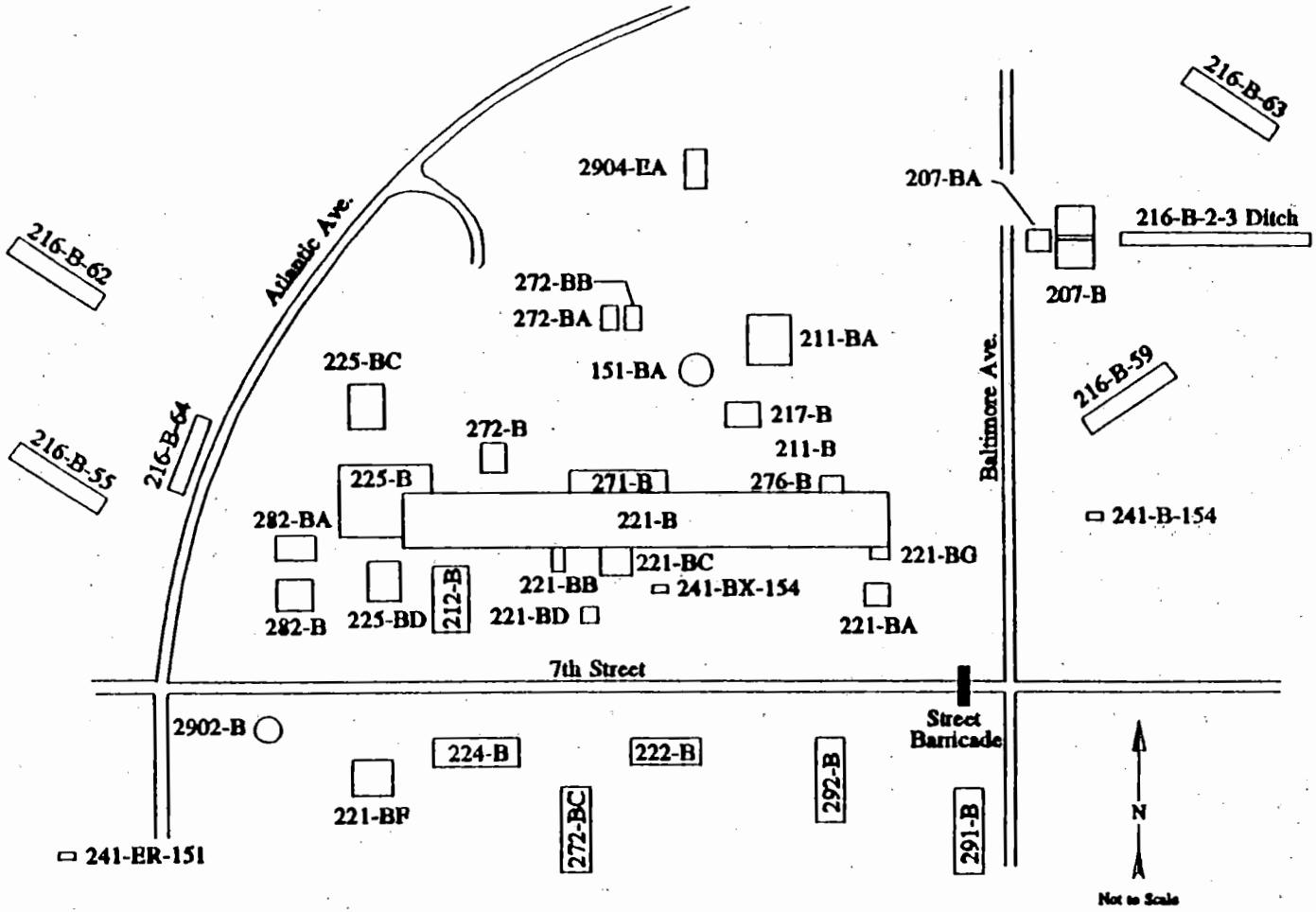

Figure 2-2. B Plant and Related Facilities.

Table 2-1. B Plant Structures and Their Functions. (2 sheets)

Facility	Function
151-BA Pump Pit	Pump for the BCE neutralization facility
207-B Retention Basin	Receives CBC discharged from B Plant
207-BA Sampling Building	Contains flow totalizer and flow proportional sampler for CBC stream
211-B Chemical Tank Farm	Bulk storage area for liquid chemicals used for processing
211-BA	BCE Neutralization Facility
212-B Building	Cask station
216-B-2-3 Ditch	CBC discharge route to the 216-B-3 Pond
216-B-55 Steam Condensate Crib	Covered trench for the disposal of process condensate (BCP) from E-23-3 low-level waste concentrator and/or 114 header
216-B-59 Retention Basin	Emergency receiver for 15-in. cooling water line discharge
216-B-62 Process Condensate Crib	Covered trench for the disposal of process condensate (BCP) from E-23-3 low-level waste concentrator
216-B-63 Ditch	Open ditch for the disposal of BCE; emergency receiver for CBC from 207-B
216-B-64 Retention Basin	Diversion basin for BCS
217-B Demineralizer	Demineralized process water supply
221-B Building	Canyon facility for processing waste to isolate selected fission products
221-BA Monitor Building	Primary beta and gamma radiation monitor station for 15-in. cooling water stream
221-BB Condensate Building	Provides housing for process and steam condensate receiving tanks and effluent monitoring instrumentation; also primary environmental monitor for BCS stream
221-BC SWP Change House	Provides SWP clothes-change area for personnel
221-BD Laundry Shed	Provides interim storage area for all used SWP laundry
221-BF Effluent Control Building	Provides batch retainment/sampling for BCP liquid waste stream
221-BG Monitor Building	Primary beta and gamma radiation monitor station for 24-in. CBC

Table 2-1. B Plant Structures and Their Functions. (2 sheets)

Facility	Function
222-B Office Building	Retired facility used for administrative offices
224-B Retired Facility	Storage and first floor offices
225-B WESF	Processing, encapsulation, and interim storage of strontium and cesium capsules
225-BC Compressor Building	Compressor building for WESF
225-BD Sample Building	Sampling for WESF cooling water
241-B-154 Diversion Boxes	Retired (boxes sealed and lines blanked)
241-BX-154 Diversion Boxes	Retired (boxes sealed and lines blanked)
241-ER-151 Diversion Boxes	Route waste and other streams to and from 221-B
271-B Support Building	Annex to 221-B containing maintenance shops, administration offices, and AMU facilities for waste processing
272-B Electrical Shop	Provides area for electrical maintenance
272-BA Material Storage Shop	Provides area for procured material storage
272-BB Insulation Shop	Provides area for insulation work
272-BC Building	Pipe and electrical storage
276-B Organic Makeup and Storage	Not in use
282-B Pump Houses	Deep well pump for emergency raw water supply
282-BA Pump Houses	Deep well pump for emergency raw water supply
291-B Fans, Stack, and Filters	Exhaust and air filtration for 221-B canyon
292-B Instrument Building	Provides the stack monitoring station for B Plant main stack
2902-B Water Tank	Provides emergency sanitary water supply
2904-EA Monitoring Building	Primary beta radiation and pH monitor station for BCE stream

SWP = Special worker protection.
BCE = B Plant chemical sewer
CBC = cooling water
BCP = process condensate
BCS = steam condensate

Figure 2-3. B Plant Schematic (221-B and 271-B Cut-away).

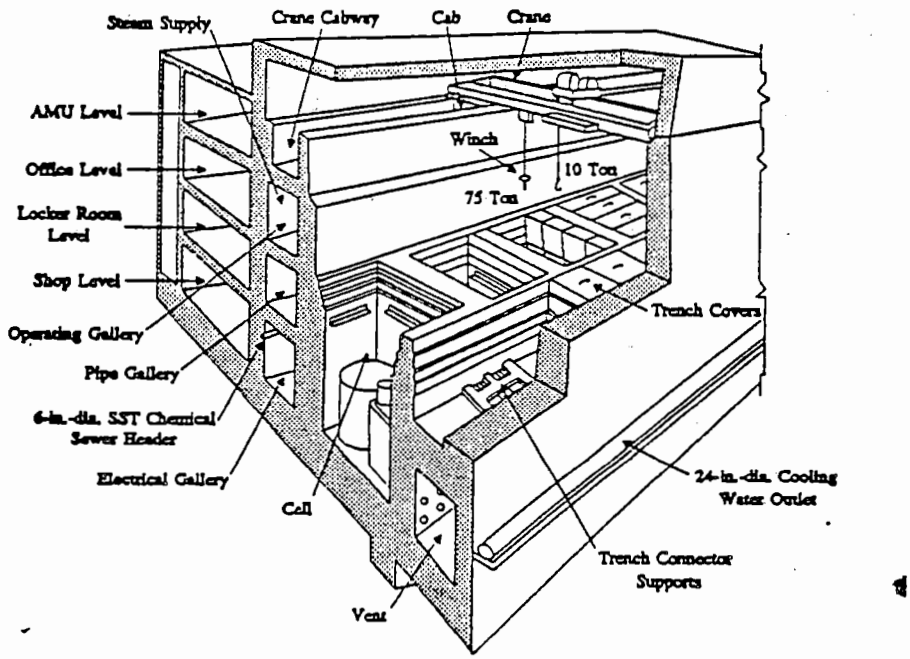

above mean sea level (MSL). It is 303 ft above the underlying water table at 408 ft MSL, and 253 ft above the elevation of the Columbia River at 458 ft MSL.

The 221-B canyon is 810.5 ft long, 77 ft 2 in. high (with partial embedments of 22.5 ft and 16 ft on the south and north sides, respectively) and has a cross-sectional width of 66 ft 2 in., which is constant to a height of 59.75 ft and then increases to a maximum of 68 ft 2 in. at the roof top. The roof slab is of varying thicknesses from 3 ft at midspan to 4 ft at the edges where it is supported by the exterior walls. The building is supported on a 6-ft-thick concrete slab.

2.3 THE 271-B BUILDING

The 271-B Building, consisting of a basement and three floors, is a reinforced concrete and cement block structure 160 ft long, 45 ft wide, and 60 ft high. This building is attached to the north and center of the 221-B Building (Figure 2-2). All levels are serviced by a freight elevator.

The basement contains the building maintenance pipe and instrument shops, process air compressor room, filters for the building ventilation air supply, and electrical motor control centers for the building.

The first floor provides space for offices, a locker room, and restrooms. Also located on the east end of the first floor is the AMU and a loading dock for incoming chemicals and supplies.

The second floor contains administrative offices, a lunch room, and the dispatcher's office containing a Facility Process Monitoring Control System and Operator Interface Unit.

The third floor contains the aqueous make-up area, including the bulk of the chemical make-up tanks, space for dry chemical storage, and a portable breathing air compressor. Approximately at the center of the 271-B Building adjacent to the canyon is a stairway to the roof of the 271-B and 221-B Buildings and access to the 221-B canyon.

There are three personnel doors and one large equipment door to the outside on the ground level and two doors on each of the four floors to the corresponding floor levels of the 221-B Building. Basement doors include one personnel door at the pipe maintenance shop and one large equipment door to and from the air compressor room.

2.4 THE 225-B BUILDING

The 225-B Building (WESF) is a two-story structure 157 ft long by 97 ft wide by 40 ft high at the outside dimensions. The building has a combined floor area of approximately 20,000 ft^2, which includes 14,000 ft^2 on the first floor and 6,000 ft^2 on the second floor.

The floor plan is partitioned into several areas according to the functional requirements of each area. These areas include: (1) the process hot cell area, (2) the hot cell service areas, (3) the operating areas, (4) the building service areas, and (5) the storage pool area. The partitioned floor plan regulates the flow of personnel and material traffic throughout the building and limits access in those areas where potential contamination or radiation exposure is high.

This page intentionally left blank.

9413126.1566

3.0 BRIEF PROCESS DESCRIPTION

B Plant is an operating facility that is required to ensure safe storage and management of the WESF cesium and strontium capsules, as well as a substantial radiological inventory remaining in the plant from previous campaigns. There are currently no production activities at B Plant, but there are several operating systems required to accomplish the current B Plant mission. B Plant receives and stores various chemicals from commercial suppliers for treatment of low-level waste generated at WESF and B Plant, generates demineralized water, and conditions water used in HVAC units. B Plant is the reference facility for pretreatment of selected DST wastes into low-level and high-level waste streams. This pretreatment is in support of the final DST waste stabilization.

The cesium and strontium feed materials to WESF were purified and concentrated in B Plant before actual processing in WESF. The cesium process system converted aqueous cesium carbonate feed solution to cesium chloride. The strontium process system converted strontium nitrate solution to strontium fluoride. Waste streams were returned to B Plant for recycling. The products were doubly encapsulated and stored underwater in storage pools. Some of these products have been shipped offsite.

Processing of cesium and strontium was completed in 1984. The WESF is currently returning capsules from offsite host facilities. Processing is limited to decontamination of equipment used in return of capsules and surveillance of stored capsules.

This page intentionally left blank.

4.0 SOURCE TERMS

4.1 LIQUID EFFLUENTS

The FEMP determination is not necessary for B Plant's liquid streams. Previous analysis has determined that the inventory at risk for liquid effluents would be much higher than the FEMP determination limit in the unlikely event of an accident condition.

In addition, the FEMP determination was also predetermined for nonradioactive, hazardous gaseous inventory at risk. Without analysis, B Plant contains hazardous constituents that exceed the limits of 40 CFR 302.4 (EPA 1989a), although engineering controls have been installed to prevent discharge of these materials.

The FEMP determination forms for both radioactive and hazardous discharges for liquid streams, as well as hazardous components for gaseous streams, are provided in Attachment 1.

As a basis for this liquid streams determination, B Plant requests that EP refer to the current liquid streams FEMPs: *Effluent Monitoring Plan for the B Plant Steam Condensate* (WHC 1990a), *Effluent Monitoring Plan for the B Plant Chemical Sewer* (WHC 1990b), *Effluent Monitoring Plan for the B Plant Cooling Water* (WHC 1990c), *Effluent Monitoring Plan for the B Plant Process Condensate* (WHC 1990d). The EP should note that though historical discharges are within environmental limits, the radionuclide inventory at risk documented in each FEMP exceeds the Derived Concentration Guidelines (DCG). In addition, the nonradioactive hazardous materials listed in any FEMP are above the reportable quantities in 40 CFR 302.4, (EPA 1989a), although engineering controls prevent these discharges. Therefore, B Plant is required to issue a FEMP for all liquid streams.

Although a similar result is indicated for gaseous effluents, historical data and projected radionuclide inventory at risk, are attached in support of EPs ongoing negotiations with the U.S. Environmental Protection Agency (EPA).

4.2 SUMMARY OF GASEOUS EFFLUENTS

In support of EPs ongoing negotiation with the EPA regarding compliance with national emission standards for emissions of radionuclides [40 CFR 61 Subpart H (EPA 1989b)], B Plant will provide the necessary radiological data and projections for gaseous effluents.

With the assistance of the 222-S Laboratory statisticians, B Plant environmental engineering has evaluated the five B Plant/WESF stacks to determine the expected emissions during neutralized current acid waste (NCAW) processing. This evaluation is based on 1983 and 1984 historical emissions data because these were the last 2 yr of processing.

The study determined that there was no correlation between alpha and beta emissions for gaseous streams and the following parameters:

- Stack flow rate
- Facility radionuclide inventory
- The month (time of year).

Because no statistical correlations exist for the above parameters, it is expected that the alpha and beta emissions will be similar to the 1983 and 1984 data.

These projections represent a conservative (high) estimate for B Plant emission during future processing and a very conservative estimation for its present extended maintenance outage. The data are summarized in Tables 4-1, 4-2, and 4-3.

Table 4-1. Alpha and Beta Emissions for the Five B Plant/ Waste Encapsulation and Storage Facility Stacks (1983 through 1984).

Stack	291-B-1		296-B-5		296-B-10		296-B-13		296-B-14	
	Alpha	Beta	Alpha	Beta	Alpha	Beta	Alpha	Beta	Alpha	Beta
Mean Value MCi/mo	3.48 E-13	1.41 E-09	(e)	9.84 E-14	(e)	1.37 E-10	(e)	2.67 E-14	1.30 E-15	7.04 E-13
Standard Deviation or s MCi/mo	2.82 E-13	4.38 E-09	(e)	9.35 E-14	(e)	5.18 E-10	(e)	1.94 E-14	2.10 E-16	2.66 E-12
t (a)	2.18	2.07	(e)	2.20	(e)	2.13	(e)	2.20	2.78	2.16
n (b)	13.00	24.00	(e)	12.00	(e)	16.00	(e)	12.00	5.00	14.00
L95%CI (d) MCi/mo	1.78 E-13	4.37 E-10 (c)	(e)	3.90 E-14	(e)	1.39 E-10 (c)	(e)	1.44 E-14	1.04 E-15	7.97 E-13 (c)
U95%CI (d) MCi/mo	5.19 E-13	3.26 E-09	(e)	1.58 E-13	(e)	4.13 E-10	(e)	3.91 E-14	1.56 E-15	2.28 E-12

(a)Value from student's t test for the 95% confidence interval.
(b)Number of data points.
(c)Indicates a negative value for the number.
(d)The lower (L) and upper (U) 95% confidence interval. x (+or-) t (s/(SQRT(n)).
(e)Indicates that the values were below the detection limits, however, the following assumptions also apply.

296-B-5 - one value slightly exceeded the detection limit of 8.0 E-15, but was considered suspect data.

296-B-10 - one value slightly exceeded the detection limit of 9.0 E-14, but was considered suspect data.

296-B-13 - all values were less than the detection limit.

Table 4-2. Projected Emissions Based on the Mean Value of Attachment 1.

Stack	Alpha (Ci/yr)	Beta (Ci/yr)
291-B-1	4.18 E-06	1.69 E-02
296-B-5	< Detectable	1.18 E-06
296-B-10	< Detectable	1.60 E-03
296-B-13	< Detectable	3.20 E-07
206-B-14	1.56 E-08	8.88 E-06

9413136.0572

Table 4-3. Potential Emissions - Assuming No Filtration. (2 Sheets)

Stack (alpha or beta)	Quantity released (historical) (Ci/yr)	Potential release with no filtration (Ci/yr)	Type/ Ci/yr	Potential dose if unfiltered (mrem/yr)	Totals (mrem/yr)
291-B-1 (Alpha)	4.18 E-06	8.36 E-03	^{239}Pu 6.44 E-03	1.53 E-02	
			^{241}Am 1.92 E-03	6.89 E-03	
219-B-1 (beta-gamma)	1.69 E-02	33.8	^{137}Cs 10.1	1.32 E-01	
			^{137}Ba 10.1	Included above	
			^{90}Sr 6.76	1.62 E-01	
			^{90}Y 6.76	Included above	3.17 E-01
296-B-5 (beta-gamma)	1.18 E-06	2.36 E-03	^{137}Cs 7.08 E-04	1.05 E-04	
			^{137}Ba 7.08 E-04	Included above	
			^{90}Sr 4.72 E-04	Included above	
			^{90}Y 4.72 E-04	Included above	1.05 E-04
296-B-10 (beta-gamma)	1.60 E-03	3.2	^{137}Cs 0.96	3.04 E-02	
			^{137}Ba 0.96	Included above	
			^{90}Sr 0.64	Included above	
			^{90}Y 0.64	Included above	3.02 E-02
293-B-13 (beta-gamma)	3.20 E-07	6.40 E-04	^{137}Cs 1.92 E-04	2.63 E-05	

Table 4-3. Potential Emissions - Assuming No Filtration. (2 Sheets)

Stack (alpha or beta)	Quantity released (historical) (Ci/yr)	Potential release with no filtration (Ci/yr)	Type/ Ci/yr	Potential dose if unfiltered (mrem/yr)	Totals (mrem/yr)
			^{137}Ba 1.92 E-04	Included above	
			^{90}Sr 1.28 E-04	Included above	
			^{90}Y 1.28 E-04	Included above	2.63 E-05
296-B-14 (alpha)	1.56 E-08	3.12 E-05	^{239}Pu 2.40 E-05	2.08 E-04	
			^{241}Am 7.17 E-06	9.39 E-05	
(beta-gamma)	8.88 E-06	1.78 E-02	^{137}Cs 5.32 E-03	7.08 E-04	
			^{137}Ba 5.32 E-03	Included above	
			^{90}Sr 3.57 E-03	Included above	
			^{90}Y 3.57 E-03	Included above	1.08 E-03
			Grand Total		3.56 E-01

5.0 SUMMARY

Table 4-1 shows the 1983 and 1984 mean monthly discharges, which are well within discharge limits and statistical confidence levels for each figure. It should be noted that the alpha emissions for three of the stacks were considered less than detectable, because both positive data points were within roundoff error of the lower deductibility limit.

Table 4-2 shows the expected emissions based on the historical mean values listed in Table 4-1. The emissions are expected to be well within environmental discharge limits. As stated above, in the evaluation performed, no correlation was found to exist between the above-noted parameters.

Table 4-3 shows the potential emissions if the existing engineering controls were not in place to mitigate such a release. These were calculated using the following assumptions:

- The HEPA filter banks have a minimum efficiency of 99.95% as required, therefore a scaling factor of 2,000 was used in calculating the result of failed HEPA filters. A factor of 3,000 is used in the WHC-EP-0498, *Unit Dose Calculation Methods and Summary of Facility Effluent Monitoring Plan Determinations*, (WHC 1991b) as suggested by EP. The differences between the two factors are insignificant and both show that the main stack exceeds the EPA threshold limit of 0.1 mrem/yr at the point of discharge.

- Beta-gamma emissions consist of 30% Cs, 30% Ba, 20% Sr, 20% Y as proposed in B Plant's draft *Low Level Waste Certification Plan* and as confirmed by sampling.

- Alpha emissions consists of 77% ^{239}Pu and 23% Am as determined by 1989 sampling.

The B Plant main stack offsite dose calculation shows that the stack exceeds the EPA limit of 0.1 mrem. The B Plant liquid effluent streams require continual sampling and monitoring because of the discharge of radionuclide constituents. Therefore, a FEMP will be required to address these effluent discharges.

This page intentionally left blank.

9413136.0576

6.0 REFERENCES

EPA, 1989a, "Designation, Reportable Quantities, and Notification," Title 40, Code of Federal Regulations, Part 302, U.S. Environmental Protection Agency, Washington, D.C.

EPA, 1989b, "National Emission Standards for Hazardous Air Pollutants," Title 40, Code of Federal Regulations, Part 61, U.S. Environmental Protection Agency, Washington, D.C.

WHC, 1990a, *Effluent Monitoring Plan for the B Plant Steam Condensate*, WHC-SD-WM-EMP-027, Westinghouse Hanford Company, Richland, Washington.

WHC, 1990b, *Effluent Monitoring Plan for the B Plant Chemical Sewer*, WHC-SD-WM-EMP-028, Westinghouse Hanford Company, Richland, Washington.

WHC, 1990c, *Effluent Monitoring Plan for the B Plant Cooling Water*, WHC-SD-WM-EMP-029, Westinghouse Hanford Company, Richland, Washington.

WHC, 1990d, *Effluent Monitoring Plan for the B Plant Process Condensate*, WHC-SD-WM-EMP-030, Westinghouse Hanford Company, Richland, Washington.

WHC, 1991a, *A Guide for Preparing Hanford Site Facility Effluent Monitoring Plans*, WHC-EP-0438, Westinghouse Hanford Company, Richland, Washington.

WHC, 1991b, *Unit Dose Calculation Methods and Summary of Facility Effluent Monitoring Plan Determinations*, WHC-EP-0498, Westinghouse Hanford Company, Richland, Washington.

This page intentionally left blank.

9413137.1570

9413136.1579

ATTACHMENT 1

DETERMINATION OF FACILITY EFFLUENT MONITORING PLAN REQUIREMENT

This page intentionally left blank.

9413136.0540

ATTACHMENT 1

DETERMINATION OF FACILITY EFFLUENT MONITORING PLAN REQUIREMENT

FACILITY B Plant DISCHARGE POINT Gaseous Effluents as listed on letter, attached

FACILITY INVENTORY AT RISK OF RADIOACTIVE MATERIALS

Radionuclide dose	Physical/ Chemical form	Quantity (Ci)	Quantity released (Ci)	Projected (mrem)
See:				
1. WHC-SD-WM-EMP-027 dated October 7, 1990				
2. WHC-SD-WM-EMP-028 dated October 7, 1990				
3. WHC-SD-WM-EMP-029 dated February 22, 1990				
4. WHC-SD-WM-EMP-030 dated January 25, 1990				
Total				

FACILITY INVENTORY AT RISK OF NONRADIOACTIVE HAZARDOUS MATERIALS

Regulated material	Quantity (lb)	Quantity released	Reportable quantity (lb)	% of reportable quantity/yr
1.				
2.				

Identification of Reference Material

If the total projected dose from radionuclides exceeds 0.1 mrem EDE from any one discharge point or if any one regulated material discharged from a facility exceeds 100% of a reportable quantity or a permitted quantity, a FEMP is required for that facility. Check the appropriate space below.

FEMP is required X FEMP is not required _____

EVALUATOR SEE ATTACHED LETTER DATE _____

MANAGER, ENVIRONMENTAL _____ DATE _____

FACILITY MANAGER _____ DATE _____

ATTACHMENT 1

DETERMINATION OF FACILITY EFFLUENT MONITORING PLAN REQUIREMENT

FACILITY B Plant DISCHARGE POINT Liquid Effluents as listed on letter, attached

FACILITY INVENTORY AT RISK OF RADIOACTIVE MATERIALS

Radionuclide dose	Physical/ Chemical form	Quantity (Ci)	Quantity released (Ci)	Projected (mrem)
See:				
1. WHC-SD-WM-EMP-027 dated October 7, 1990				
2. WHC-SD-WM-EMP-028 dated October 7, 1990				
3. WHC-SD-WM-EMP-029 dated February 22, 1990				
4. WHC-SD-WM-EMP-030 dated January 25, 1990				
Total				

FACILITY INVENTORY AT RISK OF NONRADIOACTIVE HAZARDOUS MATERIALS

Regulated material	Quantity (lb)	Quantity released	Reportable quantity (lb)	% of reportable quantity/yr
1. See Table 1				
2. See Table 1				
3. See Table 1				
4. See Table 1				

Identification of Reference Material

If the total projected dose from radionuclides exceeds 0.1 mrem EDE from any one discharge point or if any one regulated material discharged from a facility exceeds 100% of a reportable quantity or a permitted quantity, a FEMP is required for that facility. Check the appropriate space below.

FEMP is required X FEMP is not required _____

EVALUATOR SEE ATTACHED LETTER DATE _____

MANAGER, ENVIRONMENTAL _____ DATE _____

FACILITY MANAGER _____ DATE _____

Westinghouse Hanford Company

Internal Memo

From: B Plant Engineering
Phone: 3-2445 S6-70
Date: December 13, 1990
Subject: NEED FOR B PLANT FACILITY EFFLUENT MONITORING PLAN

85150-90-MMP-022

To: Distribution

cc: W. W. Bowen S6-65
M. L. Grygiel S6-65
L. Jenson T6-18
K. A. Peterson S6-70
D. R. Pratt T1-30
M. W. Stevenson S6-70
R. D. Weissenfels S6-70
MMP:MWS File/LB

References:
(1) WHC-SD-WM-EMP-027, "Effluent Monitoring Plan for the B Plant Steam Condensate," dated October 7, 1990.

(2) WHC-SD-WM-EMP-028, "Effluent Monitoring Plan for the B Plant Chemical Sewer," dated October 7, 1990.

(3) WHC-SD-WM-EMP-029, "Effluent Monitoring Plan for the B Plant Cooling Water," dated February 22, 1990.

(4) WHC-SD-WM-EMP-030, "Effluent Monitoring Plan for the B Plant Process Condensate (BCP)," dated January 25, 1990.

This letter provides WHC Environmental Protection (EP) the Facility Effluent Monitoring Plan (FEMP) determination for B Plant. B Plant Environmental Engineering has determined that a FEMP is required for B Plant.

The FEMP determination is not necessary for B Plant's liquid streams. Previous analysis has determined that the "inventory at risk" for liquid effluents would be much higher than the FEMP determination limit in the unlikely event of an accident condition.

In addition, the FEMP determination was also pre-determined for non-radioactive, hazardous gaseous "inventory at risk." Without analysis, B Plant contains hazardous constituents that exceed the limits of 40 CFR 302.4, though engineering controls have been installed to prevent discharge of these materials.

The FEMP determination forms for both radioactive and hazardous discharges for liquid streams as well as hazardous components for gaseous streams are attached and marked appropriately.

However, in support of EP's ongoing negotiation with the Environmental Protection Agency (EPA) regarding compliance with National Emission Standards for Emissions of Radionuclides (40 CFR 61 Subpart H), B Plant will provide the necessary radiological data and projections for gaseous effluents. The necessary data is attached.

Introduction

As a basis for this determination for liquid streams, B Plant requests that EP refer to the current liquid FEMPs (refs 1-4). EP should note that though historical discharges are within environmental limits, the radionuclide "inventory at risk" documented in each of these FEMP exceeds the Derived Concentration Guidelines (DCGs). In addition, the non-radioactive hazardous materials listed in any one of these FEMP's are above the reportable quantities in 40 CFR 302.4 though engineering controls prevent these discharges. Therefore, B Plant is required to issue a FEMP for all liquid streams liquid streams.

Though a similar result is indicated for gaseous effluents, historical data and projected radionuclide "inventory at risk" are attached in support of EP's on going negotiations with the EPA.

Summary of Gaseous Effluents

With the assistance of the 222-S Labs Statisticians, B Plant Environmental Engineering has completed an evaluation of the five B Plant/WESF stacks to determine the expected emissions during NCAW processing. This evaluation used 1983 and 1984 historical emissions data as a basis, since these were the last two years of processing.

The study determined that there was no correlation between alpha and beta emissions for gaseous streams and the following parameters:

1. Stack Flow Rate
2. Facility Radionuclide Inventory
3. The month (time of year)

Since no statistical correlations exist for the above parameters, it is expected that the alpha and beta emissions will be similar to the 1983 and 1984 data.

These projections represent a conservative (high) estimation for B Plant emission during future processing and a very conservative estimation for its present extended maintenance outage. A summary of the data is presented in the attached table (Attachment 1).

Distribution
Page 3
December 13, 1990

85152-90-MMP-022

Discussion of Data

The preliminary data is presented in the three tables attached and will follow under a separate cover in the near future.

Attachment 1 is the 1983 and 1984 mean monthly discharges which are well within discharge limits and statistical confidence levels for each figure. It should be noted that the alpha emissions for three of the stacks were considered less than detectable, since both (two) positive data points were within roundoff error of the lower deductibility limit.

Attachment 2 is the expected emissions based on the historical mean values in attachment 1. The emissions are expected to be well within environmental discharge limits. As stated above, in the evaluation performed, no correlation was found to exist between the above noted parameters.

Attachment 3 is the potential emissions if the existing engineering controls were not in place to mitigate such release. These were calculated using the following assumptions:

1. HEPA filter banks have a minimum efficiency of 99.95% as required, therefore a scaling factor of 2000 was used in calculating the result of failed HEPA filters as suggested by EP.
2. Beta-gamma emissions consist of 30% Cs, 30% Ba, 20% Sr, 20% Y as proposed in B Plant's draft Low Level Waste Certification Plan and as confirmed by sampling.
3. Alpha emissions consist of 77% Pu-239 and 23% Am as determined by 1989 sampling.

If you have any question please contact me on 3-2445.

M. M. Pereira, Engineer
B Plant Environmental Eng.

M. L. Grygiel
B Plant Manager

L. P. Diediker
Environmental
Protection Manager

kb

Attachments 4

Alpha and Beta Emissions for the Five B Plant/ Waste Encapsulation and Storage Facility Stacks (1983 through 1984).

Stack	291-B-1		296-B-5		296-B-10		296-B-13		296-B-14	
	Alpha	Beta	Alpha	Beta	Alpha	Beta	Alpha	Beta	Alpha	Beta
Mean Value MCi/mo	3.48 E-13	1.41 E-09	(e)	9.84 E-14	(e)	1.37 E-10	(e)	2.67 E-14	1.30 E-15	7.40 E-13
Standard Deviation or s MCi/mo	2.82 E-13	4.38 E-09	(e)	9.35 E-14	(e)	5.18 E-10	(e)	1.94 E-14	2.10 E-16	2.66 E-12
t (a)	2.18	2.07	(e)	2.20	(e)	2.13	(e)	2.20	2.78	2.16
n (b)	13.00	24.00	(e)	12.00	(e)	16.00	(e)	12.00	5.00	14.00
L95%CI (d) MCi/mo	1.78 E-13	4.37 E-10 (c)	(e)	3.90 E-14	(e)	1.39 E-10 (c)	(e)	1.44 E-14	1.04 E-15	7.97 E-13 (c)
U95%CI (d) MCi/mo	5.19 E-13	3.26 E-09	(e)	1.58 E-13	(e)	4.13 E-10	(e)	3.91 E-14	1.56 E-15	2.28 E-12

(a)Value from student's t test for the 95% confidence interval.
(b)Number of data points.
(c)Indicates a negative value for the number.
(d)The lower (L) and upper (U) 95% confidence interval. x (+or-) t (s/(SQRT(n)).
(e)Indicates that the values were below the detection limits, however, the following assumptions also apply.

296-B-5 - one value slightly exceeded the detection limit of 8.0 E-15, but was considered suspect data.

296-B-10 - one value slightly exceeded the detection limit of 9.0 E-14, but was considered suspect data.

296-B-13 - all values were less than the detection limit.

ATTACHMENT 2

PROJECTED EMISSIONS BASED ON THE MEAN VALUE OF ATTACHMENT 1

This page intentionally left blank.

9413162.1590

Projected Emissions Based on the Mean Value of Attachment 1.

Stack	Alpha (Ci/yr)	Beta (Ci/yr)
291-B-1	4.18 E-06	1.69 E-02
296-B-5	< Detectable	1.18 E-06
296-B-10	< Detectable	1.60 E-03
296-B-13	< Detectable	3.20 E-07
296-B-14	1.56 E-08	8.88 E-06

9413160.0850

This page intentionally left blank.

ATTACHMENT 3

POTENTIAL EMISSIONS - ASSUMING NO FILTRATION

This page intentionally left blank.

Potential Emissions - Assuming
No Filtration. (2 Sheets)

Stack (alpha or beta)	Quantity released (historical) (Ci/yr)	Potential release with no filtration (Ci/yr)	Type/ Ci/yr	Potential dose if unfiltered (mrem/yr)	Totals (mrem/yr)
291-B-1 (Alpha)	4.18 E-06	8.36 E-03	^{239}Pu 6.44 E-03	1.53 E-02	
			^{241}Am 1.92 E-03	6.89 E-03	
219-B-1 (beta-gamma)	1.69 E-02	33.8	^{137}Cs 10.1	1.32 E-01	
			^{137}Ba 10.1	Included above	
			^{90}Sr 6.76	1.62 E-01	
			^{90}Y 6.76	Included above	3.17 E-01
296-B-5 (beta-gamma)	1.18 E-06	2.36 E-03	^{137}Cs 7.08 E-04	1.05 E-04	
			^{137}Ba 7.08 E-04	Included above	
			^{90}Sr 4.72 E-04	Included above	
			^{90}Y 4.72 E-04	Included above	1.05 E-04
296-B-10 (beta-gamma)	1.60 E-03	3.2	^{137}Cs 0.96	3.04 E-02	
			^{137}Ba 0.96	Included above	
			^{90}Sr 0.64	Included above	
			^{90}Y 0.64	Included above	3.02 E-02

Potential Emissions - Assuming
No Filtration. (2 Sheets)

Stack (alpha or beta)	Quantity released (historical) (Ci/yr)	Potential release with no filtration (Ci/yr)	Type/ Ci/yr	Potential dose if unfiltered (mrem/yr)	Totals (mrem/yr)
293-B-13 (beta-gamma)	3.20 E-07	6.40 E-04	^{137}Cs 1.92 E-04	2.63 E-05	
			^{137}Ba 1.92 E-04	Included above	
			^{90}Sr 1.28 E-04	Included above	
			^{90}Y 1.28 E-04	Included above	2.63 E-05
296-B-14 (alpha)	1.56 E-08	3.12 E-05	^{239}Pu 2.40 E-05	2.08 E-04	
			^{241}Am 7.17 E-06	9.39 E-05	
(beta-gamma)	8.88 E-06	1.78 E-02	^{137}Cs 5.32 E-03	7.08 E-04	
			^{137}Ba 5.32 E-03	Included above	
			^{90}Sr 3.57 E-03	Included above	
			^{90}Y 3.57 E-03	Included above	1.08 E-03
			Grand Total		3.56 E-01

9413136.0595

PART 2

PLUTONIUM/URANIUM EXTRACTION PLANT IN STANDBY STATUS

FACILITY EFFLUENT MONITORING PLAN DETERMINATION

This page intentionally left blank.

9413136.0596

CONTENTS

1.0 INTRODUCTION 1-1

2.0 FACILITY DESCRIPTION 2-1

3.0 STATUS OF OPERATION 3-1

4.0 APPLICABLE REGULATIONS 4-1
- 4.1 DEPARTMENT OF ENERGY ORDERS 4-1
- 4.2 ENVIRONMENTAL PROTECTION AGENCY REGULATIONS 4-1
- 4.3 WASHINGTON STATE STANDARD AND EMISSION LIMITS 4-2
- 4.4 GROUNDWATER PROTECTION 4-2
- 4.5 DANGEROUS WASTE REGULATIONS 4-2
- 4.6 REPORTABLE QUANTITIES 4-2
- 4.7 BENTON-FRANKLIN-WALLA WALLA COUNTIES AIR POLLUTION CONTROL AUTHORITY 4-3

5.0 SOURCE TERM 5-1
- 5.1 AIR EFFLUENTS 5-1
  - 5.1.1 AIR ANALYSIS 5-1
  - 5.1.2 PUREX AIR EMISSIONS 5-1
- 5.2 WASTEWATER EFFLUENTS 5-3
  - 5.2.1 WASTEWATER ANALYSIS 5-3
  - 5.2.2 PUREX LIQUID EMISSIONS 5-3

6.0 POTENTIAL UPSET-OPERATING CONDITIONS 6-1
- 6.1 RADIOLOGICAL DOSE ASSESSMENT 6-1
- 6.2 PUBLIC DOSE ASSESSMENT 6-1
  - 6.2.1 Radiological Dose Assessment 6-1
  - 6.2.2 Hazardous Substance Dose Assessment 6-5

7.0 SUMMARY 7-1

8.0 REFERENCES 8-1

LIST OF TABLES

5-1 PUREX Radionuclide Discharges in Liquid Waste Streams 5-5

5-2 PUREX Nonradioactive materials Inventory-at-Risk Inventories Above Reportable Quantities 5-5

5-3 PUREX Nonradioactive Materials Inventory-at-Risk Inventories Below Reportable Quantities 5-6

6-1 PUREX Radionuclide Emissions From Exhaust Stacks During Standby . . 6-2

6-2 Calculated Effective Dose Equivalents From PUREX Stacks to the Maximally Exposed Individual During Standby 6-4

6-3 Individual Radionuclide Contributions in PUREX Stacks Exceeding the Effective Dose Equivalent Limit From a Hypothetical, Unmitigated Release 6-4

6-4 Calculated Effective Dose Equivalents from PUREX Liquid Discharges to the Maximally Exposed Individual 6-5

LIST OF TERMS

ANSI	American National Standard Institute
CERCLA	*Comprehensive Environmental Response, Compensation, and Liability Act of 1980*
CFR	Code of Federal Regulations
DOE	U.S. Department of Energy
Ecology	Washington State Department of Ecology
EDE	effective dose equivalent
EPA	Environmental Protection Agency
FEMP	facility effluent monitoring plan
HEPA	high-efficiency particulate air
MEI	maximally exposed individual
NESHAPS	National Emission Standards for Hazardous Air Pollutants
PUREX	Plutonium/Uranium Extraction
WAC	Washington Administrative Code

This page intentionally left blank.

PLUTONIUM/URANIUM EXTRACTION PLANT IN STANDBY STATUS FACILITY EFFLUENT MONITORING PLAN DETERMINATION

1.0 INTRODUCTION

This report documents the determination of whether a Facility Effluent Monitoring Plan (FEMP) is required for the Plutonium/Uranium Reduction (PUREX) Plant. The PUREX Plant has been placed in a standby mode. No processing activities are occurring, the majority of the tanks have been emptied, and one previous air discharge (ammonia offgas exhaust) and two previous wastewater discharges (ammonia scrubber waste and process condensate) have been eliminated. The PUREX Plant has 11 active potentially contaminated air exhaust stacks and 3 wastewater discharges.

9413130.0161

This page intentionally left blank

9413136.0602

2.0 FACILITY DESCRIPTION

The PUREX plant is located in the 200 East Area of the Hanford Site, which is located in the south central region of Washington State. The PUREX plant consists of the main 202-A Building, plus ancillary buildings and facilities. The 202-A Building contains equipment used for processing the irradiated nuclear fuel and is heavily shielded with concrete. The canyon within this building contains process cells where most of the process equipment is located, as well as other facilities.

This page intentionally left blank.

9413136.0604

3.0 STATUS OF OPERATION

The PUREX Plant was operated to reprocess the inventory of stored N Reactor fuel to provide plutonium for research, reactor development, safety programs, and United States defense and to provide slightly enriched uranium for use as fuel in reactors generating electricity and plutonium. The PUREX Plant was recently placed in standby mode.

The PUREX process is a complicated series of chemical and physical operations that dissolve the spent reactor fuel; extract the plutonium, uranium, and neptunium from each other and the other reactor fission products; separate the plutonium, uranium, and neptunium for further processing at other facilities; and recover the solvents for reuse.

9413136.0505

This page intentionally left blank

9301 9 1 3 2 1 0 6

4.0 APPLICABLE REGULATIONS

Conditions and requirements for monitoring existing or potential releases of radioactive and nonradioactive pollutants to the environment are contained in U.S. Department of Energy (DOE) orders and federal, Washington State, and local regulations.

4.1 DEPARTMENT OF ENERGY ORDERS

The General Environmental Protection Program, DOE Order 5400.1, (DOE 1988) requires a written environmental monitoring plan for each site, facility, or process that uses, generates, releases, or manages significant pollutants.

Radiation Protection of the Public and the Environment, DOE Order 5400.5, requires a monitoring plan that complies with the requirements of DOE Order 5400.1. Compliance with DOE Order 5400.5 may be demonstrated based on calculations that use information obtained from monitoring and surveillance programs.

4.2 ENVIRONMENTAL PROTECTION AGENCY REGULATIONS

The National Emission Standards for Hazardous Air Pollutants (NESHAP), 40 Code of Federal Regulations (CFR) 61, Subpart H, "National Emission Standards For Emissions of Radionuclides Other Than Radon From Department of Energy Facilities," establishes a public exposure limit and sets out monitoring requirements on emissions relative to that limit. That exposure limit is a 10 mrem/yr effective dose equivalent (EDE) to the maximally exposed individual of the public. Compliance with this standard is measured by calculating the highest effective dose equivalent where a person resides or abides using an Environmental Protection Agency (EPA) approved method.

Emissions of radionuclides must be measured at all release points that have a potential to discharge radionuclides into the air in quantities that could cause an EDE in excess of 1% of the standard, (i.e., in excess of 0.1 mrem/yr). All radionuclides that could contribute greater than 10% of the potential EDE for such a release point shall be measured individually. For other release points that have a potential to release radionuclides into the air, but not in quantities that could contribute an EDE above 0.1 mrem/yr, periodic confirmatory measurements shall be made to verify low emissions. The potential of a release point to discharge radionuclides into the air is based on the estimated radionuclide releases that would result if pollution control equipment did not exist, but the facility operations were otherwise normal.

Subpart H also states that effluent streams may be monitored by continuously withdrawing representative sample of the effluent stream following the guidance presented in American National Standard Institute (ANSI), N13.1 (ANSI 1969), *Guide to Sampling Airborne Radioactive Materials in Nuclear Facilities*, followed by periodic laboratory analysis of the samples.

4.3 WASHINGTON STATE AMBIENT AIR QUALITY STANDARD AND EMISSION LIMITS

The Washington State *Ambient Air Quality Standard and Emission Limits for Radionuclides*, Washington Administrative Code (WAC)-173-480 (WAC 1989a) sets the standard for public exposure to radionuclide emission at 25 mrem/yr EDE with compliance calculated at the point of maximum annual air concentration in an unrestricted area where any member of the public may be located (i.e., the Hanford Site boundary). However, since the Hanford Site must comply with the most restrictive of federal, state, or local laws, the federal exposure limit of 10 mrem/yr must be met.

4.4 GROUNDWATER PROTECTION

Radionuclides are defined as hazardous air pollutants. Therefore, they are considered hazardous in liquid effluent, without any specific individual radionuclide being listed as a hazardous substance under water pollution control laws. The Washington State Department of Ecology (Ecology) has proposed new groundwater protection standards, which require groundwater to meet drinking water standards. Current drinking water standards limit public exposure from radionuclides to an EDE of 4 mrem/yr. Because DOE policy is that DOE facilities comply with the spirit of all state law, any facility with radionuclide emissions in its liquid waste stream should be monitored to ensure compliance with drinking water standards.

Existing Ecology regulations restrict discharges of dangerous wastes to the groundwater (WAC-173-303) (WAC 1989b). Liquid effluent discharges must also comply with applicable permit limits. Monitoring is required to ensure compliance with these regulations and limits.

These monitoring programs must be included in a FEMP.

4.5 DANGEROUS WASTE REGULATIONS

Waste streams must be analyzed to determine whether they contain a dangerous waste as designated by WAC-173-303 (WAC 1989b). Any release of a dangerous waste or hazardous substance to the environment, except permitted releases, must be reported. If the facility has the potential to release dangerous wastes or hazardous substances to the environment, its liquid waste streams must be monitored for their presence and monitoring practices must be included in a FEMP.

4.6 REPORTABLE QUANTITIES

The regulations in 40 CFR 302 (EPA 1989b) designate hazardous substances and identify reportable quantities and notification requirements for releases of these hazardous substances under the *Comprehensive Environmental Response, Compensation and Liability Act of 1980* (CERCLA), and the *Clean Water Act of 1977*. Any unpermitted release of any of these designated hazardous substances must be reported. For FEMP determination, the potential of a facility to release hazardous substances exists if the inventory of the materials that

Compensation, and Liability Act of 1980 (CERCLA) and the *Clean Water Act of 1977*. Any unpermitted release of any of these designated hazardous substances must be reported. For the purposes of the FEMP determination, the potential of a facility to release hazardous substances exists if the inventory of the materials that could be released to the environment exceeds the reportable quantities. If the potential exists, waste streams must be monitored for the presence of these hazardous substances and monitoring programs must be included in a FEMP.

4.7 BENTON-FRANKLIN-WALLA WALLA COUNTIES AIR POLLUTION CONTROL AUTHORITY

The local air pollution control authority has jurisdiction over all air emissions, except radionuclide emissions, in the Benton, Franklin, and Walla Walla county areas, including the Hanford Site. Currently no local standards are more restrictive than the previously mentioned state and federal limits.

9413136.0609

This page intentionally left blank

0091-9363-146

5.0 SOURCE TERM

5.1 AIR EFFLUENTS

5.1.1 AIR ANALYSIS

The discharge criteria established by the EPA for radioactive emissions into the atmosphere are based on not exceeding an annual EDE of 10 mrem/yr to the maximally exposed offsite individual. To assist in performing this lengthy calculation an EPA approved computer program, CAP-88, is used. The CAP-88 uses data sets of meteorological data (such as wind direction, speed, etc.) and the distance to the nearest residence or work location to determine in which of 16 compass directions the maximum exposure will occur. For the worst-case wind direction, CAP-88 models the transport, dilution, exposure, and uptake of radionuclides by the maximally exposed individual (MEI). An annual dose for that person is then calculated.

As directed by DOE, Pacific Northwest Laboratories determined this dosage per Curie of activity for the significant, specific radionuclides emitted from PUREX.

5.1.2 PUREX AIR EMISSIONS

Eleven air effluent stacks contribute nearly all of the airborne releases from the PUREX facility. They are briefly described below in the following paragraphs.

5.1.2.1 291-A-1 Stack. The 291-A-1 Stack is the main exhaust for 202-A Building. The stack is located south of 202-A Building, discharges 200 ft above grade, and is 7 ft in diameter. The stack's main contributors are the canyon ventilation air and gases from the vessel vent systems. During normal operations, filtered and treated dissolver offgases, would also be contributors. Exhaust gases pass through 1 of 2 parallel deep-bed fiberglass filters followed by 10 parallel banks of double high-efficiency particulate air (HEPA) filtration.

5.1.2.2 296-A-1 Stack. The 296-A-1 Stack removes the Product Removal Room exhaust. The stack is located on the north side of the northwest corner of 202-A Building, discharges 74 ft above grade, and is 2 ft in diameter. The stack's main contributors are filtered exhaust from the Product Removal Room, where plutonium nitrate is handled; from N-Cell gloveboxes, which contain plutonium oxide production equipment; and from Q-Cell, which contains neptunium purification facilities. Exhaust gases pass through multiple stages of HEPA filtration before discharge.

5.1.2.3 296-A-2 Stack. The 296-A-2 Stack removes the West Sample Gallery Hood exhaust. The stack is located on the south side of the southwest corner of 202-A Building, discharges 78 ft above grade, and is 20 in. in diameter. The stack exhausts the west end of the Sample Gallery Hood exhaust header, which ventilates sample hoods used to remotely sample process solutions. Exhaust gases pass through a single stage of HEPA filtration before discharge.

5.1.2.4 296-A-3 Stack. The 296-A-3 Stack removes the East Sample Gallery Hood exhaust. The stack is located on the north side of the northeast corner of 202-A Building, discharges 74 ft above grade, and is 20 in. in diameter. It exhausts the east end of the Sample Gallery Hood exhaust header, which ventilates sample hoods used to remotely sample process solutions. Exhaust gases pass through a single stage of HEPA filtration before discharge.

5.1.2.5 296-A-5A and 296-A-5B Stacks. The 296-A-5A and -5B Stacks remove West and East Analytical Laboratory exhausts. The stacks located on the north side of 202-A Building, discharge 89 ft above grade, and are 42 in. in diameter. One stack operates while the other is in standby. The main contributors are ventilation air from analytical laboratory hoods and laboratory room air. Exhaust gases pass through parallel, single-stage HEPA filtration before discharge.

5.1.2.6 296-A-6 Stack. The 296-A-6 stack removes East Sample Gallery and U-Cell exhaust. The stack is located on the north side and near the east corner of 202-A Building, discharges 74 ft above grade, and is 40 in. in diameter. Its main contributors are ventilation air from the east half of the PUREX Sample Gallery and from the Acid Fractionator Building and U-Cell, both of which contain nitric acid recovery equipment. Exhaust gases pass through a single stage of HEPA filtration before discharge.

5.1.2.7 296-A-7 Stack. The 296-A-7 Stack removes West Sample Gallery and R-Cell exhaust. The stack is located on the west side and near the south corner of 202-A Building, discharges 78 ft above grade, and is 44 in. in diameter. Its main contributors are ventilation air from the west half of the PUREX Sample Gallery, the N-Cell control room, and R-Cell, which contains final uranium cycle solvent recovery equipment. Exhaust gases pass through one of two parallel, single-stage banks of HEPA filtration before discharge.

5.1.2.8 296-A-8 Stack. The 296-A-8 Stack removes White Room exhaust. The stack is located on the northwest corner of 202-A Building, discharges 34 ft above grade and is 40 in. in diameter. It ventilates the west end of the Pipe and Operating Gallery, from which some canyon process cell equipment is controlled. The White Room became contaminated in the past and after cleaning was isolated from the remainder of the Pipe and Operating Gallery. Exhaust gases pass through one of two parallel, single-stage banks of HEPA filtration before discharge.

5.1.2.9 296-A-10 Stack. The 296-A-10 Stack removes Storage Tunnel No. 2 exhaust. The stack is located about 2,100 ft south of the east end of 202-A Building, discharges 20 ft above grade, and is 2 ft in diameter. It ventilates Storage Tunnel No. 2, where large pieces of failed equipment from the PUREX canyon are stored. Exhaust gases pass through a single stage of HEPA filtration before discharge.

5.1.2.10 296-A-14 Stack. The 296-A-14 Stack removes 293-A Building exhaust. This stack ventilates 293-A Building, which is a small concrete structure located near the PUREX main stack. The stack discharges 42 ft above grade and is 2 ft in diameter. Its main contributors are ventilation air from four

processing cells that contain equipment to recover nitrogen oxides from the gases leaving the irradiated uranium fuel dissolver. Exhaust gases pass through a single stage of HEPA filtration before discharge.

5.1.2.11 Radioactive Emissions. The source of airborne contaminants during standby operation is residual fugitive materials or gases that are picked up by the air currents in the PUREX building and subsequently entrained into the ventilation system exhausts. Annual releases were determined by first multiplying the exhaust flow rate for each stack by the outgoing air concentration of each specific radionuclide, using second-, third-, and fourth-quarter 1990 preliminary concentration and flow data as the most representative data available for standby operation, and then normalizing these partial-year data to the full year. The stack exhausts were continuously sampled and the samples were periodically analyzed in a laboratory. The concentration of specific radionuclides in the air effluents were either selectively measured or inferred from gross alpha measurements, as ^{239}Pu, and gross beta measurements, as ^{90}Sr. In most stack effluents, the concentration of some radionuclides was below detectable limits. In these cases, the limit of detection for that radionuclide was used as a conservative estimate of its concentration. In emissions was less than zero. In these cases, a conservative value of zero was used. Table 4-1 lists the radionuclide emissions representative of standby operation from each stack.

5.1.2.12 Other Hazardous Releases. During the standby mode of operation all material processing has stopped and no nonradioactive hazardous air pollutants are released. Consequently, exposure to and uptake by the MEI are zero.

5.2 WASTEWATER EFFLUENTS

5.2.1 WASTEWATER ANALYSIS

Wastewater discharge criteria for both radioactive and hazardous chemicals are derived from the most restrictive levels given in federal and state regulations. Wastewater monitoring and a FEMP are required to ensure that liquid waste streams meet state and federal regulations.

Recent Characterization of PUREX wastewater streams during normal fuel processing was used as a conservative estimate of the stream contaminants during standby operation. The monitoring required and the FEMP content are guided by a comparison of the wastewater characterization to the discharge criteria in the regulations and by a comparison of the PUREX chemical inventory to the reportable quantities in the regulations.

5.2.2 PUREX LIQUID EMISSIONS

The PUREX Plant in standby mode currently has three liquid waste streams: the CSL (chemical sewer), the SCD (steam condensate), and the CWL (Cooling Water). Two other streams required during fuel processing, the PDD (Process Condensate) and the ASD (Ammonia Scrubber Condensate), have been eliminated in the standby mode. Further analysis may determine that it is possible to eliminate one of more of the remaining liquid waste streams.

The CSL and the CWL routinely discharge to the 216-B-3 Pond complex. The SCD routinely discharges to the soil column. In-line monitoring for radionuclides or, in the case of CSL, extreme pH can lead to diversion of the streams to the 216-A-42 Retention Basin for treatment before disposal. There is no in-line detection of hazardous chemicals. As a result, process upsets may contribute to contamination of the vadose zone and groundwater.

5.2.2.1 Chemical Sewer. The CSL discharge consists of normally nonradioactive effluents (excluding sanitary waste) collected in an extensive piping system at the PUREX Plant. Typical contributors have included regeneration solution from a water demineralizer; uncontaminated floor drains; vessel heating and cooling coil effluent; building heating, ventilation, and air conditioning wash water; pipe shaft sump waste; vacuum pump seal waste; and nonprocess steam condensate.

5.2.2.2 Steam Condensate. The SCD discharge consists almost entirely of condensed steam and raw water that were used to control the temperature of certain process vessels. The raw water was taken from the Columbia River. The process vessels involved could potentially experience steam- or cooling-coil failure resulting in radionuclide contamination of the SCD. No chemicals are added to the SCD.

5.2.2.3 Cooling Water. The CWL discharge consists almost entirely of cooling water and small amounts of steam condensate that were used to control the temperature of certain process vessels. The process vessels involved are not expected to experience coil failure that could result in radionuclide contamination of the CWL, except for the possibility of pin-hole leaks during startup or shutdown.

5.2.2.4 Radiological Discharges. Conservative annual emissions have been determined by multiplying the individual radionuclide concentrations reported in the PUREX Plant *Stream Specific Reports* for each liquid waste stream during fuel processing; WHC-EP-0342 Addendum 2 (WHC 1990a), 5 (WHC 1990b), and 20 (WHC 1990c); and the estimated reduced flow of that stream during standby operation. Table 5-1 lists the estimated radionuclide discharge of each stream.

5.2.2.5 Other Hazardous Releases. None of the liquid waste streams contain wastes designated as dangerous by WAC-173-303 (WAC 1990), as determined by the PUREX Plant *Stream Specific Reports* (WHC 1990). The chemical inventory at PUREX includes hazardous substances as defined by CERCLA, RCRA, and the Washington State Administrative Code. These chemicals and their inventoried quantities are listed in Tables 5-2 and 5-3.

Table 5-1. PUREX Radionuclide Discharges in Liquid Waste Streams.

Nuclide	Activity -- Ci / Yr			
	CSL	SCD	CWL	Total
^{241}Am	1.22 E-04	1.04 E-04	5.81 E-07	2.27 E-04
^{239}Pu	3.20 E-04	8.60 E-04	4.19 E-07	1.18 E-03
^{238}Pu	9.72 E-06	6.62 E-05		7.60 E-05
^{234}U	1.16 E-04	2.14 E-05	2.26 E-05	1.60 E-04
^{238}U	9.78 E-05	3.17 E-05	3.17 E-05	1.61 E-04
^{144}Ce		4.04 E-02		4.04 E-02
^{137}Cs	2.73 E-04	1.91 E-03		2.18 E-03
^{129}I			1.79 E-05	1.79 E-05
^{90}Sr	1.21 E-04	3.98 E-04	4.62 E-05	5.66 E-04
^{3}H	2.92 E-01	2.88 E-06		2.92 E-01
Total	2.93 E-01	4.37 E-02	1.19 E-04	3.73 E-01

Table 5-2. PUREX Nonradioactive materials Inventory-at-Risk Inventories Above Reportable Quantities.

Regulated Material	Inventory	Reportable Quantity	% of RQ
	lbs	lbs	%
1 Nitric Acid	440,000	1,000	> 100
2 Potassium Hydroxide	135,250	1,000	> 100
3 Silver Nitrate	295	1	> 100
4 Sodium Hydroxide	92,427	1,000	> 100
5 Sodium Nitrate	7,700	100	> 100
6 Sulfuric Acid	72,200	1,000	> 100

Table 5-3. PUREX Nonradioactive Materials Inventory-at-Risk Inventories Below Reportable Quantities. (2 sheets)

Regulated Material	Inventory	Reportable Quantity	% of RQ
	lbs	lbs	%
1 Acetic Acid	65	5,000	1
2 Ammonium Oxalate	2	5,000	0.04
3 Ammonium Thiocyanate	3	5,000	0.06
4 Amyl Acetate	1	5,000	0.02
5 Arsenic Pentoxide	1	5,000	0.02
6 Benzene	1	1,000	0.1
7 Chloroform	12	5,000	0.2
8 Copper	1	5,000	0.02
9 Cupric Chloride	1	5,000	0.02
10 Cyclohexanone	1	5,000	0.02
11 Dichloro-Difluoro-Methane	278	5,000	6
12 Ferric Chloride	1	1,000	0.1
13 Ferric Nitrate	1	1,000	0.1
14 Ferrous Ammonium Sulfate	2	1,000	0.2
15 Formic Acid	2	5,000	0.04
16 Hydrochloric Acid	60	5,000	1
17 Hydrofluoric Acid	4	100	4
18 Mercuric Thiocyanate	1	10	10
19 Methanol	16	5,000	0.3

Table 5-3. PUREX Nonradioactive Materials Inventory-at-Risk Inventories Below Reportable Quantities. (2 sheets)

Regulated Material	Inventory	Reportable Quantity	% of RQ
	lbs	lbs	%
20 Methyl-Isobutyl-Ketone	24	5,000	0.5
21 Nitrobenzene	1	1,000	0.1
22 Phosphoric Acid	310	5,000	6
23 Poly-Chlorinated Biphenyls	1	10	10
24 Potassium Cyanide	1	10	10
25 Pyridine	1	1,000	0.1
26 Sodium Fluoride	1	1,000	0.1

This page intentionally left blank.

9413136.1618

6.0 POTENTIAL UPSET-OPERATING CONDITIONS

6.1 RADIOLOGICAL DOSE ASSESSMENT

During normal standby operations at PUREX, the only releases from the exhaust stacks are small quantities of radionuclides, as summarized in Table 6-1. The calculated EDE to the maximally exposed individual from each PUREX stack is shown in Table 6-2. No PUREX stack's contribution to the MEI's calculated EDE exceeds the EPA standard of 0.1 mrem/yr. The highest exposure from any PUREX stack effluent is from stack 291-A-1, which contributes a calculated EDE of 0.0140 mrem/yr to the MEI. The total calculated EDE from all stacks, 0.0141 mrem/yr, is also below the 0.1 mrem/yr standard.

The hypothetical, unmitigated release from the PUREX Plant is based on the effluent bypassing HEPA filters, deep-bed filters, and other pollution control equipment. Because the radionuclide concentrations in the effluent streams are not determined upstream of this equipment, the increase in radionuclide emissions that would result from their being bypassed must be based on an evaluation of their efficiencies and the radionuclide removal process. A conservative estimate of the particulate effluent caused by filter bypass has been judged to be 3,000. The iodine emission control equipment, the silver reactors of the dissolver offgas system, are neither needed nor in service during standby operation; so radioactive iodine emissions do not increase because pollution control equipment is bypassed. Iodines unmitigated release factor is 1.0. There is no effective pollution control equipment for the other volatile emissions (tritium and carbon-14), so their unmitigated release factors are also 1.0. The unmitigated EDE to the MEI would be the normal standby operation EDE increased by the unmitigated release factors given above.

The hypothetical, unmitigated EDE to the maximally exposed individual from each PUREX stack is also shown in Table 5-2. Only the unmitigated releases from stack 291-A-1 (0.427 mrem/yr) and stack 296-A-1 (0.106 mrem/yr) have the potential to contribute an annual dose greater than the 0.1 mrem/yr standard. The exposure from all other PUREX stacks would still be below the 0.1 mrem/yr limit. The total hypothetical EDE from all 11 stacks would be 0.734 mrem/yr. Individual radionuclides contributing more than 10% of the stack 291-A-1 dosage are ^{239}Pu and ^{90}Sr, while those for 296-A-1 are ^{239}Pu and ^{241}Am. Table 6-3 shows their individual calculated EDE contributions.

6.2 PUBLIC DOSE ASSESSMENT

6.2.1 Radiological Dose Assessment

While in the standby mode, as well as during fuel processing, liquid wastes are not released directly to public waterways, but rather to onsite ponds and soil columns. The actual migration of liquid wastes from these disposal sites through the soil to public waterways is difficult to determine and, as a result, so is the calculated EDE to the MEI.

Table 6-1. PUREX Radionuclide Emissions From Exhaust Stacks During Standby. (sheet 1 of 2)

Nuclide	Activity from Exhaust Stack -- Ci / Yr[1,2]					
	291-A-1	296-A-1	296-A-2	296-A-3	296-A-5A	296-A-5B
^{241}Am	7.50 E-07	2.90 E-07	3.20 E-08	NA[3]	1.55 E-07	1.70 E-07
^{239}Pu	9.01 E-06	5.77 E-07	1.60 E-08	0[2]	7.65 E-08	8.45 E-08
^{238}Pu	5.09 E-07	NA[3]	NA[3]	NA[3]	NA[3]	NA[3]
^{212}Pb	7.42 E-04	NA[3]	NA[3]	NA[3]	NA[3]	NA[3]
^{147}Pm	2.81 E-05	NA[3]	NA[3]	NA[3]	NA[3]	NA[3]
^{137}Cs	3.82 E-06	NA[3]	NA[3]	NA[3]	NA[3]	NA[3]
^{131}I	4.33 E-04[2]	NA[3]	NA[3]	NA[3]	NA[3]	NA[3]
^{129}I	1.86 E-02	NA[3]	NA[3]	NA[3]	NA[3]	NA[3]
^{125}Sb	3.94 E-04[2]	NA[3]	NA[3]	NA[3]	NA[3]	NA[3]
^{113}Sn	5.94 E-05[2]	NA[3]	NA[3]	NA[3]	NA[3]	NA[3]
^{106}Ru	5.17 E-04	NA[3]	NA[3]	NA[3]	NA[3]	NA[3]
^{103}Ru	5.63 E-05[2]	NA[3]	NA[3]	NA[3]	NA[3]	NA[3]
^{90}Sr	4.01 E-04	0[2]	0[2]	0[2]	0[2]	0[2]
^{14}C	4.55 E-02	NA[3]	NA[3]	NA[3]	NA[3]	NA[3]
^{3}H	5.07 E-01	NA[3]	NA[3]	NA[3]	NA[3]	NA[3]
Total	5.74 E-01	8.67 E-07	4.80 E-08	0[2]	2.32 E-07	2.55 E-07

Notes:
1. Based on averaged and normalized 2nd-, 3rd-, and 4th-quarter 1990 preliminary concentration and flow data.
2. Specific analyses performed on stack 291-A-1 effluent. No activity of the short-lived nuclides ^{131}I, ^{125}Sb, ^{113}Sn, or ^{103}Ru was detected in 291-A-1 exhaust and none is believed to be present.
   The activity shown is the minimum detection limit from their lab analyses. Analyses for ^{241}Am and $^{239,240}Pu$ were performed on all other stack effluents, except those from 296-A-3, 296-A-10, and 296-A-14. The ^{239}Pu analyses shown for 296-A-3, 296-A-10, and 296-A-14 and all the ^{90}Sr analyses shown, except that of 291-A-1, are inferred from gross alpha and gross beta measurements. Any total alpha or beta measurement for an effluent which is less than zero is shown conservatively as a zero value.
3. "NA" indicates no analysis was required or performed for the radionuclide listed.

Table 6-1. PUREX Radionuclide Emissions From Exhaust Stacks During Standby. (sheet 2 of 2)

Nuclide	Activity from Exhaust Stack -- Ci / Yr[1,2]					
	296-A-6	296-A-7	296-A-8	296-A-10	296-A-14	PUREX Total
241Am	1.45 E-07	1.55 E-07	1.35 E-07	NA[3]	NA[3]	1.83 E-06
^{239}Pu	7.05 E-08	4.03 E-07	6.95 E-08	8.75 E-09[2]	5.82 E-09[2]	1.03 E-05
^{238}Pu	NA[3]	NA[3]	NA[3]	NA[3]	NA[3]	5.09 E-07
^{212}Pb	NA[3]	NA[3]	NA[3]	NA[3]	NA[3]	7.42 E-04
^{147}Pm	NA[3]	NA[3]	NA[3]	NA[3]	NA[3]	2.81 E-05
^{137}Cs	NA[3]	NA[3]	NA[3]	NA[3]	NA[3]	3.82 E-06
^{131}I	NA[3]	NA[3]	NA[3]	NA[3]	NA[3]	4.33 E-04
^{129}I	NA[3]	NA[3]	NA[3]	NA[3]	NA[3]	1.86 E-02
^{125}Sb	NA[3]	NA[3]	NA[3]	NA[3]	NA[3]	3.94 E-04
^{113}Sn	NA[3]	NA[3]	NA[3]	NA[3]	NA[3]	5.94 E-05
^{106}Ru	NA[3]	NA[3]	NA[3]	NA[3]	NA[3]	5.17 E-04
^{103}RU	NA[3]	NA[3]	NA[3]	NA[3]	NA[3]	5.63 E-05
^{90}Sr	0[2]	0[2]	0[2]	0[2]	3.55 E-07	4.01 E-04
^{14}C	NA[3]	NA[3]	NA[3]	NA[3]	NA[3]	4.55 E-02
^{3}H	NA[3]	NA[3]	NA[3]	NA[3]	NA[3]	5.07 E-01
Total	2.16 E-07	5.58 E-07	2.05 E-07	8.75 E-07	3.38 E-07	5.74 E-01

Notes:
1. Based on averaged and normalized 2nd-, 3rd-, and 4th-quarter 1990 preliminary concentration and flow data.
2. Specific analyses performed on stack 291-A-1 effluent. Analyses for ^{241}Am and ^{239,240}Pu were performed on all other stack effluents, except those from 296-A-3, 296-A-10, and 296-A-14. The ^{239}Pu analyses shown for 296-A-3, 296-A-10, and 296-A-14 and all the ^{90}Sr analyses shown, except that of 291-A-1, are inferred from gross alpha and gross beta measurements. Any total alpha or beta measurement for an effluent which is less than zero is shown conservatively as a zero value.
3. "NA" indicates no analysis was required or performed for the radionuclide listed.

Table 6-2. Calculated Effective Dose Equivalents From PUREX Stacks to the Maximally Exposed Individual During Standby.

PUREX Stack	EDE from Normal Standby mrem/yr	Unmitigated Release Factor	EDE from Unmitigated Release mrem/yr
291-A-1			
Iodine-129	1.37 E-02	1.0 E+00	1.37 E-02
Other Volatile	1.29 E-04	1.0 E+00	1.29 E-04
Particulates	1.38 E-04	3.0 E+03	4.14 E-01
Total	1.40 E-02	------	4.27 E-01
296-A-1	3.52 E-05	3.0 E+03	1.06 E-01
296-A-2	2.33 E-06	3.0 E+03	6.70 E-03
296-A-3	0.00 E+00	3.0 E+03	0.00 E+00
296-A-5A	1.08 E-05	3.0 E+03	3.23 E-02
296-A-5B	1.18 E-05	3.0 E+03	3.55 E-02
296-A-6	1.00 E-05	3.0 E+03	3.01 E-02
296-A-7	2.21 E-05	3.0 E+03	6.62 E-02
296-A-8	9.48 E-06	3.0 E+03	2.85 E-02
296-A-10	3.03 E-07	3.0 E+03	9.10 E-04
296-A-14	2.64 E-07	3.0 E+03	7.91 E-04
Total	1.41 E-01		7.34 E-01

Table 6-3. Individual Radionuclide Contributions in PUREX Stacks Exceeding the Effective Dose Equivalent Limit From a Hypothetical, Unmitigated Release.

PUREX Stack	Radionuclide	EDE Contribution	Contribution to Stack Total
		mrem/yr	%
291-A-1	^{239}Pu	2.56 E-01	60
	^{90}Sr	6.15 E-02	14
296-A-1	^{241}Am	4.56 E-02	43
	^{239}Pu	6.00 E-02	57

The potential EDE from PUREX to the MEI is determined from the hypothetical migration of all the radionuclides in the liquid waste streams directly to the Columbia River. The hypothetical EDE to the MEI is shown in Table 6-4. No PUREX liquid waste streams have calculated contributions to the MEI's EDE that exceed the proposed Ecology drinking waster standard of 4 mrem/yr. The total calculated EDE from all three streams is 0.000953 mrem/yr.

6.2.2 Hazardous Substance Dose Assessment

Six chemicals are inventoried in amounts exceeding the reportable quantity for spills listed in the various regulations. These chemicals are listed in Table 5-5 with their inventoried and reportable quantities. The hazardous substances with inventories below the reportable quantities are listed in Table 5-6.

Table 6-4. Calculated Effective Dose Equivalents from PUREX Liquid Discharges to the Maximally Exposed Individual.

Nuclide	EDE From Potential Discharge -- mrem / yr			
	CSL	SCD	CWL	Total
^{241}Am	2.44 E-05	2.09 E-05	1.16 E-07	4.54 E-05
^{239}Pu	1.92 E-06	5.16 E-06	2.51 E-09	7.08 E-06
^{238}Pu	5.64 E-08	3.84 E-07		4.41 E-07
^{238}U	1.11 E-07	2.03 E-08	2.14 E-08	1.52 E-07
^{234}U	8.70 E-08	2.82 E-08	2.82 E-08	1.43 E-07
^{144}Ce		1.98 E-04		1.98 E-04
^{137}Cs	8.74 E-05	6.11 E-04		6.98 E-04
^{129}I			3.04 E-07	3.04 E-07
^{90}Sr	7.39 E-07	2.43 E-06	2.82 E-07	3.45 E-06
^{3}H	1.87 E-07	1.84 E-12		1.87 E-07
Total	1.15 E-04	8.38 E-04	7.54 E-07	9.53 E-04

This page intentionally left blank.

9413290.1049

7.0 SUMMARY

A FEMP is required to document the monitoring programs of air and liquid effluents from the PUREX Plant. Two air exhausts, stacks 291-A-1 and 296-A-1, need continuous sampling and periodic analysis because of the potential radiological effect from hypothetical, unmitigated emissions. They also require individual analyses of the radionuclides that contribute more than 10% of their unmitigated dosage to the maximally exposed offsite individual. For stack 291-A-1, the required individual analyses are ^{239}Pu and ^{90}Sr. For stack 296-A-1, the required individual analyses are ^{239}Pu and ^{241}Am. The other nine PUREX stacks require only periodic sampling and analyses to verify low radionuclide emissions during standby operations. No monitoring of nonradioactive hazardous air pollutants is required.

All three PUREX liquid waste streams require sampling and periodic laboratory analysis to verify continued compliance with discharge permits and other state and federal regulations.

The FEMP should include the monitoring required to support the reporting requirements of regulated chemicals that have a credible potential to be discharged in amounts that exceed reportable quantities.

This page intentionally left blank

9291.96 12 1Q

8.0 REFERENCES

Clean Water Act of 1977, as amended, 33 USC 1251.

Comprehensive Environmental Response, Compensation and Liability Act of 1980, as amended, 42 USC 9601, et seq.

EPA, 1989, "Designation, Reportable Quantities, and Notification," Title 40, Code of Federal Regulations, Part 302, U.S. Environmental Protection Agency, Washington, D.C.

Resource Conservation and Recovery Act of 1976, as amended, 42 USC 6901, et seq.

WAC, 1986, Ambient Air Quality Standard and Emission Limits for Radionuclides, Washington Administrative Code 173-480, Washington State Department of Ecology, Olympia, Washington.

WAC, 1989, Dangerous Waste Regulations, Washington Administrative Code 173-303, Washington State Department of Ecology, Olympia, Washington.

WHC, 1990a, Preliminary PUREX Plant Chemical Sewer Stream - Specific Report, WHC-EP-0342.

WHC, 1990b, Preliminary PUREX Plant Stream Condensate Stream - Specific Report, WHC-EP-0342, Addendum 5, Westinghouse Hanford Company, Richland, Washington.

WHC, 1990c, Preliminary PUREX Plant Cooling Water Stream - Specific Report, WHC-EP-0342, Addendum 20, Westinghouse Hanford Company, Richland, Washington.

This page intentionally left blank.

9413136.1628

9413136.1629

ATTACHMENT 1
DETERMINATION OF FACILITY EFFLUENT MONITORING PLAN REQUIREMENT

This page intentionally left blank.

9413136.0630

ATTACHMENT 1

DETERMINATION OF FACILITY EFFLUENT MONITORING PLAN REQUIREMENT

FACILITY PUREX DISCHARGE POINT Main Building Stacks (291-A-1, 296-A-1, -2, -3, -5A, 296-A-5B, -6, -7, -8, -10, -14)

FACILITY INVENTORY AT RISK OF RADIOACTIVE MATERIALS

Radionuclide	Physical/ chemical form	Quantity (Ci)	Quantity released (Ci)	Projected dose (mrem)
1. See Tables 4.1, 4.2, 4.3				
2.				
TOTAL				

FACILITY INVENTORY AT RISK OF NONRADIOACTIVE HAZARDOUS MATERIALS

Regulated material	Quantity (lb)	Quantity released (lb)	Reportable quantity (lb)	% of reportable quantity
1. None				
2.				
TOTAL				

Identification of Reference Material

1. FSAR for PUREX normal operation mode, SD-HS-SAR-001 Rev 5.
2. Draft SAR for PUREX in standby mode, WHC-SD-CP-RD-020.
3. Preliminary CY 1990 Emissions for PUREX, S. P. Thomas, WHC, April 1990.
4. Unit Dose Calculations for WHC Facility Monitoring Plans, K. Rhoads, Batelle PNL, 12/17/90.
5. PUREX Technical Manual, WHC-CM-5-25.
6. PUREX Gaseous EMP, SD-CP-EMP-004 Rev 0.

If the total projected dose from radionuclides exceeds 0.1 mrem EDE from any one discharge point or if any one regulated material discharged from a facility exceeds 100% of a reportable quantity or a permitted quantity, a FEMP is required for that facility. Check the appropriate space below.

FEMP is required X FEMP is not required _____

EVALUATOR KH Bergsman 4/26/91 DATE 4/26/91

MANAGER, ENVIRONMENTAL [illegible] DATE 4/29/91

FACILITY MANAGER [illegible] DATE 4/29/91

ATTACHMENT 1

DETERMINATION OF FACILITY EFFLUENT MONITORING PLAN REQUIREMENT

FACILITY PUREX DISCHARGE POINT Main Building Liquid Discharges (CSL, SCD, CWL)

FACILITY INVENTORY AT RISK OF RADIOACTIVE MATERIALS

Radionuclide	Physical/ chemical form	Quantity (Ci)	Quantity released (Ci)	Projected dose (mrem)
1. See Tables 5.1 and 5.4				
2.				
TOTAL				

FACILITY INVENTORY AT RISK OF NONRADIOACTIVE HAZARDOUS MATERIALS

Regulated material	Quantity (lb)	Quantity released (lb)	Reportable quantity (lb)	% of reportable quantity
1. See Tables 5.2 and 5.3				
2.				
TOTAL				

Identification of Reference Material

1. FSAR for PUREX normal operation mode, SD-HS-SAR-001 Rev 5.
2. Draft SAR for PUREX in standby mode, WHC-SD-CP-RD-020.
3. Unit Dose Calculations for WHC Facility monitoring Plans, K. Rhoads, Batelle PNL, 12/17/90.
4. SARA chemical inventory.
5. WHC Stream Specific Reports, WHC-EP-0342, Addendum 2, 5 and 20.
6. PUREX Technical Manual, WHC-CM-5-25.
7. PUREX Liquid EMP, WHC-SD-CP-EMP-006 Rev 0.

If the total projected dose from radionuclides exceeds 0.1 mrem EDE from any one discharge point or if any one regulated material discharged from a facility exceeds 100% of a reportable quantity or a permitted quantity, a FEMP is required for that facility. Check the appropriate space below.

FEMP is required X FEMP is not required _____

EVALUATOR KH Bergeman 4/26/91 DATE 4/26/91

MANAGER, ENVIRONMENTAL [illegible] DATE 4/29/91

FACILITY MANAGER [illegible] DATE 4/29/91

9413136.0633

PART 3

URANIUM TRIOXIDE PLANT STANDBY STATUS

FACILITY EFFLUENT MONITORING PLAN DETERMINATION

This page intentionally left blank.

9413136.0634

CONTENTS

1.0 INTRODUCTION 1

2.0 FACILITY DESCRIPTION 1

3.0 STATUS OF OPERATION 1

4.0 APPLICABLE REGULATIONS 1
- 4.1 U.S. DEPARTMENT OF ENERGY ORDERS 2
- 4.2 ENVIRONMENTAL PROTECTION AGENCY REGULATIONS 2
- 4.3 WASHINGTON STATE AMBIENT AIR QUALITY STANDARD AND EMISSION LIMITS 2
- 4.4 GROUNDWATER PROTECTION 3
- 4.5 DANGEROUS WASTE REGULATIONS 3
- 4.6 REPORTABLE QUANTITIES 3
- 4.7 LOCAL AIR POLLUTION CONTROL 4

5.0 SOURCE TERM 4
- 5.1 AIR EFFLUENTS 4
  - 5.1.1 Air Analysis 4
  - 5.1.2 Air Emissions 4
  - 5.1.3 296-U-2 Stack 4
  - 5.1.4 296-U-4 Stack 5
  - 5.1.5 296-U-13 Stack 5
  - 5.1.6 Radioactive Emissions 5
  - 5.1.7 Other Hazardous Releases 5
- 5.2 WASTEWATER EFFLUENTS 6
  - 5.2.1 Wastewater Analysis 6
  - 5.2.2 UO_3 Liquid Emissions 6

6.0 POTENTIAL UPSET - OPERATING CONDITIONS 8
- 6.1 RADIOLOGICAL DOSE ASSESSMENT 8
- 6.2 PUBLIC DOSE ASSESSMENT 9
  - 6.2.1 Radiological Dose Assessment 9
  - 6.2.2 Hazardous Substance Dose Assessment 9

7.0 SUMMARY 10

8.0 REFERENCES 10

ATTACHMENTS

1 DETERMINATION OF FACILITY EFFLUENT MONITORING PLAN REQUIREMENT A-1

2 DETERMINATION OF FACILITY EFFLUENT MONITORING PLAN REQUIREMENT A-2

LIST OF TABLES

1 Uranium Trioxide Radionuclide Emissions from Exhaust Stacks 6

2 Uranium Trioxide Radionuclide Discharges in Liquid Waste Streams . . . 7

3 Uranium Trioxide Facility Nonradioactive Materials Inventory-at-Risk 8

4 Calculated Effective Dose Equivalents from Uranium Trioxide Stacks to the Maximally Exposed Individual 9

5 Calculated Effective Dose Equivalents from Uranium Trioxide Liquid Discharges to the Maximally Exposed Individual 10

9413136.0636

LIST OF TERMS

CERCLA	*Comprehensive Environmental Response, Compensation and Liability Act of 1980*
CFR	Code of Federal Regulations
DOE	U.S. Department of Energy
Ecology	Washington State Department of Ecology
EDE	effective dose equivalent
EPA	Environmental Protection Agency
FEMP	facility effluent monitoring plan
HEPA	high-efficiency particulate air
MEI	maximally exposed individual
NESHAP	National Emission Standards for Hazardous Air Pollutants
UNH	uranyl nitrate hexahydrate
UO_3	Uranium Trioxide
WAC	Washington Administrative Code

This page intentionally left blank.

9413160.0690

URANIUM TRIOXIDE PLANT STANDBY STATUS FACILITY EFFLUENT MONITORING PLAN DETERMINATION

1.0 INTRODUCTION

This report details the determination whether a facility effluent monitoring plan (FEMP) is required for the Uranium Trioxide (UO_3) Plant. The UO_3 Plant will be placed in a standby mode before November 1991. Once in standby mode, no processing activities will occur. Three air exhaust stacks and two wastewater streams will be active.

2.0 FACILITY DESCRIPTION

The UO_3 plant is located in the 200 West Area of the Hanford Site, which is located in south central Washington State. The UO_3 plant consists of a two main buildings, 224-U and 224-UA, plus ancillary buildings and facilities. The 224-U Building is divided along its length into a canyon side, containing the process equipment for concentrating the UNH, and a three-floored gallery containing offices, piping, and operating areas. The 224-UA Building has two floors; the equipment for the calcining process is on the upper floor and the powder pickup bins and the wet particulate scrubbers are on the ground floor.

3.0 STATUS OF OPERATION

Until it goes into the standby mode, the UO_3 Plant operates to convert uranyl nitrate hexahydrate (UNH) solution into UO_3 powder, which is then shipped offsite for further processing to provide slightly enriched uranium for use as fuel in reactors generating electricity and plutonium.

The UO_3 process concentrates a 60% UNH solution to 100% UNH and then calcines the 100% solution into UO_3 powder. The nitrogen oxides liberated during calcining are converted to nitric acid for reuse at other facilities.

4.0 APPLICABLE REGULATIONS

Conditions and requirements for monitoring existing or potential releases of radioactive and nonradioactive pollutants to the environment are contained in U.S. Department of Energy (DOE) orders, federal, Washington State, and local regulations.

4.1 U.S. DEPARTMENT OF ENERGY ORDERS

General Environmental Protection Program, DOE Order 5400.1, (DOE 1988) requires a written environmental monitoring plan for each site, facility, or process that uses, generates, releases, or manages significant pollutants.

Radiation Protection of the Public and the Environment, DOE Order 5400.5, (DOE 1990) requires a monitoring plan that complies with the requirements of DOE Order 5400.1 (DOE 1988). Compliance with DOE Order 5400.5 (DOE 1990) may be demonstrated based on calculations that use information obtained from monitoring and surveillance programs.

4.2 ENVIRONMENTAL PROTECTION AGENCY REGULATIONS

National Emission Standards for Hazardous Air Pollutants (NESHAP) 40 Code of Federal Regulations (CFR) 61, Subpart H, "National Emission Standards for Emissions of Radionuclides Other than Radon from Department of Energy Facilities" (EPA 1989a), establishes a public exposure limit and sets out monitoring requirements on emissions relative to those limits. That exposure limit is a 10 mrem/yr effective dose equivalent (EDE) to the maximally exposed individual of the public. Compliance with this standard is measured by calculating the highest EDE where a person resides or abides using an Environmental Protection Agency (EPA)-approved method.

Emissions of radionuclides must be measured at all release points that have a potential to discharge radionuclides into the air in quantities that could cause an EDE in excess of 1% of the standard, (i.e., in excess of 0.1 mrem/yr). All radionuclides that could contribute greater than 10% of the potential EDE for such a release point shall be measured individually. For other release points having a potential to release radionuclides into the air, but not in quantities that could contribute an EDE above 0.1 mrem/yr, periodic confirmatory measurements shall be made to verify low emissions. The potential of a release point to discharge radionuclides into the air is based on the estimated radionuclide releases that would result if pollution control equipment did not exist, but the facility operations were otherwise normal.

Subpart H also states that effluent streams may be monitored by continuously withdrawing representative samples of the effluent stream following the guidance presented in ANSI N13.1, *Guide to Sampling Airborne Radioactive Materials in Nuclear Facilities* (ANSI 1969). The requirements for continuous sampling are applicable to batch processes when the unit is in operation. Periodic sampling (grab samples) may be used only with the EPA's prior approval.

4.3 WASHINGTON STATE AMBIENT AIR QUALITY STANDARD AND EMISSION LIMITS

The Washington State *Ambient Air Quality Standard and Emission Limits for Radionuclides*, Washington Administrative Code (WAC)-173-480 (WAC 1989a) sets the standard for public exposure to radionuclide emission at 25 mrem/yr EDE with compliance calculated at the point of maximum annual air concentration in an unrestricted area where any member of the public may be located (i.e., the

Hanford Site boundary). However, since the Hanford Site must comply with the most restrictive of federal, state, or local laws, the federal exposure limit of 10 mrem/yr must be met.

4.4 GROUNDWATER PROTECTION

Radionuclides are defined as hazardous air pollutants. Therefore, they are considered hazardous in liquid effluent, without any specific individual radionuclide being listed as a hazardous substance under water pollution control laws. The Washington State Department of Ecology (Ecology) has proposed new groundwater protection standards, which require groundwater to meet drinking water standards. Current drinking water standards limit public exposure from radionuclides to an EDE of 4 mrem/yr. Because DOE policy is that DOE facilities comply with the spirit of all state law, any facility with radionuclide emissions in its liquid waste stream should be monitored to ensure compliance with drinking water standards.

Existing Ecology regulations restrict discharges of dangerous wastes to the groundwater (WAC-173-303) (WAC 1989b). Liquid effluent discharges must also comply with applicable permit limits. Monitoring is required to ensure compliance with these regulations and limits.

These monitoring programs must be included in a FEMP.

4.5 DANGEROUS WASTE REGULATIONS

Waste streams must be analyzed to determine whether they contain a dangerous waste as designated by WAC-173-303 (WAC 1989b). Any release of a dangerous waste or hazardous substance to the environment, except permitted releases, must be reported. If the facility has the potential to release dangerous wastes or hazardous substances to the environment, its liquid waste streams must be monitored for their presence and monitoring practices must be included in a FEMP.

4.6 REPORTABLE QUANTITIES

The regulations in 40 CFR 302 (EPA 1989b) designate hazardous substances and identify reportable quantities and notification requirements for releases of these hazardous substances under the *Comprehensive Environmental Response, Compensation and Liability Act of 1980* (CERCLA), and the *Clean Water Act of 1977*. Any unpermitted release of any of these designated hazardous substances must be reported. For FEMP determination, the potential of a facility to release hazardous substances exists if the inventory of the materials thatcould be released to the environment exceeds the reportable quantities. If the potential exists, waste streams must be monitored for the presence of these hazardous substances and monitoring programs must be included in a FEMP.

4.7 LOCAL AIR POLLUTION CONTROL

The Benton-Franklin-Walla Walla Counties Air Pollution Control Authority has jurisdiction over all air emissions, except radionuclide emissions, in the Benton, Franklin, and Walla Walla county areas, including the Hanford Site. Currently no local standards are more restrictive than the previously mentioned state and federal limits.

5.0 SOURCE TERM

5.1 AIR EFFLUENTS

5.1.1 Air Analysis

The discharge criteria established by the EPA for radioactive emissions into the atmosphere are based on not exceeding an annual EDE of 10 mrem/yr to the maximally exposed offsite individual. To assist in performing this lengthy calculation an EPA-approved computer program, CAP-88 (Beres 1990), is used. The CAP-88 (Beres 1990) uses data sets of meteorological data (such as wind direction, speed, etc.) and the distance to the nearest residence or work location to determine in which of 16 compass directions the maximum exposure will occur. For the worst-case wind direction, CAP-88 (Beres 1990) models the transport, dilution, exposure, and uptake of radionuclides by the maximally exposed individual (MEI). An annual dose is then calculated for that person.

As directed by DOE, Pacific Northwest Laboratory determined this dosage per curie of activity for the significant, specific radionuclides emitted from the UO_3 Plant.

5.1.2 Air Emissions

Three air effluent stacks contribute nearly all of the airborne releases from the UO_3 Plant.

5.1.3 296-U-2 Stack

The 296-U-2 stack removes exhaust from the 224-UA Building powder handling system. The stack is located on the roof of 224-UA, discharges 40 ft above grade and has dimensions of 14 by 12 in. Exhaust gases pass through two bag filters in series, a prefilter, and a high-efficiency particulate air (HEPA) filter before discharge.

5.1.4 296-U-4 Stack

The 296-U-4 stack removes exhaust from the 224-U Building. The stack is located on the roof of 224-U, discharges 119 ft above grade and is 10 in.

in diameter. Its main contributors are process tank vents, calciner off-gases and vapor from the uranyl nitrate hexahydrate (UNH) concentrators. Exhaust gases do not pass through any filters before discharge.

5.1.5 296-U-13 Stack

The 296-U-13 stack removes exhaust from the powder loadout hood in the 224-UA Building. The stack is located on the roof of 224-UA, discharges 55 ft above grade and is 25 in. in diameter. Exhaust gases pass through a prefilter and a HEPA filter before discharge.

During standby, only the 296-U-4 stack will be operated routinely; the 296-U-2 and 296-U-13 stacks will be operated approximately 1 mo/yr for maintenance, calibration, vent and balance checks, and equipment upgrade installation.

5.1.6 Radioactive Emissions

The source of airborne contaminants is residual fugitive materials or gases picked up by the air currents in the UO_3 buildings and, subsequently entrained into the buildings ventilation systems' exhausts. Annual releases were determined by multiplying the exhaust flow rate for each stack by the outgoing air concentration of each specific radionuclide in the air effluents was either selectively measured at the discharge point or inferred from gross alpha and gross beta measurements. The concentration of uranium nuclides was only available as a composite, i.e., combined ^{234}U, ^{235}U, ^{238}U, etc. concentrations. For this FEMP determination, it has been assumed that uranium exists solely as ^{234}U, which results in a slightly higher calculated EDE. In all stack effluents, the concentration of some radionuclides was below detectable limits. In these cases, the limit of detection for that radionuclide was used as a conservative estimate of its concentration. Table 1 lists the radionuclide emissions from each stack.

5.1.7 Other Hazardous Releases

In standby mode all material processing has stopped and no nonradioactive hazardous air pollutants are released. Consequently, exposure to and uptake by the MEI are zero.

5.2 WASTEWATER EFFLUENTS

5.2.1 Wastewater Analysis

Wastewater discharge criteria for both radioactive and hazardous chemicals are derived from the most restrictive levels given in federal and state regulations. Monitoring and a FEMP are required to ensure that liquid waste streams meet state and federal regulations.

Table 1. Uranium Trioxide Radionuclide Emissions from Exhaust Stacks.

Nuclide	Activity from exhaust stack--Ci/yr			
	296-U-2	296-U-4	296-U-13	Total
^{241}Am	4.53 E-11	3.89 E-07	3.62 E-10	3.90 E-07
^{239}Pu	1.96 E-11	1.96 E-07	1.66 E-10	1.96 E-07
^{234}U	1.67 E-08	4.67 E-06	1.33 E-08	4.70 E-06
^{137}Cs	2.69 E-10	1.77 E-06	1.48 E-09	1.77 E-06
^{90}Sr	6.68 E-11	4.90 E-07	3.69 E-10	4.91 E-07
Total	1.71 E-08	7.51 E-06	1.57 E-08	7.55 E-06

Recent characterization of UO_3 wastewater streams during normal operations (intermittent periods of calcining) was used as a basis for the nonradioactive stream contaminants during standby operation. Recent analysis of UO_3 wastewater streams during the periods between calcining was used as the estimate of the radioactive contaminants during standby operation. The monitoring required and the FEMP content are guided by comparing the wastewater characterization to the discharge criteria in the regulations and by comparing the UO_3 chemical inventory to the reportable quantities in the regulations.

5.2.2 UO_3 Liquid Emissions

The UO_3 Plant has two liquid waste streams. They are Process Condensate and Plant Wastewater.

5.2.2.1 Process Condensate. The Process Condensate stream consists almost entirely of condensate formed from the cooling of process offgas streams in either of two vessel vent condensers, sanitary water used to maintain minimum flows to the acid absorber, and phosphoric acid and potassium hydroxide used to perform elementary neutralization. Entrainment or condensed volatiles can introduce hazardous chemicals or radionuclides into the stream.

The Process Condensate stream routinely discharges to the 216-U-17 Crib. An automatic batch neutralization system controls the discharge pH. During standby operation, Process Condensate rates are low enough to allow batch analysis for radionuclides and hazardous chemicals before release. The Process Condensate discharge has been temporarily suspended pending review of its regulatory status.

5.2.2.2 Plant Wastewater. The Plant Wastewater discharge consists almost entirely of raw water or sanitary water used for cooling in condensers and compressors. Building and tank heaters also contribute small flows to the stream. The raw water has been taken from the Columbia River. The Plant

Wastewater stream is designed to be an uncontaminated stream. Except for off-normal conditions such as catastrophic equipment failure, none of the contributing sources comes in direct contact with any process fluids. No chemicals are added to this stream.

The Plant Wastewater stream routinely discharges through either section of the two-section 207-U Retention Basin and then into the 216-U-14 Ditch. In-line monitoring for pH upstream of the 207-U Retention Basin allows manual isolation and treatment of off-normal conditions before disposal. Detection of hazardous chemicals or of the very low radionuclide content is through analysis of periodic samples.

5.2.2.3 Radiological Discharges. Annual emissions have been determined by multiplying the individual radionuclide concentrations in the stream discharges during the standby periods between uranium calcining and the flow of that stream during the same period. Table 2 lists the estimated radionuclide discharge of each stream.

5.2.2.4 Other Hazardous Releases. None of the liquid waste streams contain wastes designated as dangerous by WAC-173-303 (WAC 1989b), as determined by the UO_3 Plant stream specific reports (WHC 1990). The chemical inventory at UO_3 includes hazardous substances as defined by the CERCLA, the *Resources Conservation and Recovery Act of 1976* and Washington State Administrative Code. These chemicals are listed in Table 3.

Table 2. Uranium Trioxide Radionuclide Discharges in Liquid Waste Streams.

Nuclide	Activity -- Ci/yr		
	Process condensate	Plant wastewater	Total
^{241}Am	3.61 E-05	1.66 E-02	1.67 E-02
^{239}Pu	1.91 E-05	4.83 E-03	4.85 E-03
^{234}U	1.50 E-04	4.85 E-03	5.00 E-03
^{3}H	1.12 E-01	1.72 E+00	1.84 E+00
Total	1.12 E-01	1.74 E+00	1.86 E+00

Table 3. Uranium Trioxide Facility Nonradioactive Materials Inventory-at-Risk.

Regulated material	Inventory	Reportable quantity	% of RQ
	lbs	lbs	%
Nitric Acid	1,117,000	1,000	> 100
Phosphoric Acid	1,937	5,000	39
Potassium Hydroxide	18,950	1,000	> 100
Sodium Hydroxide	10	1,000	1
Sulfuric Acid	1,610	1,000	> 100

6.0 POTENTIAL UPSET - OPERATING CONDITIONS

6.1 RADIOLOGICAL DOSE ASSESSMENT

During normal operations in standby mode at UO_3, the only releases from the exhaust stacks are small quantities of radionuclides, as summarized in Table 1. The calculated EDE to the MEI from each UO_3 stack is shown in Table 4. No UO_3 stack's contribution to the MEI's calculated EDE exceeds the EPA standard of 0.1 mrem/yr. The highest exposure from any UO_3 stack effluent is from stack 296-U-4, which contributes a calculated EDE of 0.00000371 mrem/yr to the MEI. The total calculated EDE from all stacks, 0.00000376 mrem/yr, is also below the 0.1 mrem/yr standard.

The hypothetical, unmitigated release from UO_3 is based on the effluent bypassing the pollution control equipment, the HEPA filters. Because radionuclide concentrations in the effluent streams are not determined before the effluent reaches the filters, the increase in radionuclide emissions that would result from bypassing the filters must be based on an evaluation of filter efficiencies and the particulate removal process. A realistic increase in particulate effluent caused by filter bypass for these stacks is judged to be 3,000. In standby mode, the radionuclide emissions are all carried by particulates, so the unmitigated EDE to the MEI would be the normal standby operation EDE increased by the unmitigated release factor given above. Stack 296-U-4 does not exhaust through any pollution control equipment. Therefore, its unmitigated release is the same as its normal release; the unmitigated release factor is 1.

The hypothetical, unmitigated EDE to the MEI from each UO_3 stack is also shown in Table 4. No UO_3 stack's contribution to the MEI's calculated EDE exceeds the EPA standard of 0.1 mrem/yr. The highest exposure from any UO_3 stack effluent is from stack 296-U-2, which contributes a calculated EDE of 0.0000896 mrem/yr to the MEI. The total calculated EDE from all stacks, 0.000175 mrem/yr, is also below the 0.1 mrem/yr standard.

Table 4. Calculated Effective Dose Equivalents from Uranium Trioxide Stacks to the Maximally Exposed Individual.

UO_3 Stack	EDE from normal standby mrem/yr	Unmitigated release factor	EDE from unmitigated release mrem/yr
296-U-2	2.99 E-08	3.0 E+03	8.96 E-05
296-U-4	3.71 E-06	1.0 E+00	3.71 E-06
296-U-13	2.71 E-08	3.0 E+03	8.14 E-05
Total	3.76 E-06		1.75 E-04

6.2 PUBLIC DOSE ASSESSMENT

6.2.1 Radiological Dose Assessment

During the standby mode (as well as during calcining), liquid wastes are not released directly to public waterways, but rather to onsite tanks and soil columns. The actual migration of liquid wastes from these disposal sites through the soil to public waterways is difficult to determine and, as a result, so is the calculated EDE to the MEI.

The potential EDE from UO_3 to the MEI is determined from the hypothetical migration of all the radionuclides in the liquid waste streams directly to the Columbia River. The hypothetical EDE to the MEI is shown in Table 5. No UO_3 liquid waste streams have calculated contributions to the MEI's EDE that exceed the proposed Ecology drinking water standard of 4 mrem/yr. The total calculated EDE from the UO_3 streams is 0.00337 mrem/yr.

6.2.2 Hazardous Substance Dose Assessment

Three chemicals are inventoried in amounts exceeding the reportable quantity for spills in the various regulations. These chemicals are listed in Table 3, as well as their inventoried and reportable quantities. Other hazardous substances with inventories below the reportable quantities are also shown in Table 3.

Table 5. Calculated Effective Dose Equivalents from Uranium Trioxide Liquid Discharges to the Maximally Exposed Individual.

Nuclide	EDE from potential discharge--mrem/yr		
	Process condensate	Plant wastewater	Total
^{241}Am	7.23 E-06	3.33 E-03	3.33 E-03
^{239}Pu	1.15 E-07	2.90 E-05	2.91 E-05
^{234}U	1.44 E-07	4.65 E-06	4.80 E-06
^{3}H	7.14 E-08	1.10 E-06	1.18 E-06
Total	7.56 E-06	3.36 E-03	3.37 E-03

7.0 SUMMARY

The three UO_3 stacks require only periodic monitoring to verify continued low radionuclide emissions during standby operations. In addition, no specific radionuclides need to be continuously monitored. No monitoring of nonradioactive hazardous air pollutants is required.

Both UO_3 liquid waste streams require monitoring to verify continued compliance with discharge permits and other state and federal regulations. These monitoring programs must be included in a FEMP. The FEMP should include the monitoring required to support the reporting requirements of regulated chemicals that have a credible potential to be discharged in amounts that exceed reportable quantities.

8.0 REFERENCES

Beres, D. A., 1990, *The Clean Air Act Assessment Package - 1988 (CAP-88) A Dose and Risk Assessment Methodology for Radionuclide Emissions to Air*, Volumes 1-3, U.S.

Clean Water Act of 1977, as amended, Public Law 95-217, 92 Stat. 1566, 33 USC 1251.

Comprehensive Environmental Response, Compensation and Liability Act of 1980, as amended, Public Law 96-510, 94 Stat. 2767, 42 USC 9601 et seq.

DOE, 1988a, *General Environmental Protection Program*, DOE Order 5400.1, U.S. Department of Energy, Washington, D.C.

DOE, 1990, *Radiation Protection of the Public and the Environment*, DOE Order 5400.5, U.S. Department of Energy, Washington, D.C.

EPA, 1989a, *National Emission Standards for Hazardous Air Pollutants*, Title 40 Code of Federal Regulations Part 61, U.S. Environmental Protection Agency, Washington, D.C.

EPA, 1989b, *Designation, Reportable Quantities, and Notification*, Title 40 Code of Federal Regulations Part 302, U.S. Environmental Protection Agency, Washington, D.C.

Resource Conservation and Recovery Act of 1976, as amended, Public Law 94-580, 90 Stat. 2795, 42 USC 6901 et seq.

WAC, 1989a, *Ambient Air Quality Standard and Emission Limits for Radionuclides*, Washington Administrative Code 173-4, Washington State Department of Ecology, Olympia, Washington.

WAC, 1989b, *Dangerous Waste Regulations*, Washington Administrative Code 173-303, Washington State Department of Ecology, Olympia, Washington.

WHC, 1990, Stream-Specific Reports, "Addendum 7 - UO_3 Plant Wastewater," "Addendum 19 - UO_3 Plant Process Condensate," WHC-EP-0342, Westinghouse Hanford Company, Richland, Washington.

This page intentionally left blank.

ATTACHMENT 1

DETERMINATION OF FACILITY EFFLUENT MONITORING PLAN REQUIREMENT

9413136.0651

This page intentionally left blank.

Attachment 1

DETERMINATION OF FACILITY EFFLUENT MONITORING PLAN REQUIREMENT

FACILITY U03 DISCHARGE POINT: Main Buildings Stacks (296-U-2, -4, -13)

FACILITY INVENTORY AT RISK OF RADIOACTIVE MATERIALS

Radionuclide	Physical Chemical Form	Quantities	Quantities Released	Projected Dose
1. See Tables 4.1 and 4.2				
Total				

FACILITY INVENTORY AT RISK OF NONRADIOACTIVE HAZARDOUS MATERIALS

Regulated Material	Quantity lb	Quantity Released lb	Reportable Quantity lb	% of Reportable Quantity
1.				
Total	None			

Identification of Reference Material

1. SAR for U03 normal operation mode, SD-CP-SAR-002 Rev 1.
2. U03 Plant Process Flowsheet, W. G. Jason and K. B. Topham, PFD-U-020-00001, RHO, 1/19/84.
3. Unit Dose Calculations for WHC Facility Monitoring Plans, K. Rhoads, Battelle PNL, 12/17/90.
4. U03 Gaseous EMP, SD-CP-EMP-003 Rev 0.

If the total projected dose from radionuclides exceeds 0.1 mrem EDE from any one discharge point or if any one regulated material discharged from a facility exceeds 100% of a reportable quantity or a permitted quantity, a FEMP is required for that facility. Check the appropriate space below.

FEMP is required X (based on non-radioactive inventory-at-risk. See Attachment 2) FEMP not required _____

EVALUATOR K H Bergsman / Jim Willett DATE 4-8-91

MANAGER, ENVIRONMENTAL Jim Nichols / [illegible] DATE 4-9-91

FACILITY MANAGER J E Cothell DATE 4/8/91

This page intentionally left blank.

ATTACHMENT 2

DETERMINATION OF FACILITY EFFLUENT MONITORING PLAN REQUIREMENT

This page intentionally left blank.

Attachment 2

DETERMINATION OF FACILITY EFFLUENT MONITORING PLAN REQUIREMENT

FACILITY U03 DISCHARGE POINT: Plant Wastewater and Process Condensate

FACILITY INVENTORY AT RISK OF RADIOACTIVE MATERIALS

Radionuclide	Physical Chemical Form	Quantities	Quantities Released	Projected Dose
1.		See Tables 5.1 and 5.3		
Total				

FACILITY INVENTORY AT RISK OF NONRADIOACTIVE HAZARDOUS MATERIALS

Regulated Material	Quantity lb	Quantity Released lb	Reportable Quantity lb	% of Reportable quantity
1. See Table 5.2				
2.				

Identification of Reference Material

1. SAR for U03 normal operation mode, SD-CP-SAR-002 Rev 1.
2. U03 Plant Process Flowsheet, W. G. Jason and K. B. Topham, PFD-U-020-00001, RHO, 1/19/84.
3. Unit Dose Calculations for WHC Facility Monitoring Plans, K. Rhoads, Battelle PNL, 12/17/90.
4. SARA chemical inventory.
5. WHC Stream Specific Reports, WHC-EP-0342, Addendum 7 and 19.
6. U03 Liquid EMP, SD-CP-EMP-005 Rev 0.

If the total projected dose from radionuclides exceeds 0.1 mrem EDE from any one discharge point or if any one regulated material discharged from a facility exceeds 100% of a reportable quantity or a permitted quantity, a FEMP is required for that facility. Check the appropriate space below.

FEMP is required X FEMP is not required _____

EVALUATOR K H Bergsman DATE 4-8-91

MANAGER, ENVIRONMENTAL Jim Nichols DATE 4-9-91

FACILITY MANAGER R E Gottrell DATE 4/8/91

This page intentionally left blank.

PART 4

SURPLUS U PLANT

FACILITY EFFLUENT MONITORING PLAN DETERMINATION

9413136.0659

This page intentionally left blank.

9413136.0660

CONTENTS

1.0 INTRODUCTION 1

2.0 FACILITY DESCRIPTION 1
2.2 PROCESS DESCRIPTION 6

3.0 STATUS OF OPERATION 6

4.0 SOURCE TERM 7
4.1 RADIOACTIVE MATERIALS 7
4.2 NONRADIOACTIVE HAZARDOUS MATERIAL 8

5.0 POTENTIAL UPSET-OPERATING CONDITIONS 8
5.1 ROUTINE CONDITIONS 8
5.2 UPSET CONDITIONS 9
5.2.1 Radioactive Materials 9
5.2.2 Nonradioactive Hazardous Material 10
5.3 EFFLUENT POINT OF DISCHARGE DESCRIPTION 11
5.3.1 Gaseous Effluent Streams 11
5.3.2 Liquid Effluent Streams 12

6.0 SUMMARY 13

7.0 REFERENCES 13

ATTACHMENT

1 DETERMINATION OF FACILITY EFFLUENT MONITORING PLAN REQUIREMENT A1-1

9413136.0661

LIST OF FIGURES

1 221-U Canyon Building 3

2 271-U Office Building 4

3 291-U Canyon Building Ventilation System 5

LIST OF TERMS

ACV	administrative control value
B&T	bismuth phosphate process
CAM	continuous air monitor
CERCLA	*Comprehensive Environmental Response, Compensation, and Liability Act of 1980*
FEMP	facility effluent monitoring plan
HRO	Hanford Restoration Operations
PCB	polychlorinated biphenyl
RCRA	*Resource Conservation and Recovery Act of 1976*
SARA	*Superfund Amendments and Reauthorization Act of 1986*
UST	underground storage tank

9413136.1663

This page intentionally left blank.

FACILITY EFFLUENT MONITORING PLAN DETERMINATION FOR THE SURPLUS U PLANT

1.0 INTRODUCTION

This evaluation describes the potential radioactive and hazardous material source terms within the U Plant complex to determine the requirement for a facility effluent monitoring plan (FEMP). The evaluation includes discussion on both gaseous and liquid effluents that could be discharged under routine or upset conditions. This evaluation is prepared in accordance with *A Guide for Preparing Hanford Site Facility Effluent Monitoring Plans*, (Guide), Section IV-2, (WHC 1991).

2.0 FACILITY DESCRIPTION

This section briefly describes the surplus U Plant complex facilities that are the responsibility of Hanford Restoration Operations (HRO). For this evaluation, the U Plant complex under HRO custody includes the 221-U Canyon Building, the 276-U Solvent Handling Facility, the 271-U office/service building, and the 291-U Canyon Building Ventilation System.

2.1 PHYSICAL DESCRIPTION

The 221-U Canyon Building, built from 1944 to 1945, has 20 sections with expansion joints between the sections (see Figure 1). Each of these sections, numbered 1 through 20, is 40 ft long. The building is divided lengthwise into the gallery side and process canyon side. These two sections are separated by a wall that runs the length of the building. The wall thicknesses are typically as follows: floor 6 ft, roof 3 to 4 ft, outside wall (process wall) 5 ft, outside wall (gallery side) 3 ft, and dividing wall 5 to 9 ft. The gallery side is 14 ft wide (inside dimension) and has four floors. From bottom to top these are: the electrical gallery, the pipe gallery, and the crane cabway, which has no ceiling and is open to the canyon deck side. These galleries contain the electrical distribution centers, almost all cold piping, instrumentation, and controls for cell processes. The process canyon side, 37 ft wide (inside dimension), contains process cells, the hot pipe trench, and the air tunnel.

The process cells in the 221-U Building are in the middle of the building next to the galleries; the pipe trench and air tunnel are between the cells and the outside wall. The 40 process cells, are arranged 2 per section in a single row. These are separated from the pipe trench, air tunnel, and each other by 7-ft-thick walls, and from the electrical and pipe galleries by 9-ft-thick walls. The operating gallery is separated from the canyon deck area by a 3-ft wall. Typical cells, 18 ft by 13 ft by 28 ft, are covered by removable 6-ft-thick concrete cover blocks. Cell number 10 is 45 ft deep and is used to collect cell drainage from the pipe trench and other cells via a concrete-encased 24-in. tile sewer pipe underneath the cell floors; the pipe

runs the entire length of the building. Cells, designed for remote operation and maintenance, contain all hot process vessels and equipment. Lines entering these cells are embedded in the cell walls and terminate on the inside of the cell wall with remote connectors. All intra-cell piping had remotely removable pipe jumpers. Cell equipment and vessels were remotely removable. The hot trench, which runs parallel to the cells from section 3 through 20, is 8 ft wide and 10 ft deep (from the top of the blocks) and is covered by 2-ft-thick removable concrete cover blocks. This trench contains most intra-cell process and waste transfer piping. The air tunnel, located directly beneath the pipe trench and separated from it and the cells by 7-ft-thick walls, is 10.6 ft high by 10.5 ft wide. The tunnel runs from section 3 through 20 and provides exhaust ventilation for the cells and pipe trench via the exhaust fan ventilation system at the 291-U Canyon Building Ventilation System.

In 221-U, the top of the cells and pipe trench cover blocks, which are level with the floor of the operating gallery, form the canyon deck. From the canyon deck to the ceiling, is 40 ft of open space. This space provides access to the cells for remote maintenance work performed by the 75-ton overhead traveling bridge crane. The crane spans the width and travels the length of the canyon. The crane cab, suspended from the bridge, travels in the crane cabway, protected from the canyon by a 5-ft-thick concrete wall. Personnel egress from the building under emergency conditions was by concrete enclosed stairways on both sides of the building (odd numbered sections for canyon side and even number section for the gallery side). The gallery side of the canyon structure abuts and is joined with the 271-U office/service building.

The 276-U Solvent Handling Facility, is an uncovered, reinforced concrete basin containing three tanks and a large amount of piping. The 54 ft by 66 ft basin is adjacent to the southwest wall of the 221-U Building. Its side walls extend from about 5 ft below grade to 3 ft above grade. Two of the tanks, with capacities of 29,000 and 6,000 gal, are made of carbon steel. The other is a 2,500-gal-capacity stainless steel tank.

The 271-U Office/Service Building, also built from 1944 to 1945, is a four-story structure(160 ft by 48 ft) and includes a basement that is physically attached to the electrical gallery side of the 221-U Canyon Building (see Figure 2). Access to the outside is provided at sections 11 and 13 on the first floor; access to the 221-U galleries is through the double doors at sections 11 and 13 on the first and second floors.

The 291-U-Stack is 14 ft in diameter at the base and 200 ft high (see Figure 3). The foundation measures 23 ft across and 7 ft thick at its greatest points. The associated sand filter, built partially below grade, is a silicon-coated, urethane foam, concrete roof slab. The vessel vent pit is a below-grade, reinforced concrete pit, 19 ft by 15 ft by 22 ft deep, with 2-ft-thick walls and floor, and closed by 2-ft-thick ground-level blocks. This pit contains the two above-ground exhaust fans and motors that provide 20,000 ft^3/min each of ventilation for the 221-U Canyon Building up the exhaust stack.

Figure 1. 221-U Canyon Building.

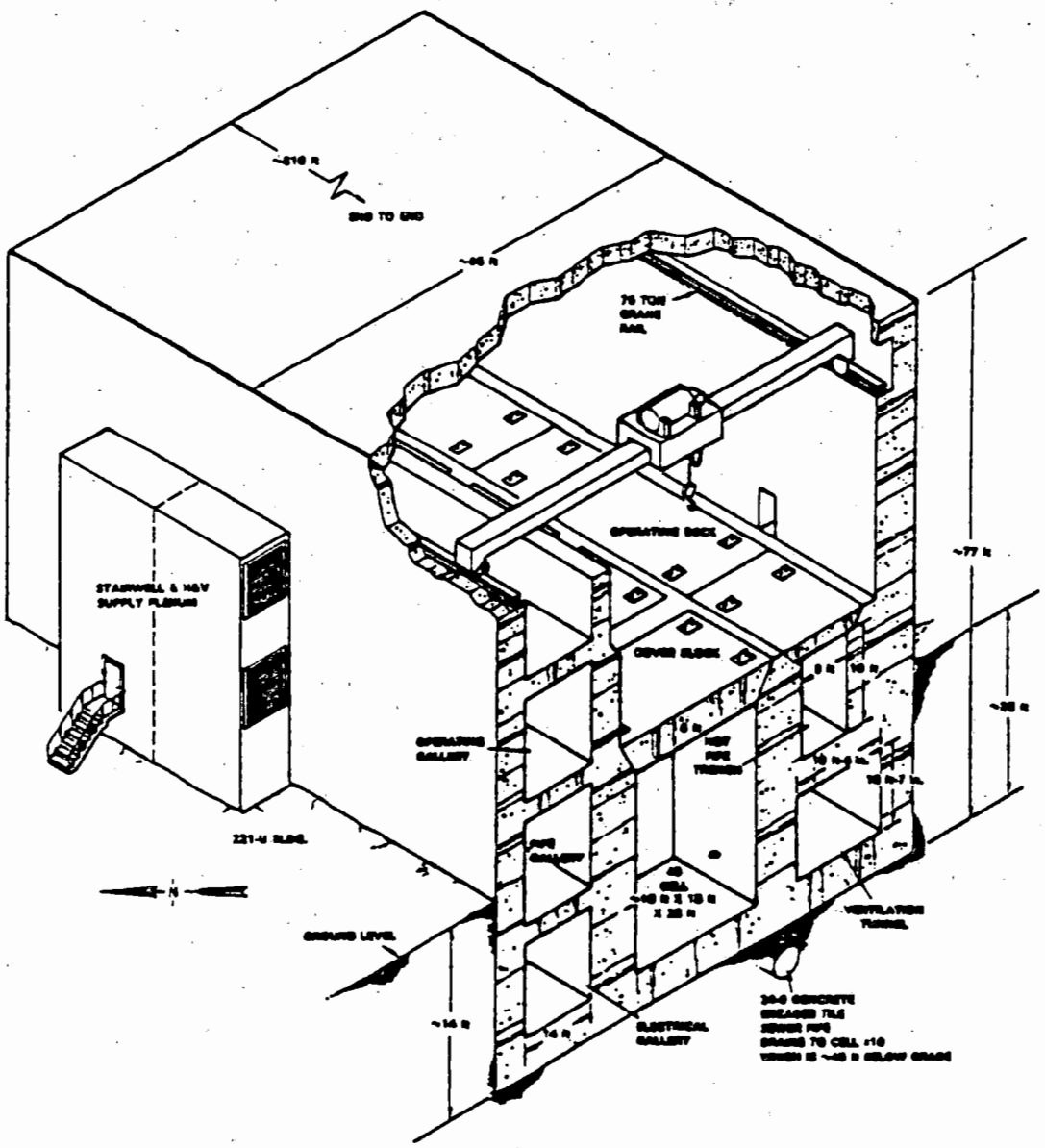

Figure 2. 271-U Office Building.

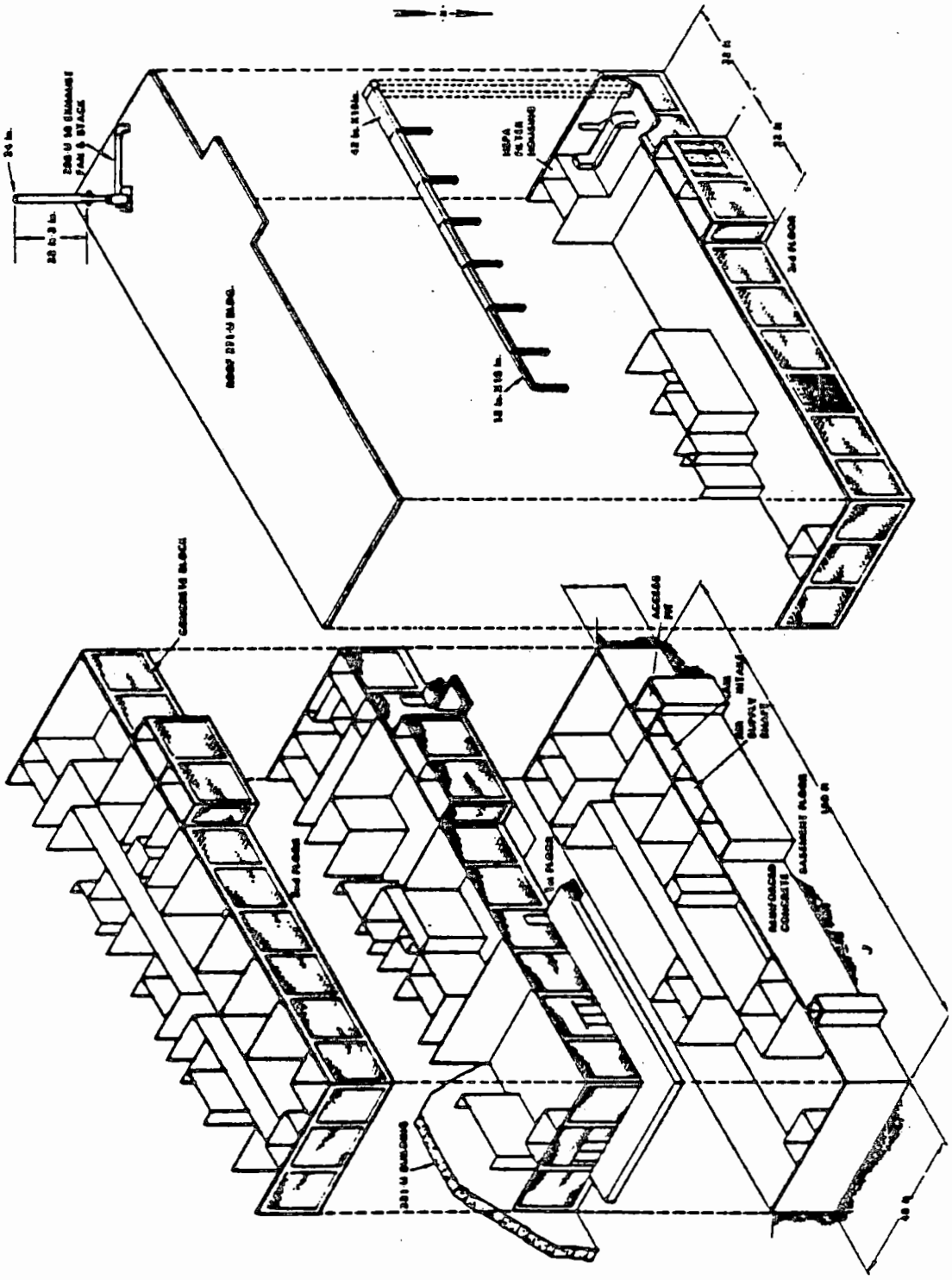

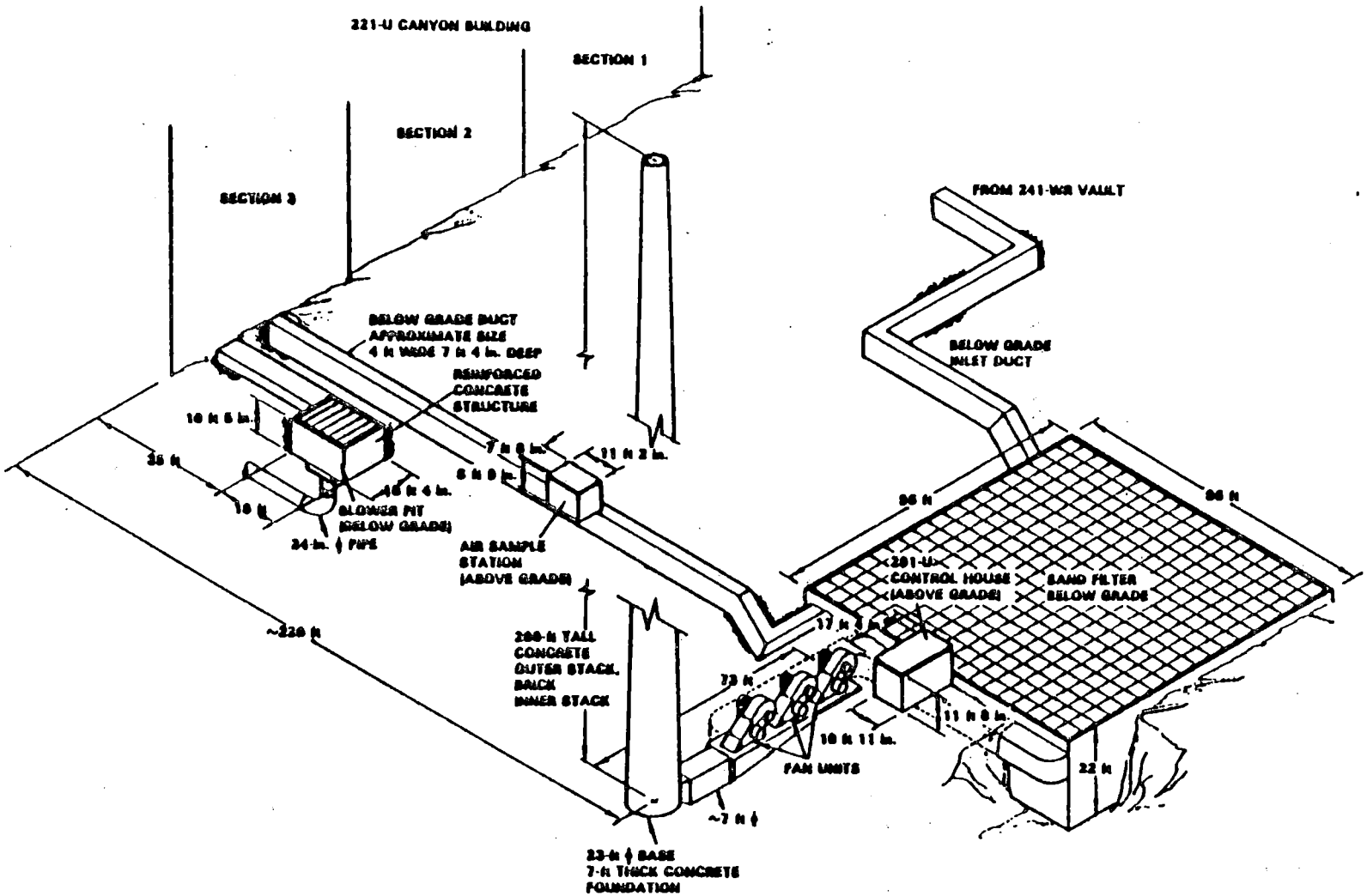

Figure 3. 291-U Canyon Building Ventilation System.

2.2 PROCESS DESCRIPTION

The 221-U reinforced concrete canyon building was originally constructed as an integral part of the U Plant fuel separations facility, but was never used for that purpose. From 1950 through 1952, U-Plant was extensively modified for the uranium metal recovery program. Modifications included installing new process equipment in the affected cells in the canyon building. From 1952 to 1958 the 221-U Canyon Building was used to recover uranium from high-level waste underground storage tanks (UST) containing liquid waste from the bismuth phosphate process (B&T) fuel separation plants. Solvent extraction with tributyl phosphate separated and decontaminated uranium from the USTs waste. The recovered uranium nitrate hexahydrate was then sent to 224-U for further processing.

The 276-U Solvent Handling Facility was built for tributyl phosphate and diluent storage, and for makeup and treatment of the organic solutions used in the 221-U Building.

The 271-U office/service building is a four-story building originally intended as a support facility for 221-U operations. The first and second floors contain offices and storage spaces. The third floor contained chemical makeup facilities and a plutonium storage area, but was never used to store plutonium. From 1975 to 1985, this floor was used as a storage area for archived contaminated sediments to support low-level waste management. The basement contains compressors, ventilation supply equipment, offices, and shops.

The operating 291-U Canyon Building Ventilation System is made up of an exhaust fan control house (291-U), stack (291-U-1), sand filter, and vessel vent pit. In addition, the ventilation system includes several hundred feet of underground concrete air tunnels connecting to 221-U, some smaller blower pits, and filter pits. This facility originally provided exhaust ventilation for the 221-U Canyon Building.

3.0 STATUS OF OPERATION

The U Plant complex is retired from service and declared surplus. No operations or processes have been conducted at the facility since it was shut down in 1958. Since shutdown, the 221-U canyon area has been used to store contaminated, deactivated equipment from other processing plants and most of the original equipment that was installed for the uranium metal recovery program. Support facilities (change room, showers, and lavatories) are not used except the change room, which is used by surveillance personnel conducting weekly canyon visual inspections, monthly fire extinguisher inspections, and periodic maintenance of stored equipment. The process system is physically incapable of operating because transfer lines have been disconnected, equipment was removed, etc. The few systems that remain in operation include: sanitary water, sanitary sewer, electrical, lighting, and

the canyon and cell exhaust system (291-U-1 Stack). At present, liquid levels are verified only in Tank 5-6, Sump 5-R, and the sumps in the electrical gallery. The facility exhibits a dose rate and radioactive surface contamination in the canyon.

The 276-U Solvent Handling Facility is not occupied and the three tanks are empty. Only the electrical and chemical sewer systems are operational.

The 271-U Office/Service Building is no longer occupied by personnel on a continuous basis. Operational systems include a supply fan, bathroom facilities, and a sink in the basement of the building.

The 291-U Canyon Building Ventilation System provides exhaust ventilation for the 221-U Canyon Building. It continues to serve its original purpose and is planned to remain in operation until the 221-U Building is fully decommissioned.

Routine surveillance and required maintenance are conducted on the U Plant Complex and will be continued until final decommissioning is accomplished.

4.0 SOURCE TERM

No process materials or wastes are being generated at U Plant. However, as a result of past operations, radioactive waste and other hazardous materials do exist and are identified below. This listing identifies wastes and materials that may have a potential for entering an effluent stream.

4.1 RADIOACTIVE MATERIALS

The following are radioactive materials or wastes that have been identified or are potentially present in the facility.

- **ASBESTOS**--Radioactive contaminated asbestos, an original facility building material used for insulation, is potentially present.
- **LEAD**--Radioactive contaminated lead, an original facility building material used for shielding, is potentially present.
- **ROOM WASTE**--A minimal amount of radioactive "room" wastes, limited to SWPs, swipes, and other materials used during routine surveillance and maintenance activities, is routinely collected at exit points of radiation areas and disposed of properly.

- **SURFACE CONTAMINATION**--Fixed and loose surface contamination is present in the canyon and, to a minor extent, external to the canyon in other defined areas.

- **LIQUID WASTE**--Radioactive liquid waste may exist in the waste tanks in Tank 5-6, Sump 5-R, and in various isolated sumps in the electrical gallery of 221-U.

4.2 NONRADIOACTIVE HAZARDOUS MATERIAL

Presently, no identified regulated materials or waste [i.e., *Resource Conservation and Recovery Act of 1976* (RCRA) (EPA-), *Comprehensive Environmental Response, Compensation, and Liability Act of 1980* (CERCLA), *Superfund Amendments and Reauthorization Act of 1986* (SARA)] are stored in the facility. The following materials are still in use as originally designed.

- **ASBESTOS**--Asbestos, an original facility building material used for insulation, is potentially present.

- **LEAD**--Lead, an original building material used for shielding, is potentially present.

- **POLYCHLORINATED BIPHENYLS**--There is a potential for the presence of polychlorinated biphenyls (PCB), an original facility building material contained in light ballasts in florescent light fixtures and transformers, is potentially present.

- **MISCELLANEOUS USED PRODUCTS**--Several containers of used products (i.e., lubricants and household and industrial cleaning agents) packaged in original containers have been discovered. When discovered, these materials are collected and either released for beneficial use or reuse or shipped for disposal.

5.0 POTENTIAL UPSET-OPERATING CONDITIONS

The materials list presented in Section 3.0 was reviewed to determine if a potential exists for any of the available radioactive and nonradioactive hazardous materials or wastes to enter an effluent stream under either routine conditions or identified credible upset conditions.

5.1 ROUTINE CONDITIONS

Routine operating activities with respect to a deactivated facility are minimal. Radioactive and hazardous materials or wastes, except the small amount of "room" wastes identified in Section 3.1, are not generated at the facility. As noted before, only the sanitary water, sanitary sewer, electrical, lighting, chemical sewer (276-U only), and the canyon and cell exhaust system (291-U-1 Stack) are operating.

Only three of the active systems may result in an effluent stream to the environment: The sanitary sewer system, the chemical sewer (276-U), and the 291-U-1 Exhaust Stack. Several sanitary sewer lines for a few nonradiological, nonhazardous sources in U Plant intersect with other building lines before entering a septic tank and associated tile fields. Although not tested for the presence of radiological or hazardous constituents, it is assumed that because no known radioactive or nonradioactive hazardous materials are in proximity of the sanitary sewer lines these materials would not be present in the lines during routine activities (i.e., no source terms identified). The 276-U chemical sewer system has not been used for a number of years. No source terms have been identified that could enter the chemical sewer system. The 291-U-1 Exhaust Stack, a radiological effluent discharge point, operates continuously. The exhaust system provides a slight negative pressure on the facility and discharges filtered air to the environment. The sampling and monitoring system on the stack consists of a record sampler and a beta-gamma continuous air monitor (CAM) unit. No past recordable releases (based on the CAM Hi Radiation Alarm at 2000 c/m) are documented during routine activities. The U Plant complex has no nonradiological gaseous effluent discharge points.

5.2 UPSET CONDITIONS

Upset operating conditions in a deactivated facility can be difficult to identify. The Guide (WHC 1991) defines an upset condition as "Any one condition that is outside the normal process operating parameters, or an unusual plant operating condition where one confinement/containment barrier or engineered control has failed." Section IV-2-1 of the Guide (WHC 1991) also states that "Facility building materials... should not be included unless there is a significant potential for release during an upset condition." The radioactive and nonradioactive hazardous materials identified in Section 3.0 were reviewed against the potential of being released to an effluent stream as a result of an upset condition. If no credible upset condition could be identified, further discussion was considered unwarranted.

5.2.1 Radioactive Materials

The radioactive materials that have the potential of being released to an effluent stream during an upset condition are discussed below.

5.2.1.1 Asbestos. No occurrence has been recorded in which asbestos-containing materials were released in radioactive contaminated areas in quantities that could produce a "...significant potential for release..." to an effluent stream, i.e., the 291-U Exhaust Stack. The potentially radioactively contaminated asbestos that exists in the canyon is inaccessible to both personnel and operational equipment that could possibly disturb asbestos surfaces. The probability of any asbestos insulating material becoming dislodged from sufficiently large areas during any single incident, and releasing enough fibers (not settling on the surrounding equipment, walls, and floors) to enter the exhaust flow stream is considered low.

5.2.1.2 Lead. No credible upset condition can be identified that would result in the migration (by any pathway) of in-place radioactively contaminated lead shielding to an effluent stream. It is considered highly improbable for any of the radioactively contaminated lead that potentially exists in the canyon to enter a gaseous or liquid effluent stream.

5.2.1.3 Room Waste. No past contamination migration from the designated radiation area collection points to the environment has been recorded. All personnel that enter contaminated areas have been trained and must survey when exiting the area. During an emergency exit, however, (i.e., fire, etc., blocking main exit route with surveillance equipment) personnel wearing potentially contaminated clothing may leave through an unmonitored egress point and then obtain monitoring assistance. However, an emergency exit has not been recorded during HRO management. Therefore, the probability for radioactively contaminated room waste to migrate from a collection point is considered low. Any contamination discovered in a nonradiologically identified area, resulting from the above upset condition, would be cleaned up and disposed of appropriately.

5.2.1.4 Surface Contamination. No occurrence has been recorded in which the fixed or loose surface contamination present in the canyon or elsewhere has migrated to the exhaust flow stream. The majority of contamination exists in areas that are inaccessible to both personnel and operational equipment, which could possibly disturb contaminated surfaces. The probability of any radioactive material becoming dislodged from sufficiently large areas during any single incident and releasing to the exhaust flow stream is considered very low.

5.2.1.5 Liquid Waste. No occurrence has been recorded in which liquid wastes have migrated from the vessels in which they are contained. The liquid levels are routinely monitored. There is no pathway in which the tanks can be relieved of their contents other than by breach, because all transfer systems and components have been physically disabled. It is considered highly improbable for any liquid waste to enter an effluent stream. Even though the vessels containing the wastes are several decades old, the vessels are not exposed to the effects of weathering and there is no evidence of metal corrosion or fatigue. In the unlikely event that a vessel does fail (failure of first containment), the contents of the vessel can be more than adequately contained by the concrete cell surrounding the vessel, as originally designed. Discussion on cell failure (second containment) is beyond the scope of the definition of upset condition.

5.2.2 Nonradioactive Hazardous Material

The nonradioactive hazardous material that have the potential of being released to an effluent stream during an upset condition are discussed below.

5.2.2.1 Asbestos. No occurrence has been recorded in which asbestos-containing materials were released in quantities that could produce a "...significant potential for release..." to an effluent stream (i.e., the 291-U Exhaust Stack). Because only routine surveillance and minimal maintenance occurs at the retired facility, the probability of personnel or operational equipment inadvertently dislodging asbestos-containing insulation

from sufficiently large areas during any single incident, and releasing enough fibers (not settling on the surrounding equipment, walls, and floors) to enter the exhaust flow stream is considered low.

5.2.2.2 Lead. No credible upset condition can be identified that would result in the migration (by any pathway) of in-place lead shielding to an effluent stream. The lead, if any, would exist in areas not frequented by personnel and it is considered highly improbable for any lead to enter a gaseous or liquid effluent stream.

5.2.2.3 PCBs. No occurrence has been recorded in which PCB-containing light ballasts or electrical transformers have leaked or spilled in quantities that could produce a "...significant potential for release..." to an effluent stream i.e., the sanitary sewer system. The areas containing the florescent light fixtures have floor drains that are filled with grout, making the sanitary sewer lines inaccessible for transport. Any break of a ballast in which contents have leaked or spilled would be located during routine surveillance, identified as potentially containing PCBs, cleaned up, and disposed of appropriately. No credible avenue for migration (by any pathway) to an effluent stream can be identified.

5.2.2.5 Miscellaneous Used Products. No occurrence has been recorded in which containers of used products (i.e., lubricants, and household and industrial cleaning agents) have leaked or spilled in quantities that could produce a "...significant potential for release..." to an effluent stream (i.e., the sanitary sewer system). The area containing the containers does not have floor drains, making the sanitary sewer lines inaccessible for transport. Any leak or spill of the largest container would be approximately less than a gallon in volume and would be located during routine surveillance, promptly cleaned up, and disposed of appropriately. No credible avenue for migration (by any pathway) to an effluent stream can be identified. The containers are in the process of being characterized and eliminated either by releasing them for beneficial use or reuse or shipping them for disposal.

5.3 EFFLUENT POINT OF DISCHARGE DESCRIPTION

If a material were identified (see Section 4.0) as having even a remote chance of being a source term and having a chance of entering an effluent stream, further evaluation would be noted below for the probability and consequence of a release to the environment. No source points for routine activities that released radiological or nonradiological hazardous materials above regulatory values were identified. Therefore, only upset conditions with a potential for releasing radiological or nonradiological hazardous materials are identified below.

5.3.1 Gaseous Effluent Streams

The following points of discharge were reviewed [Guide, Section 5.0 (WHC 1991)]. The following paragraphs either identify the discharge points as inactive or describe their potential as sources of release to the environment.

5.3.1.1 Supply Intakes. A supply fan is operational at the 271-U Building. The flow is through a filter system into the 271-U Building then to the 221-U galleries, and finally through to the canyon side. Exhaust is provided by means of the main stack describe in Section 5.1.2.

5.3.1.2 Main Stack. In the event of asbestos fiber (radioactive or nonradioactive) migration into the exhaust stream, it can be considered highly improbable for any asbestos fibers to pass through the sand filter (which has an efficiency of 99.997%), resulting in a release to the environment. (Failure of a decontamination factor at the same time asbestos dislodged is not credible.)

In the event of radiological surface contamination migration into the exhaust system, it can be considered highly improbable for any contamination to pass through the sand filter (which has an efficiency of 99.997%), resulting in a release to the environment. (Failure of a decontamination factor at the same time contamination is dislodged is not credible.) No past recordable releases (based on the CAM Hi Radiation Alarm at 2000 c/min) are documented. (NOTE: Sampling provided by Health Physics has not indicated any radioactive materials, either within the facility itself or through the exhaust system even when the stack has been temporarily shut down.)

5.3.1.3 Ventilation. The building vents are an inactive system. The building exhausts, building ventilation, and HVAC exhaust are covered in the Main Stack description.

5.3.1.4 Unmonitored Ingress/Egress Points. In the unlikely event that an emergency exit (i.e., blockage of a main exit route and inability to properly discard potentially contaminated protective clothing or use survey equipment) is required by surveillance personnel, any radiological contamination migration from a designated area would be localized, promptly identified, cleaned up, and disposed of appropriately. Any quantity released to the environment would be considered highly insignificant.

5.3.1.5 Other Filtered or Unfiltered Stream. No other filtered or unfiltered stream to the environment has been identified.

5.3.2 Liquid Effluent Streams

The following points of discharge were reviewed [Guide, Section 5.0 (WHC 1991)]. The following paragraphs either identify the discharge points as inactive or describe their potential sources of release to the environment.

5.3.2.1 Storm Drain/Facility Grounds Runoff. The storm drain facility grounds runoff is an inactive system.

5.3.2.2 Sanitary Sewer. As indicated in Section 4.0, no source term that could enter the effluent stream has been identified.

5.3.2.3 Chemical Sewer (276-U). As indicated in Section 4.0, no source term that could enter the effluent stream has been identified.

5.3.2.4 Cooling Water (276-U). The cooling water system is inactive.

5.3.2.5 Other Streams. The liquid radioactive streams, steam condensate streams, and process condensate streams are inactive systems. No other filtered or unfiltered streams to the environment have been identified.

6.0 SUMMARY

The U Plant Complex potential radiological airborne effluent is routinely sampled and the results are reported in WHC-EP-0141-2 (WHC 1990). The monitored airborne effluent, Exhaust Stack 291-U-1 is considered a "major" stack, or "significantly contributing to the total activity discharged from the 200 Areas." However, the stack is reported as having a radionuclide concentration (µCi/mL) below the lower limit of detection for $^{239,240}Pu$ (a ratio to administrative control value [ACV] of 0.13) and ^{241}Am. The radionuclide concentrations for ^{137}Cs and $^{89,90}Sr$ did not exceed the ACV. No potential radiological liquids effluents are identified for the buildings. It was established earlier that, for most cases, no upset conditions were identified in which radiological materials or wastes could enter an effluent stream and be released to the environment. The few upset conditions that appear credible have a low probability of occurrence. It is also concluded that no significant radiological increases to the environment would result during the occurrence of any of the identified upset conditions.

No potential nonradiological hazardous effluents (airborne or liquid) have been identified or reported in WHC-EP-0141-2 (WHC 1990) for the U Plant Complex. It was established earlier, that for most cases, no upset conditions were identified in which nonradiological hazardous materials or wastes could enter an effluent stream and be released to the environment. The few upset conditions that appear credible have a low probability of occurrence. It is also concluded that no significant hazardous increases to the environment would result during the occurrence of any of the identified upset conditions.

Two conclusions can be drawn from the evaluation detailed in Section 3.0 through 5.0, the reported effluent data summarized above, and the initial results in the annual environmental summary report, namely: "the calculated 50-yr effective dose equivalent for the hypothetically maximally exposed individual from all Hanford Site airborne and liquid effluents was 0.05 mrem in 1989." First, that the total projected dose from radionuclides does not exceed 0.1 mrem EDE from the U Plant complex discharge point; second, regulated materials are discharged from the U Plant that exceed 100% of a reportable quantity or a permitted quantity. Therefore, a FEMP is not required for the Surplus U Plant Complex (see Attachment).

7.0 REFERENCES

Comprehensive Environmental Response, Compensation, and Liability Act of 1980, as amended, 42 USC 9601 et seq.

Resource Conservation and Recovery Act of 1976, as amended, 42 USC 6901 et seq.

Superfund Amendments and Reauthorization Act of 1986, as amended, 42 USC 11001 et seq.

WHC, 1990, *Westinghouse Hanford Company Effluent Discharges and Solid Waste Management Report for Calendar Year 1989: 200/600 Areas*, WHC-EP-0141-2, Westinghouse Hanford Company, Richland, Washington.

WHC, 1991, *A Guide for Preparing Hanford Site Facility Effluent Monitoring Plans*, WHC-EP-0438, Westinghouse Hanford Company, Richland, Washington.

9413134.1697

ATTACHMENT 1

DETERMINATION OF FACILITY EFFLUENT MONITORING PLAN REQUIREMENT

This page intentionally left blank.

9413243.1690

DETERMINATION OF FACILITY EFFLUENT MONITORING PLAN REQUIREMENT

FACILITY INVENTORY AT RISK OF RADIOACTIVE MATERIALS

Facility: Surplus U Plant Discharge Point: 291-U Exhaust Stack

Radionuclide	Physical/Chemical Form	Quantity (Curies)	Quantity Released (μCi/mL)	Projected Dose (mrem)
1. $^{89,90}Sr$	Solid	7.0 E-05	2.17 E-13	<0.1 mrem
2. ^{137}Cr	Solid	7.4 E-04	2.30 E-12	<0.1 mrem
3. $^{239,240}Pu$	Solid	8.5 E-07	<2.64 E-15	<0.1 mrem
4. ^{241}Am	Solid	<7.0 E-07	<2.19 E-15	<0.1 mrem
Total				<0.1 mrem

FACILITY INVENTORY AT RISK OF NONRADIOACTIVE HAZARDOUS MATERIALS

Regulated material	Quantity (lbs)	Quantity released	Reportable Quantity (lbs)	% of Reportable Quantity/Year
1. None identified				
2.				
3.				
4.				

Identification of Reference Material

WHC-EP-0141-2

If the total projected dose from radionuclides exceeds 0.1 mrem ede from any one discharge point or if any one regulated material discharged from a facility exceeds 100% of a reportable quantity or a permitted quantity, a FEMP is required for that facility. Check the appropriate space below.

FEMP is required _____ FEMP is not required X

EVALUATOR J. R. Brehm DATE 1-24-91

MANAGER, ENVIRONMENTAL L. P. Diedtker DATE 2-15-91

FACILITY MANAGER G. E. Van Sickle DATE 2/14/91

This page intentionally left blank.

9413136.0683

PART 5

PLUTONIUM FINISHING PLANT

FACILITY EFFLUENT MONITORING PLAN DETERMINATION

This page intentionally left blank.

9413136.0684

CONTENTS

1.0 INTRODUCTION 1-1

2.0 FACILITY DESCRIPTION 2-1
2.1 PFP BUILDINGS 2-1
2.1.1 The 234-5Z Building 2-1
2.1.2 The 236-Z Building 2-3
2.1.3 The 231-Z Building 2-4
2.1.4 The 232-Z Building 2-4
2.1.5 The 241-Z Building 2-5
2.1.6 The 242-Z Building 2-5
2.1.7 The 270-Z Building 2-6
2.1.8 The 291-Z Building 2-6
2.1.9 The 2736-Z Building 2-6
2.1.10 The 2736-ZB Building 2-7
2.2 216-Z-20 CRIB EFFLUENT FACILITY 2-8
2.3 AUXILIARY FACILITIES 2-8

3.0 STATUS OF OPERATION 3-1
3.1 THE 234-5Z BUILDING PROCESS 3-1
3.2 THE 236-Z BUILDING PROCESS 3-1
3.3 THE 232-Z, 242-Z, AND 291-Z BUILDING PROCESSES 3-3

4.0 SOURCE TERM 4-1
4.1 LIQUID EFFLUENTS 4-1
4.2 GASEOUS EFFLUENTS 4-2
4.3 EFFLUENTS TO THE 216-Z-20 CRIB 4-5
4.3.1 Identification and Characterization of Potential Inventory at Risk 4-5
4.3.2 Effluent Stream Description 4-5
4.3.3 Effluent Point Discharge Description 4-9
4.4 EFFLUENTS TO THE 216-Z-21 SEEPAGE BASIN SYSTEM 4-9
4.4.1 Identification and Characterization of Potential Inventory at Risk 4-9
4.4.2 Effluent Stream Description 4-13
4.5 EAST AND WEST TILE FIELDS 4-13
4.5.1 Identification and Characterization of Potential Inventory at Risk 4-14
4.5.2 Effluent Stream Description 4-14
4.6 216-Z-13, 216-Z-14, AND 216-Z-15 FRENCH DRAINS 4-15
4.6.1 Identification and Characterization of Potential Inventory at Risk 4-15
4.6.2 Effluent Stream Description 4-15
4.7 241-Z TREATMENT TANKS AND FACILITY 4-15
4.7.1 Identification and Characterization of Potential Inventory at Risk 4-15
4.7.2 Effluent Stream Description 4-15
4.8 234-5Z BUILDING ZONE 1 EXHAUST 4-15
4.8.1 Identification and Characterization of Potential Inventory at Risk 4-15
4.8.2 Effluent Stream Description 4-16

CONTENTS (Cont'd)

4.9 291-Z-1 MAIN STACK 4-16
4.9.1 Identification and Characterization of Potential Inventory at Risk 4-17
4.9.2 Effluent Stream Description 4-17
4.10 296-Z-3 STACK FOR THE 241-Z BUILDING 4-19
4.10.1 Identification and Characterization of Potential Inventory at Risk 4-19
4.10.2 Effluent Stream Description 4-19
4.11 296-Z-5 STACK FOR THE 2736-ZB BUILDING 4-20
4.11.1 Identification and Characterization of Potential Inventory at Risk 4-20
4.11.2 Effluent Stream Description 4-20
4.12 296-Z-6 STACK FOR THE 2736-Z BUILDING STORAGE VAULT 4-20
4.12.1 Identification and Characterization of Potential Inventory at Risk 4-21
4.12.2 Effluent Stream Description 4-21
4.13 296-Z-10 AND 296-Z-11 STACKS FOR THE 231-Z BUILDING 4-21
4.13.1 Identification and Characterization of Potential Inventory at Risk 4-22
4.13.2 Effluent Stream Description 4-23
4.14 296-Z-14 STACK FOR THE 232-Z BUILDING (INCINERATOR) 4-23
4.14.1 Identification and Characterization of Potential Inventory at Risk 4-24
4.14.2 Effluent Stream Description 4-25
4.15 2734-ZL BUILDING HEATING, VENTILATION, AND AIR CONDITIONING EXHAUST 4-25
4.15.1 Identification and Characterization of Potential Inventory at Risk 4-25
4.15.2 Effluent Stream Description 4-25

5.0 POTENTIAL UPSET-OPERATING CONDITIONS 5-1
5.1 216-Z-20 CRIB 5-1
5.1.1 Identification and Characterization of Potential Source Terms 5-1
5.1.2 Historical Monitoring/Sampling Data For the Effluent Streams 5-9
5.2 216-Z-21 SEEPAGPE BASIN SYSTEM 5-11
5.2.1 Identification and Characterization of Potential Source Terms 5-11
5.2.2 Effluent Point Discharge Description 5-12
5.2.3 Historical Monitoring/Sampling Data 5-12
5.3 EAST AND WEST TILE FIELDS 5-12
5.3.1 Idenfification and Characterization of Potential Source Terms 5-12
5.3.2 Effluent Point Discharge Description 5-13
5.3.3 Historical Monitoring/Sampling Data 5-13
5.4 216-Z-13, 216-Z-14, AND 216-Z-15 FRENCH DRAINS 5-13
5.5 241-Z TREATMENT TANKS AND FACILITY 5-13
5.5.1 Identification and Characterization of Potential Source Terms 5-13
5.5.2 Effluent Point Discharge Description 5-14

CONTENTS (Cont'd)

5.5.3 Historical Monitoring/Sampling Data 5-14
5.6 234-5Z BUILDING ZONE 1 EXHAUST 5-15
5.6.1 Identification and Characterization of Potential Source Terms 5-15
5.6.2 Effluent Point Discharge Description 5-15
5.6.3 Historical Monitoring/Sampling Data for the Effluent Streams 5-15
5.7 291-2-1 MAIN STACK 5-16
5.7.1 Identification and Characterization of Potential Source Terms 5-16
5.7.2 Effluent Point Discharge Description 5-18
5.7.3 Historical Monitoring/Sampling Data for the Effluent Streams 5-18
5.8 296-Z-3 STACK FOR THE 241-Z BUILDING 5-18
5.8.1 Identification and Characterization of Potential Source Terms 5-18
5.8.2 Effluent Point Discharge Description 5-19
5.8.3 Historical Monitoring/Sampling Data for the Effluent Streams 5-19
5.9 296-Z-5 STACK FOR THE 2736-ZB BUILDING 5-20
5.9.1 Identification and Characterization of Potential Source Terms 5-20
5.9.2 Effluent Point Discharge Description 5-21
5.9.3 Historical Monitoring/Sampling Data for the Effluent Streams 5-21
5.10 296-Z-6 STACK FOR THE 2736-Z BUILDING STORAGE VAULT 5-21
5.10.1 Identification and Characterization of Potential Source Terms 5-21
5.10.2 Effluent Point Discharge Description 5-21
5.10.3 Historical Monitoring/Sampling Data for the Effluent Streams 5-21
5.11 296-Z-10 AND 296-Z-11 STACKS FOR THE 231-Z BUILDING 5-22
5.11.1 Identification and Characterization of Potential Source Terms 5-22
5.11.2 Effluent Point Discharge Description 5-22
5.11.3 Historical Monitoring/Sampling Data for the Effluent Streams 5-23
5.12 296-Z-14 STACK FOR THE 232-Z BUILDING (INCINERATOR) 5-23
5.12.1 Identification and Characterization of Potential Source Terms 5-23
5.12.2 Effluent Point Discharge Description 5-23
5.12.3 Historical Monitoring/Sampling Data for the Effluent Streams 5-24
5.13 2734-ZL BUILDING HEATING, VENTILATION, AND AIR CONDITIONING EXHAUST 5-24
5.13.1 Identification and Characterization of Potential Source Terms 5-24
5.13.2 Effluent Point Discharge Description 5-25

CONTENTS (Cont'd)

6.0 SUMMARY 6-1
6.1 DETERMINATION OF FACILITY EFFLUENT MONITORING PLAN REQUIREMENTS FOR 216-Z-20 CRIB 6-1
6.2 DETERMINATION OF FACILITY EFFLUENT MONITORING PLAN REQUIREMENTS FOR 216-Z-21 SEEPAGE BASIN SYSTEM 6-2
6.3 DETERMINATION OF FACILITY EFFLUENT MONITORING PLAN REQUIREMENTS FOR THE EAST AND WEST TILE FIELDS 6-2
6.4 DETERMINATION OF FACILITY EFFLUENT MONITORING PLAN REQUIREMENTS FOR THE 216-Z-13, 216-Z-14, AND 216-Z-15 FRENCH DRAINS 6-2
6.5 DETERMINATION OF FACILITY EFFLUENT MONITORING PLAN REQUIREMENTS FOR THE 241-Z TREATMENT TANKS AND FACILITY . . . 6-3
6.6 DETERMINATION OF FACILITY EFFLUENT MONITORING PLAN REQUIREMENTS FOR THE 234-5Z BUILDING ZONE 1 EXHAUST 6-3
6.7 DETERMINATION OF FACILITY EFFLUENT MONITORING PLAN REQUIREMENTS 6-4
6.8 DETERMINATION OF FACILITY EFFLUENT MONITORING PLAN REQUIREMENTS FOR THE 296-Z-3 STACK 6-4
6.9 DETERMINATION OF FACILITY EFFLUENT MONITORING PLAN REQUIREMENTS FOR THE 296-Z-5 STACK FOR THE 2736-ZB BUILING 6-4
6.10 DETERMINATION OF FACILITY EFFLUENT MONITORING PLAN REQUIREMENTS FOR THE 296-Z-6 STACK FOR THE 2736-Z BUILIDING STORAGE VAULT 6-5
6.11 DETERMINATION OF FACILITY EFFLUENT MONITORING PLAN REQUIREMENTS FOR THE 296-Z-6 STACK FOR THE 231-Z BUILIDING 6-5
6.12 DETERMINATION OF FACILITY EFFLUENT MONITORING PLAN REQUIREMENTS FOR THE 296-Z-14 STACK FOR THE 282-Z BUILDING (INCINERATOR) 6-6
6.13 DETERMINATION OF FACILITY EFFLUENT MONITORING PLAN REQUIREMENTS FOR THE 2734-ZL BUILDING HEATING, VENTILATION AND AIR CONDITIONING EXHAUST 6-6

7.0 DEFINITIONS 7-1

8.0 REFERENCES 8-1

ATTACHMENT

DETERMINATION OF FACILITY EFFLUENT MONITORING PLAN REQUIREMENT A-1

FIGURES

2-1 Plutonium Finishing Plant Complex 2-2

3-1 Plutonium Finishing Plant Process Flow Diagram 3-2

4-1 Plan and Overall Piping Schematic for Plutonium Finishing Plant Complex Effluent 4-10

4-2 Plan of the 216-Z-20 Crib Area 4-11

4-3 Diagram of the 216-Z-20 Crib 4-12

TABLES

4-1 PFP Liquid Effluent Streams 4-4

4-2 PFP Gaseous Effluent Streams 4-4

4-3 Sources to the Effluents to the 216-Z-20 Crib 4-6

4-4 Major Sources of Effluents to the 216-Z-20 Crib 4-8

5-1 Analysis of the PFP Chemical Sewer System 5-2

5-2 Hazardous Material Potentially Affecting Liquid Effluent From Plutonium Finishing Plant 5-6

5-3 Effluent Release Characteristics 5-10

5-4 Spray Pan Water Sample Results 5-12

LIST OF TERMS

ACGIH	American Conference of Governmental Industrial Hygienists
ACV	administrative control value
ALARA	as low as reasonably achievable
AMU	aqueous make-up
ANN	aluminum nitrate nonhydrate
APCA	Benton-Franklin-Walla Walla Counties Air Pollution Control Authority
BACT	best available technology for airborne control technology
BAT	best available technology for liquid control technology
BPT	best practical control technology currently available
CAM	continuous air monitor
CEM	continuous emission monitoring
CERCLA	*Comprehensive Environmental Response, Compensation, and Liability Act of 1980*
CFR	Code of Federal Regulations
DCG	Derived Concentration Guide
DL	Development Laboratory
DOE	U.S. Department of Energy
DOE-RL	U.S. Department of Energy-Richland Operations Office
DOT	U.S. Department of Transportation
Ecology	Washington Department of Ecology
EDE	effective dose equivalent
EHW	extremely hazardous waste
EL	Engineering Laboratory
EPA	U.S. Environmental Protection Agency
FEMP	facility effluent monitoring plan
HEPA	high-efficiency particulate air
HF	hydrogen fluoride
HVAC	heating, ventilation, and air conditioning
ICRP	International Commission on Radiation Protection
in. Hg	inches of mercury vacuum
KEH	Kaiser Engineers Hanford
LI/LO	load in/load out
MCL	maximum contamination level
MT	miscellaneous treatment
NESHAP	"National Emission Standards for Hazardous Air Pollutants"
NPDES	National Pollution Discharge Elimination System
PCB	polychlorinated biphenyl
PFP	Plutonium Finishing Plant
PNL	Pacific Northwest Laboratory
POTW	Publicly Owned Treatment Works
PPCW	protected process cooling water
PRF	Plutonium Reclamation Facility
PSD	significant deterioration permit
PSF	Plutonium Storage Facility
R&D	research and development
RAEPS	Washington State Department of Health, Radioactive Air Emissions Permit FF01: Supplementary Information
RCG	Radioactive Concentration Guide
RMA	remote mechanical A
RMC	remote mechanical C

LIST OF TERMS (continued)

RQ	reportable quantity
S&C	slag and crucible
SARA	*Superfund Amendments and Reauthorization Act of 1986*
SNM	special nuclear material
SPCC	spill prevention control and countermeasure
SST	safe secure transport
UOR	unusual occurrence report
Westinghouse Hanford	Westinghouse Hanford Company
wg	water gauge
WG	weapons grade

THIS PAGE INTENTIONALLY LEFT BLANK

THIS PAGE INTENTIONALLY
LEFT BLANK

PLUTONIUM FINISHING PLANT FACILITY EFFLUENT MONITORING PLAN DETERMINATION

1.0 INTRODUCTION

This report presents material required for the facility effluent monitoring plan (FEMP) for the Plutonium Finishing Plant (PFP). Information discussed in *A Guide for Preparing Hanford Site Facility Effluent Monitoring Plans* (WHC 1991a) is included in this document. This includes the following:

- Introductory material
- Definitions of terms that may be used in the guidance material, regulations, standards, or references from which facility description or effluent information is obtained
- Information on regulations and standards applicable to effluent releases and monitoring
- Information that was prepared for the FEMP determination form for the PFP.

The FEMP determination form document for the PFP contained facility descriptions, process descriptions, identification and characterization of potential source terms, description of effluent paths, and determination of FEMP requirements for the following:

- 216-Z-20 Crib, 216-Z-21 Seepage Basin System
- East and West Tile Fields
- French drains
- 241-Z Treatment Tanks and Facility
- 234-5Z Building
- 291-Z-1 Main Stack
- 241-Z Building Stack
- 2736-ZB Building Stack
- 2736-Z Building Stack
- 231-Z Building Stacks

- 232-Z Building Stack
- 2734-ZL Building heating, ventilation, and air conditioning (HVAC) Exhaust.

The information from the form document has been expanded and made more complete in some areas.

2.0 FACILITY DESCRIPTION

The PFP Complex includes a number of operations involved in the recovery and chemical conversion of plutonium. The PFP Complex is located in the 200 West Area of the Hanford Site. The complex consists of one primary processing facility and several ancillary buildings (Figure 2-1).

2.1 PFP BUILDINGS

The PFP process and support buildings include 234-5Z, 236-Z, 231-Z, 232-Z, 241-Z, 242-Z, 270-Z, 291-Z, 2736-Z, 2736-ZA, and 2736-ZB. Some processes within the PFP buildings are no longer operated. For clarity, therefore, the status of each of the process support buildings and their functions are described using the following terms.

- **Active** - An active process is currently operating or is scheduled for future operation.
- **Standby** - A standby process is not currently operating but is operable with appropriate repairs/upgrades. Future operations are not scheduled.
- **Layaway** - A layaway process is not operable without major repairs/upgrades. No operations are planned. This category is scheduled for closure as well as decontamination and decommissioning.
- **Future** - A future building, process, and/or enhancement that is planned for construction and operation.

2.1.1 The 234-5Z Building (active)

The 234-5Z Building, also referred to as PFP or the 234-5 Building, is approximately 180 ft wide by 500 ft long. The 234-5Z Building extends from 9.5 ft below grade to 46.8 ft above grade. Floor levels are designated as the basement, first floor, duct level, second floor, and roof level. Noncombustible construction materials are used. The frame is structural steel with an outer sheathing of aluminum panels over rock wool insulation and 16-gauge sheet steel. The first floor is a concrete slab, the duct level is sheet metal roof decking, and the second floor is a concrete slab. The roof is insulated metal decking. Interior walls are reinforced concrete and steel or metal studs, metal lath, and plaster. The vault and process area doors are constructed of steel with combination safe-type locks.

The 234-5Z Building basement consists mostly of pipe tunnels carrying drain piping to exterior manholes. The first floor houses the two plutonium processing lines [Remote Mechanical A (RMA) and Remote Mechanical C (RMC)] and their control rooms; scrap stabilization gloveboxes; plutonium storage vaults; the plutonium nitrate feed load-in/load-out (LI/LO), blending, and storage facilities; the engineering laboratory (EL), also referred to as the analytical laboratory, and development laboratory (DL) areas; the instrument

Figure 2-1. Plutonium Finishing Plant Complex.

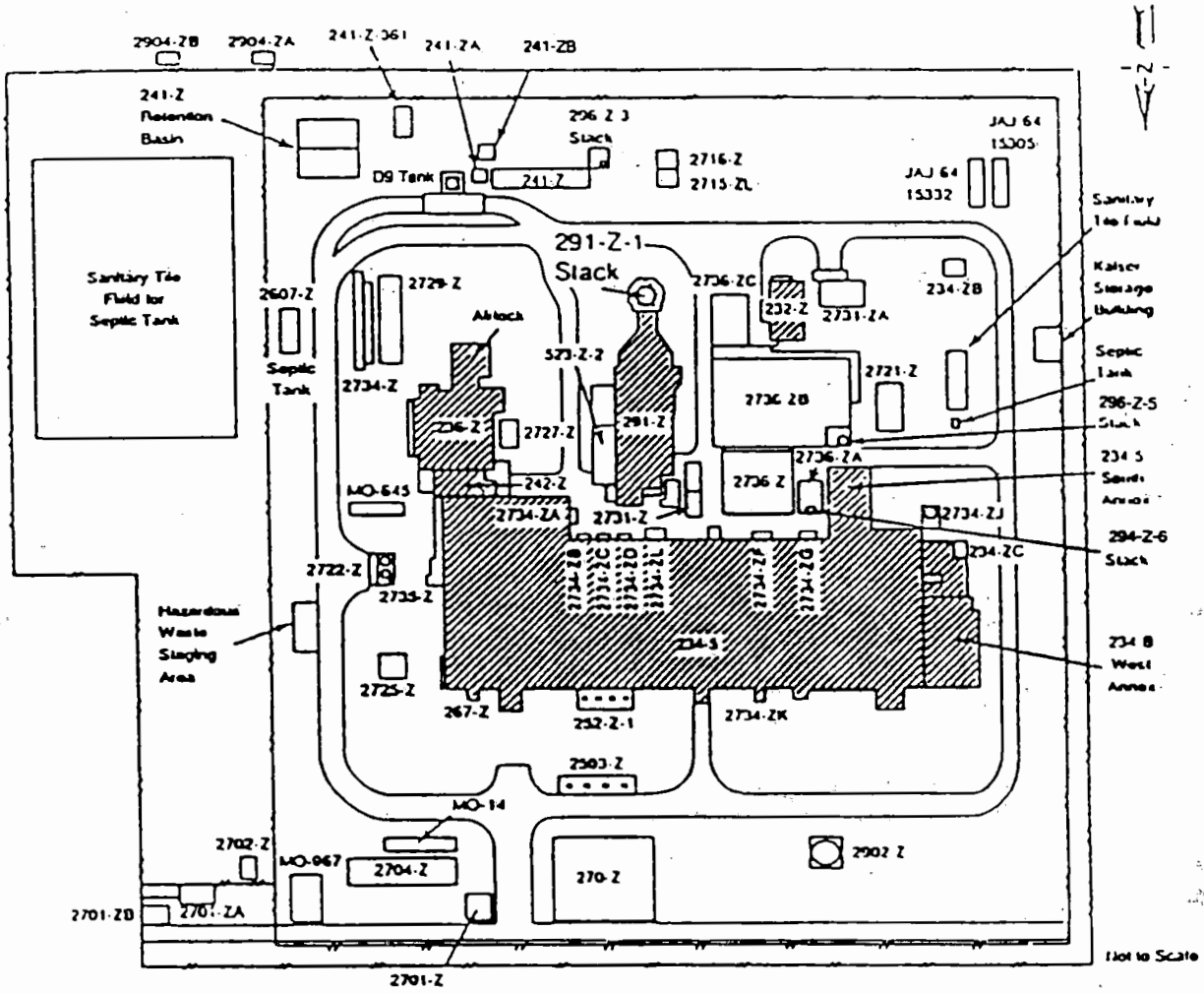

maintenance shops; the building maintenance shops; locker rooms with change facilities and restrooms; and office space. The duct level contains most of the service piping, ventilation ducts, and some ventilation filter boxes. The lunchroom, conference room, materials storage room, chemical feed preparation and aqueous make-up rooms, locker rooms with change facilities and restrooms, and offices are on the second floor. Also located on the second floor are exhaust-air ductwork, including ventilation filter boxes and filter rooms, and the fan room. The fan room, located on the northwestern corner of the second floor, houses the ventilation supply fans, the steam inlet and distribution system, air dryers, the distilled water still, air chilling units, and the Power Control Room. Building air is exhausted through the 291-Z-1 Stack.

2.1.2 The 236-Z Building (active)

The 236-Z Building is located south of the southeastern corner of the 234-5Z Building and connected to it by the 242-Z Building. The 236-Z Building, built as the CAC-880 Project, houses the Plutonium Reclamation Facility (PRF). It is also referred to as 880, PRF, Plutonium Nitrate Production Facility, or 236. Building air is exhausted through the 291-Z-1 Stack.

The building is a four-story structure, topped by a two-story penthouse. It is about 79 ft wide by 71 ft long. Its outstanding internal structural feature is a single process equipment cell that is 32 ft wide by 52 ft long, extending up through the third floor.

The building is constructed of reinforced concrete, except for the roof and the fourth floor ceiling. The roof is of open-web steel joist framing, steel decking, rigid insulation, and graveled built-up roofing. A portion of the southern building wall is also the south wall of the process cell and includes an opening in the reinforced concrete wall for moving large equipment. This opening is filled by a door and surrounding block wall. The concrete block wall has been steel plated and reinforced to withstand seismic effects.

Maintenance shop facilities are located on the service (east) side of the building on the ground floor. The second floor of the service side is used for a maintenance glovebox and ventilation exhaust filters. Building service equipment and electrical switch gear are on the third floor of the service area. The fourth floor is used for chemical preparation, miscellaneous treatment (MT), operating control room, slag and crucible (S&C), dissolver equipment, and a column room in which vertical sections of two liquid-liquid extraction columns penetrating the room from above and below are housed in a glovebox. The first through the fourth floors are serviced by a service elevator located within the east side of the building.

The process cell has a 2-ft-thick concrete wall between the cell and access hoods. These access hoods are stainless steel paneled hoods containing glass viewing windows and Hypalon* hood gloves. The hoods are on both sides

---

*Hypalon is a trademark of E.I. du Pont de Nemours and Company.

of the cell on the first two floors. The hoods contain process piping, pumps, valves, flowmeters, and other equipment that frequently requires maintenance.

The cell floor is covered with a stainless steel liner extending 18 in. up the side wall. The remaining cell wall and ceiling surfaces are covered with chemical-resistant coatings. Water-filled viewing windows on the third floor have adjacent remote control stations for the cell crane.

A remotely operated overhead crane in the process cell can be used to remove or replace process equipment. Process equipment is fabricated as part of an assembly. The assembly contains supporting dunnage, safety bars, and tapered plugs. The plugs fit into the 2-ft-thick concrete wall; the safety bars prevent accidental moving of the tanks. All piping (process, electrical, and instrument) is routed through the plugs. Disconnecting all necessary fittings in the gloved hoods permits equipment removal. Equipment can be moved by the crane to a special maintenance station at the north end of the process cell. This maintenance area is shielded from the rest of the cell by a 10-in. concrete wall. The maintenance station is equipped with a lead-covered stainless steel hood panel and leaded glass windows.

2.1.3 The 231-Z Building (standby)

The 231-Z Building is two stories constructed of reinforced concrete and concrete block. The second floor is one large open bay with floor area of approximately 23,500 ft^2 used for piping, ventilation ducts, filter cages, miscellaneous storage, and supporting facilities (vacuum pumps, hydraulic equipment, etc.) for equipment on the first floor. The first floor area is approximately 27,000 ft^2, of which 5,300 ft^2 are used for building service machinery. The remaining 21,700 ft^2 are laboratory area. In addition to the main structure, there is a 3,000-ft^2 concrete block office extension. The office building is attached to the laboratory structure and isolated by air locks. The office building has refrigerated air conditioning completely separated from the laboratory ventilation system. Building air is exhausted through the 296-Z-10 and 296-Z-11 Stacks.

2.1.4 The 232-Z Building (layaway)

The 232-Z Building houses the layaway Contaminated Waste Recovery Process. It was commonly called the incinerator. It was constructed by Project CGC-013, Plutonium Recovery from Contaminated Material. The Contaminated Waste Recovery Process was partially decontaminated and decommissioned in 1984.

The 232-Z Building is located about 200 ft south of the main portion of the 234-5Z Building and is about 100 ft west of the 291-Z-1 Stack. It is oriented with its major axis on a north-south line.

The 232-Z Building is of concrete block construction. It is approximately 37 ft wide by 57 ft long. It is divided into areas for process, storage, changeroom, chemical preparation, ventilation, and electrical equipment. Except for ventilation supply and exhaust filtration, it uses services from the 234-5Z and 291-Z Buildings.

The building is a single story over the process and storage areas and two stories over the service areas at the north end. The respective roofs are about 15 ft and 19 ft above grade. These roofs consist of concrete over metal decking, with an insulation and built-up asphalt-gravel covering. The roofs are sloped slightly to the south to provide drainage. Building air is exhausted through the 296-Z-14 Stack.

2.1.5 The 241-Z Building (active)

The 241-Z Building is designated as the Waste Treatment Facility. It is commonly called the 241-Z Sumps and in the past was called the 216-Z Large Waste Sump Tanks. It is a buried structure with a sheet-metal enclosure over the top, which houses a hoist for removing cell covers. It consists of five separate enclosures or ventilated cells, each containing a 20,000-L tank used to accumulate the liquid wastes generated in the PFP before transfer to the tank farms. Built of reinforced concrete, it is approximately 20 ft wide, 92 ft long, and 22 ft deep. It is located approximately 330 ft south of the 234-5Z Building.

At the southwest corner of the 241-Z Vault Deck is the equipment for the 241-Z vessel vent and vault ventilation system. The 24-ft-high 296-Z-3 Stack and its associated fans, filters, and controls are located on a 14-ft by 18-ft concrete pad. Building air is exhausted through the 296-Z-3 Stack.

2.1.6 The 242-Z Building (layaway)

The 242-Z Building houses portions of the Waste Treatment and Americium Facility, which are in layaway and planned for future decontamination and decommissioning. Built primarily by Project CGC-912, it is usually referred to as 912 or WT.

The 242-Z Building structure is between the southeastern corner of the 234-5Z Building and the 236-Z Building. A corridor connecting the 234-5Z, 242-Z, and 236-Z Buildings runs along its east side. At its west end is an entrance enclosure for outside entry into both the 242-Z Building and the EL area in the 234-5Z Building.

The building is approximately 40 ft wide, 26 ft long, and 23 ft high. The south portion, approximately 40 ft wide by 10 ft long, is the tank room (tank cell). This room extends the full inside building height. The north portion, designated the control room, has a mezzanine over its west half for chemical addition tanks.

The south wall of the 242-Z Building is of reinforced concrete. The remainder of the building has a structural steel frame covered externally with insulating material wall panels and internally with metal lath and plaster. The slightly peaked roof is constructed of metal decking covered by insulation and built-up asphalt and gravel.

The tank room in the 242-Z Building houses large process vessels, which are piped to the process gloveboxes of the control room. The 242-Z Building

shares the main ventilation system with the 234-5Z and 236-Z Buildings and is equipped with the other PFP utilities and services. Therefore, building air is exhausted through the 291-Z-1 Stack.

2.1.7 The 270-Z Building (active)

The 270-Z Building, also known as the PFP Operations Support Building, is a wood-frame structure with sheet-rock inner walls. This building houses Plant Management, Engineering, and Nuclear Facility Safety Personnel.

2.1.8 The 291-Z Building (active)

The 291-Z Building (known as the Exhaust Fan House, Exhaust Air Stack Building, and Compressor and Fan House) is a reinforced concrete structure located approximately 53 ft south of the central part of the 234-5Z Building. Of irregular shape, it is approximately 74 ft wide by 143 ft long. It is approximately 23 ft high, with only 4 ft above grade. This building houses the exhaust fans, the mechanical service equipment, and the substation.

Auxiliary to the 291-Z Building is the 200-ft-high 291-Z-1 Stack. Constructed of reinforced concrete, its center is 63 ft from the near end of the 291-Z Building and 230 ft from the south wall of the 234-5Z Building.

2.1.9 The 2736-Z Building (active)

The 2736-Z Building is the primary PFP Plutonium Storage Facility (PSF). Building 2736-Z is approximately 65 ft long by 56 ft wide. The building consists of four rooms for the storage of special nuclear material (SNM) divided by a corridor running the width of the building. The building has 14-in.-thick reinforced concrete walls, supported by cast-in-place concrete columns. The roof is a cast-in-place 6.5-in.-thick concrete slab. The 2736-ZA Building provides ventilation for the 2736-Z Building. Air from the 2736-Z Building is exhausted through the 296-Z-6 Stack located on the roof of the 2736-ZA Building.

Each storage room is approximately 28 ft by 28 ft. Rooms 1, 3, and 4 contain storage cubicles; Room 2 has steel shelves and open-floor storage.

Room 1 cubicles are constructed of precast 8-in-thick concrete panels. Each cubicle is approximately 8 ft tall and has a cross-sectional area 1 ft by 2 ft. There are 68 of these cubicles; 66 have pedestal storage rings for fixed array storage and 2 have shelves so that storage container locations are not fixed. Descriptions of the cubicles follow.

- The fixed array cubicles have a maximum of 45 storage rings per cubicle (9 for each of 5 pedestals). Each pedestal is 10 in. from the pedestal above or below and is 6 in. from the nearest pedestal to the side.

- The two shelved storage cubicles have 15 shelves each and have 2 interlocking doors made of 8-in.-thick precast concrete.

The doors of each cubicle are flush with the top of the cubicles and have a 0.5-in. gap from the bottom of the doors to the floor. A ventilation duct, attached to the top of each cubicle, provides a continuous airflow down through each cubicle. Thermocouples located in the top of each cubicle permit air temperature monitoring.

Room 2 contains shelved storage space for 700 items of SNM. Each cubicle measures 9 in. by 9 in. by approximately 12 in. deep. Containers are maintained on the shelf by means of a can restraining chain on the front (to load and unload) and a 2-in. lip at the bottom of each shelf. In addition, there are 296 spaces in this room for the storage of fissile material in shipping and storage container arrays (for lard can storage) up to the limit allowed by the specifications (approximately 500 kg). Ventilation for this room is provided by supply and exhaust ducts mounted near the ceiling on the east and west walls, respectively.

Rooms 3 and 4 cubicles are constructed of precast 8-in.-thick concrete panels. Each cubicle is approximately 8 ft tall with a cross-sectional area 1 ft by 2 ft. There are 68 cubicles per room, all of which have pedestal storage rings for fixed array storage. The maximum number of storage rings per cubicle is 28, 14 rings each for 2 pedestals. Each pedestal is 12 in. from the pedestal above and below, and 7.4 in. from the nearest pedestal to the side. Each cubicle has 2 doors constructed of precast concrete, 8 in. thick at the thickest part. When closed, the doors leave a gap between them to allow for air circulation via natural convection. A 6-in. gap between the bottom of each door and the floor provides additional ventilation. Ventilation for these rooms is provided by supply and exhaust ducts mounted near the ceiling on the west and east walls, respectively.

2.1.10 The 2736-ZB Building (active)

The 2736-ZB Building is located immediately to the south of the 2736-Z Building. The building is approximately 132 ft by 90 ft with reinforced concrete walls (except for administrative areas) and roof. Air from the 2736-ZB Building is exhausted through the 296-Z-5 Stack, which is located on the roof of the 2736-ZB Building.

The 2736-ZB shipping and receiving areas each provide approximately 1,000 ft^2 of floor space to accommodate a maximum of 100 shipping containers the size of 55-gal drums. Adequate spacing is provided between containers to meet Westinghouse Hanford criticality prevention and personnel exposure specifications as well as allowing corridor access to staging areas. The two areas are physically separated by a wall.

An enclosed off-loading dock and building corridor are provided to allow access to the shipping and receiving areas. The off-loading dock is external to the building and provides an area of approximately 1,700 ft^2 to stage and store cargo restraint transporters. The dock is enclosed in a metal building with a 15-ft-high eave, an electric roll-up door with seal pads, electrical outlets, and lighting. Within this enclosure is a 4,000-lb, 360° jib crane

with a chain hoist and drum handler for drum removal from and placement in the cargo restraint transporters. The cargo restraint transporters are removed from the safe secure transport (SST) by a winch with a 1,000-lb capacity. Airlocks provide controlled access from the building to the off-loading dock. A wire mesh fence bounds the east and west sides of the dock (approximately 11 ft). Separate airlocks are provided for personnel and material access. In addition, administrative controls maintain security and safeguards control during the shipping and receiving operations.

The majority of shipping containers handled contain PuO_2 powder, plutonium metal, or miscellaneous solid scrap materials from various onsite and offsite sources.

2.2 216-Z-20 CRIB EFFLUENT FACILITY

The 216-Z-20 Crib was constructed and commissioned for use in September 1981 to dispose of wastewater previously discharged to the 216-U-10 Pond through the 216-Z-19 Ditch. Use of the new crib allowed the radioactively contaminated 216-Z-19 Ditch and 216-U-10 Pond to be decommissioned.

Two liquid waste facilities were actually built. The 216-Z-20 Crib was designed and constructed to dispose of potentially radioactive liquid effluents from the 231-Z, 232-Z, 236-Z, 242-Z, 291-Z, 234-5Z, and 2736-ZB Buildings. The same building effluent headers and piping that served the 216-Z-19 Ditch were used. These headers and piping contain some residual contamination. The 207-Z Seepage Basin, later renamed 216-Z-21 Seepage Basin, was designed and constructed to dispose of noncontaminated water from the storm sewer north of the 234-5Z Building.

The 216-Z-20 Crib is approximately 1,500 ft long and approximately 10 ft wide in cross section at the bottom. Gravel was used as backfill to distribute effluents throughout the crib. A vapor barrier was placed above the gravel backfill. Soil was placed over the top to bring the area back to the surrounding grade.

2.3 AUXILIARY FACILITIES

Brief descriptions of PFP auxiliary facilities follow:

- **234-ZB (active)**--A wood frame structure with masonite walls. Used by Kaiser Engineers Hanford (KEH) for storage of paint supplies and miscellaneous equipment for construction support.

- **234-ZC (active)**--A metal frame structure utilized for storage of waste drums and SNM receipt and shipment.

- **234-5Z West Annex (active)**--A concrete structure with sheet-metal covering, built on to the 234-5Z Building for SNM storage.

- **234-5Z South Annex (active)**--A concrete block structure addition to the 234-5Z Building for DL office space.

- **241-Z Retention Basins (inactive)**--Concrete retention basins previously used to retain cooling water before transfer to the ponds.

- **241-ZA (active)**--A sheet-metal structure that contains a hood used for sampling liquid waste holding tanks.

- **D-9 Tank (active)**--A concrete barrier housing a caustic tank used for neutralization of liquid waste in 241-Z Treatment Tanks.

- **241-Z-361 (inactive)**--Underground single-walled liquid waste settling tank in layaway. Also referred to as 361-Z.

- **252-Z-1 (active)**--The PFP electrical transformers.

- **252-Z-2 (active)**--The 291-Z electrical transformer building (part of the 291-Z Building).

- **267-Z (active)**--A sheetmetal structure that is the Riser 9 valve house for the PFP sprinkler system.

- **291-Z-1 Stack (active)**--This stack is 200 ft high, with a 16.5-ft inside diameter at the bottom, and a 13.5-ft inside diameter at the top. It is constructed of reinforced concrete.

- **296-Z-3 Stack (active)**--This is a 34-in.-dia. stainless steel stack at 25 ft above grade.

- **296-Z-5 Stack (active)**--This is a 34-in.-dia. stainless steel stack at 27 ft, 7 in. above grade.

- **296-Z-6 Stack (active)**--This is a 36-in.-dia. stainless steel stack at 14 ft, 8 in. above grade.

- **296-Z-10 Stack (active)**--This is an 11-ft-high stack, 32 in. in diameter.

- **296-Z-11 Stack (active)**--This is a rectangular, 19.5-in. by 27-in. stack located on the roof of the 231-Z Building.

- **296-Z-14 Stack (active)**--This is a 21-ft-high stack, 16 in. in diameter, except for the top foot, which is 12 in. in diameter.

- **2503-Z (active)**--Electrical distribution system for PFP.

- **2701-Z (active)**--A wood structure used as the Emergency Action Center. The building houses supplies and communication equipment for use in the event of emergency evacuation of the buildings.

- **2701-ZA (active)**--A reinforced concrete structure called the Central Station Alarm Facility, housing building and complex security systems.

- **2701-ZB (active)**--A sheetmetal structure with bullet resistant windows that serves as the PFP security badgehouse. Equipment within the badgehouse controls personnel and vehicle access into and out of the PFP yard.

- **2702-Z (active)**--A sheetmetal structure that is the security communication support center.

- **2704-Z (active)**--A wood and concrete structure with security doors used for SNM records control.

- **2706-Z (active)**--Septic tank.

- **2712-Z (active)**--A sheetmetal structure that houses the 291-Z-1 Stack Air Sampler support equipment.

- **2715-Z (active)**--A sheetmetal structure used to store paint and related supplies.

- **2715-ZL (active)**--A concrete pad with metal overhang used by facility painters to store drums.

- **2721-Z (active)**--A poured reinforced-concrete structure with walls 1 ft thick, called the generator building, which provides back-up electrical power for the 234-5Z, 2701-ZA, 2736-ZA, 2736-ZB, and 291-Z Buildings. The instrument air in the 2721-Z Building is located approximately 26 ft to the west of the 2736-ZB Building and houses 3 diesel generators. The generator building is 46 ft long by 19 ft wide.

- **2722-Z (active)**--A concrete pad that serves as a truck load-out station.

- **2725-Z (active)**--A sheetmetal structure used to store main building laundry.

- **2727-Z (active)**--A sheetmetal structure used by PFP Facility Services and the EL to store miscellaneous supplies.

- **2729-Z (active)**--A concrete block and sheetmetal structure used to store pumps, piping, miscellaneous maintenance parts.

- **2731-Z (active)**--A sheetmetal structure used to store empty drums.

- **2731-ZA (active)**--A sheetmetal structure used to store laundry from the 2736-ZB Building.

- **2734-Z (active)**--A wood and concrete structure used to store oxygen, argon, etc., and bottles.

- **2734-ZA (active)**--A concrete block and sheetmetal structure used for EL argon bottle supply.

- **2734-ZB (active)**--A sheetmetal structure used for EL argon bottle supply.

- **2734-ZC (active)**--A concrete block and sheetmetal structure used for argon bottle supply.

- **2734-ZD (active)**--A sheetmetal structure used for EL oxygen and argon bottle supply.

- **2734-ZF (active)**--A sheetmetal structure for gas bottle supply in standby.

- **2734-ZG (active)**--A sheetmetal structure for gas bottle supply in standby.

- **2734-ZH (active)**--A sheetmetal structure for DL argon bottle supply.

- **2734-ZJ (active)**--A liquid nitrogen storage tank.

- **2734-ZK (active)**--A wooden structure used for the laboratory P-10 gas bottle supply.

- **2734-ZL (active)**--A sheetmetal structure called the PFP Hydrogen Fluoride (HF) Facility. This building contains the HF bottles and supply piping for the fluorinator in the RMC Line. The building has five 100-lb bottles connected to a header supplying the fluorinator, five bottles connected to a header in standby, and five bottles in a storage rack.

  An HF monitor in the facility is operated primarily for personnel protection. It would alarm and alert operations personnel of an HF release.

- **2735-Z (active)**--A sheetmetal structure that contains pumps and supports adjacent stainless steel tanks for storage of aluminum nitrate nonahydrate (ANN) and nitric acid (HNO_3).

- **2735-ZA (active)**--A poured reinforced concrete building, approximately 40 ft long by 22 ft wide, situated approximately 5 ft to the west of the 2736-Z Building. The building consists of two rooms. Room 1 is approximately 11 ft by 11 ft and houses an emergency diesel generator to power the exhaust ventilation equipment in the event of a power failure. Room 2 is approximately 26 ft long by 22 ft wide and houses the exhaust fans and filters for the 2736-Z Building. Temperature readout devices for the 2736-Z Building, Room 1, cubicle temperature measurements are also located here.

- **2736-ZC (active)**--The cargo restraint transporters dock is a sheetmetal structure used for loading and unloading SST shipment trucks.

- **2902-Z (active)**--Water tower that stores emergency water.

- **2904-ZA (active)**--A sheetmetal structure referred to as the Effluent Sampling Facility, that houses sampling, flow, pH, and alpha monitoring equipment for 216-Z-20 Crib stream discharges to the crib.

- **2904-ZB (active)**--A sheetmetal structure that houses sampling, flow, ph, and alpha monitoring equipment for 216-Z-20 Crib stream discharges to the crib.

- **JAJ-64-15305 (active)**--Trailer used by KEH personnel as a lunchroom and clothing changerooms.

- **JAJ-64-15332 (active)**--Trailer used by KEH personnel as a lunchroom and clothing changerooms.

- **MO-014 (active)**--A trailer that houses Nuclear Material Control personnel.

- **MO-997 (active)**--A trailer used by Security to conduct searches of personnel entering and exiting PFP. The trailer contains metal detectors and x-ray equipment.

- **MO-665 (active)**--A trailer that houses SNM Control personnel.

- **No number (active)**--Hazardous waste storage/staging area. An asphalt pad located on the east side of the 234-5Z Building. It is used to stage drums and containers of hazardous waste awaiting shipment.

- **No number (active)**--A sheetmetal structure located on the east fence line across from the 234-5Z Building Annex used by KEH for storing pipe and miscellaneous equipment for facility construction.

- **241-ZB (active)**--Clothing changeroom for the 241-Z Building. This sheetmetal building is used primarily as a changeroom for personnel working within the 241-Z Building area.

In addition to these buildings, approximately six movable storage structures are located adjacent to various buildings.

3.0 STATUS OF OPERATION

The following provides a description of the PFP operations. A process flow diagram for the PFP is provided in Figure 3-1.

3.1 THE 234-5Z BUILDING PROCESS

In the past, the primary plutonium process in the 234-5Z Building converted plutonium nitrate solution to metallic plutonium. Future operations will convert plutonium nitrate solution to plutonium oxide. Past and future process operations are the following:

- Receipt of plutonium nitrate
- Precipitation and filtration of plutonium oxalate
- Calcination of the oxalate to plutonium dioxide
- Fluoridation of the oxide to plutonium fluoride (inactive)
- Reduction of the fluoride to metallic plutonium (inactive).

Plutonium nitrate solutions are transferred from various containers into one of three designated 40-1 Batch Tanks located in a glovebox. From the glovebox tanks, the solution is vacuum transferred to one of the six 22-1 Storage Tanks, eventually to be processed in the RMC Line, where conversion to plutonium dioxide occurs. The RMC Line contains 20 gloveboxes.

After the plutonium solutions are blended in the batch tanks by recirculation, the nitric acid concentration is adjusted, if required. The solution is then continuously pumped to another tank for reaction with oxalic acid to form plutonium oxalate precipitate. The precipitate is collected on a drum filter and fed to a calciner. The filtrate is treated with potassium permanganate ($KMnO_4$) to destroy part of the excess oxalic acid and then is sent to PRF (the 236-Z Building) for processing to recover residual plutonium.

The 234-5Z Building also contains the shut down RMA Line, which has produced plutonium dioxide powders, and is located to the north of the RMC Line. The equipment in the RMA Line is similar to that for the RMC Line through the calciner step and again for canning powder. It will not be described here because it produces no emissions and is not expected to be placed in operation again.

3.2 THE 236-Z BUILDING PROCESS

The 236-Z Building houses the PRF process equipment and services for miscellaneous treatment, slag and crucible dissolution, filtrate concentration, feed preparation, plutonium solvent extraction, product concentration, and waste treatment processes. The PRF is capable of producing a high-purity plutonium nitrate solution from a variety of feed sources by means of continuous countercurrent solvent extraction process equipment located in a canyon cell.

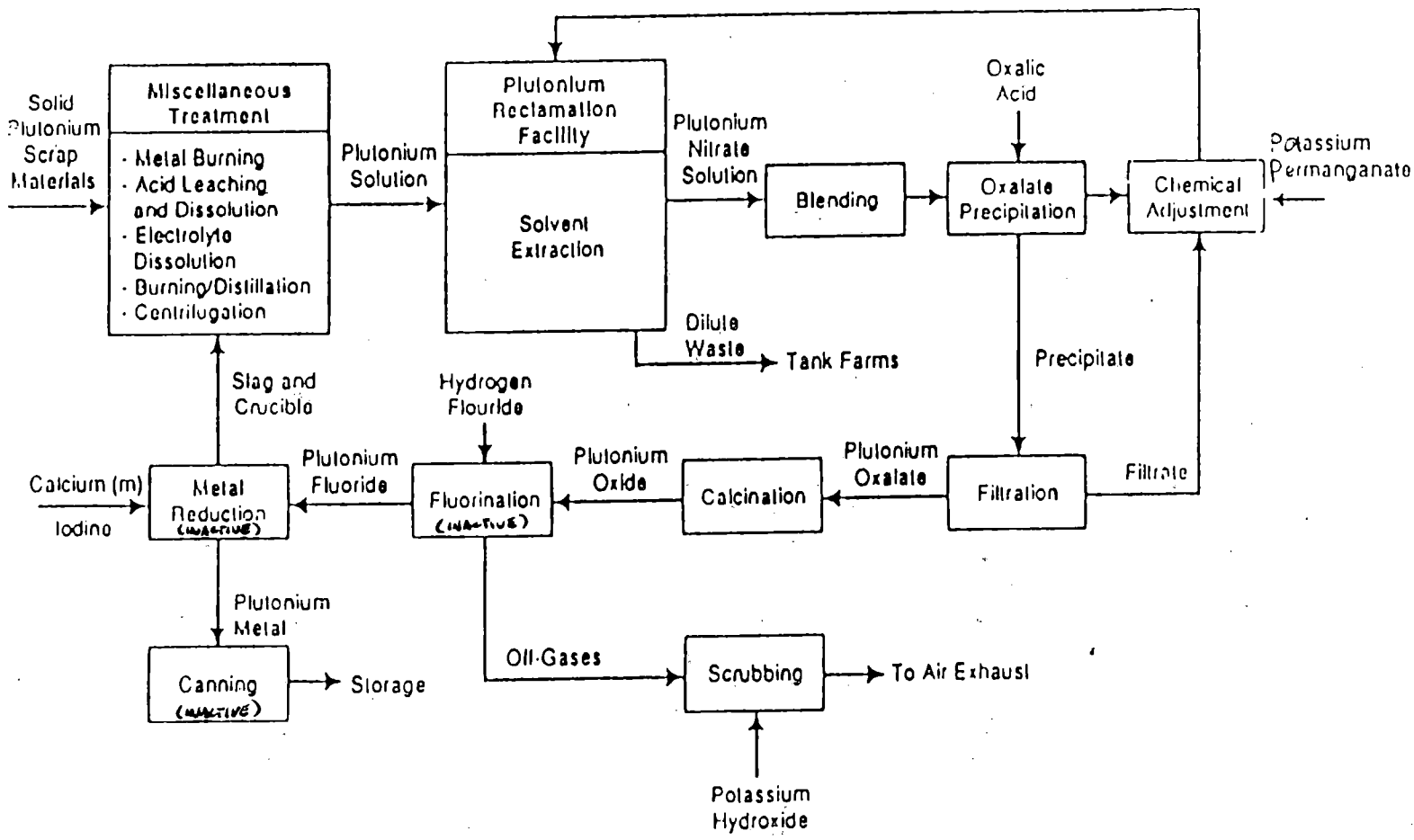

Figure 3-1. Plutonium Finishing Plant Process Flow Diagram.

A cluster of five gloveboxes contains the MT processes. The MT is a multipurpose facility previously capable of small-scale processes for plutonium recovery from scrap, portions of which are in active status. Its primary equipment includes dissolver pots, hot plates, centrifuges, condensers, and furnaces. Capabilities included metal oxidation (Glovebox 1), acid leaching and dissolution (Glovebox 5), electrolytic dissolution (Glovebox 3), and distillation and oxidation of plutonium-bearing organics (Glovebox 4). Glovebox 6 contains centrifuges and a vacuum pump. Glovebox 2 no longer exists. Only operations in Gloveboxes 5 and 6 are in active status.

3.3 THE 232-Z, 242-Z, AND 291-Z BUILDING PROCESSES

The 232-Z, 242-Z, and 291-Z Buildings do not house active processes at the present time. The 232-Z Building contains an incinerator facility that is in layaway status. The 242-Z Building previously housed the Waste Treatment and Americium Recovery Facility. The 291-Z Building houses a substation, mechanical service equipment, and exhaust fans, but it does not contain active processes.

9413196.0704

This page intentionally left blank.

4.0 SOURCE TERM

Production operations at the PFP Complex consist of plutonium reclamation and plutonium conversion. The PRF reclaims plutonium from recoverable solutions and solids. The recoverable material is treated in various ways to produce soluble and/or leachable forms of plutonium for recovery as plutonium nitrate. Plutonium nitrate is received as feed and converted to plutonium oxide (PuO_2) in the RMC Line.

None of the solutions from these operations contact the 216-Z-20 Crib effluents under normal operating conditions. The vast majority of the effluent that goes to the 216-Z-20 Crib is either equipment cooling water or heating and ventilation steam condensate, neither of which comes into contact with process materials or process chemicals under normal operating conditions. Formerly, there was the possibility of an overflow from the drains in the two aqueous make-up (AMU) chemical preparation areas, although there is a sump in each of these areas sized to hold the contents of the largest chemical tank. However, a project completed recently reroutes these drains to a catch tank, where any solution can be held until it is removed in drums, sampled, and either reused in the process, or disposed of in accordance with applicable regulations.

No diversion capability for the PFP Complex effluent currently exists, with the exception of the aforementioned AMU catch tank. The effluent cannot be shut off without drastic consequences to both personnel safety and the environment. The major portion of the effluent consists of air compressor cooling water and seal water, and vacuum pump seal water. If the water serving the air compressors were turned off, ventilation control instruments throughout the plant would cease to function, causing a loss of control of ventilation equipment such as fans and dampers. This in turn would cause a loss of the carefully adjusted staged negative pressure, which ensures confinement of the radioactive materials within the process areas. It is essential that the ventilation continue to operate, even when no actual radioactive material processing is being done. Similarly, if the vacuum pump seal water were turned off, the vacuum pumps would not operate properly. Improper vacuum system operation would preclude accurate sampling of the air within the plant for radionuclide contamination. Based on this information, the necessity of the discharge of the PFP Complex effluent can be readily understood.

The Hanford Site implemented Ecology's effluent limits in 1986. At that time, routine discharges of process and maintenance chemicals from the PFP Complex to the 216-Z-20 Crib that exceeded the limits imposed for hazardous waste ceased. The DOE has required that the Hanford Site comply fully with the *Resource Conservation and Recovery Act of 1976*.

4.1 LIQUID EFFLUENTS

The major liquid effluent streams from the PFP are the following:

- Effluents to the 216-Z-20 Crib (formerly Chemical Sewer)
- Effluents to the 216-Z-21 Seepage Basin System (North Storm Drain)

- East Tile Field (Sanitary Sewer Line)
- West Tile Field (Sanitary Sewer Line)
- French Drains.

Table 4-1 summarizes the status of each stream and gives a brief description of each liquid effluent stream and the associated facilities.

4.2 GASEOUS EFFLUENTS

The major gaseous effluent streams from the PFP are the following:

- 234-5Z Building Zone 1 Exhaust
- 291-Z-1 Main Stack
- 296-Z-3 Stack for the 241-Z Building
- 296-Z-5 Stack for the 2736-ZB Building
- 296-Z-6 Stack for the 2736-Z Building
- 296-Z-10 and 296-Z-11 Stacks for the 231-Z Building
- 296-Z-14 Stack for the 232-Z Building
- 2734-ZL Building HVAC Exhaust.

The term gaseous effluents is used interchangeably with airborne effluents in this document. The term gaseous is not intended to exclude particulate or other solid airborne emissions. Table 4-2 summarizes the status of each stream and gives a brief description of each gaseous effluent stream and the associated facilities.

Table 4-1. Plutonium Finishing Plant Liquid Effluent Streams.

Discharge Designation	Facilities Serviced	Liquid Waste Description	Hazardous Chemical Content	Radioactive Material Content	Comments
216-Z-20 Crib	234-5Z, 291-Z, 242-Z, 236-Z, 2736-Z, 232-Z	Process cooling water, condensates, building drains, air condition systems, storm drains, etc.	Normally Uncontaminated (HNO_3)	Normally Uncontaminated (^{90}Sr, ^{137}Cs, ^{238}Pu, ^{239}Pu, ^{241}Pu, ^{241}Am)	Low probability of radioactive or hazardous release
216-Z-21 Basin	Primarily 234-5Z	Storm runoff, steam condensate, and cooling water	None	None	No hazardous potential
East Tile Field	234-5Z, 236-Z, 270-Z, 2704-Z	Restroom sanitary waste	None	None	No hazardous potential
	MO-015, 016, 017, 031, 032, 939	Kitchen and Restroom sanitary waste			
West Tile Field	234-5Z Annex, 2736-ZB	Restroom sanitary waste	None	None	No hazardous potential
216-Z-13 French Drains	291-Z	ET-8 Exhaust Fan, floor drainage	None	Normally Uncontaminated	Very low probability of radioactive release
216-Z-14 French Drains	291-Z	ET-9 Exhaust Fan	None	Normally Uncontaminated	Very low probability of radioactive release
216-Z-15 French Drains	291-Z	S-12 Evaporator Cooler drainage	None	Normally Uncontaminated	Very low probability of radioactive release
241-Z Treatment Tank	241-Z Treatment Tank and Facility	Contents of 241-Z Treatment Tank	Cr, Pb, Ag, CCl_4	TRU	Upset condition only

Table 4-2. Plutonium Finishing Plant Gaseous Effluent Streams.

Discharge Designation	Facilities Serviced	Gaseous Effluent Description	Hazardous Chemical Content	Radioactive Material Content	Comments
234-5Z Building Zone 1 Exhausts	234-5Z	Exhaust from building "clean" areas	None	None	No hazardous potential
291-Z-1 Main Stack	234-5Z, 236-Z, 242-Z	Main filtered effluent discharge	CCl_4, NO_x, HCl, Acetone, HF	Pu and associated radionuclides	Hazardous potential
296-Z-3 Stack	241-Z	Building exhaust	CCl_4, NO_x	Pu and associated radionuclides	Extremely low hazardous potential
296-Z-5 Stack	2736-ZB	Building exhaust	None	Pu and associated radionuclides	Extremely low hazardous potential
296-Z-6 Stack	2736-Z	Storage vault exhaust	None	Pu and associated radionuclides	Extremely low hazardous potential
296-Z-10 and 296-Z-11 Stacks	231-Z	Building exhaust	None	Pu and associated radionuclides (^{241}Am)	Extremely low hazardous potential under upset conditions
296-Z-14 Stack	232-Z	Incinerator exhaust	None	Pu-239	Extremely low hazardous potential
2734-ZL HVAC Exhaust	2734-ZL	Stored HF bottles	HF	None	Hazardous potential under upset conditions

4.3 EFFLUENTS TO THE 216-Z-20 CRIB

The 216-Z-20 Crib receives aqueous waste from various PFP facilities before the waste is discharged to the ground. Operations and Facilities serviced by this system include the PRF (236-Z), the RMC Line (234-5), the EL (234-5), the DL (234-5), and the 291-Z Exhaust Air Stack Building. The crib also receives cooling water and floor drain liquid from various facilities including the 232-Z and 242-Z Buildings. Heating, ventilation, and air conditioning condensate water is received from the 2736-ZB Building, and various building service waste liquids and storm drain effluent from the south side of 234-5Z Building is received. The waste collected by the transport system flows through a series of manholes to the 2904-Z Monitoring Facilities and then to the 216-Z-20 Crib, where it is discharged through perforated pipes to the ground.

The sewer system uses procedures, administrative controls, and physical barriers to prevent discharge of radioactive or chemically hazardous components. Physical control barriers are built into the system to either prevent the release of regulated materials or to minimize the quantity or concentration.

4.3.1 Identification and Characterization of Potential Inventory at Risk

The content of liquid effluents to the 216-Z-20 Crib depends on the liquid from its source. The primary sources of information on this effluent stream are the *Plutonium Finishing Plant Liquid Effluent Monitoring Plan*, SD-CP-EMP-001, Rev. 1 (Keck 1988a), and "Plutonium Finishing Plant Wastewater Stream-Specific Report," Addendum 8, WHC-EP-0342 (WHC 1990). There are 158 potential contributors to this liquid effluent stream. To simplify discussion, they are summarized by source as follows:

1. The 234-5Z Building has 54 potential contributors
2. The 236-Z Building has 50 potential contributors
3. The 291-Z Building has 18 potential contributors
4. The 231-Z Building has 13 potential contributors
5. The 232-Z Building has 10 potential contributors
6. The 242-Z Building has 8 potential contributors
7. The 2736-ZB Building has 5 potential contributors.

Of the 158 potential contributors, 101 are nonroutine sources of liquid. Examples of these sources include floor drains (these receive water only as a result of an upset condition or during the testing of safety showers), sinks, drinking fountains, and similar intermittent sources. The 57 routine contributors, all located within the PFP complex buildings, are typically HVAC condensate drains and equipment cooling water streams.

4.3.2 Effluent Stream Description

The effluents to the 216-Z-20 Crib are widely varied. Table 4-3 lists a summary of sources, the facility origin, and normal chemical makeup. A more

Table 4-3. Sources of Effluents to the 216-Z-20 Crib.

Building	Sources	Liquid
234-5Z	TOCCO unit drain	Cooling water
	Drinking fountain drains	Drinking water
	Eye wash stations	Sanitary water
	Sink drains	Varied
	Cooling water drains	Cooling water
	Storm drains (south side)	Waste water
	Chiller drains	Cooling water
	Air conditioning drains	Condensate
	Chemical preparation area	Varied
236-Z	Drinking fountain drains	Drinking water
	Condensate header	Condensate
	Chemical preparation area	Varied
	Tank jacket cooling water	Varied
	Dissolver and preheaters	Condensate
	Cooling water drains	Cooling water
	Exhaust duct sump jet	Condensate
2736-ZB	HVAC condensate drain	Condensate
232-Z	Cooling water	Varied
	Floor drains	Varied
	Drinking fountains	
242-Z	Cooling water	Varied
	Miscellaneous drains	Varied
291-Z	Cooling water	Varied
	Floor drains	Varied

detailed listing of contributors to the effluent to the 216-Z-20 Crib is presented in WHC-EP-0342, Addendum 8 (WHC 1990).

Those effluent sources listed in Table 4-3 as drinking water, sanitary water, and air conditioning or chiller water, are all chemically nonhazardous and nonradioactive. Other sewer sources listed in Table 4-3 that could be potentially hazardous, radioactive, or require some evaluation are as follows:

- **TOCCO Unit Drain**--This is the cooling water drain for an induction furnace located in HC-15 Hood, Room 229 of the 234-5Z Building. The copper tubing coil, asbestos sheeting, pressure vessel, and the ceramic charge crucible act as multiple barriers to prevent contamination of the water effluent.

- **Sink Drains**--This includes five drains in the 234-5Z Building. One drain is located in Room 199 in the nonradioactive portion of a maintenance shop. It is considered very unlikely to be contaminated or receive hazardous liquids.

  Three of the drains are located in the cold side of a development laboratory (Room 202). They are unlikely to be radioactively contaminated. Test plans require two physical barriers between hazardous chemicals and the drains.

  The last sink services the scanning electron microscope in Room 182. No chemicals are normally used in the room, and the radioactive contamination potential is considered very small.

- **Cooling Water Drains**--These drains for a thermoanalyzer and a vacuum pump, located in Rooms 179-B, 179-C, and 182 of the 234-5Z Building, require two physical barriers between water and the radioactive source. Contamination of the effluent is very unlikely and no potential for hazardous chemical contamination exists.

- **Storm Drains (South Side)**--These drains are in the fenced security zone. The effluent consists of rain, slush, snow melt, etc.

- **Chemical Preparation**--This area, constituting Rooms 336 and 337 of the 234-5Z Building, is protected from chemical discharges by physical and managerial control barriers. The sumps under the chemical tanks are plugged with stand pipes that will hold a complete tank spill. Planned discharges must be authorized and reported in accordance with specified procedures.

- **Slag and Crucible Dissolver Acid Preheaters**--Two different compositions of nitric acid and ANN are preheated by steam. Plugging or failure of the preheater could cause chemical contamination of the 216-Z-20 Crib from this system located in Room 31 of the 236-Z Building.

- **Condensate Header**--Process steam trap drains located on the third floor of the 236-Z Building have no potential for hazardous chemical contamination of the 216-Z-20 Crib. This is a high pressure steam

line under nearly constant operation. Radioactive contamination is very unlikely (coil leak followed by complete loss of steam pressure).

- **Chemical Preparation (PRF)**--This area, Room 40 of the 236-Z Building, is protected from hazardous chemical releases in the same manner as the chemical preparation room for the 234-5Z Building.

- **Tank Jacket Cooling Water**--Cooling water discharges for tanks in Room 31 of the 236-Z Building all have potential for radioactive and/or chemical hazard discharges. The tanks were evaluated for their contamination potential and were determined to have no potential for release.

- **Cooling Water Drains**--These drains located in Room 35 of the 236-Z Building are normally just for water. Effluent sources include vacuum pump seal water, cooling water, condensate, backflow drain, and floor drain. Hazardous chemical or radioactive contamination of these drains is considered improbable.

- **Heating, Ventilation, and Air Conditioning Condensate Drains**--These drains are located in Room 602 in the 2736-ZB Building. The potential for radioactive or hazardous chemical contamination is very low.

- **Cooling Water and Floor Drains**--These drains located in the 232-Z, 242-Z, and 291-Z Buildings have very little potential for hazardous chemical or radioactive contamination. The 291-Z Building contains a minor amount of plutonium-contaminated residues in one sump, which discharges to the 2904-ZB Building. These residues are fixed to the sump walls and do not represent a major source of potential contamination.

The major facility sources in terms of liquid volumes are given in Table 4-4.

Table 4-4. Major Sources of Effluents to the 216-Z-20 Crib.

Building	Approximate Average Daily Volume (Gal)
231-Z	7,250
234-5Z	49,600
236-Z	40,450
291-Z	86,700
TOTAL	184,000

4.3.3 Effluent Discharge Point Description

The primary discharge point for this potential effluent is the 216-Z-20 Crib through the system shown in Figure 4-1. A plan and basic design diagram of the crib are shown in Figures 4-2 and 4-3. The crib was built in 1981; however, the effluent headers and piping, which served the old 216-Z-19 Ditch, were used for this crib. Thus, some residual contamination may be present from previous activities. The crib is about 1,500 ft long and 10 ft wide at the bottom. Gravel was used to backfill the crib to a depth of 2.5 ft. The effluent header was embedded in the gravel backfill to distribute the effluent throughout the crib. A vapor barrier was placed above the gravel backfill. Soil was then placed over the vapor barrier to return the area to natural grade.

4.4 EFFLUENTS TO THE 216-Z-21 SEEPAGE BASIN SYSTEM

The waste water designated as the storm drain effluent was originally the waste liquid originating from the storm drains on the north side of the 234-5Z Building. Use of the sewer system has been expanded to include water from the high tank overflow, building steam condensate, compressor cooling water, and air intake washing liquid. The waste liquid is nonhazardous, nonradioactive, and there is no potential for chemically hazardous or radioactive contamination. The waste water is discharged to the 216-Z-2 Basin for disposal. The drain is operated under Westinghouse Hanford guidelines provided in WHC-CM-7-5 (Part E, Rev. 1) (WHC 1988). The basin water forms a surface pond where water evaporates or seeps into the soil. The manual (WHC 1988) requires surface ponds to be sampled and analyzed quarterly for pH, nitrates, and suspected deleterious chemicals.

4.4.1 Identification and Characterization of Potential Inventory at Risk

The content of the storm drain system liquid effluent depends on its source. The primary source of information on this effluent stream is the PFP Liquid Effluent Monitoring Plan. The liquids in this effluent stream are the following:

- The PFP North Storm Sewer System is the source for which the drain system was named. The volume discharged from the storm sewer system is variable depending on the weather and consists solely of building and surroundings runoff, which is free of chemical hazards and radioactive contamination.

- The High Tank Overflow is water overflow from the emergency fire water supply tank called High Tank that is an elevated tank just north of the 234-5Z Building. The capacity of the tank is 50,000 gal. The tank has an overflow rate of approximately 5 gal/min. The tank is 145 ft high and is isolated from nearby buildings. The overflow operates only during the warm-weather months and assists in reducing algae growth in the tank.

Figure 4-1. Plan and Overall Piping Schematic for Plutonium Finishing Plant Complex Effluent.

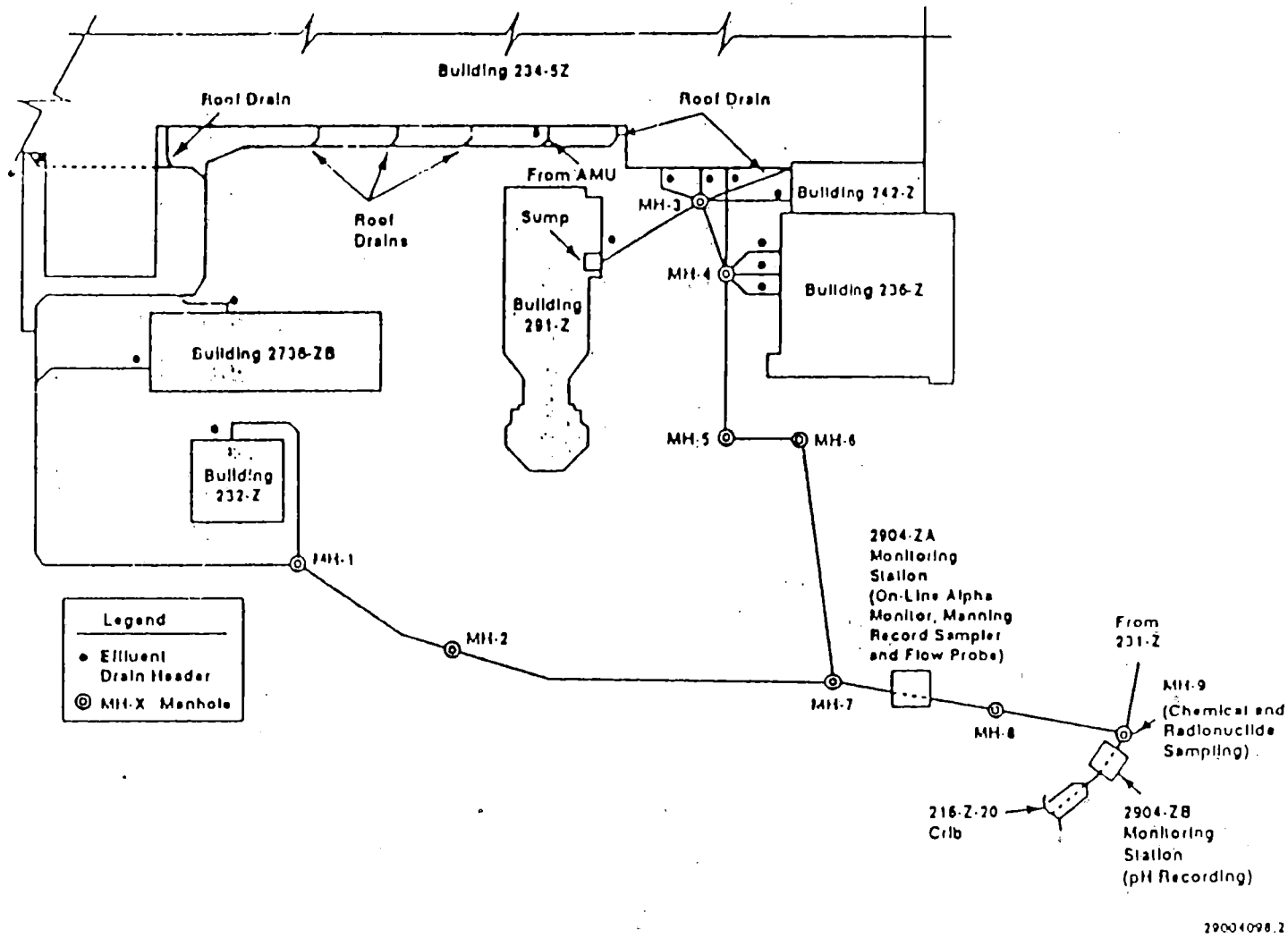

Figure 4-2. Plan of the 216-Z-20 Crib Area.

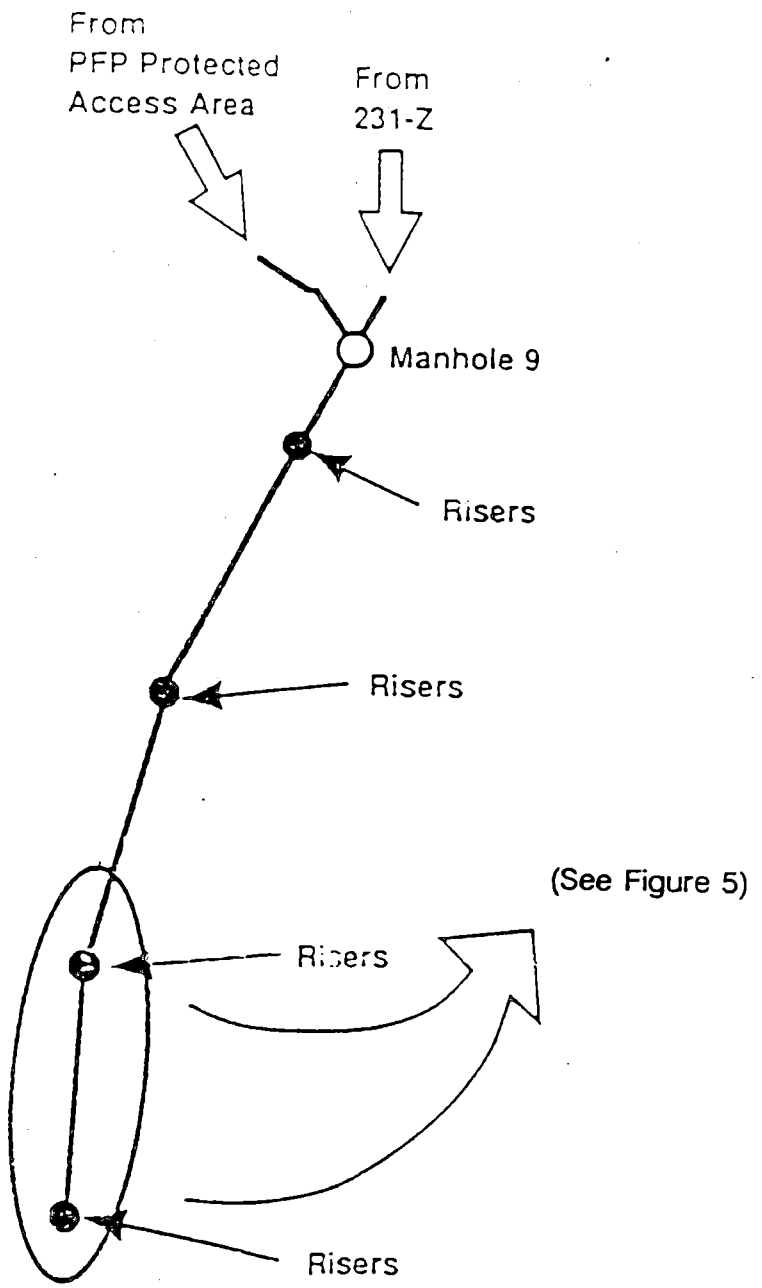

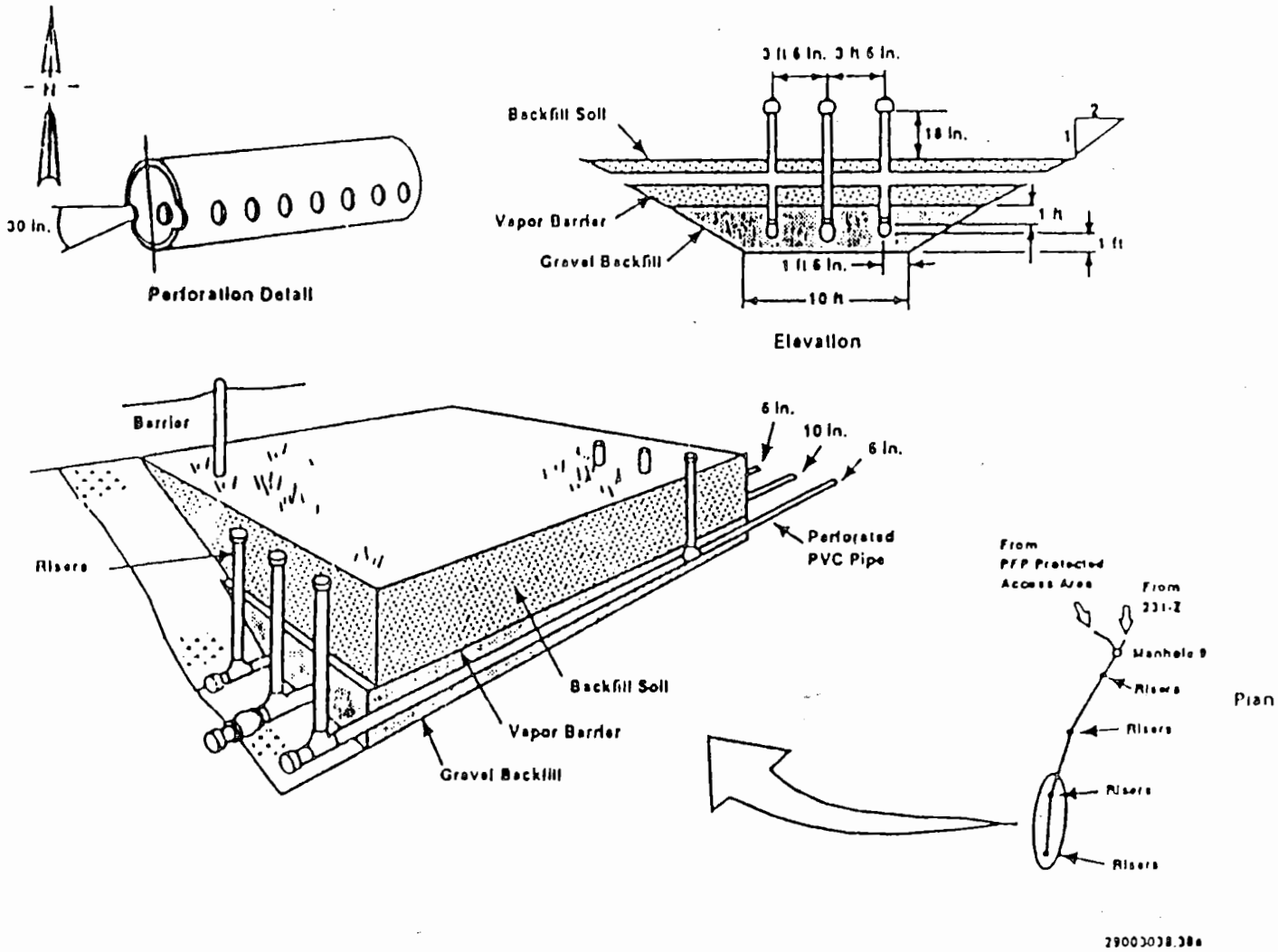

Figure 4-3. Diagram of the 216-Z-20 Crib.

- The 234-5Z Building Steam Condensate Water is generally the largest liquid effluent volume source. During cold weather, the flow can potentially reach 60 gal/min from steam condensate formed during heating of the building. In warm weather, the volume of steam condensate is minimal. There is no potential for hazardous chemical or radioactive contamination of this effluent line.

- The 234-5Z Building Dry Air Compressor Cooling Water is located in Room 321. The cooling water effluent source is generally constant at about 20 gal/min. The water is supplied by the building's sanitary water system. It cools a compressor handling some of the building's Zone 1 intake (clean) air. There is no potential for hazardous chemical or radioactive contamination of the cooling water effluent.

- The Ventilation Spray Pan Water effluent results from the use of water to remove dust particles from the 234-5Z Building intake air for Zone 1. The air and, therefore, the scrub water is free of hazardous chemicals and radioactive contamination. The liquid discharge volume is about 500 gal per operating spray pan per month.

Currently no chemicals or radioactive material are added to these effluent sources.

4.4.2 Effluent Stream Description

As previously stated, five principal storm drain system liquid effluent streams exist. These streams are discharged to the 216-Z-21 Basin. The output (volume) of Stream 1 (PFP North Storm Sewer System) is highly variable and dependent on the weather. The output of Stream 2 (High Tank Overflow) is less than 5 gal/min. The output of Stream 3 (234-5Z Building Steam Condensate Water) varies from 60 gal/min in the winter to a minimal amount in the summer. Stream 4 (234-5Z Building Dry Air Compressor Cooling Water) has an output of about 20 gal/min. Finally, Stream 5 (Ventilation Spray Pan Water) has an output of about 500 gal/mo per pan. The estimated annual discharge rate in April of 1988 was 26 Mgal/yr [see Appendix A of SD-CP-EMP-001, Rev. 1 (Keck 1988a)].

No chemicals are presently added to any of the stream sources during normal operation.

4.5 EAST AND WEST TILE FIELDS

The PFP sanitary sewer systems include the 234-5Z Sanitary Drain, the 234-5Z Annex Sanitary Drain, and the Trailer Drain. These sanitary sewer systems take waste liquid from bathroom facilities and kitchen sinks and dispose of it through a septic tank to a tile field where the liquid effluent is percolated into the soil. The sanitary sewer systems effluent is chemically nonhazardous and is nonradioactive. Also, there is virtually no potential for radioactive or hazardous chemical contamination of the sanitary sewer systems.

4.5.1 Identification and Characterization of Potential Inventory at Risk

The content of the sanitary system sewer liquid effluent depends on its source. The primary source of information on this effluent stream is the PFP SD-CP-EMP-001, Rev. 1 (Keck 1988a). The liquids comprising this effluent stream are as follows:

- The sanitary sewer system drain receives liquids from the 234-5Z and 236-Z Buildings' restrooms and changeroom showers (see Figure 2-1). This stream is normally free from chemical and radiological hazardous materials. This effluent is discharged into a tile field located to the east of the PFP.

- The sanitary sewer system drain receives liquids from the 234-5Z Building Annex restrooms (see Figure 2-1). This stream is normally free from chemical and radiological hazardous materials. The effluent is discharged into a field located west of the PFP.

- The sanitary sewer system drain receives liquids from the restrooms (bathrooms), kitchen sinks, and drinking fountains located in trailers no. MO-015, -016, -017, -031, -032, and -939 (see Figures 2-1 and 3-2). This stream is normally free from chemical and radiological hazardous materials. The effluent is discharged into a drain field located east of the PFP.

Currently, no radioactive materials are added to these effluent sources. The chemicals added to the sanitary sewer system include the following:

- Toilet bowl cleaner
- Dishwashing detergent
- Pine oil disinfectant
- Cleanser
- Hand soap (lotion or Lava)
- Shower cleaners.

The 234-5Z Building does have a large inventory of radioactive and hazardous materials.

4.5.2 Effluent Stream Description

As previously stated, three liquid effluent streams (see Section 7.1) exist. These streams are discharged through a septic tank to a tile field. The output of the three streams is not available [see Appendix B of SD-CP-EMP-001, Rev. 1 (Keck 1988a)].

4.6 216-Z-13, 216-Z-14, AND 216-Z-15 FRENCH DRAINS

4.6.1 Identification and Characterization of Potential Inventory at Risk

The content of liquid effluents being discharged to the 216-Z-13, 216-Z-14 and 216-Z-15 French Drains is not certain. The drains serve the 291-Z Building and are considered nonradioactive and nonhazardous. The drains are, however, listed on the Inventory of Injection Wells with the U.S. Environmental Protection Agency as having a very low probability of containing radioactive material.

4.6.2 Effluent Stream Description

The French drains are designed to discharge nonhazardous liquid waste. The streams are not monitored. No mitigative control devices exist on the streams.

4.7 241-Z TREATMENT TANKS AND FACILITY

4.7.1 Identification and Characterization of Potential Inventory at Risk

The content of this liquid effluent from the 241-Z Treatment Tank and Facility depends on its source. The primary sources of information on this effluent stream is SD-CP-EMP-001, Rev. 1 (Keck 1988), WHC-EP-0342, Addendum 8 (WHC 1990), and the 241-Z Treatment Tank Part A Permit Application (Part A Permit). The material in this stream is the process waste from PFP. The chemicals added to the 241-Z Treatment Tank are used to neutralize the material in the tank before its transfer to the tank farms.

4.7.2 Effluent Stream Description

This system is designed to receive a maximum of 5,300 gal/d (37,100 gal/wk); however, the maximum projected throughput is 14,000 gal/wk. The acid waste received is neutralized in this tank system. Following neutralization, $NaNO_2$ is added to meet tank farms waste form requirements. Therefore, the treatment process involves the use of NaOH, $Fe(NO_3)_2$, and $NaNO_2$.

4.8 234-5Z BUILDING ZONE 1 EXHAUST

4.8.1 Identification and Characterization of Potential Inventory at Risk

Zone 1 in the 234-5Z Building is the designation for the areas within PFP that do not contain significant (more that amounts acceptable for uncontrolled

release) amounts of radioactive material. For the purposes of this evaluation, the Zone 1 designation will exclude the 2734-ZL Building, where substantial quantities of HF are present. These areas include office areas, miscellaneous noncontrolled work areas (relative to radioactive material), and mechanical equipment areas. The only source of airborne effluent releases are stored gases, vapors from use of materials in routine maintenance activities, and the results of upset conditions.

4.8.2 Effluent Stream Description

The Zone 1 effluent stream (see Figure 2-1) includes the following:

- Air exhausted from the first floor, duct level, and some areas of the second floor of the 234-5Z Building discharged directly to the environment through roof fans. Air from most of the second floor of the 234-5Z Building exhausted through counterweight dampers in the ducts directly to the cowls on the roof.
- Hoods (e.g., welding and laboratory) located on the second floor of the 234-5Z Building exhaust small quantities of dust and fumes through fans directly to the roof.
- Air exhausted from the 232-Z Building restrooms and chemical storage area through manually operated exhaust fans through the wall.
- Exhaust air from the 232-Z Building electrical switchgear room and the second-floor ventilation supply and control room discharged to the atmosphere via gravity roof exhausters.
- Exhaust air from the 291-Z Building switchgear room, machinery room, ventilation system rooms, exhausted through natural-flow, counterweight dampers is discharged directly to cowls on the roof.
- Surrounding office trailers also release exhaust air directly to the environment by diffusion and manually operated exhaust fans.

4.9 291-Z-1 MAIN STACK

The PFP Main Stack (291-Z-1) exhausts filtered process and ventilation air from gloveboxes and hoods in 234-5Z, 236-Z, and 242-Z Buildings, and those rooms that have a slight potential for contamination. The flow rate averages about 225,000 ft^3/min. Four of seven exhaust fans operate at any one time, with the remaining three as standby, plus two steam-driven turbines for power-loss emergency operation. The stack is equipped with an isokinetic air sampling probe feeding a record sampler and an alpha continuous air monitor (CAM) with an alarm.

The PFP Main Stack is 200 ft tall with inside and outside diameters at the base of 16 ft and 18 ft, respectively. It is constructed of 9-in.-thick reinforced concrete and is stainless steel lined.

4.9.1 Identification and Characterization of Potential Inventory at Risk

The primary sources of information on the identification and characterization of the 291-Z-1 Main Stack effluents are the *Plutonium Finishing Plant Gaseous Effluent Monitoring Plan* (PFP SD-CP-EMP-002) (Keck 1988b) and the Washington State Department of Health, Radioactive Air Emissions Permit FF01: Supplementary Information (RAEPS).

4.9.2 Effluent Stream Description

Effluents associated with this stream are released through the 291-Z-1 Main Stack (see Figure 2-1). The following eight major systems contribute to this effluent stream:

- The 234-5Z Building E-3 (Zone 3) Exhaust System
- The 234-5Z Building E-4 (Zone 4) Exhaust System
- The process solution transfer vacuum exhaust
- The HF E-4 Exhaust System
- The PFP Air Sampling Vacuum Exhaust System
- The 236-Z Building E-3 Exhaust System
- The 236-Z Building E-4 Exhaust System
- The 236-Z Building Air Sampling Vacuum System.

Figure 3-1 summarizes the basic design of this system. (NOTE: The 232-Z Building system has been blanked off and is now part of the 296-Z-14 Stack Effluent System, which is addressed elsewhere.) In addition, the Zone 1 Effluent System is addressed elsewhere. Zone 1 is typically isolated from Zones 3 and 4 (there is no Zone 2 at PFP) by physical barriers and air flow [differential pressure is at least -0.15 in. water gauge (wg)].

Zone 3 includes those areas where there is a significant potential for the presence of radioactive material in quantities unacceptable for unconditional release. Zone 4 includes areas where there is radioactive contamination in quantities unacceptable for routine exposure to workers. These zones are used to establish the requirements for isolating areas using physical barriers and air flow (differential pressure). Typically, Zone 3 effluents are filtered through at least one bank of high-efficiency particulate air (HEPA) filters. For Zone 4, several banks of HEPA filters are more typical.

The 234-5Z E-3 System exhausts rooms that have a slight potential for contamination. It operates at approximately 160,000 ft^3/min and is maintained at a pressure of -0.15 to -0.3 in. wg for contamination control. The rooms typically contain gloveboxes or hoods where plutonium-bearing material is handled or stored.

The 234-5Z E-4 System exhausts those areas that are contaminated or potentially contaminated, notably the process and laboratory gloveboxes and hoods, with the exception of the middle levels of the HC-9B and HA-9A Gloveboxes. It operates at approximately 32,000 ft^3/min and is maintained at -0.5 to -2.0 in. wg for contamination control. The E-4 System

is maintained at a lower pressure than the 234-5Z E-3 System, so that airflow is from the room into the glovebox or hood, thus minimizing the potential for release of contamination to the room.

Process solutions can be transferred between gloveboxes within the PFP using the solution transfer vacuum system. A vacuum is drawn on a vessel by this system and the solution to be transferred is drawn into the vessel. The vacuum pumps are liquid-seal type rated at 26 in. of mercury vacuum (in. Hg) and located in Room 308 of the 234-5Z Building.

The HF E-4 System is the exhaust from the middle levels of the HC-9B and HA-9A Gloveboxes only. It is segregated because of the potential for HF gas emission and the deleterious effect that HF has on the fiberglass media of the HEPA filters. The HC-9B Glovebox is part of the RMC Line, and the middle level contains the fluorinator. The exhaust flow from the middle level of the HC-9B Glovebox is rated at 70 ft^3/min and -0.5 to -2.0 in. wg. The HA-9A Glovebox is not in use.

Air is drawn through the CAMs and fixed-head samplers located in the 234-5Z, 242-Z, and 291-Z Buildings by two liquid-seal type vacuum pumps located in the 291-Z Building. The two pumps are rated at 1,000 ft^3/min at 17 in. Hg.

The 236-Z E-3 System exhausts the rooms in the 236-Z Building that have a slight potential for contamination. It operates at approximately 32,000 ft^3/min and a pressure of -0.15 to -0.3 in. wg. The rooms typically contain gloveboxes or hoods where plutonium-bearing material is handled or stored.

The 236-Z E-4 System exhausts the gloveboxes, hoods, and canyons (areas which are either contaminated or potentially contaminated) of the 236-Z Building. It operates at approximately 2,500 ft^3/min and -0.5 to -2.0 in. wg for contamination control, similar to the 234-5Z E-4 System.

Air is drawn through CAMs and fixed-head samplers in the 236-Z Building by two liquid-seal type vacuum pumps located in Room 35. The two pumps are rated at 400 ft^3/min at 17 in. Hg.

4.9.2.1 234-5Z Building General Ventilation Systems. The 234-5Z Building E-3 Exhaust System operates at about 160,000 ft^3/min. This system normally exhausts rooms containing gloveboxes or hoods where plutonium is handled. The 234-5Z Building E-4 Exhaust System operates at about 32,000 ft^3/min. The E-4 Exhaust System exhausts areas that are or have a high potential to be contaminated. Typically, the 234-5Z Building E-4 Exhaust System exhausts hoods and gloveboxes. Typically, a pressure differential of -0.5 to -2.0 in. wg exists between the E-4 Exhaust (Zone 4) system and the E-3 Exhaust (Zone 3) system.

4.9.2.2 Special Plutonium Finishing Plant Ventilation Systems. The solution process vacuum system is used to transfer process liquids between gloveboxes. The vacuum pumps are liquid-seal types, rated at 26 in. Hg and are located in Room 308 of the 234-5Z Building.

The HF exhaust system is used to exhaust the two gloveboxes in the 234-5Z Building where HF is used. The HF has a deleterious effect on HEPA filters, so it receives special handling. The exhaust flow from the HF system is about 70 ft^3/min.

The PFP air sampling vacuum system provides vacuum to continuous air samplers used throughout the 234-5Z, 242-Z, and 291-Z Buildings. The system consists of two liquid-seal type vacuum pumps located in the 291-Z Building. These two pumps have a rated flow rate of 1,000 ft^3/min at 17 in. Hg.

The air sampling vacuum system for the 236-Z Building consists of two liquid-seal vacuum pumps in Room 35 of the 236-Z Building. These two pumps have a rated flow of 400 ft^3/min at 17 in. Hg.

4.9.2.3 The 236-Z Building General Ventilation System. The 236-Z Building E-3 Ventilation System exhausts the general work area at the 236-Z Building. The 236-Z Building E-3 Ventilation System operates at about 32,000 ft^3/min. The 236-Z Building E-4 Ventilation System exhausts the hoods, gloveboxes, and the canyon area of the 236-Z Building. This system operates at about 2,500 ft^3/min with a differential pressure between the E-3 Ventilation System (Zone 3) and the E-4 Ventilation System (Zone 4) of about -0.5 to -2.0 in. wg.

4.10 296-Z-3 STACK FOR THE 241-Z BUILDING

The 296-Z-3 Stack exhausts filtered air from the sumps and vessels of the 241-Z Building (the PFP Waste Retention Facility). Liquid process wastes from the PFP are received in the tanks in the 241-Z Building and are retained for batch neutralization and transfer to Tank Farms. The building is only a weather cover for the tanks.

The 296-Z-3 Stack is 24 ft high, 14 in. in diameter, and constructed of schedule 10 stainless steel. The flow rate averages about 1,200 ft^3/min. An isokinetic air sampling probe feeding a record sampler and an alpha CAM is located 20 ft downstream of the exhaust fans.

4.10.1 Identification and Characterization of Potential Inventory at Risk

The primary source of information on the identification and characterization of the airborne effluent stream from the 296-Z-3 Stack for the 241-Z Building is SD-CP-EMP-002 (Keck 1988b). This stack receives airborne effluent from the sumps and tanks in the 241-Z Building (see Figure 1). These tanks contain the process wastes from PFP operations.

4.10.2 Effluent Stream Description

Gaseous effluents associated with this stream are released through the 296-Z-3 Stack. As indicated, this stream is the exhaust/vent from tanks and sumps in the 241-Z Building. The primary source is the airborne effluent from

tank vents. The sumps are usually empty. The liquid in the tanks is process wastes from the 234-5Z or 236-Z Buildings. The liquid is neutralized, and $NaNO_2$ is added before the liquid is transferred to the Tank Farms.

4.11 296-Z-5 STACK FOR THE 2736-ZB BUILDING

The 296-Z-5 Stack exhausts filtered air from the 2736-ZB Building. This building has been in service since 1984 and contains facilities for shipping, receiving, repackaging, and nondestructive analysis of plutonium and plutonium-bearing materials.

The 296-Z-5 Stack is 15 ft high, 34 in. in diameter, and constructed of 14 gauge steel. The flow rate averages 12,000 ft^3/min. The stack is equipped with an isokinetic sampling probe feeding a record sampler and an alpha CAM with alarm.

4.11.1 Identification and Characterization of Potential Inventory at Risk

The primary source of information on the identification and characterization of the airborne effluent from the 296-Z-5 Stack for the 2736-ZB Building is SD-CP-EMP-002 (Keck 1988b). This stack receives airborne effluent from the various areas in the 2736-ZB Building. These areas include areas for shipping, receiving, repackaging, and nondestructive assay of plutonium and plutonium-bearing equipment.

4.11.2 Effluent Stream Description

Effluents associated with this stream are released through the 296-Z-5 Stack. The shipping, receiving, repackaging, and nondestructive assay areas are considered potentially contaminated and are passed through three stages of HEPA filtration. No process activity is conducted in these areas. No significant potential for the release of hazardous materials, in other than incidental amounts, is feasible during routine or upset conditions.

4.12 296-Z-6 STACK FOR THE 2736-Z BUILDING STORAGE VAULT

The 296-Z-6 Stack exhausts filtered air from the 2736-Z Building (the plutonium storage vaults).

The 296-Z-6 Stack is 36 in. by 22 in. and extends 30 in. above the roof of the 2736-ZA Building. The flow rate averages 12,000 ft^3/min. The stack is equipped with a record sampler and two alpha CAMs.

4.12.1 Identification and Characterization of Potential Inventory at Risk

The primary source of information on the identification and characterization of the airborne effluent stream from the 296-Z-6 Ventilation Stack for the 2736-Z Building Storage Vault is SD-CP-EMP-002 (Keck 1988b). This stack receives airborne effluent from the various areas in the 2736-Z Building Storage Vaults where plutonium is stored in containers.

4.12.2 Effluent Stream Description

The airborne effluent stream is released entirely through the 296-Z-6 Stack. The 2736-Z Building Storage Vault has the potential for contamination if a container were to burst. As a result, the building air is exhausted through a single stage of HEPA filtration. Currently, there are no process activities conducted in the building. No significant potential for the release of hazardous materials, in other than incidental amounts, are feasible during routine or upset conditions. (NOTE: It would require multiple errors to cause a container to burst in the storage area.)

4.13 296-Z-10 AND 296-Z-11 STACKS FOR THE 231-Z BUILDING

The 231-Z Building is currently in active operation as an office and training facility for PFP support. Formerly a PNL metallurgical research and development (R&D) facility, the building was acquired by Westinghouse Hanford predecessor Rockwell Hanford Company in 1982-83. The facility has not been completely renovated. Although process enclosures have been removed, 3 to 5 gloveboxes (with plutonium surface contamination) are still attached to the E-4 Exhaust System. A contaminated glovebox is stored in one of 6 cells. Two or more cells have been renovated. Some burial boxes containing plutonium- and uranium-contaminated solid wastes are still stored in the facility. The gaseous effluents are still monitored. Until additional information is obtained, for the purposes of these analyses, the need for a FEMP for the facility is based on the projected use of the 231-Z Building when renovations are complete.

The 231-Z Building is a two-story structure of reinforced concrete and concrete block construction. The second floor is essentially one large open bay with a floor area of approximately 23,500 ft^2 used for piping, ventilation ducts, filter cages, miscellaneous storage, and support facilities (vacuum pumps, hydraulic equipment, etc.) for equipment on the first floor. The first floor is approximately 27,000 ft^2 of which 5,300 ft^2 is used for building service machinery. The remaining 21,700 ft^2 is laboratory area. In addition to the main laboratory structure, there is a 3,000-ft^2 office extension of concrete block construction. The office building is attached to the laboratory structure and isolated by air locks. The office building has refrigerated air conditioning that is completely separate from the building ventilation.

4.13.1 Identification and Characterization of Potential Inventory at Risk

Weapons grade (WG) plutonium and ^{241}Am are present as surface contamination on equipment and process enclosures associated with the former R&D activities. Currently, the inventory is categorized into two areas - materials in stabilized, package waste (e.g., metal waste boxes, 55-gal metal drums, equipment such as gloveboxes sealed in plastic sheeting) and equipment still attached to the E-4 Exhaust System. The quantity of plutonium and americium present in each area was estimated by nondestructive testing techniques and reported to be:

150.6 g WG Pu in packaged waste - 8 large metal waste boxes with <30 g Pu in each box, 7 55-gal metal drums, 1 plastic-wrapped glovebox)

63.4 g WG Pu + 2.9 g ^{241}Am in equipment attached to the E-4 Exhaust System - 3+ cells, 5 gloveboxes.

Of the above inventory, only the 63.4 g WG plutonium and 2.9 g ^{241}Am are considered at-risk (exposed to the flow field within the facility). The inventory associated with the packaged waste would require the loss of one or more additional barriers before the inventory is exposed to the atmosphere within the facility.

The potential, uncontrolled airborne emission of the plutonium and americium surface contamination (without the attenuation provided by the emission control devices in the system) under routine conditions can be estimated by the method outlined in Appendix D, 40 CFR 61 (EPA 1989b). The method specifies a release fraction of 1×10^{-3} for powder and liquids and 1×10^{-6} for solids. The suspendability of trace levels of surface contamination from hard, unyielding surfaces such as those used in process enclosure construction (e.g., stainless steel sheets, glass and plastic panes) appears to be closer to that for a solid especially after stabilization from long-term exposure to the flow field as in this case. A release fraction of 1×10^{-4} to 1×10^{-5} appears appropriate. From the previous discussion, a release fraction of 1×10^{-5} is selected.

The mass of WG plutonium and americium are converted to activity using the factors listed in the following equations. The activity of WG plutonium is 63.4 g x 0.0821 Ci/g = 5.205 Ci. The activity of the ^{241}Am is 2.9 g x 3.43 Ci/g = 9.95 Ci. The activity emission then is:

$$\text{WG Pu } 5.205 \text{ Ci} \times (1 \times 10^{-5}) = 5.205 \times 10^{-5} \text{ Ci}$$

$$^{241}\text{Am } 9.95 \text{ Ci} \times (1 \times 10^{-5}) = 9.95 \times 10^{-5} \text{ Ci}$$

The dose to the maximally exposed offsite individual is estimated using the conversion factors provided for FEMP determinations for ^{239}Pu and ^{241}Am. The exposure from the ^{239}Pu is 2.68×10^{-4} mrem EDE and from the ^{241}Am is 7.75×10^{-4} mrem EDE. The total exposure is 0.001 mrem EDE, which is below the 0.1 mrem EDE exposure criteria that would necessitate a FEMP.

4.13.2 Effluent Stream Description

The exhaust from the 231-Z Building is derived from three zones. Zone 1 is from the areas that were designated uncontaminated areas in its previous use (e.g., office, lunch room). The Zone 3 exhaust were generated from operational areas surrounding the process enclosures. Zone 4 exhaust was from the process enclosures. Washed, filtered, conditioned air is supplied to Zone 1 areas and is recycled via a HEPA filtration system as an energy conservation technique. A portion of the air is drawn from Zone 1 into Zone 3 and into the process enclosures through HEPA filters by the vacuum drawn by the Zone 4 Exhaust System. The exhaust drawn from the process enclosures passes through a HEPA filter at the enclosure outlet and a second HEPA filter before discharge from the 296-Z-10 Stack.

4.14 296-Z-14 STACK FOR THE 232-Z BUILDING (INCINERATOR)

The exhaust system for the facility has been significantly modified to assist with facility remediation by removal of plutonium-contaminated process equipment and ventilation components. The 232-Z Building revised ventilation-exhaust system has three zones: Zone 1 (air exhausted from uncontaminated area such as offices); Zone 3 (potentially contaminated operational area surrounding Zone 4 enclosures); and Zone 4 (contaminated process enclosures). Approximately 14,000 ft^3/min of conditioned air (filtered, preheated, washed, reheated) is provided by a single supply fan located on the second floor of the building and distributed to the building zones via ceiling diffuses.

Zone 1 exhaust (restroom, changeroom, and chemical mix room) via locally control (manual on/off switches) wall exhaust fans. Exhaust from the second-floor air supply system and ventilation controls and the electrical switchgear room is discharged via gravity roof exhausters.

Air is exhausted from the Zone 3 areas via floor-mounted, nontestable HEPA filters into a below-floor duct. Two testable stages of HEPA filtration are provided downstream of the floor-mounted units. Air is drawn from the Zone 4 enclosure via nontestable filter mounted at the exhaust outlet into ductwork under the floor to three additional stages of testable HEPA filters. Exhaust air for each zone is drawn from each zone by individual fans. The two streams are combined just before entry into the new stainless steel stack (27 ft tall, 16 in. dia. tapering to 12 in. over the last 2 ft) located at the southeast corner of the building. Total exhaust flow is 1,940 ft^3/min.

4.14.1 Identification and Characterization of Potential Inventory at Risk

As part of the source term reduction/stabilization program, plutonium-contaminated process equipment and ventilation component are to be removed from the 232-Z Building. Decontamination, cleanup and stabilization of the contamination will be performed as necessary. The HEPA-filtered, plastic enclosures (greenhouses) will be used to provide local confinement during such activities. No releases into the gaseous effluents are anticipated.

A potential increase in the radioactive contamination released with the gaseous effluents could result from a process upset such as the breaching of containments as a result of the dropping of a plastic-wrapped section of contaminated ductwork or piping. Because of the presence of multiple stages of HEPA filtration, the loss of more than one process/administrative barrier is required to result in increase activity in the gaseous effluent.

A typical airborne activity concentration within the facility was reported 5×10^{-14} μCi/mL during periods of inactivity. The activity concentration is very close to those reported for emissions from the 234-5Z Building during the vacuum line removal and is well below applicable criteria.

The potential environmental dose from a facility containing the quantity of plutonium estimated for the 232-Z Building (848 g) was estimated using the factors given in Appendix D of 40 CFR 61 (EPA 1989a). The assumptions used in the calculations are as follows:

- That 848 g of WG plutonium aged 5 yr from separations (longer decay times do not increase the potential dose more than 10%) are present in the facility. The plutonium is present as plutonium dioxide (PuO_2) and is Y class.
- That the release fraction of 1×10^{-3} reported in 40 CFR 61, Appendix D (EPA 1989a), for liquids and particulate solids is applicable.
- That the HEPA filter adjustment factor given in Table 1 of 40 CFR 61, Appendix D (EPA 1989a), is applicable.
- That the mass of plutonium released is estimated to be 8.5×10^{-3} g.

The software program AIRDOS-PC (EPA 1989b) was used to evaluate the atmospheric transport and dose. The version (Version 3.0) used by the author has a limited selection of radionuclides and the ^{238}Pu activity could not be directly evaluated. The internal dose factors for ^{238}Pu and ^{239}Pu are almost the same, and the ^{238}Pu contribution was evaluated by adding its activity to the ^{239}Pu. The annual EDE estimated is 0.0032 mrem. The dose estimated is well below the 0.1 mrem dose criteria, and therefore a FEMP is not required for radioactive materials.

4.14.2 Effluent Stream Description

As described above, air drawn from the Zone 3 areas directly and also through the process enclosures (Zone 4) is filtered at least twice through HEPA filters and discharged via a 16-in.-dia. by 27-ft-tall, stainless steel stack (296-Z-14) located on the southeast corner of the 232-Z Building.

4.15 2734-ZL BUILDING HEATING, VENTILATION, AND AIR CONDITIONING EXHAUST

The 2734-ZL Building (HF) contains the HF bottles and supply piping for the fluorinator in the RMC Line. The building has five 100-lb bottles connected to a header supplying the fluorinator, five bottles connected to a header in standby, and five bottles in a storage rack.

The flow rate from the building is approximately 200 ft^3/min.

4.15.1 Identification and Characterization of Potential Inventory at Risk

The primary source of information on the identification and characterization of the airborne effluents from the 2734-ZL Building HVAC exhaust is the PFP SD-CP-EMP-002 (Keck 1988b). This exhaust system receives airborne effluent from the 2734-ZL Building, where HF is stored. No significant quantities of radioactive materials are present in this building.

4.15.2 Effluent Stream Description

Effluents associated with this stream are released through the 2734-L Building HVAC exhaust system. This stream is the ventilation exhaust from the 2734-ZL Building.

This page intentionally left blank.

5.0 POTENTIAL UPSET-OPERATING CONDITIONS

5.1 216-Z-20 CRIB

5.1.1 Identification and Characterization of Potential Source Terms

5.1.1.1 Normal Operating Conditions and Constituents. The equipment cooling water, HVAC condensate, process steam condensate drains, and process cooling water drains all have physical barriers between them and any source of hazardous chemical or radioactive material. The drinking fountains, storm drains, and protected water system are all isolated from hazardous material and radioactive material. Floor drains and fire protection drains would only contain contaminated liquid during upset conditions. (Note: small quantities of uncontaminated liquid will enter the floor drain system from the testing of the safety showers.) The decontamination facilities (decontamination showers, wound flushing stations, and eyewashes) would only be used in upset conditions. When the decontamination facilities are used, the concentrations of hazardous materials or radioactive material actually involved is insignificant compared to the quantity of water involved, unless a very severe accident has occurred. Accidents are outside the scope of this evaluation. Hood drains and sinks are the only potential source of routine release. The source of effluent can typically be characterized by the activity occurring within the room or surrounding area. There are procedural controls to ensure that the liquid introduced into the effluent pathway by this method are within regulatory requirements and guidance.

Characterization of 200 Area liquid effluents including those to the 216-Z-20 Crib have been done and have been reported by F. Jungfleisch (1989). Table 7-3 lists some comparative characterization data showing the chemical analysis of four chemical sewer samples against four samples of 200 West raw water. Samples of the effluents to the 216-Z-20 Crib exhibit a high chloride (0.5 to 1%), a comparatively higher sulfate (0.2 to 0.3%), and trace levels of acetone and chloroform. Procedures were recently instituted to prevent acetone releases and these are confirmed by the last two columns of Table 5-1. The fluoride result could be of concern if it continued, but it was not evident in any additional samples.

5.1.1.2 Hazardous Materials Present in Incidental Quantities. Most hazardous materials are present at PFP in relatively small quantities (less than a few pounds). Although the total PFP inventory of these materials may exceed the reportable quantity, the dispersion and/or method of use precludes their introduction at significant levels into the effluent stream by routine process or upset condition. For example, several types of instrumentation (e.g., electrical switches). The routine releases are essentially zero and no upset conditions exist that could result in a release of more than a small quantity of mercury. Another example is the various sealing and cleaning agents used and dispersed within the facility in household quantities. No routine or upset condition appears to exist that could release the entire

Table 5-1. Analysis of the PFP Chemical Sewer System (Concentrations are in ppb). (Sheet 1 of 3)

Sample	Raw Water Comparison	PFP Chemical Sewer			
		1st	2nd	3rd	4th
Sampling Date		04/28/86	07/25/86	10/20/86	06/22/87
US Testing Number		50034	50097	50159	50315
Stream Fraction		0.5000	0.5000	0.5000	0.5000
Aluminum	Comparable	210	250	150	170
Ammonium	Same	<50	<50	70	<50
Antimony	Same	<100	<100	<100	<100
Barium	Same	25	30	21	32
Beryllium	Same	<5	<5	<5	<5
Cadmium	Same	<2	<2	<2	<2
Calcium	Comparable	19,000	--*	--	16,000
Chromium	Same	<10	<10	<10	<10
Copper	Comparable	20	<10	26	20
Iron	Same	--	<50	<50	<50
Lead	Same	--	--	--	<5
Magnesium	Comparable	4,300	4,300	3,600	3,700
Manganese	Comparable	5	<5	17	<5
Mercury	Same	<0.1	0.1	<0.1	<0.1
Nickel	Same	<10	<10	<10	<10
Potassium	Comparable	860	1,800	880	790
Silver	Same	<10	<10	<10	<10
Sodium	Comparable	--	2,800	1,900	2,300
Strontium	Same	<300	<300	<300	<300
Uranium	Comparable	0.68	0.63	0.43	0.15
Vanadium	Same	<5	<5	<5	<5
Zinc	Comparable	70	13	12	20
Chloride	High	2,600	2,800	2,600	4,900
Cyanide	Same	<10	--	<10	<10
Fluoride	Same (except 1st sample)	<250,000	<500	<500	<500
Nitrate	Comparable	1,100	850	<500	<500
Phosphate	Same	<1,000	<1,000	<1,000	<1,000
Sulfide	No Data	--	--	--	--

Table 5-1. Analysis of the PFP Chemical Sewer System (Concentrations are in PPb). (Sheet 2 of 3)

	Raw Water Comparison	PFP Chemical Sewer			
Sample		1st	2nd	3rd	4th
Sampling Date		04/28/86	07/25/86	10/20/86	06/22/87
US Testing Number		50034	50097	50159	50315
Stream Fraction		0.5000	0.5000	0.5000	0.5000
Sulfate	Higher	13,000	14,000	12,000	15,000
Acetone	Higher	580	90	<10	<10
Chloroform	Higher	34	--	19	45
Amount (L/month)	---	9.5×10^6	1.1×10^7	1.1×10^7	5.7×10^6
pH (dimensionless)	Comparable	7.80	6.30	7.30	5.54
Temp. (celsius)	---	23.6	28.3	28.4	26.1
Alpha Act. (pCi/L)	Comparable	18	26	23	6.4
Beta Act. (pCi/L)	Comparable	5.2	5.9	9.3	<0.98
Conduct. (uS/cm)	Comparable	15	160	140	130
Organic Carbon	Comparable	1,300	2,600	<8,300	1,500
Organic Halide	Higher	210	180	<100	250
*No Data					

	200W Area Raw Water			
Sample	1st	2nd	3rd	4th
Sampling Date	06/10/86	09/12/86	01/20/87	08/21/87
US Testing Number	50061	50133	50224	50336
Stream Fraction	1.0000	1.0000	1.0000	1.0000
Aluminum	290	<150	<150	<150
Ammonium	<50	<50	<50	--
Antimony	<100	<100	<100	<100
Barium	28	28	31	31
Beryllium	<5	<5	<5	<5
Cadmium	<2	<2	<2	<2
Calcium	15,000	19,000	21,000	15,000
Chromium	<10	<10	<10	<10
Copper	28	<10	18	<10
Iron	370	<50	<50	<50

Table 5-1. Analysis of the PFP Chemical Sewer System (Concentrations are in ppb). (Sheet 3 of 3)

	200W Area Raw Water			
Sample	1st	2nd	3rd	4th
Sampling Date	06/10/86	09/12/86	01/20/87	08/21/87
US Testing Number	50061	50133	50224	50336
Stream Fraction	1.0000	1.0000	1.0000	1.0000
Lead	--*	--	14	<50
Magnesium	3,400	4,100	4,900	3,900
Manganese	52	11	<5	11
Mercury	<0.1	<0.1	<0.1	--
Nickel	<10	<10	<10	<10
Potassium	810	820	790	720
Silver	<10	<10	<10	<10
Sodium	2,200	2,400	--	2,100
Strontium	<300	<300	<300	<300
Uranium	0.75	0.68	0.41	0.40
Vanadium	<5	<5	<5	<5
Zinc	8	8	8	6
Chloride	<500	770	920	930
Cyanide	<10	<10	<10	<10
Fluoride	<500	<500	<500	93
Nitrate	<500	<500	<500	<500
Phosphate	<1,000	<1,000	<1,000	<1,000
Sulfide	<1,000	--	<1,000	--
Sulfate	<8,300	9,600	12,000	9,100
Acetone	--	--	--	--
Chloroform	--	--	--	--
Amount (L/month)	1.9×10^8	1.9×10^8	1.9×10^8	1.9×10^8
pH (dimensionless)	7.54	7.72	6.20	5.66
Temperature (celsius)	19.4	19.2	5.2	20.2
Alpha Activity (pCi/L)	8.4	35	2.4	<4.0
Beta Activity (pCi/L)	37	6.8	<2.7	<1.4
Conductivity (uS/cm)	11	120	110	120
Total Organic Carbon	2,400	1,900	1,300	1,600
Total Organic Halide	7.8	<100	<20	6.8

*No Data

inventory into the effluent stream. A final example is the various chemicals used in the analytical laboratory, which is the source of many of the more unusual hazardous materials on the list. These pounds of mercury are present in the facility. Some of the mercury is currently stored and other is present throughout the facility within various chemicals are used in various analytical processes in very small amounts. No routine or upset condition appears to exist that would result in a significant release.

A FEMP would be required when hazardous materials are present in substantial quantities typical of process quantities. Hazardous materials need to be evaluated when they are present in quantities substantially greater than their RQ values. This case occurs when the hazardous materials are used throughout the facility as dispersed quantities or are used in quantities greater than the RQ as a large quantity in a single process.

For radioactive materials, the FEMP evaluation can focus on plutonium isotopes, uranium isotopes, ^{137}Cs, ^{90}Sr, and ^{241}Am. These radionuclides are the primary radionuclides present in PFP because fission products are present in trace amounts only. (Cesium-137 and ^{90}Sr are the primary radionuclides in the fission product inventory at the Hanford Site.)

5.1.1.3 Hazardous and Radioactive Material Potentially Affecting the Effluent. The hazardous materials that may potentially affect the effluents to the 216-Z-20 Crib are summarized in Table 5-2.

5.1.1.4 Potential for Release of the Effluents to the 216-Z-20 Crib. There are no identifiable sources of routine effluent releases of hazardous or radioactive material to the 216-Z-20 Crib. The following sections evaluate the identified limiting case upset conditions for the facilities. Postulated release information is based on processes under operating conditions; however, processes in the PRF and RMC Lines are shut down.

5.1.1.4.1 Chemical Preparation Area--Building 234-5Z, Rooms 336 and 337, and Building 236-Z, Room 40. These areas are the chemical make-up area for the 236-Z and 234-5Z Buildings. There are numerous tanks in these areas. However, the various sumps are sufficient to handle any releases caused by an upset condition. The liquid from these sumps is sent to a catch tank where it is sampled before disposal. If significant amounts of hazardous or radioactive materials are present, the liquid is removed for treatment rather than becoming an effluent to the 216-Z-20 Crib, so there is no release of hazardous or radioactive materials to the 216-Z-20 Crib.

5.1.1.4.2 Slag and Crucible Dissolver Acid Preheater--Building 236-Z. If the line in this system were plugged, it could cause the heated acid to fill and overflow the vent line. This could lead to a liquid release to the effluents to the 216-Z-20 Crib through the drain. The effluent released could deliver up to 40 L/h of either HNO_3 or ANN to the 216-Z-20 Crib. Presuming a 4-h release, this postulated event could result in the release of 160 L of 10 molar (M) nitric acid and 0.2 M ANN. This scenario results in the potential release of 224 lb of nitric acid.

Table 5-2. Hazardous Material Potentially Affecting Liquid Effluent From Plutonium Finishing Plant. (2 sheets)

Product	Location	Amount (lb)	
		Present	RQ
Acetone	Rms 141, 202, 338, dock, 2715-Z	<105	5,000
Aluminum Nitrate (50%)	PFP tanks	<48,000	NL
Carbon Tetrachloride	Rms 141, 154, 202, 338, docks, Chem Prep Prf	<24,000	10
Dichlorodi-fluoromethane (gas)	Dock	<1,300	5,000
Hydrochloric Acid	Rms 141, 202, 338	>5,000	5,000
Hydrofluoric Acid	Chem Prep PRF	>100	100
Hydrogen Fluoride (gas)	Dock	<4,700	100
Hydrogen Peroxide (14% and 30%)	Chem Prep, Rm 338, dock	<275	NL
Lead	Rms 141, 188C, 202	>100	NL (for pieces with diameter >0.004m)
Nitric Acid	Rms 202, 338, dock, PFP tanks	>50,000	1,000
Oxalic Acid	Rms 202, 303, Chem Prep PRF, Chem Prep RMC, 141, 188C	<780	NL
Potassium Hydroxide (45% solution)	Chem Prep PRF, Chem Prep RMS, Rm 188C, dock	<7,700	1,000
Potassium Permanganate	Chem Prep PRF, Rms 202, 302, dock	<600	100
Sodium Carbonate	Chem Prep PRF, Rms 141, 188C, 202, 302	<500	NL
Sodium Chloride	Rms 141, 188C, 202, 302	<1,500	NL
Sodium Fluoride	Chem Prep PRF, Rms 188C, 302	<200	1,000

Table 5-2. Hazardous Material Potentially Affecting Liquid Effluent From Plutonium Finishing Plant. (2 sheets)

Product	Location	Amount (lb)	
		Present	RQ
Sodium Hydroxide (most as 50% solution)	Chem Prep PRF, Rms 188C, 202, 302, 338, docks, PFP tanks	<3,500	1,000
Sodium Nitrate	Rms 188C, 202, 302	<500	NL
Sodium Nitrite	Chem Prep PRF, Rms 141, 188C, 202	<10	100
Sulfuric Acid	Rms 141, 338	<150	1,000
Tetrachloroethylene	Dock	<75	100
Trichlorofluoromethane	Dock	<50	5,000
Waste Paint Mixture including unspecified % of Methyl Ethyl Ketone, Xylene, Toluene, Vinyl Chloride Resin, Phenol, Zinc Oxide, Methanol, Lead Chromate, Ethyl Benzene, Cyclohexanone, n-Butyl Acetate, A/Epichlorohydrin Resin, etc.	235-5 (Waste)	<350	100 (F003, F005, D001)
Zinc, Zinc Chloride	Rm 188C	<25	1,000

NL = Not listed and typically not hazardous
RMS = Rooms
Chem Prep PRF = Chemical preparation area for the Plutonium Reclamation Facility
Chem Prep RMC = Chemical preparation area for the RMC Line
PFP = Plutonium Finishing Plant
RQ = Reportable quantity.

5.1.1.4.3 Slag and Crucible Dissolver Steam Jacket Failure--Building 236-Z. The steam jacket could fail and fill with acid during shutdown. The acid could be discharged to the effluents to the 216-Z-20 Crib when the system is restarted. This could result in the release of about 56 lb of nitric acid over a 24-h period to the 216-Z-20 Crib.

5.1.1.4.4 Tank 13, Slag and Crucible Dissolver Off-Gas Scrubber Cooling Water. The scrubber cooling water jacket could fail, which would allow contact between the cooling water and the process. The dissolver tank volume is 96 L and the scrub solution is 1 M nitric acid and 0.1 M ANN with possibly some radioactive plutonium contamination. Hazardous and radioactive contaminants could leak into the effluents to the 216-Z-20 Crib as a result of this upset condition. This could result in a release of about 14 lb of nitric acid and 0.021 lb (0.6 Ci) of plutonium over a 24-h period to the 216-Z-20 Crib.

5.1.1.4.5 Off-Gas Cooler/Condenser Water. The off-gas coolers/condensers are operated at glovebox pressures. When operating, the protected process cooling water (PPCW) supply is at a significantly higher pressure than the glovebox, ensuring that the flow would be into the glovebox. When the PPCW is off, there would be no pressure. A leak in the PPCW coil could result in hazardous or radioactive material migrating into the PPCW system where it would become effluent to the 216-Z-20 Crib when the system is next operated. However, because of the nature of the material migration, it is projected that only trace quantities would enter the effluents to the 216-Z-20 Crib as a result of this upset condition.

5.1.1.4.6 C-4 Heat Exchanger in Glovebox 6. The C-4 Heat Exchanger is operated at glovebox pressures. When operating, the PPCW supply is at a significantly higher pressure than the glovebox, ensuring that the flow would be into the glovebox. When the PPCW is off, there would be no pressure. A leak in the PPCW coil could result in hazardous or radioactive material migrating into the system where it would be transferred to the 216-Z-20 Crib when the system was used again. The only chemicals in the heat exchanger are those scrubbed from the vacuum exhaust, thus only trace amounts of hazardous materials would be released. A measurable amount of radioactive material could be released by this upset condition. This could result in a release of about 6.0 lb of nitric acid and 1.2×10^{-4} lb (3.3×10^{-3} Ci) of Pu over a 24-h period to the 216-Z-20 Crib. Nitric acid levels to 0.5 g/L, ANN to 0.01 g/L, and Pu to 0.1 mg/L are considered possible.

5.1.1.4.7 Spill of Nitric Acid During Feed Transfer. The PFP bulk nitric acid storage tank holds up to 7,000 gal of liquid. The large liquid volume is more than sufficient to overwhelm tank sump barriers in either the RMC or PRF chemical preparation areas. Therefore, failure to follow operating procedures and turn the feed pump off promptly for a fill operation could result in an upset condition leading to contamination of the 216-Z-20 Crib. The PRF recently installed an interlock to prevent that, but it could still occur in the RMC facility. Therefore, a 4-h upset condition is still possible in RMC operations. The upset could release up to 7 gal/min of concentrated nitric acid (57%) over a 4-h period to the 216-Z-20 Crib from the acid storage and feed tank through some intermediate tank transfer or receiver vessel. The acid released (spilled) from the tank is considered as the contributor stream.

Timely response to this upset is necessary to minimize the discharge quantity. Both acid concentration and the pump flow rate (7 gal/min) are high, thereby increasing the chance of exceeding the CERCLA release limits.

5.1.2 Historical Monitoring/Sampling Data For the Effluent Streams

5.1.2.1 Effluent Stream Data. There are currently data from analysis of the effluent stream in both the SD-CP-EMP-001, Rev. 1 (Keck 1988a) and WHC-EP-0342, Addendum 8 (WHC 1990). Both sets of data were used as part of this evaluation.

These data were used to identify those constituents that vary significantly from the sanitary water system. (Raw water is not used at PFP.) Where information is not available on the sanitary water, the raw water data were used to indicate the potential conditions in the sanitary water. Table 5-3 summarizes the release for constituents, that differ markedly from sanitary water. (Note: the water flow into the 216-Z-20 Crib decreased from about 3×10^8 to about 7.4×10^7 gal/yr during 1989. Much of this change resulted from the diversion of the waste streams with little or no potential for contamination to the 216-Z-21 Basin.)

Based on Tables 5-2 and 5-3 (and the RQ value for silver of 1 lb), it appears there is potential to release more than the RQ amount of acetone and silver when upset conditions are considered. The results for silver may be a sampling anomaly. Further sampling may clarify this result. The silver analysis result appears indicative of a sample analysis problem (concentration below the limit of detectability for the analysis) because there were apparently 4 samples analyzed, which all resulted in values of <500 ppb with a standard deviation of zero. Further analysis appears that it could significantly reduce the estimate of this release.

The chloroform in the general sampling data (Table 5-3) is well below the RQ value and is probably a product of the chlorination of the sanitary water system [see WHC-EP-0342, Addendum 8 (WHC 1990)]. The chloride concentration concern discussed in SD-CP-EMP-001, Rev. 1 (Keck 1988a) appears to be related to the chlorination considerations because the sanitary water data are consistent with the effluent data. The materials present in process quantities do not appear to be significant contributors to the effluent stream. The absence of the material in process quantities is consistent with the current capabilities of the handling facilities (see Section 5.3.3.1). Carbon tetrachloride, for which no sampling data are available, is the only exception. Lead and zinc are present in the facility in metallic form and have little chance of being released to the liquid effluent stream by routine or upset conditions. The absence of lead and zinc is confirmed by the sampling data. The dichlorodifluoromethane and the HF are contained gases stored in appropriate containers on the PFP docks. There is no identified mechanism for these materials to be released to the liquid effluent stream in significant quantities. The absence of these gases is confirmed by sampling data [WHC-EP-0342, Addendum 8 (WHC 1990)]. If future process activities involve these gases, their contribution may need to be reevaluated.

Table 5-3. Effluent Release Characteristics.

Characteristic	Current	PRF	Amount Released (lb*)		
			RMC	General	Water@
Silver	<309	NM	NM	NM	6.2 (25)
Acetone	6.9	<1,000	<800	<500	ND
Tetrachloromethane	3.1	NM	NM	NM	<17 (<71)
Copper	8	NM	43 (10#)	48	<4 (<16)
Chloroform	NM	NM	NM	<100	ND(~0)
Carbon Tetrachloride	NM	NM	NM	NM	NM
Alpha Activity (Ci)	<3 E-03	<5 E-02	<0.4	<3 E-02	<3.5 E-03 (<1.4 E-02)
pH (dimensionless)	NL	5.6	NL	NL	NL
Conductivity (uS)	NL	NL	<+^	<+^	NL
Temperature (+^%)	MG	+45%	+70%	MG	NL

*Units in pounds unless otherwise specified. Unless otherwise specified, the result is based on 3×10^8 gal/yr, except for current values, which are based on 7.4×10^7 gal/yr.

@Table D-5 is the preferred table in determining these values. Table D-6 is only used for items not present on Table D-5 and radioactivity. It is unclear what units apply to the values on Table D-5 for radioactivity. Where two values are shown, the values in parenthesis are for 3×10^8 gal/yr, those not in parenthesis are for 7.4×10^7 gal/yr.

ND = Not detected.
NM = No measurement.
NL = Nominal value.
MG = Marginal increase.
+^ = Positive increase.
< = Less than or small, as appropriate.
= Value relates to a single sample spike (assumed to be 3 mo) and this value does not reoccur in the available data. A similar spike occurred with a fluorine sample; it is not included because it was addressed in WHC-EP-0342, Addendum 8 (WHC 1990).

These results contain a high degree of uncertainty because of the uncertainty in the data and the conservatism of the evaluation. This could be corrected by the collection of additional data to ensure that the concentrations in the streams are not overestimated and the concentrations in the supply water are not being underestimated.

In addition, WHC-EP-0342, Addendum 8 (WHC 1990) indicates that the acetone data result could be related to the laboratory analysis process. If this relationship were confirmed, the acetone result could be corrected. Based on the general sampling data, for the time period when the PRF and RMC Line were operating, it appears that further increases in the effluent releases could occur.

Based on sampling data for $^{239,240}Pu$ and the results in Table 5-2, it appears that the effluent will exceed 4% of the DCG at the point of release for ^{239}Pu. Current operations result in the release of about 1.1×10^{-8} μCi/mL for 2.8×10^{8}L. The current alpha activity release for PFP seems similar to the incoming sanitary water. However, the alpha activity in the incoming water should be uranium and its progeny, which either decays (resulting in progeny) or is removed from the water. This assumption is based on the similarity of the total alpha activity effluent to plutonium and americium analyses (within the uncertainty of the analyses). Plutonium and americium would not be present in the incoming water supply.

Future activities may significantly increase the potential routine releases. If the PRF were restarted, the effluent could increase to a level of 1.8×10^{-7} μCi/mL for an annual flow of 2.8×10^{8}L. If the RMC Line were restarted the effluent could increase to a level of 1.4×10^{-6} μCi/mL for an annual flow of 2.8×10^{8}L.

5.1.2.2 Groundwater Monitoring Data. When groundwater monitoring data for the wells adjacent to PFP are compared to sanitary and raw water data, the alpha activity in the groundwater appears to be consistent with there being no contribution from PFP at this time. It is important to note that the time delay for transport of the alpha activity from the 216-Z-20 Basin to the groundwater may not have elapsed. There appear to be elevated chlorides and nitrates in the groundwater, which could be related to this effluent stream or historical effluent streams from the 216-Z-19 Ditch, which originally received this effluent.

5.2 216-Z-21 SEEPAGE BASIN SYSTEM

5.2.1 Identification and Characterization of Potential Source Terms

The effluent is basically water derived from several sources, storm drains, cooling water, steam condensate, and cleaning water. The dust removal water (spray pan water) from the cleaning of intake air was analyzed to verify the absence of contamination risk. Samples were taken from the spray pan water before connection to this system. The results of the sample analysis are given in Table 5-4. These results confirm that the pan water source is nonradioactive.

Table 5-4. Spray Pan Water Sample Results.

	Total Alpha	Total Beta
Derived Concentration Guide	30 pCi/L	1,000 pCi/L
Drinking Water Standard	15 pCi/L	50 pCi/L
Spray Pan Water Sample #1	<2 pCi/L	<30 pCi/L
Spray Pan Water Sample #2	<2 pCi/L	<10 pCi/L

Based on SD-CP-EMP-001, Rev. 1 (Keck 1988a), the system contains only treated water supplied to PFP or typical rain water run off. No upset conditions exist that could result in concentrations hazardous or radioactive material unacceptable for uncontrolled release (referred to as significant amount of hazardous or radioactive material in the balance of this evaluation) based on the data in the referenced SD-CP-EMP-001, Rev. 1 (Keck 1988a). There are always several barriers between this water and any significant source of hazardous or radioactive material contamination. This is consistent with the current sampling data.

5.2.2 Effluent Discharge Point Description

The primary discharge point for the Storm Drain System liquid effluent is the 216-Z-21 Basin. The basin is a surface water pond where the water either evaporates or seeps into the ground. It is also possible that a small amount of the water associated with Streams 1 and 2 may remain on the surface in the PFP grounds or form part of the runoff to other areas.

5.2.3 Historical Monitoring/Sampling Data

The current data in the 1989 Environmental Surveillance Report [WHC-EP-0145-2 (Schmidt 1990)], indicates there are no significant amounts of hazardous or radioactive material present in 216-Z-21 Basin. In fact, this basin has characteristics consistent with Westlake [WHC-EP-0145-2 (Schmidt 1990)] which is a natural stagnant seep on the Hanford Site that does not receive liquid effluents from any Hanford (or any other artificial) operation. Current conditions in the basin are indicative of past conditions because the only outlets for this basin are evaporation and seepage.

5.3 EAST AND WEST TILE FIELDS

5.3.1 Identification and Characterization of Potential Source Terms

The sanitary sewer system effluent stream is characteristic of a normal sanitary sewer system. The sanitary waste system handles only used sanitary water, human waste discharges, and body cleansing agents and liquids. Based on the source of this effluent, it is regulated under the Benton-Franklin

County Health District Department guidelines for sanitary sewers. There are no upset conditions that could result in concentrations unacceptable for uncontrolled release (referred to as a significant amount of hazardous or radioactive material in the balance of this evaluation). There are always many barriers between this water and any significant source of hazardous or radioactive material contamination.

5.3.2 Effluent Discharge Point Description

The discharge point for this potential effluent is through the septic tank system into the tile field for the PFP area (see Figure 2-1).

5.3.3 Historical Monitoring/Sampling Data

No monitoring data are required or collected for sanitary sewer systems. Environmental surveillance data (i.e., raw and sanitary water data) and ground water monitoring data provide further indication that there is no effluent path of significance associated with this potential effluent stream.

5.4 216-Z-13, 216-Z-14, AND 216-Z-15 FRENCH DRAINS

No potential upset conditions have been identified or deemed credible for the 216-Z-13, 216-Z-14, and 216-Z-15 French Drains. No mechanisms were identified for routine release of radionuclides offsite and, therefore, no analyses were performed for operational radiological impact to the offsite population. Ecological impacts from this facility are essentially unchanged from present conditions.

5.5 241-Z TREATMENT TANKS AND FACILITY

5.5.1 Identification and Characterization of Potential Source Terms

5.5.1.1 Hazardous Materials Present in Incidental Quantities. Most of the hazardous materials present at PFP are in relatively small quantities (less than a few pounds). Although the total PFP inventory of these materials may exceed the reportable quantity, the dispersion and/or method of use precludes their introduction at significant levels into the effluent stream by routine process or upset condition. For example, several pounds of mercury are present in the facility. This mercury is dispersed throughout the facility within various types of instrumentation (e.g., manometers, electrical switches). The routine releases are essentially zero and no upset conditions exist that could result in a release of more than a small quantity of mercury. Another example is the various sealing and cleaning agents used and dispersed within the facility in household quantities. No routine or upset condition appears to exist that could release the entire inventory into the effluent stream. A final example is the various chemicals used in the analytical laboratory, which is the source of many of the more unusual hazardous

materials on the list. These chemicals are used in various analytical processes in very small amounts. No routine or upset condition appears to exist that would result in a significant release.

A FEMP would be required when hazardous materials are present in substantial quantities typical of process quantities. Hazardous materials need to be evaluated when they are present in quantities substantially greater than their RQ values. This case occurs when the hazardous materials are used throughout the facility as dispersed quantities or are used in quantities greater than the RQ as a large quantity in a single process.

For radioactive materials, the FEMP evaluation can focus on plutonium isotopes, uranium isotopes, ^{137}Cs, ^{90}Sr, and ^{241}Am. These radionuclides are the primary radionuclides present in PFP, as fission products are present in trace amounts only). (Cesium-137 and ^{90}Sr are the primary radionuclides in the fission product inventory at the Hanford Site.)

5.5.1.2 Hazardous and Radioactive Material Potentially Affecting the Effluent. Hazardous materials identified that could contaminate the 241-Z Treatment Tank effluent are summarized in Table 6-1.

5.5.1.3 Potential for Release Through this Process Waste System. There are no identifiable sources of routine release of hazardous or radioactive material to the environment from the 241-Z Treatment Tank system. If upset conditions were to occur within this facility, the material would be contained within the facility sumps. If this material contained significant quantities of radioactive or hazardous material, it would be returned to the process system for treatment and disposal or in special cases sent to other locations for treatment and disposal. It would not be released to the environment.

5.5.2 Effluent Discharge Point Description

There is no liquid effluent discharge to the environment. The material in this system during routine and upset conditions is sent to treatment facilities.

5.5.3 Historical Monitoring/Sampling Data

There is no effluent to monitor because none is released to the environment. When groundwater monitoring data for the wells adjacent to PFP is compared to sanitary and raw water data, the alpha activity in the groundwater appears to be consistent with there being no contribution from PFP at this time.

5.6 234-5Z BUILDING ZONE 1 EXHAUST

5.6.1 Identification and Characterization of Potential Source Terms

The only sources of routine airborne releases of hazardous material from these areas would be vapors from the storage and work areas, which would be extremely small. This may include small amounts of difluorodichloromethane associated with maintenance activities for air conditioning and refrigeration equipment. The only upset conditions postulated are as follows:

- A slight increase in the vapors from any material spilled in the areas
- A single short-term release of difluorodichloromethane caused by equipment failure or an error during maintenance
- A leak from controlled area ventilation equipment (e.g., duct work). The release from this upset condition would be very small because the interior of the ventilation equipment is at a lower pressure and flow would be into the ventilation equipment. If the ventilation equipment is inoperative, there would be no ventilation (driving force) for movement of the material.

NOTE: the gas stored at the facilities in these areas are in U.S. Department of Transportation (DOT)-approved shipping containers. No upset conditions are expected to result in the release of the contents of these containers.

5.6.2 Effluent Discharge Point Description

The effluent release points are described above. The effluent releases are directly to the environment with no engineered mitigation systems.

5.6.3 Historical Monitoring/Sampling Data for the Effluent Streams

There are currently no effluent monitors on these airborne effluent streams. However, radioactive airborne environmental monitoring data does exist for the area. The DCGs listed in DOE Order 5400.5 (DOE 1990) are concentration values that result in an exposure of 100 mrem EDE from a continuous yearly exposure to this concentration. Since the determination level for a FEMP is 0.1 mrem EDE, 0.1% of the DCG would be the concentration exposure limit for the public if a FEMP were not required. Based on the data in the *Westinghouse Hanford Company Environmental Surveillance Annual Report: 200/600 Areas* (WHC-EP-0145-2) (Schmidt 1990), the concentrations during this period are not estimated to exceed 0.1% of the DCG at the source. This is based on the results reported for ^{239}Pu, ^{137}Cs, and ^{90}S, which are the radionuclides of interest. Based on this report, the airborne concentration from all of the 200 West Area are now consistently below 0.1% of the DCG at the source since 1988.

5.7 291-Z-1 MAIN STACK

5.7.1 Identification and Characterization of Potential Source Terms

The only sources of routine airborne releases of hazardous material (excluding HF) from PFP would be vapors from the storage and work areas, which would be extremely small. This may include small amounts of difluorodichloromethane associated with maintenance activities for air conditioning, refrigeration, and other equipment. The only upset conditions impacts would be:

- A slight increase in the vapors from any material spilled in the building
- A single short-term release of difluorodichloromethane caused by equipment failure or an error during maintenance
- A leak from controlled-area ventilation equipment. A release resulting from this upset condition is estimated to be very small because the interior of the ventilation equipment is at a lower pressure and flow would be into the ventilation equipment. If the ventilation equipment is inoperative, there would be no ventilation (driving force) to allow movement of the material.

NOTE: The gas stored at the facilities in these areas are in DOT-approved shipping containers. No upset conditions have been evaluated for the release of the contents of these containers.

5.7.1.1 Hazardous Materials Present in Incidental Quantities. Most of the hazardous materials present at PFP are in relatively small quantities (less than a few pounds). Although the total PFP inventory of these materials may exceed the reportable quantity, the dispersion and/or method of use precludes their introduction at significant levels into the effluent stream by routine process or upset condition. For example, several pounds of mercury are present in the facility. This mercury is dispersed throughout the facility within various types of instrumentation (e.g., manometers, electrical switches). The routine releases are essentially zero and no upset conditions exist that could result in a release of more than a small quantity of mercury. Another example is the various sealing and cleaning agents used and dispersed within the facility in household quantities. No routine or upset condition appears to exist that could release the entire inventory into the effluent stream. A final example is the various chemicals used in the analytical laboratory, which is the source of many of the more unusual hazardous materials on the list. These chemicals are used in various analytical processes in very small amounts. No routine or upset condition appears to exist that would result in a significant release. An exception would be the malicious disposal of the material into the drain system, which is a violation of PFP administrative procedures. Such malicious acts are outside the scope of this evaluation.

A FEMP would be required when hazardous materials are present in substantial quantities typical of process quantities. Hazardous materials need to be evaluated when they are present in quantities substantially greater than their RQ values. This case occurs when the hazardous materials are used throughout the facility as dispersed quantities or are used in quantities greater than the RQ as a large quantity in a single process.

For radioactive materials, the FEMP evaluation can focus on plutonium isotopes, uranium isotopes, ^{137}Cs, ^{90}Sr, and ^{241}Am. These radionuclides are the primary radionuclides present in PFP, as fission products are present in trace amounts only). (The ^{137}Ce and ^{90}Sr are the primary radionuclides in the fission product inventory at the Hanford Site.)

5.7.1.2 Hazardous and Radioactive Material Potentially Affecting the Effluent. Hazardous materials that could contaminate the 291-Z Main Stack effluent are summarized in Table 6-2.

The only significant potential hazardous materials that could contribute significantly to the airborne effluent stream are CCl_4, HF, Acetone, and NO_x (a $NaNO_3$ reaction product with an RQ of 10 lb), HCl gas, and Pu, which was reported in SD-CP-EMP-002 (Keck 1988b). (NOTE: The potential impacts of dichlorodifluoromethane were addressed previously.) This evaluation indicates:

- Operation of the PRF will generate CCl_4 emissions in excess of reportable quantities. Operating data gathered from production campaigns conducted from 1983 through 1987 indicate CCl_4 releases averaged 400 lb/d for PRF

- NO_x produced by nitric acid, sodium nitrite, and other reactions results in the release each year of 100 lb of NO_x, with a maximum of less than 10 lb/24 h

- Twenty pounds of HCl gas are released each year.

Nonprocess upset conditions could occur during filter change-outs, and glove/bag/window/panel replacements on a glovebox. When a filter in a filterbox is changed, the airflow through the box is significantly reduced. This reduces the air flow that could transport any contaminant. The air passes through a downstream filter room before discharge. During the glovebox maintenance activities, a temporary enclosure is set up around the area, which effectively makes the area part of the glovebox, so there is no potential for an upset that would have an effect on the stack emissions.

The determination of the requirements for a FEMP are based on upset conditions without the benefit of engineered controls for mitigating release [see *A Guide for Preparing Hanford Site Facility Effluent Monitoring Plans* (WHC 1991a)] (e.g., HEPA filtration and continuous air monitor alarms). Based on the current inventories of radioactive material and existing data on routine effluent releases, which pass through HEPA filters [WHC-EP-0145-2 (Schmidt 1990)], general inspection of the inventories and data indicate that the action levels [1% of the DCG in DOE Order 5400.5 (DOE 1990)] will be exceeded for routine releases postulated with no engineering controls.

(NOTE: Currently, there is no significant release of radionuclides from PFP during routine or upset conditions because of the presence of the HEPA filters.)

5.7.2 Effluent Discharge Point Description

The 291-Z-1 Stack has a diameter of 4.1 to 4.9 m (top to base) and a height of 61 m. The stack is continuously sampled and monitored using an isokinetic stack sampler. The average flowrate in the stack is approximately 118 m^3/s.

5.7.3 Historical Monitoring/Sampling Data for the Effluent Streams

The airborne concentration measured in the 291-Z-1 Stack is from 2 to 5 times the DCG, assuming all alpha activity is ^{239}Pu. The environmental data in Table E-1 indicates that currently about 4.04×10^{-4} Ci of ^{239}Pu are released each year. Based on WHC-EP-0145-2 (Schmidt 1990), the airborne concentration of ^{239}Pu is less than 0.1% of the DCG at the 200 West Area boundary. (NOTE: The 291-Z-1 Stack release at a height of 61 m may have no effect on the airborne effluent concentration at the 200 West Area boundary.)

5.8 296-Z-3 STACK FOR THE 241-Z BUILDING

5.8.1 Identification and Characterization of Potential Source Terms

The only sources of routine airborne releases of hazardous material from these areas would be evaporation from the tanks and sumps, which is estimated to be a small quantity.

5.8.1.1 Hazardous Materials Present in Incidental Quantities. Most of the hazardous materials present at PFP are in relatively small quantities (less than a few pounds). Although the total PFP inventory of these materials may exceed the reportable quantity, the dispersion and/or method of use precludes their introduction at significant levels into the effluent stream by routine process or upset condition.

A FEMP would be required when hazardous materials are present in substantial quantities typical of process quantities. Hazardous materials need to be evaluated when they are present in quantities substantially greater than their RQ values. This case occurs when the hazardous materials are used throughout the facility as dispersed quantities or are used in quantities greater than the RQ as a large quantity in a single process.

For radioactive materials, the FEMP evaluation can focus on plutonium isotopes, uranium isotopes, ^{137}Cs, ^{90}Sr, and ^{241}Am. These radionuclides are the primary radionuclides present in PFP, because fission products are present in trace amounts only). (Cesium-137 and ^{90}Sr are the primary radionuclides in the fission product inventory at the Hanford Site.)

5.8.1.2 Hazardous and Radioactive Material Potentially Affecting the Effluent. The hazardous materials, which may potentially affect the 296-Z-3 Stack effluent are summarized in Table 6-2.

The only significant potential hazardous materials that could contribute significantly to the airborne effluent stream are CCl_4 and NO_x (a $NaNO_3$ reaction product with an RQ of 10 lb). The evaluation in SD-CP-EMP-002 (Keck 1988b) indicates the following:

- CCl_4 is present, but it is extremely well entrained in the process solution because of the actions of the PFP organic recovery system. Since it is well entrained, very little would evaporate through the tank and sump vents.

- If $NaNO_3$ is added to the process solution before neutralization, NO_x would be generated. It is projected that more than 10 lb of NO_x would be generated by this upset. It would take two procedure violations for this to happen; it is improbable.

The determination of the requirements for a FEMP are based on upset conditions without the benefit of engineered controls for mitigating release [see *A Guide for Preparing Hanford Site Facility Effluent Monitoring Plans* (WHC 1991a)] (e.g., HEPA filtration and continuous air monitor alarms). The evaluation of routine releases will assume no engineering controls such as HEPA filters. This results in an increase in the release by a factor of 3,000. Upset conditions for this facility would be actions that would increase the evaporation/resuspension rate for the tanks (e.g., accelerated neutralization or addition of $NaNO_3$ before neutralization). This type of upset could increase the release by a factor of 10 or more, but this would only continue for a few hours. Thus, the increase caused by upset conditions will not significantly affect the yearly routine release. (NOTE: there is no significant release of radionuclides from 241-Z during routine or upset conditions because of the presence of the HEPA filters.)

5.8.2 Effluent Discharge Point Description

The 296-Z-3 Stack has a diameter of 14 in. and a height of 24 ft. The stack is continuously sampled and monitored using an isokinetic stack sampler. The average flow rate in the stack is about 1,200 ft^3/min.

5.8.3 Historical Monitoring/Sampling Data for the Effluent Streams

The airborne concentration at the 296-Z-3 Stack is approximately 1 DCG, assuming all alpha activity is ^{239}Pu. Based on the 1989 Hanford Site environmental surveillance report (Schmidt 1990), the airborne concentration of ^{239}Pu is less than 0.1% of the DCG at the 200 West Area boundary.

5.9 296-Z-5 STACK FOR THE 2736-ZB BUILDING

5.9.1 Identification and Characterization of Potential Source Terms

Most of the hazardous materials are present in the 2736-ZB Building in relatively small quantities (less than a few pounds). Hazardous materials present in the building are the result of materials received. These materials are contained except during repackaging. (NOTE: The packaging meets the DOT Specification 7A requirements that they survive a 4-ft drop without releasing their contents.) During repackaging, no ventilation is used that could generate significant amounts of evaporation of hazardous materials. No airborne hazardous materials are used in this area in significant quantities. Although the total PFP inventory of these materials may exceed the reportable quantity, the dispersion and/or method of use precludes their introduction at significant levels into the effluent stream by routine process or upset conditions. For example, several pounds of mercury are present in the facility. This mercury is dispersed throughout the facility within various types of instrumentation (e.g., manometers, electrical switches). The routine releases are essentially zero and no upset conditions exist that could result in a release of more than a small quantity of mercury. Another example is the various sealing and cleaning agents used and dispersed within the facility in household quantities. No routine or upset condition appears to exist that could release the entire inventory into the effluent stream.

Nonprocess upset conditions could occur during filter change-outs and during glove/bag/window/panel replacements on a glovebox. When a filter in a filterbox is changed, the airflow through the box is significantly reduced. This reduces the air flow that could transport any contaminant. The air passes through an additional downstream filterbox before discharge. During the glovebox maintenance activities, a temporary enclosure is set up around the area, which effectively makes the area part of the glovebox, so there is no potential for an upset that would have an effect on the stack emissions.

A similar justified narrowing of the evaluation is possible for radioactive material. Only plutonium isotopes, uranium isotopes, ^{137}Cs, ^{90}Sr, and ^{241}Am will need to be considered, since the transuranics are the primary radionuclides present in PFP (fission products are present only in trace amounts). (Cesium-137 and ^{90}Sr are the primary radionuclides in the fission product inventory at the Hanford Site.)

The determination of the requirements for a FEMP are based on upset conditions without the benefit of engineered controls for mitigating release [see *A Guide for Preparing Hanford Site Facility Effluent Monitoring Plans* (WHC 1991a)] (e.g., HEPA filtration and continuous air monitor alarms). The evaluation of routine releases will assume no engineering controls such as HEPA filters. This results in an increase in the release by a factor of 3,000. No upset conditions resulting in a significant increase in airborne effluent have been identified.

5.9.2 Effluent Discharge Point Description

The 296-Z-5 Stack has a diameter of 34 in. and a height of 15 ft. The stack is continuously sampled and monitored using an isokinetic stack sampler. The average flowrate in the stack is about 12,000 ft^3/min.

5.9.3 Historical Monitoring/Sampling Data for the Effluent Streams

The airborne concentration at the 296-Z-5 Stack is approximately 0.1 of the DCG, assuming all alpha activity is ^{239}Pu. Based on the 1989 Hanford Site environmental surveillance report (Schmidt 1990), the airborne concentration of ^{239}Pu is less than 0.1% of the DCG at the 200 West Area boundary.

5.10 296-Z-6 STACK FOR THE 2736-Z BUILDING STORAGE VAULT

5.10.1 Identification and Characterization of Potential Source Terms

Only plutonium and small amounts of other radioactive contaminates are present in the product storage area.

To be consistent with current regulations governing monitoring requirements, the determination of the requirements for a FEMP are based on upset conditions without the benefit of engineered controls for mitigating release [see the Guide (WHC 1991a)] (e.g., HEPA filtration and continuous air monitor alarms). Therefore, the evaluation of this airborne effluent must reflect that the absence of the single-stage HEPA filtration in assessing releases from this facility. The evaluation of routine releases will reflect the impact of ignoring the HEPA filters by increasing the release by a factor of 3,000. No upset conditions resulting in a significant increase in airborne effluent have been identified.

5.10.2 Effluent Discharge Point Description

The 296-Z-6 Stack has a diameter of 22 in. and extends 30 in. above the 2736-ZA Building. The stack is continuously sampled and monitored. The average flow rate in the stack is about 1,200 ft^3/min.

5.10.3 Historical Monitoring/Sampling Data for the Effluent Streams

The airborne concentration at the 296-Z-6 Stack, assuming all alpha activity is ^{239}Pu, is about 0.1 of the DCG. Based on the 1989 Hanford Site environmental surveillance report (Schmidt 1990), the airborne concentration of ^{239}Pu is less than 0.1% of the DCG at the 200 West Area boundary.

5.11 296-Z-10 AND 296-Z-11 STACKS FOR THE 231-Z BUILDING

5.11.1 Identification and Characterization of Potential Source Terms

The quantity and characteristics of the plutonium and ^{241}Am surface contamination on the process enclosure surfaces and solid wastes, and the characteristics of the process enclosure/solid waste surface is described in Section 16.1. The plutonium inventory present in the burial boxes is not at risk under normal or upset conditions (properly packaged, two or more barriers must be lost before the inventory is exposed to the local atmosphere). It is likely that the plutonium and uranium contamination on the process enclosure surfaces is relatively stable for two reasons. First, most process enclosure surfaces are materials not readily corroded, such as glass or stainless steel, and second, the contamination has been present for a long period of time indicating that it is probably nonsmearable.

5.11.2 Effluent Discharge Point Description

Gaseous effluents are discharged from the roof of the 231-Z Building (approximately 45 ft to 50 ft above grade) through two stacks. The E-4 Process Exhausts are discharged at a volumetric flowrate of approximately 5,150 ft^3/min via the 296-Z-10 Stack that is 32 in. in diameter and 11 ft tall, made of stainless steel. The only portion of the E-3 exhaust discharged directly is from the two change rooms on the second floor via the rectangular, 19.5-in. by 27-in. carbon steel 296-Z-11 Stack. The volumetric flowrate is approximately 2,500 ft^3/min and is highly variable.

The four main fresh air supply systems have a total design capacity of approximately 60,000 ft^3/min. Rooms serviced by these systems receive one air change every 4 min (15 air changes per hour). Each system is equipped with wet cell washers and filters. Room air can be heated as required at the supply fan. There are also steam booster heaters in the ductwork.

There are 7 room exhaust fans with a total design capacity of approximately 40,000 ft^3/min. All exhaust ducts are located inside laboratory rooms whereas a number of supply ducts are located in each corridor. With proper balancing, air movement is from the corridor into each laboratory room. This type of air flow is indispensable for proper contamination control.

All room exhaust fans draw air from the rooms through HWS-7511-S high-efficiency fire- and moisture-resistant Type A Filters. These filters are provided to ensure against a contamination release to the environs in the event of an accident involving a contamination release within one of the laboratory rooms. The pressure differential across the filters is routinely checked by the building air-balance crew to determine whether the filters are performing adequately.

None of the room supply fans are connected to the emergency power circuit. Only the room exhaust fans servicing Rooms 46, 47, 49, and 50 are connected to the emergency circuit. In the event normal building power is

lost, air movement within the building would change radically. All air movement would be towards the north side of the laboratory to the fan operated from the emergency power. This arrangement is intentional; the potentially contaminated air moves away from the change rooms and office areas.

5.11.3 Historical Monitoring/Sampling Data for the Effluent Streams

The 296-Z-10 Stack, which discharges air from the E-4 Process Exhausts, is equipped with a record sampler and has been in continuous service up to the present time. Formal reporting of the results were discontinued in June 1987 because of the low levels of the airborne contamination and the status of the facility. The annual gross alpha and beta measured for the preceding periods are summarized for the two stacks (296-Z-10 and 296-Z-11) as follows:

	Gross Alpha, Ci		Gross Beta, Ci	
	296-Z-10	296-Z-11	296-Z-10	296-Z-11
1985	<2 E-07	<2 E-07	<7 E-07	2 E-06
1986	<2 E-07	<1 E-07	3 E-06	<4 E-07
1987*	<2 E-07	<1 E-07	<6 E-07	<4 E-07

*Based on twice the measured value for the first 6 mo.

5.12 296-Z-14 STACK FOR THE 232-Z BUILDING (INCINERATOR)

5.12.1 Identification and Characterization of Potential Source Terms

Source term reduction and stabilization performed in the 232-Z Building refers to the removal of plutonium-contaminated process equipment and ventilation system components. During the removal process, decontamination and cleanup of the interiors of process equipment and the facility itself will be performed as necessary. These activities may generate some airborne particulate materials but many of these activities will be performed using greenhouses to enclose and contain the equipment and components affected. Therefore, the release of the airborne particulate materials to Zone 3 or Zone 4 would require the loss of an physical or administrative barrier.

5.12.2 Effluent Discharge Point Description

The 296-Z-14 stack is a 16-in.-dia. by 27-ft-tall stainless steel stack located at the southeast corner of the 232-Z Building.

5.12.3 Historical Monitoring/Sampling Data for the Effluent Streams

The stack is a new installation and no measurements of the emissions exists.

5.13 2734-ZL BUILDING HEATING, VENTILATION, AND AIR CONDITIONING EXHAUST

5.13.1 Identification and Characterization of Potential Source Terms

The only sources of routine airborne releases of hazardous material (excluding HF) from these areas would be vapors from the storage and work areas, which are estimated be extremely small. The vapors may include small amounts of difluorodichloromethane, which is associated with maintenance activities for air conditioning, refrigeration, and other equipment. The only upset conditions postulated are the following:

- A slight increase in the vapors from any material spilled in the areas
- A single short-term release of difluorodichloromethane caused by equipment failure or an error during maintenance
- A leak from controlled-area ventilation equipment. The release from this upset condition would be very small because the interior of the ventilation equipment is at a lower pressure and flow would be into the ventilation equipment. If the ventilation equipment is inoperative, there would be no ventilation (driving force) to provide for movement of the material.

NOTE: The gases stored at the facilities are in DOT-approved shipping containers. No upset conditions are expected to result in the release of the contents of these containers.

Most of the hazardous material present at 2734-ZL is in relatively small quantities (less than a few pounds). Although the total PFP inventory of these materials may exceed the RQ, the dispersion and/or method of use precludes its introduction at significant levels into the effluent stream by routine process or upset condition. No routine or upset condition appears to exist that could release the entire inventory into the effluent stream. No significant quantities of hazardous material will be present in the waste stream.

During routine operations, no significant quantity of HF will be present in the waste stream. During upset conditions, significant quantities may be present. The PFP gaseous effluent monitoring plan, SD-CP-EMP-002 (Keck 1988b) postulates three possible upset conditions. The limiting event is the rupture of the HF header piping. Five HF bottles, each containing 100 lb of HF, are attached to this header. If the engineered controls for mitigating

(i.e., preventing in this case) the release event are assumed not to be functional, this facility could release up to 500 lb of HF. The RQ for HF is 100 lb.

There are no radioactive materials in this facility.

5.13.2 Effluent Discharge Point Description

The 2734-ZL Building HVAC ventilation exhaust has an average flowrate of 200 ft^3/min. In addition, the building is continuously monitored for HF. This monitor has an alarm set point of 3 ppm of HF.

9413196.0749

This page intentionally left blank.

6.0 SUMMARY

Based on the evaluation of the potential inventory of hazardous and radioactive materials and the routine effluent monitoring data for the PFP facilities, a FEMP will be required. This evaluation considered both routine and upset conditions and systems ancillary to the PFP Facilities.

6.1 DETERMINATION OF FACILITY EFFLUENT MONITORING PLAN REQUIREMENTS FOR 216-Z-20 CRIB

There is potential to release more than the RQ amount of acetone and silver when upset conditions are considered. If the PRF and RMC Line were operating, it appears that further increases in the effluent releases could occur. These future activities may significantly increase the potential routine releases.

Changes in future activities may also affect the routine alpha activity releases. If the PRF were restarted, the effluent could increase to a level of 1.8×10^{-7} μCi/mL for an annual flow of 2.8×10^{8} L. If the RMC Line were restarted, the effluent could increase to a level of 1.4×10^{-6} μCi/mL for an annual flow of 2.8×10^{8} L.

If the S&C Dissolver Acid Preheater in the 236-Z Building had a plugged line, it could cause the heated acid to fill and overflow. This scenario results in the potential release of 224 lb of nitric acid.

If the water jacket for C-4 Heat Exchanger in Glovebox 6 fails, it could result in a release of about 6.0 lb of nitric acid and 1.2×10^{-4} lb (3.3×10^{-3} Ci) of Pu to the effluents to the 216-Z-20 Crib.

Information on the potential radioactive liquid effluent releases during both routine and upset facility operating conditions indicates the EDE to the maximally exposed member of the general public consuming the water would be greater than 4 mrem/yr, which represents a dose limit from a radionuclide or mixture of radionuclides at a level of 4% of the DCG value. The principle radionuclides contributing to the potential release are ^{239,240}Pu. Based on the data, it is recommended that a FEMP be prepared describing the effluent monitoring requirements for radioactive liquid effluent releases.

Information on the potential hazardous liquid effluent releases during both routine and upset facility operating conditions indicates that the quantities of hazardous materials at the point of discharge will exceed applicable reportable quantities of regulated substances. Specific information is presented in the attachments to this report. Based on the data, it is recommended that a FEMP must be prepared describing the effluent monitoring requirements for hazardous liquid effluent releases.

6.2 DETERMINATION OF FACILITY EFFLUENT MONITORING PLAN REQUIREMENTS FOR 216-Z-21 SEEPAGE BASIN SYSTEM

Information on the potential radioactive liquid effluent releases during both routine and upset facility operating conditions indicates that no detectable (significant) release would occur. Thus, the EDE (related to this facility) to the maximally exposed member of the general public consuming the water from this area would be less than 4 mrem/yr, which represents the dose limit from a radionuclide or mixture of radionuclides at a level of 4% of the DCG value. Specific information is presented in the attachments to this document. Based on the data, it appears that no FEMP is required for this release pathway for radioactive materials in the effluent.

Information on the potential hazardous liquid effluent releases during both routine and upset facility operating conditions indicates that the quantities of hazardous materials at the point of discharge is essentially zero. Thus, this effluent pathway will not exceed applicable reportable quantities for regulated substances. Specific information is presented in the attachments to this document. Based on the data, it appears that no FEMP is required for this release pathway for hazardous materials in the liquid effluent.

6.3 DETERMINATION OF FACILITY EFFLUENT MONITORING PLAN REQUIREMENTS FOR THE EAST AND WEST TILE FIELDS

Information on the potential radioactive liquid effluent releases during both routine and upset facility operating conditions indicates that no detectable (significant) release would occur. Thus, the EDE (related to this facility) to the maximally exposed member of the general public consuming the water from this area would be less than 4 mrem/yr, which represents the dose limit from a radionuclide or mixture of radionuclides at a level of 4% of the DCG value. Specific information is presented in Attachment 1. Based on the data, it appears that no FEMP is required for this release pathway for radioactive materials in the effluent.

Information on the potential hazardous liquid effluent releases during both routine and upset facility operating conditions indicates that the quantity of hazardous materials at the point of discharge is essentially zero. Thus, this effluent pathway will not exceed applicable reportable quantities for regulated substances. Specific information is presented in the attachments to this report. Based on the data, it appears that no FEMP is required for this release pathway for hazardous materials in the effluent.

6.4 DETERMINATION OF FACILITY EFFLUENT MONITORING PLAN REQUIREMENTS FOR THE 216-Z-13, 216-Z-14, AND 216-Z-15 FRENCH DRAINS

Because of the potential for radioactive material to be in the effluent streams, a FEMP is required for these streams.

6.5 DETERMINATION OF FACILITY EFFLUENT MONITORING PLAN REQUIREMENTS FOR THE 241-Z TREATMENT TANKS AND FACILITY

Information on the potential radioactive liquid effluent releases during both routine and upset facility operating conditions indicates that no detectable (significant) release would occur. Thus, the EDE (related to this facility) to the maximally exposed member of the general public consuming the water from this area would be less than 4 mrem/yr. Four mrem/yr represents the dose limit from a radionuclide or mixture of radionuclides at a level of 4% of the DCG value. Specific information is presented in the attachments to this report. Based on the data, it appears that no FEMP is required for this release pathway for potential radioactive liquids in the effluent.

Information on the potential hazardous liquid effluent releases during both routine and upset facility operating conditions indicates that the quantities of hazardous materials at the point of discharge is essentially zero. Thus, this effluent pathway will not exceed applicable reportable quantities for regulated substances. Specific information is presented in the attachments to this report. Based on the data, it appears that no FEMP is required for this release pathway for hazardous materials in the effluent.

6.6 DETERMINATION OF FACILITY EFFLUENT MONITORING PLAN REQUIREMENTS FOR THE 234-5Z BUILDING ZONE 1 EXHAUST

An evaluation of the potential radioactive airborne effluent releases during both routine and upset facility operating conditions has been performed. The evaluation was performed by reviewing radioactive material inventories and potential upset conditions. It was concluded that there is no mechanism for a significant release of radioactive material. The evaluation indicates the EDE to the maximally exposed member of the general public would be less than 0.1 mrem/yr, which represents 1% of the radioactive airborne effluent release limit standard of 10 mrem/yr. Based on the data, it appears that a FEMP is not required for this release pathway for radioactive material.

Information on the potential hazardous airborne effluent releases during both routine and upset facility operating conditions indicates that the quantities of hazardous materials at the point of discharge to the environment will not exceed applicable reportable quantities for regulated substances. Specific information is presented in the attachments to this report. Based on the data, it appears that a FEMP is not required for this release pathway for hazardous material.

The upset condition for the facility to generate hazardous airborne material is a container breach during handling. The only generation mechanism would be evaporation of this material.

6.7 DETERMINATION OF FACILITY EFFLUENT MONITORING PLAN REQUIREMENTS FOR THE 291-Z-1 MAIN STACK

The potential radioactive airborne effluent releases during routine and upset facility operating conditions has been evaluated. Based on the current inventories of plutonium and the current effluent releases for routine activities with the HEPA filter in place, the EDE to the maximally exposed member of the general public would exceed 0.1 mrem/yr without HEPA filters. The EDE of 0.1 mrem/yr represents 1% of the radioactive airborne effluent release limit standard of 10 mrem/yr. Based on the data, it appears that a FEMP is required for this release pathway for radioactive materials.

Information on the potential hazardous airborne effluent releases during both routine and upset facility operating conditions indicates that the quantities of hazardous materials at the point of discharge to the environment will exceed applicable reportable quantities for regulated substances. Specific information is presented in the attachments to this report. Based on the data, it appears that a FEMP is required for this release pathway for hazardous materials in the effluent.

6.8 DETERMINATION OF FACILITY EFFLUENT MONITORING PLAN REQUIREMENTS FOR THE 296-Z-3 STACK

An evaluation of the potential radioactive airborne effluent releases during both routine and upset facility operating conditions can be estimated by multiplying the release by 3,000 and then correcting for dispersion of the material before it reaches the nearest member of the public. A reduction in concentration by a factor of 10^{-5} would be expected. The results indicate if the HEPA filters are not present, the concentration at the nearest member of the public would be less than 0.1 mrem EDE per year. Based on this assessment, the current effluent for routine and upset activities (without the HEPA filter in place), the radiation EDE to the maximally exposed member of the general public would be less than 0.1 mrem/yr, which represents 1% of the radioactive airborne effluent release limit standard of 10 mrem/yr. Based on the data, it appears that a FEMP is not required for this release pathway for radioactive materials in the effluent.

Information on the potential hazardous airborne effluent releases during both routine and upset facility operating conditions indicates that the quantities of hazardous materials at the point of discharge is essentially zero. Thus, this effluent pathway will not exceed applicable reportable quantities for regulated substances. Specific information is presented in the attachments to this report. Based on the data, it appears that a FEMP is not required for this release pathway for hazardous materials.

6.9 DETERMINATION OF FACILITY EFFLUENT MONITORING PLAN REQUIREMENTS FOR THE 296-Z-5 STACK FOR THE 2736-ZB BUILING

An evaluation of the potential radioactive airborne effluent releases during both routine and upset facility operating conditions can be estimated by multiplying the release by 3,000 and then correcting for dispersion of the

material before it reaches the nearest member of the public. A reduction in concentration by a factor of 10^{-5} would be expected. The results indicate if the HEPA filters are not present, the concentration at the nearest member of the public would be less than 0.1 mrem EDE per year. Based on this assessment, the current effluent for routine and upset activities (without the HEPA filter in place), the radiation EDE to the maximally exposed member of the general public would be less than 0.1 mrem/yr, which represents 1% of the radioactive airborne effluent release limit standard of 10 mrem/yr. Based on the data, it appears that a FEMP is not required for this release pathway for radioactive materials in the effluent.

Information on the potential hazardous airborne effluent releases during both routine and upset facility operating conditions indicates that the quantities of hazardous materials at the point of discharge is zero. Thus, this effluent pathway will not exceed applicable reportable quantities for regulated substances. Specific information is presented in the attachments to this report. Based on the data, it appears that a FEMP is not required for this release pathway for hazardous materials.

6.10 DETERMINATION OF FACILITY EFFLUENT MONITORING PLAN REQUIREMENTS FOR THE 296-Z-6 STACK FOR THE 2736-Z BUILDING STORAGE VAULT

An evaluation of the potential radioactive airborne effluent releases during both routine and upset facility operating conditions can be estimated by multiplying the release by 3,000 and then correcting for dispersion of the material before it reaches the nearest member of the public. Based on dispersion data provided by Pacific Northwest Laboratory (PNL), a reduction in concentration by a factor of 10^{-5} would be expected. The results indicate if the HEPA filters are not present, the concentration at the nearest member of the public would be about 0.001 DCG for a year. Based on this assessment of the current effluent for routine and upset activities (without the HEPA filter in place), the radiation EDE to the maximally exposed member of the general public would be less than 0.1 mrem/yr, which represents 1% of the radioactive airborne effluent release limit standard of 10 mrem/yr. Based on the data, it appears that a FEMP is not required for this release pathway for radioactive materials in the effluent.

Information on the potential hazardous liquid effluent releases during both routine and upset facility operating conditions indicates that the quantities of hazardous materials in the facility is zero. Thus, this effluent pathway will not exceed applicable reportable quantities for regulated substances. Specific information is presented in the attachments to this report. Based on the data, it appears that a FEMP is not required for this release pathway for hazardous materials in the effluent.

6.11 DETERMINATION OF FACILITY EFFLUENT MONITORING PLAN REQUIREMENTS FOR THE 296-Z-6 STACK FOR THE 2736-Z BUILDING

The current status of the facility is uncertain because funding to complete renovations is subject to budgetary constraints. Based on the

projected use of the facility as an office and training facility with no projected use or storage of radioactive or hazardous materials, a FEMP is not required. The decision will be reviewed based on the length of time anticipated for the current status, the type and level of the plutonium and uranium inventory estimated to be at risk, and other additional information obtained.

6.12 DETERMINATION OF FACILITY EFFLUENT MONITORING PLAN REQUIREMENTS FOR THE 296-Z-14 STACK FOR THE 232-Z BUILING (INCINERATOR)

An evaluation of the potential radioactive airborne effluent releases during both routine and upset facility operating conditions can be estimated by multiplying the release by 3,000 and then correcting for dispersion of the material before it reaches the nearest member of the public. Based on dispersion data provided by Pacific Northwest Laboratory (PNL), a reduction in concentration by a factor of 10^{-5} would be expected. The results indicate if the HEPA filters are not present, the concentration at the nearest member of the public would be about 0.001 DCG for a year. Based on this assessment, the current effluent for routine and upset activities (without the HEPA filter in place), the radiation EDE to the maximally exposed member of the general public would be less than 0.1 mrem/yr, which represents 1% of the radioactive airborne effluent release limit standard of 10 mrem/yr. Based on the data, it appears that a FEMP is not required for this release pathway for radioactive materials in the effluent.

Information on the potential hazardous liquid effluent releases during both routine and upset facility operating conditions indicates that the quantities of hazardous materials in the facility is zero. Thus, this effluent pathway will not exceed applicable reportable quantities for regulated substances. Specific information is presented in the attachments to this report. Based on the data, it appears that a FEMP is not required for this release pathway for hazardous materials in the effluent.

6.13 DETERMINATION OF FACILITY EFFLUENT MONITORING PLAN REQUIREMENTS FOR THE 2734-ZL BUILDING HEATING, VENTILATION, AND AIR CONDITIONING EXHAUST

An evaluation of the potential radioactive airborne effluent releases during both routine and upset facility operating conditions has been performed. No potential sources of significant quantities of radioactive material have been identified. Based on this information, the EDE to the maximally exposed member of the general public is estimated to be essentially zero. This estimate is clearly less than 0.1 mrem/yr, which represents 1% of the radioactive airborne effluent release limit standard of 10 mrem/yr. Based on the data, it appears that no FEMP is required for this release pathway for radioactive materials.

Information on the potential hazardous airborne effluent releases during both routine and upset facility operating conditions indicates that the quantities of hazardous materials at the point of discharge to the environment may exceed applicable reportable quantities for regulated substances (HF)

during upset conditions. Specific information is presented in the attachments to this report. Based on the data, it appears that a FEMP is required for this release pathway for hazardous materials.

This page intentionally left blank.

7.0 DEFINITIONS

Administrative Control Values--Contractor-imposed radionuclide and hazardous material release limits usually based on as low as reasonably achievable (ALARA) goals for protection of the public.

Contractor--A company or entity that has entered into a prime contract to operate a Hanford Site facility or perform a function for the U.S. Department of Energy-Richland Operations Office (DOE-RL).

Crib--Subsurface liquid waste disposal unit designed for percolation.

Dangerous Waste--Washington State designation for solid wastes specified in Washington Administrative Code (WAC) 173-303-070 through 173-303-103 (WAC 1989b) as dangerous or extremely hazardous waste.

Derived Concentration Guides--The concentration of a radionuclide in air or water that, under conditions of continuous exposure for 1 yr by a single exposure mode, would result in an effective dose equivalent of 100 mrem. Derived Concentration Guides (DCG) do not consider decay products when the parent radionuclide is the cause of the exposure. The DCGs are listed in U.S. Department of Energy (DOE) Order 5400.5, Chapter III (DOE 1990), and contractor safety and environmental compliance manuals.

Discharge Point or Effluent Discharge Point--The point at which an effluent or discharge enters the environment from the facility in which it was generated.

Ditch--Unlined conveyance of liquid wastes to a pond or trench structure designed for percolation.

Drainfield--Liquid waste disposal unit, usually underground, that is fed by a sewer system and is designed for percolation. These units are also referred to as tile fields.

Effluent--Any treated or untreated air emission or liquid discharge at a DOE site or from a DOE facility.

Effluent Monitoring--Measurement of liquid and gaseous effluents for the purpose of characterizing and quantifying contaminants, assessing radiation exposures of members of the public, providing a means to monitor and/or control effluents at or near the point of discharge, and demonstrating compliance with applicable standards and permit requirements.

Effluent Sampling--The continuous or intermittent collection and analysis of effluent samples for the purpose of characterizing and quantifying contaminants, assessing radiation exposures to members of the public, providing a means to control effluents at or near the point of discharge, and demonstrating compliance with applicable standards and permit requirements.

Environmental Control Limits--Contractor limits based on permit limits and contractor policies as derived from DOE requirements.

Environmental Occurrence--Any sudden or sustained deviation (categorized as emergencies, unusual occurrences, or off-normal occurrences) from a regulated or planned performance at a DOE operation that has environmental protection and compliance significance. Typical occurrences of interest to this document include failure of primary or secondary facility effluent monitoring equipment or a monitored/unmonitored release of regulated materials exceeding administrative control values.

Environmental Surveillance--The collection and analysis of samples or direct measurements of air, water, soil, foodstuffs, biota, and other media from DOE sites and their environs to determine compliance with applicable standards and permit requirements, assessing radiation exposures of members of the public, and assessing the effects, if any, on the local environment.

Extremely Hazardous Waste--Washington State designation for waste specified in WAC 173-303-070 through 173-303-103 (WAC 1989b).

Hazardous Materials--DOE term for nonradioactive hazardous substances as specified by the U.S. Environmental Protection Agency (EPA) [40 Code of Regulations (CFR) 302 (EPA 1989c)].

French Drain--Subsurface soil drain for disposal of relatively low-volume, low-level radioactive solutions. This is similar in basic design principles to a crib arrangement.

Hazardous Waste--Solid wastes designated by 40 CFR Part 261 (EPA 1989d), and regulated as hazardous wastes by the EPA or Washington State WAC 173-303 (WAC 1989b). This term includes dangerous waste, extremely hazardous wastes, and toxic dangerous waste.

In-Line Monitor--A system in which a detector or other measuring device is placed in the effluent stream for the purpose of performing measurements on the effluent stream.

Inventory at Risk--The quantity of radioactive and/or nonradioactive hazardous material present in a facility with the potential to enter a gaseous or liquid effluent stream.

Isokinetic--A condition that exists when the velocity of air entering a sampling probe held in an airstream is identical to the velocity axis of flow of the airstream being sampled at that point.

Mixed Waste--Waste containing both radioactive and hazardous components regulated by the *Atomic Energy Act of 1954* and the *Resource Conservation and Recovery Act of 1976*, respectively.

Normal Operations--A plant operating condition where all processes and safety control devices are operating as designed.

Occurrence Notification Center--The single point of contact for reporting occurrences (i.e., emergencies, unusual occurrences, and off-normal occurrences) that affect DOE facilities on the Hanford Site.

Out-of-Specification Condition--A condition that is outside the operating parameters established for airborne emissions and liquid discharges.

Radioactive Component--Refers only to the actual radionuclides dispersed or suspended in the waste substance.

Reportable Quantities--That quantity of hazardous substances as listed in 40 CFR 302.4 (EPA 1989c), which, if released, requires notification as per 40 CFR 302. These quantities also provide the criteria for requiring FEMPs with respect to nonradioactive hazardous substances.

Shutdown Condition--A plant condition where all processes involving radioactive and/or hazardous materials are inactive and otherwise stable.

Source Term--The amount, activity, or concentration of a hazardous or radioactive material in a facility effluent stream at the point of discharge that is available to expose personnel either within the facility or beyond the site boundary.

Toxic Dangerous Wastes--Washington State designation for wastes meeting the criteria specified in WAC 173-303-101 (WAC 1989b).

Trench--Unlined surface impoundment-like structure designed for percolation and not for the total confinement of liquid wastes.

Upset Condition--Any one condition that is outside the normal process operating parameters, or an unusual plant operating condition where one material confinement/containment barrier or engineered control has failed.

This page intentionally left blank.

8.0 REFERENCES

Atomic Energy Act of 1954, as amended, 41 USC 2011.

DOE, 1990, *Radiation Protection of the Public and the Environment*, DOE Order 5400.5, U.S. Department of Energy, Washington, D.C.

EPA, 1989a, "National Emission Standards for Hazardous Air Pollutants," Title 40, Code of Federal Regulations, Part 61, U.S. Environmental Protection Agency, Washington, D.C.

EPA, 1989b, *Users Guide for AIRDOS-PC Version 3.0*, EPA 520/6-89-035, U.S. Environmental Protection Agency Office of Radiation Programs, as Vegas Facility, Las Vegas, Nevada.

EPA, 1989c, "Designation, Reportable Quantities and Notification," Title 40, Code of Federal Regulations, Part 302, U.S. Environmental Protection Agency, Washington, D.C.

EPA, 1989d, "Identification and Listing of Hazardous Waste," Title 40, Code of Federal Regulations, Part 261, U.S. Environmental Protection Agency, Washington, D.C.

Jungfleisch, F., 1989, *Waste Streams Characterization Report*, WHC-EP-0287 Volumes 1-4, Westinghouse Hanford Company, Richland, Washington.

Keck, R. D., 1988a, *The Plutonium Finishing Plant Liquid Effluent Monitoring Plan*, SD-CP-EMP-001, Westinghouse Hanford Company, Richland, Washington.

Keck, R. D., 1988b, *The Plutonium Finishing Plant Gaseous Effluent Monitoring Plan*, SD-CP-EMP-002, Revision 0, Westinghouse Hanford Company, Richland, Washington.

Resource Conservation and Recovery Act of 1976, as amended, 42 USC 6901.

Schmidt, J. W., C. R. Huckfeldt, A. R. Johnson, and S. M. McKinney, 1990, *Westinghouse Hanford Company Environmental Surveillance Annual Report--200/600 Areas*, WHC-EP-0145-2, Westinghouse Hanford Company, Richland, Washington.

WAC, 1989a, *Underground Injection Control Program*, Washington Administrative Code 173-218, Washington State Department of Ecology, Olympia, Washington.

WAC, 1989b, *Dangerous Waste Regulations*, Washington Administrative Code 173-303, Washington State Department of Ecology, Olympia, Washington.

WHC, 1988, Environmental Compliance Manual, WHC-CM-7-5, Westinghouse Hanford Company, Richland, Washington.

WHC, 1990, "Stream Specific Reports, Addendum 8--Plutonium Finishing Plant Wastewater," WHC-EP-0342, Westinghouse Hanford Company, Richland, Washington.

WHC, 1991a, *A Guide for Preparing Hanford Site Effluent Monitoring Plans*, WHC-EP-0438, Westinghouse Hanford Company, Richland, Washington.

WHC, 1991b, *Unit Dose Calculation Methods and Summary of Facility Effluent Monitoring Plan Determinations*, WHC-EP-0498, Westinghouse Hanford Company, Richland, Washington.

9103134.0475

9413136.0175

ATTACHMENT 1

DETERMINATION OF FACILITY EFFLUENT MONITORING PLAN REQUIREMENT

This page intentionally left blank.

ATTACHMENT 1

DETERMINATION OF FACILITY EFFLUENT MONITORING PLAN REQUIREMENT

FACILITY 234-5Z, 291-Z, 242-Z, 236-Z, 2736-Z, 232-Z DISCHARGE POINT 216-Z-20 Crib

FACILITY INVENTORY AT RISK OF RADIOACTIVE MATERIALS

	Radionuclide	Physical/ chemical form	Quantity released w/o controls[1] (Ci)	Projected dose w/o controls (mrem) GENII	CAP88
1.	^{90}Sr	Liquid	6.7 E-03	2.3 E-04	2.9 E-04
2.	^{137}Cs	Liquid	1.4 E-02	3.2 E-04	3.4 E-04
3.	^{238}Pu	Liquid	4.5 E-03	2.7 E-02	3.6 E-02
4.	^{239}Pu	Liquid	7.8 E-03	5.0 E-02	6.8 E-02
5.	^{241}Pu	Liquid	5.1 E-02	5.1 E-03	7.0 E-03
6.	^{241}Am	Liquid	7.2 E-03	7.0 E-02	9.4 E-02
Total				0.15	0.21

FACILITY INVENTORY AT RISK OF NONRADIOACTIVE HAZARDOUS MATERIALS

	Regulated material	Quantity release (lb)[2]	Reportable quantity (lb)	% of reportable quantity
1.	HNO_3	224	1,000	22.4

[1]Quantities based on liquid effluent data.
[2]Upset condition.

Identification of Reference Material

WHC-EP-0141-2

If the liquid effluent is potentially contaminated (sufficient quantity to exceed 4% of the DCG on a yearly average), a FEMP is required. For airborne or liquid effluents, if the total projected dose from radionuclides exceeds 0.1 mrem EDE from any one discharge point or if any one regulated material discharged from a facility exceeds 100% of a reportable quantity or a permitted quantity, a FEMP is required. Check the appropriate space below.

FEMP is required ___X___ FEMP is not required _____

EVALUATOR JE Bramson DATE 1/24/91

MANAGER, ~~ENVIRONMENTAL~~ Facility Compliance JE Bramson for LA Garner DATE 1/25/91

~~FACILITY~~ ENVIRONMENTAL MANAGER JE Bramson DATE 1/31/91

ATTACHMENT 1

DETERMINATION OF FACILITY EFFLUENT MONITORING PLAN REQUIREMENT

FACILITY 234-5Z Building (North Storm Drain) DISCHARGE POINT 216-Z-21 Basin

FACILITY INVENTORY AT RISK OF RADIOACTIVE MATERIALS

	Radionuclide	Physical/ chemical form	Quantity released w/controls (Ci)	Quantity release w/o controls (Ci)	Projected dose w/o controls (mrem)
1.	None				

FACILITY INVENTORY AT RISK OF NONRADIOACTIVE HAZARDOUS MATERIALS

	Regulated material	Quantity (lb)	Quantity release (lb)	Reportable quantity (lb)	% of reportable quantity
1.	None				

Identification of Reference Material

If the liquid effluent is potentially contaminated (sufficient quantity to exceed 4% of the DCG on a yearly average), a FEMP is required. For airborne or liquid effluents, if the total projected dose from radionuclides exceeds 0.1 mrem EDE from any one discharge point or if any one regulated material discharged from a facility exceeds 100% of a reportable quantity or a permitted quantity, a FEMP is required. Check the appropriate space below.

FEMP is required _____ FEMP is not required ___X___

EVALUATOR [signature] DATE 1/24/91

MANAGER, ~~ENVIRONMENTAL~~ Facility Compliance [signature] for LA Garner JE Bramson DATE 1/25/91

~~FACILITY~~ ENVIRONMENTAL MANAGER [signature] DATE 1/31/91

ATTACHMENT 1

DETERMINATION OF FACILITY EFFLUENT MONITORING PLAN REQUIREMENT

FACILITY 234-5Z, 236-Z, 270-Z, and 2704-Z Buildings; MO-015, -016, -017, -031, -032, and -939 Trailers DISCHARGE POINT East Tile Field

FACILITY INVENTORY AT RISK OF RADIOACTIVE MATERIALS

	Radionuclide	Physical/ chemical form	Quantity released w/controls (Ci)	Quantity release w/o controls (Ci)	Projected dose w/o controls (mrem)
1.	None				

FACILITY INVENTORY AT RISK OF NONRADIOACTIVE HAZARDOUS MATERIALS

	Regulated material	Quantity (lb)	Quantity release (lb)	Reportable quantity (lb)	% of reportable quantity
1.	None				

Identification of Reference Material _____

If the liquid effluent is potentially contaminated (sufficient quantity to exceed 4% of the DCG on a yearly average), a FEMP is required. For airborne or liquid effluents, if the total projected dose from radionuclides exceeds 0.1 mrem EDE from any one discharge point or if any one regulated material discharged from a facility exceeds 100% of a reportable quantity or a permitted quantity, a FEMP is required. Check the appropriate space below.

FEMP is required _____ FEMP is not required X

EVALUATOR [signature] DATE DATE 1/24/91

MANAGER, ENVIRONMENTAL [signature] for JA Garner DATE DATE 1/25/91

ENVIRONMENTAL FACILITY MANAGER [signature] DATE 1/31/91

ATTACHMENT 1

DETERMINATION OF FACILITY EFFLUENT MONITORING PLAN REQUIREMENT

FACILITY 234-5Z Annex, 2736-ZB Building DISCHARGE POINT West Tile Field

FACILITY INVENTORY AT RISK OF RADIOACTIVE MATERIALS

Radionuclide	Physical/ chemical form	Quantity released w/controls (Ci)	Quantity release w/o controls (Ci)	Projected dose w/o controls (mrem)
1. None				

FACILITY INVENTORY AT RISK OF NONRADIOACTIVE HAZARDOUS MATERIALS

Regulated material	Quantity (lb)	Quantity release (lb)	Reportable quantity (lb)	% of reportable quantity
1. None				

Identification of Reference Material _____

If the liquid effluent is potentially contaminated (sufficient quantity to exceed 4% of the DCG on a yearly average), a FEMP is required. For airborne or liquid effluents, if the total projected dose from radionuclides exceeds 0.1 mrem EDE from any one discharge point or if any one regulated material discharged from a facility exceeds 100% of a reportable quantity or a permitted quantity, a FEMP is required. Check the appropriate space below.

FEMP is required _____ FEMP is not required ___X___

EVALUATOR _____ DATE DATE 1/24/91

MANAGER, ENVIRONMENTAL FACILITY COMPLIANCE _____ DATE _____

MANAGER, ENVIRONMENTAL _____ for LA Gonnaeff JE Bremson DATE 1/25/91

ENVIRONMENTAL FACILITY MANAGER _____ DATE 1-31-91

ATTACHMENT 1

DETERMINATION OF FACILITY EFFLUENT MONITORING PLAN REQUIREMENT

FACILITY 291-Z Building (French Drains) DISCHARGE POINT 216-Z-13, 216-Z-14, 216-Z-15

FACILITY INVENTORY AT RISK OF RADIOACTIVE MATERIALS

Radionuclide	Physical/ chemical form	Quantity released w/controls (Ci)	Quantity release w/o controls (Ci)	Projected dose w/o controls (mrem)
1. None[1]				

FACILITY INVENTORY AT RISK OF NONRADIOACTIVE HAZARDOUS MATERIALS

Regulated material	Quantity (lb)	Quantity release (lb)	Reportable quantity (lb)	% of reportable quantity
1. None				

Identification of Reference Material

[1]No radionuclide inventory available; however, some radioactive material assumed to be released in very low level amounts. (Inventory of Injection Wells, U.S. Environmental Protection Agency, Form 7500-4B, Facility I.D. Number WA7890008967.

If the liquid effluent is potentially contaminated (sufficient quantity to exceed 4% of the DCG on a yearly average), a FEMP is required. For airborne or liquid effluents, if the total projected dose from radionuclides exceeds 0.1 mrem EDE from any one discharge point or if any one regulated material discharged from a facility exceeds 100% of a reportable quantity or a permitted quantity, a FEMP is required. Check the appropriate space below.

FEMP is required ___X___ FEMP is not required _____

EVALUATOR _____ DATE 1/24/91

MANAGER, ENVIRONMENTAL FACILITY COMPLIANCE _____ For LA Garner JE Benson DATE 1/25/91

ENVIRONMENTAL FACILITY MANAGER _____ DATE 1-31-91

ATTACHMENT 1

DETERMINATION OF FACILITY EFFLUENT MONITORING PLAN REQUIREMENT

FACILITY 241-Z Treatment Tank DISCHARGE POINT 241-Z Treatment Tanks (Upset Condition)

FACILITY INVENTORY AT RISK OF RADIOACTIVE MATERIALS

	Radionuclide	Physical/ chemical form	Quantity (Ci)	Quantity released w/o controls (Ci)	Projected dose w/o controls (mrem)
1.	TRU	Liquid	<100	0	0

FACILITY INVENTORY AT RISK OF NONRADIOACTIVE HAZARDOUS MATERIALS

	Regulated material	Quantity released	Reportable quantity (lb)	% of reportable quantity
1.	Cr	0	10	0
2.	Pb	0	1	0
3.	Ag	0	1	0
4.	CCl_4	0	10	0

Identification of Reference Material

Dangerous Waste Part A Permit Application for the 241-Z Treatment Tank (WA7890008967) (T-2-5)

If the liquid effluent is potentially contaminated (sufficient quantity to exceed 4% of the DCG on a yearly average), a FEMP is required. For airborne or liquid effluents, if the total projected dose from radionuclides exceeds 0.1 mrem EDE from any one discharge point or if any one regulated material discharged from a facility exceeds 100% of a reportable quantity or a permitted quantity, a FEMP is required. Check the appropriate space below.

FEMP is required _____ FEMP is not required ___X___

EVALUATOR [signature] DATE 1/24/91

MANAGER, ~~ENVIRONMENTAL~~ FACILITY COMPLIANCE [signature] for LA Garner JE Bromson DATE 1/25/91

~~FACILITY~~ ENVIRONMENTAL MANAGER [signature] DATE 1-31-91

ATTACHMENT 1

DETERMINATION OF FACILITY EFFLUENT MONITORING PLAN REQUIREMENT

FACILITY 234-5Z Building DISCHARGE POINT 234-5Z Building Zone 1 Exhausts

FACILITY INVENTORY AT RISK OF RADIOACTIVE MATERIALS

Radionuclide	Physical/ chemical form	Quantity released w/controls (Ci)	Quantity release w/o controls (Ci)	Projected dose w/o controls (mrem)
1. None				

FACILITY INVENTORY AT RISK OF NONRADIOACTIVE HAZARDOUS MATERIALS

Regulated material	Quantity (lb)	Quantity release (lb)	Reportable quantity (lb)	% of reportable quantity
1. None				

Identification of Reference Material

WHC-SD-CP-SAR-021, Rev. 0
SD-CP-EMP-002, Rev. 0

For airborne or liquid effluents, if the total projected dose from radionuclides exceeds 0.1 mrem EDE from any one discharge point or if any one regulated material discharged from a facility exceeds 100% of a reportable quantity or a permitted quantity, a FEMP is required. Check the appropriate space below.

FEMP is required _____ FEMP is not required ___X___

EVALUATOR [signature] DATE 1/24/91

MANAGER, ~~ENVIRONMENTAL~~ FACILITY COMPLIANCE [signature] for LA Garner JE Gramson DATE 1/25/91

~~FACILITY~~ ENVIRONMENTAL MANAGER [signature] DATE 1-31-91

ATTACHMENT 1

DETERMINATION OF FACILITY EFFLUENT MONITORING PLAN REQUIREMENT

FACILITY 234-5Z, 236-Z, 242-Z Bldgs. DISCHARGE POINT 291-Z-1 Main Stack

FACILITY INVENTORY AT RISK OF RADIOACTIVE MATERIALS

	Radionuclide*	Quantity released w/controls (Ci)	Quantity released w/o controls (Ci)	Projected dose w/o controls (mrem) GENII	CAP88
1.	Gross Alpha	4.0 E-04	1.2 E-00	1.8 E-00	1.9 E-00
2.	Gross Beta	<4.7 E-05	1.4 E-01	1.1 E-03	1.1 E-03
Total				1.8 E-00	1.9 E-00

* Gross Alpha = ^{239}Pu and Gross Beta = ^{90}Sr

FACILITY INVENTORY AT RISK OF NONRADIOACTIVE HAZARDOUS MATERIALS

	Regulated material	Quantity released (lb)	Reportable quantity (lb/24h)	% of reportable quantity
1.	CCl_4	400/24h[1]	10	4,000
2.	NO_x	100/yr[<10[2]]	10	<100
3.	HCl	20/yr	5,000	<0.1
4.	Acetone	140/yr	5,000	<0.1
5.	HF	10[2]	100	10

Identification of Reference Material

WHC-EP-0141-2
SD-CP-EMP-002

[1]Correspondence No. 9050958, M. J. Brown to R. D. Izatt, dated 2-27-90, CERCLA Continuous Carbon Tetrachloride Releases. Value is conservative.
[2]Upset condition.

For airborne or liquid effluents, if the total projected dose from radionuclides exceeds 0.1 mrem EDE from any one discharge point or if any one regulated material discharged from a facility exceeds 100% of a reportable quantity or a permitted quantity, a FEMP is required. Check the appropriate space below.

FEMP is required ___X___ FEMP is not required _____

EVALUATOR J E Bramson DATE 1/24/91

MANAGER, ~~ENVIRONMENTAL~~ FACILITY COMPLIANCE J E Bramson for L A Gomez DATE 1/25/91

~~FACILITY~~ ENVIRONMENTAL MANAGER J E Bramson DATE 1/31/91

ATTACHMENT 1

DETERMINATION OF FACILITY EFFLUENT MONITORING PLAN REQUIREMENT

FACILITY 241-Z Building DISCHARGE POINT 296-Z-3 Stack

FACILITY INVENTORY AT RISK OF RADIOACTIVE MATERIALS

	Radionuclide*	Quantity released w/controls (Ci)	Quantity released w/o controls (Ci)	Projected dose w/o controls (mrem) GENII	CAP88
1.	Gross Alpha	7.5 E-07	2.2 E-03	8.1 E-03	1.2 E-02
2.	Gross Beta	<4.3 E-07	1.3 E-03	2.6 E-05	3.4 E-05
Total				8.1 E-03	1.2 E-02

* Gross Alpha = ^{239}Pu and Gross Beta = ^{90}Sr

FACILITY INVENTORY AT RISK OF NONRADIOACTIVE HAZARDOUS MATERIALS

	Regulated material	Quantity released (lb)	Reportable quantity (lb/24h)	% of reportable quantity
1.	CCl_4	<10[1]	10	<100
2.	NO_x	<10[1]	10	<100

Identification of Reference Material

WHC-EP-0141-2

[1]Upset condition.

For airborne or liquid effluents, if the total projected dose from radionuclides exceeds 0.1 mrem EDE from any one discharge point or if any one regulated material discharged from a facility exceeds 100% of a reportable quantity or a permitted quantity, a FEMP is required. Check the appropriate space below.

FEMP is required _____ FEMP is not required ___X___

EVALUATOR JE Bramson DATE DATE 1/25/91

MANAGER, ENVIRONMENTAL FACILITY COMPLIANCE JE Bramson for LA Garner DATE DATE 1/25/91

JE Bramson

FACILITY MANAGER [illegible] DATE 1-31-91

ATTACHMENT 1

DETERMINATION OF FACILITY EFFLUENT MONITORING PLAN REQUIREMENT

FACILITY 2736-ZB Building DISCHARGE POINT 296-Z-5 Stack

FACILITY INVENTORY AT RISK OF RADIOACTIVE MATERIALS

	Radionuclide*	Quantity released w/controls (Ci)	Quantity released w/o controls (Ci)	Projected dose w/o controls (mrem) GENII**	CAP88
1.	Gross Alpha	4.3 E-07	1.3 E-03	4.7 E-03	6.7 E-03
2.	Gross Beta	<1.5 E-06	4.5 E-03	9.0 E-05	1.2 E-04
Total				4.8 E-03	6.8 E-03

* Gross Alpha = ^{239}Pu and Gross Beta = ^{90}Sr
** Note: The treatment factor was applied for both GENII and CAP88. Environmental Protection has applied the treatment factor only to CAP88 for WHC-EP-0498 (WHC 1991b).

FACILITY INVENTORY AT RISK OF NONRADIOACTIVE HAZARDOUS MATERIALS

	Regulated material	Quantity (lb)	Quantity released (lb)	Reportable quantity (lb/24h)	% of reportable quantity
1.	None				
2.					

Identification of Reference Material

WHC-EP-0141-2

For airborne or liquid effluents, if the total projected dose from radionuclides exceeds 0.1 mrem EDE from any one discharge point or if any one regulated material discharged from a facility exceeds 100% of a reportable quantity or a permitted quantity, a FEMP is required. Check the appropriate space below.

FEMP is required _____ FEMP is not required ___X___

EVALUATOR _____ DATE 1/24/91

~~ENVIRONMENTAL~~ FACILITY COMPLIANCE MANAGER, ~~ENVIRONMENTAL~~ _____ for LA Gerner JE Bremson DATE 1/25/91

ENVIRONMENTAL ~~FACILITY~~ MANAGER _____ DATE 1-31-91

ATTACHMENT 1

DETERMINATION OF FACILITY EFFLUENT MONITORING PLAN REQUIREMENT

FACILITY 2736-Z Building DISCHARGE POINT 296-Z-6 Stack

FACILITY INVENTORY AT RISK OF RADIOACTIVE MATERIALS

	Radionuclide*	Quantity released w/controls (Ci)	Quantity released w/o controls (Ci)	Projected dose w/o controls (mrem) GENII	CAP88
1.	Gross Alpha	<5.3 E-07	1.6 E-03	5.8 E-03	8.2 E-03
2.	Gross Beta	<1.8 E-06	5.4 E-03	1.1 E-04	1.4 E-04
Total				5.9 E-03	8.3 E-03

* Gross Alpha = ^{239}Pu and Gross Beta = ^{90}Sr

FACILITY INVENTORY AT RISK OF NONRADIOACTIVE HAZARDOUS MATERIALS

	Regulated material	Quantity released (lb)	Reportable quantity (lb/24h)	% of reportable quantity
1.	None			
2.				

Identification of Reference Material

WHC-EP-0141-2

For airborne or liquid effluents, if the total projected dose from radionuclides exceeds 0.1 mrem EDE from any one discharge point or if any one regulated material discharged from a facility exceeds 100% of a reportable quantity or a permitted quantity, a FEMP is required. Check the appropriate space below.

FEMP is required _____ FEMP is not required ___X___

EVALUATOR _____ DATE _____ DATE 1/24/91

~~MANAGER, ENVIRONMENTAL~~ Facility Compliance _____ DATE _____

MANAGER, ~~ENVIRONMENTAL~~ _____ for LA Garner _____ DATE 1/25/91

JE Bremson

Environmental ~~FACILITY~~ MANAGER _____ DATE 1-31-91

ATTACHMENT 1

DETERMINATION OF FACILITY EFFLUENT MONITORING PLAN REQUIREMENT

FACILITY 231-Z Building DISCHARGE POINT 296-Z-10 and 11 Stacks (Upset Condition)[1]

FACILITY INVENTORY AT RISK OF RADIOACTIVE MATERIALS

	Radionuclide*	Quantity released (Ci)	Projected dose (mrem) GENII	CAP88
1.	Pu[2]	4.2 E-04	2.0 E-04	2.8 E-04
2.	^{241}Am	1.0 E-04	5.8 E-04	8.0 E-04

* Gross Alpha = ^{239}Pu and Gross Beta = ^{90}Sr

FACILITY INVENTORY AT RISK OF NONRADIOACTIVE HAZARDOUS MATERIALS

	Regulated material	Quantity (lb)	Quantity released (lb)	Reportable quantity (lb)	% of reportable quantity
1.	None				
2.					

Identification of Reference Material

WHC-EP-0141-2

[1]Radioactive and hazardous materials are not handled or stored in the facility.
[2]Weapons grade.

For airborne or liquid effluents, if the total projected dose from radionuclides exceeds 0.1 mrem EDE from any one discharge point or if any one regulated material discharged from a facility exceeds 100% of a reportable quantity or a permitted quantity, a FEMP is required. Check the appropriate space below.

FEMP is required _____ FEMP is not required X

EVALUATOR J Bramson DATE 1/24/91

MANAGER, ~~ENVIRONMENTAL~~ FACILITY COMPLIANCE J Bramson for LA Garner JE Bramson DATE 1/25/91

~~FACILITY~~ ENVIRONMENTAL MANAGER [signature] DATE 1-31-91

ATTACHMENT 1

DETERMINATION OF FACILITY EFFLUENT MONITORING PLAN REQUIREMENT

FACILITY 232-Z Building Incinerator DISCHARGE POINT 296-Z-14 Stack

FACILITY INVENTORY AT RISK OF RADIOACTIVE MATERIALS

	Radionuclide*	Quantity released w/o controls (Ci)	Projected dose w/o controls (mrem) GENII	CAP88
1.	Pu[1]	1.0 E-01	5.3 E-02	7.5 E-02
2.	^{241}Am	9.5 E-04	5.3 E-03	7.3 E-03

[1]Weapons grade

FACILITY INVENTORY AT RISK OF NONRADIOACTIVE HAZARDOUS MATERIALS

	Regulated material	Quantity (lb)	Quantity released (lb)	Reportable quantity (lb)	% of reportable quantity
1.	None				

Identification of Reference Material

Cammann, J.W. 10/21/90. "Environmental Doses from Postulated Emissions from 232-Z," WHC Internal Memo,81210-90-150.

For airborne or liquid effluents, if the total projected dose from radionuclides exceeds 0.1 mrem EDE from any one discharge point or if any one regulated material discharged from a facility exceeds 100% of a reportable quantity or a permitted quantity, a FEMP is required. Check the appropriate space below.

FEMP is required _____ FEMP is not required X

EVALUATOR [signature] DATE 1/24/91

MANAGER, ~~ENVIRONMENTAL~~ FACILITY COMPLIANCE [signature] for LA Gunter JE Bramson DATE 1/25/91

~~FACILITY~~ ENVIRONMENTAL MANAGER [signature] DATE 1-31-91

ATTACHMENT 1

DETERMINATION OF FACILITY EFFLUENT MONITORING PLAN REQUIREMENT

FACILITY 2734-ZL Building DISCHARGE POINT 2734-ZL HVAC Exhaust (Upset Conditions)

FACILITY INVENTORY AT RISK OF RADIOACTIVE MATERIALS

Radionuclide*	Quantity released w/controls (Ci)	Quantity released w/o controls (Ci)	Projected dose w/o controls (mrem)
1. None			

FACILITY INVENTORY AT RISK OF NONRADIOACTIVE HAZARDOUS MATERIALS

	Regulated material	Quantity (lb)	Quantity released (lb)	Reportable quanitity (lb)	% of reportable quantity
1.	HF	500	>100[1]	100	>100

Identification of Reference Material

[1] Postulated upset condition

For airborne or liquid effluents, if the total projected dose from radionuclides exceeds 0.1 mrem EDE from any one discharge point or if any one regulated material discharged from a facility exceeds 100% of a reportable quantity or a permitted quantity, a FEMP is required. Check the appropriate space below.

FEMP is required X FEMP is not required _____

EVALUATOR [signature] DATE 1/24/91

MANAGER, ~~ENVIRONMENTAL~~ FACILITY COMPLIANCE [signature] for LA Garner / JE Cramson DATE 1/25/91

ENVIRONMENTAL ~~FACILITY~~ MANAGER [signature] DATE 1-31-91

9413136.0792

PART 6

222-S LABORATORY AND ANCILLARY BUILDINGS

FACILITY EFFLUENT MONITORING PLAN DETERMINATION

This page intentionally left blank.

9413136.0793

CONTENTS

1.0 INTRODUCTION 1-1

2.0 FACILITY DESCRIPTION/STATUS OF OPERATIONS 2-1
2.1 PHYSICAL DESCRIPTION 2-1
2.2 PROCESS DESCRIPTION 2-6
2.2.1 Past Practices 2-6
2.2.2 Current Practices 2-6

3.0 APPLICABLE REGULATIONS AND STANDARDS 3-1
3.1 REGULATIONS 3-1
3.1.1 Protection of the Public and the Environment 3-1
3.2 REGULATIONS PERTAINING TO MONITORING REQUIREMENTS AT U.S. DEPARTMENT OF ENERGY FACILITIES 3-3
3.2.1 U.S. Department of Energy Facility Effluent Monitoring Plans 3-3
3.2.2 Airborne Effluents 3-5
3.2.3 Liquid Effluents 3-7
3.2.4 Hazardous Mixed Waste 3-8
3.3 STANDARDS/REFERENCES 3-9
3.4 OTHER FACILITY REQUIREMENTS 3-9

4.0 SOURCE TERM 4-1
4.1 222-SA LABORATORY 4-1
4.2 222-S LABORATORIES 4-1
4.3 207-SL RETENTION BASIN 4-2
4.4 219-S WASTE HANDLING FACILITY 4-4
4.5 NITRIC ACID TANK, 222-S LABORATORIES 4-6
4.6 NONHAZARDOUS SOLID LOW-LEVEL WASTE 4-6
4.7 MIXED SOLID WASTE - LEAD WASTE 4-6
4.8 MIXED SOLID WASTE - LABORATORY CHEMICALS 4-7
4.9 COLD WASTES 4-7
4.10 RADIOACTIVE MIXED LIQUID WASTES - ORGANIC 4-7
4.11 RADIOACTIVE MIXED LIQUID WASTE - AQUEOUS 4-8
4.12 WASTE AEROSOL CANS 4-8
4.13 TRANSURANIC SOLID WASTE 4-9
4.14 WASTE ASBESTOS 4-9
4.15 296-S-21 STACK FAN EMERGENCY DIESEL TANK 4-9
4.16 WASTE FLUORESCENT LIGHTS 4-9
4.17 218-W-7 DRY WASTE VAULT 4-10
4.18 POTENTIAL EFFLUENT STREAMS 4-10
4.18.1 Liquid Effluents 4-10
4.18.2 Airborne Emissions 4-14

5.0 POTENTIAL UPSET - OPERATING CONDITION 5-0

6.0 DEFINITIONS 6-1

7.0 REFERENCE 7-1

LIST OF FIGURES

2-1 Location of the 222-S Laboratory Complex at the Hanford Site 2-2

2-2 222-S Laboratory Complex 2-3

2-3 219-S Building Tanks 102 and 103 2-5

4-1 222-S Laboratory Wastewater System 4-3

4-2 Tank Routing of 222-S Radioactive Liquid Waste 4-5

4-3 222-S Laboratory Coolant and Condensate Flow Diagram 4-12

LIST OF TABLES

4-1 219-S Waste Designation Summary 4-4

LIST OF TERMS

ACGIH	American Conference of Governmental Industrial Hygienists
ALARA	As Low As Reasonably Achievable
APCA	Benton-Franklin-Walla Walla Counties Air Pollution Control Authority
BACT	best airborne control technology
BAT	best available technology
BPT	best practical control technology
CEM	continuous emission monitoring system
CERCLA	Comprehensive Environmental Response
CFR	Code of Federal Regulation
DCG	Derived concentration guide
DOE	U.S. Department of Energy
DOE-RL	U.S. Department of Energy - Richland, Operations Office
DOP	dioctylphthalate
DOS	di (2-ethylhexyl) sebacate
Ecology	Washington State Department of Ecology
EDE	effective dose equivalent
EDTA	ethylinediametetrarcetic acid
EHW	Extremely hazardous waste
EPA	U.S. Environmental Protection Agency
FEMP	Facility Effluent Monitoring Plan
FY	fiscal year
HEDTA	N - (hydioryethyl) - elhylenediametetruacetis acid
HEPA	high-efficiency particulate air
ICRP	International Commission on Radiation Protection
MCL	maximum contamination level
NESHAP	National Emission Standards for Hazardous Air Pollutants
NPDES	National Pollution Discharge Elimination System
OSHA	Occupational Safety and Health Administration
PCB	polychlorinated biphenyl
POTW	Publicly owned treatment works
PPMW	parts per million by weight
PSD	prevention of significant deterioration
RQ	reportable quantity
RCG	radioactivity concentration guides
RCRA	Resource Conservation and Recovery Act of 1976
SARA	Superfund Amendments and Reauthorization Act
SPCC	spill prevention control and countermeasures
TCLP	toxic characteristic leach procedure
TOC	total organic carbon
TSP	total suspended particulates
WAC	Washington Administrative Code
Westinghouse Hanford	Westinghouse Hanford Company
TRU	Transuranic

This page intentionally left blank.

9413140.0407

FACILITY EFFLUENT MONITORING PLAN DETERMINATION FOR THE 222-S LABORATORY AND ANCILLARY BUILDINGS

1.0 INTRODUCTION

This report presents material required for the facility effluent monitoring plan (FEMP) determination for the 222-S Laboratory and Ancillary Building. Information discussed in the first four sections of *A Guide for Preparing Hanford Site Facility Effluent Monitoring Plans* (WHC-EP-0438, 1991) is contained in this document. This includes: introductory material; definitions of terms that may be used in the guidance material, regulations, standards, brief facility/process description, characterization of potential source terms, and description of effluent paths, or references from which the facility description or effluent information is obtained; regulations and standards applicable to effluent releases and monitoring; and information that was used in preparing the FEMP Determination Forms (Attachment 1).

This page intentionally left blank.

2.0 FACILITY DESCRIPTION/STATUS OF OPERATION

2.1 PHYSICAL DESCRIPTION

The 222-S Laboratory complex is located in the southeast corner of the 200 West Area (see Figure 2-1). The facility contains the main laboratory complex (222-S) and a number of ancillary buildings and structures (Figure 2-2).

The 222-S Laboratory is a two-story, above-ground building 322 ft long and 107 ft wide, with a subterranean service level. This building is divided into laboratory support spaces, office spaces, a multicurie wing, and supplemental service areas. The building is designed with its own waste disposal facility, decontamination facility, fire protection and alarm system, ventilation system, and radiation monitoring systems.

The first floor of 222-S is divided into three general areas. The west end contains the lunchroom, offices, and changerooms, which are maintained free of radioactivity and toxic chemicals. The central section contains laboratories and service areas for work with low-level radioactive and/or toxic materials, although an occasional intermediate level sample may be located in this area. The east end, commonly referred to as the Multicurie Section, contains laboratories, hot cells, and service areas for working with intermediate-level radioactive samples. The central and east sections contain laboratory benches and hoods, which are supplied with services such as electrical outlets, sanitary and distilled water, propane, compressed air, and process vacuum. The partial basement contains service piping, vacuum pumps, an instrument maintenance shop, a scanning electron microscope laboratory, and a fully equipped counting room.

The second floor contains the ventilation supply fans, supply and exhaust ductwork, the ventilation system operation and control room, a glass shop, and storage areas. This area is maintained free of radioactive contamination.

The 222-SA Laboratory is a 5-wide modular building located southeast of the 222-S Laboratory. Part of this laboratory prepares nonradioactive standards for Hanford Site laboratories. The other part is used for cold process development work and standards preparation.

The 2716-S Storage Building, located south of the 222-S Laboratory, is a 1,700 ft^2 metal building with 200 ft^2 partitioned off for the storage of acids and bases. It provides both long- and short-term storage for laboratory materials and contains no radioactive materials. It is protected with a dry pipe automatic sprinkler system, heat detectors, a manual pullbox and a portable fire extinguisher. The 200 ft^2 hazardous storage area is equipped with explosion-proof lighting, a separate ventilation system, and a fire wall to meet Occupational Safety and Health Administration safety requirements for volatile combustibles, although no volatile liquid combustibles are stored in the facility. This building has no floor drains.

The 222-S Laboratory Annex houses the maintenance shop, instrument shop, and the counting room filter building.

Figure 2-1. Location of the 222-S Laboratory Complex at the Hanford Site.

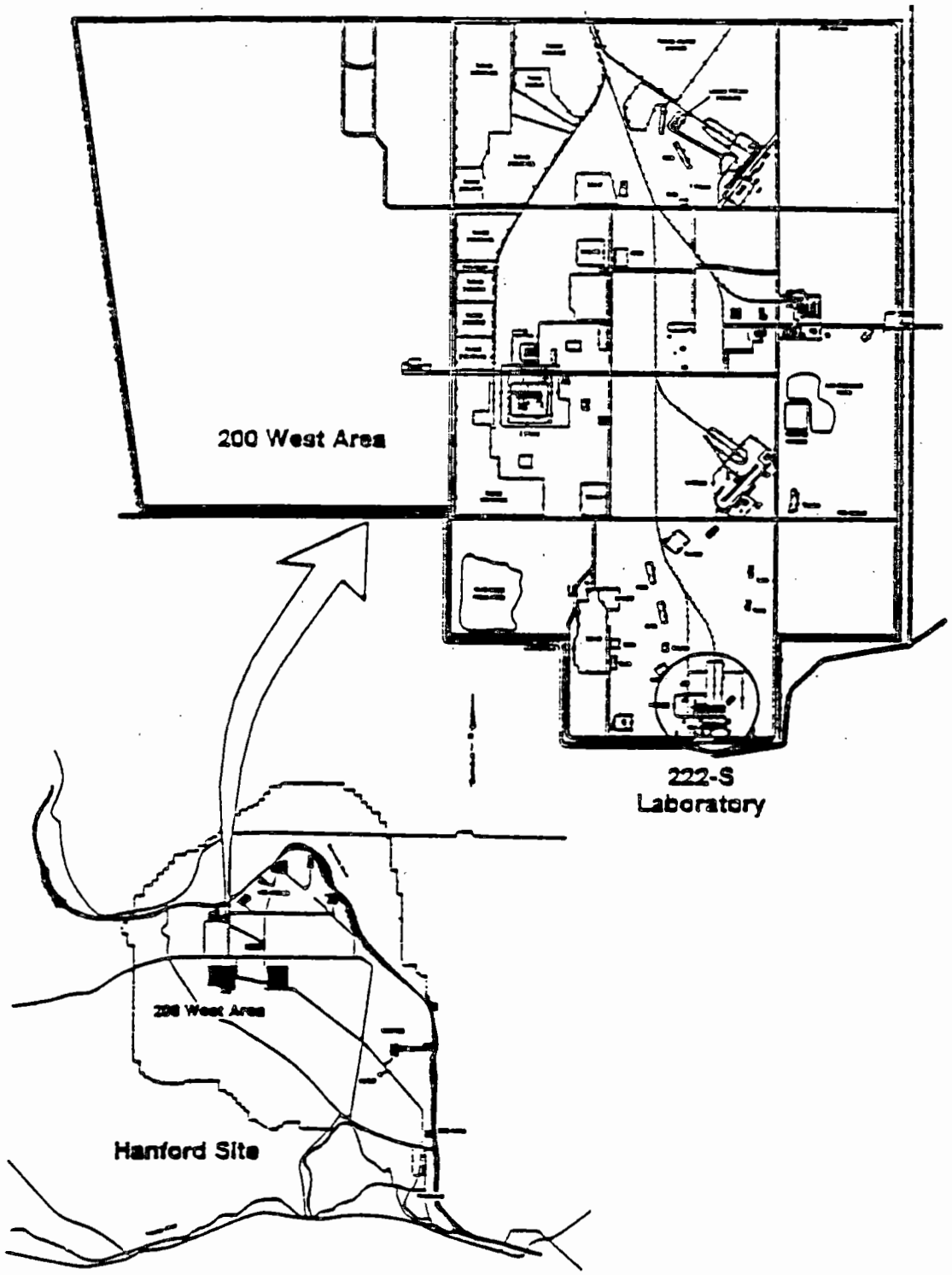

Figure 2-2. 222-S Laboratory Complex.

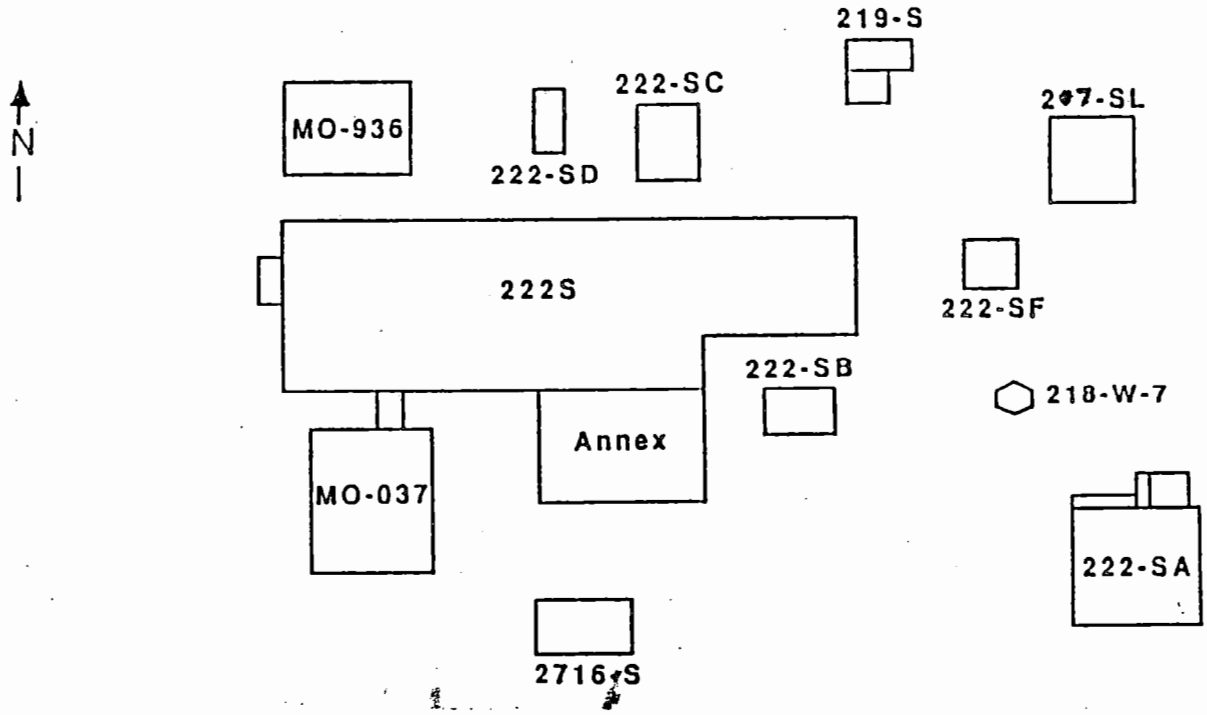

The 207-SL Retention Basin acts as a temporary holding facility for potentially radioactive or hazardous liquid effluents before their discharge to the 216-S-26 Crib. Waste water from the laboratory, normally free of radioactive and hazardous chemical contamination, is routed to the 207-SL Retention Basin. This facility is a covered, below-grade concrete structure, directly east of the 222-S Building. Two 25,000-gal compartments allow batch collecting, sampling, and discharge of the waste. If the waste water meets alpha, beta, nitrate, total organic carbon (TOC) and pH specifications for surface discharge (WHC-CM-7-5) (WHC 1989a) it is routed to the 216-S-26 Crib, located southeast of 222-S, outside the 200 West exclusion area. Water not meeting these specifications is routed to the 219-S Waste Handling Facility for disposal to underground storage tanks.

The 219-S Waste Handling Facility (Figure 2-3) collects radioactive contaminated liquid waste generated by the 222-S Laboratory operations. This facility consists of two below-grade vaults (A and B, also called cells): Vault A (T shaped) contains 2 tanks (TK 101/102); Vault B contains TK 103 (which receives radioactive waste from the hot cells); a concrete vault, tanks, the pipe trench and operating gallery; and an attached concrete-walled sample gallery. The sample gallery contains a hood. The operating gallery contains a 700-gal tank of caustic for acid neutralization. The three vault tanks (TK-101, TK-102, and TK-103) are vented by an exhaust fan, through a deentrainer and high efficiency particulate air (HEPA) filter, to the atmosphere via the 296-S-16 Stack. The sample gallery hood is vented through a HEPA filter and 296-S-22 Stack.

The 222-SD Solid Waste Handling/Storage System is a concrete-shielded drum storage area that was constructed under Project B-161. This area is for temporary storage of radioactive waste drums before transfer to the burial ground. The area is equipped with an electrically driven jib crane for remotely positioning the drums in the storage area and for remotely loading the drums on the bed of the waste truck.

The 222-SC Filter Building contains the filtration for Hot Cells 1-A, 1-E-1, 1-E-2, and 1-F. The hot cells in rooms 1-A, 1-E, -1, 1-E-2, and 1-F are serviced by the main building supply and exhaust ventilation, but to increase safety and containment, additional features are present. The 222-SC Filter Building houses five parallel pairs of HEPA filters that provide 2nd and 3rd stage HEPA filtration to hot cell exhaust air before it enters the main exhaust plenum and final HEPA filtering in 222-SB Filter Building. In total, four stages of HEPA filtration are provided for hot cell exhaust.

The 222-SB Filter Building houses 96 single-stage HEPA filters to provide final filtration for the 222-S Laboratory. Under normal operations of the ventilation system, two 46,000 ft^3/min fans exhaust air from the laboratory. Exhaust air leaves the 222-S Building through the 296-S-21 Stack. A third exhaust fan, driven by a diesel engine, will provide half of the normal operating capacity of the exhaust system if the electrically powered fans are lost. All HEPA filters in laboratory hoods, glove boxes, hot cells, auxiliary laboratory outlets, and stack discharges are tested annually with dioctylphthalate (DOP) di (2-ethylhexyl) sebacate (DOS) or equivalent to assess filter efficiency. Filters that fail to meet performance standards are replaced.

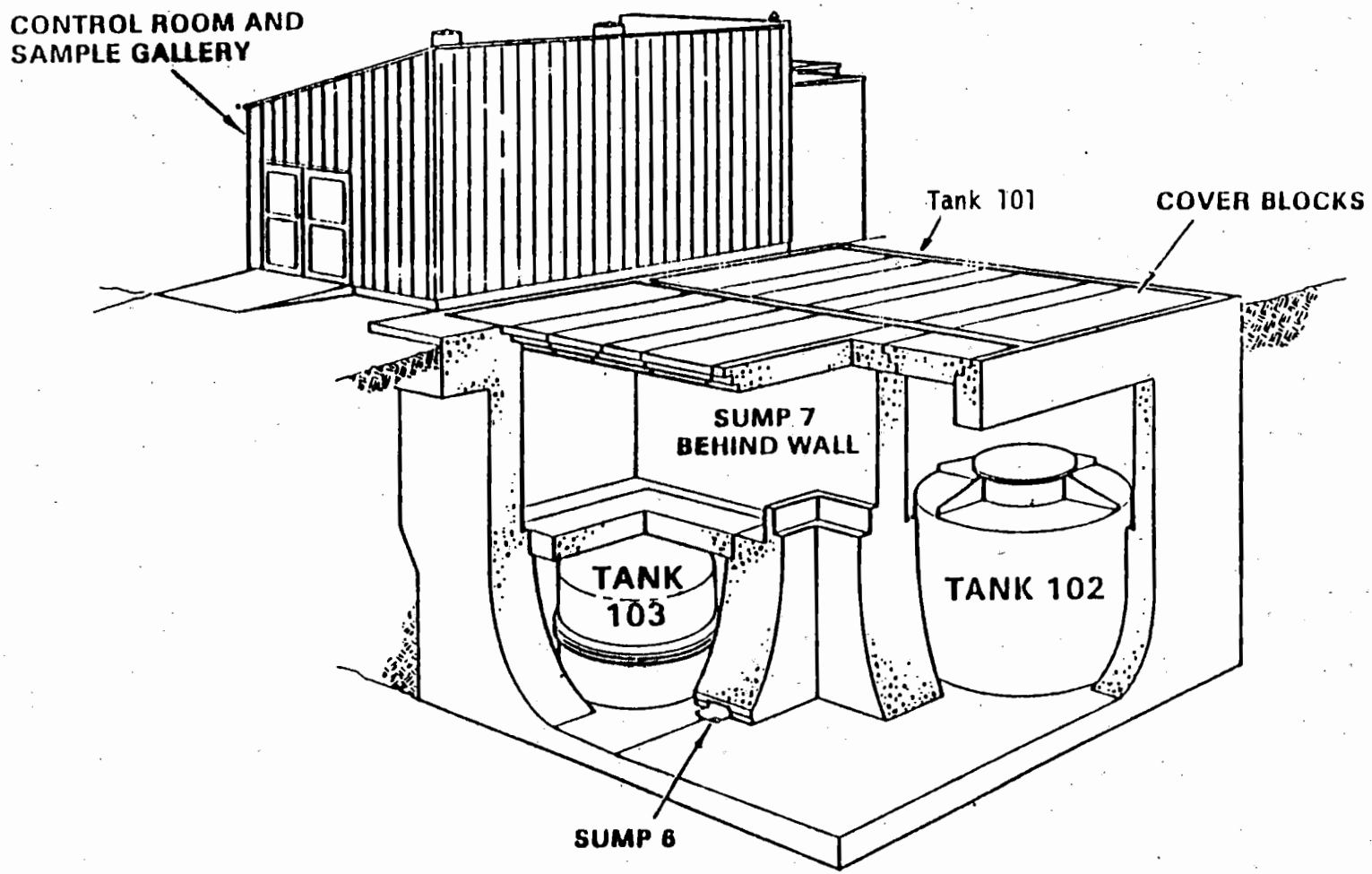

Figure 2-3. 219-S Building Tanks 102 and 103.

The 218-W-7 Dry Waste Burial Vault is located 40 ft southeast of the 222-S Laboratory. The concrete burial vault and associated dome and vent structure together are approximately 25 ft x 12 ft. This underground concrete vault was removed from service about 1960. It was used primarily to dispose of plutonium-contaminated dry hood waste generated by the 222-S Laboratory. The tank is reached via a locked hatchway.

The 216-S-26 Crib receives all wastewater collected in the 207-SL Retention Basin that meets radiological and chemical limits. The crib was designed to handle laboratory waste water at 75,000 gal/d or 25,000 gal/8-h shift. Design Criteria can be found in SD-WM-CR-009, *Construction Design Criteria, Replacement Disposal Facility for 216-S-19 Pond Influents* (Appendix 1.) Currently, the crib receives approximately 7,000 gal/d in the summer and about 15,000 gal/d in the winter. Operation and control of this crib is the responsibility of Tank Farm Operations.

2.2 PROCESS DESCRIPTION

2.2.1 Past Practices

The 222-S Laboratory facilities were constructed from 1950 to 1951 to provide analytical and plant support for the Hanford Redox Plant. Through the years, the missions of the 222-S Laboratory have changed and modifications have been made in response to new requirements and to increasingly restrictive operating and design criteria.

2.2.2 Current Practices

The current operation of the 222-S Laboratory facilities includes the provision of analytical chemistry services in support of Hanford processing plants with emphasis on waste management and chemical processing at B Plant, Uranium Oxide Plant, Tank Farms, 242-A Evaporator, Waste Encapsulation Storage Facility, Plutonium Uranium Extraction Plant, Plutonium Finishing Plant, process development/impact activities, and essential materials.

3.0 APPLICABLE REGULATIONS AND STANDARDS

This section presents information on the regulations governing effluent monitoring requirements for radioactive, nonradioactive hazardous and mixed waste materials in effluents and the applicable environmental standards and statutes.

3.1 REGULATIONS

Regulations pertaining to effluent releases at Hanford have been developed by several regulatory agencies including the U.S. Environmental Protection Agency (EPA), U.S. Department of Energy (DOE), Washington State, and the Benton-Franklin-Walla Walla Counties Air Pollution Control Authority. Because the regulations enforced by these agencies are sometimes inconsistent and Westinghouse Hanford Company (Westinghouse Hanford) may enforce more restrictive requirements as a matter of policy, Westinghouse Hanford has documented the policies for compliance in the *Environmental Compliance Manual* WHC-CM-7-5 (WHC 1989a). This document including updates should be the controlling reference for Westinghouse Hanford environmental protection criteria.

3.1.1 Protection of the Public and the Environment

To ensure the health and safety of the public, DOE-controlled facilities are required to monitor effluents that have the potential to contain regulated materials. Regulations pertaining to the monitoring and environmental surveillance requirements of effluents are typically based on the material's effluent release limits that are associated with their risk to the public. Monitoring requirements and associated limitations may also be based on best available technology (BAT) for liquid control technology, best airborne control technology (BACT) for airborne control technology, best practical control technology (BPT) currently available or other technology-based criteria. In addition, some monitoring requirements and associated limitations are based on environmental protection criteria, such as air and water quality-based discharge standards. The effluent release limits for nonradioactive and radioactive materials are designed to ensure that these facilities do not exceed an acceptable level of risk to the public and the environment.

As documented in 40 CFR 61, "National Emission Standards for Hazardous Air Pollutants" (NESHAP) (EPA 1989a), effluent release limits for radioactive material are based on limiting the public's risk by limiting the potential dose to the maximally exposed member of the public. Similarly, for most nonradioactive materials, the risk to the public and the environment is controlled by limiting the quantities of the materials released.

In the case of nonradioactive effluents, monitoring requirements may also exist at the point of generation for the protection of the worker. To provide a safe workplace environment, monitoring of nonradioactive effluents is based on the level or quantity of the material present at the point of generation

within the facility. Currently, an accurate method for projecting from the inventory at risk to the estimated release source term at the discharge point does not exist. However, limited guidance is provided in 40 CFR 61, Appendix D, *Methods for Estimating Radionuclide Emissions* (EPA 1989a), which may be extrapolated to nonradioactive inventories. Although this guidance applies specifically to radionuclide emissions in select circumstances, the release fractions can also be applied to nonradioactive effluents. Any alternative method or procedure must receive prior approval of the EPA.

It is important to review the dose limits to the public from operations at DOE-controlled facilities. The EPA is promulgating a NESHAP mandating that radionuclide air emissions from each DOE Site shall not cause any individual (maximally exposed individual) to receive a dose of greater than 10 mrem/yr effective dose equivalent (EDE). A single site or facility, as used here, means all the buildings, structures, and operations within one contiguous site. For example, the entire DOE facility at the Hanford Site must meet the 10-mrem/yr EDE standard rather than each building meet the 10-mrem/yr EDE standard. The date for mandatory compliance with the proposed revision to the NESHAP (EPA 1989c) is now December 15, 1991 for DOE; Westinghouse Hanford has an internal compliance date of November 9, 1991 (reference letter from R. D. Izatt, U.S. Department of Energy-Richland Operations Office (DOE-RL) to G. O'Neal, EPA, dated May 14, 1990).

Until the proposed revision to the NESHAP (EPA 1989c) is promulgated, the current dose limits to the public are in effect. *Radiation Protection of the Public and the Environment*, DOE Order 5400.5, (DOE 1990) provides dose limits from all DOE sources of radiation and all exposure modes of 100 mrem/yr EDE and 5 rem/yr dose equivalent limit for any tissue (including the skin and lens of the eye) to the public from operations at DOE facilities. These limits apply to doses from exposures to radiation sources from both routine activities and remedial actions in progress on the same site. Although the current limit is 100 mrem/yr it is recommended that a FEMP be prepared as if the proposed NESHAP will be promulgated with the 10-mrem/yr EDE limit. Effluent monitoring and the associated plan would be required at a level of 1% of the 10-mrem/yr EDE standards; that is, at 0.1 mrem/yr EDE.

The method used to assess radiation dose affects the requirements for effluent monitoring. The limit of 100 mrem/yr EDE is the sum of the EDE (or deep dose equivalent, if dosimeter data are used) from exposure to radiation sources external to the body during the year plus the committed EDE from radionuclides taken into the body during the year. The calculation of doses from routine DOE activities should be based on a "reference man," as defined by the International Commission on Radiation Protection (ICRP), and the dosimetry models and parameters presented in ICRP Publication 30 and subsequent ICRP publications. The weighing factors and time periods for integrating doses endorsed by ICRP are to be used for dose commitment calculations. Other requirements presented in the order include how doses from other man-made or enhanced natural radionuclide sources must be addressed.

Dose limits to the public dictate effluent monitoring requirements. Chapter II, Paragraph 1.a of DOE Order 5400.5 (DOE 1990) presents limits for exposure of the public to radioactive materials as a consequence of DOE

activities from all DOE sources of radiation. The order states that DOE activities shall not cause any member of the public to receive, in a year, a dose equivalent greater than 100 mrem to the whole body. The order also alerts the reader to the fact that the DOE must comply with legally applicable requirements, including 40 CFR 61 (NESHAP) (EPA 1989a) for airborne emissions. Doses caused by ^{220}Ra, ^{222}Ra, and their respective decay products are specifically excluded from the NESHAP dose standard, however, they are regulated by DOE Order 5400.5 (DOE 1990).

To demonstrate compliance with the dose limit requirements using analytical techniques, potential doses to individuals through the air pathway shall be evaluated using only AIRDOSE/RADRISK (EPA 1989b) or other computer codes or model specifically approved by the EPA, as specified in NESHAP. Compliance may also be demonstrated through environmental measurements using approved techniques.

3.2 REGULATIONS PERTAINING TO MONITORING REQUIREMENTS AT U.S. DEPARTMENT OF ENERGY FACILITIES

The monitoring requirements for effluents resulting from the operation of DOE-controlled sites can be presented in two categories. These categories depend on whether the release pathway is airborne or liquid. In addition, information on the monitoring requirements is presented according to a specific characteristic of the effluent; whether the effluent material is radioactive or nonradioactive. Before presenting this material, however, it is useful to review in detail the requirements outlined by DOE for FEMPs.

3.2.1 U.S. Department of Energy Facility Effluent Monitoring Plans

Requirements for a FEMP are provided in DOE Order 5400.1, *General Environmental Protection Program* (DOE 1988a). Chapter IV of the order provides specific information on the requirements for effluent monitoring systems and DOE programs. Environmental monitoring requirements differ between new and existing facilities. For a new facility with the potential for adverse impact on the environment, an environmental survey must be conducted before actual start-up. The survey shall establish background levels of radioactive and toxic pollutants, characterize pertinent environmental and ecological parameters, and identify potential pathways for human exposure or environmental impact as a basis for determining the nature and extent of the subsequent routine operational effluent and environmental monitoring programs.

Radioactive and nonradioactive pollutant effluents release at the Hanford Site shall be monitored to determine compliance with the following DOE orders:

- 5400.1 (DOE 1988a)
- 5400.3 (DOE 1989c)
- 5400.4 (DOE 1989b)
- 5400.5 (DOE 1990)
- 5480.1 (DOE 1982)
- 5480.11 (DOE 1988b)
- 5484.1 (DOE 1981).

The monitoring is performed to evaluate the effectiveness of effluent treatment and control, for radioactive material inventory purposes, and to determine compliance with all DOE, EPA, state, and local requirements pertaining to effluents and pollutant impact on the environment. Radioactive material released to onsite waste treatment or disposal system shall be monitored to assess the effectiveness of treatment and control and to provide both a qualitative and quantitative annual summary of the radioactive material released onsite.

DOE Order 5400.1 (DOE 1988a) also provides guidance on effluent monitoring. As a general rule, monitoring should be conducted in a manner that provides accurate measurements of the quantity and/or concentration of liquid and airborne pollutants in effluents as a basis for the following:

- Determining compliance with applicable discharge and effluent control limits, including self-imposed administrative limits designed to ensure compliance with in-plant operating limits, effluent standards or guides, and environmental standards and guides

- Evaluating the adequacy and effectiveness of containment and waste treatment and control, as well as efforts toward achieving levels of radioactivity that are as low as reasonably achievable (ALARA) considering technical and economical constraints

- Compiling an annual inventory of the radioactive material released in effluents and onsite discharges.

Effluent monitoring data collected should include volume, rate of discharge, and content as close as possible to the point of discharge. Effluent monitoring data pertaining to the release of nonradioactive pollutant material includes the total quantity. Effluent monitoring data pertaining to the release of radioactive material includes the total activity (number of curies) released in airborne and liquid effluents and the specific radionuclides comprising a significant portion (greater than 10%) of the radiation dose. Although exceptions exist, this requirement indicates that the measurement should be made at the point of discharge. An exception may be granted when a portion of the effluent stream close to the generation point can be monitored to provide a more accurate estimate of the hazardous material being released from the facility.

Effluents should be monitored at the point at which the applicable standards apply. For example, onsite discharges may be monitored at the waste treatment and disposal system; effluents may be monitored at the point after all treatment and control, including retention and decay, has occurred. In many cases, the monitoring location is specified in the discharge or operating permit.

The sampling method and frequency should be determined by considering the purpose or need for the data collected. Data are collected to evaluate the effectiveness of waste treatment and control, demonstrate compliance with operating limits of applicable effluent or performance standards, and compile and trend effluent characteristics. Continuous or proportional sampling is recommended and may be required where the concentrations and mixtures of potential pollutants in the effluent stream vary significantly. Periodic

sampling may be adequate when the concentrations and mixtures are reasonably constant and the likelihood of unusual variations is minimal. Similarly, proportional sampling may be necessary when effluent flow rates fluctuate, whereas a representative grab-sample may suffice for batch discharges. The method of sampling is usually specified in the applicable regulation or permit.

Gross radioactivity measurements are generally inadequate for reporting radiological data. They can be appropriate under the following conditions:

- Gross radioactivity releases are a small fraction of the offsite radioactivity concentration guides (RCG) for "unidentified mixtures" and are of no health or environmental significance
- The relative concentrations of specific radionuclides are so well known by other means that gross radioactivity measurements are truly indicative of the activity being released
- The activity of waste streams is so low as to preclude specific nuclide measurements.

Radioactive effluents and onsite discharge monitoring and reporting must be adequate to provide an annual average concentration and an annual summary of the quantities of radioactive material released. The summary should be complete to the extent that all significant releases are reported. It is required, therefore, that the annual average flow and pollutant concentration be determined for each waste stream.

The EPA regulations pertaining to the release of hazardous substances for DOE facilities are presented in 40 CFR 302 (EPA 1989a) "Designation, Reportable Quantities, and Notification." This regulation, in accordance with Sections 101(14) and 102(a) of the *Comprehensive Environmental Response, Compensation, and Liability Act of 1980* (CERCLA), designates those substances in the CERCLA statutes, identifies reportable quantities of those substances, and sets forth the notification requirements for releases of those substances. This regulation also sets forth reportable quantities for hazardous substances designated under Section 311(b)(2)(A) of the *Clean Water Act of 1977*.

3.2.2 Airborne Effluents

Airborne emissions of radioactive materials from DOE-controlled facilities at the Hanford Site are subject to EPA regulations. The primary regulation is 40 CFR 61 (NESHAP) (EPA 1989a). This list of hazardous air pollutants regulated under the NESHAP is provided in Subpart A, "General Provisions." The specific emissions standards and monitoring requirements for radionuclides are contained in 40 CFR 61 Subpart H, "National Emission Standards for Emissions of Radionuclides Other Than Radon From Department of Energy Facilities." Subpart H standards cover all DOE operations that emit radionuclides other than radon to the air, except for facilities subject to 40 CFR 191, Subpart B (EPA 1989c) (disposal of spent nuclear fuel and high-level and transuranic radioactive waste) and 40 CFR 192 (EPA 1983) (uranium and thorium mill tailings).

Subpart H of 40 CFR 61 (EPA 1989a) presents detailed requirements for emissions monitoring and test procedures, compliance and reporting record-keeping and exemptions for the reporting and testing requirements. Radionuclide emissions rates from stacks and vents must be measured at all release points that have the potential to discharge radionuclides into the air in quantities that could cause an EDE in excess of 1% of the standard. The stream that would result if all pollution control equipment did not exist, but facility operations was otherwise normal (40 CRF 61). For release points that have a potential to release radionuclides into the air, but have effluents below the continuous monitoring standard, periodic confirmatory measurement must be made to verify low emissions. Furthermore, all radionuclides that could contribute greater than 10% of the potential EDE for each monitored release point (greater than 1% EDE potential) must be measured. With prior EPA approval, alternative methods to the one described, including process knowledge, can be substituted for measurement to determine the emission levels of individual radionuclides.

Subpart H of 40 CFR 61 (EPA 1989a) specifies the monitoring requirements that determine radionuclide emission rates. These requirements include sampling points, appropriate sampling methods, flow rate determinations, frequency of sampling, analytical methods, and quality assurance procedures, or other procedures approved by the EPA. Direct measurement of air concentrations of radionuclides at the receptor point is acceptable if the criteria in 40 CFR 61 are met. These criteria include continuous monitoring of released radionuclides, satisfactory ejection limits, quality assurance, and prior EPA approval.

The NESHAP (EPA 1989a) states that plants are required to monitor their operations continuously and keep records of the results of their monitoring onsite for 5 yr. Facility operators will have to certify on a semiannual basis that no changes in operations that would require new testing have occurred. Although the report is based on the calendar year, the emission limit applies to any period of 12 consecutive months.

Additional EPA requirements on hazardous substances are contained in 40 CFR 302 (EPA 1989d). This regulation provides information on reportable quantities of nonradioactive hazardous substances. Unlisted hazardous substances designated by 40 CFR 302 are regulated in accordance with the toxic characteristic leach procedure (TCLP) (formerly extraction procedure) toxicity of the contaminant or characteristics of the waste.

Several DOE orders provide requirements for monitoring of radioactive and nonradioactive airborne effluents for DOE facilities at the Hanford Site. These orders state that DOE-controlled facilities must comply with 40 CFR 61 (EPA 1989a), the principle orders are DOE Order 5400.5 (DOE 1990), and DOE Order 5400.1 (DOE 1988a).

All airborne emissions from DOE-controlled facilities must be evaluated and their potential for release of radionuclides assessed. It further states that airborne emissions for DOE-controlled facilities that have the potential for radioactive contamination must be monitored in accordance with the requirements of DOE Order 5400.1 (DOE 1988a), and DOE Order 5400.5 (DOE 1990). Currently, the criteria listed in DOE Order 5400.6, Table 1, Criteria for

Emission Monitoring must be used to establish the airborne emission monitoring program for DOE-controlled sites.

In Washington state, airborne effluents are regulated by the Washington *Clean Air Act of 1977*. General regulations for air pollution sources are presented in WAC 173-400 (WAC 1976), including emission standards for sources emitting hazardous air pollutants.

The DOE-RL contractor policies for radioactive airborne releases are discussed in Westinghouse Hanford's environmental compliance manual, WHC-CM-7-5, Part D, "Radioactive Airborne Emissions" (WHC 1989). This manual references the applicable regulations governing the monitoring of radioactive airborne effluents in NESHAP (EPA 1989d).

3.2.3 Liquid Effluents

Requirements limiting the exposure of the public to radioactive materials from DOE-controlled activities through the drinking water pathway are presented in DOE Order 6500.5 (DOE 1990). Although the radiological criteria of the public community drinking water standards of 40 CFR 141 (EPA 1989e) are not applicable to DOE-operated drinking water systems, DOE policy is to provide an equivalent level of protection for all persons consuming the water from a drinking water supply operated by or for the DOE. These systems shall not cause any person consuming the water to receive an EDE greater than 4 mrem/yr, excluding naturally occurring radionuclides. In addition, DOE facility operators shall ensure that the liquid effluents from DOE activities shall not cause private or public drinking water systems downstream of the facility discharge to exceed the drinking water radiological limits of 40 CFR 141.

The dose limit is consistent with the drinking water criteria in 40 CFR 141, *National Interim Primary Drinking Waster Regulations (Safe Drinking Water Act)* (EPA 1989e). The dose limit is the EDE to an individual whose exclusive source of drinking water contains a radionuclide or mixture of radionuclides at a level of 4% of the appropriate derived concetration guide (DCG) value. The maximum condiment levels in public water systems are found in 40 CFR 141.15 (generally radium and alpha emitters) and 40 CFR 141.16 (beta and gamma emitters).

Facility operators must provide monitoring of liquid waste streams adequate to: (1) demonstrate compliance with the applicable requirements of DOE 5400.5, Chapter II, (DOE 1990), (2) quantify radionuclide released from each discharge point, and (3) alert affected process supervision of upsets in processes and emissions controls.

Criteria regulations apply depending on where a liquid effluent (wastewater) is discharged to. These regulations are implemented through issuance of permits by federal, state, and/or local agencies. The facility is responsible, through DOE-RL, to apply for the permit appropriate to the effluent being discharged. Before applying for any permits, the applicant

must know the sources and recipients of its wastewater discharges. The following regulations apply based on where the wastewater is discharged:

- Wastewater discharged to a publicly owned treatment works (POTW) is subject to federal regulation found in 40 CFR 403 to (EPA 1988a) and may also be subject to local regulations and limitations. Permits for such discharges are obtained from the local sewerage agency into which the effluent is discharged, or in some cases, from the state.

- Wastewater discharged into a navigable waterway (40 CFR 122) (EPA) is subject to Washington state regulations WAC 173-220 (WAC 1988) National Pollution Discharge Elimination System (NPDES). The State issues NPDES permits for such discharges.

- The State of Washington controls discharges to ground and surface water of the State, under WAC 173-216 (WAC 1989f). The State issues permits for such discharges. A permit of this type would be necessary for any discharges to land that could infiltrate to groundwater.

Each type of discharge permit identified above will typically contain discharge limitations and monitoring requirements. However, the limitations and monitoring requirements will vary depending on the source and type of wastewater being discharged. For instance, discharges to a POTW will be subject pretreatment standards based on the production process that generates the wastewater for those processes that have been categorized by the EPA. Categorical processes are identified in 40 CFR 403 through 471 (EPA 1988a). Specific limitations, monitoring, and reporting requirements have been promulgated for each categorical process. In addition to EPAs requirements, the state and local sewerage agency may impose additional limitations, monitoring, and reporting requirements. Discharges to a navigable waterway will also be subject to certain standards based on the industrial process that generated the wastewater; certain additional limitations are also typically imposed in the NPDES permit. In all cases, the specific pollutants to be monitored and the monitoring and reporting frequencies will be based on the applicable regulations and the permit language.

The DOE-RL contractor policies for nonradioactive and radioactive liquid effluents are discussed in Westinghouse Hanford's environmental compliance manual WHC-CM-7-5 (WAC 1989d). This manual describes current contractor requirements for monitoring and restricting liquid effluents. Applicable requirements are discussed in Section 3.4 of this document.

3.2.4 Hazardous Mixed Waste

Currently no regulations are in effect pertaining to "mixed waste" in effluents. Radioactive and Dangerous/Extremely Hazardous contaminants in effluent streams are handled as individual components in effluent regulations and effluent monitoring.

The DOE-RL contractor policies on mixed waste are presented in Section J of WHC-CM-7-5 (WHC 1989d).

3.3 STANDARDS/REFERENCES

Environmental Protection, Safety, and Health Protection Standards, DOE Order 5480.4. (DOE 1984), presents a listing of mandatory and good practice environmental standards.

An environmental monitoring plan shall consist of two major section: An operational environmental monitoring plan and FEMP.

A FEMP is required for each facility that uses, generates, releases, or manages regulated substances. A regulated substance is defined in Table A-1 and generally includes radioactive and nonradioactive hazardous substances as defined by WAC 173-303 (WAC 1989a), 40 CFR 302-306 (EPA 1989d), 40 CFR 264 (EPA 1988a), WAC 173-400 (WAC 1976), 40 CFR 61 (EPA 1989a), 40 CFR 761 (EPA 1984), 40 CFR 162-165 (EPA 1981), DOE orders, 40 CFR 280 (EPA 1988b), and others.

3.4 OTHER FACILITY REQUIREMENTS

Facilities that operate under a RCRA Subtitle C Permit (refer to 40 CFR 261.3) (EPA 1989f) are required to meet specific organic emission standards as part of a an EPA regulatory requirement. These would include hazardous waste treatment, storage, and disposal facilities. The rule will limit the organic emissions from designated process vents and hazardous waste equipment leaks. Also included in the final rule are organic emissions from recycling units that do not require a RCRA permit, but are part of a treatment, storage, or disposal (TSD) facility that is required to have a Subtitle C permit. If hazardous waste management facilities that manage wastes have an annual average total organic concentration of 10 parts per million by weight (ppmw) or greater, then the facility is required to reduce the total organic emissions from all processes to below 3 lb/h or 3.1 ton/yr, or install and operate a control device that reduces the total organic emissions by 95%. Facilities that are in compliance are not required to install control devices or to monitor emissions if it can be shown the organic emissions will never exceed the established limits. The effective date of the final rulemaking was December 21, 1990.

This page intentionally left blank.

4.0 SOURCE TERM

For a number of the major waste streams, effluent monitoring data provided reasonable estimates of constituents expected under routine operating conditions. The potential inventory at risk was also evaluated under upset conditions. Upset conditions are defined as the failure of one administrative or physical barrier.

The potential radionuclide mix for the 222-S Laboratory facility is assumed to be predominately plutonium, americium, cesium, and strontium. The chemical inventory is much more complex and a number of assumptions were used to make a preliminary assessment of which chemicals required further consideration. A major criterion for further consideration was that the inventory in 222-S Laboratory (or 222-SA) was greater than the reportable quantity as defined in 40 CFR 302, Table 302.4 (EPA 1989d). Also considered was a scenario where the release of a chemical would contaminate the 207-SL Holding Basin such that subsequent disposal in a crib would be in violation of WAC 173-303 (WAC 1989a), and/or 40 CFR 302. The individual chemicals so determined by this method are discussed in Section 7 (EPA 1989d).

4.1 222-SA LABORATORY

The 222-SA Laboratory wastewater consists of vacuum pump cooling water, water purification system back flush water, sink and hood drains, and the glass washer. Presently, this stream discharges directly to the 216-S-26 Crib. The stream will be rerouted to the 207-SL effluent stream [estimated fiscal year (FY) 1993] to allow sampling before discharge. Radionuclides are excluded from 222-SA facility and multiple physical/administrative barriers would have to be violated before radionuclide contamination could be relegated into or from the facility.

Disposal of chemicals to the drains is strictly prohibited without consent of the 222-S Hazardous Materials Coordinator and/or 222-S Laboratory Engineering. Internal procedures are in place for reporting of chemicals and discharges to the ground and 216-S-26 crib, for nonradioactive hazardous chemical waste disposal and use of laboratory sinks and drains. These procedures are available on request from the facility cognizant engineer. Hazardous materials will not be disposed of to the drains under normal operating conditions. However, many of the materials listed on the 222-SA SARA Chemical Inventory could accidentally be discharged to the laboratory waste stream under upset conditions. Therefore, the entire list of chemicals was evaluated against the above criteria.

4.2 222-S LABORATORIES

The 222-S Laboratory is limited to 177 g of plutonium in the facility at any one time. The maximum inventory of the principle radionuclides anticipated was estimated as 10 Ci ^{239}Pu, 298 Ci ^{90}Sr, and 47 Ci ^{137}Cs. Discussion with Westinghouse Hanford staff indicated the presence of ^{241}Am as another potentially major inventory nuclide. For this FEMP document, the projected radionuclide inventory in the laboratory was not used to predict

releases. Instead, the various airborne pathways (stacks) were evaluated based on effluent release data as published in WHC-EP-0141-2 (Brown 1990), and appropriate assumptions regarding losses of engineered controls. A discussion of the specific data and assumption used is found in Section 5.

Radionuclide composition as indicated by effluent monitoring results of the 222-S waste in the 207-SL retention basin and the 219-S tanks was used to evaluate liquid pathway releases. These inventories are discussed in Section 4.3 and 4.4. Section 7 is a discussion of the potential releases under normal and upset conditions.

The hazardous chemicals that could be emitted via the air pathway during normal operations are those that are routinely used in the various laboratory procedures and lost during the process or those that are volatilized during upset conditions. The chemicals used routinely that may be lost in significant quantities are acetone, methanol, toluene, and xylene. The total inventory based on the 222-S SARA Chemical Inventory was less than a reportable quantity (RQ).

Under upset conditions it was felt that volatile chemicals of the 222-S SARA chemical inventory that were present above RQ were an additional inventory at risk. These chemicals were further considered under the specific upset conditions and discussed in Section 5.

The liquid effluents from 222-S have no access to the environment until they reach the 207-SL Retention Waste Facility or the 219-Waste Handling Facility, thus they are not considered here. See Sections 4.3 and 4.5 for a discussion of inventory at risk.

4.3 207-SL RETENTION BASIN

The 207-SL retention basin acts as a secondary containment system for the liquid effluents exiting 222-S and 219-S (see Figure 4-1). The 222-S wastewater line handles steam condensate, vacuum pump cooling water, laboratory sink drains, drain overflow from the supply fan air washers, and discharge from sumps. The major radioactive nuclides that are anticipated are ^{90}Sr, ^{239}Pu, ^{241}Am, and ^{137}Cs [WHC-EP-0141-2, Table C-19 (Brown 1990)]. The normal procedure of performing gross alpha and gross beta measurements prior to discharge to the 216-S-26 Crib provide a clear upper limit to potential routine emissions to the soil column and will be further discussed in Section 7.

Disposal of chemicals to the drains is strictly prohibited without consent of the 222-S Hazardous Material Coordinator and/or 222-S Laboratory Engineering.

Many of the materials listed on the 222-S SARA Hazardous Chemical Inventory can be accidentally discharged to the 207-SL Retention Basin. However, if a chemical is spilled or accidentally poured into a waste water drain, it will be contained in the retention basin and handled as the situation requires. Prohibiting disposal of chemicals to the drains and having a secondary containment system are excellent systems; however, the

Figure 4-1. 222-S Laboratory Wastewater System.

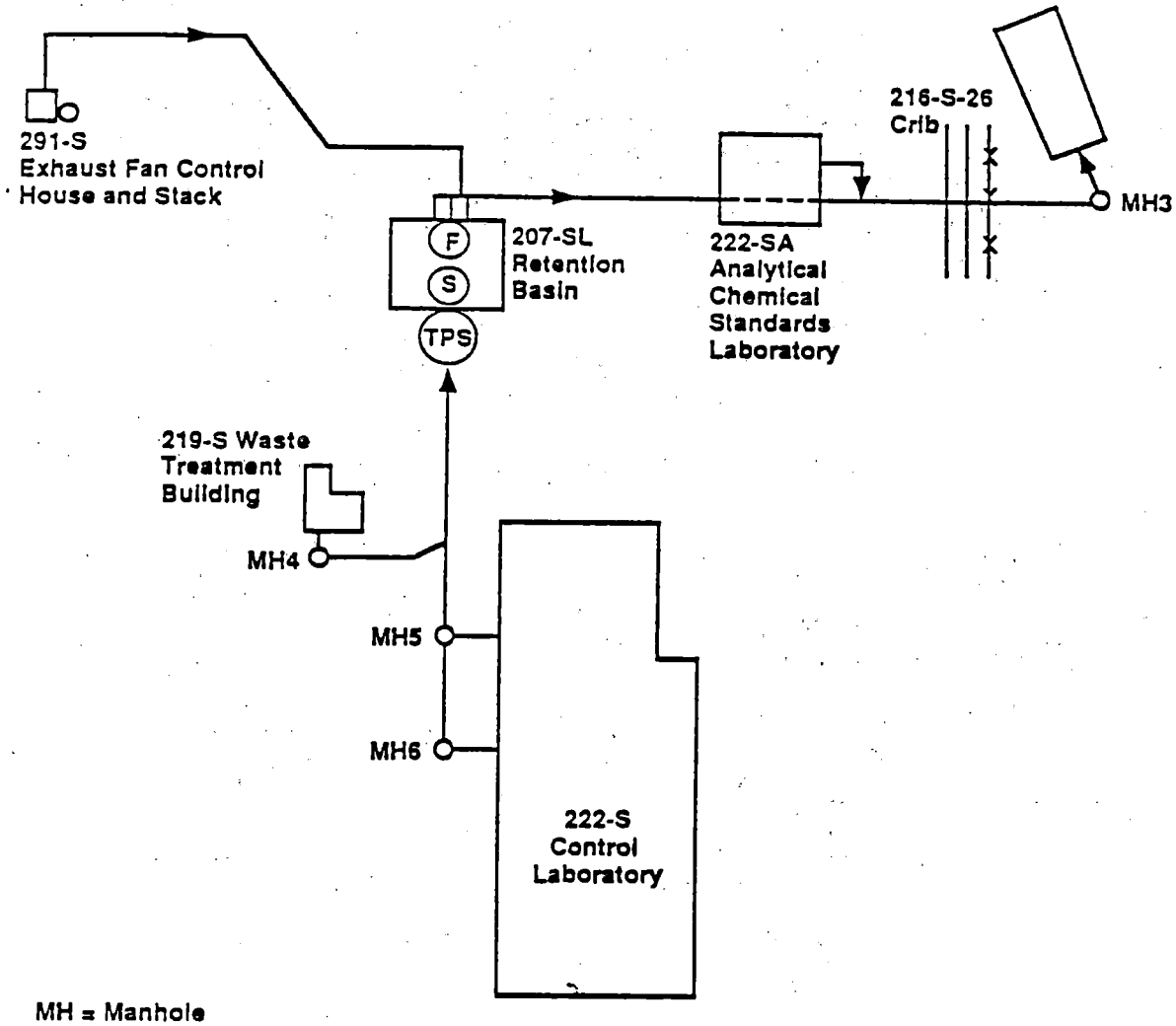

MH = Manhole

TPS = Time proportional sampler (Record)

(S) = Sampling location for SSR samples (grab samples)

(F) = Flow measurement location

present analytical parameters (pH, nitrate, TOC, alpha, bet) are not sufficient to ensure that no hazardous waste is discharged to the ground via the 216-S-26 Crib. Therefore, the entire inventory of chemicals was considered and is further discussed in Chapter 5.

4.4 219-S WASTE HANDLING FACILITY

The Waste Tanks 101, 102, and 103 contain the radioactive chemical wastes from the 222-S Laboratory (see Figure 4-2).

The maximum allowed plutonium in the tanks is 150 g. If that inventory was distributed in the total working volume of the tanks (7,860 gal) the concentration would be 5×10^{-3} g/liter. Typical Pu concentration is 4×10^{-4} g/liter, which calculates to approximately 12 g Pu in 7,860 gal of tank contents. The actual specification limit per batch transferred to the tank farms is <0.0132 g/liter (OSD-S-186-00004) (WHC 1986).

An assessment of the 219-S effluent stream for hazardous waste was performed (WHC-SD-WM-EV-058) (WHC 1991) and the stream was found to designate as a toxic, listed, characteristic dangerous waste according to WAC 173-303 (WAC 1989a). The designations are summarized in Table 1 and indicate the presence of a large inventory of mixed waste.

Table 4-1. 219-S Waste Designation Summary.

Waste Designation	Waste Characteristics
F003, F005	Non-Halogenated Spent Solvents (trace <2 ppm)
D002	Corrosive/Caustic (pH <2 pretreatment, <12.5 post Treatment)
D008	EP Toxic (13.3 ppm Lead)
D009	EP Toxic (0.3 ppm Mercury)
WT02	Toxic Waste Material (NO_2, 2,000 ppm)

Under upset conditions the chemicals in the 222-S SARA Chemical Inventory are also potentially available to the 219-S Waste Tanks. These chemicals were evaluated and those that could be present in the tank in quantities greater than the EPSs reportable quantities in accordance with 40 CFR 302 (EPA 1989d), or that could contaminate the waste to a level that would cause its WAC 173-303 (WAC 1989a) or 40 CFR 302, waste designation to change were evaluated further in Section 5.0.

The 219-S Facility also contains a 700-gal tank of approximately 50% NaOH. The contents of this tank, if released during an upset condition, would be a hazardous waste under the corrosive (pH >12.5) waste designation, and are further considered in Section 5.0.

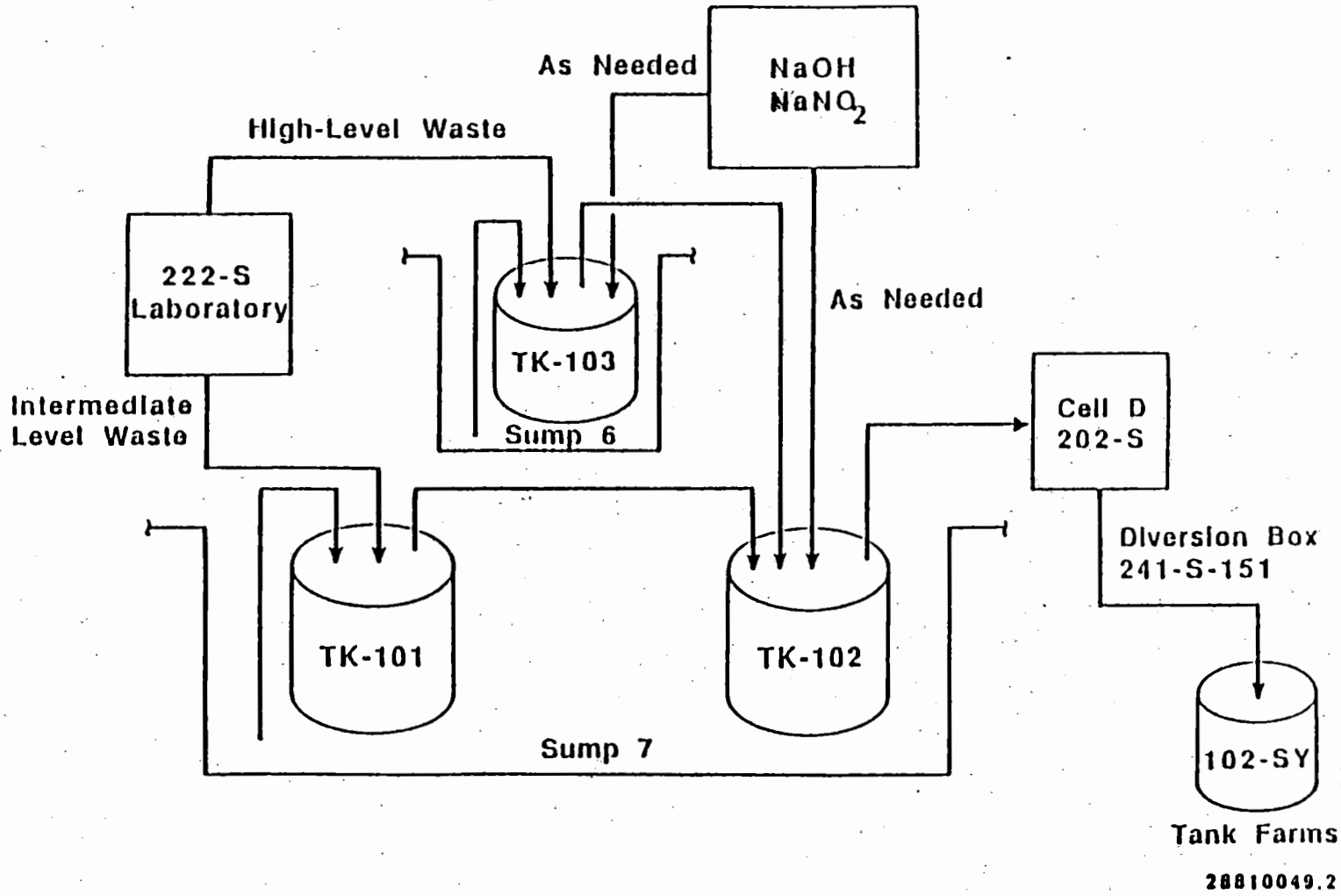

Figure 4-2. Tank Routing of 222-S Radioactive Liquid Waste.

4.5 NITRIC ACID TANK, 222-S LABORATORIES

An 800-gal nitric acid supply/storage tank is located on the north side of the 222-S Laboratory. The contents of this tank, if released during an upset condition, would be a hazardous waste under the corrosive (pH <2.0) waste designation, and are further considered in Section 5.0.

4.6 NONHAZARDOUS SOLID LOW-LEVEL WASTE

This waste stream consists of laboratory office trash and dry waste from laboratory areas. These wastes are generated only in 222-S and not in 222-SA. Laboratory dry waste typically consists of such things as surgical gloves, empty polyethylene bottles, and paper towels. These wastes are generally accumulated in drums and in individual laboratory areas. Full drums are staged in the Decon Room (Room 2-B) for shipment to the 200 West Area Burial Grounds. Broken glassware from the laboratories is accumulated in Room 2-B in a 55-gal drum. Low-level wastes >125 mrem/hr are accumulated in 55-gal drums in Room 2-B-1. These drums also contain radioactive solid waste. When full, these drums, as well as drums of broken glassware, are staged at a shielded storage pad north of the 222-S Building before shipment to the 200 West Area Burial Grounds. Large articles of solid waste that are from radiological control zones and are certified free of surface contamination, but cannot be certified for unconditional release, are accumulated in lockable steel "Load Luggers" outside of the 222-S Building before disposal at the 200 West Area Burial Grounds.

No releases to the environment are anticipated during routine operations and no upset conditions were identified that would cause a release.

The potential exists for broken glassware and other wastes, such as rags and wipes, to have residues from either RCRA-listed wastes or toxic waste mixtures. Documents reviewed cite evidence of waste segregation practices to ensure that dangerous wastes are not commingled with radioactive wastes are not commingled with radioactive wastes, (e.g., separate collection containers), but administrative controls are not currently in place to ensure that these wastes are not commingled. The wastes are enclosed within two barriers (plastic and metal), thus there does not appear to be a credible upset condition that would result in an environmental release. This source will not be further considered in this document.

4.7 MIXED SOLID WASTE - LEAD WASTE

Mixed solid waste consists of radioactive solid waste that is also dangerous waste. The primary mixed solid waste generated at 222-S is radioactively contaminated lead. Lead mixed waste is segregated from other solid radioactive wastes and staged at the mixed waste storage pad (i.e., Conex Box) north of 222-S before shipment to the Central Waste Complex.

Lead mixed waste at 222-S appeared to be limited to broken lead sample carriers. There does not appear to be a method by which significant release to environment could occur for this waste stream; however, this waste stream is regulated because the carriers appeared to be solid waste (i.e., they are

not being recycled) and lead is regulated as a dangerous waste. There does not appear to be any credible release scenario under routine or upset conditions. This source will not be considered further in this document.

4.8 MIXED SOLID WASTE - LABORATORY CHEMICALS

Mixed solid waste generated at 222-S includes outdated laboratory chemicals. Laboratory chemical wastes are accumulated with mixed liquid wastes in "less-than-90-d" accumulation areas before packaging for disposal. The outdated chemicals are either: recertified and put back into use; checked for radioactivity and, if radioactive (i.e., greater that 50 pCi/g), are labpacked and sent to the Central Waste Complex; or, if not radioactive, are packaged and sent to the 616 Building for storage until offsite disposal.

This waste stream is regulated because the laboratory chemicals used at 222-S include chemicals that are dangerous wastes. These wastes include those that can be designated as dangerous because they are discarded chemical products, toxic mixtures, or characteristic wastes (WAC 173-303) (WAC 1989a). There does not appear to be any credible release scenario under routine or upset conditions. This source will not be considered further in this document.

4.9 COLD WASTES

Cold wastes consist of those wastes that are nonradioactive hazardous wastes. These wastes include outdated laboratory chemicals and laboratory chemical wastes. These wastes are generated at both 222-S and 222-SA. These wastes are accumulated at satellite accumulation areas (222-S Room 1-C and 222-SA storage cabinet) before packaging in labpack drums for shipment to the 616 Building for ultimate offsite disposal.

This waste stream is regulated because the laboratory chemicals used at 222-S and 222-SA include chemicals that are dangerous wastes. These wastes include those that can be designated as dangerous because they are discarded chemical products toxic mixtures, or characteristic wastes (WAC 173-303) (WAC 1989a). There does not appear to be a scenario under routine or upset conditions for an environmental release. This source will not be considered further in this document.

4.10 RADIOACTIVE MIXED LIQUID WASTES - ORGANIC

Radioactive mixed liquid wastes are generated at 222-S during the radiochemical separation processes conducted in the laboratories. No mixed wastes are generated at 222-SA. Organic liquid mixed wastes are accumulated in polyethylene bottles inside the laboratory hoods where the separation processes occur. When these bottles are full, they are accumulated in satellite areas. When a sufficient quantity of waste is accumulated (i.e., 55 gal of dangerous or 1 qt of acutely hazardous waste), the bottles are transferred to the temporary (less-than-90-d) accumulation area and

packaged in labpack drums. These drums are staged at the mixed waste storage pad (i.e., Conex Box) north of the 222-S Building for shipment to the Central Waste Complex.

Carbon tetrachloride generated in one of the 222-S Laboratories, is reclaimed by distillation. This reclaimed solvent can be reused several times before it requires disposal.

This waste stream is regulated because the organic waste is a dangerous waste. The organic solvents used at 222-S include those that are listed as dangerous wastes or dangerous mixtures under (WAC 173-303) (WAC 1989a). There is no routine environmental release for this waste stream and there does not appear to be a credible scenario under upset conditions for a release.

4.11 RADIOACTIVE MIXED LIQUID WASTE - AQUEOUS

Aqueous mixed liquid wastes include aqueous phase wastes from radiochemical separation processes, discarded samples, and liquid decontamination wastes. Aqueous phase separation wastes are accumulation in bottles in laboratory hoods where the separation process occurs. When full, these bottles are transferred to a hood in Room 2-B for transfer to waste accumulation tanks located in the 219-S waste handling facility. Discarded samples are also sent to these tanks. Samples may be slurped in the tanks in Hood 16 located in Room 2-B, or may reach the tanks through drains in laboratories or hot cells. Decontamination takes place in Hood 16 in Room 2-B and decontamination wastes are drained into the storage tanks.

This waste stream is regulated because the aqueous wastes contain dangerous wastes. These wastes include corrosive dangerous wastes as well as toxic waste mixtures (WAC 173-303) (WAC 1989a). There may be a potential path to the environment during upset conditions. See Section 5.1.5 for a discussion of estimated releases.

4.12 WASTE AEROSOL CANS

One of the documents reviewed states that this waste stream consists of discarded aerosol cans for 222-S and other buildings at the facility. Aerosol cans from within radiological control zones are considered to by low-level solid wastes and are disposed of as such. Aerosol cans from other areas are disposed of as nonregulated solid waste. Aerosol cans would only be considered to be dangerous or mixed waste if they contained a dangerous waste and were not properly emptied. This document identifies at lease one product that was corrosive and would be a dangerous waste. Other cans could contain dangerous wastes, but an accurate inventory of aerosol-can products in use at 222-S has not been compiled. Final procedures do not presently exist that call for aerosol cans to be properly emptied before being disposed of. A draft procedure is in progress and is scheduled for implementation in FY 1991.

The potential exists for cans containing dangerous wastes to be disposed of without being properly emptied. However, the amount of material left in the can is so small (less than 1 lb) that it is highly unlikely that any

reportable quantities would be disposed of. The definition of an empty container in WAC 173-303 (WAC 1989a) indicates that the container is considered empty (nonregulated) if the "pressure inside the container equals or nearly equals atmospheric pressure." This waste stream is not considered further in this document.

4.13 TRANSURANIC SOLID WASTE

Transuranic (TRU) wastes are not routinely generated at 222-S. At the time of an earlier assessment (1989), some hoods were being removed from Room 2-B. These hoods had been assayed and estimated to possibly contain sufficient amounts of plutonium for designation as TRU wastes. The hoods were wrapped in plastic and stored in Room 2-B awaiting processing for disposal. Currently, the hoods are in wooden boxes east of the 222-S facility. There appears to be no plausible mechanism for release under routine or upset conditions. This waste stream is not considered further in this document.

4.14 WASTE ASBESTOS

One of the documents reviewed stated that this waste stream consists of asbestos removed from construction and asbestos-removal activities in the 222-S Building. Because these activities are performed in radioactively contaminated areas, the waste asbestos is considered to be low-level radioactive waste. This waste asbestos is double-bagged in polyethylene and placed in drums. This waste stream is regulated because asbestos wastes are regulated under the *Clean Air Act of 1977*. The wastes do not contain any dangerous waste constituents. At the time of this assessment, no asbestos was awaiting shipment and is not considered further.

4.15 296-S-21 STACK FAN EMERGENCY DIESEL TANK

The 296-S-21 Stack fan emergency diesel tank is an underground tank used to store diesel fuel to power an emergency fan for the stack. The tank is constructed of carbon steel and has a capacity of 285 gal. The tank was installed in 1977.

The tank is regulated under RCRA Subtitle I, 40 CFR 280 (EPA 1988b), 40 CFR 281 (EPA 1988c), Revised Code of Washington (RCW) 90, (RCW 1991) and WAC 173-360 (WAC 1990). The tank is required to be monitored by December 1994 for leaks and after 1998 must be monitored every 30 d and have corrosion protection and spill/overflow protection.

Because the tank is regulated under the regulations cited above and is within the time frame set for compliance, it is not considered further.

4.16 WASTE FLUORESCENT LIGHTS

This waste stream consists of waste fluorescent light bulbs from 222-S. The bulbs are processed through a fluorescent light bulb crusher and the crushed waste is collected in satellite drum. The crusher and drum are

located outside the 222-S Building. This waste stream is regulated because light bulb residues contain sufficient mercury (0.03%) and cadmium (0.03%) to be a toxic dangerous waste using the TCLP (or EP toxicity) criteria. This waste stream receives a predesignation from Westinghouse Hanford Solid Waste Engineering and is disposed of as a solid hazardous waste. There does not appear to be a credible scenario for the release from crushed tubes to the environment in an amount exceeding an EPA RQ.

4.17 218-W-7 DRY WASTE VAULT

The 218-W-7 Dry Waste Vault (operable unit 200-RO-3) was used in the past to receive dry, packaged laboratory and sampler waste from the 222-S Laboratory. The estimated inventory as of December 31, 1988 for this vault consists of 36.6 Ci, ^{90}Sr, 41.09 Ci, ^{137}Cs, 8.7×10^{-4} Ci U isotopes, 7.9×10^{-2} Pu isotopes, and 1.5×10^{-2} Ci ^{241}Am.

The unused vault is locked and does not contain any known liquid, thus there does not appear to be a credible scenario under which it would release radioactivity to the environment. This unit is not considered further in this document.

4.18 POTENTIAL EFFLUENT STREAMS

A number of individual effluent streams were identified from a site visit and documents provided by Westinghouse Hanford staff. These streams are organized here in two categories: liquid effluents and gaseous emissions. Each stream is briefly described below, and the potential for an environmental release under normal operating conditions and/or upset conditions is assessed for radioactive and hazardous chemical release.

For hazardous chemicals, the upset condition considered was the inadvertent or unknowing introduction of one container of a given inventory of chemicals into the sink hood, or floor drains. To be conservative it was assumed that the largest available container was spilled or poured down the drain over a 24-h period.

Radionuclide emissions were estimated from monitoring data, if available. A factor of 3,000 was applied to airborne emissions to simulate a loss of engineered controls.

4.18.1 Liquid Effluents

Five routine or potential liquid effluent streams were identified under routine and upset conditions from the site visit and documents provided by Westinghouse Hanford staff. During normal operations, it is unlikely that any would contain CERCLA, RQ dangerous substances. However, consideration of upset conditions has identified the potential for CERCLA, RQ to be emitted. This, coupled with the fact that radionuclides are discharged to the soil column, indicates a need for a FEMP.

4.18.1.1 222-S Laboratory Wastewater. This waste stream consists of the liquid effluent from the 222-S Building (see Figure 4-3). Included in this effluent are steam condensate, vacuum pump cooling water, laboratory sink drainage, cold tunnel sump drainage, and overflow from the supply fan air washers. This effluent is discharged into the 207-SL Retention Basin. The influent from the 222-S Laboratory is sampled via a flow totalizer and proportional grab sampling system. Samples are analyzed once daily or before discharge. If the proportional sampler is inoperable, a grab sample effluent in the basin is obtained and analyzed before discharge. The sample is analyzed for pH, TOC, nitrate, total alpha, and total beta. If the effluent is below radioactive and hazardous chemical releases limits for discharge to the soil column, it is discharged to the 216-S-26 Crib. If the sample exceeds the limits, the effluent can be sent to the 219-S Waste Handling Facility and then to the Tank Farms for disposal to the double-shell tanks.

This waste stream is not currently regulated with regard to hazardous chemicals. During an earlier assessment, it was observed that administrative controls are in place (e.g., signs at sink drains) to prevent discharge of dangerous wastes to this stream. Operating procedures are in place to prohibit disposal of liquid wastes to laboratory sinks and drains and it was noted that these procedures specifically state that hazardous chemicals may not be disposed of to this stream.

Attachment 1a (discharge point 216-S-26 Crib) lists the potential discharges to the soil column for radionuclides at the routine monitored levels and for hazardous chemicals during upset conditions. The hazardous chemicals under upset conditions were calculated as follows. It was assumed that the largest container of chemicals in the inventory was introduced to the wastewater stream. The released amount of chemical was then compared to the final RQ levels of 40 CFR 302, (EPA 1989d). No chemicals were identified which had the potential for release above the EPA RQ. Internal Westinghouse Hanford guidance (WHC-CM-7-5, Part E) regarding nonradioactive liquid discharges requires that releases discharged to groundwater should not exceed MCLs in Appendix B of WHC-CM-7-5.

Also found in 40 CFR 302 (EPA 1989d), are reportable quantities of characteristic waste. These wastes are so designated because of properties of ignitability, corrosivity, reactivity, or toxicity. Toxicity characteristics of the waste are defined by the list of compounds in 40 CFR 302 (EPA 1989d), and the regulatory limits elaborated in 40 CFR 261 (EPA 1989f). The amount of chemical that could be released under the upset conditions was assumed to be dissolved in the entire daily effluent from 222-S Laboratory (7,000 gal). If the resultant concentration of chemical was greater than the TCLP maximum concentration of contaminants for the toxicity characteristics (40 CFR 261) (EPA 1989f), the entire 7,000 gal of wastewater was designated appropriately and compared to the RQ levels in (40 CFR 302) (EPA 1989a). A number of chemical compounds met this criteria. These compounds are listed in Attachment 1a (discharge point 207-SL to 216-S-26 Crib). Also listed is the specific chemical, element, or compound, and the amount used in the calculations. Based on these upset conditions, there are potential effluents that exceed reportable quantities. The current monitoring parameters, pH, nitrate, and TOC, would detect some of these compounds. A FEMP is required based on the potential for exceeding EPA reportable quantities.

Figure 4-3. 222-S Laboratory Coolant and Condensate Flow Diagram (MH = manhole).

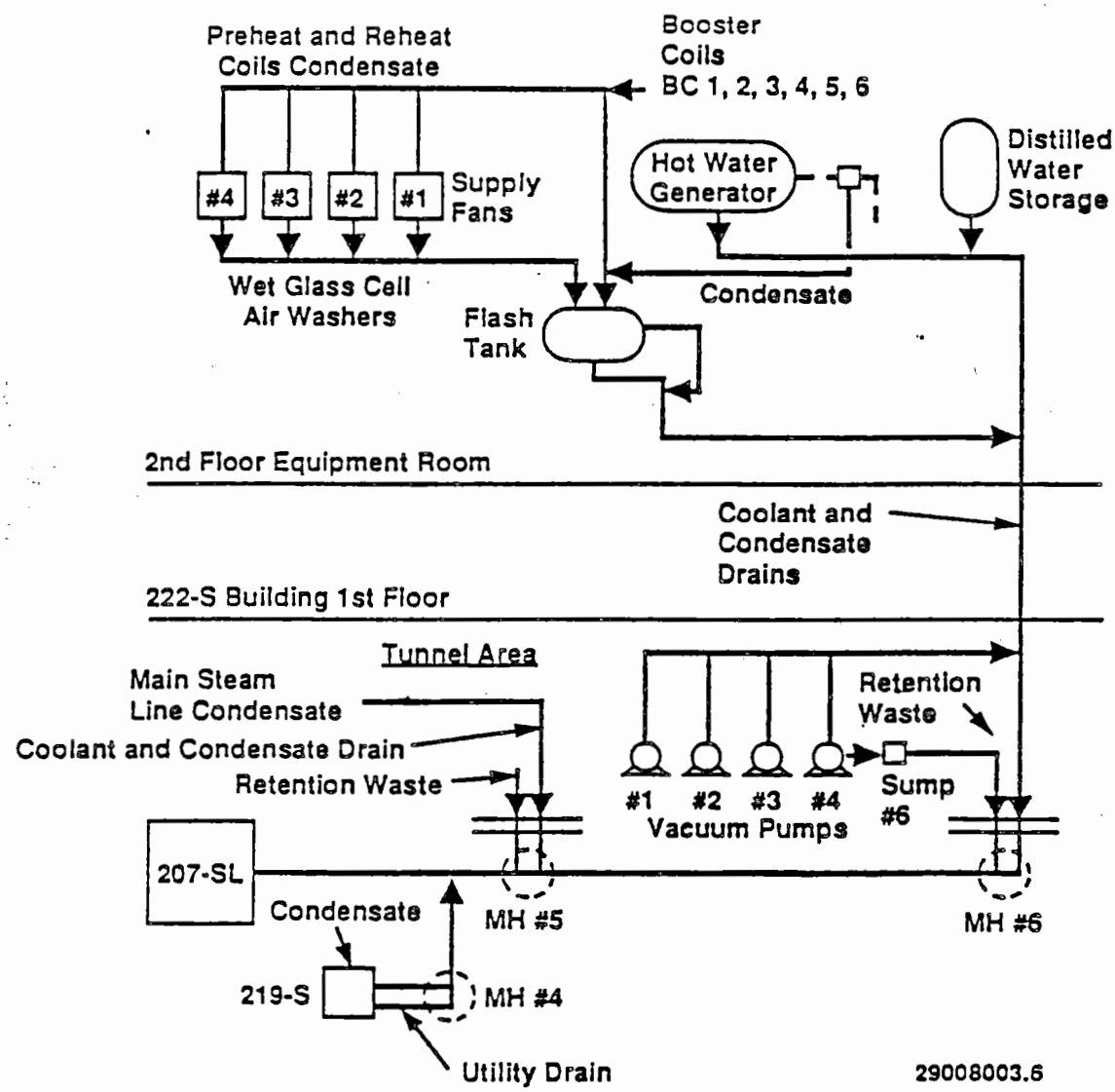

A consideration of the radioactive operation of the effluent indicates that radionuclides have been discharged to the ground in the past (WHC-EP-0141-2) (WHC 1990), and that the effluent meets the definition of a normally contaminated effluent (WHC-EP-0141-2) (WHC 1990). A FEMP is required based on the criterion that any radionuclide discharged to the ground must be monitored. In addition, the potential exits for discharge in excess of Westinghouse Hanford ACV (WHC-CM-7-5) (WHC 1989a).

4.18.1.2 **222-SA Laboratory Wastewater.** This waste stream consists of the liquid effluent from the 222-SA Building. Included in this effluent are water purification system back flush water, sink and hood drains, and discharges from the glass washer. This effluent is discharged directly to the 216-S-26 Crib without monitoring or sampling (see Figure 4-1).

This waste stream is not regulated. During an earlier assessment, it was observed that administrative controls are in place (e.g., signs at sink drains) to prevent discharge of dangerous wastes to this stream. Operating procedures for disposal of liquid wastes to laboratory sinks and drains were also reviewed at that time and it was noted that these procedures specifically state that hazardous chemicals may not be disposed of to this stream.

The RCRA permit application for the 216-S-26 Crib was withdrawn because there is no evidence that dangerous wastes were discharged to this crib. Thus, during upset conditions where administrative controls prohibiting sink disposal of chemicals have failed, there is a potential for any of the chemicals in the 222-SA inventory to be released into the soil column. A comparison of the 222-SA SARA Chemical Inventory against the RQ in (40 CFR 302) (EPA 1989d), showed that no chemicals had the potential for release under normal or upset conditions in excess of the RQ.

Ten other chemicals could, under upset conditions, contaminate the 222-SA sewer effluent such that the entire 1,000 gal estimated daily volume becomes a dangerous waste. For example, a release of 100 g of cadmium nitrate would result in the effluent having a daily average concentration of 26 ppm. This is well above the 1 ppm that would designate the effluent a dangerous waste under 40 CFR 261 (EPA 1989f), or WAC 173-303 (WAC 1989d). Thus, the effluent to the 216-S-26 Crib (1,000 gal, 8,370 lb) would be far in excess of the 1 lb RQ allowed for TCLP toxic waste in 40 CFR 302 (EPA 1989d). Four other metals, four chlorinated solvents, and pyridine would create a similar effect with regard to the TCLP waste designation of toxicity. These compounds are listed in Attachment 1b (discharge point 216-S-26 Crib). Based on this assessment, there are compounds that, if introduced into the effluent, would cause an RQ to be exceeded and would constitute the discharge of hazardous waste into the environment in violation of WAC 173-303 (WAC 1989d), and 40 CFR 302 (EPA 1989d). A FEMP is required for this effluent stream.

4.18.1.3 **222-S Nitric Acid Storage Tank.** An 800 gal nitric acid supply/storage tank is located on the north side of the 222-S Laboratory. A secondary containment structure around the tank has an approximate volume of 825 gal based on secondary containment specifications provided by Westinghouse Hanford staff. An administrative limit holds the tank volume at 600 gal. Thus, during an upset condition (i.e., failure of pipe, valve, or tank), there is no credible scenario for the release of concentrated nitric acid. Based on a lack of potential release discussed above, a FEMP is not required.

4.18.1.4 291-S Stack Fan House Cooling Water. Cooling water and steam condensate from the 291-S Facility emergency exhaust fan is routed directly to the 207-SL Basin discharge box (see Figure 4-1). Therefore, the condensate bypasses the sampling procedure -performed on 222-S influents and is discharged directly to the 216-S-26 Crib. Based on estimates of use and flow rate (WHC-EP-0342) (WHC 1990), the maximum contribution is about 14,000 gal/yr.

It does not appear that the condensate is routinely or potentially contaminated with hazardous materials. There is also no credible potential for radioactive contamination of the condensate under routine or upset conditions.

4.18.1.5 219-S Building Caustic Tank and Waste Accumulation Tanks. The 219-S Building collects radioactive and mixed liquid waste generated by 222-S Laboratory operations (see Figure 4-2). Overflow and drain lines from the caustic tank are routed to the hot waste. There does not appear to be a significant release to the environment of radioactive or mixed waste effluents under routine operating conditions.

Two potential upset conditions would appear to present the opportunity for a liquid effluent release to the environment: (a) a failure of valving of pipe from the caustic tank to the outside valve would result in a caustic spilling, which is a corrosive waste and (b) a failure of valving, fitting, or pipe downstream from the waste tank outlet and pump used to transfer waste to the tank trucks that transport the radioactive and/or hazardous waste from the 219-S Tanks to the tank farm would result in an environmental release to the ground via the French drain system.

Under upset condition (a), it was assumed that about 60 gal of caustic is available based on line drainage and/or 2 min of undetected pumping to or from a tank truck at 20-30 gal/min. The 60 gal would not exceed the 1,000 lb RQ for NaOH, but would exceed the 100 lb RQ for a waste with pH >12.5 (see Attachment 1d).

Under upset condition (b), it was assumed that there was an undetected disconnect during tank truck loading that persists for 2 min. The flow rate is assumed to be 15 gal/min and the tanks were assumed to contain the maximum of 150 g fissile material in the entire working volume of the three tanks (7,800 gal). Plutonium-239 was chosen for the calculation. The waste in the tanks has been analyzed and was found to be both corrosive (pH >12.5) and TCLP toxic for lead (see Attachment 1e).

Based on these conditions, radioactivity would be released to the soil and a release of TCLP toxic waste would exceed 40 CFR 302 (EPA 1989d), (see Attachment 1d, 1e).

4.18.2 Airborne Emissions

A number of airborne emissions were identified from the site visit and Westinghouse Hanford documents. These streams contain both radioactive and nonradioactive components.

To estimate the project radioactive dose under conditions where no engineered controls are present, a factor of 3,000 is applied to the effluent data per instructions from Westinghouse Hanford Environmental Protection.

The upset condition assumed for evaluation of potential airborne hazardous chemicals was that the entire contents of the largest container of volatile chemicals in the inventory was released and swept up into the effluent air stream. Nonvolatile chemicals were not considered at risk.

4.18.2.1 296-S-21 Stack. The 296-S-21 Stack is the main exhaust stack for 222-S. This stream consists of exhaust air from 222-S Laboratory hoods, exhaust air from hot cells, room exhaust, and process vacuum pump exhaust (see Figure 4-4). The stream contains small amounts of radioactivity and is filtered through HEPA filters. The potential also exists for the stream to contain small amounts of nitrogen oxides from nitric acid fumes and small amounts of volatiles from laboratory chemicals. The stream is continuously monitored for alpha and beta radioactivity and is routinely sampled for additional nuclide analysis. No sampling for hazardous chemicals is performed.

The exhaust gases discharged are continuously sampled and the emissions for 1989 are reported as: gross alpha $<3.33 \times 10^{-6}$ Ci and gross beta 1.78×10^{-5} Ci (WHC-EP-0141-2) (Brown 1990). Applying the multiplicative factor to simulate loss of engineered controls gives an estimated release of 0.010 Ci for gross alpha and 0.053 Ci for gross beta. Assuming ^{239}Pu for the gross alpha and ^{90}Sr for gross beta, the dose estimates for the maximum offsite individual are the following:

^{239}Pu	0.0515 mrem/yr EDE
^{90}Sr	0.0014 mrem/yr EDE

Assuming ^{241}Am for the gross alpha measurement increases the dose to 0.078 mrem. The total estimated dose to the maximally exposed offsite individual is 0.05 mrem EDE. A FEMP is not required because of radionuclide emission (see Attachment 1f). Internal Westinghouse Hanford guidance (WHC-CM-7-5) (WHC 1989a), requires sampling of airborne effluents that have the potential to exceed 10% of any DCG-Public value on an annual average. Environmental monitoring data show measured data show measured average gross alpha emissions as less than about 18% of the DCG-Public values for ^{241}Am and ^{239}Pu, so it is reasonable to assume that the stack has the potential to exceed 10% of the ^{239}Pu or ^{241}Am DCG-Public value. Therefore, a continuation of the present monitoring and sampling schedule is recommended.

The only volatile materials known to have been exhausted in significant quantities during routine operation are acetone and methanol. Toluene and xylene are also routinely used in relatively large quantities. Although other volatile materials exist in the laboratory, they are used in small quantities and the containers are kept stoppered while not in use, so evaporation is minimal. Although large amounts of some of these chemicals are available in the laboratory, they vary in quantity and concentration in several different locations. The only possible way all the inventory could be evaporated in a short time would be as a result of a catastrophic event such as an earthquake.

Figure 4-4. Airflow and Filtration Schematic 222-S Laboratory.

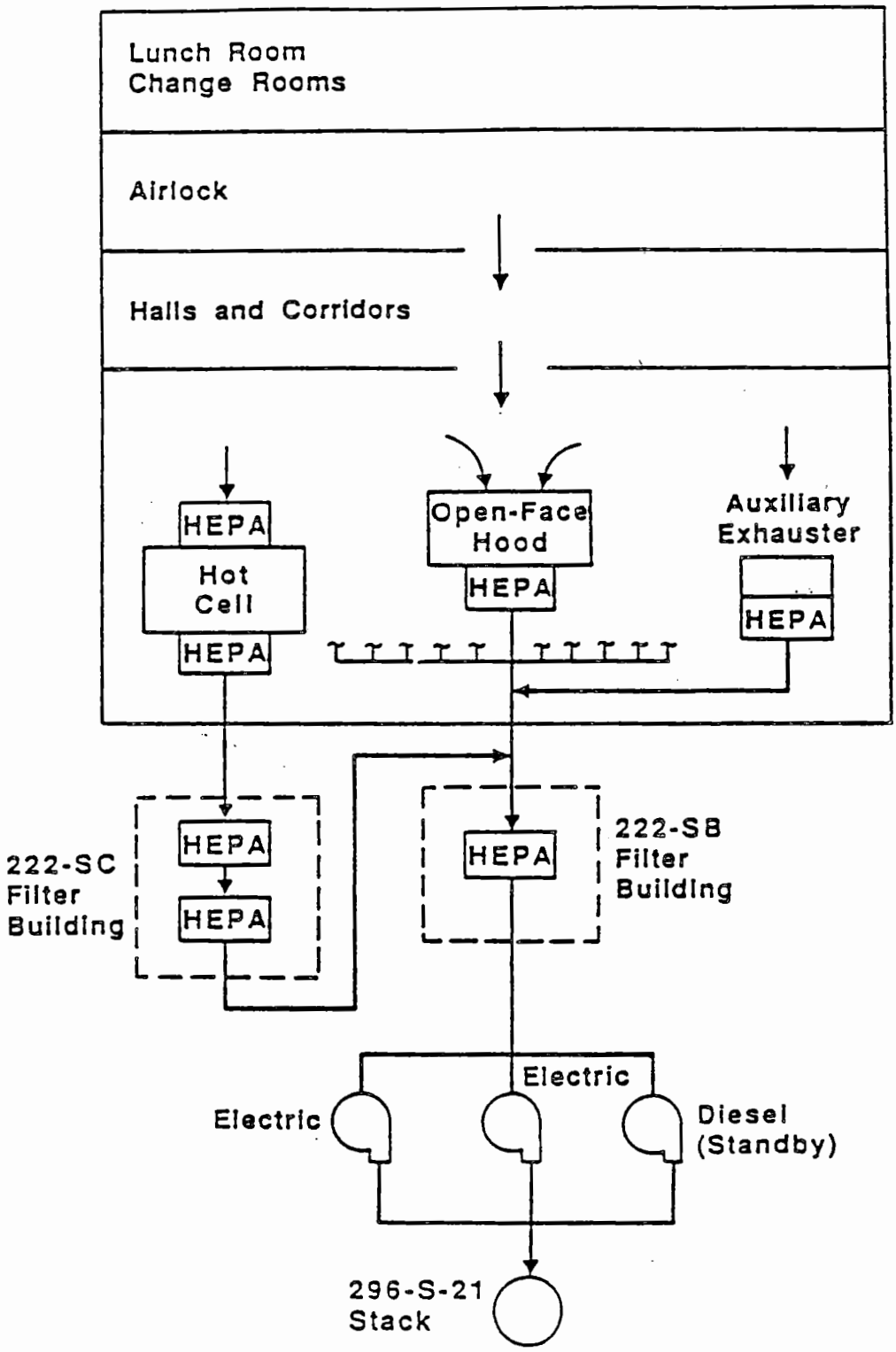

This is considered outside the scope of this document. Other nonvolatile materials have little or no chance of entering the gaseous effluent stream either through entrainment or evaporation.

Potential releases during upset conditions were evaluated based on the current 222-S chemical inventory of volatile chemicals. No chemicals that would exceed the final reportable quantities of 40 CFR 302 (EPA 1989d), were found. A FEMP is not required because of chemical emissions (see Attachment 1f).

4.18.2.2 219-S-16 Stack. This stream consists of exhaust air from the 219-S Tank vaults. The stream contains air vented from the radioactive liquid waste tanks in the vaults. This stream is monitored by a beta-gamma continuous air monitor that will sound a local alarm under conditions of low flow (SD-CP-HIE-001) (WHC 1989). The stream is sampled weekly for total alpha and total beta. The exhaust air from the vaults goes through a deentrainer tank and HEPA filters before discharge to the atmosphere. The stack exhausts the gases from TK-101, TK-102, TK-103, and A and B Vaults located below grade in 219-S Building. The exhaust gases discharged are continuously sampled and the 1989 emissions are reported as gross alpha $<6.59 \times 10^{-9}$ Ci and gross beta 3.32×10^{-8} Ci (Brown, P'Pool, and Thomas 1990). A reduction factor of 3,000 is assumed; therefore, the uncontrolled releases would be estimated at gross alpha less then 1.98×10^{-5} Ci and gross beta 9.66×10^{-5} Ci.

Plutonium-239 is commonly used as the alpha material and ^{90}Sr is commonly used for the beta material in calculating doses based on the prevalence and dose conversion factor of these radionuclides. The maximum offsite dose to an individual from the release of this level of material is 7.2×10^{-5} mrem EDE for ^{239}Pu and 2×10^{-6} mrem EDE for ^{90}Sr. The total maximum offsite exposure is estimated to be 7.4×10^{-5} mrem EDE. Based on communication with Westinghouse Hanford personnel indicating the possible presence of significant quantities of ^{241}Am, the EDE was also calculated assuming the gross alpha measurements were 100% ^{241}Am. The dose accumulated was 11×10^{-5} mrem, which is still significantly below the 0.1 mrem limit (see Attachment 1g). A FEMP is not required for the emissions of radionuclides; however, (WHC-CM-7-5) (WHC 1989a), requires sampling for airborne effluents that have the potential to exceed 10% of the public DCG values on an annual average. The 1989 data for 296-S-16 show measured average gross alpha emissions as less than about 18% of the DCG-Public values (for ^{241}Am and ^{239}Pu), thus it is reasonable to assume that the stack has the potential to exceed 10% of the ^{239}Pu or ^{241}Am DCG-Public value.

This stream is regulated because it contains radionuclides. Based on information in the waste stream identification form and observation made during the assessment, the stream does not appear to contain regulated amounts of other constituents during routine operations. Consideration of upset conditions would use the same inventory as for the 296-S-21 Stack. No chemical in excess of reportable quantities was found to be emitted under routine or upset conditions. A FEMP is not required for the emission of hazardous chemicals (see Attachment 1g).

4.18.2.3 296-S-222 Stack. This stack exhausts the sample gallery hood in 219-S. Air is drawn through the sample gallery into the hood and exhausted to the stack. No hazardous chemicals or radioactive materials are present in the sample gallery room. The only source of hazardous or radioactive materials would be from the sample box in the 219-S Vault. The sample box contains liquid samples drawn from the tanks. The air being exhausted from the sample box will be essentially the same as what is being exhausted through the 296-S-16 tank exhauster. The only difference between the two streams is that the 296-S-16 stream has a demister before the discharge through a HEPA filter; no demister is in place in the 296-S-22 exhaust system. The tanks contain the radioactive chemical wastes from the 222-S Laboratory. The air from the sample gallery hood has a low potential for contamination with radionuclides or hazardous chemicals. Because of the low potential for contamination, the stack is not monitored or sampled. This stream does, however, go through a HEPA filter before discharge to the atmosphere. This stack operates on an as needed basis (10-12 h/mo). The flow rate of the stack when operating is about 720 ft^3/min. This stream is not currently monitored or sampled.

The hood is only operated during use, historically estimated at 10-12 h/mo. The potential effluents are the material airborne in the 291-S Tank and vault and air drawn form the sample gallery. The most conservative estimate of a potential discharge would be at the same activity level as estimated for the 296-S-16. The flowrate for the 296-S-22 discharge is 5.5 times greater that 296-S-16 (720 ft^3/min/130 ft/min), but the duration is 60 times less (720 h/12 h). The total volume of gas discharged is 0.0917 (5.5/60) of the 296-S-16, as would be the calculated offsite dose. Therefore, the estimated offsite dose to the maximum individual is; ^{239}Pu EDE 6.6×10^{-6} mrem and ^{90}Sr EDE 1.8×10^{-7} mrem. Thus, the total dose to a maximally exposure offsite individual is EDE 6.8×10^{-6} mrem. A FEMP is not required for the estimated radionuclide emissions (see Attachment 1h).

This waste stream is regulated because it contains radionuclides. The stream does not appear to contain regulated amounts of other constituents. Consideration of potential chemical release resulting from upset conditions would use the same inventory as discussed for the 296-S-21 Stack. Because of the decreased use, no chemicals could exceed reportable quantities. A FEMP is not required for estimated chemical releases (see Attachment 1h).

4.18.2.4 Vacuum Air Sample Pumps Stack, 222-S Laboratories. Exhaust air from 222-S VAS pumps was vented directly to the environment. This stream has been rerouted into the 222-S main exhaust plenum and now exhausted via the 296-S-21 Stack. The release point is included in the discussion of 296-S-21.

4.18.2.5 222-SA Stack. The 222-SA Stack receives exhaust air from the laboratory hoods located in the 222-SA Building. This stream has the potential to contain trace amounts of violative organics from chemicals handled in the hoods. Because 222-SA does not handle radioactive materials, this stream does not potentially contain radionuclides. The stream has not been sampled for either chemicals or radionuclides. No treatment of the stream occurs before discharge to the atmosphere.

Based on the presence of administrative procedures prohibiting disposal of any hazardous chemical in the hoods and an assessment of the total inventory, there does not appear to be a mechanism by which there are routine emission of volatile hazardous chemicals.

An evaluation of potential releases of volatile chemicals under the upset conditions discussed in Section 5.2.1 indicates no chemicals will be emitted in excess of 40 CFR 302 (EPA 1989d). A FEMP is not required for airborne chemical emissions (see Attachment 1i).

4.18.2.6 Nitric Acid Tank Vent. This stream consists of the vent from the 222-S nitric acid supply tank (600 gal working capacity). This stream potentially contains small amounts of nitrogen oxides, though it has not been sampled. The tank does not contain radioactive materials, so there is no potential for the stream to contain radionuclides. The stream is not treated before discharge to the atmosphere. Based on the Westinghouse Hanford evaluation and consideration of NO_x discharge limits of 40 CFR 302 (EPA 1989d), there does not appear to be a credible scenario where RQ are exceeded.

This stream is classified as nonregulated, based on process knowledge, because it does not contain regulated amounts of nitrogen oxides. There appears to be no need for a FEMP because of airborne chemical emissions.

This page intentionally left blank.

5.0 POTENTIAL UPSET - OPERATING CONDITION

No potential upset conditions have been identified or deemed credible. No mechanisms were identified for routine release of 222-S Laboratory-contained radionuclides offsite. Therefore, no analyses were performed for operational radiological impact to the offsite population. Ecological impacts from this facility are essentially unchanged from present conditions.

This page intentionally left blank.

6.0 DEFINITIONS

Administrative Control Values - Contractor-imposed radionuclide and hazardous material release limits usually based on ALARA goals for protection of the public.

Contractor - A company or entity that has entered into a prime contract to operate at Hanford facility or perform a function for the U.S. Department of Energy-Richland, Operation Office (DOE-RL).

Crib - Subsurface liquid waste disposal that allows liquid waste to percolate into surrounding soil.

Dangerous Waste- Washington State designation for solid wastes specified in Washington Administrative Code (WAC) 173-303, (WAC 1989) as dangerous or extremely hazardous waste.

Derived Concentration Guides - the concentration of a radionuclide in air or water that, under conditions of continuous exposure for one year by one exposure mode, would result in an effective dose equivalent of 100 mrem. Derived concentration guides (DCG) do not consider decay products when the parent radionuclides is the cause of the exposure. The DCGs are listed in DOE Order 5400.5, Chapter III, and contractor safety and environmental compliance manuals.

Discharge Point or Effluent Discharge Point - The point at which an effluent or discharge enters the environment from the facility in which it was generated.

Effective Dose Equivalent - The summation of the products of the dose equivalent received by specified tissues of the body and a tissue-specific weighing factor. This sum is a risk-equivalent value and can be used to estimate the risk to the health-effect of the exposed individual. The tissue-specific weighing factor represents the fraction of the total health risk resulting from uniform whole-body irradiation that would be contributed by that particular tissue. The EDE includes the committed EDE from internal deposition of radionuclides and the EDE caused by penetrating radiation for sources external to the body. Effective dose equivalent is expressed in units of rem (or sievert).

Effluent - Any treated or untreated air emission or liquid discharge at a DOE site or from a facility.

Effluent Monitoring - Measurement of liquid and gaseous effluents to characterize and quantify contaminants, assess radiation exposures of members of the public, provide a means to monitor and/or control effluents at or near the point of discharge, and demonstrate compliance with applicable standards and permit requirements.

Effluent Sampling - The continuous or intermittent collection and analysis of effluent samples to characterize and quantify contaminants, assess

radiation exposures of members of the public, provide a means to control effluents at or near the point of discharge, and demonstrate compliance with applicable standard and permit requirements.

Environmental Control Limits - Contractor limits based on permit limits and contractor policies as derived from DOE requirements.

Environmental Occurrence - Any sudden or sustained deviation (categorized as emergencies, unusual occurrences, or off-normal occurrences) from a regulated or planned performance at a DOE site that has environmental protection and compliance significance. Typical occurrences of interest this document include failure of primary or secondary facility effluent monitoring equipment or a monitored and/or unmonitored release of regulated materials exceeding ACVs.

Environmental Surveillance - The collection and analysis of samples or direct measurements of air, water, soil, foodstuffs, biota, and other media from DOE sites and their environs to determine compliance with applicable standards and permit requirements, assess radiation exposures of members of the public, and assess the effects, if any, on the local environment.

Extremely Hazardous Waste - The Washington State designation for waste specified in WAC 173-303 (WAC 1989d).

French Drain - a rock-filled encasement with an open bottom to allow drainage into the soil. A French drain is used for the disposal or relatively low-volume, low-level radioactive solution.

Hazardous Materials - The DOE term for nonradioactive hazardous substances as specified by the EPA 40 CFR 302 (EPA 1989d).

Hazardous Waste - Solid waste designated by 40 CFR 261, (EPA 1989f), and regulated as hazardous wastes by EPA for Washington State (WAC 173-303) (WAC 1989). This term includes dangerous waste, extremely hazardous wastes, and toxic dangerous waste.

In-Line Monitor - A system in which a detector or other measuring device is placed in the effluent stream to perform measurements on the effluent stream.

Inventory at Risk - the quantity and/or type of radioactive and/or nonradioactive hazardous material present in a facility with the potential to enter a gaseous or liquid effluent stream.

Isokinetic - A condition that exists when the velocity of air entering a sampling probe held in an airstream is identical to the velocity axis of flow of the airstream being sampled at that point.

Mixed Waste - Waste Continuing both radioactive and hazardous components regulated by the *Atomic Energy Act of 1954*, and the *Resource Conservation and Recover Act of 1976* (RCRA), respectively.

Non-Complexed - Waste that does contain the chelating agents ethylenediametetraacetic acid (EDTA), N-(hydroethyl) ethylenediametetraacetic acid (HEDTA), citric acid, or hydroxyacetic acid.

Normal Operations - A Plant operating condition where all processes and safety control devices are operating as designed.

Out-of-Specification Condition - a condition that is outside the operating parameters established for airborne emissions and liquid discharges.

Radioactive Component - Refers only to the actual radionuclides dispersed or suspended in the waste substance.

Reportable Quantity - That quantity of hazardous substances as listed in 40 CFR 302 (EPA 1989d) which, if released, requires notification as per 40 CFR 302. These quantities also provide criteria for requiring FEMPs with respect to nonradioactive hazardous substances.

Riser - A pipe connected to the top of an underground storage tank and extended to the surface of the ground. Pumps and instrument are inserted into a waste tank through a riser.

Self-boiling - The heat produced by the decrease in the amount of any radioactive material with time caused by the spontaneous emission from the atomic nuclei of either alpha or beta particles and gamma radiation that is sufficient to cause the waste to reach the boiling temperature.

Shutdown Condition - A plant condition where all processes involving radioactive and/or hazardous material are inactive and other wise stable.

Source Term - The amount, activity, or concentration and the effective release height of a hazardous or radioactive material in a facility effluent stream at the point of discharge that is available to expose personnel either within the facility or beyond the site boundary.

Tank Farm - An area of underground tanks designed to store high-level liquid wastes generated by the processing of nuclear fuel.

Toxic Dangerous Wastes - The Washington State designation for wastes meeting the criteria specified in WAC 173-330 (WAC 1989).

Transuranic - Any radionuclide having an atomic number greater than 92.

Underground Injection - Subsurface emplacement of fluids through a bored, drilled, or driven well or through a drywell where the depth of the drywell is greater than the largest surface dimension.

Upset Condition - Any one condition that is outside the normal process operating parameters, or an unusual plant operating condition where one material confinement/containment barrier or engineered or administrative control has failed.

This page intentionally left blank.

7.0 REFERENCE

Brown, M. J., R. K. P'Pool, and S. P. Thomas, 1990, *Westinghouse Hanford Company Effluent Discharges and Solid Waste Management Report for Calendar Year 1989: 200/600 Areas*, WHC-EP-0141-2, Westinghouse Hanford Company, Richland, Washington.

Comprehensive Environmental Response, Compensation and Liability Act of 1980, as amended, 42 USC 9601 et seq.

Clean Water Act of 1977, as amended, 33 USC 1251.

Clean Water Act of 1977, as amended, 41 USC 7401.

DOE, 1981, *Environmental Protection, Safety, and Health Protection Information Reporting Requirements*, DOE Order 5484.1, U.S. Department of Energy, Washington, D.C.

DOE, 1982, *Environmental, Safety, and Health Protection Program for RL*, DOE Order 5480.1, U.S. Department of Energy, Washington, D.C.

DOE, 1984, *Environmental Protection, Safety, and Health Protection Standards*, DOE Order 5480.4, U.S. Department of Energy, Washington, D.C.

DOE, 1987, *General Design Criteria*, DOE Order 6430.1, U.S. Department of Energy, Washington, D.C.

DOE, 1988a, *General Environmental Protection Program*, DOE Order 5400.1, U.S. Department of Energy, Washington, D.C.

DOE, 1988b, *Radiation Protection for Occupational Workers*, DOE Order 5480.11, U.S. Department of Energy, Washington, D.C.

DOE, 1989a, *Comprehensive Environmental Response, Compensation and Liability Act Requirement*, DOE Order 5400.4, U.S. Department of Energy, Washington, D.C.

DOE, 1990, *Radiation Protection of the Public and the Environment*, DOE Order 5400.5, U.S. Department of Energy, Washington, D.C.

EPA, 1981, "State Registration of Pesticide Products" Title 40, Code of Federal Regulation, Part 162-165 as amended, U.S. Environmental Protection Agency, Washington, D.C.

EPA, 1983, "Health and Environmental Protection Standards for Uranium and Thorium Project Plans," Title 40, Code of Federal Regulation, Part 192, as amended, U.S. Environmental Protection Agency, Washington, D.C.

EPA, 1984, "Polychlorinated Biphenyls Manufacturing, Processing, Distribution in Commerce and Use Prohibitions," Title 40, Code of Federal Regulations, Part 761, as Amended U.S. Environmental Protection Agency, Washington, D.C.

EPA, 1987, "Land Disposal Restrictions," Title 40, Code of Federal Regulation, Part 268 U.S. Environmental Protection Agency, Washington, D.C.

EPA, 1987a, "Emergency Planning and Notification," Title 40, Code of Federal Regulations, Part 355, U.S. Environmental Protection Agency, Washington, D.C.

EPA, 1988a, "Standards for Owners and Operators of Hazardous Waste Treatment, Storage, and Disposal Facilities," Title 40, Code of Federal Regulations, Part 264, U.S. Environmental Protection Agency, Washington, D.C.

EPA, 1988b, "Technical Standards and Corrective Action Requirements for Owners and Operators of Underground Storage Tanks," Title 40, Code of Federal Regulation, Part 280, U.S. Environmental Protection Agency, Washington D.C.

EPA, 1988c, "Approval of State Underground Storage Tank Programs," Title 40, Code of Federal Regulation, Part 281, U.S. Environmental Protection Agency, Washington, D.C.

EPA, 1989a, "National Emission Standards for Hazardous Air Pollutants," Title 40, Code of Federal Regulation, Part 61, U.S. Environmental Protection Agency, Washington, D.C.

EPA, 1989b, *Users Guide for AIRDOS-PC Version 3.0*, EPA 520/6-89-035, U.S. Environmental Protection Agency Office of Radiation Programs, Las Vegas, Facility, Las Vegas, Nevada.

EPA, 1989c, "Environmental Radiation Protection Standards for Management and Disposal of Spent Nuclear Fuel, High-Level, and Transuranic Radioactive Wastes," Title 40, Code of Federal Regulations, Part 191, as amended, U.S. Environmental Protection Agency, Washington, D.C.

EPA, 1989d, "Designation, Reportable Quantities, and Notification," Title 40 Code of Federal Regulation, Part 302, U.S. Environmental Protection Agency, Washington, D.C.

EPA, 1989e, "National Primary Drinking Water Regulation," Title 40, Code of Federal Regulations, Part 141, as Amended, U.S. Environmental Protection Agency, Washington, D.C.

EPA, 1989f, "Identification and Listing of Hazardous Waste," Title 40, Code of Federal Regulation, Part 261, U.S. Environmental Protection Agency, Washington, D.C.

EPA, 1991, "Standards for Protection Against Radiation," Title 10, Code of Federal Regulation, Part 20, U.S. Environmental Protection Agency, Washington, D.C.

RCW, 1991, *Water Rights - Environment*, Revised Code of Washington 90, Washington State Department of Ecology, Olympia, Washington.

WAC, 1976, *General Regulations of Air Pollution*, Washington Administrative Code 173-400, Olympia, Washington.

WAC, 1988, *National Pollutant Discharge Elimination System Permit Program*, Washington Administrative Code 173-220, Washington State Department of Ecology, Olympia, Washington.

WAC, 1989a, *Dangerous Waste Regulations*, Washington Administrative Code 713-303, Olympia, Washington.

WAC, 1989b, *State Waste Discharge Permit Programs*, Washington Administrative Code 173-216, Washington State Department of Ecology, Olympia, Washington.

WAC, 1989c, *Underground Injection Control Program*, Washington Administrative Code 173-218, Washington State Department of Ecology, Olympia, Washington.

WAC, 1990, *Underground Storage Tank Regulations*, Washington Administrative Code 173-360, Washington State Department of Ecology, Olympia, Washington.

WHC, 1988a, "General Pretreatment Regulations for Existing and New Sources of Pollution," Title 40, Code of Federal Regulations, Part 403, U.S. Environmental Protection Agency, Washington, D.C.

WHC, 1988b, *Industrial Safety Manual*, WHC-CM-4-3, Westinghouse Hanford Company, Richland, Washington.

WHC, 1989a, *Environmental Compliance Manual*, WHC-CM-7-5, Westinghouse Hanford Company, Richland, Washington.

WHC, 1989b, *Management Policies*, WHC-CM-1-1, Westinghouse Hanford Company Richland, Washington.

WHC, 1989c, *Nonradioactive Dangerous Waste Packaging and Disposal Requirements*, WHC-CM-5-16, Westinghouse Hanford Company, Richland, Washington.

WHC, 1990, *Hanford Site Preliminary Stream-Specific Report*, WHC-EP-0342, Westinghouse Hanford Company, Richland, Washington.

WHC, 1991, *A Guide for Preparing Hanford Facility Effluent Monitoring Plans*, WHC-EP-0438, Westinghouse Hanford Company, Richland, Washington.

WHC, 1991, *219-S Waste Treatment Facility Waste Analysis Plan*, WHC-SD-WM-EV-058, Westinghouse Hanford Company, Richland, Washington.

9413146.0001

This page intentionally left blank.

9413126.0806

ATTACHMENT 1

DETERMINATION OF FACILITY EFFLUENT MONITORING PLAN REQUIREMENT

This page intentionally left blank.

ATTACHMENT 1

DETERMINATION FACILITY EFFLUENT MONITORING PLAN REQUIREMENT

FACILITY 222-S Laboratory DISCHARGE POINT 207-SL to 216-S-26 Crib

FACILITY INVENTORY AT RISK OF RADIOACTIVE MATERIALS

Radionuclide	Physical/ Chemical Form	Quantity Released w/controls (Ci)	Quantity released w/o controls (Ci)	Projected Dose w/o Controls (mrem)
1. ^{90}Sr	Soluble	<2.8 E-04	<2.8 E-04	N/A
2. ^{137}Cs	Soluble	<1.4 E-02	1.4 E-02	N/A
3. ^{239}Pu	Soluble	<2.1 E-04	2.1 E-04	N/A
4. ^{241}Am	Soluble	<6.5 E-04	<6.5 E-04	N/A
Total				

FACILITY INVENTORY AT RISK OF NONRADIOACTIVE HAZARDOUS MATERIALS

Regulated Material	Quantity (lb)	Quantity released (lb)[1,2]	Reportable Quantity (lb)	% of reportable quantity/ 24 hr
1. Carbon Tetrachloride	37	5.86 E+3 (8.8)	10	>>100%
2. Mercury Compounds (Hg metal)	1	5.86 E+3 (1)	1	>>100%
3. Pyridine	8.8	5.86 E+3 (2.2)	1,000	>>100%
4. Silver Compounds ($AgNO_3$)	2.9	5.86 E+3 (0.9)	1	>>100%
5. Tetrachloroethylene	1.1	5.86 E+3 (1.1)	100	>>100%
6. Trichloroethylene	18	5.86 E+3 (18)	100	>>100%

[1]Under upset conditions, defined as loss of one physical or administrative barrier. In this case, introduction of the largest bottle of the inventory to the waste stream.

[2]The first number in the quantity release column is the estimated weight of a 7,000-gal release of waste water to the 216-S-26 Crib. The number in parentheses is the weight of the chemical release to 207-SL under the upset conditions which caused the entire basin to become a characteristic waste based on waste characteristics defined in Table 302.4 (40 CFR 302) for the Toxicity Characteristic Leaching Procedure (TCLP).

Identification of Reference Material

WHC-EP-0141-2 (1989), Table C-19 and C-21 for Radionuclides

222-S SARA Inventory of Chemicals, 12/11/90

ATTACHMENT 1

DETERMINATION FACILITY EFFLUENT MONITORING PLAN REQUIREMENT

FACILITY 222-S Laboratory DISCHARGE POINT 207-SL to 216-S-26 Crib

If the total projected dose from radionuclides exceeds 0.1 mrem EDE from any one discharge point or if any one regulated material discharged from a facility exceeds 100% of a reportable quantity or a permitted quantity, a FEMP is required for that facility. Check the appropriate space below.

FEMP is required X FEMP is not required ____

EVALUATOR Mike Hall DATE 3-21-91

MANAGER, ENVIRONMENTAL [illegible] DATE 4-15-91

FACILITY MANAGER [illegible] DATE 4-5-91

* Based on inventory at risk >100% reportable quantity.

ATTACHMENT 1

DETERMINATION FACILITY EFFLUENT MONITORING PLAN REQUIREMENT

FACILITY 222-SA Laboratory DISCHARGE POINT 216-S-26 Crib

FACILITY INVENTORY AT RISK OF RADIOACTIVE MATERIALS

Radionuclide	Physical/ Chemical Form	Quantity Released w/controls (Ci)	Quantity released w/o controls (Ci)	Projected Dose w/o Controls (mrem)
1. None				

FACILITY INVENTORY AT RISK OF NONRADIOACTIVE HAZARDOUS MATERIALS

Regulated Material[1]	Quantity (lb)	Quantity released (lb)[1,2]	Reportable Quantity (lb)	% of reportable quantity/ 24 hr
1. Cadmium Compounds ($Cd(NO_3)_2$	2.6	8370 (1.1)	10	>>100%
2. Carbon Tetrachloride	26	8370 (8.8)	10	>>100%
3. Chlorobenzene	2.2	8370 (1.1)	100	>>100%
4. Chloroform	26	8370 (8.8)	10	>>100%
5. Chromium Compounds ($CrCl_2 \cdot 4H_2O$)	2.0	8370 (1.1)	10	>>100%
6. Lead Compounds ($PbCrO_4$)	242	8370 (0.2)	1	>>100%
7. Mercury Compounds [$Hg(NO_3)_2$]	5.7	8370 (1.1)	1	>>100%
8. Pyridine	14.5	8370 (2.1)	1000	>>100%
9. Silver Compounds	13.2	8370 (8.8)	1	>>100%
10. Tetrachloroethylene	8.8	8370 (4.4)	100	>>100%

[1]Under upset conditions, defined as loss of one physical or administrative barrier. In this case, introduction of the largest bottle of the inventory to the waste stream.

[2]The first number in the quantity release column is the estimated weight of a 1,000-gal release of waste water to the 216-S-26 Crib. The number in parentheses is the weight of the chemical release under the upset conditions which caused the entire effluent to become a characteristic waste based on waste characteristics defined in Table 302.4 (40 CFR 302) for the Toxicity Characteristic Leaching Procedure (TCLP).

Identification of Reference Material

222-S SARA Inventory of Chemicals, 12/20/90

ATTACHMENT 1

DETERMINATION FACILITY EFFLUENT MONITORING PLAN REQUIREMENT

FACILITY 222-SA Laboratory DISCHARGE POINT 216-S-26 Crib

If the total projected dose from radionuclides exceeds 0.1 mrem EDE from any one discharge point or if any one regulated material discharged from a facility exceeds 100% of a reportable quantity or a permitted quantity, a FEMP is required for that facility. Check the appropriate space below.

FEMP is required X FEMP is not required ____

EVALUATOR Michael J Hall DATE 3-21-91

MANAGER, ENVIRONMENTAL J M Nichols DATE 4-15-91

FACILITY MANAGER [illegible] DATE 4-5-91

* Based on inventory at risk >100% of reportable quantity.

ATTACHMENT 1

DETERMINATION FACILITY EFFLUENT MONITORING PLAN REQUIREMENT

FACILITY 222-S Laboratory Nitric Acid Supply Tank DISCHARGE POINT Nitric Acid Tank

FACILITY INVENTORY AT RISK OF RADIOACTIVE MATERIALS

Radionuclide	Physical/ Chemical Form	Quantity Released w/controls (Ci)	Quantity released w/o controls (Ci)	Projected Dose w/o controls (mrem)
1. None				

FACILITY INVENTORY AT RISK OF NONRADIOACTIVE HAZARDOUS MATERIALS

Regulated Material	Quantity (lb)		Quantity released (lb)	Reportable quantity (lb)	% of reportable quantity/ 24 hr
1. HNO_3	7,500	0	1,000		0

Identification of Reference Material

Discussions with Westinghouse Hanford Company personnel regarding secondary containment

If the total projected dose from radionuclides exceeds 0.1 mrem EDE from any one discharge point or if any one regulated material discharged from a facility exceeds 100% of a reportable quantity or a permitted quantity, a FEMP is required for that facility. Check the appropriate space below.

FEMP is required _____ FEMP is not required X

EVALUATOR Minerva J Hall DATE 3-21-91

MANAGER, ENVIRONMENTAL [illegible] DATE 4-15-91

FACILITY MANAGER [illegible] DATE 4-5-91

ATTACHMENT 1

DETERMINATION FACILITY EFFLUENT MONITORING PLAN REQUIREMENT

FACILITY 219-S Building Caustic Tank DISCHARGE POINT Caustic Tank Valve

FACILITY INVENTORY AT RISK OF RADIOACTIVE MATERIALS

Radionuclide	Physical/ Chemical Form	Quantity Released w/controls (Ci)	Quantity released w/o controls (Ci)	Projected Dose w/o controls (mrem)
1. None				

FACILITY INVENTORY AT RISK OF NONRADIOACTIVE HAZARDOUS MATERIALS

Regulated Material	Quantity (lb)	Quantity released (lb)	Reportable quantity (lb)	% of reportable quantity/ 24 hr
1. NaOH	<1,000	<1,000 (60 gal)	1,000	<100

(1) Valve opened and lines drain by gravity outside. Tank is top-filled so cannot siphon out contents.

Identification of Reference Material

Discussions with Westinghouse Hanford Company personnel regarding secondary configuration

If the total projected dose from radionuclides exceeds 0.1 mrem EDE from any one discharge point or if any one regulated material discharged from a facility exceeds 100% of a reportable quantity or a permitted quantity, a FEMP is required for that facility. Check the appropriate space below.

FEMP is required _____ FEMP is not required X

EVALUATOR Minerva J. Hall DATE 3-21-91

MANAGER, ENVIRONMENTAL [signature] DATE 4-15-91

FACILITY MANAGER [signature] DATE 4-5-91

ATTACHMENT 1

DETERMINATION FACILITY EFFLUENT MONITORING PLAN REQUIREMENT

FACILITY 219-S Waste Handling DISCHARGE POINT 219-S Tanks Outlet Valve

FACILITY INVENTORY AT RISK OF RADIOACTIVE MATERIALS

Radionuclide	Physical/ Chemical Form	Quantity Released w/controls (Ci)	Quantity released w/o controls (Ci)	Projected Dose w/o controls (mrem)
1. ^{239}Pu	Particulate and Soluble	3.5 E-02	3.5 E-02	N/A

FACILITY INVENTORY AT RISK OF NONRADIOACTIVE HAZARDOUS MATERIALS

Regulated Material	Quantity (lb)	Quantity released (lb)[1]	Reportable quantity (lb)	% of reportable quantity/ 24 hr
1. Corrosive Waste pH>12	97,500 (7,800 gal)	380 (30 gal)	1,000	38
2. TCLP Toxic Waste	97,500	380	1	>>100%

[1] The upset condition considered was an undetected disconnect during tank truck loading that persists for 2 min. The flow rate assumed was 15 gal/min and the tanks were assumed to contain the maximum of 150 g fissile material in the entire working volume of the three tanks. Pu-239 was chosen for the calculation.

Identification of Reference Material

PFD-S-018-0001, P. 12, Liquid Waste System for S-Plant, discussions with Westinghouse Hanford Company staff. Letter #9054332, R. Lerch to R. D. Izatt, 6/19/90.

If the total projected dose from radionuclides exceeds 0.1 mrem EDE from any one discharge point or if any one regulated material discharged from a facility exceeds 100% of a reportable quantity or a permitted quantity, a FEMP is required for that facility. Check the appropriate space below.

FEMP is required X* FEMP is not required ____

EVALUATOR Mike J Hall DATE 3-21-91

MANAGER, ENVIRONMENTAL J M Nichols DATE 4-15-91

FACILITY MANAGER [signature] DATE 4-5-91

* Based on inventory at risk >100% of reportable quantity.

ATTACHMENT 1

DETERMINATION FACILITY EFFLUENT MONITORING PLAN REQUIREMENT

FACILITY 222-S Laboratory DISCHARGE POINT 219-S-21 Stack

FACILITY INVENTORY AT RISK OF RADIOACTIVE MATERIALS

Radionuclide	Physical/ Chemical Form	Quantity Released w/controls(1) (Ci)	Quantity released w/o controls(2) (Ci)	Projected Dose w/o controls(3) (mrem)
1. Gross alpha*	Particulate	<3.33 E-06	1.0 E-02	5.15 E-02
2. Gross beta	Particulate	1.78 E-06	5.3 E-02	1.39 E-03
Total				5.3 E-02

* Alpha assumed to be ^{239}Pu and beta ^{90}Sr

FACILITY INVENTORY AT RISK OF NONRADIOACTIVE HAZARDOUS MATERIALS

Regulated Material	Quantity (lb)	Quantity released (lb)	Reportable quantity (lb)	% of reportable quantity/ 24 hr
1. None				

Identification of Reference Material

(1)Brown, M. J., R. K. P'Pool, and S. P. Thomas, May 1990, *Westinghouse Hanford Company Effluent Discharges and Solid Waste Management Report for Calendar Year 1989: 200/600 Areas*, WHC-EP-0141-2.

(2)A factor of 3,000 was applied to the monitored release data.

(3)A 10 meter stack was assumed for calculations. The projected dose for gross alpha based on assuming 100% ^{241}Am was 0.0779 mrem.

(4)Based on a review of the 222-S SARA Inventory of Chemicals, 12/11/90, and administrative procedures, no chemical is routinely emitted, nor is there a credible upset condition that would cause the release of any chemical, in amounts exceeding a reportable quantity as defined in 40 CFR 302.

If the total projected dose from radionuclides exceeds 0.1 mrem EDE from any one discharge point or if any one regulated material discharged from a facility exceeds 100% of a reportable quantity or a permitted quantity, a FEMP is required for that facility. Check the appropriate space below.

FEMP is required _____ FEMP is not required X

EVALUATOR Mirene J Hall DATE 3-21-91

MANAGER, ENVIRONMENTAL [illegible] DATE 4-15-91

FACILITY MANAGER [illegible] DATE 4-5-91

ATTACHMENT 1

DETERMINATION FACILITY EFFLUENT MONITORING PLAN REQUIREMENT

FACILITY 219-S Tanks and Tank Vaults DISCHARGE POINT 296-S-16 Stack

FACILITY INVENTORY AT RISK OF RADIOACTIVE MATERIALS

Radionuclide	Physical/ Chemical Form	Quantity Released w/controls[1] (Ci)	Quantity released w/o controls[2] (Ci)	Projected Dose w/o controls[3] (mrem)
1. Gross alpha*	Particulate	<6.59 E-09	2.0 E-05	7.2 E-05
2. Gross beta	Particulate	3.32 E-08	1.0 E-04	2.0 E-06
Total				7.4 E-05

* Alpha assumed to be ^{239}Pu and beta ^{90}Sr

FACILITY INVENTORY AT RISK OF NONRADIOACTIVE HAZARDOUS MATERIALS

Regulated Material[4]	Quantity (lb)	Quantity released (lb)	Reportable quantity (lb)	% of reportable quantity/ 24 hr
1. None				

Identification of Reference Material

[1]Brown, M. J., R. K. P'Pool, and S. P. Thomas, May 1990, *Westinghouse Hanford Company Effluent Discharges and Solid Waste Management Report for Calendar Year 1989: 200/600 Areas*, WHC-EP-0141-2.

[2]A factor of 3,000 was applied to the monitored release data.

[3]A ground-level release was assumed for calculation of the projected dose. Use of ^{241}Am instead of ^{239}Pu for the gross alpha measurement would not cause a significant change in the total projected dose.

[4]Based on a review of the 222-S SARA Inventory of Chemicals, 12/11/90, and administrative procedures, no chemical is routinely emitted, nor is there a credible upset condition that would cause the release of any chemical, in amounts exceeding a reportable quantity as defined in 40 CFR 302.

If the total projected dose from radionuclides exceeds 0.1 mrem EDE from any one discharge point or if any one regulated material discharged from a facility exceeds 100% of a reportable quantity or a permitted quantity, a FEMP is required for that facility. Check the appropriate space below.

FEMP is required _____ FEMP is not required X

EVALUATOR Minerva J Hall DATE 3-21-91

MANAGER, ENVIRONMENTAL J M Mihle DATE 4-15-91

FACILITY MANAGER [illegible] DATE 4-5-91

ATTACHMENT 1

DETERMINATION FACILITY EFFLUENT MONITORING PLAN REQUIREMENT

FACILITY 219-S Sample Gallery DISCHARGE POINT 296-S-22 Stack

FACILITY INVENTORY AT RISK OF RADIOACTIVE MATERIALS

Radionuclide	Physical/ Chemical Form	Quantity Released w/controls(1) (Ci)	Quantity released w/o controls(2) (Ci)	Projected Dose w/o controls(3) (mrem)
1. Gross alpha*	Particulate	----	1.8 E-06	6.6 E-06
2. Gross beta	Particulate	----	9.2 E-06	1.8 E-07
Total				6.8 E-06

Alpha assumed to be ^{239}Pu and beta ^{90}Sr

FACILITY INVENTORY AT RISK OF NONRADIOACTIVE HAZARDOUS MATERIALS

Regulated Material(4)	Quantity (lb)	Quantity released (lb)	Reportable quantity (lb)	% of reportable quantity/ 24 hr
1. None				

Identification of Reference Material

(1)See Text, Section 7.2.3

(2)A factor of 3,000 was applied to the monitored release data from the 296-S-16 Stack. See text.

(3)A ground-level release was assumed for calculation of the projected dose. Use of ^{241}Am instead of ^{239}Pu for the gross alpha measurement would not cause a significant change in the total projected dose.

(4)Based on a review of the 222-S SARA Inventory of Chemicals, 12/11/90, and administrative procedures, no chemical is routinely emitted, nor is there a credible upset condition that would cause the release of any chemical, in amounts exceeding a reportable quantity as defined in 40 CFR 302.

If the total projected dose from radionuclides exceeds 0.1 mrem EDE from any one discharge point or if any one regulated material discharged from a facility exceeds 100% of a reportable quantity or a permitted quantity, a FEMP is required for that facility. Check the appropriate space below.

FEMP is required _____ FEMP is not required X

EVALUATOR Minerva J Hall DATE 3-21-91

MANAGER, ENVIRONMENTAL [illegible] DATE 4-15-91

FACILITY MANAGER [illegible] DATE 4-5-91

ATTACHMENT 1

DETERMINATION FACILITY EFFLUENT MONITORING PLAN REQUIREMENT

FACILITY 222-SA Laboratory DISCHARGE POINT 222-SA Stack

FACILITY INVENTORY AT RISK OF RADIOACTIVE MATERIALS

Radionuclide	Physical/ Chemical Form	Quantity Released w/controls (Ci)	Quantity released w/o controls (Ci)	Projected Dose w/o controls (mrem)
1. None				

FACILITY INVENTORY AT RISK OF NONRADIOACTIVE HAZARDOUS MATERIALS

Regulated Material[1]	Quantity (lb)	Quantity released (lb)	Reportable quantity (lb)	% of reportable quantity/ 24 hr
1. None				

[1]Based on a review of the 222-SA SARA Inventory of Chemicals, 12/20/90 and administrative procedures, no chemical is routinely emitted, nor is there a credible upset condition that would cause release of any chemical, in amounts exceeding a reportable quantity as defined in 40 CFR 302.

Identification of Reference Material

If the total projected dose from radionuclides exceeds 0.1 mrem EDE from any one discharge point or if any one regulated material discharged from a facility exceeds 100% of a reportable quantity or a permitted quantity, a FEMP is required for that facility. Check the appropriate space below.

FEMP is required _____ FEMP is not required X

EVALUATOR Mike J Hall DATE 3-21-91

MANAGER, ENVIRONMENTAL [signature] DATE 4-15-91

FACILITY MANAGER [signature] DATE 4-5-91

This page intentionally left blank.

APPENDIX A

CONSTRUCTION DESIGN CRITERIA - REPLACEMENT DISPOSAL FACILITY FOR 216-S-19 POND INFLUENTS

This page intentionally left blank.

9413136.0861

Rockwell Hanford Operations

SUPPORTING DOCUMENT	Number	Rev. Ltr./ Chg. No.	Page 1 of 14
PROGRAM: WASTE MANAGEMENT	SD-WM-CR-009	0-0	Total Pages 14

Document Title:
Construction Design Criteria-Replacement Disposal Facility for 216-S-19 Pond Influents

Baseline Document ☒ Yes ☐ No

WBS No. or Work Package No.
WR684

Key Words:
Design Criteria, 216-S-19 Pond, Liquid Effluent Disposal, Low-Level Waste

Prepared by (Name and Dept. No.)
J. A. Winterhalder (65630)
See reverse side for additional approvals

Date
10-7-83

THIS DOCUMENT IS FOR USE IN PERFORMANCE OF WORK UNDER CONTRACTS WITH THE U.S. DEPARTMENT OF ENERGY BY PERSONS OR FOR PURPOSES WITHIN THE SCOPE OF THESE CONTRACTS. DISSEMINATION OF ITS CONTENTS FOR ANY OTHER USE OR PURPOSE IS EXPRESSLY FORBIDDEN.

Abstract

The 216-S-19 Pond is the designated site for disposal of potentially contaminated liquids discharged from the 222-S Laboratory facilities. This document establishes the Construction Design Criteria for a new crib to replace the existing pond. Upon completion of crib construction, the 216-S-19 Pond will be deactivated and stabilized as part of this capital work order task.

*	Distribution Name	Mail Address
	Rockwell Hanford Operations	
*	M. R. Adams	2750E/200E
*	J. F. Albaugh	2750E/200E
	G. R. Board	274E/200E
	G. F. Boothe	202S/200W
*	G. T. Dukelow	2750E/200E
*	D. Dyer	2750E/200E
	A. N. Gallegos	271U/200W
*	W. F. Heine	2750E/200E
	R. J. Hennig	2750E/200E
*	N. W. Hodges	2750E/200E
*	E. J. Jones	2750E/200E
*	L. E. Kusler	2750E/200E
*	G. V. Last	202S/200E
*	A. G. Law	MO-936/200W
*	D. L. Nearing	2750E/200E
	D. Paine	222U/200W
*	R. S. Pavlina	2750E/200E
*	B. D. Pickett	202S/200W
*	R. D. Prosser	2750E/200E
	J. H. Roecker	2750E/200E
*	C. P. Sutter	2704S/200W
*	K. M. Tominey	MO-21/200E
*	R. E. Wheeler	202S/200W
	G. F. Williamson	2750E/200E
*	J. A. Winterhalder	2750E/200E
	U.S. Department of Energy Richland Operations Office	
*	R. W. Brown	FED/700
*	R. D. Izatt	FED/700

(Continued on reverse side)

*COMPLETE DOCUMENT
(No asterisk, title page/summary of revision page only)

Release Stamp

OFFICIALLY RELEASED
OCT 12 1 29 PM '83

7

Prepared By: _____

Used By: _____

A-6400-073 (R-2-83)

EXECUTIVE SUMMARY

Potentially contaminated liquid wastes from the 222-S Laboratory facilities are currently discharged to the 216-S-19 Pond via the 207-SL Retention Basins. The 216-S-19 Pond, located outside of the 200 West Area south perimeter fence, is a surface contaminated zone approximately one acre in size. This document establishes the Construction Design Criteria for a new crib to replace the existing pond. Eliminating the surface disposal of these potentially contaminated liquids is consistent with, and supports the Department of Energy's prescribed standard for reducing radiation exposure to As Low As Reasonably Achievable (ALARA).

A new crib will be constructed approximately 500 feet south of the 207-SL Retention Basin. The proposed location takes advantage of the existing piping run to minimize new piping requirements and improve construction efficiency.

The crib shall provide disposal by percolation of up to 75,000 gallons per day or a maximum of 25,000 gallons per 8 hour shift on a continuing basis. Average daily flows are approximately 40,000 gallons. This facility shall provide capability for safe, year around disposal and shall be designed for a 30 year life.

Following crib construction, the 216-S-19 Pond will be deactivated and stabilized as part of this capital work order task.

9413136.0863

TABLE OF CONTENTS

	Page
1.0 INTRODUCTION	5
2.0 DESCRIPTION	5
2.1 Process	7
2.2 Capacity	7
2.3 Range of Operating Conditions	7
2.4 Degree of Reliability	8
2.5 Intended Life	8
3.0 PHYSICAL DESIGN PARAMETERS	8
3.1 Piping	8
3.2 Crib	9
3.3 216-S-19 Pond Deactivation and Stabilization	9
3.4 Number of Operating Personnel	9
3.5 Discussion of Risk	10
3.6 General Utility Requirements	10
3.7 Maintenance Requirements	12
3.8 Security and Safeguards	12
3.9 Site Location	12
4.0 GENERAL CRITERIA AND STANDARDS	12
4.1 Regulations, Codes, Standards and Guides	12
4.2 Energy Conservation	14
5.0 QUALITY ASSURANCE	14
Figure 1 200 West Area	6
Figure 2 Proposed Crib Location	11

CONSTRUCTION DESIGN CRITERIA
REPLACEMENT DISPOSAL FACILITY FOR
216-S-19 POND INFLUENTS

1.0 INTRODUCTION

The 216-S-19 Pond occupies an area approximately one acre in size and is located outside of the 200 West Area south perimeter fence (Figure 1). The pond influents originate from the 222-S Laboratory via the 207-SL Rentention Basins and underground piping to a headwall at the pond. The approximately 40,000 gallons per day released to the site keeps only a small portion of the total area wet. A radionuclide inventory for the site is not available, however, the pond area does contain low levels of residual contamination. Replacement of this facility will eliminate the surface disposal of potentially contaminated laboratory effluents and supports the Department of Energy's prescribed standard of reducing radiation exposure to As Low As Reasonably Achievable (ALARA).

2.0 DESCRIPTION

This document establishes the construction design criteria for a new crib to replace the existing 216-S-19 Pond. A crib will be designed and constructed to dispose of potentially radioactive liquid effluents from the 222-S Laboratory facilities. The design and operation of this new facility will be in compliance with Department of Energy (DOE) regulations and Rockwell Hanford Operations (RHO) requirements. The pond, decommissioned as a result of this facility's construction, will be backfilled and stabilized as a part of this capital work order.

Rockwell Hanford Operations

SUPPORTING DOCUMENT	Number SD- WM-CR-009	Rev. Ltr./Chg. No. 0-0	Page 6

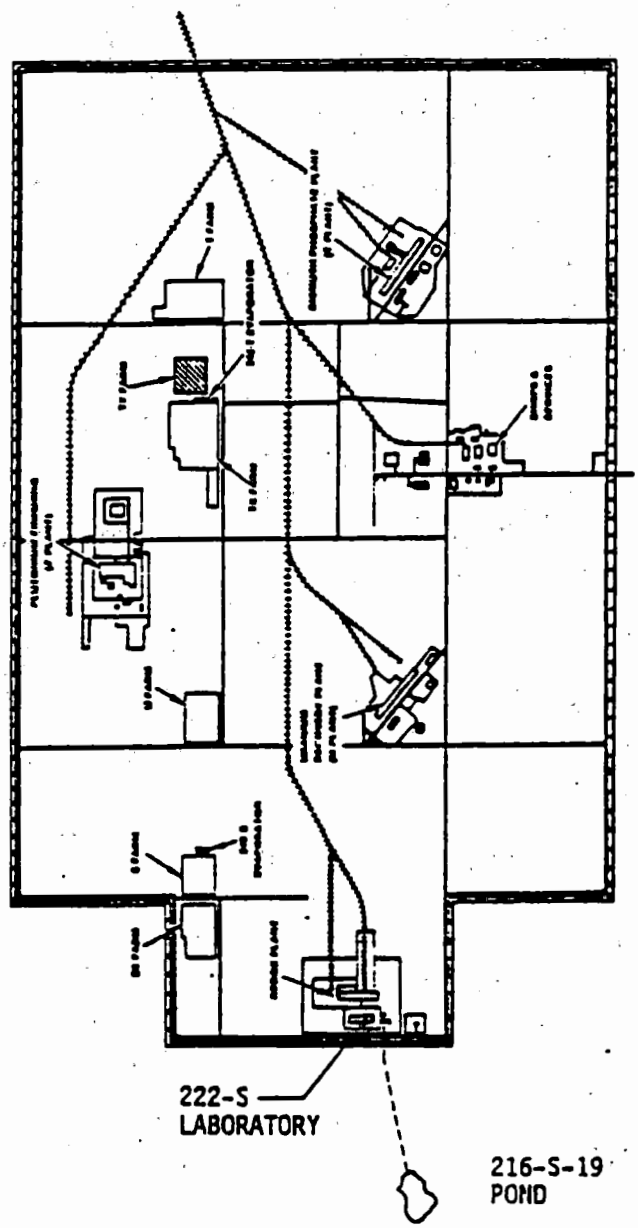

FIGURE 1. 200 WEST AREA

2.1 Process

Potentially contaminated waste water from the 222-S Laboratory facilities shall be delivered by gravity flow in pipes from the 207-SL Retention Basins to a crib where disposal shall be by infiltration/percolation into the soil. Procedures for effluent sampling shall be maintained at the 207-SL Retention Basins and laboratory analyses, including pH, shall be performed prior to release to the crib. This method of disposal shall isolate the effluent from the surface environment and shall not result in the contamination of groundwater to levels greater than 10 percent of those listed in DOE Order 5480.1A, Chapter XI, Table II.

2.2 Capacity

Field percolation data gathered at the proposed crib location shall be used in design to assure safe disposal capability for up to 75,000 gallons per day or a maximum of 25,000 gallons per 8 hour shift on a continuing basis. The average daily volume released from the 207-SL Retention Basin is approximately 40,000 gallons. No significant increases or decreases in effluent volumes are anticipated.

2.3 Range of Operating Conditions

The crib shall safely dipose of influents year around. Influent temperatures are expected to fluctuate seasonally between 50 F to 100 F (minimum/maximum). A wide list of chemicals are routinely used within the laboratory facilities and have the potential to be discharged to the effluent stream. The major chemicals added to the effluent are nitric acid and acetone and small amounts of sulfuric and hydrofluoric acids. Other chemicals are

expected to be present in trace amounts only. PH is within the range of 3 to 10. Suspended solids analysis is not performed, but solids originating from the source are expected to be negligible. The greatest potential source of solids are the retention basins which could receive "blow sand" from the surrounding environment.

2.4 Degree of Reliability

The degree of reliability achieved by design shall permit the facility to function safely and effectively throughout the intended life without undue maintenance or replacement.

2.5 Intended Life

The facility shall have a design life of 30 years.

3.0 PHYSICAL DESIGN PARAMETERS

3.1 Piping

Approximately 30 feet of unperforated piping shall be installed to connect the existing 8-inch vitreous clay pipe (at approximately N33763 and W73415) to the proposed crib location (Figure 2). The amount of piping in the crib shall be determined during design based on percolation data and the effluent volumes established in Section 2.2. Vent risers specified in the design shall include an acceptable form of filtration of preclude condensate deposition on the surrounding surface soils. The existing piping extending to the pond shall be blanked.

3.2 Crib

The crib shall isolate effluent waste from the surface enviornment and shall not result in the contamination of groundwater to levels greater than 10 percent of the concentrations listed in DOE Order 5480.1A, Chapter XI, Table II. A groundwater quality well shall be installed to monitor the downward movement of radionuclides and groundwater concentrations. Crib design shall result in minimum expansion of radiation control area while maintaining capability for safe disposal of the effluent volumes described in Section 2.2. A gage well equipped with a manual liquid level tape (reference drawings H-2-72185 and H-2-72186) shall be included in the design to provide a means for monitoring crib liquid levels and performance over time. Crib design shall also minimize facility management and decommissioning costs. The crib shall be capable of supporting light and medium duty equipment used for revegetation and selective herbicide applications (maximum expected load of 12,000 lbs).

3.3 216-S-19 Pond Deactivation and Stabilization

The 216-S-19 Pond and controlled area shall be backfilled and stabilized as part of this capital work order. Deactivation shall comply with the general requirements of RHO-MA-139, Part J, "Inactive Radioactive Terrestrial Sites".

3.4 Number of Operating Personnel

No personnel shall be assigned to this facility. Surveillance and maintenance of this facility will be a part-time task and will be performed by personnel assigned to other facilities.

3.5 Discussion of Risk

No single component failure shall result in unacceptable safety consequences. Unacceptable consequences are:

- o Instantaneous release of radioactivity in air or liquid from the crib/soil column in excess of 5,000 times DOE Order 5480.1A, Chapter XI, Table II values at point of discharge.
- o Exposure of personnel to ionizing radiation in excess of DOE Order 5480.1A, Chapter XI values.
- o Contamination of groundwater to levels greater than 10 percent of concentrations listed in DOE Order 5480.1A, Chapter XI, Table II.

The effects of single component failures shall be evaluated, where applicable, for unacceptable consequences.

Hazards associated with the construction of this crib are routinely encountered in similar projects. During excavation, applicable safety features shall be provided for the protection of construction personnel from possible cave-ins of the crib area.

Radiation exposure to personnel during construction and as a result of facility operation shall be as low as reasonably achievable (ALARA). Following construction, the facility shall be posted in accordance with RHO-MA-220, Rev. L, "Radiological Standards and Operational Controls", requirements.

3.6 General Utility Requirements

No permanent utilities will be required for this facility.

Rockwell Hanford Operations

SUPPORTING DOCUMENT	Number SD- WM-CR-009	Rev. Ltr./Chg. No. 0-0	Page 11

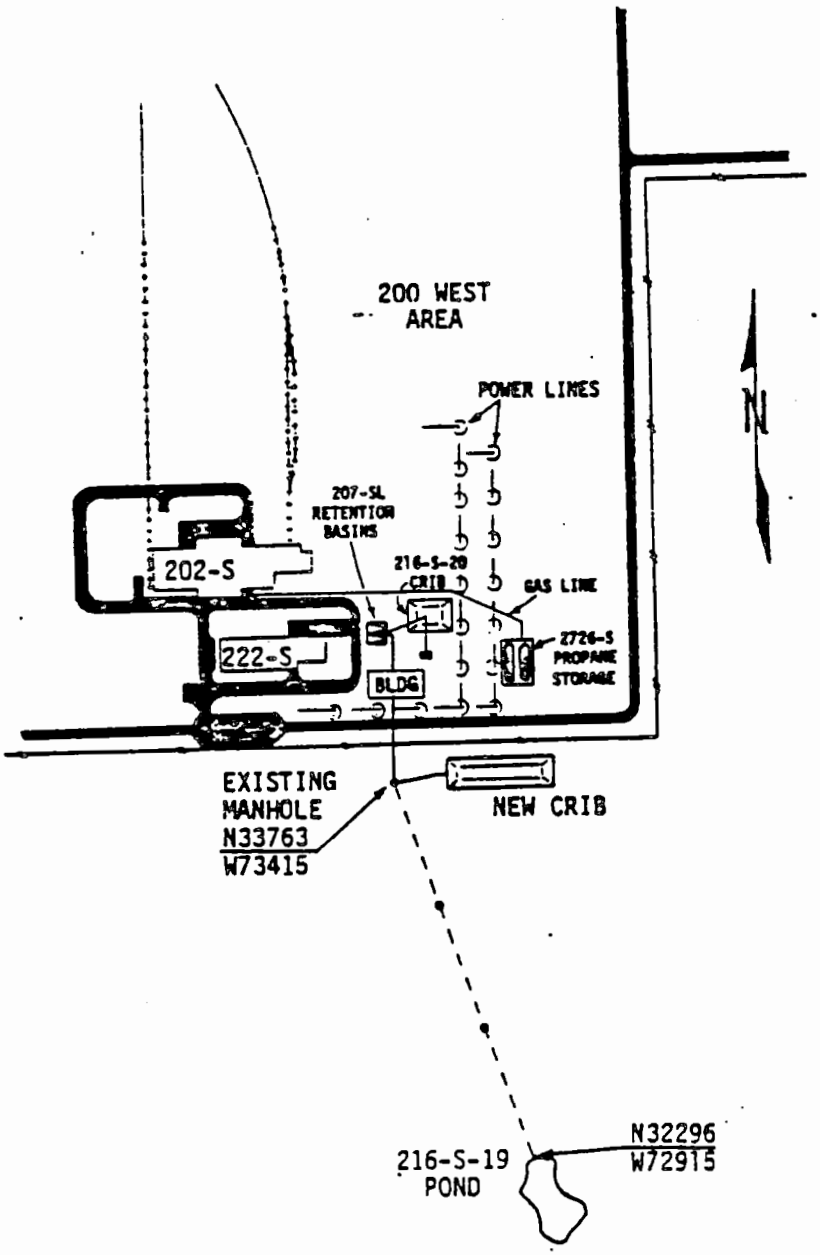

FIGURE 2. PROPOSED CRIB LOCATION

3.7 Maintenance Requirements

Periodic replacement of the crib vent filters will be required and facility access shall be provided to accommodate monitoring of the groundwater and crib liquid levels.

3.8 Security and Safeguards

The facility will be located outside of the 200 West Area south perimeter fence and as part of this project will be posted in accordance with RHO-MA-220, Rev. L, "Radiological Standards and Operational Controls." No additional safeguarding or security is required.

3.9 Site Location

The proposed location of the crib (Figure 2) is approximately 500 feet south of the 207-SL Retention Basin. This location will enhance construction efficiency by minimizing new piping runs.

4.0 GENERAL CRITERIA AND STANDARDS

4.1 Regulations, Codes, Standards and Guides

Design and construction shall be in accordance with the following regulations, codes, standards and guides:

SDC-1.1 Functional Design Criteria, Specification Acceptance Test Procedures, and Certified Vendor Information Files

SDC-1.2 Hanford Plant Standards and National Codes and Standards

SDC-1.3 Preparation and Control of Engineering and Architectual Drawings

9413136.0872

DOE Order 5480.1A, "Environmental Protection, Safety and Health Protection Program for DOE Operations".

Chapter I, "Environmental Protection, Safety and Health Protection Standards"

Chapter IX, "Construction Safety and Health Program"

Chapter XII, "Prevention, Control and Abatement of Environmental Pollution"

DOE Order 5484.1, "Environmental Protection, Safety and Health Protection Information Reporting Requirements"

Chapter III, "Effluent and Environmental Monitoring Program Requirements"

DOE RL Order 5700.1, "Quality Assurance"

DOE RL Order 5700.2, "Project Management System"

DOE RL Order 5820.2, "Radioactive Waste Management"

DOE RL Order 6430, "General Design Criteria for DOE Facilities"

DOE/EV 1830-T5, "A Guide to Reducing Radiation Exposure to As Low As Reasonably Achievable (ALARA)"

RHO-QA-PL-1, "Project Quality Requirements Plan"

RHO-MA-139, "Environmental Protection Manual"

RHO-MA-220, Rev. E, "Radiological Standards and Operational Controls"

RHO-MA-221, "Accident Prevention Standards"

RHO-CD-138, "Containment Barrier Criteria"

The latest edition of all regulations, codes, standards and guides (at the time of design effort) shall be used.

4.2 Energy Conservation

Energy conservation is not applicable to the design of this facility.

5.0 QUALITY ASSURANCE

Quality Assurance (QA) activities for all contractors involved in the design, construction and testing of the proposed facility shall be formulated and executed to assure that the product meets the intent of the design. The Quality Assurance Program Requirements shall be in accordance with DOE Order RL 5700.1 - Quality Assurance.

Three QA levels established for classifying structures and components according to the degree of quality required for safety and considerations for system design are identified in RHO-QA-PL-1, Project Quality Requirements Plan.

This page intentionally left blank.

9413136.0876

PART 7

SURPLUS S PLANT (REDOX) COMPLEX

FACILITY EFFLUENT MONITORING PLAN DETERMINATION

This page intentionally left blank.

9413136.0877

CONTENTS

1.0 INTRODUCTION 1

2.0 FACILITY DESCRIPTION 1
2.1 PHYSICAL DESCRIPTION 1
2.2 PROCESS DESCRIPTION 6

3.0 STATUS OF OPERATION 8

4.0 SOURCE TERM 9
4.1 INVENTORY AT RISK 9
4.2 RADIOACTIVE MATERIALS 9
4.3 NONRADIOACTIVE HAZARDOUS MATERIAL 10
4.4.1 Gaseous Effluent Streams 11
4.4.2 Liquid Effluent Streams 12

5.0 POTENTIAL UPSET-OPERATING CONDITIONS 13
5.1 ROUTINE CONDITIONS 13
5.1.1 Sanitary Sewer System 13
5.1.2 Chemical Sewer Line (216-S-10 Ditch) 13
5.1.3 Exhaust Stacks 14
5.2.1 Radioactive Materials 15
5.2.2 NONRADIOACTIVE HAZARDOUS MATERIAL 16

6.0 SUMMARY 18

7.0 REFERENCES 19

ATTACHMENT

1 DETERMINATION OF FACILITY EFFLUENT MONITORING PLAN REQUIREMENT A-1

LIST OF FIGURES

1 202-S Canyon, Silo, and Office Building 3

2 292-S Control and Jet Pit House 4

3 293-S Nitric Acid Recovery and Iodine Backup Facility 5

4 291-S Exhaust Fan Facility 7

LIST OF TERMS

ACV	administrative control values
CAM	continuous air monitor
CERCLA	*Comprehensive Environmental Response, Compensation, and Liability Act of 1980*
CY	calendar year
FEMP	facility effluent monitoring plan
HEPA	high efficiency particulate air
HRO	Hanford Restoration Operations
LLD	lower limits of detection
PBC	polychlorinated biphenyl
RCRA	*Resource Conservation and Recovery Act of 1976*
REDOX	Reduction Oxidation Plant
SARA	*Superfund Amendments and Reauthorization Act or 1986*
SWP	special work permit (protective clothing)
WAC	Washington Administrative Code

0080.9E/14/7

This page intentionally left blank.

FACILITY EFFLUENT MONITORING PLAN DETERMINATION FOR THE SURPLUS S PLANT COMPLEX

1.0 INTRODUCTION

This report describes the potential radioactive and hazardous material source terms within the S Plant [Reduction Oxidation Plant (REDOX)] complex to determine the requirement for a facility effluent monitoring plan (FEMP). The evaluation includes discussion of both gaseous and liquid effluents that could be discharged under routine and/or upset conditions. This evaluation is prepared in accordance with *A Guide for Preparing Hanford Site Facility Effluent Monitoring Plans* (Guide, Section IV-2) (WHC 1991).

2.0 FACILITY DESCRIPTION

This section briefly describes the facilities associated with the surplus REDOX complex that are the responsibility of Hanford Restoration Operations (HRO). For this evaluation the REDOX complex includes the 202-S Canyon, Silo, and Office Building, the 276-S Solvent Handling Facility, the 292-S Control and Jet Pit House, the 293-S Nitric Acid Recovery and Iodine Backup Facility, the 211-S Liquid Chemical Storage Tank Farm, and the 291-S Exhaust Fan Facility.

2.1 PHYSICAL DESCRIPTION

The REDOX 202-S Canyon Building is a reinforced concrete structure consisting of the canyon and the silo area (see Figure 1). The building is 468 ft long and 161 ft wide, the canyon section is 83 ft high (60 ft above grade) and the silo section is 132 ft high (117 ft above grade).

The canyon portion of the 202-S Building contains all the equipment for handling radioactive process steps such as fuel dissolution, feed preparation, solvent distillation, and waste concentration and/or neutralization. Operating, pipe, and sample galleries are located on the north and south sides of the canyon portion. A storage gallery is located under the south sample gallery. All service portions of the REDOX Building are shielded from the radioactive processing areas by concrete walls nominally 6 ft thick. The location of the equipment behind massive concrete shielding required the operations to be done by remote control. Chemical, steam, and water additions to the process vessels were made from the service areas through pipe lines penetrating the concrete shielding. Transfers of radioactive solutions between process vessels were made by steam jets, gravity flow, and electrically operated pumps. Agitation of solutions was accomplished by remote-operated recirculating steam jets or electrically driven agitators. This equipment plus additional monitoring and control assemblies is located in the canyon cells and building galleries.

The silo, located on the west end of the 202-S Building is 84 ft by 41 ft by 132 ft high and contains a process area and an operating area. The column shaft is 12 ft by 69 ft by 86 ft high. The east, west, and south walls are 3.5 ft-thick concrete, the north wall is 1.5 ft thick. The operating area of the silo has eight levels. The first five levels are used for chemical makeup; the sixth level is occupied by the silo crane. The seventh level consists of the operating gallery and the silo sample gallery. The eighth level is an equipment area.

The south service area of the 202-S Building houses the offices, lunch room, conference room, men's locker room, women's lounge, survey room, instrument shop, process blower room, compressor room, and switchgear room. The following exhaust fans are operational at the 202-S Building and provide ventilation as specified: 296-S-2 - PR Cage/North Sample Gallery Exhaust, 296-S-4 - East End Shops Exhaust (decontamination, hot, and regulator shops), and 296-S-6 - Feed Tank Area and Silo Sample Gallery Exhaust.

The 276-S Solvent Handling Facility is an above-ground concrete building, 43 ft 2 in. wide by 58 ft long, that consists of the process and operating sections. The facility is located north and west of the 202-S Silo. The process side is 26 ft wide by 58 ft long with 2-foot concrete walls except the north wall. (This wall is constructed of a steel frame with corrugated asbestos siding.) The process side housed three aluminum storage tanks used for the treatment and storage of hexone. The operating area is 15 ft wide by 58 ft long and has a steel framework with asbestos siding on all four walls and the roof. A 2-foot thick concrete wall with no interconnecting doors separates the process and operating sections. All doors from both sections open to the outside. Valves that had to be operated have extension handles that pass through the center concrete wall separating the two areas.

The 292-S Control and Jet Pit House is located directly east of the main 202-S REDOX Building. The building is concrete with outside dimensions of 16 ft by 16 ft by 11 ft high (see Figure 2). An exhaust jet pit, located directly beneath the building, housed the jets and actuators that controlled the discharges from the dissolver vessels to the exhaust stack at 291-S. A second pit adjacent to the exhaust jet pit and under the exterior cover blocks contains the drain seal tank for the vent lines from 202-S and a sump which collects liquid from all vents and trenches in the 291-S, 292-S, and 293-S Buildings.

The 293-S Nitric Acid Recovery and Iodine Backup Facility is a reinforced concrete structure, 29 ft by 16 ft, extending from 12 ft below grade to 30 ft above grade (see Figure 3). The building is located just east of the main REDOX building (202-S) and adjacent to the plant ventilation stack. A corrugated metal lean-to portion, attached to the southwall, is 9 ft by 28 ft and contains a control room. An underground nitric acid storage tank (10 ft height by 10 ft diameter cylindrical stainless steel tank) is located directly west of the 293-S Building. Its maximum capacity is 5,000 gal at overflow.

Figure 1. 202-S Canyon, Silo, and Office Building.

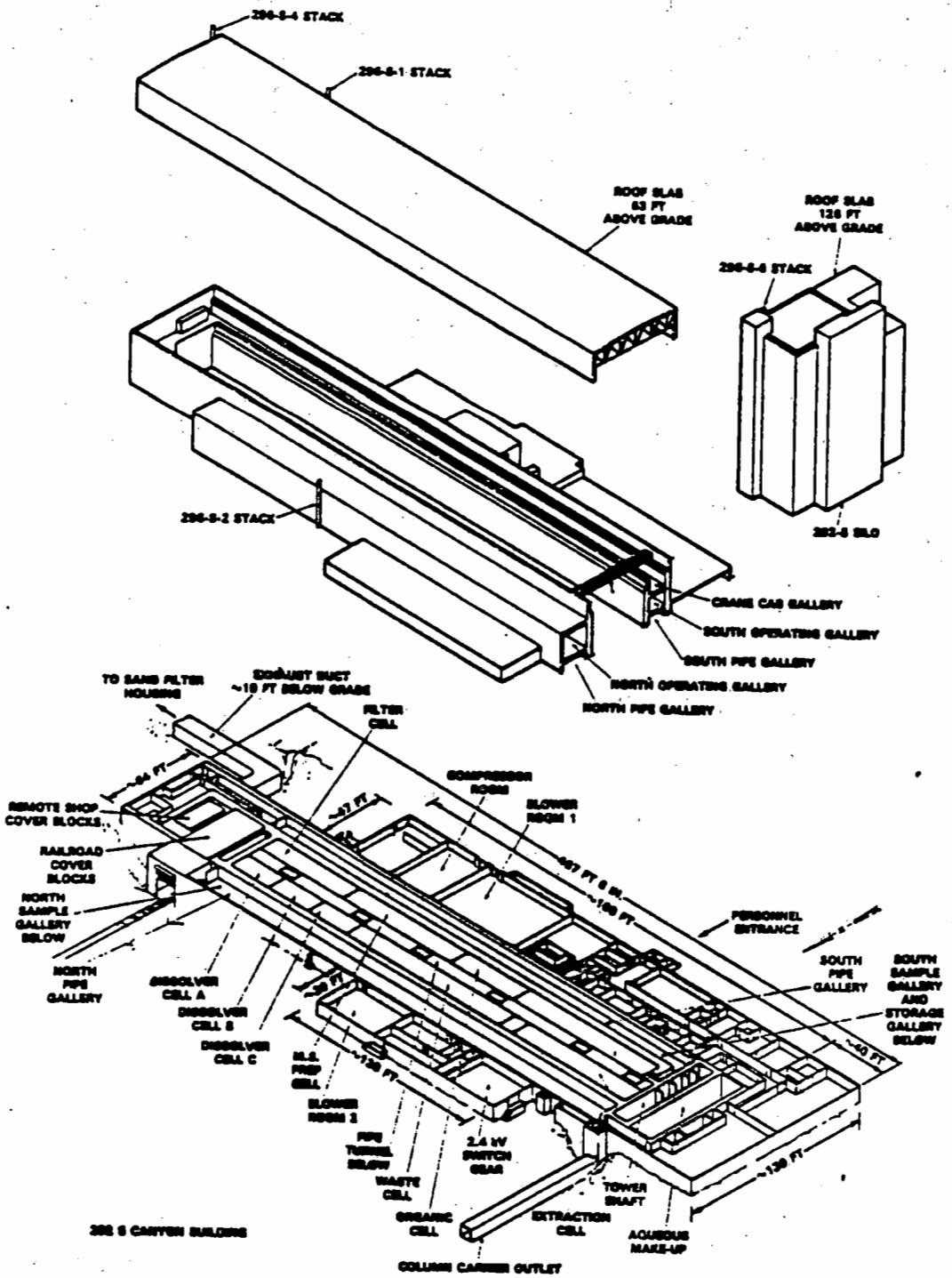

Figure 2. 292-S Control and Jet Pit House.

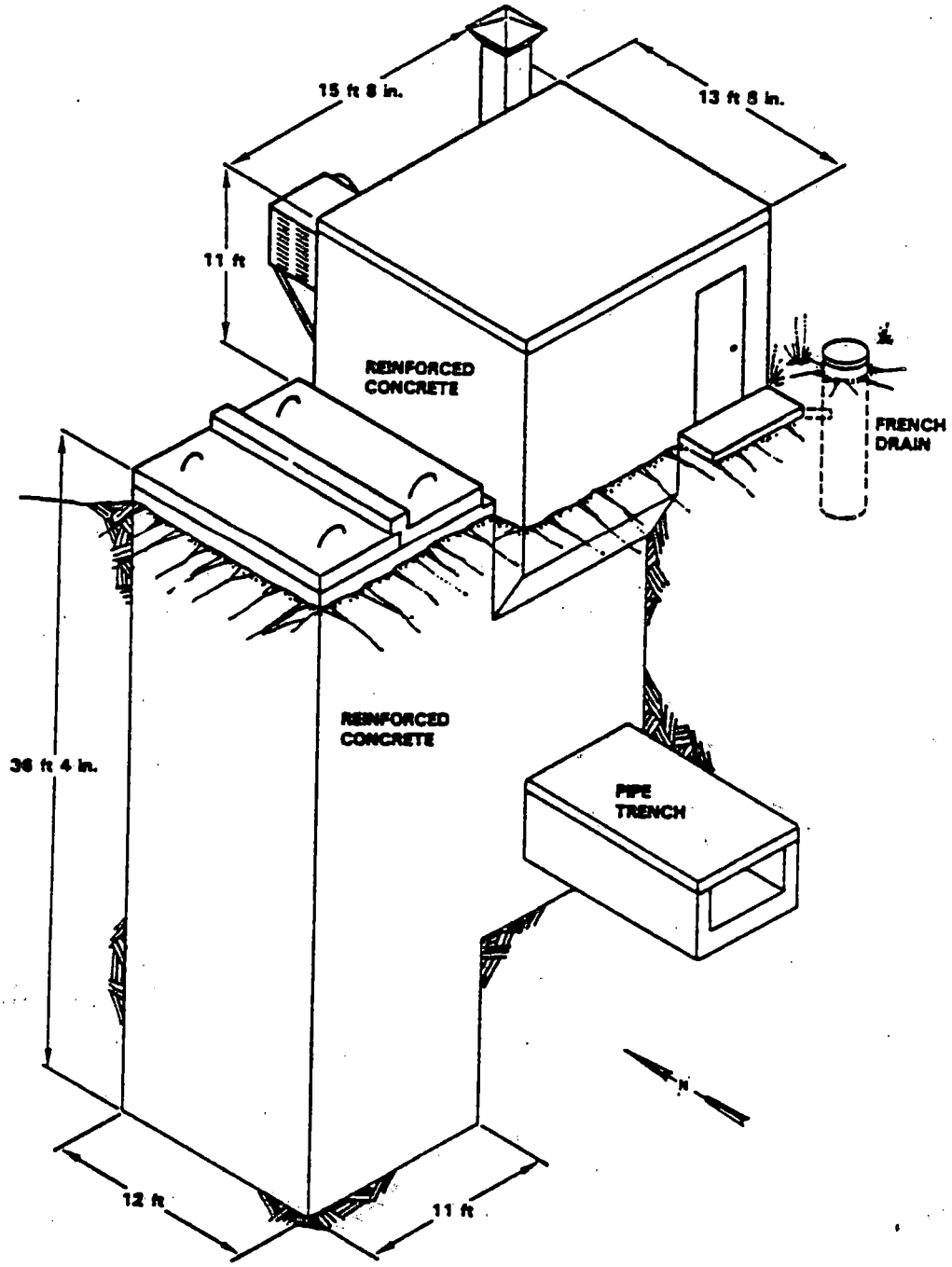

Figure 3. 293-S Nitric Acid Recovery and Iodine Backup Facility.

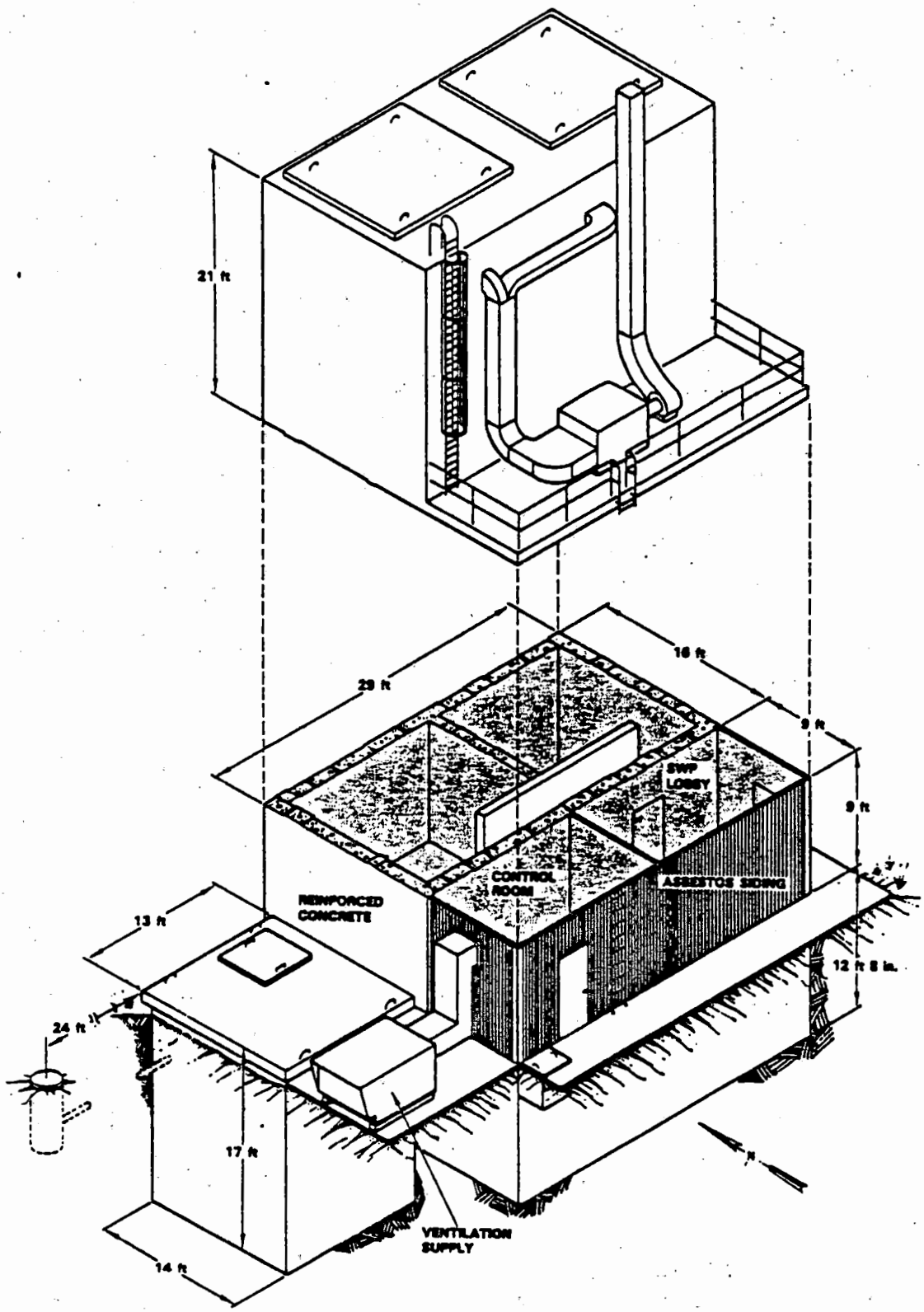

The 211-S Liquid Chemical Storage Tank Farm provided 11 tanks as bulk storage for the aqueous chemicals used in the REDOX process. The tanks are located directly west of the 202-S Canyon Building, in the 211-S Area, on a concrete pad. Three 35-ft-diameter, 23-ft-high, 149,000-gal-capacity, Tygon-lined, mild steel storage tanks and one 9-ft-diameter, 9-ft-high, 43,000-gal-capacity stainless steel storage tank contained aluminum nitrate solutions. Two 20-ft-diameter, 20-ft-high, 41,000-gal-capacity; one 12-ft-diameter, 19-ft-high, 15,000-gal-capacity; and one 9-ft-diameter, 9-ft-high, 4,300-gal-capacity stainless steel storage tanks contained nitric acid. Two 30-ft-diameter, 20-ft-high, 99,000-gal-capacity mild steel storage tanks contained caustic solutions. One 12-ft-diameter, 19-ft-high, 15,000-gal-capacity storage tank was used to store demineralized water.

The 291-S Exhaust Fan Facility consists of the sand filter, exhaust fans located in the fan house, and the 291-S-1 Stack (see Figure 4). The sand filter is a partially below-grade, reinforced-concrete box structure, 85 ft by 85 ft by 13 ft deep, with a silicon-coated, urethane-foam, concrete roof slab. The fan house outside dimensions are 14 ft by 20 ft by 11 ft high, with 1-ft-floor. Three stainless steel, direct-driven blowers are located in the fan house. Two are powered by 60 hp electric motors and the third is driven by a steam turbine. They are of identical design and are installed in parallel. A single exhaust fan creates the 20,000 ft^3/min flow rate up the exhaust stack. The standby steam-driven exhaust fan is used in emergency situations and will automatically begin operating when electrical power fails, supply air system fails, or the differential pressure across the canyon decreases below established standards. The 291-S Stack is 14 ft in diameter at the base and 200 ft high. It is a double steel structure; the outer shell is made of reinforced concrete and the inner shell is constructed of acid-resistant brick and mortar.

2.2 PROCESS DESCRIPTION

The 202-S Canyon, Silo, and Office Building complex was constructed from 1950 to 1952 as the first large-scale solvent extraction process-type plant built in the United States for the recovery of plutonium from irradiated uranium fuel. The facility operated from 1952 to 1967. The process, which replaced the batch precipitation methods first used at the Hanford Site, was designed to separate uranium, plutonium, and neptunium as individual product streams from the fission products with which they are associated in the irradiated fuel. The silo section contains five chemical makeup levels, the column maintenance level, and the column operating, sample gallery, and column chemical feed tank levels. The silo also contained 13 columns used in the extraction process.

The 276-S Solvent Handling Facility was used for bulk storage of raw hexone and chemical treatment of new and recycled hexone. This solvent was used for recovery of plutonium, uranium, and neptunium from irradiated fuel rods in the 202-S Building.

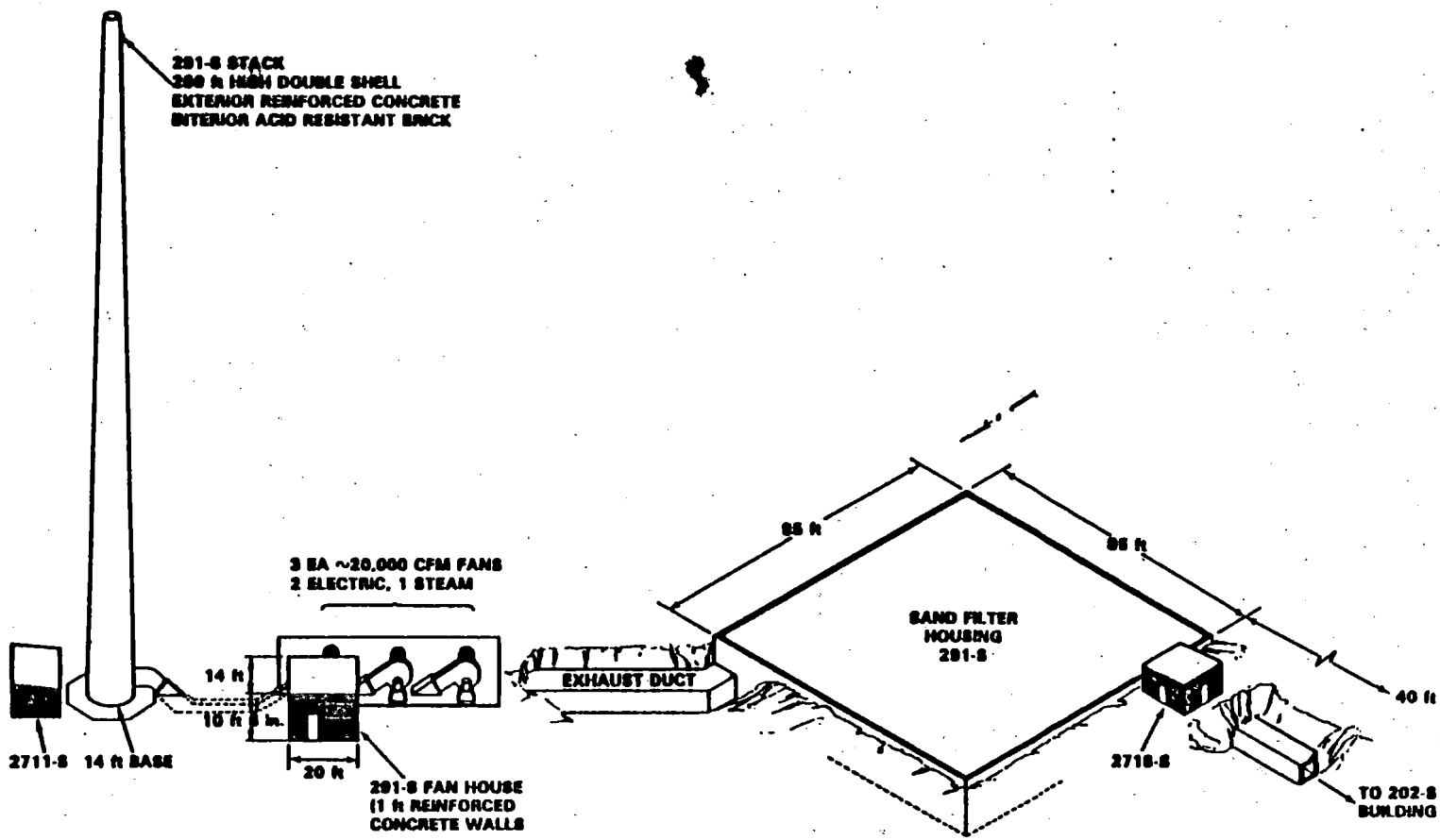

Figure 4. 291-S Exhaust Fan Facility.

The 292-S Control and Jet Pit House was built as part of the original REDOX complex and provided the control point for the discharge jets on the dissolver vessels within cells A, B, and C of the 202-S Building. Under normal operating conditions, any liquid condensate in the sump was air jetted into the drain seal tank and then jetted to cell D (waste concentration cell) in the 202-S Building.

The 293-S Nitric Acid Recovery and Iodine Backup Facility provided silver reactor backup capabilities for radioiodine removal in combination with recovery of the majority of the nitric acid fumes evolved during the dissolution of the irradiated uranium rods. This facility was added in 1957. The radioiodine was removed using a caustic scrubber system, while the acid fumes were recovered in a nitric acid absorber.

The 211-S Liquid Chemical Storage Tank Farm received and stored liquid chemicals to be used in the REDOX process in 11 storage tanks of various sizes. Unloading facilities were also available for tank trucks and railroad tank cars. The following chemicals were originally received and stored at the 211-S Area: nitric acid, sodium hydroxide, sodium dichromate, demineralized water, and aluminum nitrate nonhydrate.

The 291-S Exhaust Fan Facility contains the exhaust ventilation equipment for the 202-S Canyon Building. Exhaust air leaves the 202-S Canyon Building via the main exhaust duct and passes through the sand filter, the exhaust fans, and out the stack. The 291-S sand filter removes radioactive particles from the exhaust ventilation air before discharge to the atmosphere.

3.0 STATUS OF OPERATION

The REDOX complex is retired from service and declared surplus. No operations or processes have been conducted at the facility since it was shut down in 1967. Since shutdown, the 202-S Canyon Area has been used to store the original equipment used in the REDOX process. The only support facilities (change room, showers, and lavatories) in use is the change room, which is used by surveillance personnel conducting surveillance inspections and periodic maintenance of stored equipment. The process system is physically incapable of operating because transfer lines have been disconnected, equipment has been removed, etc. The few systems that remain in operation at 202-S include: raw water, sanitary water, steam, instrument air, sanitary sewer, chemical sewer (the north and south pipe and operating galleries contain floor and funnel drains that discharge to the piping system leading to the 216-S-10 Ditch), electrical, lighting, emergency battery room, the canyon and cell exhaust system (291-S-1 Stack), the PR Cage/North Sample Gallery Exhaust (296-S-2 Stack), the East End Shops Exhaust (decontamination, hot, and regulator shops) (296-S-4 Stack), and the Feed Tank Area and Silo Sample Gallery Exhaust (296-S-6 Stack). At present, liquid levels are verified only in sumps CS-1, DS-13, ES-1, FS-1, and GS-1 and in tanks D-8, D-9, D-10, and D-13. The facility exhibits a dose rate and radioactive surface contamination in the canyon.

The 276-S Solvent Handling Facility was deactivated and cleaned up in 1967. The hexone storage tanks within the 276-S Building have not been used since clean up, and were confirmed empty and clean in 1989. The operational systems include: electrical and chemical sewer (three floor drains in the operating side discharge via the chemical sewer to the 216-S-10 Ditch).

The 292-S Control and Jet Pit House liquid level is always maintained in the drain seal vessel to ensure that the exhaust jet line is isolated from each individual contributing drain line. Two liquid-level indicators located within the 292-S Building provide information on the status of the liquid in the 191-S Sump and 191-S Drain seal vessel. The operational systems include electrical, steam, and air.

The 293-S Nitric Acid Recovery and Iodine Backup Facility is unused. Only the electrical system is operational.

The 211-S Liquid Chemical Storage Tank Farm is unused. The operational systems include the electrical and steam systems. No indication is present of liquid storage in the tanks.

The 291-S Exhaust Fan Facility provides exhaust ventilation for the 202-S Canyon Building. It continues to serve its original purpose and is planned to remain in operation until the REDOX complex is fully decommissioned. Other operational systems include electrical, steam, water, and air.

The REDOX complex is routinely surveilled and maintained as required, and will be continued until final decommissioning is accomplished.

4.0 SOURCE TERM

4.1 INVENTORY AT RISK

No process materials or wastes are being "generated" at REDOX. However, as a result of past operations, radioactive waste and other hazardous materials do exist and are identified below. This list identifies wastes and materials that may have a potential for entering an effluent stream.

4.2 RADIOACTIVE MATERIALS

The following are radioactive materials or wastes that have been identified or are potentially present in the facilities.

- Asbestos - Radioactive contaminated asbestos (original facility building material) used for insulation is potentially present.
- Lead - Radioactive contaminated lead (original facility building material) used for shielding is potentially.

- Liquid Waste - Radioactive liquid waste may exist in the 202-S Building in sumps CS-1, DS-13, ES-1, FS-1, and GS-1 and in tanks D-8, D-9, D-10, and D-13.

- Room Waste - A minimal amount of radioactive room wastes, limited to: special work permit (SWP) protective clothing, swipes, and other materials used during routine surveillance and maintenance activities, is routinely collected at exit points of radiation areas in the 202-S, 291-S, and 293-S Buildings and disposed of properly.

- Surface Contamination - Fixed and loose surface contamination is present in the 202-S Building (in the canyon and to a lessor extent, external to the canyon in other defined areas) and 293-S Building.

4.3 NONRADIOACTIVE HAZARDOUS MATERIAL

Presently, no identified regulated materials or waste [i.e., *Resource Conservation and Recovery Act of 1976* (RCRA), *Comprehensive Environmental Response, Compensation, and Liability Act of 1980* (CERCLA), *Superfund Amendments and Reauthorization Act of 1986* (SARA)] are stored in the facilities. The following materials are still in use as originally designed.

- Asbestos - (Original facility building material) used for insulation.

- Battery Acid - Present in the batteries (original design use) used for emergency lighting for the facility.

- Lead - (Original facility building material) used for shielding.

- Polychlorinated Biphenyl - (Original facility building material) containing light ballasts in florescent light fixtures, and transformers.

- Satellite Accumulation Storage Area - A 30-d satellite accumulation storage area has been established at the 202-S loading dock and another at the 2715-S Oil Storage Building for the temporary placement of hazardous materials awaiting disposal.

4.4 EFFLUENT POINT OF DISCHARGE DESCRIPTION

If a material were identified (see Section 4.0) as having even a remote chance of being a source term and having a chance of entering an effluent stream, further evaluation is provided for the probability and consequence of a release to the environment. No source points for routine activities that released radiological or nonradiological hazardous materials above regulatory values were identified. Therefore, only upset conditions with a potential for releasing radiological or nonradiological hazardous materials are identified below.

4.4.1 Gaseous Effluent Streams

The following points of discharge were reviewed (Guide, Section 5.0) (WHC 1991) and either are identified as inactive for the facility or have the potential for a release to the environment described.

4.4.1.1 Supply Intakes. Blower Rooms 1, 2, and 5 are operational. Each room contains supply fans for the 202-S Building.

4.4.1.2 Main Stack - (291-S-1). In the event of radioactive or nonradioactive asbestos fiber migration into the exhaust stream, it can be considered highly improbable for any asbestos fibers to pass through the sand filter, which has an efficiency of 99.997%, resulting in a release to the environment. (Failure of a decontamination factor at the same time asbestos is dislodged is not credible.) However, if a release to the environment did occur, the quantity of asbestos fibers discharged would be considered highly insignificant.

In the event of radiological surface contamination migration into the exhaust stream, it can be considered highly improbable for any contamination to pass through the sand filter, which has an efficiency of 99.997%, resulting in a release to the environment. (Failure of a decontamination factor at the same time of dislodged contamination is not credible.) No past recordable releases [based on the continuous air monitor (CAM) Hi Radiation Alarm at 2,000 cpm] are documented. (Even when the stack has been temporarily shut down, sampling provided by Health Physics has not indicated any migration of radioactive materials, either within the facility or through the exhaust system.)

4.4.1.3 Building Vents. The building vents are an inactive system.

4.4.1.4 Building Exhausts - (296-S-2, -4, -6). In the event of radioactive or nonradioactive asbestos fiber migration into the exhaust system, it can be considered highly improbable for any asbestos fibers to pass through the HEPA filter, which has an efficiency of less than or equal to 99.95%, resulting in a release to the environment. (Failure of a decontamination factor at the same time that asbestos is dislodged is not credible.) However, if a release to the environment did occur, the quantity of asbestos fibers discharged would be considered highly insignificant. (The 291-S-6 Exhaust System is not equipped with a HEPA filter because it exhausts from the clean side of the 202-S Silo. However, no material containing friable asbestos is presently identified in the exhausted area. Any detected friable asbestos would be discovered during routine surveillance, promptly cleaned up, and disposed of appropriately.)

In the event of radiological surface contamination migration into the exhaust stream, it can be considered highly improbable for any contamination to pass through the HEPA filter, which has an efficiency of less than or equal to 99.95%, resulting in a release to the environment. (Failure of a decontamination factor at the same time that contamination is dislodged is not credible.) (The 291-S-6 Exhaust System is not equipped with a HEPA filter because it exhausts from the clean side of the 202-S Silo and past concentrations are below the lower limit of detection as noted in WHC-EP-0141-2 (WHC 1990a).

4.4.1.5 Building Ventilation. Building ventilation is covered under the Main Stack description.

4.4.1.6 Heating, Ventilating, and Air Conditioning Exhaust. The heating, ventilating, and air conditioning systems are included in the Main Stack description.

4.4.1.7 Unmonitored Ingress/Egress Points. The facilities have no unmonitored ingress/egress points that would allow for radiological contamination migration from the designated radiation area collection points to the environment, even during an emergency exit situation.

4.4.1.8 Any Other Filtered or Unfiltered Stream to the Environment. No other filtered or unfiltered stream to the environment has been identified.

4.4.2 Liquid Effluent Streams

The following points of discharge were reviewed (Guide, Section 5.0) (WHC 1991) and either are identified as inactive for the facility or have the potential for a release to the environment described.

4.4.2.1 Storm Drain/Facility Grounds Runoff. The storm drains and facility grounds runoff are inactive systems.

4.4.2.2 Sanitary Sewer. As indicated in Section 4.0, no source term that could enter the effluent stream has been identified.

4.4.2.3 Chemical Sewer (202-S). Several chemical sewer drains and lines remain open to the 216-S-10 Ditch. However, during routine and any potential upset conditions previously identified (i.e., cooling water from the air compressor in 202-S, overflow from the water tower, pipe failure of a sanitary- or raw-water line), the probability of radiological or nonradiological hazardous materials or wastes entering the system and being released to the environment is very low. The report, WHC-EP-0342, Addendum 9 (WHC 1990b) concludes that because the REDOX Complex waste stream does not contain any dangerous waste, as defined in WAC 173-303 (WAC 1989), it is proposed that the waste stream not be designated a dangerous waste.

4.4.2.4 Cooling Water. The cooling water from the air compressor in the 202-S Building is one of two main routine waste streams to the 216-S-10 Ditch. The compressor aftercooler uses the raw water distribution network for its supply. The REDOX raw-water distribution system is a closed-loop network from the supply main through the aftercooler discharge. The air compressor aftercooler supplies compressed air for instrument needs for the 202-S Building and the 222-S Laboratory. The probability of the cooling water being contaminated with radiological or nonradiological hazardous materials or wastes is very low. See the discussion of the chemical sewer system.

4.4.2.5 Liquid Radioactive Streams. The liquid radioactive streams are inactive systems.

4.4.2.6 Steam Condensate Streams. The steam condensate streams are inactive systems.

4.4.2.7 Process Condensate Streams. The process condensate streams are inactive systems.

4.4.2.8 Any Other Filtered or Unfiltered Stream to the Environment. No other filtered or unfiltered streams to the environment have been identified.

5.0 POTENTIAL UPSET-OPERATING CONDITIONS

The list of radioactive and nonradioactive hazardous material was reviewed to determine if a potential exists for any of the available radioactive and nonradioactive hazardous materials or wastes to enter an effluent stream under either routine conditions or identified credible upset conditions.

5.1 ROUTINE CONDITIONS

Routine operating activities in a deactivated facility are minimal. Radioactive and hazardous materials or wastes (except the small amount of room wastes identified in Section 3.1) are not generated at the facility. As noted before, throughout the REDOX complex, only the raw water, sanitary water, steam, instrument air, sanitary sewer, chemical sewer, electrical, lighting, emergency battery room, the canyon and cell exhaust system (291-S-1 Stack), the PR Cage/North Sample Gallery Exhaust (296-S-2 Stack), the East End Shops Exhaust (decontamination, hot, and regulator shops) (296-S-4 Stack), and the Feed Tank Area and Silo Sample Gallery Exhaust (296-S-6 Stack) are operating. Only six of the active systems may result in an effluent stream to the environment: the sanitary sewer system, the chemical sewer line (216-S-1 Ditch) and the 296-S-1, -2, -4, and -6 exhaust stacks.

5.1.1 Sanitary Sewer System

Several sanitary sewer lines from a few nonradiological, nonhazardous sources in the 202-S Building intersects with other building lines before entry into a septic tank and associated tile fields. No known radioactive or nonradioactive hazardous materials are in proximity of the sanitary sewer lines and therefore, these materials would not be present in the lines during routine activities (i.e., no source terms identified).

5.1.2 Chemical Sewer Line (216-S-10 Ditch)

The 216-S-10 Ditch is an open-air soil-column effluent disposal site located outside the 200 West Area perimeter fence and southwest of the REDOX complex. It consists of a ditch that is 2,250 ft long by 6 ft wide. The maximum depth to the water table is 180 ft. The system was designed to handle chemical sewer, cooling water, air conditioning, and drain waste from the 202-S Building, and sanitary water overflow from the 2901-S-901 High Water Tower. The 216-S-10 Ditch has 101 potential contributors from the 202-S Building, 30 from the 211-S Tank Farm, 15 from the chemical sewer line

itself, 3 from the 276-S Building, and 1 from the water tower overflow. The two routine waste streams are the cooling water from the air compressor in the 202-S Building and the sanitary water overflow from the high water tower that provides sanitary water for the entire REDOX complex. The air compressor aftercooler supplies compressed air for the instruments in the 202-S Building and the 222-S Laboratory. The aftercooler uses the raw water distribution network for its supply. The REDOX raw water distribution system is a closed-loop network from the supply main through the aftercooler discharge. The wastewater overflow from the water tower is necessary to reduce algae growth during the summer and eliminate icing conditions during the winter. Waste streams from all other access points along the chemical sewer line presently do not flow. In the 202-S Building all floor drains and funnels in the north operating and pipe galleries have been isolated using grout plugs. The south operating and pipe galleries, floor drains, and funnels are still in operation. The intent of these open floor drains is to provide emergency drainage in case of a water main leak. No other leakage condition exists. The 211-S Tank Farm and 276-S Building are both deactivated and have no active process systems (lighting is available). No pump drains, tank drains, safety shower drains, and condensate drains are in operation today. The estimated total wastewater flow into the 216-S-10 Ditch is 355,000 gal/d, with the cooling wastewater from the 202-S Building comprising an average of 275,000 gal/d and the sanitary water tower overflow comprising 80,000 gal/d. Efforts to reduce this waste stream are continuing. The elimination of the air compressor in the 202-S Building is presently in the final design stages and is scheduled to be completed by calendar year (CY) 1992, with the cessation of all wastewater flow from the 202-S Building to the ditch by the beginning of CY 1993. When the compressor is removed from service, all raw water service will be removed from the 202-S Building, and the remaining floor drains and funnels in the south operating and pipe galleries will be isolated using grout. The *S Plant Wastewater Stream-Specific Report*, WHC-EP-0342, Addendum 9 (WHC 1990) concludes that because the REDOX complex waste stream does not contain any dangerous waste, as defined in Washington Administrative Code (WAC) 173-303 (WAC 1989), it is proposed that the waste stream not be designated a dangerous waste. For annual reporting on liquid effluent to DOE and Washington Department of Ecology weekly grab samples are collected from the 216-S-10 Ditch outlet and the sample results show that this stream is not a dangerous waste pursuant to WAC 173-303 (WAC 1989) regulations.

5.1.3 Exhaust Stacks

The 291-S-1 Exhaust Stack, the REDOX main radiological effluent discharge point, operates continuously. The exhaust system provides a slight negative pressure on the facility and discharges filtered air (sand filter) from the canyon, vessel ventilation, and treated dissolver offgas system to the environment. The sampling and monitoring system on the stack consists of a record sampler and a beta-gamma CAM unit. No past recordable releases (based on the CAM Hi Radiation Alarm at 2000 cpm) are documented during routine activities (i.e., no source terms identified). The radionuclide concentrations for this stack are reported in WHC-EP-0141-2, *Westinghouse Hanford Company Effluent Discharges and Solid Waste Management Report for Calendar Year 1989: 200/600 Areas* (WHC 1990a).

The 296-S-2, PR Cage/North Sample Gallery Exhaust system operates continuously and exhausts filtered air from the REDOX north sample gallery and the PR cage area to the environment. The air is filtered through two banks of high efficiency particulate air (HEPA) filters. The sampling system consists of a record sampler. The radionuclide concentrations for this stack are reported in WHC-EP-0141-2 (WHC 1990a).

The East End Shops Exhaust, 296-S-4, system operates continuously and exhausts HEPA filtered air from the REDOX decontamination room and the regulated shop to the environment. The sampling system consists of a record sampler. The radionuclide concentrations for this stack are reported in WHC-EP-0141-2 (WHC 1990a).

The 296-S-6 Feed Tank Area and Silo Sample Gallery Exhaust system operates continuously and exhausts unfiltered air from the REDOX plant, the silo gallery, an organic feed tank, and a sample elevator to the environment. The sampling system consists of a record sampler. Past effluent data have shown that the radionuclide concentrations are below the lower limit of detection; therefore no filtration is provided for the 296-S-6 Stack. The radionuclide concentrations are as reported in WHC-EP-0141-2 (WHC 1990a).

The REDOX Complex has no nonradiological gaseous effluent discharge points.

Upset operating conditions in a deactivated facility can be difficult to identify. The Guide (WHC 1991) defines an upset condition as, "Any one condition that is outside the normal process operating parameters, or an unusual plant operating condition where one confinement/containment barrier or engineered control has failed." The Guide (Section IV-2-1) (WHC 1991) also states that "Facility building materials... should not be included unless there is a significant potential for release during an upset condition." The radioactive and nonradioactive hazardous materials identified in Section 3 were reviewed against the potential of being released to an effluent stream as a result of an upset condition. If no credible upset condition could be identified, further discussion was considered unwarranted.

5.2.1 Radioactive Materials

5.2.1.1 Asbestos. No occurrence has been recorded in which asbestos-containing materials were released in radioactive contaminated areas in quantities that could produce a "...significant potential for release..." (WHC 1991) to an effluent stream (i.e., the 291-S Exhaust Stack). The potentially radioactively contaminated asbestos that exists in the canyon is inaccessible to both personnel and operational equipment that could possibly disturb asbestos surfaces. The probability of any asbestos insulating material becoming dislodged from a sufficiently large area during any single incident, and releasing enough fibers (i.e., fibers not settling on the surrounding equipment, walls, and floors) to enter the exhaust flow stream is considered low.

5.2.1.2 Lead. No credible upset condition can be identified that would result in the migration by any pathway of in-place radioactively contaminated lead shielding to an effluent stream. It is considered highly improbable for

any radioactively contaminated lead that potentially exists in the canyon to enter a gaseous or liquid effluent stream.

5.2.1.3 Liquid Waste. No occurrence has been recorded in which liquid wastes have migrated from the vessels in which they are contained. The liquid levels are routinely monitored. No pathway exists in which the sumps or tanks can be relieved of their contents (other than by breach), because all transfer systems and components have been physically disabled. It is considered highly improbable for any liquid waste to enter an effluent stream. Even though the vessels containing the wastes are several decades old, the vessels are not exposed to the effects of weathering, and show no evidence of metal corrosion or fatigue. In the unlikely event that a vessel did fail (failure of first containment), the contents of each vessel can be more than adequately contained by the concrete cell surrounding it, as intended by the design. Discussions on the failure of the cell (second containment) is beyond the scope of the definition of an upset condition.

5.2.1.4 Room Waste. No contamination migration from the designated radiation area collection points to the environment has been recorded. All personnel entering contaminated areas have been trained and must survey when exiting the area. Therefore, the probability for radioactively contaminated room waste to migrate from a collection point is considered low. Any contamination discovered (areas routinely surveyed) in a nonradiologically identified area resulting from the upset condition would be cleaned up and disposed of appropriately. The probability for radioactively contaminated room waste to migrate from a collection point to the environment is considered very low.

5.2.1.5 Surface Contamination. No occurrence has been recorded in which the fixed or loose surface contamination present in the canyon or elsewhere has migrated to the exhaust flow stream. The majority of contamination exists in areas that are inaccessible to both personnel and operational equipment that could possibly disturb contaminated surfaces. The probability of any radioactive material becoming dislodged from a sufficiently large area during any single incident, and releasing to the exhaust flow stream is considered very low.

5.2.2 NONRADIOACTIVE HAZARDOUS MATERIAL

5.2.2.1 Asbestos. No occurrence has been recorded in which asbestos-containing materials were released in quantities that could produce a "...significant potential for release..." (WHC 1991) to an effluent stream (i.e., the 291-S Exhaust Stack). Because only routine surveillance and minimal maintenance occurs at the retired facility, the probability of personnel or operational equipment inadvertently dislodging asbestos-containing insulation from a sufficiently large area during any single incident, and releasing enough fibers (i.e., fibers not settling on the surrounding equipment, walls, and floors) to enter the exhaust flow stream is considered low.

5.2.2.2 Battery Acid. No occurrence has been recorded in which battery acid has leaked or spilled in quantities that could produce a "...significant potential for release..." (WHC 1991) to an effluent stream (i.e., the sanitary or chemical sewer system). The battery room has no drains and contains the

required concrete berm to prevent any accidental leak or spill from exiting the area. In the unlikely event that a battery casing did fail (failure of first containment), the acid can be more than adequately contained by the concrete berm surrounding the battery bank, as intended in the original design. Discussions on the failure of the berm (second containment) is beyond the scope of the definition of upset condition.

5.2.2.3 Lead. No credible upset condition can be identified that would result in the migration by any pathway of in-place lead shielding to an effluent stream. The lead, if any, would exist in areas not frequented by personnel and it is considered highly improbable for any lead to enter a gaseous or liquid effluent stream.

5.2.2.4 Liquid Waste. No occurrence has been recorded in which liquid resulting from a pipe failure in the raw or sanitary water systems within one of the facilities has entered a liquid effluent stream (216-S-10 Ditch). The 202-S Building, 211-S Tank Farm, and 276-S Building are not used as storage facilities and they contain only the original associated process equipment used during their operational timeframe. However, these facilities continue to be connected to the sanitary and raw water distribution systems. The only credible upset condition of a pipe failure in either the raw or sanitary water system could possibly result in a liquid discharge to the remaining open floor drains through the chemical sewer lines to the 216-S-10 Ditch. To minimize this potential, the system is routinely surveyed to identify any potential leakage problem and implement appropriate corrective action. Although the unplugged floor and tunnel drains and manholes within the REDOX Complex are a source of potential chemical contamination from spills or leaks, spills or leaks are considered highly improbable because no process chemicals are used or stored in the facilities. When the compressor is removed from service, all raw water service will be removed from the 202-S Building, and the remaining floor drains and funnels in the south operating and pipe galleries will be isolated using grout.

5.2.2.5 Polychlorinated Biphenyls. No occurrence has been recorded in which polychlorinated biphenyl (PCB)-containing light ballasts or electrical transformers have leaked or spilled in quantities that could produce a "...significant potential for release..." (WHC 1991) to an effluent stream (i.e., the sanitary sewer system). The floor drains in areas containing the florescent light fixtures are filled with grout, making the sanitary sewer lines inaccessible for transport. Any rupture of a ballast or a transformer in which contents have leaked or spilled would be located during routine surveillance, identified as potentially containing PCBs, cleaned up, and disposed of appropriately. No credible avenue for migration by any pathway to an effluent stream can be identified.

5.2.2.6 Satellite Accumulation Storage Area. No occurrence has been recorded at the satellite accumulation storage areas in which used products (i.e., lubricants and household and industrial cleaning agents) packaged in original containers have leaked or spilled in quantities that could produce a "...significant potential for release..." (WHC 1991) to an effluent stream (i.e., airborne release to the environment). No liquid-containing receptables are stored at the satellite area. The only credible upset condition identified is an accidental impact by a vehicle (close proximity to designated parking lot) into the satellite area with possible rupture of containers and a

potential leak or spill of solid material on the soil. The probability of this scenario occurring is considered low. Any leak or spill would be identified during the incident, promptly cleaned up, and disposed of appropriately.

6.0 SUMMARY

The REDOX Complex potential radiological effluents, both airborne and liquid, are routinely sampled and the results are reported in WHC-EP-0141-2 (WHC 1990a). The monitored airborne effluents are from (exhaust stacks 291-S-1, 296-S-2, and 296-S-4) which are considered minor stacks, or not "significantly contributing to the total activity discharged from the 200 Areas" (WHC 1991). The stacks are reported to have radionuclide concentrations (μCi/mL) and total activities (Ci) below or near the lower limit of detection (LLD). All readings were below administrative control values (ACV). The only potential radiological liquid effluent, the REDOX chemical sewer, is also reported as having both a radionuclide concentration (μCi/mL) and total activity (Ci) below the LLD. It was established that for most cases, no upset conditions were identified in which radiological materials or wastes could enter an effluent stream and be released to the environment. The few upset conditions that appear credible have a very low probability of occurrence. It is also concluded that no significant radiological increases to the environment would result during the occurrence of any of the identified upset conditions.

The REDOX Complex potential nonradiological hazardous effluents, both airborne and liquid, are also reported in WHC-EP-0141-2 (WHC 1990a). The only monitored nonradiological airborne effluent is from exhaust stack 296-S-6 and is considered a "minor" stack, or not "significantly contributing to the total activity discharged from the 200 Areas" (WHC 1991). The stack is reported as having a radionuclide concentration (μCi/mL) and total activity (Ci) below the ACV, and because past effluent data have identified the stack effluent as below the LLD, it is not provided with a HEPA filter. No liquid nonradiological hazardous effluents have been identified [reported either in WHC-EP-0141-2 (WHC 1990a), or in WHC-EP-0342, Addendum 9 (WHC 1990b)]. It was established that for most cases, no upset conditions were identified in which nonradiological hazardous materials or wastes could enter an effluent stream and be released to the environment. The few upset conditions that appear credible have a very low probability of occurrence. It is also concluded that no significant hazardous increases to the environment would result during the occurrence of any of the identified upset conditions.

Based on the evaluation performed in Sections 3.0 through 5.0, the reported effluent data summarized above, and the initial results in the annual environmental summary report, "the calculated 50-yr effective dose equivalent

for the hypothetically maximally exposed individual from all Hanford Site airborne and liquid effluents was 0.05 mrem in 1989," (WHC 1990a) the following conclusions can be drawn:

- Total projected dose from radionuclides does not exceed 0.1 mrem EDE from any one REDOX Complex discharge point.
- No regulated materials are discharged from the REDOX Complex that exceed 100% of a reportable quantity or a permitted quantity.

Therefore, a FEMP is not required for the surplus REDOX Complex (see attachments).

7.0 REFERENCES

Comprehensive Environmental Response, Compensation, and Liability Act of 1980, as amended, 42 USC 9601 et seq.

Resource Conservation and Recovery Act of 1976, as amended, 42 USC 6901 et seq.

Superfund Amendments and Reauthorization Act of 1986, as amended, 42 USC 11001 et seq.

WAC, 1989, *Dangerous Waste Regulations*, Washington Administrative Code 73-303, Washington State Department of Ecology, Olympia, Washington.

WHC, 1990a, *Westinghouse Hanford Company Effluent Discharges and Solid Waste Management Report for Calendar Year 1989: 200 Areas*, WHC-EP-0141-2, Westinghouse Hanford Company, Richland, Washington.

WHC, 1990b, *S Plant Wastewater Stream-Specific Report*, WHC-EP-0342, Addendum 9, Westinghouse Hanford Company, Richland, Washington.

WHC, 1991, *A Guide for Preparing Hanford Site Facility Effluent Monitoring Plans*, WHC-EP-0438, Westinghouse Hanford Company, Richland, Washington.

THIS PAGE INTENTIONALLY
LEFT BLANK

ATTACHMENTS

DETERMINATION OF FACILITY EFFLUENT MONITORING PLAN REQUIREMENT

This page intentionally left blank.

9413146.0002

ATTACHMENT 1

DETERMINATION OF FACILITY EFFLUENT MONITORING PLAN REQUIREMENT

FACILITY REDOX Complex **DISCHARGE POINT** 291-S-1 (Exhaust Stack)

FACILITY INVENTORY AT RISK OF RADIOACTIVE MATERIALS

Radionuclide	Physical/Chemical Form	Quantity (Curies)	Quantity Released	Projected Dose (mrem)
1. $^{239,240}Pu$	Solid	<2.22 E-07	<1.04 E-15 ($_{u}$Ci/mL)	<0.1 mrem
2. ^{241}Am	Solid	<4.43 E-07	<2.07 E-15	<0.1 mrem
3.				
4.				
Total				<0.1 mrem

FACILITY INVENTORY AT RISK OF NONRADIOACTIVE HAZARDOUS MATERIALS

Regulated material	Quantity (lbs)	Quantity released	Reportable Quantity (lbs)	% of Reportable Quantity/Year
1. None identified				
2.				
3.				
4.				

Identification of Reference Material

WHC-EP-0141-2

If the total projected dose from radionuclides exceeds 0.1 mrem ede from any one discharge point or if any one regulated material discharged from a facility exceeds 100% of a reportable quantity or a permitted quantity, a FEMP is required for that facility. Check the appropriate space below.

FEMP is required _____ FEMP is not required X

EVALUATOR J. B. Brehm **DATE** 1-24-91

MANAGER, ENVIRONMENTAL L. P. Diediker **DATE** 2-15-91

FACILITY MANAGER G. E. Van Sickle **DATE** 2-14-91

ATTACHMENT 2

DETERMINATION OF FACILITY EFFLUENT MONITORING PLAN REQUIREMENT

FACILITY REDOX Complex **DISCHARGE POINT** 296-S-2 (Exhaust Stack)

FACILITY INVENTORY AT RISK OF RADIOACTIVE MATERIALS

Radionuclide	Physical/Chemical Form	Quantity (Curies)	Quantity Released	Projected Dose (mrem)
1.Total Alpha	Solid	<2.90 E-08	<3.05 E-15 ($_u$Ci/mL)	<0.1 mrem
2.Total Beta	Solid	1.24 E-06	1.50 E-14	<0.1 mrem
3.				
4.				
Total				<0.1 mrem

FACILITY INVENTORY AT RISK OF NONRADIOACTIVE HAZARDOUS MATERIALS

Regulated material	Quantity (lbs)	Quantity released	Reportable Quantity (lbs)	% of Reportable Quantity/Year
1. None identified				
2.				
3.				
4.				

Identification of Reference Material

WHC-EP-0141-2

If the total projected dose from radionuclides exceeds 0.1 mrem ede from any one discharge point or if any one regulated material discharged from a facility exceeds 100% of a reportable quantity or a permitted quantity, a FEMP is required for that facility. Check the appropriate space below.

FEMP is required _____ FEMP is not required X

EVALUATOR J. R. Brehm J R Brehm DATE 1-24-91

MANAGER, ENVIRONMENTAL L. P. Diediker DATE

FACILITY MANAGER G. E. Van Sickle G E Van Sickle DATE 2-14-91

ATTACHMENT 3

DETERMINATION OF FACILITY EFFLUENT MONITORING PLAN REQUIREMENT

FACILITY REDOX Complex **DISCHARGE POINT** 296-S-4 (Exhaust Stack)

FACILITY INVENTORY AT RISK OF RADIOACTIVE MATERIALS

Radionuclide	Physical/Chemical Form	Quantity (Curies)	Quantity Released	Projected Dose (mrem)
1.Total Alpha	Solid	2.96 E-07	4.37 E-15 ($_{u}$Ci/mL)	<0.1 mrem
2.Total Beta	Solid	1.88 E-06	2.78 E-14	<0.1 mrem
3.				
4.				
Total				<0.1 mrem

FACILITY INVENTORY AT RISK OF NONRADIOACTIVE HAZARDOUS MATERIALS

Regulated material	Quantity (lbs)	Quantity released	Reportable Quantity (lbs)	% of Reportable Quantity/Year
1. None identified				
2.				
3.				
4.				

Identification of Reference Material

WHC-EP-0141-2

If the total projected dose from radionuclides exceeds 0.1 mrem ede from any one discharge point or if any one regulated material discharged from a facility exceeds 100% of a reportable quantity or a permitted quantity, a FEMP is required for that facility. Check the appropriate space below.

FEMP is required _____ FEMP is not required X

EVALUATOR J. R. Brehm J R Brehm DATE 1-24-91

MANAGER, ENVIRONMENTAL L. P. Diediker for DATE

FACILITY MANAGER G. E. Van Sickle DATE 2-14-91

ATTACHMENT 4

DETERMINATION OF FACILITY EFFLUENT MONITORING PLAN REQUIREMENT

FACILITY REDOX Complex **DISCHARGE POINT** 296-S-6 (Exhaust Stack)

FACILITY INVENTORY AT RISK OF RADIOACTIVE MATERIALS

Radionuclide	Physical/Chemical Form	Quantity (Curies)	Quantity Released	Projected Dose (mrem)
1.Total Alpha	Solid	7.57 E-07	5.40 E-15 ($_u$Ci/mL)	<0.1 mrem
2.Total Beta	Solid	4.19 E-06	2.99 E-14	<0.1 mrem
3.				
4.				
Total				<0.1 mrem

FACILITY INVENTORY AT RISK OF NONRADIOACTIVE HAZARDOUS MATERIALS

Regulated material	Quantity (lbs)	Quantity released	Reportable Quantity (lbs)	% of Reportable Quantity/Year
1. None identified				
2.				
3.				
4.				

Identification of Reference Material

WHC-EP-0141-2

If the total projected dose from radionuclides exceeds 0.1 mrem ede from any one discharge point or if any one regulated material discharged from a facility exceeds 100% of a reportable quantity or a permitted quantity, a FEMP is required for that facility. Check the appropriate space below.

FEMP is required _____ FEMP is not required X

EVALUATOR J. R. Brehm DATE 1-24-91

MANAGER, ENVIRONMENTAL L. P. Diediker DATE 2-15-91

FACILITY MANAGER G. E. Van Sickle DATE 2-14-91

ATTACHMENT 5

DETERMINATION OF FACILITY EFFLUENT MONITORING PLAN REQUIREMENT

FACILITY REDOX Complex **DISCHARGE POINT** RM-28 (Chemical Sewer)

FACILITY INVENTORY AT RISK OF RADIOACTIVE MATERIALS

Radionuclide	Physical/Chemical Form	Quantity (Curies)	*Quantity Released	Projected Dose (mrem)
1. $^{89,90}Sr$	Liquid	<7.9 E-04	<4.0 E-09 (μCi/mL)	
2. ^{137}Cs	Liquid	<4.0 E-03	<2.0 E-08	
3. $^{239,240}Pu$	Liquid	<7.6 E-04	<3.8 E-09	
4. ^{241}Am	Liquid	<1.5 E-03	<7.7 E-09	
Total		<7.6 E-03		<0.1 mrem
			*<LLD	

FACILITY INVENTORY AT RISK OF NONRADIOACTIVE HAZARDOUS MATERIALS

Regulated material	Quantity (lbs)	Quantity released	Reportable Quantity (lbs)	% of Reportable Quantity/Year
1. None identified				
2.				
3.				
4.				

Identification of Reference Material

WHC-EP-0141-2, WHC-EP-0342 (Addendum 9)

If the total projected dose from radionuclides exceeds 0.1 mrem ede from any one discharge point or if any one regulated material discharged from a facility exceeds 100% of a reportable quantity or a permitted quantity, a FEMP is required for that facility. Check the appropriate space below.

FEMP is required _____ FEMP is not required X

EVALUATOR J. R. Brehm **DATE** 1-24-91

MANAGER, ENVIRONMENTAL L. E. Vanstrieker **DATE** 2-15-91

FACILITY MANAGER G. E. Van Sickle **DATE** 2-14-91

This page intentionally left blank.

9413136.0909

PART 8

SURPLUS 233-S COMPLEX

FACILITY EFFLUENT MONITORING PLAN DETERMINATION

This page intentionally left blank.

9413136.0910

CONTENTS

1.0 INTRODUCTION 1

2.0 FACILITY DESCRIPTION 1
2.1 PHYSICAL DESCRIPTION 1
2.2 PROCESS DESCRIPTION 3

3.0 STATUS OF OPERATION 3

4.0 SOURCE TERM 4
4.1 RADIOACTIVE MATERIALS 4
4.2 NONRADIOACTIVE HAZARDOUS MATERIAL 4

5.0 POTENTIAL UPSET-OPERATING CONDITIONS 5
5.1 ROUTINE CONDITIONS 5
5.2 UPSET CONDITIONS 5
5.2.1 Radioactive Materials 6
5.2.2 Nonradioactive Hazardous Material 6
5.3 EFFLUENT POINT OF DISCHARGE 7
5.3.1 Gaseous Effluent Streams 7
5.3.2 Liquid Effluent Streams 8

6.0 SUMMARY 9

7.0 REFERENCES 9

ATTACHMENT

1 DETERMINATION OF FACILITY EFFLUENT MONITORING PLAN REQUIREMENT A1-1

LIST OF FIGURES

1 233-S Plutonium Concentration Facility and 233-SA Filter Building 2

This page intentionally left blank.

SURPLUS 233-S COMPLEX FACILITY EFFLUENT MONITORING PLAN DETERMINATION

1.0 INTRODUCTION

This evaluation describes the potential radioactive and hazardous material source terms within the 233-S Plutonium Concentration Facility to determine the requirement for a facility effluent monitoring plan (FEMP). Both gaseous and liquid effluents that could be discharged under routine and/or upset conditions are included. This evaluation is prepared in accordance with *A Guide for Preparing Hanford Site Facility Effluent Monitoring Plans*, (WHC 1991).

2.0 FACILITY DESCRIPTION

This section briefly describes the facilities associated with the surplus 233-S Plutonium Concentration Facility that are the responsibility of Hanford Restoration Operations (HRO). For this evaluation the 233-S Plutonium Concentration Facility under HRO custody includes the 233-S Building and the 233-SA Filter Building.

2.1 PHYSICAL DESCRIPTION

The 233-S Building, a reinforced-concrete and corrugated-metal structure (located directly north of the 202-S Canyon Building), consists of 8 rooms, 5 airlocks (only 1 is being used), and a 4-story, 32-ft high bay area divided into 2 zones (see Figure 1). One is a process zone and the other is a process viewing area that is partitioned by vertical transparent plastic (Lucite*) panels. The viewing room is a maintenance and process viewing area with four working levels; the top three levels are open-grated flooring. Access to these working levels is provided through a sheet metal-enclosed stairwell adjoining the exterior high bay walls. The process hood, designed for contact maintenance, contains stainless steel, titanium, and glass process equipment.

The 233-SA Filter Building is located adjacent to and east of the 233-S Building. It contains the east and west filter banks and two stacks (296-S-7E and 296-S-7W). Each filter bank contains a roughing filter and two high efficiency particulate air (HEPA) filters in series. The two exhaust fans are located outside the building.

---

*Lucite is a trademark of E. I. Du Pont de Nemours and Company.

Figure 1. 233-S Plutonium Concentration Facility and 233-SA Filter Building.

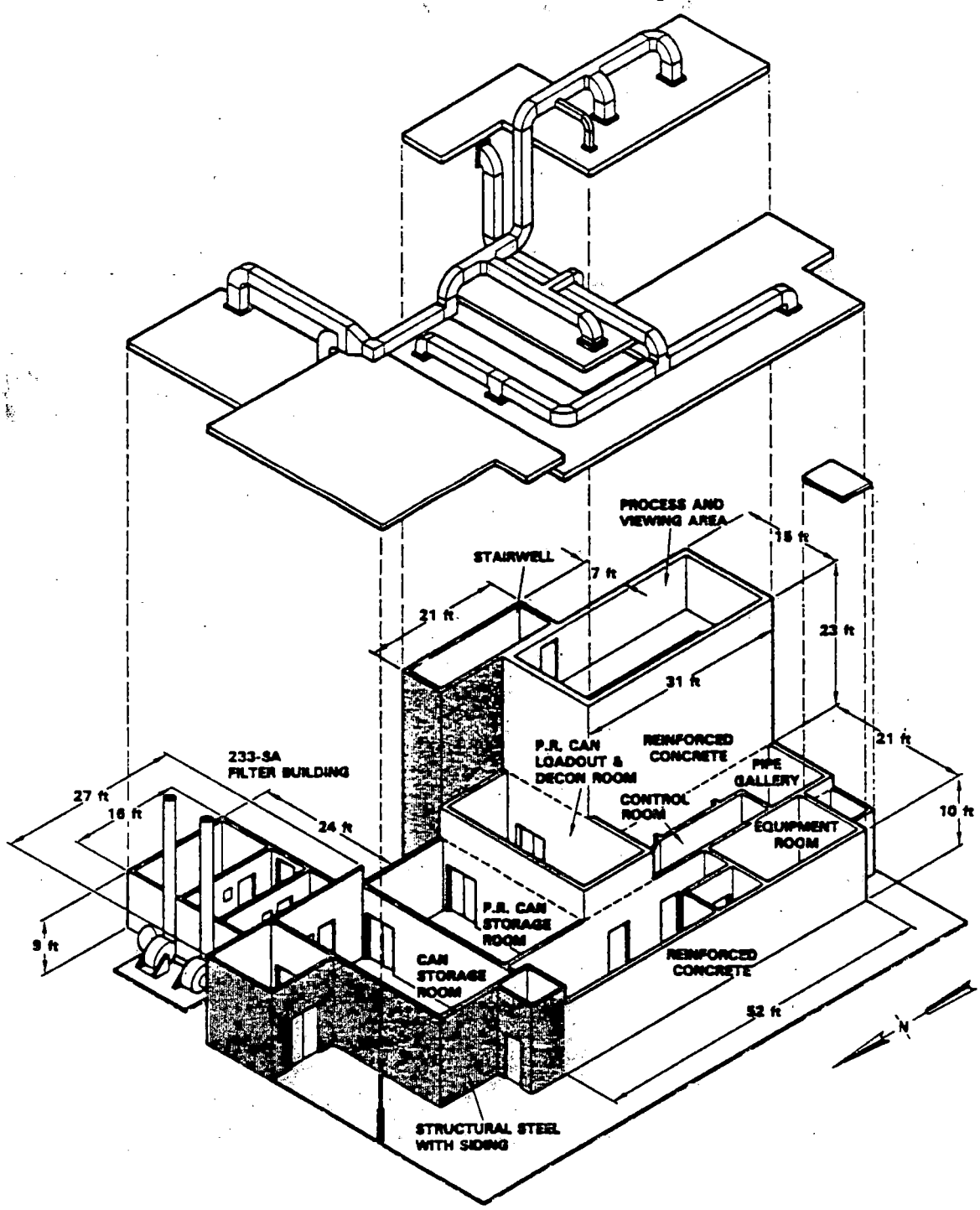

2.2 PROCESS DESCRIPTION

The 233-S Plutonium Concentration Facility was built from 1954 to 1955 and put into service in March 1955. During the initial process, a dilute plutonium nitrate solution was transferred from the 202-S Building to the 233-S Facility. In the 233-S Building, the plutonium solution was concentrated and loaded into product removal (PR) cans for transport to Z Plant for further processing. In 1962, the operation was expanded to include neptunium concentration and loadout process, along with an ion-exchange purification process. In November 1963, a chemical reaction in the ion-exchange unit resulted in a fire that extensively damaged the process equipment spreading gross alpha contamination within the process area and general contamination to other portions of the facility. Parts of the area were cleaned of gross contamination; nonsmearable alpha contamination was fixed using a special paint. The facility was then put back into operation using the original evaporation process.

The 233-SA Filter Building contains the exhaust ventilation equipment for the 233-S Building. Exhaust air leaves the 233-S Building via roof-mounted ductwork. The 233-SA Building contains two parallel sets of filters. After passing through one of these filter banks, the air is discharged through one of the two 296-S-7 Stacks located adjacent to the building.

3.0 STATUS OF OPERATION

The 233-S Plutonium Concentration Facility is surplus and retired from service. No operations or processes have been conducted at the facility since it was shut down in 1967. Since the 233-S Facility was deactivated, the identified critical systems have been maintained under an ongoing surveillance and maintenance program. In addition, stabilization activities were conducted in 1987. The stabilization activities were limited to containing the high levels of contamination inside the process hood; decontaminating the viewing room, stairwell, and loadout room; and cleaning up the adjacent areas outside the 233-S Building. No decontamination activities were attempted inside the process hood or pipe gallery. The only support facilities in use are the special work permit (special clothing) (SWP) change room and lavatory, which is used by surveillance personnel conducting surveillance inspections and periodic maintenance. The process system is physically incapable of operating because transfer lines have been disconnected, equipment removed, etc. The few systems that remain in operation at 233-S include raw water, sanitary water, steam, instrument air, sanitary sewer, electrical, lighting, and the building exhaust system (296-S-7W Stack). The facility exhibits a dose rate and radioactive surface contamination in the process areas.

The 233-SA Filter Building provides exhaust ventilation for the 233-S Building. The 296-S-7W Stack is currently in operation. The 296-S-7E Stack is in standby mode. Both fans are electrically driven. Only the electrical system is operational. The liquid level in a seal pot for the filters is actively maintained by surveillance personnel who hand carry water. No radiological or nonradiological hazardous waste or material is associated with the seal pot.

4.0 SOURCE TERM

No process materials or wastes are being "generated" at the 233-S Plutonium Concentration Facility. However, as a result of past operations, radioactive waste and other hazardous materials do exist. The Section 3.1 identifies wastes and materials that may have a potential for entering an effluent stream.

4.1 RADIOACTIVE MATERIALS

The following are radioactive materials or wastes that have been identified or are potentially present in the facilities.

- ASBESTOS - Radioactive contaminated asbestos (original facility building material) used for insulation is potentially present.
- LEAD - Radioactive contaminated lead (original facility building material) used for shielding is potentially present.
- ROOM WASTE - A minimal amount of radioactive "room" wastes, limited to SWPs, swipes, and other materials used during routine surveillance and maintenance activities, is routinely collected at one radiation area exit point each in the 233-S Building and in the 233-SA Building and properly disposed of in accordance with established procedures.
- SURFACE CONTAMINATION - Fixed and loose surface contamination is present in both the 233-S and 233-SA buildings.

4.2 NONRADIOACTIVE HAZARDOUS MATERIAL

Presently, no identified regulated materials or waste [i.e., *Resource Conservation and Recovery Act of 1976* (RCRA), *Comprehensive Environmental Response, Compensation, and Liability Act of 1980* (CERCLA), *Superfund Amendments and Reauthorization Act of 1986* (SARA)] are stored in the facilities. The following materials are still in use as originally designed.

- ASBESTOS - An original facility ybuilding material used for insulation
- LEAD - An original facility building material used for shielding
- POLYCHLORINATED BIPHENYLS - An original facility building material contained in light ballasts in florescent light fixtures, and transformers.

However, other chemical constituents could exist in the buildings. An historical review of the types of chemicals used during operations has been documented in WHC-SD-DD-TI-056, *233-S Potential Chemical Hazards* (WHC 1990). The information will be used to support the characterization required for future decommissioning activities.

5.0 POTENTIAL UPSET-OPERATING CONDITIONS

The list of radioactive waste and other hazardous materials was reviewed to determine if a potential exists for any of the available radioactive and nonradioactive hazardous materials or wastes to enter an effluent stream either under routine conditions or identified credible upset conditions.

5.1 ROUTINE CONDITIONS

Routine operating activities for a deactivated facility are minimal. Radioactive and hazardous materials or wastes (except for the small amount of room wastes identified in Section 3.1) are not generated at the facility. As noted before, only the raw water, sanitary water, steam, instrument air, sanitary sewer, electrical, lighting, and building exhaust systems (296-S-7W Stack) are operating in the 233-S Building and only the electrical system is operational in the 233-SA Building.

Only two of these active systems may result in an effluent stream to the environment: the sanitary sewer system and the 296-S-7W Exhaust Stack. Several sanitary sewer lines from a few nonradiological, nonhazardous sources in the building intersect with other building lines before entering a septic tank and associated tile fields. No known radioactive or nonradioactive hazardous materials are in proximity of the sanitary sewer lines; therefore, these materials would not be present in the lines during routine activities (i.e., no source terms identified). The 296-S-7W Exhaust Stack, the 233-S Building main radiological effluent discharge point, operates continuously. The exhaust system provides a slight negative pressure on the facility and discharges HEPA filtered air from the 233-S Building to the environment. Both stacks (296-S-7E and 296-S-7W) have identical record samplers and a single switchable alpha continuous air monitor (CAM) unit. No past recordable releases (based on the CAM Hi Radiation Alarm at 2000 cpm) are documented during routine activities (i.e., no source terms identified). The radionuclide concentrations for this stack are reported in WHC-EP-0141-2, *Westinghouse Hanford Company Effluent Discharges and Solid Waste Management Report for Calendar Year 1989: 200/600 Areas* (Brown 1990).

Neither the 233-S Building nor the 233-SA Building has nonradiological gaseous effluent discharge points.

5.2 UPSET CONDITIONS

Upset operating conditions in a deactivated facility can be difficult to identify. The Guide (WHC 1991) defines an upset condition as, "Any one condition that is outside the normal process operating parameters, or an unusual plant operating condition where one confinement/containment barrier or engineered control has failed." The Guide (Section IV-2-1) (WHC 1991) also states that, "Facility building materials... should not be included unless there is a significant potential for release during an upset condition." The radioactive and nonradioactive hazardous materials identified in Section 3.0

were reviewed against the potential of being released to an effluent stream as a result of an upset condition. If no credible upset condition could be identified, further discussion was considered unwarranted.

5.2.1 Radioactive Materials

5.2.1.1 Asbestos. No past occurrence has been recorded in which asbestos-containing materials were released in radioactive contaminated areas in quantities that could produce a "...significant potential for release..." (WHC 1991) to an effluent stream (i.e., the 296-S-7W Exhaust Stack). The potentially radioactively contaminated asbestos that exists in the building is inaccessible to both personnel and operational equipment that could possibly disturb asbestos surfaces. The probability of any asbestos insulating material becoming dislodged from a sufficiently large area during any single incident and releasing enough fibers (i.e., not settling on the surrounding equipment, walls, and floors) to enter the exhaust flow stream is considered low.

5.2.1.2 Lead. No credible upset condition can be identified that would result in the migration, by any pathway, of in-place radioactively contaminated lead shielding to an effluent stream. It is considered highly improbable for any radioactively contaminated lead that potentially exists in the building to enter a gaseous or liquid effluent stream.

5.2.1.3 Room Waste. No past contamination migration from the designated radiation area collection points to the environment has been recorded. All personnel that enter contaminated areas have been trained and must survey upon exiting the area. Therefore, the probability for radioactively contaminated room waste to migrate from a collection point is considered low. Any contamination discovered (areas are routinely surveyed) in a nonradiologically identified area, resulting from the above upset condition, would be cleaned up and disposed of appropriately. The probability for radioactively contaminated room waste to migrate from a collection point to the environment is considered very low.

5.2.1.4 Surface Contamination. No past occurrence has been recorded in which the fixed or lose surface contamination present in the building has migrated to the exhaust flow stream. The majority of contamination exists in areas that are inaccessible to both personnel and operational equipment, which could possibly disturb contaminated surfaces. The probability of any radioactive material becoming dislodged from a sufficiently large area during any single incident and releasing to the exhaust flow stream is considered very low.

5.2.2 Nonradioactive Hazardous Material

5.2.2.1 Asbestos. No past occurrence has been recorded in which asbestos-containing materials were released in quantities that could produce a "...significant potential for release..." to an effluent stream (WHC 1991) (i.e., the 296-S-7W Exhaust Stack). Because only routine surveillance and minimal maintenance occurs at the retired facility, the probability of personnel or operational equipment inadvertently dislodging asbestos-containing insulation from a sufficiently large area during any single

incident, and releasing enough fibers (i.e., not settling on the surrounding equipment, walls, and floors) to enter the exhaust flow stream is considered low.

5.2.2.2 Lead. No credible upset condition can be identified that would result in the migration (by the pathway) of in place lead shielding to an effluent stream. The lead, if any, would exist in areas not frequented by personnel and it is considered highly improbable for any lead to enter a gaseous or liquid effluent stream.

5.2.2.3 Polychlorinated Biphenyls. No past occurrence has been recorded in which PCB-containing light ballasts or electrical transformers have leaked or spilled in quantities that could produce a "...significant potential for release..." (WHC 1991) to an effluent stream (i.e., the sanitary sewer system). The areas containing the florescent light fixtures do not have floors, making the sanitary sewer lines inaccessible for transport. Any ballast or transformer rupture in which contents have leaked or spilled would be located during routine surveillance, identified as potentially containing PCBs, cleaned up, and disposed of appropriately. No credible avenue for migration by any pathway to an effluent stream can be identified.

5.3 EFFLUENT POINT OF DISCHARGE

If a material were identified (see Section 4.0) as having even a remote chance of being a source term and having a chance of entering an effluent stream, further evaluation is promised below for the probability and consequence of a release to the environment. No source points for routine activities that released radiological or nonradiological hazardous materials above regulatory values were identified. Therefore, only upset conditions with a potential for releasing radiological or nonradiological hazardous materials are identified below.

5.3.1 Gaseous Effluent Streams

The following points of discharge were reviewed (Guide, Section 5.0) (WHC 1991) and either are identified as inactive for the facility or have the potential for a release to the environment described.

- Supply Intakes - A supply fan is operational in the 233-S Building.
- Main Stack - (296-S-7W)

If asbestos fiber (radioactive or nonradioactive) migrated into the exhaust stream, it can be considered highly improbable for any asbestos fibers to pass through the two HEPA filters in series (each has an efficiency of equal to or greater than 99.95%), resulting in a release to the environment. (Failure of a decontamination factor at the same time as asbestos is dislodged is not credible.)

In the event of radiological surface contamination migration into the exhaust stream, it can be considered highly improbable for any contamination to pass through the two HEPA filters in series (each has an efficiency of

equal to or greater than 99.95%), resulting in a release to the environment. (Failure of a decontamination factor at the same time as contamination is dislodged is not credible.) No past recordable releases (based on the CAM Hi Radiation Alarm at 2000 cpm) are documented. (NOTE: Even when the stack has been temporarily shut down (i.e., loss of power), sampling provided by Health Physics has not indicated any migration of radioactive materials through the exhaust system.)

- Building Vents - These are an inactive system.
- Building Exhausts - These are inactive systems.
- Building Ventilation - See the Main Stack description.
- HVAC Exhaust - See the Main Stack description.
- Unmonitored Ingress/Egress Points - The facilities have no unmonitored ingress/egress points that would allow for the radiological contamination migration from the designated radiation area collection points to the environment, even during an emergency exit.
- Any other Filtered or Unfiltered Stream to the Environment - No other filtered or unfiltered stream has been identified.

5.3.2 Liquid Effluent Streams

The following points of discharge were reviewed (Guide, Section 5.0) (WHC 1991) and either are identified as inactive for the facility or have the potential for a release to the environment described.

- Storm Drain/Facility Grounds Runoff - This is an inactive system.
- Sanitary Sewer - As indicated in Section 4.0, no source term that could enter the effluent stream has been identified.
- Chemical Sewer - This is an inactive system.
- Cooling Water - This is an inactive system.
- Liquid Radioactive Streams - These are inactive systems.
- Steam Condensate Streams - These are inactive systems.
- Process Condensate Streams - These are inactive systems.
- Any other Filtered or Unfiltered Stream to the Environment - No other filtered or unfiltered stream has been identified.

6.0 SUMMARY

The 233-S Plutonium Concentration Facility potential radiological airborne effluent is routinely sampled and the results are reported in WHC-EP-0141-2 (Brown 1990). The monitored airborne effluent: Exhaust Stack 296-S-7W is considered a major stack, or "significantly contributing to the total activity discharged from the 200 Areas." However, the stack is reported as having a radionuclide concentration (μCi/mL) below the lower limit of detection (LLD) for $^{239,240}Pu$ (a ratio to administrative control value [ACV] of 0.02) and a radionuclide concentration for ^{241}Am at a ratio to ACV of 0.01. No potential radiological liquid effluents has been identified for the building. It was established earlier that for most cases, no upset conditions were identified in which radiological materials or wastes could enter an effluent stream and be released to the environment. The few upset conditions that appear credible have a very low probability of occurrence. It is also concluded that no significant radiological increases to the environment would result during the occurrence of any of the identified upset conditions.

No potential nonradiological hazardous effluents (airborne or liquid) are identified or reported in WHC-EP-0141-2 (Brown 1990) for the 233-S Plutonium Concentration Facility. It was established earlier that for most cases, no upset conditions were identified in which nonradiological hazardous materials or wastes could enter an effluent stream and be released to the environment. The few upset conditions that appear credible are assumed to have a very low probability of occurrence. It is also assumed that no significant hazardous increases to the environment would result during the occurrence of any of the identified upset conditions.

Based on the evaluation documented in Sections 3.0 through 5.0, the reported effluent data summarized above, and the initial results in the annual environmental summary report, namely: "the calculated 50-yr effective dose equivalent for the hypothetically maximally exposed individual from all Hanford Site airborne and liquid effluents was 0.05 mrem in 1989," (Brown 1990) the following conclusions can be drawn:

- The total projected dose from radionuclides does not exceed 0.1 mrem EDE from the 233-S Plutonium Concentration Facility discharge point

- No regulated materials are discharged from the 233-S Plutonium Concentration Facility that exceeds 100% of a reportable quantity or a permitted quantity.

Therefore, a FEMP is not required for the surplus 233-S Plutonium Concentration Facility (see Attachment).

7.0 REFERENCES

Brown, 1990, *Westinghouse Hanford Company Effluent Discharges and Solid Waste Management Report for Calendar Year 1989: 200/600 Areas*, WHC-EP-0141-2, Westinghouse Hanford Company, Richland, Washington.

Comprehensive Environmental Response, Compensation, and Liability Act of 1980, as amended, 42 USC 9601 et seq.

Resource Conservation and Recovery Act of 1976, as amended, 42 USC 6901, et seq.

Superfund Amendment and Reauthorization Act of 1986, as amended, 42 USC 11001 et seq.

WHC, 1990, *233-S Potential Chemical Hazards*, WHC-SD-DD-TI-056, Westinghouse Hanford Company, Richland, Washington.

WHC, 1991, *A Guide to Preparing Hanford Site Facility Effluent Monitoring Plans*, WHC-EP-0438, Westinghouse Hanford Company, Richland, Washington.

ATTACHMENT 1

DETERMINATION OF FACILITY EFFLUENT MONITORING PLAN REQUIREMENT

This page intentionally left blank.

ATTACHMENT 1

DETERMINATION OF FACILITY EFFLUENT MONITORING PLAN REQUIREMENT

FACILITY: 233-S Plutonium Conc. DISCHARGE POINT: 296-S-7W (Exhaust Stack)

FACILITY INVENTORY AT RISK OF RADIOACTIVE MATERIALS

Radionuclide	Physical/ chemical form	Quantity (Ci)	Quantity released	Projected dose (mrem)
1. $^{239,240}Pu$	Solid	<5.3 E - 07	<4.21 E - 15 (μCi/mL)	<0.1
2. ^{241}Am	Solid	3.5 E - 07	2.79 E - 15	<0.1
3.				
Total				<0.1

FACILITY INVENTORY AT RISK OF NONRADIOACTIVE HAZARDOUS MATERIALS

Regulated material	Quantity (lb)	Quantity released	Reportable quantity (lb)	% of reportable quantity/ year
1. None Identified				
2.				
3.				

Identification of Reference Material

WHC-EP-0141-2

If the total projected dose from radionuclides exceeds 0.1 mrem EDE from any one discharge point of if any one regulated material discharged from a facility exceeds 100% of the reportable quantity or a permitted quantity, a FEMP is required for that facility. Check the appropriate space below.

FEMP is required _____ FEMP is not required X

EVALUATOR J. R. Brehm DATE 1-24-91

MANAGER, ENVIRONMENTAL L. P. Diediker DATE 3-15-91

FACILITY MANAGER G. E. Van Sickle DATE 2-14-91

This page intentionally left blank.

9413136.0927

PART 9

PROTECTIVE EQUIPMENT DECONTAMINATION FACILITY

FACILITY EFFLUENT MONITORING PLAN DETERMINATION

This page intentionally left blank.

9413136.0920

CONTENTS

1.0 INTRODUCTION 1

2.0 FACILITY DESCRIPTION/STATUS OF OPERATION 1
2.1 FACILITY PHYSICAL DESCRIPTION 1
2.2 PROCESS DESCRIPTION 1
2.3 STATUS OF OPERATION 2

3.0 SOURCE TERMS 2

4.0 POTENTIAL UPSET-OPERATING CONDITIONS 3

5.0 SUMMARY 3

6.0 REFERENCES 4

ATTACHMENT

1 DETERMINATION OF FACILITY EFFLUENT MONITORING PLAN REQUIREMENT A1-1

LIST OF TERMS

DOP	dioctyl phthalate
EDE	effective dose equivalent
FEMP	facility effluent monitoring plan
MSDS	material safety data sheets
PEDF	Protective Equipment Decontamination Facility
SARA	*Superfund Amendments and Reauthorization Act of 1986*

FACILITY EFFLUENT MONITORING PLAN DETERMINATION FOR THE PROTECTIVE EQUIPMENT DECONTAMINATION FACILITY

1.0 INTRODUCTION

This document provides information to determine if a Facility Effluent Monitoring Plan (FEMP) is required for the Protective Equipment Decontamination Facility (PEDF).

2.0 FACILITY DESCRIPTION/STATUS OF OPERATION

2.1 FACILITY PHYSICAL DESCRIPTION

The PEDF is located in the 200 West Area of the Hanford Site. The original laundry was constructed in 1952 and has been expanded since then. The current complex includes approximately 25,000 ft^2 of connected buildings: 2724-W, 2724-WA, 2724-WB, and MO-406. Radioactive and nonradioactive washing and drying have separate process areas in building 2724-W. The remaining buildings are for laundry finishing tasks, storage, change rooms, offices, and a lunchroom. Mask cleaning and repair are performed in MO-412, which is adjacent to the laundry facility and is referred to as the mask station.

2.2 PROCESS DESCRIPTION

In laundering the clothing, the facility handles commercial laundry products and maintenance chemicals. The laundry processes both radioactively contaminated and nonradioactively contaminated clothing. Thus, a potential exists to generate radioactive airborne and liquid effluents.

Although the laundry handles both radioactive and nonradioactive material, the mask station handles only nonradioactive equipment. A mask decontamination room with high efficiency particulate air (HEPA) filtered exhaust is not in use and is not expected to run in the future because of operational inefficiencies. The radioactively contaminated masks are decontaminated at the 2706 Building in the 200 West Area before being received at the mask station. No potential exists to generate radioactive airborne and liquid effluents.

After the masks are sanitized and inspected, the mask canisters and face pieces are tested on a Q-127 smoke generator before being revised in the field. The mask washer uses dishwashing soap and a sanitizer that do not contain reportable quantities of hazardous materials. The Q-127 heats dioctyl phthalate (DOP) to generate smoke that exhausts through a portable HEPA filter vacuum and discharged back into the room.

2.3 STATUS OF OPERATION

The PEDF is currently handling radioactive and nonradioactive laundry and mask-cleaning operations for the site.

3.0 SOURCE TERMS

The potential radioactive airborne effluent releases during routine laundry operating conditions have been evaluated. The PEDF has three air discharge points: Roto-clone and two nonradioactive clothes dryers. The laundry facility requires no HEPA filtration because of the very low levels of radioactivity. Therefore, no filter upset conditions were reviewed. The Roto-clone is a hydrostatic precipitator or wash bath system that removes lint and dust particulate from the radioactive dryers exhaust and room air.

To reduce the potential of room airborne radiation, the laundry bags are not opened or presorted before washing. After the laundry bag rope closures are untied, the bags are placed in the washers and submerged in water before the clothing is machine tumbled out of the bags. In addition, strict radiological limits on all washable clothing are required by radiation work procedures. The 2724-W laundry facility, the 296-W-01 (L100) stack, released 1.67×10^{-6} Ci of gross alpha and 1.46×10^{-5} Ci of gross beta in 1989 according to WHC-EP-0141-2 (WHC 1990a). Using this data, the Environmental Protection Group is verifying the offsite dose determination of less than 0.1 mrem/yr (Carpenter 1991). It is recommended that a FEMP is not required for radioactive airborne effluents based on this low level of radioactivity.

The two nonradioactive dryers have lint filters for particulate emissions. The function of the clothes dryers have no potential to generate radioactive or hazardous airborne effluents. It is recommended that a FEMP is not required for these effluents.

For the liquid effluent discharge, all laundry process chemicals are released through the washers and collected in a common sump, which discharges both radioactive and nonradioactive effluents to the 216-W-LC Laundry Crib. The sump also collects all steam condensate, equipment wash-downs from the floor drains, and a minor stream from one handwashing sink. A vibratory filter is used to remove sand, lint, and miscellaneous trash (e.g., pens, pencils, etc.) from the wastewater. Effluent filtration is required to prevent particulate from plugging the laundry crib, not to remove radionuclides or hazardous materials. Therefore, no filter upset conditions were reviewed. In the past, the facility drains have backed up causing flooding on the floor, out the delivery door, and onto the driveway. However, no contamination has been detected following these events.

The 2724-W Laundry Wastewater Stream Specific Report, WHC-EP-0342 Addendum 11, (WHC 1990b), has proposed that this wastestream is not designated a dangerous waste. The evaluation included a review of the material safety data sheets (MSDS), *Superfund Amendments and Reauthorization Act of 1986* (SARA) inventory reports, operating procedures, and a diligent chemical search of the facility. Based on the quantities of powdered soap that would be

needed to exceed the reportable quantities, a process upset or spill is not credible as discharging significant amounts of hazardous materials. Several hundred pounds of soap would have to be flushed down the floor drains rather than be swept up for reuse. Thus, no potential exists for release of regulated substances above reportable quantities through this pathway.

Information on the potential radioactive liquid effluent releases from the laundry facility during routine operating conditions indicates the radiation effective dose equivalent to the maximally exposed member of the general public consuming the water, at the point of intake, would be greater than 4 mrem/yr (WHC 1990b). This exposure is based on the radionuclide effluent concentrations above the 4% level of the Derived Concentration Guide value. It is recommended that a FEMP be prepared describing the effluent monitoring requirements for radioactive liquid releases.

An evaluation of the mask cleaning and maintenance facility for potential radioactive liquid or airborne effluent releases has been performed. No radioactively contaminated respirators are allowed to be received at this facility. Based on this requirement and operational history, it is recommended that a FEMP is not required for either of these releases.

A review of the hazardous liquid effluent releases during both routine and upset mask-station operating conditions has been performed. Based on the MSDS information and SARA inventories, no potential exists for releasing regulated material above the reportable quantities. If a spill were to occur, it would be contained within the facility. It is recommended that a FEMP is not required for liquid discharges of hazardous materials.

No air exhausts to the environment; therefore there are no hazardous airborne releases. Except for a fugitive amount, the DOP material is recycled and retained within the equipment which is 0.84% of the reportable quantity of 5,000 lb. Because no hazardous airborne releases exhaust to the environment and the fugitive amount is of no concern, a FEMP is not required for hazardous airborne releases from the mask station.

4.0 POTENTIAL UPSET-OPERATING CONDITIONS

No potential upset conditions have been identified or deemed credible. No mechanisms were identified for routine release of any radionuclides offsite and, therefore, no analyses were performed for operational radiological impacts to the offsite population. Ecological impacts from this facility are essentially unchanged from present conditions.

5.0 SUMMARY

Based on the information collected and the data reviewed, the FEMP determination for the PEDF indicates that a FEMP will be required for the wash water discharge because of the liquid effluent radionuclide concentration.

This determination considered radioactive and hazardous materials present in the facility and the potential for releases from airborne and liquid effluent pathways.

6.0 REFERENCES

Superfund Amendments and Reauthorization Act of 1986, Public Law 99-499, 42 USC 11001 et seq.

WHC, 1990a, *Westinghouse Hanford Company Effluent Discharges and Solid Waste Management Report for Calendar Year 1989: 200/600 Areas*, WHC-EP-0141-2, Westinghouse Hanford Company, Richland, Washington.

WHC, 1990b, *The 2724-W Laundry Wastewater Stream Specific Report*, WHC-EP-0342 Addendum 11, Westinghouse Hanford Company, Richland Washington.

9413126.0035

ATTACHMENT 1

DETERMINATION OF FACILITY EFFLUENT MONITORING PLAN REQUIREMENT

This page intentionally left blank.

ATTACHMENT 1

DETERMINATION OF FACILITY EFFLUENT MONITORING PLAN REQUIREMENT

FACILITY Protective Equipment Decontamination Facility (PEDF) **DISCHARGE POINT** 296-W-01 (L100)

FACILITY INVENTORY AT RISK OF RADIOACTIVE MATERIALS

Radionuclide	Physical/ chemical form	Quantity (Ci)	Quantity released	Projected dose (mrem)
1. Gross Alpha	Particulate		1.67 E-06	<0.1 mrem/yr
2. Gross Beta	Particulate		1.46 E-05	<0.1 mrem/yr
TOTAL			1.63 E-05	<0.1 mrem/yr

FACILITY INVENTORY AT RISK OF NONRADIOACTIVE HAZARDOUS MATERIALS

Regulated material	Quantity (lb)	Quantity released (lb)	Reportable quantity (lb)	% of reportable quantity/yr
1. None				
TOTAL				

Identification of Reference Material

Westinghouse Hanford Company Effluent Discharges and Solid Waste Management Report for Calendar Year 1989: 200/600 Areas, Brown, M. J., et. al., WHC-EP-0141-2.

If the total projected dose from radionuclides exceeds 0.1 mrem EDE from any one discharge point or if any one regulated material discharged from a facility exceeds 100% of a reportable quantity or a permitted quantity, a FEMP is required for that facility. Check the appropriate space below.

FEMP is required _____ FEMP is not required X

EVALUATOR [signature] DATE 12/21/90

MANAGER, ENVIRONMENTAL [signature] DATE 1-11-91

FACILITY MANAGER [signature] DATE 12-21-90

ATTACHMENT 1

DETERMINATION OF FACILITY EFFLUENT MONITORING PLAN REQUIREMENT

FACILITY Protective Equipment Decontamination Facility (PEDF) **DISCHARGE POINT** Dryers

FACILITY INVENTORY AT RISK OF RADIOACTIVE MATERIALS

Radionuclide	Physical/ chemical form	Quantity (Ci)	Quantity released	Projected dose (mrem)
1. None				
2.				
TOTAL				

FACILITY INVENTORY AT RISK OF NONRADIOACTIVE HAZARDOUS MATERIALS

Regulated material	Quantity (lb)	Quantity released (lb)	Reportable quantity (lb)	% of reportable quantity/yr
1. None				
TOTAL				

Identification of Reference Material

If the total projected dose from radionuclides exceeds 0.1 mrem EDE from any one discharge point or if any one regulated material discharged from a facility exceeds 100% of a reportable quantity or a permitted quantity, a FEMP is required for that facility. Check the appropriate space below.

FEMP is required _____ FEMP is not required X

EVALUATOR [signature] DATE 12/21/90

MANAGER, ENVIRONMENTAL [signature] DATE 1-11-91

FACILITY MANAGER [signature] DATE 12-21-90

ATTACHMENT 1

DETERMINATION OF FACILITY EFFLUENT MONITORING PLAN REQUIREMENT

FACILITY Protective Equipment Decontamination Facility (PEDF) **DISCHARGE POINT** 296-W-LC (Laundry Crib)

FACILITY INVENTORY AT RISK OF RADIOACTIVE MATERIALS

Radionuclide	Physical/ chemical form	Quantity (Ci)	Quantity released	Projected dose (mrem)
1. ^{90}Sr	Liquid	9.6 E-04	9.6 E-04	>4 mrem/yr
2.				
TOTAL		9.6 E-05	9.6 E-05	>4 mrem/yr

FACILITY INVENTORY AT RISK OF NONRADIOACTIVE HAZARDOUS MATERIALS

Regulated material	Quantity (lb)	Quantity released (lb)	Reportable quantity (lb)	% of reportable quantity/yr
1. Ammonium Bicarbonate	1,250	None	5,000	NA
2. Sodium Metasilicate	1,070	None	100	NA
3. Sodium Phosphate	640	None	5,000	NA
TOTAL				

Identification of Reference Material

Westinghouse Hanford Company Effluent Discharges and Solid Waste Management Report for Calendar Year 1989: 200/600 Areas, Brown, M. J., et. al., WHC-EP-0141-2.

If the total projected dose from radionuclides exceeds 0.1 mrem EDE from any one discharge point or if any one regulated material discharged from a facility exceeds 100% of a reportable quantity or a permitted quantity, a FEMP is required for that facility. Check the appropriate space below.

EVALUATOR Reviewed Date FEMP is not required DATE 12/21/90

MANAGER, ENVIRONMENTAL Date DATE 12/22/90

Manager, Environmental Date

FACILITY MANAGER Date DATE 12/27/90

Facility Manager Date

ATTACHMENT 1

DETERMINATION OF FACILITY EFFLUENT MONITORING PLAN REQUIREMENT

FACILITY MO-412/200-W **DISCHARGE POINT** Mask Washer Sink

FACILITY INVENTORY AT RISK OF RADIOACTIVE MATERIALS

Radionuclide	Physical/ chemical form	Quantity (Ci)	Quantity released	Projected dose (mrem)
1. None				
2.				
TOTAL				

FACILITY INVENTORY AT RISK OF NONRADIOACTIVE HAZARDOUS MATERIALS

Regulated material	Quantity (lb)	Quantity released (lb)	Reportable quantity (lb)	% of reportable quantity/yr
1. None				
TOTAL				

Identification of Reference Material

If the total projected dose from radionuclides exceeds 0.1 mrem EDE from any one discharge point or if any one regulated material discharged from a facility exceeds 100% of a reportable quantity or a permitted quantity, a FEMP is required for that facility. Check the appropriate space below.

FEMP is required _____ FEMP is not required X

EVALUATOR [signature] DATE 12/21/90

MANAGER, ENVIRONMENTAL [signature] DATE 1-11-91

FACILITY MANAGER [signature] DATE 12-21-90

ATTACHMENT 1

DETERMINATION OF FACILITY EFFLUENT MONITORING PLAN REQUIREMENT

FACILITY MO-412/200-W **DISCHARGE POINT** O-127 (Fugitive)

FACILITY INVENTORY AT RISK OF RADIOACTIVE MATERIALS

Radionuclide	Physical/ chemical form	Quantity (Ci)	Quantity released	Projected dose (mrem)
1. None				
2.				
TOTAL				

FACILITY INVENTORY AT RISK OF NONRADIOACTIVE HAZARDOUS MATERIALS

Regulated material	Quantity (lb)	Quantity released (lb)	Reportable quantity (lb)	% of reportable quantity/yr
1. Dioctyl Phthalate	17	42	5,000	0.84%
TOTAL				

Identification of Reference Material

If the total projected dose from radionuclides exceeds 0.1 mrem EDE from any one discharge point or if any one regulated material discharged from a facility exceeds 100% of a reportable quantity or a permitted quantity, a FEMP is required for that facility. Check the appropriate space below.

FEMP is required _____ FEMP is not required X

EVALUATOR [signature] DATE 12/21/90

MANAGER, ENVIRONMENTAL [signature] DATE 1-11-91

FACILITY MANAGER [signature] DATE 12-21-90

This page intentionally left blank.

PART 10

GROUT TREATMENT FACILITY

FACILITY EFFLUENT MONITORING PLAN DETERMINATION

This page intentionally left blank.

CONTENTS

1.0 INTRODUCTION 1

2.0 FACILITY DESCRIPTION/STATUS OF OPERATION 2
2.1 THE DRY MATERIALS FACILITY 2
2.2 THE 241-AP-026 WASTE PUMP PIT AND TRANSFER PIPING 2
2.3 GROUT PROCESSING FACILITY 2
2.4 GROUT DISPOSAL FACILITY 3

3.0 SOURCE TERM 4

4.0 POTENTIAL UPSET-OPERATING CONDITIONS 4
4.1 TRANSFER PROCESSES 4
4.2 VENTILATION SYSTEMS 5

5.0 SUMMARY 6

6.0 REFERENCES 6

ATTACHMENTS

1 FACILITY EFFLUENT MONITORING PLAN DETERMINATION SHEETS A1-1

2 EQUIVALENT CONCENTRATION OF REFERENCE DOUBLE-SHELL TANK WASTE AND TOXICITY DATA SOURCES AND CATEGORIES A2-1

3 PROCESS MASS COMPREHENSIVE ENVIRONMENTAL RESPONSE, COMPENSATION, AND LIABILITY ACT REPORTABLE QUANTITY EVALUATION A3-1

4 IN-PROCESS VOLUMES A4-1

LIST OF TABLES

1 Modeled Doses from Controlled and Uncontrolled Operations 6

LIST OF TERMS

CERCLA	*Comprehensive Environmental Response, Compensation, and Liability Act of 1980*
DMF	Dry Materials Facility
DOE	U.S. Department of Energy
DOE-RL	U.S. Department of Energy-Richland Operations Office
DST	double-shell tank
EDE	effective dose equivalent
FEMP	facility effluent monitoring plan
GDF	Grout Disposal Facility
GPF	Grout Processing Facility
GTF	Grout Treatment Facility
HEPA	high efficiency particulate air (filter)
LCT	liquid collection tank
NESHAP	National Emission Standards for Hazardous Air Pollutants
PIH	portable instrument house
SARA	*Superfund Amendment and Reauthorization Act of 1986*
WAC	Washington Administrative Code
Westinghouse Hanford	Westinghouse Hanford Company

GROUT TREATMENT FACILITY FACILITY EFFLUENT MONITORING PLAN DETERMINATION

1.0 INTRODUCTION

The U.S. Department of Energy (DOE) has recently issued new requirements for complying with DOE and other Federal agency environmental regulations. The DOE orders now require environmental monitoring plans for each site, facility, or process that uses, generates, releases, or manages significant pollutants of radioactive and hazardous materials.

The environmental monitoring plan has two parts: a facility effluent monitoring plan (FEMP) and an environmental surveillance plan (DOE Order 5400.1, (DOE 1988a). In DOE/RL 89-18 (DOE/RL 1989), the U.S. Department of Energy-Richland Operations Office (DOE-RL) has assigned the current research contractor (Battelle) the responsibility for environmental surveillance. In the same document (DOE-RL 1989), DOE-RL has assigned Westinghouse Hanford Company (Westinghouse Hanford) the responsibility for effluent and related near-field monitoring activities, except for some research and development and for facilities operated solely by contractors other than Westinghouse Hanford.

Westinghouse Hanford has also been charged with developing a guidance document to be used for preparing Hanford Site FEMPs. The document *A Guide For Preparing Hanford Site Facility Effluent Monitoring Plans*, (WHC 1991) provides guidance in the determination of the need for FEMPs for individual facilities and the development of FEMPs when required. A FEMP determination is an initial evaluation of potential radioactive or hazardous material source terms within a facility to determine if a FEMP is required. This document constitutes a FEMP determination evaluation for the Hanford Grout Treatment Facility (GTF). The FEMP determination is provided as Attachment 1; reference materials are listed in Attachment 2.

The GTF is an existing facility astride the southeast border of the 200 East Area of the Hanford Site. The *Final Environmental Impact Statement, Disposal of Hanford Defense High-Level, Transuranic and Tank Wastes* (DOE 1987) referred to the GTF as the Transportable Grout Facility. The facility began construction in 1985 to provide permanent near-surface disposal of mixed low-level and hazardous waste. The GTF is composed of a pump pit and transfer piping from dedicated double-shell feed tanks and three major facilities. The major facilities are the Dry Materials Facility (DMF), the Grout Processing Facility (GPF), and the Grout Disposal Facility (GDF). The GTF was operated between August 1988 and July 1989 for the disposal of non-hazardous, low-level phosphate/sulfate waste. The GPF and DMF facilities are currently on standby with anticipated startup in September 1992. The GDF currently contains one filled waste vault; four additional vaults are being constructed under Project B-714.

2.0 FACILITY DESCRIPTION/STATUS OF OPERATION

Grout treatment is a process of mixing selected double-shell tank (DST) wastes with grout-forming solids and, if necessary, chemical liquid additives. The initial disposal of dangerous wastes is scheduled for 1992.

The disposal of current and projected inventories of DST waste may take 25 yr. During this period, approximately 43 disposal vaults will be constructed, filled, and closed.

The waste is disposed of in batch sizes (campaigns) of approximately 1 Mgal. A combination of dry cementitious materials is mixed with the wastes, and the resulting grout slurry is pumped into near-surface concrete vaults for solidification and permanent disposal.

2.1 THE DRY MATERIALS FACILITY

The DMF receives, blends, and discharges the dry cementitious materials used in the grout-forming process. The DMF truck and railcar consists of unloading facilities, pneumatic transfer piping, material storage and blending facilities, and a truck load-out facility. The DMF is a nonnuclear facility and does not handle hazardous wastes. The DMF does handle portland cement, a hazardous substance subject to the *Superfund Amendment and Reauthorization Act of 1986* (SARA) inventory reporting requirements. Portland cement is not currently subject to toxic substance release reporting requirements under SARA.

Because the DMF is a nonnuclear facility without reportable release requirements for hazardous materials, it does not fall under the purview of FEMP requirements and will not be further addressed in this document.

2.2 THE 241-AP-026 WASTE PUMP PIT AND TRANSFER PIPING

Wastes to be processed at the GTF are received and mixed, if required, in the GTF 241-AP-102 Waste Feed Tank before each campaign. The waste is pumped from the waste feed tank using a deep-well turbine pump housed within the 241-AP-102 Pump Pit. The waste solution is pumped to the GPF through a 2-in. carbon steel pipe encased within a 4-in. carbon steel pipe. The double piping permits leak detection and provides containment of any leak in the primary piping. This transfer pipe is located below ground.

2.3 GROUT PROCESSING FACILITY

The GPF mixes the dry-blended solids and the liquid waste feed to form grout slurry. The GPF consists of various units performing the following functions:

- Dry-blended materials receiving, storage, and feeding
- Process additives storage and dispensing

- Dry-blended material and liquid waste feed mixing
- Grout pumping
- Equipment decontamination
- Process ventilation
- Process control
- Flush solution collection.

Dry-blended material is delivered from the DMF to the GPF in bulk transport trucks. The material is unloaded from the trucks into a storage bin.

For processing, the material is fed to the grout mixer. Liquid waste is also fed to the grout mixer, where it is mixed with the dry solids to form a grout slurry. The grout produced by the mixer is discharged into a surge tank that feeds a progressing cavity grout pump. This pump discharges the slurry to the GPF piping.

The GPF liquid collection tank (LCT), surge tank, and mixer are located in a below-grade containment module. Airborne emissions from this equipment and module are controlled by decontamination sprays, a fabric filter, and redundant dual-high efficiency particulate air (HEPA) filter trains.

2.4 GROUT DISPOSAL FACILITY

The GDF is designed to handle and provide permanent disposal of grouted DST waste. The DST waste contains dangerous components subject to regulation under the Washington State *Dangerous Waste Regulations* [Washington Administrative Code (WAC) 1989]. The GDF consists of the following facilities and equipment:

- Vaults and piping
- Portable instrument house (PIH) and vault instrumentation.

Forty-three vaults are required to dispose of wastes currently identified to be processed by the GTF. Each subsurface rectangular vault is constructed of cast-in-place concrete. The total capacity of a vault, is 212,000 ft^3 (1.59 Mgal).

Grout distribution piping consists of a 2-in. carbon steel pipe encased in a 4-in. carbon steel pipe that runs from the GPF to a single discharge point in the vault. This pipe is located underground.

The PIH is an instrumentation trailer used to transmit monitoring information to the GPF from each active vault. The PIH does not handle the grouted waste.

A portable ventilation system (exhauster) is associated with each vault during active filling and grout curing (stagnant operation). The exhauster provides containment for and controls airborne emissions from the vault with dual-HEPA filtration.

3.0 SOURCE TERM

Methods for developing the source term for the GTF are discussed in *Methods and Data for Use in Determining Source Terms for the Grout Disposal Program* (Hendrickson 1990). The document provides characterization data for the contents of three DSTs considered to be representative of current and future GTF waste feed materials. The document encompasses data on radionuclide, inorganic, and organic constituents of the waste.

The waste source term identified for this determination is normal operating analyses (Hendrickson 1990). The source term for this determination is derived from two fundamental stages of control and operation. These stages of operation are delineated by single-failure evaluation of transfer processes and by single-failure evaluation of ventilation systems.

The GTF does not have any routine liquid discharges. Liquid discharges would be limited to double-failure (accident) releases from transfer piping.

Airborne releases from ventilation systems and module maintenance provide the only significant release potentials under nonaccident scenarios. These releases are discussed in *Grout Treatment Facility Airborne Emissions Projections* (Hendrickson 1991).

For *Comprehensive Environmental Response Compensation and Liability Act of 1980* (CERCLA) and the *Dangerous Waste Regulations* (WAC 1989), toxicity evaluation of the source term has been conducted and provided in the *Grout Treatment Facility Dangerous Waste Permit Application* (DOE/RL-88-27, Draft Revision 2) (DOE-RL 1990). Tables 3.5 and 3.5a from DOE/RL-88-27 (DOE-RL 1990) detailing this evaluation are included as Attachment 3. Attachment 4 details the application of CERCLA reporting requirements to the inventory at risk.

4.0 POTENTIAL UPSET-OPERATING CONDITIONS

Potential upset conditions (assuming single failure) are those involving transfer process failures and ventilation system failures.

4.1 TRANSFER PROCESSES

For this evaluation, the hazardous material inventory at risk is assumed to be contained in the volume of waste feed and grouted waste within the process at any one time. As such, the process volume of those facilities discussed in Sections 2.2 and 2.3 and the piping described in Section 2.4 constitute the inventory at risk. Neither waste feed in 241-AP-102 nor grouted waste within a vault are considered at risk in transfer processes.

Attachment 5 to this document details the evaluation of the total equivalent waste feed volume contained in the transfer pipe from 241-AP-102 to the GPF, the process volume of the GPF, and the volume of the piping to the

furthest disposal vault within the scope of 43 campaigns. The summation of such volumes is an equivalent volume of 2317 L of waste feed. For CERCLA purposes, one constituent, sodium nitrite ($NaNO_2$), was determined to be present in quantities greater than reportable if entirely released (Attachment 4).

The risk associated with this volume of waste is reduced by sloping the transfer piping. If a single failure of the inner feed piping occurred, a large fraction of the leak would run back to the 241-AP-026 Pump Pit and the 241-AP-102 Tank. If a single failure of the inner grout piping occurred, the majority of the leak would continue to run to the vault. In either case, leak detection instrumentation would provide notification of the leak and the process would be shut down. Neither of these fractions poses a significant release potential.

Some fractions of this postulated volume of waste feed and/or grout would run to the GPF module. Leak detection instrumentation would provide notification of the leak and the process would be shut down. Decontamination actions would be initiated, transferring the module sump contents to the LCT. The module, as stated previously, provides containment for releases to the environment. Environmental releases would then revert to those from ventilation systems.

The ventilation and decontamination system for the GPF provides a decontamination factor of 4×10^6 to particulate module emissions. Nonaccident sodium nitrite particle emission would be limited to far less than CERCLA-reportable quantities.

4.2 VENTILATION SYSTEMS

Upset conditions for ventilation systems within the GTF are assumed to be those of filter failure while exhaust systems remain functional. As discussed in the *Safety Analysis Report* (WHC 1990), this is an accident, but it will be treated in this determination as an upset for the purposes of radionuclide release. In the event of filter failure within the GTF, the failed equipment is shut down while redundant ventilation is activated.

Airborne environmental releases of radionuclides and organic chemicals were discussed in Hendrickson (1991), which detailed conditions, release factors, and dose consequences for the operation of the GTF. The document (Hendrickson 1991) contains projections of emissions from the operation of the GPF and the GDF and from maintenance actions within the GPF module.

Airborne emissions subject to the "National Emission Standards for Hazardous Air Pollutants" (NESHAP) (EPA 1989) from the Grout Facilities are those of radionuclides. Continuous radionuclide monitoring requirements under NESHAP (EPA 1989) are based on the potential of a facility stack to release radionuclides and cause an offsite dose consequence of a 0.10 mrem/yr effective dose equivalent (EDE) to the maximally impacted individual. Such a potential release is based on an assumption of direct release, without emission control, while otherwise operating at capacity. Modeled doses from controlled and uncontrolled operations are found to be those listed in Table 1.

Table 1. Modeled Doses from Controlled and Uncontrolled Operations (Hendrickson 1991).

Grout Treatment Facility Airborne Radionuclide Emissions	Offsite Dose for Uncontrolled Emissions (mrem/yr EDE)	Offsite Dose for Controlled Emissions (mrem/yr EDE)
Grout Processing Facility	4.71 E-02	1.13 E-04
Grout Disposal Vault Exhauster Stack (each)	1.43 E-02	8.92 E-04
GPF Module Maintenance	2.67 E-06	2.67 E-06

5.0 SUMMARY

The Grout Treatment Facility has been reviewed to determine whether a FEMP is required by DOE Order 5400.1 (DOE 1988). As discussed above, and detailed in Attachment 1, it has been determined that a FEMP is not required for the operation of the GTF.

6.0 REFERENCES

Comprehensive Environmental Response, Compensation and Liability Act of 1980, as amended, 42 USC 9601 et seq.

DOE, 1987, *Final Environmental Impact Statement, Disposal of Hanford Defense High-Level, Transuranic and Tank Wastes*, DOE/EIS.0113, U.S. Department of Energy, Washington, D.C.

DOE, 1988a, *General Environmental Protection Program*, DOE Order 5400.1, U.S. Department of Energy, Washington, D.C.

DOE/RL, 1989, United States Department of Energy - Richland Operation Office Environmental Protection Implementation Plan, U.S. Department of Energy-Richland Operations Office, Richland, Washington.

DOE/RL, 1990, *Grout Treatment Facility Dangerous Waste Permit Application*, DOE/RL 88-27, U.S. Department of Energy-Richland Operations Office, Richland, Washington.

EPA, 1989, "National Emission Standards for Hazardous Air Pollutants," Title 40, Code of Federal Regulations, Part 61, U.S. Environmental Protection Agency, Washington, D.C.

Hendrickson, 1990, *Methods and Data for Use in Determining Source Terms for the Grout Disposal Program*, SD-WM-TI-355, Rev. 1, Westinghouse Hanford Company, Richland, Washington.

Hendrickson, 1991, *Grout Treatment Facility Airborne Emissions Projections*, WHC-SD-WM-TI-427, Rev. 0, Westinghouse Hanford Company, Richland, Washington.

Superfund Amendment and Reauthorization Act of 1986, as amended, 42 USC 11001 et seq.

WAC, 1989, *Dangerous Waste Regulations*, Washington Administrative Code 173-303, Washington State Department of Ecology, Olympia, Washington.

WHC, 1991, *A Guide for Preparing Hanford Site Facility Effluent Monitoring Plans*, WHC-EP-0438, Westinghouse Hanford Company, Richland, Washington.

This page intentionally left blank.

ATTACHMENT 1

FACILITY EFFLUENT MONITORING PLAN DETERMINATION SHEETS

This page intentionally left blank.

ATTACHMENT 1
DETERMINATION FACILITY EFFLUENT MONITORING PLAN REQUIREMENT

FACILITY Grout Treatment Facility DISCHARGE POINT 296-G-1
Grout Processing Facility

FACILITY INVENTORY AT RISK OF RADIOACTIVE MATERIALS

Radionuclide	Physical/Chemical Form	Quantity Released (Ci)	Quantity (mrem)	Projected Dose (mrem)
1.				
2.				
3.				
Total Various (^3H dominant dose)	Solid and gaseous	1,796	5.37/yr	0.0471/yr

FACILITY INVENTORY AT RISK OF NONRADIOACTIVE HAZARDOUS MATERIALS

Regulated Material	Quantity (lb)	Quantity Released	Reportable Quantity (lb)	% of Reportable Quantity/Year
1. $NaNO_2$	338	<1	100	<1
2.				
3.				
4.				

Identification of Reference Material

See Attachment 2

If the total projected dose from radionuclides exceeds 0.1 mrem EDE from any one discharge point or if any one regulated material discharged from a facility exceeds 100% of a reportable quantity or a permitted quantity, a FEMP is required for that facility. Check the appropriate space below.

FEMP is required ____ FEMP is not required X

Evaluator: D. W. Hendrickson Date: February 1, 1991
Manager, Environmental: Date: 2-13-91
Facility Manager: GW JACKSON Date: 2/5/91

ATTACHMENT 1
DETERMINATION FACILITY EFFLUENT MONITORING PLAN REQUIREMENT

FACILITY Grout Treatment Facility DISCHARGE POINT Each Vault Exhauster
Grout Disposal Facility

FACILITY INVENTORY AT RISK OF RADIOACTIVE MATERIALS

Radionuclide	Physical/Chemical Form	Quantity Released (Ci)	Quantity (mrem)	Projected Dose (mrem)
1.				
2.				
3.				
Total Various (^{3}H dominant dose)	Solid and gaseous	1,796[1]	5.37/yr[2]	0.0471/yr

FACILITY INVENTORY AT RISK OF NONRADIOACTIVE HAZARDOUS MATERIALS

Regulated Material	Quantity (lb)	Quantity Released	Reportable Quantity (lb)	% of Reportable Quantity/Year
1. $NaNO_2$	338[1]	<1	100	<1
2.				
3.				
4.				

Identification of Reference Material

See Attachment 2

If the total projected dose from radionuclides exceeds 0.1 mrem EDE from any one discharge point or if any one regulated material discharged from a facility exceeds 100% of a reportable quantity or a permitted quantity, a FEMP is required for that facility. Check the appropriate space below.

FEMP is required ____ FEMP is not required X

Evaluator: D. W. Hendrickson Date: February 1, 1990
Manager, Environmental: Date: 2-13-91
Facility Manager: GW JACKSON Date: 2/5/91

[1]Inventory at risk in process volume.
[2]Actual projected emissions from disposal vault.

ATTACHMENT 2

EQUIVALENT CONCENTRATION OF REFERENCE DOUBLE-SHELL TANK WASTE AND TOXICITY DATA SOURCES AND CATEGORIES

TOXICITY DATA SOURCES AND CATEGORIES

This page intentionally left blank.

Table 3-5. Equivalent Concentration of Reference Double Shell Tank Waste[1]

Component	Compound	MW		Mean	Compound		Toxicity		Equivalent
		Component	Compound	(mg/g)	(mg/g)	wt%	Category	Factor	Conc.(%)
H_2O	H_2O	18.015	18.015	7.3 E+02	7.3 E+02	71.027%	Non-toxic	0	0.000%
NO_3	$NaNO_3$	62.005	84.995	7.8 E+01	1.1 E+02	10.403%	D	0.0001	0.001%
NO_2	$NaNO_2$	46.006	68.995	3.4 E+01	5.1 E+01	4.961%	X	1	4.961%
OH	NaOH	17.007	39.997	2.7 E+01	6.3 E+01	6.178%	C	0.001	0.006%
Al	$NaAlO_2$	26.982	81.970	1.2 E+01	3.6 E+01	3.547%	Non-toxic	0	0.000%
CO_3	Na_2CO_3	60.009	105.989	7.9 E+00	1.4 E+01	1.358%	C	0.001	0.001%
K	KOH	39.098	56.106	7.0 E+00	1.0 E+01	0.977%	C	0.001	0.001%
PO_4	Na_3PO_4	94.971	163.941	4.2 E+00	7.3 E+00	0.705%	D	0.0001	0.000%
Cl	NaCl	35.453	58.443	2.7 E+00	4.5 E+00	0.433%	D	0.0001	0.000%
SO_4	Na_2SO_4	96.058	142.037	1.5 E+00	2.2 E+00	0.216%	Non-toxic	0	0.000%
Cr	$Cr_2O_7.2Na$	51.996	261.967	3.0 E-01	7.6 E-01	0.074%	C	0.001	0.000%
F	NaF	18.998	41.988	2.9 E-01	6.4 E-01	0.062%	C	0.001	0.000%
Pb	PbO	207.200	223.199	6.3 E-02	6.8 E-02	0.007%	B	0.01	0.000%

Table 3-5. Equivalent Concentration of Reference Double Shell Tank Waste[1]

Component	Compound	MW		Mean	Compound		Toxicity		Equivalent
		Component	Compound	(mg/g)	(mg/g)	wt%	Category	Factor	Conc.(%)
As	As_2O_5	74.922	229.840	2.9 E-02	4.4 E-02	0.004%	B	0.01	0.000%
Se	$O_3Se.2Na$	78.960	172.938	2.2 E-02	4.8 E-02	0.005%	B	0.01	0.000%
CN	$Na_3Fe(CN)_6$	26.018	280.923	2.1 E-02	3.8 E-02	0.004%	A	0.1	0.000%
Fe	Fe_2O_3	55.847	159.692	1.5 E-02	2.1 E-02	0.002%	Non-toxic	0	0.000%
Zn	ZnO	65.380	81.379	9.0 E-03	1.1 E-02	0.001%	B	0.01	0.000%
Mg	MgO	24.305	40.304	7.1 E-03	1.2 E-02	0.001%	Non-toxic	0	0.000%
Ag	AgCl	107.868	143.321	4.3 E-03	5.7 E-03	0.001%	Non-toxic	0	0.000%
Diethyl phthalate				9.4 E-04	9.4 E-04	0.000%	C	0.001	0.000%
Dioctyl phthalate				2.5 E-03	2.5 E-03	0.000%	B	0.01	0.000%
EDTA				3.4 E-01	3.4 E-01	0.033%	D	0.0001	0.000%
MICEDA				2.9 E-03	2.9 E-03	0.000%	D	0.0001	0.000%
Total					1027.773				4.972%

Table 3-5a. Toxicity Data Sources and Categories

Compound	40 CFR 302.4	NIOSH						Overall
		Oral (Rat)		Inhalation (Rat)		Dermal (Rabbit)		
	Category	LD_{50} (mg/kg)	Category	LC_{50} (mg/L)	Category	LD_{50} (mg/kg)	Category	Category
H_2O	Non-toxic		Non-toxic		Non-toxic		Non-toxic	Non-toxic
$NaNO_3$	Non-toxic	3236	D		Non-toxic		Non-toxic	D
$NaNO_2$	B	85	C	0.0055	X		Non-toxic	X
NaOH	C		Non-toxic		Non-toxic		Non-toxic	C
$NaAlO_2$	Non-toxic		Non-toxic		Non-toxic		Non-toxic	Non-toxic
Na_2CO_3	Non-toxic	4090	D	2.3	C		Non-toxic	C
KOH	C	273	C		Non-toxic		Non-toxic	C
Na_3PO_4	D		Non-toxic		Non-toxic		Non-toxic	D
NaCl	Non-toxic	3000	D		Non-toxic		Non-toxic	D
Na_2SO_4	Non-toxic		Non-toxic		Non-toxic		Non-toxic	Non-toxic
$Cr_2O_7.2Na$	Non-toxic	50	C		Non-toxic		Non-toxic	C
NaF	Non-toxic	52	C		Non-toxic		Non-toxic	C
PbO^2	Non-toxic	64	C		Non-toxic	64	B	B

Table 3-5a. Toxicity Data Sources and Categories

Compound	40 CFR 302.4	NIOSH						Overall
		Oral (Rat)		Inhalation (Rat)		Dermal (Rabbit)		
	Category	LD_{50} (mg/kg)	Category	LC_{50} (mg/L)	Category	LD_{50} (mg/kg)	Category	Category
As_2O_5	D	64	C		Non-toxic	64	B	B
$O_3Se.2Na$	B	64	C		Non-toxic	64	B	B
$Na_3Fe(CN)_6$	A[3]	6440[4]	Non-toxic		Non-toxic		Non-toxic	A
Fe_2O_3	Non-toxic		Non-toxic		Non-toxic		Non-toxic	Non-toxic
ZnO	Non-toxic	64	C		Non-toxic	64	B	B
MgO	Non-toxic		Non-toxic		Non-toxic		Non-toxic	Non-toxic
AgCl	Non-toxic		Non-toxic		Non-toxic		Non-toxic	Non-toxic
Diethylphthalate	C	8600	Non-toxic		Non-toxic		Non-toxic	C
Dioctylphthalate	D	30600	Non-toxic		Non-toxic	25	B	B
EDTA	D		Non-toxic		Non-toxic		Non-toxic	D
MICEDA	D		Non-toxic		Non-toxic		Non-toxic	D

1. SD-WM-TI-355, Rev. 1.

2. $PbO/As_2O_5/ZnO/O_3Se.2Na$ (1/1/1/1) NIOSH Jan. 1990 [Unk. route mammal] As_2O_5 Chosen as highest category despite lack of presence.

3. Cyanides (Soluble Cyanide Salts) 40 CFR 302.4.

4. For NaCN NIOSH Jan. 1990 [oral rat].

This page intentionally left blank.

9413136.0866

ATTACHMENT 3

Process Mass Comprehensive Environmental Response, Compensation, and Liability Act Reportable Quantity Evaluation

9413136.1009

This page intentionally left blank.

9413136.0960

Process Mass CERCLA Reportable Quantity Evaluation								
Component	Compound	Molecular Weight		Component Mean (mg/g)	Compound (mg/g)	Compound (g/L)	Process Mass @ 2317 L (lb)	CERCLA RQ (lb)
		Component	Compound					
H_2O	H_2O	18.015	18.015	7.3 E+02	7.3 E+02	949	4843	
NO_3	$NaNO_3$	62.005	84.995	7.8 E+01	1.1 E+02	138.9964	709	
NO_2	$NaNO_2$	46.006	68.995	3.4 E+01	5.1 E+01	66.28753	338	100
OH	NaOH	17.007	39.997	2.7 E+01	6.3 E+01	82.54674	421	1000
Al	$NaAlO_2$	26.982	81.970	1.2 E+01	3.6 E+01	47.39291	242	
CO_3	Na_2CO_3	60.009	105.989	7.9 E+00	1.4 E+01	18.13896	93	
K	KOH	39.098	56.106	7.0 E+00	1.0 E+01	13.05839	67	1000
PO_4	Na_3PO_4	94.971	163.941	4.2 E+00	7.3 E+00	9.425116	48	
Cl	NaCl	35.453	58.443	2.7 E+00	4.5 E+00	5.786086	30	
SO_4	Na_2SO_4	96.058	142.037	1.5 E+00	2.2 E+00	2.883399	15	
Cr	$Cr_2O_7.2Na$	51.996	261.967	3.0 E-01	1.5 E+00	1.964906	10	1000
F	NaF	18.998	41.988	2.9 E-01	6.4 E-01	0.833204	4	5000
Pb	PbO	207.200	223.199	6.3 E-02	6.8 E-02	0.088224	0.45	
As	As_2O_5	74.922	229.840	2.9 E-02	8.9 E-02	0.115654	0.59	5000

Process Mass CERCLA Reportable Quantity Evaluation								
Component	Compound	Molecular Weight		Component Mean (mg/g)	Compound (mg/g)	Compound (g/L)	Process Mass @ 2317 L (lb)	CERCLA RQ (lb)
		Component	Compound					
Se	$O_3Se.2Na$	78.960	172.938	2.2 E-02	4.8 E-02	0.06264	0.32	100
CN	$Na_3Fe(CN)_6$	26.018	280.923	2.1 E-02	2.3 E-01	0.294768	1.50	10
Fe	Fe_2O_3	55.847	159.692	1.5 E-02	4.3 E-02	0.055759	0.28	
Zn	ZnO	65.380	81.379	9.0 E-03	1.1 E-02	0.014563	0.07	
Mg	MgO	24.305	40.304	7.1 E-03	1.2 E-02	0.015306	0.08	
Ag	AgCl	107.868	143.321	4.3 E-03	5.7 E-03	0.007427	0.04	
Diethyl phthalate				9.4 E-04	9.4 E-04	0.001222	0.01	1000
Dioctyl phthalate				2.5 E-03	2.5 E-03	0.00325	0.02	5000
EDTA				3.4 E-01	3.4 E-01	0.442	2.26	5000
MICEDA				2.9 E-03	2.9 E-03	0.00377	0.02	5000
Total					1028.783	1337.418		

ATTACHMENT 4

In-Process Volumes

9413146.0971

This page intentionally left blank.

9413160.0972

In-Process Volumes

1. Waste feed line (2" sch 40, ID = 2.067")

Line lengths

Drawing H-2-76472	W46940 - W46881	=	59 ft
	N40664 - N40597	=	67
	W46881 - W46815	=	66
Drawing H-2-76480	W46815 - W45861	=	954
	N40597 - N40552	=	45
	N40582 - N40552	=	30
	N40582 - N40531	=	51
Drawing H-2-98837	W45879 - W45861	=	18
	N40528 - N40500	=	28
Total			1318 ft

Volume = $\pi((2.067/12)/2)^2*(1318)*(28.316\ L/ft^3)$ = 870 L waste

2. Grout Line (Maximum length, 2.5" sch 160, ID = 2.125")

Drawing H-2-77577 = 2250 ft

Volume = $\pi((2.125/12)/2)^2*(2250)*(28.316\ L/ft^3)$ = 1,569 L grout

Equivalent Volume Waste = L Grout * L Waste/(1.43 L grout) = 1,097 L waste

3. Pump (neglect volume of stator)

Volume = receiving chamber + stator casing

Volume = $[(10/12)^3 + \pi(4/12)^2*(156/12)]*(28.316\ L/ft^3)$ = 144.88 L grout

Equivalent Volume Waste = 144.18/1.43 = 101.3 L waste

4. Surge Tank

Volume = $\pi r^2 h/3$ + -10L = $[\pi(1.8\ ft)^2(2.46\ ft)/3]*(28.316\ L/ft^3)$ +10 = 246.34 grout

Equivalent Volume Waste = 246.34/1.43 = 172.3 L waste

5. Mixer (neglect blade volume)

Volume = $\pi(6/12)^2(59/12)*(28.316\ L/ft^3)$ = 109.34 L grout

Equivalent Volume Waste = 109.34/1.43 = 76.5 L waste

Total Equivalent Volume = 870 + 1097 + 101.3 + 172.3 + 76.5 = **2317 L Waste**

Reviewed by: [signature] 2-1-91

THIS PAGE INTENTIONALLY
LEFT BLANK

9413136.0974

APPENDIX

UNIT DOSE CONVERSION FACOTRS PREPARED BY PACIFIC NORTHWEST LABORATORY TO BE USED IN OFFSITE DOSE CALCULATIONS

This page intentionally left blank.

9413136.0975

UNIT DOSE CALCULATIONS FOR WHC FACILITY EFFLUENT MONITORING PLANS

K. Rhoads January 3, 1991

INTRODUCTION

Dose calculations for unit (1 Ci) radionuclide releases were performed in support of efforts by Westinghouse Hanford Company (WHC) to develop Effluent Monitoring Plans for all WHC facilities on the Hanford site. Atmospheric releases from generic locations in the 100, 200 E, 200 W, and 300 areas were modeled for both elevated and ground-level releases; 400 area releases were modeled for ground level only. Impacts of liquid releases were evaluated for individuals at Ringold (100 and 200 area effluents) and Riverview (300 Area effluents). Both the CAP-88 (Beres 1990) and GENII (Napier et al 1988) code packages were used to model atmospheric releases in order to satisfy requirements of the U. S. Environmental Protection Agency (USEPA 1989) and the U. S. Department of Energy. The GENII code was used to model liquid releases.

METHODS

Standard parameters for Hanford dose calculations were included in the calculations where possible (McCormack, et al 1984). Meteorology data were collected at weather stations in each of the Hanford operating areas and represent the five-year average of data taken between 1983 and 1987. The location of the maximally exposed individual for each area is included in the attached tables with results of the dose calculations. Individual locations were based on the site boundary location having the greatest radionuclide air concentration under average atmospheric conditions. Doses were calculated as 50-year committed effective dose equivalents for all internal deposition pathways using the EPA model specified in 40 CFR 61. Default solubility classes were used for all radionuclides in these preliminary calculations. These should be appropriate for most facilities evaluated, except where plutonium or uranium are released in soluble form and contribute substantially to the overall dose from a given facility. Default classes for uranium and plutonium assume these radionuclides are released as insoluble compounds; this will result in a lower overall dose than would be the case if they were released in more soluble form.

RESULTS

Results of the evaluation are presented in Tables 1 - 11, and represent the 50-year committed dose equivalent following a chronic annual release of 1 Ci of each radionuclide. The CAP-88 and GENII codes handle ingrowth of long-lived radioactive daughter products differently, as noted in the tables. GENII calculates doses for all radionuclides in each decay chain, therefore the doses reported in Tables 1 -6 include contributions from both parent and ingrown daughters. CAP-88 does not calculate activities for ingrowth of daughter radionuclides following release of the parent, but will estimate the dose from very short-lived daughters where the parent-to-daughter activity ratio is effectively 1:1. CAP-88 doses reported in Tables 7 - 11 are for the parent nuclide only, except in the case where very short-lived daughters have been included in the parent dose as noted. CAP-88 doses including contributions from daughter ingrowth should be estimated using the fractional contribution from the parent nuclide reported in the GENII results.

The total dose expected from emissions at a given facility can be obtained by multiplying the release quantity in Ci for each radionuclide by the corresponding unit dose factor in the tables, and summing the contributions for all nuclides in the effluent stream. Please note that doses calculated using the GENII code are reported as rem to the maximum individual from an annual release; those from CAP-88 are reported in mrem. Values in the tables were taken directly from code outputs, and have been left in the units reported by each code to avoid transcription errors.

REFERENCES

Beres, D. A., 1990. The Clean Air Act Assessment Package -1988 (CAP-88). A Dose and Risk Assessment Methodology for Radionuclide Emissions to Air. Vols. 1-3, U. S. Environmental Protection Agency, Washington, D. C.

McCormack, W. D., J. V. Ramsdell, and B. A. Napier. 1984. Hanford Dose Overview Program: Standardized Methods and Data for Hanford Environmental Dose Calculations. PNL-3777, Rev. 1, Pacific Northwest Laboratory, Richland, Washington.

Napier, B. A., R. A. Peloquin, D. L. Strenge, and J. V. Ramsdell. 1988. GENII - The Hanford Environmental Radiation Dosimetry Software System. PNL-6584, Vols. 1-3. Pacific Northwest Laboratory, Richland, Washington.

U. S. Environmental Protection Agency. 1989. National Emission Standards for Hazardous Air Pollutants; Radionuclides; Final Rule and Notice of Reconsideration. 40 CFR Part 61, Federal Register 54 (240):51654-51715.

TABLE 2. GENII DOSE ESTIMATES FOR 1 Ci RADIONUCLIDE RELEASES - 200 E AREA
Location to the individual: 16000 METERS EAST

NUCLIDE	GROUND LEVEL DOSE EQUIVALENT (REM)*		89 m STACK DOSE EQUIVALENT (REM)*	
H 3	2.0E-08		7.0E-09	
C 14	4.2E-06		1.5E-06	
MN 54	1.1E-06		3.7E-07	
CO 60	9.0E-06		3.2E-06	
SE 79	6.6E-05		2.2E-05	
KR 85	1.6E-11		9.1E-12	
SR 90	3.4E-05	(94)*	1.2E-05	(94)
Y 90	2.6E-07		9.0E-08	
NB 94	1.0E-05		3.6E-06	
ZR 95	1.1E-06	(75)	3.8E-07	(76)
NB 95	4.1E-07		1.5E-07	
TC 99	3.4E-06		1.2E-06	
RU 103	5.0E-07	(100)	1.7E-07	(100)
RU 106	1.4E-05		4.7E-06	
RH 106	**		**	
SN 113	7.9E-07		2.7E-07	
SB 125	1.2E-06		4.2E-07	
SN 126	8.4E-06	(74)	2.9E-06	(73)
I 129	8.4E-04		2.9E-04	
I 131	5.1E-05	(100)	1.8E-05	(100)
CS 134	3.0E-05		1.0E-05	
CS 135	3.2E-06		1.1E-06	
CS 137**	2.2E-05		7.7E-06	
CE 144	1.0E-05	(100)	3.6E-06	(100)
PM 147	9.8E-07		3.4E-07	
RN 220	***		***	
PO 216	***		***	
PB 212	3.6E-06	(93)	1.3E-06	(95)
BI 212	1.7E-07		8.4E-08	
PO 212	**		**	
TL 208	**		**	
RA 226	3.1E-04	(98)	1.0E-04	(98)
TH 230	5.5E-03	(100)	1.9E-03	(100)
U 233	2.8E-03	(100)	9.9E-04	(100)
U 234	2.8E-03		9.7E-04	
U 235	2.6E-03	(100)	9.0E-04	(100)
U 236	2.7E-03		9.2E-04	
U 238	2.5E-03	(100)	8.6E-04	(100)

* Doses calculated with GENII include contributions from the parent nuclide, long-lived daughter chains, and short-lived daughters. Numbers in parenthesis indicate percent of the total dose attributable to the parent nuclide in chains with long-lived daughters.

** Short-lived daughters are included in dose from parent nuclide.

*** Very short-lived; model as PB212.

TABLE 2. GENII DOSE ESTIMATES FOR 1 Ci RADIONUCLIDE RELEASES - 200 E AREA
(Cont.) Location to the individual: 16000 METERS EAST

NUCLIDE	GROUND LEVEL DOSE EQUIVALENT (REM)*	89 m STACK DOSE EQUIVALENT (REM)*
NP 237	1.4E-02 (100)	5.0E-03 (100)
PU 238	6.0E-03	2.1E-03
PU 239	6.4E-03	2.2E-03
PU 240	6.4E-03	2.2E-03
PU 241	1.0E-04 (100)	3.6E-05 (100)
AM 241	9.7E-03	3.4E-03
AM 243	9.7E-03 (100)	3.4E-03 (100)
CM 244	5.5E-03 (100)	1.9E-03 (100)

* Doses calculated with GENII include contributions from the parent nuclide, long-lived daughter chains, and short-lived daughters. Numbers in parenthesis indicate percent of the total dose attributable to the parent nuclide in chains with long-lived daughters.

TABLE 3. GENII DOSE ESTIMATES FOR 1 Ci RADIONUCLIDE RELEASES - 200 W AREA
Location to the individual: 24000 METERS EAST

NUCLIDE	GROUND LEVEL DOSE EQUIVALENT (REM)*		89 m STACK DOSE EQUIVALENT (REM)*	
H 3	1.2E-08		4.7E-09	
C 14	2.4E-06		1.0E-06	
MN 54	6.0E-07		2.4E-07	
CO 60	5.2E-06		2.1E-06	
SE 79	3.8E-05		1.5E-05	
KR 85	1.0E-11		5.8E-12	
SR 90	2.0E-05	(94)*	8.0E-06	(94)
Y 90	1.5E-07		6.0E-08	
NB 94	5.8E-06		2.4E-06	
ZR 95	6.3E-07	(76)	2.6E-07	(75)
NB 95	2.4E-07		9.8E-08	
TC 99	2.0E-06		7.8E-07	
RU 103	2.9E-07	(100)	1.2E-07	(100)
RU 106	7.7E-06		3.2E-06	
RH 106	**		**	
SN 113	4.5E-07		1.8E-07	
SB 125	6.8E-07		2.8E-07	
SN 126	4.7E-06	(74)	1.9E-06	(74)
I 129	4.9E-04		2.0E-04	
I 131	2.9E-05	(100)	1.2E-05	(100)
CS 134	1.7E-05		7.1E-06	
CS 135	1.8E-06		7.3E-07	
CS 137**	1.3E-05		5.2E-06	
CE 144	5.9E-06	(100)	2.4E-06	(100)
PM 147	5.6E-07		2.3E-07	
RN 220	***		***	
PO 216	***		***	
PB 212	2.1E-06	(92)	8.6E-07	(93)
BI 212	6.1E-08		4.3E-08	
PO 212	**		**	
TL 208	**		**	
RA 226	1.7E-04	(98)	7.1E-05	(98)
TH 230	3.2E-03	(100)	1.3E-03	(100)
U 233	1.6E-03	(100)	6.6E-04	(100)
U 234	1.6E-03		6.5E-04	
U 235	1.5E-03	(100)	6.1E-04	(100)
U 236	1.5E-03		6.2E-04	
U 238	1.4E-03	(100)	5.8E-04	(100)

* Doses calculated with GENII include contributions from the parent nuclide, long-lived daughter chains, and short-lived daughters. Numbers in parenthesis indicate percent of the total dose attributable to the parent nuclide in chains with long-lived daughters.

** Short-lived daughters are included in dose from parent nuclide.

*** Very short-lived; model as PB212.

TABLE 3. GENII DOSE ESTIMATES FOR 1 Ci RADIONUCLIDE RELEASES - 200 W AREA
(Cont.) Location to the individual: 24000 METERS EAST

NUCLIDE	GROUND LEVEL DOSE EQUIVALENT (REM)*	89 m STACK DOSE EQUIVALENT (REM)*
NP 237	8.1E-03 (100)	3.3E-03 (100)
PU 238	3.4E-03	1.4E-03
PU 239	3.6E-03	1.5E-03
PU 240	3.6E-03	1.5E-03
PU 241	5.9E-05 (100)	2.4E-05 (100)
AM 241	5.6E-03	2.3E-03
AM 243	5.6E-03 (100)	2.3E-03 (100)
CM 244	3.2E-03 (100)	1.3E-03 (100)

* Doses calculated with GENII include contributions from the parent nuclide, long-lived daughter chains, and short-lived daughters. Numbers in parenthesis indicate percent of the total dose attributable to the parent nuclide in chains with long-lived daughters.

TABLE 8. CAP-88 DOSE ESTIMATES FOR 1 Ci RADIONUCLIDE RELEASES - 200 E AREA
Location to the individual: 16000 METERS EAST

NUCLIDE	10 m STACK DOSE EQUIVALENT (MREM)*	89 m STACK DOSE EQUIVALENT (MREM)*
H-3	2.19E-05	5.42E-06
C-14	2.62E-03	6.48E-04
MN-54	5.51E-03	1.51E-03
CO-60	2.90E-02	7.94E-03
SE-79	**	**
KR-85	4.88E-08	1.21E-08
SR-90	4.38E-02	1.20E-02
Y-90	3.77E-04	1.04E-04
NB-94	2.58E-02	7.05E-03
ZR-95	2.65E-03	7.24E-04
NB-95	1.76E-03	4.82E-04
TC-99	1.09E-03	2.97E-04
RU-103	1.42E-03	3.89E-04
RU-106	2.09E-02	5.71E-03
RH-106	***	***
SN-113	1.18E-03	3.23E-04
SB-125	4.15E-03	1.14E-03
SN-126	8.63E-03	2.36E-03
I-129	2.91E-01	1.84E-01
I-131	1.68E-02	1.06E-02
CS-134	3.13E-02	8.56E-03
CS-135	2.15E-03	5.87E-04
CS-137***	2.39E-02	6.54E-03
CE-144	1.37E-02	3.75E-03
PM-147	1.14E-03	3.11E-04
RN-220	****	****
PO-216	****	****
PB-212	3.32E-03	9.42E-04
BI-212	2.66E-04	1.14E-04
PO-212	***	***
TL-208	***	***
RA-226	5.45E-01	1.49E-01
TH-230	5.69E+00	1.55E+00
U-233	3.23E+00	8.83E-01
U-234	3.19E+00	8.72E-01
U-235	2.96E+00	8.10E-01
U-236	3.02E+00	8.26E-01
U-238	2.84E+00	7.77E-01

* Doses calculated with CAP88 are for the parent nuclide only, and do not include contributions from long-lived daughter chains.

** Dose factors not included in code radionuclide library.

*** Short-lived daughters are included in dose from parent nuclide.

**** Very short-lived; model as PB212.

TABLE 8. CAP-88 DOSE ESTIMATES FOR 1 Ci RADIONUCLIDE RELEASES - 200 E AREA
(Cont.) Location to the individual: 16000 METERS EAST

NUCLIDE	10 m STACK DOSE EQUIVALENT (MREM)*	89 m STACK DOSE EQUIVALENT (MREM)*
NP-237	1.19E+01	3.25E+00
PU-238	8.02E+00	2.19E+00
PU-239	8.67E+00	2.37E+00
PU-240	8.66E+00	2.37E+00
PU-241	1.38E-01	3.76E-02
AM-241	1.31E+01	3.59E+00
AM-243	1.31E+01	3.59E+00
CM-244	6.94E+00	1.90E+00

* Doses calculated with CAP88 are for the parent nuclide only, and do not include contributions from long-lived daughter chains.

TABLE 9. CAP-88 DOSE ESTIMATES FOR 1 Ci RADIONUCLIDE RELEASES - 200 W AREA
Location to the individual: 24000 METERS EAST

NUCLIDE	10 m STACK DOSE EQUIVALENT (MREM)*	89 m STACK DOSE EQUIVALENT (MREM)*
H-3	1.38E-05	3.58E-06
C-14	1.65E-03	4.28E-04
MN-54	3.27E-03	9.84E-04
CO-60	1.72E-02	5.19E-03
SE-79	**	**
KR-85	3.07E-08	7.98E-09
SR-90	2.60E-02	7.82E-03
Y-90	2.22E-04	6.73E-05
NB-94	1.53E-02	4.61E-03
ZR-95	1.57E-03	4.73E-04
NB-95	1.05E-03	3.15E-04
TC-99	6.45E-04	1.94E-04
RU-103	8.45E-04	2.54E-04
RU-106	1.24E-02	3.73E-03
RH-106	***	***
SN-113	7.02E-04	2.11E-04
SB-125	2.47E-03	7.42E-04
SN-126	5.12E-03	1.54E-03
I-129	1.14E-01	1.09E-01
I-131	6.53E-03	6.29E-03
CS-134	1.86E-02	5.60E-03
CS-135	1.28E-03	3.84E-04
CS-137***	1.42E-02	4.28E-03
CE-144	8.14E-03	2.45E-03
PM-147	6.75E-04	2.03E-04
RN-220	****	****
PO-216	****	****
PB-212	1.85E-03	5.91E-04
BI-212	9.88E-05	5.81E-05
PO-212	***	***
TL-208	***	***
RA-226	3.23E-01	9.73E-02
TH-230	3.38E+00	1.02E+00
U-233	1.92E+00	5.77E-01
U-234	1.89E+00	5.70E-01
U-235	1.76E+00	5.30E-01
U-236	1.79E+00	5.40E-01
U-238	1.69E+00	5.08E-01

* Doses calculated with CAP88 are for the parent nuclide only, and do not include contributions from long-lived daughter chains.

** Dose factors not included in code radionuclide library.

*** Short-lived daughters are included in dose from parent nuclide.

**** Very short-lived; model as PB212.

TABLE 9. CAP-88 DOSE ESTIMATES FOR 1 Ci RADIONUCLIDE RELEASES - 200 W AREA
(Cont.) Location to the individual: 24000 METERS EAST

NUCLIDE	10 m STACK DOSE EQUIVALENT (MREM)*	89 m STACK DOSE EQUIVALENT (MREM)*
NP-237	7.05E+00	2.12E+00
PU-238	4.76E+00	1.43E+00
PU-239	5.15E+00	1.55E+00
PU-240	5.14E+00	1.55E+00
PU-241	8.17E-02	2.46E-02
AM-241	7.79E+00	2.35E+00
AM-243	7.79E+00	2.34E+00
CM-244	4.12E+00	1.24E+00

* Doses calculated with CAP88 are for the parent nuclide only, and do not include contributions from long-lived daughter chains.

DISTRIBUTION

Number of Copies

OFFSITE

1	U.S. Environmental Protection Agency, Region X 1200 Sixth Avenue Seattle, Washington 98081	
	G. O'Neal	AT-081
1	U.S. Environmental Protection Agency, Region X 712 Swift Boulevard, Suite 5 Richland, Washington 99352	
	P. T. Day	
2	Washington State Department of Health Radiation Protection Division Airdustrial Park, Bldg. 5 Olympia, Washington 98504	
	A. Conklin	LE-13
1	Westinghouse Idaho Nuclear Company PO Box 4000 Idaho Falls, Idaho 83403	
	K. Kouri	32-02

ONSITE

8	U.S. Department of Energy Field Office, Richland	
	G. M. Bell	A5-52
	R. F. Brich	A5-55
	S. S. Clark	A6-55
	E. M. Dagan	A5-19
	L. A. Huffman	A6-55
	T. P. Pietrok	A5-19
	S. D. Stites	A5-19
	Public Reading Room	A1-65
1	Hanford Environmental Health Foundation	
	L. J. Maas	B2-75

DISTRIBUTION (continued)

Number of Copies		
ONSITE		
1	Kaiser Engineers Hanford	
	P. G. Bodily	E2-10
7	Pacific Northwest Laboratory	
	W. J. Bjorklund	P7-68
	T. D. Chikalla	P7-75
	R. E. Jaquish	K1-30
	D. L. Klages	P7-68
	A. K. Stalker	P7-60
	M. J. Sula	P7-78
	R. K. Woodruff	K6-13
	Technical Files	K1-11
41	Westinghouse Hanford Company	
	S. E. Albin	T1-06
	S. M. Anthony	N3-05
	R. J. Bliss	B3-04
	R. E. Bolls	N3-13
	M. J. Brown	T1-30
	G. D. Carpenter	B2-16
	G. J. Carter	T1-06
	L. P. Diediker (2)	T1-30
	J. J. Dorian	B2-16
	J. A. Eacker	R1-51
	D. G. Farwick	H4-16
	K. A. Gano	X0-21
	L. A. Garner	T5-54
	E. M. Greager	L6-60
	K. A. Hadley	N1-35
	N. S. Hale	B4-53
	M. J. Hall	B2-19
	D. R. Herman	S4-01
	K. R. Jordan	B3-51
	E. J. Kosiancic	S0-61
	R. J. Landon	B2-19
	R. E. Lerch	B2-35
	G. J. Miskho	R2-50
	J. M. Nickels (2)	T1-30
	R. A. Paasch	B2-20
	M. M. Pereira	S6-70
	K. N. Peterson	S6-70
	D. R. Pratt	T1-30
	R. J. Thompson	S6-01
	R. R. Thompson	L4-88

DISTRIBUTION (continued)

Number of Copies

ONSITE

Westinghouse Hanford Company (continued)

L. W. Vance	H4-16
D. J. Watson	X0-41
C. D. Wollam	S6-19
Document Processing and Distribution (2)	L8-15
Central Files	L8-04
Information Release Administration (3)	R1-08

9413136.1068

This page intentionally left blank.

9413246.0969