U.S. Department of Energy
Hanford Site

July 8, 2020

20-ECD-0033

Ms. Alexandra K. Smith, Program Manager
Nuclear Waste Program
Washington State
Department of Ecology
3100 Port of Benton Blvd.
Richland, Washington 99354

Dear Ms. Smith:

SUBMITTAL OF CLASS 3 PERMIT MODIFICATION TO THE HANFORD FACILITY RESOURCE CONSERVATION AND RECOVERY ACT PERMIT, DANGEROUS WASTE PORTION FOR THE LIQUID EFFLUENT RETENTION FACILITY AND THE 200 AREA EFFLUENT TREATMENT FACILITY [S-2-8, T-2-6]

This letter transmits a Class 3 Permit Modification for the Hanford Facility Resource Conservation and Recovery Act Permit, Dangerous Waste Portion for the Treatment Storage, and Disposal of Dangerous Waste, Permit Number WA7890008967 (Revision 8C) for the Liquid Effluent Retention Facility (LERF) and the 200 Area Effluent Treatment Facility (ETF), Operating Unit Group 3.

This proposed Class 3 permit modification would allow the LERF and 200 Area ETF to construct a fourth LERF basin (Basin 41). In addition, Addendum A, Part A Form was revised to include the processes and storage and treatment capacities that will be used in the future to treat, store, or dispose of dangerous wastes at the facility.

This transmittal includes:

- Permittee Certifications required under WAC 173-303-810(12) to support submittal of the Class 3 permit modification (Attachment 1).
- Addendum A, Part A Form (Attachment 2).
- Hanford Facility RCRA Permit Change Notice, Part III, Operating Unit Group 3 LERF & 200 Area ETF (Attachment 3).
- Supporting Information (Attachment 4).

The public comment period for this permit modification is scheduled to begin on July 10, 2020, and continue through September 8, 2020.

If you have any questions, please contact me, or your staff may contact Christopher J. Kemp, Director, Environmental Compliance Division, Office of River Protection, on (509) 373-0649.

Sincerely,

Digitally signed by Brian T. Vance
DN: cn=Brian T. Vance, o=Office of River Protection, ou=Department of Energy, email=brian.t.vance@orp.doe.gov, c=US
Date: 2020.07.07 09:53:40 -07'00'

Brian T. Vance
Manager

ECD:RLE

Attachments: (4)

cc w/attachs:
J. Cantu, Ecology
^Operating Record (MSA)
Administrative Record (AR-03744) (S-2-8, T-2-6)
Environmental Portal
WRPS Correspondence

cc w/o attachs:
J. Bell, NPT
R. Buck, Wanapum
A. S. Carlson, Ecology
L. Contreras, YN
S. L. Dahl, Ecology
D. Einan, EPA
J. L. Foster, WRPS
K. G. Hall, Ecology
J. T. Hamilton, WRPS
A. Mayenna, Ecology
M. Murphy, CTUIR
K. Niles, Oregon Energy
S. A. Thompson, WRPS
J. H. Temple, Ecology
E. J. Van Mason, WRPS

Attachment 1
20-ECD-0033

U.S. Department of Energy, Office of River Protection Certification
Washington River Protection Solutions LLC Certification

(3 Pages Including Cover Sheet)

U.S. Department of Energy, Office of River Protection Certification

The following certification statement is provided for the submittal of the Class 3 permit modification (C3-LERF/ETF-2020-01) to the Liquid Effluent Retention Facility (LERF) and 200 Area Effluent Treatment Facility (ETF) chapter of the Hanford Facility Resource Conservation and Recovery Act Permit, Dangerous Waste Portion for the Treatment, Storage, and Disposal of Dangerous Waste.

I certify under penalty of law that this document and all attachments were prepared under my direction or supervision in accordance with a system designed to assure that qualified personnel properly gather and evaluate the information submitted. Based on my inquiry of the person or persons who manage the system, or those persons directly responsible for gathering the information, the information submitted is, to the best of my knowledge and belief, true, accurate, and complete. I am aware that there are significant penalties for submitting false information, including the possibility of fine and imprisonment for knowing violations.

Digitally signed by Brian T. Vance
DN: cn=Brian T. Vance, o=Office of River Protection, ou=Department of Energy, email=brian.t.vance@orp.doe.gov, c=US
Date: 2020.07.07 09:54:36-07'00'

Brian T. Vance, Manager
Office of River Protection
U.S. Department of Energy

Date

Washington River Protection Solutions LLC Certification

The following certification statement is provided for the submittal of the Class 3 permit modification (C3-LERF/ETF-2020-01) to the Liquid Effluent Retention Facility (LERF) and 200 Area Effluent Treatment Facility (ETF) chapter of the Hanford Facility Resource Conservation and Recovery Act Permit, Dangerous Waste Portion for the Treatment, Storage, and Disposal of Dangerous Waste.

I certify under penalty of law that this document and all attachments were prepared under my direction or supervision in accordance with a system designed to assure that qualified personnel properly gather and evaluate the information submitted. Based on my inquiry of the person or persons who manage the system, or those persons directly responsible for gathering the information, the information submitted is, to the best of my knowledge and belief, true, accurate, and complete. I am aware that there are significant penalties for submitting false information, including the possibility of fine and imprisonment for knowing violations.

June 10, 2020

John R. Eschenberg
President and Project Manager
Washington River Protection
Solutions LLC

Date

Attachment 2
20-ECD-0033

ADDENDUM A
Liquid Effluent Retention Facility & 200 Area Effluent Treatment Facility
Part A Form

(27 Pages Including Cover Sheet)

ADDENDUM A
LIQUID EFFLUENT RETENTION FACILITY & 200 AREA EFFLUENT TREATMENT FACILITY
PART A FORM

This page intentionally left blank.

WASHINGTON STATE DEPARTMENT OF ECOLOGY

Addendum A
Part A Form

Date Received	Reviewed by:	Date:
Month Day Year	Approved by:	Date:

I. This form is submitted to: (place an "X" in the appropriate box)

☒	Request modification to a final status permit (commonly called a "Part B" permit)	
☐	Request a change under interim status	
☐	Apply for a final status permit. This includes the application for the initial final status permit for a site or for a permit renewal (i.e., a new permit to replace an expiring permit).	
☐	Establish interim status because of the wastes newly regulated on:	(Date)
	List waste codes:	

II. EPA/State ID Number

W A 7 8 9 0 0 0 8 9 6 7

III. Name of Facility

U.S. Department of Energy – Hanford Facility

IV. Facility Location (Physical address not P.O. Box or Route Number)
A. Street

Refer to Permit Attachment 2, Hanford Facility Permit Legal Description

City or Town	State	ZIP Code
Near Richland	WA	

County Code	County Name
005	Benton

B. Land Type	C. Geographic Location Latitude (degrees, mins, secs)	Longitude (degrees, mins, secs)	D. Facility Existence Date Month Day Year
F	Refer to TOPO Map (Section XV)		11 19 1980

V. Facility Mailing Address

Street or P.O. Box

P.O. Box 450

City or Town	State	ZIP Code
Richland	WA	99352

VI. Facility contact (Person to be contacted regarding waste activities at facility)		
Name (last)	(first)	
Vance	Brian	
Job Title	Phone Number (area code and number)	
Manager	(509) 372-2315	
Contact Address		
Street or P.O. Box		
P.O. Box 450		
City or Town	State	ZIP Code
Richland	WA	99352

VII. Facility Operator Information		
A. Name		Phone Number
U.S. Department of Energy Owner/Operator Washington River Protection Solutions, LLC Co-Operator for LERF & 200 Area ETF		(509) 372-2315 (509) 376-2574
Street or P.O. Box		
P.O. Box 450 P.O. Box 850		
City or Town	State	ZIP Code
Richland	WA	99352
B. Operator Type F		
C. Does the name in VII.A reflect a proposed change in operator? If yes, provide the scheduled date for the change:	☐ Yes ☒ No Month Day Year	
D. Is the name listed in VII.A, also the owner? If yes, skip to Section VIII.C.	☐ Yes ☒ No	

VIII. Facility Owner Information		
A. Name	Phone Number (area code and number)	
U.S. Department of Energy Owner/Operator	(509) 372-2315	
Street or P.O. Box		
P.O. Box 450		
City or Town	State	ZIP Code
Richland	WA	99352
B. Owner Type F		
C. Does the name in VIII.A reflect a proposed change in owner? If yes, provide the scheduled date for the change:	☐ Yes ☒ No Month Day Year	

IX. NAICS Codes (5/6 digit codes)													
A. First							B. Second						
5	6	2	2	1	1	Waste Treatment & Disposal	5	6	2	9	1	0	Remediation Services
C. Third							D. Fourth						
5	4	1	7	1	5	Research & Development in the Physical, Engineering and Life Sciences	9	2	4	1	1	0	Administration of Air & Water Resource & Solid Waste Management Programs

X. Other Environmental Permits (see instructions)

A. Permit Type	B. Permit Number	C. Description
E	AOP00-05-006	Title V Air Operating Permit. Incorporation of current non-radiological Notice of Construction permits and FF-01 radiological licenses into the AOP may be delayed up to 2 years.
E	DELISTING	ETF Delisting, 70 Federal Register (FR) 44496, dated August 3, 2005
E	TSCA	Toxic Substance Control Act Risk-based Disposal approval Application for Management of Polychlorinated Biphenyl Remediation Waste at the 200 Area Liquid Waste Processing Facilities, dated June 8, 2004
E	OAWT-107	Approval of the Request for Approval of Alternate Reuse Practices for the 200 Area Effluent Treatment Facility (ETF) Treated Effluent, 05-AMCP-0378, dated August 3, 2005
E	ST00450	WAC 173-216, State Waste Discharge Permit for the 200 Area Effluent Treatment Facility State-Approved Land Disposal Site
E	ST00451	WAC 173-216, State Waste Discharge Permit Program, Sitewide Permit for Miscellaneous Streams

XI. Nature of Business (provide a brief description that includes both dangerous waste and non-dangerous waste areas and activities)

Construction of the Liquid Effluent Retention Facility (LERF) began in 1990, and waste management operations began in April 1994. Construction of the 200 Area ETF began in 1992, and waste management operations began in November of 1995. The LERF and 200 Area ETF comprise an aqueous waste (dilute wastewaters) treatment systems located in the 200 East Area that provides storage and treatment for a variety of aqueous mixed waste. The 200 Area ETF also includes an Effluent Grout Treatment Facility (EGTF) to provide tank and container storage and treatment of certain secondary wastes.

The aqueous waste streams are contaminated with radionuclides, heavy metals, and/or organic constituents. The aqueous waste streams include process condensate from the 242-A Evaporator, aqueous waste from the Waste Treatment and Immobilization Plant (WTP), and other aqueous waste generated from onsite remediation and waste management activities. For example, the process condensate from the 242-A Evaporator is a treatment residue; and the primary chemicals that carry over from dewatering process are ammonia and acetone. Leachate from mixed waste landfills is composed of storm water that has leached through a Subtitle C landfill, and could contain a small amount of radionuclides and chemical constituents leached from land disposal restrictions (LDR) compliant wastes. Purgewater is composed of >99% groundwater that may be contaminated with radionuclides and dangerous waste from past-practice spills or releases.

S04 and T02 - Surface Impoundment Storage and Treatment

Four lined surface impoundments (LERF Basins 41, 42, 43, and 44) are used to store and treat aqueous waste. Aqueous waste in LERF is treated by pH and flow equalization. Operations of the LERF basins qualified for the surface impoundment treatment exemption from the LDR in accordance with 40 CFR 268.4, incorporated by reference by WAC 173-303-140 (reference Addendum B, Waste Analysis Plan). The aqueous waste from LERF is pumped to the 200 Area ETF for treatment in a series of process units, or systems, that remove or destroy dangerous waste constituents. The treated effluent is discharged to a State-Approved Land Disposal Site north of the 200 West Area, under the authority of a Washington State Waste Discharge Permit (ST0004500) and the 200 Area Final Delisting (40 CFR 261, Appendix IX, Table 2).

The design capacity for the 4-surface impoundments is 31,200,000 gallons, based on a maximum operating capacity of 7.8 million gallons for each LERF basin (LERF berm top with required 2-feet of freeboard). The estimated annual quantity of waste is 402,000,000 pounds, based on the capacity of the four LERF Basins and the LERF largest annual volume discharge year to 200 Area ETF.

S01 and T04 - Container Storage and Treatment

Eight container storage and treatment dangerous waste management units (DWMUs) are located at the 200 Area ETF. Containers in these areas can be moved between DWMUs. The primary treatment in containers is decanting and the use of absorbents or hardeners to stabilize free liquids in sludge drained from treatment tanks. Once containers are full, the containers are moved to the 2025E Container Storage Area, Outside Container Storage Area, EGTF Container Storage Areas, sent to another treatment, storage, and disposal facility, Integrated Disposal Facility (IDF), or Environmental Restoration Disposal Facility (ERDF), as appropriate.

The container design capacity 70,000 gallons is an empirical number based on the equivalent of storing 55-gallon drums within the eight-container storage areas. The treatment capacity 12,500 gallons is an empirical number based on maximum anticipated treatment. The eight-container storage and treatment areas are:

XI. Nature of Business (provide a brief description that includes both dangerous waste and non-dangerous waste areas and activities)

- 2025E Process Area. The waste primarily consists of containers that function as part of the waste management process. Waste streams are accumulated into DOT approved containers near a specific operation within the 2025E Process Area. The containers primarily store waste generated from maintenance and operations activities. Treatment activities include decanting and the use of absorbents for liquid stabilization. Another function of the waste management process is to store aqueous waste containers from other Hanford Site sources in the 2025E Process Area and transfer the waste to the 200 Area ETF tanks for processing. Once the Process Area containers are full, the containers are moved to the 2025E Container Storage Area, the Outside Container Storage Area, another TSD facility, or ERDF.
- 2025E Container Storage Area. The containerized waste primarily consists of brine and dry powder treatment residues, aqueous wastes received for treatment, and waste generated from maintenance and operations activities. Treatment activities in this area include decanting and the use of absorbents for liquid stabilization.
- 2025E Truck Bay. This area is used to store containers being moved between the 2025E Process Area, 2025E Container Storage Area, and Outside Container Storage Area. The containerized waste primarily consists of brine and dry powder treatment residues, aqueous wastes received for treatment, and waste generated from maintenance and operations activities. Treatment activities in this area include decanting and the use of absorbents for liquid stabilization. However, container storage and treatment is limited because of the limited space available in the 2025E Truck Bay.
- Outside Container Storage Area. The containerized waste primarily consists of brine and dry powder treatment residues, and waste generated from maintenance and operations activities. Treatment activities in this area include the use of absorbents for liquid stabilization.
- 2025ED Load-In Station. This area is primarily used to store waste generated from maintenance and operations activities, aqueous waste in tanker trucks and other containers (such as drums, or totes) until the waste is transferred into the Load-In Station tank, surge tank, or directly to LERF. Treatment activities in this area include decanting and the use of absorbents for liquid stabilization.
- Backup Load-In Station. This area is primarily used to store aqueous waste in tanker trucks and other containers (such as drums, or totes) until the waste is transferred into LERF, or 200 Area ETF.
- EGTF Container Storage Area. The container storage area is used to store containers of grout, and waste generated from maintenance and operations activities. After the grout cures, the containers are transferred to the EGTF Outside Container Storage Area before transfer to IDF for disposal.
- EGTF Outside Container Storage Area. The container storage area is used to store containers of cured grout prior to transfer to the IDF for disposal.

S02 and T01 – Tank Storage and Treatment

The 27 tanks below are the tank storage and treatment DWMUs identified in Section XII.C. Aqueous waste is treated and stored in the 2025E Process Area in a series of tank systems. Additional, tanks are associated with the 2025ED Load-In Station, steam stripper system, brine storage, and EGTF. The structural design capacity is based on the tank dimensions.

20B-TK-1, Sump Tank 1
20B-TK-2, Sump Tank 2
59A-TK-1, Load-In Station Tank
60A-TK-1, Surge Tank
60C-TK-1, pH Adjust Tank
60C-TK-2, Effluent pH Adjust Tank
60F-TK-1, 1st RO Feed Tank
60F-TK-2, 2nd RO Feed Tank
60H-TK-1A, Verification Tank
60H-TK-1B, Verification Tank
60H-TK-1C, Verification Tank
60I-EV-1, Evaporator Vapor Body Vessel
60I-TK-1A, Secondary Waste Receiving Tank
60I-TK-1B, Secondary Waste Receiving Tank
60I-TK-2, Distillate Flash Tank
60J-TK-1A, Concentrate Tank
60J-TK-1B, Concentrate Tank
59A-TK-2, Sump Tank
59A-TK-3, Sump Tank
60K-CO-001, Steam Stripper Column
60K-TK-001, Steam Stripper Condensate Tank
60K-CO-201, Steam Stripper Concentrator
60K-TK-201, Concentrator Condensate Tank
Steam Stripper Distillate Tank
Brine Lag Storage Tank
Brine Lag Storage Tank
Ammonia Treatment Tank

NAICS Codes. NAICS Codes listed in Section IX.B – IX.D apply to the Hanford Facility and not to this unit.

EXAMPLE FOR COMPLETING ITEMS XII and XIII (shown in lines numbered X-1, X-2, and X-3 below): A facility has two storage tanks that hold 1200 gallons and 400 gallons respectively. There is also treatment in tanks at 20 gallons/hr. Finally, a one-quarter acre area that is two meters deep will undergo in situ vitrification.

Section XII. Process Codes and Design Capacities								Section XIII. Other Process Codes								
Line Number		A. Process Codes (enter code)			B. Process Design Capacity		C. Process Total Number of Units	Line Number		A. Process Codes (entercode)			B. Process Design Capacity		C. Process Total Number of Units	D. Process Description
					1. Amount	2. Unit of Measure (enter code)							1. Amount	2. Unit of Measure (enter code)		
X	1	S	0	2	1,600	G	002	X	1	T	0	4	700	C	001	In situ vitrification
X	2	T	0	3	20	E	001									
X	3	T	0	4	700	C	001									
	1	S	0	4	31,200,000	G	4		1	T	0	4	12,500	U	8	container treatment
	2	T	0	2	31,200,000	U	4		2							
	3	S	0	1	70,000	G	8		3							
	4	T	0	4	12,500	U	8		4							
	5	S	0	2	2,800,000	G	27		5							
	6	T	0	1	216,000	U	27		6							
	7								7							
	8								8							
	9								9							
1	0							1	0							
1	1							1	1							
1	2							1	2							
1	3							1	3							
1	4							1	4							
1	5							1	5							
1	6							1	6							
1	7							1	7							
1	8							1	8							
1	9							1	9							
2	0							2	0							
2	1							2	1							
2	2							2	2							
2	3							2	3							
2	4							2	4							
2	5							2	5							

XIV. Description of Dangerous Wastes

Example for completing this section: A facility will receive three non-listed wastes, then store and treat them on-site. Two wastes are corrosive only, with the facility receiving and storing the wastes in containers. There will be about 200 pounds per year of each of these two wastes, which will be neutralized in a tank. The other waste is corrosive and ignitable and will be neutralized then blended into hazardous waste fuel. There will be about 100 pounds per year of that waste, which will be received in bulk and put into tanks.

Line Number	A. Dangerous Waste No.				B. Estimated Annual Quantity of Waste	C. Unit of Measure	D. Processes									
							(1) Process Codes									(2) Process Description [If a code is not entered in D (1)]
X 1	D	0	0	2	400	P	S	0	1	T	0	1				
X 2	D	0	0	1	100	P	S	0	2	T	0	1				
X 3	D	0	0	2												Included with above
1	D	0	0	1	402,000,000	P	S	0	4	T	0	2				Surface Impoundment Storage & Treatment
2	D	0	0	2												Included with above
3	D	0	0	3												Included with above
4	D	0	0	4												Included with above
5	D	0	0	5												Included with above
6	D	0	0	6												Included with above
7	D	0	0	7												Included with above
8	D	0	0	8												Included with above
9	D	0	0	9												Included with above
10	D	0	1	0												Included with above
11	D	0	1	1												Included with above
12	D	0	1	8												Included with above
13	D	0	1	9												Included with above
14	D	0	2	2												Included with above
15	D	0	2	8												Included with above
16	D	0	2	9												Included with above
17	D	0	3	0												Included with above
18	D	0	3	3												Included with above
19	D	0	3	4												Included with above
20	D	0	3	5												Included with above
21	D	0	3	6												Included with above
22	D	0	3	8												Included with above
23	D	0	3	9												Included with above
24	D	0	4	0												Included with above
25	D	0	4	1												Included with above

EPA/State ID Number	W	A	7	8	9	0	0	0	8	9	6	7

Continuation of Section XIV. Description of Dangerous Waste

Line Number	A. Dangerous Waste No. (enter code)				B. Estimated Annual Quantity of Waste	C. Unit of Measure (enter code)	D. Process									
							(1) Process Codes (enter)									(2) Process Description [If a code is not entered in D (1)]
26	D	0	4	3												Included with above
27	F	0	0	1												Included with above
28	F	0	0	2												Included with above
29	F	0	0	3												Included with above
30	F	0	0	4												Included with above
31	F	0	0	5												Included with above
32	F	0	3	9												Included with above
33	W	T	0	1												Included with above
34	W	T	0	2												Included with above
35	U	2	1	0												Included with above
36	D	0	0	1	258,700,000	P	S	0	2	T	0	1				Tank Storage & Treatment
37	D	0	0	2												Included with above
38	D	0	0	3												Included with above
39	D	0	0	4												Included with above
40	D	0	0	5												Included with above
41	D	0	0	6												Included with above
42	D	0	0	7												Included with above
43	D	0	0	8												Included with above
44	D	0	0	9												Included with above
45	D	0	1	0												Included with above
46	D	0	1	1												Included with above
47	D	0	1	8												Included with above
48	D	0	1	9												Included with above
49	D	0	2	2												Included with above
50	D	0	2	8												Included with above
51	D	0	2	9												Included with above
52	D	0	3	0												Included with above
53	D	0	3	3												Included with above
54	D	0	3	4												Included with above
55	D	0	3	5												Included with above
56	D	0	3	6												Included with above

EPA/State ID Number	W	A	7	8	9	0	0	0	8	9	6	7

Continuation of Section XIV. Description of Dangerous Waste

Line Number	A. Dangerous Waste No. (enter code)				B. Estimated Annual Quantity of Waste	C. Unit of Measure (enter code)	D. Process									
							(1) Process Codes (enter)									(2) Process Description [If a code is not entered in D (1)]
57	D	0	3	8												Included with above
58	D	0	3	9												Included with above
59	D	0	4	0												Included with above
60	D	0	4	1												Included with above
61	D	0	4	3												Included with above
62	F	0	0	1												Included with above
63	F	0	0	2												Included with above
64	F	0	0	3												Included with above
65	F	0	0	4												Included with above
66	F	0	0	5												Included with above
67	F	0	3	9												Included with above
68	W	T	0	1												Included with above
69	W	T	0	2												Included with above
70	U	2	1	0												Included with above
71	D	0	0	1	2,375,000	P	S	0	1							Container Storage Includes Debris
72	D	0	0	2												Included with above
73	D	0	0	3												Included with above
74	D	0	0	4												Included with above
75	D	0	0	5												Included with above
76	D	0	0	6												Included with above
77	D	0	0	7												Included with above
78	D	0	0	8												Included with above
79	D	0	0	9												Included with above
80	D	0	1	0												Included with above
81	D	0	1	1												Included with above
82	D	0	1	8												Included with above
83	D	0	1	9												Included with above
84	D	0	2	2												Included with above
85	D	0	2	8												Included with above
86	D	0	2	9												Included with above
87	D	0	3	0												Included with above

EPA/State ID Number	W	A	7	8	9	0	0	0	8	9	6	7

Continuation of Section XIV. Description of Dangerous Waste

Line Number	A. Dangerous Waste No. (enter code)				B. Estimated Annual Quantity of Waste	C. Unit of Measure (enter code)	D. Process									
							(1) Process Codes (enter)									(2) Process Description [If a code is not entered in D (1)]
88	D	0	3	3												Included with above
89	D	0	3	4												Included with above
90	D	0	3	5												Included with above
91	D	0	3	6												Included with above
92	D	0	3	8												Included with above
93	D	0	3	9												Included with above
94	D	0	4	0												Included with above
95	D	0	4	1												Included with above
96	D	0	4	3												Included with above
97	F	0	0	1												Included with above
98	F	0	0	2												Included with above
99	F	0	0	3												Included with above
100	F	0	0	4												Included with above
101	F	0	0	5												Included with above
102	F	0	3	9												Included with above
103	W	T	0	1												Included with above
104	W	T	0	2												Included with above
105	U	2	1	0												Included with above
106	D	0	0	1	2,304,000	P	T	0	4							Container Treatment Includes Debris
107	D	0	0	2												Included with above
108	D	0	0	3												Included with above
109	D	0	0	4												Included with above
110	D	0	0	5												Included with above
111	D	0	0	6												Included with above
112	D	0	0	7												Included with above
113	D	0	0	8												Included with above
114	D	0	0	9												Included with above
115	D	0	1	0												Included with above
116	D	0	1	1												Included with above
117	D	0	1	8												Included with above
118	D	0	1	9												Included with above

EPA/State ID Number	W	A	7	8	9	0	0	0	8	9	6	7

Continuation of Section XIV. Description of Dangerous Waste

Line Number	A. Dangerous Waste No. (enter code)				B. Estimated Annual Quantity of Waste	C. Unit of Measure (enter code)	D. Process									
							(1) Process Codes (enter)									(2) Process Description [If a code is not entered in D (1)]
119	D	0	2	2												Included with above
120	D	0	2	8												Included with above
121	D	0	2	9												Included with above
122	D	0	3	0												Included with above
123	D	0	3	3												Included with above
124	D	0	3	4												Included with above
125	D	0	3	5												Included with above
126	D	0	3	6												Included with above
127	D	0	3	8												Included with above
128	D	0	3	9												Included with above
129	D	0	4	0												Included with above
130	D	0	4	1												Included with above
131	D	0	4	3												Included with above
132	F	0	0	1												Included with above
133	F	0	0	2												Included with above
134	F	0	0	3												Included with above
135	F	0	0	4												Included with above
136	F	0	0	5												Included with above
137	F	0	3	9												Included with above
138	W	T	0	1												Included with above
139	W	T	0	2												Included with above
140	U	2	1	0												Included with above
141																
142																
143																
144																
145																
146																
147																
148																
149																

XV. Map

Attach to this application a topographic map of the area extending to at least one (1) mile beyond property boundaries. The map must show the outline of the facility; the location of each of its existing and proposed intake and discharge structures; each of its dangerous waste treatment, storage, recycling, or disposal units; and each well where fluids are injected underground. Include all springs, rivers, and other surface water bodies in this map area, plus drinking water wells listed in public records or otherwise known to the applicant within ¼ mile of the facility property boundary. The instructions provide additional information on meeting these requirements.

XVI. Facility Drawing

All existing facilities must include a scale drawing of the facility (refer to Instructions for more detail).

XVII. Photographs

All existing facilities must include photographs (aerial or ground-level) that clearly delineate all existing structures; existing storage, treatment, recycling, and disposal areas; and sites of future storage, treatment, recycling, or disposal areas (refer to Instructions for more detail).

XVIII. Certifications

I certify under penalty of law that this document and all attachments were prepared under my direction or supervision in accordance with a system designed to assure that qualified personnel properly gather and evaluate the information submitted. Based on my inquiry of the person or persons who manage the system, or those persons directly responsible for gathering the information, the information submitted is, to the best of my knowledge and belief, true, accurate, and complete. I am aware that there are significant penalties for submitting false information, including the possibility of fine and imprisonment for knowing violations.

Operator Name and Official Title (type or print) Brian T. Vance, Manager U.S. Department of Energy Office of River Protection	Signature Digitally signed by Brian T. Vance DN: cn=Brian T. Vance, o=Office of River Protection, ou=Department of Energy, email=brian.t.vance@orp.doe.gov, c=US Date: 2020.07.07 09:55:36-07'00'	Date Signed
Co-Operator Name and Official Title (type or print) John R. Eschenberg President and Project Manager Washington River Protection Solutions, LLC	Signature	Date Signed 06/10/20
Co-Operator – Address and Telephone Number P.O. Box 850 Richland, WA 99352 (509) 376-2574		
Facility-Property Owner Name and Official Title (type or print) Brian T. Vance, Manager U.S. Department of Energy Office of River Protection	Signature Digitally signed by Brian T. Vance DN: cn=Brian T. Vance, o=Office of River Protection, ou=Department of Energy, email=brian.t.vance@orp.doe.gov, c=US Date: 2020.07.07 09:56:03-07'00'	Date Signed

Comments

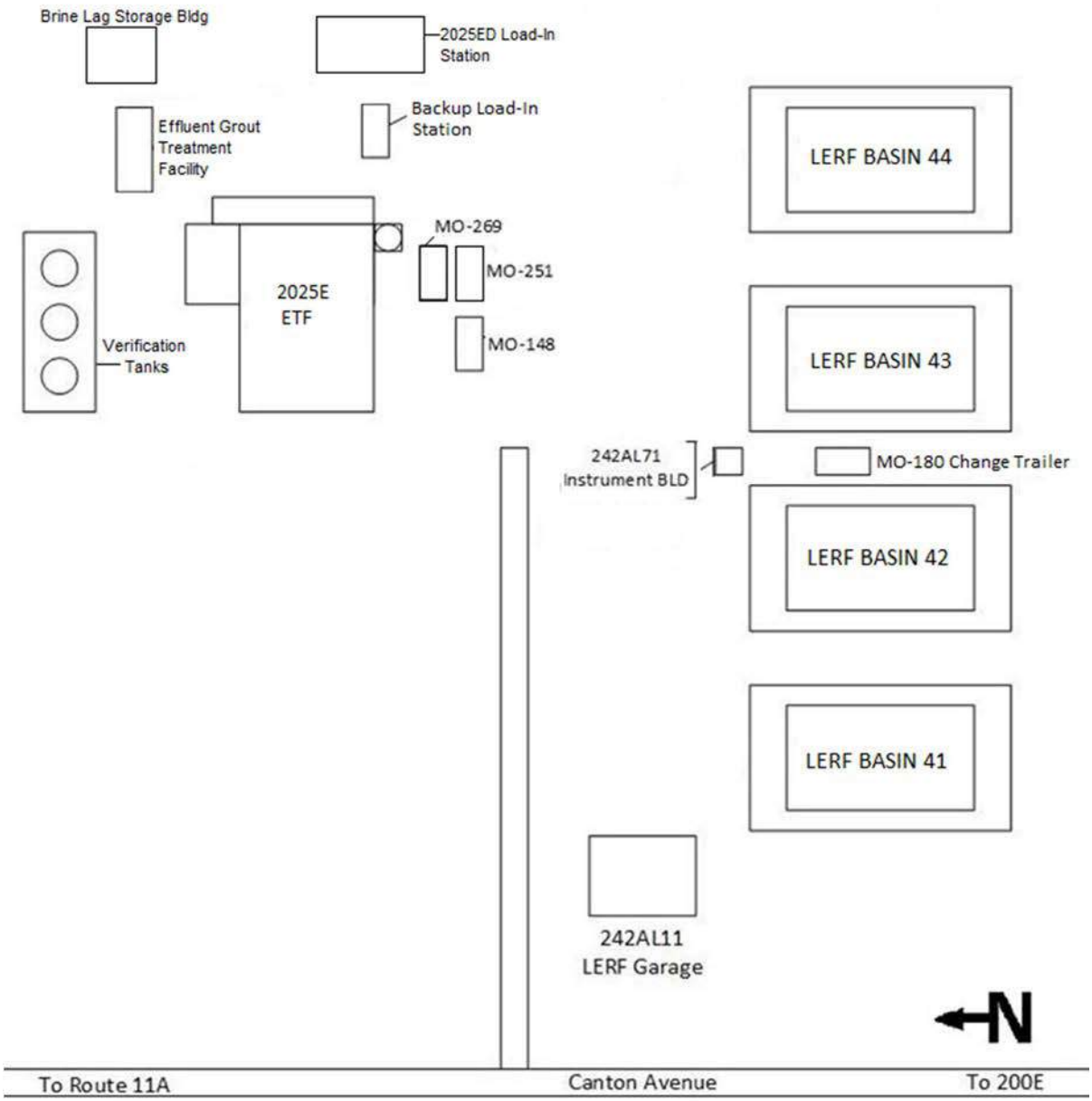

A.1. LERF and 200 Area ETF Site Plan

Photo 5/2016

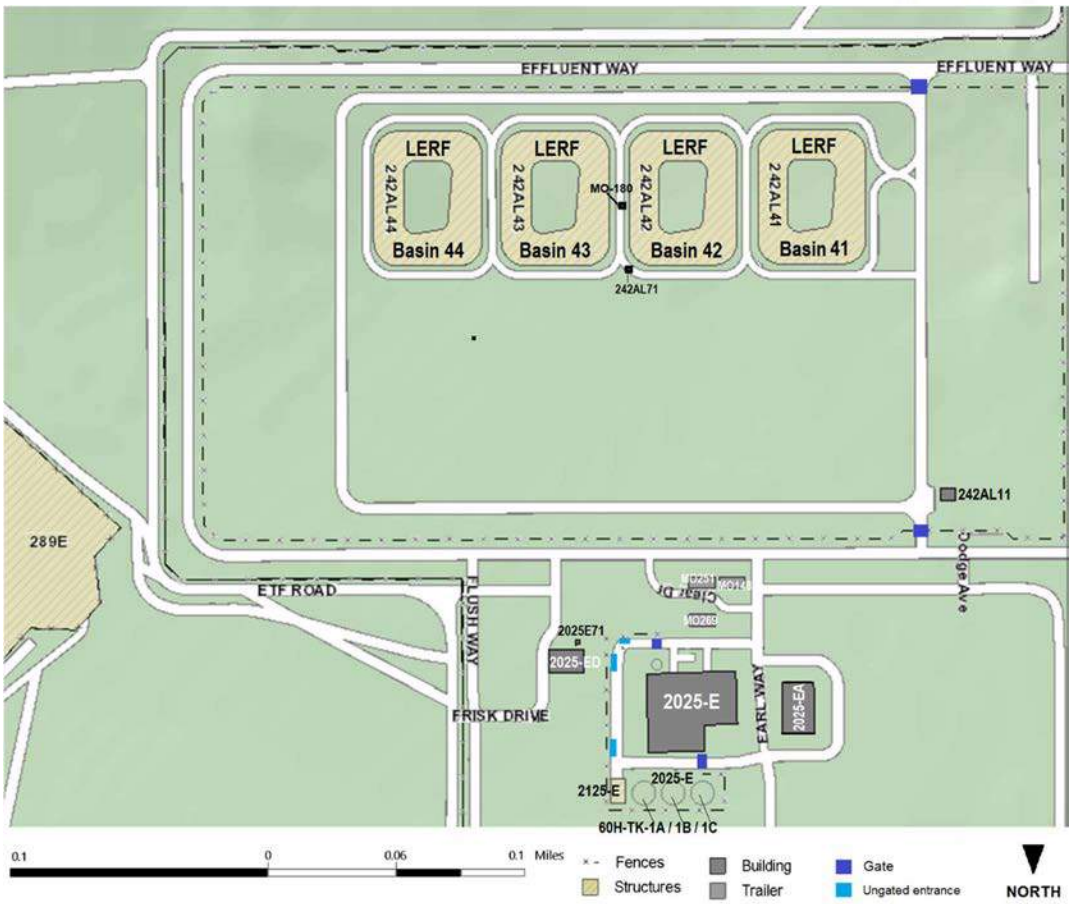

A.2. LERF and 200 Area ETF

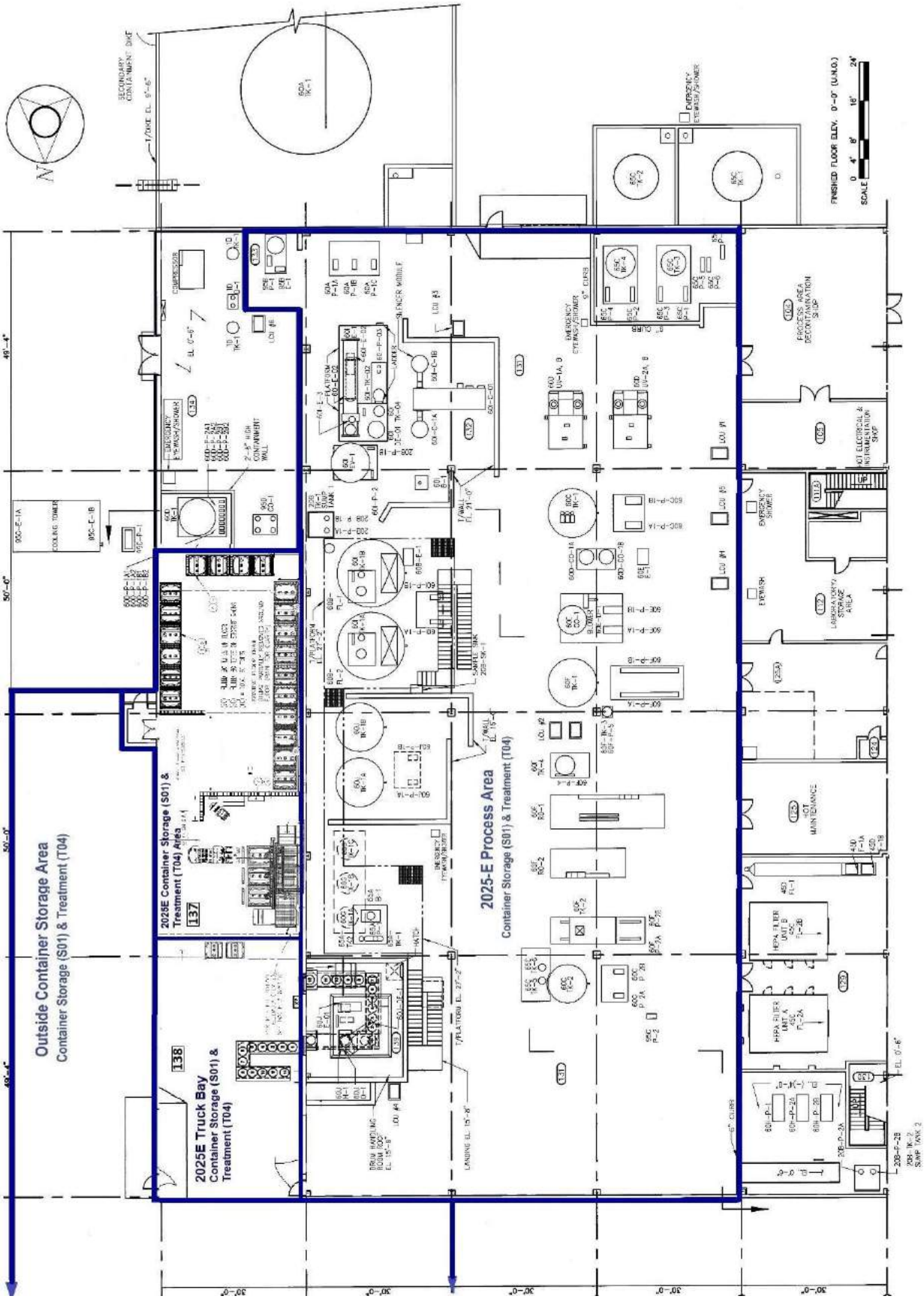

A.3. 2025-E ETF Ground Floor Plan

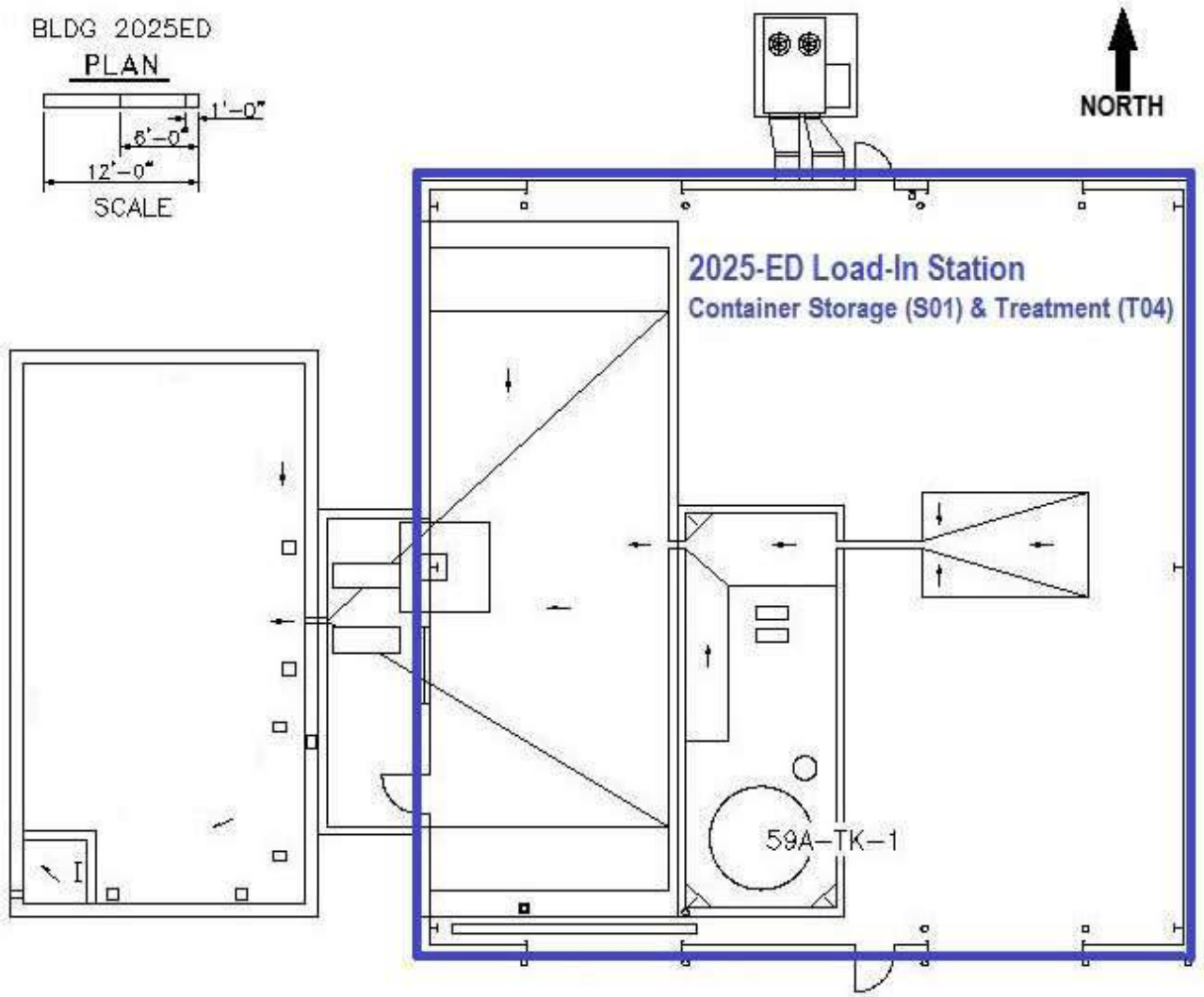

A.4. 2025-ED Load-In Station

A.5. 200 Area ETF Building 2025-E Photo 9/2016

A.6. 2025-E Process Area Photo 3/2016

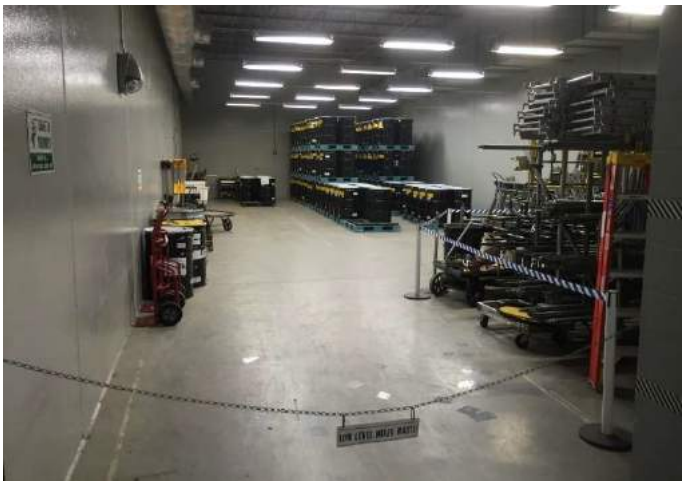

A.7. 2025-E Container Storage Area Photo 9/2016

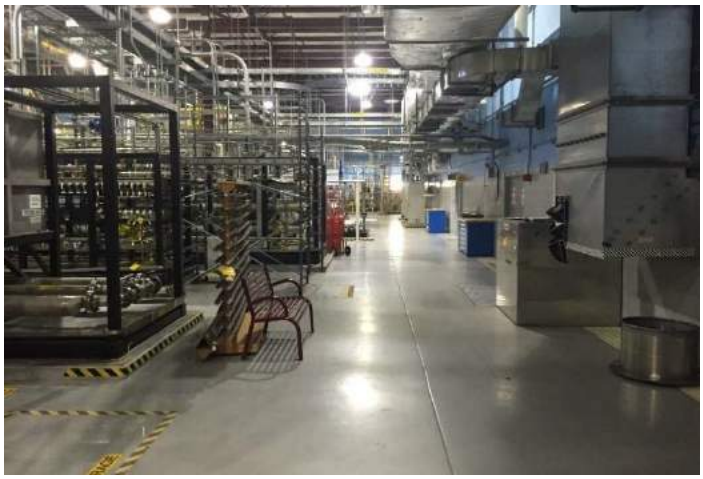

A.8. 2025-E Process Area Photo 3/2016

A.9. 2025-E Truck Bay Photo 3/2016

A.10. 2025-E Process Area Photo 3/2016

A.11. 2025-E Process Area Primary Train Photo 3/2016

A.12. Outside Container Storage Area Photo 3/2016

A.13. 2025-ED Load-In Station Photo 3/2016

A.14. 2025-ED Load-In Station Photo 3/2016
59A-TK-1 and Tanker Truck

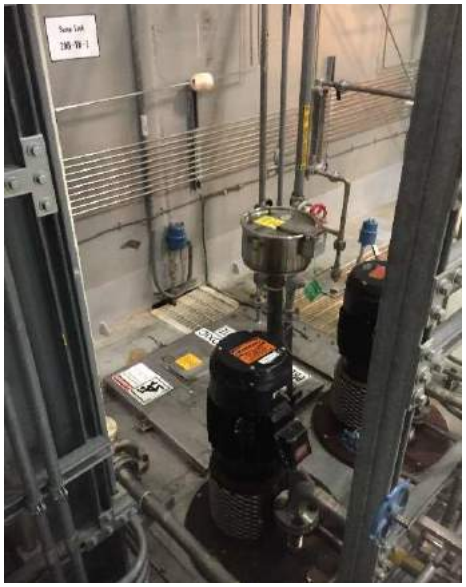

A.15. 20B-TK-1, Sump Tank 1 Photo 2/2017

A.16. 20B-TK-2, Sump Tank 2 Photo 2/2017

A.17. 60A-TK-1, Surge Tank Photo 1/2017

A.18. pH Adjustment Tank 60C-TK-1 Photo 1/2017

A.19. Effluent pH Adjustment Tank 60C-TK-2 Photo 1/2017

A.20. 1st RO Feed Tank 60F-TK-1 Photo 1/2017

A.21. 2nd RO Feed Tank 60F-TK-2 Photo 1/2017

A.22. 60H-TK-1A/1B/1C, Verification Tanks Photo 9/2016

A.23. 60I-EV-1 Photo 9/2016
Evaporator Vapor Body Vessel

A.24. 60I-TK-1A Photo 2/2017
Secondary Waste Receiving Tank

A.25. 60I-TK-1B Photo 2/2017
Secondary Waste Receiving Tank

A.26. 60I-TK-2 Distillate Flash Tank Photo 2/2017

A.27. 60J-TK-1A/1B, Concentrate Tanks Photo 2/2017

A.28. 59A-TK-2 Sump Tank Photo 1/2019

1

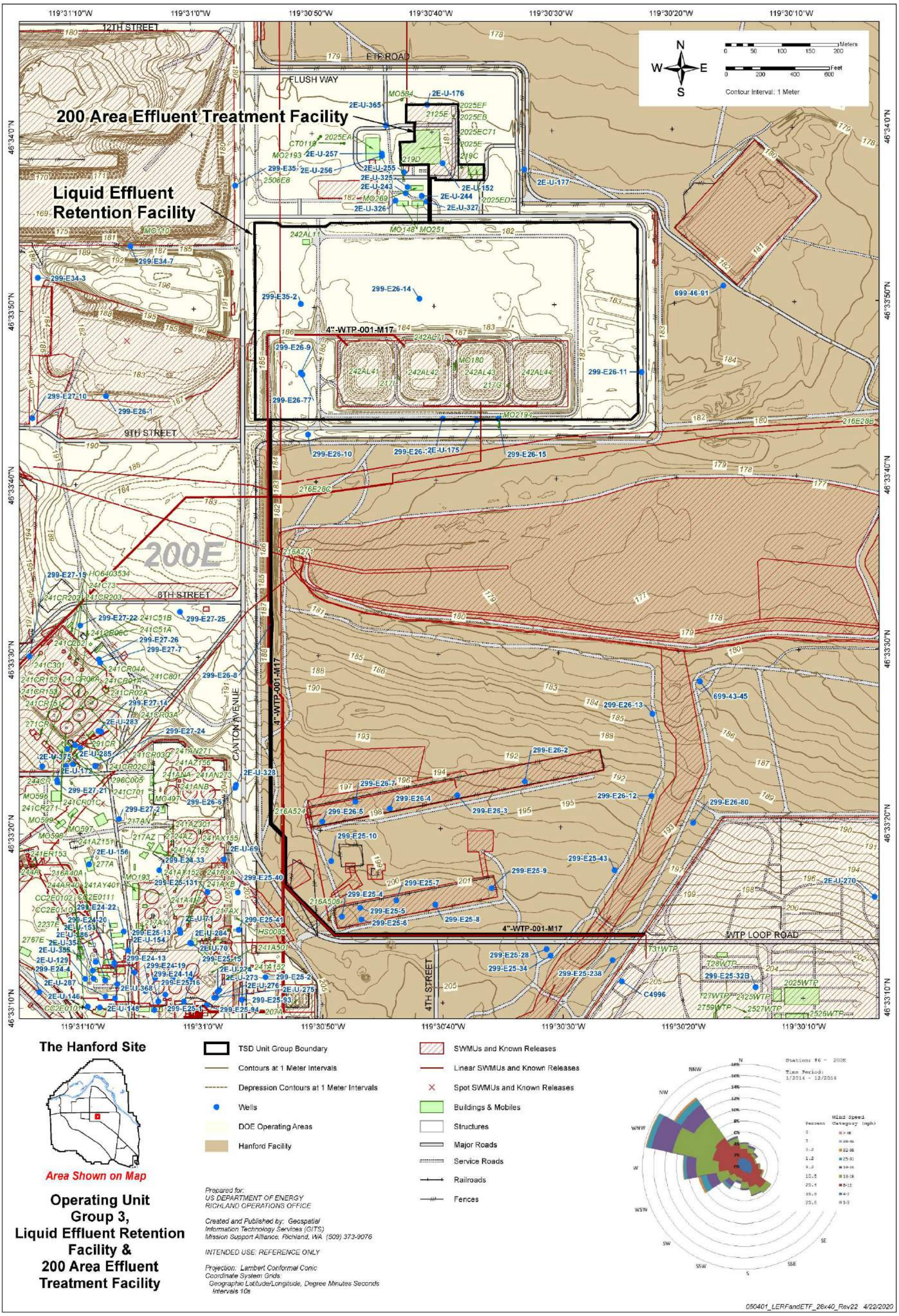
200 Area Effluent Treatment Facility
Liquid Effluent Retention Facility
12TH STREET
ETF ROAD
FLUSH WAY
9TH STREET
8TH STREET
4TH STREET
CANTON AVENUE
WTP LOOP ROAD
200E
4"-WTP-001-M17
Contour Interval: 1 Meter
The Hanford Site
Area Shown on Map
Operating Unit Group 3, Liquid Effluent Retention Facility & 200 Area Effluent Treatment Facility
TSD Unit Group Boundary
Contours at 1 Meter Intervals
Depression Contours at 1 Meter Intervals
Wells
DOE Operating Areas
Hanford Facility
SWMUs and Known Releases
Linear SWMUs and Known Releases
Spot SWMUs and Known Releases
Buildings & Mobiles
Structures
Major Roads
Service Roads
Railroads
Fences
Prepared for:
US DEPARTMENT OF ENERGY
RICHLAND OPERATIONS OFFICE
Created and Published by: Geospatial Information Technology Services (GITS)
Mission Support Alliance, Richland, WA (509) 373-9076
INTENDED USE: REFERENCE ONLY
Projection: Lambert Conformal Conic
Coordinate System Grids:
Geographic Latitude/Longitude, Degree Minutes Seconds
Intervals 10s
050401_LERFandETF_28x40_Rev22 4/22/2020

This page intentionally left blank.

Attachment 3
20-ECD-0033

Hanford Facility RCRA Permit Change Notice
Part III, Operating Unit Group 3
Liquid Effluent Retention Facility & 200 Area Effluent Treatment Facility

(68 Pages Including Cover Sheet)

Hanford Facility RCRA Permit Change Notice

Part III, Operating Unit Group 3

Liquid Effluent Retention Facility & 200 Area Effluent Treatment Facility

Index

Page	Permit Section
Page 2 of 8:	Permit Conditions
Page 3 of 8:	Addendum A, Part A Form
Page 4 of 8:	Addendum B, Waste Analysis Plan
Page 5 of 8:	Addendum C, Process Information
Page 6 of 8:	Addendum F, Preparedness & Prevention
Page 7 of 8:	Addendum I, Inspection Plan
Page 8 of 8:	Addendum J, Contingency Plan

Submitted by WRPS Co-Operator:

Jeremy T. Hartley — 5/28/20 Date

Reviewed by DOE-ORP Program Office:

Brian A. Harkins — Digitally signed by Brian A. Harkins Date: 2020.06.23 13:33:56 -07'00'

Rob G. Hastings — Date

Hanford Facility RCRA Permit Change Notice	
Unit: Liquid Effluent Retention Facility & 200 Area Effluent Treatment Facility	Permit Part: Part III, Operating Unit Group 3

Description of Modification:

Permit Conditions:

☐ Update the following List of Addenda Specific to Operating Unit Group 3 with modification approval date:

Addendum A Part A Form, dated TBD ~~October 25, 2017~~
Addendum B Waste Analysis Plan, dated TBD ~~December 7, 2018~~
Addendum C Process Information, dated TBD ~~December 7, 2018~~
Addendum F Preparedness and Prevention, dated TBD ~~January 23, 2018~~
Addendum I Inspection Requirements, dated TBD ~~April 30, 2019~~
Addendum J Contingency Plan, dated TBD ~~April 30, 2019~~

☐ Updated Permit Condition III.3.B.3.d to add "41" to the LERF Basins listing.

☐ Updated Permit Condition III.3.Q.1 to reflect four LERF basins

☐ Revised Permit Condition II.3.R.3 to update report title

☐ Added the following Permit Conditions:

III.3.Q.15 The Permittees will comply with the requirements of WAC 173 303 650(4)(a), incorporated by reference. The inspection record required by this Permit Condition must be provided to Ecology prior receiving waste at LERF Basin 41.

III.3.Q.16 Prior to receipt of any dangerous waste into the LERF Basin 41, the Permittees shall comply with Permit Condition III.3.R.5.

III.3.R.4 Prior to receipt of Waste Treatment and Immobilization Plant waste into the LERF, the permittees shall provide an updated Liquid Effluent Retention Facility Engineering Evaluation and update as applicable the Addendum D, Groundwater Monitoring Plan.

III.3.R.5 A new groundwater well, representative of the groundwater flow around the LERF Basin 41, shall be installed, deemed operational and added to the permit via a Class 2 permit modification. The Class 2 permit modification shall include an updated Addendum D, Groundwater Monitoring Plan, as required by Permit Condition III.3.R.4.

WAC 173-303-830 Modification Class	Class 1	Class 1	Class 2	Class 3
Please mark the Modification Class:				X

Enter relevant WAC 173-303-830, Appendix I Modification citation number: H.1

Enter wording of WAC 173-303-830, Appendix I Modification citation: Modification or addition of surface impoundment units that result in increasing the facility's surface impoundment storage or treatment capacity

Modification Approved: ☐ Yes ☐ No (state reason) Reason for Non-concurrence:	Reviewed by Ecology: Stephanie Schleif Date

Hanford Facility RCRA Permit Change Notice	
Unit: Liquid Effluent Retention Facility & 200 Area Effluent Treatment Facility	Permit Part: Part III, Operating Unit Group 3

Description of Modification:

Addendum A, Part A Form

- ☐ Updated Section XI, Nature of Business for addition of LERF Basin 41 surface impoundment, container storage and treatment areas, tank storage and treatment, and an Effluent Grout Treatment Facility (EGTF) to provide tank and container storage and treatment of certain secondary wastes; and removal of two tanks.
- ☐ Updated Section XII, Process Codes and Design Capacities for addition and removal of the systems above
- ☐ Updated Section XIV, Description of Dangerous Wastes for addition and removal of the systems above
- ☐ Added Figure A.1, General Facility Layout to show locations for the systems added above.
- ☐ Renumbered Figures A.1 – A.15 to A.2 – A.16, and deleted Figure 16.
- ☐ Updated Figure A.2, LERF and 200 Area ETF to label LERF Basin 41 on the photograph
- ☐ Updated Figure A.3, 2025-E ETF Ground Floor Plan to show container storage areas more clearly
- ☐ Updated topographic map showing connection to LERF Basin 41.

WAC 173-303-830 Modification Class	Class 1	Class 1	Class 2	Class 3
Please mark the Modification Class:				X

Enter relevant WAC 173-303-830, Appendix I Modification citation number: H.1, F.1.a, and G.1.b

Enter wording of WAC 173-303-830, Appendix I Modification citation: H.1, Modification or addition of surface impoundment units that result in increasing the facility's surface impoundment storage or treatment capacity;
F.1.a, Resulting in greater than 25% increase in the facility's container storage capacity;
G.1.b, Modification or addition of tank units resulting in up to 25% increase in the facility's tank capacity,

Modification Approved: ☐ Yes ☐ No (state reason) Reason for Non-concurrence:	Reviewed by Ecology:
	Stephanie Schleif Date

Hanford Facility RCRA Permit Change Notice	
Unit: Liquid Effluent Retention Facility & 200 Area Effluent Treatment Facility	Permit Part: Part III, Operating Unit Group 3

Description of Modification:

Addendum B, Waste Analysis Plan

- ☐ Updated Sections B.1, B.1.1, and B.2.1.1 to reflect addition of LERF Basin 41.

WAC 173-303-830 Modification Class	Class 1	Class 1	Class 2	Class 3
Please mark the Modification Class:				X

Enter relevant WAC 173-303-830, Appendix I Modification citation number: H.1

Enter wording of WAC 173-303-830, Appendix I Modification citation: Modification or addition of surface impoundment units that result in increasing the facility's surface impoundment storage or treatment capacity.

Modification Approved: ☐ Yes ☐ No (state reason) Reason for Non-concurrence:	Reviewed by Ecology:
	Stephanie Schleif Date

Hanford Facility RCRA Permit Change Notice	
Unit: Liquid Effluent Retention Facility & 200 Area Effluent Treatment Facility	Permit Part: Part III, Operating Unit Group 3

Description of Modification:

Addendum C, Process Information

- ☐ Revised surface impoundment text to reflect addition of fourth surface impoundment (LERF Basin 41).
- ☐ Editorial (e.g., updated Figure and Table numbering, Figure titles)
- ☐ Revised Table C.2 Liquid Effluent Retention Facility Containment System to include Basin 41 drawings
- ☐ Revised Table C.3 Liquid Effluent Retention Facility Piping and Instrumentation to include Basin 41 drawings
- ☐ Revised Table C.10 Geomembrane Material Specifications to include Basin 41 specification
- ☐ Revised Table C.11 Drainage Gravel Specifications to include Basin 41 specifications
- ☐ Updated Figure C.1, showing LERF and 200 Area ETF Layout
- ☐ Added figures for Basin 41 (Liner System Schematic, Leachate Collection Sump, Liner Anchor Wall and Cover Tension System) (new figures identified below)
- ☐ Figure C.15 retitled as Figure C.16 representing Basins 42, 43, and 44. New Figure C.15 represents Basin 41
- ☐ Figure C.16 retitled as Figure C.18 representing Basins 42, 43, and 44. New Figure C.17 represents Basin 41
- ☐ Figure C.17 retitled as Figure C.20 representing Basins 42, 43, and 44. New Figure C.19 represents Basin 41

WAC 173-303-830 Modification Class	Class 1	Class 1	Class 2	Class 3
Please mark the Modification Class:				X

Enter relevant WAC 173-303-830, Appendix I Modification citation number: H.1

Enter wording of WAC 173-303-830, Appendix I Modification citation: Modification or addition of surface impoundment units that result in increasing the facility's surface impoundment storage or treatment capacity.

Modification Approved: ☐ Yes ☐ No (state reason) Reason for denial:	Reviewed by Ecology:
	Stephanie Schleif — Date

Hanford Facility RCRA Permit Change Notice	
Unit: Liquid Effluent Retention Facility & 200 Area Effluent Treatment Facility	Permit Part: Part III, Operating Unit Group 3

Description of Modification:

Addendum F, Preparedness & Prevention

- ☐ Updated runoff information for LERF dikes.
- ☐ Update equipment and power failure information.

WAC 173-303-830 Modification Class	Class 1	Class 1	Class 2	Class 3
Please mark the Modification Class:				X

Enter relevant WAC 173-303-830, Appendix I Modification citation number: H.1

Enter wording of WAC 173-303-830, Appendix I Modification citation: Modification or addition of surface impoundment units that result in increasing the facility's surface impoundment storage or treatment capacity.

Modification Approved: ☐ Yes ☐ No (state reason) Reason for denial:	Reviewed by Ecology:
	Stephanie Schleif — Date

Hanford Facility RCRA Permit Change Notice	
Unit: Liquid Effluent Retention Facility & 200 Area Effluent Treatment Facility	Permit Part Part III, Operating Unit Group 3

Description of Modification:

Addendum I, Inspection Plan

- ☐ Updated Table I.1 visual inspection for the surface impoundment inspections to include LERF Basin 41.
- ☐ Updated Table I.2 instrumentation monitoring for the surface impoundment to include LERF Basin 41.

WAC 173-303-830 Modification Class	Class 1	Class 1	Class 2	Class 3
Please mark the Modification Class:				X

Enter relevant WAC 173-303-830, Appendix I Modification citation number: H.1

Enter wording of WAC 173-303-830, Appendix I Modification citation: Modification or addition of surface impoundment units that result in increasing the facility's surface impoundment storage or treatment capacity.

Modification Approved: ☐ Yes ☐ No (state reason) Reason for denial:	Reviewed by Ecology:
	Stephanie Schleif — Date

Hanford Facility RCRA Permit Change Notice	
Unit: Liquid Effluent Retention Facility & 200 Area Effluent Treatment Facility	Permit Part: Part III, Operating Unit Group 3

Description of Modification:

Addendum J, Contingency Plan

- ☐ Updated Figure J.2, LERF and 200 Area ETF Site Plan to label Basin 41.
- ☐ Added LERF Basins Response Action Plan

WAC 173-303-830 Modification Class	Class 1	Class 1	Class 2	Class 3
Please mark the Modification Class:				X

Enter relevant WAC 173-303-830, Appendix I Modification citation number: H.1

Enter wording of WAC 173-303-830, Appendix I Modification citation: Modification or addition of surface impoundment units that result in increasing the facility's surface impoundment storage or treatment capacity.

Modification Approved: ☐ Yes ☐ No (state reason) Reason for denial:	Reviewed by Ecology:
	Stephanie Schleif Date

Remove and replace the following:

- ☐ Permit Conditions
- ☐ Addendum A, Part A Form
- ☐ Addendum B, Waste Analysis Plan
- ☐ Addendum C, Process Information
- ☐ Addendum F, Preparedness & Prevention
- ☐ Addendum I, Inspection Plan
- ☐ Addendum J, Contingency Plan

PART III, OPERATING UNIT GROUP 3 PERMIT CONDITIONS
LIQUID EFFLUENT RETENTION FACILITY &
200 AREA EFFLUENT TREATMENT FACILITY

UNIT DESCRIPTION

The Liquid Effluent Retention Facility (LERF) and 200 Area Effluent Treatment Facility (200 Area ETF) consists of an aqueous waste treatment system that provides treatment, storage integral to the treatment process, and storage of secondary wastes from the treatment process for a variety of aqueous mixed waste. The 200 Area ETF is located in the 200 East Area. Aqueous wastes managed by the 200 Area ETF include process condensate from the LERF and 200 Area ETF and other aqueous waste generated from onsite remediation and waste management activities.

The LERF consists of ~~three~~ four lined surface impoundments, or basins. Aqueous waste from LERF is pumped to the 200 Area ETF for treatment in a series of process units, or systems, that remove or destroy essentially all of the dangerous waste constituents. The treated effluent is discharged to a State-Approved Land Disposal Site (SALDS) north of the 200 West Area, under the authority of a Washington State Waste Discharge Permit Number ST0004500 (Ecology 2014) and 200 Area ETF Delisting (40 Code of Federal Regulations (CFR) 261, Appendix IX, Table 2). Construction of the LERF began in 1990. Waste management operations began at LERF in April 1994. Construction of the 200 Area ETF began in 1992. Waste management operations began at 200 Area ETF in November of 1995.

This Chapter provides unit-specific Permit conditions applicable to the dangerous waste management units for LERF and 200 Area ETF.

LIST OF ADDENDA SPECIFIC TO OPERATING UNIT GROUP 3

Addendum A	Part A Form, dated TBD~~October 25, 2017~~
Addendum B	Waste Analysis Plan, dated TBD~~December 7, 2018~~
Addendum C	Process Information, dated TBD~~December 7, 2018~~
Addendum D	Groundwater Monitoring, dated January 23, 2018
Addendum E	Security Requirements, dated June 30, 2011
Addendum F	Preparedness and Prevention, TDB~~dated January 23, 2018~~
Addendum G	Personnel Training, dated June 30, 2015
Addendum H	Closure Plan, dated October 25, 2017
Addendum I	Inspection Requirements, dated TDB~~April 30, 2019~~
Addendum J	Contingency Plan, dated TBD~~April 30, 2019~~

DEFINITIONS

Flow Equalization: Flow equalization is the process by which concentrations of constituents are homogenized through blending of the wastewater in the LERF Basins, resulting in a more uniform loading of constituents prior to entering the appropriate treatment train.

State and Federal Delisting Actions: The state delisting action pursuant to Washington Administrative Code (WAC) 173-303-910(3), August 8, 2005, and the federal delisting action appearing in 40 CFR 261, Appendix IX, Table 2 applicable to the United States, Department of Energy, Richland, Washington.

ACRONYMS

LERF and 200 Area ETF 200-Area Liquids Processing Facility

III.3.A COMPLIANCE WITH UNIT-SPECIFIC PERMIT CONDITIONS

III.3.A.1 The Permittees will comply with all Permit Conditions in this Chapter and its Addendums with respect to dangerous waste management and dangerous waste management units in LERF and 200 Area ETF, in addition to requirements in Permit Part I and Part II.

III.3.B GENERAL WASTE MANAGEMENT

III.3.B.1 The Permittees are authorized to accept dangerous and/or mixed waste for treatment in dangerous waste management units that satisfies the waste acceptance criteria in Permit Addendum B according to the waste acceptance procedures in Permit Addendum B. [WAC 173-303-300]

III.3.B.2 The Permittees are authorized to manage dangerous and/or mixed wastes physically present in the dangerous waste management units in LERF and 200 Area ETF as of the effective date of this Permit according to the requirements of Permit Condition III.3.B.1.

III.3.B.3 The Permittees are authorized to treat and/or store dangerous/mixed waste in the dangerous waste management units in LERF and 200 Area ETF according to the following requirements:

III.3.B.3.a The Permittees are authorized to treat, and store as necessary in support of treatment, dangerous waste in the 200 Area ETF tank systems identified in Permit Addendum C, Section C.2, and Section C.4 according to the Permit Conditions of this Chapter.

III.3.B.3.b The Permittees are authorized to store and treat those dangerous and/or mixed waste identified in Permit Addendum C, Section C.3, in containers according to the requirements of this Chapter. All container management activities pursuant to this Permit Condition will take place within the container storage areas or within the 200 Area ETF process area identified in Permit Addendum C, Figures C.2 and C.3.

III.3.B.3.c Treatment in containers authorized by Permit Condition III.3.B.3.b is limited to decanting of free liquids, and addition of sorbents to free liquids. The Permittees will ensure that sorbents are compatible with wastes and the containers. Sorbents will be compliant with the requirements of WAC 173-303-140(4)(b)(iv), incorporated by reference.

III.3.B.3.d The Permittees are authorized to treat aqueous waste in LERF Basins (Basins 41, 42, 43 and 44) subject to the following requirements:

III.3.B.3.d.1 Following treatment in a LERF Basin, aqueous wastes must be treated in 200 Area ETF according to Permit Conditions III.3.B.3.a through c.; [40 CFR 268.4(2)(iii), incorporated by reference by WAC 173-303-140].

III.3.B.3.d.2 The Permittees must ensure that for each basin, either supernatant is removed on a flow-through basis, to meet the requirement of 40 CFR 268.4(a)(2)(ii) incorporated by reference by WAC 173-303-140, or incoming waste is shown to not contain solids by either: (1) sampling results showing the waste does not contain detectable solids, or (2) filtering through a 10 micron filter; [WAC 173-303-815(2)(b)(ii)].

III.3.B.4 The Permittees will maintain the physical structure of the LERF and 200 Area ETF as documented in the applicable sections of Permit Addendum C, Section C.2. [WAC 173-303-630(7), WAC 173-303-640(3), WAC 173-303-640(4)]

III.3.B.5 The Permittees are authorized to use treated effluent for recycle/makeup water purposes at the 200 Area ETF as outlined in Permit Addendum C, Section C.2.5.5, and the letters dated August 19, 2005, EPA Region 10 to Keith A. Klein; and August 8, 2005, Department of Ecology to Keith A. Klein. [WAC 173-303-815(2)(b)(ii)]

III.3.Q.3 The Permittees will develop and maintain, and operate the LERF Basins to ensure that any flow of waste into the impoundment can be immediately shut off in the event of overtopping or liner failure. [WAC 173-303-650(2)(d)]

III.3.Q.4 The Permittees will comply with the requirements of WAC 173-303-650(2)(g), incorporated by reference.

III.3.Q.5 The Permittees will comply with the requirements of WAC 173-303-650(4)(b), incorporated by reference.

III.3.Q.6 The Permittees will comply with the requirements of WAC 173-303-650(4)(c), incorporated by reference. The certification required by this Permit Condition must be provided to Ecology no later than seven calendar days after the date of the certification. A copy of the certification will be placed in the Hanford Facility Operating Record, LERF and 200 Area ETF file required by Permit Condition II.I.1. [WAC 173-303-650(4)(c)]

III.3.Q.7 The Permittees will comply with the requirements of WAC 173-303-650(5)(b), incorporated by reference, in response to events in WAC 173-303-650(5)(a), incorporated by reference.

III.3.Q.8 The Permittees will comply with the requirements of WAC 173-303-650(5)(d) for any LERF Basin that has been removed from service in accordance with Permit Condition III.3.Q.7 that the Permittees will restore to service. [WAC 173-303-650(5)(d)]

III.3.Q.9 The Permittees will close any LERF Basin removed from service in accordance with the requirements of Permit Condition III.3.Q.7 or a basin that cannot be repaired or that the Permittees will not to return to service. [WAC 173-303-650(5)(e)]

III.3.Q.10 The Permittees will comply with the requirements of Addendum C, Section C.5.10 with respect to management of ignitable or reactive wastes in the LERF Basins. [WAC 173-303-650(7)]

III.3.Q.11 The Permittees can place incompatible wastes and materials in the same LERF Basin only if in compliance with the requirements of WAC 173-303-395(1)(b), (c). [WAC 173-303-650(8)]

III.3.Q.12 The Permittees will use the action leakage rate in Addendum C, Section C.5.8, for operation of LERF Basins, and comply with the requirements of WAC 173-303-650(10)(b). [WAC 173-303-650(10)]

III.3.Q.13 The Permittees will comply with the requirements of WAC 173-303-650(11), incorporated by reference.

III.3.Q.14 The Permittees will comply with the requirements of 40 CFR 264, Subpart CC, incorporated by reference by WAC 173-303-692.

III.3.Q.15 The Permittees will submit a certification by an independent qualified registered professional engineer attesting to LERF Basin 41 structural integrity of the basin's dikes, liners, and cover systems, as required by WAC 173-303-650(4)(a) and WAC 173-303-806(4)(d)(v). This certification must be provided to Ecology prior to receiving waste at Basin 41. A copy of these certifications will be placed in the Hanford Facility Operating Record, LERF and 200 Area ETF file required by Permit Condition II.I.1.

III.3.Q.16 Prior to receipt of any dangerous waste into the LERF Basin 41, the Permittees shall comply with Permit Condition III.3.R.5.

III.3.R GROUNDWATER

III.3.R.1 The Permittees will comply with the requirements of Addendum D, Groundwater Monitoring Plan. [WAC 173-303-645]

III.3.R.2 All wells constructed pursuant to this Permit will be constructed in compliance with Chapter 173-160 WAC incorporated by reference through WAC 173-303-645(8)(c).

III.3.R.3 Maintain the Liquid Effluent Retention Facility Engineering Evaluation ~~and Characterization~~ report in the Hanford Facility Operating Record, LERF and 200 Area ETF, which satisfies the requirements in WAC 173-303-806 and -645.

III.3.R.4 Prior to receipt of Waste Treatment and Immobilization Plant waste into the LERF, the permittees shall provide an updated Liquid Effluent Retention Facility Engineering Evaluation report and update as applicable the Addendum D, Groundwater Monitoring Plan.

III.3.R.5 Prior to receipt of waste water into LERF Basin 41, a new groundwater well, representative of the groundwater flow around the LERF Basin 41, shall be installed, deemed operational and added to the Permit via a Class 2 permit modification. The Class 2 permit modification shall include an updated Addendum D, Groundwater Monitoring Plan, as required by Permit Condition III.3.R.4.

~~This page intentionally left blank.~~

B. WASTE ANALYSIS PLAN

B.1 Introduction

In accordance with the regulations set forth in the Washington State Department of Ecology (Ecology) Dangerous Waste Regulations, Washington Administrative Code (WAC) 173-303-300, this Waste Analysis Plan (WAP) has been prepared for operation of the Liquid Effluent Retention Facility (LERF) and the 200 Area Effluent Treatment Facility (200 Area ETF) located in the 200 East Area on the Hanford Site, Richland, Washington.

The purpose of this WAP is to ensure that adequate knowledge as defined in WAC 173-303-040, is obtained for dangerous and/or mixed waste accepted by and managed in LERF and 200 Area ETF. This WAP documents the sampling and analytical methods, and describes the procedures used to obtain this knowledge. This WAP also documents the requirements for generators sending aqueous waste to the LERF or 200 Area ETF for treatment. Throughout this WAP, the term generator includes any Hanford Site source, including Treatment, Storage, and Disposal (TSD) units, whose process produces an aqueous waste.

LERF consists of ~~three~~ four surface impoundments, which provide treatment and storage. The 200 Area ETF includes a tank system, which provides treatment and storage, and container management areas, which provides container storage and treatment. Additionally, this WAP discusses the sampling and analytical methods for the treated effluent (treated aqueous waste) that is discharged from 200 Area ETF as a non-dangerous, delisted waste to the State Approved Land Disposal Site (SALDS). Specifically, the WAP contains sampling and analysis requirements including quality assurance/quality control requirements, for the following:

- Influent Waste Acceptance Process - determines the acceptability of a particular aqueous waste at the LERF or 200 Area ETF pursuant to applicable Permit conditions, regulatory requirements, and operating capabilities prior to acceptance of the waste at the LERF or 200 Area ETF for treatment or storage. This includes documenting that wastes accepted for treatment at 200 Area ETF are within the treatability envelope required by the Final Delisting 200 Area ETF, Permit Condition 1.a.i. Refer to Section B.2.
- Special Management Requirements - identifies the special management requirements for aqueous wastes managed in the LERF or 200 Area ETF. Refer to Section B.3.
- Influent Aqueous Waste Sampling and Analysis - describes influent sampling and analyses used to characterize an influent aqueous waste to ensure proper management of the waste and for compliance with the special management requirements. Also includes rationale for analyses. Refer to Section B.4.
- Treated Effluent Sampling and Analysis - describes sampling and analyses of treated effluent (i.e., treated aqueous waste) for compliance with Discharge Permit Number ST0004500; and Final Delisting 200 Area ETF [40 CFR 261, Appendix IX, Table 2 incorporated by reference by WAC 173-303-910(3) and the corresponding State Final Delisting issued pursuant to WAC 173-303-910(3) limits]. Also includes rationale for analyses. Refer to Section B.5.
- 200 Area ETF Generated Waste Sampling and Analysis - describes the sampling and analyses used to characterize the secondary waste streams generated from the treatment process and to characterize waste generated from maintenance and operations activities. Also includes rationale for analyses. Characterization and designation of wastes generated from maintenance and operations activities are conducted pursuant to WAC 173-303-170 and are not subject to the permit requirements of WAC 173-303-800. These descriptions are included in this WAP for purposes of completeness, but are not enforceable conditions of this WAP or the permit. Refer to Section B.6.

- Quality Assurance and Quality Control - ensures the accuracy and precision of sampling and analysis activities. Refer to Section B.7.

This WAP meets the specific requirements of the following:

- Land Disposal Restrictions (LDR) Treatment Exemption for the LERF under 40 CFR 268.4, U.S. Environmental Protection Agency (EPA), December 6, 1994 Memo, Mr. Dan Duncan, EPA to Ms. June Hennig, U.S. Department of Energy (DOE), Liquid Effluent Retention Facility (LERF) Land Disposal Restrictions Treatment Exemption – Regulatory Interpretation.
- Final Delisting 200 Area ETF [40 CFR 261, Appendix IX, Table 2 incorporated by reference by WAC 173-303-910(3)].
- Corresponding State Final Delisting issued pursuant to WAC 173-303-910(3).
- Discharge Permit Number ST0004500, as amended.
- Hanford Facility Dangerous Waste Permit (Permit) WA7890008967, as amended.

Some Permit requirements from Discharge Permit Number ST0004500 are included in this WAP for completeness. In addition, generator requirements for designation of wastes generated by LERF and 200 Area ETF from operation and maintenance activities are also included in this WAP for completeness. The Discharge Permit Number ST0004500 requirements are not within the scope of Resource Conservation and Recovery Act (RCRA) or WAC 173-303 or subject to the permit requirements of WAC 173-303-800. Therefore, revisions of this WAP that are not governed by the requirements of WAC 173-303 will not be considered as a modification subject to review or approval by Ecology. Any other revisions to this WAP will be incorporated through the Permit modification process as necessary to demonstrate compliance with requirements of this Permit, including Permit Conditions I.E.7 and I.E.8.

B.1.1 Liquid Effluent Retention Facility and 200 Area Effluent Treatment Facility Description

The LERF and 200 Area ETF comprise an aqueous waste treatment system located in the 200 East Area. Both LERF and 200 Area ETF may receive aqueous waste through several inlets. 200 Area ETF can receive aqueous waste through three inlets. First, 200 Area ETF can receive aqueous waste directly from the LERF. Second, aqueous waste can be transferred from the 2025-ED Load-In Station to 200 Area ETF. Third, aqueous waste can be transferred from containers (e.g., carboys, drums) to the 200 Area ETF through either the Secondary Waste Receiving Tanks or the Concentrate Tanks. The Load-In Station is located just east of building 2025-E and currently consists of three storage tanks and a pipeline that connects to either LERF or 200 Area ETF through fiberglass pipelines with secondary containment.

The LERF can receive aqueous waste through four inlets. First, aqueous waste can be transferred to LERF through a dedicated pipeline from the 200 West Area. Second, aqueous waste can be transferred through a pipeline that connects LERF with the 242-A Evaporator and WTP. Third, aqueous waste also can be transferred to LERF from a pipeline that connects LERF to the Load-In Station. Finally, aqueous waste can be transferred into LERF through a series of sample ports located at each basin.

The LERF consists of ~~three~~ four lined surface impoundments. Aqueous waste from LERF is pumped to 200 Area ETF through a double walled fiberglass pipeline. The pipeline is equipped with leak detection located in the annulus between the inner and outer pipes. Basin 41 is equipped with eight available sample risers constructed of 6-inch-perforated pipe, and a ninth riser that contains liquid level instrumentation. ~~Each basin is~~Basins 42, 43, and 44 are equipped with six available sample risers constructed of 6-inch-perforated pipe. A seventh sample riser in ~~each basins~~ Basins 42, 43, and 44 is dedicated to influent waste receipt piping, and an eighth riser in ~~each~~ these basins contains liquid level instrumentation. Each riser extends along the sides of each basin from the top to the bottom of the basin. Detailed information on the construction and operation of the LERF is provided in Addendum C, Process Information.

The requirements of 40 CFR 264, Subpart BB (WAC 173-303-691) are not applicable to the LERF or 200 Area ETF because aqueous waste with 10 percent or greater organic concentration would not be acceptable for processing at the LERF or 200 Area ETF. Waste characterization is performed in accordance with Addendum B, Waste Analysis Plan, to demonstrate that incoming aqueous waste is below 10 percent total organic content.

The generator is responsible for providing analytical data and/or knowledge that the influent aqueous waste meets the mixed waste exemption to implement Subpart CC emission standards [WAC 173-303-300(5)(i)(i), WAC 173-303-300(5)(i)(ii)]. The LERF Basins rely on the mixed waste exemption to implement Subpart CC emission standards [WAC 173-303-692(1)(b)(vi)]. Should the LERF Basins receive non-radioactive dangerous waste, the volatile organic concentration at the point of waste origination shall be less than 500 parts per million (ppm) by weight [40 CFR 264.1082(c)(1)]. These waste streams may be combined with mixed waste in the LERF Basins without affecting the use of the mixed waste exemption because the non-radioactive dangerous waste streams would be below 500 ppm by weight volatile organic concentration. Non-dangerous radioactive waste, state-only dangerous waste, and non-radioactive/non-dangerous waste may also be combined with mixed waste in the LERF Basins without affecting the use of the mixed waste exemption.

The generator is also responsible for identifying LDRs treatment standards applicable to the influent aqueous waste as part of the characterization, as required under 40 CFR 268.40 incorporated by reference by WAC 173-303-140. Because the 200 Area ETF main treatment train is a Clean Water Act, equivalent treatment unit [40 CFR 268.37(a)] incorporated by reference by WAC 173-303-140, generators are not required to identify underlying hazardous constituents for characteristic wastes pursuant to 40 CFR 268.9, incorporated by reference by WAC 173-303-140, for wastewaters (i.e., <1 percent total suspended solids and <1 percent total organic carbon). The 200 Area ETF secondary waste (e.g., powder) reflects a change in LDR treatability group (i.e., wastewater to non-wastewater) so there is a new LDR point of generation, at which point any characteristic and associated underlying hazardous constituents must be identified. Therefore, generators of a non-wastewater may be required to identify underlying hazardous constituents for characteristic wastes pursuant to 40 CFR 268.9, incorporated by reference by WAC 173-303-140.

When analyzing an aqueous waste stream for LERF and 200 Area ETF waste acceptance characterization, a generator is required to use the target list of parameters identified in Table B.3, of this WAP. This requirement is in addition to any analysis required for purposes of designation under WAC 173-303-070. These data are used by LERF and 200 Area ETF to verify the treatability of an aqueous waste stream, and to develop a treatment plan for the waste after acceptance. Refer to Table B.6, for the corresponding analytical methods. The generator may use knowledge in lieu of some analyses, as determined by LERF and 200 Area ETF management or their designee, if the knowledge satisfies the definition of knowledge in WAC 173-303-040. For example if a generator provides information that the process generating an aqueous waste does not include or involve organic chemicals, analyses for organic compounds likely would not be required. Additional analyses could be required if historical information and/or knowledge indicate that an aqueous waste contains constituents not included in the target list of parameters.

The characterization and historical information are documented in the waste profile sheet, which is discussed in the following section and is part of the Hanford Facility Operating Record, LERF and 200 Area ETF File according to Permit Condition II.I.

B.2.1.2 Aqueous Waste Profile Sheet

The waste profile sheet documents the characterization of each new aqueous waste stream. The profile includes a detailed description of the source, volume, waste designation and applicable LDR treatment standards, and physical nature (wastewater or non-wastewater) of the aqueous waste. For an aqueous waste to be accepted for treatment or storage in the LERF or 200 Area ETF, each new waste stream generator is required to complete and provide this form to LERF and 200 Area ETF management. Each generator also is required to provide the analytical data and/or knowledge used to designate the aqueous

sampling locations, methodologies, and frequencies for these aqueous wastes. For samples collected at the LERF and 200 Area ETF, unit-specific sampling protocol is followed. The sample containers, preservation materials, and holding times for each analysis are listed in Section B.8.

B.4.1.1 Batch Samples

In those cases where an aqueous waste is sampled in a LERF Basin, samples are collected from ~~four of the six available sample~~ risers located in each basin (refer to Section B.1.1), i.e., four separate samples. When LERF levels are low, fewer than four samples can be taken if the sampling approach is still representative. ~~Though there are eight sample risers at each basin, one is dedicated to liquid level instrumentation and another is dedicated as an influent port.~~ Operating experience indicates that four samples adequately capture the spatial variability of an aqueous waste stream in the LERF Basin. Specifically, sections of stainless steel (or other compatible material) tubing are inserted into the sample riser to an appropriate depth. Using a portable pump, the sample line is flushed with the aqueous waste and the sample collected. The grab sample containers typically are filled for volatile organic compounds (VOC) analysis first, followed by the remainder of the containers for the other parameters.

Several sample ports are also located at 200 Area ETF, including a valve on the recirculation line at 200 Area ETF surge tank, and a sample valve on a tank discharge pump line at the 2025-ED Load-In Station. All samples are obtained at the LERF or 200 Area ETF are collected in a manner consistent with SW-846 procedures (EPA as amended).

B.4.2 Analytical Rationale

As stated previously, each generator is responsible for designating and characterizing an aqueous waste stream. Accordingly, each generator samples and analyzes an influent waste stream using the target list of parameters (Table B.3) for the waste acceptance process. At the discretion of the LERF and 200 Area ETF management, a generator may provide knowledge in lieu of some analyses as discussed in Section B.2.1.1. The LERF and 200 Area ETF personnel will work with the generator to determine which parameters are appropriate for the characterization.

The analytical methods for these parameters are provided in Section B.8. All methods are EPA methods satisfying the requirements of WAC 173-303-110(3). Additional analyses may be required if historical information and knowledge indicate that an influent aqueous waste contains constituents not included in the target list of parameters. For example, if knowledge indicates that an aqueous waste contains a parameter that is regulated by the Groundwater Quality Criteria (WAC 173-200), that parameter(s) would be added to the suite of analyses required for that aqueous waste stream.

The analytical data for the parameters presented in Table B.3, including VOC, Semi-volatile Organic Compound (SVOC), metals, anions, and general chemistry parameters are used to define the physical and chemical properties of the aqueous waste for the following:

- Set operating conditions in the LERF and 200 Area ETF (e.g., to determine operating configuration, refer to Section B.2.2.2).
- Identify concentrations of some constituents which may also interfere with, or foul 200 Area ETF treatment process (e.g., fouling of the RO membranes, refer to Section B.2.2.2).
- Evaluate LERF liner and piping material compatibility.
- Determine treatability to evaluate if applicable constituents in the treated effluent will meet Discharge Permit and Delisting limits.
- Estimate concentrations of some constituents in the waste generated in the secondary treatment train (i.e., dry powder waste).

B.7.1.2 Special Training

Individuals involved in sampling, analysis, and data review will be trained and qualified to implement safely the activities addressed in this WAP and QA/QC plan. Training will conform to the training requirements specified in WAC 173-303-330 and Addendum G~~F~~, Personnel Training. Training records will be maintained in accordance with Section B.7.1.3.

B.7.1.3 Documentation and Records

Sample records are documented as part of the Hanford Facility Operating Record, LERF and 200 Area ETF File pursuant to Permit Condition II.I. These documents and records include the following:

- Training
- Chains of Custody for all regulatory sampling performed by LERF and 200 Area ETF
- Data Summary Reports
- QA/QC reports
- Assessment reports
- Instrument inspection, maintenance, and calibration logs

B.7.2 Data Quality Parameters and Criteria

Data quality parameters are listed by EPA QA/G-5S, Guidance for Choosing a Sampling Design for Environmental Data Collection as:

- Purpose of Data Collection (e.g. determining if a parameter exceeds a threshold level).
- Spatial and Temporal Boundaries of Study.
- Preliminary Estimation of Sample Support (volume that each sample represents).
- Statistical Parameter of Interest (e.g. mean, percentile, percentage).
- Limits on Decision Error/Precision (e.g. false acceptance error, false rejection error).

The parameters for the first four bullets (limits, sample points, frequency of samples, etc.) are already established in the permits, delisting petition, and this WAP. The focus of this QA/QC plan is on limits on decision error/precision.

The data quality parameters were chosen to ensure Limits on Decision Error/Precision are appropriate for purposes of using the data to demonstrate compliance with permits, delisting exclusion limits, and this WAP. The principal quality parameters are precision, accuracy, representativeness, comparability, and completeness. Secondary data parameters of importance include sensitivity and detection levels. The data quality parameters and the data acceptance criteria are discussed below.

B.7.2.1 Precision

Precision is a measure of agreement among replicate measurements of the same property, under prescribed similar conditions. Precision is expressed in terms of the relative percent difference (RPD) for duplicate measurements. QA/QC sample types that test precision include field and laboratory duplicates and spike duplicates. The RPDs for laboratory duplicates and/or matrix spike duplicates will be routinely calculated.

$$\text{RPD} = (100)\left(\frac{\text{sample result} - \text{duplicate sample result}}{\text{average of sample result} + \text{duplicate sample result}}\right)$$

Matrix spike duplicates are replicates of matrix spike samples that are analyzed with every analytical batch that contains a 200 Area ETF treated effluent sample. The precision of the analytical methods are estimated from the results of the matrix spike (MS) and the matrix spike duplicate (MSD) for selected analytes. Matrix spike analyses cannot be performed for certain analytical methods, including

C. PROCESS INFORMATION

This addendum provides a detailed discussion of the Liquid Effluent Retention Facility (LERF) and 200 Area Effluent Treatment Facility (200 Area ETF) processes and equipment. The LERF and 200 Area ETF comprise an aqueous waste treatment system located in the 200 East Area that provides storage and treatment for a variety of aqueous mixed waste. This aqueous waste includes process condensate from the 242-A Evaporator and other aqueous waste generated from onsite remediation and waste management activities.

The LERF consists of ~~three~~ four lined surface impoundments, or basins. Aqueous waste from LERF is pumped to the 200 Area ETF for treatment in a series of process units, or systems, that remove or destroy essentially all of the dangerous waste constituents. The treated effluent is discharged to a State-Approved Land Disposal Site (SALDS) north of the 200 West Area, under the authority of a Washington State Waste Discharge Permit ST0004500 and the Final Delisting 200 Area ETF (40 Code of Federal Regulations (CFR) 261, Appendix IX, Table 2).

Both LERF and 200 Area ETF waste processing operations are controlled in a central Control Room located in the 2025-E building. The 200 Area ETF Control Room is staffed continuously during 200 Area ETF processing operations. Processing operations are defined as when liquid transfers of any sort are occurring to/from/within the LERF and 200 Area ETF or when wastes are being treated at 200 Area ETF[1]. Examples of processing operations include, but are not limited to, when liquid waste are transferred to/from the LERF Basins (see Section C.1), during active liquid waste treatment/processing at the 200 Area ETF (e.g., liquid waste treatment in tanks and liquid waste movement between primary and secondary treatment train processes and/or other 200 Area ETF tanks [see Section C.2], and liquid waste receipts at the Load-In Station [see Section C.2.1]). Section C.2.5.1 describes the centralized computer system (i.e., monitor and control system or MCS) that is located at the 200 Area ETF Control Room and other locations at the 200 Area ETF. The MCS monitors the performance of the 200 Area ETF operations and records alarms from various equipment as described in this Addendum C and Addendum I, Inspection Requirements. At times when processing operations are not occurring, the 200 Area ETF Control Room is not manned continuously, and alarms are monitored daily as specified in Addendum I.

The hazardous waste management activities for each Dangerous Waste Management Unit (DWMU) are identified in Table C.1 and Addendum A, Part A Form. Storage containers can be moved between the DWMUs identified in Table C.1 to support LERF and 200 Area ETF waste management processes. Additional information on waste generation and designation is provided in Section B.6. The waste streams are stored and some are treated at 200 Area ETF before being transferred for final treatment, storage, or disposal as appropriate.

[1]Liquid transfers does not include standard facility operations of liquid recirculation (e.g. for pump seals), sanitary water and cooling water, and outdoor rainwater management activities.

Table C.1. Summary of LERF and 200 Area Dangerous Waste Management Units

Management Type	DWMUs	Part A Treatment	Part A Storage
Surface Impoundment (storage and treatment)	1. LERF Basin 41 ~~1.~~2. LERF Basin 42 ~~2.~~3. LERF Basin 43 ~~3.~~4. LERF Basin 44	T02 Surface Impoundment Treatment	S04 Surface Impoundment Storage
Container (storage and treatment)	1. 2025-E Container Storage Area 2. 2025-E Process Area 3. 2025-E Truck Bay 4. Outside Container Storage Area 5. 2025-ED Load-In Station	T04 Container Treatment	S01 Container Storage
Tank (storage and treatment)	1. 20B-TK-1, Sump Tank 1 2. 20B-TK-2, Sump Tank 2 3. 59A-TK-1, Load-In Station Tank 4. 59A-TK-109, Load-In Station Tank (permanently removed from service) 5. 59A-TK-117, Load-In Station Tank (permanently removed from service) 6. 60A-TK-1, Surge Tank 7. 60C-TK-1, pH Adjust Tank 8. 60C-TK-2, Effluent pH Adjust Tank 9. 60F-TK-1, 1st RO Feed Tank 10. 60F-TK-2, 2nd RO Feed Tank 11. 60H-TK-1A, Verification Tank 12. 60H-TK-1B, Verification Tank 13. 60H-TK-1C, Verification Tank 14. 60I-EV-1, Evaporator Vapor Body Vessel 15. 60I-TK-1A, Secondary Waste Receiving Tank 16. 60I-TK-1B, Secondary Waste Receiving Tank 17. 60I-TK-2, Distillate Flash Tank 18. 60J-TK-1A, Concentrate Tank 19. 60J-TK-1B, Concentrate Tank	T01 Tank Treatment	S02 Tank Storage

The following sections provide a description of each of the authorized DWMUs within the LERF and 200 Area ETF.

C.1 Liquid Effluent Retention Facility Process Description

Each of the ~~three~~ four LERF Basins has an operating capacity of 7.8 million gallons. The LERF receives aqueous waste through several inlets including the following:

- ~~A~~ PC-5000 pipeline (3"-EVAP_COND-PC5000-M17) that connects LERF Catch Basins 242AL-41 and 242AL-43 with both the 242-A Evaporator and WTP-EMF.
- 4"-WTP-001-M17 pipeline that connects LERF Catch Basins 242AL-41 and 242AL-42 with the Waste Treatment and Immobilization Plant (WTP), Effluent Management Facility (EMF).
- A pipeline from the 200 West Area.
- A pipeline that connects LERF to the Load-In Station (2025-ED) via ETF.
- A series of sample ports located at each basin.

Figure C-1 presents a general layout of LERF and associated pipelines. Aqueous waste from LERF is pumped to the 200 Area ETF through one of two double-walled fiberglass transfer pipelines. Effluent from the 200 Area ETF also can be transferred back to the LERF through one of these transfer pipelines. These pipelines are equipped with leak detection located in the annulus between the inner and outer pipes. In the event that these leak detectors are not in service, the pipelines are visually inspected during transfers for leakage by opening the secondary containment drain lines located at the 200 Area ETF end of the transfer pipelines.

~~Each basin is~~ Basin 41 is equipped with eight available sample risers constructed of 6-inch-perforated pipe, and a ninth riser that contains liquid level instrumentation. Basins 42, 43, and 44 are equipped with six available sample risers constructed of 6-inch perforated pipe. A seventh sample riser in ~~each b~~Basins 42, 43, and 44 is dedicated to influent aqueous waste receipt piping ~~(except for aqueous waste received from the 242-A Evaporator)~~, and an eighth riser in ~~each~~ these basins contains liquid level instrumentation. Each riser extends along the sides of each basin from the top to the bottom of the basin and allows samples to be collected from any depth. Personnel access to these sample ports is from the perimeter area of the basins. A catch basin is provided at the northwest corner of each LERF Basin for aboveground piping and manifolds for transfer pumps. Aqueous waste from the 242-A Evaporator is transferred through piping which ties into piping at the Catch Basins 242AL-41 and 242AL-43. Aqueous waste from the WTP, EMF is transferred through a pipeline (4"-WTP-001-M17) that ties into piping at the LERF Catch Basins 242AL-41 and 242AL-42. Under routine operations, a submersible pump is used to transfer aqueous waste from a LERF Basin to the 200 Area ETF for processing or for basin-to-basin transfers. This pump is connected to a fixed manifold on one of four available risers.

Each basin consists of a multilayer liner system supported by a concrete anchor wall around the basin perimeter and a soil-bentonite clay underlayment. The multilayer liner system consists of a primary liner in contact with the aqueous waste, a layer of bentonite carpet, a geonet, a geotextile, a gravel layer, and a secondary liner that rests on the bentonite underlayment. Any aqueous waste leakage through the primary liner flows through the geonet and gravel to a leachate collection system. The leachate flows to a sump at the northwest corner of each basin, where the leachate is pumped up the side slope and back into the basin above the primary liner. Each liner is constructed of high-density polyethylene. A floating cover is stretched over each basin above the primary liner. These covers serve to keep unwanted material from entering the basins, and to minimize evaporation of the liquid contents.

C.2 200 Area Effluent Treatment Facility Process Description

The 200 Area ETF is designed as a flexible treatment system that provides treatment for contaminants anticipated in process condensate and other onsite aqueous waste. The design influent flow rate into the 200 Area ETF is approximately 150 gallons per minute (gpm), with planned outages for activities such as maintenance on the 200 Area ETF systems. Maintenance outages typically are scheduled between

200 Area ETF Tank Systems Information, Table C.7, 200 Area ETF Additional Tank System Information, and Table C.8, Ancillary Equipment and Material Data provides individual tank volumes, dimensions, and construction materials. The relative locations of the tanks and process units are presented in Figures C.2 and C.3.

C.4.1 Design Requirements

The following sections provide an overview of the design specifications for the tanks within the LERF and 200 Area ETF. A separate discussion on the design of the process units also is provided. In accordance with the new tank system requirements of WAC 173-303-640(3), the following tank components and specifications were assessed:

- Dimensions, capacities, wall thicknesses, and pipe connections.
- Materials of construction and linings and compatibility of materials with the waste being processed.
- Materials of construction of foundations and structural supports.
- Design codes and standards used in construction.
- Structural design calculations, including seismic design basis.
- Waste characteristics and the effects of waste on corrosion.

This assessment was documented in the Final RCRA Information Needs Report (Final RCRA Information Needs Report, Mausshardt 1995; the engineering assessment performed for the 200 Area ETF tank systems by an independent professional engineer. A similar assessment of design requirements was performed for Load-In Station tanks 59A-TK-109 and 59A-TK-117 and is documented in 200 Area Effluent BAT/AKART Implementation, ETF Truck Load-in Facility, Project W-291H Integrity Assessment Report (W-291H-IAR, KEH 1995). An assessment was also performed when Load-In Station tank 59A-TK-1 was placed into service for receipt of dangerous and mixed wastes. The assessment is documented in the 200 Area Effluent Treatment Facility Purgewater Unloading Facility Tank System Integrity Assessment (HNF-41604, 2009).

The specifications for the preparation, design, and construction of the tank systems at the 200 Area ETF are documented in the Design Construction Specification, Project C-018H, 242-A Evaporator/PUREX Plant Process Condensate Treatment Facility (V-C018HC1-001, WHC 1992). The preparation, design, and construction of Load-In Station tanks 59A-TK-109 and 59A-TK-117 are provided in the construction specifications in Project W-291, 200 Area Effluent BAT/AKART Implementation ETF Truck Load-in Facility, Construction Specifications (W-291H-C2, KEH 1994). The preparation, design, and construction of Load-In Station tank 59A-TK-1 are documented in Purgewater Unloading Facility Project Documentation (HNF-39966, 2009).

Most of the tanks in the 200 Area ETF are constructed of stainless steel. According to the design of the 200 Area ETF, it was determined stainless steel would provide adequate corrosion protection for these tanks. Exceptions include Load-In Station tank 59A-TK-1, which is constructed of fiberglass-reinforced plastic and the verification tanks, which are constructed of carbon steel with an epoxy coating. The Evaporator Vapor Body Vessel (and the internal surfaces of the thin film dryer) is constructed of a corrosion resistant alloy, known as alloy 625, to address the specific corrosion concerns in the secondary treatment train. Finally, the hydrogen peroxide decomposer vessels are constructed of carbon steel and coated with a vinyl ester lining.

The shell thicknesses of the tanks identified in Table C.6 represent a nominal thickness of a new tank when placed into operation. The tank capacities identified in this table represent the maximum volumes. Nominal tank volumes discussed below represent the maximum volume in a tank unit during normal operations.

design and integrity of these units are presented in the engineering assessment (Final RCRA Information Needs Report, Mausshardt 1995).

Filters. The Load-In Station fine and rough filter vessels (including the influent and auxiliary filters) are designed to comply with the ASME Section VIII, Division I, Pressure Vessels (Boiler and Pressure Vessel Code, ASME 1992). The application of these standards to the construction of the 200 Area ETF filter system and independent inspection ensure that the filter and filter supports have sufficient structural strength and that the seams and connections are adequate to ensure the integrity of the filter vessels.

Ultraviolet Oxidation (UV/OX) System. The UV/OX reaction chamber is designed to comply with manufacturers standards.

Degasification System. The codes and standards applicable to the design, fabrication, and testing of the degasification column are identified as follows:

- ASME - B31.3, Chemical Plant and Petroleum Refinery Piping (ASME 1990)
- AWS - D1.1, Structural Welding Code - Steel (AWS 1992)
- ANSI - B16.5, Pipe Flanges and Flanged Fittings (ANSI 1992)

RO System. The pressure vessels in the RO unit are designed to comply with ASME Section VIII, Division I, Pressure Vessels (Boiler and Pressure Vessel Code, ASME 1992), and applicable codes and standards.

Ion Exchange (Polishers). The IX columns are designed in accordance with ASME Section VIII, Division I, Pressure Vessels (Boiler and Pressure Vessel Code, ASME 1992), and applicable codes and standards. Polisher piping is fabricated of type 304 stainless steel or polyvinyl chloride (PVC) and meets the requirements of ASME B31.3, Chemical Plant and Petroleum Refinery Piping (ASME 1990).

Thin Film Dryer System. The thin film dryer is designed to meet the requirements of ASME Section VIII, Division I, Boiler and Pressure Vessel Code (Pressure Vessels, ASME 1992), and applicable codes and standards. The piping meets the requirements of ASME B31.3, Chemical Plant and Petroleum Refinery Piping (ASME 1990).

C.4.1.5 Design Information for Tank Systems located at LERF

The codes and standards applicable to the design, construction, and testing of the tanks and ancillary piping systems located at LERF are as follows:

ASME - B31.3	Chemical Plant and Petroleum Refinery Piping, ASME 1990, and ASME 2016 for Basin 41 ancillary equipment
ASME Sect. VIII, Division I	Pressure Vessels (Boiler and Pressure Vessel Code), ASME 1992, and ASME 2017 for Basin 41 ancillary equipment
AWS - D1.1	Structural Welding Code – Steel, AWS 1992, and AWS 2015 for Basin 41 ancillary equipment
ANSI - B16.5	Pipe Flanges and Flanged Fittings, ANSI 1992, and ASME 2017 for Basin 41 ancillary equipment
ASME Sect. IX	Welding and Brazing Qualifications (Boiler and Pressure Vessel Code), ASME 1992 and ASME 2017 for Basin 41 ancillary equipment

~~C.4.1.5~~ C.4.1.6 Integrity Assessments

The integrity assessment for 200 Area ETF (Final RCRA Information Needs Report, Mausshardt 1995) attests to the adequacy of design and integrity of the tanks and ancillary equipment to ensure that the

All tank systems holding dangerous waste are marked with labels or signs to identify the waste contained in the tanks. The labels or signs are legible at a distance of at least 50-feet and bear a legend that identifies the waste in a manner that adequately warns employees, emergency response personnel, and the public, of the major risk(s) associated with the waste being stored or treated in the tank system(s).

C.4.6 Air Emissions

Tank systems that contain extremely hazardous waste that is acutely toxic by inhalation must be designed to prevent the escape of such vapors. To date, no extremely hazardous waste has been managed in 200 Area ETF tanks and is not anticipated. However, the 200 Area ETF tanks have forced ventilation that draws air from the tank vapor spaces to prevent exposure of operating personnel to any toxic vapors that might be present. The vapor passes through a charcoal filter and two sets of high-efficiency particulate air filters before discharge to the environment. The Load-In Station tanks and verification tanks are vented to the atmosphere.

C.4.7 Management of Ignitable or Reactive Wastes in Tanks Systems

Although the 200 Area ETF is permitted to accept waste that is designated ignitable or reactive, such waste would be treated or blended immediately after placement in the tank system so that the resulting waste mixture is no longer ignitable or reactive. Aqueous waste received does not meet the definition of a combustible or flammable liquid given in National Fire Protection Association (NFPA) code number 30 (NFPA 1996).

The buffer zone requirements in NFPA-30, which require tanks containing combustible or flammable solutions be a safe distance from each other and from public way, are not applicable.

C.4.8 Management of Incompatible Wastes in Tanks Systems

The 200 Area ETF manages dilute solutions that can be mixed without compatibility issues. The 200 Area ETF is equipped with several systems that can adjust the pH of the waste for treatment activities. Sulfuric acid and sodium hydroxide are added to the process through the MCS for pH adjustment to ensure there will be no large pH fluctuations and adverse reactions in the tank systems.

C.5 LERF Surface Impoundment Operations

This section provides specific information on surface impoundment operations at the LERF, including descriptions of the liners and secondary containment structures, as required by WAC 173-303-650 and WAC 173-303-806(4)(d).

The LERF consists of ~~three~~ four lined surface impoundments (basins) with a design capacity of 7.8 million gallons each. Each basin would overflow when the basin's volume reaches 9 million gallons. The dimensions of each basin at the anchor wall are approximately 338 x 278 feet. The typical top dimensions of the wetted area are approximately 292 x 233 feet, while the bottom dimensions ~~are~~ range from approximately 180 to 190 feet long, and 120 to 130 feet wide ~~188 x 124 feet~~. Total depth from the top of the dike to the bottom of the basin is approximately 26.4 feet at the deepest point. The typical finished basin bottoms lie at about 15 feet below the initial grade and ~~593~~580 feet above sea level. The dikes separating the basins have a typical height of 10 feet and typical top width of 38 feet around the perimeter of the impoundments.

C.5.1 List of Dangerous Waste

A list of dangerous and/or mixed aqueous waste that can be stored in LERF is presented in Addendum A. Addendum B, Waste Analysis Plan also provides a discussion of the types of waste that are managed in the LERF.

C.5.2 Construction, Operation, and Maintenance of Liner System

General information concerning the liner system is presented in the following sections. Information regarding loads on the liner, liner coverage, UV light exposure prevention, and location relative to the water table are discussed.

C.5.2.1 Liner Construction Materials

The LERF employs a double-composite liner system with a leachate detection, collection, and removal system between the primary and secondary liners. Each basin is constructed with an upper or primary liner consisting of a high-density polyethylene geomembrane laid over a bentonite carpet liner. The lower or secondary liner in each basin is a composite of a geomembrane laid over a layer of soil/bentonite admixture with a hydraulic conductivity less than 3.9E-08 inches per second. The synthetic liners extend up the dike wall to a concrete anchor wall that surrounds the basin at the top of the dike. A batten system bolts the layers in place to the anchor wall (Figures C.15 and C.16).

Figures C.17 and C.18 demonstrate a schematic cross-section of the liner system. The liner components, listed from the top to the bottom of the liner system, are the following:

- Primary 60-mil high-density polyethylene geomembrane
- Bentonite carpet liner
- Geotextile
- Drainage gravel (bottom) and geonet (sides)
- Geotextile
- Secondary 60-mil high-density polyethylene geomembrane
- Geotextile layer (Basin 41 only)
- Soil/bentonite admixture (36 inches on the bottom, 42 inches on the sides)
- Geotextile

The primary geomembrane, made of 60-mil (0.06 inch) high-density polyethylene, forms the basin surface that holds the aqueous waste. The secondary geomembrane, also 60-mil (0.06 inch) high-density polyethylene, forms a barrier surface for leachate that might penetrate the primary liner. The high-density polyethylene chemically is resistant to constituents in the aqueous waste and has a relatively high strength compared to other lining materials. The high-density polyethylene resin specified for the LERF contains carbon black, antioxidants, and heat stabilizers to enhance its resistance to the degrading effects of UV light. The approach to ensuring the compatibility of aqueous waste streams with the LERF liner materials and piping is discussed in Addendum B, Waste Analysis Plan.

Three geotextile layers are used in the LERF liner system. The layers are thin, nonwoven polypropylene fabric that chemically is resistant, highly permeable, and resistant to microbiological growth. The first two layers prevent fine soil particles from infiltrating and clogging the drainage layer. The second geotextile also provides limited protection for the secondary geomembrane from the drainage rock. The third geotextile layer prevents the mixing of the soil/bentonite admixture with the much more porous and granular foundation material.

The soil/bentonite layer is a mixture of 12 percent bentonite, and is 36 inches thick on the bottom of the basins and (42 inches thick on the basin sidewalls (Figures C.17 and C.18).; The soil/bentonite admixture its permeability is less than 3.9E-08 inches per second. This composite liner design, consisting of a geomembrane laid over essentially impermeable soil/bentonite, is considered best available technology for solid waste landfills and surface impoundments. The combination of synthetic and clay liners is reported in the literature to provide the maximum protection from waste migration (Flexible Membrane Liners for Solid and Hazardous Waste Landfills - A State of the Art Review, Forseth and Kmet, 1983).

A number of laboratory tests were conducted to measure the engineering properties of the soil/bentonite admixture, in addition to extensive field tests performed on three test fills constructed near the LERF site. For establishing an optimum ratio of bentonite to soil for the soil/bentonite admixture, mixtures of various ratios were tested to determine permeability and shear strength. A mixture of 12 percent bentonite was selected for the soil/bentonite liner and tests described in the following paragraphs demonstrated that the admixture meets the desired permeability of less than 3.9E-08 inches per second. Detailed discussion of test procedures and results is provided in Report of Geotechnical Investigation, 242-A Evaporation and PUREX Interim Storage Basins, W-105, Project Number 90-1901 (Chen-Northern 1990).

Direct shear tests were performed according to ASTM D3080 test procedures (Standard Test Method for Direct Shear Test of Soils Under Consolidation Drained Conditions, ASTM 1990) on soil/bentonite samples of various ratios. Based on these results, the conservative minimum Mohr-Coulomb shear strength value of 30 degrees was estimated for a soil/bentonite admixture containing 12 percent bentonite. With respect to particle movement ('piping'), estimated fluid velocities in this low-permeability material are too low to move the soil particles.

The high degree of compaction of the soil/bentonite layer [92 percent per ASTM D1557 (Test Method for Laboratory Compaction Characteristics of Soil Using Modified Effort (56,000 feet-pound/feet), ASTM 1991)] was expected to maximize the bonding forces between the clay particles, thereby minimizing moisture transport through the liner. With respect to particle movement ('piping'), estimated fluid velocities in this low-permeability material are too low to move the soil particles. Therefore, piping is not considered a problem.

For the soil/bentonite layer, three test fills were constructed to demonstrate that materials, methods, and procedures used would produce a soil/bentonite liner that meets the Environmental Protection Agency (EPA) permeability requirement of less than 3.9E-08 inches per second. All test fills met the EPA requirements. A thorough discussion of construction procedures, testing, and results is provided in Report of Permeability Testing, Soil-bentonite Test Fill, KEH W-105, Project No 86-19005 (Chen-Northern 1991).

The aqueous waste stored in the LERF is typically a dilute mixture of organic and inorganic constituents. Though isolated instances of soil liner incompatibility have been documented in the literature (Flexible Membrane Liners for Solid and Hazardous Waste Landfills - A State of the Art Review, Forseth and Kmet 1983), these instances have occurred with concentrated solutions that were incompatible with the geomembrane liners in which the solutions were contained. Considering the dilute nature of the aqueous waste that is and will be stored in LERF and the moderate pH, and test results demonstrating the compatibility of the high-density polyethylene liners with the aqueous waste (9090 Test Results [WHC-SD-Wl05-TD-001, 1991]), gross failure of the soil/bentonite layer is not probable.

C.5.2.1.1 Material Specifications

Material specifications for the liner system and leachate collection system, including liners, drainage gravel, and drainage net are discussed in the following sections. Material specifications for Basin 41 are documented in LERF Basin 41 Design Construction Specification (RPP-SPEC-63632, 2019). Material specifications for Basins 42, 43, and 44 are documented in the Final Specifications 242-A Evaporator and PUREX Interim Retention Basins (W-105/83360/ER-0156, KEH 1990) and Construction Specifications for 242-A Evaporator and PUREX Interim Retention Basins (W-105, KEH 1990).

Geomembrane Liners. The high-density polyethylene resin for geomembranes for the LERF meets the material specifications listed in Table C.10. ~~Key physical properties include thickness 60 mil (0.06 inch) and impermeability (hydrostatic resistance of over 450 pounds per square inch).~~ Physical properties meet National Sanitation Foundation Standard 54 (Flexible Membrane Liners, NSF 1985). Testing to determine if the liner material is compatible with typical dilute waste solutions was performed and documented in 9090 Test Results (WHC-SD-Wl05-TD-001, 1991).

A 12-inch-thick gravel drainage layer on the bottom of the basins between the primary and secondary liners provides a flow path for liquid to the leachate detection, collection, and removal system (Figures C.17 and C.18). A geonet (or drainage net) is located immediately above the secondary geomembrane on the basin sidewalls. The geonet functions as a preferential flow path for liquid between the liners, carrying liquid down to the gravel drainage layer and subsequently to the leachate sump. The geonet is a mesh made of high-density polyethylene, with approximately 0.5-inch openings.

Soil/Bentonite Liner. The soil/bentonite admixture consists of 11.5 to 14.5 percent bentonite mixed into well-graded silty sand with a maximum particle size of 0.187 inch (No. 4 sieve). Test fills were performed to confirm the soil/bentonite admixture applied at LERF has hydraulic conductivity less than 3.9E-08 inches per second, as required by WAC 173-303-650(2)(j) for new surface impoundments.

Bentonite Carpet Liner. The bentonite carpet liner consists of bentonite (90 percent sodium montmorillonite clay) in a primary backing of woven polypropylene with nylon filler fiber, and a cover fabric of open weave spunlace polyester. The montmorillonite is anticipated to retard migration of solution through the liner, exhibiting a favorable cation exchange for adsorption of some constituents (such as ammonium). Based on composition of the bentonite carpet and of the type of aqueous waste stored at LERF, no chemical attack, dissolution, or degradation of the bentonite carpet liner is anticipated.

Geotextile. The nonwoven geotextile layers consist of long-chain polypropylene polymers containing stabilizers and inhibitors to make the filaments resistant to deterioration from UV light and heat exposure. The geotextile layers consist of continuous geotextile sheets held together by needle punching. Edges of the fabric are sealed or otherwise finished to prevent outer material from pulling away from the fabric or raveling.

Drainage Gravel. The drainage layer consists of thoroughly washed and screened, naturally occurring rock meeting the size specifications for Grading Number 5 in Washington State Department of Transportation (WSDOT) construction specifications (Standard Specification for Road, Bridge, and Municipal Construction, WSDOT 1988). The LERF basins are designed to meet WAC 173-303-650(2)(j) for new surface impoundments. The specifications for the drainage layer are given in Table C.11. The minimum hydraulic conductivity requirement for LERF Basin 41 is 0.04 inches per second; the sieve requirements are provided in Table C.11. Hydraulic conductivity tests for Basins 42, 43, and 44 are documented in (Tests of Drainage Rock for the V797 Project, Hanford, Washington; Tests of Drainage Rock for the W105 Project, Hanford, Washington; and Tests of Drainage Rock for the W105 Project, Hanford, Washington, CNI WordOrder No. 2527, Chen-Northern 1992.) The results showed that the drainage rock used at LERF Basins 42, 43, and 44 met the sieve requirements and had a hydraulic conductivity of at least 0.4 inches per second, which exceeded the minimum of at least 0.04 inches per second required by WAC 173-303-650(2)(j) for new surface impoundments.

Geonet. The geonet is fabricated from two sets of parallel high-density polyethylene strands, spaced 0.5 inches center-to-center maximum to form a mesh with minimum two strands per 1 inch in each direction. The geonet is located between the liners on the sloping sidewalls to provide a preferential flow path for leachate to the drainage gravel and subsequently to the leachate sump.

Leachate Collection Sump. Materials used to line the 10 x 6 x 1-feet-deep leachate sump, at the bottom of each basin in the northwest corner, include [from top to bottom (Figures C.19 and C.20~~17~~)]:

- 1 inch high-density polyethylene flat stock (supporting the leachate riser pipe)
- Geotextile
- 60-mil (0.06 inch) high-density polyethylene rub sheet
- Secondary composite liner:
  - 60-mil (0.06 inch) high-density polyethylene geomembrane

- 3 feet of soil/bentonite admixture
- Geotextile

Specifications for these materials are identical to those discussed previously.

Leachate System Risers. Risers for the leachate system consist of 10-inch and 4-inch pipes from the leachate collection sump to the catch basin northwest of each basin ~~(Figure C.17)~~. The risers lay below the primary liner in a gravel-filled trench that also extends from the sump to the concrete catch basin (Figures C.19 and C.20~~17~~).

Basin 41 risers are a polyethylene plastic compound fabricated to meet the requirements in ASTM D3350. ~~The~~ Basins 42, 43, and 44 risers are high-density polyethylene pipes fabricated to meet the requirements in ASTM D1248 (ASTM 1989). The 10-inch riser pipe is perforated every 8 inches with 0.5-inch holes around the diameter. Level sensors and leachate pump are inserted in the 10-inch riser pipe to monitor and remove leachate from the sump. To prevent clogging of the pump and piping with fine particulate, the end of the riser is encased in a gravel-filled box constructed of high-density polyethylene geonet and wrapped in geotextile. The 4-inch riser pipe is perforated every 4 inches with 1/4-inch holes around the diameter. A level detector is inserted in the 4-inch riser pipe.

Leachate Pump. A deep-well submersible pump, ~~designed to deliver approximately 5 gallons per minute,~~ is installed in the 10-inch leachate riser in each basin. Wetted parts of the leachate pump are made of ~~316L~~300 series stainless steel, providing both corrosion resistance and durability. The submersible pump for Basin 41 is capable of delivering between 3.2 - 13.3 gpm, and the submersible pump for Basins 42, 43, and 44 is capable of delivering approximately 1.2 - 7 gpm. All leachate flow is throttled with a needle valve to deliver approximately 5 gpm

C.5.2.1.2 Loads on Liner System

The LERF liner system is subjected to the following types of stresses.

Stresses from Installation or Construction Operations. Contractors were required to submit construction quality control plans that included procedures, techniques, tools, and equipment used for the construction and care of liner and leachate system. Methods for installation of all components were screened to ensure that the stresses on the liner system were kept to a minimum.

Calculations to estimate the greatest risk for damage to the secondary high-density polyethylene liner during construction for Basin 41, expected when the gravel drainage layer is spread using lightweight construction equipment, are documented in RPP-CALC-63745, LERF Basin 41 Construction Equipment Limitations for Liner and Geotextile Protection. Calculations ~~were performed~~ to estimate the risk of damage to the secondary high-density polyethylene liner during construction for Basins 42, 43, and 44 ~~(~~are documented in Calculations for Liquid Effluent Retention Facility Part B Permit Application ~~[~~(HNF-SD-LEF-TI-005, 1997~~]~~). ~~The greatest risk expected was from spreading the gravel layer over the geotextile layer and secondary geomembrane.~~ The results of the calculations show that the strength of the geotextile was sufficiently high to withstand the stress of a small gravel spreader driving on a minimum of 6 inches of gravel over the geotextile and geomembrane. The likelihood of damage to the geomembrane lying under the geotextile was considered low.

To avoid driving heavy machinery directly on the secondary liner, a 90-foot conveyer was used to deliver the drainage gravel into ~~the b~~Basins 42, 43, and 44. The gravel was spread and consolidated by hand tools and a bulldozer. The bulldozer traveled on a minimum thickness of 12 inches of gravel. Where the conveyer assembly was placed on top of the liner, cribbing was placed to distribute the conveyer weight. No heavy equipment was allowed for use directly in contact with the geomembranes.

Additional calculations were performed to estimate the ability of the leachate riser pipe to withstand the static and dynamic loading imposed by lightweight construction equipment riding on the gravel layer. For Basin 41 the calculations are documented in LERF Basin 41 Static and Dynamic Loads of Effluent

Pipe (RPP-CALC-63746, 2020). (For Basins 42, 43, 44 the calculations are documented in Calculations for Liquid Effluent Retention Facility Part B Permit Application, (HNF-SD-LEF-TI-005, 1997). Those calculations demonstrated that the pipe could buckle under the dynamic loading of small construction equipment; therefore, the pipe was avoided by equipment during spreading of the drainage gravel.

Geomembrane shall not be placed when the air temperature is above 104°F or below 41°F unless it can be demonstrated to the approval of the Purchaser by trial welds that acceptable welds can be made at the prevailing temperature. Geomembrane shall not be placed when there is any rainfall or snowfall, in the presence of excessive moisture due to fog or dew, in ponded water, on a frozen subgrade, or during high winds.

Installation of synthetic lining materials can proceed~~ed~~ only when winds ~~were~~ are less than 15 miles per hour~~,~~; and not during ~~precipitation~~ rainfall or snowfall, in the presence of excessive moisture due to fog or dew, in ponded water, or on a frozen subgrade. In addition, the synthetic lining materials shall not be placed when the air temperature is above 104°F or below 41°F, unless it can be demonstrated by trial welds that acceptable welds can be made at the prevailing temperature. ~~The minimum ambient air temperature for unfolding or unrolling the high-density polyethylene sheets was 14°Fahrenheit [F], and a minimum temperature of 32°F was required for seaming the high-density polyethylene sheets. Between shifts,~~ To prevent lifting by wind geomembranes and geotextile ~~were~~ can be anchored with sandbags as needed ~~to prevent lifting by wind~~. Calculations were performed to determine the appropriate spacing of sandbags on the geomembrane to resist lifting caused by 110-mile per hour winds (LERF Basin 41 Wind Uplift Forces and Required Ballast, RPP-CALC-63747, 2019). For Basins 42, 43, and 44, ~~C~~calculations were performed to determine the appropriate spacing of sandbags on the geomembrane to resist lifting caused by 80-mile per hour winds (Calculations for Liquid Effluent Retention Facility Part B Permit Application, HNF-SD-LEF-TI-005, 1997). All of the synthetic components contain UV light inhibitors and no impairment of performance is anticipated from the short-term UV light exposure during construction. Section C.5.2.4 provides further detail on exposure prevention.

During the laying of the soil/bentonite layer and the overlying geomembrane, the moisture content of the admixture ~~was~~ is monitored and adjusted to ensure optimum compaction and to avoid development of cracks.

C.5.2.1.3 Static and Dynamic Loads and Stresses from the Maximum Quantity of Waste

When a LERF Basin is full, operating liquid depth is approximately 22.2 feet. Static load on the primary liner is roughly 9.6~~9.1~~ pounds per square inch. Load on the secondary liner is slightly higher because of the weight of the gravel drainage layer. Assuming a relative density of 50 pounds per cubic foot for the drainage gravel [conservative estimate based on specific gravity of 2.65 (Simplified Design of Building Foundations, Ambrose 1988)], the secondary high-density polyethylene liner carries approximately ~~10.2~~11.55 pounds per square inch of load when a basin is full.

Side slope liner stresses were calculated for each of the layers in the basin sidewalls and for the pipe trench on the northwest corner of each basin. The calculation are documented in LERF Basin 41 Side Slope Liner Stresses (RPP-CALC-63748, 2020) for Basin 41; and in (Calculations for Liquid Effluent Retention Facility Part B Permit Application, (HNF-SD-LEF-TI-005, 1997) for Basins 42, 43, and 44. Results of these calculations indicate factors of safety against tension, shear, or normal stresses ~~were~~ are 1.5 or greater for the primary geomembrane, geotextile, geonet, and secondary geomembrane.

Because the LERF is not located in an area of seismic concern, as identified in Appendix VI of 40 CFR 264 and WAC 173-303-282(6)(a)(I), discussion and calculation of potential seismic events are not required.

C.5.2.1.4 Stresses Resulting from Settlement, Subsidence, or Uplift

Uplift stresses from natural sources are expected to have negligible impact on the liner. Groundwater lies approximately 200 feet below the LERF, average annual precipitation is only 6.3 inches (Hanford Site Climatological Summary 2004 with Historical Data, PNNL-15160), and the average unsaturated permeability of the soils near the basin bottoms is high, ranging from about 2.2E-04 inches per second to about 0.4 inches per second (Report of Geotechnical Investigation, 242-A Evaporation and PUREX Interim Storage Basins, W-105, Project Number 90-1901, Chen-Northern 1990). Calculations for uplift stresses from natural sources are documented in LERF Basin 41 Settlement of Foundation Soils (RPP-CALC-63750, 2020) for Basin 41; ~~(~~and in Additional Information for Project W-105, Part B Permit Application~~,~~ (Chen-Northern 1991) for Basins 42, 43, and 44. Therefore, no hydrostatic uplift forces are expected to develop in the soil underneath the basins. In addition, the soil under the basins consists primarily of gravel and sand, and contains few or no organic constituents. Therefore, uplift caused by gas production from organic degradation is not anticipated.

Based on the design of the soil-bentonite liner, no structural uplift stresses are present within the lining system. Calculations for structural uplift stresses is documented in LERF Basin 41 Wind Uplift Forces and Required Ballast (RPP-CALC-63747, 2020) for Basin 41; and ~~(~~in Additional Information for Project W-105, Part B Permit Application~~,~~ (Chen-Northern 1991) for Basins 42, 43, and 44.

Regional subsidence is not anticipated because neither petroleum nor extractable economic minerals are present in the strata underlying the LERF Basins, nor is karst (erosive limestone) topography present.

Dike soils and soil/bentonite layers ~~were~~ are required to be compacted thoroughly and proof-rolled during construction. Calculation of settlement potential showed that combined settlement for the foundation and soil/bentonite layer is expected to be about 1.75 inches for Basin 41, and 1.1 inches for Basins 42, 43 and 44. Therefore, ~~S~~settlement impact on the liner and basin stability is expected to be minimal. The calculations are documented in LERF Basin 41 Settlement of Foundation Soils (RPP-CALC-63750, 2020) for Basin 41; and in ~~(~~Additional Information for Project W-105, Part B Permit Application, (Chen-Northern 1991) for Basins 42, 43, and 44.

C.5.2.1.5 Internal and External Pressure Gradients

Pressure gradients across the liner system from groundwater are anticipated to be negligible. The LERF is about 200 feet above the seasonal high water table, which prevents buildup of water pressure below the liner. The native gravel foundation materials of the LERF are relatively permeable and free draining. The 2 percent slope of the secondary liner prevents the pooling of liquids on top of the secondary liner. Finally, the fill rate of the basins is slow enough (average 50 ~~gallons per minute~~gpm) that the load of the liquid waste on the primary liner is gradually and evenly distributed.

To prevent the buildup of gas between the liners, ~~each basin is~~ Basin 41 is equipped with 22 vents, and Basins 42, 43, and 44 are equipped with 21 vents in the primary geomembrane located above the maximum water level that allow the reduction of any excess gas pressure. Gas passing through these vents exit through a single pipe that penetrates the anchor wall into a carbon adsorption filter. This filter extracts nearly all of the organic compounds, ensuring that emissions to the air from the basins are not toxic.

C.5.2.2 Liner System Location Relative to High-Water Table

The lowest point of each LERF Basin is the northwest corner of the sump, where the typical subgrade elevation is 571.5~~574~~ feet above mean sea level. Based on data collected from the groundwater monitoring wells at the LERF site, the seasonal high-water table is located approximately 200 feet or more below the lowest point of the basins. This substantial thickness of unsaturated strata beneath the LERF provides ample protection to the liner from hydrostatic pressure because of groundwater intrusion

into the soil/bentonite layer. Further discussion of the unsaturated zone and site hydrogeology is provided in Addendum D, Groundwater Monitoring Plan.

C.5.2.3 Liner System Foundation

Foundation materials are primarily gravels and cobbles with some sand and silt. The native soils onsite are derived from unconsolidated Holocene sediments. These sediments are fluvial and glaciofluvial sands and gravels deposited during the most recent glacial and postglacial event. Grain-size distributions and shape analyses of the sediments indicate that deposition occurred in a high-energy environment (Report of Geotechnical Investigation, 242-A Evaporator and PUREX Interim Storage Basins, Hanford Federal Reservation, W-105, Project No 90-1901, Chen-Northern 1990).

Analysis of five soil borings from the LERF site was conducted to characterize the natural foundation materials and to determine the suitability of onsite soils for construction of the impoundment dikes and determine optimal design factors. Well-graded gravel containing varying amounts of silt, sand, and cobbles comprises the layer in which the basins were excavated. This gravel layer extends to depths of 33 to 36 feet below land surface (Report of Geotechnical Investigation, 242-A Evaporator and PUREX Interim Storage Basins, Hanford Federal Reservation, W-105, Project No 90-1901, Chen-Northern 1990). The basins are constructed directly on the subgrade. Excavated soils were screened to remove oversize cobbles (greater than 6 inches in the largest dimension) and used to construct the dikes.

Settlement potential of the foundation material and soil/bentonite layer was found to be low. The foundation is comprised of undisturbed native soils. The bottom of the basin excavation lies within the well-graded gravel layer, and is dense to very dense. Below the gravel is a layer of dense to very dense poorly graded and well-graded sand. Settlement was calculated for the gravel foundation soils and for the soil/bentonite layer, under the condition of hydrostatic loading from 22.2 feet of fluid depth. The combined settlement for the soils and the soil/bentonite layer is estimated to be about 1.1 inches. This amount of settlement is expected to have minimal impact on overall liner or basin stability. Settlement calculations are provided in LERF Basin 41 Settlement of Foundation Soils (RPP-CALC-63750, 2020) for Basin 41. Settlement calculations are provided in (~~-~~Additional Information for Project W-105, Part B Permit Application~~,~~ (Chen-Northern 1991) and~~. Settlement calculations are provided~~ in Calculations for Liquid Effluent Retention Facility Part B Permit Application (HNF-SD-LEF-TI-005, 1997) for Basins 42, 43, and 44.

The load bearing capacity of the foundation material, based on the soil analysis discussed previously, is estimated at about 69 pounds per square inch [maximum advisable presumptive bearing capacity (Basic Soils Engineering, Hough 1969)]. Anticipated static and dynamic loading from a full basin is estimated to be less than 13 pounds per square inch (Section C.5.2.1.3), which provides an ample factor of safety.

When the basins are empty, excess hydrostatic pressure in the foundation materials under the liner system theoretically could result in uplift and damage. However, because the native soil forming the foundations is unsaturated and relatively permeable, and because the water table is located at a considerable depth beneath the basins, any infiltration of surface water at the edge of the basin is expected to travel predominantly downward and away from the basins, rather than collecting under the excavation itself. No gas is expected in the foundation because gas-generating organic materials are not present.

Subsidence of undisturbed foundation materials is generally the result of fluid extraction (water or petroleum), mining, or karst topography. Neither petroleum, mineral resources, nor karst are believed to be present in the sediments overlying the Columbia River basalts. Potential groundwater resources do exist below the LERF. Even if these sediments were to consolidate from fluid withdrawal, their depth most likely would produce a broad, gently sloping area of subsidence that would not cause significant strains in the LERF liner system. Consequently, the potential for subsidence related failures are expected to be negligible.

Borings at the LERF site, and extensive additional borings in the 200 East Area, have not identified any significant quantities of soluble materials in the foundation soil or underlying sediments (Hydrogeology of the 200 Are Low-Level Burial Grounds - An Interim Report, PNL-6820, 1989). Consequently, the potential for sinkholes is considered negligible.

C.5.2.4 Liner System Exposure Prevention

Both primary and secondary geomembranes and the floating cover are stabilized with carbon black to prevent degradation from UV light. Furthermore, none of the liner layers experience long-term exposure to the elements. During construction, ~~thin polyethylene sheeting was used to maintain~~ preventive measures are taken to maintain optimum moisture content and provide protection from the wind for the soil/bentonite layer until the secondary geomembrane ~~was laid~~ is in place. The secondary geomembrane ~~was~~ is covered by the geonet and geotextile ~~as soon as~~ once quality control testing ~~was~~ is complete. Once the geotextile layer ~~was~~ is completed, drainage material is immediately ~~was~~ placed over the geotextile. The final (upper) geotextile layer ~~was~~ is placed over the drainage gravel and immediately covered by the bentonite carpet liner. The bentonite carpet liner~~This was covered immediately~~, in turn, is covered by the primary high-density polyethylene liner.

Both high-density polyethylene liners, geotextile layers, and geonet are anchored permanently to a concrete wall at the top of the basin berm. ~~During construction, liners were held in place with many sandbags on both the basin bottoms and side slopes~~ ~~t~~To prevent wind from lifting and damaging the materials~~.~~, ~~C~~calculations were performed to determine the amount of fluid needed in a basin to prevent wind lift damage to the primary geomembrane. Approximately 6 to 8 inches of solution ~~are kept~~ is required in each basin to minimize the potential for uplifting the primary liner. The calculations are documented in LERF Basin 41 Wind Uplift Forces and Required Ballast (RPP-CALC-63747, 2020) for Basin 41; and in ~~(~~Calculations for Liquid Effluent Retention Facility Part B Permit Application~~,~~ (HNF-SD-LEF-TI-005, 1997) for Basins 42,43, and 44.

The upper 11 to 15 feet of the sidewall liner also could experience stresses in response to temperature changes. ~~Accommodation of thermal influences for the LERF geosynthetic layers is affected by inclusion of sufficient slack as the liners were installed.~~ Calculations for Basin 41 demonstrate that approximately 1.2 feet of slack is required in the long basin bottom dimension, 0.8 feet across the basin, and 1.1 feet from the bottom of the basin to the top of the basin wall (LERF Basin 41 Thermal Expansion/Contraction Potential, HDPE Liner, RPP-CALC-63751, 2020). Calculations for Basins 42, 43, and 44 demonstrate that approximately 2.2 feet of slack is required in the long basin bottom dimension, 1.5 feet across the basin, and 1.1 feet from the bottom of the basin to the top of the basin wall (Calculations for Liquid Effluent Retention Facility Part B Permit Application, HNF-SD-LEF-TI-005, 1997).

The entire lining system is covered by a floating cover that is bolted to the concrete anchor wall (see Section C.5.11).

C.5.2.4.1 Liner Repairs During Operations

Should repair of a basin liner be required while the basin is in operation, a sufficient quantity of the basin contents will be transferred to the 200 Area ETF or another available basin to allow access for the repair activities. After the liner around the leaking or damaged section is cleaned, repairs to the geomembrane will be made as recommended by the liner vendor or others knowledgeable in liner repair; such as a professional engineer that has adequate knowledge and experience to make recommendations in liner repairs. The criteria for selecting a person or company to make liner repair recommendations is determined by the Permittees for the LERF Basins. Selection criteria could include educational background, related experience, and professional qualifications.

C.5.2.4.2 Control of Air Emissions

The LERF Basins use a floating membrane cover that is stretched over each basin to form a continuous barrier over the entire surface area. These covers serve to keep unwanted material from entering the basins, and minimize evaporation of the aqueous waste contents. The covers have chemical/physical properties that maintain the material integrity for the intended service life of the material.

To accommodate volumetric changes in the air between the fluid in the basin and the cover, and to avoid problems related to 'sealing' the basins too tightly, each basin is equipped with a carbon filter breather vent system. Any air escaping from the basins must pass through this vent, consisting of a pipe that penetrates the anchor wall and extends into a carbon adsorption filter unit.

C.5.2.5 Liner Coverage

The liner system covers the entire ground surface that underlies the ~~retention~~ LERF basins. The primary liner extends up the side slopes to a concrete anchor wall at the top of the dike encircling the entire basin (Figure C.15 and C.16~~15~~).

C.5.3 Prevention of Overtopping

Overtopping prevention is accomplished through administrative controls and liquid-level instrumentation installed in each basin. The instrumentation includes local liquid-level indication as well as remote indication at the 200 Area ETF. Before an aqueous waste is transferred into a basin, administrative controls are implemented to ensure overtopping will not occur during the transfer. The volume of feed to be transferred is compared to the available volume in the receiving basin. The transfer is not initiated unless there is sufficient volume available in the receiving basin or a cut-off level is established. The transfer into the basin would be stopped when this cut-off level is reached.

In the event of a 25-year, 24-hour storm event, precipitation would accumulate on the basin covers. Through the self-tensioning design of the basin covers and maintenance of adequate freeboard, all accumulated precipitation would be contained on the covers and none would flow over the dikes or anchor walls. The 25-year, 24-hour storm is expected to deliver 2.1 inches of rain or approximately 2 feet of snow. Cover specifications include the requirement that the covers be able to withstand the load from this amount of precipitation. Because the cover floats on the surface of the fluid in the basin, the fluid itself provides the primary support for the weight of the accumulated precipitation. Through the cover self-tensioning mechanism, there is ample 'give' to accommodate the overlying load without overstressing the anchor and attachment points.

Rainwater and snow evaporate readily from the cover, particularly in the arid Hanford Facility climate, where evaporation rates exceed precipitation rates for most months of the year. The black color of the cover further enhances evaporation. Thus, the floating cover prevents the intrusion of precipitation into the basin and provides for evaporation of accumulated rain or snow.

C.5.3.1 Freeboard

Under current operating conditions, 2 feet of freeboard is maintained at each LERF Basin, which corresponds to an operating level of 22.2 feet, or operating capacity 7.8 million gallons.

C.5.3.2 Immediate Flow Shutoff

The mechanism for transferring aqueous waste is either through pump transfers with on/off switches or through gravity transfers with isolation valves. These methods provide positive ability to shut off transfers immediately in the event of overtopping. Overtopping a basin during a transfer is very unlikely because the low flow rate into the basin provides long response times. At a flow rate of 75 ~~gallons per minute~~gpm, approximately ~~11~~13 days would be required to fill a LERF Basin from the maximum operating level to overflow level.

C.5.3.3 Outflow Destination

Aqueous waste in the LERF is transferred routinely to 200 Area ETF for treatment. However, should it be necessary to immediately empty a basin, the aqueous waste either would be transferred to the 200 Area ETF for treatment or transferred to another basin (or basins), whichever is faster. If necessary, a temporary pumping system may be installed to increase the transfer rate.

C.5.4 Structural Integrity of Dikes

The structural integrity of the dikes for Basins 42, 43, and 44 was certified attesting to the structural integrity of the dikes, signed by a qualified, registered professional engineer. For Basin 41, a certification from an IQRPE that the impoundment's dike, including that portion of any dike which provides freeboard, has structural integrity will be completed in accordance with WAC 173-303-650(4)(c) and WAC 173 303-806(4)(d)(v). These certifications will be maintained in the LERF and 200 Area ETF Operating Record.

C.5.4.1 Dike Design, Construction, and Maintenance

The construction material for the LERF dikes ~~of the LERF are constructed of~~ comes from onsite native soils, ~~generally~~ consisting of a well-graded mixture of cobbles and gravels, ~~. Well-graded mixtures were specified,~~ with cobbles up to 6 inches in the largest dimension;~~,~~ but not constituting more than 20 percent of the dike fill volume ~~of the fill~~. The dikes are designed with a 3:1 (3 units horizontal to 1 unit vertical) slope on the basin side, and 2.25:1 on the exterior side. ~~The dikes are approximately 26.9 feet high from the bottom of the basin, and 10 feet above grade.~~ The top of the dikes are approximately 26.4 feet higher than the low point of the bottom of the basin, and 10 feet above grade.

Calculations were performed to verify the structural integrity of the dikes. For Basin 41 the calculations are documented in LERF Basin 41 Evaluation of Dike Stability and Erosion, RPP-CALC-63752, 2020. The dikes exceed the minimum acceptable global slope stability safety factors of 1.5 for normal long term static loading and 1.3 for surcharge with static loading, and a minimum acceptable safety factors of 1.1 for seismic loading and 1.5 for structural stability, internal slope stability and erosion stability. The lowest safety factor for the external dike slope design seismic event exceeds the minimum acceptable factor of 1.1.

For Basin 42, 43, and 44 the calculations are documented in ~~(~~Calculations for Liquid Effluent Retention Facility Part B Permit Application, HNF-SD-LEF-TI-005, 1997~~)~~. The calculations demonstrate that the structural strength of the dikes is such that, without dependence on any lining system, the sides of the basins can withstand the pressure exerted by the maximum allowable quantity of fluid in the impoundment. The dikes have a factor of safety greater than 2.5 against failure by sliding.

C.5.4.2 Dike Stability and Protection

In the following paragraphs, various aspects of stability for the LERF dikes and the concrete anchor wall are presented, including slope failure, hydrostatic pressure, and protection from the environment.

Failure in Dike/Impoundment Cut Slopes. A slope stability analysis was performed to determine the factor of safety against slope failure. The computer program GeoStudio 2012 SLOPE/W program Version 8.0 (Basin 41) and 'PCSTABL5' from Purdue University, using the modified Janbu Method (Basins 42, 43, and 44), was employed to evaluate slope stability under both static and seismic loading cases. One hundred surfaces per run were generated and analyzed. The assumptions used were as follows (Additional Information for Project W-105, Part B Permit Application, Chen-Northern 1991):

- Unit ~~W~~weight of gravel: 135 pounds per cubic foot.
- Maximum dry density of gravel: 144.5 pounds per cubic foot.
- Mohr-Coulomb shear strength angle for gravel: minimum 40 degrees (Basin 41) and 33 degrees (Basins 42, 43, and 44).
- Weight of soil/bentonite: 100 pounds per cubic foot.

- Mohr-Coulomb shear strength angle for soil/bentonite: minimum 30 degrees.
- Slope: 3 horizontal: 1 vertical.
- No fluid in impoundment (worst case for stability).
- Soils at in-place moisture (not saturated conditions).

Results of the static stability analysis showed that the dike slopes were stable with a minimum factor of safety of 1.97 for Basin 41 (LERF Basin 41 Evaluation of Dike Stability and Erosion RPP-CALC-63752, 2020); and 1.77 for Basins 42, 43, and 44 (Additional Information for Project W-105, Part B Permit Application, Chen-Northern 1991).

The standard horizontal acceleration required in the Hanford Plant Standards, "Standard Architectural-Civil Design Criteria, Design Loads for Facilities" (HPS-SDC-4.1, DOE-RL 1988), for structures on the Hanford Site is 0.12 g-force. Adequate factors of safety for cut slopes in units of this type generally are considered 1.5 for static conditions and 1.1 for dynamic stability (Site Investigation Report, Non-Drag-Off Landfill Site Low-Level Burial Area No. 5, 200 West Area, Golder 1989). Results of LERF Basin 41 Evaluation of Dike Stability and Erosion (RPP-CALC-63752, 2020), showed that Basin 41 slopes were stable under horizontal accelerations of 0.22 g-force, with minimum factors of safety of 1.4 and 1.7 (data from program GeoStudio 2012 SLOPE/W). Results of Basins 42, 43, and 44~~the~~ stability analysis showed that the ~~LERF B~~basin slopes were stable under horizontal accelerations of ~~0.10 and 0.15~~ 0.12 g-force, with minimum factors of safety of 3.12 and 2.77~~1.32 and 1.17~~, respectively (Additional Information for Project W-105, Part B Permit Application, Chen-Northern 1991). Printouts from the PCSTABL5 program are provided in Calculations for Liquid Effluent Retention Facility Part B Permit Application (HNF-SD-LEF-TI-005, 1997).

Hydrostatic Pressure. Failure of the dikes due to buildup of hydrostatic pressure, caused by failure of the leachate system or liners, is very unlikely. The liner system is constructed with two essentially impermeable layers consisting of a synthetic layer overlying a soil layer with low-hydraulic conductivity. It would require a catastrophic failure of both liners to cause hydrostatic pressures that could endanger dike integrity. Routine inspections of the leachate detection system, indicating quantities of leachate removed from the basins, provide an early warning of leakage or operational problems that could lead to excessive hydrostatic pressure. A significant precipitation event (e.g., a 25-year, 24-hour storm) will not create a hydrostatic problem because the interior sidewalls of the basins are covered completely by the liners. The covers can accommodate this volume of precipitation without overtopping the dike (Section C.5.3), and the coarse nature of the dike and foundation materials on the exterior walls provides for rapid drainage of precipitation away from the basins.

Protection from Root Systems. To reduce the ~~R~~risk to structural integrity of the dikes because of penetrating root systems, the basins are ~~is minimal. E~~excavated ~~ion and construction~~ such that ~~removed~~ all vegetation on and around the impoundments is removed;~~, and~~ and native plants (such as sagebrush) grow very slowly. The large grain size of the cobbles and gravel used as dike construction material do not provide an advantageous germination medium for native plants. Should plants with extending roots become apparent on the dike walls, the plants will be controlled with appropriate herbicide application. The risk to structural integrity of the dikes from root systems is therefore minimal.

Protection from Burrowing Mammals. The cobble size materials that make up the dike construction material and the exposed nature of the dike sidewalls do not offer an advantageous habitat for burrowing mammals. Lack of vegetation on the LERF site discourages foraging. The risk to structural integrity of the dikes from burrowing mammals is therefore minimal. Periodic visual inspections of the dikes provide observations of any animals present. Should burrowing mammals be noted onsite, appropriate pest control methods such as trapping or application of rodenticides will be employed.

Protective Cover. Approximately 3 inches of crushed gravel serve as the cover of the exterior dike walls. This coarse material is inherently resistant to the effect of wind because of its large grain size. Total

annual precipitation is low (6.3 inches) and a significant storm event (e.g., a 25-year, 24-hour storm) could result in about 2.1 inches of precipitation in a 24-hour period. The absorbent capacity of the soil exceeds this precipitation rate; therefore, the impact of wind and precipitation run-on to the exterior dike walls will be minimal.

C.5.5 Transfer Lines Secondary Containment and Leak Detection

~~Aqueous waste from the 242-A Evaporator is transferred to the LERF using a pump located in the 242-A Evaporator and approximately 5,000 feet of pipe, consisting of a 3-inch carrier pipe within a 6-inch outer containment pipeline. Flow through the pump is controlled by a valve, at flow rates from 40 to 80 gallons per minute. The pipeline exits the 242-A Evaporator below grade and remains below grade at a minimum 14-feet depth for freeze protection, until the pipeline emerges at the LERF catch basin, at the corner of each basin. All piping at the catch basin that is less than 4 feet below grade is wrapped with electric heat tracing tape and insulated for protection from freezing.~~

~~The transfer line from the 242-A Evaporator is centrifugally cast, fiberglass-reinforced epoxy thermoset resin pressure pipe fabricated to meet the requirements of ASME D2997, Standard Specification for Centrifugally-Cast Reinforced Thermosetting Resin Pipe (ASME 1984). The 3-inch carrier piping is centered and supported within 6-inch containment piping. Pipe supports are fabricated of the same material as the pipe, and meet the strength requirements of ANSI B31.3, Process Piping Guide (ANSI 1987) for dead weight, thermal, and seismic loads. A catch basin is provided at the northwest corner of each basin where piping extends from the basin to allow for basin-to-basin and basin-to-200 Area ETF liquid transfers. Drawing H-2-88766, Sheets 1 through 4, provide schematic diagrams of the piping system at LERF. Drawing H-2-79604 provides details of the piping from the 242-A Evaporator to LERF.~~

LERF Basins to/from 200 Area ETF. Aqueous waste from the LERF basins to the 200 Area ETF surge tank is transferred through one of two buried fiberglass pipelines interfacing with LERF Catch Basin 242AL-43 or LERF Catch Basin 242AL-44. Leak detection consists of low-point electronic leak detection elements. The leak detection system alarms in the 200 Area Control Room if a leak develops. If the electronic leak detection system is not available, visual inspection can be employed by opening a drain valve in the surge tank secondary containment (200 Area ETF end of the transfer pipelines) to check for no liquid in the annular space between the inner and outer pipe during waste transfers.

Inter-Basin Transfers. Within the LERF catch basins, aboveground piping serves to transfer waste from one basin to another (refer to Table C.3, for schematic diagrams of LERF Piping and Instrumentation). Inter-basin piping interfaces at each catch basin. Drawing H-2-88766, Sheets 1 through 4, provide schematic diagrams of the piping system at LERF. ~~Inter-basin piping is sloped form Basin 42 toward Basin 44.~~ Leak detection consists of single ~~low point~~ electronic leak detection elements located at all low point ~~the~~ ends of the encasement pipe at Basins 41, 42, 43, and ~~Basin~~ 44, which alarm in the 200 Area ETF Control Room. A catch basin is provided at the northwest corner of each basin where the inlet pipes, leachate risers, and transfer pipe risers emerge from the basin. The catch basin consists of an 8-inch thick concrete pad at the top of the dike. The perimeter of the catch basin has an 8-inch-high curb and the concrete is coated with a chemical resistant epoxy sealant. The concrete pad, which has an electronic leak detection element, is sloped so that any leaks or spills from the piping or pipe connections will drain into the basin, which have electronic leak detection elements that alarm in the ETF Control Room. The catch basin provides an access point for inspecting, servicing, and operating various systems such as transfer valving, leachate level instrumentation, and leachate pump. ~~Drawing H-2-79593 provides a~~ Refer to Table C.2, for schematic diagram of the catch basins.

WTP-EMF to LERF Catch Basins 242AL-41 and 242AL-42. The process condensate transfer line (4"-WTP-001-M17) from WTP-EMF to LERF Catch Basins 242AL-41 and 242AL-42 is centrifugally cast from LERF Basin 41 and Basin 42 to Node 8A. ~~-~~and is stainless steel from Node 8A to WTP-EMF. The piping material is ~~ASTM D-2296~~ASTM D-2996, "Filament Wound Fiberglass Resin Pipe." The 4-inch carrier piping is centered and supported within 8-inch containment piping. Pipe supports are

fabricated of the same material as the pipe, and meet the strength requirements of ASME B31.3 (ASME 1996) for dead weight, thermal, and seismic loads. The transfer line (4"-WTP-001-M17) leaving the WTP-EMF tank system is considered ancillary equipment to the LERF and 200 Area ETF, from the WTP fence line up to LERF Catch Basins 242AL-41 (valve 60M-41-1) and 242AL-42 (valve 80W-006); after valves 60M-41-1 and 80W-006 the components belong to the surface impoundments.

The process condensate from WTP-EMF can be transferred to LERF by using a pump located at WTP-EMF, and approximately 6,340 feet of pipe (from Node 8A to LERF), consisting of a 4-inch carrier pipe within an 8-inch outer containment pipeline. The encased fiberglass transfer line (4"-WTP-001-M17) slopes toward LERF Catch Basins 242AL-41 and 242AL-42, and runs below grade up to the LERF Basins. The encasement line (8"-ENC-M17) and WTP-EMF transfer line (4"-WTP-001-M17) is equipped with a single-low point electronic leak detection element at Catch Basins 242AL-41 and 242AL-42~~,~~. ~~and~~ For transfers to LERF Basin 41, the sight glass is FG-60M-003; for transfers to LERF Basin 42 the sight glass ~~(~~is FG-80W-001~~), located in close proximity to the electronic leak detection element at LERF Catch Basin 242AL-42~~.

If a leak develops in the primary pipe, fluid will travel down the interior of the secondary containment pipe to a leak detection system located at LERF Catch Basins 242AL-41 and 242AL-42. Upon detection of a leak, a general alarm sounds in the 200 Area ETF Control Room. Any leaked waste into the encasement line is gravity drained to LERF Basins 41 and 42. In accordance with Permit Condition III.3.J.4.b, ~~i~~If the electronic leak detection system is not available, visual inspection can be employed at LERF Catch Basins 242AL-41 and 242AL-42 ~~the~~ sight glasses (FG-60M-003 and/or FG-80W-001 respectively)~~, located in LERF Catch Basin 242AL-42~~. Upon verification of a leak, the 200 Area ETF shift manager will direct shutdown of the aqueous waste through the transfer line(s). The pump located at WTP-EMF is shut down, stopping the flow of aqueous waste through the transfer pipeline.

242-A Evaporator to LERF. The PC-5000 transfer line is described in the 242-A Evaporator Permit. Aqueous waste from the 242-A Evaporator is transferred to the LERF using the PC-5000 transfer line. The PC-5000 transfer line leaving the 242-A Evaporator is considered ancillary equipment to the 242-A Evaporator up to LERF Catch Basin 242AL-43. The 242-A Evaporator is responsible for monitoring of the PC-5000 transfer line.

WTP-EMF Backup Transfer Line to PC-5000 to LERF. The WTP-EMF Backup Transfer Line (3"-WTP-002-M17) to PC-5000 to LERF Catch Basins 242AL-41 and 242AL-43 is described in the 242-A Evaporator Permit. ~~Aqueous waste from WTP-EMF can be transferred to PC-5000 to LERF using the backup transfer pipeline (3"-WTP-002-M17) that connects to PC-5000 for transfer to LERF Basin 242AL-43.~~ The backup transfer pipeline is ancillary equipment to the 242-A Evaporator up to LERF Catch Basins 242AL-41 and 242AL-43. The 242-A Evaporator is responsible for monitoring the backup transfer line.

If a leak or spill of dangerous and/or mixed waste is detected in the secondary containment, the following actions will be taken:

- ✓ Immediately and safely contain or stop the flow of dangerous waste into the tank or secondary containment.
- ✓ Determine the source of the dangerous waste.
- ✓ Remove the dangerous waste from secondary containment pursuant to WAC 173-303-640(7)(b). The waste removed from secondary containment areas will be managed as dangerous and/or mixed waste.
- ☐ If the cause of the release has not damaged the integrity of the tank system, the Permittee may return the tank system to service pursuant to WAC 173-303-640(7)(e)(ii). In such a case, the

Permittee will take action to ensure the incident that caused liquid to enter the secondary containment will not reoccur.

- If the source of the dangerous waste and/or mixed waste is determined to be a leak from the primary containment, or the tank system is unfit for use as determined through an integrity assessment or other inspection, the Permittee must comply with the requirements of WAC 173-303-640(7) and take the following actions [WAC 173-303-640(5)(c)]:
  - Close the tank system according to procedures in WAC 173-303-640(7)(e)(i); or
  - Repair and re-certify [in accordance with WAC 173-303-810(13)(a)] the tank system before the tank system is placed back into service [WAC 173-303-640(7)(e) and (f) and WAC 173-303-806(4)(c)(vii)].
- The Permittees will notify and report to Ecology any releases to the environment in accordance with Permit Conditions I.E.15 and I.E.16 [WAC 173-303-640(7)(d)].
  - If liquids (e.g. dangerous and/or mixed waste, leaks and spills, precipitation, firewater, liquids from damaged or broken pipes) cannot be removed from the secondary containment system within 24 hours, Ecology will be verbally notified within 24-hours of determination that the liquid cannot be removed.
  - If the liquids cannot be removed within 24 hours, the Permittees will provide Ecology with a written demonstration within seven business days, in accordance with WAC 173-303-640(4)(c)(iv), WAC 173-303-640(7)(b)(ii), and WAC 173-303-806(4)(c)(vii). The written demonstration will identify at a minimum:
  - Reasons for delayed removal.
- Measures implemented to ensure continued protection of human health and the environment.
- Current actions being taken to remove liquids from secondary containment.
- The Permittees will document in the Operating Record the actions/procedures taken to comply with the above conditions in accordance with WAC 173-303-640(6)(d).

~~C.5.5.1 Secondary Containment System for Piping~~

~~The 6-inch containment piping encases the 3-inch carrier pipe from the 242-A Evaporator to the LERF. All of the piping and fittings that are not directly over a catch basin or a basin liner are of this pipe-within-a-pipe construction. A catch basin is provided at the northwest corner of each basin where the inlet pipes, leachate risers, and transfer pipe risers emerge from the basin. The catch basin consists of an 8-inch-thick concrete pad at the top of the dike. The perimeter of the catch basin has an 8-inch-high curb and the concrete is coated with a chemical resistant epoxy sealant. The concrete pad is sloped so that any leaks or spills from the piping or pipe connections will drain into the basin. The catch basin provides an access point for inspecting, servicing, and operating various systems such as transfer valving, leachate level instrumentation and leachate pump. Drawing H-2-79593 provides a schematic diagram of the catch basins.~~

~~C.5.5.2 Leak Detection System~~

~~During operation, the 242-A Evaporator receives dilute tank waste directly from the Tank Farms, treats waste by evaporation, and returns the concentrated waste to Tank Farms. The process condensate that is generated is transferred to LERF. Single-point electronic leak detection elements are installed along the transfer line at 1,000-feet intervals. The leak detection elements are located in the bottom of specially designed test risers. Each sensor element employs a conductivity sensor, which is connected to a cable leading back to the 242-A Evaporator Control Room. If a leak develops in the carrier pipe, fluid will~~

~~travel down the exterior surface of the carrier pipe or the interior of the containment pipe. As moisture contacts a sensor unit, an alarm sounds in the 200 Area ETF Control Room, which is monitored continuously when the 242-A Evaporator is transferring liquids to LERF. If the alarm sounds, 200 Area ETF Operations staff troubleshoots the alarm and, upon verification of a leak, requests that the pump located in the 242-A Evaporator be shut down to stop the flow of process condensate through the transfer line. The 242-A Evaporator has limited surge capacity, and its operation is closely tied to supporting Tank Farm operations. The flow of process condensate to LERF is not stopped automatically by indication of a possible leak in the primary transfer line. A low-volume air purge of the annulus between the carrier pipe and the containment pipe is provided to prevent condensation buildup and minimize false alarms by the leak detection elements.~~

~~The catch basins have conductivity leak detectors that alarm in the 200 Area ETF Control Room. Leak detector alarms are monitored in the 200 Area Control Room continuously during aqueous waste transfers and at least daily when no transfers are occurring. Leaks into the catch basins drain back to the basin through a 2-inch drain on the floor of the catch basin.~~

~~C.5.5.3~~C.5.5.1 Integrity Assessment~~Certification~~

Although an integrity assessment is not required for piping associated with surface impoundments, an assessment of the transfer liner was performed, including a hydrostatic leak/pressure test at 150 pounds per square inch gauge. A statement by an IQRPE~~Independent, Qualified, Registered Professional Engineer~~ attesting to the integrity of the piping system is included in Integrity Assessment Report for the 242-A Evaporator/LERF Waste Transfer Piping, Project W105 (WHC-SD-WM-ER-112, 1993), along with the results of the leak/pressure test.

C.5.6 Double Liner and Leak Detection, Collection, and Removal System

The double-liner system for LERF is discussed in Section C.5.2. The leachate detection, collection, and removal system (Figures C.17 and C.~~17~~18) as designed and constructed to remove leachate that might permeate the primary liner. System components for each basin include:

- 12-inch layer of drainage gravel below the primary liner at the bottom of the basin.
- Geonet below the primary liner on the sidewalls to direct leachate to the gravel layer.
- 10 x 6 x 1-feet-deep leachate collection sump consisting of a 1-inch high-density polyethylene flat stock, geotextile to trap large particles in the leachate, and 60-mil (0.06 inch) high-density polyethylene rub sheet set on the secondary liner.
- 10-inch and 4-inch perforated leachate high-density polyethylene riser pipes from the leachate collection sump to the catch basin northwest of the basin.
- Leachate collection sump level instrumentation installed in the 4-inch riser pipe.
- Level sensors, submersible leachate pump, and 1.5-inch fiberglass-reinforced epoxy thermoset resin pressure piping installed in the 10-inch riser pipe.
- Piping at the catch basin to route the leachate through 1.5-inch high-density polyethylene pipe back to the basins.

The bottom of the basins has a two percent slope to allow gravity flow of leachate to the leachate collection sump. This exceeds the minimum of 1 percent slope required by WAC 173-303-650(j) for new surface impoundments. Material specifications for the leachate collection system are given in Section C.5.2.1.1.

Calculations demonstrate that fluid from a small hole (0.08 inch) (Requirements for Hazardous Waste Landfill Design, Construction, and Closure, EPA/625/4-89/022, 1989, p. 122) at the furthest end of the basin, under a low head situation, would travel to the sump in less than 24 hours (Calculations for Liquid Effluent Retention Facility Part B Permit Application, HNF-SD-LEF-TI-005, 1997). Additional

calculations indicate the capacity of the pump to remove leachate is sufficient to allow time to readily identify a leak and activate emergency procedures (HNF-SD-LEF-TI-005, 1997).

The fluid level in each leachate sump is required to be maintained below 13 inches to prevent significant liquid backup into the drainage layer, as measured by installed level measurement devices. The leachate pump is activated when the liquid level in the sump reaches about 11 inches, and is shut off when the sump liquid level reaches about 7 inches. This operation may be done either manually or automatically. Liquid level control is accomplished with conductivity probes that trigger relays selected specifically for application to submersible pumps and leachate fluids. A flow meter/totalizer on the leachate return pipe measures fluid volumes pumped and pumping rate from the leachate collection sumps, and indicates volume and flow rate on local readouts. In addition, a timer on the leachate pump tracks the cumulative pump operating time. Other instrumentation provided is real-time continuous level monitoring with readout at the catch basin. Leachate levels are monitored at least weekly. A sampling port is provided in the leachate piping system at the catch basin. The leak rate through the primary liner can be calculated using two methods: 1) measured as the leachate flow meter/totalizer readings (flow meters/totalizers are located on the outflow line from the collection sumps in the bottom of the LERF Basins), and 2) calculated using the pump operating time readings multiplied by the pump flow rate (the pump runs at a constant flow rate). Calculations using either method are sufficient for compliance. For more information on inspections, refer to Addendum I.

The stainless steel leachate pump is throttled with a needle valve to deliver~~s~~ 5 gpm~~gallons per minute~~. The leachate pump returns ~~draw~~ liquid from the sump via 1.5-inch pipe and discharges into the basin through 1.5-inch high-density polyethylene pipe.

C.5.7 Construction Quality Assurance

For Basin 41, the requirements for a construction quality assurance plan and reporting construction quality assurance inspection and testing results are provided in LERF Basin 41 Design Construction Specification (RPP-SPEC-63232). ~~The~~For Basins 42, 43, and 44, the construction quality assurance plan and complete report of construction quality assurance inspection and testing results are provided in 242-A Evaporator Interim Retention Basin Construction Quality Assurance Plan (CQAPLN2.QS.1149, Rev. 4, KEH 1991). A general description of construction quality assurance procedures is outlined in the following paragraphs.

For excavation of the basins and construction of the dikes, regular inspections were conducted to ensure compliance with procedures and drawings, and compaction tests were performed on the dike soils.

For the soil/bentonite layer, test fills were first conducted in accordance with EPA guidance to demonstrate compaction procedures and to confirm compaction and permeability requirements can be met. The ratio of bentonite to soil and moisture content was monitored; lifts did not exceed 6 inches before compaction, and specific compaction procedures were followed. Laboratory and field tests of soil properties were performed for each lift and for the completed test fill. The same suite of tests was conducted for each lift during the laying of the soil/bentonite admixture in the basins.

Geotextiles and geomembranes were laid in accordance with detailed procedures and quality assurance programs provided by the manufacturers and installers. These included destructive and nondestructive tests on the geomembrane seams, and documentation of field test results and repairs.

C.5.8 Proposed Action Leakage Rate and Response Action Plan

An action leakage rate limit is established where action must be taken due to excessive leakage from the primary liner. The action leak rate is based on the maximum design flow rate the leak detection system can remove without the fluid head on the bottom liner exceeding 12 inches. The limiting factor in the leachate removal rate is the hydraulic conductivity of the drainage gravel. An action leakage rate (also called the rapid or large leak rate) of 2,100 gallons per acre per day was calculated for each basin. The

calculations for Basin 41 are documented in LERF Basin 41 Effluent Collection and Removal System Parameters, RPP-CALC-63756, 2020. The calculations for Basins 42, 43, and 44 are documented in (Calculation of the Rapid or Large Leak Rate for LERF Basins in the 200 East Area, WHC-SD-EN-TI-009, 1992).

When it is determined that the action leakage rate has been exceeded, the response action plan will follow the actions in WAC 173-303-650(11)(b) and (c), which includes notification of Ecology in writing within 7 days, assessing possible causes of the leak, and determining whether waste receipt should be curtailed and/or the basin emptied.

C.5.9 Dike Structural Integrity Engineering Certification

The structural integrity of the dikes was certified The IQRPE certifications, attesting to the structural integrity of the dikes, are maintained in the LERF and 200 Area ETF operating record., signed by a Qualified, Registered Professional Engineer.

C.5.10 Management of Ignitable, Reactive, or Incompatible Wastes

Although ignitable or reactive aqueous waste might be received in small quantities at LERF, such aqueous waste is mixed with dilute solutions in the basins, removing the ignitable or reactive characteristics. For compatibility requirements with the LERF liner, refer to Addendum B, Waste Analysis Plan.

C.5.11 Cover Construction, Materials, and Operation

Each basin is equipped with a floating cover stretched over each basin above the primary liner. The floating covers prevent evaporation and intrusion from dust, precipitation, vegetation, animals, and birds. The three LERF Basins 41, 42, 43, and 44 either have a very low-density polyethylene cover (VLDPE), or a chlorosulfonated polyethylene (CSPE) cover.

Both VLDPE and CSPE covers contain carbon black for UV light protection, and anti-oxidants to prevent heat degradation. Both cover materials were determined to be compatible with the LERF Basin waste acceptance criteria. The VLDPE covers have seaming enhancers to improve the covers ability to be welded; while the CSPE cover uses modern seaming equipment that does not need seaming enhancers for the material to perform its required function. Typical manufacturer's limited warranty for weathering of VLDPE products is 20-years (Poly America, undated), whereas CSPE provides a 30-year limited manufacturer's warranty for weathering. This provides a margin of safety for the anticipated use of the LERF for aqueous waste storage.

The covers are anchored and tensioned at the concrete wall at the top of the dikes, using a patented mechanical tensioning system. Figure C.15 and Figure C.16C.15 depicts the tension mechanism and the anchor wall at the perimeter of each basin. A patented tensioning system is employed to prevent wind from lifting the cover and automatically accommodate changes in liquid level in the basins. The cover tension mechanism consists of a cable running from the flexible geosynthetic cover over a pulley on the tension tower (located on the concrete anchor wall) to a dead man anchor. These anchors (blocks) hang from the cables inside of the tension towers. The anchor wall also provides for solid attachment of the liner layers and the cover, using a 1/4-inch batten and neoprene gasket to bolt the layers to the concrete wall, effectively sealing the basin from the intrusion of light, precipitation, and airborne dust (Figure C.15 and Figure C.16C.15). Thermal stresses also are experienced by the floating cover. Sufficient slack was included in the design to accommodate thermal contraction and expansion.

C.6 Air Emissions Control

This section addresses the 200 Area ETF requirements of Air Emission Standards for Process Vents, under 40 CFR 264, Subpart AA (WAC 173-303-690 incorporated by reference) and Subpart CC. The requirements of 40 CFR 264, Subpart BB (WAC 173-303-691) isare not applicable to the LERF or 200 Area ETF because aqueous waste with 10 percent or greater organic concentration would not be acceptable for processing at the LERF or 200 Area ETF. Waste characterization is performed in

accordance with Addendum B, Waste Analysis Plan, to demonstrate that incoming aqueous waste is below 10 percent total organic content.

C.6.1 Applicability of Subpart AA Standards

The Evaporator Vapor Body Vessel and thin film dryer perform operations that specifically require evaluation for applicability of WAC 173-303-690. Aqueous waste in these units routinely contains greater than 10 parts per million concentrations of organic compounds and are, therefore, subject to air emission requirements under WAC 173-303-690. Organic emissions from all affected process vents on the Hanford Facility must be less than 3 pounds per hour and 3.1 tons per year, or control devices must be installed to reduce organic emissions by 95 percent.

The vessel off gas system provides a process vent system. This system provides a slight vacuum on the 200 Area ETF process vessels and tanks (see Section C.2.5.2). Two vessel vent header pipes combine and enter the vessel off gas system filter unit consisting of a demister, electric heater, prefilter, high-efficiency particulate air filters, activated carbon absorber, and two exhaust fans (one fan in service while the other is backup). The vessel off gas system filter unit is located in the high-efficiency particulate air filter room west of the 2025-E Process Area. The vessel off gas system exhaust discharges into the larger building ventilation system, with the exhaust fans and stack located outside and immediately west of the ETF. The exhaust stack discharge point is 51 feet above ground level.

The annual average flow rate for the 200 Area ETF stack (which is the combined vessel off gas and building exhaust flow rates) is 56,000 cubic feet per minute with a total annual flow of approximately 2.9E+10 cubic feet. During waste processing, the airflow through just the vessel off gas system is about 800 standard cubic feet per minute.

Organic emissions occur during waste processing, which occurs less than 310 days each year (i.e., 85 percent operating efficiency). This operating efficiency represents the maximum annual operating time for the ETF, as shutdowns are required during the year for planned maintenance outages and for reconfiguring the 200 Area ETF to accommodate different aqueous waste.

C.6.2 Process Vents - Demonstrating Compliance

This section outlines how the 200 Area ETF complies with the requirements and includes a discussion of the basis for meeting the organic emissions limits, calculations demonstrating compliance, and conditions for reevaluation.

C.6.2.1 Basis for Meeting Limits/Reductions

The 242-A Evaporator and the 200 Area ETF are currently the only operating TSD units that contribute to the Hanford Facility volatile organic emissions under 40 CFR 264, Subpart AA. The combined release rate is currently well below the threshold of 3 pounds per hour and 3.1 tons per year of volatile organic compounds. As a result, the 200 Area ETF meets these standards without the use of air pollution control devices.

The amount of organic emissions could change as waste streams are changed, or TSD units are brought online or are deactivated. The organic air emissions summation will be re-evaluated periodically as condition warrants. Operations of the TSD units operating under 40 CFR 264, Subpart AA, will be controlled to maintain Hanford Facility emissions below the threshold limits or pollution control device(s) will be added, as necessary, to achieve the reduction standards specified under 40 CFR 264, Subpart AA.

C.6.2.2 Demonstrating Compliance

Calculations to determine organic emissions are performed using the following assumptions:

- Maximum flow rate from LERF to 200 Area ETF is 150 ~~gallons per minute~~gpm.
- Emissions of organics from tanks and vessels upstream of the UV/OX process are determined

from flow and transfer rates given in Clean Air Act Requirements, WAC 173-400, and As-built Documentation, Project C-018H, 242-A Evaporator/PUREX Plant Process Condensate Treatment Facility (Adtechs 1995).

- UV/OX reaction rate constants and residence times are used to determine the amount of organics, which are destroyed in the UV/OX process. These constants are given in 200 Area Effluent Treatment Facility Delisting Petition (DOE/RL-92-72, 1993).
- All organic compounds that are not destroyed in the UV/OX process are assumed to be emitted from the tanks and vessels into the vessel off gas system.
- No credit for removal of organic compounds in the vessel off gas system carbon absorber unit is taken. The activated carbon absorbers are used if required to reduce organic emissions.

The calculation to determine organic emissions consists of the following steps:

1. Determine the quantity of organics emitted from the tanks or vessels upstream of the UV/OX process, using transfer rate values.
2. Determine the concentration of organics in the waste after the UV/OX process using UV/OX reaction rates and residence times. If the 200 Area ETF is configured such that the UV/OX process is not used, a residence time of zero is used in the calculations (i.e., none of the organics are destroyed).
3. Assuming all the remaining organics are emitted, determine the rate, which the organics are emitted using the feed flow rate and the concentrations of organics after the UV/OX process.
4. The amount of organics emitted from the vessel off gas system is the sum of the amount calculated in steps 1 and 3.

The organic emission rates and quantity of organics emitted during processing are determined using these calculations and are included in the Hanford Facility Operating Record, LERF and 200 Area ETF file.

C.6.2.3 Reevaluating Compliance with Subpart AA Standards

Calculations to determine compliance with Subpart AA will be reviewed when any of the following conditions occur at the 200 Area ETF:

- Changes in the maximum feed rate to the 200 Area ETF (i.e., greater than the 150 ~~gallons per minute~~gpm flow rate).
- Changes in the configuration or operation of the 200 Area ETF that would modify the assumptions given in Section C.6.2.2 (e.g., taking credit for the carbon absorbers as a control device).
- Annual operating time exceeds 310 days.

C.6.3 Applicability of Subpart CC Standards

The air emission standards of 40 CFR 264, Subpart CC apply to tank, surface impoundment, and container storage units that manage wastes with average volatile organic concentrations equal to or exceeding 500 parts per million by weight, based on the hazardous waste composition at the point of origination (61 FR 59972). However, TSD units that are used solely for management of radioactive mixed waste are exempt. Mixed waste is managed at the LERF and 200 Area ETF and dangerous waste could be treated and stored at these TSD units.

C.6.3.1 Demonstrating Compliance with Subpart CC for Tanks

Since the 200 Area ETF tanks already have process vents regulated under 40 CFR 264, Subpart AA (WAC 173-303-690), they are exempt from Subpart CC [40 CFR 264.1080(b)(8)].

Table C.2. Liquid Effluent Retention Facility Containment System

LERF System	Drawing Number	Drawing Title
Basins 42, 43, and 44 Bottom Liner	H-2-79590, Sheet 1	Civil Plan, Sections & Det; Cell Basin Bottom Liner
Basins 42, 43, and 44 Top Liner	H-2-79591, Sheet 1	Civil Plan, Sections & Det; Cell Basin Top Liner
Basins 42, 43, and 44 Catch Basin	H-2-79593, Sheet 1, 3-5	Civil Plan, Sections & Det; Catch Basin
Basin 41 Bottom Liner	H-2-838749, Sheet 1	LERF Basin 41 Civil Bottom Liner Details
Basin 41 Top Liner	H-2-838750, Sheet 1	LERF Basin 41 Civil Top Liner
Basin 41 Catch Basin	H-2-838751, Sheets 1-4	Structural Catch Basin Details

The drawings identified in Table C.3 illustrate the piping and instrumentation configuration within LERF, and of the transfer piping systems between the LERF and the 242-A Evaporator. These drawings are provided for general information, and to demonstrate the adequacy of the design of the LERF as a surface impoundment.

Table C.3. Liquid Effluent Retention Facility Piping and Instrumentation

LERF System	Drawing Number	Drawing Title
Transfer piping ~~to~~from 242-A Evaporator	H-2-79604, Sheet 1	Piping Plot & Key Plans; 242-A Evap Cond Stream
Transfer piping from WTP to LERF Catch Basin 242AL-41 and 242AL-42	H-2-838045, Sheet 2	Civil, Piping Plan Radioactive Process Condensate 4" -WTP-001-M17
LERF Piping and Instrumentation	H-2-88766, Sheet 1	P&ID; LERF Basin & ETF Influent Evaporator
	H-2-88766, Sheet 2	P&ID; LERF Basin & ETF Influent
	H-2-88766, Sheet 3	P&ID; LERF Basin & ETF Influent
	H-2-88766, Sheet 4	P&ID; LERF Basin & ETF Influent
	H-2-83865, Sheet 1	Mechanical General Arrangement
	H-2-838771, Sheets 1, 6 -10	LERF Basin 41 Catch Basin Piping
Legend	H-2-89351, Sheet 1	Piping & Instrumentation Diagram - Legend
	H-2-838746-1	Design Legend and General Notes

~~Table C.10. Geomembrane Material Specifications~~

Property	Basin 41 Value[1]	Basins 42, 43, 44 Value[2]
Specific gravity, g/cc minimum	0.940	0.932 to 0.950
Resin melt index	1.0 gram/10 min (maximum)	0.04 ounce/10 minute (maximum)
Thickness (thickness of flow marks shall not exceed 200% of nominal liner thickness)	1.5 mm (0.06 inches) ± 10%	1.5 mm (0.06 inches) ± 10%
Carbon black content bottom liner	2.0 – 3.0%	1.8 to 3%
Carbon black content top liner	2.0 – 3.0%	2 to 3%
Tensile Properties (each direction)		
Tensile strength at yield, minimum	120 PSI	120 PSI
Tensile strength at break, minimum	180 PSI	180 PSI
Elongation at yield, minimum	10%	10%
Elongation at break, minimum	500%	500%
Tear resistance, (minimum average)	42 pounds	30 pounds
Puncture resistance, (minimum average)	108 pounds	69 pounds
Low temperature/brittleness, maximum	-40°F	-25°F
Dimensional percent change, maximum	±2%	±2%
Environmental/aging stress crack resistance, minimum	750 hours	750 hours
Water absorption, maximum, and weight change	5%	5%
Hydrostatic resistance	270 PSI	450 PSI
Oxidation induction time (200 C/l atm. O_2)	100 minutes	90 minutes

[1] LERF Basin 41 Design Construction Specification (RPP-SPEC-63632, 2019).
[2] LERF Basins 42, 43, and 44, Construction Specifications for 242-A Evaporator and PUREX Interim Retention Basins (W 105, KEH 1990). Format uses NSF 54 table for high-density polyethylene as a guide (NSF 1985). However, Resource Conservation and Recovery Act values for dimensional stability and environmental stress crack have been added.

PSI = pounds per square inch
mm = millimeter

~~Table C.10. Geomembrane Material Specifications~~

~~Property~~	~~Value~~
~~Specific Gravity~~	~~0.932 to 0.950~~
~~Melt Flow Index~~	~~0.04 ounce/10 minute, maximum~~
~~Thickness (thickness of flow marks shall not exceed 200 percent of the nominal liner thickness)~~	~~1.5 millimeter 0.06 inches ± 10%~~
~~Carbon Black Content~~	~~1.8 to 3%, bottom liner~~ ~~2 to 3% top liner~~
~~Tensile Properties (Each Direction)~~	
~~Tensile Strength at Yield~~	~~120 pounds/inch width, minimum~~
~~Tensile Strength at Break~~	~~180 pounds/inch width, minimum~~
~~Elongation at Yield~~	~~10%, minimum~~
~~Elongation at Break~~	~~500%, minimum~~
~~Tear Resistance~~	~~30 pounds, minimum~~
~~Puncture Resistance~~	~~69 pounds, minimum~~
~~Low Temperature/Brittleness~~	~~-688°F, maximum~~
~~Dimensional Percent Change (each direction)~~	~~±2%, maximum~~
~~Environmental Stress Crack~~	~~750 hour, minimum~~
~~Water Absorption~~	~~0.1% maximum and weight change~~
~~Hydrostatic Resistance~~	~~450 pounds/inch^2~~
~~Oxidation Induction Time (200 C/1 atm. O_2)~~	~~90 minutes~~

~~Reference: Construction Specifications for 242-A Evaporator and PUREX Interim Retention Basins (W-105, KEH 1990). Format uses NSF-54 table for high-density polyethylene as a guide (NSF 1985). However, Resource Conservation and Recovery Act values for dimensional stability and environmental stress crack have been added.~~

Table C.11. Drainage Gravel Specifications

Sieve Size	Percent Passing by Weight	
	Basin 41[1]	Basins 42, 43, 44[2]
1 inch	100	100
0.75 inches	90 - 100	80 – 100
0.50 inches	50 - 75	--
0.375 inches	--	10 - 40
0.187 inches (#4)	0 - 8	0 – 4
Permeability, minimum	0.04 inches per second	0.04 inches per second,

[1] Sieve size is from WSDOT M41-10-88, Section 9.03.1(3)C for Grading No. 5 (WSDOT 2020). Permeability requirement is from WAC 173-303-650(2)(j) for new surface impoundments.

[2] Sieve size is from WSDOT M41-10-88, Section 9.03.1(3)C for Grading No. 5 (WSDOT 1988). Permeability requirement is from WAC 173-303-650(2)(j) for new surface impoundments.

~~Table C.11. Drainage Gravel Specifications~~

~~Property~~	~~Value~~
~~Sieve Size~~	
~~1 inch~~	~~100 wt.% passing~~
~~0.75 inches~~	~~80 – 100 wt.% passing~~
~~0.375 inches~~	~~10 – 40 wt.% passing~~
~~0.187 inches~~	~~0 – 4 wt.% passing~~
~~Permeability~~	~~0.04 inches/second, minimum~~

~~Reference: Sieve size is from WSDOT M41-10-88, Section 9.03.1(3)C for Grading No. 5 (WSDOT 1988). Permeability requirement is from WAC 173-303-650(2)(j) for new surface impoundments.~~

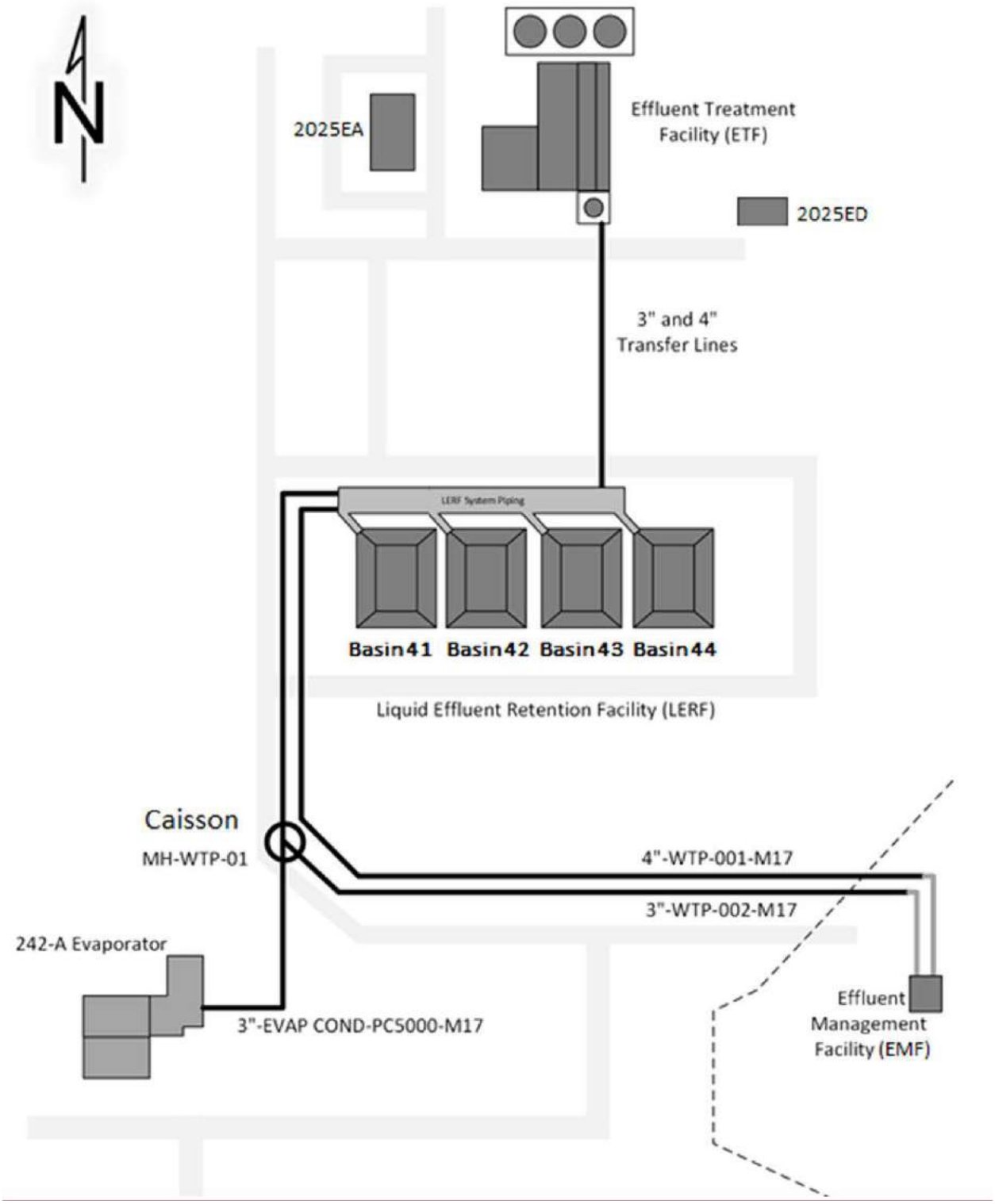

Figure C.1. Liquid Effluent Retention Facility Layout

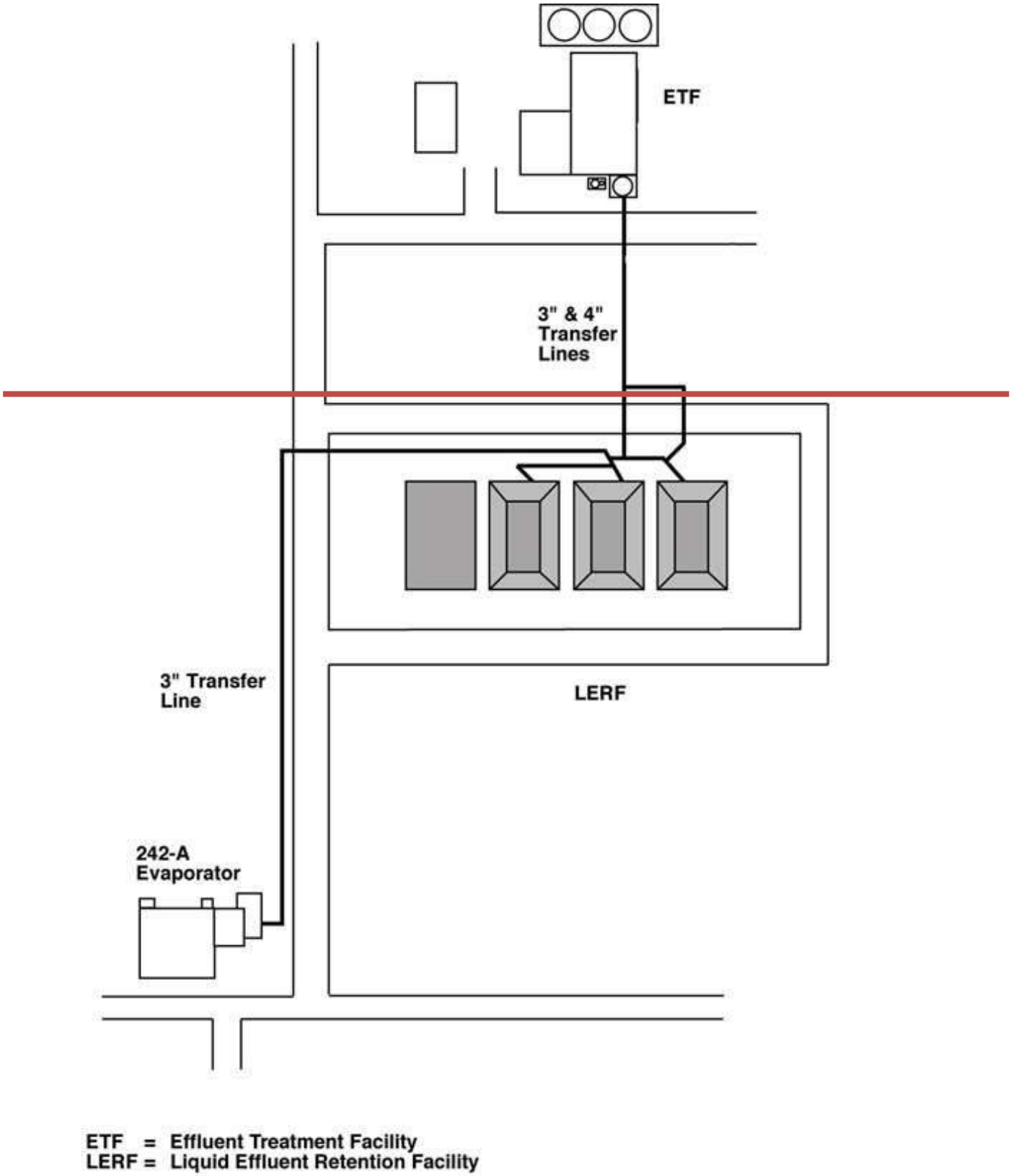

~~Figure C.1. Liquid Effluent Retention Facility Layout~~

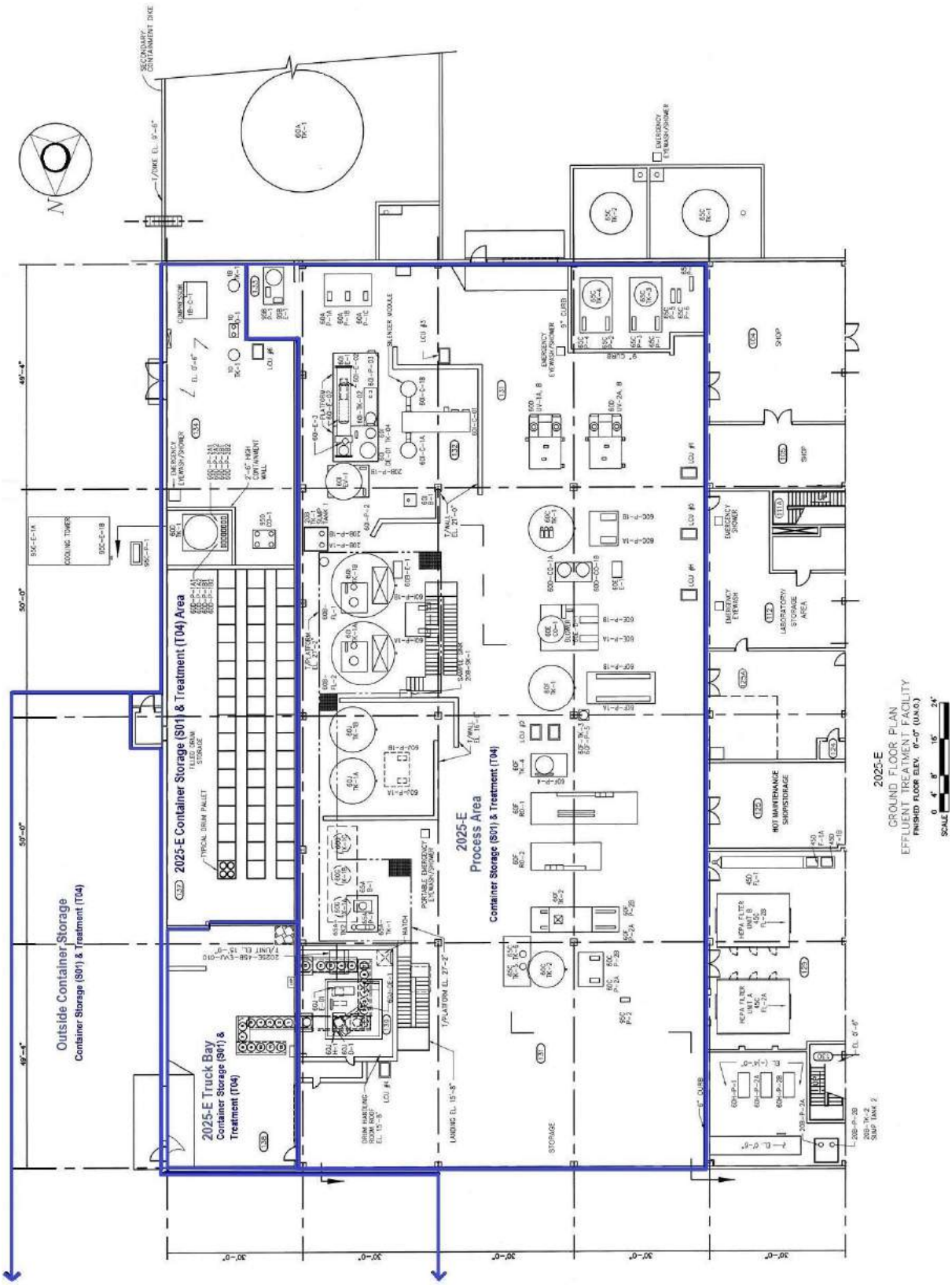

1 Figure C.3. Building 2025-E Ground Floor Plan

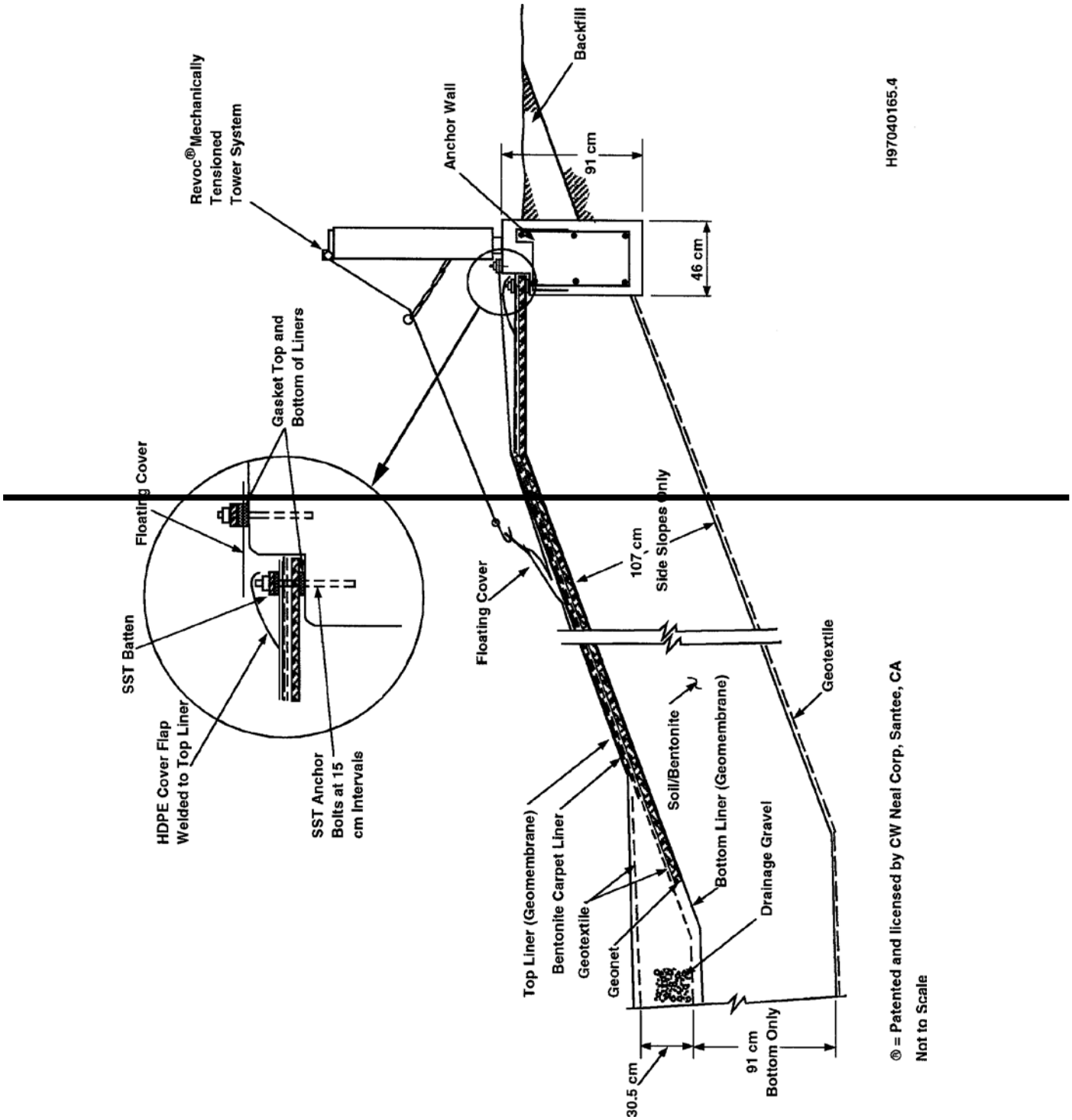

Figure C.15. Liner Anchor Wall and Cover Tension System

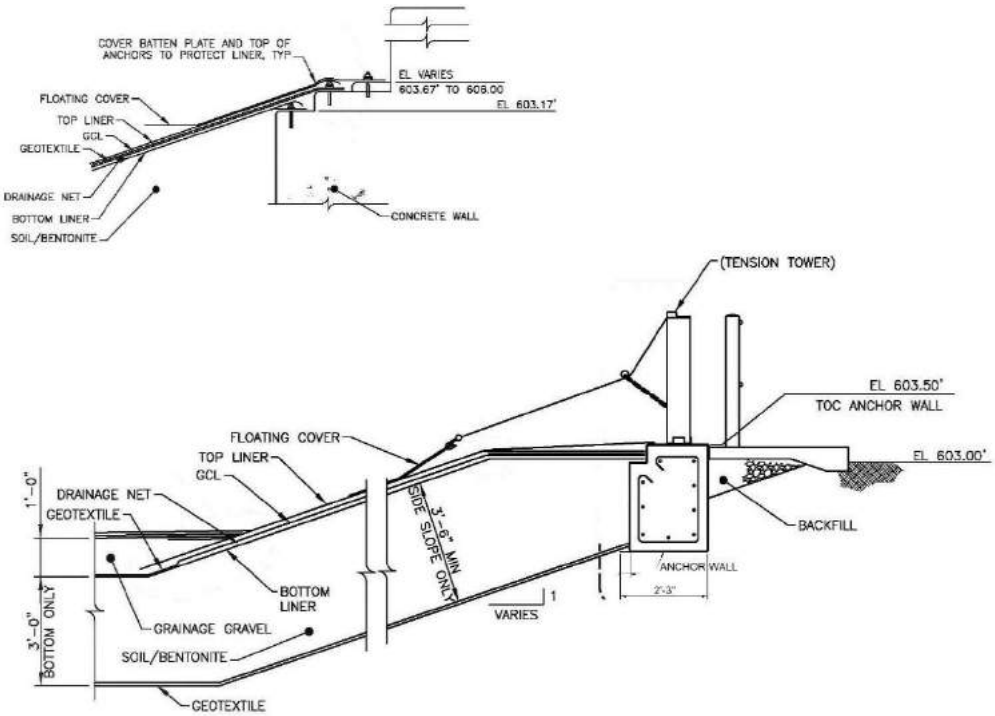

Figure C.15. Liner Anchor Wall and Cover Tension, Basin 41

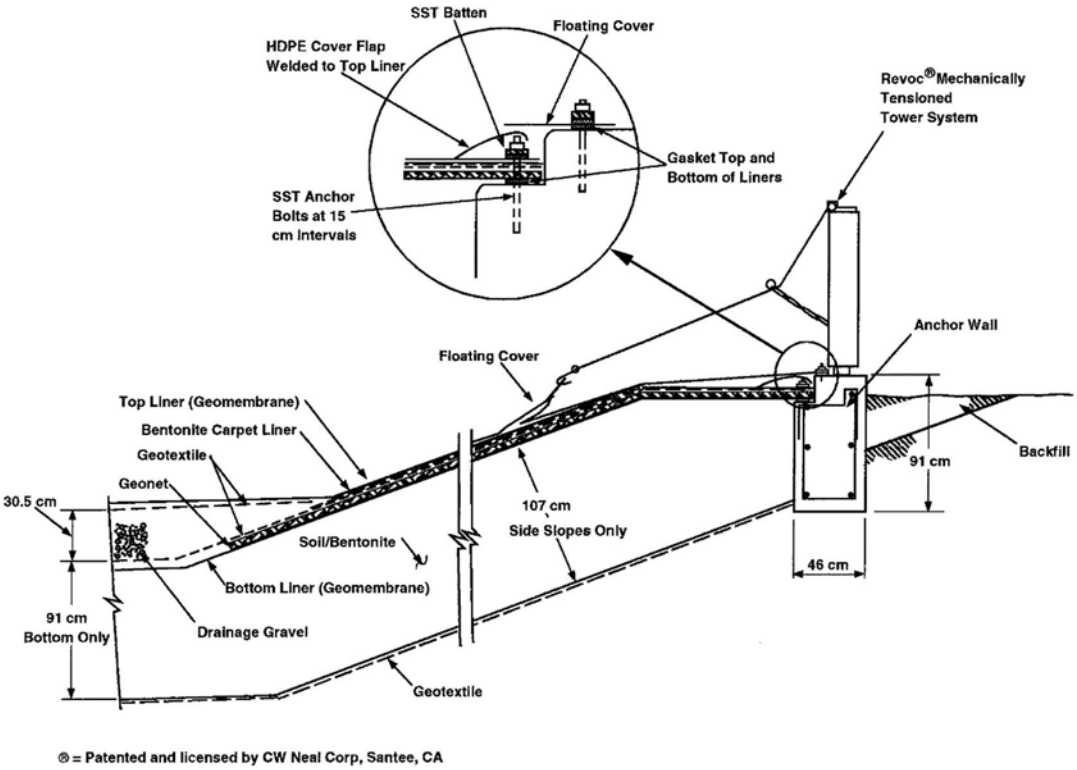

Figure C.16. Liner Anchor Wall and Cover Tension, Basins 42, 43, and 44

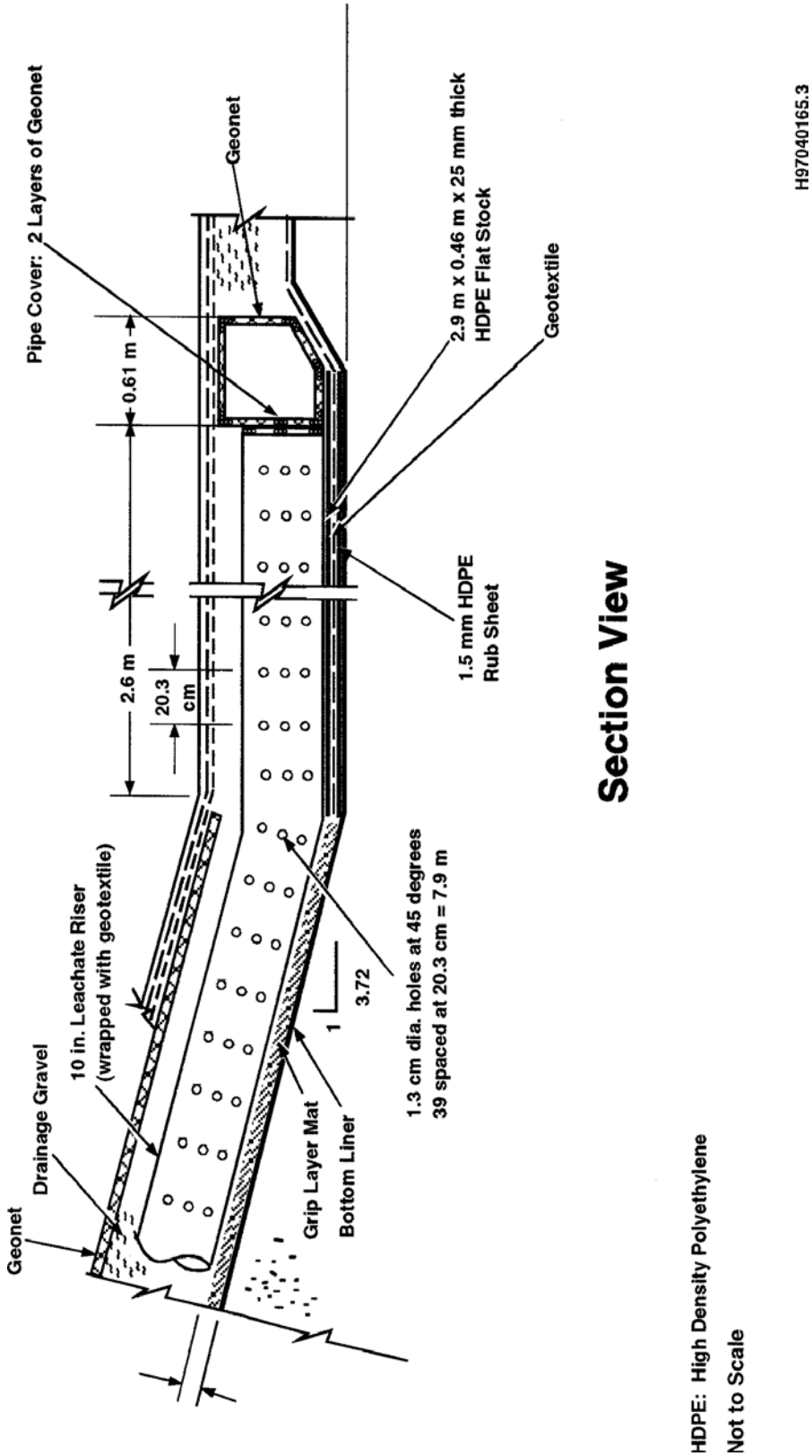

~~Figure C.16. Liner System Schematic~~

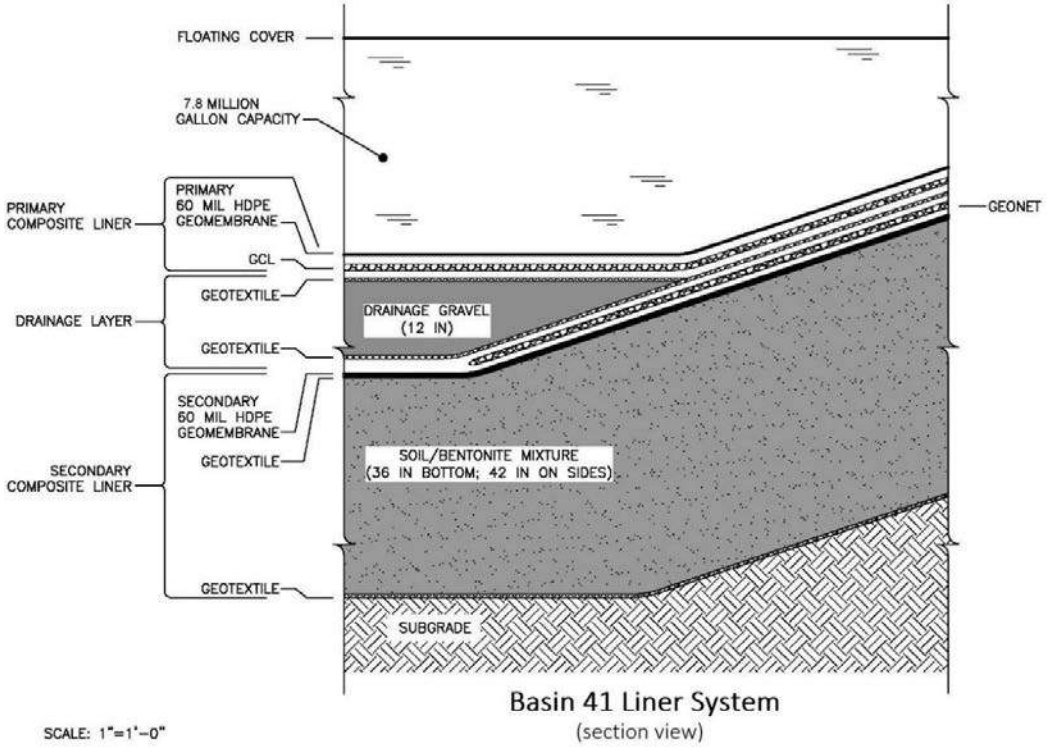

Figure C.17. Basin 41 Liner System

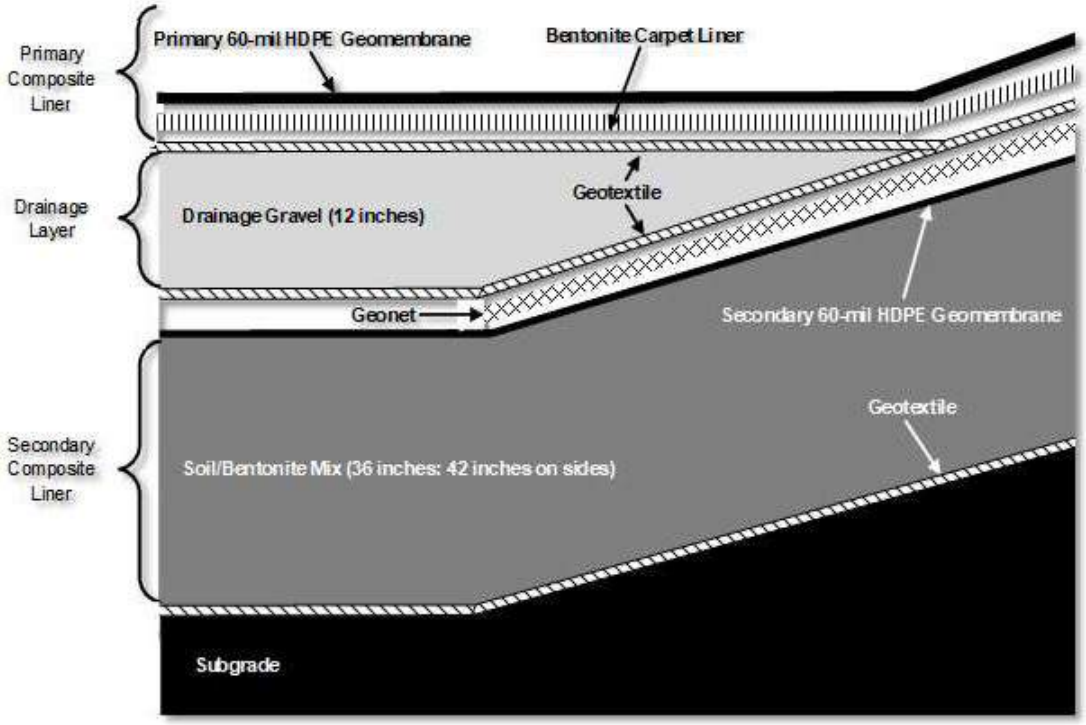

Figure C.18. Basins 42, 43, and 44 Liner System

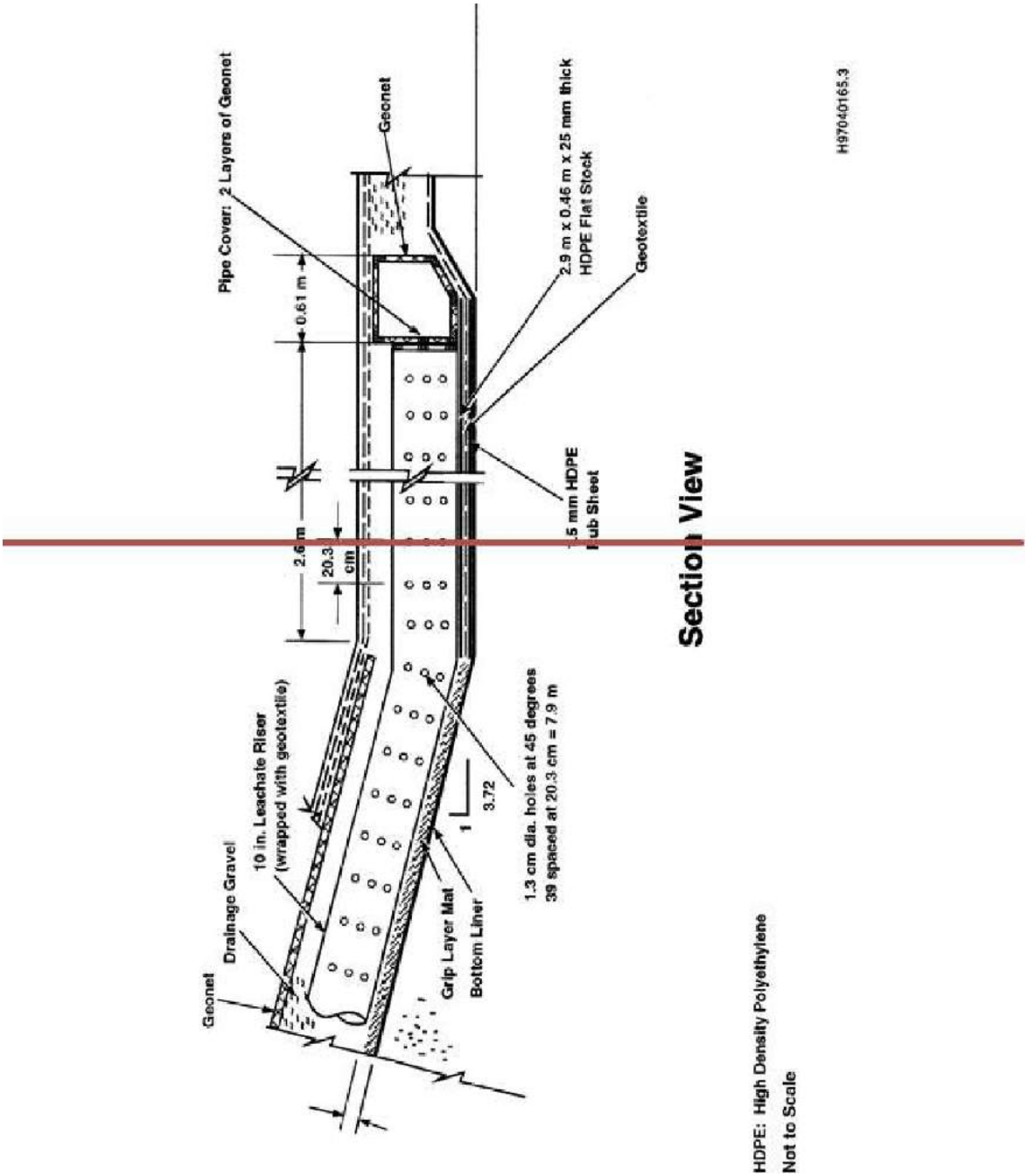

Figure C.17. Detail of Leachate Collection Sump

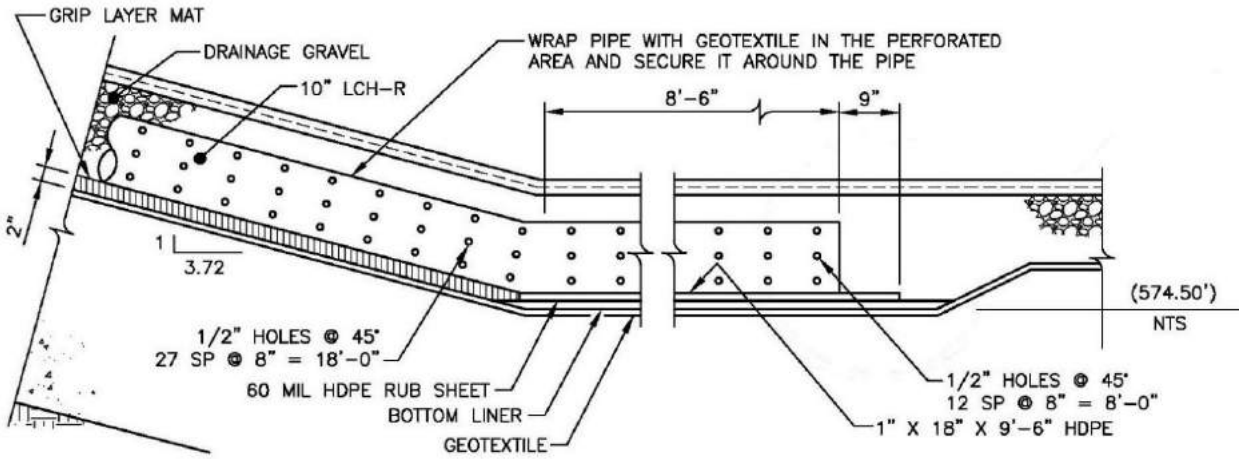

Figure C.19. Basin 41 Leachate Collection Sump

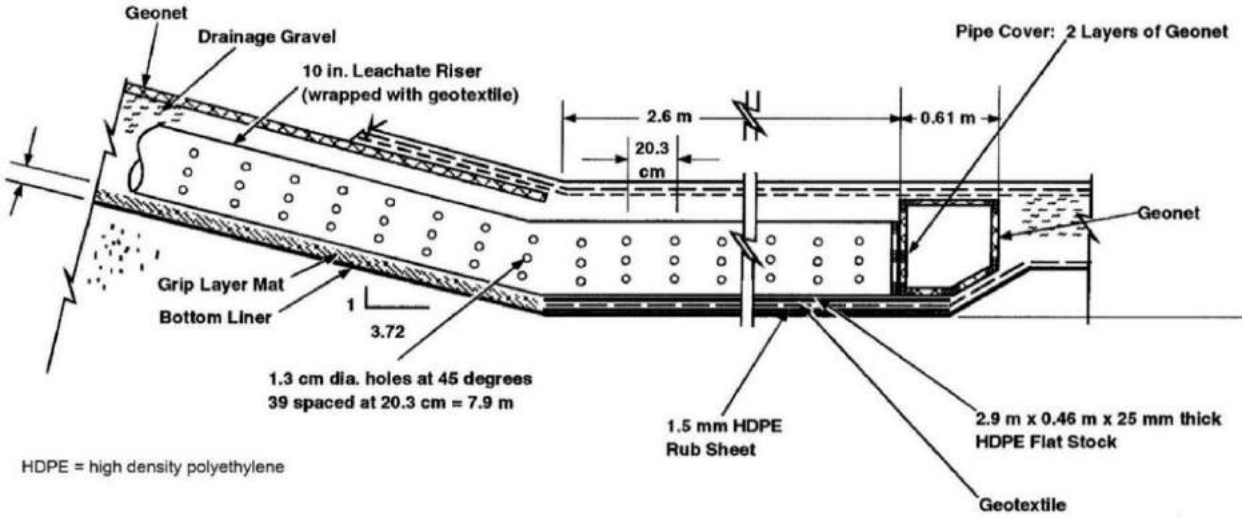

Figure C.20. Basin 42, 43, and 44 Leachate Collection Sump

for fire control for fires requiring high water volume and pressure. The 200 Area ETF is serviced by two 12-inch raw water lines that are tied into the 200 East Area raw water distribution grids. These lines provide a looped configuration that supplies two independent sources of raw water for fire protection and raw water uses. Connections from the 200 Area ETF raw water system supply fire hydrants and the wet pipe sprinkler system. In the event that water pressure is lost, the Hanford Fire Department is equipped with fire engines to provide needed water.

F.1.2 Aisle Space Requirement

The operation of the LERF does not involve aisle space. Nevertheless, the LERF and the individual basins are easily accessible to emergency response personnel and vehicles. A 20-feet-wide service road runs along the base of the basin area on the east, south, and west sides within the operational security fence.

Aisle spacing at 200 Area ETF is sufficient to allow the movement of personnel and fire protection equipment in and around the containers. This storage arrangement also meets the requirements of the National Fire Protection Association (NFPA 1996) for the protection of personnel and the environment. A minimum 30-inch aisle space is maintained between rows of containers as required by WAC 173-303-630(5)(c).

F.2 Preventive Procedures, Structures, and Equipment

The following sections describe preventive procedures, structures, and equipment.

F.2.1 Unloading Operations, Spill Prevention, and Control

Underground pipelines that transfer aqueous waste to and from the LERF are encased in a secondary pipe. If a leak is detected in a pipeline, flow in the pipeline will be stopped and the cause of the leak investigated and remediated.

If it is required to transfer aqueous waste from one LERF basin to another, existing transfer pumps are used as described in Addendum C.

The 2025-ED Load-in Station is monitored continuously during tank-filling operations and filling is stopped immediately if leaks occur. Care is taken to ensure that even minor leaks are cleaned up immediately and disposed of in accordance with approved management procedures. Any spill that is determined to be a dangerous waste will be managed according to the requirements of WAC 173-303.

F.2.2 Runoff

The LERF is constructed and operated to ensure that all aqueous waste is contained within the basins. The basins are designed and operated to prevent overtopping. Furthermore, the basins are provided with floating covers to prevent the introduction of precipitation into the basins. The basins also are graded to ensure that all precipitation outside the basins is directed away from the surface impoundments.

~~The basins are constructed so that the top of the basin dikes are approximately 9.8 feet above grade. The exterior side slopes of the basins have a 2.25 (horizontal) to 1 (vertical) slope.~~The dikes are designed with a 3:1 (3 units horizontal to 1 unit vertical) slope on the basin side, and 2.25:1 on the exterior side. The top of the dikes are approximately 26.4 feet higher than the low-point of the bottom of the basin, and 10 feet above grade. Run-on of precipitation to the basins from the surrounding area is not possible because the surrounding area slopes away from the LERF.

Dangerous waste and hazardous chemical handling areas at the 200 Area ETF are designed to contain spills, leaks, and wash water, thereby preventing run-off and subsequent releases. All dangerous and/or mixed waste loading and unloading areas are provided with secondary containment structures as described in Addendum C, Process Information.

F.2.3 Water Supplies

The LERF uses operating practices, structures, and equipment to prevent the contamination of natural

water supplies (i.e., groundwater and surface water). The LERF is monitored continuously in the 200 Area ETF Control Room during liquid waste transfers and at least daily when waste transfers are not occurring to detect abnormal conditions (e.g., leaks), and regularly inspected to detect equipment and structural deteriorations that could allow possible water supply contamination. The basins are provided with a leachate collection system that is designed to contain any leachate generated. These systems, in conjunction with the double-composite liner system and underlying low permeable clay liner, ensure that should a release occur, the release will be fully contained within the basin configuration and, therefore, water supplies will be protected. Addendum J, Contingency Plan, provides information on procedures that are implemented if a release is detected at the LERF.

There are no drinking water wells near the 200 Area ETF. Therefore, a release would not immediately contaminate drinking water supplies. The 200 Area ETF uses operating practices, structures, and equipment to prevent the contamination of natural water supplies (i.e., groundwater and surface water). The 200 Area ETF is continuously monitored in the 200 Area ETF Control Room during liquid waste processing and/or Load-In Station operations transfer to detect abnormal conditions and at least daily when waste process and/or waste transfer operations are not occurring, and is inspected regularly to detect equipment and structural deteriorations that could allow spills to the environment. Areas in contact with dangerous and/or mixed waste are monitored continuously in the 200 Area ETF Control Room during Load-in Station and/or 200 Area ETF processing operations through a series of level and pressure indicators, leak detection alarms, equipment failure alarms, and control panel readouts. In addition, the 200 Area ETF is inspected regularly for the presence of leaks or other off normal conditions wherever possible (in all areas that can be safely entered).

In addition to detailed operating practices, structures and equipment are used at the 200 Area ETF to prevent contamination of water supplies. The structures and equipment designed to prevent contamination of water supplies are the same as the structures and equipment used to prevent run-off from dangerous and/or mixed waste handling areas.

F.2.4 Equipment and Power Failure

The storage function of the LERF is not affected by loss of power and a temporary loss of power would not pose a threat to the environment. Loss of electrical power would not cause the storage of the waste to be jeopardized. For process condensate transferred from the 242-A Evaporator, appropriate valving procedures are followed to ensure a smooth restart of the flow to the LERF in the event of a power failure at the 242-A Evaporator. For secondary liquid waste streams transferred from the Waste Treatment and Immobilization Plant (WTP), appropriate valving procedures are followed to ensure a smooth restart of the flow to the LERF in the event of a power failure at the WTP.

The 200 Area ETF does not have a standby power source. Power to selected lighting, computers, and process controls is configured with an uninterruptible power supply. During partial loss of normal power, the affected pumps and subsystems will be shut down. Complete loss of power to the 200 Area ETF shuts down the entire 200 Area ETF except for the instruments, connected to the uninterruptible power supply. The uninterruptible power supply provides temporary power to some systems to assist in an orderly shutdown of the process in the event power cannot be restored quickly. Redundant pumps allow the process to continue to operate when only one component is out of service.

When power at the 200 Area ETF is lost, the valves assume a fail-safe position to allow the process to remain in a safe shutdown mode until restoration of power. This action allows the operators to perform equipment surveys during shutdown and to confirm that there are no safety issues because the 200 Area ETF is shut down. Because a power failure would also shutoff flow into the 200 Area ETF, there will not be any increase in volume in any of the holdup basins, tanks, or other systems.

A combination of reliability, redundancy, maintenance, and repair features are used in the 200 Area ETF equipment and systems to minimize random failure of equipment. For crucial systems such as ventilation filters, redundant trains are provided to mitigate equipment and system failure. Spare parts are maintained for essential production and safety equipment.

I.1.2.2.5 Effluent Treatment Facility Piping

The 200 Area ETF employs an extensive piping system. During inspections at the 200 Area ETF, any aboveground piping is inspected visually for signs of leakage and for general structural integrity. During the visual inspection, particular attention is paid to valves and fittings for signs of cracking, deformation, and leakage.

I.1.2.3 Surface Impoundment and Condition Assessment

~~The following describes the surface impoundment inspections performed at LERF.~~

Inspection and monitoring criteria and frequencies for the LERF Basins 41, 42, 43, and 44 are provided in Table I-1 and Table I-2. A description of the LERF basins; leachate detection, collection, and removal system; inter-basin transfer pipelines, and overtopping and flow controls are discussed in Addendum C.

I.1.2.3.1 Overtopping Control

Under current operating conditions, 2 feet of freeboard is maintained at each LERF basin, which corresponds to an operating level of 22.2 feet, or operating capacity of 7.8 million gallons. Level indicators at each basin are monitored to confirm that this level is not exceeded.

Before an aqueous waste is transferred into a basin, administrative controls are implemented to ensure overtopping will not occur during the transfer. The volume of feed to be transferred is compared to the available volume in the receiving basin. The transfer is not initiated unless there is sufficient volume available in the receiving basin or a cut-off level is established. The transfer into the basin would be stopped when this cut-off level is reached.

The LERF basins also are provided with floating covers that are designed and constructed to prevent overtopping by the introduction of precipitation and dust into the basins. Overtopping and flow control also are discussed in Addendum C.

I.1.2.3.2 Impoundment Contents

The LERF basins are inspected weekly to assess whether the contents are escaping from a basin. Level indicators are inspected weekly to check for unaccountable change in the level of the basins.

I.1.2.3.3 Leak Detection

The leachate detection, collection, and removal system is described in Addendum C. The leachate collection sump pump is activated when the liquid level in the leachate sump reaches a preset level. A flow meter/totalizer measures the amount of leachate removed. In addition, the timer on the leachate pump tracks the cumulative pump run time. The leak rate through the primary liner can be determined using one of two methods:

1. Measured as the leachate flow meter/totalizer readings (flow meters/totalizers are located on the outflow line from the collection sumps in the bottom of the LERF basins) or
2. Calculated using the pump operating time readings multiplied by the pump flow rate (the pump runs at a constant flow rate).

Calculations using either method are sufficient for compliance. If either the flow meter/totalizer or pump operating time system is not functioning, this is identified as an abnormal condition (see Section I.1).

The LERF employs a double walled transfer piping between 242-A Evaporator and LERF and between LERF and 200 Area ETF. The WAC 173-303-650 regulations do not require a discussion of piping for surface impoundments. However, for the purposes of comprehensive coverage of the LERF, inspections and integrity assessments are performed on the piping system. Aqueous waste (e.g., process condensate) is transferred from the 242-A Evaporator to the LERF via a buried pipeline. Likewise, aqueous waste is

Table I.1. Visual Inspection Schedule for the LERF and 200 Area ETF

Item	Inspection	Frequency
Container handling	Inspect for deterioration of containers and secondary containment, including corrosion and cracks in secondary containment foundation and coating. Inspect container labels to ensure that they are readable.	Weekly
Support Systems		
Vessel ventilation system	Inspect filters (HEPA and pre-filters), check vessel off gas pressures, system flow, and discharge temperatures.	Daily
Sump tank system	Inspect sump trenches for unexpected liquids, which indicate spills or leaks from process equipment.	Daily
Safety Systems		
Eye wash stations	Check status; check for adequate pressure.	Monthly
Safety showers	Check status; check for adequate pressure.	Monthly
Emergency Systems		
Fire extinguishers	Check for adequate charge.	Monthly
Emergency lighting	Test operability.	Monthly
Processing Area		
Uninterruptible power supply	Check output voltage and visually inspect battery pack for corrosion and leakage. Check indicator lights for fault conditions.	Annually
LERF (Surface Impoundment)		
LERF Basins 41, 42, 43, and 44 Catch Basins	Perform daily visual check for leak in each catch basin during waste transfers.	Daily
LERF basins and dikes	Check the overtopping controls and integrity of the basins and dikes.	Weekly
LERF contents	Check basin level indicators for unaccountable changes in the level of the basins.	Weekly
Leak Detections	Determine the leak rate per wetted surface area.	Weekly
LERF basins and dikes	Check for run-on, run-off, cover integrity, erosion problems, and other signs of deterioration.	Weekly & After significant precipitation events
Ignitable and Reactive		
Ignitable and reactive waste	Storage in compliance with Hanford Site fire protection standards and WAC 173-303-630(8).	Annually[2]

Table I.1. Visual Inspection Schedule for the LERF and 200 Area ETF

Item	Inspection	Frequency
Container Storage Areas Other Than Secondary Treatment Train		
Container Storage	Container labels to ensure labels are not obscured, removed, or otherwise unreadable.	Weekly
	Deterioration of containers, containment systems, or cracks in protective coating or foundations caused by corrosion, mishandling, or other factors.	Weekly
	Leaks, spills, accumulated liquids, and open or improperly sealed containers.	Daily

HEPA – High efficiency particulate air

[2]When waste management activities occur

I.1.5 Instrumentation Monitoring

Continuous monitoring applies to the electronic monitoring performed in the 200 Area ETF Control Room for this instrumentation during 200 Area ETF processing operations and/or 2025-E Load-In Station transfers. Data from alarms, leak detectors, and level transmitters are monitored daily in the 200 Area ETF Control Room when waste transfers are not occurring (see C.2.5.1). In cases where this instrumentation is out of service (e.g., calibration, power failures, or maintenance) daily visual inspections will be performed in accordance with WAC 173-303-640, using the alternate methods discussed in Addendum C, Section C.1 for leak detection, Section C.4.3.1.2 for level inspection, and Section C.4.4.2 for overfill prevention will be followed.

In the event the electronic leak detectors or level indicators for Sump Tank 1 or Sump Tank 2 are out of service, daily visual inspections will be performed each operating day (WAC-173-303-640).

Inspections pertaining to instrumentation monitoring is provided in Table I.2.

Table I.2. Inspection Plan for Instrumentation Monitoring

Item	Inspection	Frequency
2025-ED Load-In Station		
Level alarm LSH-59A-003	Monitor liquid level in Load-In Tank TK-1 to prevent overflow.	Continuously
Leak Detector	Monitor for leakage in the Load-In Station tank pit sump.	Continuously
Main Treatment Train		
Leak detector LAH-20B009	Monitor for leakage in the surge tank drainage sump.	Continuously
Level alarm LAH-60A013	Monitor surge tank level to prevent overflow.	Continuously
Level alarm LAH~~L~~-60C-111	Monitor liquid levels in the pH adjustment tank to prevent overflow.	Continuously
Level alarm LAH~~L~~-60F-101	Monitor liquid levels in the first RO feed tank to prevent overflow.	Continuously

Table I.2. Inspection Plan for Instrumentation Monitoring

Item	Inspection	Frequency
Level alarm LAH~~L~~-60F-201	Monitor liquid levels in the second RO feed tank to prevent overflow.	Continuously
Level alarms LAH~~L~~-60C-211	Monitor liquid levels in the effluent pH adjustment tank to prevent overflow.	Continuously
Level transmitter LAH~~X~~-60H-001A/B/C	Monitor liquid level in verification tanks to prevent overflow.	Continuously
Leak detector LAH-20B010	Monitor for leakage in the verification tank drainage sump.	Continuously
Secondary Treatment Train		
Level alarm LAHH~~L~~-60I-001A/B	Monitor liquid levels in secondary waste receiver tanks A and B to prevent overflow.	Continuously
Level alarm LAHH~~L~~-60J-001A/B	Monitor liquid levels in concentrate tanks A and B to prevent overflow.	Continuously
Level alarm LAHH~~L~~-60I-107	Monitor liquid levels in the evaporator tank to prevent overflow.	Continuously
Level alarm LAHH~~L~~-60J-036	Monitor liquid levels in the spray condenser tank to prevent overflow.	Continuously
Level alarm LAHH~~L~~-60I-108	Monitor liquid levels in the distillate flash tank to prevent overflow.	Continuously
Level alarm LAHH-60I-119	Monitor liquid levels in the entrainment separator tank to prevent overflow.	Continuously
Level alarm LAHH-20B-001	Monitor liquid level in Sump Tank 1 to prevent overflow.	Continuously
Level alarm LAHH-20B-002	Monitor liquid level in Sump Tank 2 to prevent overflow.	Continuously
Leak detector LAH-20B-003	Monitor for leakage to Sump No. 1.	Continuously
Leak detector LAH-20B-005	Monitor for leakage to Sump No. 2.	Continuously
Leak detector	Monitor for leakage from pipeline between 200 Area ETF and 2025-ED Load-In Station.	Continuously
Leak detector	Monitor for leakage from pipeline between 200 Area ETF and LERF.	Continuously
Leak detector	Monitor for leakage from pipeline between LERF and the 242-A Evaporator.	Continuously

Table I.2. Inspection Plan for Instrumentation Monitoring

Item	Inspection	Frequency
Surface Impoundments (LERF Basins 41, 42, 43, 44)		
WTP-EMF to LERF Catch Basin 242AL-41 (4"-WTP-001-M17) Leak Alarm LDA-41-4	Verify no leak alarm for transfer pipeline (4" -WTP-001-M17); or perform daily visual inspection to check for liquid in the sight glass FG-60M-003 at LERF Catch Basin 242AL-41 each day during dangerous waste transfers.	Daily
LERF Basins Level indicators LI-BSN-41/-42/-43/-44	Verify basin level at 200 Area ETF Control Room; or check basin level indicators located at 242-AL-71 for unaccountable changes in the level of the basins; or visually take level readings by interpreting level (0.5-feet level of accuracy) from the white markings at 2-feet increments painted on the side of the basin; or by using a tape measure. Verify that at least 2 feet of freeboard is maintained at each LERF basin for proper basin overtopping control.	Weekly
LERF Basins Leachate Level indicators LI-LCH-41/-42/-43/-44	Verify basin leachate level at 200 Area ETF Control Room; or check basin leachate level indicators located at 242-AL-71; or obtain level via dip tube (i.e., bubbler or Druck); or obtain level using pump run hours and flow.	Weekly
LERF Basin Leak Detection (action leakage rate) Totalizer FIT-41-1/42-1/-43-1/44-1 -or- Pump Run Hour KQI-41-1/42-1/-43-1/-44-1	Calculate action leakage rate for each basin using totalizer method or pump run hour method; and determine whether the action leakage rate for each basin is less than limit of 2,100 gallons per acre per day; and record the rate.	Weekly
Basins 43 and 44 Inter-basin transfer Leak alarms LDA-80W-002/-003	Verify no leak alarm for transfer pipeline; or perform daily visual check during waste transfers by opening drain valve at LERF catch basin to check for no liquid in the annular space between the inner and outer pipe each day during dangerous waste transfers.	Daily
Basin 41 and 42 Inter-basin transfer Leak Alarms LDA-41-6; sight glass FG-60M-004 LDA-41-7; sight glass FG-60M-005 LDA-42-3; sight glass FG-60M-007	Verify no leak alarm for transfer pipeline; or perform daily visual check of sight glass during waste transfers.	Daily

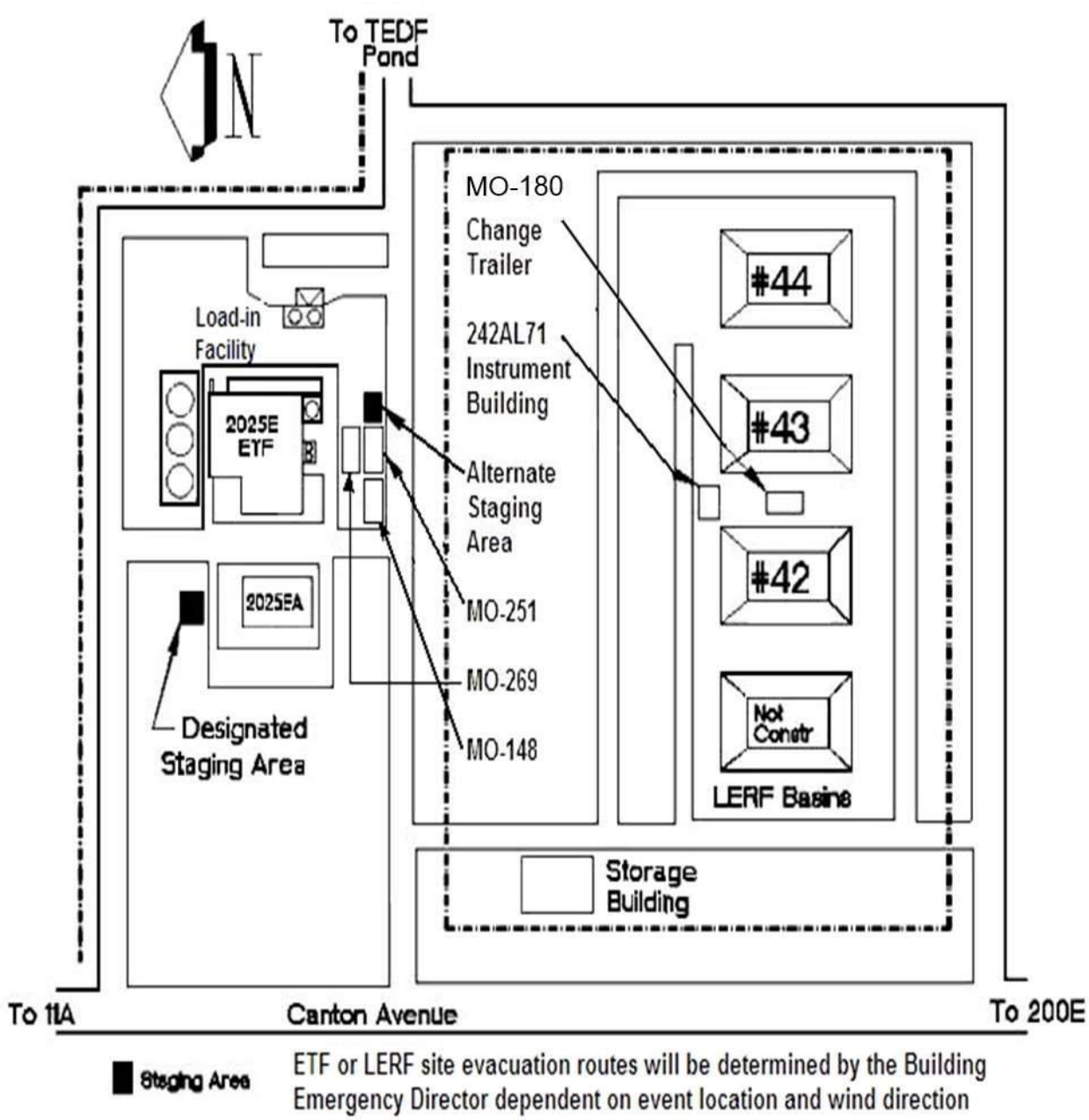

~~Figure J.2. LERF and 200 Area ETF Site Plan~~

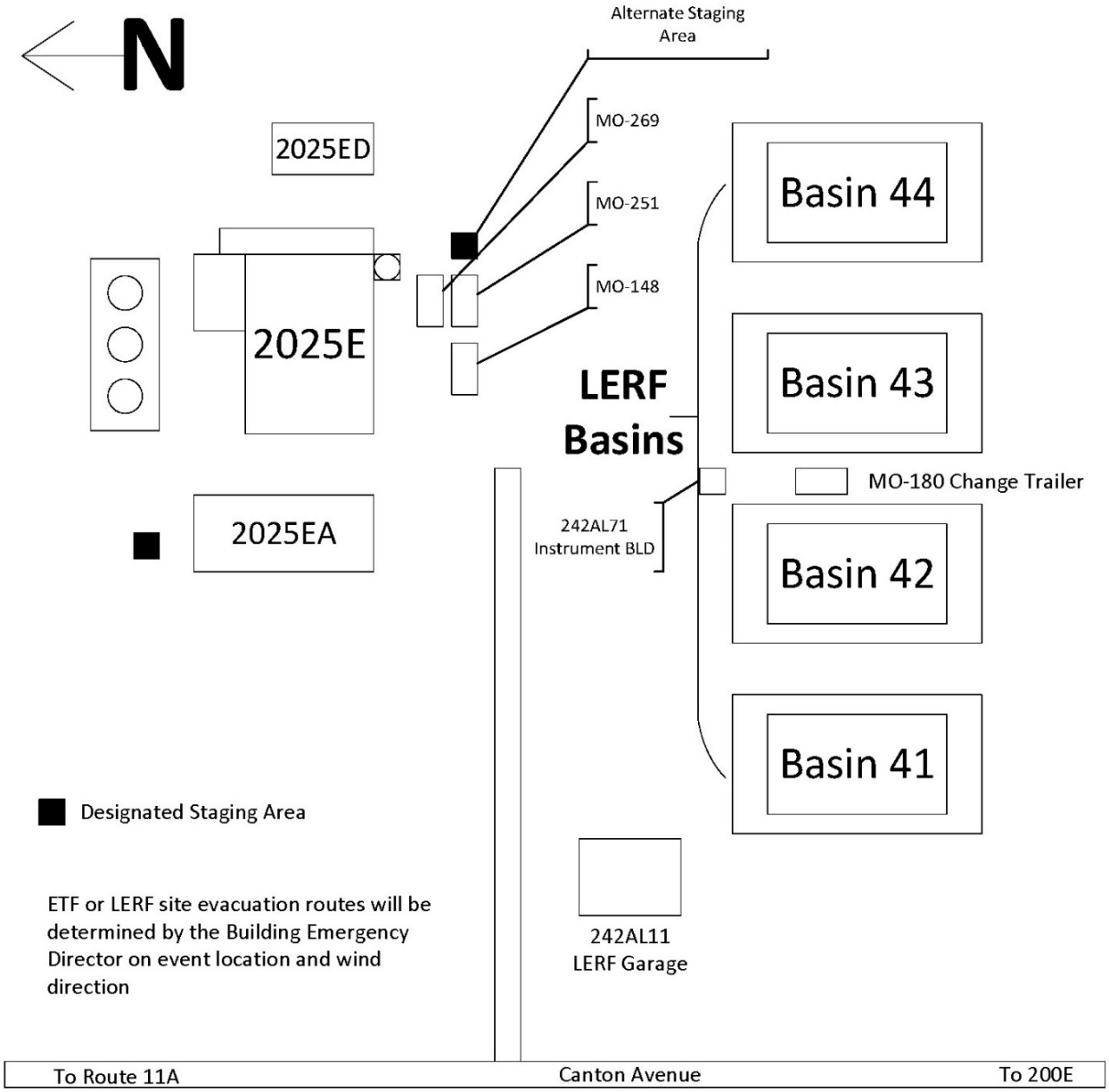

Figure J.2. LERF and 200 Area ETF Site Plan

- Operations management is notified of the damaged or unacceptable waste to be received.
- If the conformance issue results in a spill or release, actions described in Section J.3.2.5 are taken.
- The generating organization is notified of the conformance issue.

An operations representative, in conjunction with the generating organization, determines the course of action to resolve the conformance issue.

J.3.3 Prevention of Recurrence or Spread of Fires, Explosions, or Releases

The BED, as part of the ICP, takes the steps necessary to ensure that a secondary release, fire, or explosion does not occur. The BED will take measures, where applicable, to stop processes and operations, collect and contain released waste, and remove or isolate containers. The BED shall also monitor for leaks, pressure buildups, gas generation, or ruptures in valves, pipes, or other equipment, whenever this is appropriate.

J.3.4 Incident Recovery and Restart of Operations

A recovery plan is developed when necessary in accordance with Permit Attachment 4, Hanford Emergency Management Plan, (DOE/RL-94-02), Section 9.2. A recovery plan is needed following an event where further risk could be introduced to personnel, the LERF and 200 Area ETF, or the environment through recovery action and/or to maximize the preservation of evidence.

If this plan was implemented according to Section J.3 of this plan, Ecology is notified before operations can resume. Permit Attachment 4, Hanford Emergency Management Plan, (DOE/RL-94-02), Section 5.1 discusses different reports to outside agencies. This notification is in addition to those required reports and includes the following statements:

- There are no incompatibility issues with the waste and released materials from the incident.
- All the equipment has been cleaned, fit for its intended use, and placed back into service.

The notification required by WAC 173-303-201(14)(j) or WAC 173-303-360(2)(j) may be made via telephone conference. Additional information that Ecology requests regarding these restart conditions will be included in the required 15-day report identified in Section J.5 of this plan.

For emergencies not involving activation of the Hanford Emergency Operations Center, the BED ensures that conditions are restored to normal before operations are resumed. If the Hanford Site Emergency Response Organization was activated and the emergency phase is complete, a special recovery organization could be appointed at the discretion of RL to restore conditions to normal. This process is detailed in RL and contractor emergency procedures. The makeup of this organization depends on the extent of the damage and the effects. The onsite recovery organization will be appointed by the appropriate contractor's management.

J.3.4.1 LERF Basins Response Action Plan

WAC 173-303-650(11)(a) regulations require the owner of the operator of a surface impoundment unit to have an approved response action plan before receipt of waste. The intent of the response action plan is to assure that any leachate that leaks through the primary lining system will not migrate out of the surface impoundment into the environment. This response action plan establishes actions to be taken if a LERF Basin exceeds the action leakage rate. An action leakage rate limit is established where action must be taken due to excessive leakage from the primary liner. The action leak rate is based on the maximum design flow rate the leak detection system can remove without the fluid head on the bottom (secondary) liner exceeding 12 inches. The limiting factor in the leachate removal rate is the hydraulic conductivity of the drainage gravel.

An action leakage rate of 2,100 gallons per acre per day was calculated for each basin. The calculations for Basin 41 are documented in LERF Basin 41 Effluent Collection and Removal System Parameters, RPP-CALC-63756, 2020. The calculations for Basins 42, 43, and 44 are documented in Calculation of the Rapid or Large Leak Rate for LERF Basins in the 200 East Area, WHC-SD-EN-TI-009, 1992.

To determine if the action leakage rate has been exceeded, calculate action leakage rate for each basin using totalizer method or pump run hour method; and determine whether the action leakage rate for each basin is less than limit of 2,100 gallons per acre per day.

J.3.4.1.1 Response Actions

WAC 173-303-650(11) lists several actions if the action leakage rate is exceeded. In the event the action leakage rate is exceeded perform the following actions:

- Notify Ecology in writing of the exceedance within 7 days of the determination
- Submit a preliminary written assessment to the department within fourteen days of the determination, as to the amount of liquids, likely sources of liquids, possible location, size, and cause of any leaks, and short-term actions taken and planned;
- Determine to the extent practicable the location, size, and cause of any leak;
- Determine whether waste receipt should cease or be curtailed, whether any waste should be removed from the unit for inspection, repairs, or controls, and whether or not the unit should be closed;
- Determine any other short-term and longer-term actions to be taken to mitigate or stop any leaks; and
- Within 30 days after the notification that the action leakage rate has been exceeded, submit to the Ecology the results of the analyses specified in bullets 3, 4, and 5 of this section, the results of actions taken, and actions planned. Monthly thereafter, as long as the flow rate in the leak detection system exceeds the action leakage rate, submit to Ecology a report summarizing the results of any remedial actions taken and actions planned.

To make the leak and/or remediation determinations in bullets 3, 4, and 5 above, assess the source of liquids and amounts of liquids by source. To identify the source of liquids and possible location of any leaks, and the hazard and mobility of the liquid conduct a fingerprint, dangerous constituent, or other analyses of the liquids in the leak detection system. Evaluate the seriousness of any leaks in terms of potential for escaping into the environment; or document why such assessments are not needed.

J.3.5 Incompatible Waste

After an event, the BED or the onsite recovery organization ensures that no waste that might be incompatible with the released material is treated, stored, and/or disposed of until cleanup is completed. Cleanup actions are taken by LERF and 200 Area ETF personnel or other assigned personnel. Permit Attachment 4, Hanford Emergency Management Plan, (DOE/RL-94-02), Section 9.2.3, describes actions to be taken.

Waste from cleanup activities is designated and managed as newly generated waste. A field check for compatibility before storage is performed as necessary. Incompatible wastes are not placed in the same container. Containers of waste are placed in storage areas appropriate for their compatibility class.

If incompatibility of wastes was a factor in the incident, the BED or the onsite recovery organization ensures that the cause is corrected.

J.3.6 Post Emergency Equipment Maintenance and Decontamination

All equipment used during an incident is decontaminated (if practicable) or disposed of as spill debris. Decontaminated equipment is checked for proper operation before storage for subsequent use. Consumable and disposed materials are restocked. Used fire extinguishers are replaced.

The BED ensures that all equipment is cleaned and fit for its intended use before operations are resumed. Depleted stocks of neutralizing and absorbing materials are replenished; protective clothing is cleaned or disposed of and restocked, etc.

Attachment 4
20-ECD-0033

Supporting Information

(1432 Pages Including Cover Sheet)

Supporting Information LERF Basin 41

System	Document	Document Title
Regulatory Crosswalk	N/A	Regulatory Crosswalk for LERF Basin 41
IQRPE Design Assessment Report	RPP-IQRPE-50063	Independent Qualified Registered Professional Engineer Design Assessment Report for Liquid Effluent Retention Facility (LERF) Basin 41
Piping Plot & Key Plans 242-A Evap Cond Stream	H-2-79604-1	ECN-715507, LERF Basin 41 Installation - Mechanical Update drawing to depict the installation of 242AL-41 basin
P&ID LERF Basin & ETF Influent Evaporator	H-2-88766-1	ECN-715508, LERF Basin 41 Existing Piping Connections – Mechanical
	H-2-88766-2	Update the sheet and zone reference for the 3"-EVAP COND-PC5000-M17 transfer line
	H-2-88766-4	ECN-715509, LERF Basin 41 New Piping Connections - Mechanical Update the Catch Basin 42 P&ID drawing sheet to depict the interface connection of transfer lines 242AL-41-WT-WTL-SN-001 and 242AL-41-WTWTL-SN-002
Drawing Legend	H-2-838746-1	LERF Basin 41 General Notes
LERF Basin 41 Excavation	H-2-838747-1	LERF Basin 41 Civil Site Plan
	H-2-838748-1	LERF Basin 41 Civil Excavation Plan
LERF Basin 41 Bottom Liner	H-2-838749-1	LERF Basin 41 Civil Bottom Liner
	H-2-838749-2	LERF Basin 41 Civil Bottom Liner Details
LERF Basin 41 Top Liner	H-2-838750-1	LERF Basin 41 Civil Top Liner
	H-2-838750-2	LERF Basin 41 Civil Top Liner Details
	H-2-838750-3	LERF Basin 41 Civil Top Liner Details
	H-2-838750-4	LERF Basin 41 Civil Top Liner Details
LERF Basin 41 Catch Basin	H-2-838751-1	LERF Basin 41 Structural Catch Basin
	H-2-838751-2	LERF Basin 41 Structural Catch Basin Details
	H-2-838751-3	LERF Basin 41 Structural Catch Basin Details
	H-2-838751-4	LERF Basin 41 Structural Catch Basin Details
LERF Basin 41 Sample Port Riser	H-2-838753-1	LERF Basin 41 Civil Sample Port Riser Details
LERF Basin 41 Floating Cover	H-2-838754-1	LERF Basin 41 Civil Floating Cover
LERF Basin 41	H-2-838765-1	LERF Basin 41 Mechanical General Arrangement
	H-2-838766-1	LERF Basin 41 Basin 41 General Arrangement
LERF Basin 41 Pump	H-2-838768-1	LERF Basin 41 Basin Pump Notes and Parts List
	H-2-838768-2	LERF Basin 41 Basin Pump Assembly
	H-2-838768-3	LERF Basin 41 Basin Pump Assembly
	H-2-838768-4	LERF Basin 41 Basin Pump Details
	H-2-838768-5	LERF Basin 41 Basin Pump Details
	H-2-838768-6	LERF Basin 41 Basin Pump Details
	H-2-838768-7	LERF Basin 41 Basin Pump Assembly and Sections
	H-2-838768-8	LERF Basin 41 Basin Pump Details and Sections
	H-2-79668-6	Electrical Elementary Diagram Basin 41 Pumps
LERF Basin 41 Leachate Pump	H-2-838769-1	LERF Basin 41 Leachate Pump Notes and Parts List
	H-2-838769-2	LERF Basin 41 Leachate Pump Assembly
	H-2-838769-3	LERF Basin 41 Leachate Pump Details
	H-2-838769-4	LERF Basin 41 Leachate Pump Details
	H-2-838769-5	LERF Basin 41 Leachate Pump Weldments
	H-2-838769-6	LERF Basin 41 Leachate Pump Pipe Spools
	H-2-838769-7	LERF Basin 41 Leachate Pump Pipe Spools
	H-2-838769-8	LERF Basin 41 Leachate Pump Details
	H-2-838769-9	LERF Basin 41 Leachate Pump Details
	H-2-838770-1	LERF Basin 41 Leachate Piping Notes and Parts List
	H-2-838770-2	LERF Basin 41 Leachate Piping Assembly
	H-2-838770-3	LERF Basin 41 Leachate Piping View
	H-2-838770-4	LERF Basin 41 Leachate Piping Details
	H-2-838770-5	LERF Basin 41 Leachate Piping Details
	H-2-838770-6	LERF Basin 41 Leachate Piping Details
	H-2-838770-7	LERF Basin 41 Leachate Piping Details
	H-2-838774-1	Mechanical Hydraulic Diagram

LERF Basin 41 Catch Basin Piping	H-2-838767-1	LERF Basin 41 Catch Basin Notes and Parts List
	H-2-838771-1	LERF Basin 41 Catch Basin Piping Notes and Parts List
	H-2-838771-2	LERF Basin 41 Catch Basin Piping Isometric
	H-2-838771-3	LERF Basin 41 Catch Basin Piping Assembly
	H-2-838771-4	LERF Basin 41 Catch Basin Piping Details
	H-2-838771-5	LERF Basin 41 Catch Basin Piping Assembly
	H-2-838771-6	LERF Basin 41 Catch Basin Piping Assembly
	H-2-838771-7	LERF Basin 41 Catch Basin Piping Assembly
	H-2-838771-8	LERF Basin 41 Catch Basin Piping Details
	H-2-838771-9	LERF Basin 41 Catch Basin Piping Assembly
	H-2-838771-10	LERF Basin 41 Catch Basin Piping Details
Calculations	RPP-CALC-63650	Leachate and Basin Pump Flow Calculation
	RPP-CALC-63660	LERF Basin 41 Liner Anchor Wall Design
	RPP-CALC-63664	LERF Basin 41 Catch Basin Design
	RPP-CALC-63745	LERF Basin 41 Construction Equipment Limitations for Liner and Geotextile Protection
	RPP-CALC-63746	LERF Basin 41 Static and Dynamic Loads on Leachate Pipe
	RPP-CALC-63747	LERF Basin 41 Wind Uplift Forces and Required Ballast
	RPP-CALC-63748	LERF Basin 41 Side Slope Liner Stresses
	RPP-CALC-63749	LERF Basin 41 Side Slope Liner Stability and Stress - Pipe Trench
	RPP-CALC-63750	LERF Basin 41 Settlement of Foundation Soils
	RPP-CALC-63751	LERF Basin 41 Thermal Expansion/Contraction Potential, HDPE Liner
	RPP-CALC-63752	LERF Basin 41 Evaluation of Dike Stability and Erosion
	RPP-CALC-63755	LERF Basin 41 Travel Time for Leachate
	RPP-CALC-63756	LERF Basin 41 Effluent Collection and Removal System Parameters
	RPP-CALC-63780	LERF Basin 41 Buried Piping Analysis
	RPP-CALC-63782	LERF Basin 41 Sample Port Riser Anchor Wall Design
Control System Strategy for LERF Basin 41	RPP-RPT-62003	Control System Strategy for Liquid Effluent Retention Facility Basin 41
Material Compatibility	RPP-RPT-62215	LERF Basin 41 Material Compatibility with Wastewater
LERF Basin 41 Construction Specification	RPP-SPEC-63632	LERF Basin 41 Construction Specification

Regulatory Crosswalk for LERF Basin 41

WAC 173-303	Requirement	Permit Location	Design Media
Addendum A, Part A Form			
-803(3)(l) -806(4)(a)(xviii)	Topographic Map	Addendum A	
Addendum B, Waste Analysis Plan			
-300	Waste Analysis	Addendum B	
Addendum C, Process Information			
-806(4)(d) -650	Surface Impoundments	C.5	H-2-838748, Civil Excavation Plan H-2-838747-1, LERF Basin 41 Civil Site Plan
-806(4)(d)(i)	List of dangerous waste	C.5.1	N/A
-806(4)(d)(ii)	Detailed plans and an engineering report describing how the surface impoundment is designed, and is or will be constructed, and operated	C.5	RPP-SPEC-63632, LERF Basin 41 Design Construction Specification
-806(4)(d)(ii)(A)	Construction, operation, and maintenance of liner system	C.5.2	RPP-SPEC-63632, LERF Basin 41 Design Construction Specification
-650(2)(a)(i)(A)	Liner construction materials	C.5.2.1	RPP-SPEC-63632,LERF Basin 41 Design Construction Specification
-650(2)(a)(i)(B)	Liner system foundation	C.5.2.3	H-2-838750-1, LERF Basin 41 Civil Top Liner H-2-838750-2, LERF Basin 41 Civil Top Liner Details H-2-838750-3, LERF Basin 41 Civil Top Liner Details H-2-838750-4, LERF Basin 41 Civil Top Liner Details RPP-CALC-63745, LERF Basin 41 Construction Equipment Limitations for Liner and Geotextile Protection RPP-CALC-63746, LERF Basin 41 Static and Dynamic Loads of Effluent Pipe RPP-CALC-63747, LERF Basin 41 Wind Uplift Forces and Required Ballast RPP-CALC-63748, LERF Basin 41 Side Slope Liner Stresses RPP-CALC-63750, LERF Basin 41 Settlement of Foundation Soils RPP-CALC-63751, LERF Basin 41 Thermal Expansion/Contraction Potential, HDPE Liner RPP-CALC-63752, LERF Basin 41 Evaluation of Dike Stability

WAC 173-303	Requirement	Permit Location	Design Media
			and Erosion
-650(2)(a)(i)(C)	Liner coverage	C.5.2.5	H-2-838749-1, LERF Basin 41 Civil Bottom Liner H-2-838749-2, LERF Basin 41 Civil Bottom Liner Details H-2-838750-1, LERF Basin 41 Civil Top Liner H-2-838750-2, LERF Basin 41 Civil Top Liner Details H-2-838750-3, LERF Basin 41 Civil Top Liner Details H-2-838750-4, LERF Basin 41 Civil Top Liner Details RPP-CALC-63660, LERF Basin 41 Liner Anchor Wall Design RPP-CALC-63748, LERF Basin 41 Side Slope Liner Stresses RPP-CALC-63750, LERF Basin 41 Settlement of Foundation Soils RPP-CALC-63751, LERF Basin 41 Thermal Expansion/Contraction Potential, HDPE Liner RPP-CALC-63752, LERF Basin 41 Evaluation of Dike Stability and Erosion
-650(2)(c, d) -806(4)(d)(ii)(B) -806(4)(d)(ii)(G)(iv)	Prevention of Overtopping	C.5.3	H-2-838754-1, LERF Basin 41 Civil Floating Cover RPP-RPT-62003, Control System Strategy for Liquid Effluent Retention Facility Basin 41
-650(2)(g)(i)	Protection from Root Systems	C.5.4.2	RPP-CALC-63752, LERF Basin 41 Evaluation of Dike Stability and Erosion
-650(2)(g)(ii)	Protection from Burrowing Mammals	C.5.4.2	RPP-CALC-63752, LERF Basin 41 Evaluation of Dike Stability and Erosion
-806(4)(d)(ii)(C)	Structural integrity of dikes	C.5.4	RPP-CALC-63752, LERF Basin 41 Evaluation of Dike Stability and Erosion
-806(4)(d)(ii)(F) -335	Construction quality assurance	C.5.7	RPP-SPEC-63632, LERF Basin 41 Design Construction Specification
-806(4)(d)(viii), (ix)	Management of ignitable, reactive, or incompatible wastes	C.5.10	N/A
-650(2)	Design and operating requirements	C.5.2	N/A
-650(2)(g)(iii)	Cover Construction, Materials, and Operation	C.5.11	H-2-838754-1, Civil Floating Cover
-650(2)(i)(A)	Strength and Compressibility Test Results	Table C.2	RPP-CALC-63752, LERF Basin 41 Evaluation of Dike Stability and Erosion RPP-CALC-63750, LERF Basin 41 Settlement of Foundation Soils

WAC 173-303	Requirement	Permit Location	Design Media
-650(2)(j), (l)	Leachate Detection, Collection, and Removal System	C.5.2.1.1, C.5.6, C.5.8	H-2-838769-1, Leachate Pump Notes and Parts List H-2-838769-2, Leachate Pump Assembly H-2-838769-3, Leachate Pump Details H-2-838769-4, Leachate Pump Assembly H-2-838769-5, Leachate Pump Weldments H-2-838769-6, Leachate Pump Pipe Spools H-2-838769-7, Leachate Pump Pipe Spools H-2-838769-8, Leachate Pump Details H-2-838769-9, Leachate Pump Details H-2-838770-1, Leachate Piping Notes and Parts List H-2-838770-2, Leachate Piping Assembly H-2-838770-3, Leachate Piping View H-2-838770-4, Leachate Piping Details H-2-838770-5, Leachate Piping Details H-2-838770-6, Leachate Piping Details H-2-838770-7, Leachate Piping Details RPP-CALC-63756, LERF Basin 41 Effluent Collection and Removal System Parameters
-650(2)(f), (g), (h)	Dike Design, Construction, and Maintenance	C.5.4.1	RPP-CALC-63752, LERF Basin 41 Evaluation of Dike Stability and Erosion RPP-CALC-63750, LERF Basin 41 Settlement of Foundation Soils
-806(4)(d)(ii)(C) -650(2)(g) -650(4)(c)	Structural Integrity of Dikes	C.5.4	RPP-CALC-63752, LERF Basin 41 Evaluation of Dike Stability and Erosion
-806(4)(d)(v)	Dike Structural Integrity Engineering Certification	C.5.9	Basin 41 IQRPE certification is pending
-650(2)(g)	Stability Analysis Dike Slopes	C.5.4.1	RPP-CALC-63752, LERF Basin 41 Evaluation of Dike Stability and Erosion RPP-CALC-63750, LERF Basin 41 Settlement of Foundation Soils

WAC 173-303	Requirement	Permit Location	Design Media
-650(2)(g)(iii) -650(2)(j)(iii) -806(4)(d)(ii)(D)	Double liner and leak detection, collection, and removal system	C.5.6	H-2-838749-1, LERF Basin 41 Civil Bottom Liner H-2-838749-2, LERF Basin 41 Civil Bottom Liner Details H-2-838750-1, LERF Basin 41 Civil Top Liner H-2-838750-2, LERF Basin 41 Civil Top Liner Details H-2-838750-3, LERF Basin 41 Civil Top Liner Details H-2-838750-4, LERF Basin 41 Civil Top Liner Details H-2-838769-1, Leachate Pump Notes and Parts List H-2-838769-2, Leachate Pump Assembly H-2-838769-3, Leachate Pump Details H-2-838769-4, Leachate Pump Assembly H-2-838769-5, Leachate Pump Weldments H-2-838769-6, Leachate Pump Pipe Spools H-2-838769-7, Leachate Pump Pipe Spools H-2-838769-8, Leachate Pump Details H-2-838769-9, Leachate Pump Details H-2-838770-1, Leachate Piping Notes and Parts List H-2-838770-2, Leachate Piping Assembly H-2-838770-3, Leachate Piping View H-2-838770-4, Leachate Piping Details H-2-838770-5, Leachate Piping Details H-2-838770-6, Leachate Piping Details H-2-838770-7, Leachate Piping Details RPP-CALC-63756, LERF Basin 41 Effluent Collection and Removal System Parameters
-650(4)(a)	During construction and installation, liners and cover systems (e.g., membranes, sheets, or coatings) must be inspected for uniformity, damage, and imperfections immediately after construction or installation	C.5.7	RPP-SPEC-63632, LERF Basin 41 Design Construction Specification
-650(4)(c)	IQRPE Certification for structural integrity of dike provided to Ecology no later than 7-calendar days after the date of the certification	C.5.4.1	Basin 41 IQRPE certification is pending

WAC 173-303	Requirement	Permit Location	Design Media
-650(10), (11) -806(4)(d)(ii)(G)	Proposed Action Leakage Rate and Response Action Plan	C.5.8	RPP-CALC-63756, LERF Basin 41 Effluent Collection and Removal System Parameters
-650(12)	Air emissions control Compliance with Subpart AA, BB, CC Re-evaluating Compliance with Subpart AA, BB, CC	C.5.2.4.2 C.6 C.6.3.3	H-2-838754-1, LERF Basin 41 Civil Floating Cover H-2-838771-2, LERF Basin 41 Catch Basin Piping Isometric H-2-838771-3, LERF Basin 41 Catch Basin Piping Assembly H-2-838771-8, LERF Basin 41 Catch Basin Piping Details H-2-838771-9, LERF Basin 41 Catch Basin Piping Assembly H-2-838771-10, LERF Basin 41 Catch Basin Piping Details
Addendum F, Preparedness & Prevention			
-340	Preparedness and Prevention Requirements	F.1	
	Unloading Operations, Spill Prevention, and Control	F.2.1	
	Runoff	F.2.2	
	Prevention of Reaction of Ignitable, Reactive, and Incompatible Waste	F.3	
Addendum I, Inspection Plan			
-650(4)	Surface impoundment inspection	I.2.2.3	
-650(4)(b,d)	Monitoring and Inspection of surface impoundment, including double liner system, leak detection system, cover systems, and overtopping control	Table I.	
-650(4)(d)(ii)	After the final cover is installed, the amount of liquids removed from each leak detection system sump must be recorded at least monthly. If the liquid level in the sump stays below the pump operating level for two consecutive months, the amount of liquids in the sumps must be recorded at least quarterly. If the liquid level in the sump stays below the pump operating level for two consecutive quarters, the amount of liquids in the sumps must be recorded at least semi annually.	Table I.	

WAC 173-303	Requirement	Permit Location	Design Media
Addendum H, Closure Plan			
-650(6)	Closure of Surface Impoundments	H.5.3	N/A

DOCUMENT RELEASE AND CHANGE FORM

Prepared For the U.S. Department of Energy, Assistant Secretary for Environmental Management
By Washington River Protection Solutions, LLC., PO Box 850, Richland, WA 99352
Contractor For U.S. Department of Energy, Office of River Protection, under Contract DE-AC27-08RV14800

TRADEMARK DISCLAIMER: Reference herein to any specific commercial product, process, or service by trade name, trademark, manufacturer, or otherwise, does not necessarily constitute or imply its endorsement, recommendation, or favoring by the United States government or any agency thereof or its contractors or subcontractors. Printed in the United States of America.

Release Stamp

DATE: Jun 10,2020

HANFORD RELEASE

1. **Doc No:** RPP-IQRPE-50063 **Rev.** 00

2. **Title:**
Independent Qualified Registered Professional Engineer Design Assessment Report for Liquid Effluent Retention Facility (LERF) Basin 41

3. **Project Number:** T1P226 ☐N/A

4. **Design Verification Required:** ☐Yes ☒No

5. **USQ Number:** ☒ N/A RPP-27195

6. **PrHA Number** **Rev.** ☒ N/A

Clearance Review Restriction Type: public

7. **Approvals**

Title	Name	Signature	Date
Clearance Review	Ayers, Lynn M	*Ayers, Lynn M*	06/10/2020
Design Authority	Wilson, Nathaniel W	*Wilson, Nathaniel W*	06/09/2020
Checker	Wilson, Nathaniel W	*Wilson, Nathaniel W*	06/09/2020
Document Control Approval	Scales, Anthony	*Scales, Anthony*	06/10/2020
Environmental Protection	Wall, Jeremy M	*Wall, Jeremy M*	06/09/2020
Originator	Greenhalgh, Aaron M	*Greenhalgh, Aaron M*	06/09/2020
Other Approver	Roosendaal, Gene D	*Roosendaal, Gene D*	06/09/2020
Responsible Manager	Smith, Gregory E	*Smith, Gregory E*	06/10/2020

8. **Description of Change and Justification**

Initial release of document. This Independent Qualified Registered Professional Engineer Design Assessment Report was created by Meier Architecture Engineering and provided to WRPS under submittal 64658-032-SUB-002-001.

9. **TBDs or Holds** ☒N/A

10. **Related Structures, Systems, and Components**

a. **Related Building/Facilities** ☐N/A	b. **Related Systems** ☐N/A	c. **Related Equipment ID Nos. (EIN)** ☒N/A
ETF FACILITIES LERF FACILITIES	ETF LERF	

11. **Impacted Documents – Engineering** ☒N/A

Document Number	Rev.	Title

12. **Impacted Documents (Outside SPF):**

N/A

13. **Related Documents** ☒N/A

Document Number	Rev.	Title

14. **Distribution**

Name	Organization
Blaak, Whitney S	COGNIZANT SYSTEM ENGINEERING
Demiter, Scott M	ETF OPERATIONS
Foster, Jim	242-A/AW/ETF OPERATIONS
Goessmann, Glen E	ENGINEERING PROGRAMS
Greenhalgh, Aaron M	TANK FARM PROJECTS ENGINEERING
Halgren, Dale L	ETF ENGINEERING
Harris, John W	SAFETY PROGRAM SERVICES RC/P
Joslyn, Cameron C	ETF ENGINEERING
McFerran, Brandon E	242-A/AW/ETF OPERATIONS
McShane, Michael P	ENGINEERING PROGRAMS
O'Meara, Sean P	ETF ENGINEERING
Roosendaal, Gene D	TFP PROJECT MANAGEMENT
Rutherford, Wally	ETF ENGINEERING
Shultz, Milton V	NUCLEAR SAFETY
Smith, Gregory E	TANK FARM PROJECTS ENGINEERING
Smoot, Bill R	TFP RADCON
Thompson, Suzette A	RCRA PERMITTING
Wall, Jeremy M	RETRVL & CLOSURE/PROJ ENV CMPL
Wilson, Nathaniel W	ETF PROJECTS ENGINEERING

Figure 1. Technical Report Checklist.

Report Number RPP-IQRPE-50063 Revision: 0

Report Title: IQRPE Design Assessment Report for LERF Basin 41

The following checklist is used by checkers to ensure technical reports are complete and in compliance with engineering procedures (i.e., TFC-ENG-DESIGN-C-25). This checklist is also applicable to ECNs that revise these types of documents. DRCF required approvers vary according to the type of document being released. Required approvers are identified in SPF.

Item No.	Yes	No	N/A	Item
				Version/Format
1			✓	If revising an existing report, are the changes being made against the current revision in SPF?
2	✓			Is the Document Release and Change Form (DRCF) properly filled out?
3	✓			Are all of the pages properly labeled with Report Number, Revision Number, and Sequential Page Number?
4	✓			Are the Subject and Purpose clearly stated and do they meet the end users' needs?
				References
5	✓			Are all References properly documented within the report and can they be easily verified within Document Control, online, or within the library, etc.? If reference documents are not readily available, are they attached?
6	✓			Have the correct design bases documents been identified (e.g., codes, standards, DOE Orders, TOC standards, regulatory requirements, etc.)?
				Open Items/Input
7	✓			Is there a reference/source for each input?
8	✓			Do the identified references/sources fully support the inputs?
9			✓	Are all assumptions used to support the report individually listed and numbered?
10			✓	Is there a justification written for each assumption that includes a technical basis?
11			✓	Do the justifications adequately support the assumptions?
12			✓	If the report has open items, TBDs, and/or HOLDs, is there a method identified to track them?
				Results/Conclusion
13	✓			Are the results of the report consistent with the input and assumptions?
14		✓		Do the results of the report affect any other technical documents?
15	✓			Do the results substantiate the conclusion?
				Approvals
16	✓			Does the DRCF identify the method of verification and checking and does it have a signature block for the verifier/checker?

Item No.	Comments
	N/A

Checker: Nathaniel Wilson [signature] 6/9/2020

Print Name **Signature** **Date**

RPP-IQRPE-50063
Revision 0

Independent Qualified Registered Professional Engineer Design Assessment Report for Liquid Effluent Facility (LERF) Basin 41

Prepared by

A.M. Greenhalgh
Washington River Protection Solutions, LLC

Date Published
June 2020

Prepared for the U.S. Department of Energy
Office of River Protection

Contract No. DE-AC27-08RV14800

Approved for Public Release;
Further Dissemination Unlimited

Independent Qualified Registered Professional Engineer Design Assessment Report For Liquid Effluent Retention Facility (LERF) Basin 41

IQRPE Design Assessment Report No. DA-334426-01 Rev. 0

Prepared By

Meier Architecture • Engineering
12 W. Kennewick Ave.
Kennewick, WA 99336

At the request of

Washington River Protection Solutions
Richland, Washington 99352

Meier Project No. 20-8600
WRPS Subcontract No. 64658, Release 032

June 2, 2020

TABLE OF CONTENTS

1.0 INTRODUCTION 4
1.1 PROJECT DESCRIPTION 4
1.1.1 Background 4
1.1.2 IQRPE Scope 6
1.2 DESIGN REVIEW REQUIREMENTS 22
1.3 DESIGN OVERVIEW FOR LERF BASIN 41 PROJECT 22
1.3.1 Transfer Piping 22
1.3.2 Encasement Piping Drains 23
1.3.3 Encasement and Catch Basin Leak Detector System 23
1.3.4 Catch Basin Concrete Structure and Coating System (242AL-41) 23
1.3.5 LERF Basin 41 Dike 24
1.4 SCOPE OF IQRPE DESIGN ASSESSMENT 24
1.4.1 Portions of LERF Basin 41 Project Included in Scope for IQRPE Certification 24
1.4.2 Portions of the LERF Basin 41 Project Not Included in Scope for IQRPE Certification 25

2.0 ASSESSMENT SUMMARY 25
2.1 CODES, STANDARDS, AND REGULATIONS 25
2.2 BASIS OF DESIGN 25
2.2.1 Structural Design Standards 26
2.2.2 Transfer Piping System 27
2.2.3 LERF Basin 41 Dike Structural Analysis 27
2.2.4 Waste Compatibility 28
2.2.5 Pressure Control System 30
2.2.6 Secondary Containment System 31
2.2.7 Ancillary Equipment Design 32
2.2.8 P&ID Review 33
2.2.9 Corrosion Assessment 33
2.2.10 Recommended Inspection Schedule 33

3.0 DESIGN REVIEW ASSESSMENT CERTIFICATIONS 35

4.0 REFERENCES 37

Tables

Table 1: LERF Basin 41 Project Major Components Operating Characteristics 25

Table 2: LERF Basin 41 Project Piping Materials of Construction 29

Figures

Figure 1: LERF Basin 41- Scoping Diagram Showing WAC 173-303-640 and WAC 173-303-650 Boundaries 5

Figure 2: Hanford Map Showing the Location of the 200 East and West Areas 7

Figure 3: Hanford Site Map Showing the Location of Basin 41 8
Figure 4: Aerial Photograph Showing LERF Basin 41 (ETF in Foreground).....9
Figure 5: Catch Basin 41 Piping Interface Overview 10
Figure 6: Catch Basin 41 Piping Detail 11
Figure 7: LERF Basin 41 P&ID Clouded Area Shows IQRPE Scope (H-2-88766, Sheet 6) 12
Figure 8: LERF Basin 41 Civil Excavation Plan (H-2-838748, Sheet 1).....13
Figure 9: LERF Basin 41 Excavation Section Views showing Dike (H-2-838748, Sheet 1) 14
Figure 10: LERF Basin 41 Catch Basin Plan View (H-2-838751, Sheet 1).....14
Figure 11: LERF Basin 41 Mechanical General Arrangement (H-2-838765, Sheet 1).....15
Figure 12: LERF Basin 41 Piping Detail-B (H-2-838765, Sheet 2).....16
Figure 13: LERF Basin 41 Piping Detail-H (H-2-838765, Sheet 3).....17
Figure 14: LERF Basin 41 Piping Detail-J (H-2-838765, Sheet 4).....18
Figure 15: LERF Basin 41 Piping Section K-K (H-2-838765, Sheet 4) 19
Figure 16: LERF Basin 41 Catch Basin Assembly (H-2-838767, Sheet 3).....19
Figure 17: WTP/EMF Effluent Interface Ball Valve (H-2-838771, Sheet 4).....20
Figure 18: 242A Process Condensate Interface Ball Valve (H-2-838771, Sheet 4).....20
Figure 19: Encasement Leak Detector Pipe Spool (H-2-838771, Sheet 8) 21

1.0 INTRODUCTION

The Code of Federal Regulations (CFR) 40 CFR 264.192, *Design and Installation of New Tank Systems or Components,* and Washington Administrative Code (WAC) 173-303-640(3), *Design and Installation of New Tank Systems or Components*, provide a set of requirements for owner/operators of dangerous waste tank systems. This Design Assessment Report is prepared for Washington River Protection Solutions, LLC (WRPS), to meet the Washington Department of Ecology (Ecology) review, by an Independent Qualified Registered Professional Engineer (IQRPE) to certify that the proposed tank system will have sufficient structural integrity and is acceptable for storing and treating dangerous waste per 40 CFR 264.192(a) and WAC 173-303-640(3)(a). Also, the IQRPE is to certify that surface impoundments dikes will have structural integrity and will not fail per 40 CFR 264.226(c), *Monitoring and Inspection*, and WAC 173-303-650(4)(c), *Surface Impoundments*. 40 CFR 264.192(a) and WAC 173-303-640(3)(a) have identical requirements for tank system. Similarly 40 CFR 264.226(c) and WAC 173-303-650(4)(c) have identical requirements for surface impoundments dikes.

IP-334426-01, *IQRPE Inspection Plan for LERF Basin 41*, identifies the IQRPE inspections required for procurement, fabrication, testing, installation, and tightness testing of the tank system in accordance with WAC 173-303-640(3) associated with the LERF Basin 41 Project, and review of surface impoundments dikes for structural integrity in accordance with WAC 173-303-650(4)(c).

An IQRPE Installation Assessment Report for LERF Basin 41 will be prepared for WRPS by an IQRPE to certify that the tank system installations are in accordance with 40 CFR 264.192(b)-(f), and WAC 173-303-640(3)(c)-(g), and surface impoundments to have structural integrity in accordance with 40 CFR 264.226(c) and WAC 173-303-650(4)(c).

The IQRPE maintains “independence” at all times. However, comments by others are considered by the IQRPE during the preparation of reports and plans. Only the IQRPE can implement changes to the master IQRPE documents.

1.1 PROJECT DESCRIPTION

1.1.1 Background

The Liquid Effluent Retention Facility (LERF) is a treatment, storage, and disposal (TSD) unit serving generators of radiological dangerous effluents on the Hanford site. LERF is permitted under the *Resource Conservation and Recovery Act* (RCRA) of 1976 for the storage and treatment of liquid mixed waste effluents through pH and flow equalization. Functionally, LERF serves as a collection point and must be capable of feeding the Effluent Treatment Facility (ETF) for final treatment and disposal of liquid effluent. There are three (3) operating basins at LERF with a fourth basin (Basin 41) that was excavated in the 1990’s. The LERF Basin Project is to complete Basin 41 design and installation of associated equipment, piping, and tie-ins in order to provide LERF with more capacity. This capacity increase is needed in the future due to projected increases in 242-A Evaporator campaigns and liquid effluent that will be coming from the Waste Treatment Plant (WTP) when it becomes operational. The Basin 41 Project is further described in MT-50497, *Liquid Effluent Retention Facility (LERF) Basin 41*.

Design of the new Basin 242AL-41 (Basin 41) is to ensure there is sufficient storage capacity for future LERF operations consisting of:

- Continuous Operations:
  - Effluent Management Facility (EMF)/WTP Effluent.
  - 242-A Evaporator Condensate.
  - IDF Leachate.
- Intermittent Operations:
  - Feed to ETF.
  - Tanker/Load-In from ETF.
  - Groundwater.
  - LERF Cover Water.
  - Basin Recirculation or Basin-to-Basin Transfers.

IQRPE design assessment scoping of LERF Basin 41 to comply with WAC 173-303-640, *Tank Systems*, and WAC 173-303-650 applicable code requirement boundaries are depicted in Figure 1:

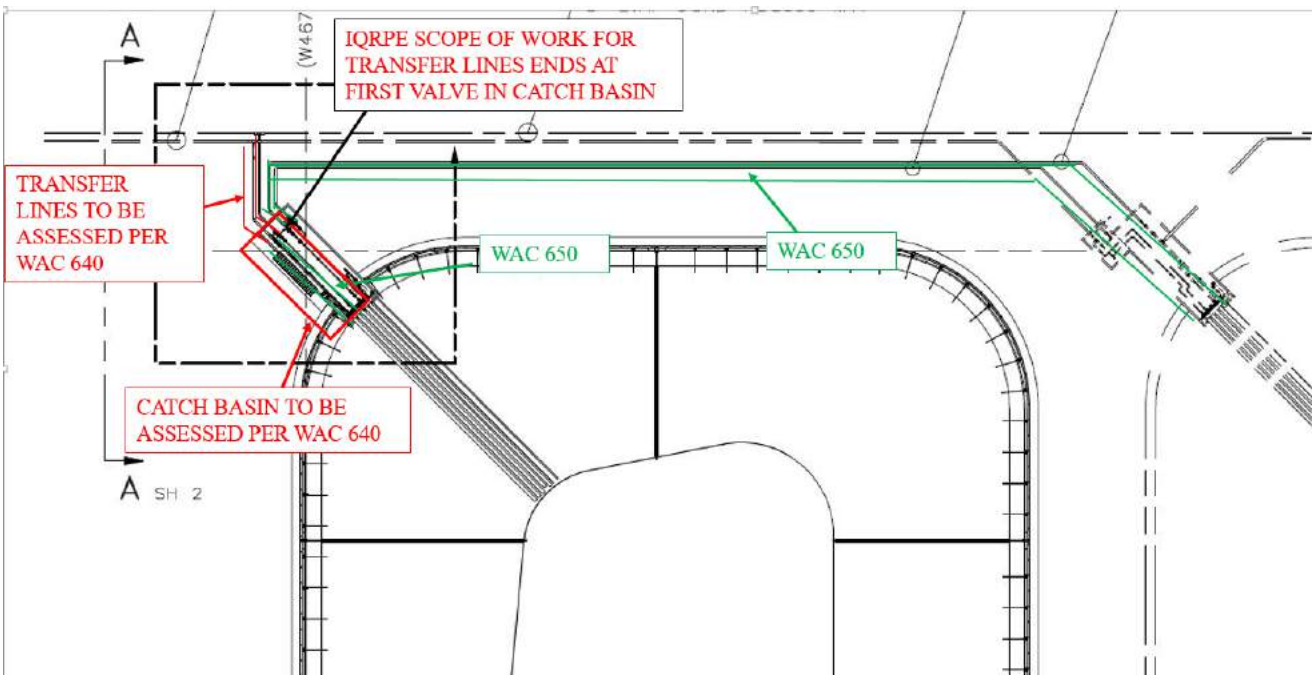

Figure 1: LERF Basin 41- Scoping Diagram Showing WAC 173-303-640 and WAC 173-303-650 Boundaries

<u>WAC 173-303-640</u>

The IQPRE scope to support the design and installation of Basin 41 tank system components under WAC 173-303-640 includes the following:

- 4”-60M-008-M18 primary piping with 8” encasement piping from 4”-WTP-001-M17 piping tie-in point to valve 60M-41-1 in catch basin. Also included is the 8” ENCL-M17 encasement drain piping 1”-60M-012-M10 up to ball valve 60M-41-7 (H-2-88766, Sheet 6, *P&ID LERF Basin & ETF Influent Evaporator*).

- 3”-60M-009-M18 primary piping with 6” encasement piping from 3”-EVAP COND-PC5000-M17 piping tie-in point to valve 60M-41-2 in catch basin. Also included is the 6” ENCL-M17 encasement drain piping 1”-60M-013-M10 up to ball valve 60M-41-8 (H-2-88766, Sheet 6).
- Catch Basin Leak Detector System (LDS 41-8).
- 242AL-41 catch basin concrete structure and coating system.

WAC 173-303-650

The IQRPE scope to support the design and installation of Basin 41 surface impoundment components under WAC 173-303-650 includes the assessment of the dike including that portion of any dike which provides freeboard and has structural integrity. The certification must establish, in particular, that the dike:

- Will withstand the stress of the pressure exerted by the types and amounts of wastes to be placed in the impoundment; and
- Will not fail due to scouring or piping, without dependence on any liner system included in the surface impoundment construction.

The installation of LERF Basin 41 will occur on the Hanford Nuclear Waste Site in the 200 East Area.

1.1.2 IQRPE Scope

Meier Architecture • Engineering (Meier) provided an IQRPE to perform the design assessment per WRPS Statement of Work (SOW) No. 334426, *IQRPE Support for Liquid Effluent Retention Facility (LERF) Basin 41*. The scope includes a review of the design, installation, and testing activities for equipment. The Tank System equipment described in Section 1.1.1 above is to be certified under WAC 173-303-640. Certification to WAC 173-303-650 for LERF Basin 41 is limited to the structural stability of the dikes.

A review of design documents (drawings, calculations, specifications, etc.) was completed by the IQRPE. Fabrication and installation inspections will be completed by the IQRPE at a later date. Included within the scope of the IQRPE review are various technical evaluations covering areas dealing with potential waste leak paths, thermal expansion, water hammer, and freeze protection issues associated with the LERF Basin 41 Project.

The IQRPE performed the design assessment to the requirements of 40 CFR 264.192; WAC 173-303-640(3); 40 CFR 264.226(c) and WAC 173-303-650(4)(c) for LERF Basin 41.

This IQRPE design assessment takes credit for the following previously issued IQRPE Design Assessment and Installation Assessment Reports that cover the previously installed components of the Waste Transfer System (WTS).

- RPP-25153, Volume 3: *IQRPE DST System Integrity Assessment - Waste Compatibility*. This report reviews the past, current, and projected future contents of the Hanford double-shell tanks (DSTs), materials of construction of the DSTs and ancillary equipment, and possible mechanisms of corrosion to reach conclusions and recommendations about waste compatibility with the existing equipment.
- RPP-27591, Volume 2: *IQRPE DST System Integrity Assessment - Pipeline Integrity*. This report assesses design standards, hazardous waste compatibility, existing corrosion

protection measures, past pipeline integrity assessments, and results of leak test, internal inspection, and examinations necessary to support the overall DST System Integrity Assessment.

- RPP-RPT-58441, *Double-Shell Tank System Integrity Assessment Report (DSTAR)*. This report assesses the overall integrity for the waste storage tanks, pits, vaults, and buried piping using the DST System configuration as of 2016.

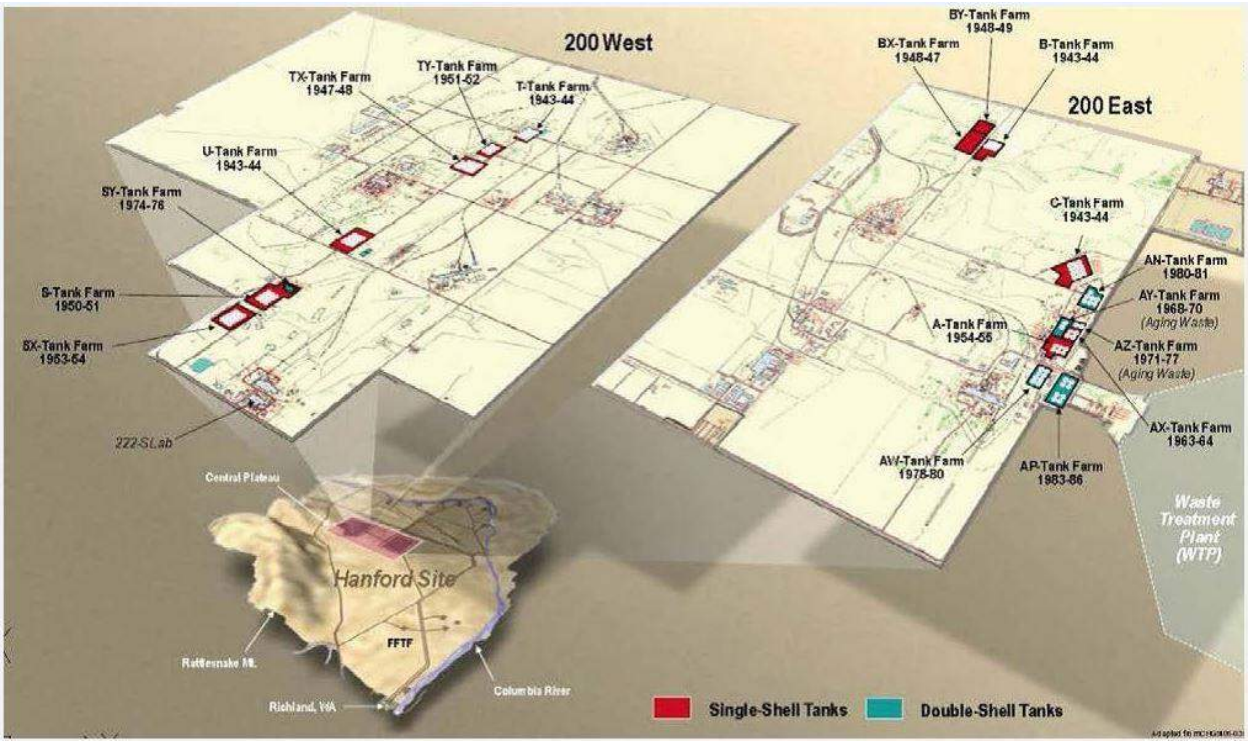

Figure 2: Hanford Map Showing the Location of the 200 East and West Areas

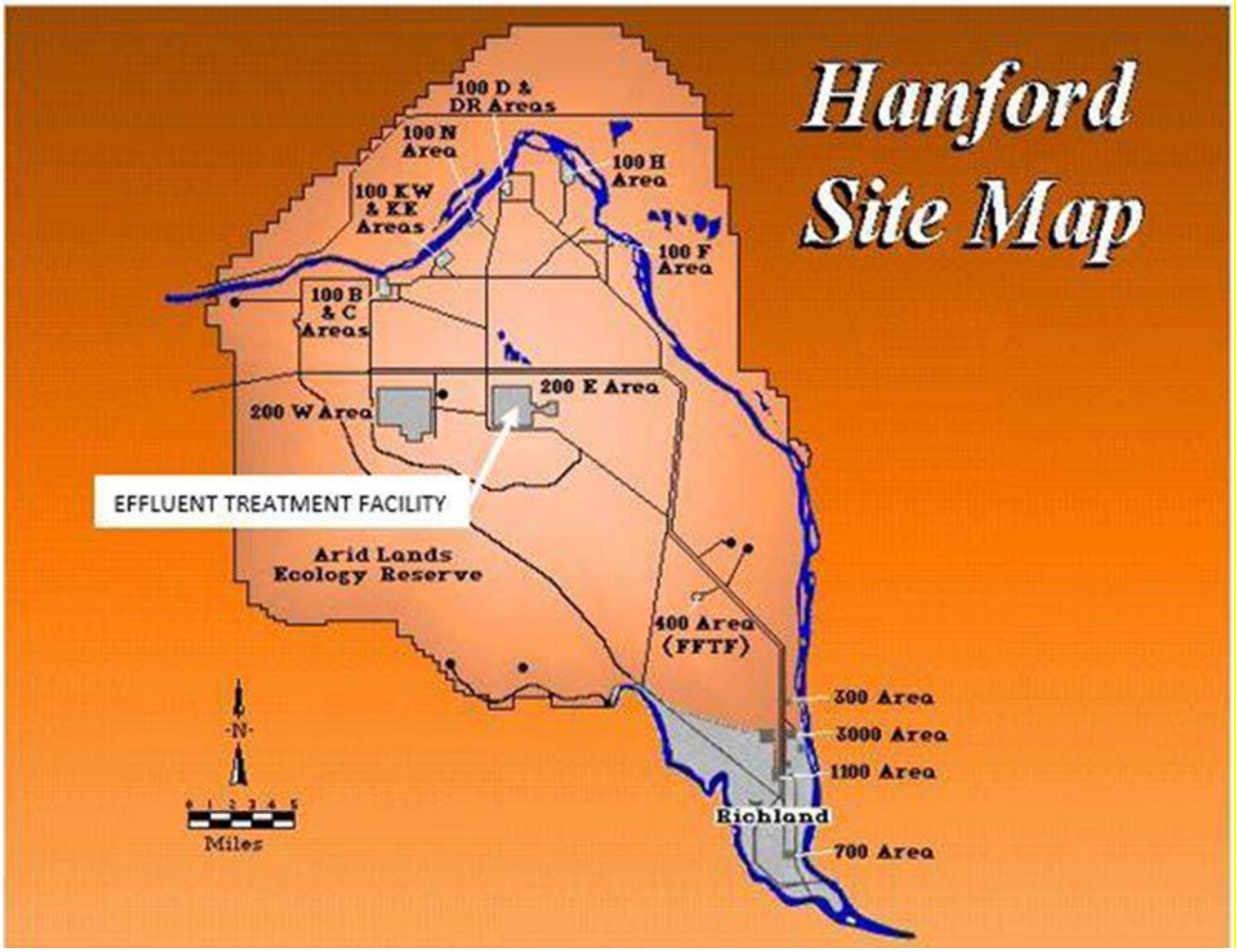

Figure 3: **Hanford Site Map Showing the Location of Basin 41**

Figure 4: Aerial Photograph Showing LERF Basin 41 (ETF in Foreground)

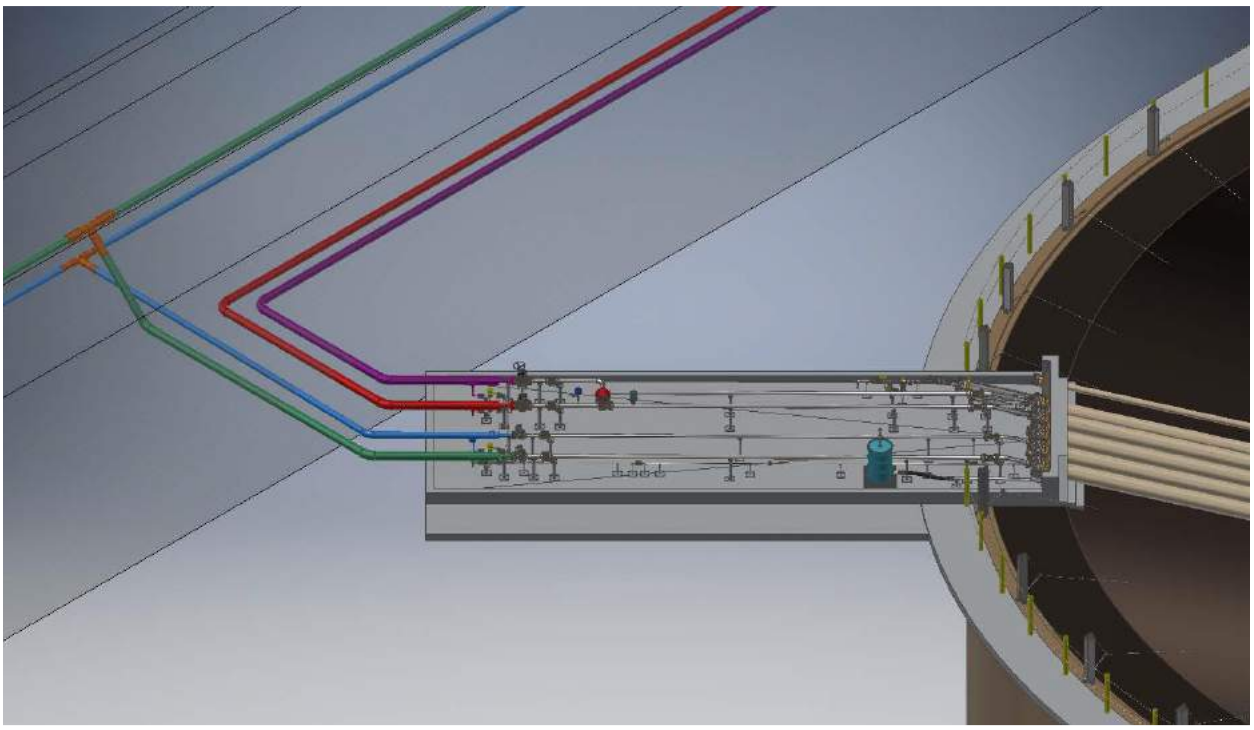

Figure 5: Catch Basin 41 Piping Interface Overview

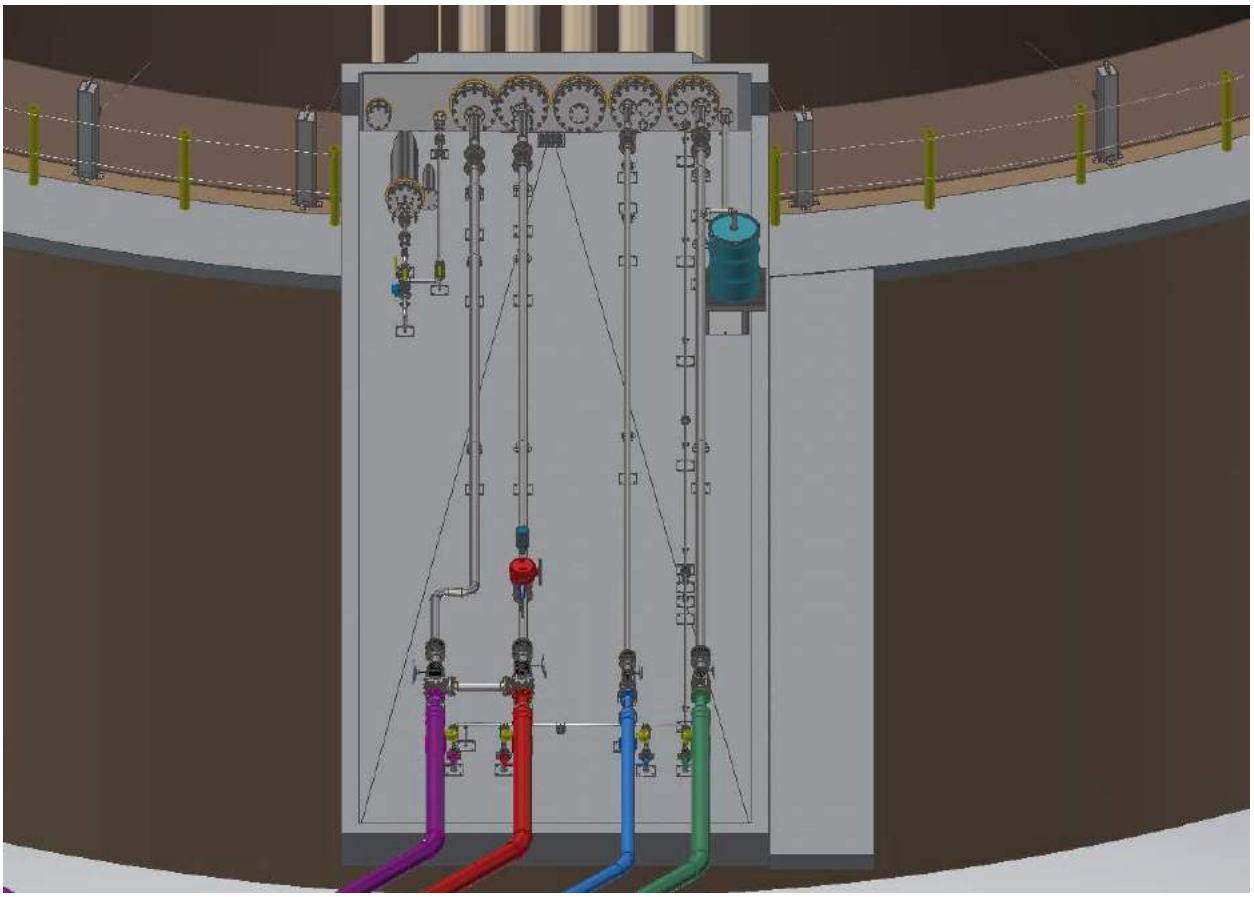

Figure 6: Catch Basin 41 Piping Detail

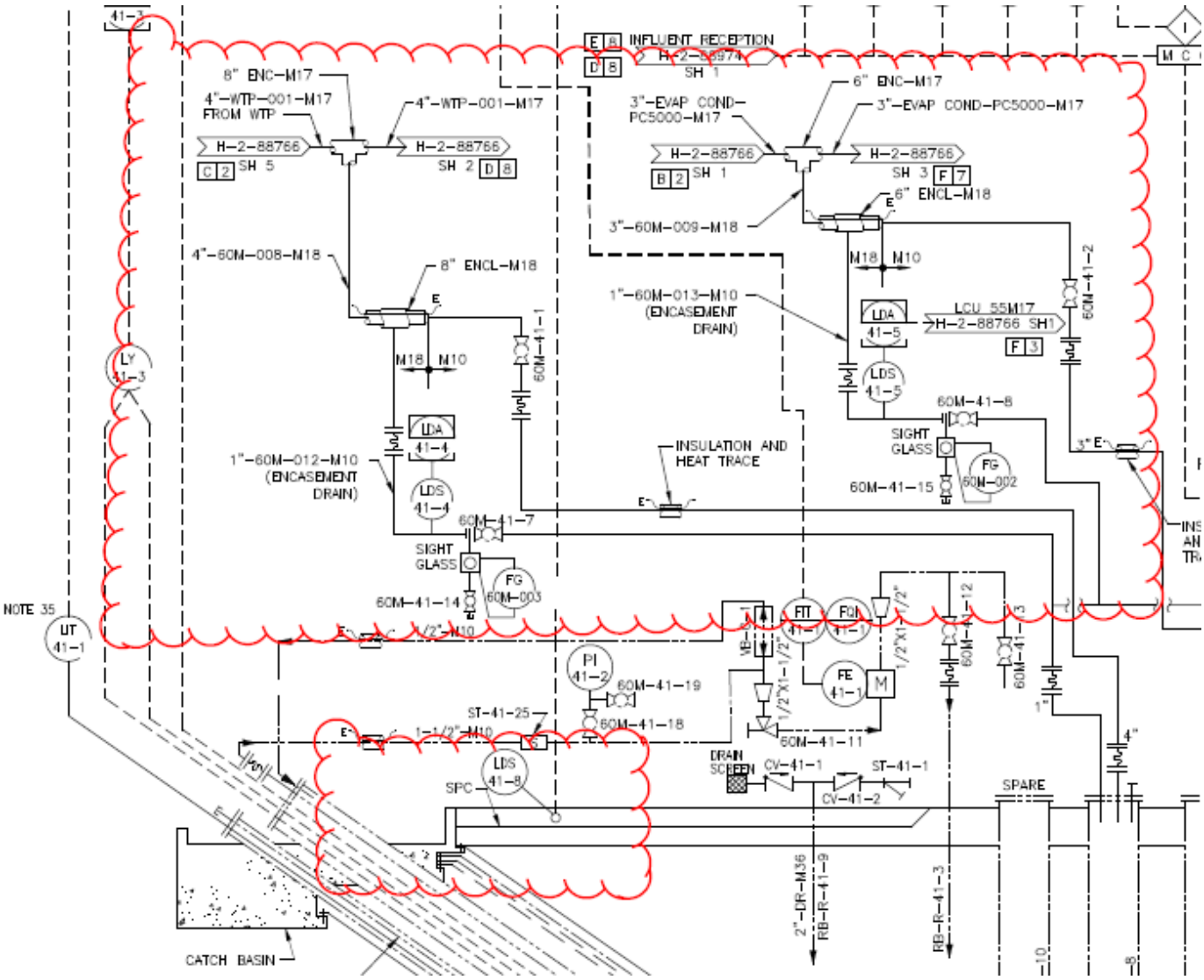

Figure 7: LERF Basin 41 P&ID Clouded Area Shows IQRPE Scope (H-2-88766, Sheet 6)

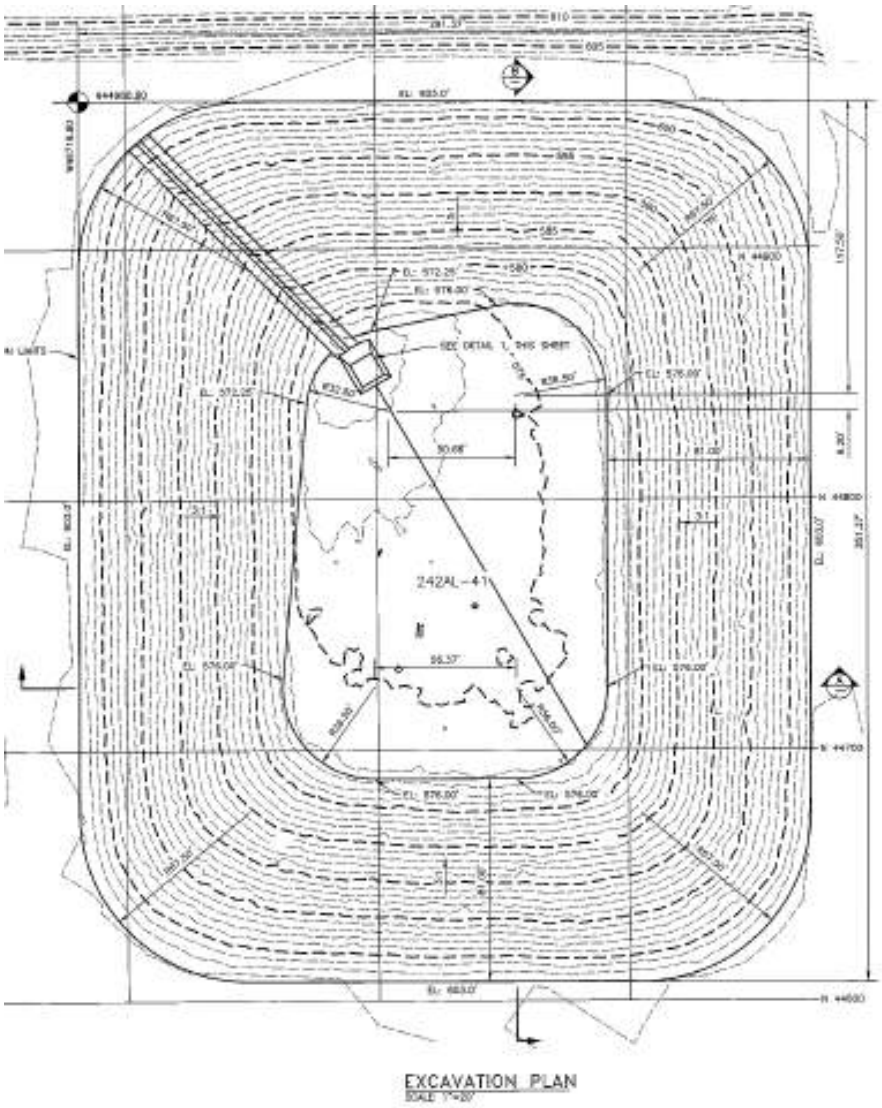

Figure 8: LERF Basin 41 Civil Excavation Plan (H-2-838748, Sheet 1)

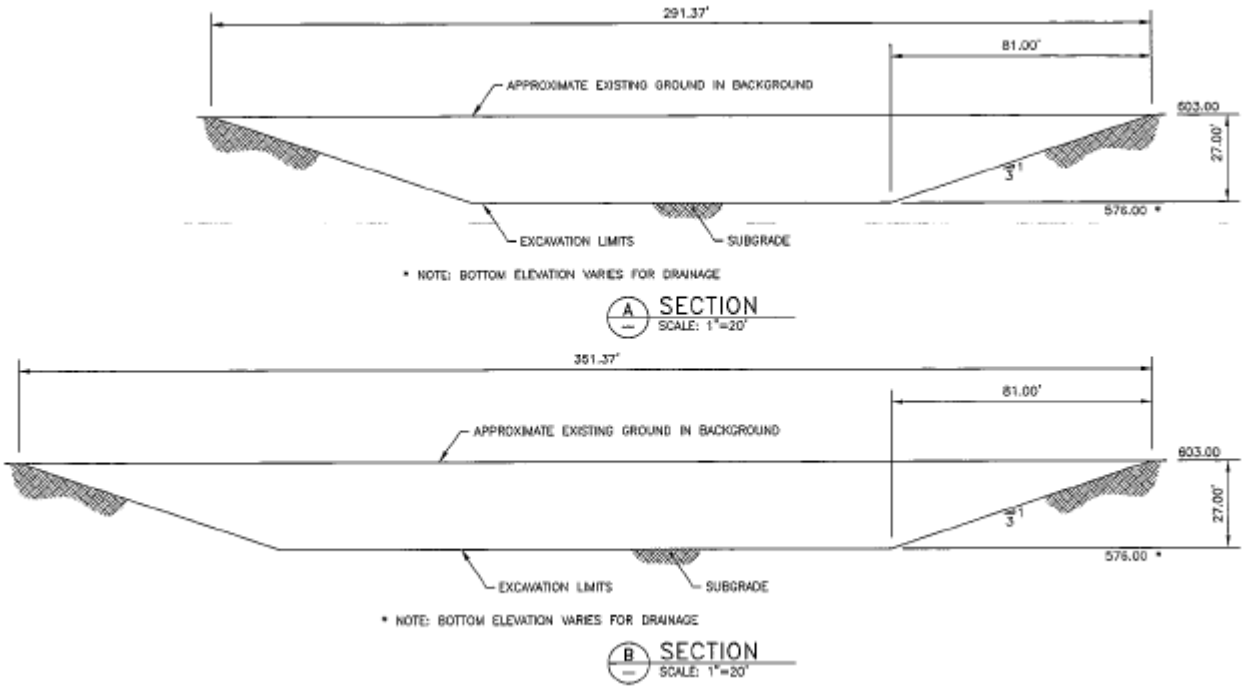

Figure 9: LERF Basin 41 Excavation Section Views showing Dike (H-2-838748, Sheet 1)

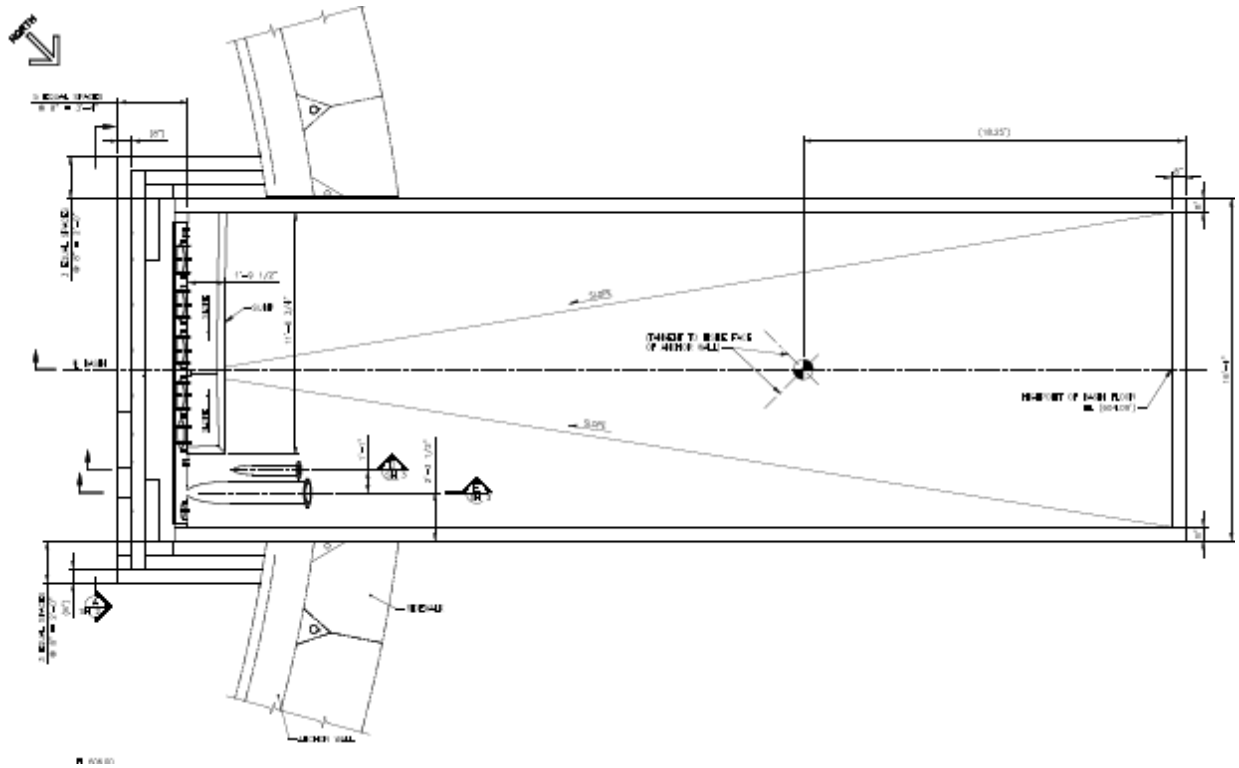

Figure 10: LERF Basin 41 Catch Basin Plan View (H-2-838751, Sheet 1)

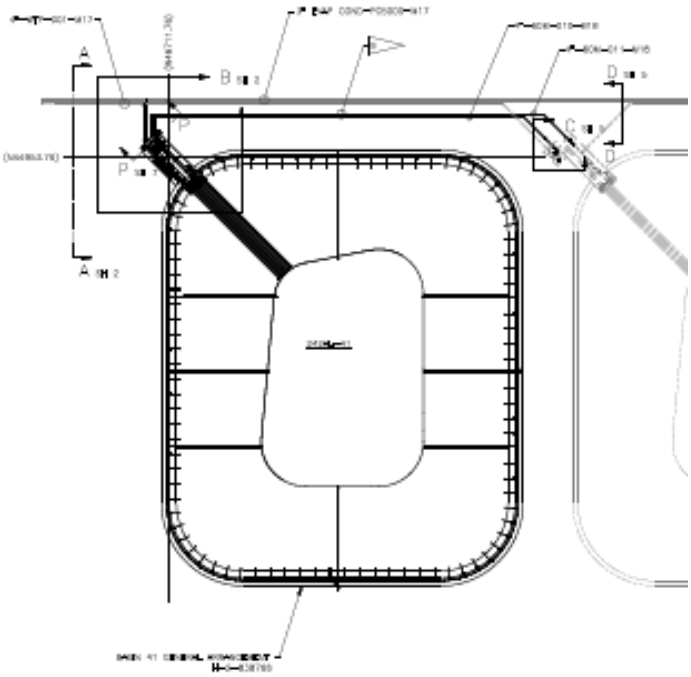

Figure 11: LERF Basin 41 Mechanical General Arrangement (H-2-838765, Sheet 1)

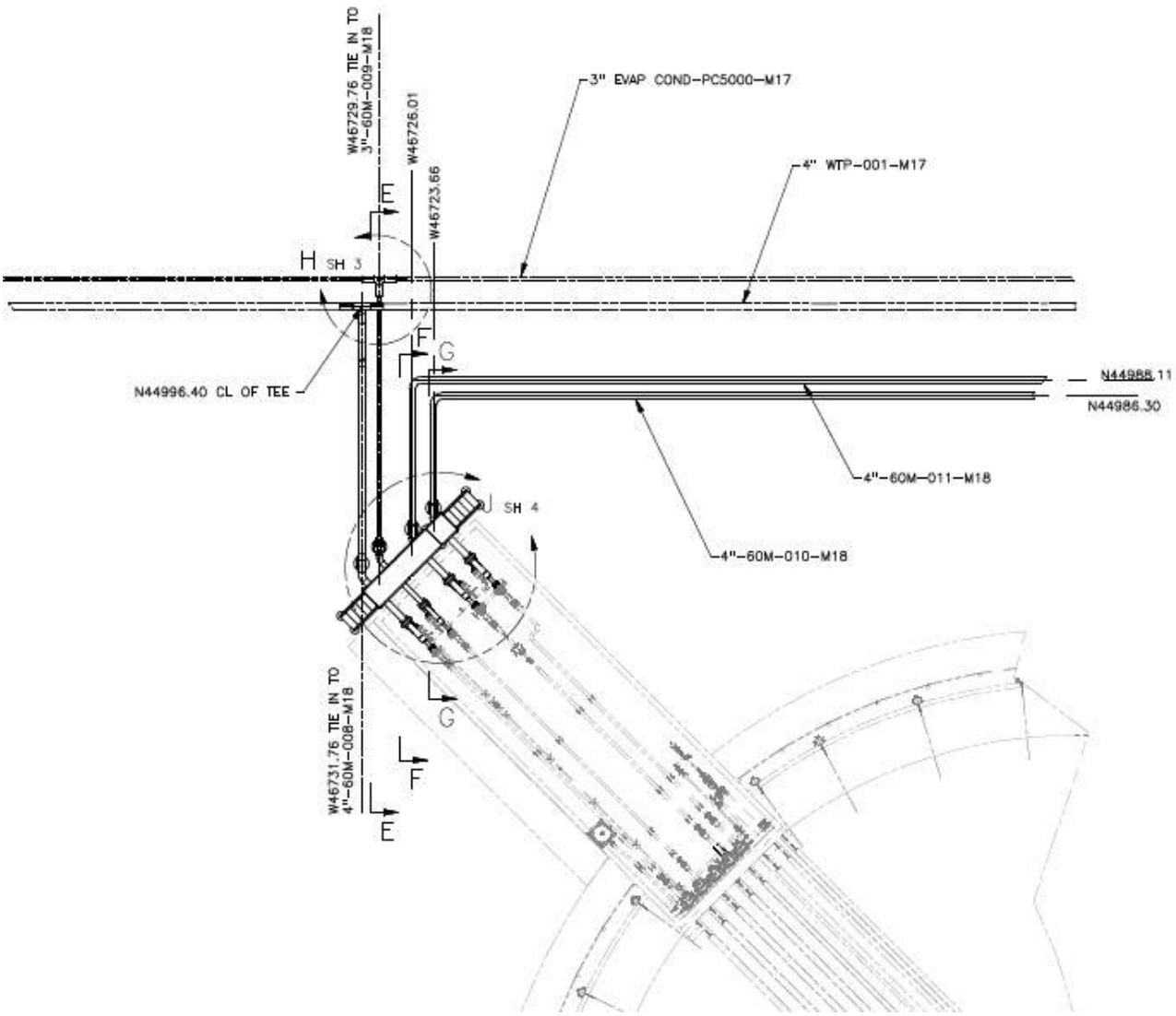

Figure 12: LERF Basin 41 Piping Detail-B (H-2-838765, Sheet 2)

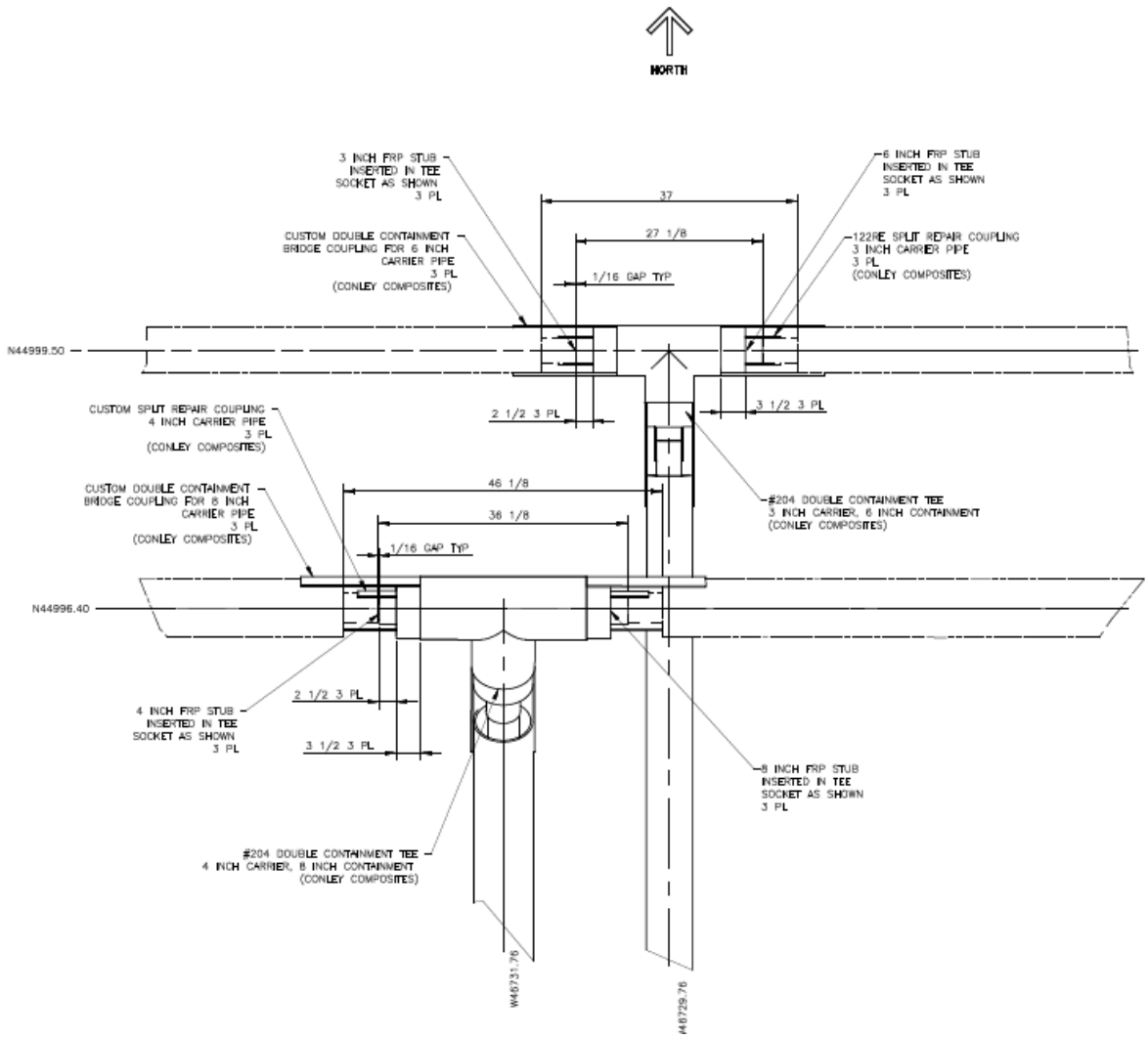

Figure 13: LERF Basin 41 Piping Detail-H (H-2-838765, Sheet 3)

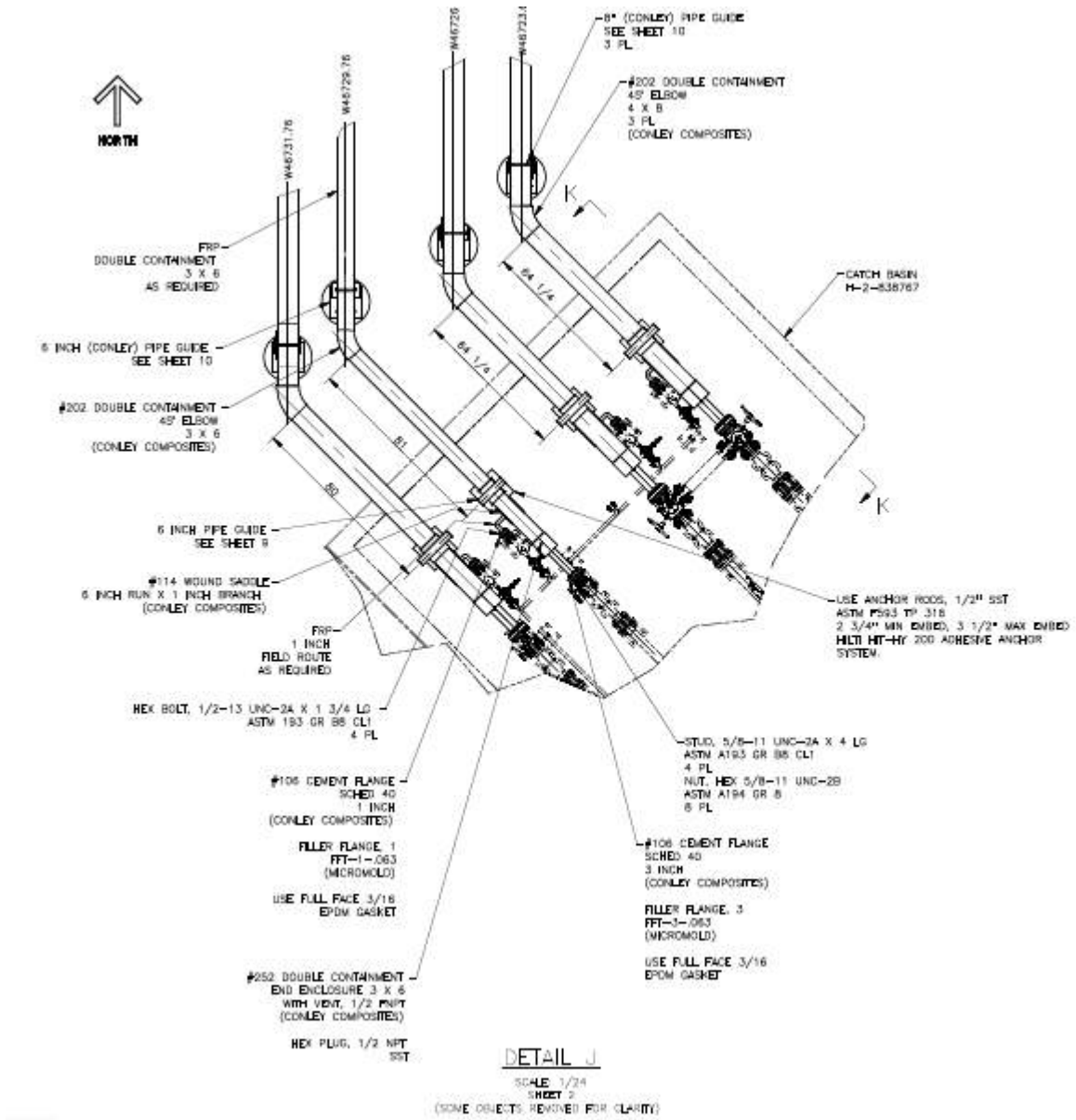

Figure 14: LERF Basin 41 Piping Detail-J (H-2-838765, Sheet 4)

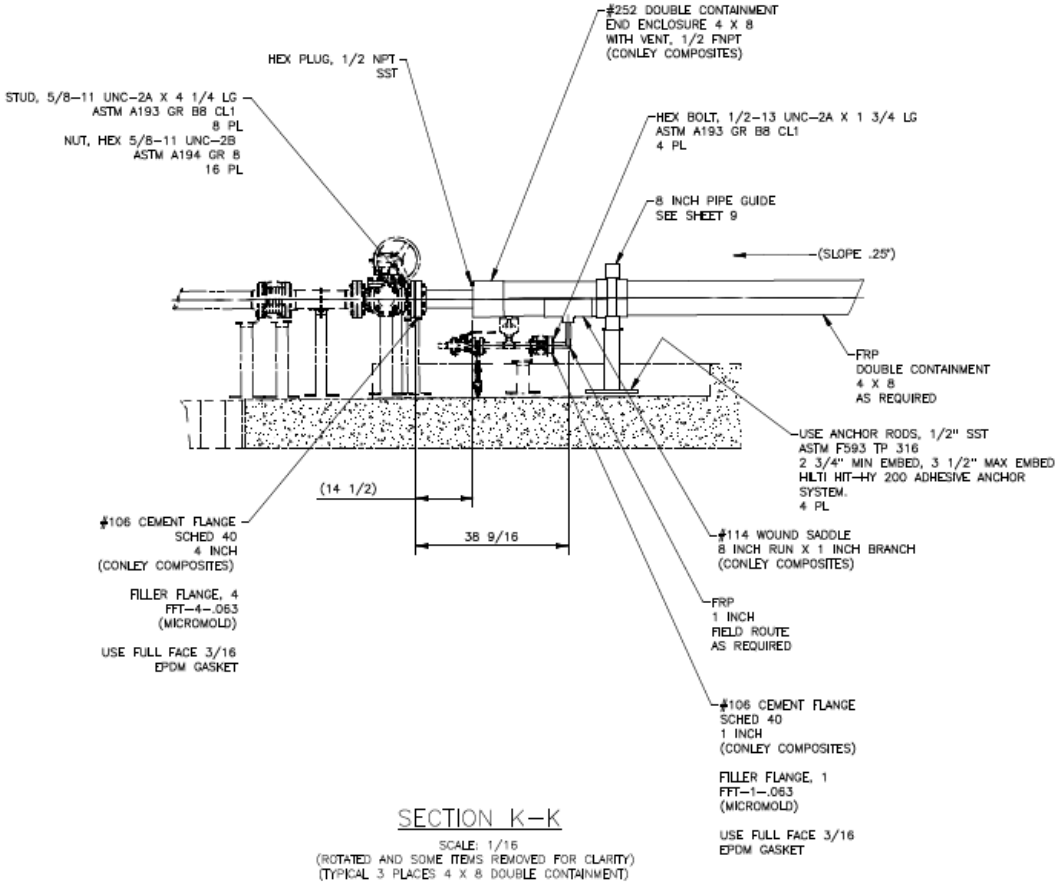

Figure 15: LERF Basin 41 Piping Section K-K (H-2-838765, Sheet 4)

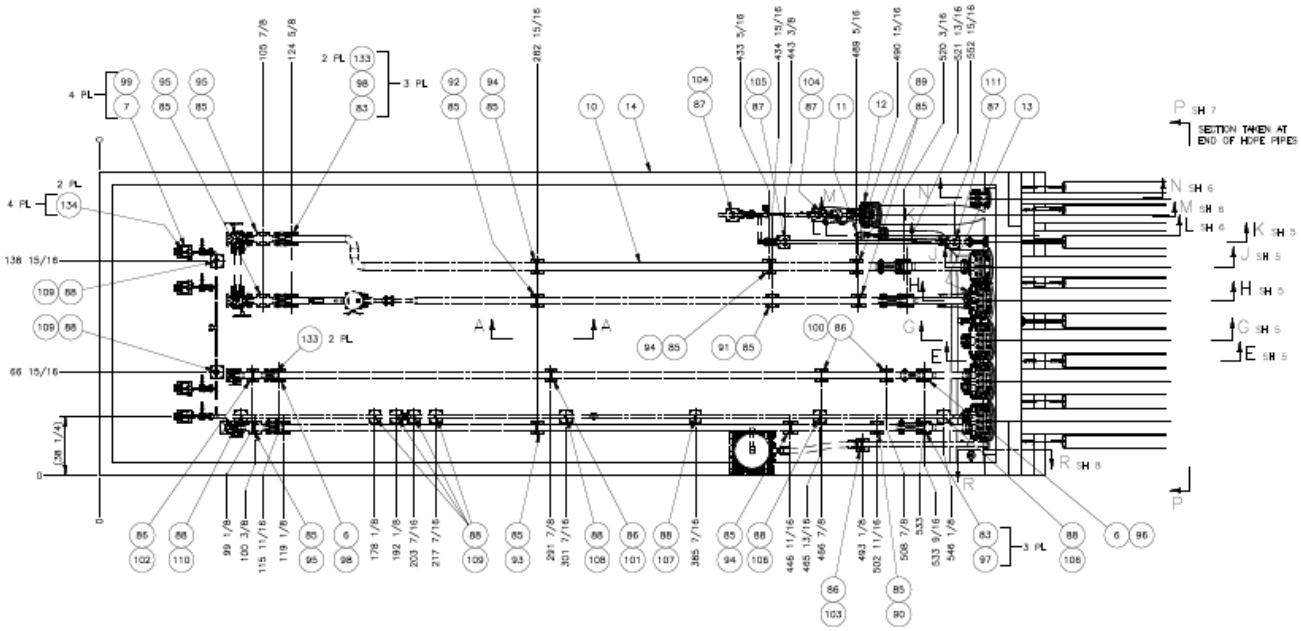

Figure 16: LERF Basin 41 Catch Basin Assembly (H-2-838767, Sheet 3)

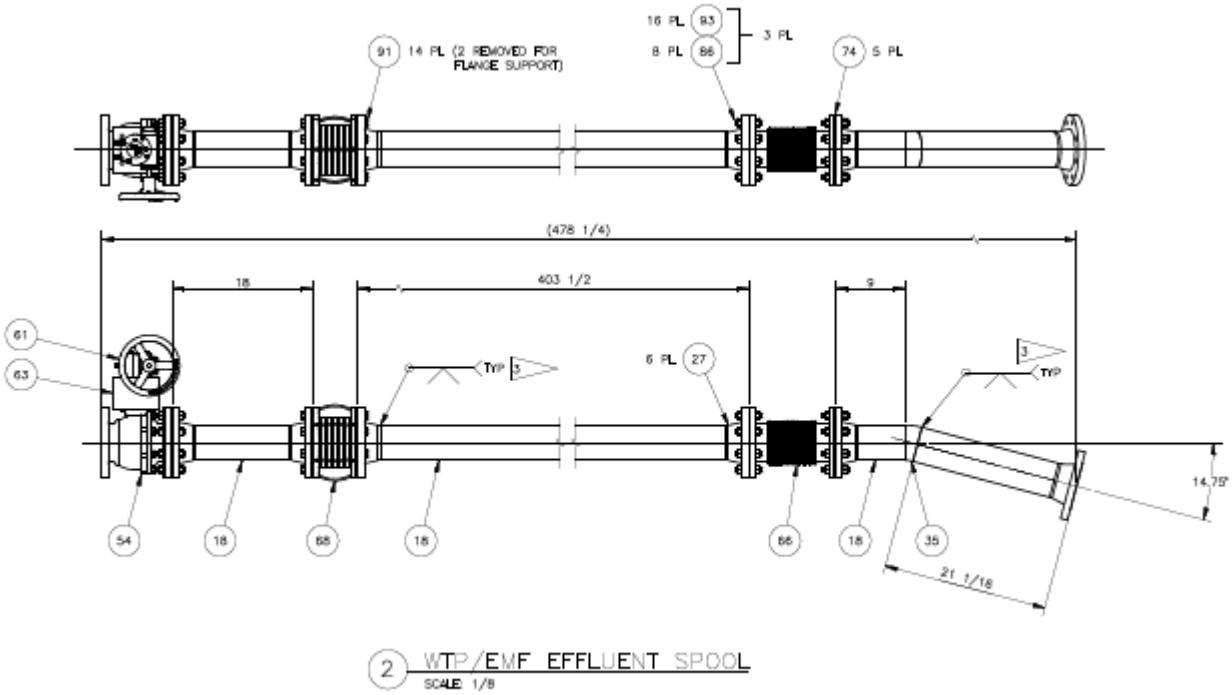

Figure 17: WTP/EMF Effluent Interface Ball Valve (H-2-838771, Sheet 4)

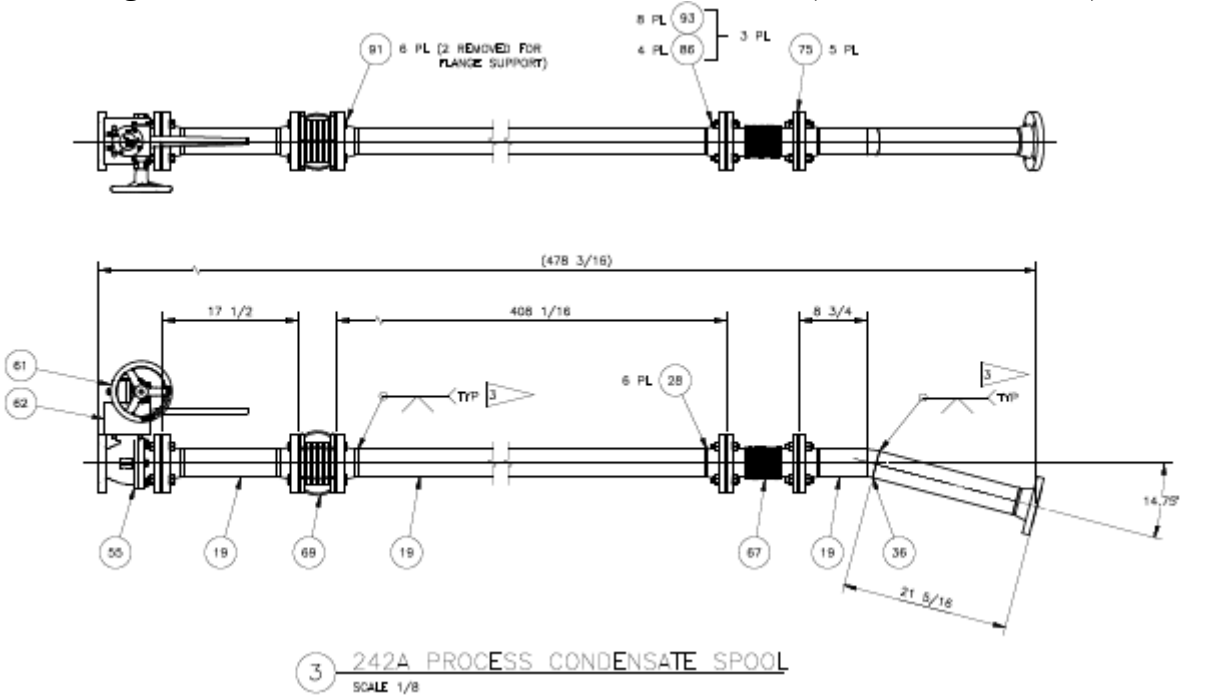

Figure 18: 242A Process Condensate Interface Ball Valve (H-2-838771, Sheet 4)

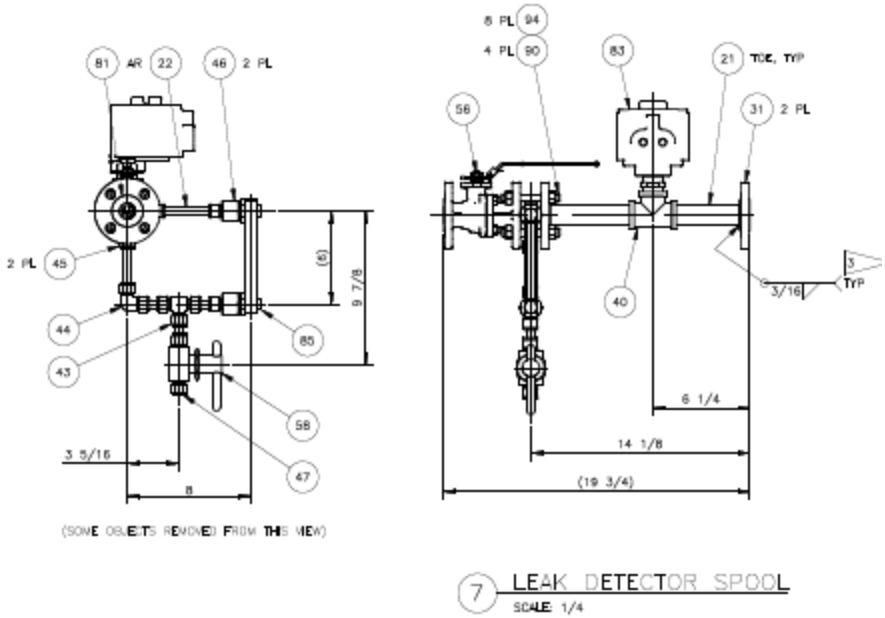

Figure 19: Encasement Leak Detector Pipe Spool (H-2-838771, Sheet 8)

1.2 DESIGN REVIEW REQUIREMENTS

Many of the components required for the transfer of dangerous or mixed waste are regulated by 40 CFR 264.192 and WAC 173-303-640(3) tank system requirements. The CFR and WAC codes require an IQRPE review of the design of these components prior to installation. Certification to WAC 173-303-650 for LERF Basin 41 is limited to the structural stability of the dikes. As a basis for the IQRPE certification, a review is performed on a final version of the document design package as prepared and reviewed by WRPS. Documents such as drawings, calculations, Engineering Change Notices (ECNs), Engineering Design Transmittals (EDTs), Technical Evaluations, and specifications included in the design review package that are marked as final, and have signatures of the preparer, checker, and approver, are reviewed by the IQRPE as a completed document. All other documents will be reviewed as preliminary or supportive information.

The IQRPE maintains "independence" at all times. However, comments by others are considered by the IQRPE during the preparation of reports and plans. Only the IQRPE can implement changes to the master IQRPE documents.

1.3 DESIGN OVERVIEW FOR LERF BASIN 41 PROJECT

This Design Assessment Report is prepared for the Owner and Ecology by an IQRPE to certify that the proposed tank system will have sufficient structural integrity and is acceptable for storing and treating dangerous waste per 40 CFR 264.192(a) and WAC 173-303-640(3)(a); and Surface Impoundments per 40 CFR 264.226(c) and WAC 173-303-650(4)(c).

The specific components included as part of this IQRPE design assessment for the LERF Basin 41 Project are listed below:

- Transfer Piping:
  - 4"-60M-008-M18
  - 3"-60M-009-M18
- Encasement Piping Drains:
  - 1"-60M-012-M10
  - 1"-60M-013-M10
- Encasement and Catch Basin Leak Detector System.
- Catch basin concrete structure and coating system (242AL-41).
- Basin 41 Dike.

1.3.1 Transfer Piping

Double containment piping (4 X 8) is 4"-60M-008-M18 primary/carrier piping with 8" encasement piping is a waste transfer piping. Carrier and encasement pipe is Conley Double Containment FRP Pipe® utilizing Conley Aromatic® amine cured epoxy resin in accordance with pipe class M-18 listed in construction specification RPP-SPEC-63632, *LERF Basin 41 Construction Specification*. IQRPE scope of 4"-60M-008-M18 pipe run is from 4"-WTP-001-M17 piping tie-in point to ball valve 60M-41-1 (H-14-838771, *LERF Basin 41 Catch Basin Piping Assembly*, Sheet 4) in the catch basin only. Encasement piping is capped using #252 double containment end enclosure about 14½" before the ball valve flanged connection.

The second double containment waste transfer piping (3 X 6) is 3"-60M-009-M18 primary/carrier piping with 6" encasement piping. Carrier and containment pipe is Conley Double Containment

FRP Pipe® utilizing Conley Aromatic® amine cured epoxy resin in accordance with pipe class M-18 listed in construction specification RPP-SPEC-63632. IQRPE scope of 3”-60M-009-M18 pipe run is only from 3”-EVAP COND-PC5000-M17 piping tie-in point to valve 60M-41-2 (H-14-838771, Sheet 4) in catch basin. Encasement piping is capped using #252 double containment end enclosure about 14½” before the ball valve flanged connection.

Both of these pipes are installed partially in the berm and partially above ground using saddle supports and sloped towards the catch basin. Pipes are procured and installed in accordance with construction specification RPP-SPEC-63632. See P&ID H-2-88766, Sheet 6, and H-2-838765, *LERF Basin 41 Mechanical General Arrangement* for piping layout and piping details.

1.3.2 Encasement Piping Drains

Any leakage from transfer piping 4”-60M-008-M18 and 3”-60M-009-M18 is collected in their respective containment piping. Because transfer piping is sloped towards the catch basin, any collected liquid waste is transferred to the basin upper liner via 1” fiberglass reinforced plastic (FRP) pipe and flanged to 1”-60M-012-M10 and 1”-60M-013-M10 respectively. Encasement drain piping is ASTM A312, Grade TP 304L piping in accordance with pipe Class M-10 listed in construction specification RPP-SPEC-63632.

IQRPE scope of encasement drain 1”-60M-012-M10 and 1” FRP piping run is from 8” ENCL-M17 (encasement pipe for 4”- 60M-008-M18) tie-in point to valve 60M -41-7 in catch basin only.

IQRPE scope of encasement drain 1”-60M-013-M10 and 1” FRP piping run is from 6” ENCL-M17 (encasement pipe for 3”- 60M-009-M18) tie-in point to valve 60M -41-8 in catch basin only.

Both these encasement pipes drain to the catch basin liner. Encased piping is procured and installed in accordance with construction specification RPP-SPEC-63632. See P&ID H-2-88766, Sheet 6; H-2-838765, Sheet 4; and H-2-838771, Sheet 8, for piping layout and piping details.

1.3.3 Encasement and Catch Basin Leak Detector System

There are three (3) leak detectors in the scope of this design assessment as listed below:

- LDS 41-4 for encasement pipe 1”-60M-012-M10 for any leakage detected in the 8” ENCL-M17 encasement pipe and will alarm locally (H-2-88766, Sheet 6; H-2-838776, Sheet 1, and H-2-838776).
- LDS 41-5 for encasement pipe 1”-60M-013-M10 for any leakage detected in the 6” ENCL-M17 encasement pipe and will alarm locally (H-2-88766, Sheet 6 and H-2-838776, Sheet 1).
- LDS 41-8 is a catch basin leak detector alarm and connected to a control room and will activate when liquid level in the catch basin reaches the preset level. (H-2-88766, Sheet 6 and H-2-838776, Sheet 1).

1.3.4 Catch Basin Concrete Structure and Coating System (242AL-41)

Catch basin concrete structure (242AL-41) is an open top concrete structure (51’-0” long by 16’-4” wide) as shown on drawing H-2-838751, Sheets 1-4, *LERF Basin 41 Structural Catch Basin Details.* The catch basin is constructed of concrete and its surface is coated in accordance with RPP-SPEC-63632 (Section 09 85 50, *Chemical Resistant Decontaminable Coatings*). Finish coat,

siloxane, a high performance engineered silicone-epoxy coating system, is intended for use as the top coat in the catch basin. The top coat is the material expected to provide secondary containment for piping in the catch basin. The siloxane coating material was evaluated in RPP-RPT-62215, *LERF Basin 41 Material Compatibility with Wastewater*, and found to be suitable for use over the 30 years design life.

The catch basin is used for tie-in to the WTP/EMF and the 242-A condensate transfer lines terminating at the new isolation valves installed within Basin 41 catch basin. There are other piping systems installed in the catch basin as part of the overall LERF Basin 41 Project which are not part of this design assessment. The catch basin is used as a secondary containment for any leakage from WTP/EMF and 242-A condensate portions of non-encased piping and drain piping system. (H-2-88766, Sheet 6 and H-2-838767, Sheet 3, *LERF Basin 41 Catch Basin Assembly*).

1.3.5 LERF Basin 41 Dike

The dike of LERF Basin 41 was originally constructed in the 1990 time frame to the requirements of W-105-C4, *Construction Specification for Soil/Bentonite Liner System for 242-A Evaporator Cond Interim Retention Basin*. The construction of the dike will be completed in accordance with RPP-SPEC-63632. The dike consists of the four (4) sloped walls of the basin as shown in drawing H-2-838748, *LERF Basin 41 Civil Excavation Plan*. The dike is 81 feet wide and height of 27 feet with 3:1 slope as shown on Drawing H-2-838748, Sheet 1.

Typical dike crest consists of 4” depth top roadway material between finished grade and subgrade surface as shown on drawing H-2-838749, Sheet 1, *LERF Basin 41 Civil Bottom Liner*. The dike is provided with slope erosion protection consisting of 3” depth top permanent erosion protection between the finished grade and subgrade surface as shown on drawing H-2-838749, Sheet 1.

1.4 SCOPE OF IQRPE DESIGN ASSESSMENT

This IQRPE design assessment includes a comprehensive review of the LERF Basin 41 Project design package per 40 CFR 264.192, WAC 173-303-640(3), 40 CFR 264.226(c), and WAC 173-303-650(4)(c).

1.4.1 Portions of LERF Basin 41 Project Included in Scope for IQRPE Certification

Documents included in this design review for the LERF Basin 41 Project include:

- Calculations.
- Procurement Specifications.
- Technical Specifications.
- Design and Fabrication Drawings.
- ECNs.
- P&IDs.

A list of documents reviewed by the IQRPE as part of this Design Assessment Report is included in Section 4.0.

1.4.2 Portions of the LERF Basin 41 Project Not Included in Scope for IQRPE Certification

This IQRPE review was limited only to LERF Basin 41 Project components and no other systems or components were evaluated.

2.0 ASSESSMENT SUMMARY

As described in Section 1.1.2, systems within the IQRPE scope of this assessment is adequately designed to prevent failure caused by corrosion or by structural loads imposed by the system's intended service. The system design complies with the applicable requirements of 40 CFR 264.192, WAC 173-303-640(3), 40 CFR 264.226(c), and WAC 173-303-650(4)(c).

Design documents that were reviewed as part of this assessment are referenced in Section 4.0.

2.1 CODES, STANDARDS, AND REGULATIONS

The codes, standards, and regulations specifically used during the preparation of this certification are referenced, as necessary, throughout this report.

RPP-SPEC-63602, *LERF Basin 41 Engineering Design Code of Record Specification*, lists the codes and standards used to design, construct, operate, and decommission the LERF Basin 41 Project. The materials used in the project were evaluated in RPP-RPT-62215, *LERF Basin 41 Material Compatibility with Wastewater*. A complete list of applicable references is contained in Section 4.0.

2.2 BASIS OF DESIGN

The primary operating characteristics of the LERF Basin 41 Project is presented in Table 1.

Table 1: LERF Basin 41 Project Major Components Operating Characteristics

Equipment	Operating Characteristic
Transfer Piping 4"-60M-008-M18 with 8" Encasement	• Transfers EMF/WTP waste from 4"-WTP-001-M17 piping to tie-in point to ball valve 60M-41-1 in catch basin. • Carrier pipe maximum operating pressure is 150 psig at 150 °F temperature per RPP-SPEC-63632, Attachment 2, LERF Pipe Class M-18. • Encasement pipe maximum operating pressure is 50 psig at 150 °F temperature per RPP-SPEC-63632, Attachment 2, LERF Pipe Class M-18.
Transfer Piping 3"-60M-009-M18 with 6" Encasement	• Transfers 242-A Evaporator condensate waste from 3" EVAP COND-PC5000-M17 piping to tie-in point to ball valve 60M-41-2 in catch basin. • Carrier pipe maximum operating pressure is 150 psig at 150 °F temperature per RPP-SPEC-63632, Attachment 2, LERF Pipe Class M-18.

Table 1: LERF Basin 41 Project Major Components Operating Characteristics

Equipment	Operating Characteristic
	• Encasement pipe maximum operating pressure is 50 psig at 150 °F temperature per RPP-SPEC-63632, Attachment 2, LERF Pipe Class M-18.
Encasement Drain Piping 1”-60M-012-M10 1”-60M-013-M10	• 1”-60M-012-M10 connects 8” ENCL-M17 encasement pipe for 4”-60M-008-M18 to ball valve 60M-41-7 in catch basin. • 1”-60M-013-M10 connects 6” ENCL-M17 encasement pipe for 3”-60M-009-M18 to ball valve 60M-41-8 in catch basin. • Encasement drain piping maximum operating pressure is 50 psig at 150 °F temperature per RPP-SPEC-63632, Attachment 1, LERF Pipe Class M-10.

2.2.1 Structural Design Standards

The 40 CFR 264.192 and WAC 173-303-640(3) require that an IQRPE certify that the proposed tank system will have sufficient structural integrity and is acceptable for storing and treating dangerous waste. This assessment must show, in accordance with 40 CFR 264.192(a) and WAC 173-303-640(3)(a), that the foundation, structural support, seams, connections, and pressure controls are adequately designed and that the tank system has sufficient structural strength, compatibility with the waste to be stored and treated, and corrosion protection to ensure that it will not collapse, rupture, or fail. The 40 CFR 264.226(c) and WAC 173-303-650(4)(c) require that an IQRPE certify that the surface impoundment’s dike including that portion of any dike which provides freeboard, has structural integrity.

Mechanical calculation RPP-CALC-63780, *LERF Basin 41 Buried Piping Analysis*, was performed in accordance with piping code requirements in ASME B31.3, *Process Piping*. The calculation utilized the International Organization for Standardization’s (ISO) code for glass-reinforced plastics (GRP) piping, ISO 14692, *Petroleum and Natural Gas Industries - Glass-reinforced Plastics (GRP) Piping* as a supplemental verification of system flexibility, as well as a means to determine support and anchor loads. Ecology Publication 94-114, *Guidance for Assessing and Certifying Tank Systems that Store and Treat Dangerous Waste*, defines backfill requirements to provide structural support to prevent excessive settlement and corrosion.

Calculations include the following areas as applicable:

- Pipe wall thickness calculations for pressure.
- Stress calculations for sustained loads due to pressure, dead load, and other sources.
- Stress calculations for displacements such as those associated with thermal loads.
- Stress calculations for occasional loads such as pressure, weight, earthquake, and wind loads.
- Stress calculations for transients such as water hammer.

WAC 173-303-650(4)(c) requirements for LERF Basin 41 were evaluated in RPP-CALC-63752, *LERF Basin 41 Evaluation of Dike Stability and Erosion*. The calculation was performed in accordance with DOE-STD-1020-2016, *Natural Phenomena Hazards Analysis and Design Criteria for DOE Facilities,* International Building Code (IBC) 2015 and American Society of Civil Engineers (ASCE) 7-10, *Minimum Design Loads for Buildings and Other Structures,* to evaluate the following:

- Global slope stability.
- Internal slope stability.
- Structural stability.
- Erosion stability.

The following subsections highlight the IQRPE structural design standard review for transfer piping and the LERF Basin 41 dike for the LERF Basin 41 Project, and also identify any specific exceptions to this IQRPE certification as they relate to the structural review.

2.2.2 Transfer Piping System

LERF Basin 41 piping will be procured, constructed, and tested in accordance with construction specification RPP-SPEC-63632. The drawing and analysis (H-2-838765, RPP-CALC-63780 and P&ID H-2-88766, Sheet 6) were reviewed for structural issues.

Calculation RPP-CALC-63780 concluded that the maximum stress demand-to-capacity ratio (DCR) among all associated buried transfer piping is 0.80 for the combined stress due to gravity, pressure, and thermal loadings. It also stated that among the existing regions of piping that were modeled for the sake of determining representative stresses on newly-connected piping, the maximum stress DCR is 0.83 for the occasional stress due to seismic loads. Given that all stress DCRs associated with this supplemental analysis are less than 1.0, the subject piping was found to perform acceptably under anticipated loadings per ISO 14692 requirements and other Hanford standards cited in the calculation.

RPP-SPEC-63632 details how backfilling will be conducted in the construction and installation phases. This eliminated any need for further evaluation of additional backfill requirements.

The IQRPE concludes that the appropriate structural considerations to meet 40 CFR 264.192 and WAC 173-303-640(3) for the LERF Basin 41 Project have been made.

2.2.3 LERF Basin 41 Dike Structural Analysis

The LERF Basin 41 dike will be constructed in accordance with construction specification RPP-SPEC-63632. Drawing H-2-838748 and RPP-CALC-63752 were reviewed for structural analysis to check that the LERF Basin 41 dike meets the following requirements listed in WAC 173-303-650(4)(c):

- Will withstand the stress of the pressure exerted by the types and amounts of wastes to be placed in the impoundment; and
- Will not fail due to scouring or piping, without dependence on any liner system included in the surface impoundment construction.

The IQRPE concludes that the appropriate structural considerations for Surface Impoundments to meet 40 CFR 264.226(c) and WAC 173-303-650(4)(c) for LERF Basin 41 Project have been made.

2.2.3.1 Structural Design Exceptions

Based on the above review, there are no IQRPE Certification exceptions to the structural design standards review.

2.2.3.2 Structural Design Assessment Conclusion

The IQRPE concurs that this design basis meets the requirements of 40 CFR 264.192, WAC 173-303-640(3)(a), 40 CFR 264.226(c), and WAC 173-303-650(4)(c) for the LERF Basin 41 Project.

2.2.4 Waste Compatibility

Regulations located in 40 CFR 264.192(a) and WAC 173-303-640(3)(a) require tank systems be compatible with the wastes transported or otherwise handled.

This section documents the waste compatibility and corrosion investigation of two (2) transfer piping systems designed for installation as part of the LERF Basin 41 Project. Components investigated were piping materials. Piping materials were obtained from RPP-SPEC-63632 and referenced drawings in Table 2.

The materials of construction for those components of the LERF Basin 41 Installation Project in contact with tank waste are summarized in Table 2 below:

Table 2: LERF Basin 41 Project Piping Materials of Construction

Item	Drawing Location	Description	Item #	Component Materials / Notes
Transfer Piping: 4”-60M-008-M18 with 8” Encasement 3”-60M-009-M18 with 6” Encasement	H-2-838765, Sheets 3 and 4 RPP-SPEC-63632	#204 Double Containment Tee	N/A	Conley Composites FRP (ASTM D2996, Type 1, Grade 1, Class F, *Standard Specification for Filament-Wound “Fiberglass” (Glass-Fiber-Reinforced Thermosetting-Resin) Pipe)*
		Custom Double Containment Tee Bridge Repair Coupling	N/A	Conley Composites FRP (ASTM D2996, Type 1, Grade 1, Class F)
		#122RE Split Repair Coupling	N/A	Conley Composites FRP (ASTM D2996, Type 1, Grade 1, Class F)
		FRP Pipe	N/A	FRP (ASTM D2996, Type 1, Grade 1, Class F)
		#202 Double Containment 45º Elbow	N/A	Conley Composites FRP (ASTM D2996, Type 1, Grade 1, Class F)
		#252 Double Containment End Enclosure	N/A	Conley Composites FRP (ASTM D2996, Type 1, Grade 1, Class F)
		#106 Cement Flange	N/A	Conley Composites FRP (ASTM D2996, Type 1, Grade 1, Class F)
		3/16” Full Face Gasket	N/A	Ethylene Propylene Diene Monomer (EPDM)
		#114 Wound Saddle	N/A	Conley Composites FRP (ASTM D2996, Type 1, Grade 1, Class F)
		Filler Flange	N/A	Micromold
Isolation Valves: 60M-41-1 60M-41-2	H-2-838771, Sheets 2 and 4	4” Ball Valve	54	Flowtek, Stainless Steel
		3” Ball Valve	55	Flowtek, Stainless Steel
Leak Detector Spool	H-2-838771, Sheets 1, 2 and 8	1” Pipe	21	304L Stainless Steel
		1” Flange	31	304L Stainless Steel
		Pipe Tee	40	304L Stainless Steel
		Tube Fitting	43,44, 45, 46, 47	Swagelok –Stainless Steel
		½” Valve	58	Swagelok –Stainless Steel
		Flexswitch	83	FCI, FLT93S Stainless Steel
Catch Basin (Secondary containment for carrier piping with no encasement)	H-2-838751, RPP-SPEC-63632	Catch Basin	N/A	Concrete structure. Catch basin is applied with chemical resistant de-contaminable coatings per RPP-SPEC-63632, Section 09 85 50. Coatings are as listed below: • Field Primer: Amerlock 2/400 • Concrete Surfacer: Nu-Klad 114A • Primer and Base Coating: Amerlock 400 • Intermediate &Finish Coating: PSX 700 Siloxane

2.2.4.1 Anticipated Chemistry and Controls

All primary pipe and valve component materials in contact with liquid waste are austenitic stainless steel, and FRP. EPDM is used as gasket material between the FRP pipe spool flanges. EPDM is traditionally used as gasket material in other parts of Tank Farms due to its exceptional mechanical properties and radiation resistance. Based on tank waste processing experience at Hanford, all metallic and nonmetallic materials in contact with waste are adequate for service. LERF Basin 41 catch basin is coated with a chemical resistant de-contaminable coating as described above in Table 2.

The catch basin's siloxane coating material along with the basin primary liner, gaskets, double containment piping and fittings, and floating cover were evaluated in RPP-RPT-62215, *LERF Basin 41 Material Compatibility with Wastewater*. The materials used for these items were found to be suitable for use over the design life of the project.

2.2.4.2 Waste Compatibility Exceptions

Based on the above review, there are no IQRPE Certification exceptions to the anticipated waste compatibility or corrosion issues with the LERF Basin 41 Project materials of construction.

2.2.4.3 Waste Compatibility Assessment Conclusion

The IQRPE concurs that this design basis meets the requirements of 40 CFR 264.192 and WAC 173-303-640(3)(a).

2.2.5 Pressure Control System

40 CFR 264.192(a) and WAC 173-303-640(3)(a) require that an IQRPE certify that the proposed tank system has been designed with appropriate pressure control systems. The various components of the LERF Basin 41 Project were evaluated for pressure control issues and the details are presented in the sections listed below.

2.2.5.1 Transfer Piping

Pressure requirements for transfer piping system (H-2-838765, Sheets 3 and 4) are established in construction specification RPP-SPEC-63632. The maximum operating pressure for 3" and 4" LERF Pipe Class M-18 primary piping assemblies is 150 psig at 150 °F. Similarly, the maximum operating pressure for 6" and 8" LERF Pipe Class M-18 containment piping assemblies is 50 psig at 150 °F.

The transfer piping assemblies are required to undergo acceptance pressure testing after field installation in accordance with ASME B31.3 and construction specification RPP-SPEC-63632. The results will be documented in the inspection report documents.

Calculation RPP-CALC-63780 analyzed the piping for conformance to pressure rating requirements per ASME B31.3. Water hammer analysis was evaluated as part of the transient load evaluation. Evaluation of occasional loads due to transient pressures such as water hammer analyses was not performed since new piping and components being installed as part of this Project's scope have a pressure capacity greater than or equal to that of the existing system. This calculation concluded that the new piping was sufficiently strong to handle all existing transient

pressures from existing transient initiators. Calculation also evaluated the new transient initiators and concluded that they will introduce negligible transient pressures. No overpressure protection is required for the installation of the new transfer piping system.

The IQRPE concludes that the appropriate pressure control considerations for LERF Basin 41 transfer piping have been made.

2.2.5.2 Encasement Drain Piping

Pressure requirements for the encasement drain piping system (H-2-838765, Sheet 4, and H-2-838771, Sheet 8) are established in construction specification RPP-SPEC-63632. The maximum operating pressure rating for 1”- 60M-012-M10 and 1”- 60M-013-M10 is defined in LERF Pipe Class M-10 drain piping assemblies is 50 psig at 150 °F.

The encasement piping assemblies are required to undergo acceptance pressure testing in accordance with ASME B31.3 and construction specification RPP-SPEC-63632. The results will be documented in Inspection Reports.

The IQRPE concludes that the appropriate pressure control considerations for LERF Basin 41 encasement piping have been made.

2.2.5.3 Pressure Control System Exceptions

Based on the above review, there are no IQRPE certification exceptions to the pressure control system review for the LERF Basin 41 Project.

2.2.5.4 Pressure Control System Assessment Conclusion

The IQRPE concurs that this design basis meets the requirements of 40 CFR 264.192 and WAC 173-303-640(3)(a).

2.2.6 Secondary Containment System

40 CFR 264.193 and WAC 173-303-640(4) require that an IQRPE certify that the proposed tank system has been designed with an appropriate secondary containment system. Secondary containment for tank systems that store, accumulate, or treat dangerous waste must be designed and installed to meet the requirements of 40 CFR 264.193(b) and WAC 173-303-640(4)(b). Secondary containment for LERF Basin 41 is accomplished by encasement piping for 3” and 4” primary (carrier) piping. Secondary containment for small sections of the transfer piping and encasement drain piping, where there no secondary containment piping installed, is provided by the catch basin.

Two (2) leak detectors (LDS 41-4 and LDS 41-5) are installed for monitoring the leak in the encasement drain piping systems.

The catch basin is used as secondary containment for carrier piping with no encasement. Siloxane a high performance engineered silicone-epoxy coating system is intended for use as the top coat in the catch basin. The top coat is the material expected to provide secondary containment for piping in the catch basin. Siloxane coating material has been evaluated in RPP-RPT-62215 for the intended use.

The catch basin is provided with one (1) leak detector (LDS 41-8) to detect any non-encased piping leakage in the catch basin (H-2-838751, Sheet 1). The catch basin floor is sloped towards the location where LDS 41-8 is installed (H-2-838776, Sheet 1).

Leak detector placement is consistent with generally accepted engineering practices to provide timely detection of any leakage from the primary pathway into the secondary containment.

Conclusions from the review of the design standards for the LERF Basin 41 Project are summarized below:

- The LERF Basin 41 Project components are designed to prevent any migration of wastes out of the secondary containment system to the soil, groundwater, or surface water at any time during the use of the tank system.
- The system is constructed of materials that are compatible with the waste to be placed in the system.
- The system has been specified to have sufficient strength to withstand stresses due to static head during a release, pressure gradients, climatic conditions, and other stresses resulting from daily operations.
- A leak detection system for liquids has been provided.
- The system is sloped or otherwise designed or operated to drain and remove liquids resulting from leaks, spills, or precipitation.

The IQRPE concludes that the appropriate secondary containment considerations have been made.

2.2.6.1 Secondary Containment System Exceptions

There are no exceptions to the IQRPE certification of the secondary containment review assessment**.**

2.2.6.2 Secondary Containment System Assessment Conclusion

The IQRPE concurs that this design basis meets the requirements of 40 CFR 264.193(b) and WAC 173-303-640(4)(b).

2.2.7 Ancillary Equipment Design

40 CFR 264.192 and WAC 173-303-640(3) requires that an IQRPE certify that the proposed tank system has been designed with appropriate ancillary equipment in accordance with the requirements of 40 CFR 264.192(e), and WAC 170-303-640(3)(f) and (4)(f). WAC 173-303-040, *Definitions,* defines “Ancillary Equipment” as any device including, but not limited to, such devices as piping, fittings, flanges, and valves that is used to distribute, meter, or control the flow of dangerous waste from its point of generation to a storage or treatment tank(s), between dangerous waste storage and treatment tanks to a point of disposal on-site, or to a point of shipment for disposal off-site. A review of the ancillary equipment design is normally part of the IQRPE review. The scope of this review includes components listed as in-scope in Section 1.3 and as described in the review sections. Piping, fittings, flanges, and valves have been evaluated by the IQRPE throughout this report, which includes all ancillary equipment in-scope for this design assessment. No other ancillary equipment was identified.

2.2.7.1 Ancillary Equipment System Exceptions

Based on the above review, there are no IQRPE certification exceptions to the ancillary equipment design review.

2.2.7.2 Ancillary Equipment System Assessment Conclusion

The IQRPE concurs that this design basis meets the requirements of 40 CFR 264.192 and WAC 173-303-640(3).

2.2.8 P&ID Review

P&ID details for the LERF Basin 41 Project are depicted on H-2-88766, Sheet 6.

The IQRPE concludes that the appropriate P&ID review has been made.

2.2.9 Corrosion Assessment

40 CFR 264.192 and WAC 173-303-640(3) require an IQRPE corrosion assessment of only the external portion of the primary containment that is in direct contact with soil or water.

Double containment piping 4”-60M-008-M18 primary carrier piping with 8” encasement piping and 3”-60M-008-M18 primary carrier piping with 6” encasement piping is LERF Pipe Class M-18 listed in construction specification RPP-SPEC-63632. Carrier and containment pipe is Conley Double Containment FRP Pipe® utilizing Conley Aromatic® amine cured epoxy resin in accordance with pipe class M-18 listed in construction specification RPP-SPEC-63632.

Per RPP-CALC-63780, design input #9, states that corrosion-erosion allowance for FRP pipe is neglected since the pipe has a corrosion barrier (inner liner) which has a thickness of 0.060".

Piping is installed partially in the berm and partially above ground using saddle supports (H-2-838765, Sheet 4).

Additional aspects of corrosion are discussed in the Waste Compatibility, Section 2.2.4.

The IQRPE concludes that appropriate corrosion considerations have been made.

2.2.9.1 Corrosion Assessment Exceptions

Based on the above requirements, there are no IQRPE certification exceptions to the corrosion assessment review for LERF Basin 41 Project.

2.2.9.2 Corrosion Assessment Conclusion

The IQRPE concurs that this design basis meets the requirements of 40 CFR 264.192 and WAC 173-303-640(3).

2.2.10 Recommended Inspection Schedule

Per the requirements of WAC 173-303-640(2)(e), “a schedule for conducting integrity assessments over the life of the tank to ensure that the tank retains its structural integrity and will not collapse, rupture, or fail. The schedule must be based on the results of past integrity assessments, age of the

tank system, materials of construction, characteristics of the waste, and any other relevant factors." Because there are new elements and the existing Basin 41 dike, this assessment has two (2) parts.

New Elements

The new elements include:

- 4"-60M-008-M18 primary piping with 8" encasement piping from 4"-WTP-001-M17 piping tie-in point to valve 60M-41-1 in catch basin. Also included is the 8" ENCL-M17 encasement drain piping 1"-60M-012-M10 up to ball valve 60M-41-7 (H-2-88766, Sheet 6).
- 3"-60M-009-M18 primary piping with 6" encasement piping from 3"-EVAP COND-PC5000-M17 piping tie-in point to valve 60M-41-2 in catch basin. Also included is the 6" ENCL-M17 encasement drain piping 1"-60M-013-M10 up to ball valve 60M-41-8 (H-2-88766, Sheet 6).
- Catch Basin Leak Detector System (LDS 41-8).
- 242AL-41 catch basin concrete structure and coating system.

Because these are new elements, no prior integrity assessments have been completed. Since these elements are expected to be installed in 2021, the age of these elements is new. The materials of construction are compatible with the waste as detailed in Section 2.2.4 of this report. The characteristics of the wastewater is covered in RPP-RPT-62215. Additionally, corrosion is evaluated in Section 2.2.9 of this report. RPP-RPT-62215 used a design life of 30 years for material evaluation. To allow time for an integrity assessment, it is recommended that a complete Integrity Assessment Report be completed of the above tank elements 15 years after initial installation or first contact with waste, whichever is later. The later date applies since it is our assessment that the life for FRP piping and other elements is based on first contact with waste rather than date of installation.

LERF Basin 41 Dike

Per WAC 173-303-650, only the structural aspects of the Basin 41 dike are addressed. Therefore, based on the SOW No. 334426, "the schedule must be based on the results of past integrity assessments, age of the tank system, materials of construction, characteristics of the waste, and any other relevant factors" of the Basin 41 dike structure. The Basin 41 dike was excavated in the 1990's along with Basins 42, 43, and 44. No prior integrity assessments have been completed for Basin 41. The age of the dike is the earthen construction materials which were placed in the 1990s. Since there is a liner, the materials of dike are not expected to be in contact with waste. As such, the earthen materials of the dike have not been assessed for compatible with the wastes. The characteristics of the wastewater is covered in RPP-RPT-62215. Because the compatibility of the dike materials with the waste is unknown, it is recommended that an inspection be completed of the entire dike system covered by WAC 173-303-650 and the liner based on the life of the liner or 15 years after first contact with waste, whichever is later. Since the liner is protected from environmental conditions such as ultraviolet (UV) light, the later date applies since it is our assessment that the life for the liner and other elements is based on first contact with waste rather than date of installation. Additionally, although not assessed, it is unlikely that the wastewater would have any detrimental effect on the earthen materials of the dike.

Note: It is anticipated that these new elements of the tank system and LERF Basin 41 dike as described above will be evaluated as part of the entire system and will be included in the overall

IQRPE Integrity Assessment Report for this system in accordance with the interval for integrity assessment established by the operator for the system as long as the scheduled integrity assessment falls within the recommended period provided above.

3.0 DESIGN REVIEW ASSESSMENT CERTIFICATIONS

The IQRPE Support to the LERF Basin 41 Project, as previously described, has been reviewed by the IQRPE and was assessed to be in compliance with the applicable sections of 40 CFR 264.192, WAC 173-303-640(3), 40 CFR 264.226(c), and WAC 173-303-650(4)(c). These results are based on a review of the applicable codes, standards, and documents.

A listing of the IQRPE, Professional Engineers, and other engineers who participated in the preparation of this design assessment report is provided below:

Independent Qualified Registered Professional Engineer

Sohan S. Gahir
- P.E., Mechanical Engineering, License No. 18503

Professional Engineers (PE)

Paul M. Giever
- P.E., Civil, Structural Engineering, License No. 28084

Alexander P. Butterfield
- P.E., Mechanical Engineering, License No. 52255

Andrew S. Klein
- P.E., Chemical, Fire Protection, License No. 47831

Michel J. Langevin
- P.E., Mechanical Engineering, License No. 23759

BS Degreed Engineer

Nathaniel R. Weinman
- E.I.T., Mechanical Engineering, Enrollment Number E-11818

The certifications below are in accordance with the requirements of 40 CFR 270.11(d), *Signatories to Permit Applications and Reports,* and WAC 173-303-810(13)(a), *Certifications.*

Report Lead IQRPE:

40 CFR 270.11(d)

I certify under penalty of law that this document and all attachments were prepared under my direction or supervision according to a system designed to assure that qualified personnel properly gather and evaluate the information submitted. Based on my inquiry of the person or persons who manage the system, or those persons directly responsible for gathering the information, the information submitted is, to the best of my knowledge and belief, true, accurate, and complete. I am aware that there are significant penalties for submitting false information, including the possibility of fine and imprisonment for knowing violations.

WAC 173-303-810(13)(a)

I certify under penalty of the law that this document and all attachments were prepared under my direction or supervision in accordance with a system designed to assure that qualified personnel properly gather and evaluate the information submitted. Based on my inquiry of the person or persons who manage the system, or those persons directly responsible for gathering the information, the information submitted is, to the best of my knowledge and belief, true, accurate, and complete. I am aware that there are significant penalties for submitting false information, including the possibility of fine and imprisonment for knowing violations.

Report Reviewed by:

Sohan S. Gahir, PE
Independent Qualified Registered Professional Engineer

June 2, 2020
Date

4.0 REFERENCES

40 CFR 264. Subpart J, "*Tank Systems*," Code of Federal Regulations, as amended.

40 CFR 264. Subpart K, "*Surface Impoundments*," Code of Federal Regulations, as amended.

40 CFR 264.192, *Design and Installation of New Tank Systems or Components*, Code of Federal Regulations, as amended.

40 CFR 264.226(c), *Monitoring and Inspection*, Code of Federal Regulations, as amended.

40 CFR 270.11(d), *"Signatories to Permit Applications and Reports,"* Code of Federal Regulations, as amended.

ASCE 7-10, *Minimum Design Loads for Buildings and Other Structures*, American Society of Civil Engineers, Reston Virginia.

ASME B31.3, 2016, *Process Piping*, American Society of Mechanical Engineers, New York, New York.

ASTM A312/A312M-17, 2017, *Standard Specification for Seamless, Welded, and Heavily Cold Worked Austenitic Stainless Steel Pipes*, ASTM International, West Conshohocken, Pennsylvania.

ASTM D2996, 2017, *Standard Specification for Filament-Wound "Fiberglass" (Glass-Fiber-Reinforced Thermosetting-Resin) Pipe*, ASTM International, West Conshohocken, Pennsylvania.

DOE-STD-1020-2016, *Natural Phenomena Hazards Analysis and Design Criteria for DOE Facilitie*s, US Department of Energy, German Town, Maryland.

H-2-838748, 2020, Sheet 1, *LERF Basin 41 Civil Excavation Plan*, Rev. 0, US Department of Energy, Richland, Washington.

H-2-838749, 2020, Sheet 1, *LERF Basin 41 Civil Bottom Liner*, Rev. 0, US Department of Energy, Richland, Washington.

H-2-838749, 2020, Sheet 2, *LERF Basin 41 Civil Bottom Liner Details*, Rev. 0, US Department of Energy, Richland, Washington.

H-2-838751, 2020, Sheet 1, *LERF Basin 41 Structural Catch Basin*, Rev. 0, US Department of Energy, Richland, Washington.

H-2-838751, 2020, Sheets 2-4, *LERF Basin 41 Structural Catch Basin Details*, Rev. 0, US Department of Energy, Richland, Washington

H-2-838765, 2020, Sheet 1, *LERF Basin 41 Mechanical General Arrangement*, Rev. 0, US Department of Energy, Richland, Washington.

H-2-838765, 2020, Sheet 2, *LERF Basin 41 Mechanical Sections and Details*, Rev. 0, US Department of Energy, Richland, Washington.

H-2-838765, 2020, Sheet 3, *LERF Basin 41 Mechanical Details*, Rev. 0, US Department of Energy, Richland, Washington.

H-2-838765, 2020, Sheets 4-5, *LERF Basin 41 Mechanical Sections and Details*, Rev. 0, US Department of Energy, Richland, Washington.

H-2-838765, 2020, Sheets 6-7, *LERF Basin 41 Mechanical Sections*, Rev. 0, US Department of Energy, Richland, Washington.

H-2-838765, 2020, Sheets 8-11, *LERF Basin 41 Mechanical Details*, Rev. 0, US Department of Energy, Richland, Washington.

H-2-838767, 2020, Sheet 1, *LERF Basin 41 Catch Basin Notes and Parts List*, Rev. 0, US Department of Energy, Richland, Washington.

H-2-838767, 2020, Sheet 2, *LERF Basin 41 Catch Basin Isometric and Parts List*, Rev. 0, US Department of Energy, Richland, Washington.

H-2-838767, 2020, Sheet 3, *LERF Basin 41 Catch Basin Assembly*, Rev. 0, US Department of Energy, Richland, Washington.

H-2-838767, 2020, Sheet 4, *LERF Basin 41 Catch Basin Section and Details*, Rev. 0, US Department of Energy, Richland, Washington.

H-2-838767, 2020, Sheets 5-7, *LERF Basin 41 Catch Basin Sections* Rev. 0, US Department of Energy, Richland, Washington.

H-2-838767, 2020, Sheets 8-11, *LERF Basin 41 Catch Basin Details*, Rev. 0, US Department of Energy, Richland, Washington.

H-2-838771, 2020, Sheet 1, *LERF Basin 41 Catch Basin Piping Notes and Parts List*, Rev. 0, US Department of Energy, Richland, Washington.

H-2-838771, 2020, Sheet 2, *LERF Basin 41 Catch Basin Piping Isometric*, Rev.0, US Department of Energy, Richland, Washington.

H-2-838771, 2020, Sheet 3, *LERF Basin 41 Catch Basin Piping Assembly*, Rev.0, US Department of Energy, Richland, Washington

H-2-838771, 2020, Sheet 4, *LERF Basin 41 Catch Basin Piping Details*, Rev.0, US Department of Energy, Richland, Washington

H-2-838771, 2020, Sheets 5-7 & 9, *LERF Basin 41 Catch Basin Piping Assembly*, Rev.0, US Department of Energy, Richland, Washington

H-2-838771, 2020, Sheets 8 & 10, *LERF Basin 41 Catch Basin Piping Details*, Rev. 0, US Department of Energy, Richland, Washington.

H-2-838776, 2020, Sheets 1-2, *LERF Basin 41 Electrical Power and INSTM Plan*, Rev. 0, US Department of Energy, Richland, Washington.

H-2-88766, 2020, Sheet 6, *P&ID LERF Basin & ETF Influent Evaporator*, Rev. 0, US Department of Energy, Richland, Washington.

IBC 2015, 2015 International Building Code, International Code Council, Country Club Hills, Illinois.

IP-334426-01, 2020, *IQRPE Inspection Plan for LERF Basin 41*, Rev. 1, Meier Architecture • Engineering, Kennewick, Washington.

ISO 14692:2002, Parts 1-4, *Petroleum and Natural Gas Industries - Glass-reinforced Plastics (GRP) Piping*, International Organization for Standardization, Geneva, Switzerland.

MT-50497, 2019, *Liquid Effluent Retention Facility (LERF) Basin 41*, Rev. 00, Washington River Protection Solutions, LLC, Richland, Washington.

Publication 94-114, 2014, *Guidance for Assessing and Certifying Tank Systems*, Washington State Department of Ecology.

RPP-25153, 2007, Volume 3: *IQRPE DST System Integrity Assessment - Waste Compatibility*, Rev. 1, CH2M Hill Hanford Group, Inc., Richland, Washington.

RPP-27591, 2007, Volume 2: *IQRPE DST System Integrity Assessment - Pipeline Integrity*, Rev. 1, CH2M Hill Hanford Group, Inc., Richland, Washington.

RPP-CALC-63752, 2020, *LERF Basin 41 Evaluation of Dike Stability and Erosion*, Rev. 0, Washington River Protection Solutions, Richland, Washington.

RPP-CALC-63780, 2020, *LERF Basin 41 Buried Piping Analysis*, Rev. 0, Washington River Protection Solutions, Richland, Washington.

RPP-RPT-58441, 2016, *Double-Shell Tank System Integrity Assessment Report (DSTAR)*, Rev. 0, Washington River Protection Solutions, LLC, Richland, Washington.

RPP-RPT-62215, 2020, *LERF Basin 41 Material Compatibility with Wastewater*, Rev. 0, Washington River Protection Solutions, LLC, Richland, Washington.

RPP-SPEC-63602, 2020, *LERF Basin 41 Engineering Design Code of Record Specification*, Rev. 0, Washington River Protection Solutions, LLC, Richland, Washington.

RPP-SPEC-63632, 2020, *LERF Basin 41 Construction Specification*, Rev. 0, Washington River Protection Solutions, LLC, Richland, Washington.

W-105-C4, 1993, *Construction Specification for Soil/Bentonite Liner System for 242-A Evaporator Cond Interim Retention Basin*, Rev. 2, Kaiser Engineers Hanford Co., Richland, Washington.

WAC 173-303, "*Dangerous Waste Regulations*," Washington Administrative Code, as amended.

WAC 173-303-640(3), "*Design and Installation of New Tank Systems or Components*," Washington Administrative Code, as amended.

WAC 173-303-640, "*Tank Systems*," Washington Administrative Code, as amended.

WAC 173-303-640-810(13)(a), "*Certification*," Washington Administrative Code, as amended.

WAC 173-303-650, "*Surface Impoundments*," Washington Administrative Code, as amended.

Washington River Protection Solutions Statement of Work (SOW) No. 334426, 2019, *IQRPE Support for Liquid Effluent Retention Facility (LERF) Basin 41*, Rev. 0, Washington River Protection Solutions, LLC, Richland, Washington.

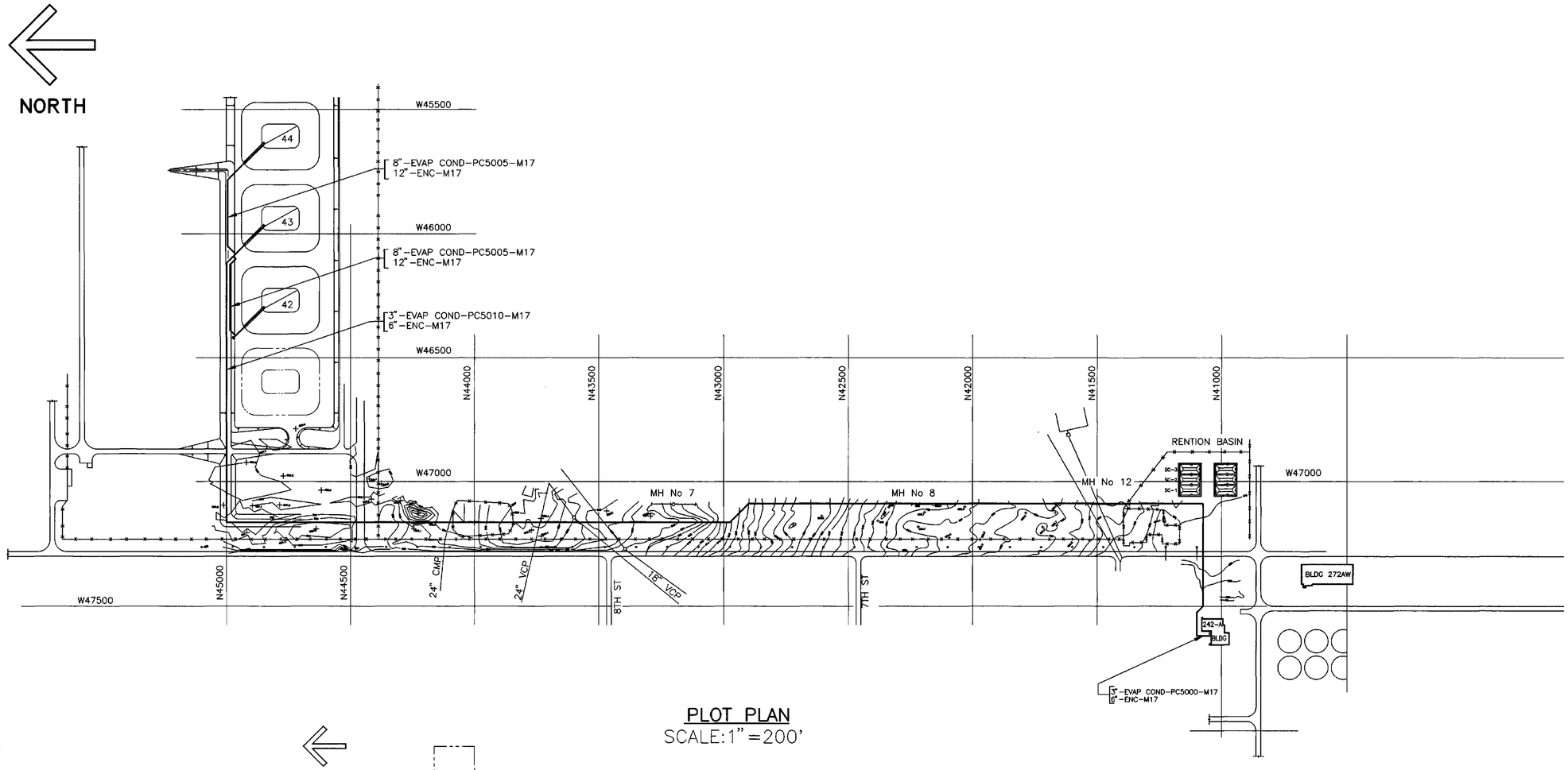

PLOT PLAN
SCALE: 1" = 200'

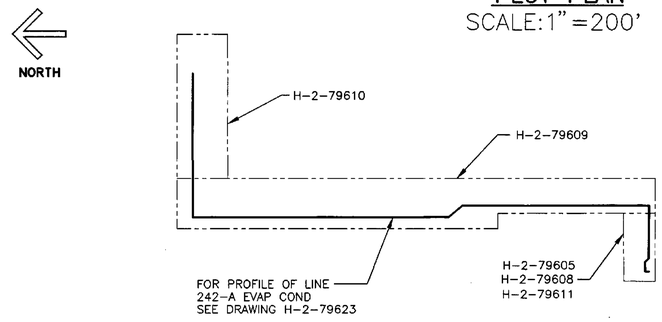

DRAWING KEY PLAN
SCALE: NONE

DWG NO	TITLE	REFERENCES	
DRAWING TRACEABILITY LIST			

REF NUMBER	TITLE
H-2-79581	DWG LIST

NEXT USED ON

REV NO	DESCRIPTION	REV BY DATE	CHK BY DATE	DFTG APVD DATE	COG ENGR	COMPANY
3	REV ECN 646829 REDRAWN TO AUTOCAD PER DIR	PRW 7/22/98	9/9/98			

REVISIONS

CADFILE B079604A CADCODE WIN95:ACD2:14.0:SS

CHK PRINT ☐ DATE COMMENT PRINT ☐ DATE

2 PLOT SCALE: 1=1

DRAWN BY
CHECKED
DFTG APVD
COG ENGR
APVD
APVD
APVD
APVD
APVD
APVD

SEE PREVIOUS REVISION

U.S. DEPARTMENT OF ENERGY
Richland Operations Office
WASTE MANAGEMENT FEDERAL SERVICES OF HANFORD

PIPING PLOT & KEY PLANS 242-A EVAP COND STREAM

SIZE	BLDG NO	INDEX NO	DWG NO	REV
F	0110/ 0304	200E/ 242AL	H-2-79604	3

SCALE SHOWN EDT 123424 SHEET 1 OF 1

GTITLE.DWG (10-96)

REV 3 SH 1 OF 1 DWG NO H-2-79604

ENGINEERING CHANGE NOTICE

Prepared For the U.S. Department of Energy, Assistant Secretary for Environmental Management
By Washington River Protection Solutions, LLC., PO Box 850, Richland, WA 99352
Contractor For U.S. Department of Energy, Office of River Protection, under Contract DE-AC27-08RV14800

TRADEMARK DISCLAIMER: Reference herein to any specific commercial product, process, or service by trade name, trademark, manufacturer, or otherwise, does not necessarily constitute or imply its endorsement, recommendation, or favoring by the United States government or any agency thereof or its contractors or subcontractors. Printed in the United States of America.

Release Stamp

DATE: May 27,2020 HANFORD RELEASE

1a. **ECN No:** ECN-715507 **Rev.** 00	1b. **Project Number:** T1P226 ☐N/A
2. **Title:** LERF Basin 41 Installation - Mechanical	
3. **WA or Redline ECN:** ☐WA ☐REDLINE ☒N/A	4. **Temporary Modification:** ☐Yes ☒No
5. **Design Type:** II	6. **Design Verification Required:** ☐Yes ☒No
7. **Safety Classification:** ☐SC ☐SS ☒GS ☐N/A	
8. **USQ Number:** ☒N/A RPP-27195	9. **PrHA Number** **Rev.** ☒N/A

Workflow Approval Status: For Approval
Clearance Review Restriction Type: undefined

10. **Trend Codes**

Cause	Commodity	Discipline Driver
Initial Design Release	Mechanical Equipment	Mechanical

11. **Design Authority Designator**

PRJ - LERF BASIN 41

12. **Approvals**

Title	Name	Signature	Date
Design Authority	Wilson, Nathaniel W	*Wilson, Nathaniel W*	04/14/2020
Checker	Dorsh, Paul M	*Dorsh, Paul M*	03/18/2020
Document Control Approval	Meinecke, Kathryn R	*Meinecke, Kathryn R*	05/27/2020
Environmental Protection	Wall, Jeremy M	*Wall, Jeremy M*	02/28/2020
Originator	Hall, Richard B	*Hall, Richard B*	03/18/2020
Other Approver	Greenhalgh, Aaron M	*Greenhalgh, Aaron M*	04/13/2020
Responsible Engineering Manager	Huntington, Matthew R	*Huntington, Matthew R*	04/15/2020

13. **Problem**

LERF currently consists of three main retention basins. The future mission of various Hanford clean-up projects requires additional volume capacity from LERF for liquid retention. Consequently, LERF cannot handle the increased liquid volume as currently designed and is undersized.

14. **Solution**

Design and install a new LERF liquid retention basin. The new basin (Basin 242AL-41, Basin 41) will reside in the space previously excavated west of Basin 242AL-42 (Basin 42). Install the new basin utilizing T1P226 project drawings as referenced within H-2-838745 drawing list. The installation shall adhere to construction specification RPP-SPEC-63632.

As the project drawings indicate Basin 41 will be installed. The Basin 41 design will include excavation details to achieve the proper profile with a soil/bentonite layer. The basin's bottom liner is installed followed by the basin's top liner with the top cover as the final layer. The catch basin will be located in the northwest corner as typical with other basins. Mechanical risers extending into the primary basin and the leachate system will be installed from the catch basin while the smaller sample risers are located around the basin perimeter.

15. **Analysis**

Project calculations validate the new Basin 41 design, see H-2-838745 for reference. The scope of this ECN is to install the basin, the liners, the catch basin and mechanical equipment depicted within the Block 14 Solution. ECN-715508 will perform the mechanical piping connection of the 4"-WTP-001-M17 and 3"-EVAP COND-PC5000-M17 transfer lines. ECN-715509 will install and perform the mechanical piping connection of the new transfer lines to Basin 42 Catch Basin.

Design checks were performed in accordance with ARES ESD (Sargent & Lundy) Quality Assurance Procedure (QAP) 3.2 and 3.6.

16. **Description of Change**

H-2-79582 Sheet 1:
-Update drawing to depict the installation of 242AL-41 basin and catch basin. Add a reference to point to project drawing list, H-2-838745.

H-2-79583 Sheet 1:
-Update drawing to depict the installation of 242AL-41 basin and catch basin. Add a reference to point to project drawing list, H-2-838745.

H-2-79583 Sheet 2:
-Update drawing to depict the installation of 242AL-41 basin and catch basin. Add a reference to point to project drawing list, H-2-838745.

H-2-79586 Sheet 1:
-Update drawing to depict the installation of 242AL-41 basin and catch basin. Add a reference to point to project drawing list, H-2-838745.

H-2-79604 Sheet 1:
-Update drawing to depict the installation of 242AL-41 basin.

H-2-79610 Sheet 1:

RICHARD B. HALL STATE OF WASHINGTON 55334 REGISTERED PROFESSIONAL ENGINEER 5/27/2020

ENGINEERING CHANGE NOTICE

ECN No: ECN-715507 **Rev.** 00

16. **Description of Change**

-Update drawing to depict the installation of 242AL-41 basin and catch basin. Add a reference to point to project drawing list, H-2-838745, and the catch basin design, H-2-838766. Update a drawing error pertaining to the PC5000 transfer line.

H-2-830097 Sheet 1:
-Update drawing to depict the installation of 242AL-41 basin and catch basin. Add a reference to point to project drawing list, H-2-838745.

H-2-830098 Sheet 1:
-Update drawing to depict the installation of 242AL-41 basin and catch basin. Add a reference to point to the appropriate project drawings. Update labels throughout drawing to remove "new" in multiple locations as the referenced piping is now installed and existing.

17. **Work Package Number(s)**

TBD

18. **TBDs or Holds** ☒N/A

19. **Related Structures, Systems, and Components**

a. **Related Building/Facilities** ☐N/A	b. **Related Systems** ☐N/A	c. **Related Equipment ID Nos. (EIN)** ☒N/A
LERF FACILITIES	LERF	

20. **Engineering Drawings to be Changed** Does change affect the Electronic Routing Board? ☐

Drawing Number	Rev.	Title
H-2-79582 SH 001	01	CIVIL LOCATION PLAN
H-2-79583 SH 001	01	CIVIL SITE PREPARATION EXCAVATION PLAN & DETAILS
H-2-79583 SH 002	01	CIVIL SITE PREPARATION FILL PLAN & DET
H-2-79586 SH 001	02	CIVIL SITE PLAN & FENCE DET
H-2-79604 SH 001	03	PIPING PLOT & KEY PLANS 242-A EVAP COND STREAM
H-2-79610 SH 001	03	PIPING PLAN RETENTION BASINS
H-2-830097 SH 001	01	W-519 SITE/UTILITY SYSTEMS PLAN AND PROFILE STA 2+000 TO STA 2+333.0
H-2-830098 SH 001	01	W-519 SITE/UTILITY SYSTEMS PLAN & PROFILE LERF BASINS

21. **Related Modification Traveler** ☐N/A

MT-50497

22. **Related Documents** ☐N/A

Document Number	Rev.	Title
DCN-715392	00	Delete Basin 41 from Drawings
ECN-715508	00	LERF Basin 41 Existing Piping Connections - Mechanical
ECN-715509	00	LERF Basin 41 New Piping Connections - Mechanical
H-2-838745 SH 001	00	LERF BASIN 41 DRAWING LIST / TITLE SHEET
H-2-838766 SH 001	00	LERF BASIN 41 BASIN 41 GENERAL ARRANGEMENT
H-2-88766 SH 006	00	P&ID LERF BASIN & ETF INFLUENT EVAPORATOR
RPP-SPEC-63632	00	LERF Basin 41 Construction Specification

23. **Distribution**

Name	Organization
Angevine, Brennan T	MISSION ANALYSIS ENGINEERING
Blaak, Whitney S	COGNIZANT SYSTEM ENGINEERING
Demiter, Scott M	ETF OPERATIONS
Foster, Jim	242-A/AW/ETF OPERATIONS
Goessmann, Glen E	ENGINEERING PROGRAMS
Greenhalgh, Aaron M	TANK FARM PROJECTS ENGINEERING
Harris, John W	SAFETY PROGRAM SERVICES RC/P
Joslyn, Cameron C	ETF ENGINEERING
McFerran, Brandon E	242-A/AW/ETF OPERATIONS
McShane, Michael P	ENGINEERING PROGRAMS
Omberg Carro, Susan K	NUCLEAR SAFETY
Powers, Daniel J	ETF ENGINEERING
Roosendaal, Gene D	TFP PROJECT MANAGEMENT
Rutherford, Wally	ETF ENGINEERING
Sackett, Tom E	TANK FARM PROJECTS
Samoska, Jerry A	INSTRUMENT & CNTRL ENGINEERING
Shultz, Milton V	NUCLEAR SAFETY
Smith, Gregory E	TANK FARM PROJECTS ENGINEERING
Smoot, Bill R	TFP RADCON
Stamper, Lavonne J	ETF ENGINEERING
Swanson, Brad L	242-A/AW/ETF OPERATIONS
Wall, Jeremy M	RETRVL & CLOSURE/PROJ ENV CMPL
Wilson, Nathaniel W	ETF PROJECTS ENGINEERING

ENGINEERING CHANGE NOTICE	**ECN No:** ECN-715507 **Rev.** 00

ENGINEERING CHANGE NOTICE
CONTINUATION SHEET

ECN NO.: 715507

Document/Drawing No. H-2-79582 Sheet 1 Revision 1

CONSTRUCTION NOTE: (DO NOT INCORPORATE)

THIS "WAS" CONDITION REFLECTS THE "IS" CONDITION OF DCN-715392.

WAS:

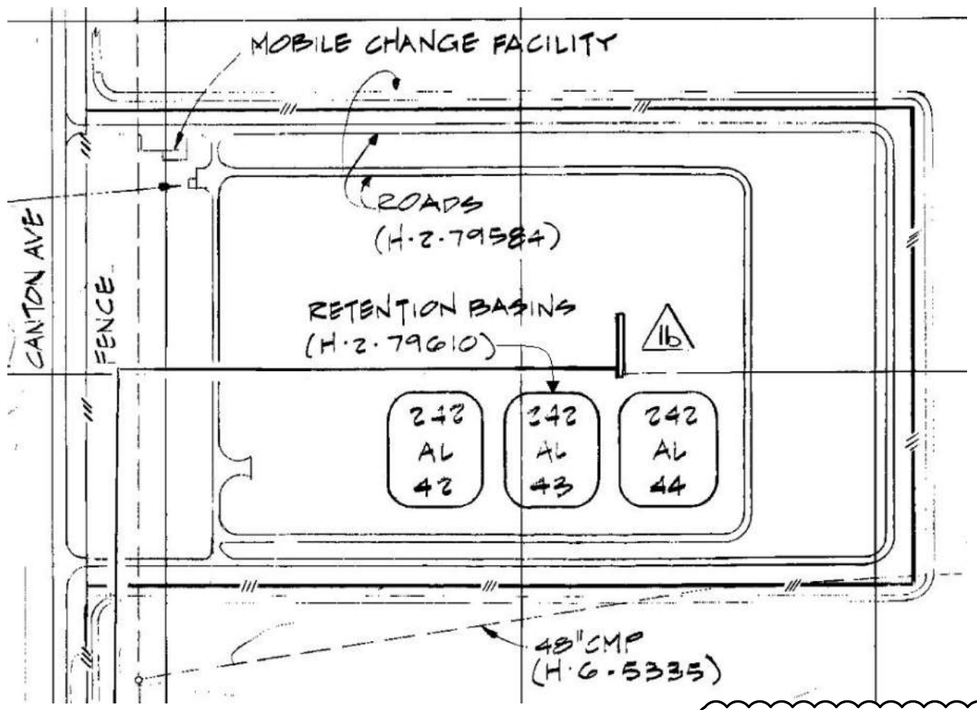

IS:

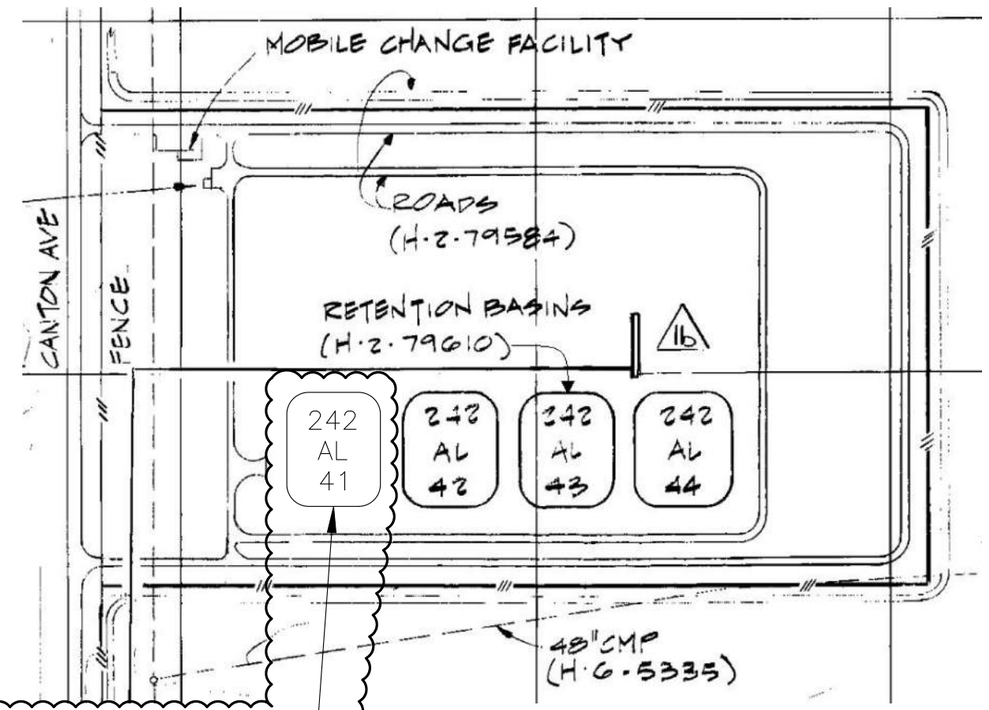

FOR PROJECT T1P226 DESIGN AND INSTALLATION OF BASIN 242AL-41, SEE PROJECT DRAWING LIST H-2-838745

ENGINEERING CHANGE NOTICE
CONTINUATION SHEET

ECN NO.: 715507

Document/Drawing No. H-2-79583 Sheet 1 Revision 1

CONSTRUCTION NOTE: (DO NOT INCORPORATE)

THIS "WAS" CONDITION REFLECTS THE "IS" CONDITION OF DCN-715392.

WAS:

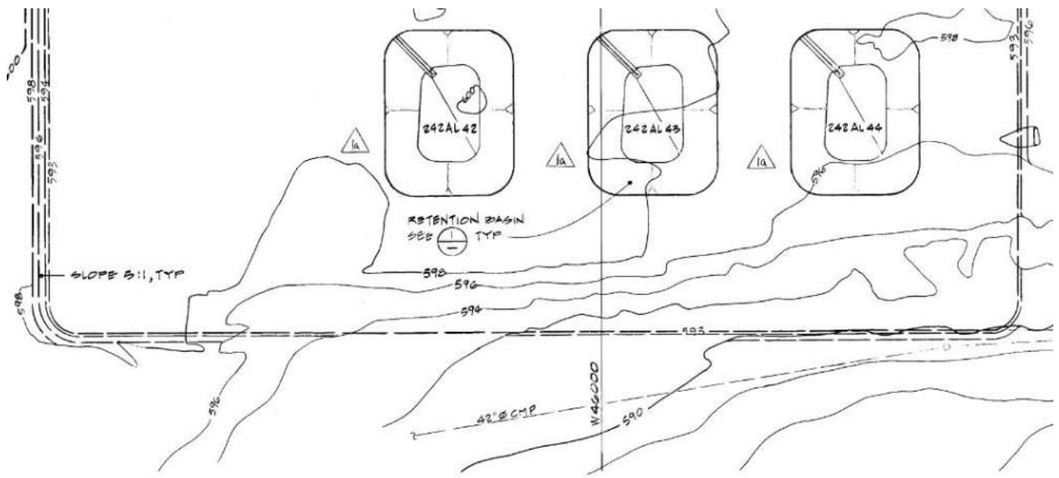

IS:

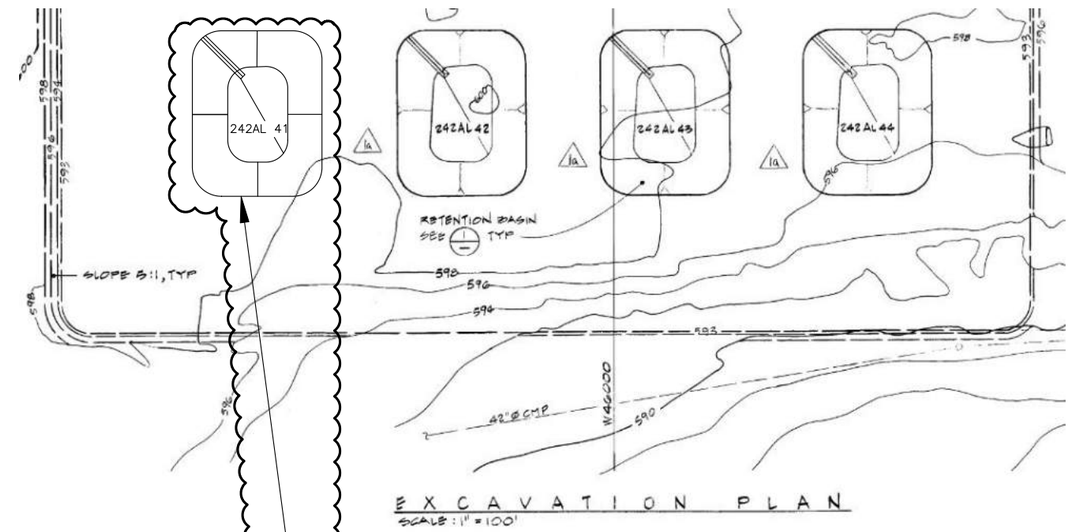

FOR PROJECT T1P226 DESIGN AND INSTALLATION OF BASIN 242AL-41, SEE PROJECT DRAWING LIST H-2-838745

ENGINEERING CHANGE NOTICE
CONTINUATION SHEET

ECN NO.: 715507

Document/Drawing No. H-2-79583 Sheet 2 Revision 1

CONSTRUCTION NOTE: (DO NOT INCORPORATE)

THIS "WAS" CONDITION REFLECTS THE "IS" CONDITION OF DCN-715392.

WAS:

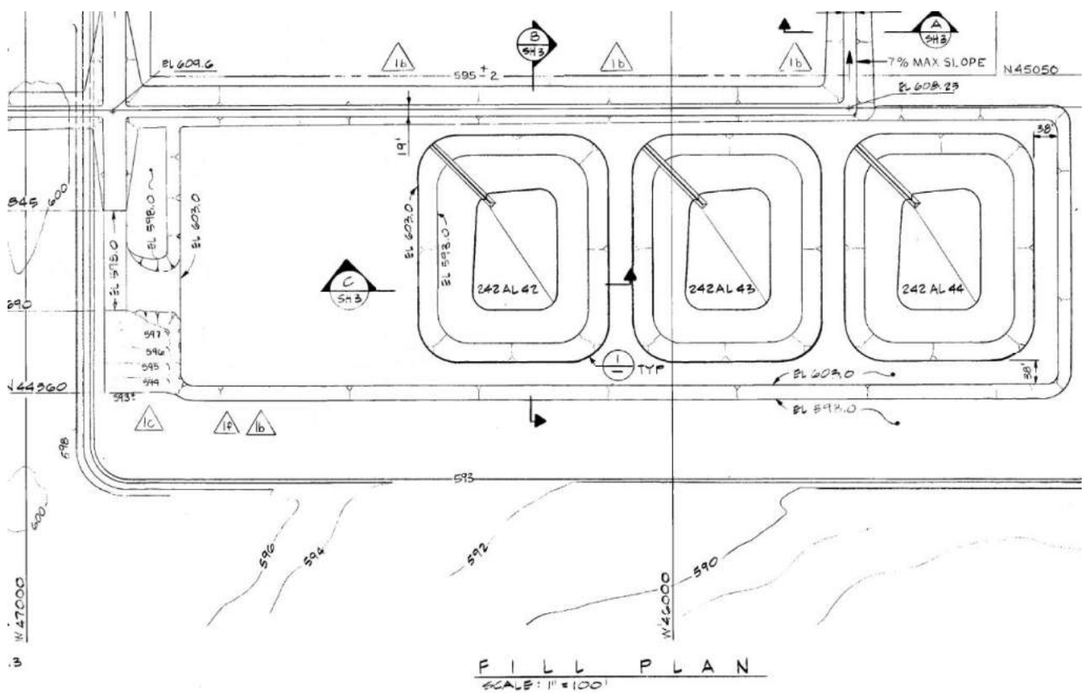

IS:

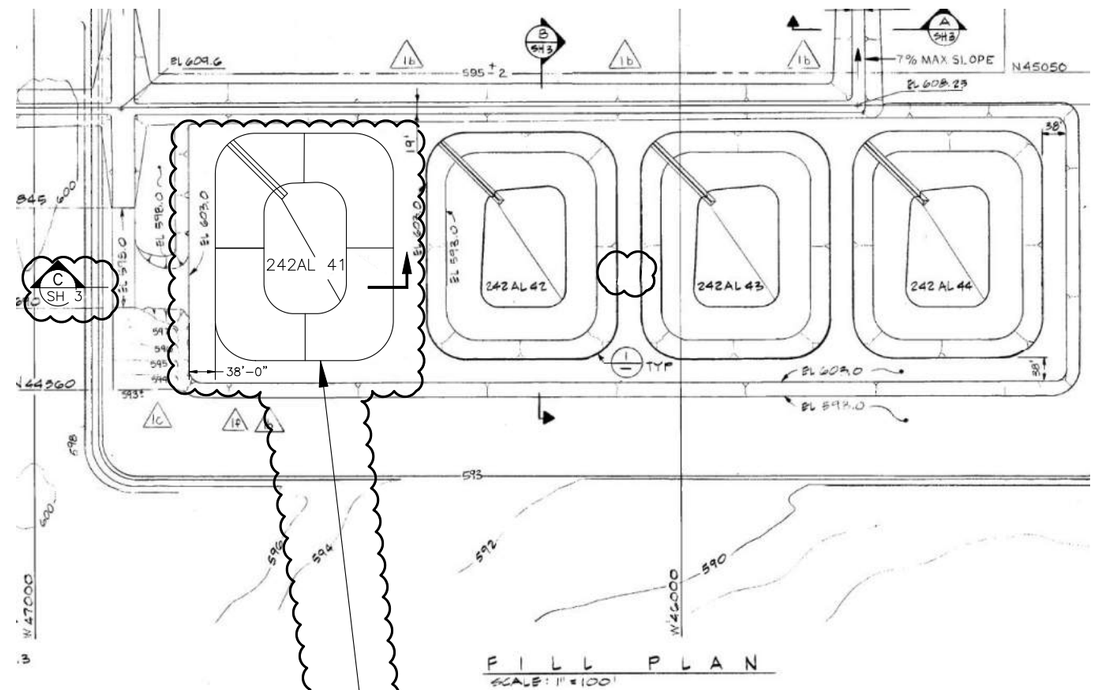

FOR PROJECT T1P226 DESIGN AND INSTALLATION OF BASIN 242AL-41, SEE PROJECT DRAWING LIST H-2-838745

ENGINEERING CHANGE NOTICE
CONTINUATION SHEET

ECN NO.: 715507

Document/Drawing No. H-2-79586 Sheet 1 Revision 2

CONSTRUCTION NOTE: (DO NOT INCORPORATE)

THIS "WAS" CONDITION REFLECTS THE "IS" CONDITION OF DCN-715392.

WAS:

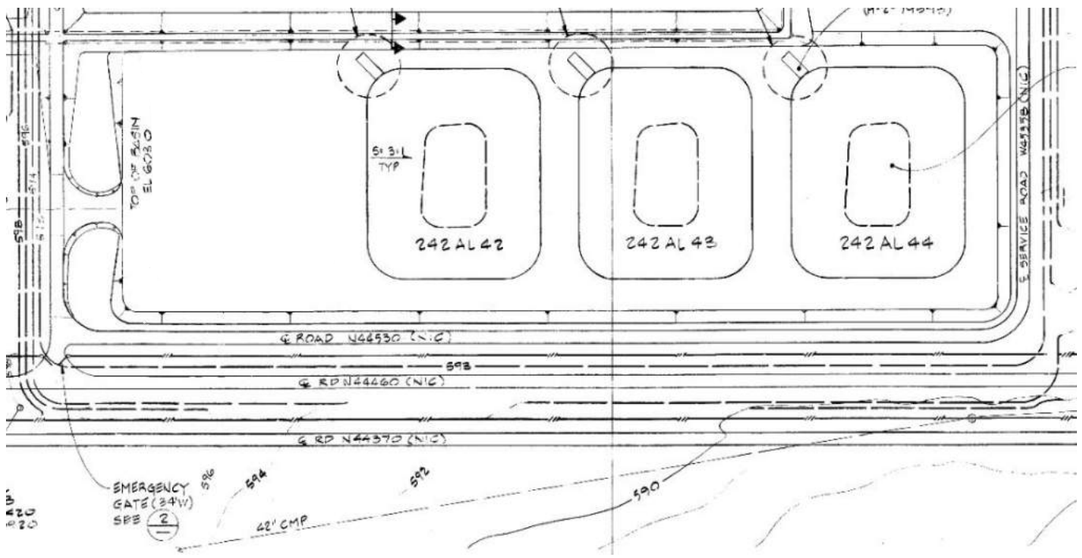

IS:

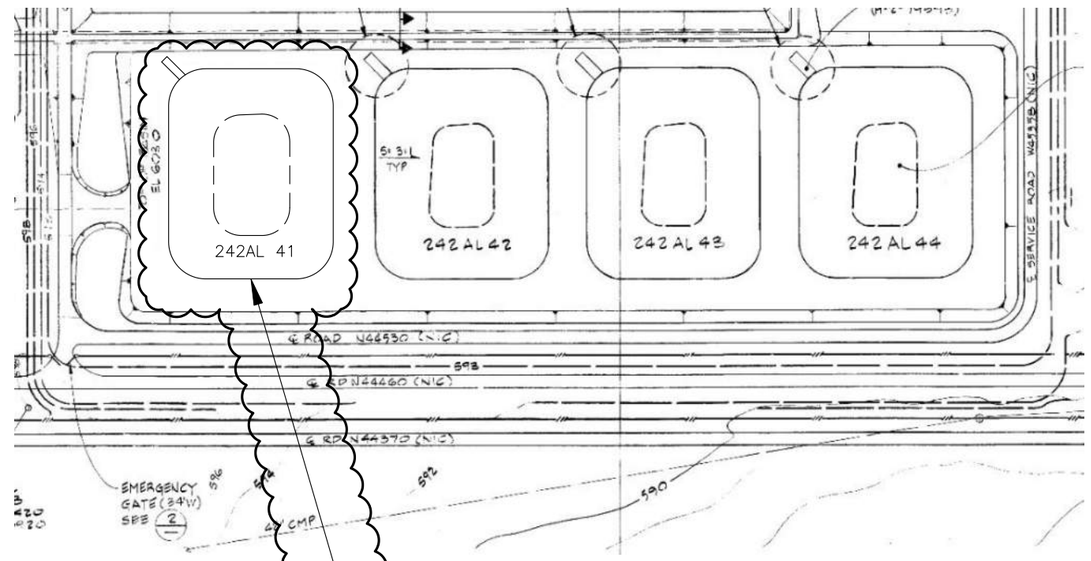

FOR PROJECT T1P226 DESIGN AND INSTALLATION OF BASIN 242AL-41, SEE PROJECT DRAWING LIST H-2-838745

ENGINEERING CHANGE NOTICE
CONTINUATION SHEET

ECN NO.: 715507

Document/Drawing No. H-2-79604 Sheet 1 Revision 3

WAS:

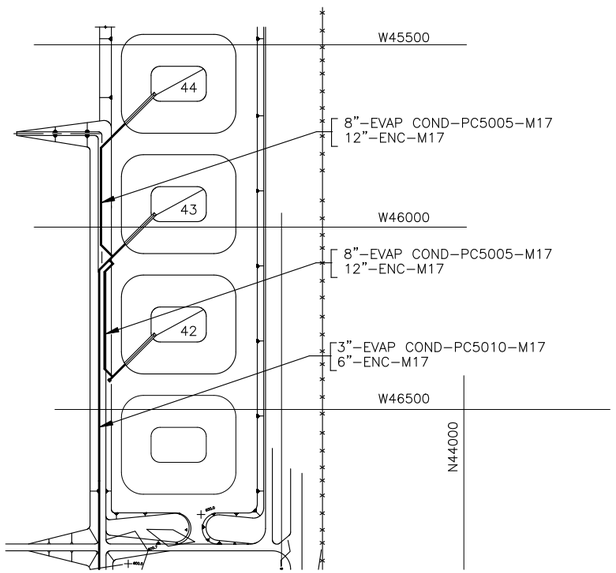

IS:

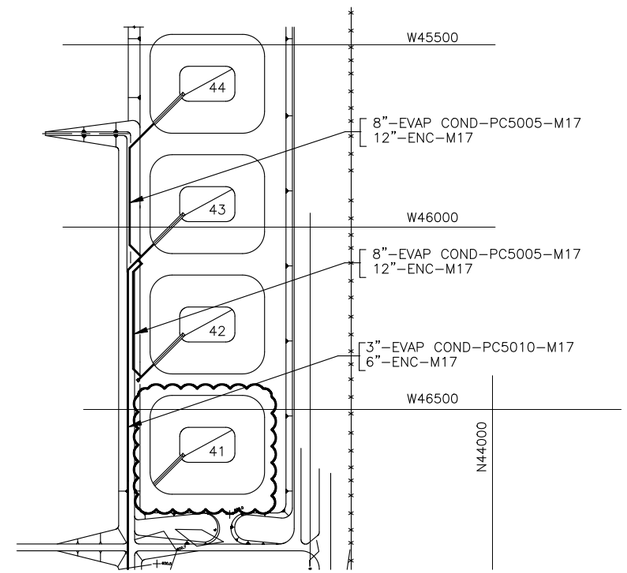

CONSTRUCTION NOTE: (DO NOT INCORPORATE)

THIS "WAS" CONDITION REFLECTS THE "IS" CONDITION OF DCN-715392.

ENGINEERING CHANGE NOTICE
CONTINUATION SHEET

ECN NO.: 715507

Document/Drawing No. H-2-79610 Sheet 1 Revision 3

WAS:

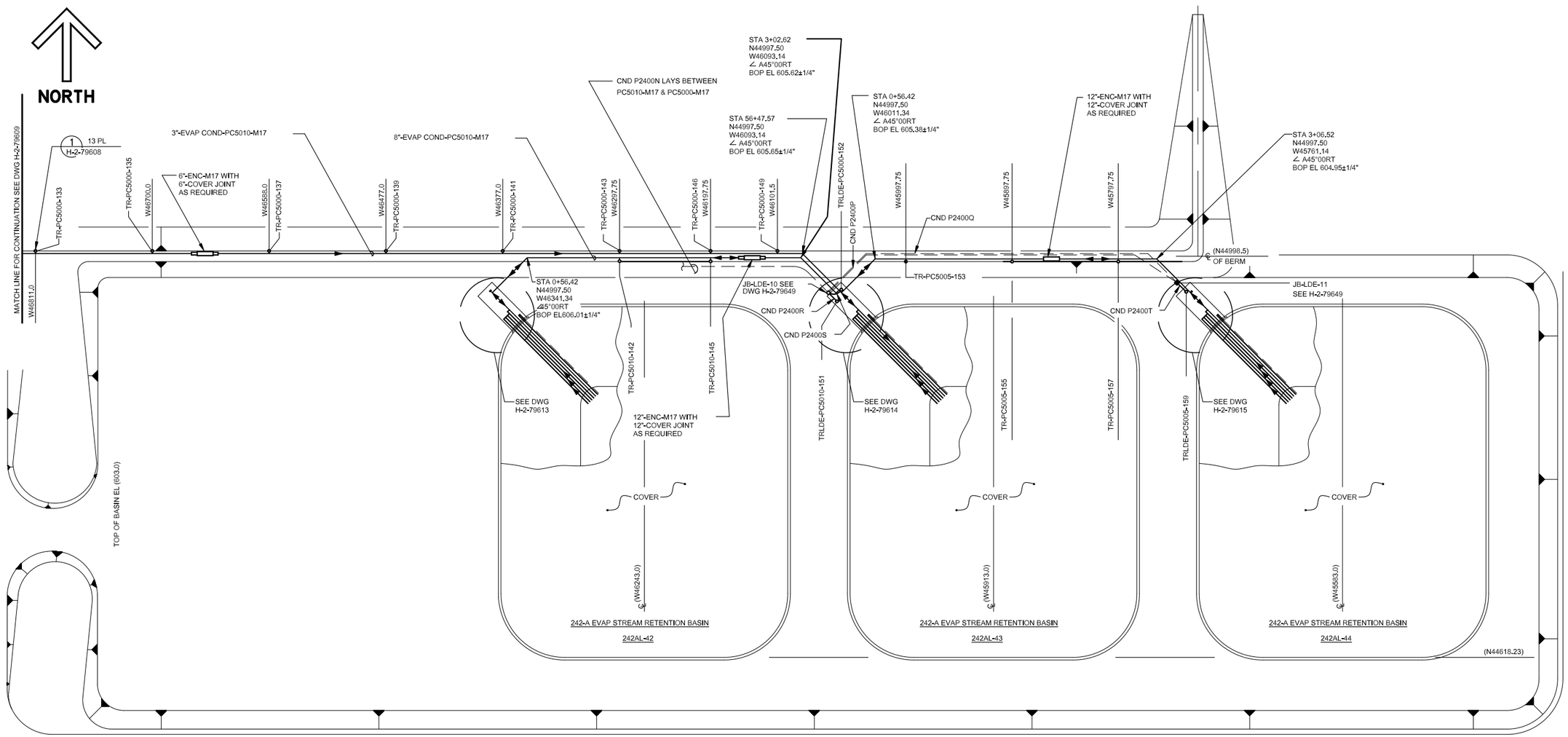

PLAN
SCALE: 1"=40'-0"

NOTE:

1. FOR GENERAL NOTES SEE DWG H-2-79605

ENGINEERING CHANGE NOTICE
CONTINUATION SHEET

ECN NO.: 715507

Document/Drawing No. H-2-79610 Sheet 1 Revision 3

IS:

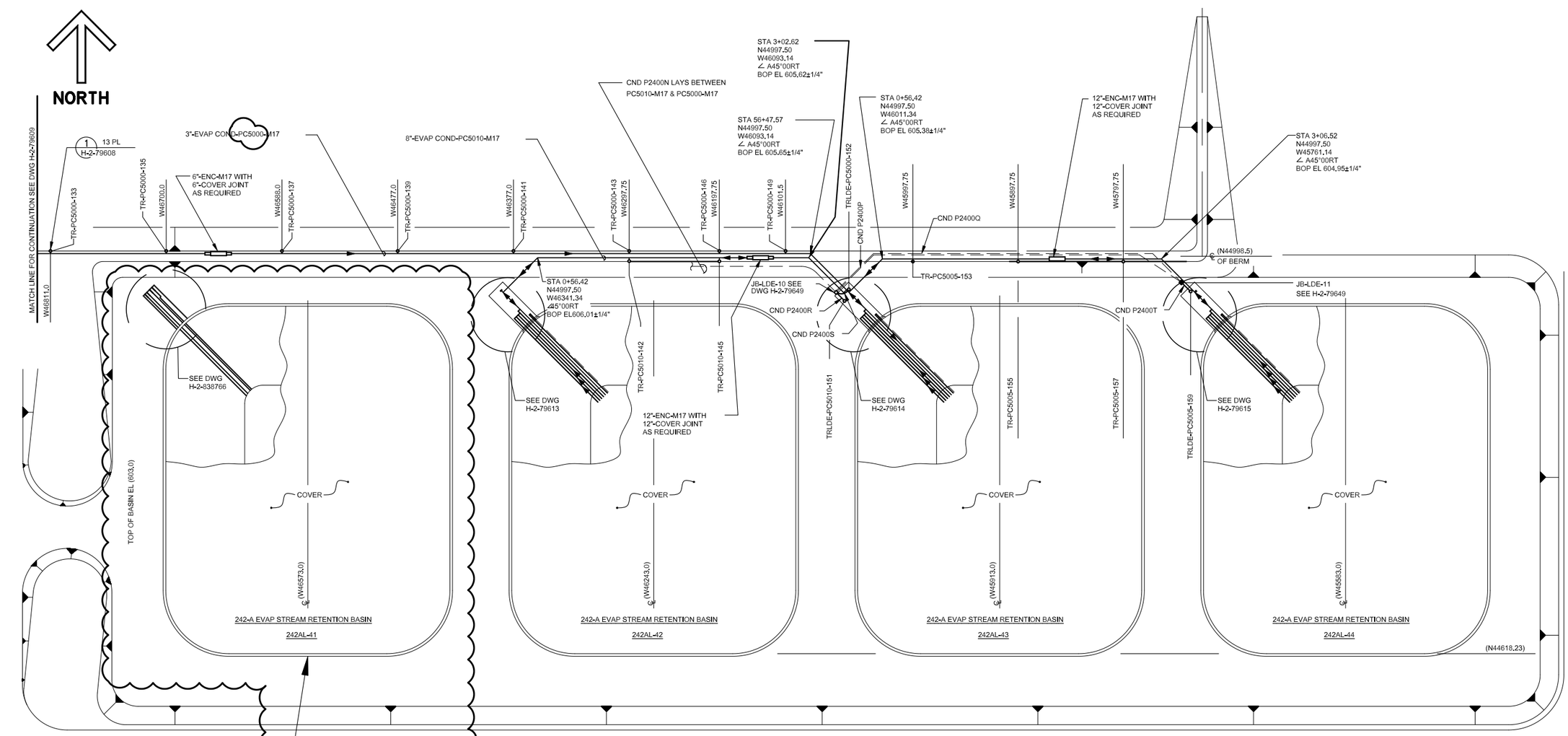

FOR PROJECT T1P226 DESIGN AND
INSTALLATION OF BASIN 242AL-41,
SEE PROJECT DRAWING LIST H-2-838745

PLAN
SCALE: 1"=40'-0"

NOTE:

1. FOR GENERAL NOTES SEE DWG H-2-79605

ENGINEERING CHANGE NOTICE
CONTINUATION SHEET

ECN NO.: 715507

Document/Drawing No. H-2-830097 Sheet 1 Revision 1

WAS:

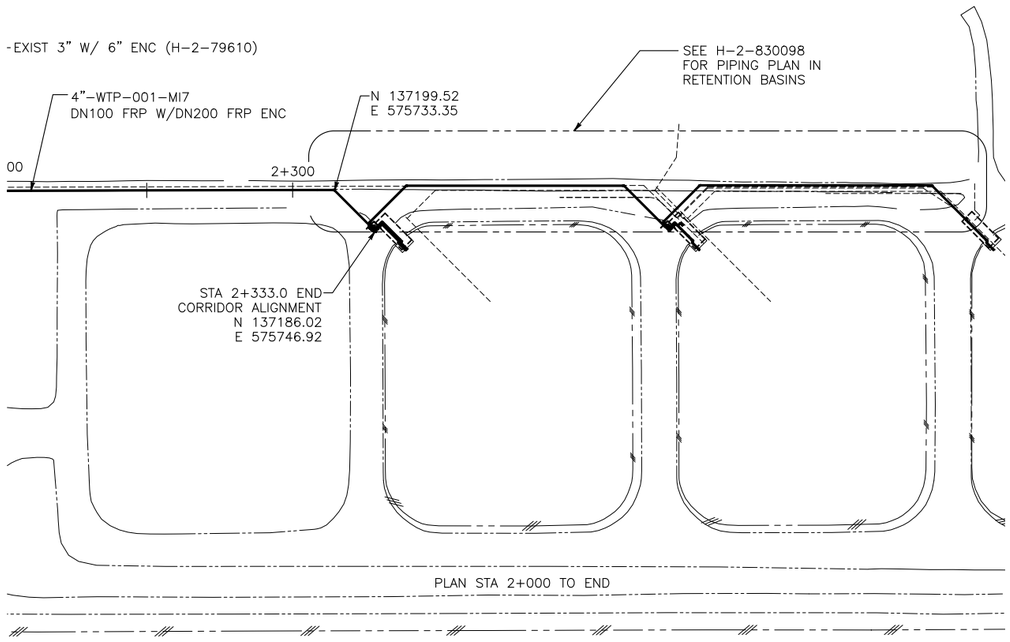

IS:

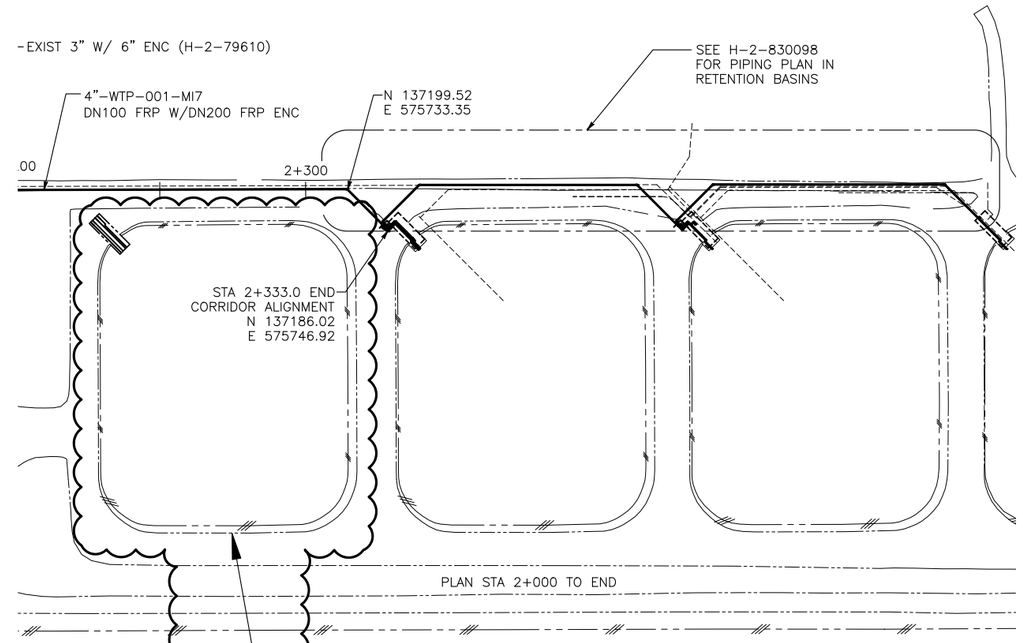

FOR PROJECT T1P226 DESIGN AND
INSTALLATION OF BASIN 242AL-41,
SEE PROJECT DRAWING LIST H-2-838745

ENGINEERING CHANGE NOTICE
CONTINUATION SHEET

ECN NO.: 715507

Document/Drawing No. H-2-830098 Sheet 1 Revision 1

WAS:

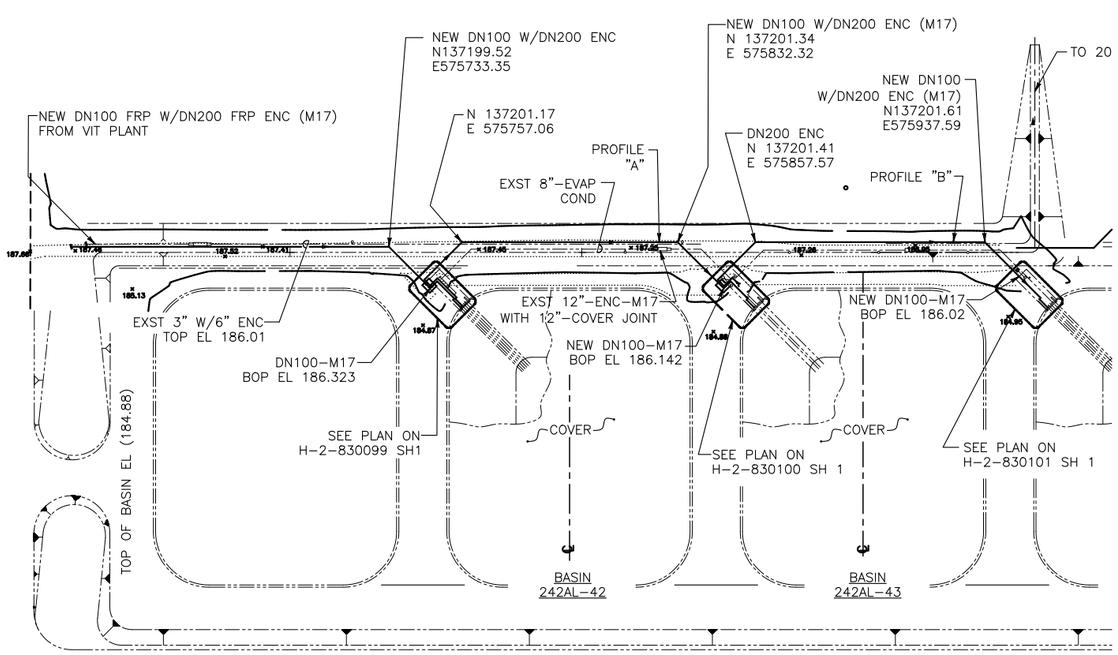

IS:

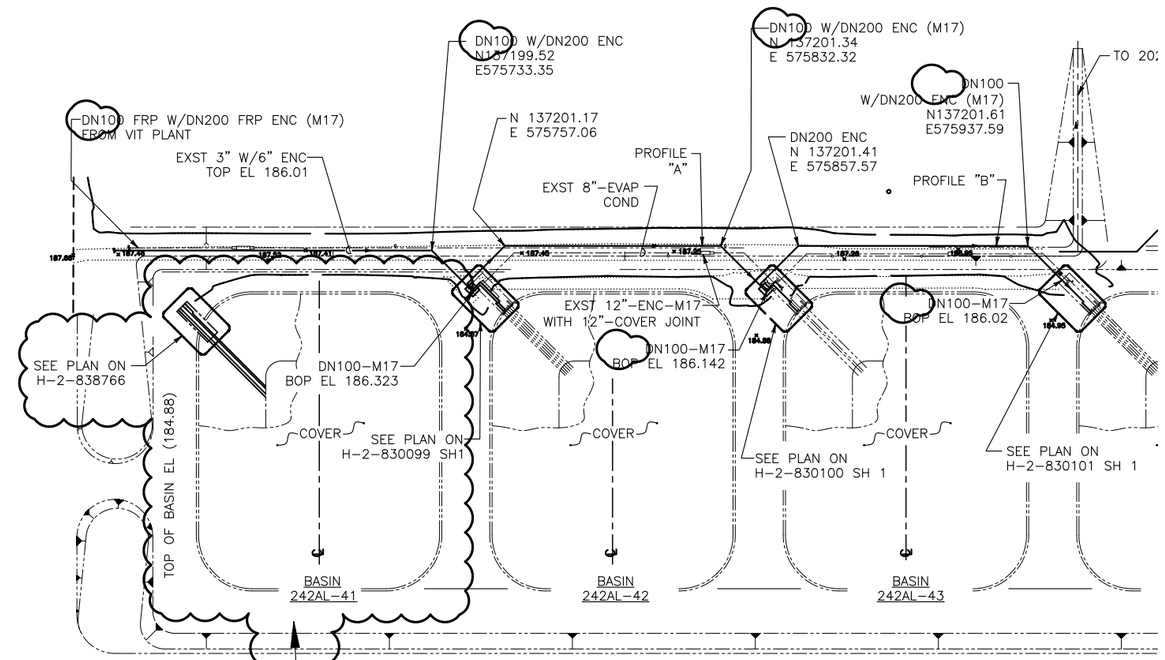

FOR PROJECT T1P226 DESIGN AND
INSTALLATION OF BASIN 242AL-41,
SEE PROJECT DRAWING LIST H-2-838745

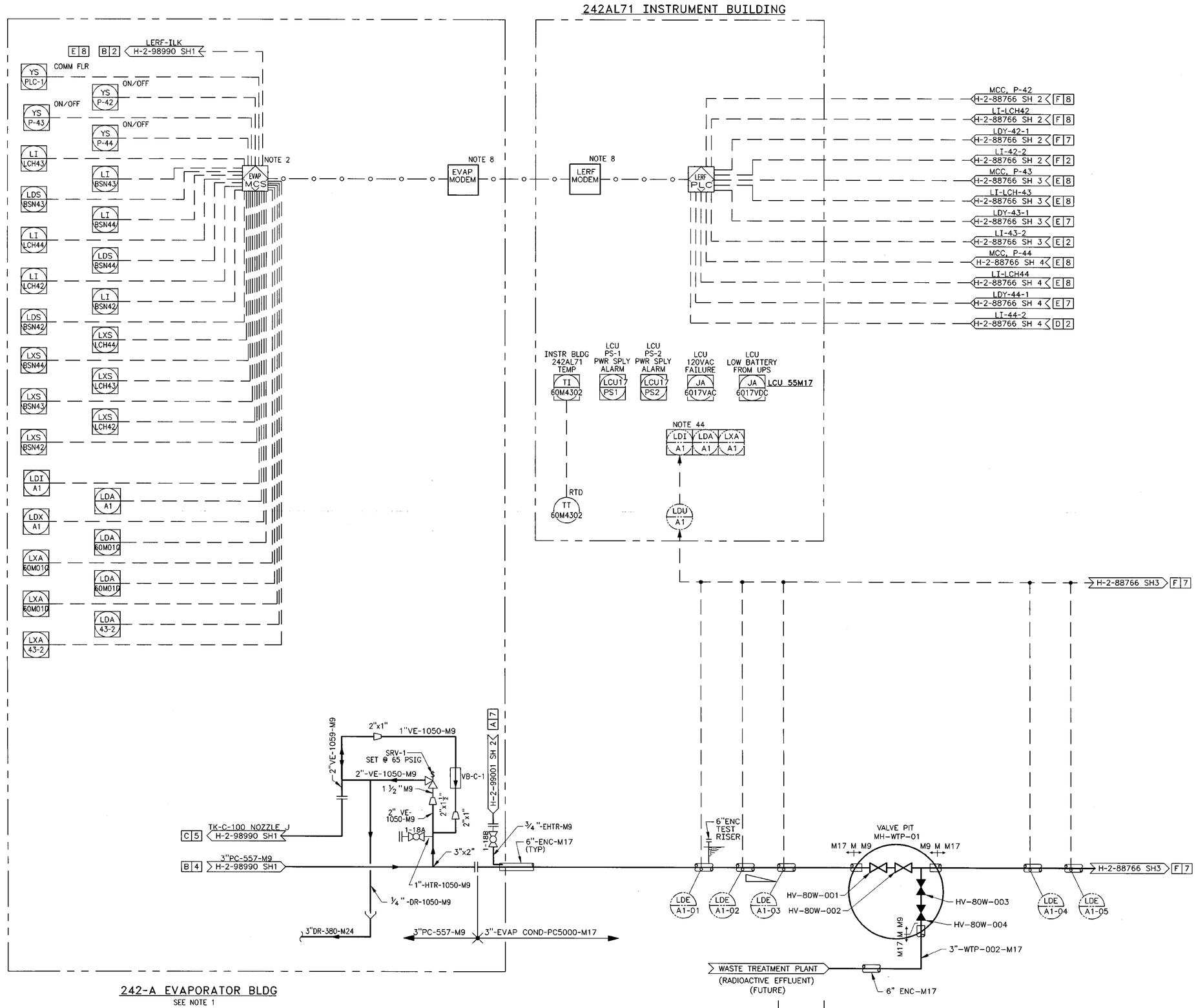

NOTES:

1. FOR ADDITIONAL NOTES AND SYMBOL LEGEND SEE DWG H-2-79601, SH 1.
2. OPERATING CONTRACTOR TO REPROGRAM EXISTING EVAP-MCS-10 AS REQUIRED. (EXISTING SIGNALS TO 242A MCS NOT SHOWN, SEE DWG H-2-79601, SH 2).
3. DELETED
4. AIR PRESSURE SHALL NOT EXCEED 15 PSIG PER M-17 PIPING MANUFACTURER RECOMMENDATION.
5. MODIFY ETF SURGE TANK 2925E-60A-TK-1 "HIGH" LEVEL FROM ETF MCS TO NEW MCS (REFERENCE DWG H-2-89337, SH 1).
6. MODIFY ETF SURGE TANK INLET VALVES AOV-60A055 AND AOV-60A056 POSITION FROM ETF MCS TO NEW MCS (REFERENCE DWG H-2-88974).
7. MODIFY EXISTING 242A MCS INTERLOCK PER DWG H-2-88816, SH 1.
8. RADIRECT ASMI-52 DSL MODEM.
9. RUPTURE DISKS TO BE OSECO 1.5" TYPE PLR NICKEL NONFRAGMENTING RUPTURE DISK IN 1.5" TYPE PRDI 316SS RUPTURE DISK HOLDER, 150 LB. ANSI OR ENGINEERING APPROVED EQUAL. RUPTURE DISK TO BE RATED FOR A BURST PRESSURE OF 7 PSIG @ 72 DEGREES F, 0% MANUFACTURING RANGE.
10. H-2-88815 CONTAINS SOFTWARE THAT PROVIDES SHUTDOWN TO LERF TRANSFER PUMPS IN THE EVENT OF LOW FLOW. THE FLOW SWITCH ON THE PUMP IS CAPABLE OF PROVIDING THE SAME PROTECTION TO THE PUMP. HOWEVER THE SWITCH IS NOT ADJUSTABLE AND MAY TRIP AT A FLOW HIGHER THAN NECESSARY. IN THE EVENT THAT A LOWER FLOW IS REQUIRED OR IF THE SWITCH BECOMES UNRELIABLE, THE SWITCH MAY BE JUMPERED OUT VIA THE CORRECTIVE MAINTENANCE PROGRAM.
11. DELETED
12. DELETED
13. MODIFY ETF SURGE TANK 2025E-60A-TK-1 CONTINUOUS LEVEL FROM ETF MCS TO NEW MCS (REFERENCE DWG H-2-89337, SH 1)
14. DELETED
15. DELETED
16. DELETED
17. DELETED
18. DELETED
19. DELETED
20. DELETED
21. PROVIDE ENCASEMENT TEST RISERS APPROXIMATELY EVERY 100 FEET.
22. INSTALL LDE 60M01D IN EXISTING RISER.
23. DELETED
24. DELETED
25. DELETED
26. DELETED
27. DELETED
28. DELETED
29. DELETED
30. PROVIDE LEAK DETECTION APPROXIMATELY EVERY 1000 FEET OF ENCASED PIPE.
31. DELETED
32. INSTALL LDE 60M01C IN EXISTING RISER.
33. DELETED
34. DELETED
35. MODIFY EXISTING BASIN AND LEACHATE LEVEL SIGNALS, SHARED WITH THE NEW MCS, FROM EXISTING LERF-PLC-20 TO EXISTING EVAP-PLC-10 TO EXISTING 242A MCS.
36. MODIFY EXISTING LEACHATE PUMP STATUS AND CATCH BASIN LEAK DETECTION SIGNALS, RETRANSMITTED FROM THE NEW MCS, FROM EXISTING LERF-PLC-20 TO EXISTING EVAP-PLC-10 TO EXISTING 242A MCS.
37. OPERATING CONTRACTOR TO REPROGRAM EXISTING 242A MCS AS REQUIRED.
38. OPERATING CONTRACTOR TO REPROGRAM ETF MCS AS REQUIRED.
39. FOR NEW MCS LOGIC SEE DRAWINGS H-2-88815, SH 1-6.
40. BLIND FLANGE CAN BE REMOVED AND LEFT OFF FOR INSPECTION OF CONTAINMENT PIPE.
41. REMOVEABLE SPOOL PIECE TO FACILITATE INSTALLATION OF PORTABLE PUMP AND PIPE MANIFOLD.
42. CONTINUOUS LEAK DETECTION CABLE.
43. SEND LERF PLC INPUTS LDA-60M01D, LXA-60M01D, LDA-60M01C, LXA-60M01C, LDA-43-2, & LXA-43-2 SIGNALS TO EVAPORATOR BLDG PLC VIA EXST MODEM.
44. SEND LERF PLC INPUT, LDU-A1, TO EVAPORATOR BLDG VIA EXST MODEM.
THE 4-20 ANALOG SIGNAL SHOULD BE INTERPRETED AS FOLLOWS:
0mA=Loss of Power;
2.0mA=Cable Break;
3.0mA=Cable Loop Impalance/Service Needed;
3.5mA=Service Required Alarm;
5.05mA=System Normal;
~6.45-8.75mA=LDE-A1-06 Leak;
~9.26-11.56mA=LDE-A1-05 Leak;
~11.85-14.15mA=LDE-A1-04 Leak;
~14.74-17.04mA=LDE-A1-03 Leak;
~17.45-19.75mA=LDE-A1-02 Leak;
~20.16-22.46mA=LDE-A1-01 Leak.

BLDG. NO.
2025E
242A
242AL71

INDEX NO.

THIS SPACE RESERVED FOR BUILDING AND INDEX NUMBERS

APR 20 2016
DATE: STA: 30
HANFORD RELEASE
ID: 25

H-2-79601,SH2	P & ID 242-A EVAP BLDG & XCY PIPING	H-2-88737	SITE PLAN AND DRAWING LIST
NUMBER	TITLE	NUMBER	TITLE
DRAWING TRACEABILITY LIST		REFERENCES	
		NEXT USED ON	

REV NO	DESCRIPTION	REV BY DATE	CHK BY DATE	DFTD APVD DATE	ENGR	COMPANY
14	INCORPORATED ECN-726604-R2 AND ECN-726604-R3	KDJ 4/10				CHPRC

REVISIONS

		DATE
DESIGNED	CM NICKOLAUS	
DSGN ENGR	CM NICKOLAUS	10-1-1993
CHECKED	JA SHIPMAN	9-20-1993
SAFETY	J ARCHIBALD	10-14-1993
ENVIR	JD AXFORD	10-18-1993
QUAL ENGR	TD HAYS	10-14-1993
LEAD ENGR	RT HALLUM	10-12-1993
	GR MEZGER	10-14-93
APPROVED FOR IMPLEMENTATION BY	JJ NOBLE	
FOR	WHC	DATE 10-14-93

SAFETY CLASS: 3 | EDT

U.S. DEPARTMENT OF ENERGY
RICHLAND FIELD OFFICE
KAISER ENGINEERS HANFORD COMPANY

P & ID
LERF BASIN & ETF INFLUENT EVAPORATOR

PROJECT C-018H 242-A EVAP PUREX PLANT CNDS TRTMT FACIL

SIZE	BLDG NO.	INDEX NO.	DWG NO.	REV NO.
F	SEE ABOVE	7004	H-2-88766	14

SCALE: NONE | JOB NO. CR9583 | SHEET 1 OF 5

PLOT SCALE: 1=1 | 18466 | KEH 0350.00 (04/92)

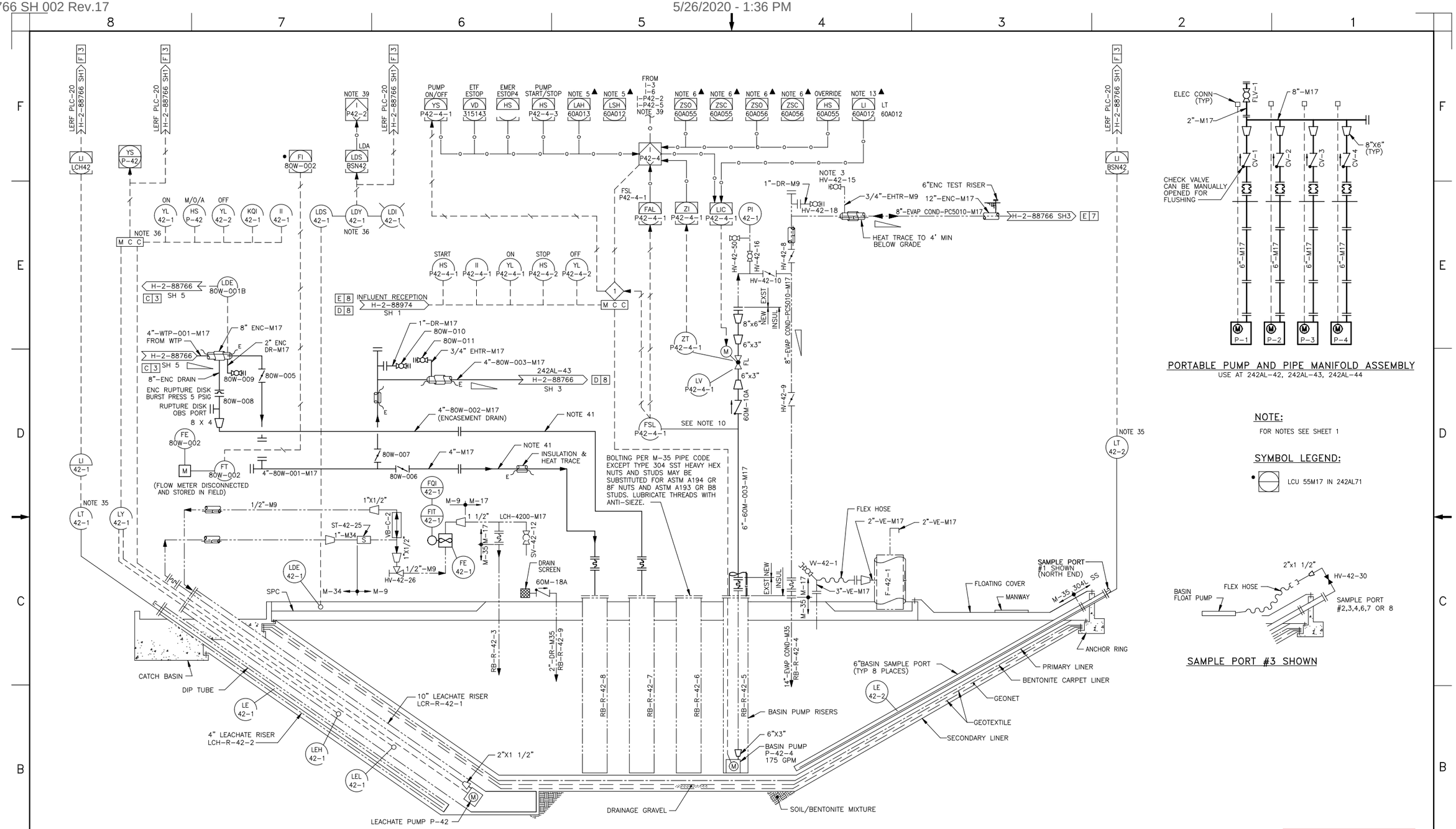

DATE:
May 26,2020
HANFORD RELEASE

DWG NUMBER	TITLE	REF NUMBER	TITLE
DRAWING TRACEABILITY LIST		NEXT USED ON	REFERENCES

REV NO	DESCRIPTION
17	INC DCN-715849

REVISIONS

BLDG NO 242AL-42

INDEX NO 7004

CAUTION: NOT COMPLETE WITHOUT CURRENT CHANGE DOCUMENTS FROM DATABASE

	NAME	DATE	COMPANY
DRAFTER	A W KRONER	02/26/2020	WRPS
DRAFTING CHECKER	S T FRANKLIN	02/26/2020	WRPS
DISC. ENG. GROUP LEAD	T M GREEN	02/26/2020	WRPS

U.S. DEPARTMENT OF ENERGY
Office of River Protection

P&ID
LERF BASIN & ETF INFLUENT EVAPORATOR

SIZE	DRAWING NUMBER	SHEET	REV
F	H-2-88766	2	17

SCALE NONE

30271 DOE_TB_F.DWG (SEPTEMBER 2019)

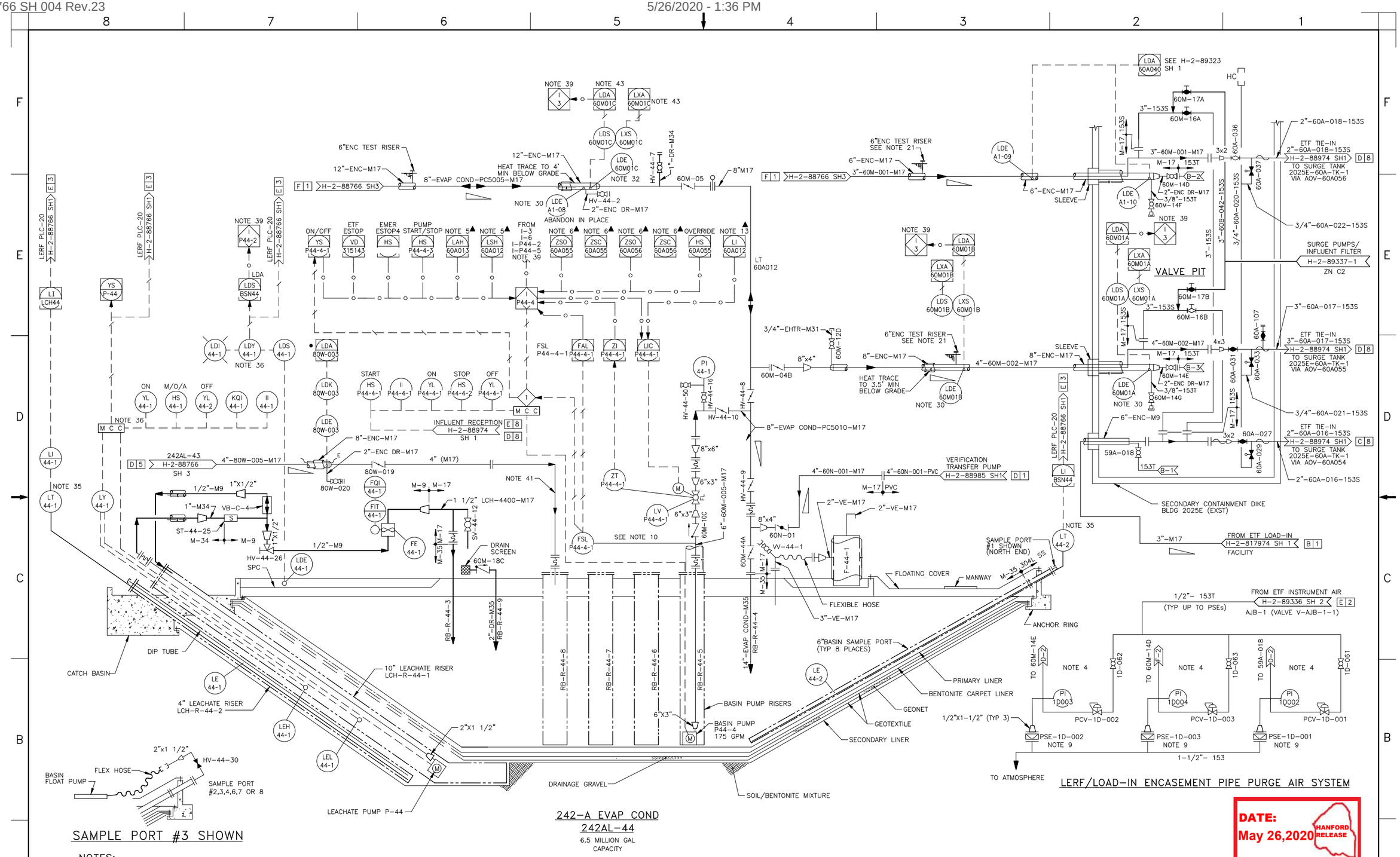

NOTES:

FOR NOTES SEE SHEET 1.

SYMBOL LEGEND:

• LCU 55M17 IN 242AL71

DWG NUMBER	TITLE
DRAWING TRACEABILITY LIST	

REF NUMBER	TITLE
REFERENCES	
NEXT USED ON END ITEM	

REV NO	DESCRIPTION
23	INC DCN-715849
REVISIONS	

BLDG NO 242AL-44

INDEX NO 7004

CAUTION: NOT COMPLETE WITHOUT CURRENT CHANGE DOCUMENTS FROM DATABASE

	NAME	DATE	COMPANY
DRAFTER	A W KRONER	01/09/2020	WRPS
DRAFTING CHECKER	S T FRANKLIN	01/09/2020	WRPS
DISC ENG GROUP LEAD	T M GREEN	01/09/2020	WRPS

U.S. DEPARTMENT OF ENERGY
Office of River Protection

P&ID
LERF BASIN & ETF INFLUENT EVAPORATOR

SIZE F | DRAWING NUMBER H-2-88766 | SHEET 4 | REV 23

SCALE NONE

30273

DOE_TB_F.DWG (SEPTEMBER 2019)

ENGINEERING CHANGE NOTICE

Prepared For the U.S. Department of Energy, Assistant Secretary for Environmental Management
By Washington River Protection Solutions, LLC., PO Box 850, Richland, WA 99352
Contractor For U.S. Department of Energy, Office of River Protection, under Contract DE-AC27-08RV14800

TRADEMARK DISCLAIMER: Reference herein to any specific commercial product, process, or service by trade name, trademark, manufacturer, or otherwise, does not necessarily constitute or imply its endorsement, recommendation, or favoring by the United States government or any agency thereof or its contractors or subcontractors. Printed in the United States of America.

Release Stamp

DATE: May 27,2020 HANFORD RELEASE

1a. **ECN No:** ECN-715508 **Rev.** 00	1b. **Project Number:** T1P226 ☐N/A
2. **Title:** LERF Basin 41 Existing Piping Connections - Mechanical	
3. **WA or Redline ECN:** ☐WA ☐REDLINE ☒N/A	4. **Temporary Modification:** ☐Yes ☒No
5. **Design Type:** II	6. **Design Verification Required:** ☐Yes ☒No
7. **Safety Classification:** ☐SC ☐SS ☒GS ☐N/A	**Workflow Approval Status:** For Approval **Clearance Review Restriction Type:** undefined
8. **USQ Number:** ☒N/A RPP-27195	9. **PrHA Number** **Rev.** ☒N/A

10. **Trend Codes**

Cause	Commodity	Discipline Driver
Initial Design Release	Piping, Tubing	Mechanical

11. **Design Authority Designator**

PRJ - LERF BASIN 41

12. **Approvals**

Title	Name	Signature	Date
Design Authority	Wilson, Nathaniel W	*Wilson, Nathaniel W*	04/21/2020
Checker	Dorsh, Paul M	*Dorsh, Paul M*	03/18/2020
Document Control Approval	Alvarez, Efren	*Alvarez, Efren*	05/27/2020
Environmental Protection	Wall, Jeremy M	*Wall, Jeremy M*	04/30/2020
Originator	Hall, Richard B	*Hall, Richard B*	03/18/2020
Other Approver	Joslyn, Cameron C	*Joslyn, Cameron C*	05/07/2020
Responsible Engineering Manager	Huntington, Matthew R	*Huntington, Matthew R*	05/07/2020

13. **Problem**

The new LERF Basin 41, associated catch basin, and ancillary equipment was installed by ECN-715507. The 242-A Process Condensate and the EMF Effluent lines do not route to the new basin. Without a direct route for these two process lines to drain into Basin 41 the future liquid volume sent to LERF will overwhelm the other LERF basins.

14. **Solution**

Install a tie-in point within the existing 242-A Process Condensate (3"-EVAP COND-PC5000-M17) and EMF Effluent (4"-WTP-001-M17) lines and route new pipe to Basin 41. Install the new tie-in point in each transfer line utilizing an FRP carrier pipe and encasement pipe as identified on the design media, reference H-2-838765. Excavate into the south LERF transfer line berm to access the transfer line tie-in points as shown on the project design media. Cut and install the transfer line tie-in connections as described in the construction specification RPP-SPEC-63632 and the manufacturer's recommendations. Install the new transfer lines 4"-60M-008-M18 and 3"-60M-009-M18 up to the appropriate connection in Basin 41 with the proper piping insulation, heat trace, and pipe supports. Coordinate backfill of the transfer line berm with the installation of new transfer lines in ECN-715509.

15. **Analysis**

Perform the tie-in point into the 3"-EVAP COND-PC5000-M17 and the 4"-WTP-001-M17 at the coordinate location identified on drawing H-2-838765. Route the new pipe lines to Catch Basin 41 for connection with the catch basin piping as detailed within the design media and installed via ECN-715507. Perform all field work in accordance with the project construction specification RPP-SPEC-63632.

Design checks were performed in accordance with ARES ESD (Sargent & Lundy) Quality Assurance Procedure (QAP) 3.2 and 3.6.

16. **Description of Change**

H-2-79604 Sheet 1:
-Update drawing to depict the installation of new line 3"-60M-009-M18.

H-2-79610 Sheet 1:
-Update drawing to depict the installation of new line 3"-60M-009-M18. The installation includes the FRP tie-in into the existing transfer lines as depicted on H-2-838765.

H-2-88766 Sheet 1:
-Update the sheet and zone reference for the 3"-EVAP COND-PC5000-M17 transfer line.

H-2-88766 Sheet 2:
-Update the sheet and zone reference for the 4"-WTP-001-M17 transfer line.

H-2-88766 Sheet 3:
-Update the sheet and zone reference for the 3"-EVAP COND-PC5000-M17 transfer line

H-2-88766 Sheet 5:
-Update the sheet and zone reference for the 4"-WTP-001-M17 transfer line.

RICHARD B. HALL STATE OF WASHINGTON 53333 REGISTERED PROFESSIONAL ENGINEER 5/27/2020

ENGINEERING CHANGE NOTICE

ECN No: ECN-715508 **Rev.** 00

16. **Description of Change**

H-2-830097 Sheet 1:
-Update drawing to depict the installation of new line 3"-60M-009-M18 and the new line 4"-60M-008-M18. The installation includes the FRP tie-in into the existing transfer lines as depicted on H-2-838765.

H-2-830098 Sheet 1:
-Update drawing to depict the installation of new line 3"-60M-009-M18 and the new line 4"-60M-008-M18. The installation includes the FRP tie-in into the existing transfer lines as depicted on H-2-838765.

17. **Work Package Number(s)**

TBD

18. **TBDs or Holds** ☒N/A

19. **Related Structures, Systems, and Components**

a. **Related Building/Facilities** ☐N/A	b. **Related Systems** ☐N/A	c. **Related Equipment ID Nos. (EIN)** ☐N/A
LERF FACILITIES	LERF	3"-EVAP COND-PC5000-M17 4"-WTP-001-M17

20. **Engineering Drawings to be Changed** Does change affect the Electronic Routing Board? ☐

Drawing Number	Rev.	Title
H-2-79604 SH 001	03	PIPING PLOT & KEY PLANS 242-A EVAP COND STREAM
H-2-79610 SH 001	03	PIPING PLAN RETENTION BASINS
H-2-830097 SH 001	01	W-519 SITE/UTILITY SYSTEMS PLAN AND PROFILE STA 2+000 TO STA 2+333.0
H-2-830098 SH 001	01	W-519 SITE/UTILITY SYSTEMS PLAN & PROFILE LERF BASINS
H-2-88766 SH 001	14	P & ID LERF BASIN & ETF INFLUENT EVAPORATOR
H-2-88766 SH 002	16	P&ID LERF BASIN & ETF INFLUENT EVAPORATOR
H-2-88766 SH 003	20	P&ID LERF BASIN & ETF INFLUENT EVAPORATOR
H-2-88766 SH 005	02	P & ID LERF-WTP INTERFACE

21. **Related Modification Traveler** ☐N/A

MT-50497

22. **Related Documents** ☐N/A

Document Number	Rev.	Title
ECN-715507	00	LERF Basin 41 Installation - Mechanical
ECN-715509	00	LERF Basin 41 New Piping Connections - Mechanical
H-2-838765 SH 001	00	LERF BASIN 41 MECHANICAL GENERAL ARRANGEMENT
H-2-88766 SH 006	00	P&ID LERF BASIN & ETF INFLUENT EVAPORATOR
RPP-SPEC-63632	00	LERF Basin 41 Construction Specification

23. **Distribution**

Name	Organization
Angevine, Brennan T	MISSION ANALYSIS ENGINEERING
Blaak, Whitney S	COGNIZANT SYSTEM ENGINEERING
Demiter, Scott M	ETF OPERATIONS
Foster, Jim	242-A/AW/ETF OPERATIONS
Goessmann, Glen E	ENGINEERING PROGRAMS
Greenhalgh, Aaron M	TANK FARM PROJECTS ENGINEERING
Halgren, Dale L	ETF ENGINEERING
Harris, John W	SAFETY PROGRAM SERVICES RC/P
Joslyn, Cameron C	ETF ENGINEERING
McFerran, Brandon E	242-A/AW/ETF OPERATIONS
McShane, Michael P	ENGINEERING PROGRAMS
Omberg Carro, Susan K	NUCLEAR SAFETY
Powers, Daniel J	ETF ENGINEERING
Roosendaal, Gene D	TFP PROJECT MANAGEMENT
Rutherford, Wally	ETF ENGINEERING
Sackett, Tom E	TANK FARM PROJECTS
Samoska, Jerry A	INSTRUMENT & CNTRL ENGINEERING
Shultz, Milton V	NUCLEAR SAFETY
Smith, Gregory E	TANK FARM PROJECTS ENGINEERING
Smoot, Bill R	TFP RADCON
Swanson, Brad L	242-A/AW/ETF OPERATIONS
Wall, Jeremy M	RETRVL & CLOSURE/PROJ ENV CMPL
Wilson, Nathaniel W	ETF PROJECTS ENGINEERING

ENGINEERING CHANGE NOTICE
CONTINUATION SHEET

ECN NO.: 715508

Document/Drawing No. H-2-79604 Sheet 1 Revision 3

CONSTRUCTION NOTE: (DO NOT INCORPORATE)

THIS "WAS" CONDITION REFLECTS THE "IS" CONDITION OF ECN-715507 WHEN WORK COMPLETE.

WAS:

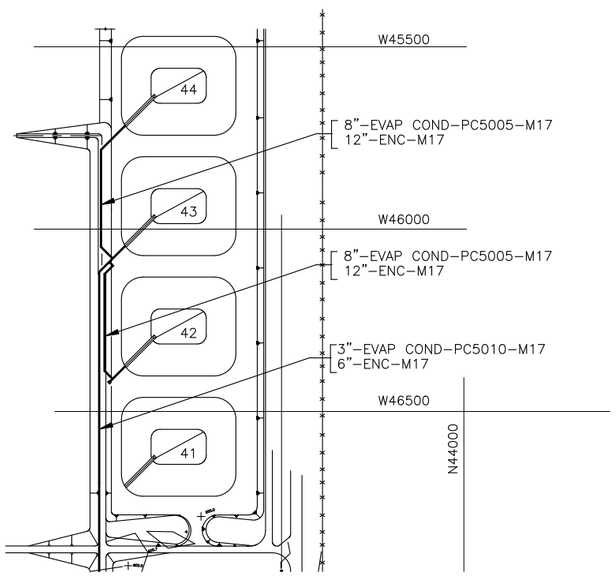

IS:

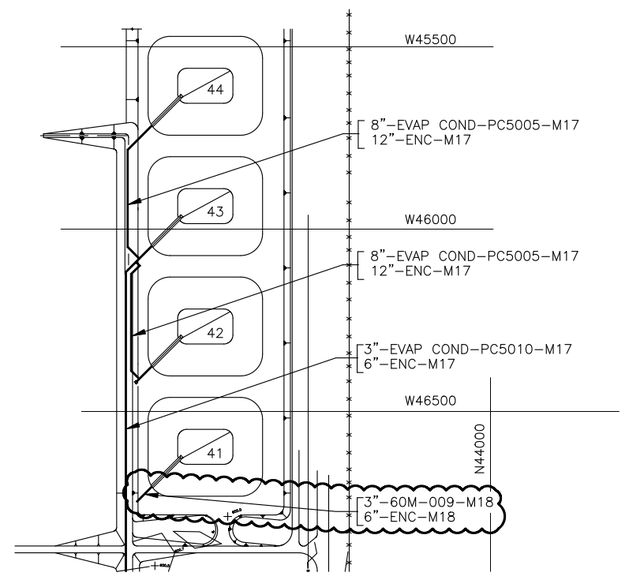

CONSTRUCTION NOTE: (DO NOT INCORPORATE)

THIS "WAS" CONDITION REFLECTS THE "IS" CONDITION OF ECN-715507 WHEN WORK COMPLETE.

ENGINEERING CHANGE NOTICE
CONTINUATION SHEET

ECN NO.: 715508

Document/Drawing No. H-2-79610 Sheet 1 Revision 3

WAS: (ZONE E/8)

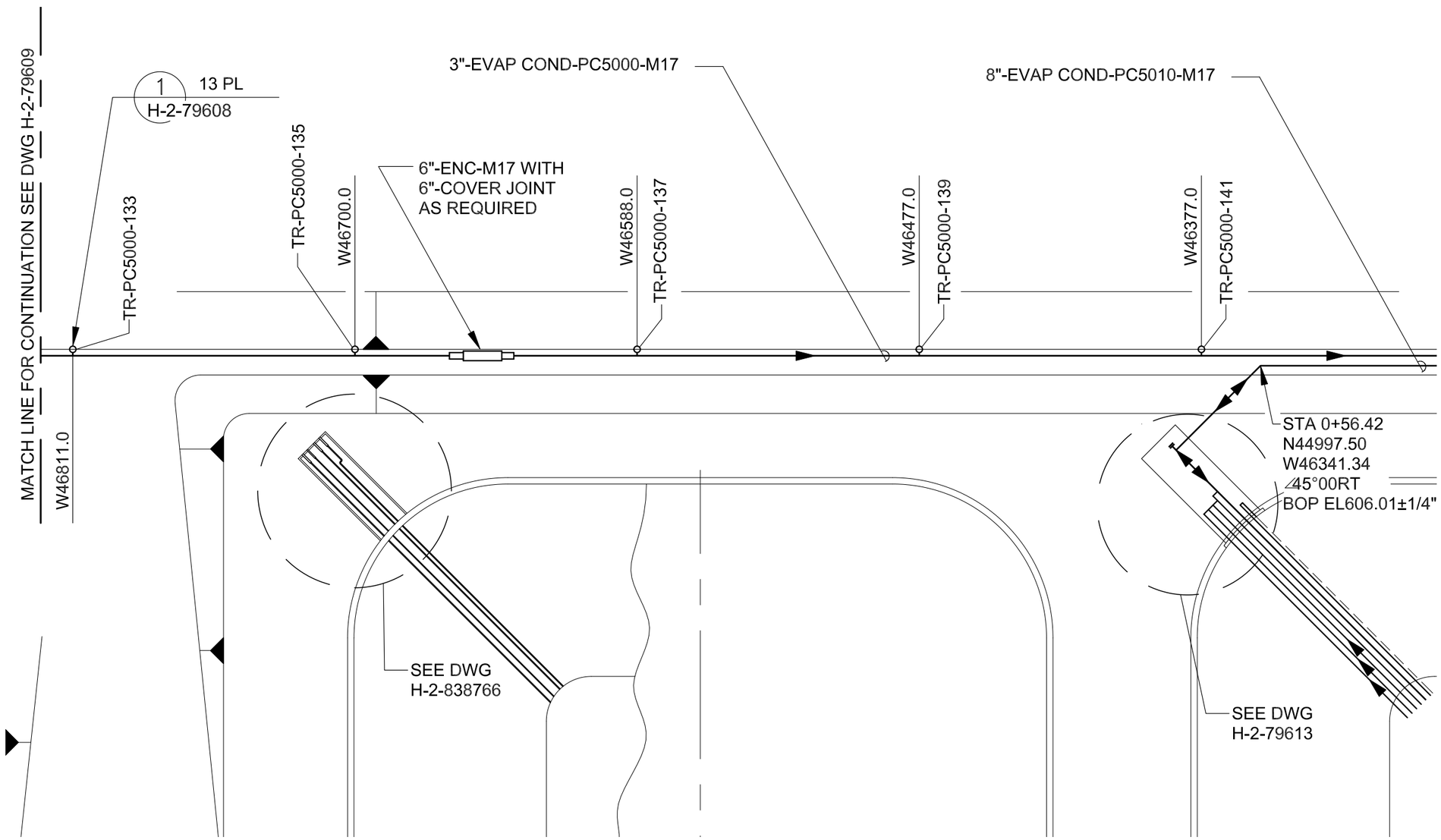

ENGINEERING CHANGE NOTICE
CONTINUATION SHEET

ECN NO.: 715508

Document/Drawing No. H-2-79610 Sheet 1 Revision 3

IS: (ZONE E/8)

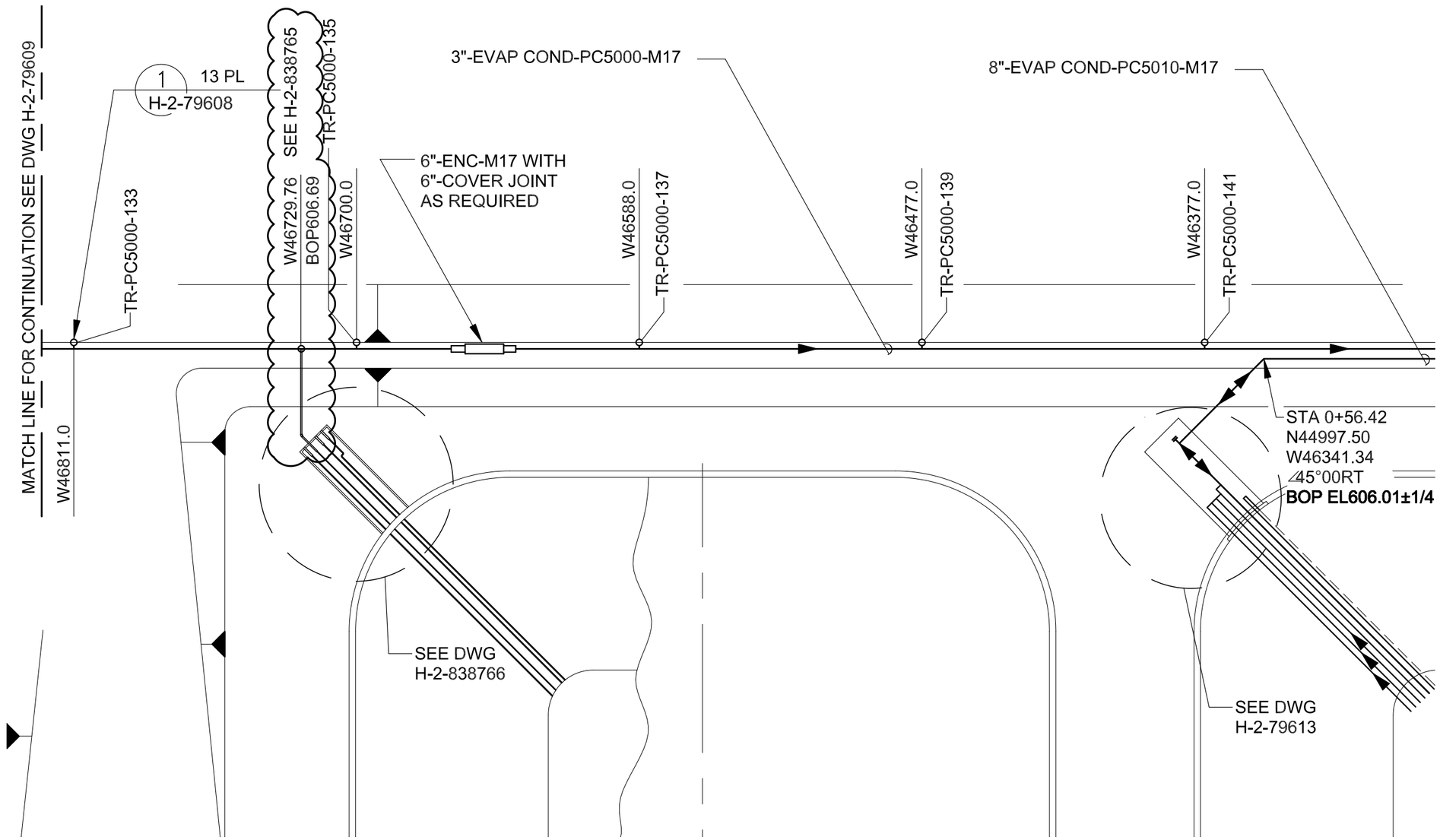

ENGINEERING CHANGE NOTICE
CONTINUATION SHEET

ECN NO.: 715508

Document/Drawing No. H-2-88766 Sheet 1 Revision 14

WAS: (ZONE B/2)

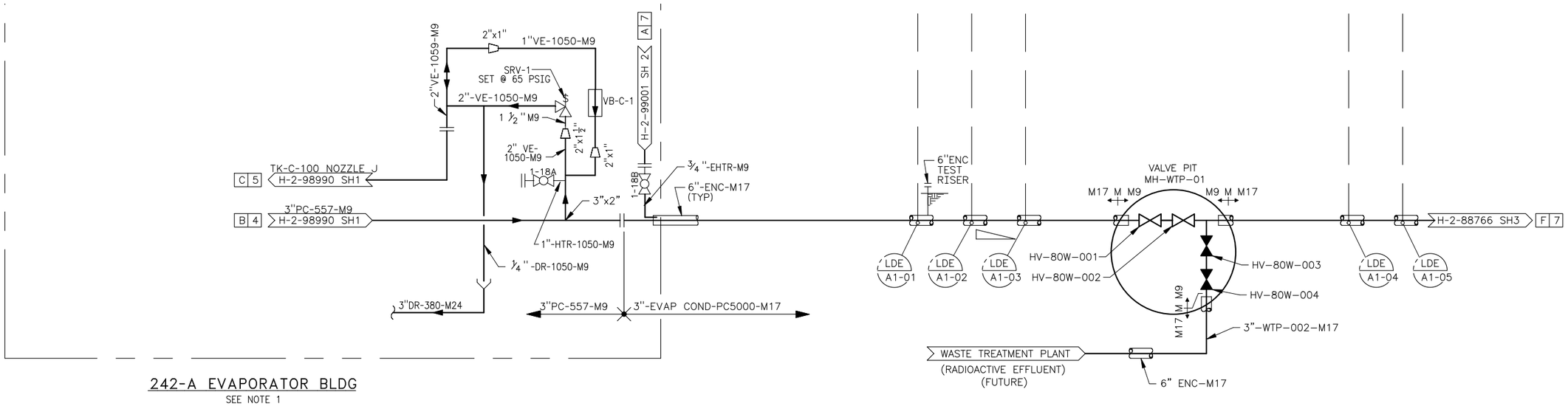

IS: (ZONE B/2)

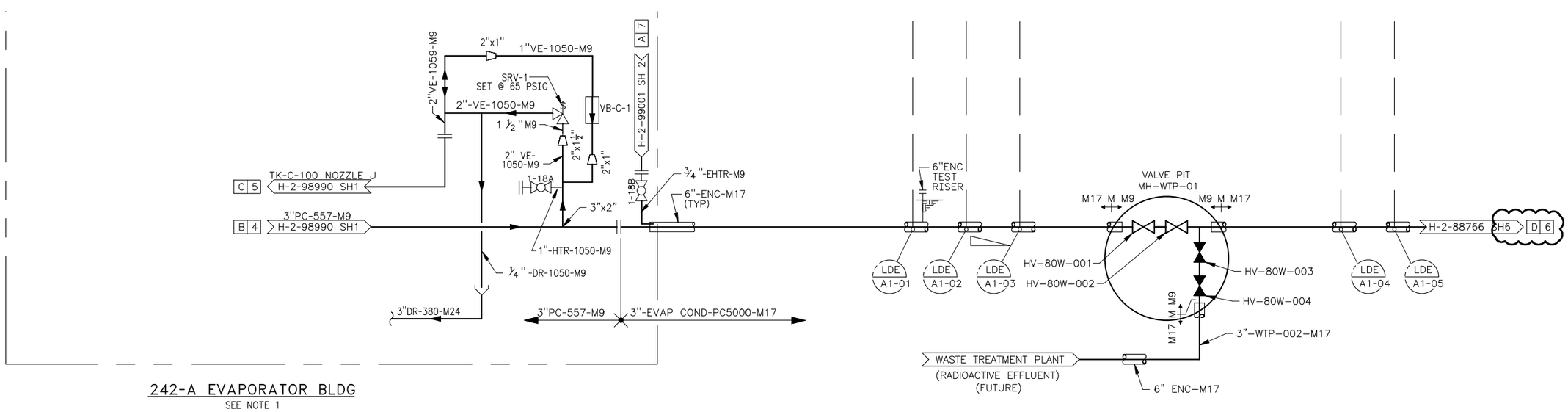

ENGINEERING CHANGE NOTICE
CONTINUATION SHEET

ECN NO.: 715508

Document/Drawing No. H-2-88766 Sheet 2 Revision 16

WAS: (ZONE D/8)

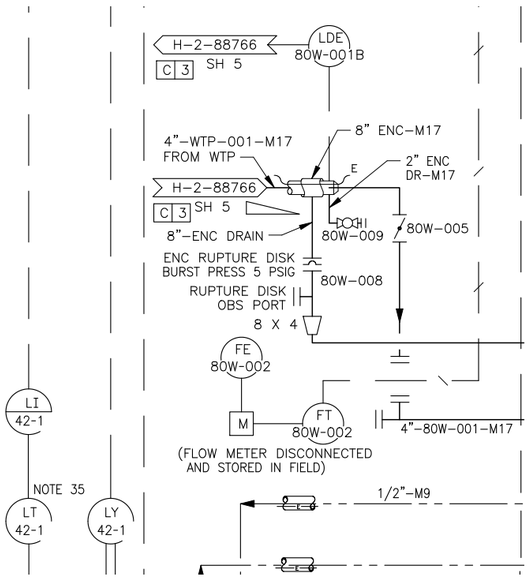

IS: (ZONE D/8)

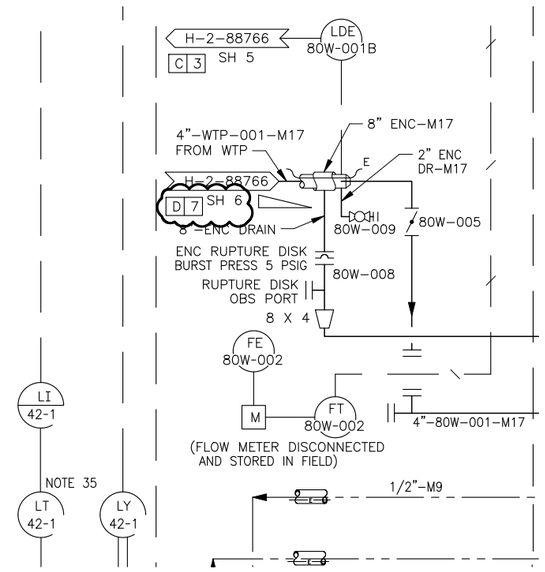

ENGINEERING CHANGE NOTICE
CONTINUATION SHEET

ECN NO.: 715508

Document/Drawing No. H-2-88766 Sheet 3 Revision 20

WAS: (ZONE F/7)

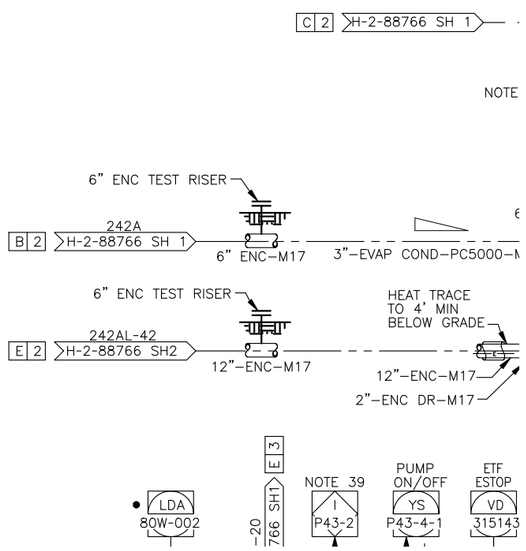

IS: (ZONE F/7)

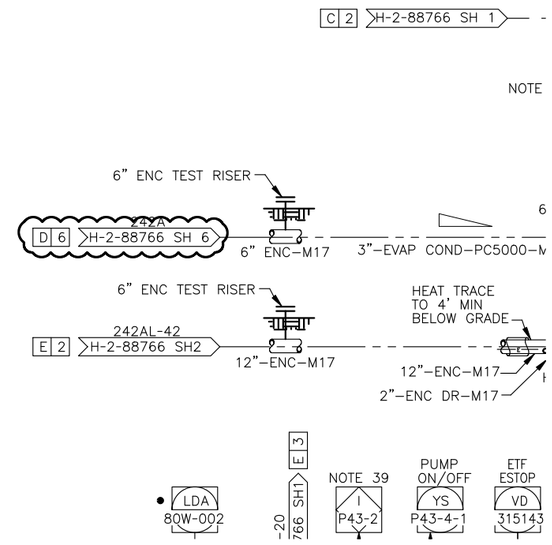

ENGINEERING CHANGE NOTICE
CONTINUATION SHEET

ECN NO.: 715508

Document/Drawing No. H-2-88766 Sheet 5 Revision 2

WAS: (ZONE C/2)

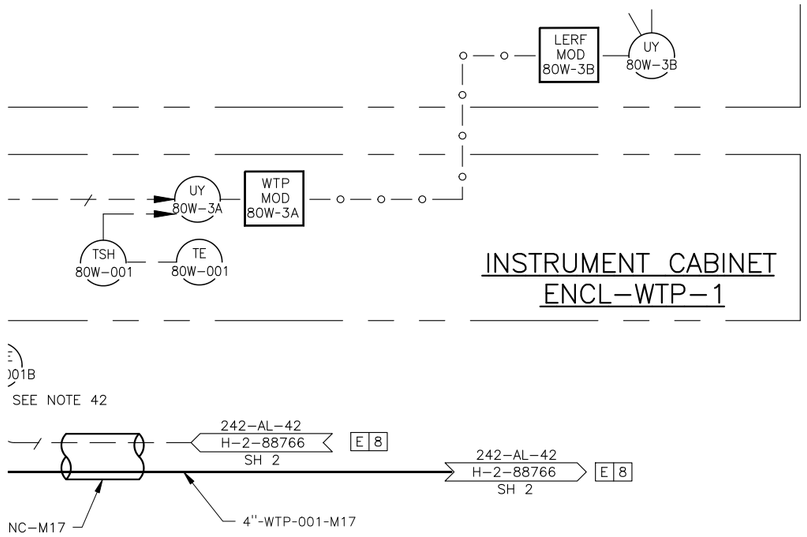

INUOUS LEAK DETECTION
E TO MH-WTP-01

3" EVAP COND-PC5000-M17 TIE-IN
H-2-88766
SH 1

NOTE:

1. FOR NOTES AND SYMBOL LEGEND, SEE SH 1.

SYMBOL LEGEND

FROM TEDF LINE J

LCU 55M17 (H-2-88836)

IS: (ZONE C/2)

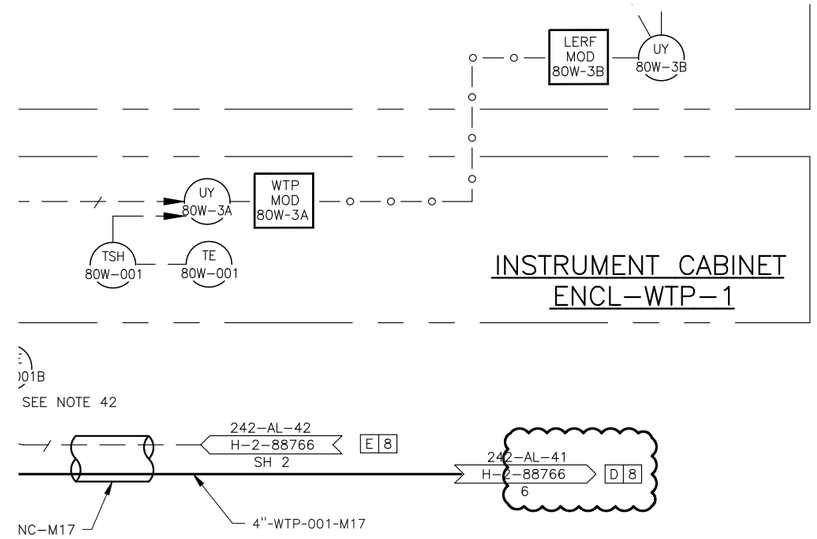

INUOUS LEAK DETECTION
E TO MH-WTP-01

3" EVAP COND-PC5000-M17 TIE-IN
H-2-88766
SH 1

NOTE:

1. FOR NOTES AND SYMBOL LEGEND, SEE SH 1.

SYMBOL LEGEND

FROM TEDF LINE J

LCU 55M17 (H-2-88836)

CONSTRUCTION NOTE: (DO NOT INCORPORATE)

THIS "WAS" CONDITION REFLECTS THE "IS" CONDITION OF ECN-715507 WHEN WORK COMPLETE.

ENGINEERING CHANGE NOTICE
CONTINUATION SHEET

ECN NO.: 715508

Document/Drawing No. H-2-830097 Sheet 1 Revision 1

WAS: (ZONE E/5)

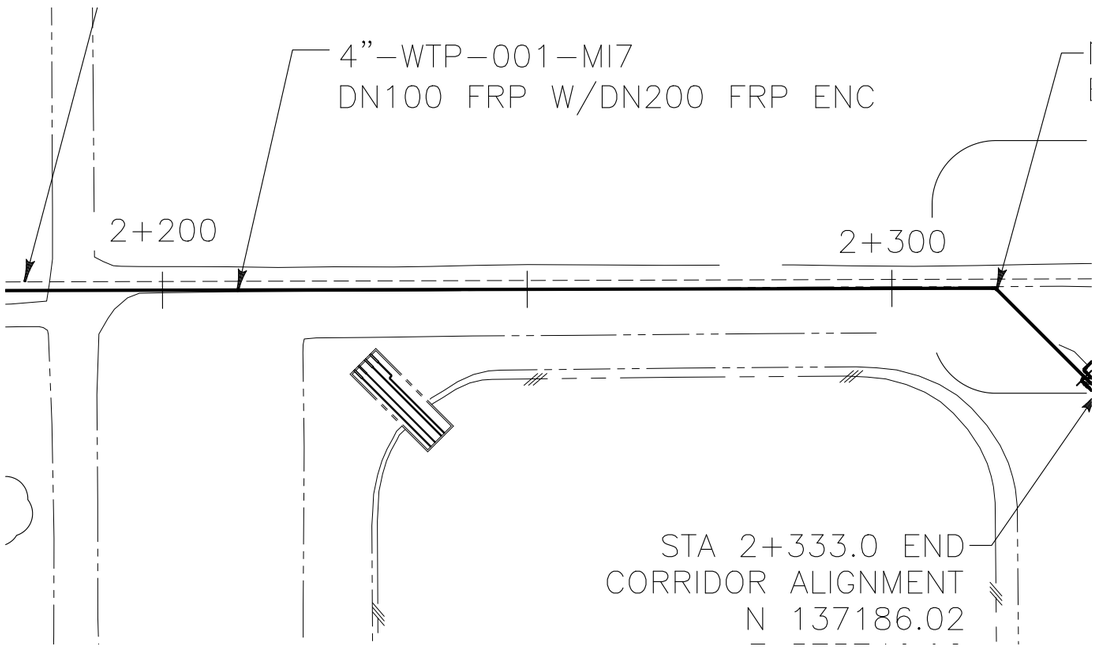

IS: (ZONE E/5)

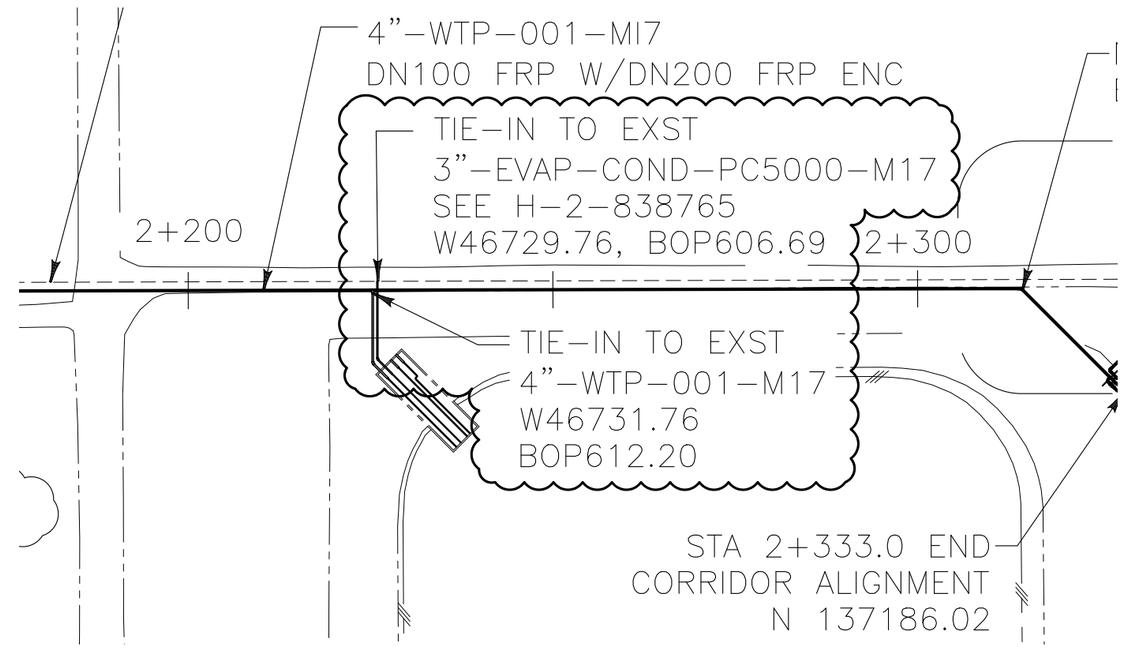

CONSTRUCTION NOTE: (DO NOT INCORPORATE)

THIS "WAS" CONDITION REFLECTS THE "IS" CONDITION OF ECN-715507 WHEN WORK COMPLETE.

ENGINEERING CHANGE NOTICE
CONTINUATION SHEET

ECN NO.: 715508

Document/Drawing No. H-2-830098 Sheet 1 Revision 1

WAS: (ZONE E-F/7)

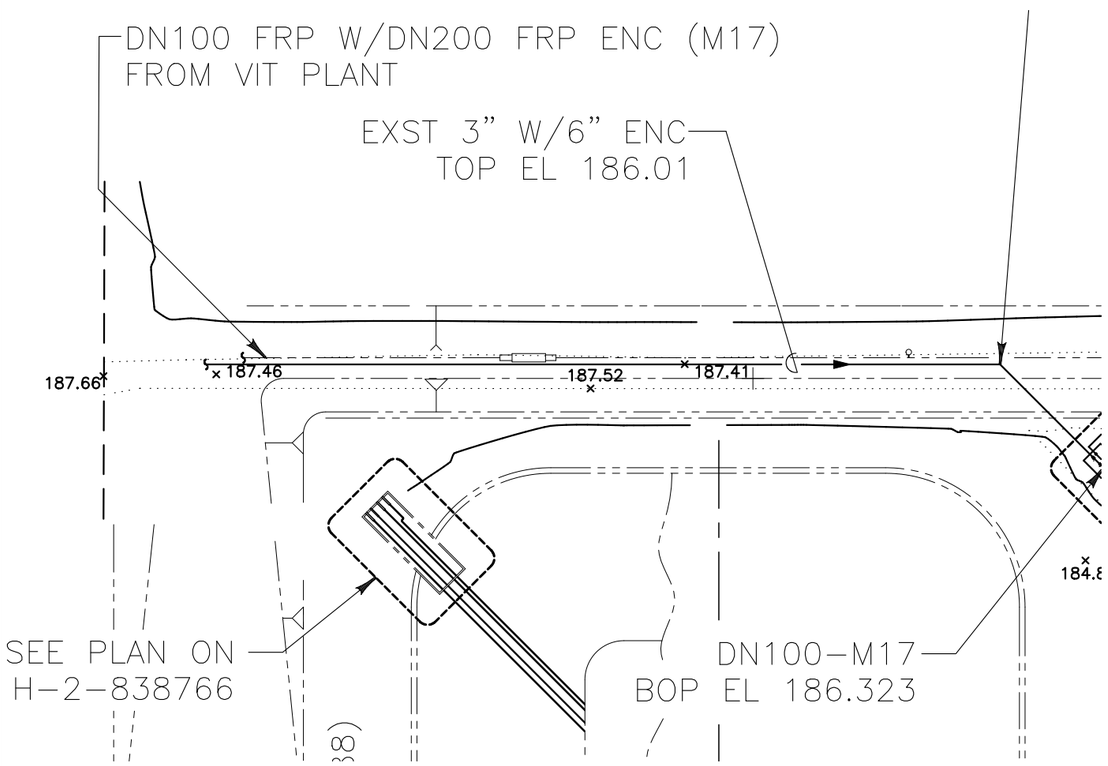

IS: (ZONE E-F/7)

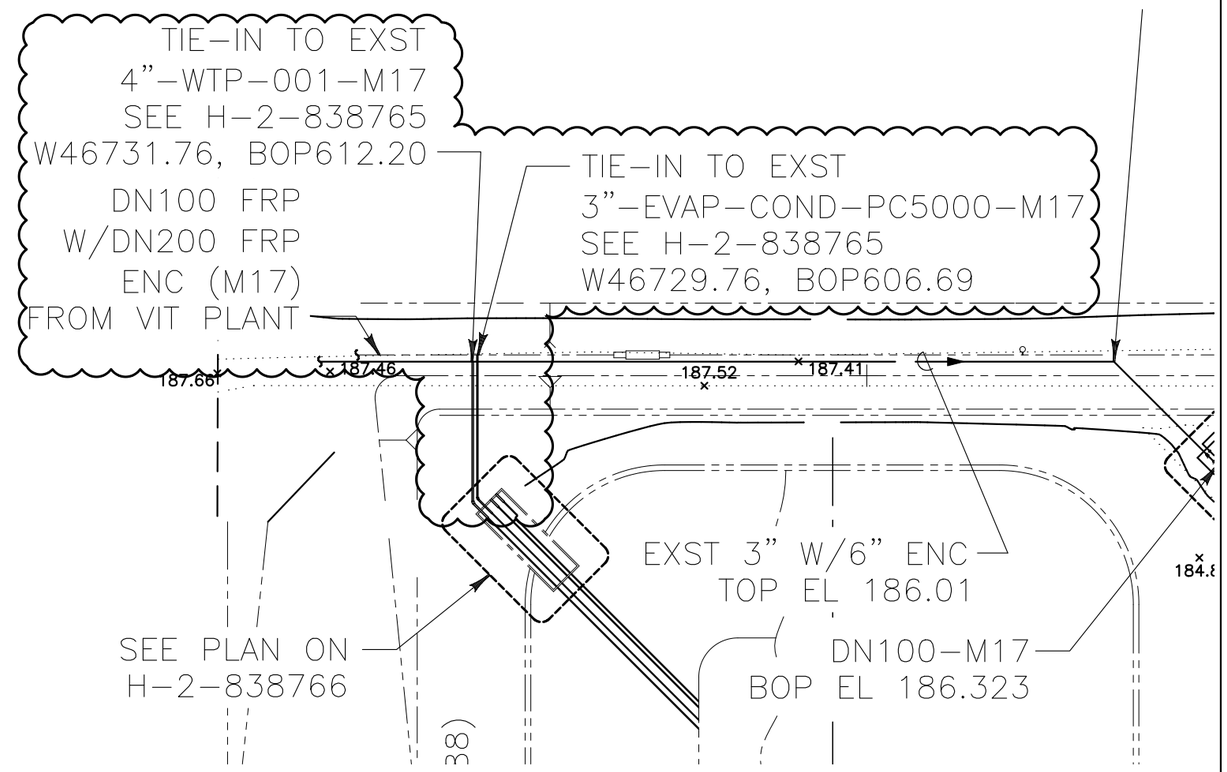

ENGINEERING CHANGE NOTICE

Prepared For the U.S. Department of Energy, Assistant Secretary for Environmental Management
By Washington River Protection Solutions, LLC., PO Box 850, Richland, WA 99352
Contractor For U.S. Department of Energy, Office of River Protection, under Contract DE-AC27-08RV14800

TRADEMARK DISCLAIMER: Reference herein to any specific commercial product, process, or service by trade name, trademark, manufacturer, or otherwise, does not necessarily constitute or imply its endorsement, recommendation, or favoring by the United States government or any agency thereof or its contractors or subcontractors. Printed in the United States of America.

Release Stamp

DATE: May 27,2020

HANFORD RELEASE

1a. **ECN No:** ECN-715509 **Rev.** 00	1b. **Project Number:** T1P226 ☐N/A
2. **Title:** LERF Basin 41 New Piping Connections - Mechanical	
3. **WA or Redline ECN:** ☐ WA ☐ REDLINE ☒ N/A	4. **Temporary Modification:** ☐ Yes ☒ No
5. **Design Type:** II	6. **Design Verification Required:** ☐Yes ☒No
7. **Safety Classification:** ☐SC ☐SS ☒GS ☐N/A	
8. **USQ Number:** ☒ N/A RPP-27195	9. **PrHA Number** **Rev.** ☒ N/A

Workflow Approval Status: For Approval
Clearance Review Restriction Type: undefined

10. **Trend Codes**

Cause	Commodity	Discipline Driver
Initial Design Release	Piping, Tubing	Mechanical

11. **Design Authority Designator**

PRJ - LERF BASIN 41

12. **Approvals**

Title	Name	Signature	Date
Design Authority	Wilson, Nathaniel W	*Wilson, Nathaniel W*	04/21/2020
Checker	Dorsh, Paul M	*Dorsh, Paul M*	04/07/2020
Document Control Approval	Meinecke, Kathryn R	*Meinecke, Kathryn R*	05/27/2020
Environmental Protection	Wall, Jeremy M	*Wall, Jeremy M*	04/30/2020
Originator	Hall, Richard B	*Hall, Richard B*	03/18/2020
Other Approver	Greenhalgh, Aaron M	*Greenhalgh, Aaron M*	04/15/2020
Other Approver	Joslyn, Cameron C	*Joslyn, Cameron C*	05/07/2020
Responsible Engineering Manager	Huntington, Matthew R	*Huntington, Matthew R*	05/11/2020

13. **Problem**

The new LERF Basin 41, associated catch basin, and ancillary equipment was installed by ECN-715507. However, this installation did not mechanically connect Basin 41 with the other LERF piping network. As such, no liquid can be transferred from Basin 41 to the other LERF basins and/or ETF, or subsequently the other LERF basins and/or ETF can not transfer feed to Basin 41.

14. **Solution**

Install two new transfer lines (4"-60M-010-M18 and 4"-60M-011-M18) from Catch Basin 41 to a tie-in point within Catch Basin 42. The installation of these two new transfer lines will allow Basin 41 to be connected with the existing LERF piping network. The installed transfer lines will utilize an FRP carrier pipe and encasement pipe as identified on the new design media, reference H-2-838765. Perform the tie-in connection to Catch Basin 42 piping as shown in H-2-838765. Excavate into the south LERF transfer line berm as necessary for installation of the new transfer lines as shown on the project design media. Install the transfer line as described in the construction specification RPP-SPEC-63632 and the manufacturer's recommendations. Ensure proper piping insulation, heat trace, and pipe supports are utilized per the project design media. Coordinate backfill of the transfer line berm with the installation of other the new transfer lines in ECN-715508. Remove the existing bling flange and install valve 60M-42-8 (see H-2-838765) as shown on this ECN.

15. **Analysis**

Perform the installation of new transfer line 4"-60M-010-M18 and new transfer line 4"-60M-011-M18 at the coordinate location identified on drawing H-2-838765. Route the new pipe lines from Catch Basin 41 to Catch Basin 42 for connection with the existing LERF piping. The Catch Basin 41 piping installation is detailed within ECN-715507. Perform all field work in accordance with the project construction specification RPP-SPEC-63632.

Design checks were performed in accordance with S&L Quality Assurance Procedure (QAP) 3.2 and 3.6.

16. **Description of Change**

H-2-79610 Sheet 1:
-Update drawing to depict the installation of transfer lines 4"-60M-010-M18 and 4"-60M-011-M18.

H-2-79613 Sheet 1:
-Update drawing sheet to show the installation of transfer lines 4"-60M-010-M18 and 4"-60M-011-M18 as they interface with the existing Catch Basin 42 piping. Install new valves within the existing Catch Basin 42 piping to facilitate necessary operations functionality.

H-2-88766 Sheet 2:
-Update the Catch Basin 42 P&ID drawing sheet to depict the interface connection of transfer lines 4"-60M-010-M18 and 4"-60M-011-M18.

H-2-830097 Sheet 1:
-Update this sheet to for installation of transfer lines 4"-60M-010-M18 and 4"-60M-011-M18.

H-2-830098 Sheet 1:
-Update this sheet to for installation of transfer lines 4"-60M-010-M18 and 4"-60M-011-M18.

RICHARD B. HALL
STATE OF WASHINGTON
REGISTERED
PROFESSIONAL ENGINEER
5/27/2020

ENGINEERING CHANGE NOTICE

ECN No: ECN-715509 **Rev.** 00

16. **Description of Change**

H-2-830099 Sheet 1:
-Update plan view indicating the installation of transfer line 4"-60M-011-M18 and it's interface with the existing Catch Basin 42 piping.

H-2-830099 Sheet 2:
-Update plan view and section views as appropriate to identify the interface of transfer line 4"-60M-011-M18 following installation.

17. **Work Package Number(s)**

TBD

18. **TBDs or Holds** ☒N/A

19. **Related Structures, Systems, and Components**

a. **Related Building/Facilities** ☐N/A	b. **Related Systems** ☐N/A	c. **Related Equipment ID Nos. (EIN)** ☐N/A
LERF FACILITIES	LERF	242AL-42

20. **Engineering Drawings to be Changed** Does change affect the Electronic Routing Board? ☐

Drawing Number	Rev.	Title
H-2-79610 SH 001	03	PIPING PLAN RETENTION BASINS
H-2-79613 SH 001	05	PIPING PLAN CATCH BASIN 242AL-42
H-2-830097 SH 001	01	W-519 SITE/UTILITY SYSTEMS PLAN AND PROFILE STA 2+000 TO STA 2+333.0
H-2-830098 SH 001	01	W-519 SITE/UTILITY SYSTEMS PLAN & PROFILE LERF BASINS
H-2-830099 SH 001	02	W-519 SITE/UTILITY SYSTEMS BASIN 242AL-42 PIPE LAYOUT
H-2-830099 SH 002	01	W-519 SITE/UTILITY SYSTEMS BASIN 243AL-42 PIPE LAYOUT
H-2-88766 SH 002	16	P&ID LERF BASIN & ETF INFLUENT EVAPORATOR

21. **Related Modification Traveler** ☐N/A

MT-50497

22. **Related Documents** ☐N/A

Document Number	Rev.	Title
ECN-715507	00	LERF Basin 41 Installation - Mechanical
ECN-715508	00	LERF Basin 41 Existing Piping Connections - Mechanical
H-2-838765 SH 001	00	LERF BASIN 41 MECHANICAL GENERAL ARRANGEMENT
H-2-88766 SH 006	00	P&ID LERF BASIN & ETF INFLUENT EVAPORATOR
RPP-SPEC-63632	00	LERF Basin 41 Construction Specification

23. **Distribution**

Name	Organization
Angevine, Brennan T	MISSION ANALYSIS ENGINEERING
Blaak, Whitney S	COGNIZANT SYSTEM ENGINEERING
Demiter, Scott M	ETF OPERATIONS
Foster, Jim	242-A/AW/ETF OPERATIONS
Goessmann, Glen E	ENGINEERING PROGRAMS
Greenhalgh, Aaron M	TANK FARM PROJECTS ENGINEERING
Harris, John W	SAFETY PROGRAM SERVICES RC/P
Joslyn, Cameron C	ETF ENGINEERING
McFerran, Brandon E	242-A/AW/ETF OPERATIONS
McShane, Michael P	ENGINEERING PROGRAMS
Omberg Carro, Susan K	NUCLEAR SAFETY
Powers, Daniel J	ETF ENGINEERING
Roosendaal, Gene D	TFP PROJECT MANAGEMENT
Rutherford, Wally	ETF ENGINEERING
Sackett, Tom E	TANK FARM PROJECTS
Samoska, Jerry A	INSTRUMENT & CNTRL ENGINEERING
Shultz, Milton V	NUCLEAR SAFETY
Smith, Gregory E	TANK FARM PROJECTS ENGINEERING
Smoot, Bill R	TFP RADCON
Stamper, Lavonne J	ETF ENGINEERING
Swanson, Brad L	242-A/AW/ETF OPERATIONS
Wall, Jeremy M	RETRVL & CLOSURE/PROJ ENV CMPL
Wilson, Nathaniel W	ETF PROJECTS ENGINEERING

CONSTRUCTION NOTE: (DO NOT INCORPORATE)

THIS "WAS" CONDITION REFLECTS THE "IS" CONDITION OF ECN-715507 AND ECN-715508 WHEN WORK COMPLETE.

ENGINEERING CHANGE NOTICE
CONTINUATION SHEET

ECN NO.: 715509

Document/Drawing No. H-2-79610 Sheet 1 Revision 3

WAS: (ZONE E/6-8)

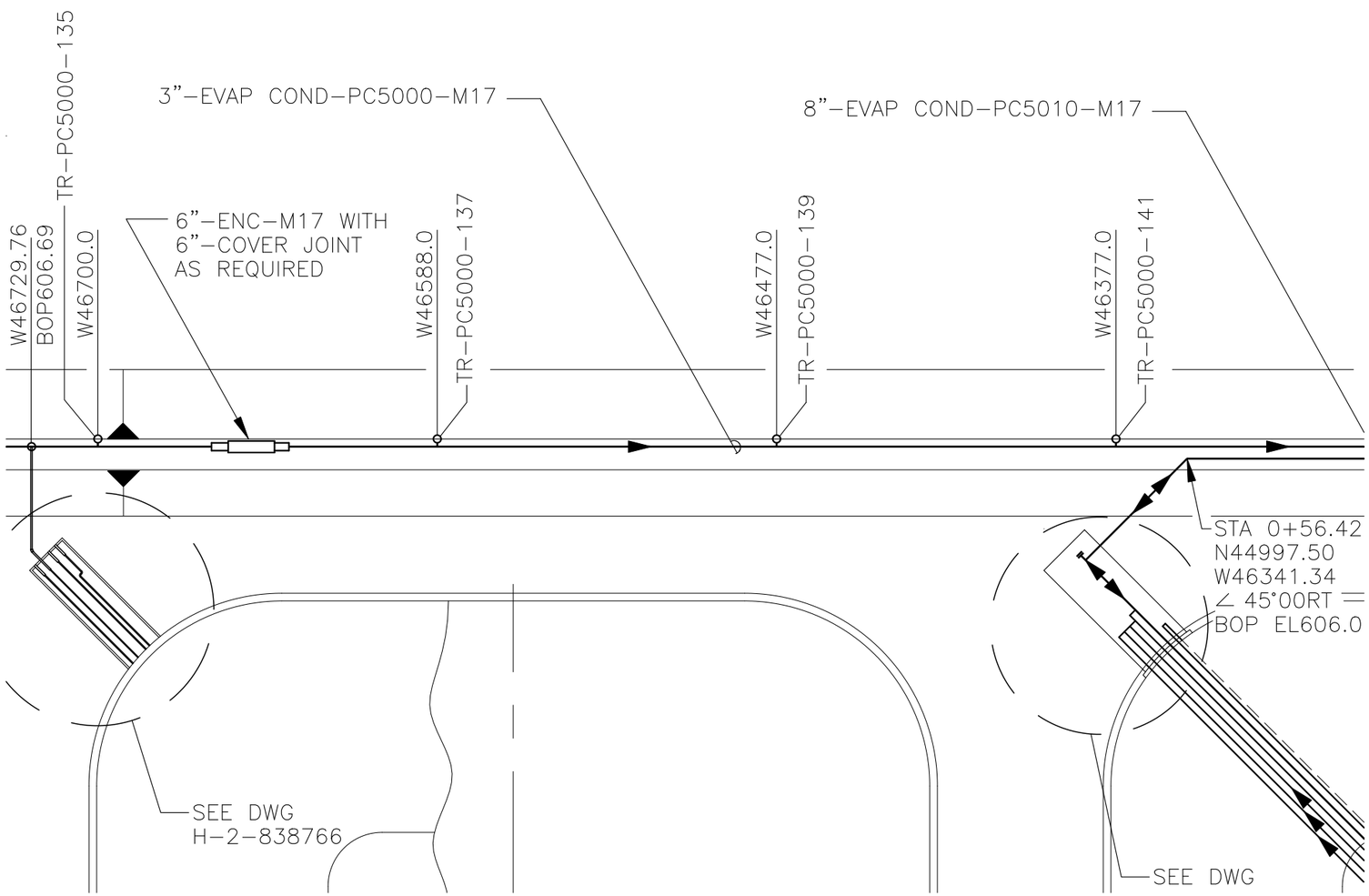

ENGINEERING CHANGE NOTICE
CONTINUATION SHEET

ECN NO.: 715509

Document/Drawing No. H-2-79610 Sheet 1 Revision 3

IS: (ZONE E/6-8)

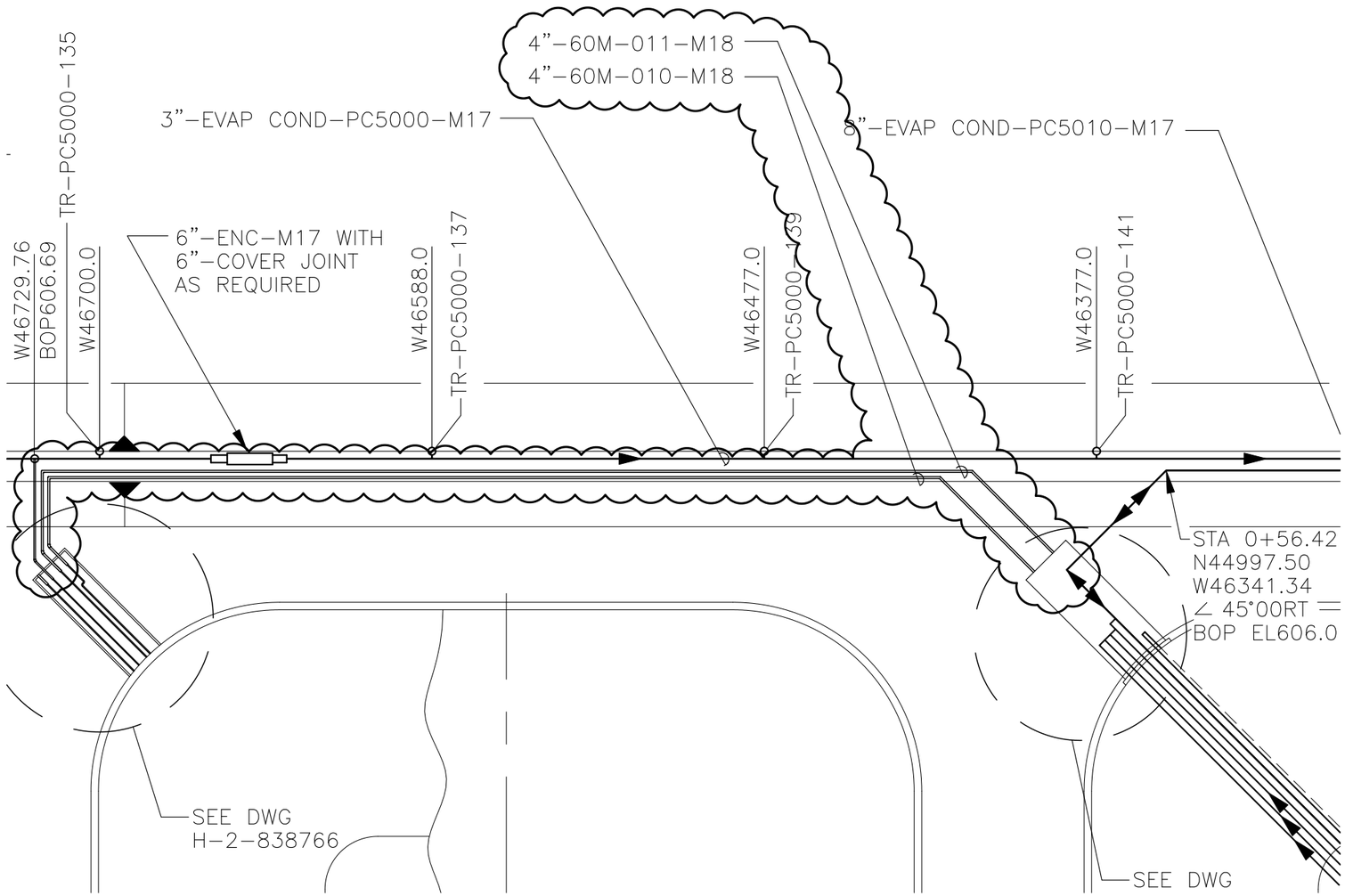

ENGINEERING CHANGE NOTICE
CONTINUATION SHEET

ECN NO.: 715509

Document/Drawing No. H-2-79613 Sheet 1 Revision 5

WAS: (ZONE B-D/6-8)

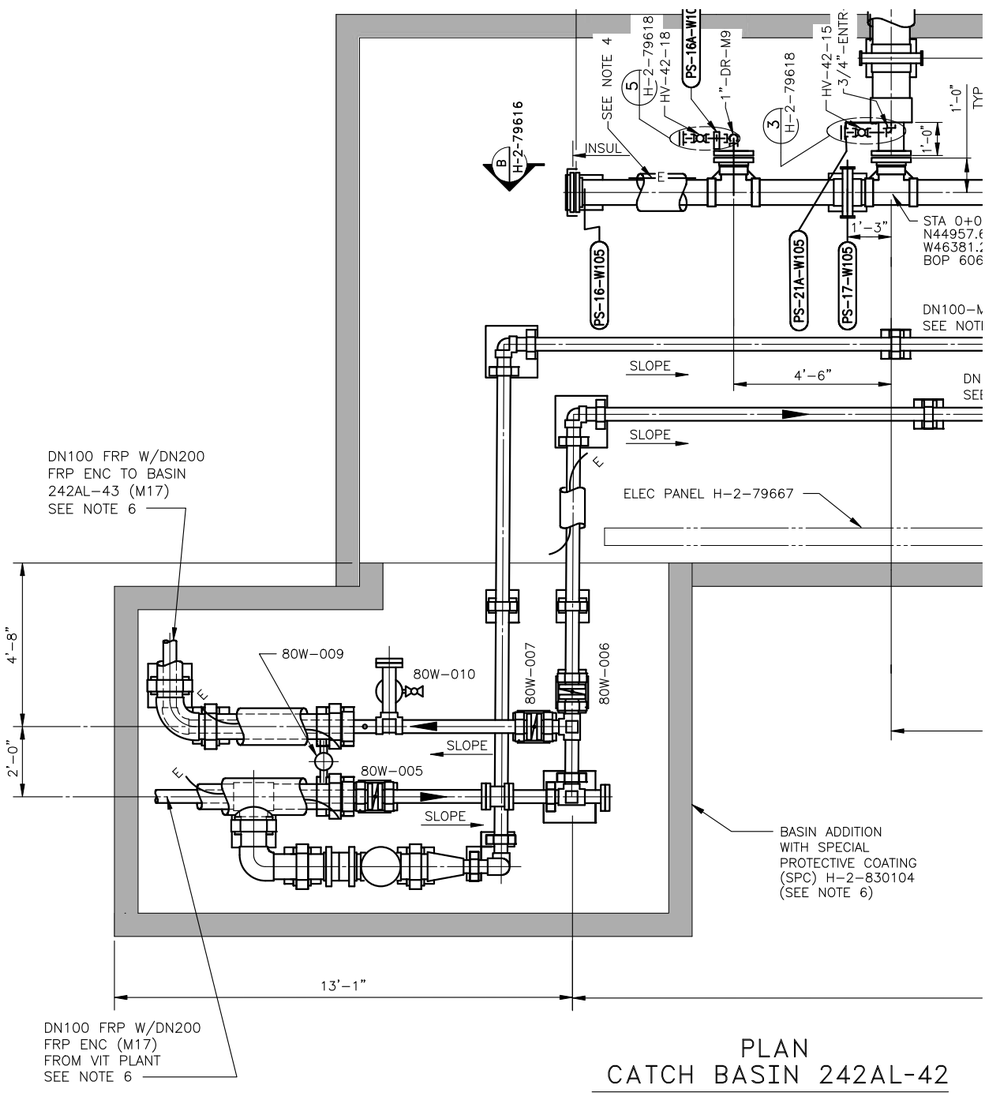

PLAN
CATCH BASIN 242AL-42

SCALE: 1/2" = 1'-0"

IS: (ZONE B-D/6-8)

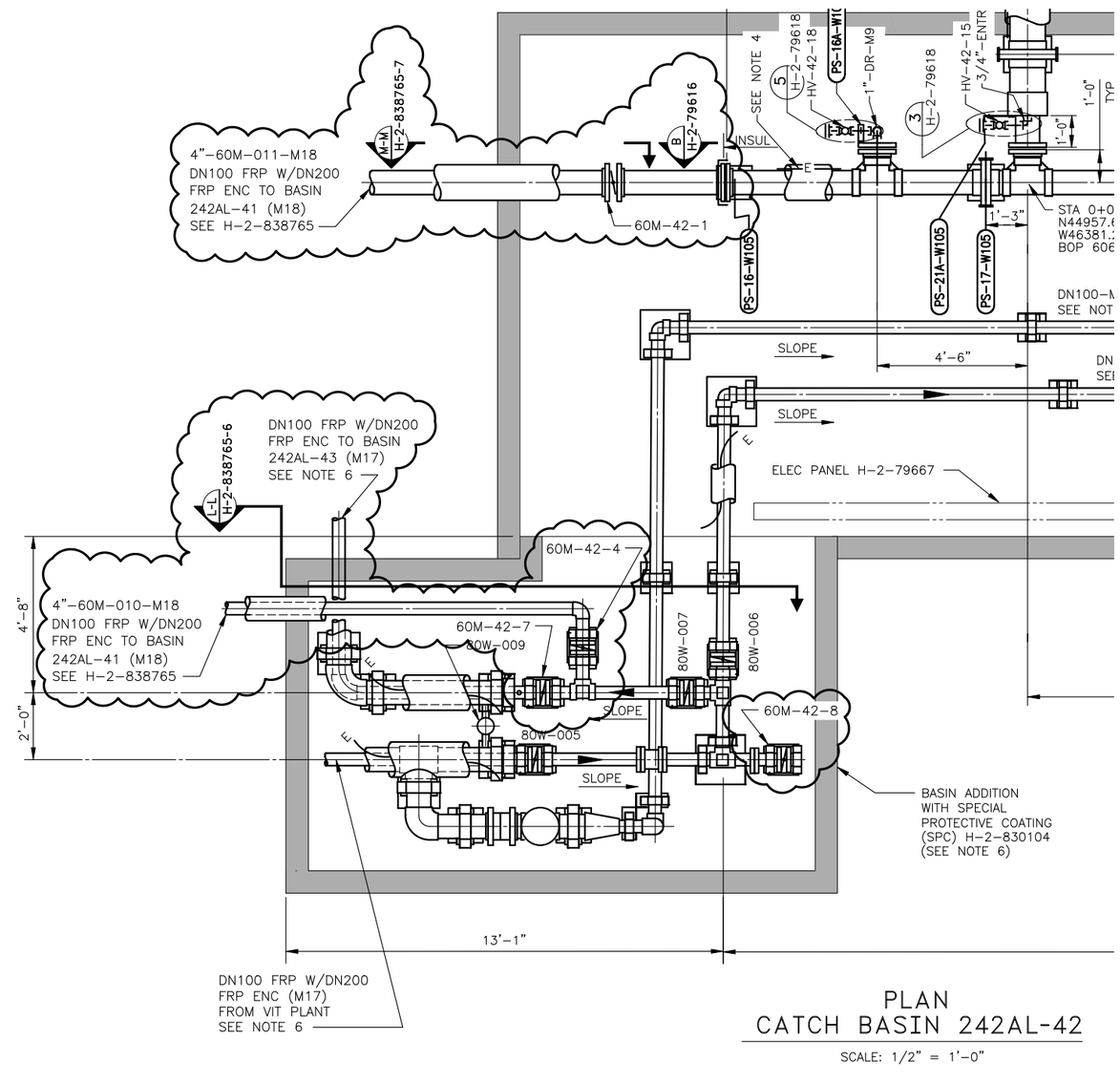

PLAN
CATCH BASIN 242AL-42

SCALE: 1/2" = 1'-0"

ENGINEERING CHANGE NOTICE
CONTINUATION SHEET

ECN NO.: 715509

Document/Drawing No. H-2-88766 Sheet 2 Revision 16

WAS: (ZONE E/3-4)

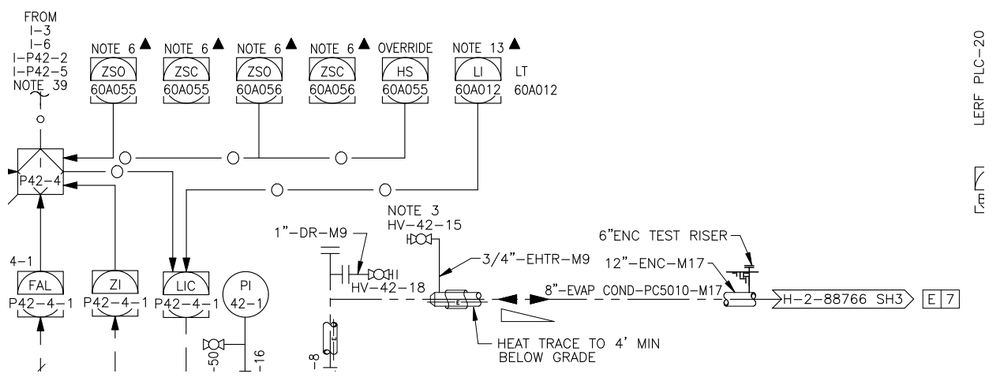

WAS: (ZONE E/6)

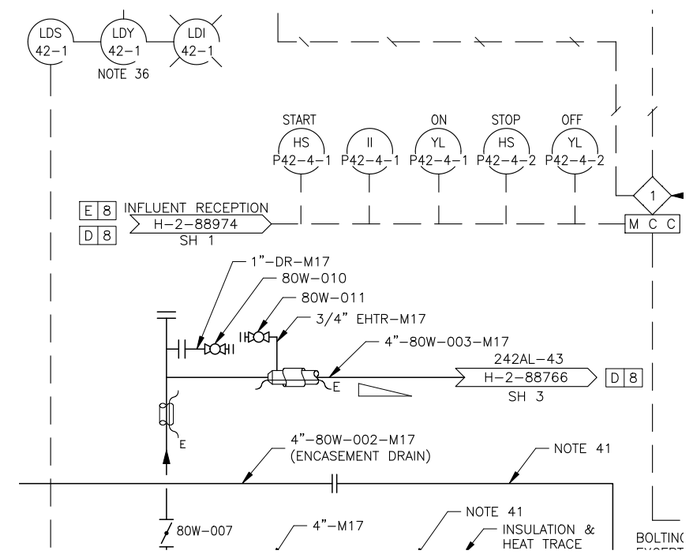

WAS: (ZONE D/7)

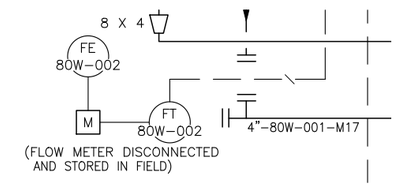

IS: (ZONE E/3-4)

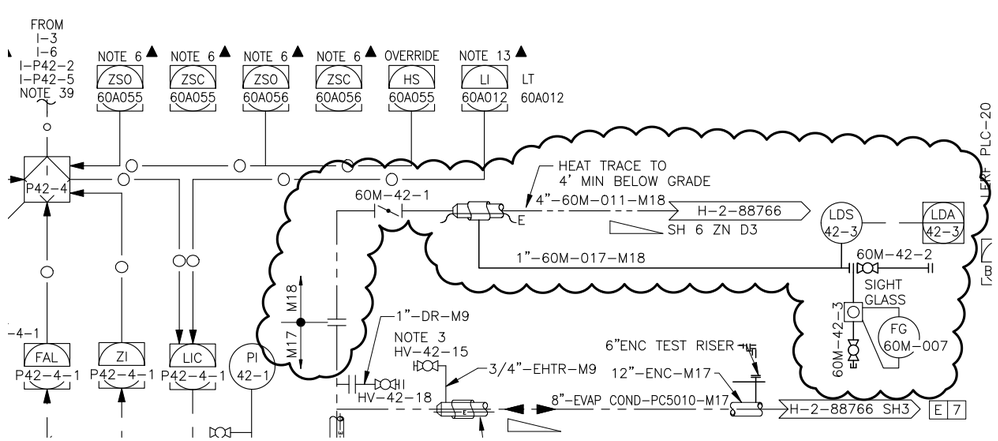

IS: (ZONE E/6)

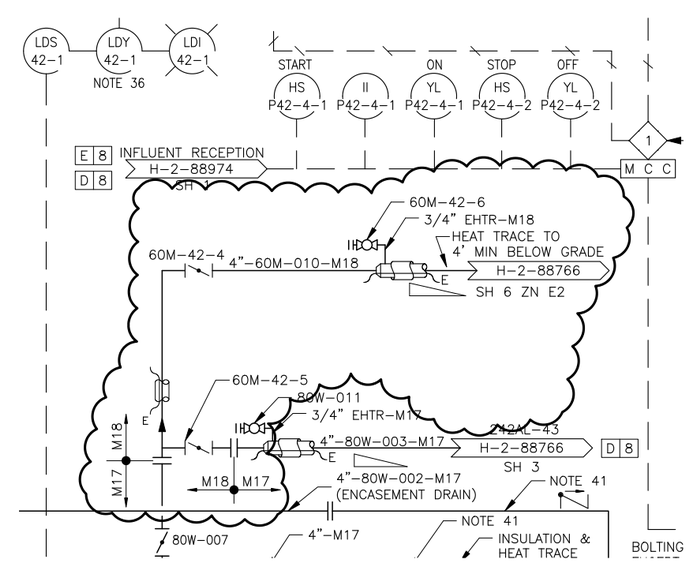

IS: (ZONE D/7)

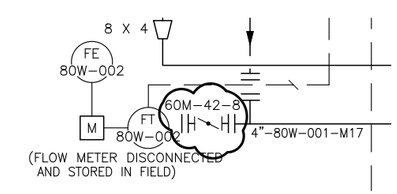

ENGINEERING CHANGE NOTICE CONTINUATION SHEET	ECN NO.: 715509

Document/Drawing No. H-2-830097 Sheet 1 Revision 1

CONSTRUCTION NOTE: (DO NOT INCORPORATE)

THIS "WAS" CONDITION REFLECTS THE "IS" CONDITION OF ECN-715507 AND ECN-715508 WHEN WORK COMPLETE.

WAS: (ZONE E/5)

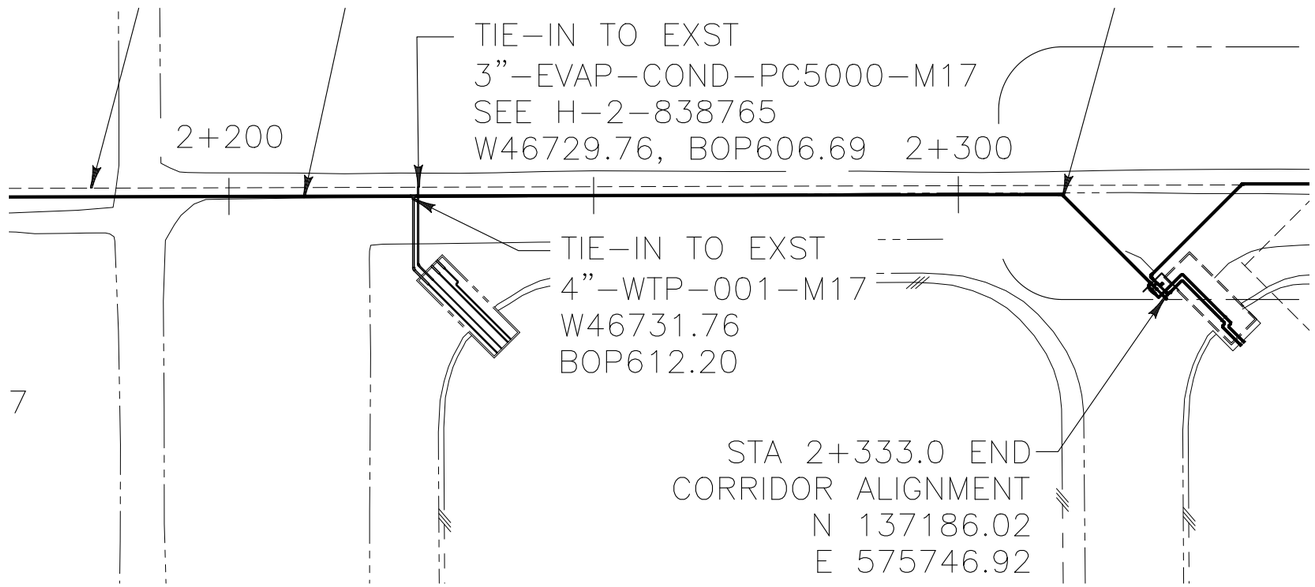

IS: (ZONE E/5)

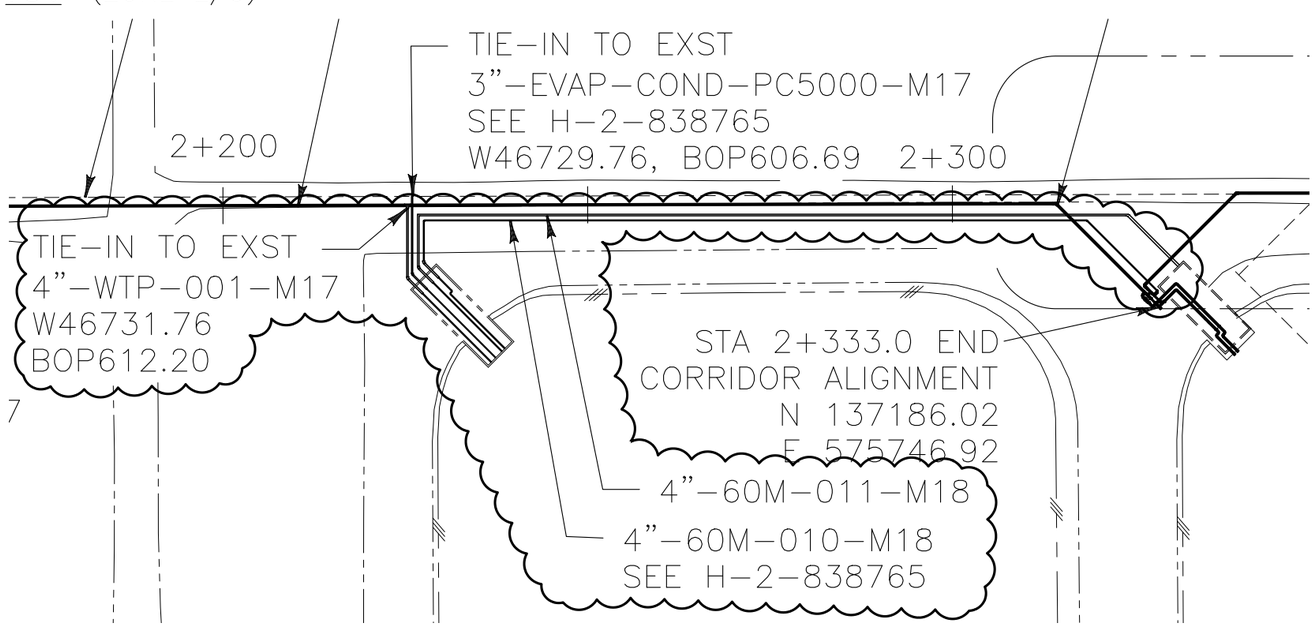

ENGINEERING CHANGE NOTICE
CONTINUATION SHEET

ECN NO.: 715509

Document/Drawing No. H-2-830098 Sheet 1 Revision 1

CONSTRUCTION NOTE: (DO NOT INCORPORATE)

THIS "WAS" CONDITION REFLECTS THE "IS" CONDITION OF ECN-715507 AND ECN-715508 WHEN WORK COMPLETE.

WAS: (ZONE E-F/7)

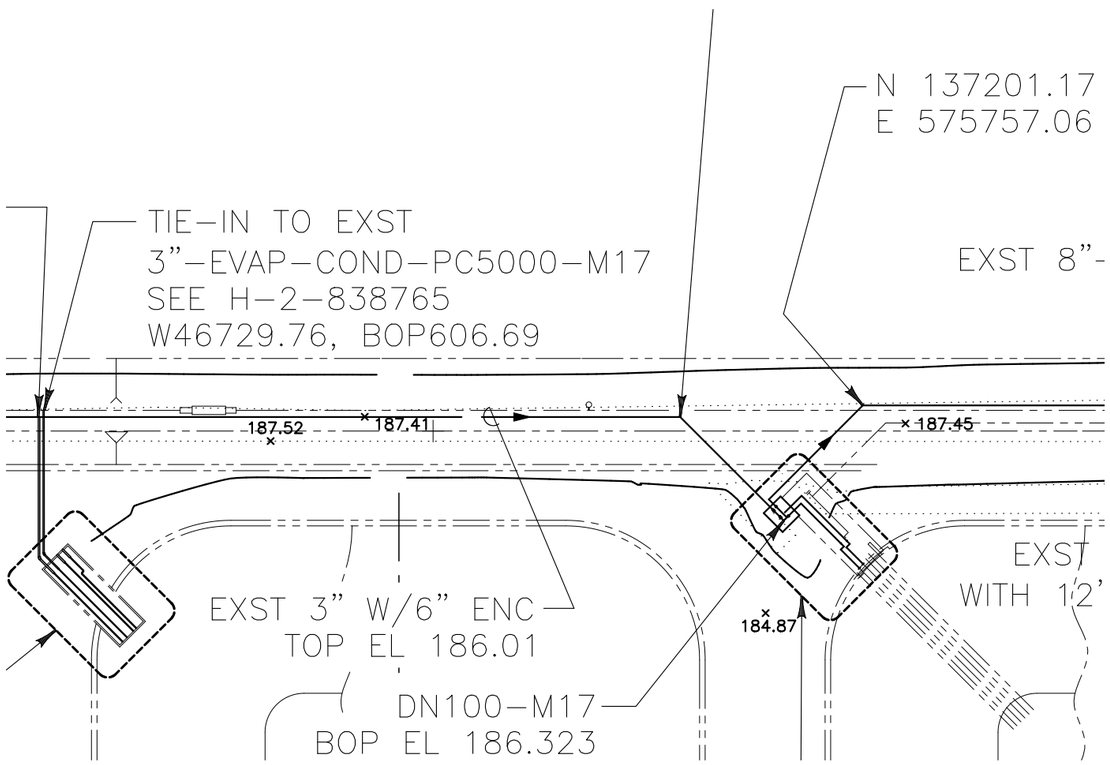

IS: (ZONE E-F/7)

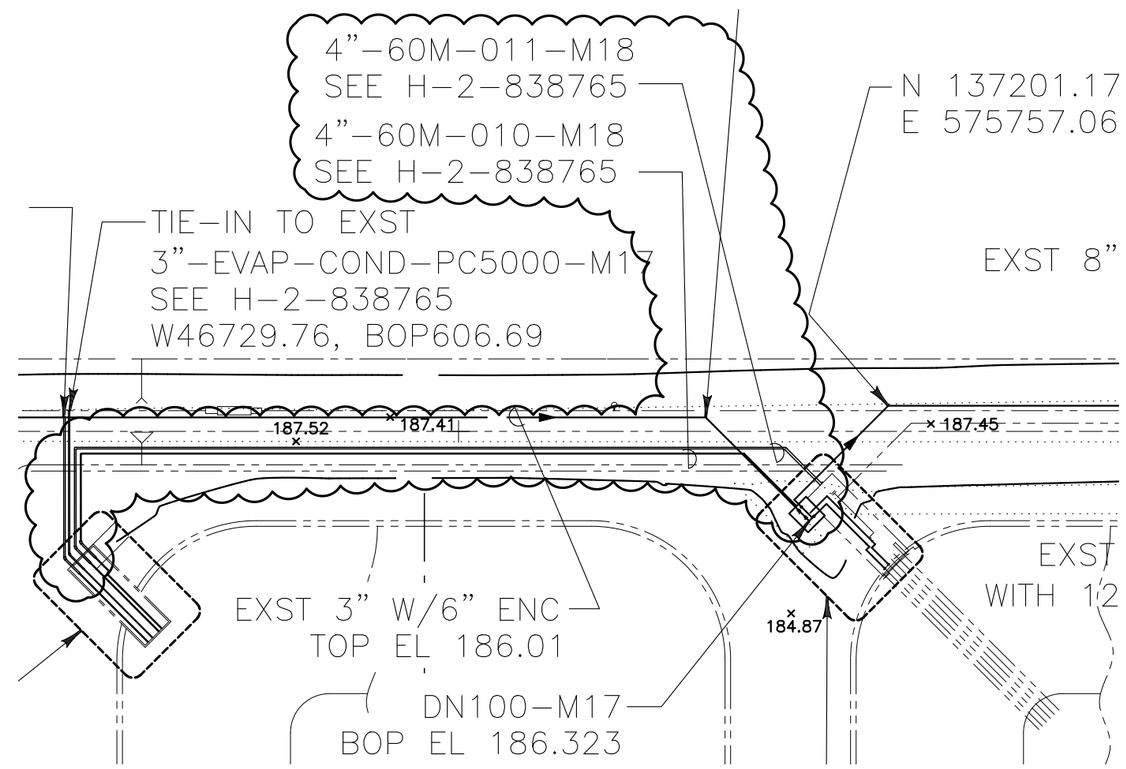

ENGINEERING CHANGE NOTICE
CONTINUATION SHEET

ECN NO.: 715509

Document/Drawing No. H-2-830099 Sheet 1 Revision 2

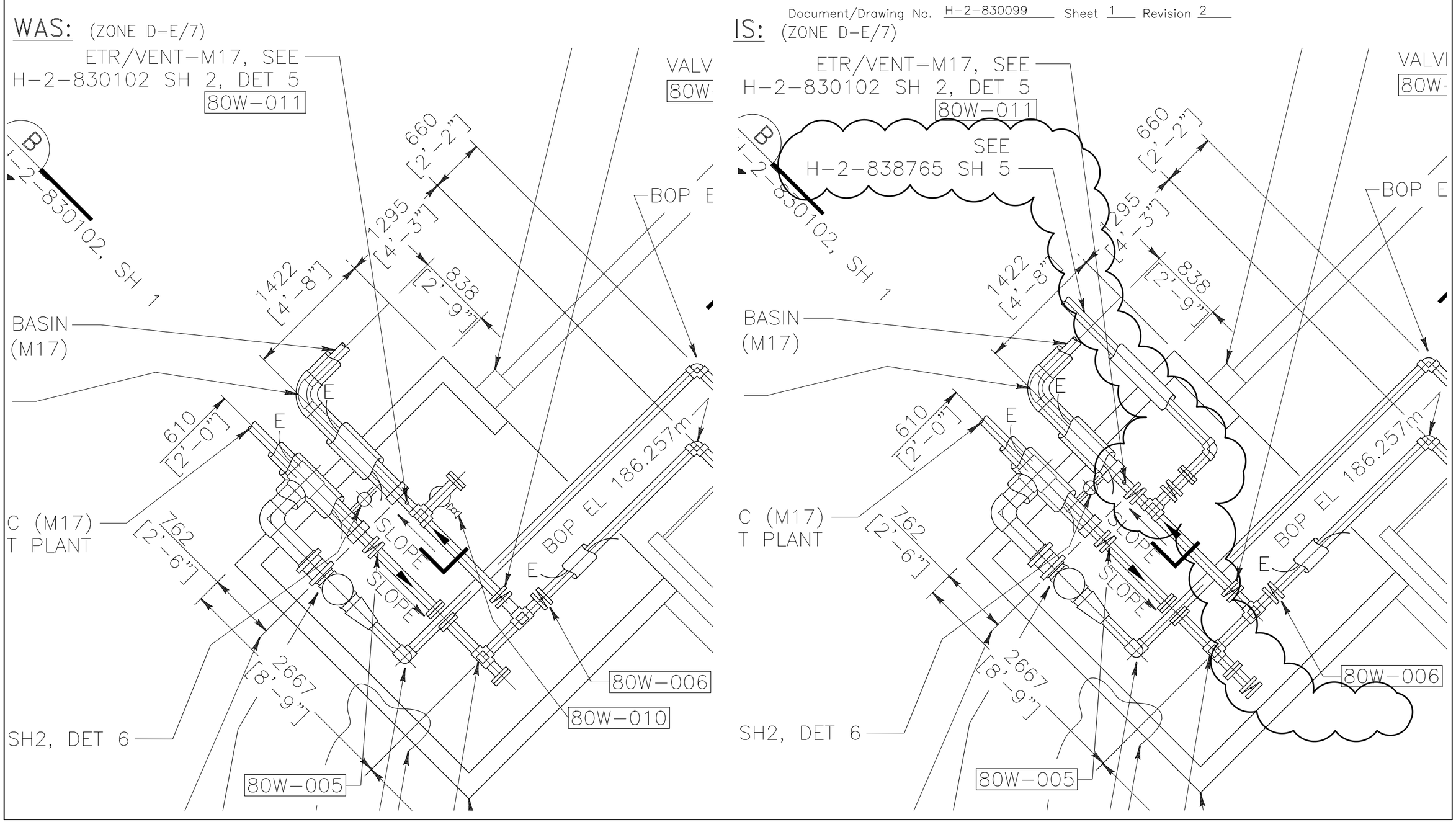

ENGINEERING CHANGE NOTICE
CONTINUATION SHEET

ECN NO.: 715509

Document/Drawing No. H-2-830099 Sheet 2 Revision 1

WAS: (ZONE E/7)

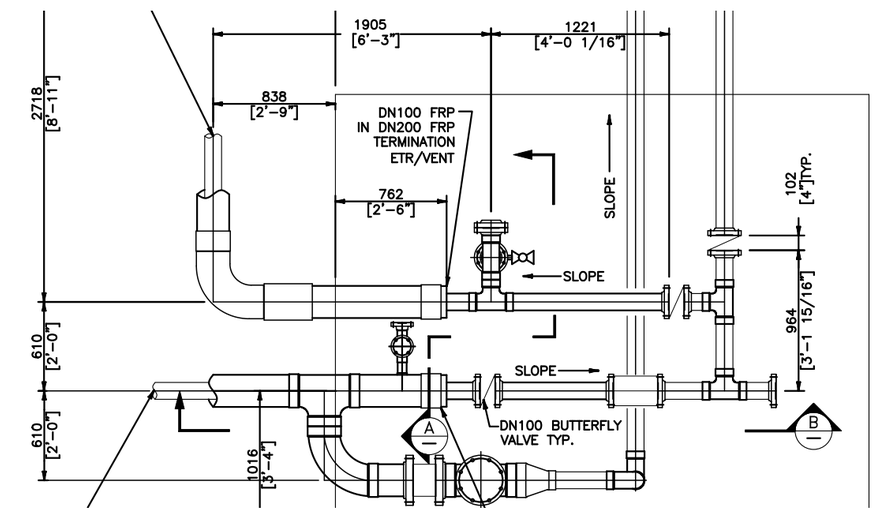

WAS: (ZONE B/6)

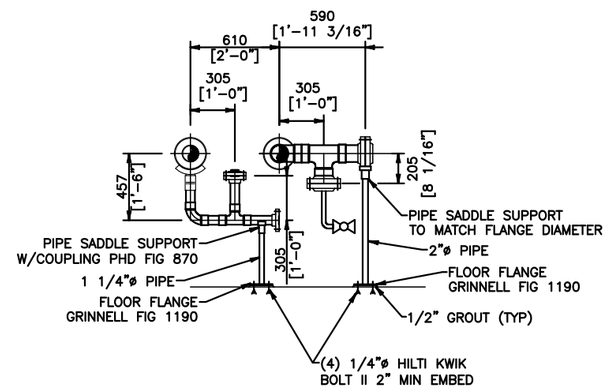

A VIEW
SCALE: NONE

WAS: (ZONE D/1)

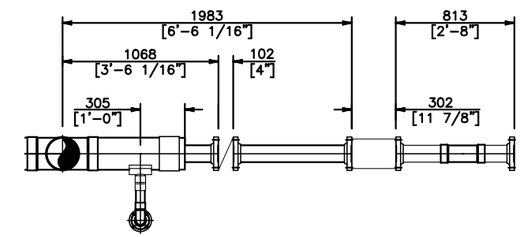

B VIEW
SCALE: NONE

IS: (ZONE E/7)

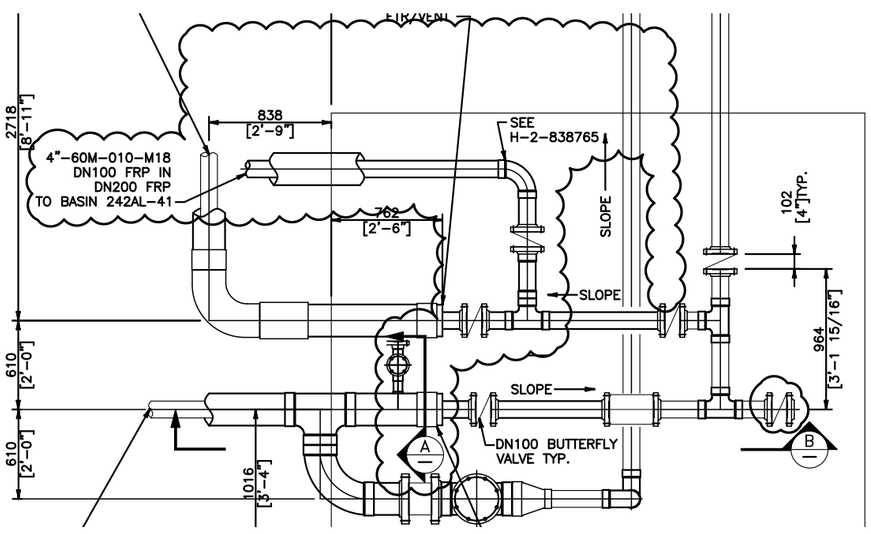

IS: (ZONE B/6)

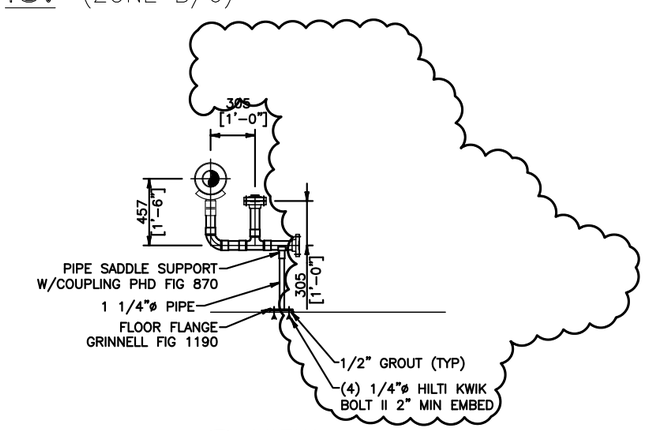

A VIEW
SCALE: NONE

IS: (ZONE D/1)

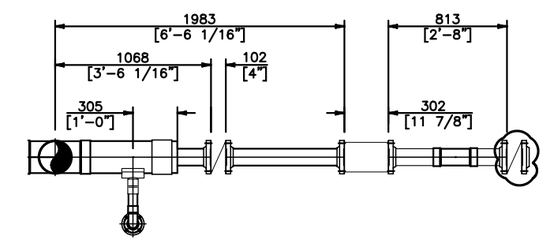

B VIEW
SCALE: NONE

ABBREVIATIONS

AP	ANGLE POINT
ASTM	AMERICAN SOCIETY FOR TESTING AND MATERIALS
AWG	AMERICAN WIRE GAUGE
BC	BOLTED CAP
BOM	BILL OF MATERIALS
BOP	BOTTOM OF PIPE
BOT	BOTTOM
BW	BUTT WELD
CDF	CONTROLLED DENSITY FILL
CF	CUBIC FOOT
C.I.	CAST IRON
CL	CENTERLINE
CO	COMPANY
CONC	CONCRETE
BOP EL.	BOTTOM OF PIPE ELEVATION
CJ	CONSTRUCTION JOINT
CKT	CIRCUIT BREAKER
CND	CONDUIT
CO	CLEAN OUT
CORP	CORPORATION
DB	DIRECT BURY
DIA	DIAMETER
DP	DISTRIBUTION PANELBOARD
DR-RBR-R	DRAIN-RETENTION BASIN RISER
DWG	DRAWING
E	ELECTRICAL
E. INV.	EAST INVERT
EL	ELEVATION
ELEV	ELEVATION
EP	EDGE OF PAVEMENT
EQ	EQUAL
EW	EACH WAY
EX	EXISTING
EXST	EXISTING
FF	FAR FACE
FLG	FLANGE
FNPT	FEMALE NATIONAL PIPE THREAD
FOF	FACE OF FLANGE
GALV	GALVANIZED
GDM	GEOSYNTHETIC DRAINAGE MATERIAL
GCL	GEOSYNTHETIC CLAY LINER
GND	GROUND
GR	GRADE
HDPE	HIGH DENSITY POLYETHYLENE
HH	HANDHOLE
HMA	HOT MIXED ASPHALT
HORIZ.	HORIZONTAL
IBC	INTERNATIONAL BUILDING CODE
I&C	INSTRUMENTATION & CONTROLS
ID	INNER DIAMETER
IE	INVERT ELEVATION
INC.	INCORPORATED
INV. EL	INVERT ELEVATION
KAIC	KILO AMPERE INTERRUPTING CAPACITY
LCH-R	LEACHATE RISER
LF	LINEAR FEET
LG	LONG
LT	LEFT
MAT'S	MATERIALS
MAX	MAXIMUM
MC	MOTOR CONTROLLER
MFG	MANUFACTURED
MH	MAN HOLE
MIL	0.001 INCH
MIN	MINIMUM
MK	MARK
MNPT	MALE NATIONAL PIPE THREAD
MO	MOBILE OFFICE
MPZ	MINI POWER CENTER, MINI POWER ZONE
NC	NORMALLY CLOSED
NEC	NATIONAL ELECTRICAL CODE
NF	NEAR FACE
N. INV.	NORTH INVERT
NO	NORMALLY OPEN
NST	NOT STEEPER THAN
NTS	NOT TO SCALE
OC	ON CENTER
OD	OUTSIDE DIAMETER
PBX	PULLBOX
PIV	POST INDICATOR VALVE
PH	PHASE
PL	PLACES
PSF	POUNDS PER SQUARE FOOT
PSI	POUNDS PER SQUARE INCH
P.T.	PRESSURE TREATED
PVC	POLYVINYL CHLORIDE
RAD	RADIUS
RB-SR	RETENTION BASIN SAMPLE PORT RISER
RB-R	RETENTION BASIN RISER
REQD	REQUIRED
RF	RAISED FACE
RGS	RIGID GALVANIZED STEEL (CONDUIT)
RMC	RIGID METAL CONDUIT
RT	RIGHT
RW	RAW WATER
S. INV.	SOUTH INVERT
SAN	SANITARY SEWER
SCH	SCHEDULE
SD	STORM DRAIN
SDR	STANDARD DIMENSIONAL RATIO
SF	SQUARE FOOT
SIM	SIMILAR
SNS	SANITARY SEWER
SP	SPACE
SSMH	SANITARY SEWER MANHOLE
SP	SPACING
SQ.	SQUARE
SQ FT.	SQUARE FOOT
STA	STATION
STL	STEEL
SST	STAINLESS STEEL
SW	SANITARY WATER
SW	SOCKET WELD
THK	THICK
THRU	THROUGH
TOA	TOP OF ASPHALT
TOC	TOP OF CONCRETE
TYP	TYPICAL
UL	UNDERWRITERS LABORATORIES
VERT.	VERTICAL
VPI	VERTICAL POINT OF INFLECTION
W. INV.	WEST INVERT
WWF	WELDED WIRE FABRIC
XFMR	TRANSFORMER

LEGEND

SYMBOLS

702.0	CONTOURS
	SAWCUT LINE
S	SANITARY SEWER SERVICE
	GRID LINE
EP	EDGE OF PAVEMENT
X	FENCE
	BURIED UTILITIES
RW	RAW WATER LINE
W	SANITARY WATER LINE
E	ELECTRICAL LINE
T T	TELECOMMUNICATION LINE
SD	STORM DRAIN LINE
C C	13.8 KV OVERHEAD POWER
	SIGN
	THRUST BLOCK
	ELBOW
	GATE VALVE
	POST INDICATOR VALVE
	FIRE HYDRANT
	BOLLARD
	UTILITY POLE
UG	UNDERGROUND UTILITY MARKER
	SURVEY CONTROL MONUMENT
	TEE
	SANITARY SEWER CLEANOUT
	RISER
	STAIRWAY
	CAP
	CENTER LINE
	MAN HOLE
A H	DETAIL CALLOUT
A	DETAIL CALLOUT
	LIGHT POLE
	DUPLEX RECEPTACLE, NEMA STYLE AS NOTED
	SPECIALTY RECEPTACLE, STYLE AS NOTED
	SPECIALTY RECEPTACLE, STYLE AS NOTED
H	ELECTRICAL HANDHOLE
	GRAVEL/SLOPE STABILIZATION/AGGREGATE BASE COURSE/GRANULAR BASE COURSE CDF/PEA GRAVEL/CRUSHED ROCK/ DRAINAGE GRAVEL
	SAND/PIPE BEDDING MATERIAL
	CONCRETE AREA
	COMPACTED BACKFILL
	SUBGRADE
	SOIL/ BENTONITE
	GEOSYNTHETIC DRAINAGE MATERIAL (GDM)

GENERAL NOTES:

1. PRIOR TO STARTING WORK IN AN AREA, VERIFY REFERENCE ELEVATIONS, COORDINATES, AND DIMENSIONS (ALL SHOWN IN PARENTHESES) WITH SURVEY EQUIPMENT. CONTACT PROJECT ENGINEER BEFORE PROCEEDING WITH CONSTRUCTION IF REFERENCE ELEVATION SHOWN ON DRAWING DIFFERS FROM FIELD VERIFIED ELEVATION BY MORE THAN 0.10 FEET, OR IF A COORDINATE OR DIMENSION DIFFERS BY MORE THAN 0.5 FEET.

2. EXISTING UTILITIES, PIPING SIZES, MATERIALS, LOCATIONS, AND ELEVATIONS ARE SCHEMATICALLY SHOWN IN AN APPROXIMATE WAY ONLY AND MAY VARY FROM THAT SHOWN. THE CONTRACTOR SHALL DETERMINE THE EXACT LOCATION OF ALL EXISTING UTILITIES BEFORE COMMENCING WORK AND AGREES TO BE FULLY RESPONSIBLE FOR ANY AND ALL DAMAGES WHICH MIGHT BE OCCASIONED BY FAILURE TO EXACTLY LOCATE ANY AND ALL UTILITIES. QUANTITIES SHOWN ARE FOR BIDDING PURPOSES ONLY. THE CONTRACTOR IS RESPONSIBLE FOR CORRECT LENGTHS AND QUANTITIES. THE CONTRACTOR SHALL BE RESPONSIBLE FOR REPAIRING DAMAGED LINES AT CONTRACTOR'S EXPENSE.

3. THE EXACT LOCATION OF EXISTING UTILITIES AND MONUMENTS SHALL BE FIELD VERIFIED PRIOR TO BEGINNING CONSTRUCTION. TIE-IN LOCATIONS, ELEVATIONS, AND INVERTS ARE SHOWN USING THE BEST INFORMATION AVAILABLE AT THE TIME OF DESIGN AND MAY BE ADJUSTED IN THE FIELD AS NEEDED WITH THE APPROVAL OF THE ON-SITE CONSTRUCTION ENGINEER.

4. UNLESS NOTED OTHERWISE, RETAIN AND PROTECT EXISTING FENCES, ASPHALT, STRIPING, ETC. ADJACENT TO THE SITE. REPAIR DAMAGE BY CONTRACTOR'S OPERATIONS AT CONTRACTOR'S EXPENSE

5. RECORD DRAWINGS: CONTRACTOR SHALL BE REQUIRED TO MARK AND KEEP RECORD OF ANY CHANGES TO CONTRACT DOCUMENTS WHICH ARE MADE DURING COURSE OF CONSTRUCTION. AFTER COMPLETION OF WORK AND BEFORE FINAL ACCEPTANCE, CONTRACTOR SHALL TURN OVER TO PROJECT ENGINEER ONE COMPLETE SET OF CONTRACT DOCUMENTS SHOWING ALL "AS-BUILT" CHANGES.

6. CLEARING AND GRUBBING SHALL CONSIST OF REMOVING ALL MATERIALS WITHIN PROJECT LIMITS THAT WILL INTERFERE WITH CONSTRUCTION.

7. ALL QUANTITIES AS SHOWN ARE APPROXIMATE AND SHALL BE VERIFIED BY THE CONTRACTOR.

8. FOR CONSTRUCTION SPECIFICATION SEE RPP-SPEC-63632.

9. DESIGN MATERIAL PROPERTY:

   CONCRETE Fc=4500 PSI @ 28 DAYS
   REN'F STL Fy=60,000 PSI

10. CONCRETE PROTECTION FOR REINFORCEMENT SHALL BE AS FOLLOWS UNLESS OTHERWISE NOTED:

    FOOTING & SLABS ON GROUND 3" CLR BOTTOM & SIDES
    FORMED SURFACES: 1 1/2" CLR

11. REBAR LAP SPLICES NOT OTHERWISE SHOWN SHALL BE 50 BAR DIAMETER.

12. TOLERANCES SHALL CONFORM TO ACI: 301 OR AS NOTED OTHERWISE.

13. PIPE LINE IDENTIFICATION:

    1 1/2" LCH-R-M36
    - 1 1/2" — LINE SIZE
    - LCH-R — SERVICE
    - M36 — PIPE CODE PER SPECIFICATION

    SERVICE LEGEND:

LCH-R	LEACHATE RISER
RB-R	RETENTION BASIN RISER
RB-SR	RETENTION BASIN SAMPLE PORT RISER
DR-RBR-R	DRAIN-RETENTION BASIN RISER

14. CHAMFER ALL SHARP CORNERS OF HDPE PIPE MATERIAL IN CONTACT WITH BASIN LINER MATERIAL.

15. HILTI HIT-HY 200 ADHESIVE WITH SST ANCHOR RODS, ASTM F593 TP 316. 1/2" DIAMETER WITH 3-1/2" EMBEDMENT. NUT AND WASHERS SHALL BE USED TO ATTACH GEOSYNTHETIC COMPONENTS TO CONCRETE. GASKETS SHALL BE USED UNDER BATTEN PLATES.

16. FINISH ELEVATIONS AND OUT OF PLANE TOLERANCE SHALL BE ± 0.10 FEET IN ALL LOCATIONS EXCEPT THE FOLLOWING: TOP OF THE BASIN FOR A PERIMETER STRIP OF 6 FEET FROM THE ANCHOR WALL; A STRIP OF 16 FEET (8 FEET EITHER SIDE OF THE CENTERLINE OF CATCH BASIN EXTENDING FROM THE CATCH BASIN TO THE TOE OF THE SLOPE INCLUDING THE SUMP; GRADIENTS FOR FLOW PATH TO THE LEACHATE CHANNEL IN THE BOTTOM OF THE BASIN AND SUMP SHALL BE CONTINUOUS AND UNOBSTRUCTED AS SHOWN IN THE DRAWINGS. AT THE EXCLUDED LOCATIONS FINISHED ELEVATIONS AND OUT OF PLANE TOLERANCE SHALL BE PLUS 0.20 FEET, MINUS 0.10 FEET. STRAIGHTNESS AT NORTHWEST BASIN CORNER SHALL NOT EXCEED 0.04 FEET PER FOOT OR 0.13 FEET PER 100 FEET OF LENGTH.

17. GASKET MATERIAL FOR SECTIONS D & E ON H-2-838751 SH 3 TO BE 3/16 INCH FULL FACE TEFLON BONDED EPDM WITH A HARDNESS OF 50 TO 70 DUROMETER SHORE A. SST STUDS 3-1/2 INCHES LONG, 300 SERIES. TORQUE NUTS TO 40 FT LBS.

18. NO CONSTRUCTION EQUIPMENT, NOR VEHICLE SHALL DRIVE OVER THE EFFLUENT PIPES AFTER INSTALLATION.

DATE: May 26,2020 HANFORD RELEASE

5-20-2020

DWG NUMBER	TITLE
DRAWING TRACEABILITY LIST	

REF NUMBER	TITLE
H-2-838745	DRAWING LIST/TITLE SHEET
REFERENCES	

REV NO	DESCRIPTION
0	RELEASED PER EDT-882460
REVISIONS	

CAUTION: NOT COMPLETE WITHOUT CURRENT CHANGE DOCUMENTS FROM DATABASE

WBS NO 242-AL 242AL-41

WBS NO 0000

	NAME	DATE	COMPANY
DRAWN BY	C. CULBERTSON		
CHECKED BY	L. R. DIEDS		
ENGINEERING CHIEF SCIENTIST	D. G. JOSLIN		
DESIGN ENGINEER	P. M. DORISH		
DESIGN APPROVER	N. W. WILSON		

U.S. DEPARTMENT OF ENERGY
Office of River Protection

LERF BASIN 41
GENERAL
NOTES

SIZE F | DRAWING NUMBER H-2-838746 | SHEET 1 | REV 00

SCALE NONE

29684

DOE_TILE.DWG (SUPERSEDES 2016)

SCAN DATA TABLE*														
NO.	REMARKS	DEPTH	NO.	REMARKS	DEPTH	NO.	REMARKS	DEPTH	NO.	REMARKS	DEPTH	NO.	REMARKS	DEPTH
1	UNDERGROUND ELECTRIC	2.2'	11	UNDERGROUND ELECTRIC	1.8' – 3.1'	21	UNKNOWN UTILITY	3.8' – 4.3'	31	WASTE TRANSFER	3.7' – 3.9'	41	UNDERGROUND ELECTRIC	0.6' & 2.9'
2	UNDERGROUND ELECTRIC	2.5' – 2.6'	12	UNDERGROUND ELECTRIC	1.6' – 3.1'	22	UNKNOWN UTILITY	3.8' – 4.8'	32	WASTE TRANSFER	1.9' – 2.7'	42	UNKNOWN UTILITY	1.6' – 1.9' & 3.1'
3	UNDERGROUND ELECTRIC	2.5' – 2.6'	13	UNKNOWN UTILITY	4.2' – 5.6'	23	UNKNOWN UTILITY	2.5' – 2.6'	33	WASTE TRANSFER	4.6' – 4.8'	43	UNDERGROUND ELECTRIC	2.4'
4	UNDERGROUND ELECTRIC	1.6' – 1.9'	14	UNDERGROUND ELECTRIC	0.8' – 2.5'	24	UNDERGROUND ELECTRIC	1.8'	34	WASTE TRANSFER	UNKNOWN	44	UNKNOWN UTILITY	1.5' – 3.2'
5	UNDERGROUND ELECTRIC	1.8' – 1.9'	15	UNKNOWN UTILITY	1.4' – 2.0'	25	UNDERGROUND ELECTRIC	1.7' – 1.8'	35	WASTE TRANSFER	UNKNOWN	45	UNDERGROUND ELECTRIC	1.8'
6	UNDERGROUND ELECTRIC	1.3' – 2.0'	16	WASTE TRANSFER	3.8' – 4.7'	26	WASTE TRANSFER	UNKNOWN	36	WASTE TRANSFER	4.6'	46	UNDERGROUND ELECTRIC	2.3' – 2.5'
7	UNDERGROUND ELECTRIC	2.2' – 3.2'	17	UNDERGROUND ELECTRIC	1.8' – 2.2'	27	UNDERGROUND ELECTRIC	0.3' – 1.9'	37	WASTE TRANSFER	4.0'	47	UNDERGROUND ELECTRIC	1.2'
8	UNDERGROUND ELECTRIC	2.3' – 3.2'	18	UNDERGROUND ELECTRIC	2.0' – 2.3'	28	UNDERGROUND ELECTRIC	1.0' – 2.7'	38	UNDERGROUND ELECTRIC	1.3'	48	UNDERGROUND ELECTRIC	1.6'
9	UNDERGROUND ELECTRIC	2.3' – 3.0'	19	UNDERGROUND ELECTRIC	4.1' – 4.2'	29	UNDERGROUND ELECTRIC	1.5' – 2.6'	39	UNDERGROUND ELECTRIC	1.2' – 1.7'	49	UNDERGROUND ELECTRIC	1.3'
10	UNDERGROUND ELECTRIC	2.7' – 3.2'	20	UNKNOWN UTILITY	1.5' – 1.9'	30	WASTE TRANSFER	5.0' – 5.1'	40	UNKNOWN UTILITY	UNKNOWN	50	XXXXX	XXX

* GPR SCAN PERFORMED BY BNLTECH ON 11/19/19 AND 12/19/19

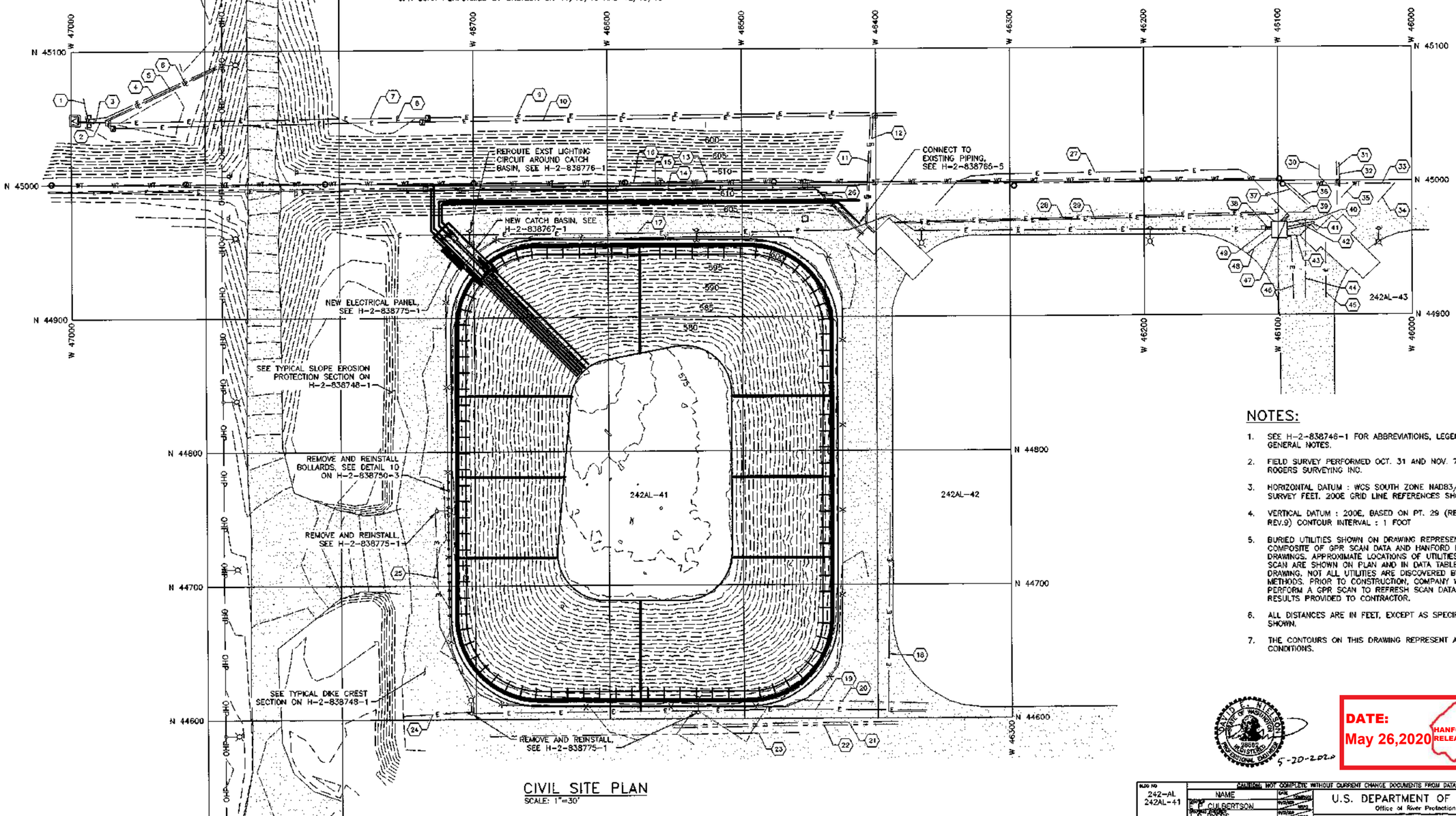

CIVIL SITE PLAN

SCALE: 1"=30'

NOTES:

1. SEE H-2-838748-1 FOR ABBREVIATIONS, LEGEND, AND GENERAL NOTES.
2. FIELD SURVEY PERFORMED OCT. 31 AND NOV. 7, 2019 BY ROGERS SURVEYING INC.
3. HORIZONTAL DATUM : WCS SOUTH ZONE NAD83/91 US SURVEY FEET. 200E GRID LINE REFERENCES SHOWN.
4. VERTICAL DATUM : 200E, BASED ON PT. 29 (REF H-2-2310 REV.9) CONTOUR INTERVAL : 1 FOOT
5. BURIED UTILITIES SHOWN ON DRAWING REPRESENT A COMPOSITE OF GPR SCAN DATA AND HANFORD REFERENCE DRAWINGS. APPROXIMATE LOCATIONS OF UTILITIES FROM GPR SCAN ARE SHOWN ON PLAN AND IN DATA TABLES ON SITE DRAWING. NOT ALL UTILITIES ARE DISCOVERED BY GPR METHODS. PRIOR TO CONSTRUCTION, COMPANY WILL PERFORM A GPR SCAN TO REFRESH SCAN DATA WITH RESULTS PROVIDED TO CONTRACTOR.
6. ALL DISTANCES ARE IN FEET, EXCEPT AS SPECIFICALLY SHOWN.
7. THE CONTOURS ON THIS DRAWING REPRESENT AS FOUND CONDITIONS.

DATE: May 26,2020 HANFORD RELEASE

5-20-2020

DWG NUMBER	TITLE
H-2-838745	DRAWING LIST/TITLE SHEET

DRAWING TRACEABILITY LIST

REFERENCES

REV NO	DESCRIPTION
0	RELEASED PER EDT-882461

REVISIONS

BLDG NO 242-AL 242AL-41

BLDG NO 0110

CAUTION: NOT COMPLETE WITHOUT CURRENT CHANGE DOCUMENTS FROM DATABASE

	NAME	DATE
DRAWN	E E CULBERTSON	
DESIGN ENGINEER	J R BYERS	
DESIGNED FOR REVIEWER	C C JOSLYN	
DESIGN ENGINEER	P M DORSH	
DESIGN AUTHORITY	N W WILSON	

U.S. DEPARTMENT OF ENERGY
Office of River Protection

LERF BASIN 41
CIVIL
SITE PLAN

SIZE F | DRAWING NUMBER H-2-838747 | SHEET 1 | REV 00

SCALE SHOWN

29684

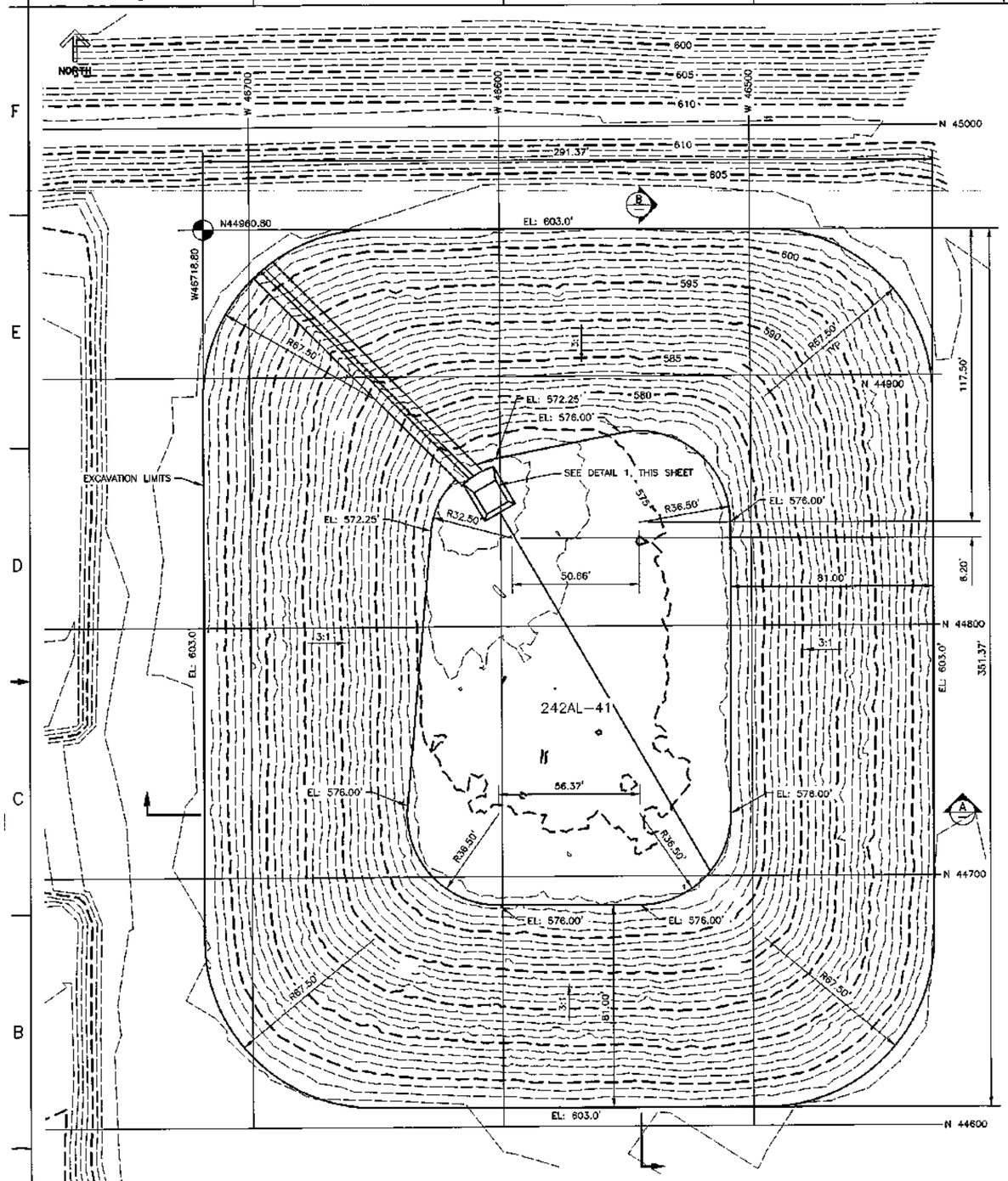

EXCAVATION PLAN
SCALE: 1"=20'

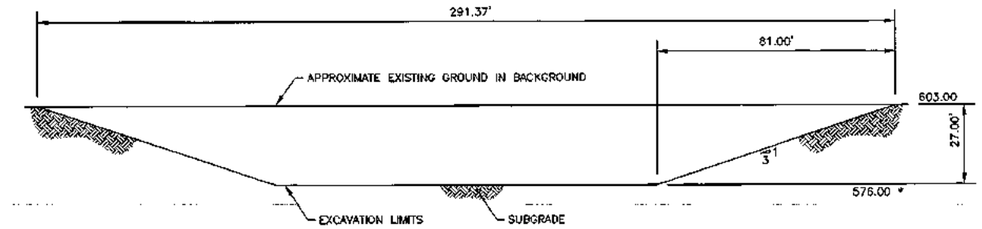

* NOTE: BOTTOM ELEVATION VARIES FOR DRAINAGE

A SECTION
SCALE: 1"=20'

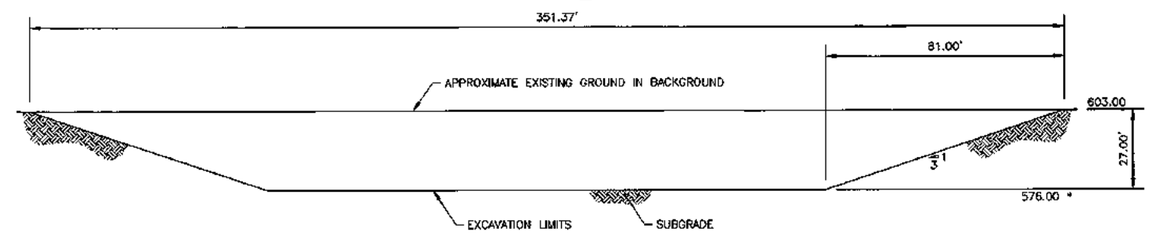

* NOTE: BOTTOM ELEVATION VARIES FOR DRAINAGE

B SECTION
SCALE: 1"=20'

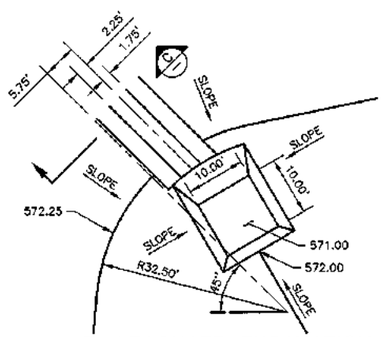

1 LEACHATE EXCAVATION
SCALE: 1"=10'

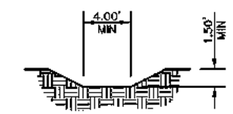

C SECTION
SCALE: 1"=5'

NOTES:

1. SEE H-2-838746-1 FOR ABBREVIATIONS, LEGEND, AND GENERAL NOTES.
2. ALL DISTANCES ARE IN FEET, EXCEPT AS SPECIFICALLY SHOWN.
3. OVERALL FILL = 320 CUBIC YARDS.
4. CONTRACTOR SHALL REMOVE EXISTING RIP-RAP ARMORING AS REQUIRED TO FACILITATE PLACEMENT OF BENTONITE.
5. THE CONTOURS ON THIS DRAWING REPRESENT AS FOUND CONDITIONS AND DESIGN ELEVATIONS SHOWN ARE SUBGRADE PRIOR TO SOIL/ BENTONITE MIX.
7. UNDERGROUND OR EMBEDDED UTILITIES ARE LOCATED WITHIN OR ADJACENT TO THE AREA.
8. THE LOCATION OR IDENTIFICATION OF SUCH UTILITIES HAS NOT BEEN VERIFIED. CONTRACTOR IS RESPONSIBLE FOR FIELD LOCATING AND IDENTIFYING UNDERGROUND OR EMBEDDED UTILITIES.
9. THE CONTRACTOR SHALL EXERCISE DUE CAUTION DURING ALL EXCAVATION WORK TO AVOID DAMAGE TO EXISTING SUBSURFACE FACILITIES AND TO PROTECT THE WORK CREW.
10. PLACE CRUSHED ROCK STABILIZATION PER TYPICAL DIKE CREST SECTION (H-2-838749-1) ON AREAS DISTURBED BY WORK UNLESS DIRECTED OTHERWISE BY COMPANY.

5-20-2020

DATE: May 26,2020 HANFORD RELEASE

DWG NUMBER	TITLE
H-2-838745	DRAWING LIST/TITLE SHEET

DRAWING TRACEABILITY LIST

REF NUMBER	TITLE
NEXT USED ON	REFERENCES

REV NO	DESCRIPTION
0	RELEASED PER EDT-882461

REVISIONS

CAUTION: NOT COMPLETE WITHOUT CURRENT CHANGE DOCUMENTS FROM DATABASE

BASE MD 242-AL 242AL-41

PROJ MD 0110

	NAME	DATE
DRAWER	B F CULBERTSON	
DESIGN ENGINEER	J R BIERS	
REPRESENTIVE TASK ENGINEER	C C JOSLIN	
PROJECT ENGINEER	P M CORSH	
DESIGN AUTHORITY	N W WILSON	

U.S. DEPARTMENT OF ENERGY
Office of River Protection

LERF BASIN 41
CIVIL
EXCAVATION PLAN

SIZE F | DRAWING NUMBER H-2-838748 | SHEET 1 | REV 00

SCALE SHOWN

29663

DOE_TEF_PAG (SEPTEMBER 2015)

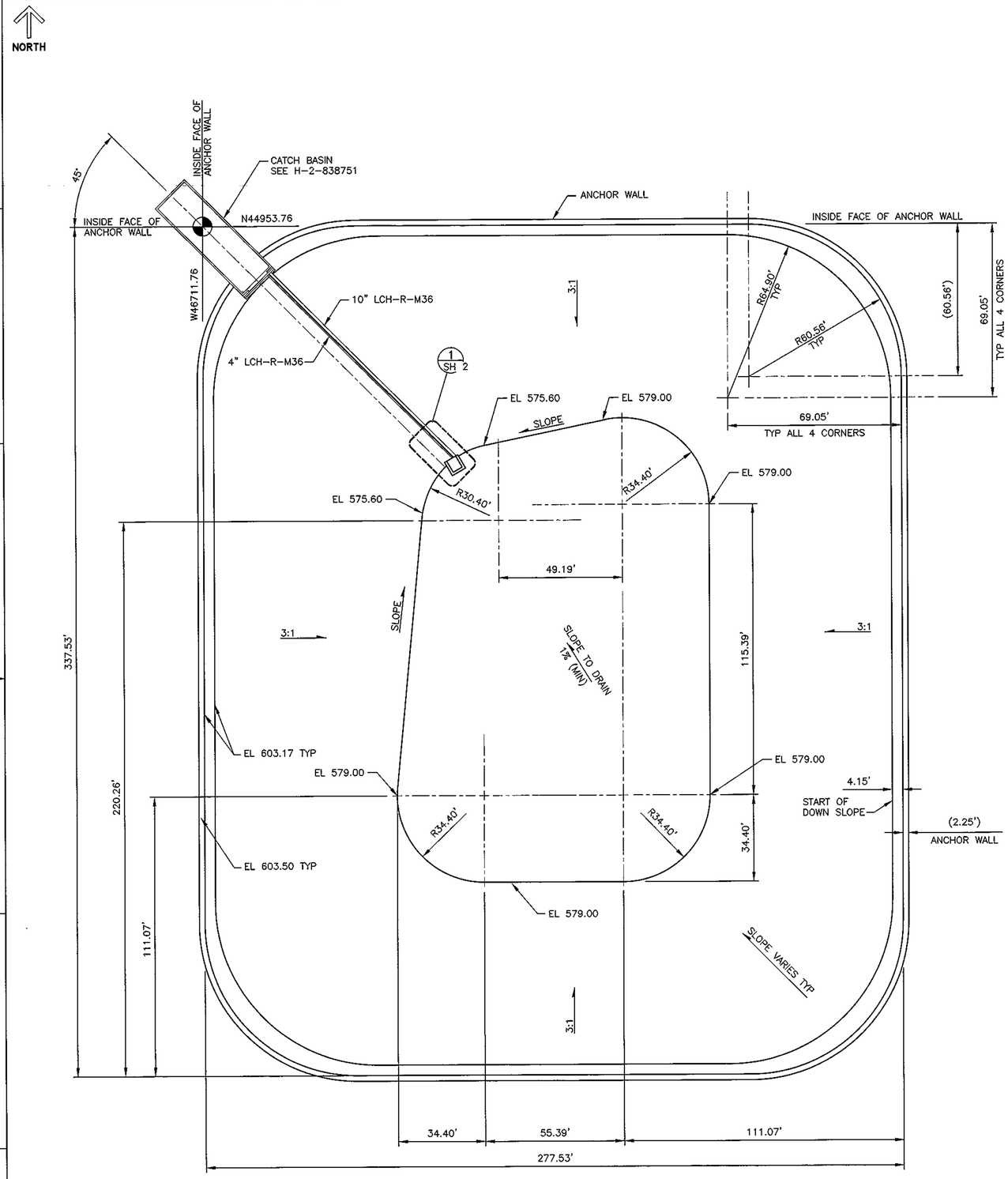

PLAN – TOP OF SECONDARY LINER

SCALE: 1"=20'

1" = 20' 0' 10' 20' 40' 60' SCALE FEET

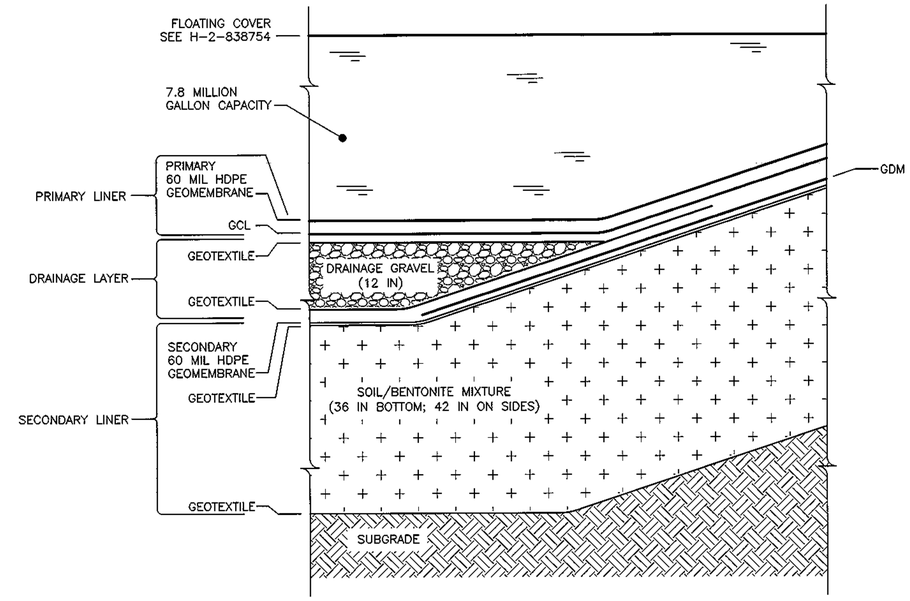

LINER SYSTEM SCHEMATIC

SCALE: 1"=1'-0"

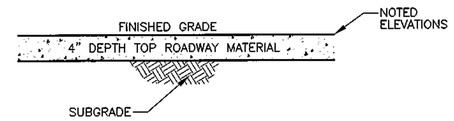

TYPICAL DIKE CREST SECTION

SCALE: NTS

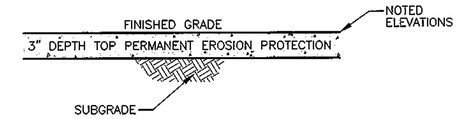

TYPICAL SLOPE EROSION PROTECTION SECTION

SCALE: NTS

NOTES:

1. SEE H-2-838746-1 FOR ABBREVIATIONS, LEGEND, AND GENERAL NOTES.
2. SLACK SHALL BE INCLUDED IN THE SECONDARY HDPE LINER TO ALLOW FOR SETTLEMENT AND THERMAL CONTRACTION AND DISTRIBUTED AS UNIFORMLY AS PRACTICABLE. MINIMUM SLACK SHALL BE DETERMINED ACCORDING TO THE FOLLOWING FORMULAS:
   A. $[(T+37.22) \times 190.21 \times (13\times10^{-5}) + 0.2]$ FEET ALONG THE BASIN FLOOR IN THE NORTH-SOUTH DIRECTION.
   B. $[(T+37.22) \times 130.21 \times (13\times10^{-5}) + 0.2]$ FEET ALONG THE BASIN FLOOR IN THE EAST-WEST DIRECTION.
   C. $[(T+37.22) \times 109.00 \times (13\times10^{-5}) + 0.2]$ FEET AROUND THE SLOPES IN THE DIRECTION OF THE DOWNSLOPE WHERE T IS THE TEMPERATURE OF THE HDPE LINER IN CELSIUS.

DAVID E. NIELSON STATE OF WASHINGTON 28592 REGISTERED PROFESSIONAL ENGINEER 5-20-2020

DATE: May 26, 2020 HANFORD RELEASE

DWG NUMBER	TITLE
H-2-838745	DRAWING LIST & TITLE SHEET

DRAWING TRACEABILITY LIST

REF NUMBER	TITLE
	REFERENCES
NEXT USED ON	

REV NO	DESCRIPTION
0	RELEASED PER EDT-882461

REVISIONS

BLDG NO 242-AL 242AL-41

CAUTION: NOT COMPLETE WITHOUT CURRENT CHANGE DOCUMENTS FROM DATABASE

	NAME	DATE	COMPANY
DRAFTER	J R BYERS	05/20/2020	WRPS
DRAWING SUPERVISOR	S A SNODGRASS	05/20/2020	WRPS
ENGINEERING PEER REVIEWER	C C JOSLYN	05/21/2020	WRPS
DESIGN ENGINEER	P M DORSH	05/21/2020	WRPS
DESIGN AUTHORITY	N W WILSON	05/21/2020	WRPS

U.S. DEPARTMENT OF ENERGY
Office of River Protection

LERF BASIN 41
CIVIL
BOTTOM LINER

0105 NO 0105

SIZE F | DRAWING NUMBER H-2-838749 | SHEET 1 | REV 00

SCALE SHOWN

29666

DOE_TB_F.DWG (SEPTEMBER 2018)

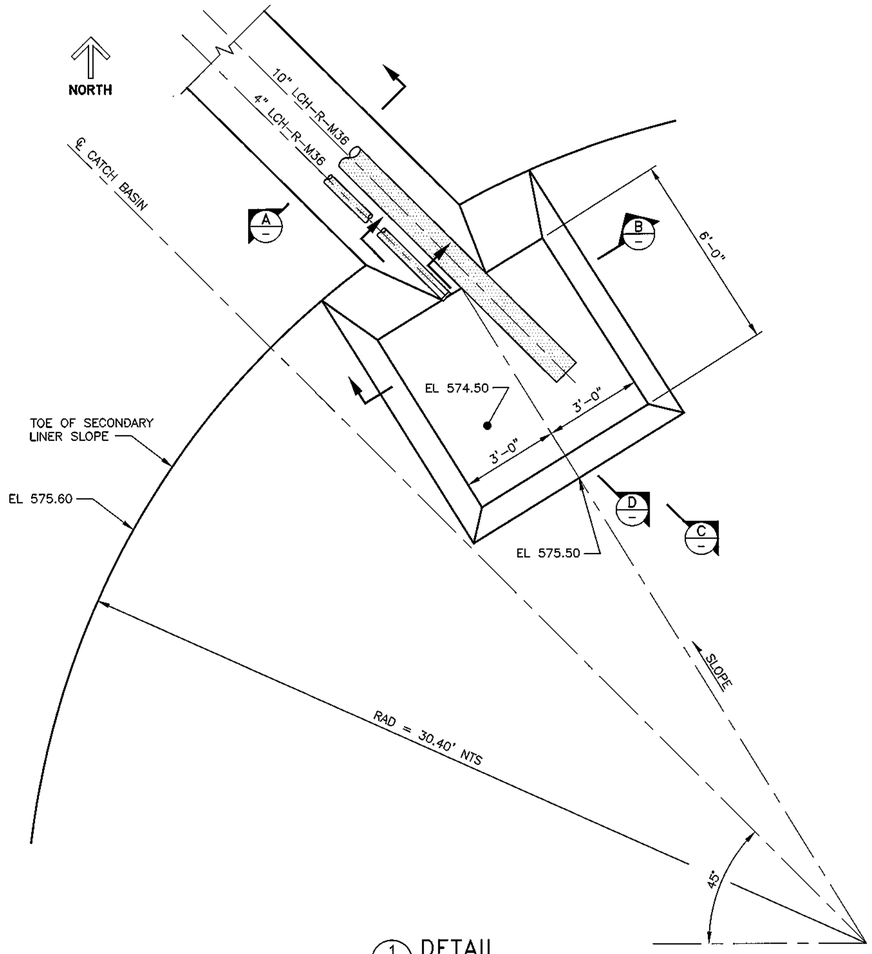

1 SH 1 DETAIL
SCALE: 1/2"=1'-0"

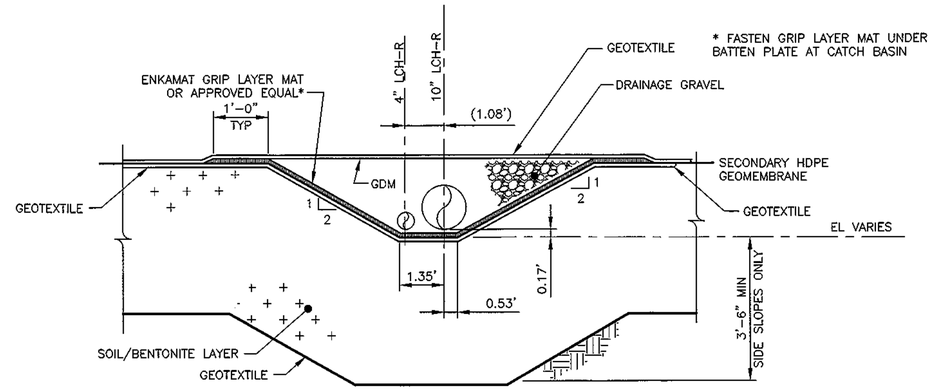

A SECTION
SCALE: NTS

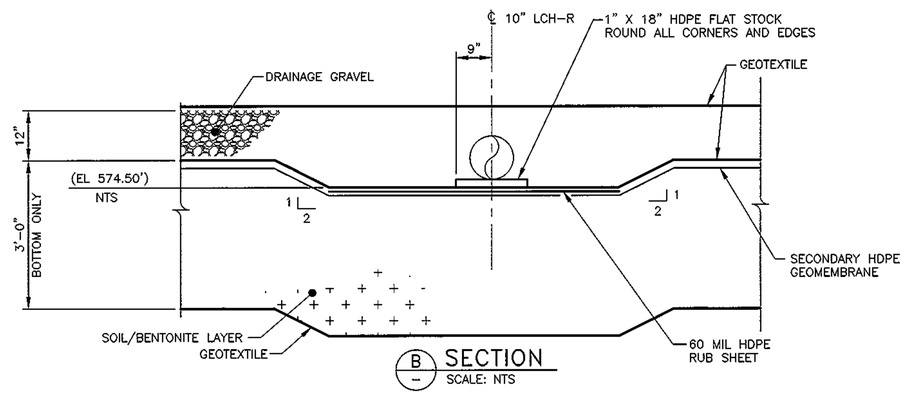

B SECTION
SCALE: NTS

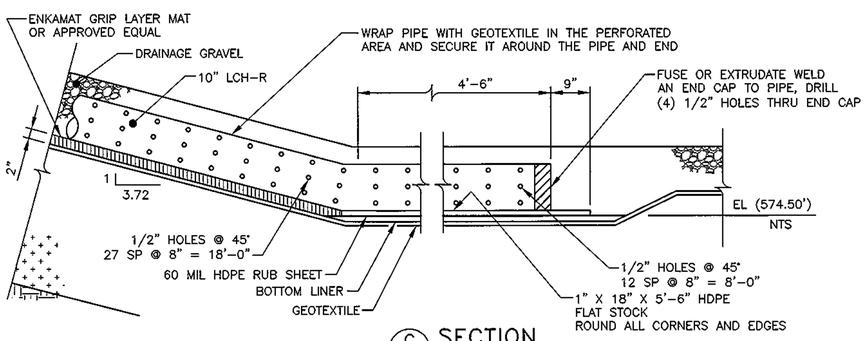

C SECTION
SCALE: NTS

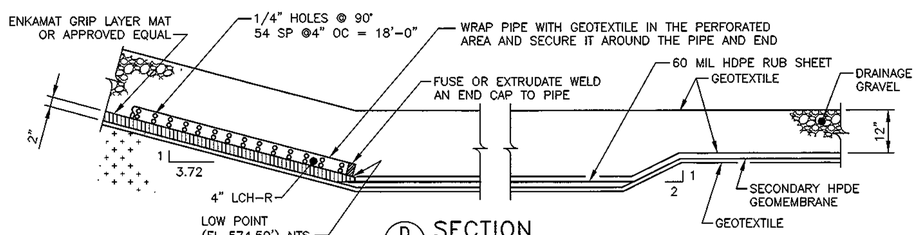

D SECTION
SCALE: NTS

NOTES:

1. GRIP LAYER MAT SHALL HAVE A TENSILE STRENGTH OF AT LEAST 2000 LB/FT IN ACCORDANCE WITH ASTM D6818.

DAVID C. NILSON STATE OF WASHINGTON 28592 REGISTERED PROFESSIONAL ENGINEER
5-20-2020

DATE: May 26, 2020 HANFORD RELEASE

DWG NUMBER	TITLE
DRAWING TRACEABILITY LIST	

REF NUMBER	TITLE
NEXT USED ON	REFERENCES

REV NO	DESCRIPTION
0	RELEASED PER EDT-882461
REVISIONS	

BLDG NO 242-AL 242AL-41
BLDG NO 0105

CAUTION: NOT COMPLETE WITHOUT CURRENT CHANGE DOCUMENTS FROM DATABASE

	NAME	DATE	COMPANY
DRAFTER	J R BYERS	05/20/2020	WRPS
DRAFTING CHECKER	S A SNODGRASS	05/20/2020	WRPS
ENGINEERING PEER REVIEWER	C C JOSLYN	05/21/2020	WRPS
DESIGN ENGINEER	P M DORSH	05/20/2020	WRPS
DESIGN AUTHORITY	N W WILSON	05/21/2020	WRPS

U.S. DEPARTMENT OF ENERGY
Office of River Protection

LERF BASIN 41
CIVIL
BOTTOM LINER DETAILS

SIZE F | DRAWING NUMBER H-2-838749 | SHEET 2 | REV 00
SCALE SHOWN

29665 DOE_TB_F.DWG (SEPTEMBER 2019)

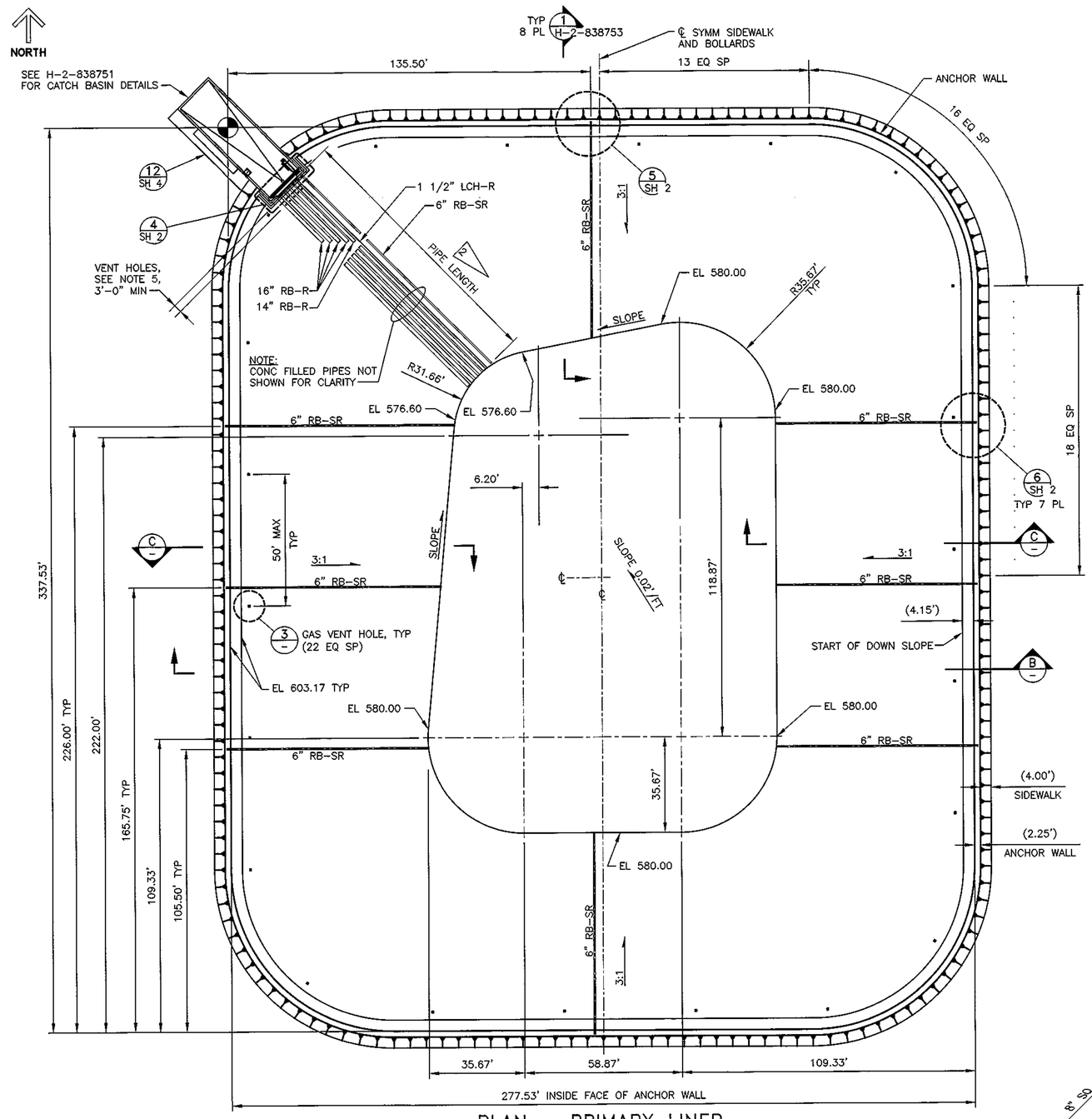

PLAN – PRIMARY LINER

SCALE: 1"=20'

1" = 20' 0' 10' 20' 40' 60' SCALE FEET

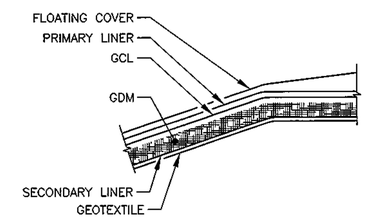

1 DETAIL

SCALE: NTS

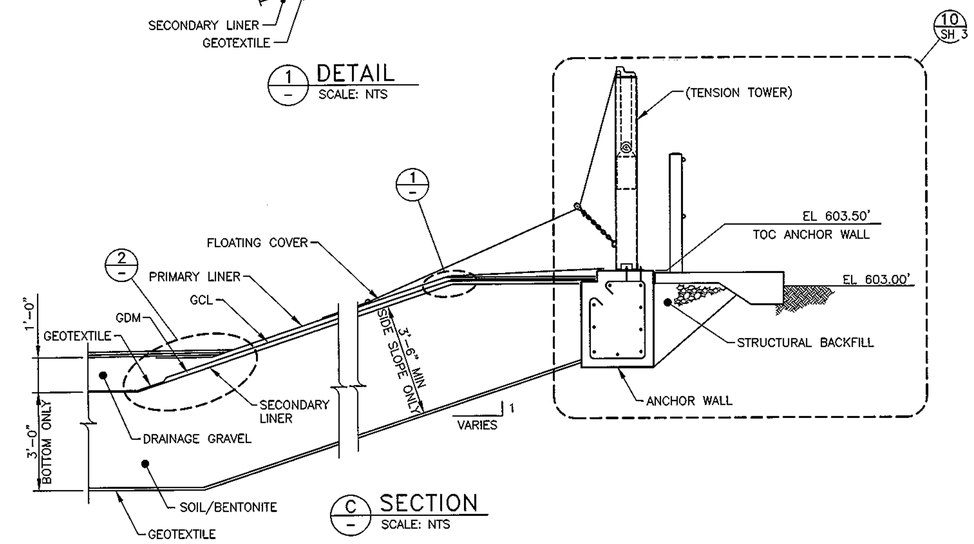

C SECTION

SCALE: NTS

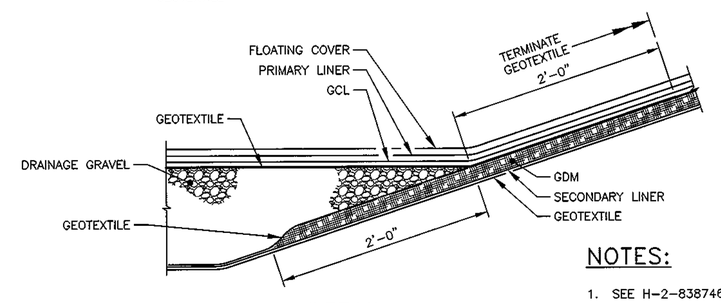

2 DETAIL

SCALE: NTS

NOTES:

1. SEE H-2-838746-1 FOR ABBREVIATIONS, LEGEND, AND GENERAL NOTES.

2. FORMULA FOR DETERMINING PIPE LENGTH. MEASURE PIPE TEMPERATURE AND LENGTH FOR SLOPE AT TIME OF CUTTING.
PIPE LENGTH = MEASURE LENGTH OF SLOPE X (1-(0.0012 X (160-PIPE TEMP °F))) AS-BUILT FINAL LENGTH AND AMBIENT TEMPERATURE.

3. WELD AND INSPECT STRUCTURAL WELDS IN ACCORDANCE WITH AWS D1.1. 2015, STATICALLY LOADED CRITERIA. ALL WELDS SHALL BE VT ON FINAL PASS UNLESS OTHERWISE SPECIFIED. WELD PROCEDURES AND QUALIFICATIONS PER ASME B&PV CODE, SECTION IX, 2017, ARE ACCEPTABLE.

4. SLACK SHALL BE INCLUDED IN THE PRIMARY HDPE LINER TO ALLOW FOR SETTLEMENT AND THERMAL CONTRACTION AND DISTRIBUTED AS UNIFORMLY AS PRACTICABLE. MINIMUM SLACK SHALL BE DETERMINED ACCORDING TO THE FOLLOWING FORMULAS:
   A. $[(T+37.22) \times 190.21 \times (13\times10^{-5}) + 0.2]$ FEET ALONG THE BASIN FLOOR IN THE NORTH-SOUTH DIRECTION.
   B. $[(T+37.22) \times 130.21 \times (13\times10^{-5}) + 0.2]$ FEET ALONG THE BASIN FLOOR IN THE EAST-WEST DIRECTION.
   C. $[(T+37.22) \times 109.00 \times (13\times10^{-5}) + 0.2]$ FEET AROUND THE SLOPES IN THE DIRECTION OF THE DOWNSLOPE WHERE T IS THE TEMPERATURE OF THE HDPE LINER IN CELSIUS.

5. DRILL 1/4" DIA VENT HOLE IN EACH PIPE, 6" RB-SR, 14" RB-R, AND 16" RB-R (VENT HOLE IN 2" DR-BR-R AND 1 1/2" LCH-R SHOWN ON PIPING DRAWINGS), 3'-0" MIN FROM CATCH BASIN FACE OF WALL.

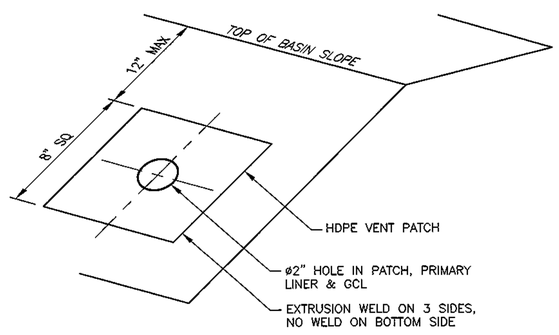

3 DETAIL-GAS VENT

SCALE: NTS

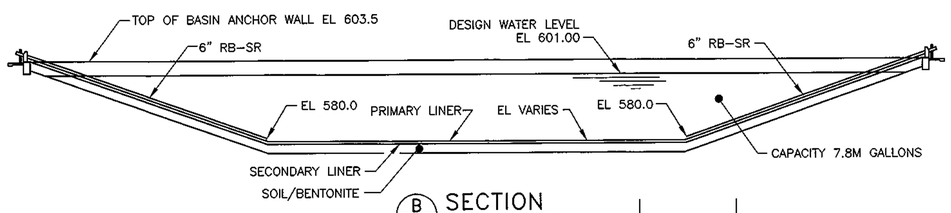

B SECTION

SCALE: 1"=20'

DATE: May 26, 2020

HANFORD RELEASE

DAVID E. NILSON, STATE OF WASHINGTON, 28592 REGISTERED PROFESSIONAL ENGINEER 5-20-2020

DWG NUMBER	TITLE
DRAWING TRACEABILITY LIST	

REF NUMBER	TITLE
H-2-838745	DRAWING LIST & TITLE SHEET
REFERENCES	

NEXT USED ON

REV NO	DESCRIPTION
0	RELEASED PER EDT-882461
REVISIONS	

DLDO NO 242-AL 242AL-41

0105 NO 0105

CAUTION: NOT COMPLETE WITHOUT CURRENT CHANGE DOCUMENTS FROM DATABASE

	NAME	DATE	COMPANY
DRAWN BY	J R BYERS	04/30/2020	WRPS
DRAWING CHECKED	S A SNODGRASS	04/30/2020	WRPS
ENGINEERING FIELD REPRESENTATIVE	C C JOSLYN	05/14/2020	WRPS
DESIGN ENGINEER	P M DORSH	05/20/2020	WRPS
DESIGN AUTHORITY	N W WILSON	05/01/2020	WRPS

U.S. DEPARTMENT OF ENERGY
Office of River Protection

LERF BASIN 41
CIVIL
TOP LINER

SIZE F | DRAWING NUMBER H-2-838750 | SHEET 1 | REV 00

SCALE SHOWN

29676

DOE_TB_F.DWG (SEPTEMBER 2019)

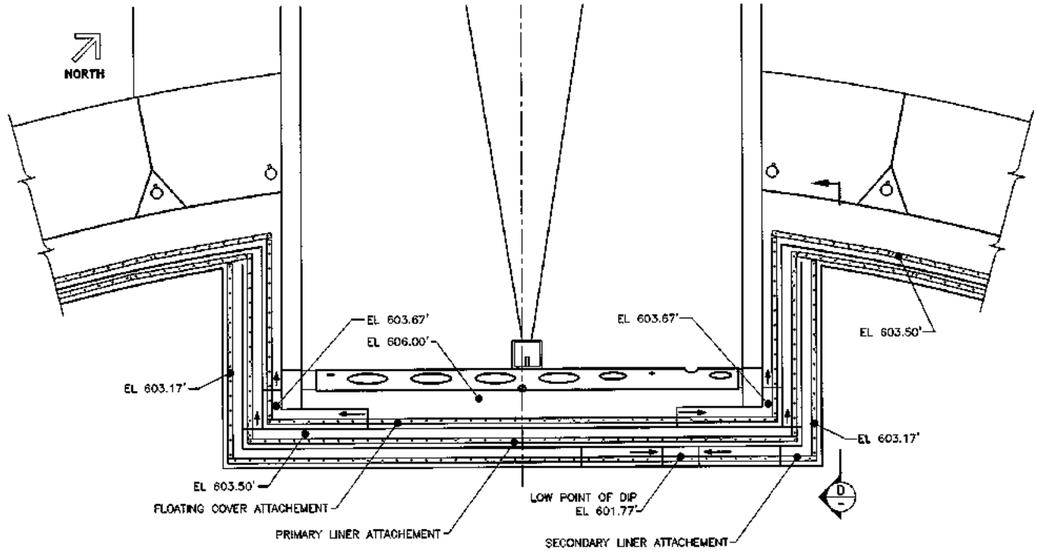

4 SH DETAIL–LINER ANCHORAGE AT CATCH BASIN WALL
SCALE: 1/2"=1'–0"

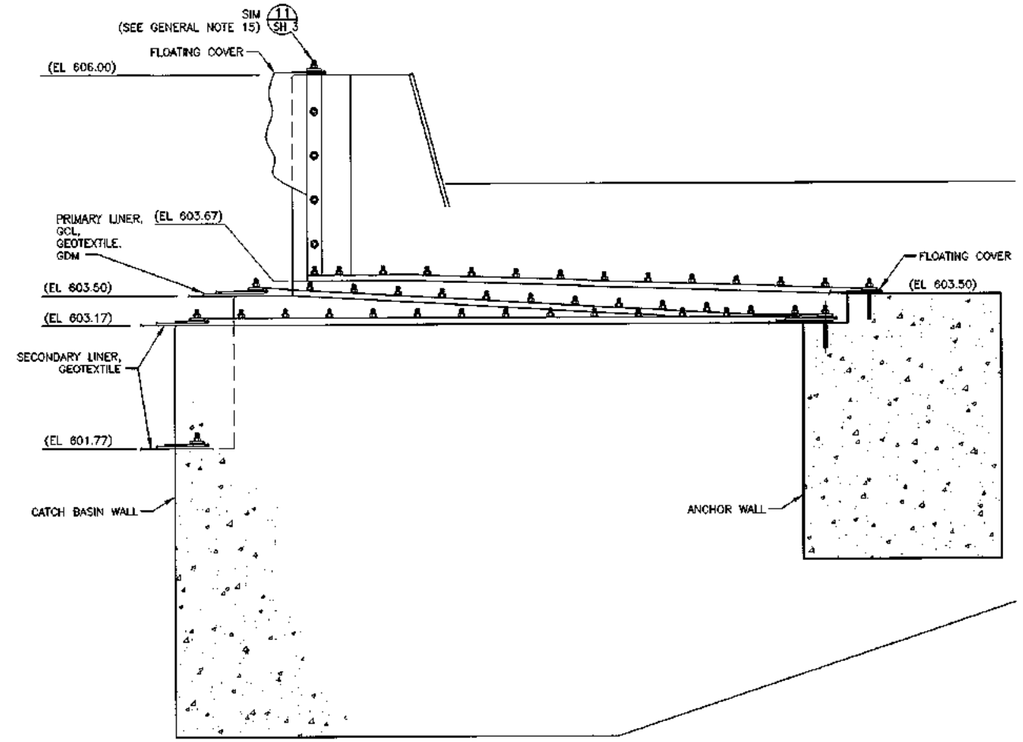

D – SECTION
SCALE: 1 1/2"=1'–0"

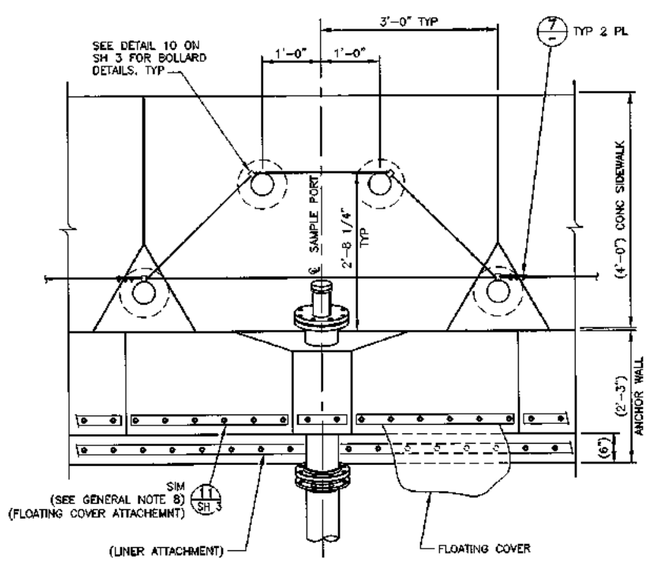

5 SH 1 DETAIL–NORTH SAMPLE PORT
SCALE: 1"=1'–0"

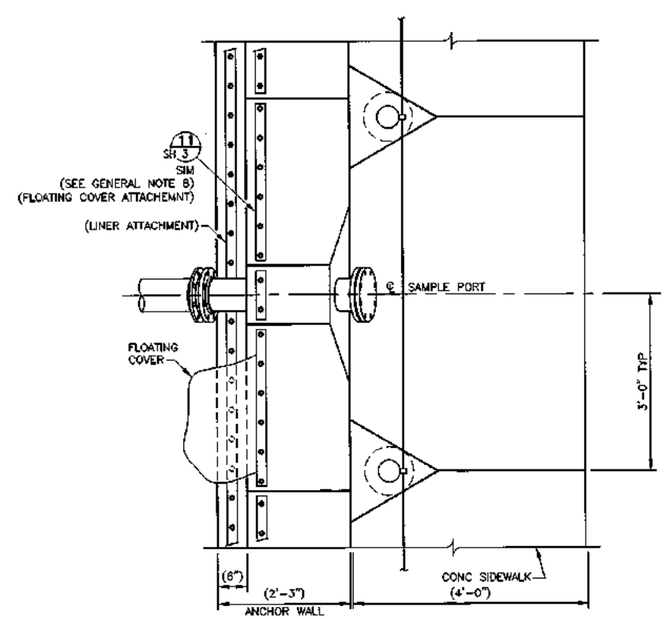

6 SH 1 DETAIL–SAMPLE PORTS
SCALE: 1"=1'–0"

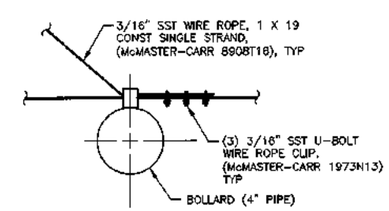

7 – DETAIL
SCALE: 3"=1'–0"

DATE: May 26,2020 HANFORD RELEASE

DWG NUMBER	TITLE
DRAWING TRACEABILITY LIST	

REF NUMBER	TITLE
NEXT USED ON	REFERENCES

REV NO	DESCRIPTION
0	RELEASED PER EDT–882461
REVISIONS	

CAUTION: NOT COMPLETE WITHOUT CURRENT CHANGE DOCUMENTS FROM DATABASE

	NAME	DATE
DRAWN BY	J R RYERS	
ENGINEERING DESIGN	S A SNOUGRASS	
ENGINEERING CHIEF REVIEWER	C C JOSLYN	
DESIGN APPROVER	P M CORSH	
DESIGN AUTHORITY	N W WILSON	

242–AL
242AL–41
0106

U.S. DEPARTMENT OF ENERGY
Office of River Protection

LERF BASIN 41
CIVIL
TOP LINER DETAILS

SIZE F | DRAWING NUMBER H–2–838750 | SHEET 2 | REV 00
SCALE SHOWN
29672

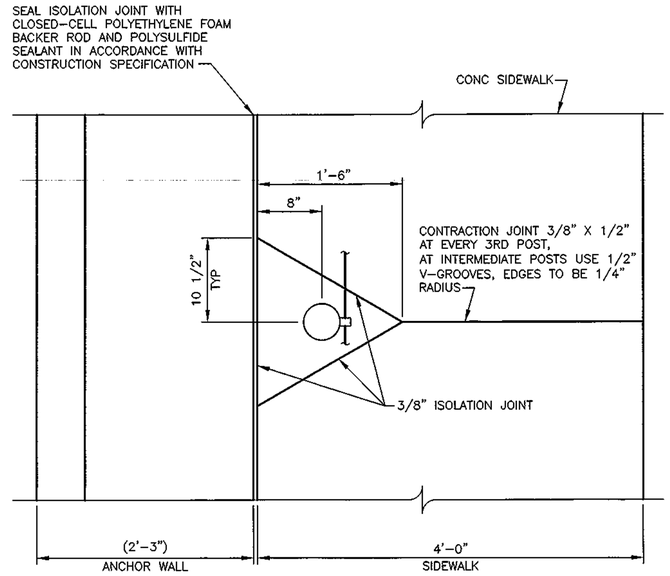

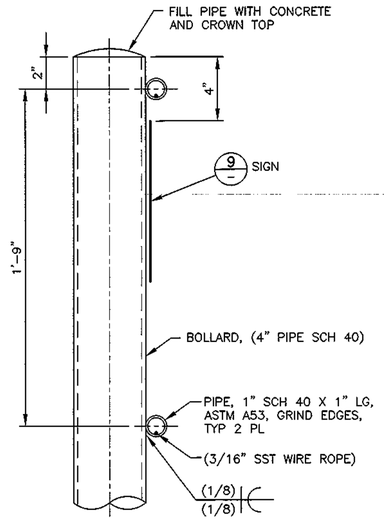

8 DETAIL
SCALE: 3"=1'-0"

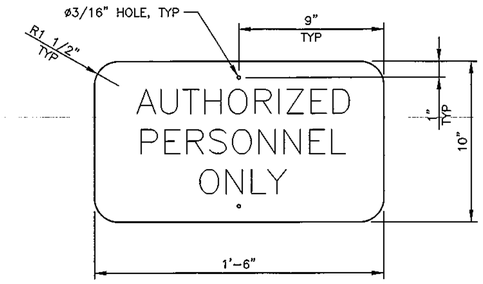

9 DETAIL-SIGN
SCALE: 3"=1'-0"

NOTES:

1. MATERIAL: ALUMINUM, 1/8" MINIMUM THICKNESS.
2. LETTERS IN ACCORDANCE WITH USDOT STANDARD HIGHWAY SIGNS MANUAL, STANDARD ALPHABET, ALL CAPS, CENTER ON SIGN, 1 1/2" CHARACTER HEIGHT.
3. ATTACH TO GUARD POSTS WITH NO 8-32 ZINC-PLATED STEEL THREAD CUTTING SCREWS (OR BOLTS) AND WASHER.
4. PLACE ONE SIGN ON EVERY 8TH GUARD POST BEGINNING APPROX 12FT E SIDE OF CENTER LINE OF CATCH BASIN FOR A TOTAL OF 24 SIGNS PER BASIN.

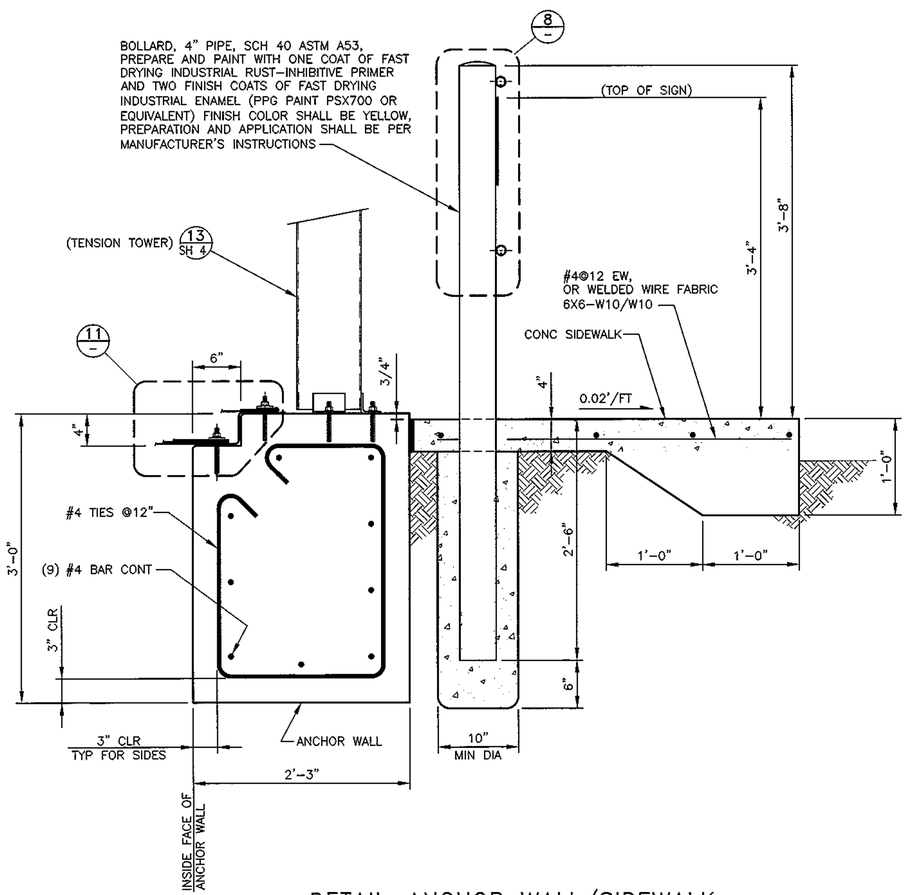

10 SH 1 DETAIL-ANCHOR WALL/SIDEWALK
SCALE: 1 1/2"=1'-0"

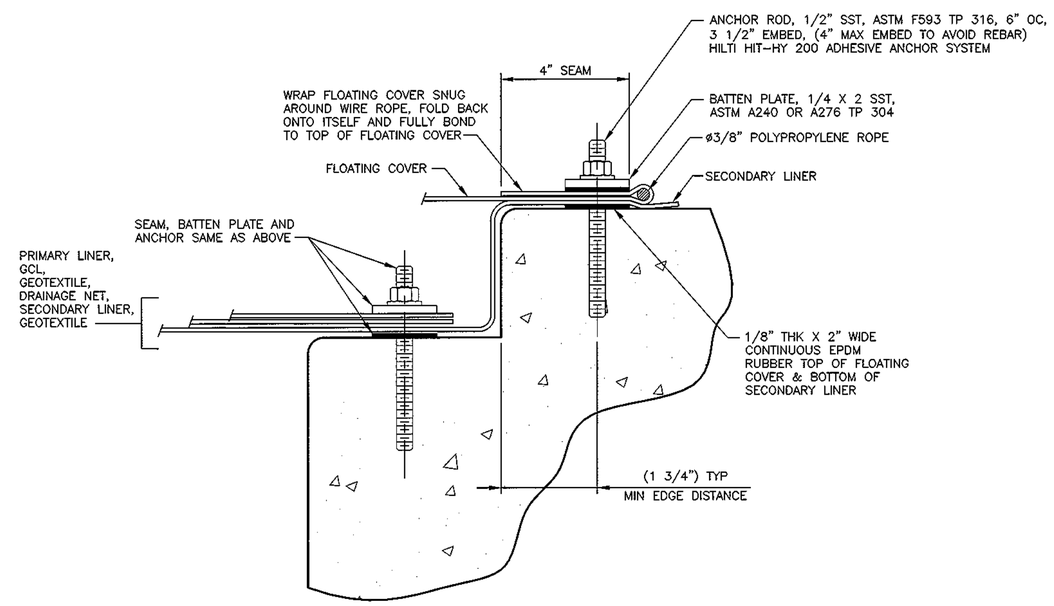

11 DETAIL
SCALE: 6"=1'-0"

DATE: May 26, 2020 HANFORD RELEASE

DWG NUMBER	TITLE	REF NUMBER	TITLE
DRAWING TRACEABILITY LIST		NEXT USED ON	REFERENCES

REV NO	DESCRIPTION
0	RELEASED PER EDT-882461

REVISIONS

BLDG NO 242-AL 242AL-41

0105 NO 0105

CAUTION: NOT COMPLETE WITHOUT CURRENT CHANGE DOCUMENTS FROM DATABASE

	NAME	DATE	COMPANY
DRAWER	J R BYERS	04/03/2020	WRPS
CHIEF ROAD SUPERVISOR	S A SNODGRASS	04/03/2020	WRPS
ENGINEERING PEER REVIEWER	C C JOSLYN	04/14/2020	WRPS
DESIGN ENGINEER	P M DORSH	04/03/2020	WRPS
DESIGN AUTHORITY	N W WILSON	04/04/2020	WRPS

U.S. DEPARTMENT OF ENERGY
Office of River Protection

LERF BASIN 41
CIVIL
TOP LINER DETAILS

SIZE	DRAWING NUMBER	SHEET	REV
F	H-2-838750	3	00

SCALE SHOWN

29671 DOE_TB_F.DWG (SEPTEMBER 2019)

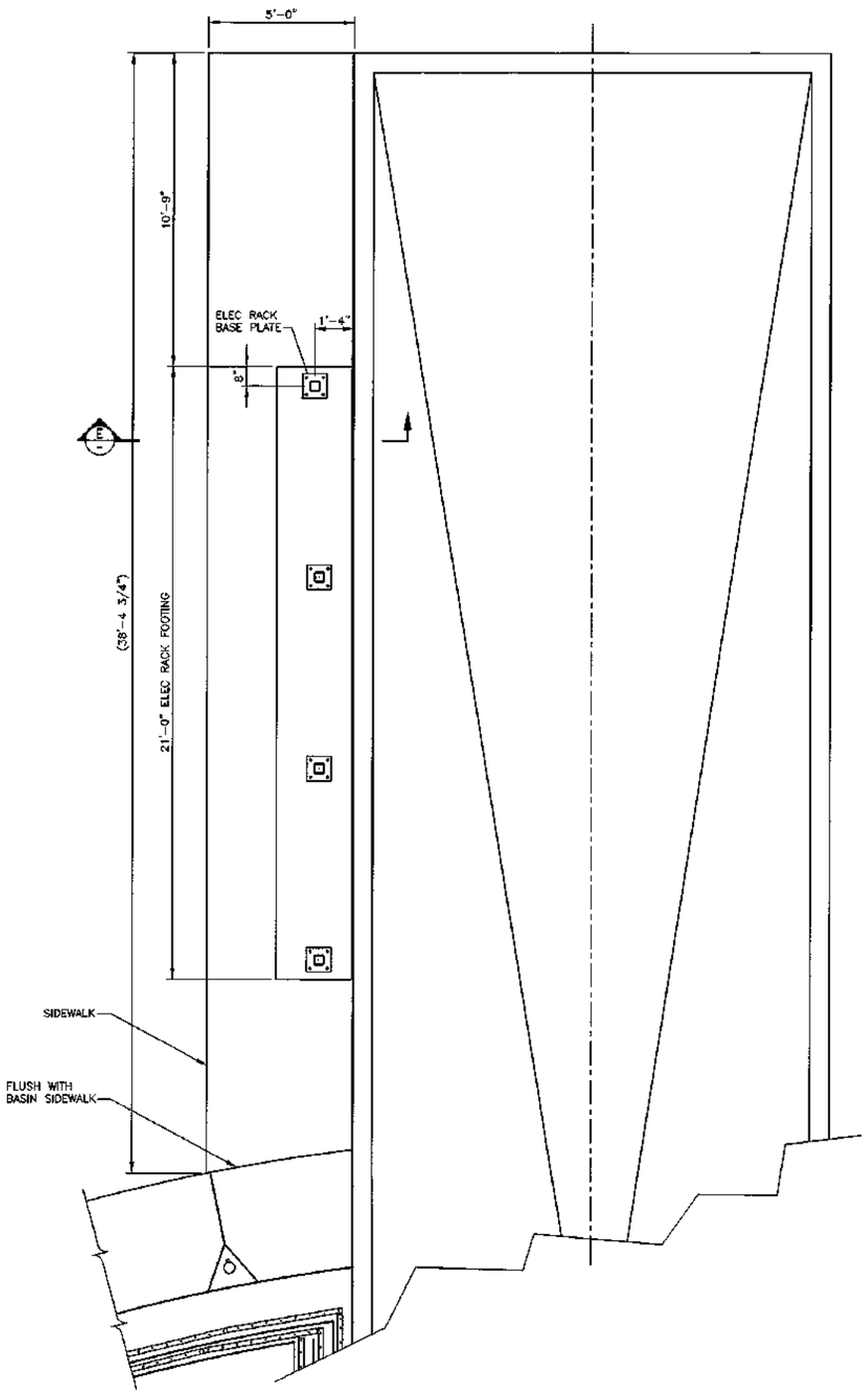

12 SH 1 DETAIL-SIDEWALK/RACK FOOTING AT CATCH BASIN
SCALE: 1/2"=1'-0"

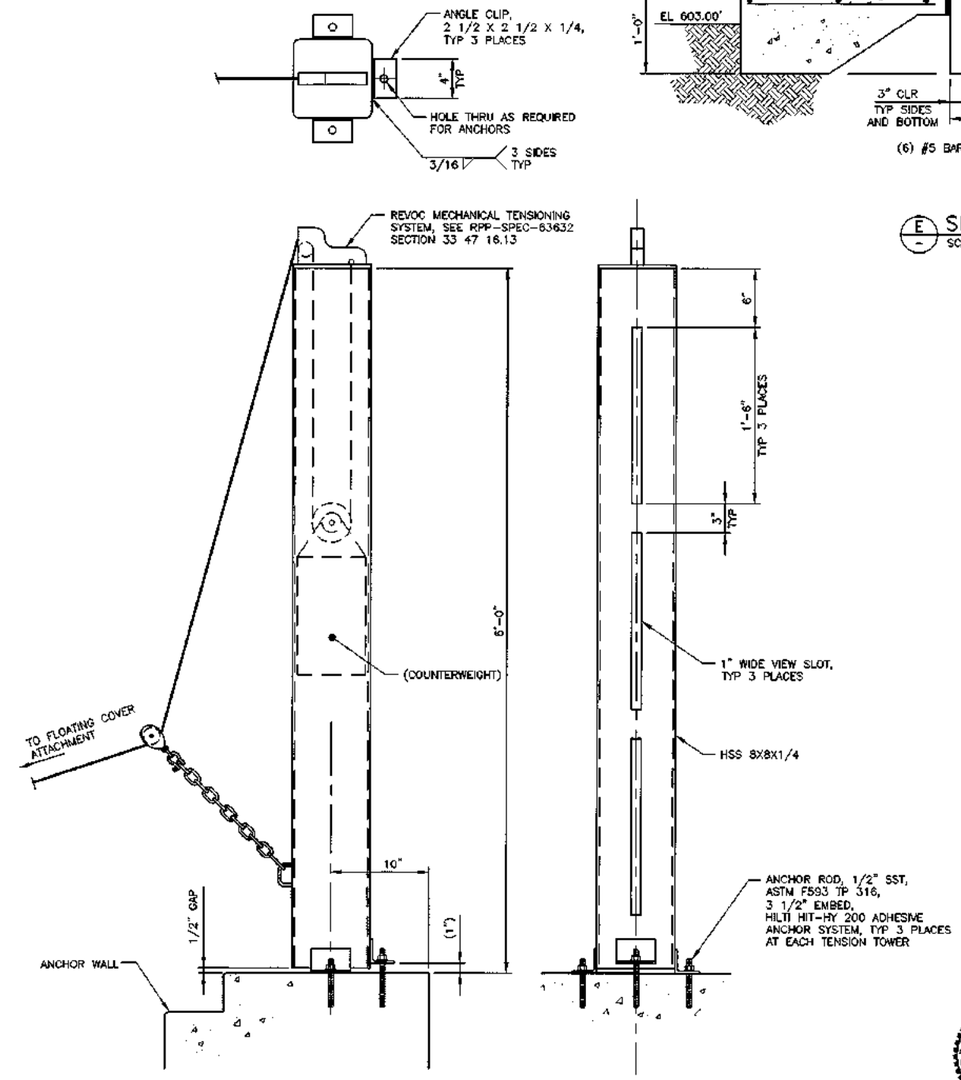

13 SH 3 DETAIL-TENSION TOWER
SCALE: NTS

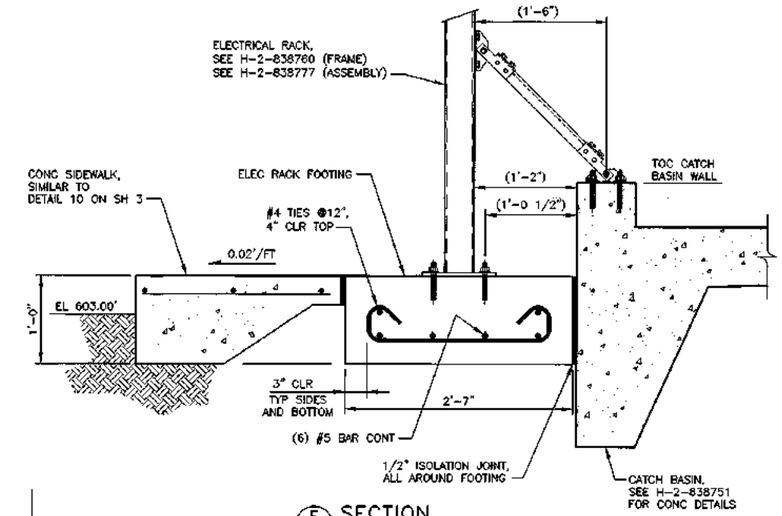

E SECTION
SCALE: 1 1/2"=1'-0"

DATE: May 26,2020 HANFORD RELEASE

DWG NUMBER	TITLE
DRAWING TRACEABILITY LIST	

REF NUMBER	TITLE
REFERENCES	
NEXT USED ON	

REV NO	DESCRIPTION
0	RELEASED PER EDT-882461
REVISIONS	

BLDG NO 242-AL 242AL-41
DWG NO 0105

CAUTION: NOT COMPLETE WITHOUT CURRENT CHANGE DOCUMENTS FROM DATABASE

	NAME	DATE
DRAWN BY	J. R. BYERS	
DESIGN ENGINEER	S A SNODGRASS	
DESIGNED BY & CHECKED	C C JOSLYN	
SERVICE ENGINEER	P M DORSH	
SERVICE MANAGER	N W WILSON	

U.S. DEPARTMENT OF ENERGY
Office of River Protection

LERF BASIN 41
CIVIL
TOP LINER DETAILS

SIZE F | DRAWING NUMBER H-2-838750 | SHEET 4 | REV 00

SCALE SHOWN

29674

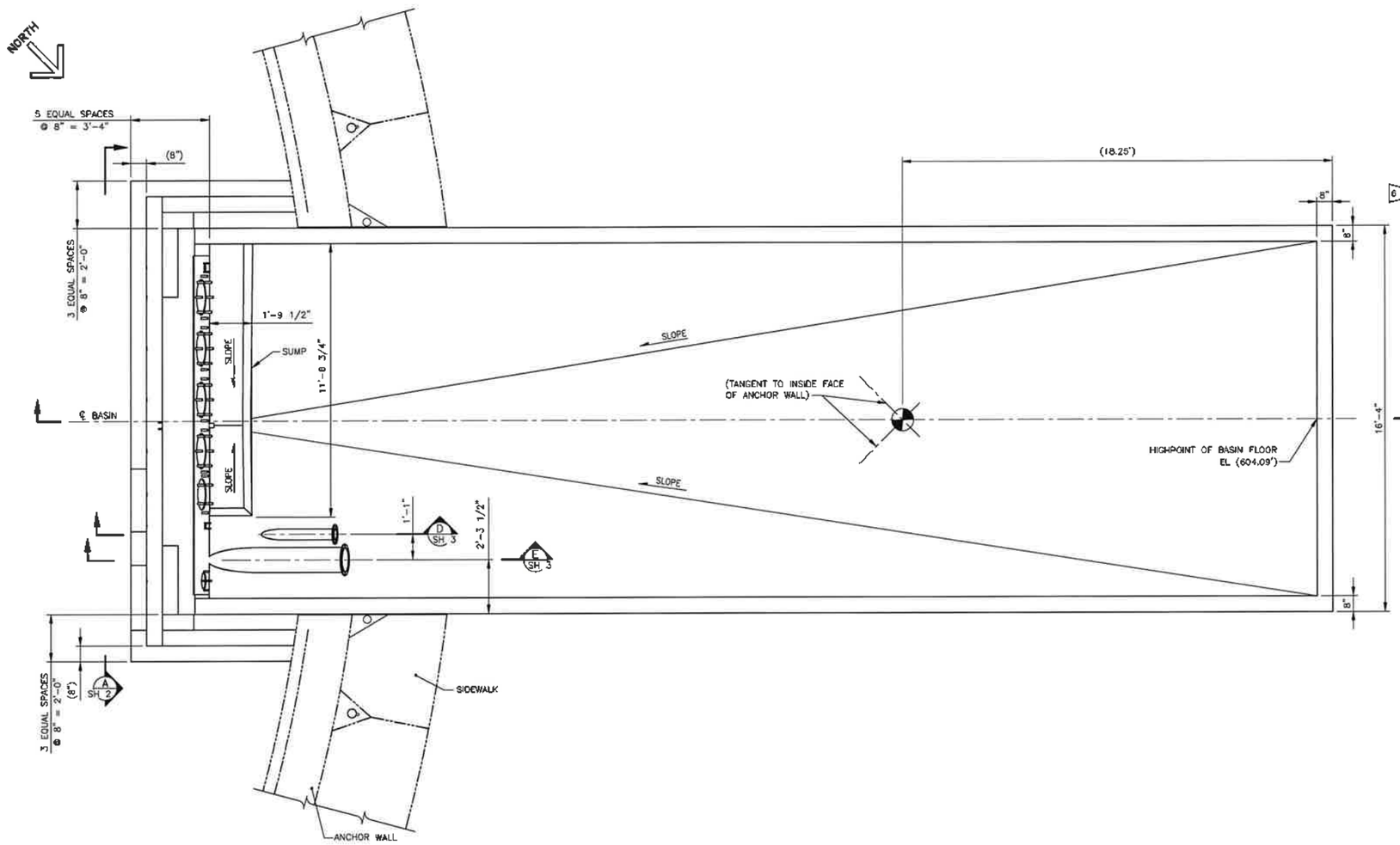

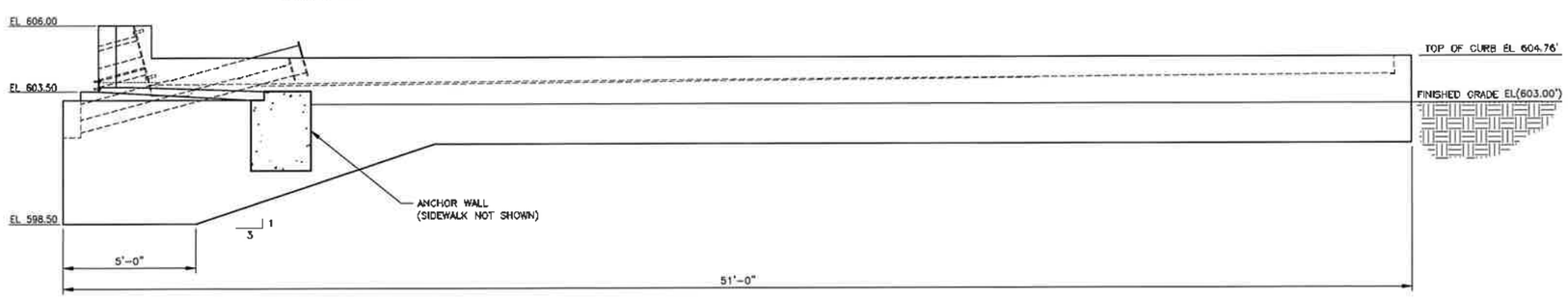

NOTES:

1. SEE H-2-838745-1 FOR ABBREVIATIONS, LEGEND, AND GENERAL NOTES.
2. FOR CONCRETE AND REBAR REQUIREMENTS SEE RPP-SPEC-63632.
3. THE FLOOR, INSIDE EDGE AND TOP OF CURB OF THE CATCH BASIN SHALL RECEIVE AN SF-3.0 FINISH.
4. WELD AND INSPECT STRUCTURAL WELDS IN ACCORDANCE WITH AWS D1.1, 2015, STATICALLY LOADED CRITERIA. ALL WELDS SHALL BE VT ON FINAL PASS UNLESS OTHERWISE SPECIFIED. WELD PROCEDURES AND QUALIFICATIONS PER ASME B&PV CODE, SECTION IX, 2017, ARE ACCEPTABLE.
5. FOR STRUCTURAL ANALYSIS SEE RPP-CALC-63884.
6. FOR STAINLESS STEEL PIPE USE CLASS M-10 PIPING CODE, SEE CONSTRUCTION SPECIFICATION RPP-SPEC-63632 SECTION 40 40 00. FABRICATE, WELD, INSPECT AND TEST PIPING IN ACCORDANCE WITH ASME B31.3, 2016 FOR CATEGORY NORMAL FLUID SERVICE. DESIGN PRESSURE IS 150 PSIG, AND DESIGN TEMPERATURE IS 150°F. HYDROSTATIC LEAK PRESSURE TEST TO 225 PSIG (-0/+25 PSIG). FABRICATION TEMPERATURE IS 50°F TO 120°F.

RONALD W. DAVIDSON STATE OF WASHINGTON 24180 REGISTERED PROFESSIONAL ENGINEER

5/21/2020

DATE: May 20, 2020 HANFORD RELEASE

CATCH BASIN

SCALE: 1/2"=1'-0"

DWG NUMBER	TITLE
DRAWING TRACEABILITY LIST	

REF NUMBER	TITLE
H-2-838745	DRAWING LIST/TITLE SHEET
REFERENCES	
NEXT USED ON END ITEM	

REV NO	DESCRIPTION
0	RELEASED PER EDT-882462
REVISIONS	

DOC NO 242-AL 242AL-41

INDEX NO 0401

CAUTION: NOT COMPLETE WITHOUT CURRENT CHANGE DOCUMENTS FROM DATABASE

	NAME	DATE	COMPANY
DRAFTER	J. R. BYERS		
SENIOR DRAFTER	V. F. SALYERS		
CONTRACTING TECH REVIEWER	C. C. JOSLYN		
DESIGN ENGINEER	R. W. DAVIDSON		
DESIGN AUTHORITY	N. W. WILSON		

U.S. DEPARTMENT OF ENERGY
Office of River Protection

LERF BASIN 41
STRUCTURAL
CATCH BASIN

F H-2-838751 SHEET 1 REV 00

SCALE SHOWN

29751

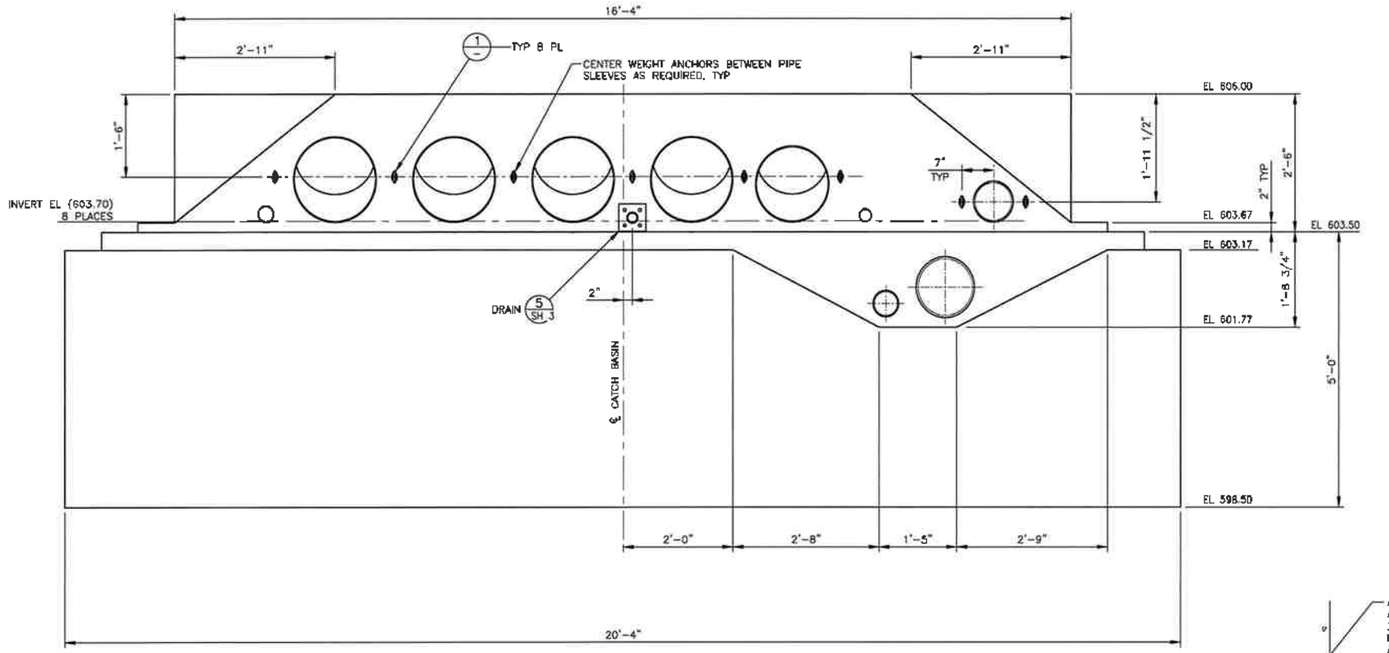

A VIEW SH 1
SCALE: 1"=1'-0"

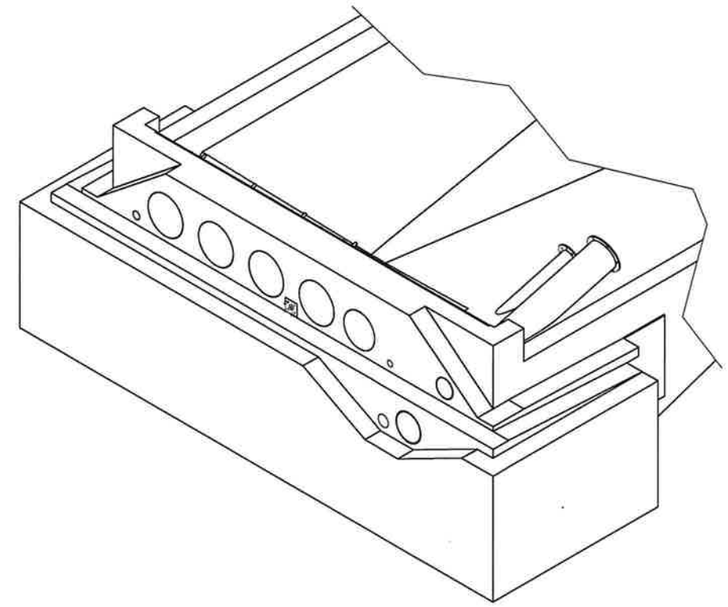

ISO VIEW OF CATCH BASIN WALL
SCALE: NTS

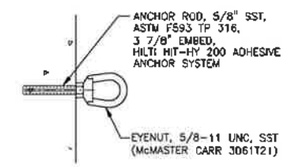

1 DETAIL-WEIGHT ANCHOR
SCALE: 3"=1'-0"

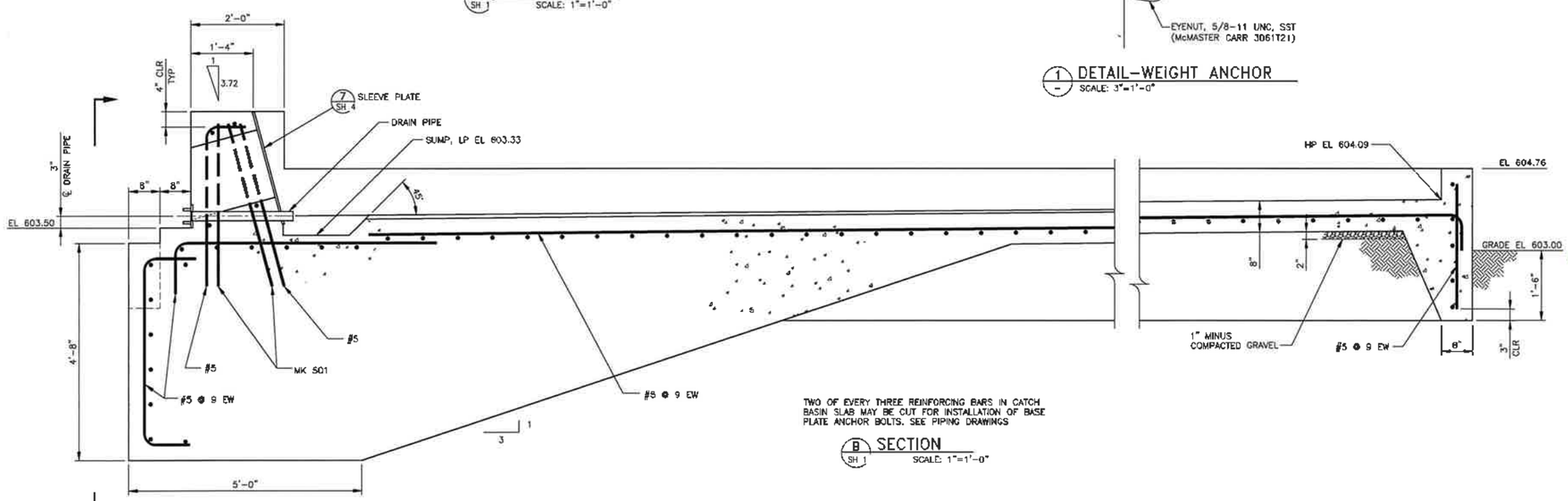

TWO OF EVERY THREE REINFORCING BARS IN CATCH BASIN SLAB MAY BE CUT FOR INSTALLATION OF BASE PLATE ANCHOR BOLTS. SEE PIPING DRAWINGS

B SECTION SH 1
SCALE: 1"=1'-0"

RONALD W. DAVIDSON STATE OF WASHINGTON 24180 REGISTERED PROFESSIONAL ENGINEER
5/21/2020

DATE: May 20, 2020 HANFORD RELEASE

DWG NUMBER	TITLE
DRAWING TRACEABILITY LIST	

REF NUMBER	TITLE
H-2-838745	DRAWING LIST/TITLE SHEET
REFERENCES	
NEXT USED ON END ITEM	

REV NO	DESCRIPTION
0	RELEASED PER EDT-982462
REVISIONS	

WBS NO 242-AL, 242AL-41
NEOC NO 0401

CAUTION: NOT COMPLETE WITHOUT CURRENT CHANGE DOCUMENTS FROM DATABASE

	NAME	DATE	CONFIRM
DRAWER	J. R. BYERS	10/15/99	ARES
DRAWING CHECKER	V. F. SALTERS	10/15/99	ARES
ENGINEERING DATA REVIEWER	C. C. JOSLYN	10/15/99	ARES
DESIGN ENGINEER	R. W. DAVIDSON	10/15/99	ARES
DESIGN AUTHORITY	N. W. WILSON	10/15/99	MPP

U.S. DEPARTMENT OF ENERGY
Office of River Protection

LERF BASIN 41
STRUCTURAL
CATCH BASIN DETAILS

SIZE F | DRAWING NUMBER H-2-838751 | SHEET 2 | REV 00
SCALE SHOWN

27536

NOTES:
FOR GENERAL NOTES AND PARTS/MATERIAL SEE SHEET 1.

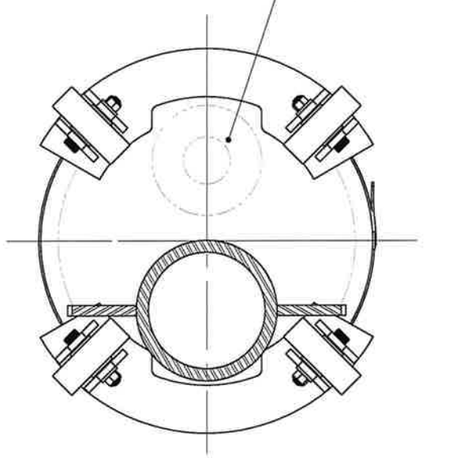

SECTION D-D
SCALE: 1 / 2

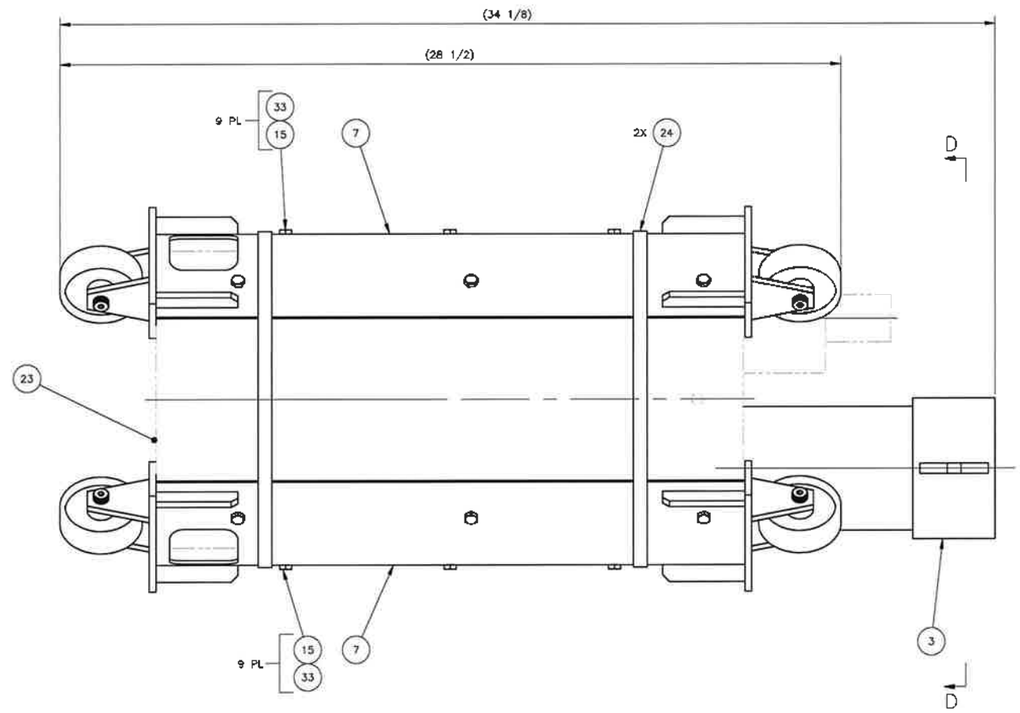

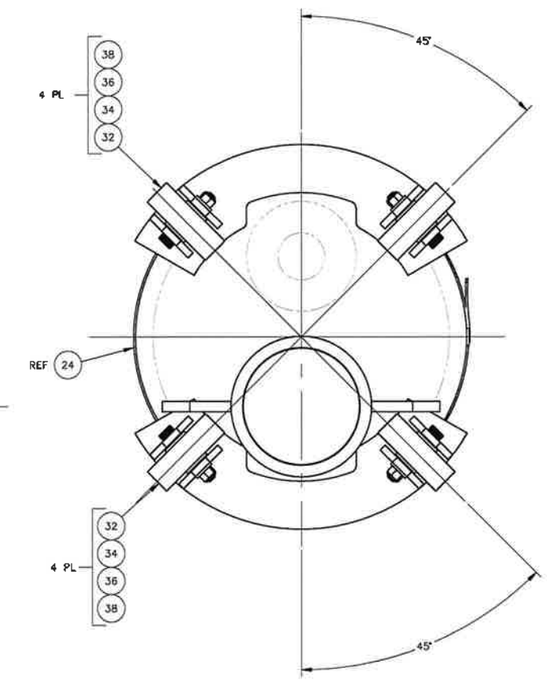

2 PUMP ASSEMBLY
SCALE: 1/4

PAUL M. DORSH
STATE OF WASHINGTON
41918
REGISTERED
PROFESSIONAL ENGINEER
5/26/2020

DATE:
May 26, 2020
HANFORD RELEASE

DWG NUMBER	TITLE
DRAWING TRACEABILITY LIST	

REF NUMBER	TITLE
REFERENCES	
NEXT USED ON SHEET 1	

REV	DESCRIPTION
0	RELEASED PER EDT-882463
REVISIONS	

BLDG NO 242-AL 242AL-41
INDEX NO 2800

CAUTION: NOT COMPLETE WITHOUT CURRENT CHANGE DOCUMENTS FROM DATABASE

	NAME	DATE	COMPANY
DRAWN BY	F CHAVEZ	5/26/20	KBR
CHECKED BY	W T ARNDT	5/26/20	KBR
CHECKING TECH REVIEWER	C C JOSLYN	5/26/20	KBR
DESIGN ENGINEER	P M DORSH	5/26/20	KBR
DESIGN AUTHORITY	N W WILSON	5/26/20	KBR

U.S. DEPARTMENT OF ENERGY
Office of River Protection

LERF BASIN 41
BASIN PUMP
DETAILS

SIZE F | DRAWING NUMBER H-2-838768 | SHEET 3 | REV 00
SCALE SHOWN

29750 1 DOE_TBLF.DWG (SEPTEMBER 2016)

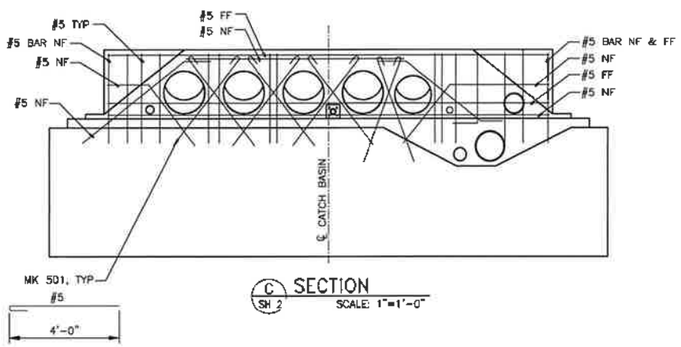

C SH 2 SECTION
SCALE: 1"=1'-0"

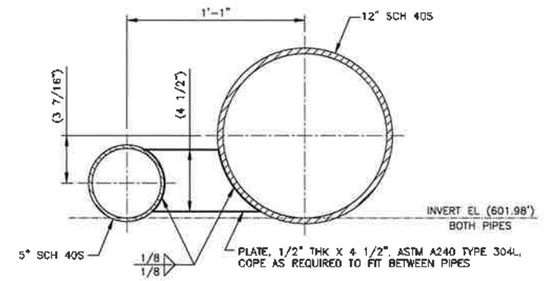

2 – DETAIL-SLEEVE SUPPORT
SCALE: 3"=1'-0"

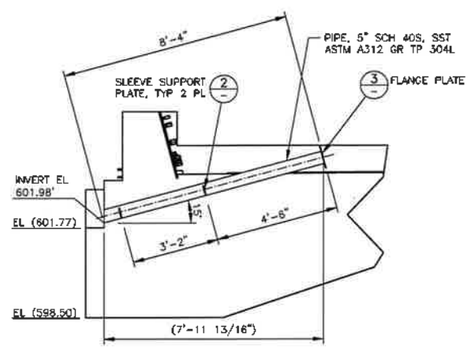

D SH 1 SECTION
SCALE: 1/2"=1'-0"

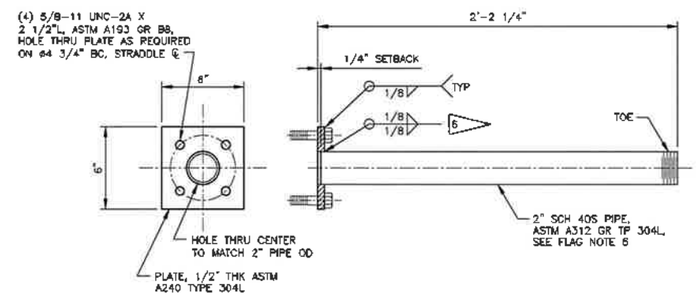

5 SH 2 DETAIL-DRAIN PIPE
SCALE: 3"=1'-0"

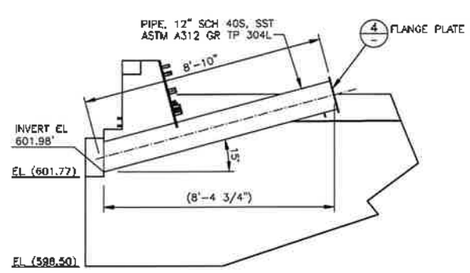

E SH 1 SECTION
SCALE: 1/2"=1'-0"

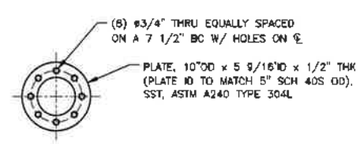

3 – FLANGE PLATE-10"
SCALE: 1 1/2"=1'-0"

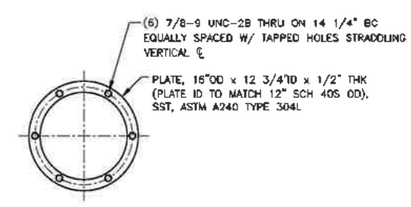

4 – FLANGE PLATE-16"
SCALE: 1 1/2"=1'-0"

DATE:
May 20, 2020
HANFORD RELEASE

DWG NUMBER	TITLE
H-2-838745	DRAWING LIST/TITLE SHEET

DRAWING TRACEABILITY LIST

REF NUMBER	TITLE
NEXT USED ON SH 2	REFERENCES

REV	DESCRIPTION
0	RELEASED PER EDT-882462

REVISIONS

BLDG NO 242-AL, 242AL-41
ROOM NO 0401

CAUTION: NOT COMPLETE WITHOUT CURRENT CHANGE DOCUMENTS FROM DATABASE

	NAME	DATE	COMPANY
DRAWER	J A RYERS	5/19/20	ARES
DRAWING CHECKER	V F SALYERS	5/19/20	ARES
CONSULTING PLATE REVIEWER	C C JOSLYN	5/19/20	ARES
DESIGN MANAGER	R W DAVIDSON	5/19/20	ARES
DESIGN AUTHORITY	N W WILSON	5/19/20	ARES

U.S. DEPARTMENT OF ENERGY
Office of River Protection

LERF BASIN 41
STRUCTURAL
CATCH BASIN DETAILS

SIZE F | DRAWING NUMBER H-2-838751 | SHEET 3 | REV 00
SCALE SHOWN

29350 DOE_TB_F.DWG (SEPTEMBER 2014)

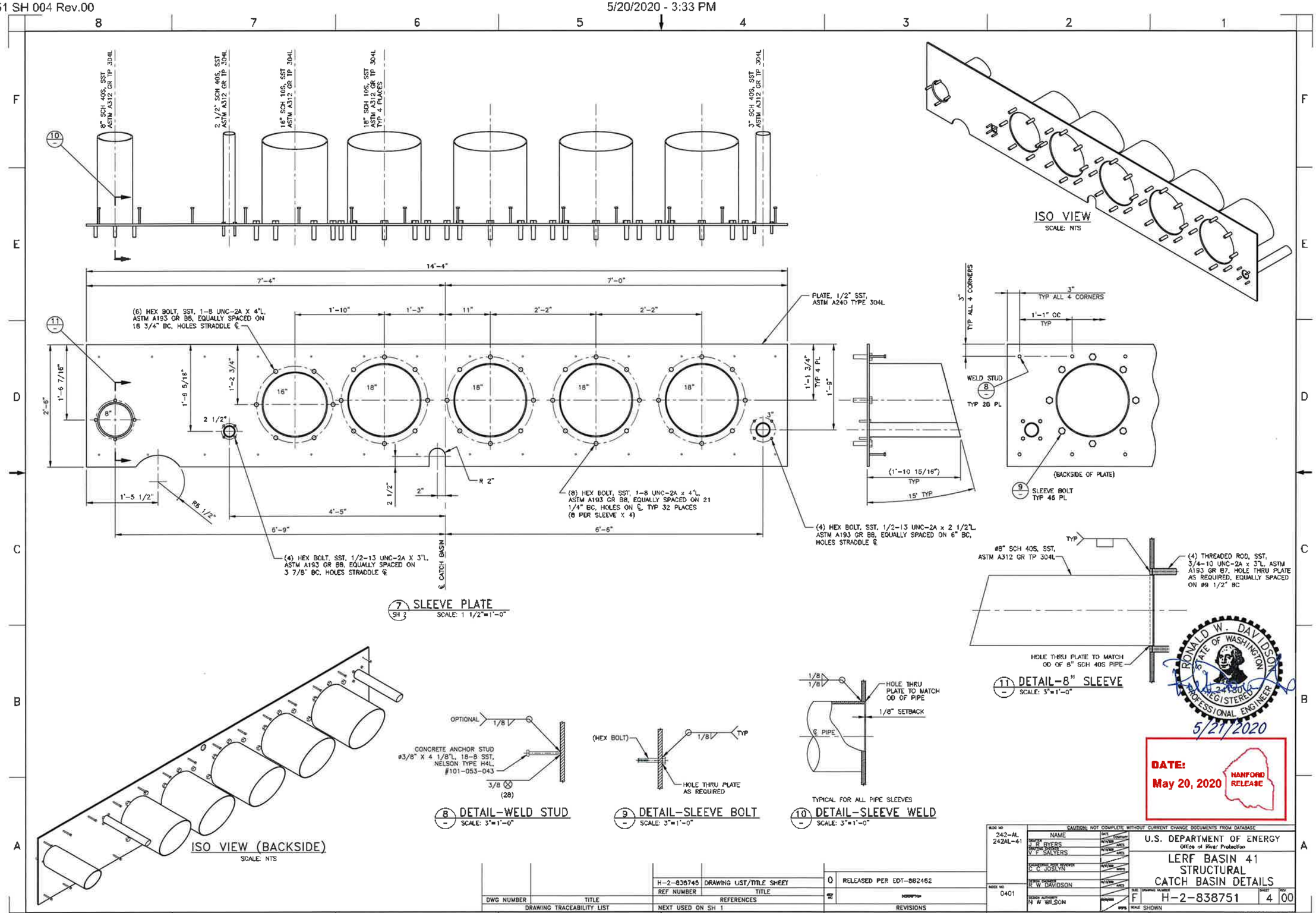
8" SCH 40S, SST ASTM A312 GR TP 304L
2 1/2" SCH 40S, SST ASTM A312 GR TP 304L
16" SCH 10S, SST ASTM A312 GR TP 304L
18" SCH 10S, SST ASTM A312 GR TP 304L TYP 4 PLACES
3" SCH 40S, SST ASTM A312 GR TP 304L
ISO VIEW
SCALE: NTS
14'-4"
7'-4"
7'-0"
(6) HEX BOLT, SST, 1-8 UNC-2A X 4"L, ASTM A193 GR B8, EQUALLY SPACED ON 18 3/4" BC, HOLES STRADDLE ℄
PLATE, 1/2" SST, ASTM A240 TYPE 304L
1'-10"
1'-3"
11"
2'-2"
2'-2"
2'-6"
1'-6 7/16"
1'-8 5/16"
1'-2 3/4"
1'-1 3/4" TYP 4 PL
1'-9"
2 1/2"
R 2"
2 1/2"
2"
1'-5 1/2"
R5 1/2"
4'-5"
6'-9"
6'-6"
(8) HEX BOLT, SST, 1-8 UNC-2A x 4"L, ASTM A193 GR B8, EQUALLY SPACED ON 21 1/4" BC, HOLES ON ℄, TYP 32 PLACES (8 PER SLEEVE X 4)
(4) HEX BOLT, SST, 1/2-13 UNC-2A X 3"L, ASTM A193 GR B8, EQUALLY SPACED ON 3 7/8" BC, HOLES STRADDLE ℄
℄ CATCH BASIN
(4) HEX BOLT, SST, 1/2-13 UNC-2A x 2 1/2"L, ASTM A193 GR B8, EQUALLY SPACED ON 6" BC, HOLES STRADDLE ℄
(1'-10 15/16") TYP
15° TYP
3" TYP ALL 4 CORNERS
1'-1" OC TYP
WELD STUD TYP 28 PL
(BACKSIDE OF PLATE)
SLEEVE BOLT TYP 45 PL
7 SH 2 SLEEVE PLATE
SCALE: 1 1/2"=1'-0"
8" SCH 40S, SST, ASTM A312 GR TP 304L
(4) THREADED ROD, SST, 3/4-10 UNC-2A x 3"L, ASTM A193 GR B7, HOLE THRU PLATE AS REQUIRED, EQUALLY SPACED ON ø9 1/2" BC
HOLE THRU PLATE TO MATCH OD OF 8" SCH 40S PIPE
11 DETAIL-8" SLEEVE
SCALE: 3"=1'-0"
ISO VIEW (BACKSIDE)
SCALE: NTS
OPTIONAL 1/8
CONCRETE ANCHOR STUD ø3/8" X 4 1/8"L, 18-8 SST, NELSON TYPE H4L #101-053-043
3/8 (28)
8 DETAIL-WELD STUD
SCALE: 3"=1'-0"
(HEX BOLT)
1/8 TYP
HOLE THRU PLATE AS REQUIRED
9 DETAIL-SLEEVE BOLT
SCALE: 3"=1'-0"
1/8
HOLE THRU PLATE TO MATCH OD OF PIPE
1/8" SETBACK
℄ PIPE
TYPICAL FOR ALL PIPE SLEEVES
10 DETAIL-SLEEVE WELD
SCALE: 3"=1'-0"
RONALD W. DAVIDSON
STATE OF WASHINGTON
24801
REGISTERED PROFESSIONAL ENGINEER
5/21/2020
DATE: May 20, 2020
HANFORD RELEASE
DWG NUMBER
TITLE
DRAWING TRACEABILITY LIST
H-2-838745 DRAWING LIST/TITLE SHEET
REF NUMBER TITLE
REFERENCES
NEXT USED ON SH 1
0 RELEASED PER EDT-882462
REV NO DESCRIPTION
REVISIONS
242-AL, 242AL-41
INDEX NO 0401
CAUTION: NOT COMPLETE WITHOUT CURRENT CHANGE DOCUMENTS FROM DATABASE
NAME DATE COMPANY
DRAWN R. BYERS
DESIGN SUPERV. V. F. SALYERS
ENGINEERING CHIEF REVIEWER C. C. JOSLYN
DESIGN ENGINEER R. W. DAVIDSON
DESIGN AUTHORITY N. W. WILSON
U.S. DEPARTMENT OF ENERGY
Office of River Protection
LERF BASIN 41
STRUCTURAL
CATCH BASIN DETAILS
SIZE F
DRAWING NUMBER H-2-838751
SHEET 4
REV 00
SCALE SHOWN
29752

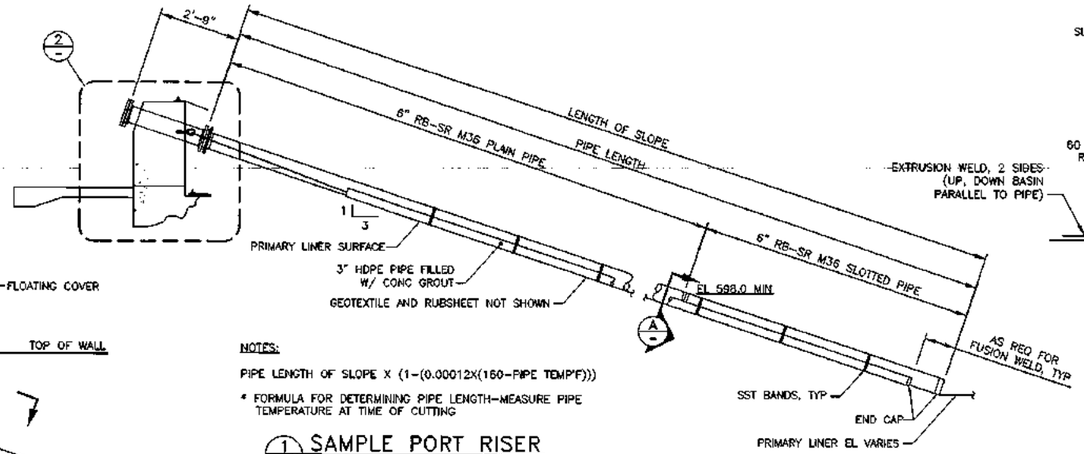

NOTES:

PIPE LENGTH OF SLOPE X (1-(0.00012X(160-PIPE TEMP°F)))

* FORMULA FOR DETERMINING PIPE LENGTH-MEASURE PIPE TEMPERATURE AT TIME OF CUTTING

1 SAMPLE PORT RISER
H-2-838750 SCALE: NTS

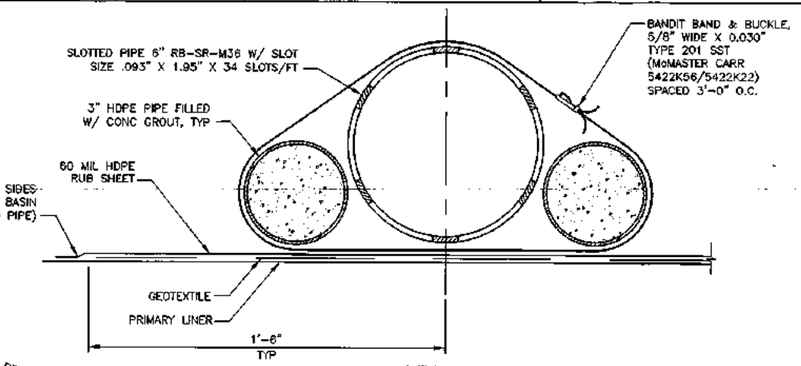

A SECTION
SCALE: 6"=1'-0"

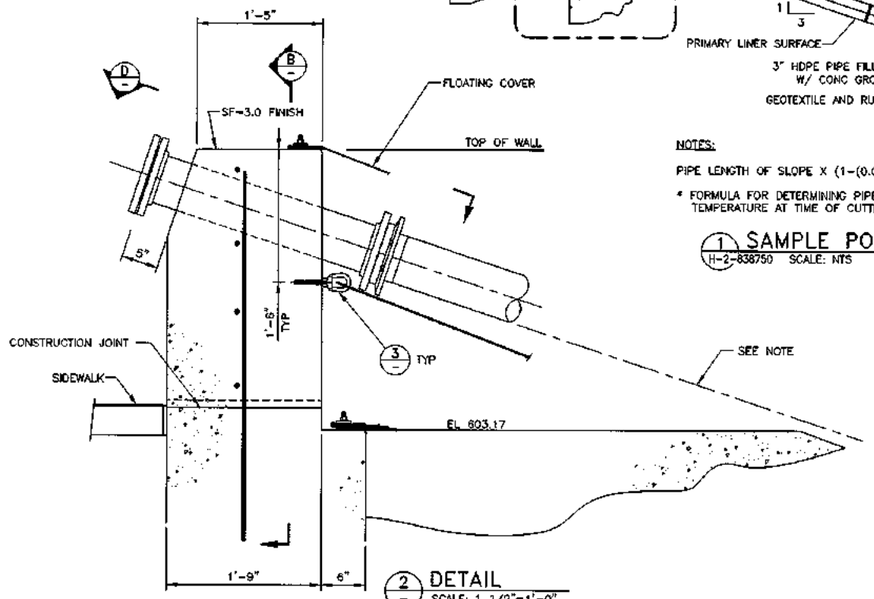

NOTES:

FIELD ADJUST ELEVATION SUCH THAT OUTSIDE BOTTOM OF 6 INCH PIPE ALIGNS 1 INCH ABOVE AND PARALLEL WITH THE SIDE SLOPE OF THE BASIN SOIL BENTONITE SURFACE.

2 DETAIL
SCALE: 1 1/2"=1'-0"

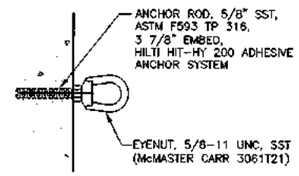

3 DETAIL-WEIGHT ANCHOR
SCALE: 3"=1'-0"

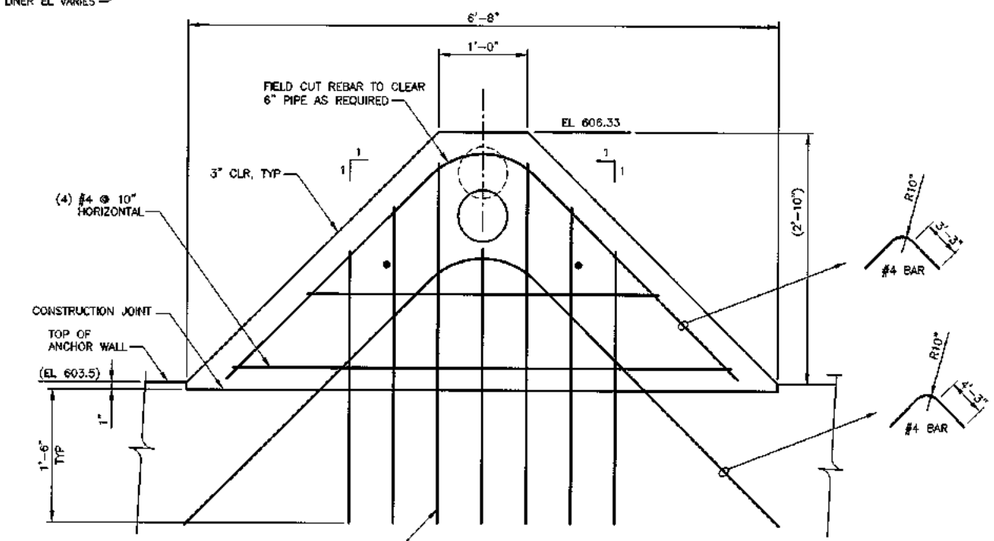

B SECTION
SCALE: NTS

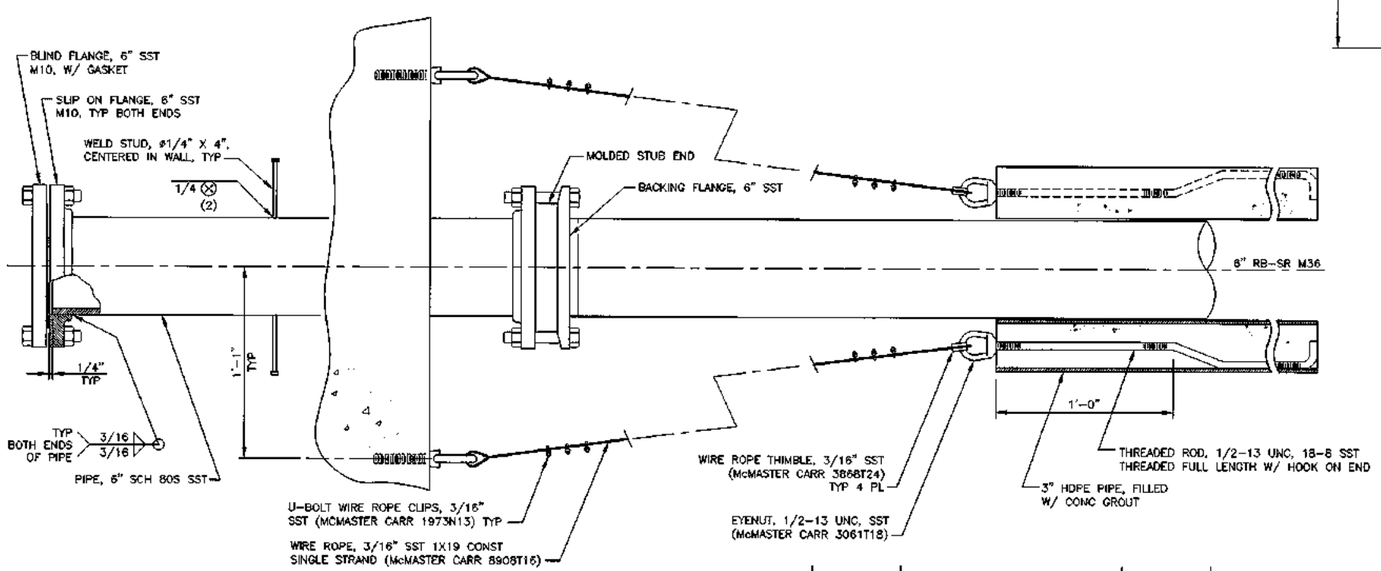

D SECTION
SCALE: 3"=1'-0"

NOTES:

1. SEE H-2-838746-1 FOR ABBREVIATIONS, LEGEND, AND GENERAL NOTES.
2. WELD AND INSPECT STRUCTURAL WELDS IN ACCORDANCE WITH AWS D1.1, 2015, STATICALLY LOADED CRITERIA. ALL WELDS SHALL BE VT ON FINAL PASS UNLESS OTHERWISE SPECIFIED. WELD PROCEDURES AND QUALIFICATIONS PER ASME B&PV CODE, SECTION IX, 2017, ARE ACCEPTABLE.
3. FOR STRUCTURAL ANALYSIS SEE RPP-CALC-63782.

DATE: May 26,2020 HANFORD RELEASE

5-20-2020

DWG NUMBER	TITLE
DRAWING TRACEABILITY LIST	

REF NUMBER	TITLE
REFERENCES	
NEXT USED ON	

REV NO	DESCRIPTION
0	RELEASED PER EDT-882461

REVISIONS

BLDG NO 242-AL 242AL-41
SHEET NO 0105

CAUTION: NOT COMPLETE WITHOUT CURRENT CHANGE DOCUMENTS FROM DATABASE

	NAME	DATE
DRAWN	J. R. BYERS	
DRAWING CHECKED	S. A. SNODGRASS	
DESIGNED PER NUMBER	C. C. JOSLYN	
DESIGN ENGINEER	R. W. DAVIDSON	
DESIGN AUTHORITY	R. W. WILSON	

U.S. DEPARTMENT OF ENERGY
Office of River Protection

LERF BASIN 41
CIVIL
SAMPLE PORT RISER DETAILS

SIZE F DRAWING NUMBER H-2-838753 SHEET 1 REV 00
SCALE SHOWN

NORTH

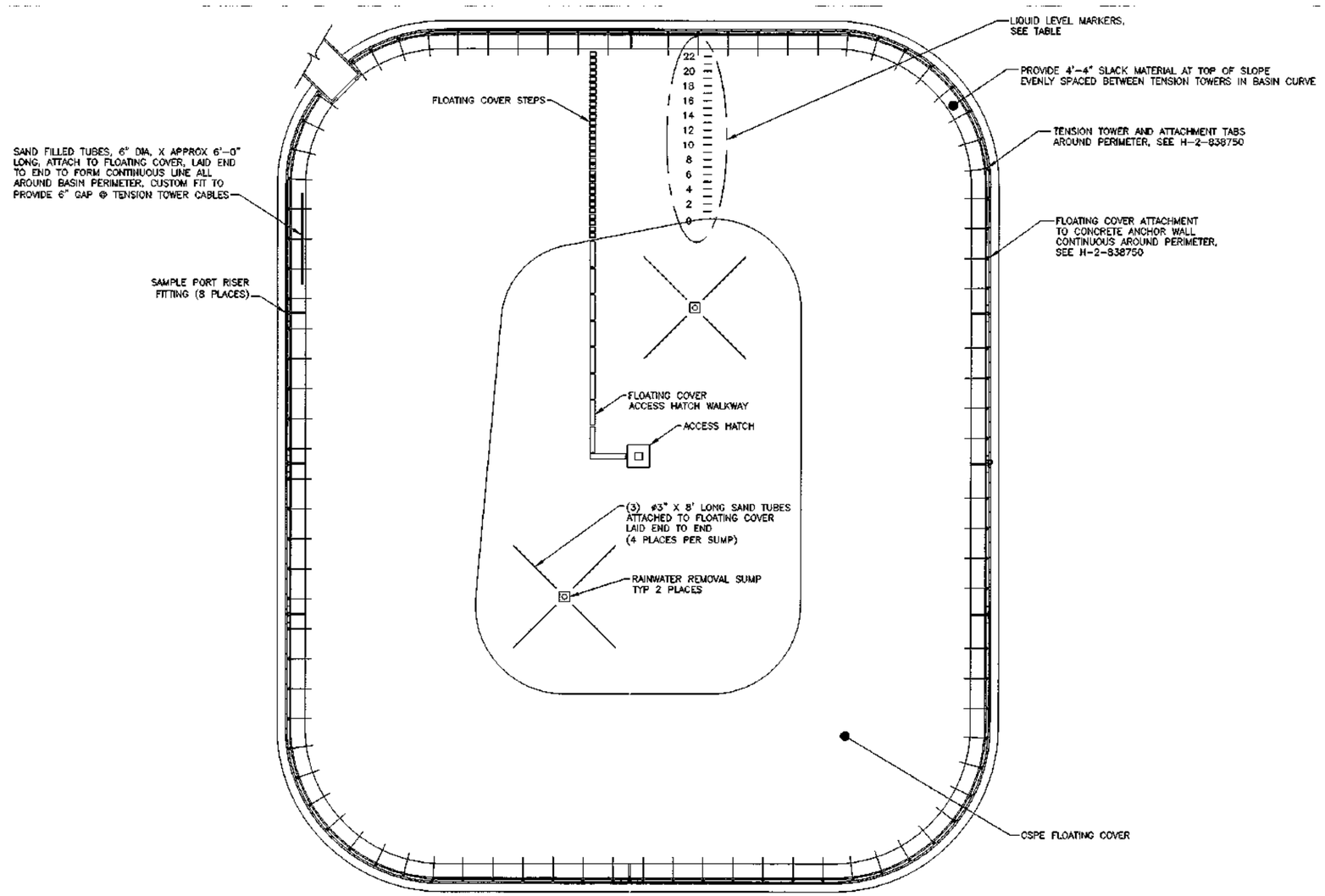

FLOATING COVER
SCALE: 1"=20'-0"

NOTES:

1. FLOATING COVER SHALL BE MECHANICALLY-TENSIONED TYPE, DESIGNED, FABRICATED, INSTALLED AND TESTED IN ACCORDANCE WITH RPP-SPEC-63632 SECTION 334716.13.
2. FOR BASIN 41 LAYOUT INFORMATION INCLUDING PRIMARY LINER, THE CATCH BASIN, ANCHOR WALL, SAMPLE RISERS, TENSION TOWERS, ATTACHMENT POINTS, ETC. SEE DRAWING H-2-838750.
3. LIQUID LEVEL ELEVATION MARKERS SHALL BE FULLY BONDED TO THE TOP OF THE FLOATING COVER. NUMBERED LIQUID LEVEL ELEVATION MARKERS SHALL BE PROVIDED AT EVEN 2 FOOT INTERVALS (0 THROUGH 22) ALONG BASIN SIDE SLOPE. NUMBERS SHALL BE 8" WIDE BY 16" HIGH. TICK MARKS SHALL BE 2" WIDE BY 12" LONG. LIQUID LEVEL MARKERS SHALL BE INSTALLED AT ELEVATIONS INDICATED IN LIQUID LEVEL MARKERS INSTALLATION TABLE BELOW. LIQUID LEVELS ARE APPROXIMATE AND BASED ON UNIFORM DEVELOPMENT OF FOLD AT TOP OF SLOPE.
4. LIQUID LEVEL ELEVATION MARKERS LOCATIONS SHALL BE ESTABLISHED BY LICENSED SURVEYOR.

LIQUID LEVEL MARKERS INSTALLATION TABLE	
LEVEL MARKER	MARKER ELEVATION (POND EMPTY)
---	601.82
22	600.87
---	599.92
20	598.98
---	598.02
18	597.08
---	596.13
16	595.18
---	594.23
14	593.28
---	592.33
12	591.38
---	590.44
10	589.49
---	588.54
8	587.59
---	586.64
6	585.69
---	584.74
4	583.79
---	582.85
2	581.90
---	580.95
0	580.00

DATE: May 26,2020 HANFORD RELEASE

5-20-2020

DWG NUMBER	TITLE
H-2-838745	DRAWING LIST / TITLE SHEET
REF NUMBER	TITLE

DRAWING TRACEABILITY LIST — REFERENCES — NEXT USED ON END ITEM

REV NO	DESCRIPTION
0	RELEASED PER EDT-882461

REVISIONS

WBS NO 242-AL 242AL-41

CAUTION: NOT COMPLETE WITHOUT CURRENT CHANGE DOCUMENTS FROM DATABASE

	NAME	DATE
DRAWN	J C EVERS	04/24/20
DRAWING CHECKED	S A SNODGRASS	04/24/20
PROFESSIONAL CIVIL ENGINEER	N C JOSLYN	04/24/20
LEAD ENGINEER	P M DORSH	04/24/20
DESIGN AUTHORITY	N W WILSON	04/24/20

U.S. DEPARTMENT OF ENERGY
Office of River Protection

LERF BASIN 41
CIVIL
FLOATING COVER

PROJECT NO 0105

SIZE F — DRAWING NUMBER H-2-838754 — SHEET 1 — REV 00

SCALE SHOWN

29673

GENERAL NOTES: (UNLESS OTHERWISE SPECIFIED)

1. DIMENSIONS ARE IN INCHES, TOLERANCES SHALL BE AS FOLLOWS:
   FRACTIONS = ±1/8" ANGLES = ±0.5° DECIMAL = .XX ±0.03 .XXX ±.010
2. REMOVE ALL BURRS AND BREAK SHARP EDGES.
3. VALVE PN: 990-0100W0A10010-I0S00S0E000KB
   FIGURE 990 SERIES VALVE. WAFER. 4". CAST IRON BODY. 316SS DISC. 316SS STEM, EPDM SEAT, ASME 150, BARE STEM VALVE.

   GEAR OPERATOR + STEM ADAPTER KIT PN'S: ISV-1103485 + ISV-1103450
   GEAR 24:1 WITH 6" HANDWEEL, BAC 1500 IN LBS + MTG KIT BAC
4. FOR BURIED PIPING ANALYSIS SEE RPP-CALC-63780.
5. USE CLASS M-18 PIPING CODE SEE CONSTRUCTION SPECIFICATION RPP-SPEC-63832 SECTION 40 40 00.
6. FOR PIPING INSULATION SEE CONSTRUCTION SPECIFICATION RPP-SPEC-63832 SECTION 40 42 13.
7. INSTALL FRP PIPING AND FITTINGS IN ACCORDANCE WITH MANUFACTURER INSTRUCTIONS AND/OR RECOMMENDATIONS.

8 WELD AND INSPECT STRUCTURAL WELDS IN ACCORDANCE WITH AWS D1.1, 2015 STATICALLY LOADED CRITERIA. ALL WELDS SHALL BE VT ON FINAL PASS UNLESS OTHERWISE SPECIFIED. WELD PROCEDURES AND QUALIFICATIONS PER ASME B&PV CODE SECTION IX, 2017 ARE ACCEPTABLE.

9 USE #251 DOUBLE CONTAINMENT INTERLOCKING UNION ON BOTH NEW M-18 LINES CENTERED ±20 FT BETWEEN BASIN 41 AND BASIN 42.

10 JOINT ADHESIVES AND BONDING MATERIAL SHALL BE OF THE SAME MANUFACTURER AS THE PIPE AND FITTINGS AND SHALL BE OF THE SAME RESIN SYSTEM. ADHESIVES SHALL BE APPLIED IN ACCORDANCE WITH MANUFACTURER RECOMMENDATIONS.

(NOTES CONTINUED)

11. PREPARE AND PAINT ALL EXPOSED CARBON STEEL SURFACES WITH PPG PSX700 OR EQUIVALENT. FINISH COLOR SHALL BE GRAY. APPLY PER MANUFACTURER'S SPECIFICATIONS. POWDER COATING IS AN ACCEPTABLE COATING SYSTEM.

NORTH

JACOB D WILLIAMS
STATE OF WASHINGTON
51722
REGISTERED
PROFESSIONAL ENGINEER
5/27/2020

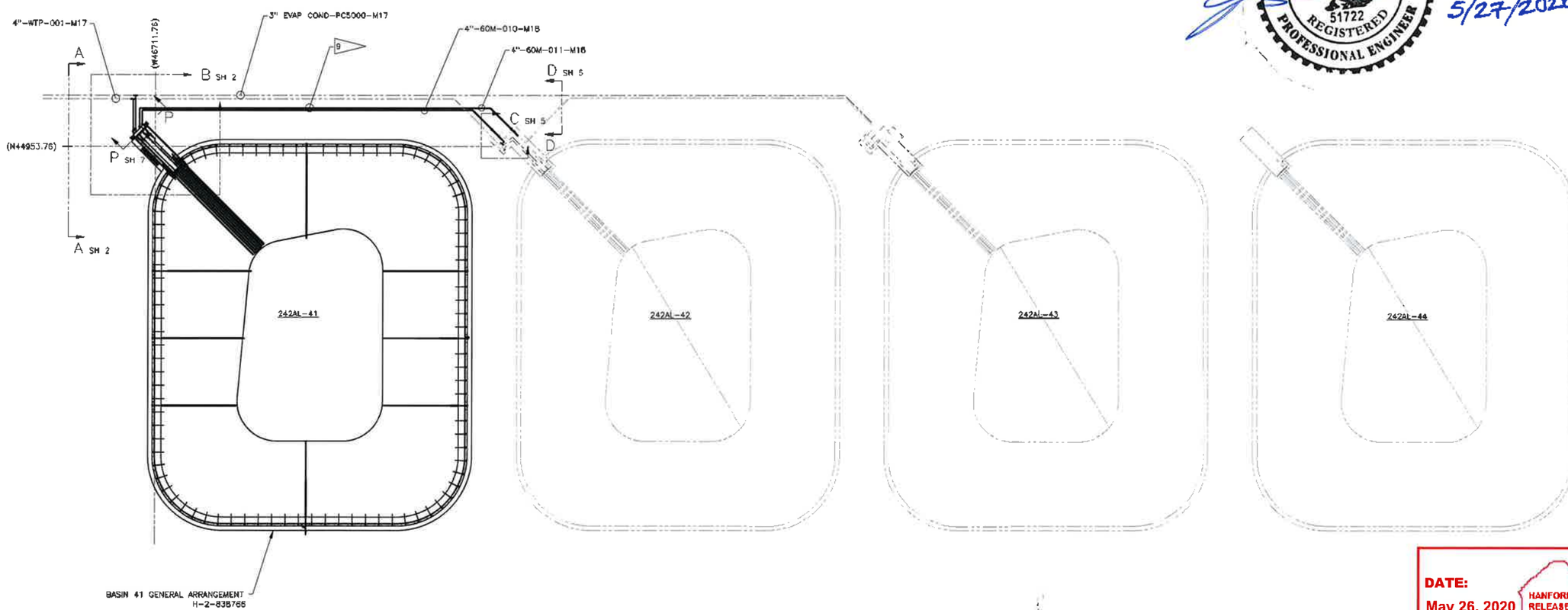

LERF BASIN 41 MECHANICAL GENERAL ARRANGEMENT

SCALE: NONE

DATE: May 26, 2020 HANFORD RELEASE

DWG NUMBER	TITLE
DRAWING TRACEABILITY LIST	

REF NUMBER	TITLE
H-15-38	LERF BASIN 41
H-2-638745	DRAWING LIST/TITLE SHEET
REFERENCES	
NEXT USED ON END ITEM	

REV NO	DESCRIPTION
0	RELEASED PER EDT-682463
REVISIONS	

INDEX NO 242-AL 242AL-41
INDEX NO 8407

CAUTION: NOT COMPLETE WITHOUT CURRENT CHANGE DOCUMENTS FROM DATABASE

	NAME	DATE
DRAFTER	W L ARNDT	05/21/2020
DRAFTING SUPERV	H A MENDEZ	05/21/2020
ENGINEERING DISC REVIEWER	G C JOSLYN	05/21/2020
DESIGN OWNER	J D WILLIAMS	05/21/2020
DESIGN AUTHORITY	N W WILSON	05/21/2020

U.S. DEPARTMENT OF ENERGY
Office of River Protection

LERF BASIN 41
MECHANICAL
GENERAL ARRANGEMENT

SIZE F DRAWING NUMBER H-2-838765 SHEET 1 REV 00
SCALE AS SHOWN

28472 DOC_TEL_F.DWG (SEPTEMBER 2016)

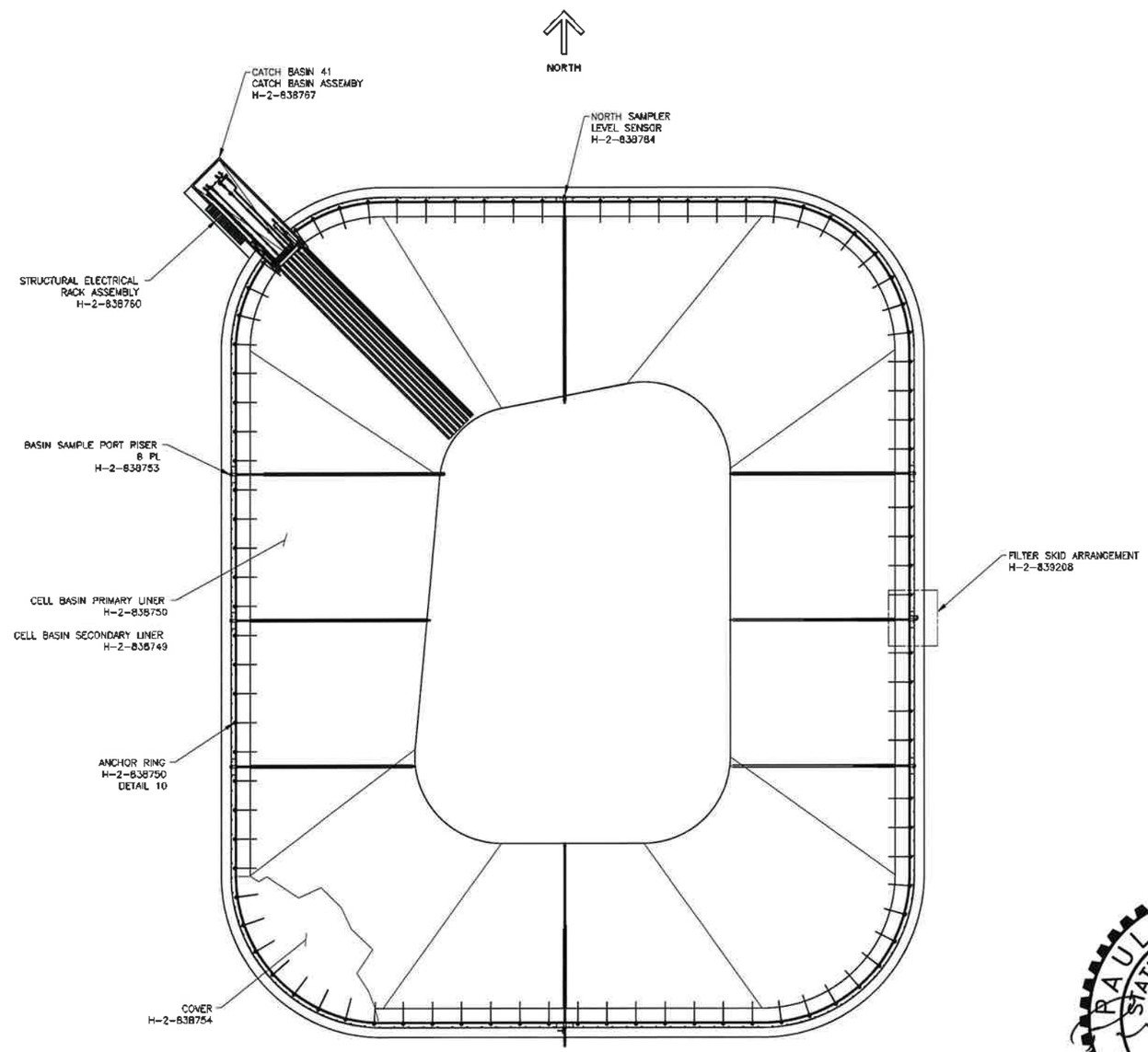

BASIN 41 GENERAL ARRANGEMENT

SCALE: NONE

PAUL M. DORSH
STATE OF WASHINGTON
41918
REGISTERED
PROFESSIONAL ENGINEER
5/26/2020

DATE:
May 26, 2020
HANFORD RELEASE

DWG NUMBER	TITLE
DRAWING TRACEABILITY LIST	

REF NUMBER	TITLE
H-15-36	LERF BASIN 41
H-2-838745	DRAWING LIST/TITLE SHEET
REFERENCES	
NEXT USED ON H-2-838765	

REV NO	DESCRIPTION
0	RELEASED PER EDT-882463
REVISIONS	

BLDG NO 247-AL 242AL-41

INDEX NO 8407

CAUTION: NOT COMPLETE WITHOUT CURRENT CHANGE DOCUMENTS FROM DATABASE

	NAME	DATE	COMPANY
DRAFTSP	W T ARNDT	5/5/2020	STRUCTURE
DRAFTING CHECKER	H A MENDEZ	5/5/2020	STRUCTURE
ENGINEERING CHAIR REVIEWER	C C JOSLYN	5/5/2020	STRUCTURE
DESIGN ENGINEER	P M DORSH	5/5/2020	STRUCTURE
DESIGN AUTHORITY	N W WILSON	5/5/2020	STRUCTURE

U.S. DEPARTMENT OF ENERGY
Office of River Protection

LERF BASIN 41
BASIN 41
GENERAL ARRANGEMENT

DRAWING NUMBER H-2-838766 SHEET 1 REV 00

SCALE SHOWN

79277

DOC_TB_F.DWG (SEPTEMBER 2016)

GENERAL NOTES: (UNLESS OTHERWISE SPECIFIED)

1. DIMENSIONS ARE IN INCHES, TOLERANCES SHALL BE AS FOLLOWS: FRACTIONS = ±1/8" ANGLES = ±0.5° DECIMAL = .XX ±0.03 .XXX ±.010
2. REMOVE ALL BURRS AND BREAK SHARP EDGES.
3. FABRICATE, WELD, INSPECT, AND TEST PIPING IN ACCORDANCE WITH ASME B31.3, 2016 FOR CATEGORY NORMAL FLUID SERVICE. DESIGN PRESSURE IS 150 PSIG, AND DESIGN TEMPERATURE IS 150°F. HYDROSTATIC LEAK PRESSURE TEST TO 225 PSIG (-0/+25 PSIG). FABRICATION TEMPERATURE IS 50°F TO 120°F.
4. ALL MACHINED SURFACES SHALL BE 125√ IN ACCORDANCE WITH ASME B46.1, 2009, UNLESS OTHERWISE SPECIFIED.
5. WELD AND INSPECT STRUCTURAL WELDS IN ACCORDANCE WITH AWS D1.1, 2015 STATICALLY LOADED CRITERIA. ALL WELDS SHALL BE VT ON FINAL PASS UNLESS OTHERWISE SPECIFIED. WELD PROCEDURES AND QUALIFICATIONS PER ASME B&PV CODE SECTION IX, 2017 ARE ACCEPTABLE.
6. FOR B31.3 ANALYSIS SEE RPP-CALC-63779.
7. USE CLASS M-10 PIPING CODE SEE CONSTRUCTION SPECIFICATION RPP-SPEC-63632 SECTION 40 40 00.
8. DO NOT CABLE TIE WIRE ROPE. CABLE TIES ARE USED FOR POWER CABLE ONLY.

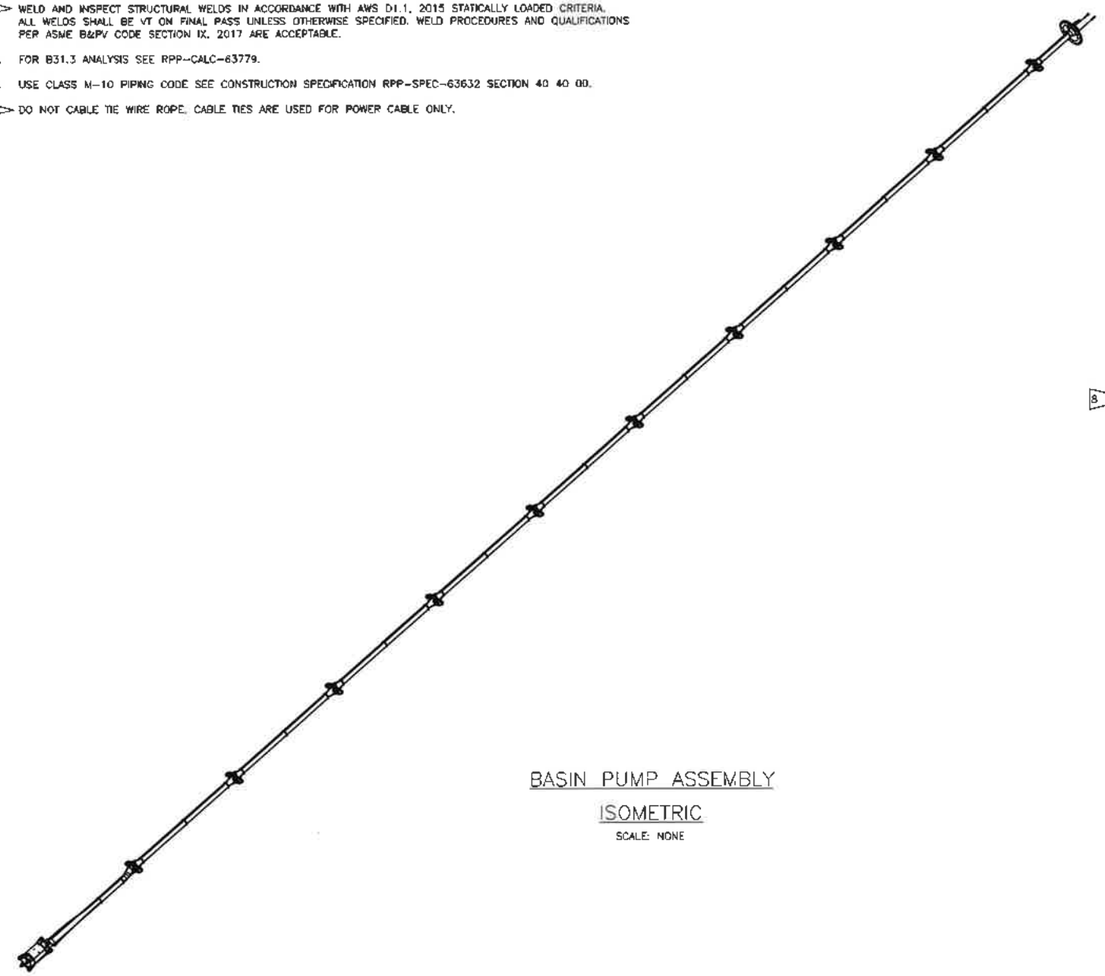

BASIN PUMP ASSEMBLY

ISOMETRIC

SCALE: NONE

PARTS/MATERIAL LIST

QTY -080	QTY -070	QTY -060	QTY -050	QTY -040	QTY -030	QTY -020	QTY -010	PART/DASH NUMBER	NOMENCLATURE/DESCRIPTION	MATERIAL/REFERENCE	QMT	ITEM NO
								-010	BASIN PUMP ASSEMBLY		2	1
							1	-020	PUMP ASSEMBLY		3	2
						1		-030	PIPE SPOOL		4	3
							1	-040	PIPE SPOOL		4	4
							9	-050	PIPE SPOOL		5	5
							1	-060	PIPE SPOOL		5	6
						2		-070	CARRIAGE WELDMENT		6	7
							20	-080	WHEEL SUPPORT WELDMENT		7	8
	1							-001	CARRIAGE BODY, 11 GA THK	ASTM A240 304L	10	9
	1							-002	CARRIAGE END PLATE, 1/4	ASTM A240 304L	9	10
	1							-003	CARRIAGE END PLATE, 1/4	ASTM A240 304L	9	11
	6							-004	SUPPORT PLATE, 1/4	ASTM A240 304L	11	12
4	8							-005	WHEEL BRACKET, 1/4 THK	ASTM A240 304L	11	13
					2			-006	LIFTING LUG, 3/8 THK	ASTM A240 TP 304L	11	14
						18		-007	SPACER, 1/2 THK	ASTM D3350 HDPE	11	15
					1			-008	COUPLING, 4 SW X FNPT	ASTM A182 F304L	10	16
		1						-009	FLANGE, 16 BLIND RF CL150	ASTM A182 F304L	8	17
		2	2	1					FLANGE, 4 SW RF CL150	ASTM A182 F304L		18
							10	BLUEGARD STYLE 3700	GASKET, 4 CL150, 1/8 THK	GARLOCK		19
				2					ELBOW, 4 45 DEG. LR, SCH 10S, BW	ASTM A403 WPS 304L		20
		AR	AR	AR	AR				PIPE, 4 SCH 10S	ASTM A312 TP 304L		21
1								-006	PLATE, 1/4	ASTM A240 304L	7	22
						1		SM4H85-X10	SUBMERSIBLE PUMP W/200 FT CABLE	GORMAN-RUPP		23
						2			BANDING, 3/4 X .033 THK W/ CLAMP, SST			24
							1	CGB398	CORD GRIP, 1 MNPT	EATON		25
							2	CGB116	CORD GRIP, 1/2 MNPT	EATON		26
							4	5128245	DUPLEX SLEEVE, 1/4	ESCO		27
							AR	TY55442PX	LASHING CABLE TIE	THOMAS & BETTS		28
							2	S0116-SA10	SHACKLE, 3/8	SUNCOR STAINLESS		29
							4	1037292	STANDARD THIMBLE, WIRE ROPE	CROSBY		30
							AR	(3461T34)	WIRE ROPE, 1/4	(MCMASTER-CARR)		31
						8	40		WHEEL, 3 DIA	NYLON		32
						18			BOLT, HEX HEAD 1/4-20 UNC-2A X 1/2 LG	ASTM A193 GR B8 CL2		33
						8	40	(90298A63)	HEX SOCKET SHOULDER SCREW, 5/16-18 UNC-2A X 1 3/4 LG	(MCMASTER-CARR)		34
							80		STUD, 5/8-11 UNC-2A X 4 LG	ASTM A193 GR B8		35
						8	40		LOCKNUT, HEX 5/16-18 UNC 2-B	ASTM A194 GR 8		36
							160		NUT, HEAVY HEX 5/8-11 UNC-2B	ASTM A194 GR 8		37
						8	40		WASHER, FLAT 5/16	SS 304		38

PAUL M. DORSH — STATE OF WASHINGTON — 41918 — REGISTERED PROFESSIONAL ENGINEER

5/26/2020

DATE: May 26, 2020 — HANFORD RELEASE

DWG NUMBER	TITLE
DRAWING TRACEABILITY LIST	

REF NUMBER	TITLE
H-15-38	LERF BASIN 41
H-2-838745	DRAWING LIST/TITLE SHEET
REFERENCES	
NEXT USED ON H-2-838767	

REV	DESCRIPTION
0	RELEASED PER EDT-882483
REVISIONS	

BLDG NO 242-AL, 242AL-41

INDEX NO 2700

CAUTION: NOT COMPLETE WITHOUT CURRENT CHANGE DOCUMENTS FROM DATABASE

	NAME	DATE
DRAWN	E CHAVEZ	5/26/2020
DRAFTING ADMIN	W T ARNDT	5/26/2020
CALCULATING TECH REVIEWER	R E JOSLIN	5/26/2020
DESIGN ENGINEER	P M DORSH	5/26/2020
DESIGN AUTHORITY	N W WILSON	5/26/2020

U.S. DEPARTMENT OF ENERGY
Office of River Protection

LERF BASIN 41
BASIN PUMP
NOTES AND PARTS LIST

SIZE F — DRAWING NUMBER H-2-838768 — SHEET 1 — REV 00

SCALE SHOWN

29765

NOTES:
FOR GENERAL NOTES AND PARTS/MATERIAL SEE SHEET 1.

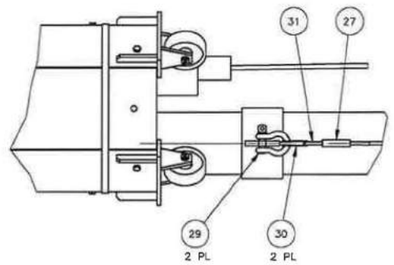

DETAIL A
SCALE: 1 / 4

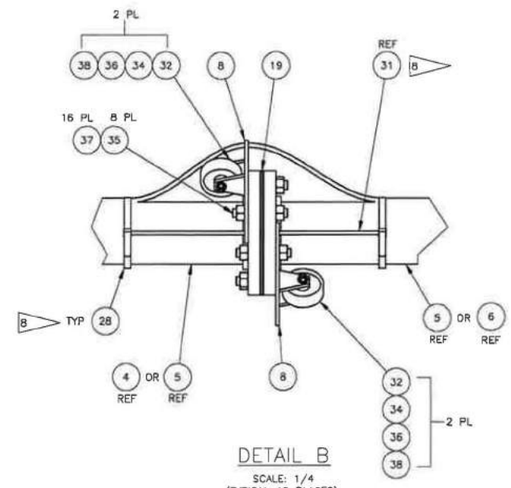

DETAIL B
SCALE: 1/4
(TYPICAL 10 PLACES)

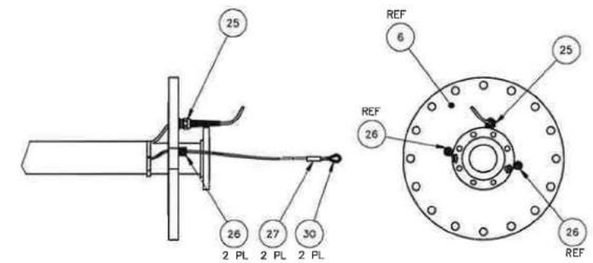

DETAIL C
SCALE: 1/8
(BOTH SIDES)
(ITEMS REMOVED FOR CLARITY)

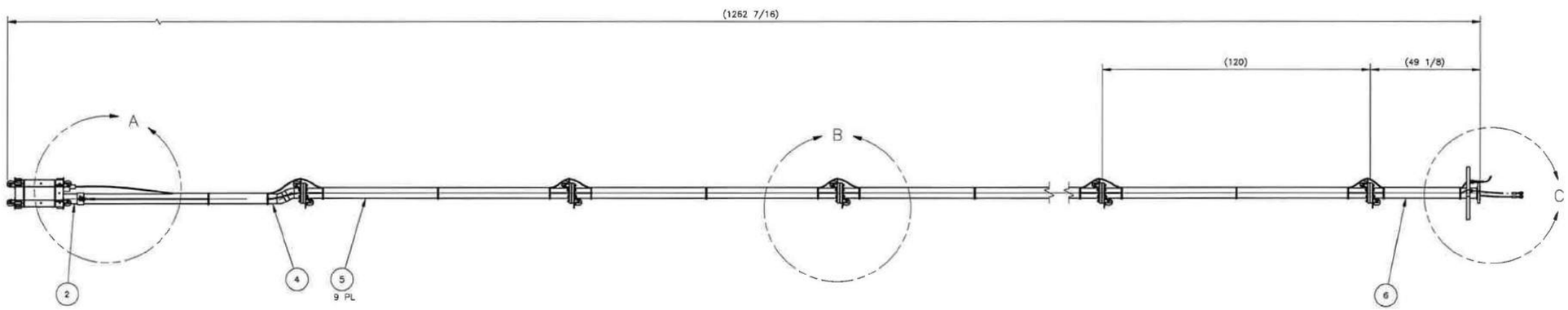

1 BASIN PUMP ASSEMBLY
SCALE: 1/12

DATE:
May 26, 2020
HANFORD RELEASE

RAUL M. DORSH
STATE OF WASHINGTON
41918
REGISTERED
PROFESSIONAL ENGINEER
5/26/2020

DWG NUMBER	TITLE
DRAWING TRACEABILITY LIST	

REF NUMBER	TITLE
REFERENCES	
NEXT USED ON SHEET 1	

REV	DESCRIPTION
0	RELEASED PER EDT-882463
REVISIONS	

BLDG NO 242-AL 242AL-41
INDEX NO 2800

CAUTION: NOT COMPLETE WITHOUT CURRENT CHANGE DOCUMENTS FROM DATABASE

	NAME	DATE
DRAWN BY	F CHAVEZ	10/9/2020
DESIGN LEAD	W T ARNDT	10/9/2020
CHECKED (TOP DESIGN)	R A JOSLIN	10/9/2020
DESIGN AUTHORITY	N W WILSON	10/9/2020

U.S. DEPARTMENT OF ENERGY
Office of River Protection

LERF BASIN 41
BASIN PUMP
ASSEMBLY

SIZE F | DRAWING NUMBER H-2-838768 | SHEET 2 | REV 00
SCALE SHOWN

28525

NOTES:
FOR GENERAL NOTES AND PARTS/MATERIAL SEE SHEET 1.

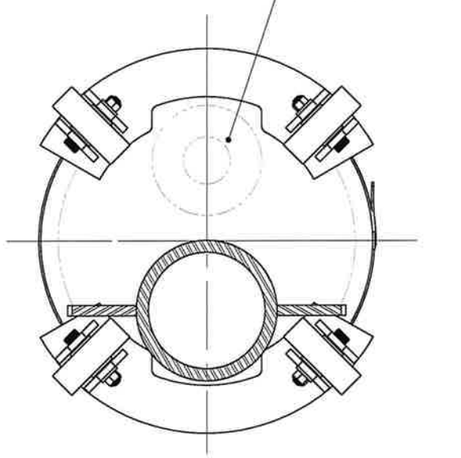

SECTION D-D
SCALE: 1 / 2

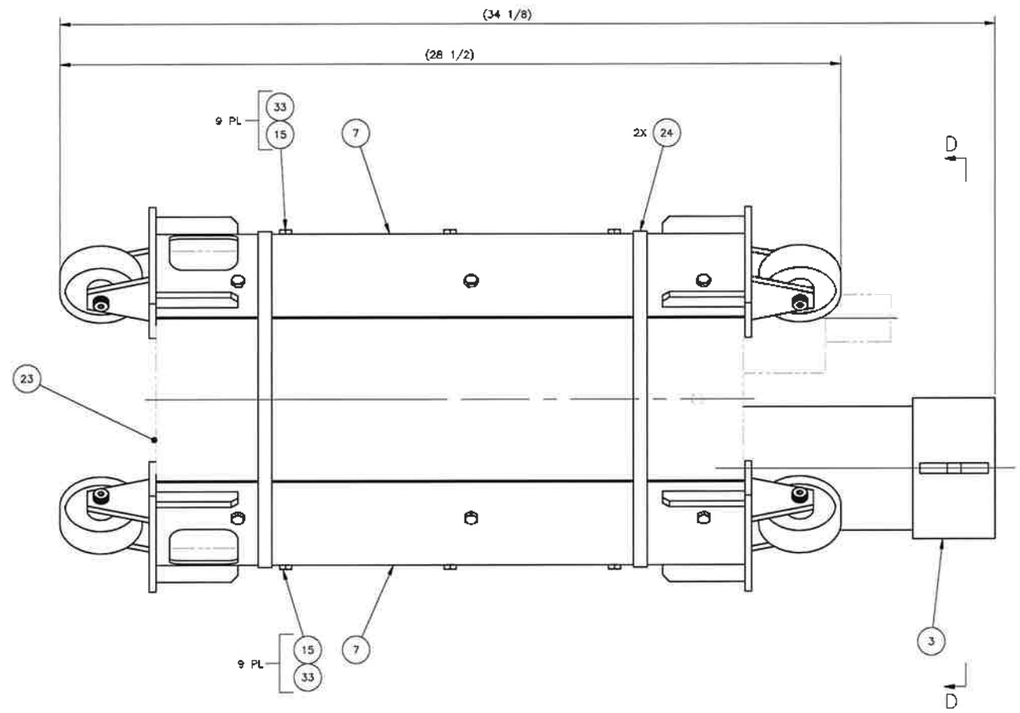

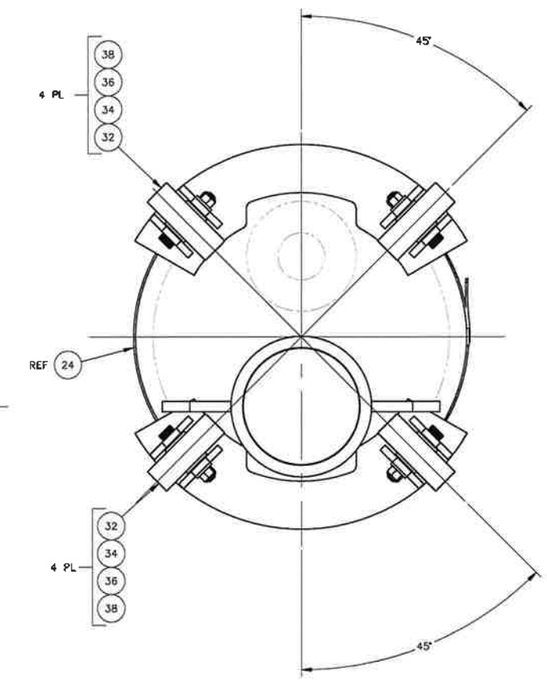

2 PUMP ASSEMBLY
SCALE: 1/4

PAUL M. DORSH
STATE OF WASHINGTON
41918
REGISTERED
PROFESSIONAL ENGINEER
5/26/2020

DATE:
May 26, 2020
HANFORD RELEASE

DWG NUMBER	TITLE
DRAWING TRACEABILITY LIST	

REF NUMBER	TITLE
REFERENCES	
NEXT USED ON SHEET 1	

REV	DESCRIPTION
0	RELEASED PER EDT-882463
REVISIONS	

BLDG NO 242-AL 242AL-41
INDEX NO 2800

CAUTION: NOT COMPLETE WITHOUT CURRENT CHANGE DOCUMENTS FROM DATABASE

	NAME	DATE	COMPANY
DRAWN BY	F CHAVEZ	5/26/20	KBR
CHECKED BY	W T ARNDT	5/26/20	KBR
CHECKING TECH REVIEWER	C C JOSLYN	5/26/20	KBR
DESIGN ENGINEER	P M DORSH	5/26/20	KBR
DESIGN AUTHORITY	N W WILSON	5/26/20	KBR

U.S. DEPARTMENT OF ENERGY
Office of River Protection

LERF BASIN 41
BASIN PUMP
DETAILS

SIZE F | DRAWING NUMBER H-2-838768 | SHEET 3 | REV 00
SCALE SHOWN

29750 1 DOE_TBLF.DWG (SEPTEMBER 2016)

NOTES:
FOR GENERAL NOTES AND PARTS/MATERIAL SEE SHEET 1.

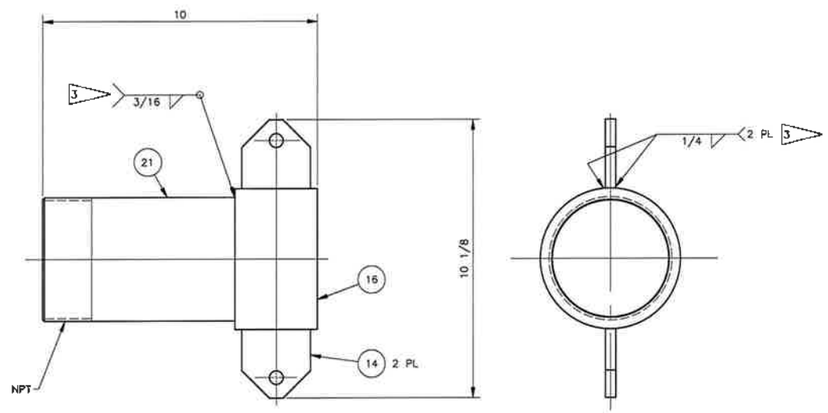

3 PIPE SPOOL
SCALE: 1/2

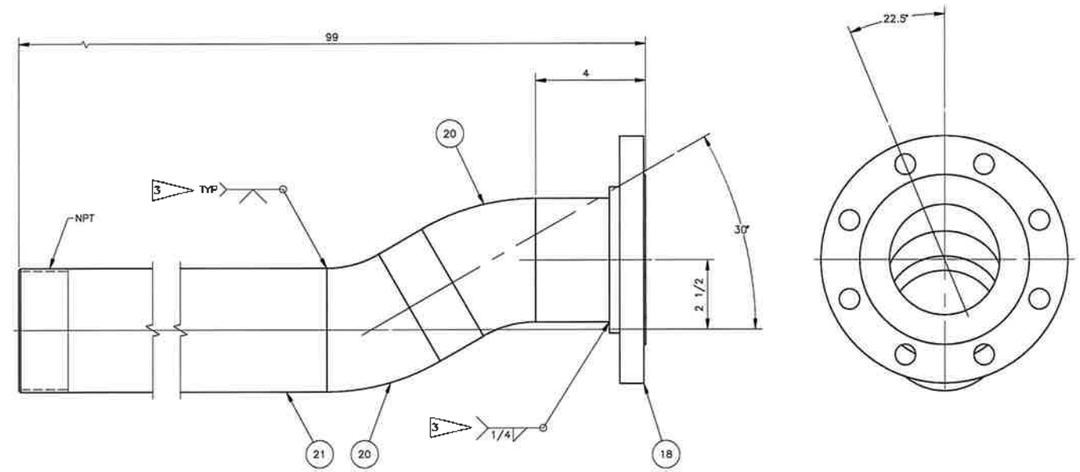

4 PIPE SPOOL
SCALE: 1/2

PAUL M. DORSH
STATE OF WASHINGTON
41918
REGISTERED
PROFESSIONAL ENGINEER
5/26/2020

DATE:
May 26, 2020
HANFORD RELEASE

DWG NUMBER	TITLE
DRAWING TRACEABILITY LIST	

REF NUMBER	TITLE
REFERENCES	
NEXT USED ON SHEET 1	

REV	DESCRIPTION
0	RELEASED PER EDT-882463
REVISIONS	

BLDG NO 242-AL 242AL-41
MOD NO 2800

CAUTION: NOT COMPLETE WITHOUT CURRENT CHANGE DOCUMENTS FROM DATABASE

	NAME	DATE	COMPANY
DRAWN	F CHAVEZ		
ENGINEERING DESIGN	W T ARNDT		
ENGINEERING DATA REVIEWER	C C JOSLYN		
DESIGN ENGINEER	P M DORSH		
PROJECT ENGINEER	N W WILSON		

U.S. DEPARTMENT OF ENERGY
Office of River Protection

LERF BASIN 41
BASIN PUMP
ASSEMBLY AND SECTIONS

SIZE	DRAWING NUMBER	SHEET	REV
F	H-2-838768	4	00

SCALE SHOWN

29758

NOTES:
FOR GENERAL NOTES AND PARTS/MATERIAL SEE SHEET 1.

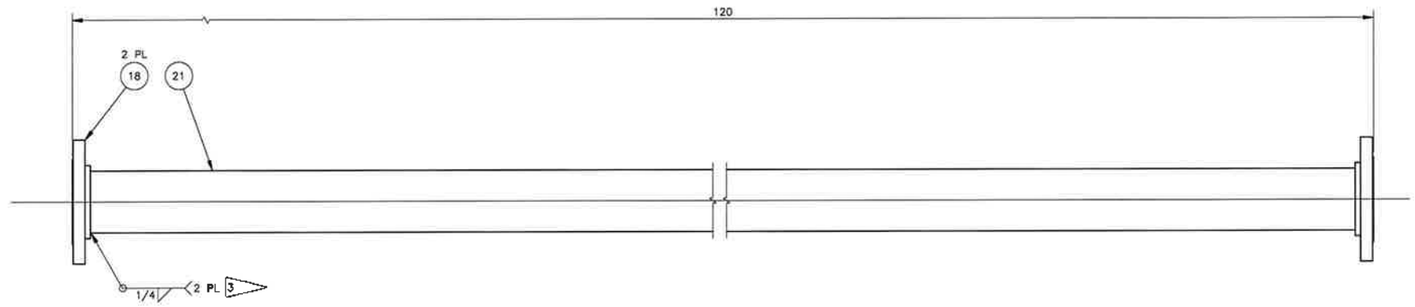

5 PIPE SPOOL
SCALE: 1/4

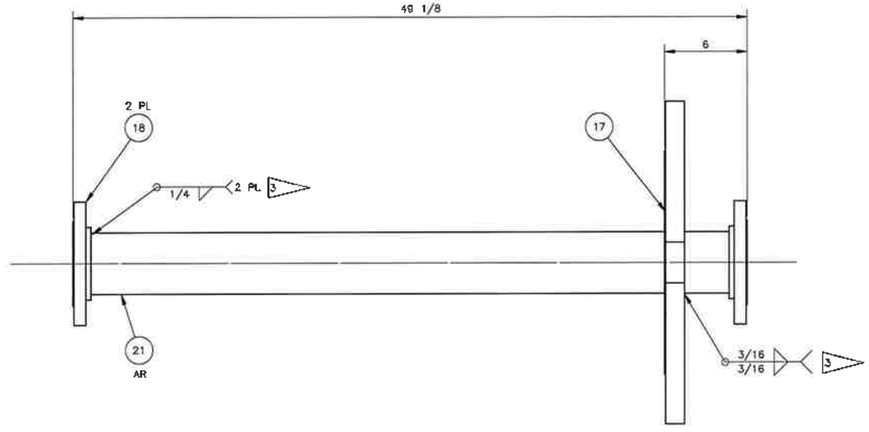

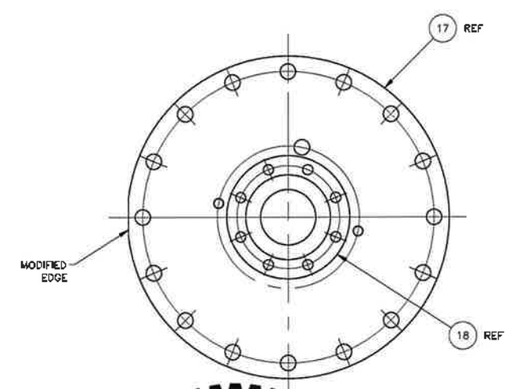

6 PIPE SPOOL
SCALE: 1/4

PAUL M. DORSH
STATE OF WASHINGTON
41918
REGISTERED
PROFESSIONAL ENGINEER
5/26/2020

DATE:
May 26, 2020
HANFORD RELEASE

DWG NUMBER	TITLE
	DRAWING TRACEABILITY LIST

REF NUMBER	TITLE
	REFERENCES
NEXT USED ON SHEET 1	

0	RELEASED PER EDT-862463	
REV	DESCRIPTION	
	REVISIONS	

RUN NO 242-AL 242AL-41
INDEX NO 2700

CAUTION: NOT COMPLETE WITHOUT CURRENT CHANGE DOCUMENTS FROM DATABASE

	NAME	DATE	COMPANY
DRAFTER	F CHAVEZ	8/8/88	WRPS
DRAFTER CHECK	W T ARNDT	8/8/88	WRPS
ENGINEERING PEER REVIEWER	C C JOSLYN	8/8/88	WRPS
DESIGN ENGINEER	P M DORSH	8/8/88	WRPS
DESIGN AUTHORITY	N W WILSON	8/8/88	WRPS

U.S. DEPARTMENT OF ENERGY
Office of River Protection

LERF BASIN 41
BASIN PUMP
ASSEMBLY AND SECTIONS

SIZE	DRAWING NUMBER	SHEET	REV
F	H-2-838768	5	00

SCALE SHOWN

29750 DOE_RLF.DWG (SEPTEMBER 2010)

NOTES:
FOR GENERAL NOTES AND PARTS/MATERIAL SEE SHEET 1.

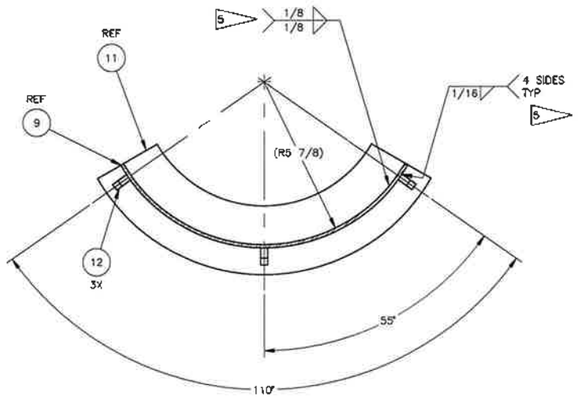

SECTION E–E
SCALE: 1 / 2

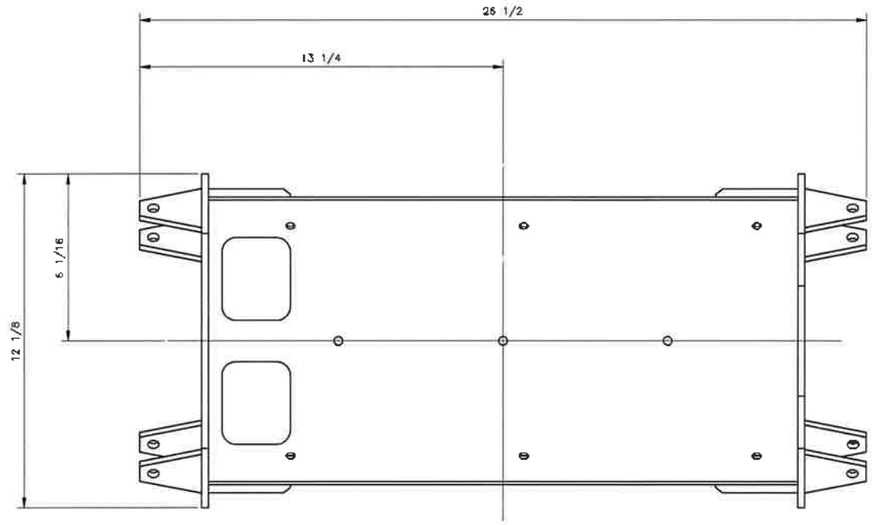

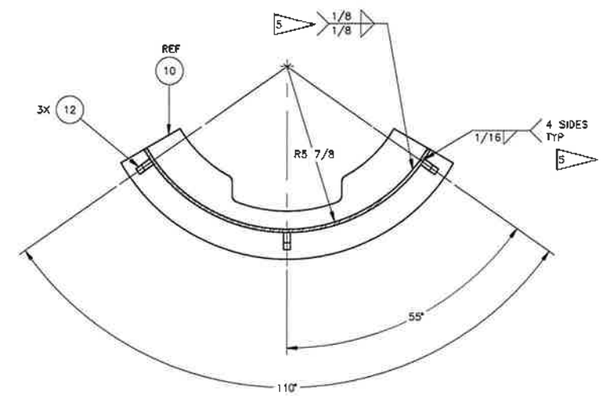

SECTION F–F
SCALE: 1 / 2

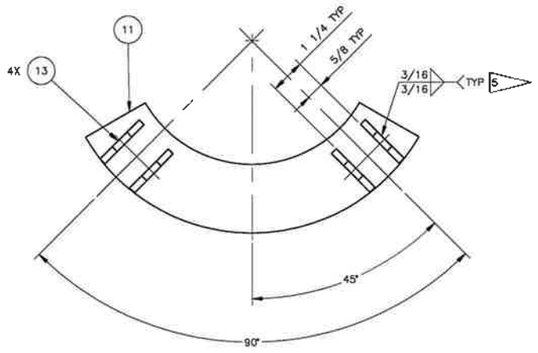

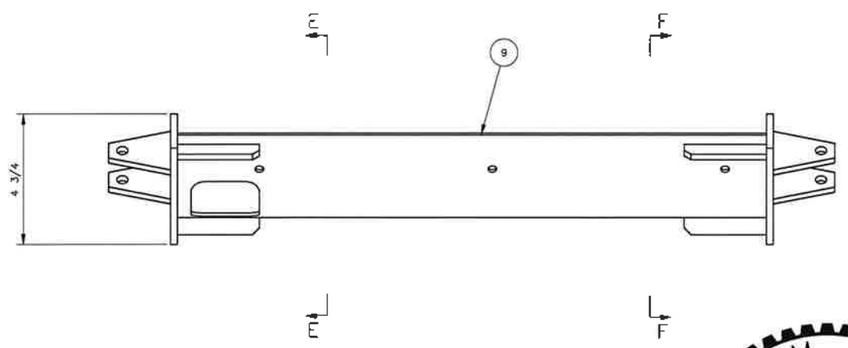

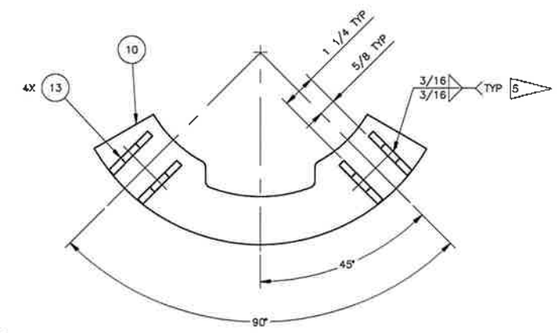

7 CARRIAGE WELDMENT
SCALE: 1/2

PAUL M. DORSH
STATE OF WASHINGTON
41918
REGISTERED
PROFESSIONAL ENGINEER
5/26/2020

DATE:
May 26, 2020
HANFORD RELEASE

DWG NUMBER	TITLE
DRAWING TRACEABILITY LIST	

REF NUMBER	TITLE
REFERENCES	
NEXT USED ON SHEET 1	

REV		
0	RELEASED PER EDT-882463	
REVISIONS		

BLDG NO 242-AL 242AL-41
BLDG NO 2800

CAUTION: NOT COMPLETE WITHOUT CURRENT CHANGE DOCUMENTS FROM DATABASE

	NAME	DATE	COMPANY
DRAWN	E CHAVEZ	05/26/20	WRPS
DRAFTING CHECK	W T ARNDT	05/26/20	WRPS
ENGINEERING CHECK REVIEWER	C C JOSLYN	05/26/20	WRPS
DESIGN ENGINEER	P M DORSH	05/26/20	WRPS
DRAWING MANAGEMENT	N W WILSON	05/26/20	WRPS

U.S. DEPARTMENT OF ENERGY
Office of River Protection

LERF BASIN 41
BASIN PUMP
ASSEMBLY AND SECTIONS

SIZE F | DRAWING NUMBER H-2-838768 | SHEET 6 | REV 00
SCALE SHOWN

NOTES:
FOR GENERAL NOTES AND PARTS/MATERIAL SEE SHEET 1.

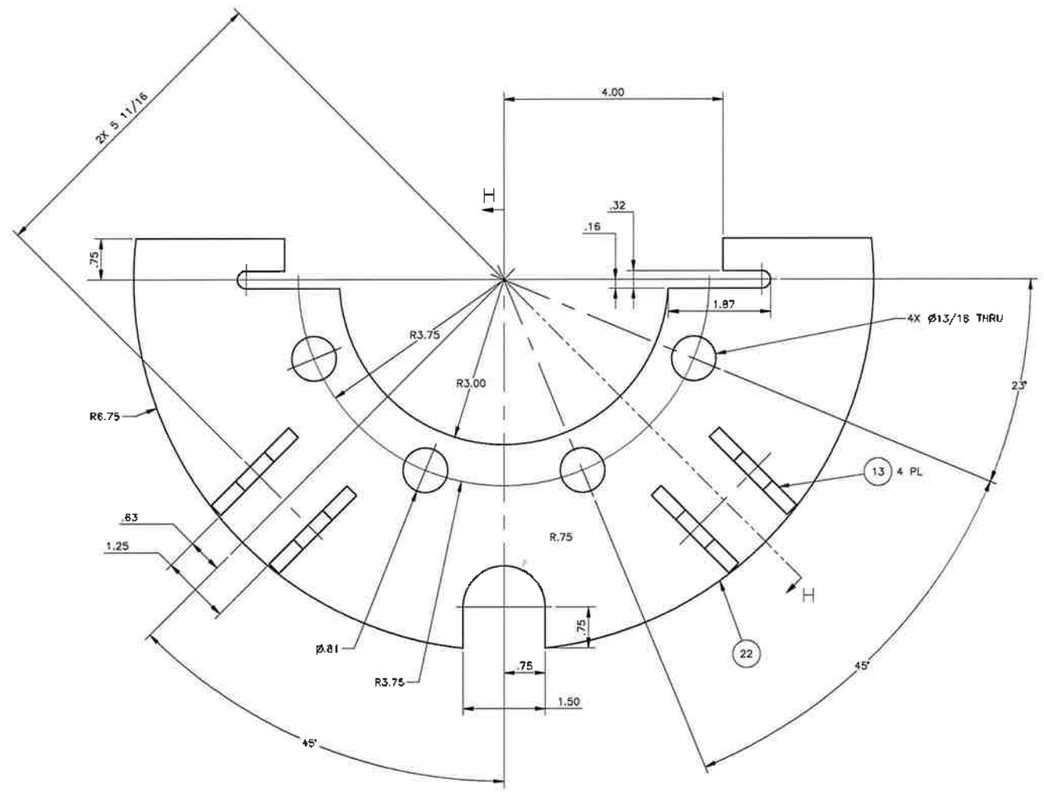

8 WHEEL SUPPORT WELDMENT
SCALE: 1/1

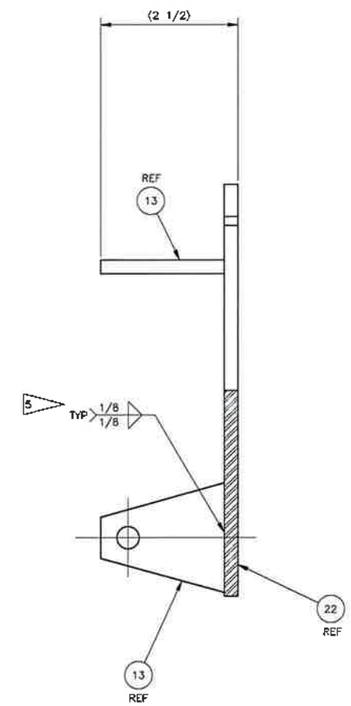

SECTION H-H
SCALE: 1/1

PAUL M. DORSH
STATE OF WASHINGTON
41918
REGISTERED
PROFESSIONAL ENGINEER
5/26/2020

DATE:
May 26, 2020
HANFORD RELEASE

DWG NUMBER	TITLE
DRAWING TRACEABILITY LIST	

REF NUMBER	TITLE
REFERENCES	
NEXT USED ON SHEET 1	

REV	DESCRIPTION
0	RELEASED PER EDT-882463
REVISIONS	

BLDG NO 242-AL 242AL-41
MODEL NO 2700

CAUTION: NOT COMPLETE WITHOUT CURRENT CHANGE DOCUMENTS FROM DATABASE

	NAME	DATE	COMPANY
DRAWN	C CHAVEZ	11/1/88	KBPS
DESIGN CHECK	W T ARNDT	11/1/88	KBPS
ENGINEERING PEER REVIEWER	C C JOSLYN	11/1/88	KBPS
LEAD ENGINEER	P M DORSH	11/1/88	KBPS
DESIGN AUTHORITY	N W WILSON	11/1/88	KBPS

U.S. DEPARTMENT OF ENERGY
Office of River Protection

LERF BASIN 41
BASIN PUMP
SECTIONS AND DETAILS

SIZE F DRAWING NUMBER H-2-838768 SHEET 7 REV 00
SCALE SHOWN

28532 DOE_TBLF.DWG (SEPTEMBER 2019)

NOTES:
FOR GENERAL NOTES AND PARTS/MATERIAL SEE SHEET 1.

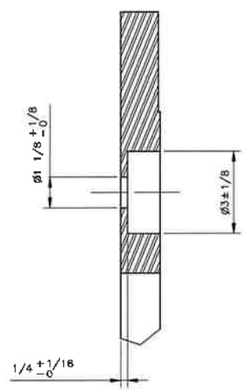

SECTION J–J
SCALE: 1/2

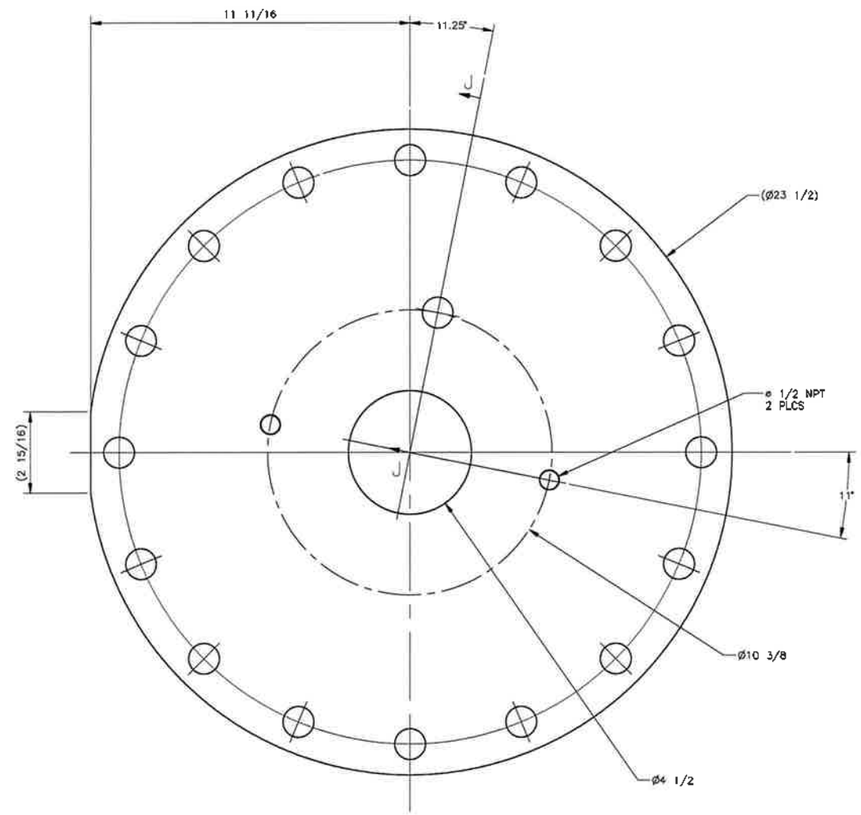

17 FLANGE
SCALE: 1/2

PAUL M. DORSH
STATE OF WASHINGTON
41918
REGISTERED
PROFESSIONAL ENGINEER
5/26/2020

DATE:
May 26, 2020
HANFORD RELEASE

DWG NUMBER	TITLE
DRAWING TRACEABILITY LIST	

REF NUMBER	TITLE
REFERENCES	
NEXT USED ON SHEET 1	

REV NO	DESCRIPTION
0	RELEASED PER EDT-682463
REVISIONS	

SIZE NO 242–AL 242AL–41
NOZZ NO 2800

CAUTION: NOT COMPLETE WITHOUT CURRENT CHANGE DOCUMENTS FROM DATABASE

	NAME	DATE	COMPANY
DRAWN	F CHAVEZ	5/5/20	SMPS
DWG CHK REVIEW	W T ARNDT	5/5/20	SMPS
CHANGE DWG REVIEW	C C JOSLYN	5/5/20	SMPS
APPR DORSH	P M DORSH	5/5/20	SMPS
DESIGN AUTHORITY	N W WILSON	5/5/20	SMPS

U.S. DEPARTMENT OF ENERGY
Office of River Protection

LERF BASIN 41
BASIN PUMP
DETAILS AND SECTIONS

SIZE F | DRAWING NUMBER H-2-838768 | SHEET 8 | REV 00
SCALE SHOWN
28527

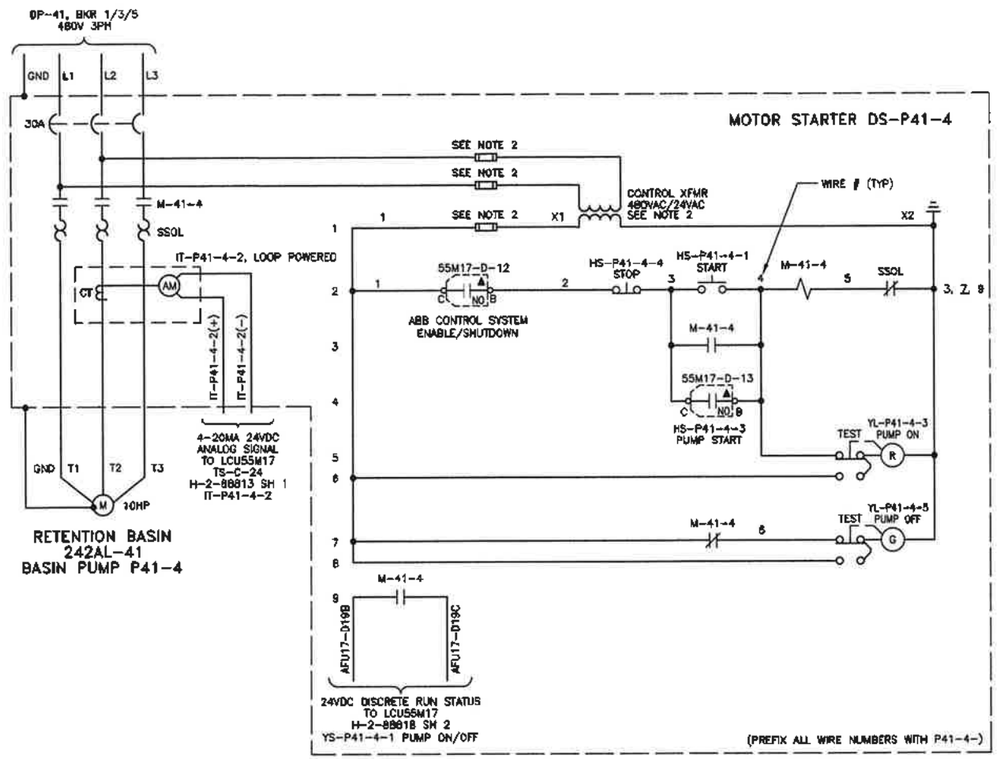

MOTOR STARTER DS-P41-4 ELEMENTARY DIAGRAM

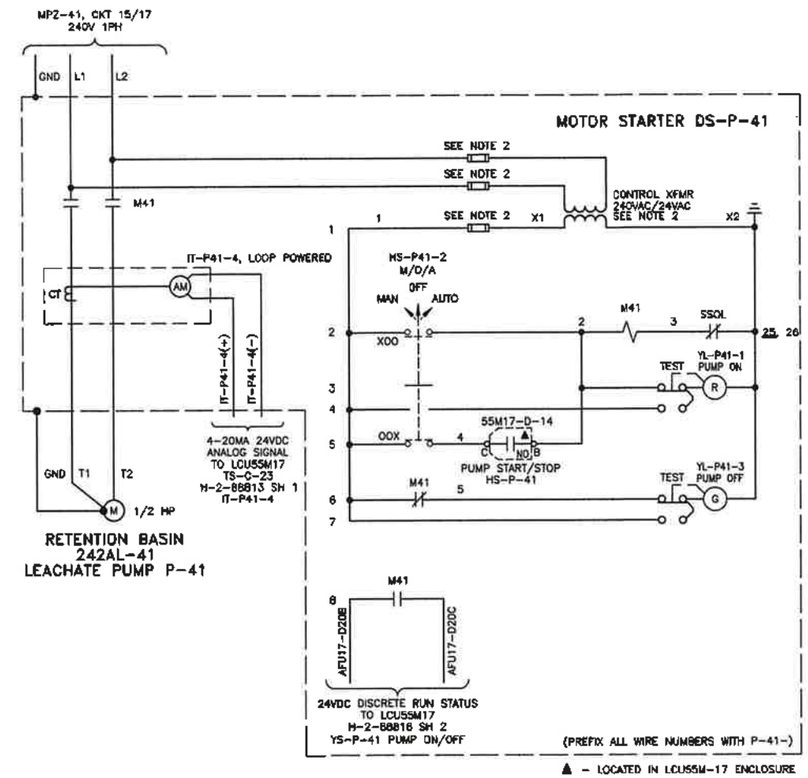

MOTOR STARTER DS-P-41 ELEMENTARY DIAGRAM

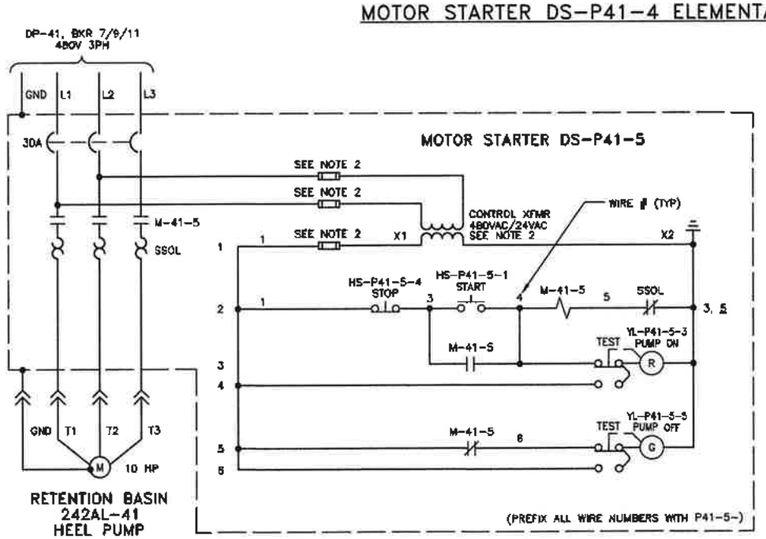

MOTOR STARTER DS-P41-5 ELEMENTARY DIAGRAM

NOTES:

1. SEE DRAWING H-2-838746 FOR ABBREVIATIONS, LEGEND, & GENERAL NOTES.
2. CONTROL TRANSFORMER AND FUSES SHALL BE SIZED BY MOTOR CONTROLLER MANUFACTURER, AND SIZES/RATINGS ADDED TO DRAWING DURING AS-BUILTING.

LORI B. WEIDNER
STATE OF WASHINGTON
38876
REGISTERED
PROFESSIONAL ENGINEER
5/20/2020

DATE:
May 20,2020
HANFORD RELEASE

DWG NUMBER	TITLE
DRAWING TRACEABILITY LIST	

REF NUMBER	TITLE
H-2-838745	DRAWING LIST/TITLE SHEET
REFERENCES	

NEXT USED ON

0	RELEASED PER EDT-882464
REVISIONS	

BLDG NO: 242-AL, 242AL-41, 242AL-71
INDEX NO: 5903, 7302

CAUTION: NOT COMPLETE WITHOUT CURRENT CHANGE DOCUMENTS FROM DATABASE.

	NAME	DATE
DRAFTER	L R CONLEY	
DESIGN ENGINEER	D R CHAPMAN	
ENGINEERING TECH REVIEW	S P O'HARA	
ENGINEER OWNER	L B WEIDNER	
DESIGN AUTHORITY	N W WILSON	

U.S. DEPARTMENT OF ENERGY
Office of River Protection

ELECTRICAL
ELEMENTARY DIAGRAM
BASIN 41 PUMPS

SIZE F | DRAWING NUMBER H-2-79668 | SHEET 6 | REV 00
SCALE NONE

GENERAL NOTES: (UNLESS OTHERWISE SPECIFIED)

1. DIMENSIONS ARE IN INCHES, TOLERANCES SHALL BE AS FOLLOWS:
   FRACTIONS = ±1/8" ANGLES = ±0.5° DECIMAL = .XX ±0.03 .XXX ±.010
2. REMOVE ALL BURRS AND BREAK SHARP EDGES.
3. FABRICATE, WELD, INSPECT, AND TEST PIPING IN ACCORDANCE WITH ASME B31.3, 2016 FOR CATEGORY NORMAL FLUID SERVICE. DESIGN PRESSURE IS 100 PSIG, AND DESIGN TEMPERATURE IS 150°F. HYDROSTATIC LEAK PRESSURE TEST TO 150 PSIG (-0/+10 PSIG). FABRICATION TEMPERATURE IS 50°F TO 120°F.
4. ALL MACHINED SURFACES SHALL BE 125 IN ACCORDANCE WITH ASME B46.1, 2009, UNLESS OTHERWISE SPECIFIED.
5. WELD AND INSPECT STRUCTURAL WELDS IN ACCORDANCE WITH AWS D1.1, 2015 STATICALLY LOADED CRITERIA. ALL WELDS SHALL BE VT ON FINAL PASS UNLESS OTHERWISE SPECIFIED. WELD PROCEDURES AND QUALIFICATIONS PER ASME B&PV CODE SECTION IX, 2017 ARE ACCEPTABLE.
6. FOR B31.3 ANALYSIS SEE RPP-CALC-63779.
7. USE CLASS M-10 PIPING CODE. SEE CONSTRUCTION SPECIFICATION RPP-SPEC-63632 SECTION 40 40 00.
8. DO NOT CABLE TIE WIRE ROPE. CABLE TIES ARE USED FOR POWER CABLE ONLY.

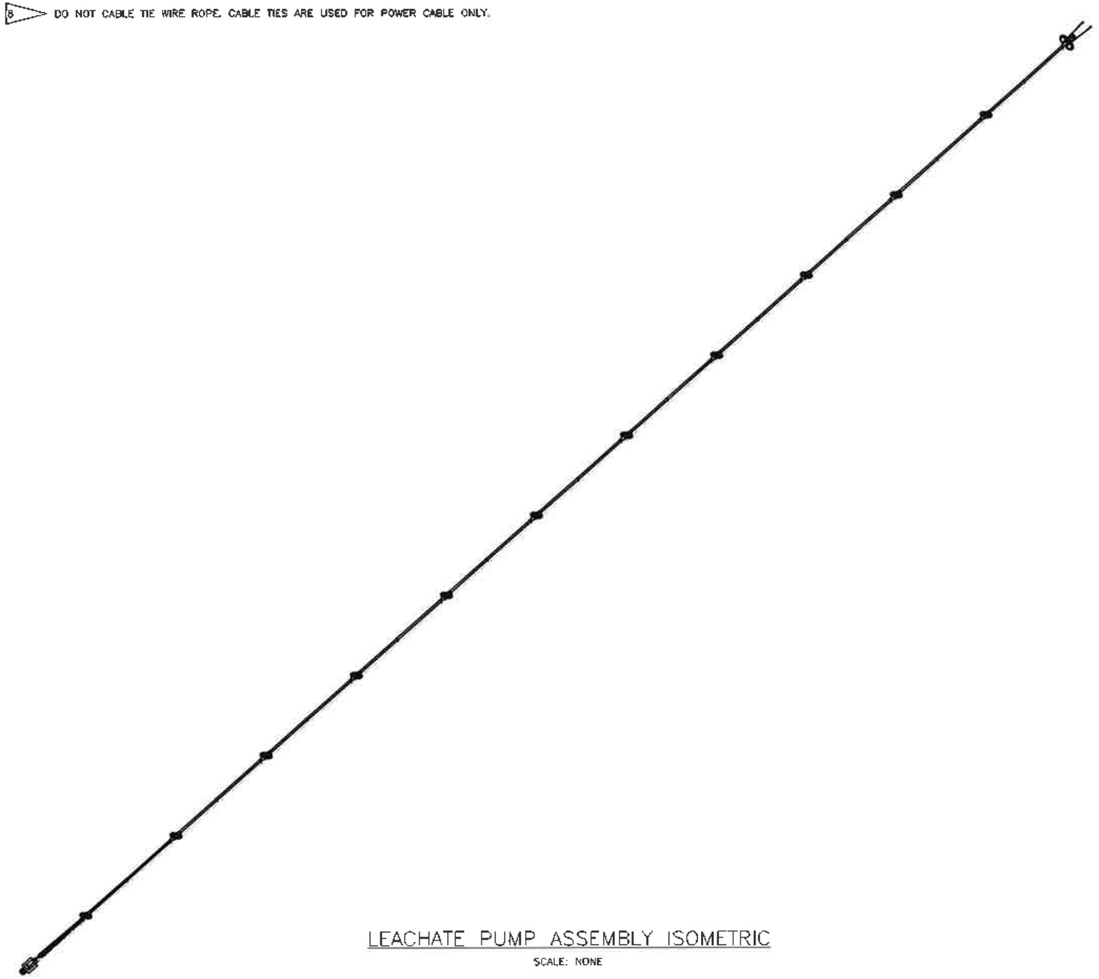

LEACHATE PUMP ASSEMBLY ISOMETRIC

SCALE: NONE

PARTS/MATERIAL LIST

QTY -080	QTY -070	QTY -060	QTY -050	QTY -040	QTY -030	QTY -020	QTY -010	PART/DASH NUMBER	NOMENCLATURE/DESCRIPTION	MATERIAL/REFERENCE	SHT	ITEM NO
								-010	LEACHATE PUMP ASSEMBLY		2	1
							1	-020	PUMP SUPPORT ASSEMBLY		4	2
							22	-030	WHEEL SUPPORT ASSEMBLY		4	3
						2		-040	PUMP SUPPORT WELDMENT		5	4
					1			-050	WHEEL SUPPORT WELDMENT		5	5
							1	-060	PIPE SPOOL 1		6	6
							10	-070	PIPE SPOOL 2		6	7
							1	-080	PIPE SPOOL 3		7	8
		1						-001	MODIFIED BLIND FLANGE, 10, RF CL150	ASTM A182 GR F304L	8	9
			1					-002	WHEEL SUPPORT 1, PLATE, 1/4 THK	ASTM A240 304L	8	10
			4					-003	WHEEL SUPPORT BRACKET, PLATE, 1/4 THK	ASTM A240 304L	8	11
				2				-004	PUMP SUPPORT, PLATE, 1/4 THK	ASTM A240 304L	8	12
				1				-005	PUMP SUPPORT, PIPE, 4 SCH 10S	ASTM A312 TP 304L	9	13
						2		-006	FLAT BAR, 3/8 X 3/4 X LAR	ASTM A276 304L	9	14
	AR	AR							PIPE, 1 1/2 SCH 10S	ASTM A312 TP 304L		15
AR									PIPE, 1 1/2 SCH 40S	ASTM A312 TP 304L		16
						AR			PIPE, 1 1/4 SCHED 40S	ASTM A312 TP 304L		17
		1							PIPE, 1/2 X 6 LG, SCHED 40	ASTM A312 TP 304L		18
1	2	2							FLANGE, 1 1/2 WN RF, CL150	ASTM A182 GR F304L		19
1									PIPE COUPLING, 1 1/2 SW X 1 1/4 FNPT, CL3000	PENN MACHINE		20
						1		1SC3/05/6 C L40	CLOSE-COUPLED SUBMERSIBLE ELECTRIC PUMP	LOWARA		21
							1	CGB396	CORD GRIP, 1 NPT	EATON		22
							2	CGB116	CORD GRIP, 1/2 NPT	EATON		23
					2				WHEEL, 3 DIA	NYLON		24
							11	BLUEGARD STYLE 3700	GASKET, 1 1/2 CL150, 1/8 THK	GARLOCK		25
							4	G411	THIMBLE	CROSBY		26
						AR			BANDING, 3/4 X .033 THK W/ CLAMP			27
							AR		CABLE TIE			28
								S0116-SA10	SHACKLE, 3/8	SUNCOR STAINLESS		29
					2			(90298A63)	HEX SOCKET SHOULDER SCREW, 5/16-18 UNC-2A X 1 3/4 LG	(MCMASTER-CARR)		30
							44		STUD, 1/2-13 UNC-2A X 3 1/4 LG	ASTM A193 GR B8 CL2		31
					2				LOCKNUT, HEX 5/16-18 UNC 2-B	ASTM A194 GR 8		32
							128		NUT, HEAVY HEX 1/2-13 UNC-2B	ASTM A194 GR 8		33
							68		WASHER, FLAT 1/2	SS 304		34
					2				WASHER, FLAT 5/16	SS 304		35
							4	5128245	DUPLEX SLEEVE, 1/4	ESCO		36
							AR	(3461T34)	WIRE ROPE, 1/4 DIA	(MCMASTER-CARR)		37
						2			ELBOW, 1 1/4, 90 DEG SR (MODIFIED) SCHED 40 BW	ASTM A403 WPS 304L		38

PAUL M. DORSH — STATE OF WASHINGTON — 41918 — REGISTERED PROFESSIONAL ENGINEER

5/26/2020

DATE: May 26, 2020 — HANFORD RELEASE

DWG NUMBER	TITLE
H-15-38	LERF BASIN 41
H-2-838745	DRAWING LIST/TITLE SHEET

DRAWING TRACEABILITY LIST

REF NUMBER / TITLE — REFERENCES — NEXT USED ON H-2-838767

REV	DESCRIPTION
0	RELEASED PER EDT-882463

REVISIONS

BLDG NO: 242-AL, 242AL-41

INDEX NO: 2800

CAUTION: NOT COMPLETE WITHOUT CURRENT CHANGE DOCUMENTS FROM DATABASE

	NAME	DATE	COMPANY
DRAFTER	H A MENDEZ	05/26/2020	4SFS
ENGINEER	W T ARNDT	05/26/2020	4SFS
ENGINEERING PEER REVIEWER	C C JOSLYN	05/26/2020	4SFS
DESIGN ENGINEER	P M DORSH	05/26/2020	4SFS
DESIGN AUTHORITY	N W WILSON	05/26/2020	

U.S. DEPARTMENT OF ENERGY
Office of River Protection

LERF BASIN 41
LEACHATE PUMP
NOTES AND PARTS LIST

SIZE F — DRAWING NUMBER H-2-838769 — SHEET 1 — REV 00

SCALE SHOWN

28545

NOTES:
FOR GENERAL NOTES AND PARTS/MATERIAL LIST SEE SHEET 1.

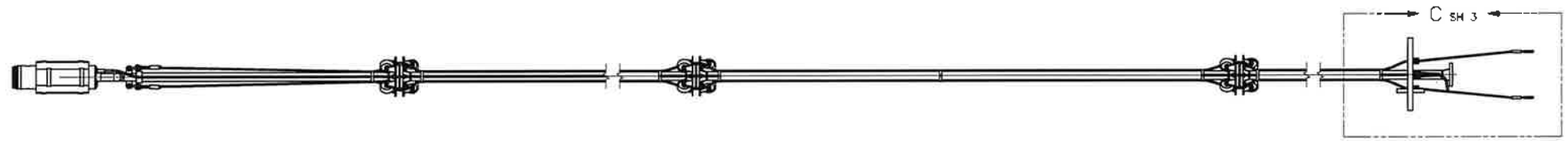

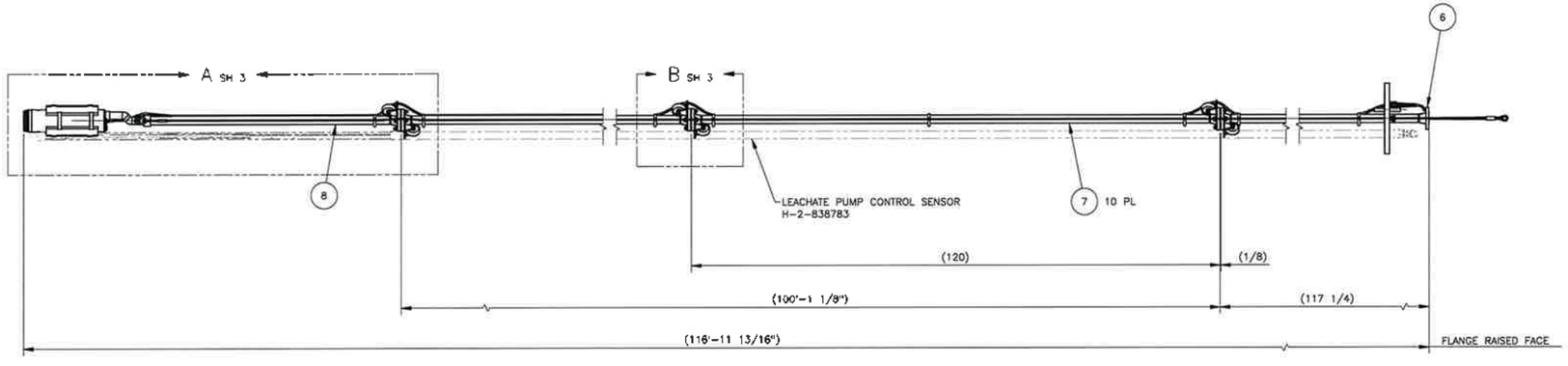

1 LEACHATE PUMP ASSEMBLY
SCALE: 1/12
(ROTATED 15° FOR CLARITY)

PAUL M. DORSH
STATE OF WASHINGTON
41918
REGISTERED
PROFESSIONAL ENGINEER
5/26/2020

DATE:
May 26, 2020
HANFORD RELEASE

DWG NUMBER	TITLE
DRAWING TRACEABILITY LIST	

REF NUMBER	TITLE
REFERENCES	
NEXT USED ON SEE SHEET 1	

REV NO	DESCRIPTION
0	RELEASED PER EDT-882463
REVISIONS	

BLDG NO: 242-AL, 242AL-41
INDEX NO: 2600

CAUTION: NOT COMPLETE WITHOUT CURRENT CHANGE DOCUMENTS FROM DATABASE

	NAME	DATE	COMPANY
DRAFTER	H A MENDEZ	05/26/2020	WRPS
DRAFTER SUPPORT	W T ARNDT	05/26/2020	WRPS
ENGINEERING PEER REVIEWER	C C JOSLYN	05/26/2020	WRPS
DESIGN ENGINEER	P M DORSH	05/26/2020	WRPS
DESIGN AUTHORITY	N W WILSON	05/26/2020	WRPS

U.S. DEPARTMENT OF ENERGY
Office of River Protection

LERF BASIN 41
LEACHATE PUMP
ASSEMBLY

SIZE	DRAWING NUMBER	SHEET	REV
F	H-2-838769	2	00

SCALE SHOWN

29765

NOTES:
FOR GENERAL NOTES AND PARTS/MATERIAL LIST SEE SHEET 1.

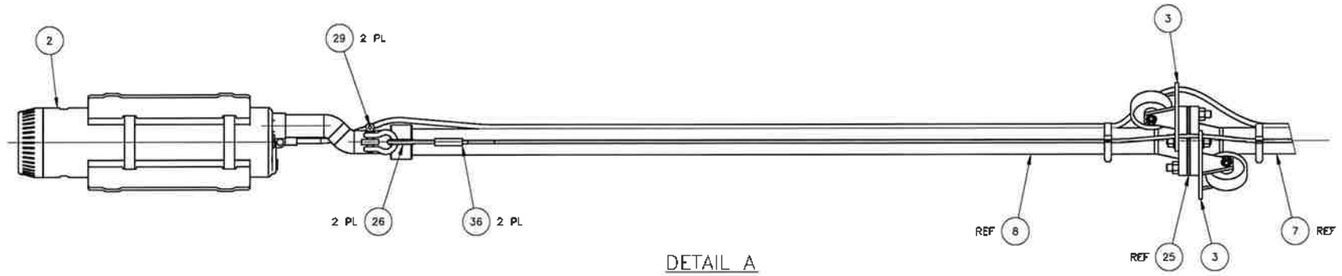

DETAIL A
SCALE: 1/4
SHEET 2

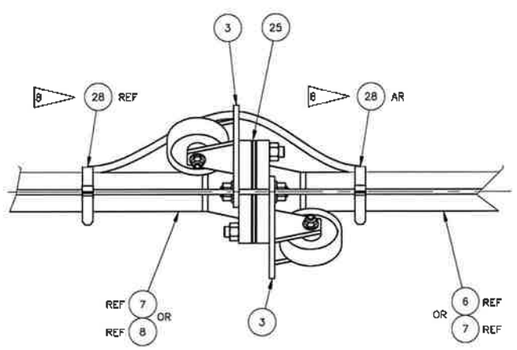

DETAIL B
SCALE: 3/8
SHEET 2
(TYPICAL 11 PL)

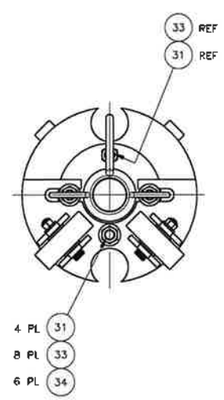

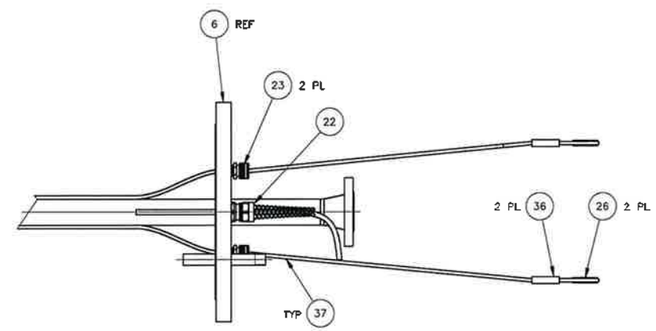

DETAIL C
SCALE: 1/4
SHEET 2

PAUL M. DORSH
STATE OF WASHINGTON
41918
REGISTERED
PROFESSIONAL ENGINEER
5/26/2020

DATE:
May 26, 2020
HANFORD RELEASE

DWG NUMBER	TITLE
DRAWING TRACEABILITY LIST	

REF NUMBER	TITLE
REFERENCES	
NEXT USED ON SEE SHEET 1	

REV NO	DESCRIPTION
0	RELEASED PER EDT-862463
REVISIONS	

BLDG NO 242-AL 242AL-41
MODEL NO 2600

CAUTION: NOT COMPLETE WITHOUT CURRENT CHANGE DOCUMENTS FROM DATABASE

	NAME	DATE	Company
DRAFTER	H A MENDEZ	05/26/2020	MSA
SENIOR DESIGNER	W T ARNDT	05/26/2020	MSA
CONTRACTING PARTS REVIEWER	C C JOSLYN	05/26/2020	MSA
DESIGN ENGINEER	P M DORSH	05/26/2020	MSA
DESIGN AUTHORITY	N W WILSON	05/26/2020	MSA

U.S. DEPARTMENT OF ENERGY
Office of River Protection

LERF BASIN 41
LEACHATE PUMP
DETAILS

SIZE F | DRAWING NUMBER H-2-838769 | SHEET 3 | REV 00
SCALE SHOWN

28533

NOTES:
FOR GENERAL NOTES AND PARTS/MATERIAL LIST SEE SHEET 1.

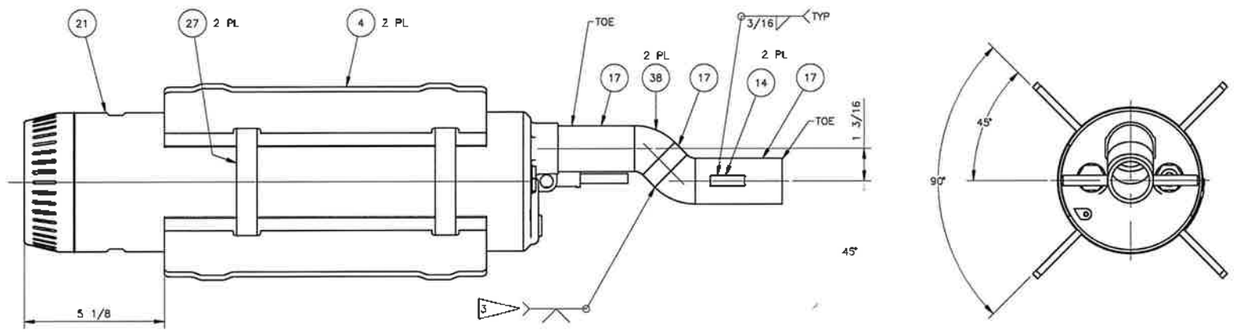

2 PUMP SUPPORT ASSEMBLY
SCALE: 1/2

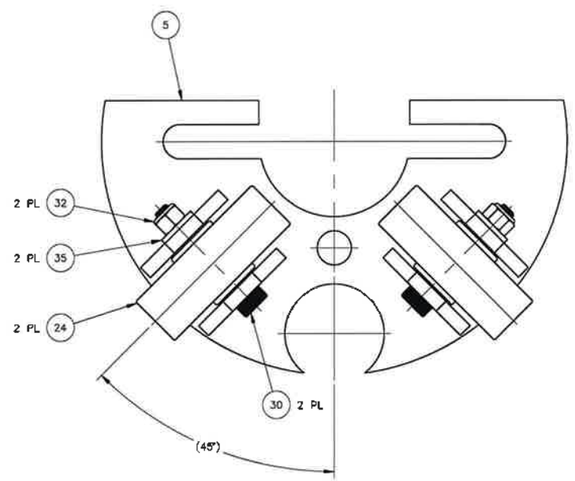

3 WHEEL SUPPORT ASSEMBLY
SCALE: 1/1

PAUL M. DORSH
STATE OF WASHINGTON
41918
REGISTERED
PROFESSIONAL ENGINEER
5/26/2020

DATE:
May 26, 2020
HANFORD RELEASE

DWG NUMBER	TITLE
DRAWING TRACEABILITY LIST	

REF NUMBER	TITLE
REFERENCES	
NEXT USED ON SEE SHEET 1	

REV NO	DESCRIPTION
0	RELEASED PER EDT-862463
REVISIONS	

SUBS NO 242-AL 242AL-41
BOOK NO 2600

CAUTION: NOT COMPLETE WITHOUT CURRENT CHANGE DOCUMENTS FROM DATABASE

	NAME	DATE	COMPANY
DRAFTER	H. A. MENDEZ	05/26/20	WRPS
CHIEF DRAFTER	W. T. ARNDT	05/26/20	WRPS
ENGINEERING PEER REVIEWER	C. C. JOSLYN	05/26/20	WRPS
DESIGN ENGINEER	P. M. DORSH	05/26/20	WRPS
DESIGN AUTHORITY	N. W. WILSON	05/26/20	WRPS

U.S. DEPARTMENT OF ENERGY
Office of River Protection

LERF BASIN 41
LEACHATE PUMP
DETAILS

SIZE F | DRAWING NUMBER H-2-838769 | SHEET 4 | REV 00
SCALE SHOWN
28554

NOTES:
FOR GENERAL NOTES AND PARTS/MATERIAL LIST SEE SHEET 1.

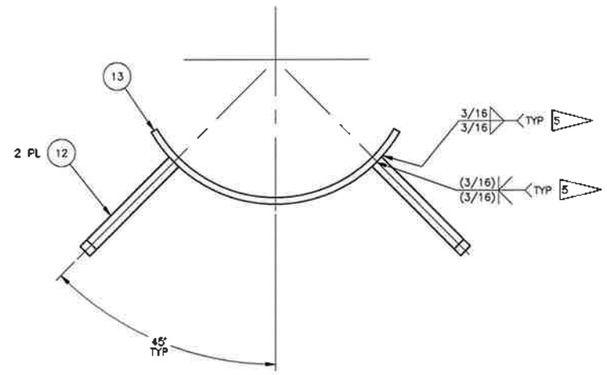

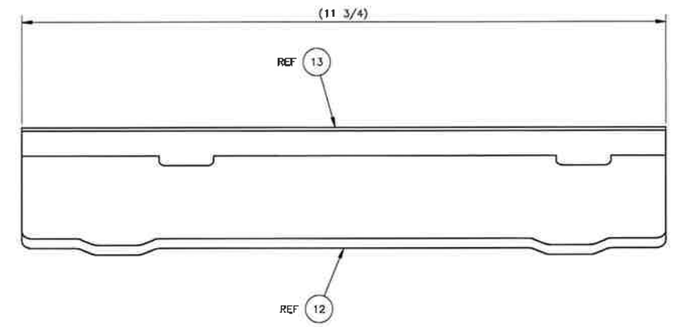

4 PUMP SUPPORT WELDMENT
SCALE: 1/1

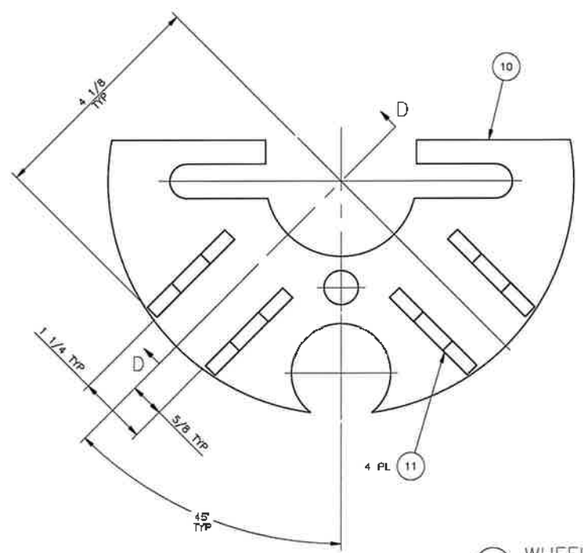

5 WHEEL SUPPORT WELDMENT
SCALE: 1/1

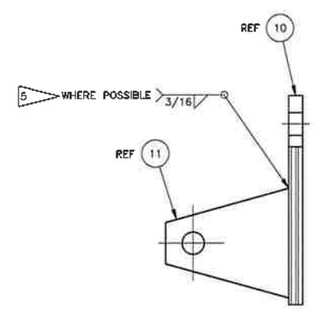

SECTION D–D
SCALE: 1/1

DATE:
May 26, 2020
HANFORD RELEASE

DWG NUMBER	TITLE	REF NUMBER	TITLE
DRAWING TRACEABILITY LIST		REFERENCES	
		NEXT USED ON SEE SHEET 1	

REV	DESCRIPTION
0	RELEASED PER EDT-882463
REVISIONS	

BLDG NO 242-AL 242AL-41
NOTE NO 2600

CAUTION: NOT COMPLETE WITHOUT CURRENT CHANGE DOCUMENTS FROM DATABASE

	NAME	DATE	COMPANY
DRAWN	H A MENDEZ		
DRAFTING CHECK	W T ARNDT		
ENGINEERING PEER REVIEWER	C C JOSLYN		
DESIGN ENGINEER	P M DORSH		
DESIGN AUTHORITY	N W WILSON		

U.S. DEPARTMENT OF ENERGY
Office of River Protection

LERF BASIN 41
LEACHATE PUMP
WELDMENTS

SIZE F | DRAWING NUMBER H-2-838769 | SHEET 5 | REV 00
SCALE SHOWN

28537 DOE_TEL_2.DWG (SEPTEMBER 2016)

NOTES:
FOR GENERAL NOTES AND PARTS/MATERIAL LIST SEE SHEET 1.

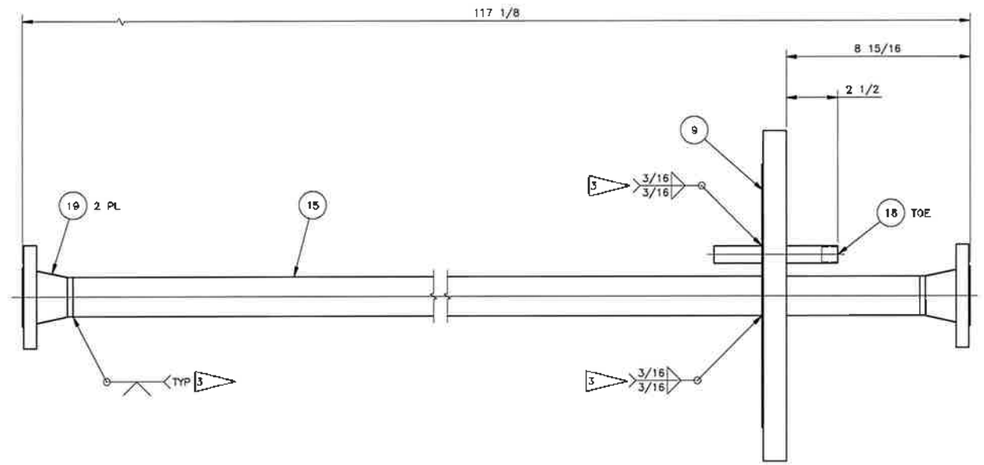

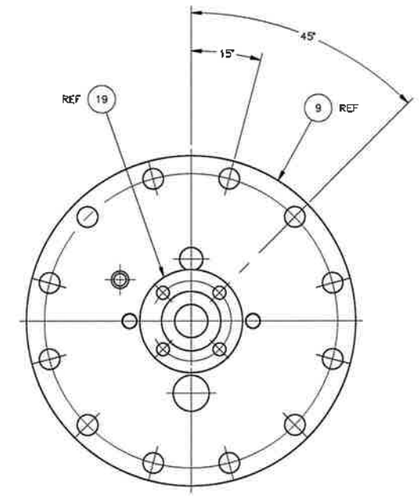

6 PIPE SPOOL 1
SCALE: 3/8

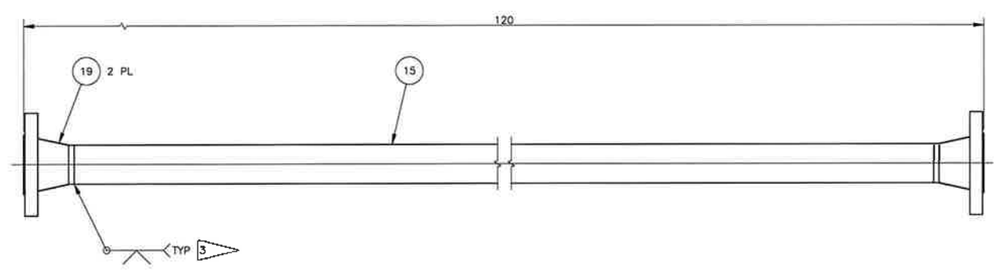

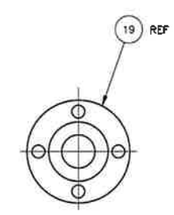

7 PIPE SPOOL 2
SCALE: 3/8

DATE:
May 26, 2020
HANFORD RELEASE

DWG NUMBER	TITLE
DRAWING TRACEABILITY LIST	

REF NUMBER	TITLE
REFERENCES	
NEXT USED ON SEE SHEET 1	

REV NO	DESCRIPTION
0	RELEASED PER EDT-882463
REVISIONS	

BLDG NO: 242-A, 242AL-41
INDEX NO: 2600

CAUTION: NOT COMPLETE WITHOUT CURRENT CHANGE DOCUMENTS FROM DATABASE

	NAME	DATE	CONTRACT
DRAFTER	H A MENDEZ	5/26/2020	69979
DRAFTER SUPERV	W T ARNDT	5/26/2020	69979
ENGINEERING REVIEW	C C JOSLYN	5/26/2020	69979
DESIGN ENGINEER	P M DORSH	5/26/2020	69979
DESIGN AUTHORITY	N W WILSON	5/26/2020	69979

U.S. DEPARTMENT OF ENERGY
Office of River Protection

LERF BASIN 41
LEACHATE PUMP
PIPE SPOOLS

SIZE F | DRAWING NUMBER H-2-838769 | SHEET 6 | REV 00
SCALE: SHOWN

28550 DOE_RL_F.DWG (SEPTEMBER 2019)

NOTES:
FOR GENERAL NOTES AND PARTS/MATERIAL LIST SEE SHEET 1.

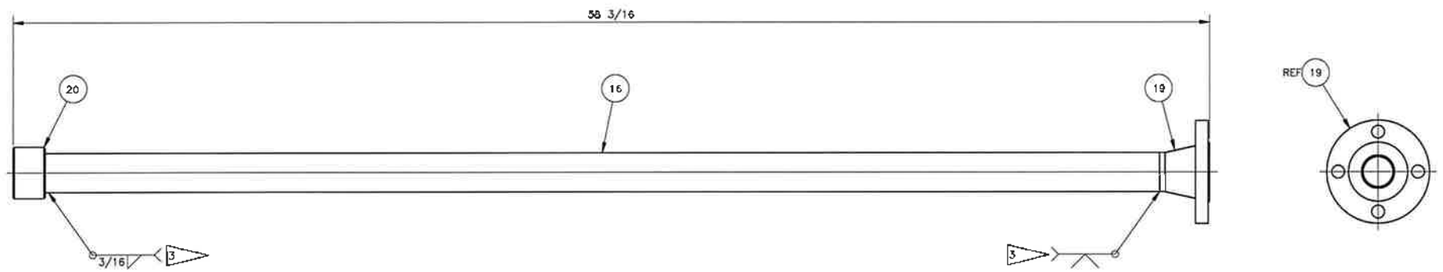

8 PIPE SPOOL 3
SCALE: 3/8

PAUL M. DORSH
STATE OF WASHINGTON
41918
REGISTERED
PROFESSIONAL ENGINEER
5/26/2020

DATE:
May 26, 2020
HANFORD RELEASE

DWG NUMBER	TITLE
DRAWING TRACEABILITY LIST	

REF NUMBER	TITLE
REFERENCES	
NEXT USED ON SEE SHEET 1	

REV NO	DESCRIPTION
0	RELEASED PER EDT-882463
REVISIONS	

BLDG NO 242-AL 242AL-41

INDEX NO 2600

CAUTION: NOT COMPLETE WITHOUT CURRENT CHANGE DOCUMENTS FROM DATABASE

	NAME	DATE
DRAFTER	H.A. MENDEZ	5/26/2020
DRAFTER SUPERV	W.T. ARNDT	5/26/2020
ENGINEERING CHIEF REVIEWER	R.C. JOSLIN	5/26/2020
DESIGN ENGINEER	P.M. DORSH	5/26/2020
DESIGN AUTHORITY	N.W. WILSON	5/26/2020

U.S. DEPARTMENT OF ENERGY
Office of River Protection

LERF BASIN 41
LEACHATE PUMP
PIPE SPOOLS

SIZE	DRAWING NUMBER	SHEET	REV
F	H-2-838769	7	00

SCALE SHOWN

28543

NOTES:
FOR GENERAL NOTES AND PARTS/MATERIAL LIST SEE SHEET 1.

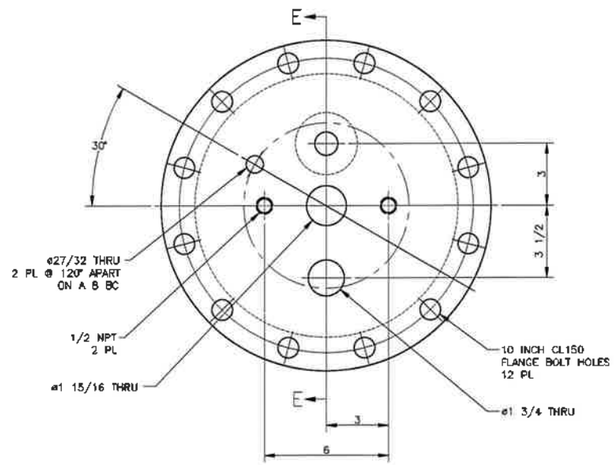

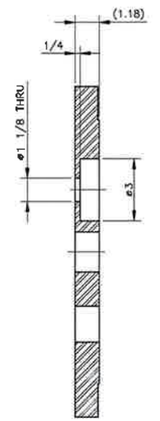

SECTION E–E
SCALE: 3/8

9 MODIFIED BLIND FLANGE
SCALE: 3/8

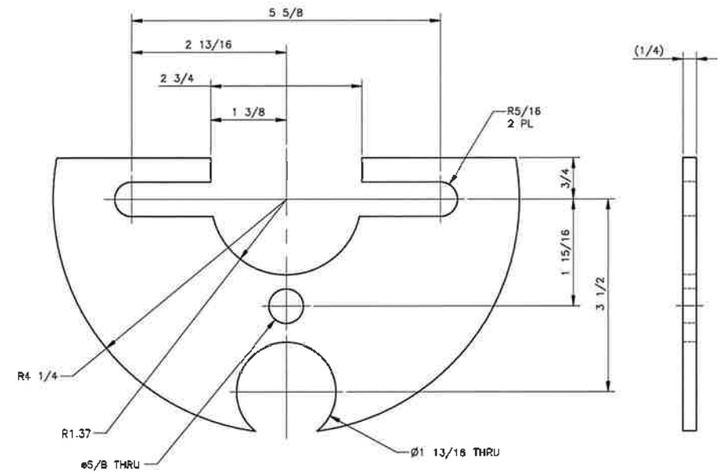

10 WHEEL SUPPORT 1
SCALE: 1/1

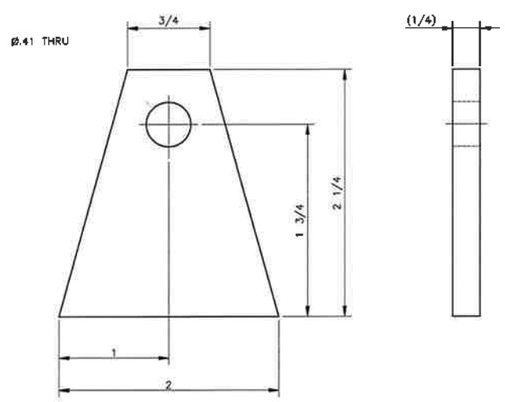

11 WHEEL SUPPORT BRACKET
SCALE: 2/1

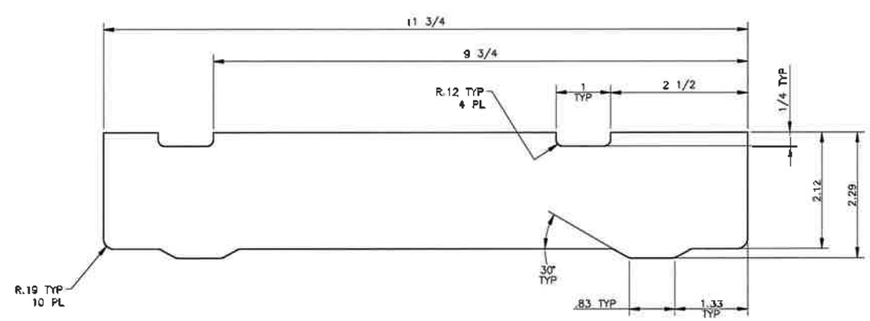

12 PUMP SUPPORT PLATE
SCALE: 1/1

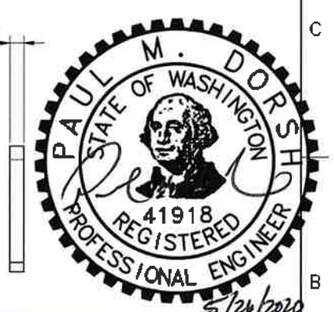

DATE:
May 26, 2020
HANFORD RELEASE

DWG NUMBER	TITLE	REF NUMBER	TITLE
DRAWING TRACEABILITY LIST		REFERENCES	
		NEXT USED ON SEE SHEET 1	

REV	DESCRIPTION
0	RELEASED PER EDT-882463
REVISIONS	

BLDG NO 242-AL, 242AL-41
BLOCK NO 2600

CAUTION: NOT COMPLETE WITHOUT CURRENT CHANGE DOCUMENTS FROM DATABASE

	NAME	DATE	COMPANY
DRAFTER	H A MENDEZ	10/1/99	MRTS
ENGINEERING ARCHITECT	W T ARNDT	10/1/99	MRTS
ENGINEERING DATA REVIEWER	C C JOSLYN	10/1/99	MRTS
DESIGN ENGINEER	P M DORSH	10/1/99	MRTS
DESIGN AUTHORITY	N W WILSON	10/1/99	MRTS

U.S. DEPARTMENT OF ENERGY
Office of River Protection

LERF BASIN 41
LEACHATE PUMP
DETAILS

SIZE F | DRAWING NUMBER H-2-838769 | SHEET 8 | REV 00
SCALE SHOWN

28542 DOE_TB_F.DWG (SEPTEMBER 2019)

NOTES:
FOR GENERAL NOTES AND PARTS/MATERIAL LIST SEE SHEET 1.

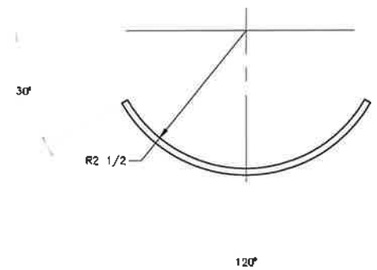

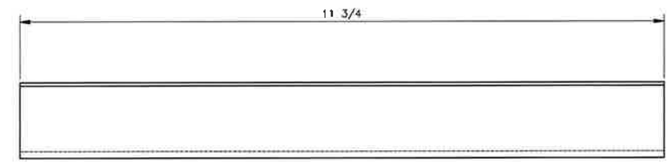

(13) PUMP SUPPORT PIPE
SCALE: 1/1

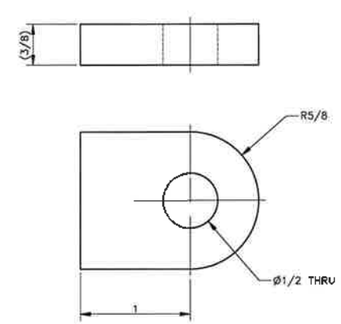

(14) FLAT BAR
SCALE: 2:1

DATE:
May 26, 2020
HANFORD RELEASE

DWG NUMBER	TITLE
DRAWING TRACEABILITY LIST	

REF NUMBER	TITLE
REFERENCES	
NEXT USED ON SEE SHEET 1	

REV NO	DESCRIPTION
0	RELEASED PER EDT-882463
REVISIONS	

INDEX NO 242-AL 242AL-41
INDEX NO 2600

CAUTION: NOT COMPLETE WITHOUT CURRENT CHANGE DOCUMENTS FROM DATABASE

	NAME	DATE	COMPANY
DRAFTER	H A MENDEZ	04/17/20	WRPS
DRAFTING SUPERV	W T ARNDT	04/17/20	WRPS
ENGINEERING FIELD REVIEWER	C C JOSLYN	04/17/20	WRPS
DESIGN ENGINEER	P M DORSH	04/17/20	WRPS
DESIGN AUTHORITY	N W WILSON	04/17/20	WRPS

U.S. DEPARTMENT OF ENERGY
Office of River Protection

LERF BASIN 41
LEACHATE PUMP
DETAILS

SIZE F | DRAWING NUMBER H-2-838769 | SHEET 9 | REV 00
SCALE SHOWN
28530

GENERAL NOTES: (UNLESS OTHERWISE SPECIFIED)

1. DIMENSIONS ARE IN INCHES, TOLERANCES SHALL BE AS FOLLOWS:
   FRACTIONS = ±1/8" ANGLES = ±0.5° DECIMAL = .XX ±0.03 .XXX ±.010
2. REMOVE ALL BURRS AND BREAK SHARP EDGES.
3. FABRICATE, WELD, INSPECT, AND TEST PIPING IN ACCORDANCE WITH ASME B31.3, 2016 FOR CATEGORY NORMAL FLUID SERVICE. DESIGN PRESSURE IS 100 PSIG, AND DESIGN TEMPERATURE IS 150°F. HYDROSTATIC LEAK PRESSURE TEST TO 150 PSIG (-0/+10 PSIG). FABRICATION TEMPERATURE IS 50°F TO 120°F.
4. FOR B31.3 ANALYSIS SEE RPP-CALC-63779.
5. FOR PIPING USE CLASS M-10 PIPING CODE SEE CONSTRUCTION SPECIFICATION RPP-SPEC-63632 SECTION 40 40 00.
6. FOR TUBING USE CLASS 153T TUBING CODE SPEC HNF-27957.
7. FOR PIPING INSULATION SEE CONSTRUCTION SPECIFICATION RPP-SPEC-63632 SECTION 40 42 13.

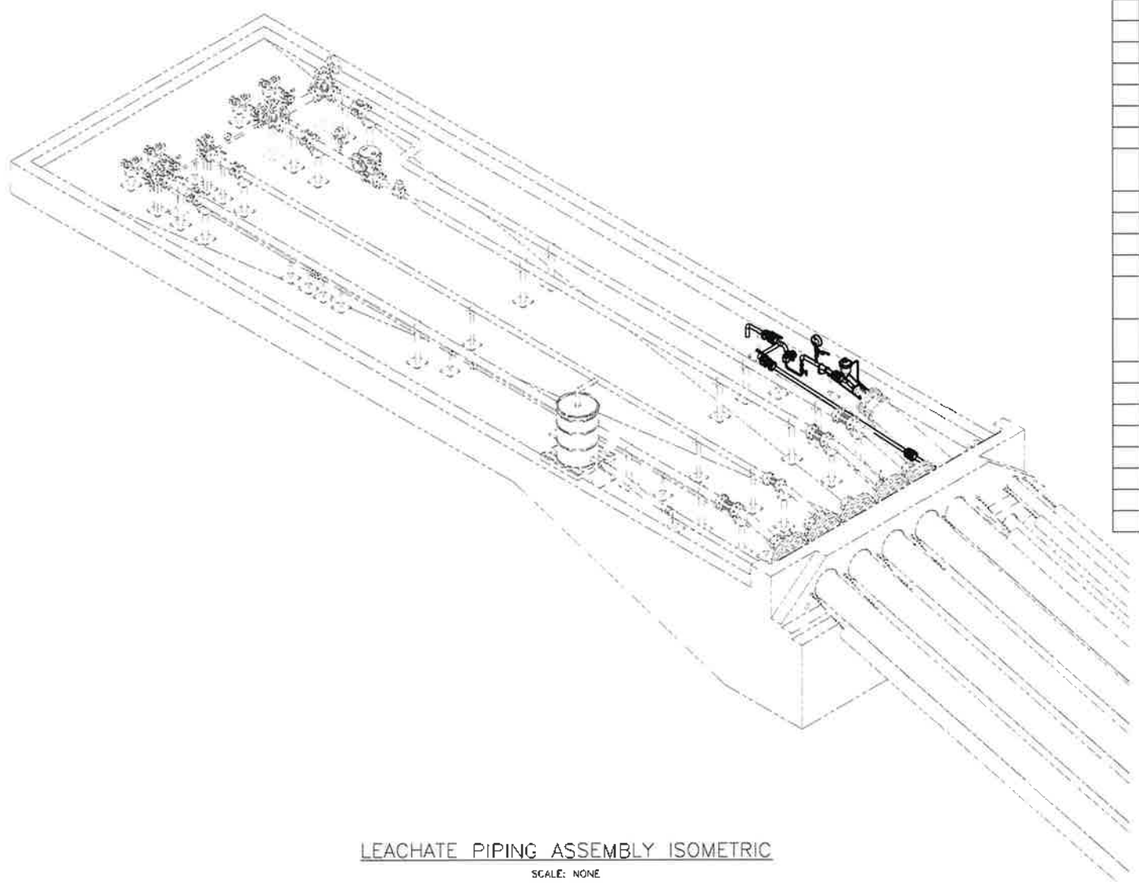

LEACHATE PIPING ASSEMBLY ISOMETRIC

SCALE: NONE

PARTS/MATERIAL LIST

QTY -080	QTY -070	QTY -060	QTY -050	QTY -040	QTY -030	QTY -020	QTY -010	PART/DASH NUMBER	NOMENCLATURE/DESCRIPTION	MATERIAL/REFERENCE	SHT	ITEM NO
							X	-010	LEACHATE PIPING ASSEMBLY		2	1
						X	1	-020	PIPE SPOOL 1		4	2
					X		1	-030	PIPE SPOOL 2		4	3
				X			1	-040	PIPE SPOOL 3		5	4
			X				1	-050	PIPE SPOOL 4		5	5
		X					1	-060	PIPE SPOOL 5		6	6
	X						1	-070	PIPE SPOOL 6		7	7
X							1	-080	PIPE SPOOL 7		7	8
												9
AR	AR	AR	AR		AR	AR			PIPE, 1 1/2 SCH 40S	ASTM A312 TP 304L		10
				AR	AR				PIPE, 1/2 SCH 40S	ASTM A312 TP 304L		11
							AR		TUBE, 1/2 X .065 WALL	ASTM A269 TP 316		12
2	2	2	1		1	2			FLANGE, 1 1/2 WN RF, CL150	ASTM A182 GR F304L		13
		1		1					FLANGE, 1/2 WN RF, CL150	ASTM A182 GR F304L		14
1							1		ELBOW, 1 1/2 45 DEG LR, SCH 40S, BW	ASTM A403 WPS 304L		15
		2	1		1				ELBOW, 1 1/2 90 DEG LR, SCH 40S, BW	ASTM A403 WPS 304L		16
				2					ELBOW, 1/2 90 DEG LR, SCH 40S, BW	ASTM A403 WPS 304L		17
							1		STREET ELBOW, 1/2 NPT	ASTM A351		18
		1			1				REDUCER CONCENTRIC, 1 1/2 X 1/2, SCH 40S, BW	ASTM A312 TP 304L		19
		1							TEE, 1 1/2, SCH 40S, BW	ASTM A403 WPS 304L		20
							1		TEE, 1/2 NPT, CL3000	ASTM A182		21
					1	1		(45BT332)	THREDOLET, 1/2 FNPT	(McMASTER CARR)		22
							4		PIPE NIPPLE, SCHED 40S 1/2 NPT X 3 LG	ASTM A312 TP 304L		23
				1					PIPE NIPPLE, SCH 40S 1/2 NPT X 2 LG	ASTM A312 TP 304L		24
				1				3131-3	UNION TAILPIECE, 1/2 FNPT	HART INDUSTRIES		25
					1			3131-3	UNION THREADPIECE, 1/2 FNPT	HART INDUSTRIES		26
							1	141.6	AIRVACUUM VALVE, 1/2 FNPT INLET, 1/2 FNPT DISCHARGE	APCO		27
							2	150150-11000SSTT-NN-00 01	BALL VALVE, 1 1/2 FP	FLOWTEK		28
							2	(46495K210)	BALL VALVE, 1/2	(MCMASTER CARR)		29
				1				SS-15RF8	NEEDLE VALVE, 1/2 FNPT	SWAGELOK		30
							1	8711-TSA-005-R-5-NO-DT	FLOW METER, 1/2 CL 150, 8700 SERIES	ROSEMOUNT		31
					1			MODEL 582-SS	STRAINER, 1 1/2 SW	MUELLER		32
							1	351009 SW L 04 L XLLC4 100#	PRESSURE GAUGE, 1/2 NPT, 3 1/2 FACE, 0 TO 100 PSIG	ASHCROFT		33
							2		DURCOR FLANGED FLEXIJOINT, 1 1/2 INCH, 4 CONVOLUTIONS	ETHYLENE		34
							8		GASKET, 1/8 THK, 1 1/2 INCH RF, CL150	GARLOCK		35
							2		GASKET, 1/8 THK, 1/2 INCH RF, CL150	GARLOCK		36
							1	SS-810-7-8	FEMALE CONNECTOR, 1/2 FNPT	SWAGELOK		37
							1	SS-810-1-8	MALE CONNECTOR, 1/2 NPT	SWAGELOK		38
							16		STUD, 1/2-13 UNC-2A X 2 3/4 LG	ASTM A193 GR B8 CL2		39
							4		STUD, 1/2-13 UNC-2A X 5 LG	ASTM A193 GR B8 CL2		40
							16		HEX BOLT, 1/2-13 UNC-2A X 1 1/2 LG	ASTM A193 GR B8 CL2		41
							40		NUT, HEX 1/2-13 UNC-2B	ASTM A194 GR 8		42

PAUL M. DORSH — STATE OF WASHINGTON — 41918 — REGISTERED PROFESSIONAL ENGINEER

5/26/2020

DATE: May 26, 2020 — HANFORD RELEASE

DWG NUMBER	TITLE
DRAWING TRACEABILITY LIST	

REF NUMBER	TITLE
H-15-38	LERF BASIN 41
H-2-838745	DRAWING LIST/TITLE SHEET
REFERENCES	
NEXT USED ON H-2-838771	

REV	DESCRIPTION
0	RELEASED PER EDT-882463
REVISIONS	

BLDG NO: 242-AL, 242AL-41

INDEX NO: 8407

CAUTION: NOT COMPLETE WITHOUT CURRENT CHANGE DOCUMENTS FROM DATABASE

	NAME	DATE	COMPANY
DRAFTER	F CHAVEZ	05/26/2020	MSPS
DRAFTER CHANGE	W T ARNDT	05/26/2020	MSPS
CONCURRING PEER REVIEWER	C C JOSLYN	05/26/2020	MSPS
DESIGN ENGINEER	P M DORSH	05/26/2020	MSPS
DESIGN AUTHORITY	N W WILSON	05/26/2020	MSPS

U.S. DEPARTMENT OF ENERGY
Office of River Protection

LERF BASIN 41
LEACHATE PIPING
NOTES AND PARTS LIST

SIZE: F — DRAWING NUMBER: H-2-838770 — SHEET: 1 — REV: 00

SCALE: SHOWN

29779

DOE_RL_F.DWG (SEPTEMBER 2019)

NOTES:
FOR GENERAL NOTES AND PARTS/MATERIAL LIST SEE SHEET 1.

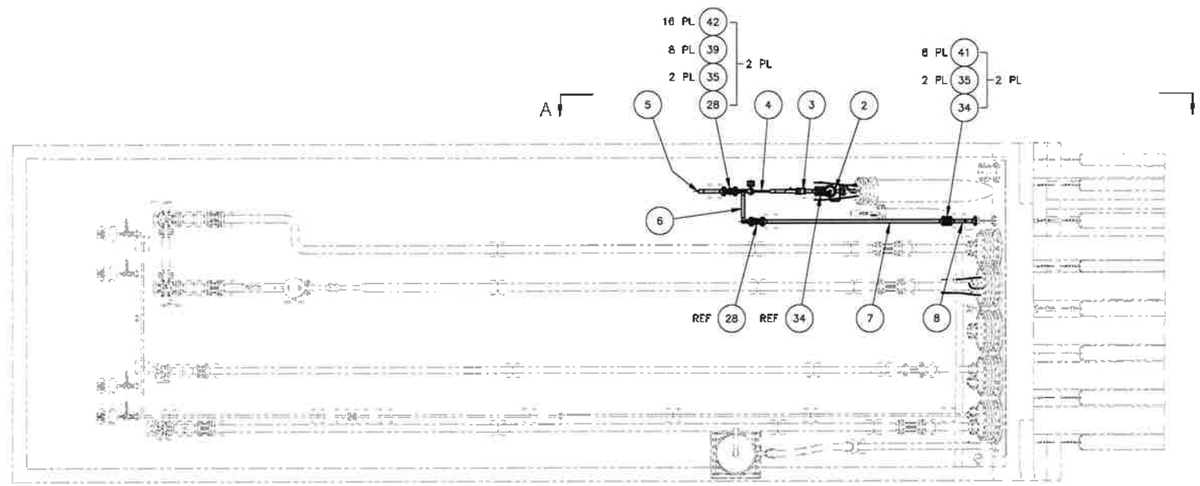

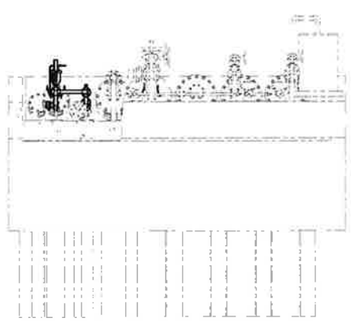

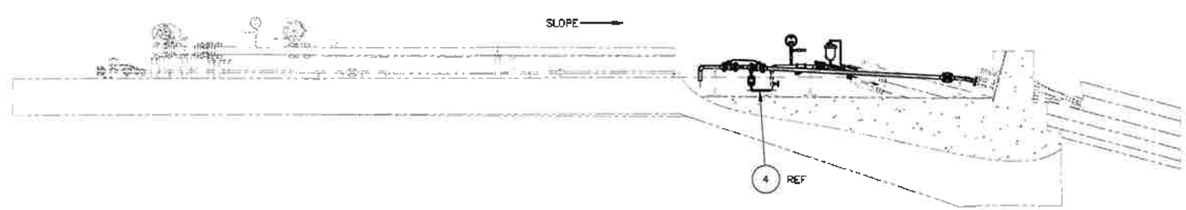

1 LEACHATE PIPING ASSEMBLY
SCALE: 1/32

PAUL M. DORSH
STATE OF WASHINGTON
41918
REGISTERED
PROFESSIONAL ENGINEER
5/26/2020

DATE:
May 26, 2020
HANFORD RELEASE

DWG NUMBER	TITLE
DRAWING TRACEABILITY LIST	

REF NUMBER	TITLE
REFERENCES	
NEXT USED ON SHEET 1	

REV NO	DESCRIPTION
0	RELEASED PER EDT-882463
REVISIONS	

BLDG NO 242-AL 242AL-41
BLDG NO 8407

CAUTION: NOT COMPLETE WITHOUT CURRENT CHANGE DOCUMENTS FROM DATABASE

	NAME	DATE	COMPANY
DRAFTER	J CHAVEZ		
ENGINEERING	W T ARNDT		
ENGINEERING DATA REVIEWER	C C JOSLYN		
DESIGN ENGINEER	P M DORSH		
DESIGN AUTHORITY	N W WILSON		

U.S. DEPARTMENT OF ENERGY
Office of River Protection

LERF BASIN 41
LEACHATE PIPING
ASSEMBLY

SIZE F | DRAWING NUMBER H-2-838770 | SHEET 2 | REV 00
SCALE SHOWN
29771
DOE_TB_F.DWG (SEPTEMBER 2014)

NOTES:
FOR GENERAL NOTES AND PARTS/MATERIAL LIST SEE SHEET 1.

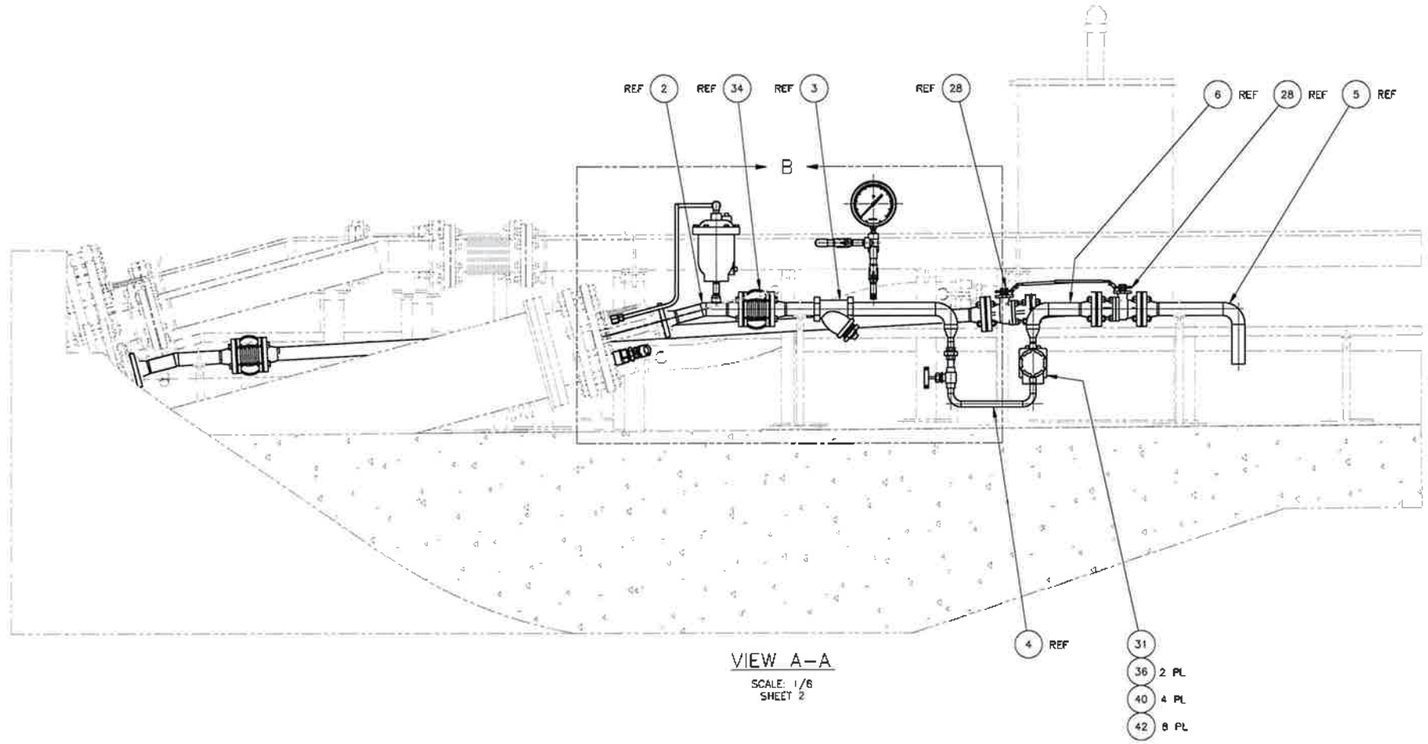

VIEW A–A
SCALE: 1/8
SHEET 2

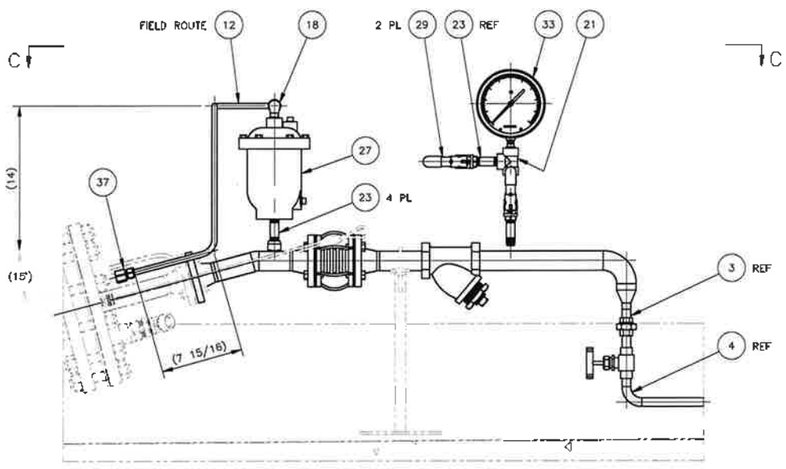

DETAIL B
SCALE: 3/16
(SOME OBJECTS REMOVED FOR CLARITY)

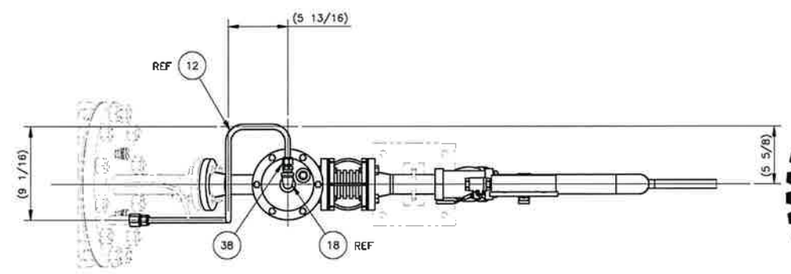

VIEW C–C
SCALE: 3/16
(SOME OBJECTS REMOVED FOR CLARITY)

PAUL M. DORSH
STATE OF WASHINGTON
41918
REGISTERED
PROFESSIONAL ENGINEER
5/26/2020

DATE:
May 26, 2020
HANFORD RELEASE

DWG NUMBER	TITLE
DRAWING TRACEABILITY LIST	

REF NUMBER	TITLE
REFERENCES	
NEXT USED ON SHEET 1	

REV NO	DESCRIPTION
0	RELEASED PER EDT-882463
REVISIONS	

BLDG NO 242-AL 242AL-41
BLDG NO 8407

CAUTION: NOT COMPLETE WITHOUT CURRENT CHANGE DOCUMENTS FROM DATABASE

	NAME	DATE	COMPANY
DRAFTER	F CHAVEZ		
DESIGN OWNER	W T ARNDT		
CONTRACTING FIELD REVIEWER	C C JOSLYN		
DESIGN ENGINEER	P M DORSH		
DRAWING TECHNICIAN	N W WILSON		

U.S. DEPARTMENT OF ENERGY
Office of River Protection

LERF BASIN 41
LEACHATE PIPING
VIEW

SIZE F | DRAWING NUMBER H-2-838770 | SHEET 3 | REV 00
SCALE SHOWN
29732

NOTES:
FOR GENERAL NOTES AND PARTS/MATERIAL LIST SEE SHEET 1.

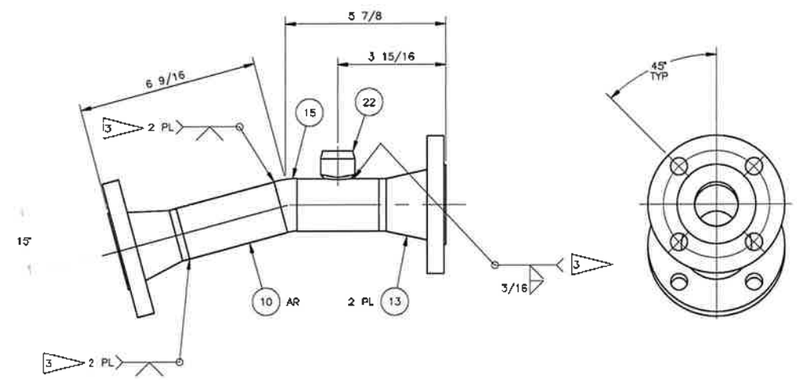

2 PIPE SPOOL 1
SCALE: 1/2

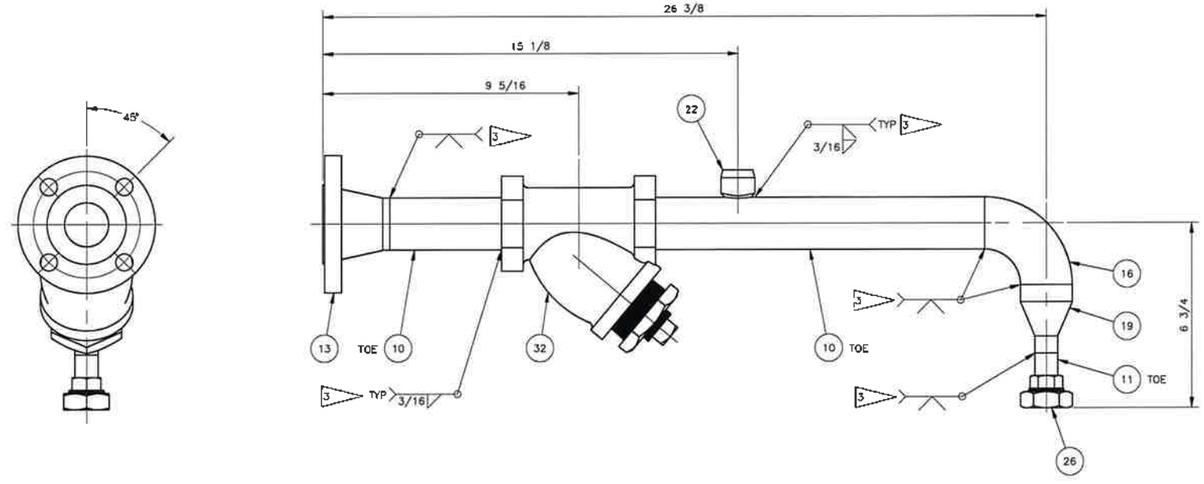

3 PIPE SPOOL 2
SCALE: 1/2

PAUL M. DORSH
STATE OF WASHINGTON
41918
REGISTERED
PROFESSIONAL ENGINEER
5/26/2020

DATE:
May 26, 2020
HANFORD RELEASE

DWG NUMBER	TITLE
DRAWING TRACEABILITY LIST	

REF NUMBER	TITLE
REFERENCES	
NEXT USED ON SHEET 1	

REV NO	DESCRIPTION
0	RELEASED PER EDT-882463
REVISIONS	

BLDG NO 242-AL 242AL-41
INDEX NO 8407

CAUTION: NOT COMPLETE WITHOUT CURRENT CHANGE DOCUMENTS FROM DATABASE

	NAME	DATE	COMPANY
DESIGNED	M HAVE 2		
DRAFTED	W T ARNDT		
ENGINEERING PROJ. REVIEWER	C C JOSLYN		
DESIGN CONSULTANT	S M DORSH		
DESIGN AUTHORITY	N W WILSON		

U.S. DEPARTMENT OF ENERGY
Office of River Protection

LERF BASIN 41
LEACHATE PIPING
DETAILS

SIZE F | DRAWING NUMBER H-2-838770 | SHEET 4 | REV 00

SCALE SHOWN

29762

NOTES:
FOR GENERAL NOTES AND PARTS/MATERIAL LIST SEE SHEET 1.

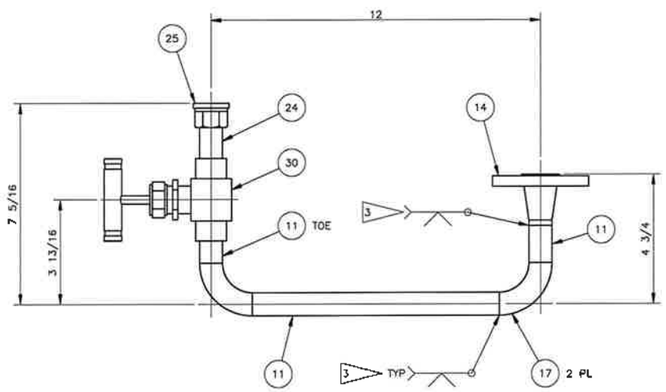

4 PIPE SPOOL 3
SCALE: 1/2

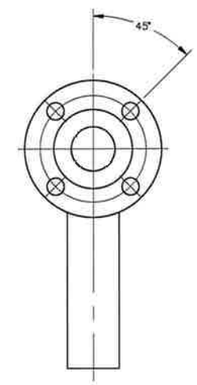

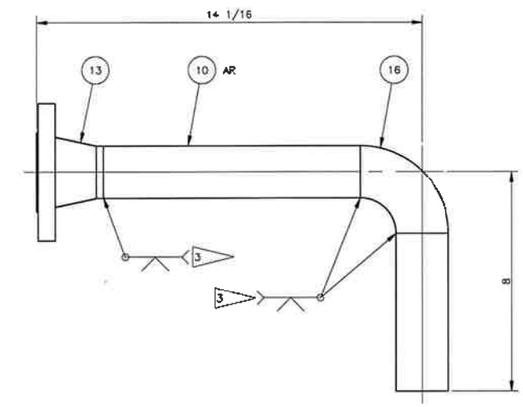

5 PIPE SPOOL 4
SCALE: 1/2

PAUL M. DORSH
STATE OF WASHINGTON
41918
REGISTERED
PROFESSIONAL ENGINEER
5/26/2020

DATE:
May 26, 2020
HANFORD RELEASE

DWG NUMBER	TITLE
DRAWING TRACEABILITY LIST	

REF NUMBER	TITLE
REFERENCES	
NEXT USED ON SHEET 1	

0	RELEASED PER EDT-882483
REV	DESCRIPTION
REVISIONS	

BLDG NO 242-AL 242AL-41

NOTE NO 8407

CAUTION: NOT COMPLETE WITHOUT CURRENT CHANGE DOCUMENTS FROM DATABASE

	NAME	DATE	COMPANY
DRAFTER	J. CHAVEZ	5/26/2020	KBR
WRITER/ADMIN	W. T. ARNDT	5/26/2020	KBR
CONTRACTOR REV. REVIEWER	C. E. JOSLYN	5/26/2020	KBR
DESIGN ENGINEER	P. M. DORSH	5/26/2020	KBR
DESIGN AUTHORITY	N. W. WILSON	5/26/2020	KBR

U.S. DEPARTMENT OF ENERGY
Office of River Protection

LERF BASIN 41
LEACHATE PIPING
DETAILS

SIZE F | DRAWING NUMBER H-2-838770 | SHEET 5 | REV 00

SCALE SHOWN

29775

NOTES:
FOR GENERAL NOTES AND PARTS/MATERIAL LIST SEE SHEET 1.

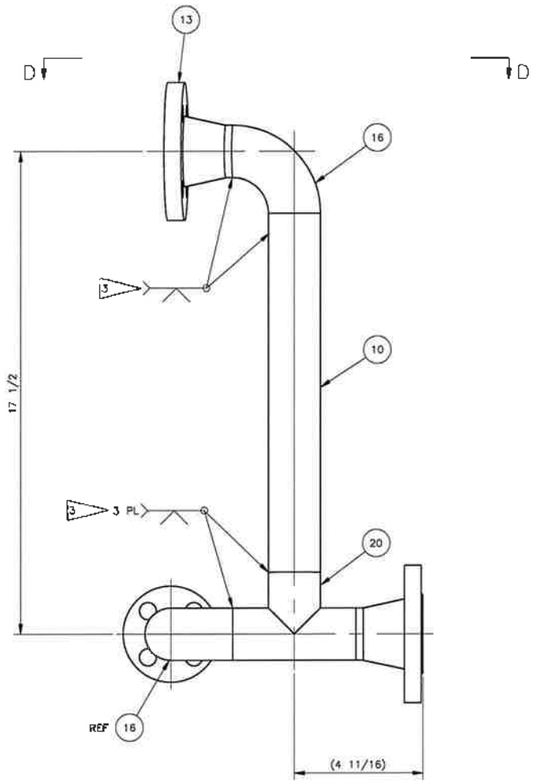

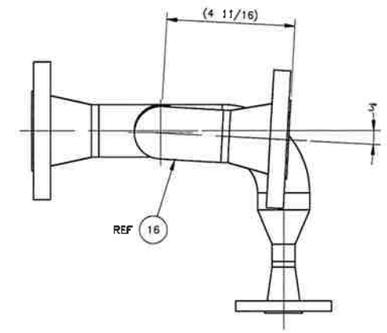

VIEW D-D
SCALE: 1/2

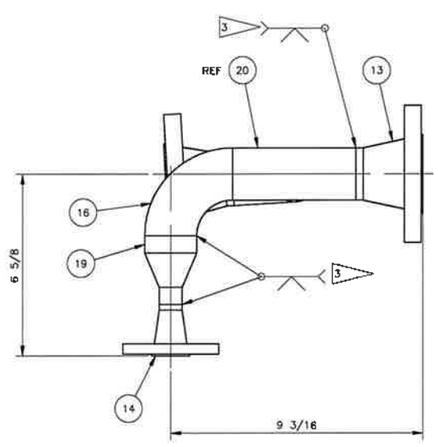

6 PIPE SPOOL 5
SCALE: 1/2

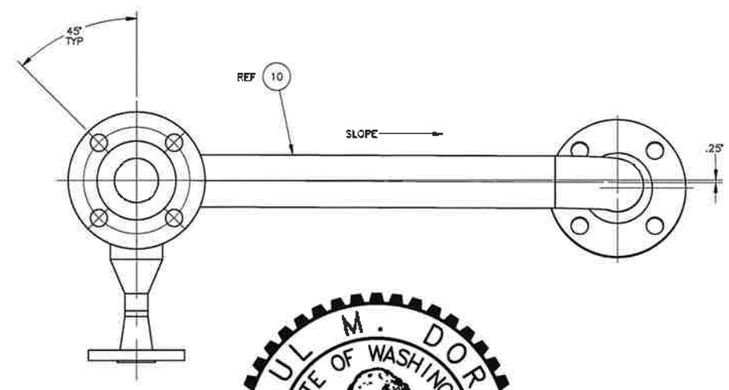

PAUL M. DORSH
STATE OF WASHINGTON
41918
REGISTERED
PROFESSIONAL ENGINEER
5/26/2020

DATE:
May 26, 2020
HANFORD RELEASE

DWG NUMBER	TITLE
DRAWING TRACEABILITY LIST	

REF NUMBER	TITLE
REFERENCES	
NEXT USED ON SHEET 1	

REV	DESCRIPTION
0	RELEASED PER EDT-882463
REVISIONS	

BLDG NO 242-AL 242AL-41
INDEX NO 8407

CAUTION: NOT COMPLETE WITHOUT CURRENT CHANGE DOCUMENTS FROM DATABASE

	NAME	DATE
DRAFT	F CHAVEZ	5/26/2020
DESIGN AGENT	W T ARNDT	5/26/2020
PROJECT ENGR	R E JOSELYN	5/26/2020
DESIGN ENGINEER	P M DORSH	5/26/2020
DESIGN AUTHORITY	N W WILSON	5/26/2020

U.S. DEPARTMENT OF ENERGY
Office of River Protection

LERF BASIN 41
LEACHATE PIPING
DETAILS

DWG F DRAWING NUMBER H-2-838770 SHEET 6 REV 00
SCALE SHOWN

NOTES:
FOR GENERAL NOTES AND PARTS/MATERIAL LIST SEE SHEET 1.

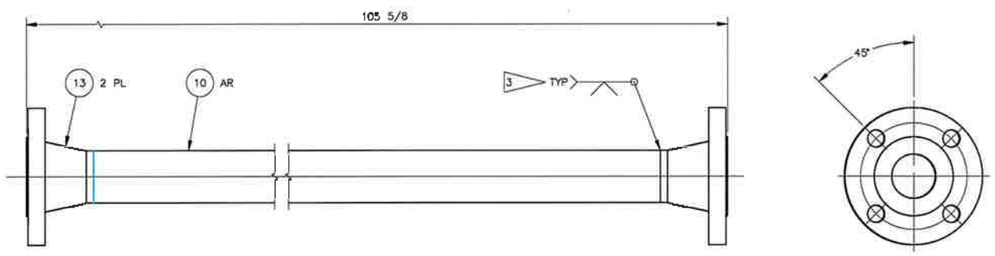

7 PIPE SPOOL 6
SCALE: 1/2

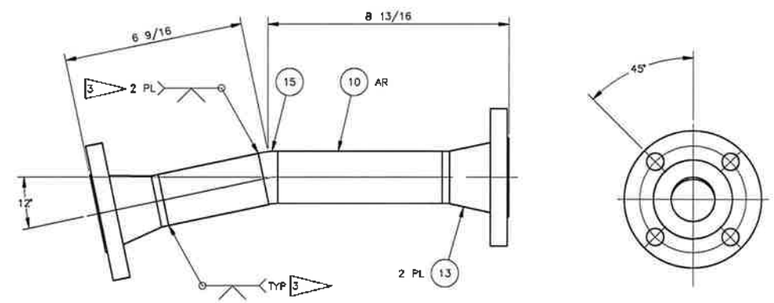

8 PIPE SPOOL 7
SCALE: 1/2

PAUL M. DORSH
STATE OF WASHINGTON
41918
REGISTERED
PROFESSIONAL ENGINEER
5/26/2020

DATE:
May 26, 2020
HANFORD RELEASE

DWG NUMBER	TITLE
DRAWING TRACEABILITY LIST	

REF NUMBER	TITLE
REFERENCES	
NEXT USED ON SHEET 1	

REV	DESCRIPTION
0	RELEASED PER EDT-882463

REVISIONS

BLDG NO 242-AL 242AL-41
BLDG NO 8407

CAUTION: NOT COMPLETE WITHOUT CURRENT CHANGE DOCUMENTS FROM DATABASE

	NAME	DATE	COMPANY
DRAWN	J CHAVEZ	5/26/2020	WRPS
DESIGN ENGR	W T ARNDT	5/26/2020	WRPS
CHANGE/DES REV REVIEW	C C JOSLYN	5/26/2020	WRPS
DESIGN CHECKER	P M DORSH	5/26/2020	WRPS
DESIGN AUTHORITY	N W WILSON	5/26/2020	WRPS

U.S. DEPARTMENT OF ENERGY
Office of River Protection

LERF BASIN 41
LEACHATE PIPING
DETAILS

SIZE	DRAWING NUMBER	SHEET	REV
F	H-2-838770	7	00

SCALE SHOWN

29785

GENERAL NOTES: (UNLESS OTHERWISE SPECIFIED)

1. DIMENSIONS ARE IN INCHES, TOLERANCES SHALL BE AS FOLLOWS: FRACTIONS = ±1/8" ANGLES = ±0.5° DECIMAL = .XX ±0.03 .XXX ±.010
2. REMOVE ALL BURRS AND BREAK SHARP EDGES.
3. FABRICATE, WELD, INSPECT, AND TEST PIPING IN ACCORDANCE WITH ASME B31.3, 2016 FOR CATEGORY NORMAL FLUID SERVICE. DESIGN PRESSURE IS 150 PSIG, AND DESIGN TEMPERATURE IS 150°F. HYDROSTATIC LEAK PRESSURE TEST TO 225 PSIG (-0/+25 PSIG). FABRICATION TEMPERATURE IS 50°F TO 120°F.
4. ALL MACHINED SURFACES SHALL BE 125 IN ACCORDANCE WITH ASME B46.1, 2009, UNLESS OTHERWISE SPECIFIED.
5. WELD AND INSPECT STRUCTURAL WELDS IN ACCORDANCE WITH AWS D1.1, 2015 STATICALLY LOADED CRITERIA. ALL WELDS SHALL BE VT ON FINAL PASS UNLESS OTHERWISE SPECIFIED. WELD PROCEDURES AND QUALIFICATIONS PER ASME B&PV CODE SECTION IX, 2017 ARE ACCEPTABLE.
6. FOR B31.3 ANALYSIS SEE RPP-CALC-63779.
7. FOR STRUCTURAL ANALYSIS VENT FILTER FRAME SEE RPP-CALC-63787.
8. FOR PIPING HEAT TRACE SEE CONSTRUCTION SPECIFICATION RPP-SPEC-63632 SECTION 40 41 00. FOR HEAT TRACE LOCATION AND ORIENTATION SEE H-2-838760.
9. FOR PIPING INSULATION SEE CONSTRUCTION SPECIFICATION RPP-SPEC-63632 SECTION 40 42 13.
10. USE CLASS M-10 PIPING CODE SEE CONSTRUCTION SPECIFICATION RPP-SPEC-63632 SECTION 40 40 00.
11. GROUT PER CONSTRUCTION SPEC 63632, SECTION 03 30 00, MAX 1" THICK. ANCHOR ROD, 1/2" SST ASTM F593 TP 316, 2 3/4" MIN EMBED, 3 1/2" MAX EMBED. HILTI HIT-HY 200 ADHESIVE ANCHOR SYSTEM.
12. PREPARE AND PAINT ALL EXPOSED CARBON STEEL SURFACES WITH PPG PSX700 OR EQUIVALENT. FINISH COLOR SHALL BE GRAY. APPLY PER MANUFACTURER'S SPECIFICATIONS. POWDER COATING IS AN ACCEPTABLE COATING SYSTEM.

PARTS/MATERIAL LIST

QTY -120	QTY -110	QTY -100	QTY -090	QTY -080	QTY -070	QTY -060	QTY -050	QTY -040	QTY -030	QTY -020	QTY -010	PART/DASH NUMBER	NOMENCLATURE/DESCRIPTION	MATERIAL/REFERENCE	SHT	ITEM NO
												-010	CATCH BASIN PIPING ASSEMBLY		3	1
											1	-020	WTP/EMF EFFLUENT SPOOL		4	2
											1	-030	242A PROCESS CONDENSATE SPOOL		4	3
											1	-040	BASIN PUMP SPOOL		5	4
											1	-050	BASIN PUMP RECIRCULATION/TRANSFER SPOOL		6	5
											1	-060	DRAIN SPOOL		7	6
											4	-070	LEAK DETECTOR SPOOL		8	7
											1	-080	VENT SPOOL		8	8
											1	-090	3 WAY TIE IN SPOOL		8	9
											1	-100	VENT FILTER SUPPORT FRAME		9	10
											1	-110	VENT FILTER ASSEMBLY		10	11
											1	-120	VENT HOSE ASSEMBLY		10	12
																13
											1	H-2-838770	LEACHATE PIPING ASSEMBLY			14
		AR											PLATE, 1/4	ASTM A36		15
		4											ANGLE, 3 X 3 X 1/4 X 29 LG	ASTM A36		16
		4											ANGLE, 3 X 3 X 1/4 X 13 LG	ASTM A36		17
			AR				AR	AR		AR			PIPE, 4 SCHED 40S	ASTM A312 GR TP 304L		18
				AR					AR				PIPE, 3 SCHED 40S	ASTM A312 GR TP 304L		19
								AR					PIPE, 2 SCHED 40S	ASTM A312 TP 304L		20
					AR	AR							PIPE, 1 SCHED 40S	ASTM A312 TP 304L		21
					AR								TUBE, 1/2 OD X .049 WALL	ASTM A269 TP 316L		22
	1												PIPE NIPPLE, SCHED 40S 2 NPT X 10 LG	ASTM A312 TP 304L		23
	1												PIPE NIPPLE, SCHED 40S 2 NPT X 8 LG	ASTM A312 TP 304L		24
	1												PIPE NIPPLE, SCHED 40S 2 NPT X 6 LG	ASTM A312 TP 304L		25
								3					PIPE NIPPLE, SCHED 40S 1/2 NPT X 3 LG	ASTM A312 TP 304L		26
			2				6	8		6			FLANGE, 4 WN RF, CL150	ASTM A182 GR F 304L		27
				1					6				FLANGE, 3 WN RF, CL150	ASTM A182 GR F 304L		28
								2					FLANGE, 2 WN RF, CL150	ASTM A182 GR F 304L		29
						10							FLANGE, 1 WN RF, CL150	ASTM A182 304L		30
					2								FLANGE, 1 SO RF, CL150	ASTM A182 304L		31
						1							FLANGE, 1 BLIND RF, CL150	ASTM A182 304L		32
							2						ELBOW, 4 LR 90 DEG SCHED 40S BW	ASTM A403 WP-S 304L		33
						1							ELBOW, 1 LR 90 DEG SCHED 40S BW	ASTM A403 WP-S 304L		34
							1	1		1			ELBOW 4 LR 45 DEG SCHED 40S BW	ASTM A403 WP-S 304L		35
				1					1				ELBOW 3 LR 45 DEG SCHED 40S BW	ASTM A403 WP-S 304L		36
						1							ELBOW 1 LR 45 DEG SCHED 40S BW	ASTM A403 WP-S 304L		37
	2												ELBOW, 2 FNPT 90 DEG, CL2000	ASME B16.11		38
						4							TEE, 1 SCHED 40S BW	ASTM A403 WP-S 304L		39
					1								TEE, 1 NPT, CL150	ASTM A182 TP 304L		40
								1					TEE, 1/2 NPT, CL3000			41
								2					REDUCER CONCENTRIC, 4 X 2	ASTM A403 WP-S 304L		42
					1							SS-810-3	TEE, 1/2 TUBE OD	SWAGELOK		43
					1							SS-810-9	UNION ELBOW, 90 DEG, 1/2 TUBE OD	SWAGELOK		44
					2							SS-810-1-4	MALE CONNECTOR, 1/4 NPT X 1/2 TUBE OD	SWAGELOK		45
					2							SS-810-7-12	FEMALE CONNECTOR, 3/4 FNPT X 1/2 TUBE OD	SWAGELOK		46
					1							SS-810-P	PLUG, 1/2 FNPT	SWAGELOK		47
				1								(4565T342)	THREDOLET, 3/4 FNPT	(McMASTER CARR)		48
								1				(4567T332)	THREDOLET, 1/2 FNPT	(McMASTER CARR)		49
				1								(4464K255)	HEX PLUG, 3/4 NPT	(McMASTER CARR)		50

(SEE CONTINUED ON SHEET 2)

PAUL M. DORSH — STATE OF WASHINGTON — 41918 — REGISTERED PROFESSIONAL ENGINEER

5/26/2020

DATE: May 26, 2020 — HANFORD RELEASE

DWG NUMBER	TITLE
DRAWING TRACEABILITY LIST	

REF NUMBER	TITLE
H-15-38	LERF BASIN 41
H-2-838745	DRAWING LIST/TITLE SHEET
REFERENCES	
NEXT USED ON H-2-838767	

REV NO	DESCRIPTION
0	RELEASED PER EDT-882463
REVISIONS	

SYSTEM NO 242-AL, 242AL-41 — INDEX NO 8407

CAUTION: NOT COMPLETE WITHOUT CURRENT CHANGE DOCUMENTS FROM DATABASE

	NAME	DATE	COMPANY
DRAFTER	W T ARNDT		
DRAFTING CHECKER	H A MENDEZ		
ENGINEERING PEER REVIEWER	C C JOSLYN		
SCIENCE ENGINEER	P M DORSH		
DESIGN AUTHORITY	N W WILSON		

U.S. DEPARTMENT OF ENERGY
Office of River Protection

LERF BASIN 41
CATCH BASIN PIPING
NOTES AND PARTS LIST

SIZE F — DRAWING NUMBER H-2-838771 — SHEET 1 — REV 00

SCALE SHOWN

29778 — DOE_RL_F.DWG (SEPTEMBER 2014)

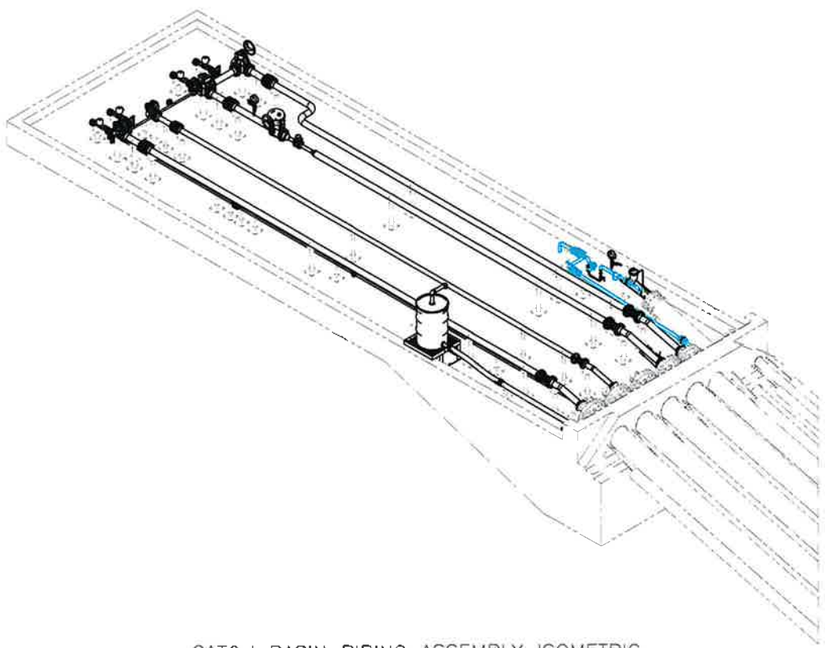

CATCH BASIN PIPING ASSEMBLY ISOMETRIC

SCALE: NO SCALE

PARTS/MATERIAL LIST

QTY -120	QTY -110	QTY -100	QTY -090	QTY -080	QTY -070	QTY -060	QTY -050	QTY -040	QTY -030	QTY -020	QTY -010	PART/DASH NUMBER	NOMENCLATURE/DESCRIPTION	MATERIAL/REFERENCE	SHT	ITEM NO
		1											GRATING, 1 1/2" X 3/16" RECTANGULAR BAR, CW SERIES, GALVANIZED, 28 X 28	MONKCHOLS		51
							1	1				170400-11A02-SSTT-NO-0024	BALL VALVE, 3 WAY, 4 INCH	FLOWTEK		52
								1				150400-11000SSUT-NB-0001	BALL VALVE, 2 WAY, 4 INCH, FP F15, 60 DEG V PORT	FLOWTEK		53
										1		150400-11000SSTT-NN-0001	BALL VALVE, 2 WAY, 4 INCH, FP F15	FLOWTEK		54
									1			140300-11000SSTT-NN-0001	BALL VALVE, 2 WAY, 3 INCH, FP F15	FLOWTEK		55
					1							150100-11000SSTT-NN-0001	BALL VALVE, 1 INCH, FP F15	FLOWTEK		56
								2				(46495K210)	BALL VALVE, 1/2	(MCMASTER CARR)		57
					1							SS-4SS8-SH	VALVE, ON-OFF, 1/2 TUBE OD	SWAGELOK		58
								1				700501-113C0538/K	MOTOR OPERATED ACTUATOR	BRAY		59
							1	1				FTG33	MANUAL OPERATOR, 30:1	FLOWTEK		60
									1	1		FTG22	MANUAL OPERATOR, 22:1	BRAY		61
									1			EZ-011S	MOUNTING BRACKET	FLOWTEK		62
										1			MOUNTING BRACKET	FLOWTEK		63
								1				EZ-013S	MOUNTING BRACKET	FLOWTEK		64
							1	1				EZ-045S	MANUALY OPERATOR MOUNTING BRACKET	FLOWTEK		65
							1	1		1		MNLC150FL0400	EXPANSION JOINT, 4 INCH	METRAFLEX		66
									1			MNLC150FL0300	EXPANSION JOINT, 3 INCH	METRAFLEX		67
							1	1		1			DURCOR FLANGED FLEXIJOINT, 4 INCH, 5 CONVOLUTIONS	ETHYLENE		68
									1				DURCOR FLANGED FLEXIJOINT, 3 INCH, 4 CONVOLUTIONS	ETHYLENE		69
						1					4		DURCOR FLANGED FLEXIJOINT, 1 INCH, 4 CONVOLUTIONS	ETHYLENE		70
	1											(6795K54)	CAM AND GROOVE HOSE COUPLING, 2 FNPT, SSTL	(McMASTER CARR)		71
				1								(53015K570)	CAM AND GROOVE HOSE COUPLING, 3 NPT, SSTL	(McMASTER CARR)		72
2												(53015K167)	CAM AND GROOVE HOSE COUPLING FEMALE X BARBED, 3 INCH, SSTL	(McMASTER CARR)		73
							5	7		5	3		GASKET, 1/8 THK, 4 INCH, RF, CL150	GARLOCK		74
									5		2		GASKET, 1/8 THK, 3 INCH, RF, CL150	GARLOCK		75
								2					GASKET, 1/8 THK, 2 INCH RF, CL150	GARLOCK		76
											1		GASKET, 1/8 THK, 1 1/2 INCH RF, CL150	GARLOCK		77
						4					9		GASKET, 1/8 THK, 1 INCH, RF, CL150	GARLOCK		78
AR													HOSE, 3 INCH, PICORD EXTREMEFLEX FOOD GRADE X X FT LG	GOODYEAR		79
	1												VENTSORB, 2 FNPT INLET, 2 FNPT OUTLET	CALGON CARBON		80
					1							OP-C-3	ORIFICE PLATE FLOWMETER	DWYER		81
								1				8711-TSA-020-R-5-NO-DT	MAGNETIC FLOWMETER	ROSEMOUNT		82
					1							FLT935-1B-1A201E-4C000-00	FLEXSWITCH	FCI		83
								1				351009 SW L 04 L XLLC4 100#	PRESSURE GAUGE, 1/2 NPT, 3 1/2 FACE, 0 TO 100 PSIG	ASHCROFT		84
					1							84762-10600BN4W	LIQUID LEVEL GAGE, 6 INCH CENTERLINE, 3/4 NPT ADAPTERS	OIL-RITE		85
							24	40	12	24	28		STUD, 5/8-11 UNC-2A X 3 1/2 LG	ASTM A193 GR B8 CL2		86
								4					STUD, 5/8-11 UNC-2A X 6 3/8 LG	ASTM A193 GR B8 CL2		87
						8					20		STUD, 1/2-13 UNC-2A X 2 1/2 LG	ASTM A193 GR B8 CL2		88
											4		STUD, 1/2-13 UNC-2A X 3 1/4 LG	ASTM A193 GR B8 CL2		89
					4								STUD, 1/2-13 UNC-2A X 3 3/4 LG	ASTM A193 GR B8 CL2		90
							14	14	8	14			HEX BOLT, 5/8-11 UNC-2A X 1 3/4 LG	ASTM A193 GR B8 CL2		91
											16		HEX BOLT, 1/2-13 UNC-2A X 1 1/4 LG	ASTM A193 GR B8 CL2		92
							48	88	24	48	56		NUT, HEX 5/8-11 UNC-2B	ASTM A194 GR 8		93
					8	16					52		NUT, HEX 1/2-13 UNC-2B	ASTM A194 GR 8		94

(BOM CONTINUED FROM SHEET 1)

PAUL M. DORSH — STATE OF WASHINGTON — 41918 — REGISTERED PROFESSIONAL ENGINEER

5/26/2020

DATE: May 26, 2020 — HANFORD RELEASE

DWG NUMBER	TITLE
DRAWING TRACEABILITY LIST	

REF NUMBER	TITLE
REFERENCES	
NEXT USED ON SHEET 1	

REV	DESCRIPTION
0	RELEASED PER EDT-882463
REVISIONS	

BLOCK NO 242-AL 242AL-41

BLOCK NO 8407

CAUTION: NOT COMPLETE WITHOUT CURRENT CHANGE DOCUMENTS FROM DATABASE

	NAME	DATE
DRAWN BY	W T ARNDT	05/26/2020
DRAFTING CHECKED	H A MENDEZ	05/26/2020
ENGINEERING PEER REVIEWER	C C JOSLYN	05/26/2020
SERVICE ENGINEER	P M DORSH	05/26/2020
DESIGN AUTHORITY	N W WILSON	05/26/2020

U.S. DEPARTMENT OF ENERGY
Office of River Protection

LERF BASIN 41
CATCH BASIN PIPING
ISOMETRIC

SIZE F — DRAWING NUMBER H-2-838771 — SHEET 2 — REV 00

SCALE SHOWN

29769

DOE_TB_F.DWG (SEPTEMBER 2014)

NOTES:
FOR GENERAL NOTES AND PARTS/MATERIAL SEE SHEET 1 AND 2.

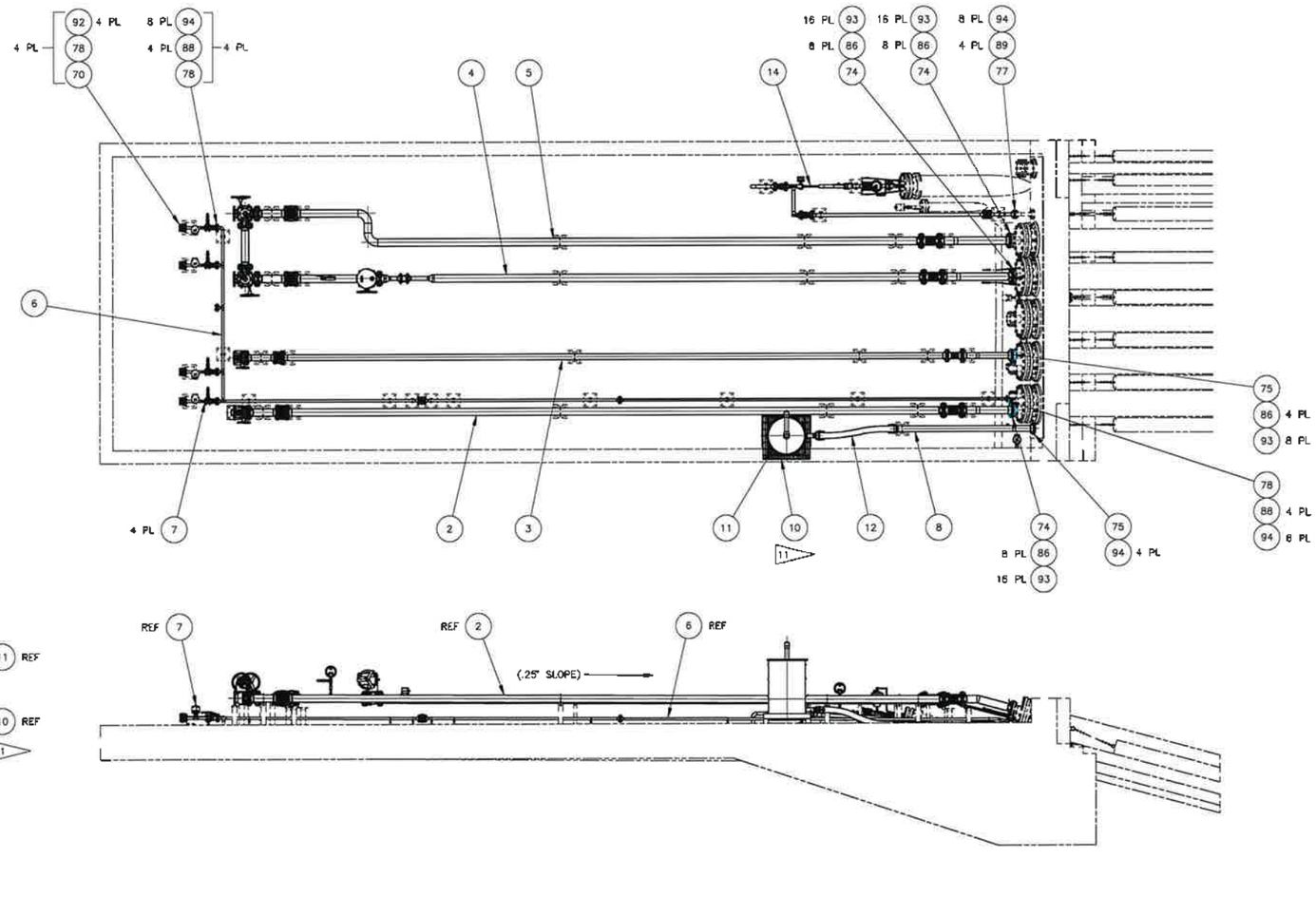

1 CATCH BASIN PIPING ASSEMBLY
SCALE: 1/32

PAUL M. DORSH
STATE OF WASHINGTON
41918
REGISTERED
PROFESSIONAL ENGINEER
5/26/2020

DATE:
May 26, 2020
HANFORD RELEASE

DWG NUMBER	TITLE
DRAWING TRACEABILITY LIST	

REF NUMBER	TITLE
REFERENCES	
NEXT USED ON SHEET 1	

0	RELEASED PER EDT-882463
REVISIONS	

BLDG NO 242-AL, 242AL-41
INDEX NO 8407

CAUTION: NOT COMPLETE WITHOUT CURRENT CHANGE DOCUMENTS FROM DATABASE

	NAME	DATE	COMPANY
DRAFTER	W T ARNDT	05/26/20	WRPS
DRAFTING DESIGNER	H A MENDEZ	05/26/20	WRPS
ENGINEERING FIELD REVIEWER	C C JOSLYN	05/26/20	WRPS
DESIGN ENGINEER	P M DORSH	05/26/20	WRPS
DESIGN AUTHORITY	N W WILSON	05/26/20	WRPS

U.S. DEPARTMENT OF ENERGY
Office of River Protection

LERF BASIN 41
CATCH BASIN PIPING
ASSEMBLY

SIZE F | DRAWING NUMBER H-2-838771 | SHEET 3 | REV 00
SCALE SHOWN

25785

NOTES:
FOR GENERAL NOTES AND PARTS/MATERIAL SEE SHEET 1 AND 2.

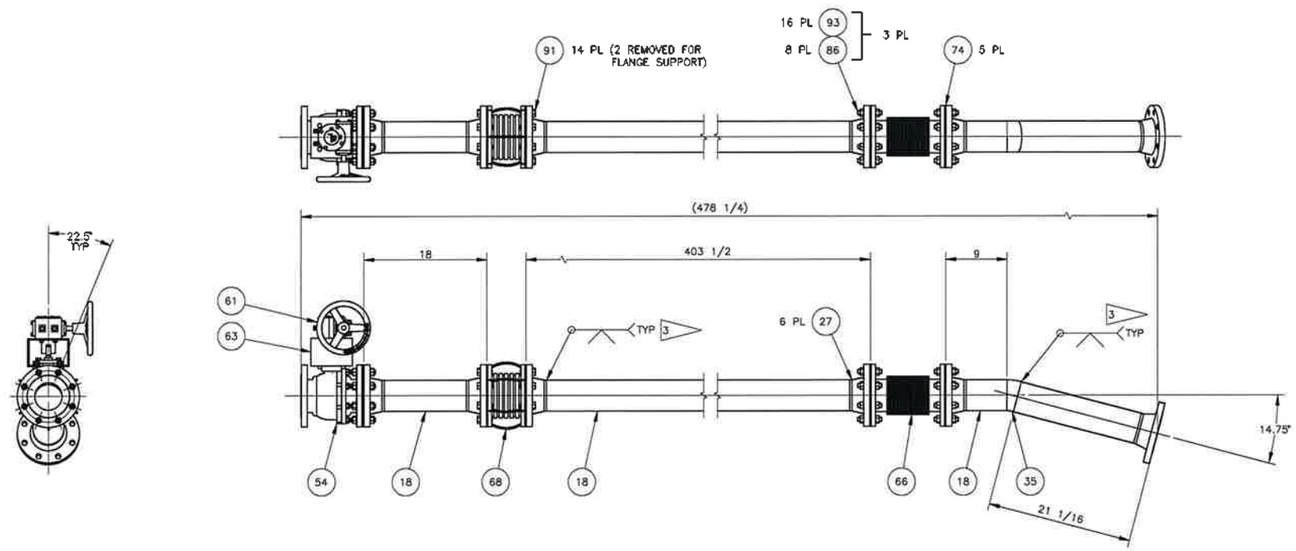

2 WTP/EMF EFFLUENT SPOOL
SCALE: 1/8

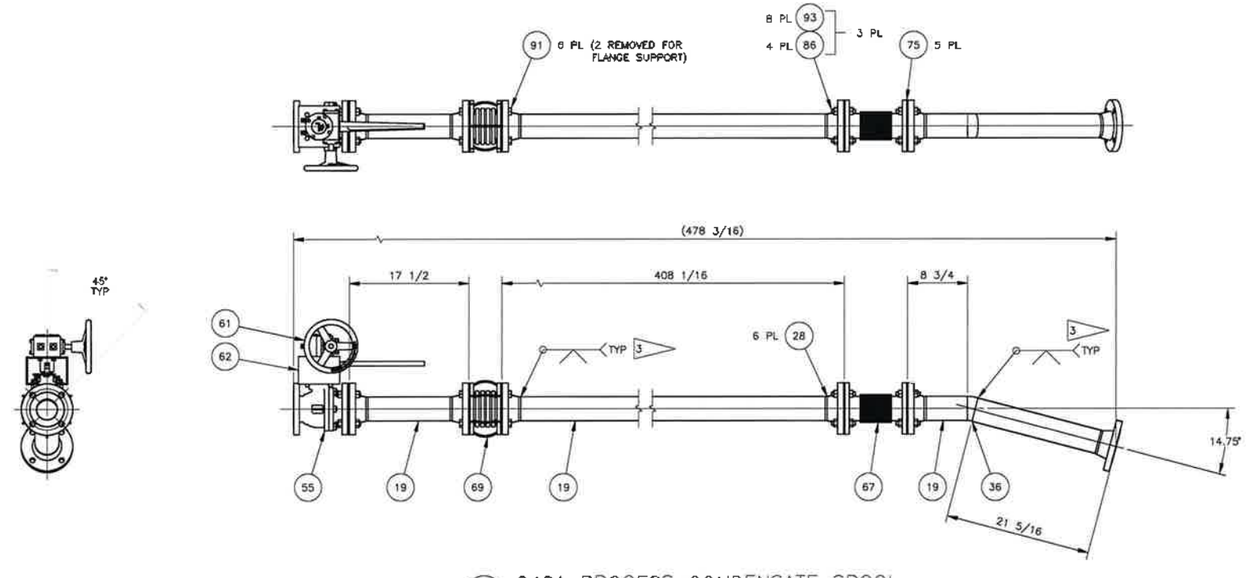

3 242A PROCESS CONDENSATE SPOOL
SCALE 1/8

PAUL M. DORSH
STATE OF WASHINGTON
41918
REGISTERED
PROFESSIONAL ENGINEER
5/26/2020

DATE:
May 26, 2020
HANFORD RELEASE

DWG NUMBER	TITLE	REF NUMBER	TITLE
DRAWING TRACEABILITY LIST		REFERENCES	
		NEXT USED ON SHEET 1	

REV	DESCRIPTION
0	RELEASED PER EDT-662463

REVISIONS

DESIGN NO	242-AL, 242AL-41
SHEET NO	8407

CAUTION: NOT COMPLETE WITHOUT CURRENT CHANGE DOCUMENTS FROM DATABASE

	NAME	DATE
DRAWN BY	W T ARNDT	
MANUAL DRAFTS	H A MENDEZ	
ENGINEERING FIELD REVIEWER	C C JOSLYN	
DESIGN ENGINEER	P M DORSH	
DESIGN AUTHORITY	N W WILSON	

U.S. DEPARTMENT OF ENERGY
Office of River Protection

LERF BASIN 41
CATCH BASIN PIPING
DETAILS

SIZE	DRAWING NUMBER	SHEET	REV
F	H-2-838771	4	00

SCALE SHOWN

NOTES:
FOR GENERAL NOTES AND PARTS/MATERIAL SEE SHEET 1 AND 2.

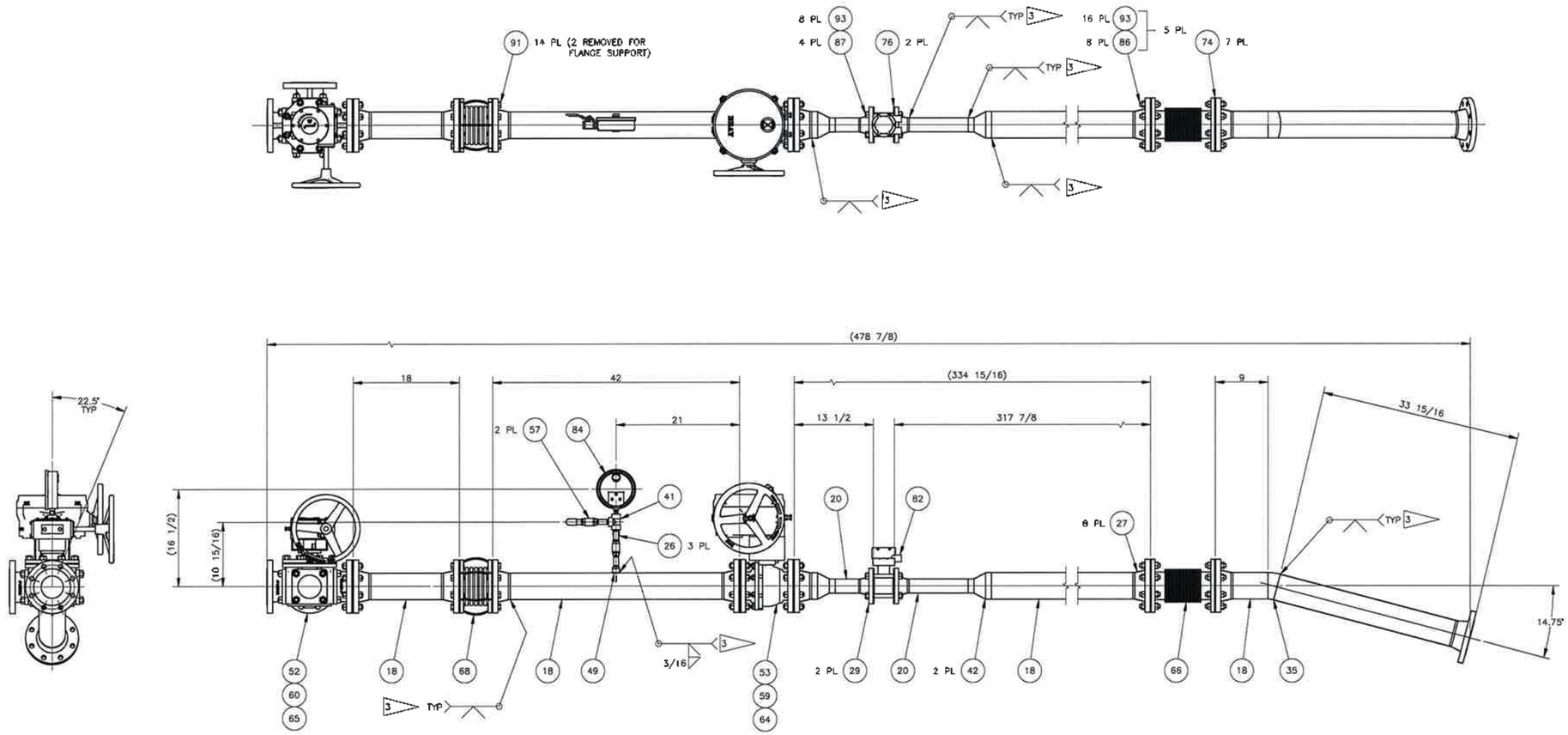

4 BASIN PUMP SPOOL
SCALE: 1/8

PAUL M. DORSH
STATE OF WASHINGTON
41918
REGISTERED
PROFESSIONAL ENGINEER
5/26/2020

DATE:
May 26, 2020
HANFORD RELEASE

DWG NUMBER	TITLE
DRAWING TRACEABILITY LIST	

REF NUMBER	TITLE
REFERENCES	
NEXT USED ON SHEET 1	

REV NO	DESCRIPTION
0	RELEASED PER EDT-882463
REVISIONS	

BLDG NO: 242-AL, 242AL-41
MODEL NO: 8407

CAUTION: NOT COMPLETE, WITHOUT CURRENT CHANGE DOCUMENTS FROM DATABASE

	NAME	DATE	COMPANY
DRAWN BY	W T ARNDT	5/26/2020	MPS
DRAFTING CHECKED	H A MENDEZ	5/26/2020	MPS
ENGINEERING TECH REVIEWER	C C JOSLYN	5/26/2020	MPS
ENGINEERING CHECKED	P M DORSH	5/26/2020	MPS
DESIGN AUTHORITY	N W WILSON	5/26/2020	MPS

U.S. DEPARTMENT OF ENERGY
Office of River Protection

LERF BASIN 41
CATCH BASIN PIPING
ASSEMBLY

SIZE F | DRAWING NUMBER H-2-838771 | SHEET 5 | REV 00
SCALE SHOWN

29773

NOTES:
FOR GENERAL NOTES AND PARTS/MATERIAL SEE SHEET 1 AND 2.

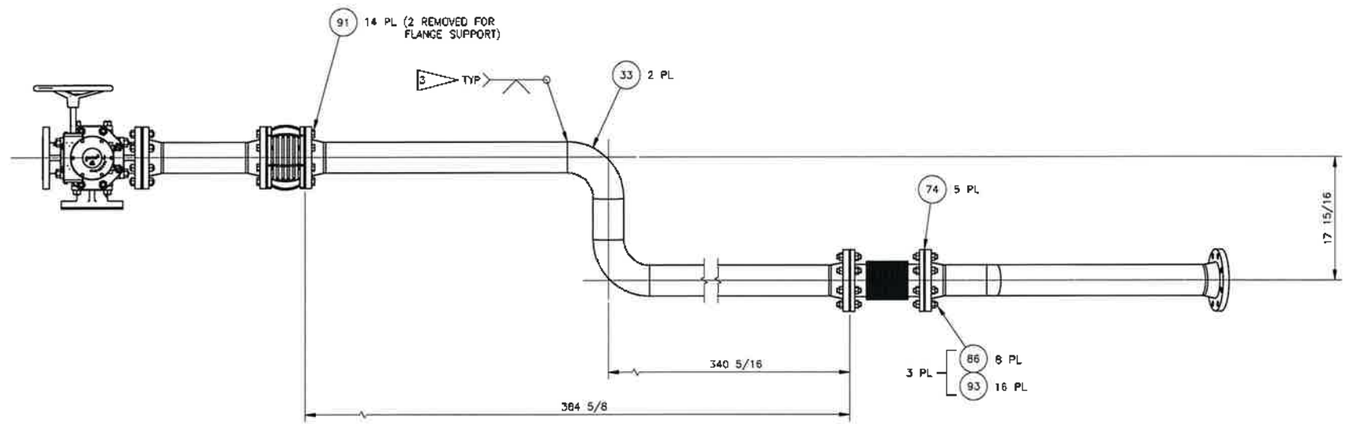

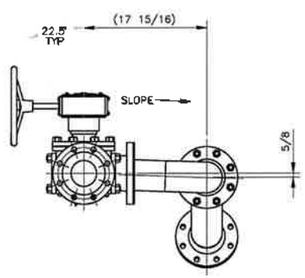

(VALVE AND ACTUATOR REMOVED FROM THIS VIEW FOR CLARITY)

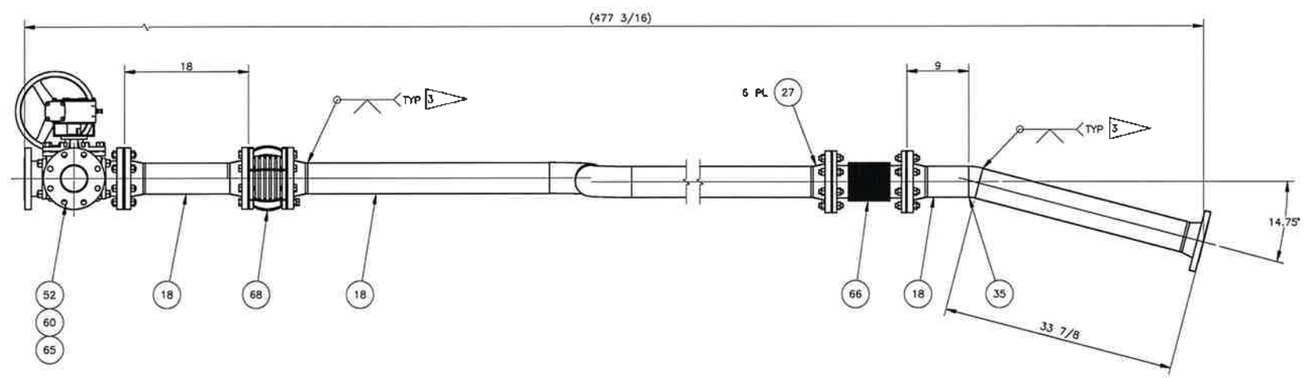

5 BASIN PUMP RECIRC/TRANSFER SPOOL
SCALE: 1/8

PAUL M. DORSH
STATE OF WASHINGTON
41918
REGISTERED
PROFESSIONAL ENGINEER
5/26/2020

DATE:
May 26, 2020
HANFORD RELEASE

DWG NUMBER	TITLE
DRAWING TRACEABILITY LIST	

REF NUMBER	TITLE
REFERENCES	
NEXT USED ON SHEET 1	

REV	DESCRIPTION
0	RELEASED PER EDT-882463
REVISIONS	

BLDG NO 242-AL 242AL-41
INDEX NO 8407

CAUTION: NOT COMPLETE WITHOUT CURRENT CHANGE DOCUMENTS FROM DATABASE

	NAME	DATE	COMPANY
DRAFTER	W. L. ARNOT		
DRAFTING CHECKER	H. A. MENDEZ		
CHALLENGE TEAM REVIEWER	G. C. JOSLYN		
DESIGN ENGINEER	P. M. DORSH		
DESIGN AUTHORITY	N. W. WILSON		

U.S. DEPARTMENT OF ENERGY
Office of River Protection

LERF BASIN 41
CATCH BASIN PIPING
ASSEMBLY

SIZE	DRAWING NUMBER	SHEET	REV
F	H-2-838771	6	00

SCALE SHOWN

NOTES:
FOR GENERAL NOTES AND PARTS/MATERIAL SEE SHEET 1 AND 2.

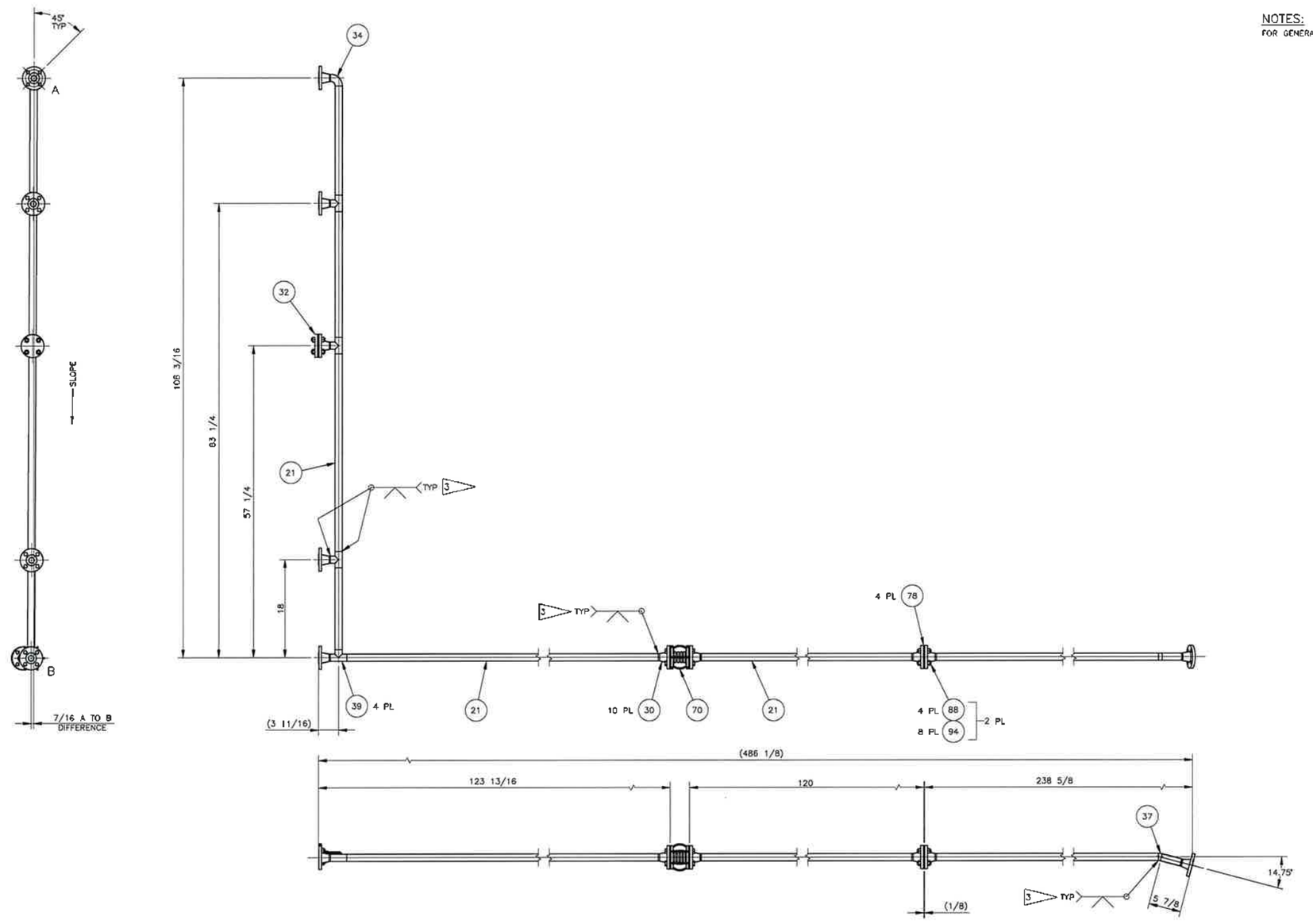

(SOME ITEMS IN THIS VIEW REMOVED FOR CLARITY)

6 DRAIN SPOOL
SCALE: 1/12

STATE OF WASHINGTON
PAUL M. DORSH
41918
REGISTERED
PROFESSIONAL ENGINEER
5/26/2020

DATE:
May 26, 2020
HANFORD RELEASE

DWG NUMBER	TITLE
DRAWING TRACEABILITY LIST	

REF NUMBER	TITLE
REFERENCES	
NEXT USED ON SHEET 1	

REV NO	DESCRIPTION
0	RELEASED PER EDT-882463
REVISIONS	

BLDG NO 242-AL 242AL-41
INDEX NO 8407

CAUTION: NOT COMPLETE WITHOUT CURRENT CHANGE DOCUMENTS FROM DATABASE

	NAME	DATE	COMPANY
DRAFTER	W T ARNDT	05/26/2020	MSA
DRAFTING CHECKER	H A MENDEZ	05/26/2020	MSA
CHARACTERIZE PEER REVIEWER	C C JOSLYN	05/26/2020	MSA
LEAD ENGINEER	P M DORSH	05/26/2020	MSA
DESIGN AUTHORITY	N W WILSON	05/26/2020	MSA

U.S. DEPARTMENT OF ENERGY
Office of River Protection

LERF BASIN 41
CATCH BASIN PIPING
ASSEMBLY

SIZE F | DRAWING NUMBER H-2-838771 | SHEET 7 | REV 00
SCALE SHOWN

297ab

NOTES:
FOR GENERAL NOTES AND PARTS/MATERIAL SEE SHEET 1 AND 2.

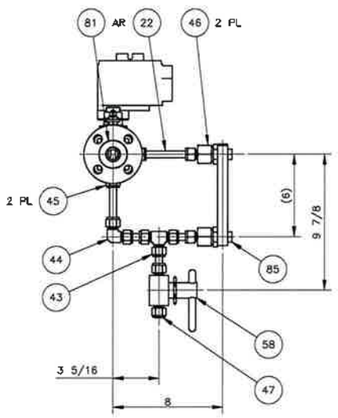

(SOME OBJECTS REMOVED FROM THIS VIEW)

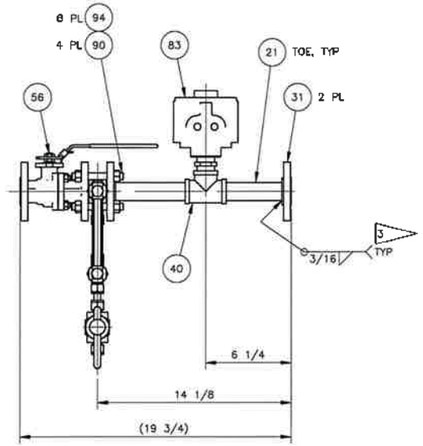

7 LEAK DETECTOR SPOOL
SCALE: 1/4

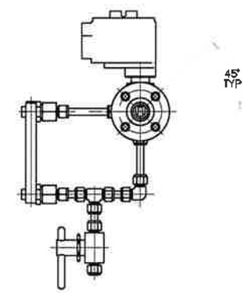

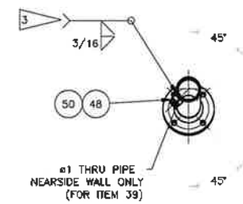

SECTION A–A
SCALE: 1/8

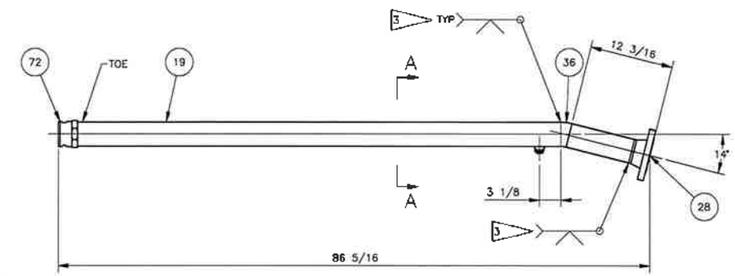

8 VENT SPOOL
SCALE: 1/8

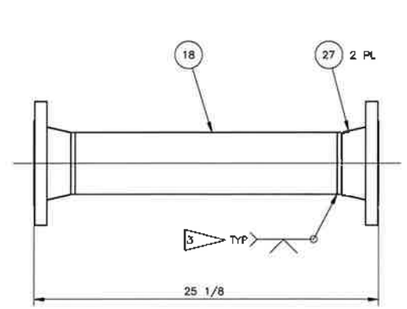

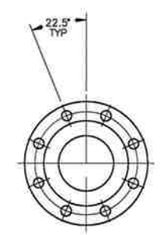

9 3–WAY TIE IN SPOOL
SCALE: 1/4

DATE:
May 26, 2020
HANFORD RELEASE

DWG NUMBER	TITLE
DRAWING TRACEABILITY LIST	

REF NUMBER	TITLE
REFERENCES	
NEXT USED ON SHEET 1	

REV	DESCRIPTION
0	RELEASED PER EDT-682463
REVISIONS	

BLDG NO 242-AL 242AL-41
INDEX NO 8407

CAUTION: NOT COMPLETE WITHOUT CURRENT CHANGE DOCUMENTS FROM DATABASE

	NAME	DATE	COMPANY
DRAFTER	W T ARNDT	5/26/20	SSPS
DRAFTING OVERSEE	H A MENDEZ	5/26/20	SSPS
ENGINEERING PEER REVIEWER	C C JOSLYN	5/26/20	SSPS
DESIGN ENGINEER	P M DORSH	5/26/20	SSPS
DESIGN AUTHORITY	N W WILSON	5/26/20	SSPS

U.S. DEPARTMENT OF ENERGY
Office of River Protection

LERF BASIN 41
CATCH BASIN PIPING
DETAILS

SIZE F | DRAWING NUMBER H-2-838771 | SHEET 8 | REV 00
SCALE SHOWN
29770

NOTES:
FOR GENERAL NOTES AND PARTS/MATERIAL SEE SHEET 1 AND 2.

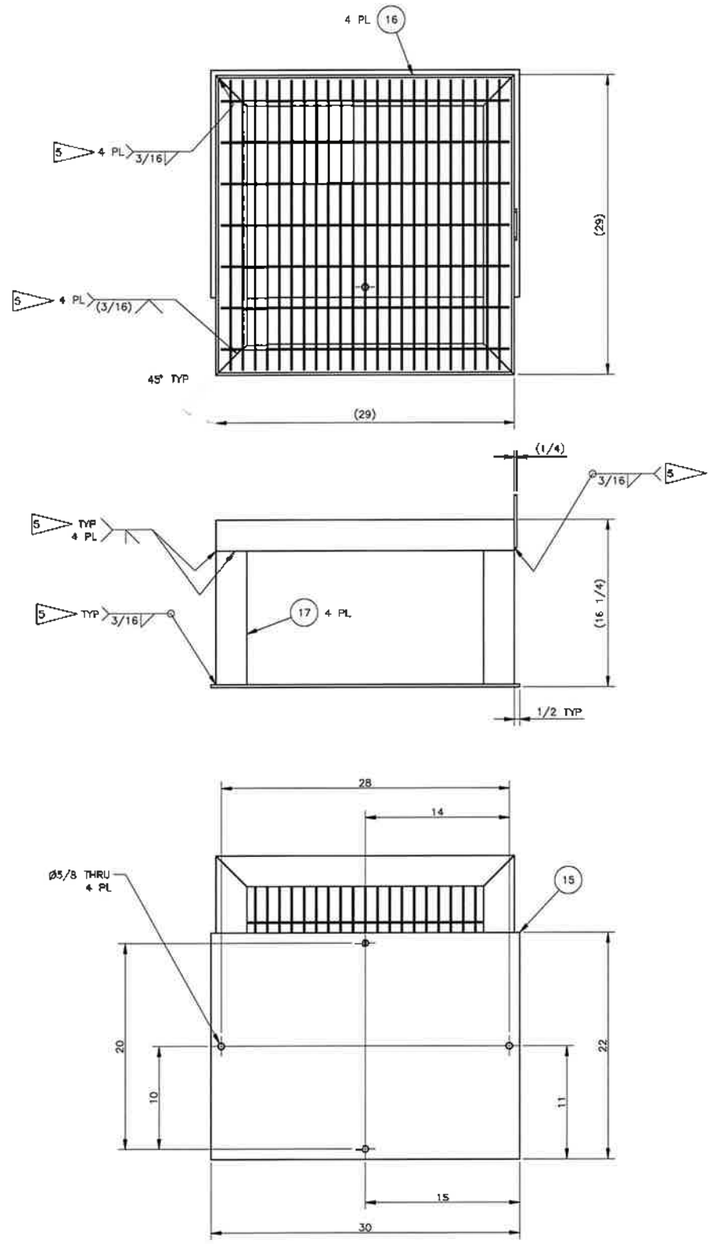

10 VENT FILTER FRAME
SCALE: 3/16
(GRATING REMOVED FOR CLARITY)

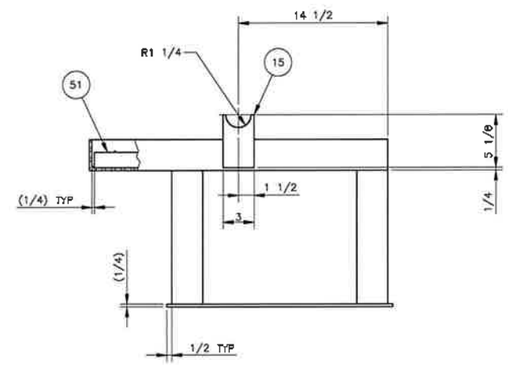

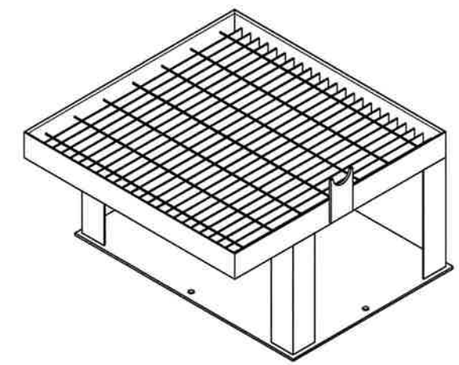

PAUL M. DORSH
STATE OF WASHINGTON
41918
REGISTERED
PROFESSIONAL ENGINEER
5/26/2020

DATE:
May 26, 2020
HANFORD RELEASE

DWG NUMBER	TITLE
DRAWING TRACEABILITY LIST	

REF NUMBER	TITLE
REFERENCES	
NEXT USED ON SHEET 1	

REV	DESCRIPTION
0	RELEASED PER EDT-882463

REVISIONS

BLDG NO 242-AL 242AL-41
MODEL NO 8407

CAUTION: NOT COMPLETE WITHOUT CURRENT CHANGE DOCUMENTS FROM DATABASE

	NAME	DATE	CONTRACT
DRAWN BY	W T ARNDT		
DESIGN LEAD	H A MENDEZ		
CHARACTERIZATION REVIEWER	C C JOSLYN		
DESIGN REVIEWER	P M DORSH		
DRAWING MANAGER	N W WILSON		

U.S. DEPARTMENT OF ENERGY
Office of River Protection

LERF BASIN 41
CATCH BASIN PIPING
ASSEMBLY

SIZE	DRAWING NUMBER	SHEET	REV
F	H-2-838771	9	00

SCALE SHOWN

29781

NOTES:
FOR GENERAL NOTES AND PARTS/MATERIAL SEE SHEET 1 AND 2.

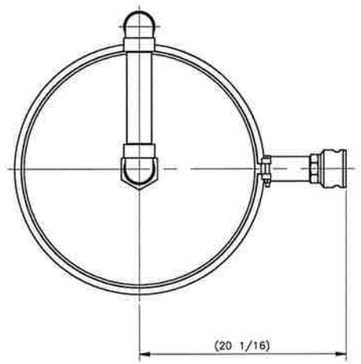

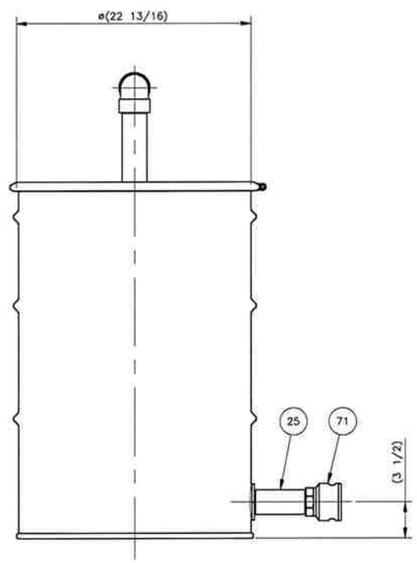

11 VENT FILTER ASSEMBLY
SCALE: 1/8

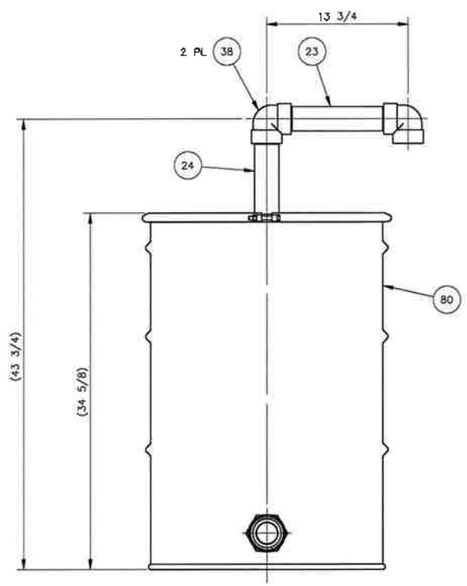

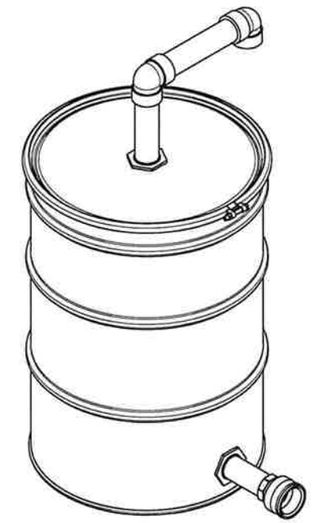

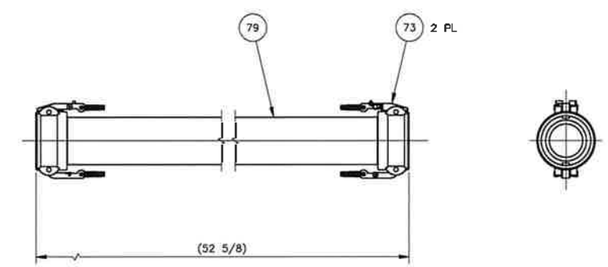

12 VENT HOSE ASSEMBLY
SCALE: 1/4

PAUL M. DORSH
STATE OF WASHINGTON
41918
REGISTERED
PROFESSIONAL ENGINEER
5/26/2020

DATE:
May 26, 2020
HANFORD RELEASE

DWG NUMBER	TITLE
DRAWING TRACEABILITY LIST	

REF NUMBER	TITLE
REFERENCES	
NEXT USED ON SHEET 1	

0	RELEASED PER EDT-682463	
REV	DESCRIPTION	
REVISIONS		

BLDG NO. 242-AL, 242AL-41
INDEX NO. 8407

CAUTION: NOT COMPLETE WITHOUT CURRENT CHANGE DOCUMENTS FROM DATABASE

	NAME	DATE
DRAFTER	W T ARNDT	5/26/2020
ENGINEERING DESIGN	H A MENDEZ	5/26/2020
ENGINEERING DESIGN REVIEWER	C C JOSLYN	5/26/2020
DESIGN ENGINEER	P M DORSH	5/26/2020
DESIGN AUTHORITY	N W WILSON	5/26/2020

U.S. DEPARTMENT OF ENERGY
Office of River Protection

LERF BASIN 41
CATCH BASIN PIPING
DETAILS

SIZE F | DRAWING NUMBER H-2-838771 | SHEET 10 | REV 00
SCALE: SHOWN

29784

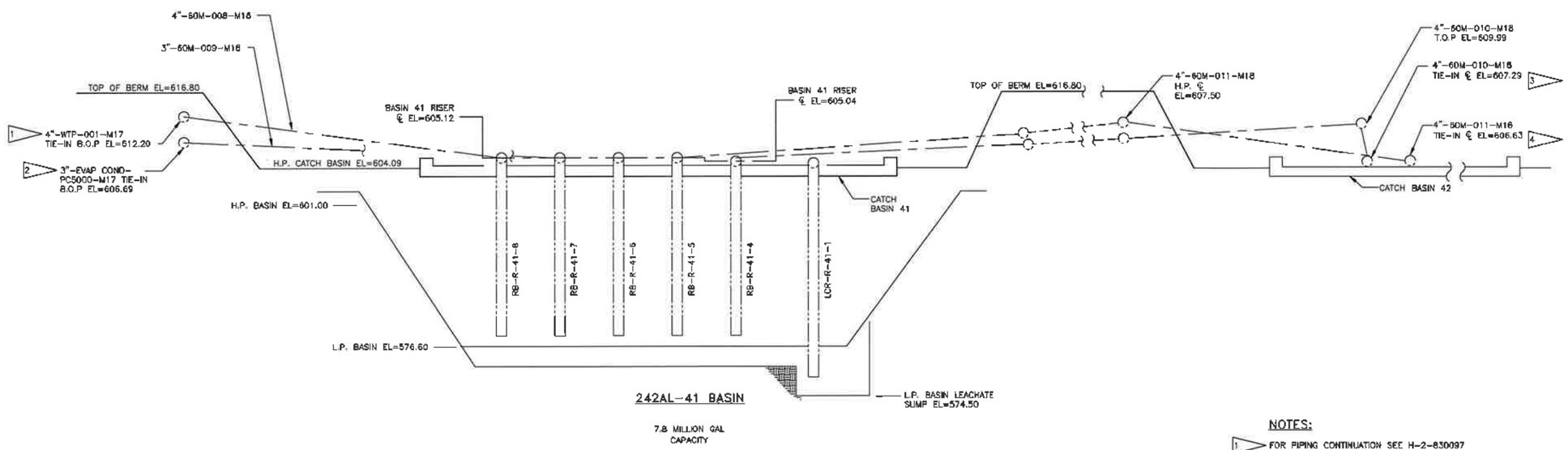

NOTES:

1. FOR PIPING CONTINUATION SEE H-2-830097
2. FOR PIPING CONTINUATION SEE H-2-79610
3. FOR PIPING CONTINUATION SEE H-2-830099 SH 1-2
4. FOR PIPING CONTINUATION SEE SECTION VIEW B ON H-2-79610

PAUL M. DORSH
STATE OF WASHINGTON
41918
REGISTERED
PROFESSIONAL ENGINEER

5/26/2020

DATE:
May 26, 2020
HANFORD RELEASE

DWG NUMBER	TITLE
H-2-838745	DRAWING LIST/TITLE SHEET

DRAWING TRACEABILITY LIST

REF NUMBER	TITLE
NEXT USED ON	

REFERENCES

REV NO	DESCRIPTION
0	RELEASED PER EDT-882463

REVISIONS

SUBSIDIARY NO: 242-AL, 242AL-41
SHEET NO: 8512

CAUTION: NOT COMPLETE WITHOUT CURRENT CHANGE DOCUMENTS FROM DATABASE

	NAME	DATE	COMPANY
DESIGN AGENCY	D. E. CHAPMAN		
DESIGN AGENCY	W. T. ARNDT		
CONSTRUCTION PER RECEIVER	C. C. JOSLYN		
DESIGN ENGINEER	P. M. DORSH		
DESIGN AUTHORITY	N. W. WILSON		

U.S. DEPARTMENT OF ENERGY
Office of River Protection

LERF BASIN 41
MECHANICAL
HYDRAULIC DIAGRAM

SIZE F | DRAWING NUMBER H-2-838774 | SHEET 1 | REV 00

SCALE NONE

297153

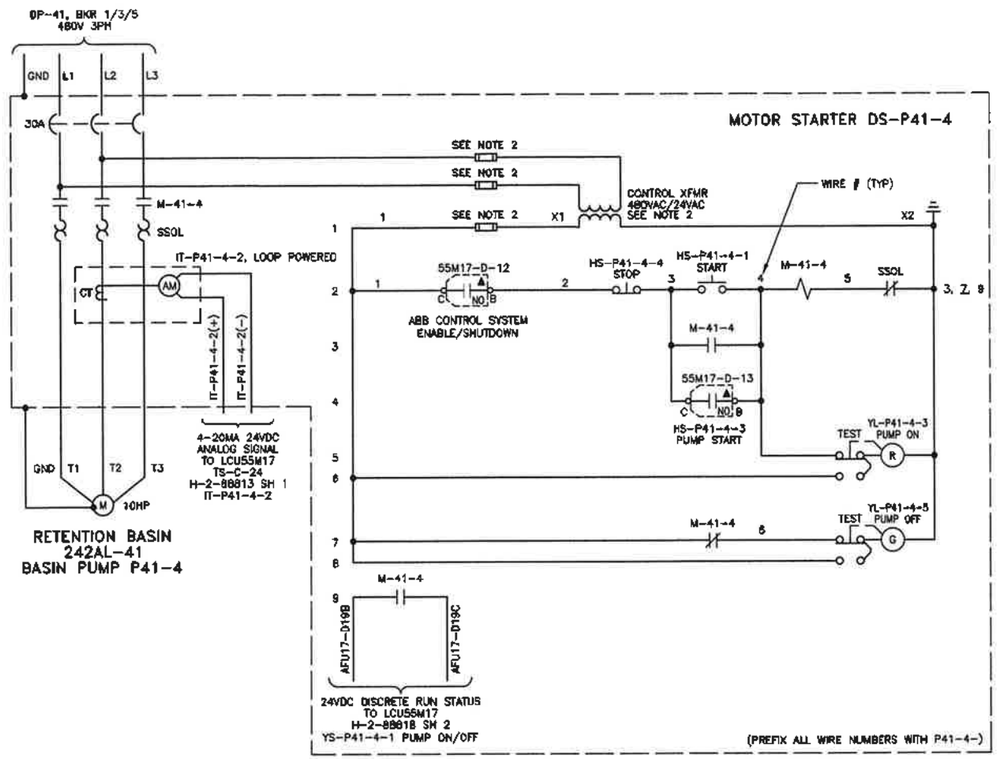

MOTOR STARTER DS-P41-4 ELEMENTARY DIAGRAM

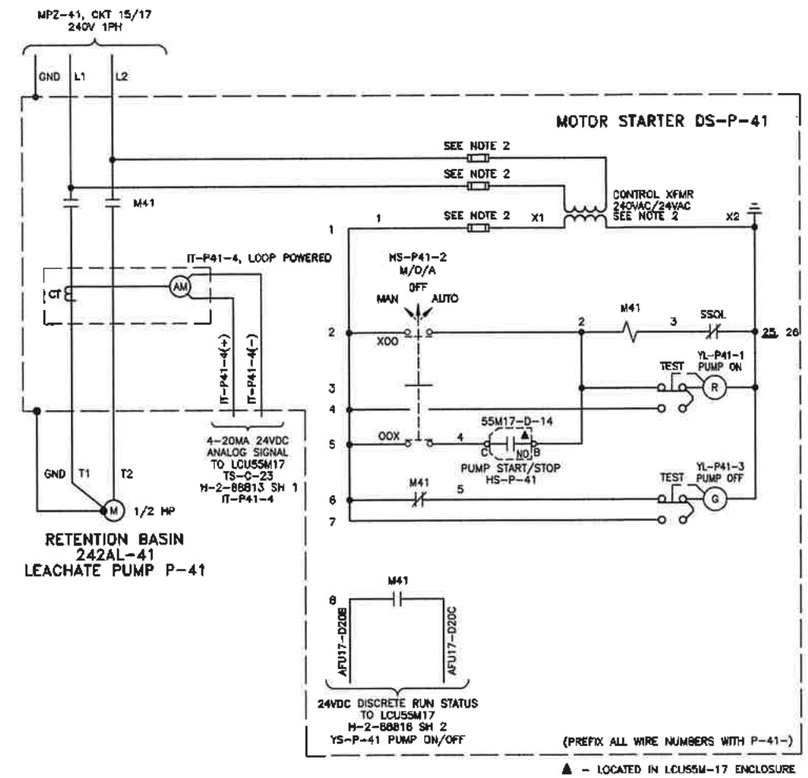

MOTOR STARTER DS-P-41 ELEMENTARY DIAGRAM

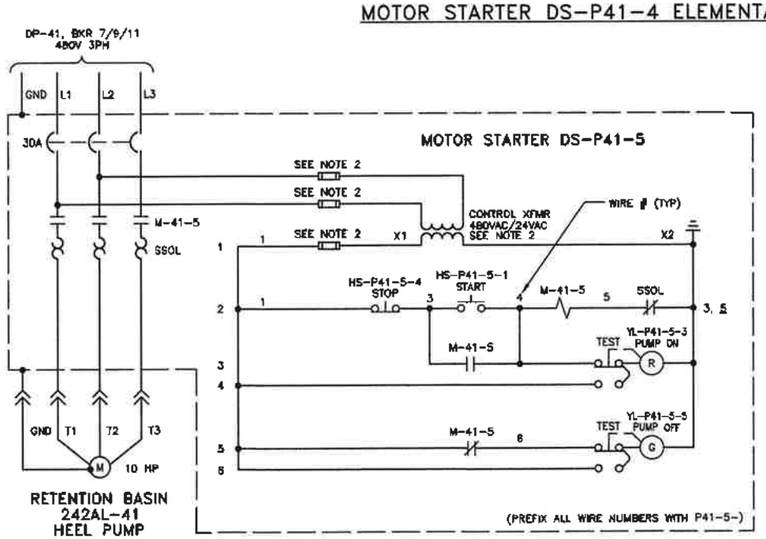

MOTOR STARTER DS-P41-5 ELEMENTARY DIAGRAM

NOTES:

1. SEE DRAWING H-2-838746 FOR ABBREVIATIONS, LEGEND, & GENERAL NOTES.
2. CONTROL TRANSFORMER AND FUSES SHALL BE SIZED BY MOTOR CONTROLLER MANUFACTURER, AND SIZES/RATINGS ADDED TO DRAWING DURING AS-BUILTING.

LORI B. WEIDNER
STATE OF WASHINGTON
38876
REGISTERED
PROFESSIONAL ENGINEER
5/20/2020

DATE:
May 20,2020
HANFORD RELEASE

DWG NUMBER	TITLE
DRAWING TRACEABILITY LIST	

REF NUMBER	TITLE
H-2-838745	DRAWING LIST/TITLE SHEET
REFERENCES	

NEXT USED ON

0	RELEASED PER EDT-882464
REVISIONS	

BLDG NO: 242-AL, 242AL-41, 242AL-71
INDEX NO: 5903, 7302

CAUTION: NOT COMPLETE WITHOUT CURRENT CHANGE DOCUMENTS FROM DATABASE.

	NAME	DATE
DRAFTER	L R CONLEY	
DESIGN ENGINEER	D R CHAPMAN	
ENGINEERING TECH REVIEW	S P O'HARA	
ENGINEER OWNER	L B WEIDNER	
DESIGN AUTHORITY	N W WILSON	

U.S. DEPARTMENT OF ENERGY
Office of River Protection

ELECTRICAL
ELEMENTARY DIAGRAM
BASIN 41 PUMPS

SIZE F | DRAWING NUMBER H-2-79668 | SHEET 6 | REV 00
SCALE NONE

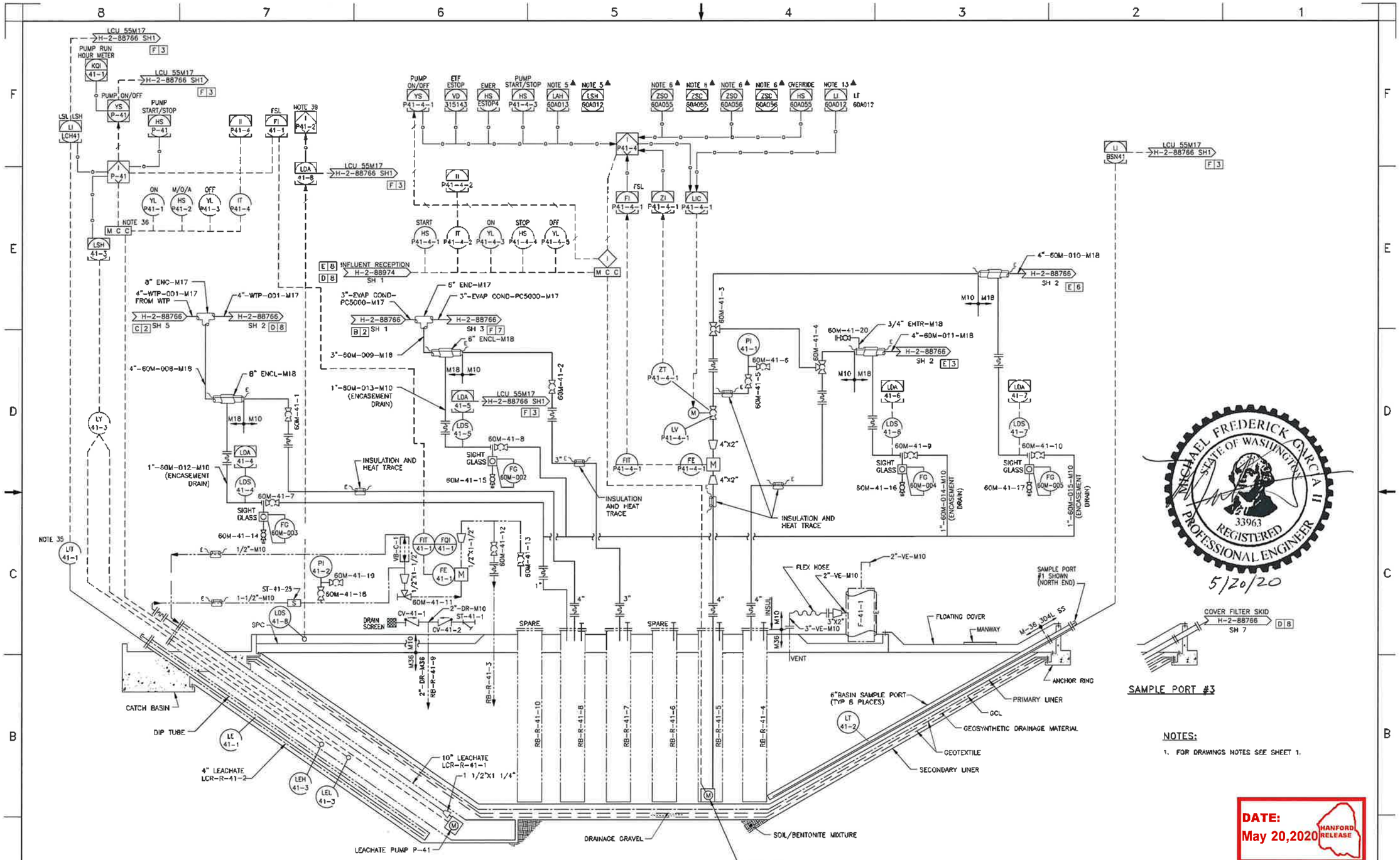
242-A EVAP COND
242AL-41
7.8 MILLION GAL CAPACITY
SAMPLE PORT #3
NOTES:
1. FOR DRAWINGS NOTES SEE SHEET 1.
DATE: May 20,2020
HANFORD RELEASE
MICHAEL FREDERICK GARCIA II
STATE OF WASHINGTON
33963
REGISTERED PROFESSIONAL ENGINEER
5/20/20
CATCH BASIN
DIP TUBE
LEACHATE PUMP P-41
BASIN PUMP P-41-4
DRAINAGE GRAVEL
SOIL/BENTONITE MIXTURE
SECONDARY LINER
GEOTEXTILE
GEOSYNTHETIC DRAINAGE MATERIAL
GCL
PRIMARY LINER
ANCHOR RING
FLOATING COVER
MANWAY
SAMPLE PORT #1 SHOWN (NORTH END)
6"BASIN SAMPLE PORT (TYP 6 PLACES)
SPARE
SPARE
INSULATION AND HEAT TRACE
INSULATION AND HEAT TRACE
INSULATION AND HEAT TRACE
FLEX HOSE
INFLUENT RECEPTION
H-2-88974 SH 1
U.S. DEPARTMENT OF DEPARTMENT
Office of River Protection
P&ID
LERF BASIN & ETF INFLUENT EVAPORATOR
H-2-88766
RELEASED PER EDT-682459
DRAWING LIST/TITLE SHEET
H-2-838745
242AL-41
7004
NONE

GENERAL NOTES: (UNLESS OTHERWISE SPECIFIED)

1. DIMENSIONS ARE IN INCHES, TOLERANCES SHALL BE AS FOLLOWS:
   FRACTIONS = ±1/8" ANGLES = ±0.5° DECIMAL = .XX ±0.03 .XXX ±.010
2. REMOVE ALL BURRS AND BREAK SHARP EDGES.
3. FABRICATE, WELD, INSPECT, AND TEST PIPING IN ACCORDANCE WITH ASME B31.3, 2016 FOR CATEGORY NORMAL FLUID SERVICE. DESIGN PRESSURE IS 100 PSIG, AND DESIGN TEMPERATURE IS 150°F. HYDROSTATIC LEAK PRESSURE TEST TO 150 PSIG (-0/+10 PSIG). FABRICATION TEMPERATURE IS 50°F TO 120°F.
4. FOR B31.3 ANALYSIS SEE RPP-CALC-63779.
5. FOR PIPING USE CLASS M-10 PIPING CODE SEE CONSTRUCTION SPECIFICATION RPP-SPEC-63632 SECTION 40 40 00.
6. FOR TUBING USE CLASS 153T TUBING CODE SPEC HNF-27957.
7. FOR PIPING INSULATION SEE CONSTRUCTION SPECIFICATION RPP-SPEC-63632 SECTION 40 42 13.

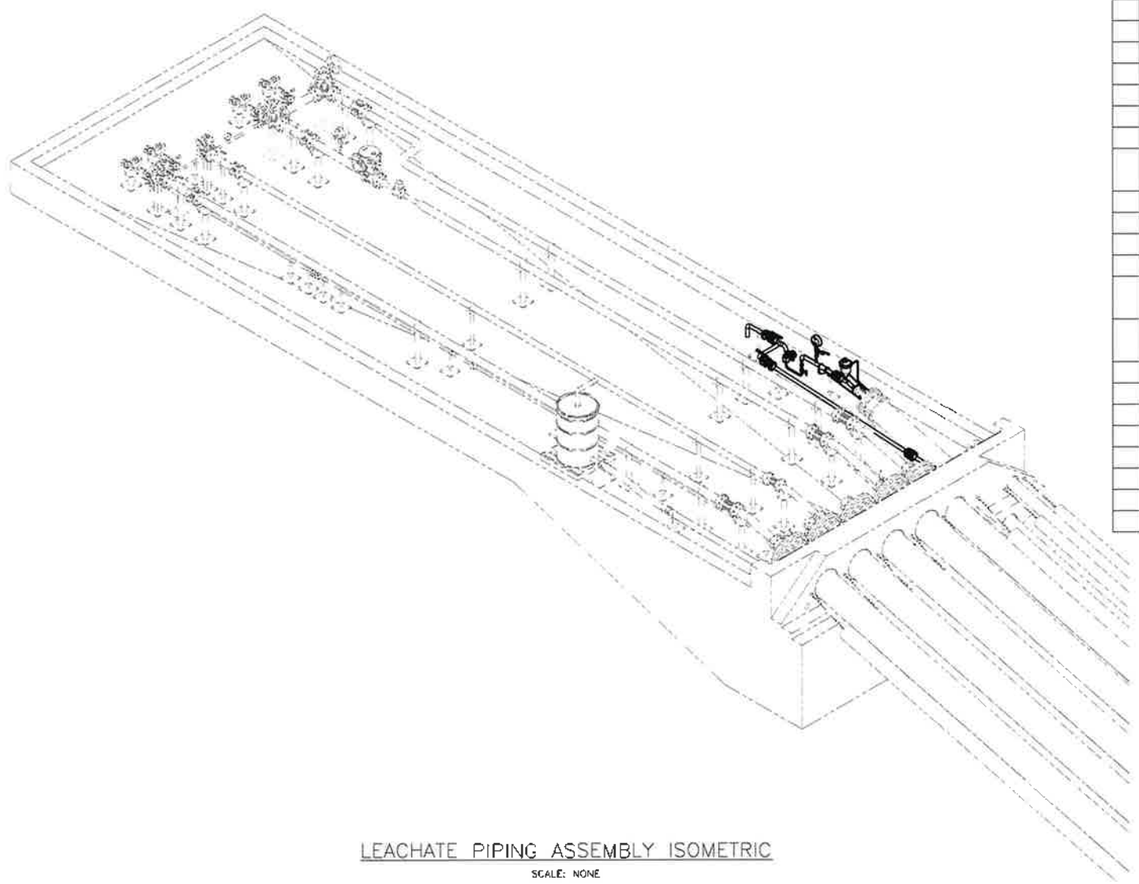

LEACHATE PIPING ASSEMBLY ISOMETRIC

SCALE: NONE

PARTS/MATERIAL LIST

QTY -080	QTY -070	QTY -060	QTY -050	QTY -040	QTY -030	QTY -020	QTY -010	PART/DASH NUMBER	NOMENCLATURE/DESCRIPTION	MATERIAL/REFERENCE	SHT	ITEM NO
							X	-010	LEACHATE PIPING ASSEMBLY		2	1
						X	1	-020	PIPE SPOOL 1		4	2
					X		1	-030	PIPE SPOOL 2		4	3
				X			1	-040	PIPE SPOOL 3		5	4
			X				1	-050	PIPE SPOOL 4		5	5
		X					1	-060	PIPE SPOOL 5		6	6
	X						1	-070	PIPE SPOOL 6		7	7
X							1	-080	PIPE SPOOL 7		7	8
												9
AR	AR	AR	AR		AR	AR			PIPE, 1 1/2 SCH 40S	ASTM A312 TP 304L		10
				AR	AR				PIPE, 1/2 SCH 40S	ASTM A312 TP 304L		11
							AR		TUBE, 1/2 X .065 WALL	ASTM A269 TP 316		12
2	2	2	1		1	2			FLANGE, 1 1/2 WN RF, CL150	ASTM A182 GR F304L		13
		1		1					FLANGE, 1/2 WN RF, CL150	ASTM A182 GR F304L		14
1							1		ELBOW, 1 1/2 45 DEG LR, SCH 40S, BW	ASTM A403 WPS 304L		15
		2	1		1				ELBOW, 1 1/2 90 DEG LR, SCH 40S, BW	ASTM A403 WPS 304L		16
				2					ELBOW, 1/2 90 DEG LR, SCH 40S, BW	ASTM A403 WPS 304L		17
							1		STREET ELBOW, 1/2 NPT	ASTM A351		18
		1			1				REDUCER CONCENTRIC, 1 1/2 X 1/2, SCH 40S, BW	ASTM A312 TP 304L		19
		1							TEE, 1 1/2, SCH 40S, BW	ASTM A403 WPS 304L		20
							1		TEE, 1/2 NPT, CL3000	ASTM A182		21
					1	1		(45BT332)	THREDOLET, 1/2 FNPT	(McMASTER CARR)		22
							4		PIPE NIPPLE, SCHED 40S 1/2 NPT X 3 LG	ASTM A312 TP 304L		23
				1					PIPE NIPPLE, SCH 40S 1/2 NPT X 2 LG	ASTM A312 TP 304L		24
				1				3131-3	UNION TAILPIECE, 1/2 FNPT	HART INDUSTRIES		25
					1			3131-3	UNION THREADPIECE, 1/2 FNPT	HART INDUSTRIES		26
							1	141.6	AIRVACUUM VALVE, 1/2 FNPT INLET, 1/2 FNPT DISCHARGE	APCO		27
							2	150150-11000SSTT-NN-00 01	BALL VALVE, 1 1/2 FP	FLOWTEK		28
							2	(46495K210)	BALL VALVE, 1/2	(MCMASTER CARR)		29
				1				SS-15RF8	NEEDLE VALVE, 1/2 FNPT	SWAGELOK		30
							1	8711-TSA-005-R-5-NO-DT	FLOW METER, 1/2 CL 150, 8700 SERIES	ROSEMOUNT		31
					1			MODEL 582-SS	STRAINER, 1 1/2 SW	MUELLER		32
							1	351009 SW L 04 L XLLC4 100#	PRESSURE GAUGE, 1/2 NPT, 3 1/2 FACE, 0 TO 100 PSIG	ASHCROFT		33
							2		DURCOR FLANGED FLEXIJOINT, 1 1/2 INCH, 4 CONVOLUTIONS	ETHYLENE		34
							8		GASKET, 1/8 THK, 1 1/2 INCH RF, CL150	GARLOCK		35
							2		GASKET, 1/8 THK, 1/2 INCH RF, CL150	GARLOCK		36
							1	SS-810-7-8	FEMALE CONNECTOR, 1/2 FNPT	SWAGELOK		37
							1	SS-810-1-8	MALE CONNECTOR, 1/2 NPT	SWAGELOK		38
							16		STUD, 1/2-13 UNC-2A X 2 3/4 LG	ASTM A193 GR B8 CL2		39
							4		STUD, 1/2-13 UNC-2A X 5 LG	ASTM A193 GR B8 CL2		40
							16		HEX BOLT, 1/2-13 UNC-2A X 1 1/2 LG	ASTM A193 GR B8 CL2		41
							40		NUT, HEX 1/2-13 UNC-2B	ASTM A194 GR 8		42

PAUL M. DORSH — STATE OF WASHINGTON — 41918 — REGISTERED PROFESSIONAL ENGINEER

5/26/2020

DATE: May 26, 2020 — HANFORD RELEASE

DWG NUMBER	TITLE
DRAWING TRACEABILITY LIST	

REF NUMBER	TITLE
H-15-38	LERF BASIN 41
H-2-838745	DRAWING LIST/TITLE SHEET
REFERENCES	
NEXT USED ON H-2-838771	

REV	DESCRIPTION
0	RELEASED PER EDT-882463
REVISIONS	

BLDG NO: 242-AL, 242AL-41

INDEX NO: 8407

CAUTION: NOT COMPLETE WITHOUT CURRENT CHANGE DOCUMENTS FROM DATABASE

	NAME	DATE	COMPANY
DRAFTER	F CHAVEZ	05/26/2020	MSPS
DRAFTER CHANGE	W T ARNDT	05/26/2020	MSPS
CONCURRING PEER REVIEWER	C C JOSLYN	05/26/2020	MSPS
DESIGN ENGINEER	P M DORSH	05/26/2020	MSPS
DESIGN AUTHORITY	N W WILSON	05/26/2020	MSPS

U.S. DEPARTMENT OF ENERGY
Office of River Protection

LERF BASIN 41
LEACHATE PIPING
NOTES AND PARTS LIST

SIZE: F — DRAWING NUMBER: H-2-838770 — SHEET: 1 — REV: 00

SCALE: SHOWN

29779

DOE_RL_F.DWG (SEPTEMBER 2019)

NOTES:
FOR GENERAL NOTES AND PARTS/MATERIAL LIST SEE SHEET 1.

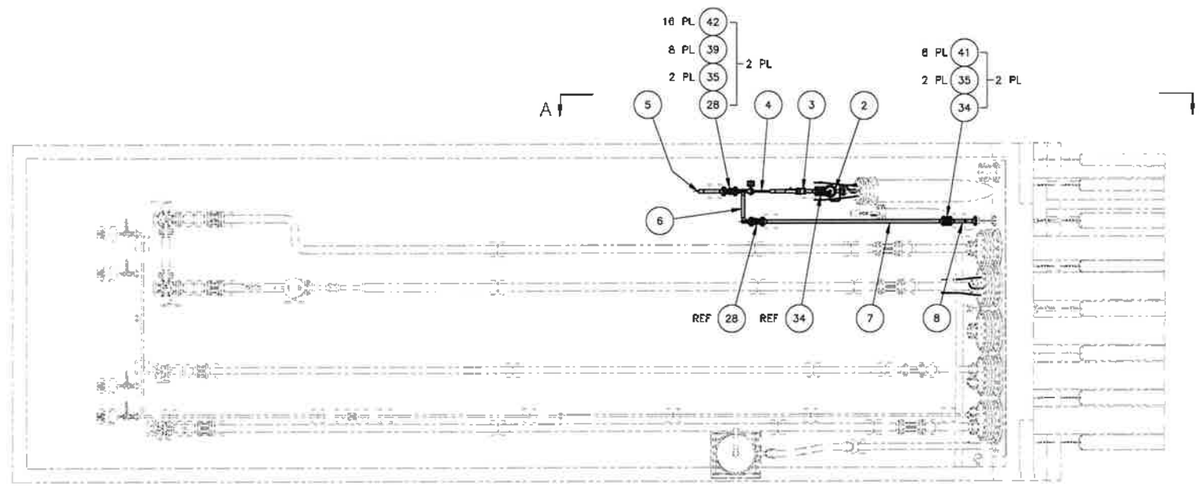

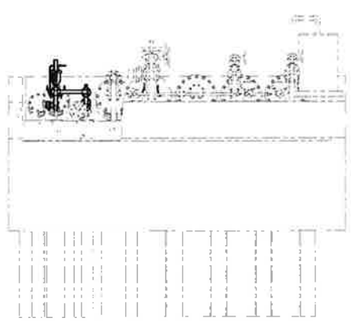

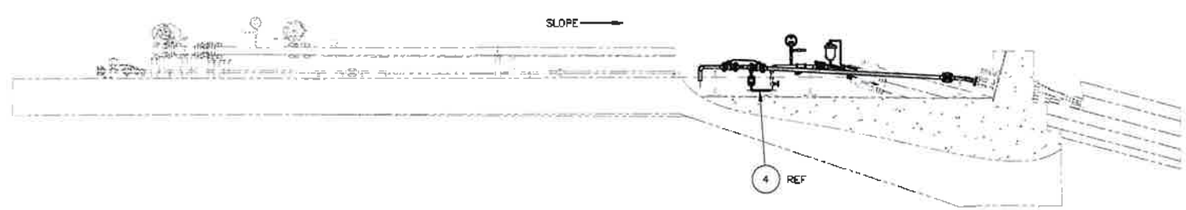

1 LEACHATE PIPING ASSEMBLY
SCALE: 1/32

PAUL M. DORSH
STATE OF WASHINGTON
41918
REGISTERED
PROFESSIONAL ENGINEER
5/26/2020

DATE:
May 26, 2020
HANFORD RELEASE

DWG NUMBER	TITLE
DRAWING TRACEABILITY LIST	

REF NUMBER	TITLE
REFERENCES	
NEXT USED ON SHEET 1	

REV NO	DESCRIPTION
0	RELEASED PER EDT-882463
REVISIONS	

BLDG NO 242-AL 242AL-41
BLDG NO 8407

CAUTION: NOT COMPLETE WITHOUT CURRENT CHANGE DOCUMENTS FROM DATABASE

	NAME	DATE	COMPANY
DRAFTER	J CHAVEZ		
ENGINEERING	W T ARNDT		
ENGINEERING DATA REVIEWER	C C JOSLYN		
DESIGN ENGINEER	P M DORSH		
DESIGN AUTHORITY	N W WILSON		

U.S. DEPARTMENT OF ENERGY
Office of River Protection

LERF BASIN 41
LEACHATE PIPING
ASSEMBLY

SIZE F | DRAWING NUMBER H-2-838770 | SHEET 2 | REV 00
SCALE SHOWN
29771
DOE_TB_F.DWG (SEPTEMBER 2014)

NOTES:
FOR GENERAL NOTES AND PARTS/MATERIAL LIST SEE SHEET 1.

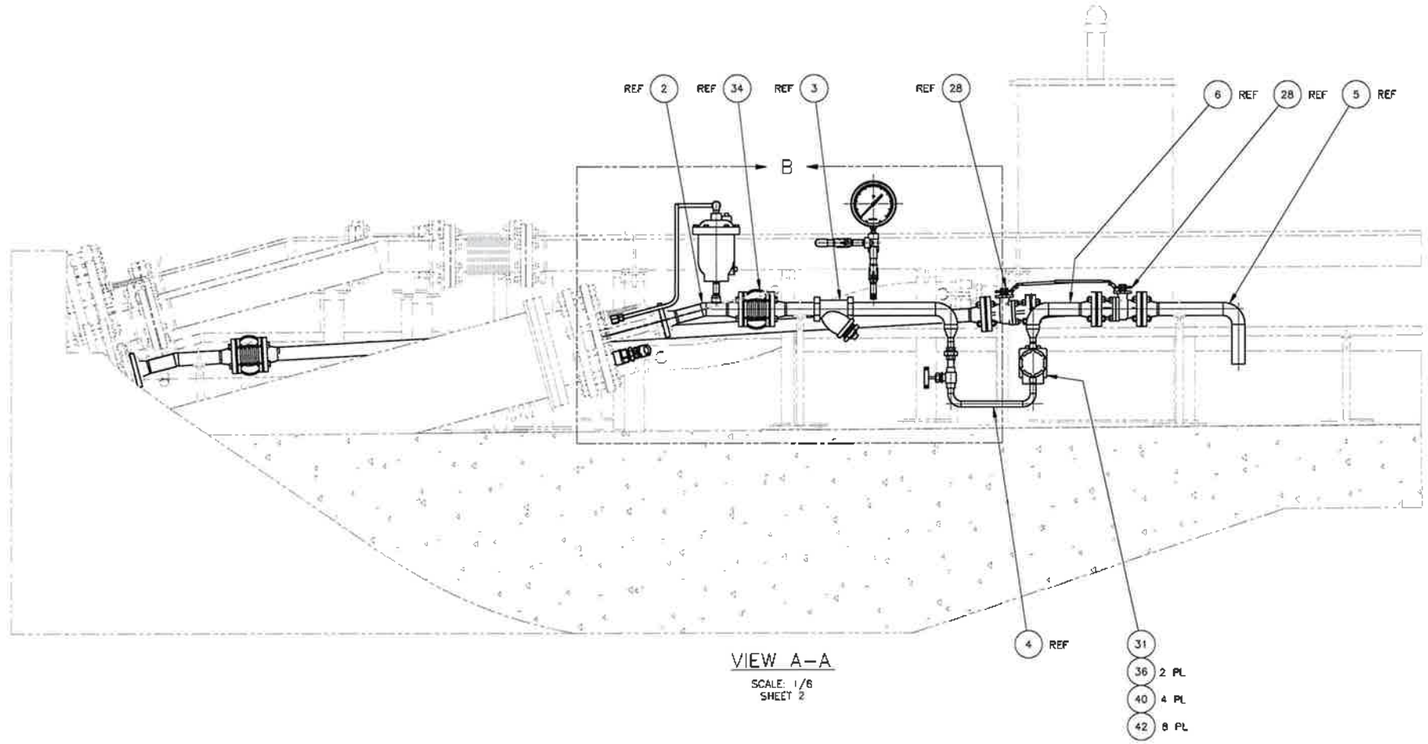

VIEW A–A
SCALE: 1/8
SHEET 2

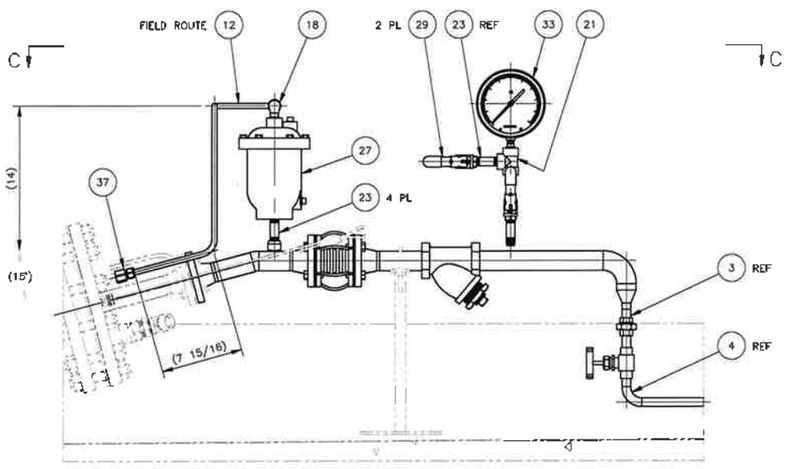

DETAIL B
SCALE: 3/16
(SOME OBJECTS REMOVED FOR CLARITY)

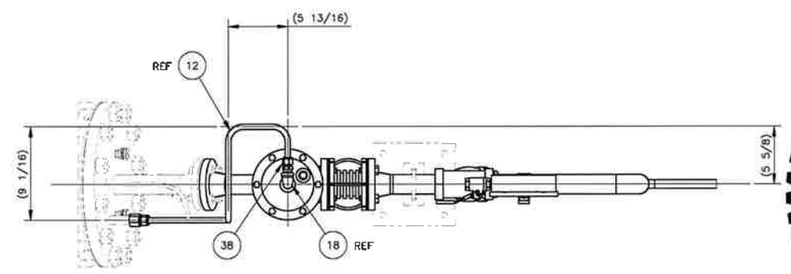

VIEW C–C
SCALE: 3/16
(SOME OBJECTS REMOVED FOR CLARITY)

PAUL M. DORSH
STATE OF WASHINGTON
41918
REGISTERED
PROFESSIONAL ENGINEER
5/26/2020

DATE:
May 26, 2020
HANFORD RELEASE

DWG NUMBER	TITLE
DRAWING TRACEABILITY LIST	

REF NUMBER	TITLE
REFERENCES	
NEXT USED ON SHEET 1	

REV NO	DESCRIPTION
0	RELEASED PER EDT-882463
REVISIONS	

BLDG NO 242-AL 242AL-41
BLDG NO 8407

CAUTION: NOT COMPLETE WITHOUT CURRENT CHANGE DOCUMENTS FROM DATABASE

	NAME	DATE	COMPANY
DRAFTER	F CHAVEZ		
DESIGN OWNER	W T ARNDT		
CONTRACTING FIELD REVIEWER	C C JOSLYN		
DESIGN ENGINEER	P M DORSH		
DRAWING TECHNICIAN	N W WILSON		

U.S. DEPARTMENT OF ENERGY
Office of River Protection

LERF BASIN 41
LEACHATE PIPING
VIEW

SIZE F | DRAWING NUMBER H-2-838770 | SHEET 3 | REV 00
SCALE SHOWN
29732

NOTES:
FOR GENERAL NOTES AND PARTS/MATERIAL LIST SEE SHEET 1.

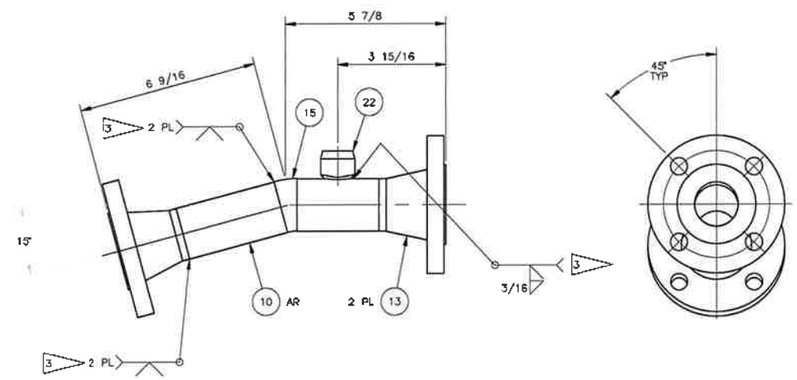

2 PIPE SPOOL 1
SCALE: 1/2

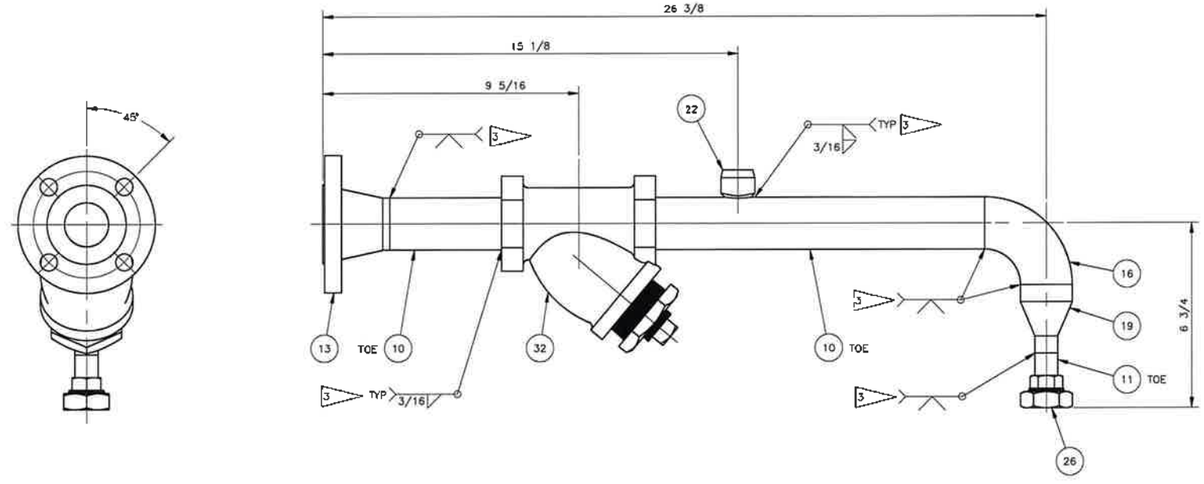

3 PIPE SPOOL 2
SCALE: 1/2

PAUL M. DORSH
STATE OF WASHINGTON
41918
REGISTERED
PROFESSIONAL ENGINEER
5/26/2020

DATE:
May 26, 2020
HANFORD RELEASE

DWG NUMBER	TITLE
DRAWING TRACEABILITY LIST	

REF NUMBER	TITLE
REFERENCES	
NEXT USED ON SHEET 1	

REV NO	DESCRIPTION
0	RELEASED PER EDT-882463
REVISIONS	

BLDG NO 242-AL 242AL-41
INDEX NO 8407

CAUTION: NOT COMPLETE WITHOUT CURRENT CHANGE DOCUMENTS FROM DATABASE

	NAME	DATE	COMPANY
DESIGNED	M HAVE 2		
DRAFTED	W T ARNDT		
ENGINEERING PROJ. REVIEWER	C C JOSLYN		
DESIGN CONSULTANT	S M DORSH		
DESIGN AUTHORITY	N W WILSON		

U.S. DEPARTMENT OF ENERGY
Office of River Protection

LERF BASIN 41
LEACHATE PIPING
DETAILS

SIZE F | DRAWING NUMBER H-2-838770 | SHEET 4 | REV 00

SCALE SHOWN

29762

NOTES:
FOR GENERAL NOTES AND PARTS/MATERIAL LIST SEE SHEET 1.

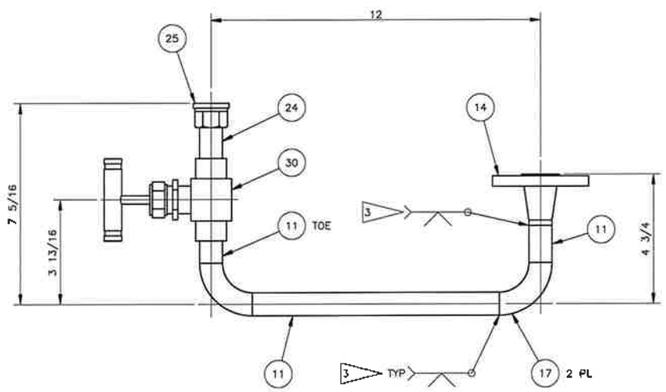

4 PIPE SPOOL 3
SCALE: 1/2

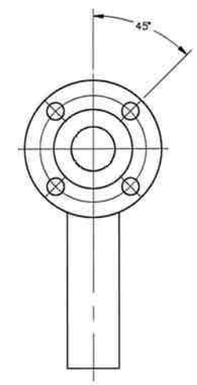

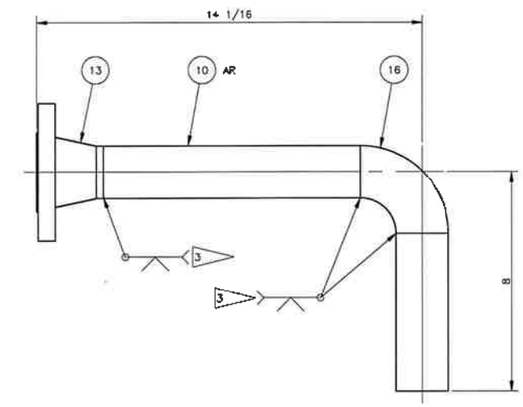

5 PIPE SPOOL 4
SCALE: 1/2

PAUL M. DORSH
STATE OF WASHINGTON
41918
REGISTERED
PROFESSIONAL ENGINEER
5/26/2020

DATE:
May 26, 2020
HANFORD RELEASE

DWG NUMBER	TITLE
DRAWING TRACEABILITY LIST	

REF NUMBER	TITLE
REFERENCES	
NEXT USED ON SHEET 1	

0	RELEASED PER EDT-882483
REV	DESCRIPTION
REVISIONS	

BLDG NO 242-AL 242AL-41

NOTE NO 8407

CAUTION: NOT COMPLETE WITHOUT CURRENT CHANGE DOCUMENTS FROM DATABASE

	NAME	DATE	COMPANY
DRAFTER	J. CHAVEZ	5/26/2020	KBR
WRITER/ADMIN	W. T. ARNDT	5/26/2020	KBR
CONTRACTOR REV. REVIEWER	C. E. JOSLYN	5/26/2020	KBR
DESIGN ENGINEER	P. M. DORSH	5/26/2020	KBR
DESIGN AUTHORITY	N. W. WILSON	5/26/2020	KBR

U.S. DEPARTMENT OF ENERGY
Office of River Protection

LERF BASIN 41
LEACHATE PIPING
DETAILS

SIZE F | DRAWING NUMBER H-2-838770 | SHEET 5 | REV 00

SCALE SHOWN

29775

NOTES:
FOR GENERAL NOTES AND PARTS/MATERIAL LIST SEE SHEET 1.

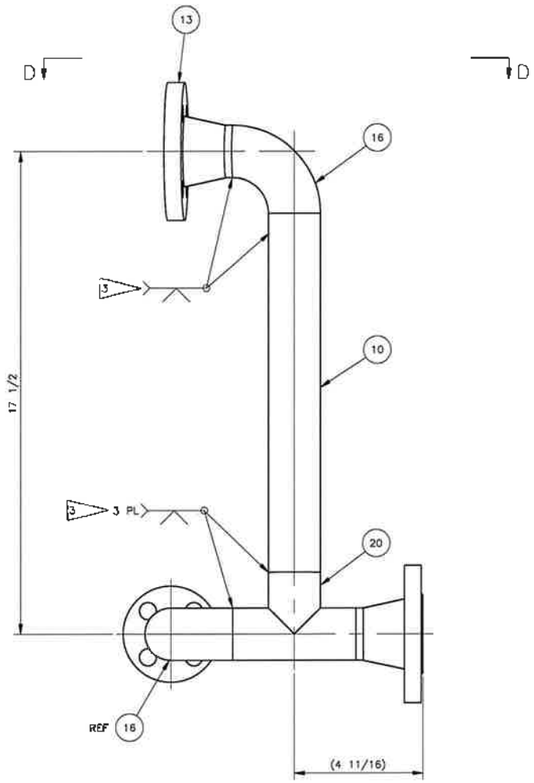

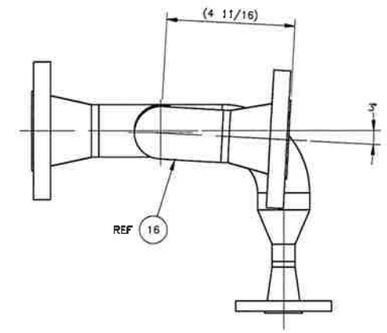

VIEW D-D
SCALE: 1/2

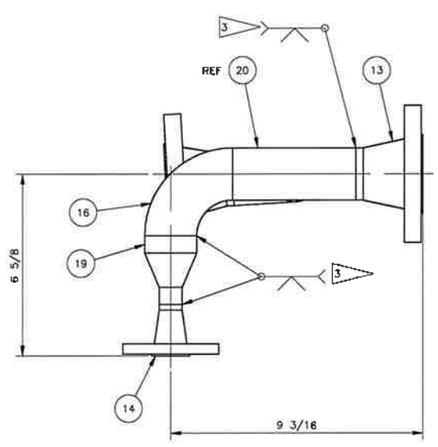

6 PIPE SPOOL 5
SCALE: 1/2

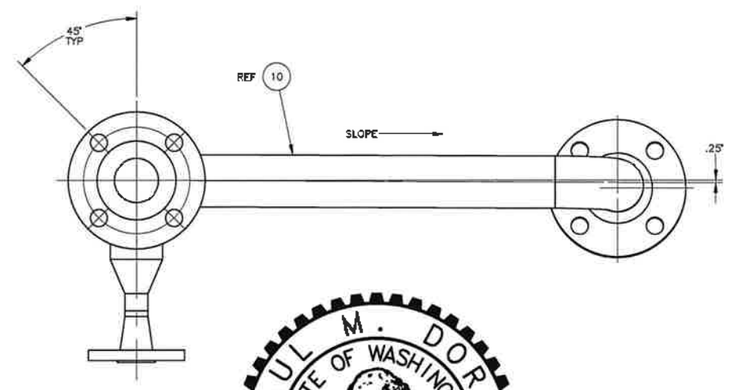

PAUL M. DORSH
STATE OF WASHINGTON
41918
REGISTERED
PROFESSIONAL ENGINEER
5/26/2020

DATE:
May 26, 2020
HANFORD RELEASE

DWG NUMBER	TITLE
DRAWING TRACEABILITY LIST	

REF NUMBER	TITLE
REFERENCES	
NEXT USED ON SHEET 1	

REV	DESCRIPTION
0	RELEASED PER EDT-882463
REVISIONS	

BLDG NO 242-AL 242AL-41
INDEX NO 8407

CAUTION: NOT COMPLETE WITHOUT CURRENT CHANGE DOCUMENTS FROM DATABASE

	NAME	DATE
DRAFT	F CHAVEZ	5/26/2020
DESIGN AGENT	W T ARNDT	5/26/2020
PROJECT ENGR	R E JOSELYN	5/26/2020
DESIGN ENGINEER	P M DORSH	5/26/2020
DESIGN AUTHORITY	N W WILSON	5/26/2020

U.S. DEPARTMENT OF ENERGY
Office of River Protection

LERF BASIN 41
LEACHATE PIPING
DETAILS

DWG F DRAWING NUMBER H-2-838770 SHEET 6 REV 00
SCALE SHOWN

NOTES:
FOR GENERAL NOTES AND PARTS/MATERIAL LIST SEE SHEET 1.

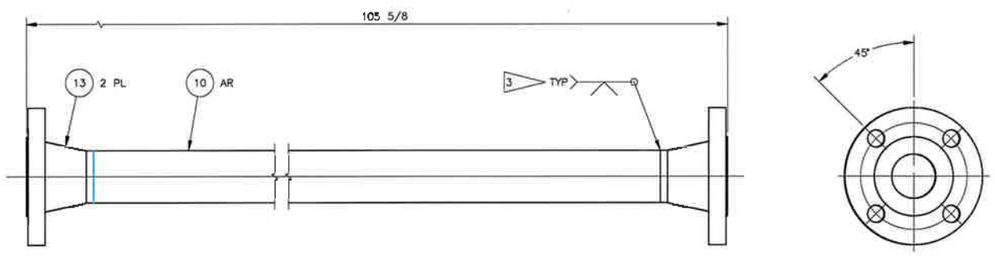

7 PIPE SPOOL 6
SCALE: 1/2

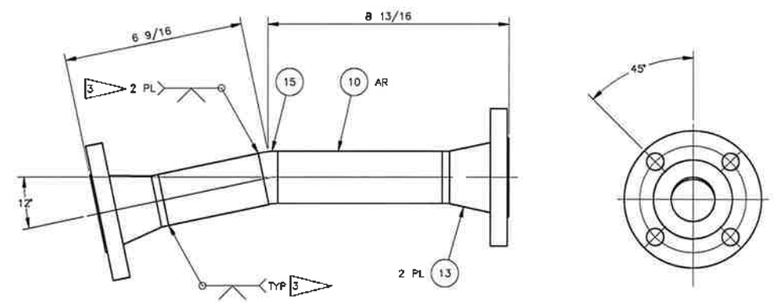

8 PIPE SPOOL 7
SCALE: 1/2

PAUL M. DORSH
STATE OF WASHINGTON
41918
REGISTERED
PROFESSIONAL ENGINEER
5/26/2020

DATE:
May 26, 2020
HANFORD RELEASE

DWG NUMBER	TITLE
DRAWING TRACEABILITY LIST	

REF NUMBER	TITLE
REFERENCES	
NEXT USED ON SHEET 1	

REV	DESCRIPTION
0	RELEASED PER EDT-882463

REVISIONS

BLDG NO 242-AL 242AL-41
BLDG NO 8407

CAUTION: NOT COMPLETE WITHOUT CURRENT CHANGE DOCUMENTS FROM DATABASE

	NAME	DATE	COMPANY
DRAWN	J CHAVEZ	5/26/2020	WRPS
DESIGN ENGR	W T ARNDT	5/26/2020	WRPS
CHANGE/DES REV REVIEW	C C JOSLYN	5/26/2020	WRPS
DESIGN CHECKER	P M DORSH	5/26/2020	WRPS
DESIGN AUTHORITY	N W WILSON	5/26/2020	WRPS

U.S. DEPARTMENT OF ENERGY
Office of River Protection

LERF BASIN 41
LEACHATE PIPING
DETAILS

SIZE	DRAWING NUMBER	SHEET	REV
F	H-2-838770	7	00

SCALE SHOWN

29785

GENERAL NOTES: (UNLESS OTHERWISE SPECIFIED)

1. DIMENSIONS ARE IN INCHES, TOLERANCES SHALL BE AS FOLLOWS: FRACTIONS = ±1/8" ANGLES = ±0.5° DECIMAL = .XX ±0.03 .XXX ±.010
2. REMOVE ALL BURRS AND BREAK SHARP EDGES.
3. FABRICATE, WELD, INSPECT, AND TEST PIPING IN ACCORDANCE WITH ASME B31.3, 2016 FOR CATEGORY NORMAL FLUID SERVICE. DESIGN PRESSURE IS 150 PSIG, AND DESIGN TEMPERATURE IS 150°F. HYDROSTATIC LEAK PRESSURE TEST TO 225 PSIG (-0/+25 PSIG). FABRICATION TEMPERATURE IS 50°F TO 120°F.
4. ALL MACHINED SURFACES SHALL BE 125 IN ACCORDANCE WITH ASME B46.1, 2009, UNLESS OTHERWISE SPECIFIED.
5. WELD AND INSPECT STRUCTURAL WELDS IN ACCORDANCE WITH AWS D1.1, 2015 STATICALLY LOADED CRITERIA. ALL WELDS SHALL BE VT ON FINAL PASS UNLESS OTHERWISE SPECIFIED. WELD PROCEDURES AND QUALIFICATIONS PER ASME B&PV CODE SECTION IX, 2017 ARE ACCEPTABLE.
6. FOR B31.3 ANALYSIS SEE RPP-CALC-63779.
7. FOR STRUCTURAL ANALYSIS VENT FILTER FRAME SEE RPP-CALC-63787.
8. FOR PIPING HEAT TRACE SEE CONSTRUCTION SPECIFICATION RPP-SPEC-63632 SECTION 40 41 00. FOR HEAT TRACE LOCATION AND ORIENTATION SEE H-2-838760.
9. FOR PIPING INSULATION SEE CONSTRUCTION SPECIFICATION RPP-SPEC-63632 SECTION 40 42 13.
10. USE CLASS M-10 PIPING CODE SEE CONSTRUCTION SPECIFICATION RPP-SPEC-63632 SECTION 40 40 00.
11. GROUT PER CONSTRUCTION SPEC 63632, SECTION 03 30 00, MAX 1" THICK. ANCHOR ROD, 1/2" SST ASTM F593 TP 316, 2 3/4" MIN EMBED, 3 1/2" MAX EMBED. HILTI HIT-HY 200 ADHESIVE ANCHOR SYSTEM.
12. PREPARE AND PAINT ALL EXPOSED CARBON STEEL SURFACES WITH PPG PSX700 OR EQUIVALENT. FINISH COLOR SHALL BE GRAY. APPLY PER MANUFACTURER'S SPECIFICATIONS. POWDER COATING IS AN ACCEPTABLE COATING SYSTEM.

PARTS/MATERIAL LIST

QTY -120	QTY -110	QTY -100	QTY -090	QTY -080	QTY -070	QTY -060	QTY -050	QTY -040	QTY -030	QTY -020	QTY -010	PART/DASH NUMBER	NOMENCLATURE/DESCRIPTION	MATERIAL/REFERENCE	SHT	ITEM NO
												-010	CATCH BASIN PIPING ASSEMBLY		3	1
											1	-020	WTP/EMF EFFLUENT SPOOL		4	2
											1	-030	242A PROCESS CONDENSATE SPOOL		4	3
											1	-040	BASIN PUMP SPOOL		5	4
											1	-050	BASIN PUMP RECIRCULATION/TRANSFER SPOOL		6	5
											1	-060	DRAIN SPOOL		7	6
											4	-070	LEAK DETECTOR SPOOL		8	7
											1	-080	VENT SPOOL		8	8
											1	-090	3 WAY TIE IN SPOOL		8	9
											1	-100	VENT FILTER SUPPORT FRAME		9	10
											1	-110	VENT FILTER ASSEMBLY		10	11
											1	-120	VENT HOSE ASSEMBLY		10	12
																13
											1	H-2-838770	LEACHATE PIPING ASSEMBLY			14
		AR											PLATE, 1/4	ASTM A36		15
		4											ANGLE, 3 X 3 X 1/4 X 29 LG	ASTM A36		16
		4											ANGLE, 3 X 3 X 1/4 X 13 LG	ASTM A36		17
			AR				AR	AR		AR			PIPE, 4 SCHED 40S	ASTM A312 GR TP 304L		18
				AR					AR				PIPE, 3 SCHED 40S	ASTM A312 GR TP 304L		19
								AR					PIPE, 2 SCHED 40S	ASTM A312 TP 304L		20
					AR	AR							PIPE, 1 SCHED 40S	ASTM A312 TP 304L		21
					AR								TUBE, 1/2 OD X .049 WALL	ASTM A269 TP 316L		22
	1												PIPE NIPPLE, SCHED 40S 2 NPT X 10 LG	ASTM A312 TP 304L		23
	1												PIPE NIPPLE, SCHED 40S 2 NPT X 8 LG	ASTM A312 TP 304L		24
	1												PIPE NIPPLE, SCHED 40S 2 NPT X 6 LG	ASTM A312 TP 304L		25
								3					PIPE NIPPLE, SCHED 40S 1/2 NPT X 3 LG	ASTM A312 TP 304L		26
			2				6	8		6			FLANGE, 4 WN RF, CL150	ASTM A182 GR F 304L		27
				1					6				FLANGE, 3 WN RF, CL150	ASTM A182 GR F 304L		28
								2					FLANGE, 2 WN RF, CL150	ASTM A182 GR F 304L		29
						10							FLANGE, 1 WN RF, CL150	ASTM A182 304L		30
					2								FLANGE, 1 SO RF, CL150	ASTM A182 304L		31
						1							FLANGE, 1 BLIND RF, CL150	ASTM A182 304L		32
							2						ELBOW, 4 LR 90 DEG SCHED 40S BW	ASTM A403 WP-S 304L		33
						1							ELBOW, 1 LR 90 DEG SCHED 40S BW	ASTM A403 WP-S 304L		34
							1	1		1			ELBOW 4 LR 45 DEG SCHED 40S BW	ASTM A403 WP-S 304L		35
				1					1				ELBOW 3 LR 45 DEG SCHED 40S BW	ASTM A403 WP-S 304L		36
						1							ELBOW 1 LR 45 DEG SCHED 40S BW	ASTM A403 WP-S 304L		37
	2												ELBOW, 2 FNPT 90 DEG, CL2000	ASME B16.11		38
						4							TEE, 1 SCHED 40S BW	ASTM A403 WP-S 304L		39
					1								TEE, 1 NPT, CL150	ASTM A182 TP 304L		40
								1					TEE, 1/2 NPT, CL3000			41
								2					REDUCER CONCENTRIC, 4 X 2	ASTM A403 WP-S 304L		42
					1							SS-810-3	TEE, 1/2 TUBE OD	SWAGELOK		43
					1							SS-810-9	UNION ELBOW, 90 DEG, 1/2 TUBE OD	SWAGELOK		44
					2							SS-810-1-4	MALE CONNECTOR, 1/4 NPT X 1/2 TUBE OD	SWAGELOK		45
					2							SS-810-7-12	FEMALE CONNECTOR, 3/4 FNPT X 1/2 TUBE OD	SWAGELOK		46
					1							SS-810-P	PLUG, 1/2 FNPT	SWAGELOK		47
				1								(4565T342)	THREDOLET, 3/4 FNPT	(McMASTER CARR)		48
								1				(4567T332)	THREDOLET, 1/2 FNPT	(McMASTER CARR)		49
				1								(4464K255)	HEX PLUG, 3/4 NPT	(McMASTER CARR)		50

(SEE CONTINUED ON SHEET 2)

PAUL M. DORSH — STATE OF WASHINGTON — 41918 — REGISTERED PROFESSIONAL ENGINEER

5/26/2020

DATE: May 26, 2020 — HANFORD RELEASE

DWG NUMBER	TITLE
DRAWING TRACEABILITY LIST	

REF NUMBER	TITLE
H-15-38	LERF BASIN 41
H-2-838745	DRAWING LIST/TITLE SHEET
REFERENCES	
NEXT USED ON H-2-838767	

REV NO	DESCRIPTION
0	RELEASED PER EDT-882463
REVISIONS	

SYSTEM NO 242-AL, 242AL-41 — INDEX NO 8407

CAUTION: NOT COMPLETE WITHOUT CURRENT CHANGE DOCUMENTS FROM DATABASE

	NAME	DATE	COMPANY
DRAFTER	W T ARNDT		
DRAFTING CHECKER	H A MENDEZ		
ENGINEERING PEER REVIEWER	C C JOSLYN		
SCIENCE ENGINEER	P M DORSH		
DESIGN AUTHORITY	N W WILSON		

U.S. DEPARTMENT OF ENERGY
Office of River Protection

LERF BASIN 41
CATCH BASIN PIPING
NOTES AND PARTS LIST

SIZE F — DRAWING NUMBER H-2-838771 — SHEET 1 — REV 00

SCALE SHOWN

29778 — DOE_RL_F.DWG (SEPTEMBER 2014)

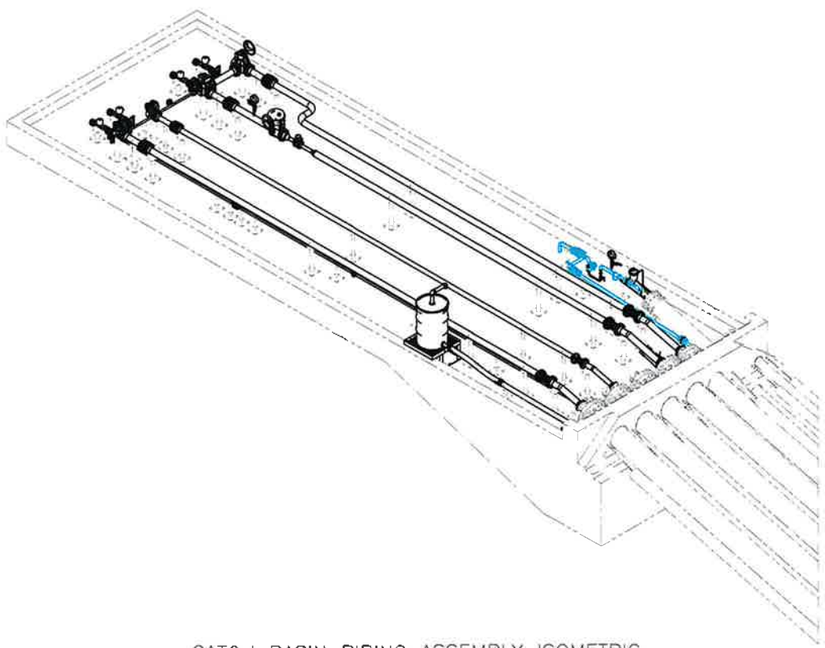

CATCH BASIN PIPING ASSEMBLY ISOMETRIC

SCALE: NO SCALE

PARTS/MATERIAL LIST

QTY -120	QTY -110	QTY -100	QTY -090	QTY -080	QTY -070	QTY -060	QTY -050	QTY -040	QTY -030	QTY -020	QTY -010	PART/DASH NUMBER	NOMENCLATURE/DESCRIPTION	MATERIAL/REFERENCE	SHT	ITEM NO
		1											GRATING, 1 1/2" X 3/16" RECTANGULAR BAR, CW SERIES, GALVANIZED, 28 X 28	MONKCHOLS		51
							1	1				170400-11A02-SSTT-NO-0024	BALL VALVE, 3 WAY, 4 INCH	FLOWTEK		52
								1				150400-11000SSUT-NB-0001	BALL VALVE, 2 WAY, 4 INCH, FP F15, 60 DEG V PORT	FLOWTEK		53
										1		150400-11000SSTT-NN-0001	BALL VALVE, 2 WAY, 4 INCH, FP F15	FLOWTEK		54
									1			140300-11000SSTT-NN-0001	BALL VALVE, 2 WAY, 3 INCH, FP F15	FLOWTEK		55
					1							150100-11000SSTT-NN-0001	BALL VALVE, 1 INCH, FP F15	FLOWTEK		56
								2				(46495K210)	BALL VALVE, 1/2	(MCMASTER CARR)		57
					1							SS-4SS8-SH	VALVE, ON-OFF, 1/2 TUBE OD	SWAGELOK		58
								1				700501-113C0538/K	MOTOR OPERATED ACTUATOR	BRAY		59
							1	1				FTG33	MANUAL OPERATOR, 30:1	FLOWTEK		60
									1	1		FTG22	MANUAL OPERATOR, 22:1	BRAY		61
									1			EZ-011S	MOUNTING BRACKET	FLOWTEK		62
										1			MOUNTING BRACKET	FLOWTEK		63
								1				EZ-013S	MOUNTING BRACKET	FLOWTEK		64
							1	1				EZ-045S	MANUALY OPERATOR MOUNTING BRACKET	FLOWTEK		65
							1	1		1		MNLC150FL0400	EXPANSION JOINT, 4 INCH	METRAFLEX		66
									1			MNLC150FL0300	EXPANSION JOINT, 3 INCH	METRAFLEX		67
							1	1		1			DURCOR FLANGED FLEXIJOINT, 4 INCH, 5 CONVOLUTIONS	ETHYLENE		68
									1				DURCOR FLANGED FLEXIJOINT, 3 INCH, 4 CONVOLUTIONS	ETHYLENE		69
						1					4		DURCOR FLANGED FLEXIJOINT, 1 INCH, 4 CONVOLUTIONS	ETHYLENE		70
	1											(6795K54)	CAM AND GROOVE HOSE COUPLING, 2 FNPT, SSTL	(McMASTER CARR)		71
				1								(53015K570)	CAM AND GROOVE HOSE COUPLING, 3 NPT, SSTL	(McMASTER CARR)		72
2												(53015K167)	CAM AND GROOVE HOSE COUPLING FEMALE X BARBED, 3 INCH, SSTL	(McMASTER CARR)		73
							5	7		5	3		GASKET, 1/8 THK, 4 INCH, RF, CL150	GARLOCK		74
									5		2		GASKET, 1/8 THK, 3 INCH, RF, CL150	GARLOCK		75
								2					GASKET, 1/8 THK, 2 INCH RF, CL150	GARLOCK		76
											1		GASKET, 1/8 THK, 1 1/2 INCH RF, CL150	GARLOCK		77
						4					9		GASKET, 1/8 THK, 1 INCH, RF, CL150	GARLOCK		78
AR													HOSE, 3 INCH, PICORD EXTREMEFLEX FOOD GRADE X X FT LG	GOODYEAR		79
	1												VENTSORB, 2 FNPT INLET, 2 FNPT OUTLET	CALGON CARBON		80
					1							OP-C-3	ORIFICE PLATE FLOWMETER	DWYER		81
								1				8711-TSA-020-R-5-NO-DT	MAGNETIC FLOWMETER	ROSEMOUNT		82
					1							FLT935-1B-1A201E-4C000-00	FLEXSWITCH	FCI		83
								1				351009 SW L 04 L XLLC4 100#	PRESSURE GAUGE, 1/2 NPT, 3 1/2 FACE, 0 TO 100 PSIG	ASHCROFT		84
					1							84762-10600BN4W	LIQUID LEVEL GAGE, 6 INCH CENTERLINE, 3/4 NPT ADAPTERS	OIL-RITE		85
							24	40	12	24	28		STUD, 5/8-11 UNC-2A X 3 1/2 LG	ASTM A193 GR B8 CL2		86
								4					STUD, 5/8-11 UNC-2A X 6 3/8 LG	ASTM A193 GR B8 CL2		87
						8					20		STUD, 1/2-13 UNC-2A X 2 1/2 LG	ASTM A193 GR B8 CL2		88
											4		STUD, 1/2-13 UNC-2A X 3 1/4 LG	ASTM A193 GR B8 CL2		89
					4								STUD, 1/2-13 UNC-2A X 3 3/4 LG	ASTM A193 GR B8 CL2		90
							14	14	8	14			HEX BOLT, 5/8-11 UNC-2A X 1 3/4 LG	ASTM A193 GR B8 CL2		91
											16		HEX BOLT, 1/2-13 UNC-2A X 1 1/4 LG	ASTM A193 GR B8 CL2		92
							48	88	24	48	56		NUT, HEX 5/8-11 UNC-2B	ASTM A194 GR 8		93
					8	16					52		NUT, HEX 1/2-13 UNC-2B	ASTM A194 GR 8		94

(BOM CONTINUED FROM SHEET 1)

PAUL M. DORSH — STATE OF WASHINGTON — 41918 — REGISTERED PROFESSIONAL ENGINEER

5/26/2020

DATE: May 26, 2020 — HANFORD RELEASE

DWG NUMBER	TITLE
DRAWING TRACEABILITY LIST	

REF NUMBER	TITLE
REFERENCES	
NEXT USED ON SHEET 1	

REV	DESCRIPTION
0	RELEASED PER EDT-882463
REVISIONS	

BLOCK NO 242-AL 242AL-41

BLOCK NO 8407

CAUTION: NOT COMPLETE WITHOUT CURRENT CHANGE DOCUMENTS FROM DATABASE

	NAME	DATE
DRAWN BY	W T ARNDT	05/26/2020
DRAFTING CHECKED	H A MENDEZ	05/26/2020
ENGINEERING PEER REVIEWER	C C JOSLYN	05/26/2020
SERVICE ENGINEER	P M DORSH	05/26/2020
DESIGN AUTHORITY	N W WILSON	05/26/2020

U.S. DEPARTMENT OF ENERGY
Office of River Protection

LERF BASIN 41
CATCH BASIN PIPING
ISOMETRIC

SIZE F — DRAWING NUMBER H-2-838771 — SHEET 2 — REV 00

SCALE SHOWN

29769

DOE_TB_F.DWG (SEPTEMBER 2014)

NOTES:
FOR GENERAL NOTES AND PARTS/MATERIAL SEE SHEET 1 AND 2.

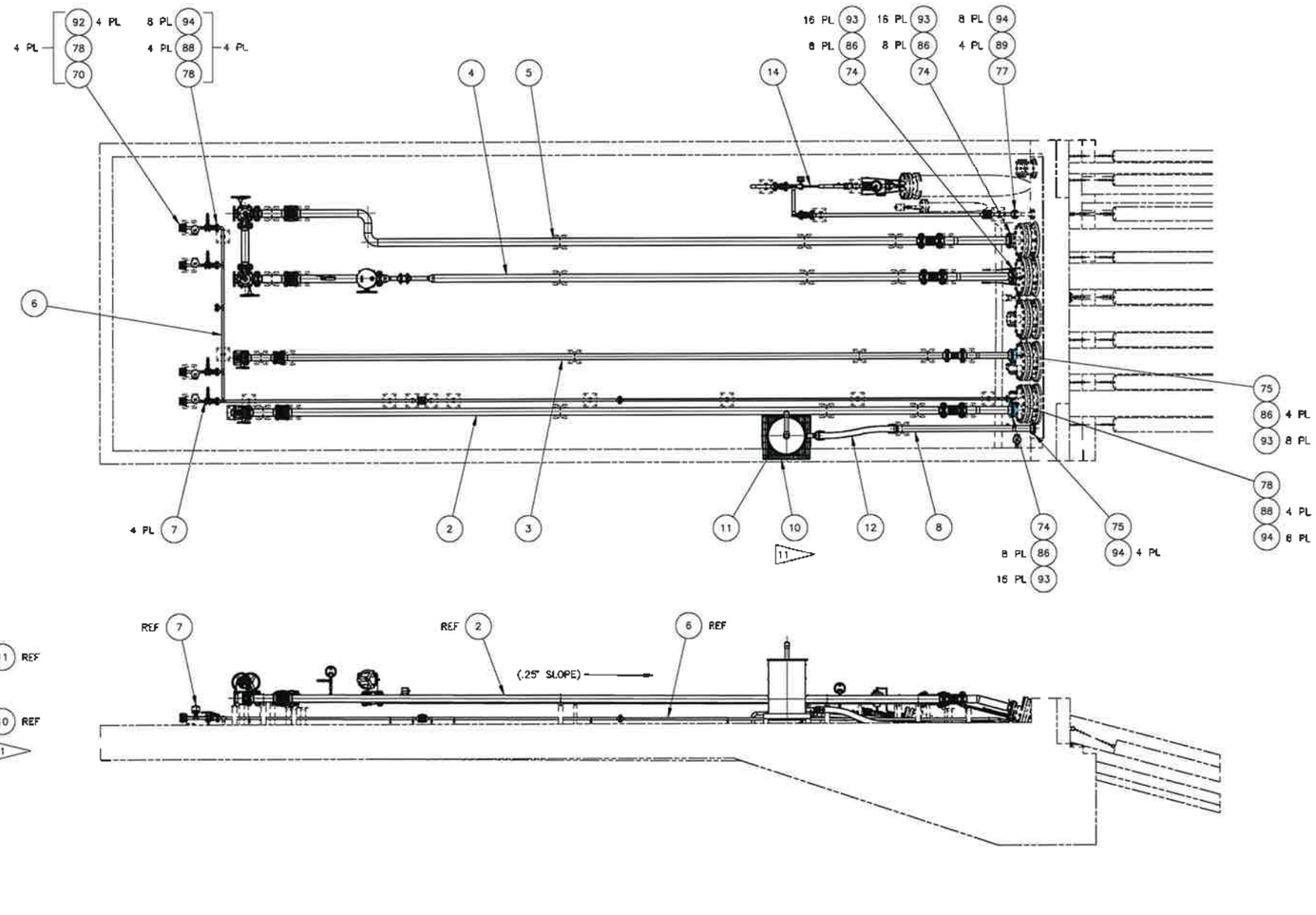

1 CATCH BASIN PIPING ASSEMBLY
SCALE: 1/32

PAUL M. DORSH
STATE OF WASHINGTON
41918
REGISTERED
PROFESSIONAL ENGINEER
5/26/2020

DATE:
May 26, 2020
HANFORD RELEASE

DWG NUMBER	TITLE
DRAWING TRACEABILITY LIST	

REF NUMBER	TITLE
REFERENCES	
NEXT USED ON SHEET 1	

0	RELEASED PER EDT-882463
REVISIONS	

BLDG NO 242-AL, 242AL-41
INDEX NO 8407

CAUTION: NOT COMPLETE WITHOUT CURRENT CHANGE DOCUMENTS FROM DATABASE

	NAME	DATE	COMPANY
DRAFTER	W T ARNDT	05/26/20	WRPS
DRAFTING DESIGNER	H A MENDEZ	05/26/20	WRPS
ENGINEERING FIELD REVIEWER	C C JOSLYN	05/26/20	WRPS
DESIGN ENGINEER	P M DORSH	05/26/20	WRPS
DESIGN AUTHORITY	N W WILSON	05/26/20	WRPS

U.S. DEPARTMENT OF ENERGY
Office of River Protection

LERF BASIN 41
CATCH BASIN PIPING
ASSEMBLY

SIZE F | DRAWING NUMBER H-2-838771 | SHEET 3 | REV 00
SCALE SHOWN

25785

NOTES:
FOR GENERAL NOTES AND PARTS/MATERIAL SEE SHEET 1 AND 2.

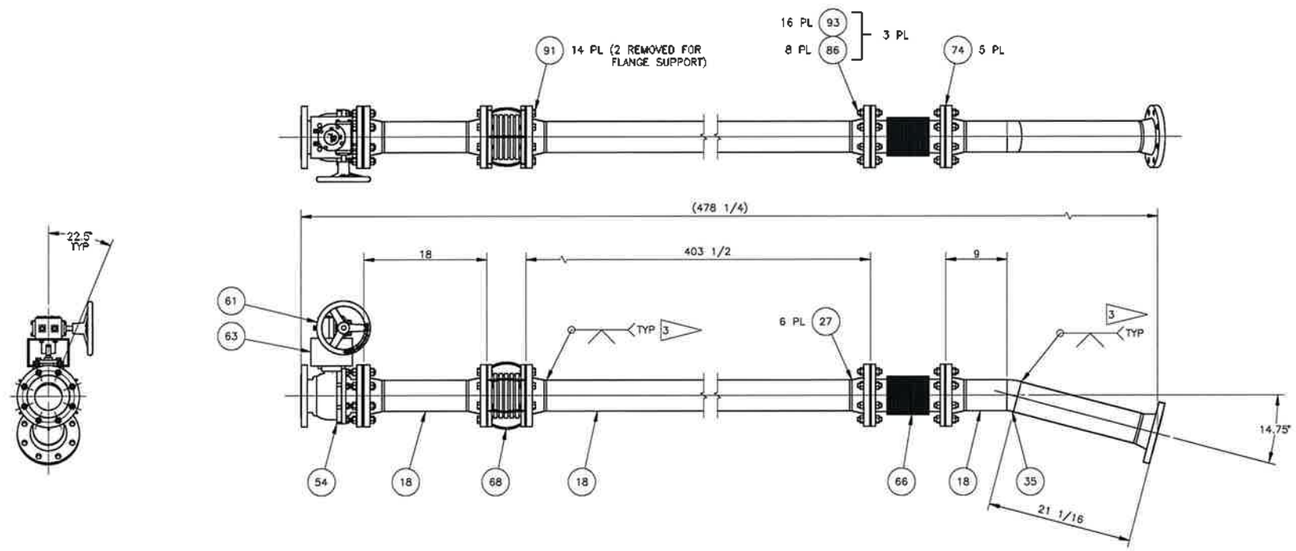

2 WTP/EMF EFFLUENT SPOOL
SCALE: 1/8

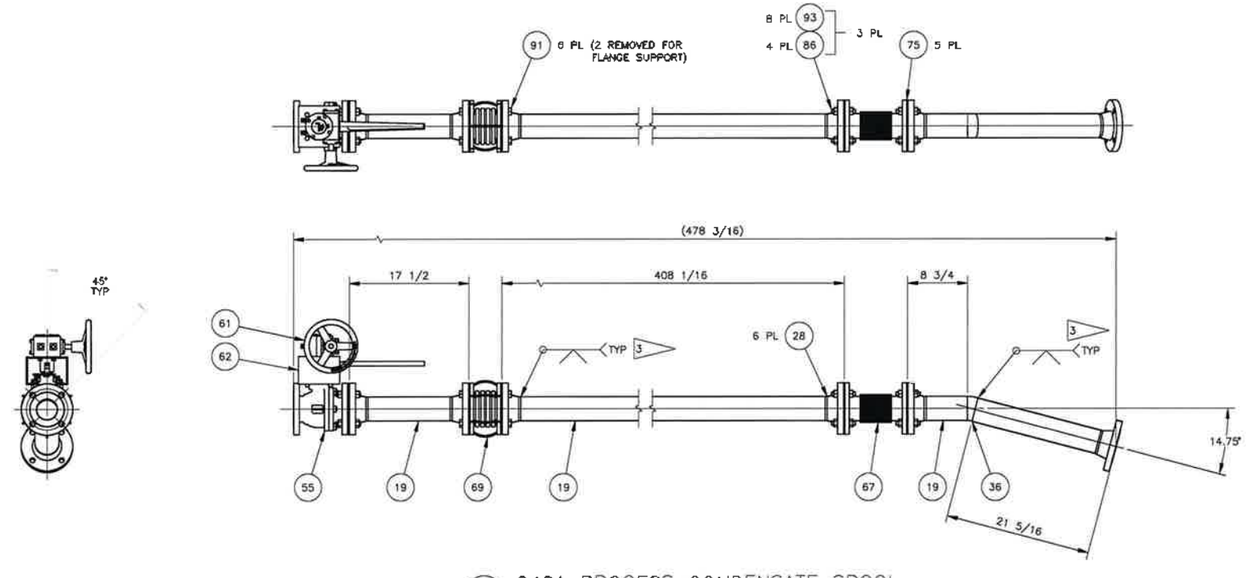

3 242A PROCESS CONDENSATE SPOOL
SCALE 1/8

PAUL M. DORSH
STATE OF WASHINGTON
41918
REGISTERED
PROFESSIONAL ENGINEER
5/26/2020

DATE:
May 26, 2020
HANFORD RELEASE

DWG NUMBER	TITLE	REF NUMBER	TITLE
DRAWING TRACEABILITY LIST		REFERENCES	
		NEXT USED ON SHEET 1	

REV	DESCRIPTION
0	RELEASED PER EDT-662463

REVISIONS

DESIGN NO	242-AL, 242AL-41
SHEET NO	8407

CAUTION: NOT COMPLETE WITHOUT CURRENT CHANGE DOCUMENTS FROM DATABASE

	NAME	DATE
DRAWN BY	W T ARNDT	
MANUAL DRAFTS	H A MENDEZ	
ENGINEERING FIELD REVIEWER	C C JOSLYN	
DESIGN ENGINEER	P M DORSH	
DESIGN AUTHORITY	N W WILSON	

U.S. DEPARTMENT OF ENERGY
Office of River Protection

LERF BASIN 41
CATCH BASIN PIPING
DETAILS

SIZE	DRAWING NUMBER	SHEET	REV
F	H-2-838771	4	00

SCALE SHOWN

NOTES:
FOR GENERAL NOTES AND PARTS/MATERIAL SEE SHEET 1 AND 2.

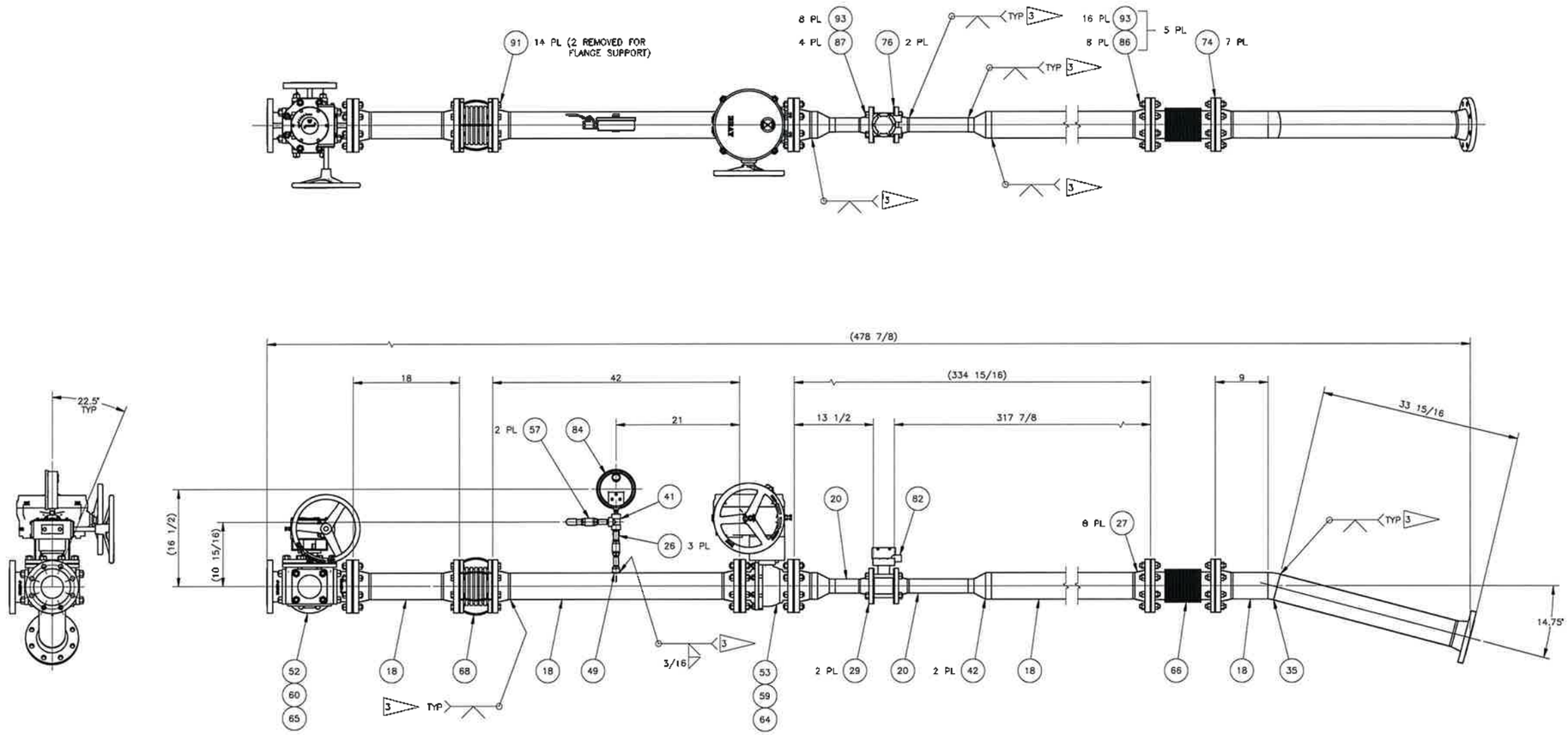

4 BASIN PUMP SPOOL
SCALE: 1/8

PAUL M. DORSH
STATE OF WASHINGTON
41918
REGISTERED
PROFESSIONAL ENGINEER
5/26/2020

DATE:
May 26, 2020
HANFORD RELEASE

DWG NUMBER	TITLE
DRAWING TRACEABILITY LIST	

REF NUMBER	TITLE
REFERENCES	
NEXT USED ON SHEET 1	

REV NO	DESCRIPTION
0	RELEASED PER EDT-882463
REVISIONS	

BLDG NO: 242-AL, 242AL-41
MODEL NO: 8407

CAUTION: NOT COMPLETE, WITHOUT CURRENT CHANGE DOCUMENTS FROM DATABASE

	NAME	DATE	COMPANY
DRAWN BY	W T ARNDT	5/26/2020	MPS
DRAFTING CHECKED	H A MENDEZ	5/26/2020	MPS
ENGINEERING TECH REVIEWER	C C JOSLYN	5/26/2020	MPS
ENGINEERING CHECKED	P M DORSH	5/26/2020	MPS
DESIGN AUTHORITY	N W WILSON	5/26/2020	MPS

U.S. DEPARTMENT OF ENERGY
Office of River Protection

LERF BASIN 41
CATCH BASIN PIPING
ASSEMBLY

SIZE F | DRAWING NUMBER H-2-838771 | SHEET 5 | REV 00
SCALE SHOWN

29773

NOTES:
FOR GENERAL NOTES AND PARTS/MATERIAL SEE SHEET 1 AND 2.

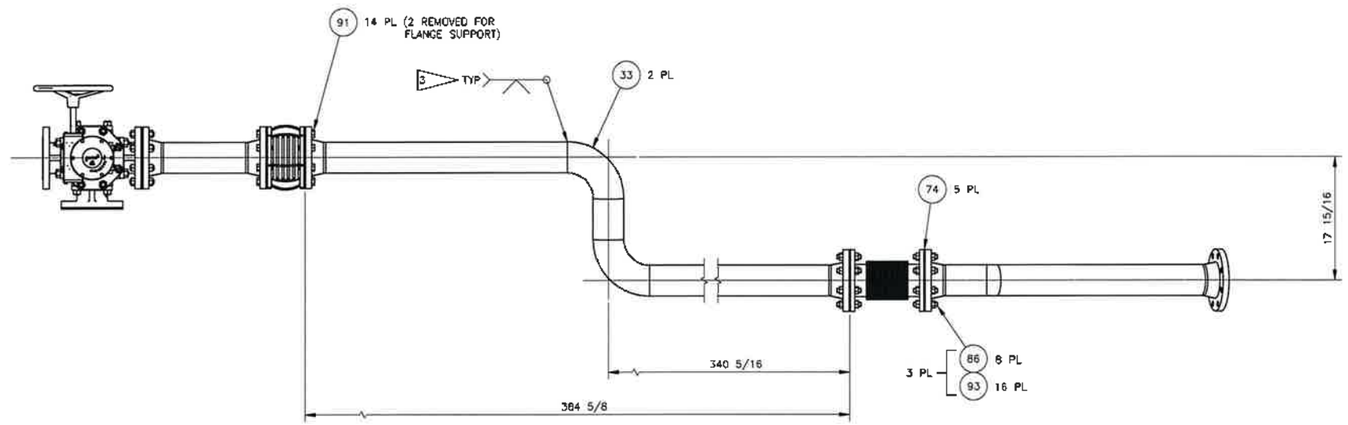

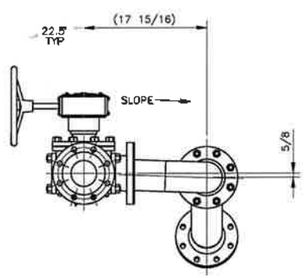

(VALVE AND ACTUATOR REMOVED FROM THIS VIEW FOR CLARITY)

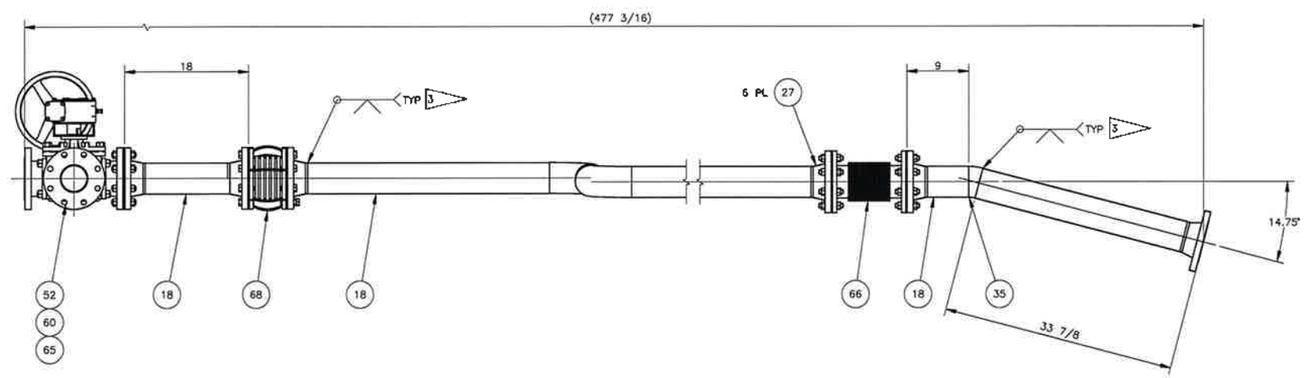

5 BASIN PUMP RECIRC/TRANSFER SPOOL
SCALE: 1/8

PAUL M. DORSH
STATE OF WASHINGTON
41918
REGISTERED
PROFESSIONAL ENGINEER
5/26/2020

DATE:
May 26, 2020
HANFORD RELEASE

DWG NUMBER	TITLE
DRAWING TRACEABILITY LIST	

REF NUMBER	TITLE
REFERENCES	
NEXT USED ON SHEET 1	

REV	DESCRIPTION
0	RELEASED PER EDT-882463
REVISIONS	

BLDG NO 242-AL 242AL-41
INDEX NO 8407

CAUTION: NOT COMPLETE WITHOUT CURRENT CHANGE DOCUMENTS FROM DATABASE

	NAME	DATE	COMPANY
DRAFTER	W. L. ARNOT		
DRAFTING CHECKER	H. A. MENDEZ		
CHALLENGE TEAM REVIEWER	G. C. JOSLYN		
DESIGN ENGINEER	P. M. DORSH		
DESIGN AUTHORITY	N. W. WILSON		

U.S. DEPARTMENT OF ENERGY
Office of River Protection

LERF BASIN 41
CATCH BASIN PIPING
ASSEMBLY

SIZE	DRAWING NUMBER	SHEET	REV
F	H-2-838771	6	00

SCALE SHOWN

NOTES:
FOR GENERAL NOTES AND PARTS/MATERIAL SEE SHEET 1 AND 2.

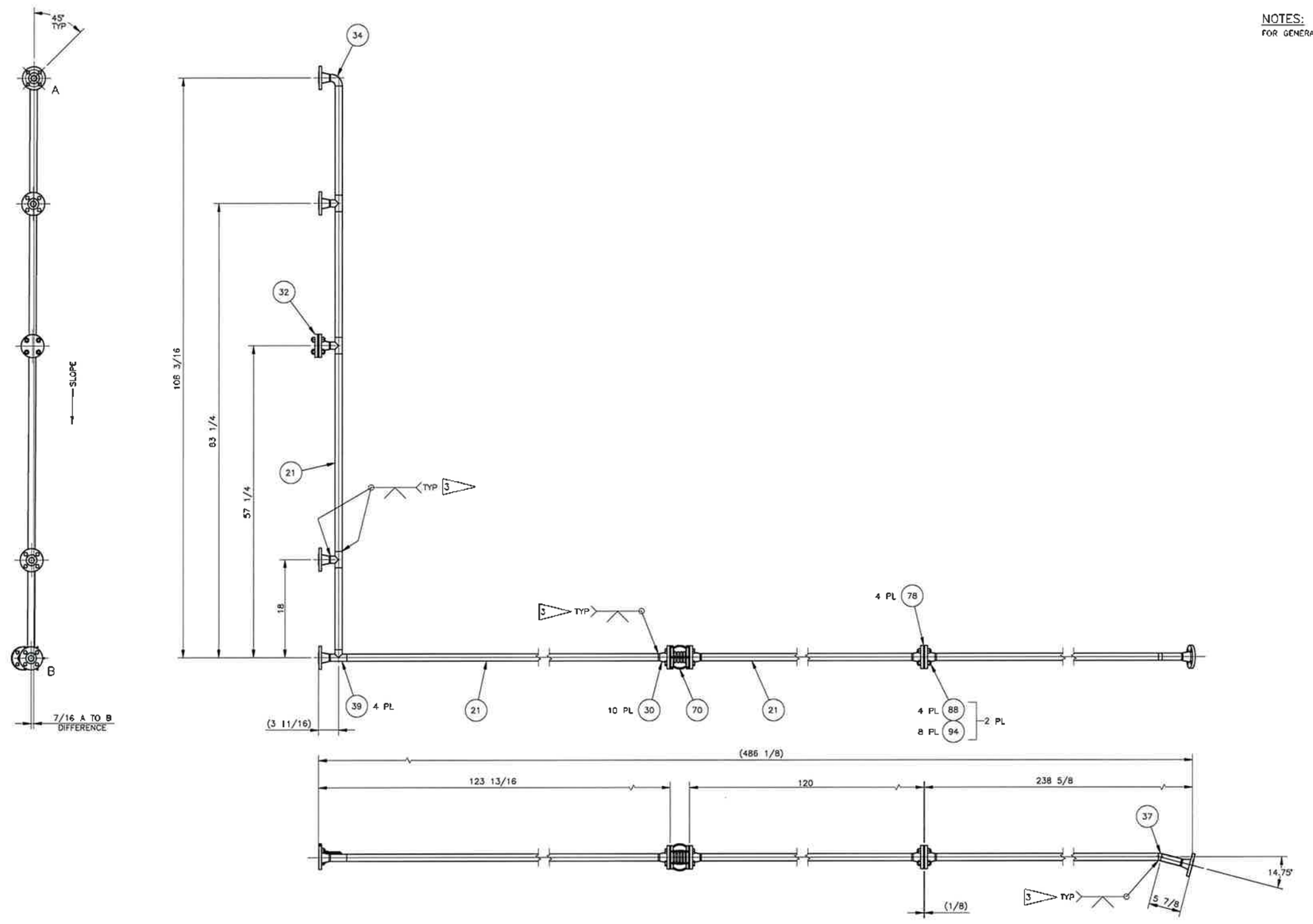

(SOME ITEMS IN THIS VIEW REMOVED FOR CLARITY)

6 DRAIN SPOOL
SCALE: 1/12

STATE OF WASHINGTON
PAUL M. DORSH
41918
REGISTERED
PROFESSIONAL ENGINEER
5/26/2020

DATE:
May 26, 2020
HANFORD RELEASE

DWG NUMBER	TITLE
DRAWING TRACEABILITY LIST	

REF NUMBER	TITLE
REFERENCES	
NEXT USED ON SHEET 1	

REV NO	DESCRIPTION
0	RELEASED PER EDT-882463
REVISIONS	

BLDG NO 242-AL 242AL-41
INDEX NO 8407

CAUTION: NOT COMPLETE WITHOUT CURRENT CHANGE DOCUMENTS FROM DATABASE

	NAME	DATE	COMPANY
DRAFTER	W T ARNDT	05/26/2020	MSA
DRAFTING CHECKER	H A MENDEZ	05/26/2020	MSA
CHARACTERIZE PEER REVIEWER	C C JOSLYN	05/26/2020	MSA
LEAD ENGINEER	P M DORSH	05/26/2020	MSA
DESIGN AUTHORITY	N W WILSON	05/26/2020	MSA

U.S. DEPARTMENT OF ENERGY
Office of River Protection

LERF BASIN 41
CATCH BASIN PIPING
ASSEMBLY

SIZE F | DRAWING NUMBER H-2-838771 | SHEET 7 | REV 00
SCALE SHOWN

297ab

NOTES:
FOR GENERAL NOTES AND PARTS/MATERIAL SEE SHEET 1 AND 2.

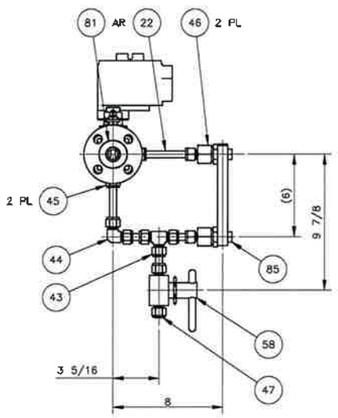

(SOME OBJECTS REMOVED FROM THIS VIEW)

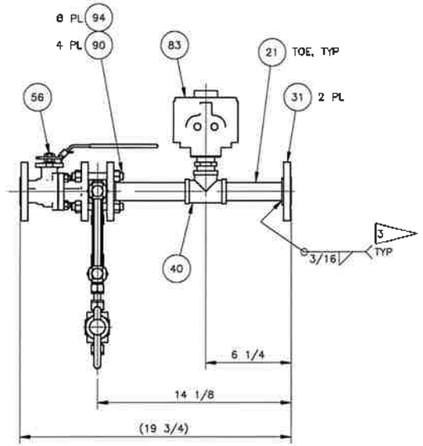

7 LEAK DETECTOR SPOOL
SCALE: 1/4

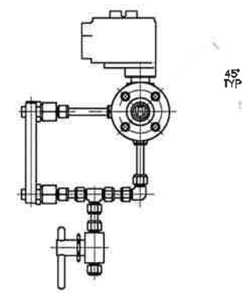

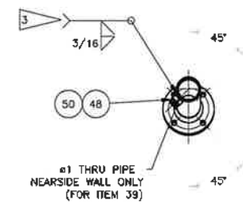

SECTION A–A
SCALE: 1/8

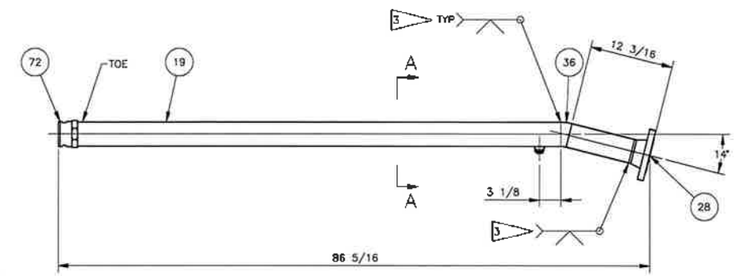

8 VENT SPOOL
SCALE: 1/8

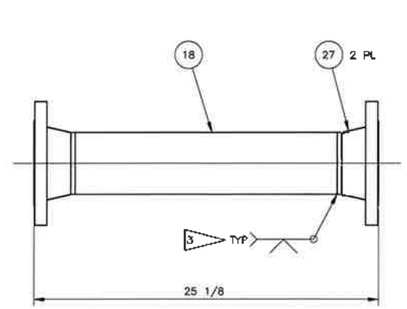

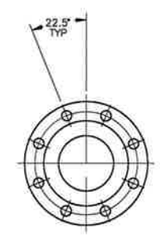

9 3–WAY TIE IN SPOOL
SCALE: 1/4

DATE:
May 26, 2020
HANFORD RELEASE

DWG NUMBER	TITLE
DRAWING TRACEABILITY LIST	

REF NUMBER	TITLE
REFERENCES	
NEXT USED ON SHEET 1	

REV	DESCRIPTION
0	RELEASED PER EDT-682463
REVISIONS	

BLDG NO 242-AL 242AL-41
INDEX NO 8407

CAUTION: NOT COMPLETE WITHOUT CURRENT CHANGE DOCUMENTS FROM DATABASE

	NAME	DATE	COMPANY
DRAFTER	W T ARNDT	5/26/20	SSPS
DRAFTING OVERSEE	H A MENDEZ	5/26/20	SSPS
ENGINEERING PEER REVIEWER	C C JOSLYN	5/26/20	SSPS
DESIGN ENGINEER	P M DORSH	5/26/20	SSPS
DESIGN AUTHORITY	N W WILSON	5/26/20	SSPS

U.S. DEPARTMENT OF ENERGY
Office of River Protection

LERF BASIN 41
CATCH BASIN PIPING
DETAILS

SIZE F | DRAWING NUMBER H-2-838771 | SHEET 8 | REV 00
SCALE SHOWN
29770

NOTES:
FOR GENERAL NOTES AND PARTS/MATERIAL SEE SHEET 1 AND 2.

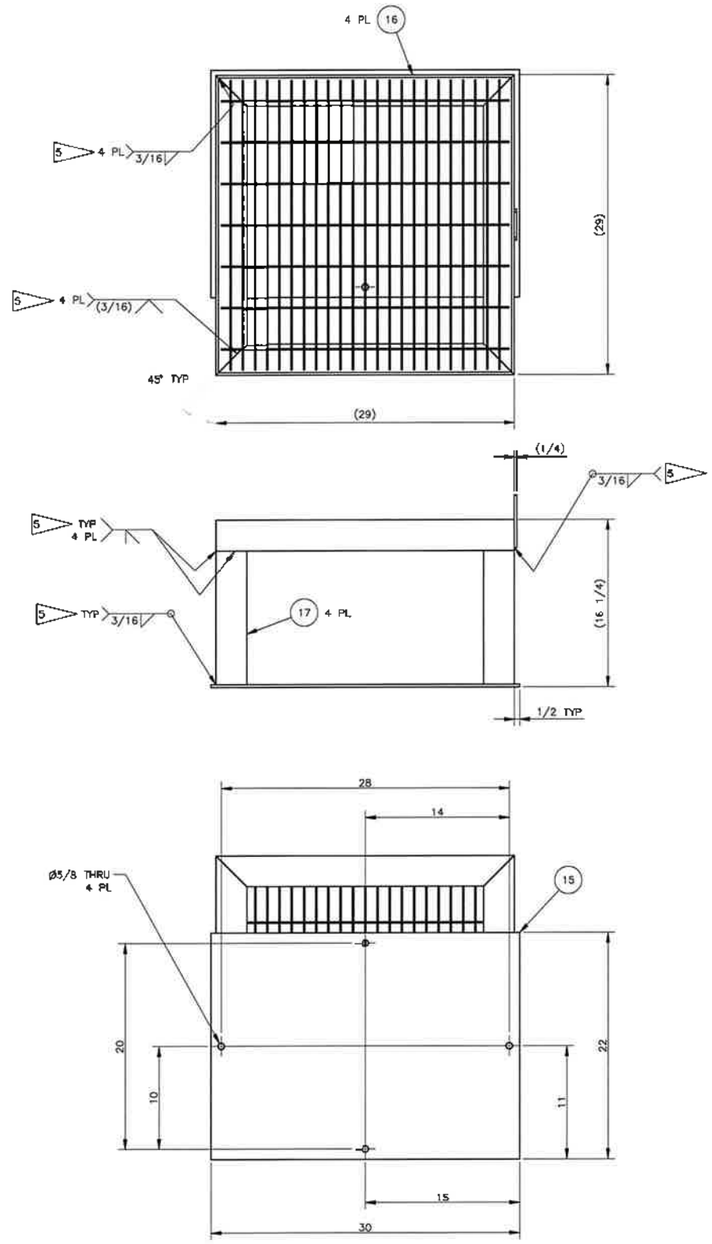

10 VENT FILTER FRAME
SCALE: 3/16
(GRATING REMOVED FOR CLARITY)

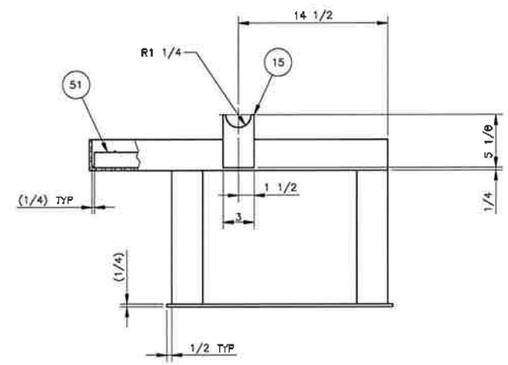

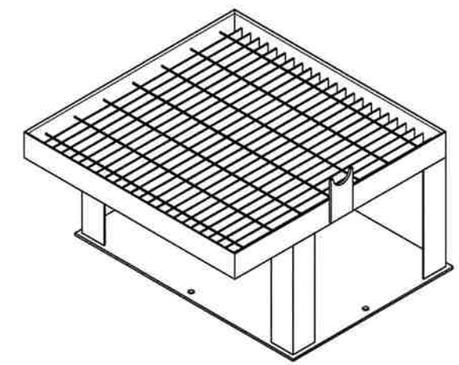

PAUL M. DORSH
STATE OF WASHINGTON
41918
REGISTERED
PROFESSIONAL ENGINEER
5/26/2020

DATE:
May 26, 2020
HANFORD RELEASE

DWG NUMBER	TITLE
DRAWING TRACEABILITY LIST	

REF NUMBER	TITLE
REFERENCES	
NEXT USED ON SHEET 1	

REV	DESCRIPTION
0	RELEASED PER EDT-882463

REVISIONS

BLDG NO 242-AL 242AL-41
MODEL NO 8407

CAUTION: NOT COMPLETE WITHOUT CURRENT CHANGE DOCUMENTS FROM DATABASE

	NAME	DATE	CONTRACT
DRAWN BY	W T ARNDT		
DESIGN LEAD	H A MENDEZ		
CHARACTERIZATION REVIEWER	C C JOSLYN		
DESIGN REVIEWER	P M DORSH		
DRAWING MANAGER	N W WILSON		

U.S. DEPARTMENT OF ENERGY
Office of River Protection

LERF BASIN 41
CATCH BASIN PIPING
ASSEMBLY

SIZE	DRAWING NUMBER	SHEET	REV
F	H-2-838771	9	00

SCALE SHOWN

29781

NOTES:
FOR GENERAL NOTES AND PARTS/MATERIAL SEE SHEET 1 AND 2.

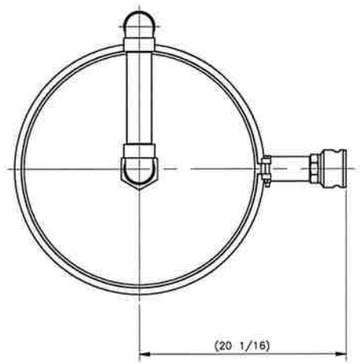

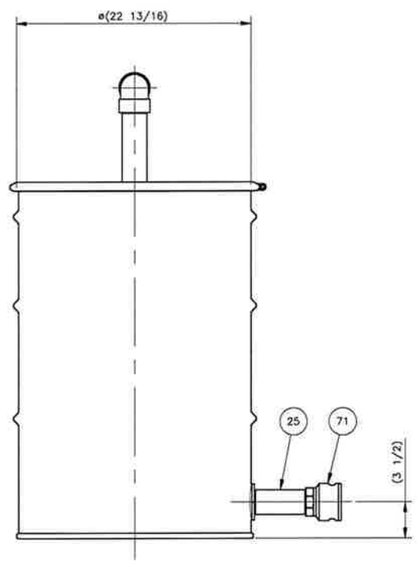

11 VENT FILTER ASSEMBLY
SCALE: 1/8

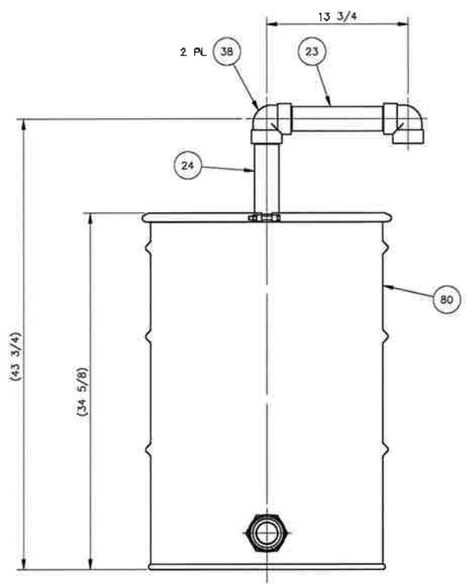

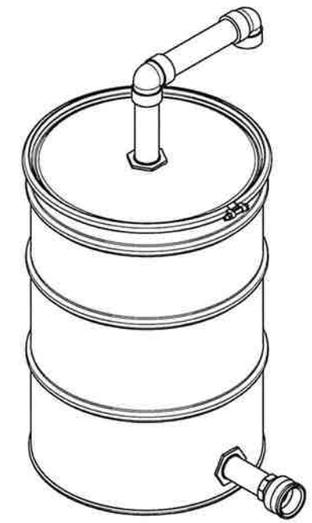

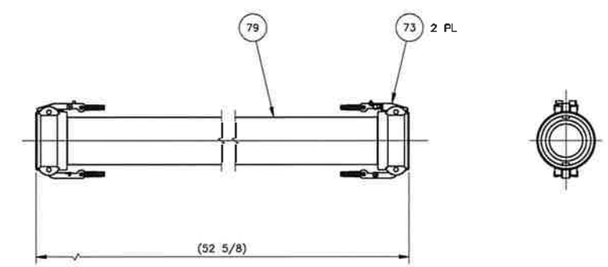

12 VENT HOSE ASSEMBLY
SCALE: 1/4

PAUL M. DORSH
STATE OF WASHINGTON
41918
REGISTERED
PROFESSIONAL ENGINEER
5/26/2020

DATE:
May 26, 2020
HANFORD RELEASE

DWG NUMBER	TITLE
DRAWING TRACEABILITY LIST	

REF NUMBER	TITLE
REFERENCES	
NEXT USED ON SHEET 1	

0	RELEASED PER EDT-682463	
REV	DESCRIPTION	
REVISIONS		

BLDG NO. 242-AL, 242AL-41
INDEX NO. 8407

CAUTION: NOT COMPLETE WITHOUT CURRENT CHANGE DOCUMENTS FROM DATABASE

	NAME	DATE
DRAFTER	W T ARNDT	5/26/2020
ENGINEERING DESIGN	H A MENDEZ	5/26/2020
ENGINEERING DESIGN REVIEWER	C C JOSLYN	5/26/2020
DESIGN ENGINEER	P M DORSH	5/26/2020
DESIGN AUTHORITY	N W WILSON	5/26/2020

U.S. DEPARTMENT OF ENERGY
Office of River Protection

LERF BASIN 41
CATCH BASIN PIPING
DETAILS

SIZE F | DRAWING NUMBER H-2-838771 | SHEET 10 | REV 00
SCALE: SHOWN

29784

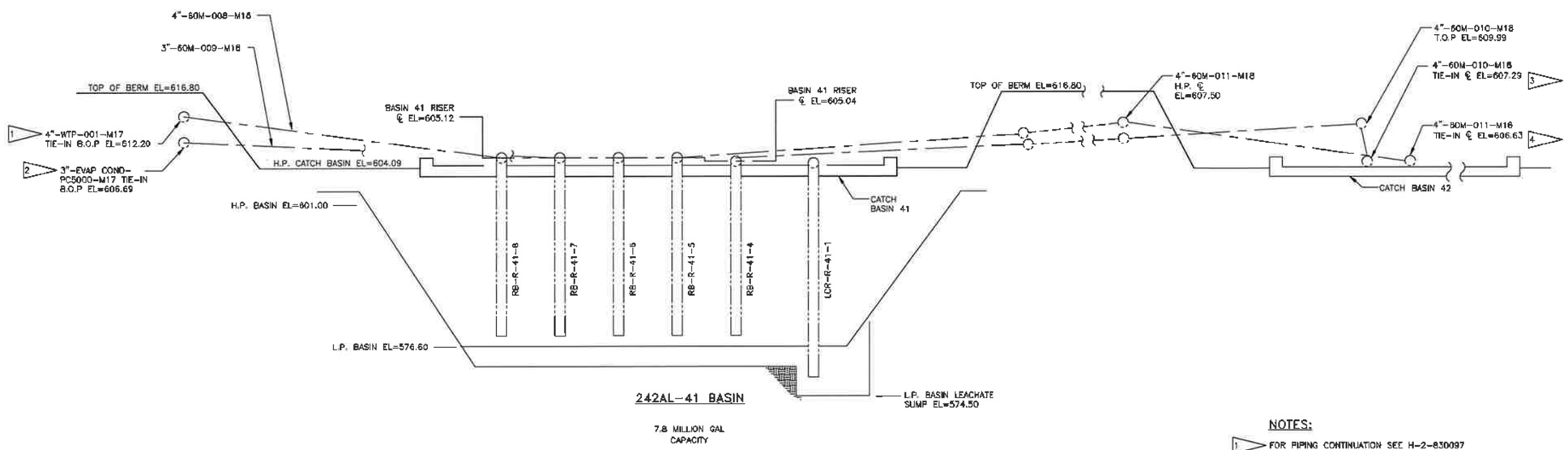

NOTES:

1. FOR PIPING CONTINUATION SEE H-2-830097
2. FOR PIPING CONTINUATION SEE H-2-79610
3. FOR PIPING CONTINUATION SEE H-2-830099 SH 1-2
4. FOR PIPING CONTINUATION SEE SECTION VIEW B ON H-2-79610

PAUL M. DORSH
STATE OF WASHINGTON
41918
REGISTERED
PROFESSIONAL ENGINEER

5/26/2020

DATE:
May 26, 2020
HANFORD RELEASE

DWG NUMBER	TITLE
H-2-838745	DRAWING LIST/TITLE SHEET

DRAWING TRACEABILITY LIST

REF NUMBER	TITLE
NEXT USED ON	

REFERENCES

REV NO	DESCRIPTION
0	RELEASED PER EDT-882463

REVISIONS

SUBSIDIARY NO: 242-AL, 242AL-41
SHEET NO: 8512

CAUTION: NOT COMPLETE WITHOUT CURRENT CHANGE DOCUMENTS FROM DATABASE

	NAME	DATE	COMPANY
DESIGN AGENCY	D. E. CHAPMAN		
DESIGN AGENCY	W. T. ARNDT		
CONSTRUCTION PER RECEIVER	C. C. JOSLYN		
DESIGN ENGINEER	P. M. DORSH		
DESIGN AUTHORITY	N. W. WILSON		

U.S. DEPARTMENT OF ENERGY
Office of River Protection

LERF BASIN 41
MECHANICAL
HYDRAULIC DIAGRAM

SIZE F | DRAWING NUMBER H-2-838774 | SHEET 1 | REV 00

SCALE NONE

297153

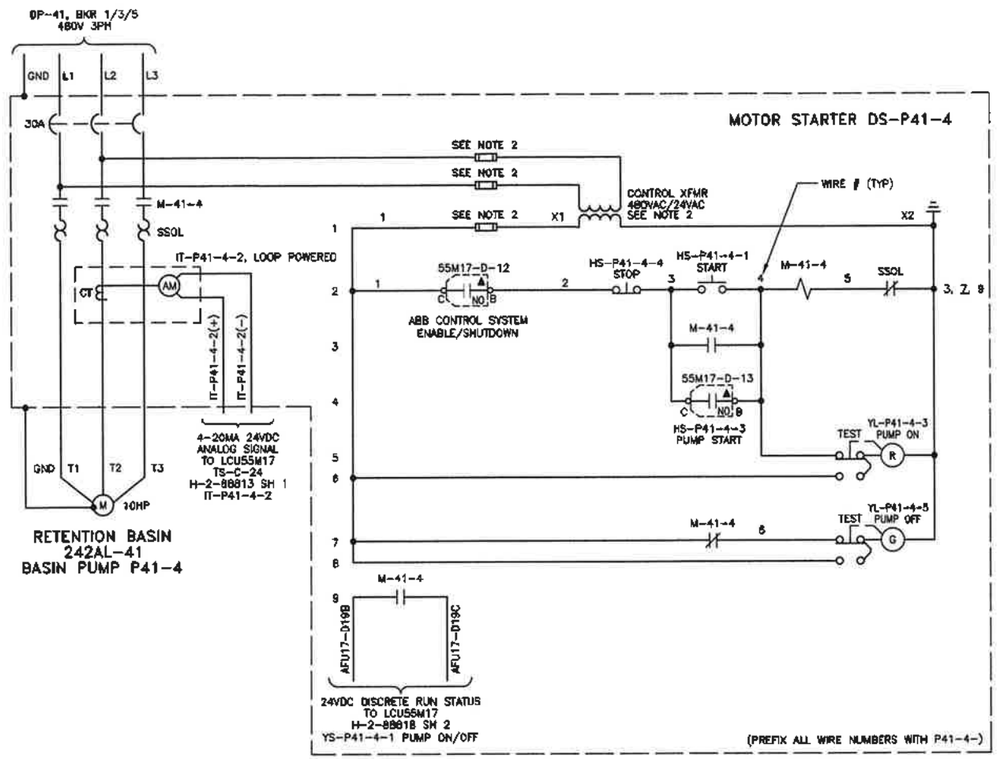

MOTOR STARTER DS-P41-4 ELEMENTARY DIAGRAM

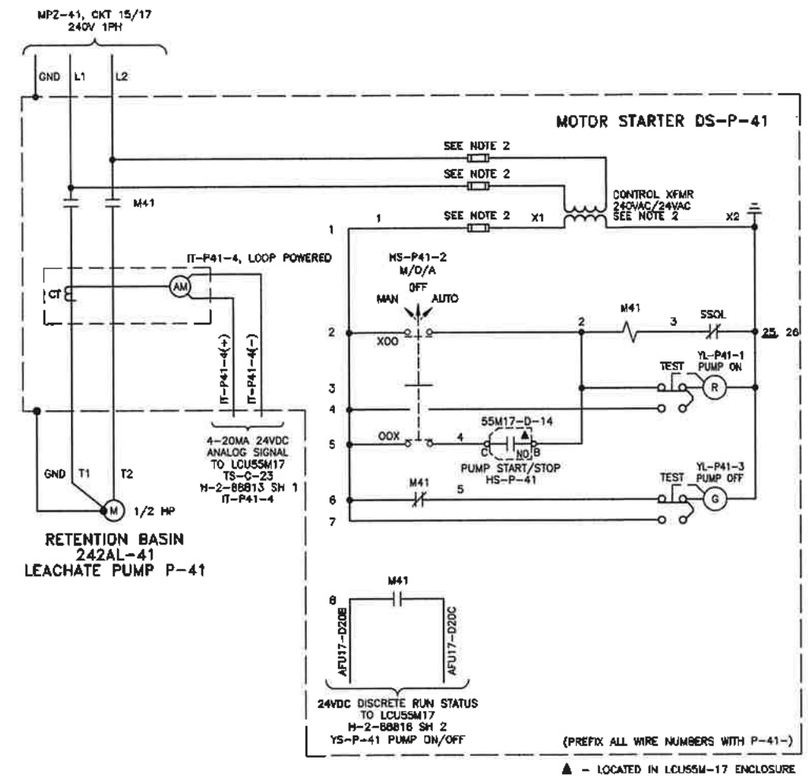

MOTOR STARTER DS-P-41 ELEMENTARY DIAGRAM

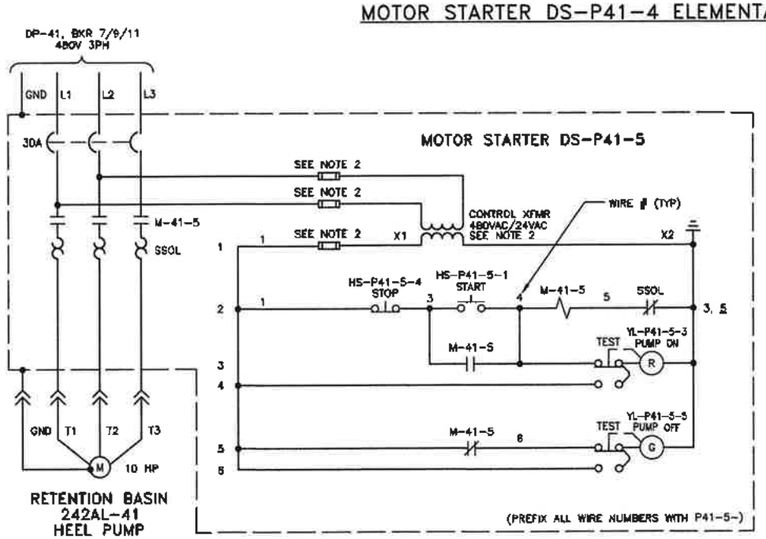

MOTOR STARTER DS-P41-5 ELEMENTARY DIAGRAM

NOTES:

1. SEE DRAWING H-2-838746 FOR ABBREVIATIONS, LEGEND, & GENERAL NOTES.
2. CONTROL TRANSFORMER AND FUSES SHALL BE SIZED BY MOTOR CONTROLLER MANUFACTURER, AND SIZES/RATINGS ADDED TO DRAWING DURING AS-BUILTING.

LORI B. WEIDNER
STATE OF WASHINGTON
38876
REGISTERED
PROFESSIONAL ENGINEER
5/20/2020

DATE:
May 20,2020
HANFORD RELEASE

DWG NUMBER	TITLE
DRAWING TRACEABILITY LIST	

REF NUMBER	TITLE
H-2-838745	DRAWING LIST/TITLE SHEET
REFERENCES	

NEXT USED ON

0	RELEASED PER EDT-882464
REVISIONS	

BLDG NO: 242-AL, 242AL-41, 242AL-71
INDEX NO: 5903, 7302

CAUTION: NOT COMPLETE WITHOUT CURRENT CHANGE DOCUMENTS FROM DATABASE.

	NAME	DATE
DRAFTER	L R CONLEY	
DESIGN ENGINEER	D R CHAPMAN	
ENGINEERING TECH REVIEW	S P O'HARA	
ENGINEER OWNER	L B WEIDNER	
DESIGN AUTHORITY	N W WILSON	

U.S. DEPARTMENT OF ENERGY
Office of River Protection

ELECTRICAL
ELEMENTARY DIAGRAM
BASIN 41 PUMPS

SIZE F | DRAWING NUMBER H-2-79668 | SHEET 6 | REV 00
SCALE NONE

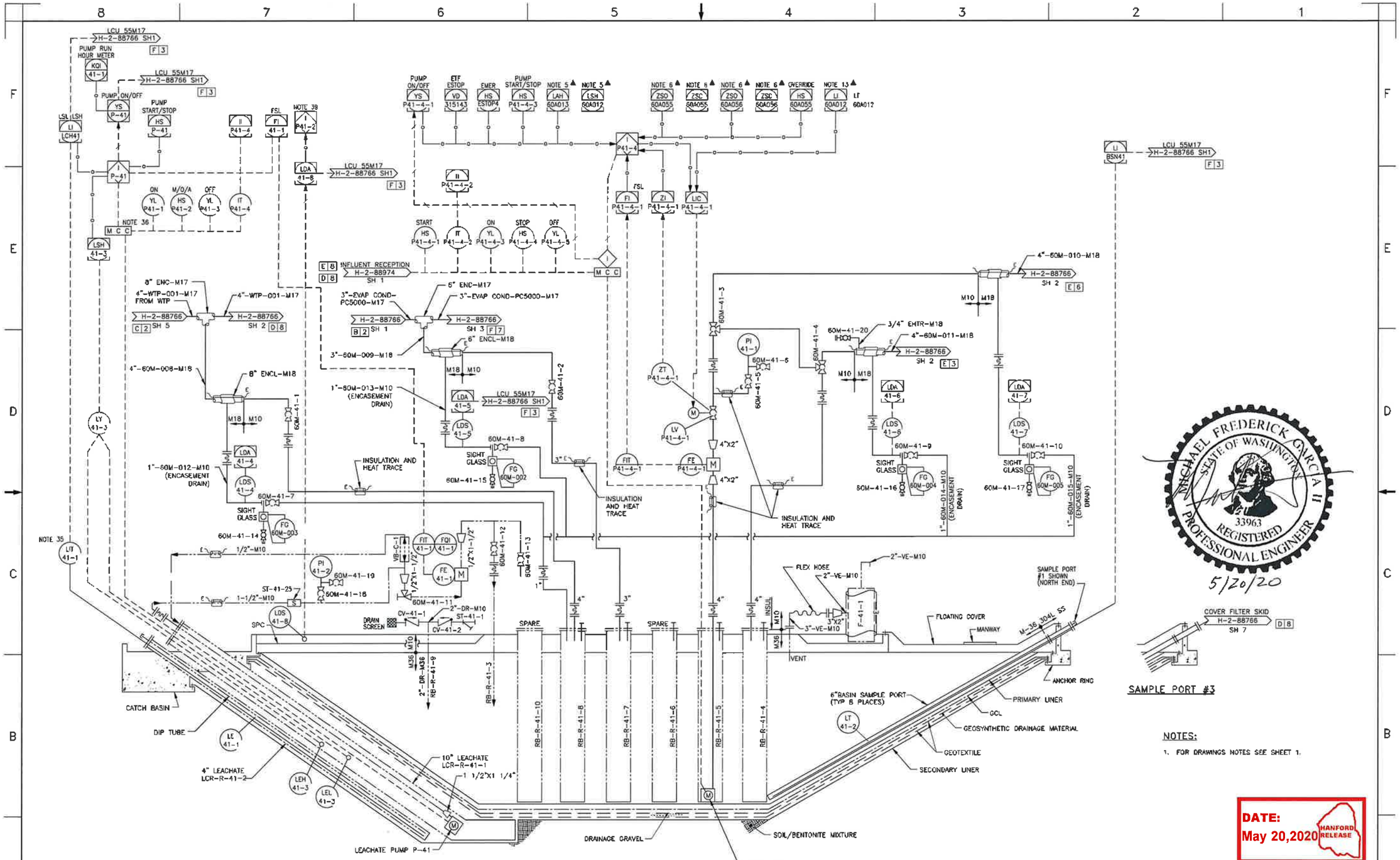
242-A EVAP COND
242AL-41
7.8 MILLION GAL CAPACITY
SAMPLE PORT #3
NOTES:
1. FOR DRAWINGS NOTES SEE SHEET 1.
DATE: May 20,2020
HANFORD RELEASE
MICHAEL FREDERICK GARCIA II
STATE OF WASHINGTON
33963
REGISTERED PROFESSIONAL ENGINEER
5/20/20
CATCH BASIN
DIP TUBE
LEACHATE PUMP P-41
BASIN PUMP P-41-4
DRAINAGE GRAVEL
SOIL/BENTONITE MIXTURE
SECONDARY LINER
GEOTEXTILE
GEOSYNTHETIC DRAINAGE MATERIAL
GCL
PRIMARY LINER
ANCHOR RING
FLOATING COVER
MANWAY
SAMPLE PORT #1 SHOWN (NORTH END)
6"BASIN SAMPLE PORT (TYP 6 PLACES)
SPARE
SPARE
INSULATION AND HEAT TRACE
INSULATION AND HEAT TRACE
INSULATION AND HEAT TRACE
FLEX HOSE
INFLUENT RECEPTION
H-2-88974 SH 1
U.S. DEPARTMENT OF DEPARTMENT
Office of River Protection
P&ID
LERF BASIN & ETF INFLUENT EVAPORATOR
H-2-88766
RELEASED PER EDT-682459
DRAWING LIST/TITLE SHEET
H-2-838745
242AL-41
7004
NONE

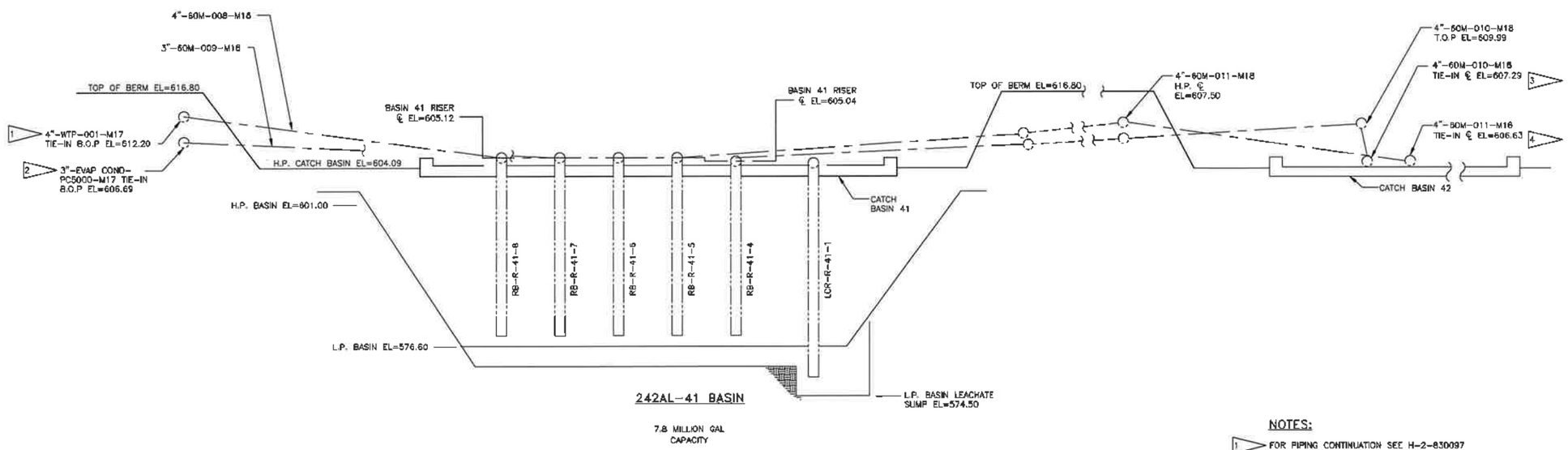

NOTES:

1. FOR PIPING CONTINUATION SEE H-2-830097
2. FOR PIPING CONTINUATION SEE H-2-79610
3. FOR PIPING CONTINUATION SEE H-2-830099 SH 1-2
4. FOR PIPING CONTINUATION SEE SECTION VIEW B ON H-2-79610

PAUL M. DORSH
STATE OF WASHINGTON
41918
REGISTERED
PROFESSIONAL ENGINEER

5/26/2020

DATE:
May 26, 2020
HANFORD RELEASE

DWG NUMBER	TITLE
H-2-838745	DRAWING LIST/TITLE SHEET

DRAWING TRACEABILITY LIST

REF NUMBER	TITLE
NEXT USED ON	

REFERENCES

REV NO	DESCRIPTION
0	RELEASED PER EDT-882463

REVISIONS

SUBSIDIARY NO: 242-AL, 242AL-41
SHEET NO: 8512

CAUTION: NOT COMPLETE WITHOUT CURRENT CHANGE DOCUMENTS FROM DATABASE

	NAME	DATE	COMPANY
DESIGN AGENCY	D. E. CHAPMAN		
DESIGN AGENCY	W. T. ARNDT		
CONSTRUCTION PER RECEIVER	C. C. JOSLYN		
DESIGN ENGINEER	P. M. DORSH		
DESIGN AUTHORITY	N. W. WILSON		

U.S. DEPARTMENT OF ENERGY
Office of River Protection

LERF BASIN 41
MECHANICAL
HYDRAULIC DIAGRAM

SIZE F | DRAWING NUMBER H-2-838774 | SHEET 1 | REV 00

SCALE NONE

297153

GENERAL NOTES: (UNLESS OTHERWISE SPECIFIED)

1. DIMENSIONS ARE IN INCHES, TOLERANCES SHALL BE AS FOLLOWS: FRACTIONS = ±1/8" ANGLES = ±0.5° DECIMAL = .XX ±0.03 .XXX ±.010
2. REMOVE ALL BURRS AND BREAK SHARP EDGES.
3. GROUT PER CONSTRUCTION SPEC 63632, SECTION 03 30 00, MAX 1" THICK. ANCHOR ROD, 1/2" SST ASTM F593 TP 316, 2 3/4" MIN EMBED, 3 1/2" MAX EMBED. HILTI HIT-HY 200 ADHESIVE ANCHOR SYSTEM.
4. FABRICATE, WELD, INSPECT, AND TEST PIPING IN ACCORDANCE WITH ASME B31.3, 2016 FOR CATEGORY NORMAL FLUID SERVICE. DESIGN PRESSURE IS 150 PSIG, AND DESIGN TEMPERATURE IS 150°F. HYDROSTATIC LEAK PRESSURE TEST TO 225 PSIG (-0/+25 PSIG). FABRICATION TEMPERATURE IS 50°F TO 120°F.
5. ALL MACHINED SURFACES SHALL BE 125 IN ACCORDANCE WITH ASME B46.1, 2009, UNLESS OTHERWISE SPECIFIED.
6. WELD AND INSPECT STRUCTURAL WELDS IN ACCORDANCE WITH AWS D1.1, 2015 STATICALLY LOADED CRITERIA. ALL WELDS SHALL BE VT ON FINAL PASS UNLESS OTHERWISE SPECIFIED. WELD PROCEDURES AND QUALIFICATIONS PER ASME B&PV CODE SECTION IX, 2017 ARE ACCEPTABLE.
7. FOR HDPE PIPE USE CLASS M-36 PIPING CODE AND FOR STAINLESS STEEL PIPE USE CLASS M-10 PIPING CODE. SEE CONSTRUCTION SPECIFICATION RPP-SPEC-63632 SECTION 40 40 00.
8. HDPE WELD.
9. PREPARE AND PAINT ALL EXPOSED CARBON STEEL SURFACES WITH PPG PSX700 OR EQUIVALENT. FINISH COLOR SHALL BE GRAY. APPLY PER MANUFACTURER'S SPECIFICATIONS. POWDER COATING IS AN ACCEPTABLE COATING SYSTEM.
10. THESE THREADED COMPONENTS ARE DESIGNATED AS PIPING CODE M-10 PER CONSTRUCTION SPECIFICATION RPP-SPEC-63632 SECTION 40 40 00. PERFORM HYDROSTATIC LEAK PRESSURE TEST IN ACCORDANCE WITH FLAG NOTE 4.

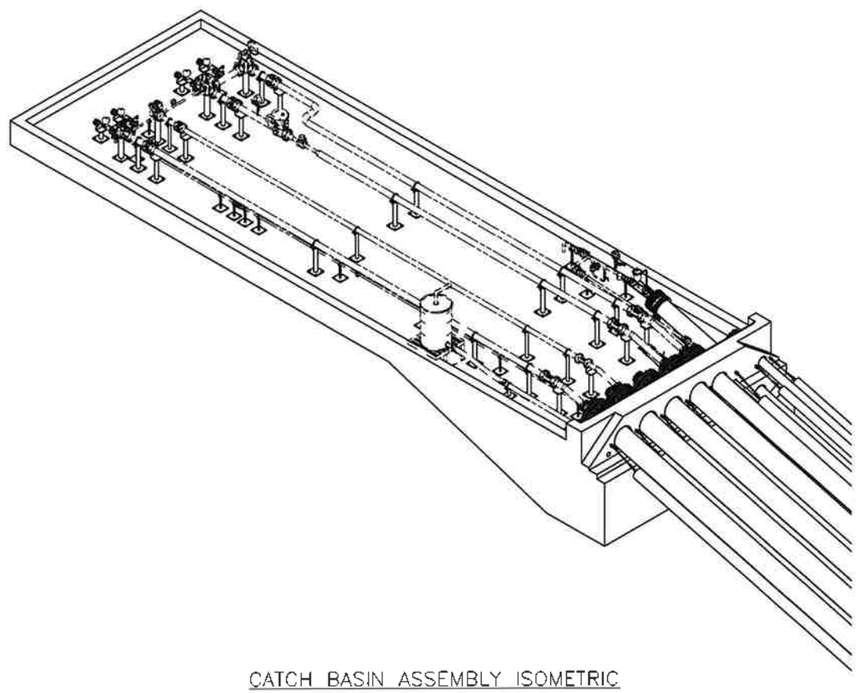

CATCH BASIN ASSEMBLY ISOMETRIC

SCALE: NONE

PARTS/MATERIAL LIST

QTY -090	QTY -080	QTY -070	QTY -060	QTY -050	QTY -040	QTY -030	QTY -020	QTY -010	PART/DASH NUMBER	NOMENCLATURE/DESCRIPTION	MATERIAL/REFERENCE	SHT	ITEM NO
									-010	CATCH BASIN ASSEMBLY		3	1
								1	-020	WTP/EMF EFFLUENT TIE IN WELDMENT		9	2
								1	-030	242A PROCESS CONDENSATE TIE IN WELDMENT		9	3
								1	-040	SPARE TIE IN WELDMENT		9	4
								1	-050	PUMP RECIRCULATION/TRANSFER TIE IN WELDMENT		9	5
								2	-060	3 INCH FLANGE MOUNT SUPPORT		10	6
								4	-070	1 INCH FLANGE MOUNT SUPPORT		10	7
								4	-080	VALVE SUPPORT ASSEMBLY		10	8
	1								-090	VALVE SUPPORT WELDMENT		10	9
								1	H-2-838771-010	CATCH BASIN PIPING			10
								1	H-2-838773-010	CATCH BASIN LEACHATE LEVEL PROBE			11
								1	H-2-838769-010	LEACHATE PUMP ASSEMBLY			12
								1	H-2-838768-010	BASIN PUMP ASSEMBLY			13
								1	H-2-838751-010	LERF CATCH BASIN 41			14
AR										PLATE, 3/8	ASTM A36		15
		AR	AR							PLATE, 1/4	ASTM A36		16
AR										HSS, 3 X 3 X 3/16 WALL	A500 GR B		17
								AR		ROUND BAR, 1/2 X LAR, TOE	ASTM A276 TP 304L		18
								AR		PIPE, 16 SDR 26	ASTM D3350 HDPE		19
								AR		PIPE, 14 SDR 26	ASTM D3350 HDPE		20
								AR		PIPE, 10 SDR 26	ASTM D3350 HDPE		21
								AR		PIPE, 8 SDR 26	ASTM D3350 HDPE		22
								AR		PIPE, 4 SDR 11	ASTM D3350 HDPE		23
								AR		PIPE, 6 SDR 26	ASTM D3350 HDPE		24
								AR		PIPE, 2 SDR 11	ASTM D3350 HDPE		25
								AR		PIPE, 1 1/2, SDR 11	ASTM D3350 HDPE		26
				AR	AR		AR			PIPE, 4 SCHED 40S	ASTM A312 GR TP 304L		27
						AR				PIPE, 3 SCHED 40S	ASTM A312 GR TP 304L		28
							AR			PIPE, 2 SCHED 40S	ASTM A312 GR TP 304L		29
						AR	AR			PIPE, 1 SCHED 40S	ASTM A312 GR TP 304L		30
								AR		PIPE, 1 SCHED 10S	ASTM A312 GR TP 304L		31
								2		END CAP, 3/4 THK	ASTM D3350 HDPE		32
								8		END STRIP, 1/2 THK	ASTM D3350 HDPE		33
								1	-001	FLANGE, 25 OD X 1 THK	ASTM D3350 HDPE	11	34
								3	-002	FLANGE, 25 OD X 1 THK	ASTM D3350 HDPE	11	35
								1	-003	FLANGE, 23 OD X 1 THK	ASTM D3350 HDPE	11	36
								1	-004	FLANGE, 18 OD X 1 THK	ASTM D3350 HDPE	11	37
								1	-005	FLANGE, 12 OD X 3/4 THK	ASTM D3350 HDPE	11	38
								1	-006	FLANGE, 6 OD X 3/4 THK	ASTM D3350 HDPE	11	39
	1								-007	WEAR PLATE, TEFLON, 3/8	ASTM D3294	11	40
								1		MOLDED FLANGE ADAPTER, 2 SDR 11	ASTM D3350 HDPE		41
								4		MOLDED STUB END, 18 SDR 26	ASTM D3350 HDPE		42
								1		MOLDED STUB END, 14 SDR 26	ASTM D3350 HDPE		43
								1		MOLDED STUB END, 10 SDR 26	ASTM D3350 HDPE		44
								1		MOLDED STUB END, 6 SDR 26	ASTM D3350 HDPE		45
								1		MOLDED STUB END, 4 SDR 11	ASTM D3350 HDPE		46
								1		MOLDED STUB END, 1 1/2 SDR 11	ASTM D3350 HDPE		47
								8		BACKING FLANGE, 16	ASTM A182 GR F 316L		48
								2		BACKING FLANGE, 14	ASTM A182 GR F 316L		49
								2		BACKING FLANGE, 10	ASTM A182 GR F 316L		50

(BOM CONTINUED ON SHEET 2)

PAUL M. DORSH — STATE OF WASHINGTON — 41918 — REGISTERED PROFESSIONAL ENGINEER

5/26/2020

DATE: May 26, 2020 — HANFORD RELEASE

DWG NUMBER	TITLE
DRAWING TRACEABILITY LIST	

REF NUMBER	TITLE
H-15-38	LERF BASIN 41
H-2-838745	DRAWING LIST/TITLE SHEET

REFERENCES — NEXT USED ON H-2-838766

REV NO	DESCRIPTION
0	RELEASED PER EDT-882463

REVISIONS

BLOCK NO 242-AL 242AL-41

BLOCK NO 8407

CAUTION: NOT COMPLETE WITHOUT CURRENT CHANGE DOCUMENTS FROM DATABASE

	NAME	DATE	COMPANY
DRAWN BY	W. ARNDT		
CHECKED BY	H. A. MENDEZ		
CONCURRING PER REVIEWER	C. C. JOSLYN		
CLASS TRAINER	P. M. DORSH		
DESIGN AUTHORITY	N. W. WILSON		

U.S. DEPARTMENT OF ENERGY
Office of River Protection

LERF BASIN 41
CATCH BASIN
NOTES AND PARTS LIST

SIZE F — DRAWING NUMBER H-2-838767 — SHEET 1 — REV 00

SCALE SHOWN

29422

DOE/RL/ORP (SEPTEMBER 2016)

GENERAL NOTES: (UNLESS OTHERWISE SPECIFIED)

1. DIMENSIONS ARE IN INCHES, TOLERANCES SHALL BE AS FOLLOWS: FRACTIONS = ±1/8" ANGLES = ±0.5° DECIMAL = .XX ±0.03 .XXX ±.010
2. REMOVE ALL BURRS AND BREAK SHARP EDGES.
3. FABRICATE, WELD, INSPECT, AND TEST PIPING IN ACCORDANCE WITH ASME B31.3, 2016 FOR CATEGORY NORMAL FLUID SERVICE. DESIGN PRESSURE IS 150 PSIG, AND DESIGN TEMPERATURE IS 150°F. HYDROSTATIC LEAK PRESSURE TEST TO 225 PSIG (-0/+25 PSIG). FABRICATION TEMPERATURE IS 50°F TO 120°F.
4. ALL MACHINED SURFACES SHALL BE 125 IN ACCORDANCE WITH ASME B46.1, 2009, UNLESS OTHERWISE SPECIFIED.
5. WELD AND INSPECT STRUCTURAL WELDS IN ACCORDANCE WITH AWS D1.1, 2015 STATICALLY LOADED CRITERIA. ALL WELDS SHALL BE VT ON FINAL PASS UNLESS OTHERWISE SPECIFIED. WELD PROCEDURES AND QUALIFICATIONS PER ASME B&PV CODE SECTION IX, 2017 ARE ACCEPTABLE.
6. FOR B31.3 ANALYSIS SEE RPP-CALC-63779.
7. FOR STRUCTURAL ANALYSIS VENT FILTER FRAME SEE RPP-CALC-63787.
8. FOR PIPING HEAT TRACE SEE CONSTRUCTION SPECIFICATION RPP-SPEC-63632 SECTION 40 41 00. FOR HEAT TRACE LOCATION AND ORIENTATION SEE H-2-838760.
9. FOR PIPING INSULATION SEE CONSTRUCTION SPECIFICATION RPP-SPEC-63632 SECTION 40 42 13.
10. USE CLASS M-10 PIPING CODE SEE CONSTRUCTION SPECIFICATION RPP-SPEC-63632 SECTION 40 40 00.
11. GROUT PER CONSTRUCTION SPEC 63632, SECTION 03 30 00, MAX 1" THICK. ANCHOR ROD, 1/2" SST ASTM F593 TP 316, 2 3/4" MIN EMBED, 3 1/2" MAX EMBED. HILTI HIT-HY 200 ADHESIVE ANCHOR SYSTEM.
12. PREPARE AND PAINT ALL EXPOSED CARBON STEEL SURFACES WITH PPG PSX700 OR EQUIVALENT. FINISH COLOR SHALL BE GRAY. APPLY PER MANUFACTURER'S SPECIFICATIONS. POWDER COATING IS AN ACCEPTABLE COATING SYSTEM.

PARTS/MATERIAL LIST

QTY -120	QTY -110	QTY -100	QTY -090	QTY -080	QTY -070	QTY -060	QTY -050	QTY -040	QTY -030	QTY -020	QTY -010	PART/DASH NUMBER	NOMENCLATURE/DESCRIPTION	MATERIAL/REFERENCE	SHT	ITEM NO
												-010	CATCH BASIN PIPING ASSEMBLY		3	1
											1	-020	WTP/EMF EFFLUENT SPOOL		4	2
											1	-030	242A PROCESS CONDENSATE SPOOL		4	3
											1	-040	BASIN PUMP SPOOL		5	4
											1	-050	BASIN PUMP RECIRCULATION/TRANSFER SPOOL		6	5
											1	-060	DRAIN SPOOL		7	6
											4	-070	LEAK DETECTOR SPOOL		8	7
											1	-080	VENT SPOOL		8	8
											1	-090	3 WAY TIE IN SPOOL		8	9
											1	-100	VENT FILTER SUPPORT FRAME		9	10
											1	-110	VENT FILTER ASSEMBLY		10	11
											1	-120	VENT HOSE ASSEMBLY		10	12
																13
											1	H-2-838770	LEACHATE PIPING ASSEMBLY			14
		AR											PLATE, 1/4	ASTM A36		15
		4											ANGLE, 3 X 3 X 1/4 X 29 LG	ASTM A36		16
		4											ANGLE, 3 X 3 X 1/4 X 13 LG	ASTM A36		17
			AR				AR	AR		AR			PIPE, 4 SCHED 40S	ASTM A312 GR TP 304L		18
				AR					AR				PIPE, 3 SCHED 40S	ASTM A312 GR TP 304L		19
								AR					PIPE, 2 SCHED 40S	ASTM A312 TP 304L		20
					AR	AR							PIPE, 1 SCHED 40S	ASTM A312 TP 304L		21
					AR								TUBE, 1/2 OD X .049 WALL	ASTM A269 TP 316L		22
	1												PIPE NIPPLE, SCHED 40S 2 NPT X 10 LG	ASTM A312 TP 304L		23
	1												PIPE NIPPLE, SCHED 40S 2 NPT X 8 LG	ASTM A312 TP 304L		24
	1												PIPE NIPPLE, SCHED 40S 2 NPT X 6 LG	ASTM A312 TP 304L		25
								3					PIPE NIPPLE, SCHED 40S 1/2 NPT X 3 LG	ASTM A312 TP 304L		26
			2				6	8		6			FLANGE, 4 WN RF, CL150	ASTM A182 GR F 304L		27
				1					6				FLANGE, 3 WN RF, CL150	ASTM A182 GR F 304L		28
								2					FLANGE, 2 WN RF, CL150	ASTM A182 GR F 304L		29
						10							FLANGE, 1 WN RF, CL150	ASTM A182 304L		30
					2								FLANGE, 1 SO RF, CL150	ASTM A182 304L		31
						1							FLANGE, 1 BLIND RF, CL150	ASTM A182 304L		32
							2						ELBOW, 4 LR 90 DEG SCHED 40S BW	ASTM A403 WP-S 304L		33
						1							ELBOW, 1 LR 90 DEG SCHED 40S BW	ASTM A403 WP-S 304L		34
							1	1		1			ELBOW 4 LR 45 DEG SCHED 40S BW	ASTM A403 WP-S 304L		35
				1					1				ELBOW 3 LR 45 DEG SCHED 40S BW	ASTM A403 WP-S 304L		36
						1							ELBOW 1 LR 45 DEG SCHED 40S BW	ASTM A403 WP-S 304L		37
	2												ELBOW, 2 FNPT 90 DEG, CL2000	ASME B16.11		38
						4							TEE, 1 SCHED 40S BW	ASTM A403 WP-S 304L		39
					1								TEE, 1 NPT, CL150	ASTM A182 TP 304L		40
								1					TEE, 1/2 NPT, CL3000			41
								2					REDUCER CONCENTRIC, 4 X 2	ASTM A403 WP-S 304L		42
					1							SS-810-3	TEE, 1/2 TUBE OD	SWAGELOK		43
					1							SS-810-9	UNION ELBOW, 90 DEG, 1/2 TUBE OD	SWAGELOK		44
					2							SS-810-1-4	MALE CONNECTOR, 1/4 NPT X 1/2 TUBE OD	SWAGELOK		45
					2							SS-810-7-12	FEMALE CONNECTOR, 3/4 FNPT X 1/2 TUBE OD	SWAGELOK		46
					1							SS-810-P	PLUG, 1/2 FNPT	SWAGELOK		47
				1								(4565T342)	THREDOLET, 3/4 FNPT	(McMASTER CARR)		48
								1				(4567T332)	THREDOLET, 1/2 FNPT	(McMASTER CARR)		49
				1								(4464K255)	HEX PLUG, 3/4 NPT	(McMASTER CARR)		50

(SEE CONTINUED ON SHEET 2)

PAUL M. DORSH — STATE OF WASHINGTON — 41918 — REGISTERED PROFESSIONAL ENGINEER

5/26/2020

DATE: May 26, 2020 — HANFORD RELEASE

DWG NUMBER	TITLE
DRAWING TRACEABILITY LIST	

REF NUMBER	TITLE
H-15-38	LERF BASIN 41
H-2-838745	DRAWING LIST/TITLE SHEET
REFERENCES	
NEXT USED ON H-2-838767	

REV NO	DESCRIPTION
0	RELEASED PER EDT-882463
REVISIONS	

SYSTEM NO 242-AL, 242AL-41 — INDEX NO 8407

CAUTION: NOT COMPLETE WITHOUT CURRENT CHANGE DOCUMENTS FROM DATABASE

	NAME	DATE	COMPANY
DRAFTER	W T ARNDT		
DRAFTING CHECKER	H A MENDEZ		
ENGINEERING PEER REVIEWER	C C JOSLYN		
SCIENCE ENGINEER	P M DORSH		
DESIGN AUTHORITY	N W WILSON		

U.S. DEPARTMENT OF ENERGY
Office of River Protection

LERF BASIN 41
CATCH BASIN PIPING
NOTES AND PARTS LIST

SIZE F — DRAWING NUMBER H-2-838771 — SHEET 1 — REV 00

SCALE SHOWN

29778 — DOE_RL_F.DWG (SEPTEMBER 2014)

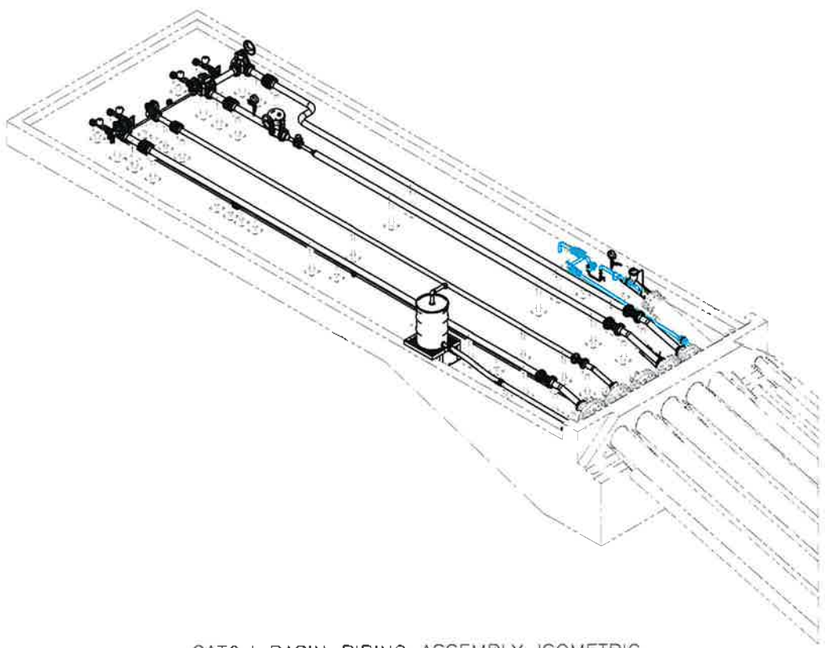

CATCH BASIN PIPING ASSEMBLY ISOMETRIC

SCALE: NO SCALE

PARTS/MATERIAL LIST

QTY -120	QTY -110	QTY -100	QTY -090	QTY -080	QTY -070	QTY -060	QTY -050	QTY -040	QTY -030	QTY -020	QTY -010	PART/DASH NUMBER	NOMENCLATURE/DESCRIPTION	MATERIAL/REFERENCE	SHT	ITEM NO
		1											GRATING, 1 1/2" X 3/16" RECTANGULAR BAR, CW SERIES, GALVANIZED, 28 X 28	MONKCHOLS		51
							1	1				170400-11A02-SSTT-NO-0024	BALL VALVE, 3 WAY, 4 INCH	FLOWTEK		52
								1				150400-11000SSUT-NB-0001	BALL VALVE, 2 WAY, 4 INCH, FP F15, 60 DEG V PORT	FLOWTEK		53
										1		150400-11000SSTT-NN-0001	BALL VALVE, 2 WAY, 4 INCH, FP F15	FLOWTEK		54
									1			140300-11000SSTT-NN-0001	BALL VALVE, 2 WAY, 3 INCH, FP F15	FLOWTEK		55
					1							150100-11000SSTT-NN-0001	BALL VALVE, 1 INCH, FP F15	FLOWTEK		56
								2				(46495K210)	BALL VALVE, 1/2	(MCMASTER CARR)		57
					1							SS-4SS8-SH	VALVE, ON-OFF, 1/2 TUBE OD	SWAGELOK		58
								1				700501-113C0538/K	MOTOR OPERATED ACTUATOR	BRAY		59
							1	1				FTG33	MANUAL OPERATOR, 30:1	FLOWTEK		60
									1	1		FTG22	MANUAL OPERATOR, 22:1	BRAY		61
									1			EZ-011S	MOUNTING BRACKET	FLOWTEK		62
										1			MOUNTING BRACKET	FLOWTEK		63
								1				EZ-013S	MOUNTING BRACKET	FLOWTEK		64
							1	1				EZ-045S	MANUALY OPERATOR MOUNTING BRACKET	FLOWTEK		65
							1	1		1		MNLC150FL0400	EXPANSION JOINT, 4 INCH	METRAFLEX		66
									1			MNLC150FL0300	EXPANSION JOINT, 3 INCH	METRAFLEX		67
							1	1		1			DURCOR FLANGED FLEXIJOINT, 4 INCH, 5 CONVOLUTIONS	ETHYLENE		68
									1				DURCOR FLANGED FLEXIJOINT, 3 INCH, 4 CONVOLUTIONS	ETHYLENE		69
						1					4		DURCOR FLANGED FLEXIJOINT, 1 INCH, 4 CONVOLUTIONS	ETHYLENE		70
	1											(6795K54)	CAM AND GROOVE HOSE COUPLING, 2 FNPT, SSTL	(McMASTER CARR)		71
				1								(53015K570)	CAM AND GROOVE HOSE COUPLING, 3 NPT, SSTL	(McMASTER CARR)		72
2												(53015K167)	CAM AND GROOVE HOSE COUPLING FEMALE X BARBED, 3 INCH, SSTL	(McMASTER CARR)		73
							5	7		5	3		GASKET, 1/8 THK, 4 INCH, RF, CL150	GARLOCK		74
									5		2		GASKET, 1/8 THK, 3 INCH, RF, CL150	GARLOCK		75
								2					GASKET, 1/8 THK, 2 INCH RF, CL150	GARLOCK		76
											1		GASKET, 1/8 THK, 1 1/2 INCH RF, CL150	GARLOCK		77
						4					9		GASKET, 1/8 THK, 1 INCH, RF, CL150	GARLOCK		78
AR													HOSE, 3 INCH, PICORD EXTREMEFLEX FOOD GRADE X X FT LG	GOODYEAR		79
	1												VENTSORB, 2 FNPT INLET, 2 FNPT OUTLET	CALGON CARBON		80
					1							OP-C-3	ORIFICE PLATE FLOWMETER	DWYER		81
								1				8711-TSA-020-R-5-NO-DT	MAGNETIC FLOWMETER	ROSEMOUNT		82
					1							FLT935-1B-1A201E-4C000-00	FLEXSWITCH	FCI		83
								1				351009 SW L 04 L XLLC4 100#	PRESSURE GAUGE, 1/2 NPT, 3 1/2 FACE, 0 TO 100 PSIG	ASHCROFT		84
					1							84762-10600BN4W	LIQUID LEVEL GAGE, 6 INCH CENTERLINE, 3/4 NPT ADAPTERS	OIL-RITE		85
							24	40	12	24	28		STUD, 5/8-11 UNC-2A X 3 1/2 LG	ASTM A193 GR B8 CL2		86
								4					STUD, 5/8-11 UNC-2A X 6 3/8 LG	ASTM A193 GR B8 CL2		87
						8					20		STUD, 1/2-13 UNC-2A X 2 1/2 LG	ASTM A193 GR B8 CL2		88
											4		STUD, 1/2-13 UNC-2A X 3 1/4 LG	ASTM A193 GR B8 CL2		89
					4								STUD, 1/2-13 UNC-2A X 3 3/4 LG	ASTM A193 GR B8 CL2		90
							14	14	8	14			HEX BOLT, 5/8-11 UNC-2A X 1 3/4 LG	ASTM A193 GR B8 CL2		91
											16		HEX BOLT, 1/2-13 UNC-2A X 1 1/4 LG	ASTM A193 GR B8 CL2		92
							48	88	24	48	56		NUT, HEX 5/8-11 UNC-2B	ASTM A194 GR 8		93
					8	16					52		NUT, HEX 1/2-13 UNC-2B	ASTM A194 GR 8		94

(BOM CONTINUED FROM SHEET 1)

PAUL M. DORSH — STATE OF WASHINGTON — 41918 — REGISTERED PROFESSIONAL ENGINEER

5/26/2020

DATE: May 26, 2020 — HANFORD RELEASE

DWG NUMBER	TITLE
DRAWING TRACEABILITY LIST	

REF NUMBER	TITLE
REFERENCES	
NEXT USED ON SHEET 1	

REV	DESCRIPTION
0	RELEASED PER EDT-882463
REVISIONS	

BLOCK NO 242-AL 242AL-41

BLOCK NO 8407

CAUTION: NOT COMPLETE WITHOUT CURRENT CHANGE DOCUMENTS FROM DATABASE

	NAME	DATE
DRAWN BY	W T ARNDT	05/26/2020
DRAFTING CHECKED	H A MENDEZ	05/26/2020
ENGINEERING PEER REVIEWER	C C JOSLYN	05/26/2020
SERVICE ENGINEER	P M DORSH	05/26/2020
DESIGN AUTHORITY	N W WILSON	05/26/2020

U.S. DEPARTMENT OF ENERGY
Office of River Protection

LERF BASIN 41
CATCH BASIN PIPING
ISOMETRIC

SIZE F — DRAWING NUMBER H-2-838771 — SHEET 2 — REV 00

SCALE SHOWN

29769

DOE_TB_F.DWG (SEPTEMBER 2014)

NOTES:
FOR GENERAL NOTES AND PARTS/MATERIAL SEE SHEET 1 AND 2.

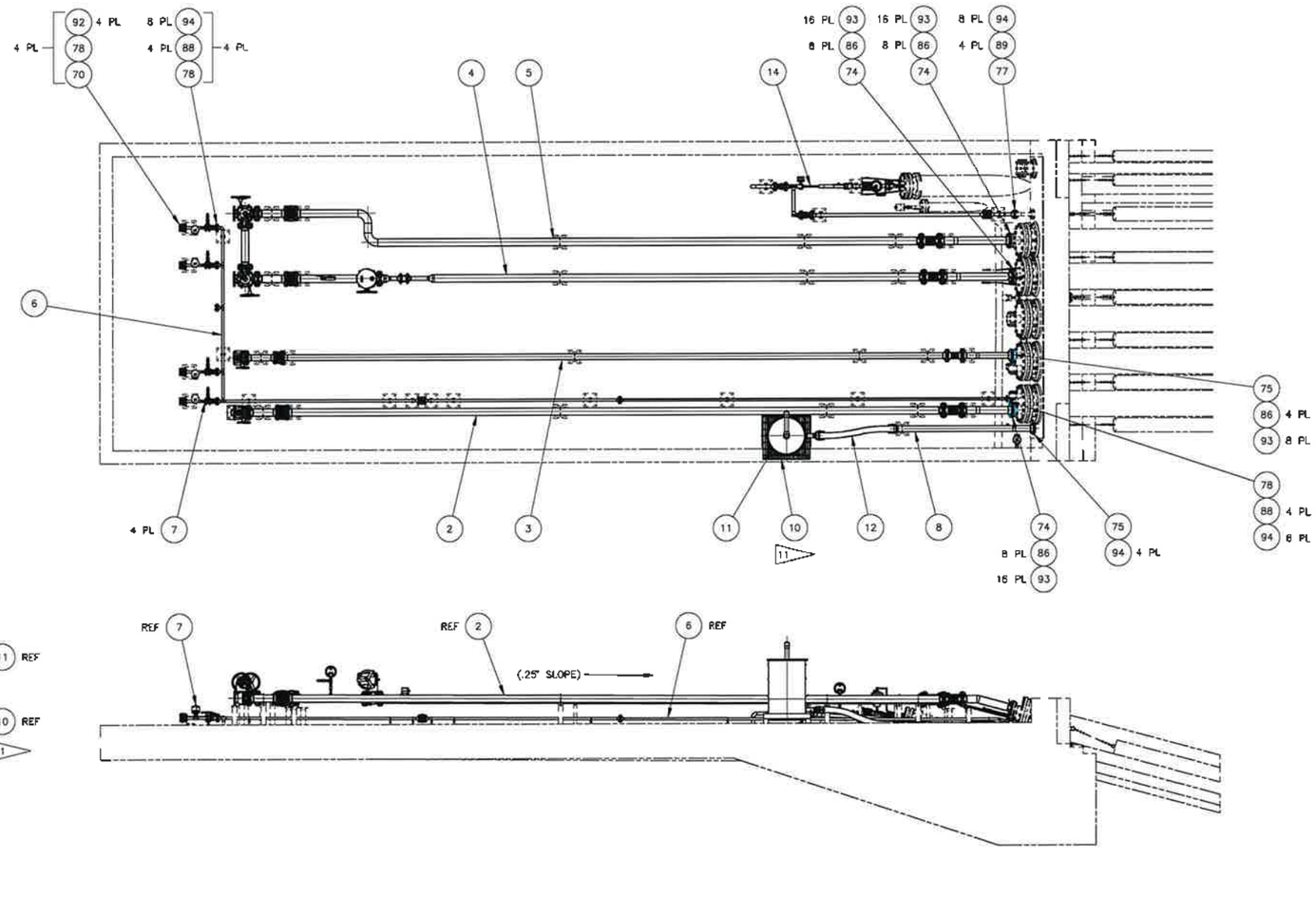

1 CATCH BASIN PIPING ASSEMBLY
SCALE: 1/32

PAUL M. DORSH
STATE OF WASHINGTON
41918
REGISTERED
PROFESSIONAL ENGINEER
5/26/2020

DATE:
May 26, 2020
HANFORD RELEASE

DWG NUMBER	TITLE
DRAWING TRACEABILITY LIST	

REF NUMBER	TITLE
REFERENCES	
NEXT USED ON SHEET 1	

0	RELEASED PER EDT-882463
REVISIONS	

BLDG NO 242-AL, 242AL-41
INDEX NO 8407

CAUTION: NOT COMPLETE WITHOUT CURRENT CHANGE DOCUMENTS FROM DATABASE

	NAME	DATE	COMPANY
DRAFTER	W T ARNDT	05/26/20	WRPS
DRAFTING DESIGNER	H A MENDEZ	05/26/20	WRPS
ENGINEERING FIELD REVIEWER	C C JOSLYN	05/26/20	WRPS
DESIGN ENGINEER	P M DORSH	05/26/20	WRPS
DESIGN AUTHORITY	N W WILSON	05/26/20	WRPS

U.S. DEPARTMENT OF ENERGY
Office of River Protection

LERF BASIN 41
CATCH BASIN PIPING
ASSEMBLY

SIZE F | DRAWING NUMBER H-2-838771 | SHEET 3 | REV 00
SCALE SHOWN

25785

NOTES:
FOR GENERAL NOTES AND PARTS/MATERIAL SEE SHEET 1 AND 2.

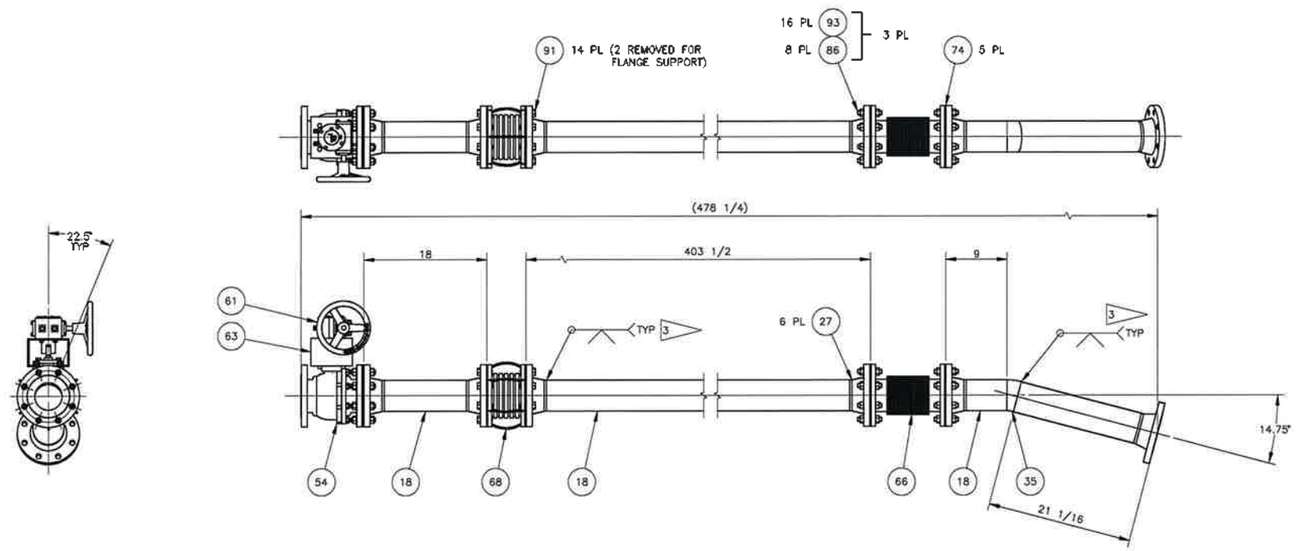

2 WTP/EMF EFFLUENT SPOOL
SCALE: 1/8

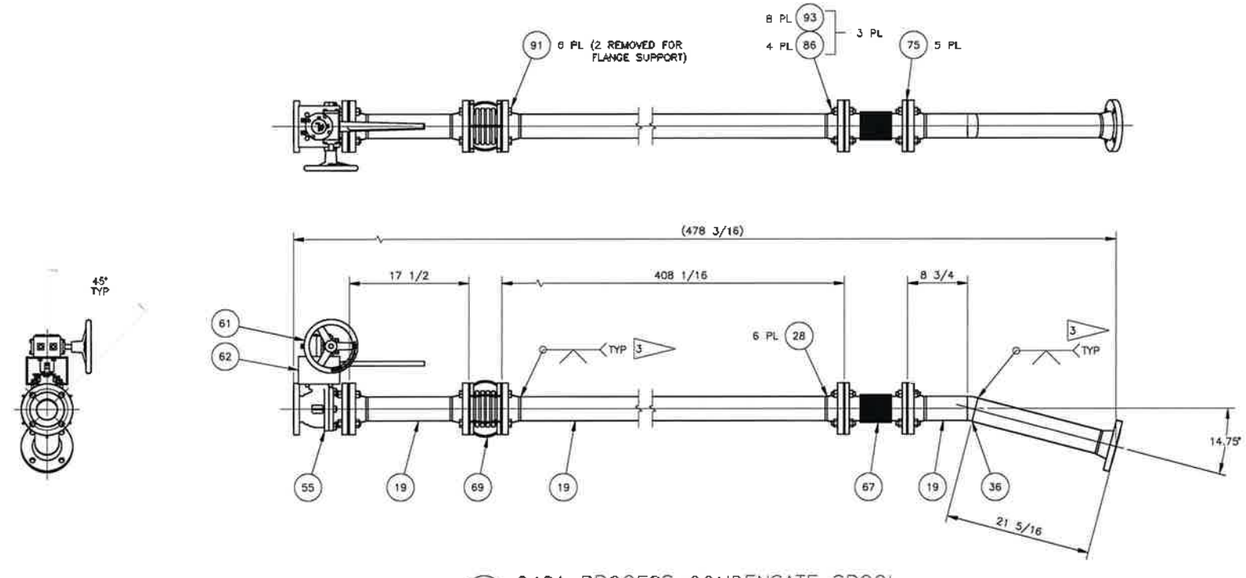

3 242A PROCESS CONDENSATE SPOOL
SCALE 1/8

PAUL M. DORSH
STATE OF WASHINGTON
41918
REGISTERED
PROFESSIONAL ENGINEER
5/26/2020

DATE:
May 26, 2020
HANFORD RELEASE

DWG NUMBER	TITLE	REF NUMBER	TITLE
DRAWING TRACEABILITY LIST		REFERENCES	
		NEXT USED ON SHEET 1	

REV	DESCRIPTION
0	RELEASED PER EDT-662463

REVISIONS

DESIGN NO	242-AL, 242AL-41
SHEET NO	8407

CAUTION: NOT COMPLETE WITHOUT CURRENT CHANGE DOCUMENTS FROM DATABASE

	NAME	DATE
DRAWN BY	W T ARNDT	
MANUAL DRAFTS	H A MENDEZ	
ENGINEERING FIELD REVIEWER	C C JOSLYN	
DESIGN ENGINEER	P M DORSH	
DESIGN AUTHORITY	N W WILSON	

U.S. DEPARTMENT OF ENERGY
Office of River Protection

LERF BASIN 41
CATCH BASIN PIPING
DETAILS

SIZE	DRAWING NUMBER	SHEET	REV
F	H-2-838771	4	00

SCALE SHOWN

NOTES:
FOR GENERAL NOTES AND PARTS/MATERIAL SEE SHEET 1 AND 2.

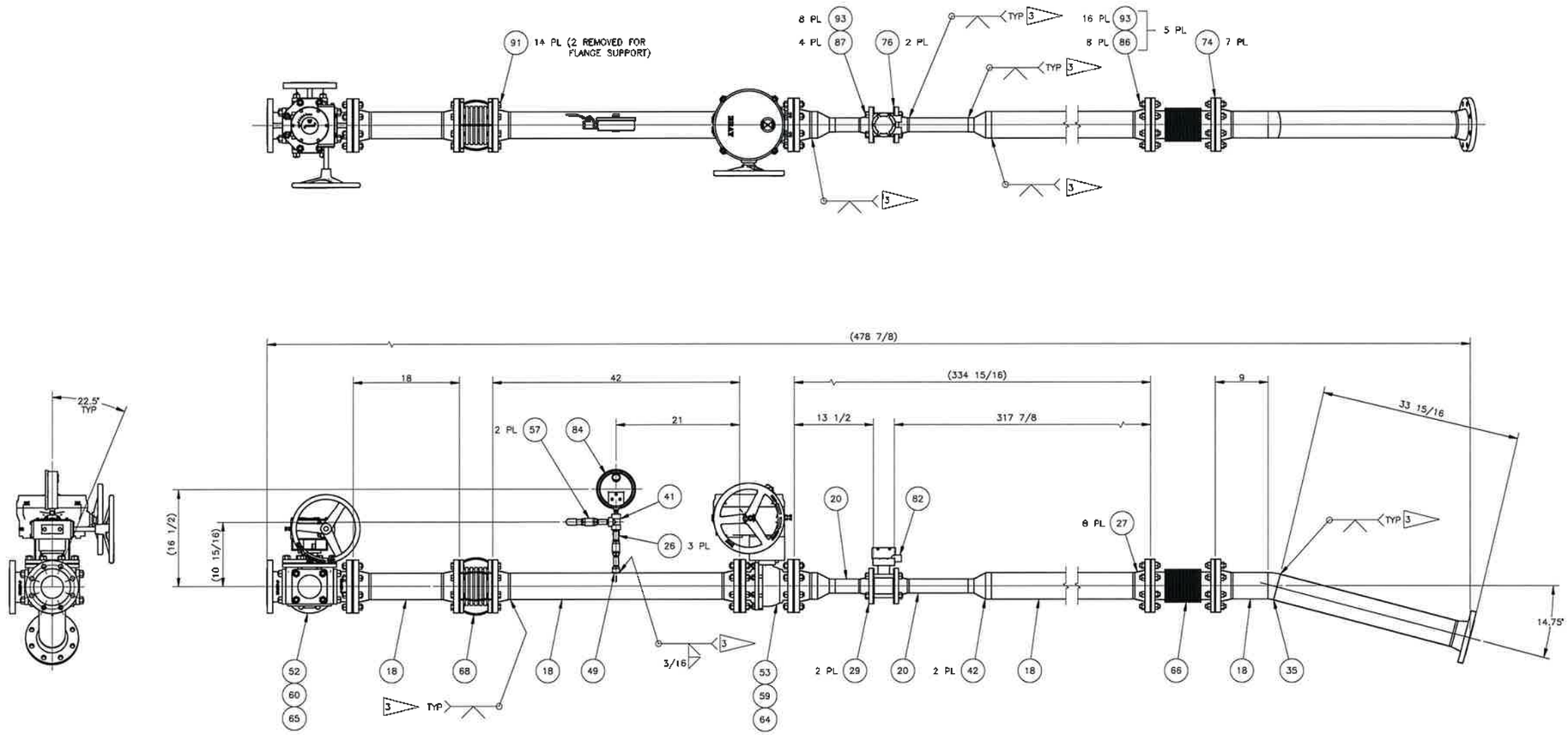

4 BASIN PUMP SPOOL
SCALE: 1/8

PAUL M. DORSH
STATE OF WASHINGTON
41918
REGISTERED
PROFESSIONAL ENGINEER
5/26/2020

DATE:
May 26, 2020
HANFORD RELEASE

DWG NUMBER	TITLE
DRAWING TRACEABILITY LIST	

REF NUMBER	TITLE
REFERENCES	
NEXT USED ON SHEET 1	

REV NO	DESCRIPTION
0	RELEASED PER EDT-882463
REVISIONS	

BLDG NO: 242-AL, 242AL-41
MODEL NO: 8407

CAUTION: NOT COMPLETE, WITHOUT CURRENT CHANGE DOCUMENTS FROM DATABASE

	NAME	DATE	COMPANY
DRAWN BY	W T ARNDT	5/26/2020	MPS
DRAFTING CHECKED	H A MENDEZ	5/26/2020	MPS
ENGINEERING TECH REVIEWER	C C JOSLYN	5/26/2020	MPS
ENGINEERING CHECKED	P M DORSH	5/26/2020	MPS
DESIGN AUTHORITY	N W WILSON	5/26/2020	MPS

U.S. DEPARTMENT OF ENERGY
Office of River Protection

LERF BASIN 41
CATCH BASIN PIPING
ASSEMBLY

SIZE F | DRAWING NUMBER H-2-838771 | SHEET 5 | REV 00
SCALE SHOWN

29773

NOTES:
FOR GENERAL NOTES AND PARTS/MATERIAL SEE SHEET 1 AND 2.

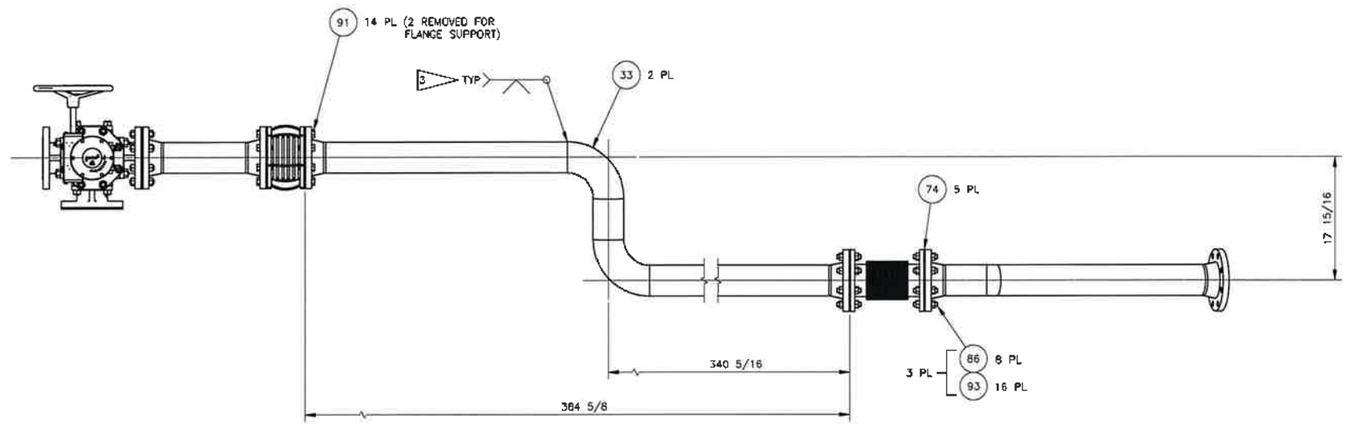

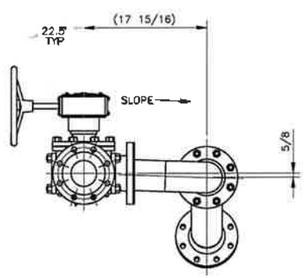

(VALVE AND ACTUATOR REMOVED FROM THIS VIEW FOR CLARITY)

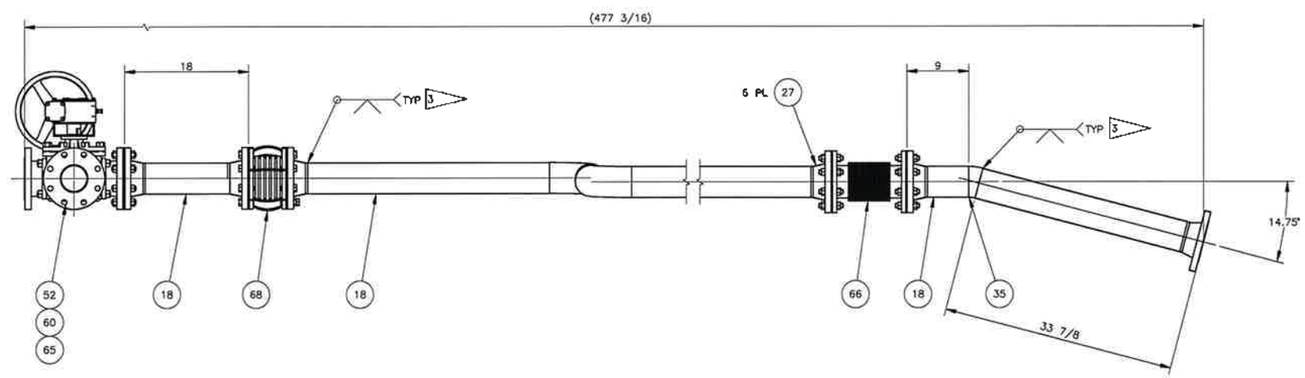

5 BASIN PUMP RECIRC/TRANSFER SPOOL
SCALE: 1/8

PAUL M. DORSH
STATE OF WASHINGTON
41918
REGISTERED
PROFESSIONAL ENGINEER
5/26/2020

DATE:
May 26, 2020
HANFORD RELEASE

DWG NUMBER	TITLE
DRAWING TRACEABILITY LIST	

REF NUMBER	TITLE
REFERENCES	
NEXT USED ON SHEET 1	

REV	DESCRIPTION
0	RELEASED PER EDT-882463
REVISIONS	

BLDG NO 242-AL 242AL-41
INDEX NO 8407

CAUTION: NOT COMPLETE WITHOUT CURRENT CHANGE DOCUMENTS FROM DATABASE

	NAME	DATE	COMPANY
DRAFTER	W. L. ARNOT		
DRAFTING CHECKER	H. A. MENDEZ		
CHALLENGE TEAM REVIEWER	G. C. JOSLYN		
DESIGN ENGINEER	P. M. DORSH		
DESIGN AUTHORITY	N. W. WILSON		

U.S. DEPARTMENT OF ENERGY
Office of River Protection

LERF BASIN 41
CATCH BASIN PIPING
ASSEMBLY

SIZE	DRAWING NUMBER	SHEET	REV
F	H-2-838771	6	00

SCALE SHOWN

NOTES:
FOR GENERAL NOTES AND PARTS/MATERIAL SEE SHEET 1 AND 2.

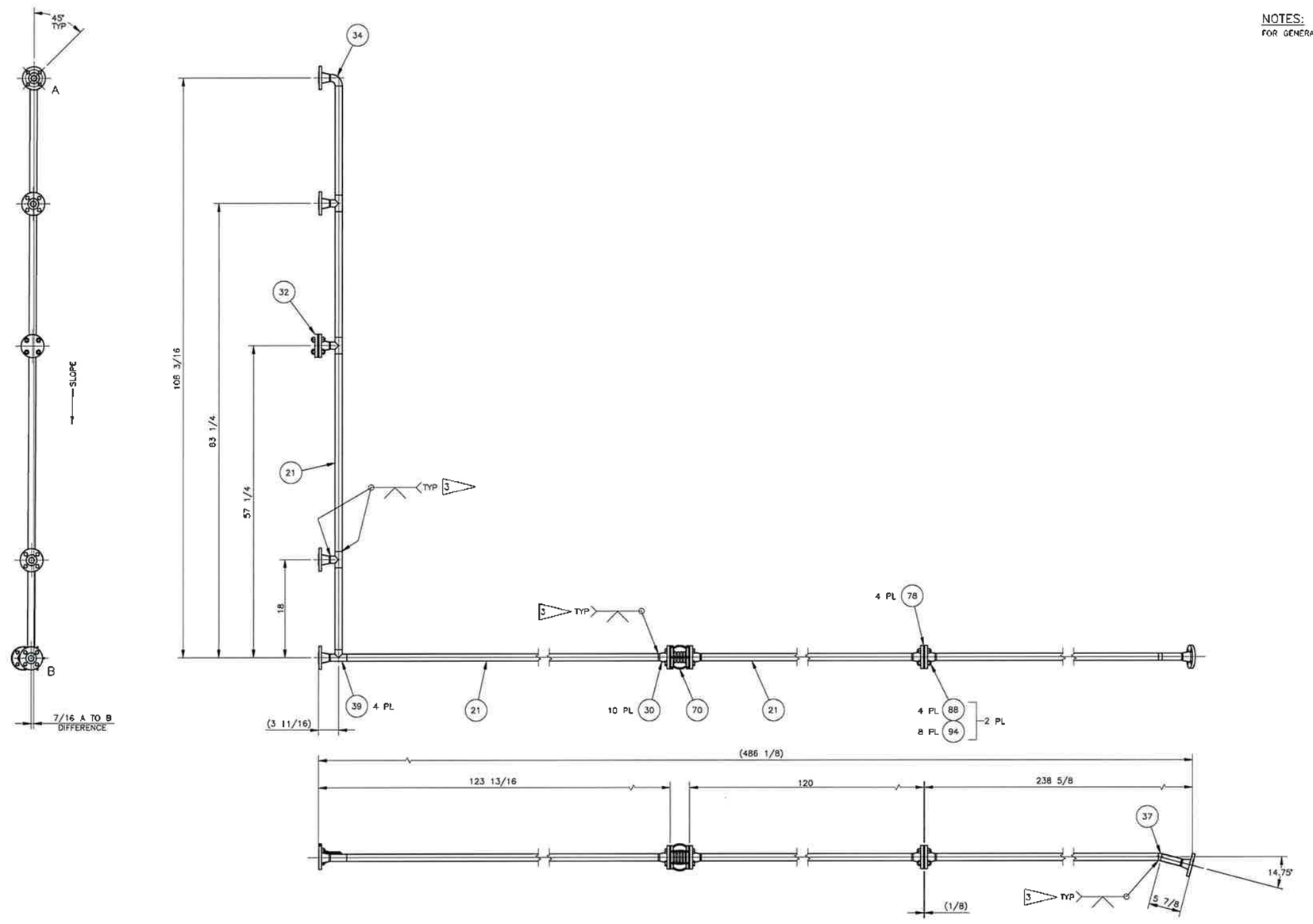

(SOME ITEMS IN THIS VIEW REMOVED FOR CLARITY)

6 DRAIN SPOOL
SCALE: 1/12

STATE OF WASHINGTON
PAUL M. DORSH
41918
REGISTERED
PROFESSIONAL ENGINEER
5/26/2020

DATE:
May 26, 2020
HANFORD RELEASE

DWG NUMBER	TITLE
DRAWING TRACEABILITY LIST	

REF NUMBER	TITLE
REFERENCES	
NEXT USED ON SHEET 1	

REV NO	DESCRIPTION
0	RELEASED PER EDT-882463
REVISIONS	

BLDG NO 242-AL 242AL-41
INDEX NO 8407

CAUTION: NOT COMPLETE WITHOUT CURRENT CHANGE DOCUMENTS FROM DATABASE

	NAME	DATE	COMPANY
DRAFTER	W T ARNDT	05/26/2020	MSA
DRAFTING CHECKER	H A MENDEZ	05/26/2020	MSA
CHARACTERIZE PEER REVIEWER	C C JOSLYN	05/26/2020	MSA
LEAD ENGINEER	P M DORSH	05/26/2020	MSA
DESIGN AUTHORITY	N W WILSON	05/26/2020	MSA

U.S. DEPARTMENT OF ENERGY
Office of River Protection

LERF BASIN 41
CATCH BASIN PIPING
ASSEMBLY

SIZE F | DRAWING NUMBER H-2-838771 | SHEET 7 | REV 00
SCALE SHOWN

297ab

NOTES:
FOR GENERAL NOTES AND PARTS/MATERIAL SEE SHEET 1 AND 2.

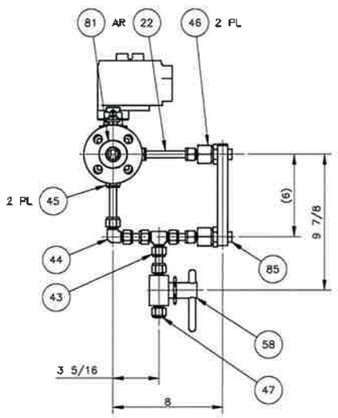

(SOME OBJECTS REMOVED FROM THIS VIEW)

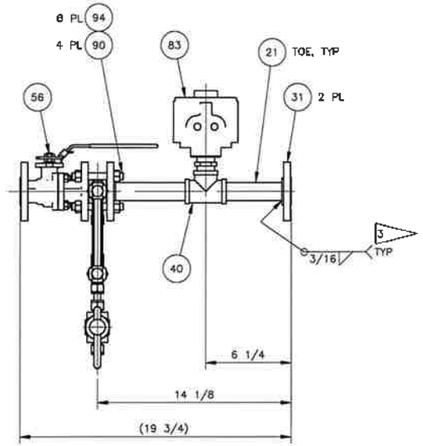

7 LEAK DETECTOR SPOOL
SCALE: 1/4

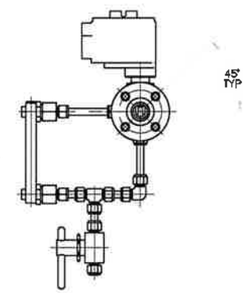

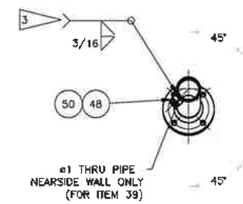

SECTION A–A
SCALE: 1/8

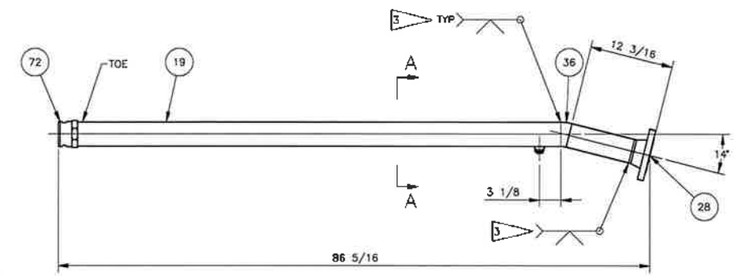

8 VENT SPOOL
SCALE: 1/8

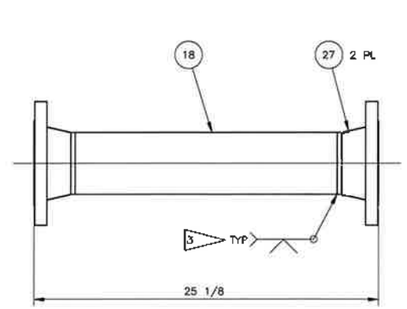

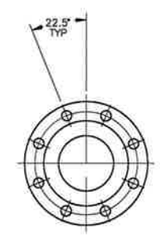

9 3–WAY TIE IN SPOOL
SCALE: 1/4

DATE:
May 26, 2020
HANFORD RELEASE

DWG NUMBER	TITLE
DRAWING TRACEABILITY LIST	

REF NUMBER	TITLE
REFERENCES	
NEXT USED ON SHEET 1	

REV	DESCRIPTION
0	RELEASED PER EDT-682463
REVISIONS	

BLDG NO 242-AL 242AL-41
INDEX NO 8407

CAUTION: NOT COMPLETE WITHOUT CURRENT CHANGE DOCUMENTS FROM DATABASE

	NAME	DATE	COMPANY
DRAFTER	W T ARNDT	5/26/20	SSPS
DRAFTING OVERSEE	H A MENDEZ	5/26/20	SSPS
ENGINEERING PEER REVIEWER	C C JOSLYN	5/26/20	SSPS
DESIGN ENGINEER	P M DORSH	5/26/20	SSPS
DESIGN AUTHORITY	N W WILSON	5/26/20	SSPS

U.S. DEPARTMENT OF ENERGY
Office of River Protection

LERF BASIN 41
CATCH BASIN PIPING
DETAILS

SIZE F | DRAWING NUMBER H-2-838771 | SHEET 8 | REV 00
SCALE SHOWN
29770

NOTES:
FOR GENERAL NOTES AND PARTS/MATERIAL SEE SHEET 1 AND 2.

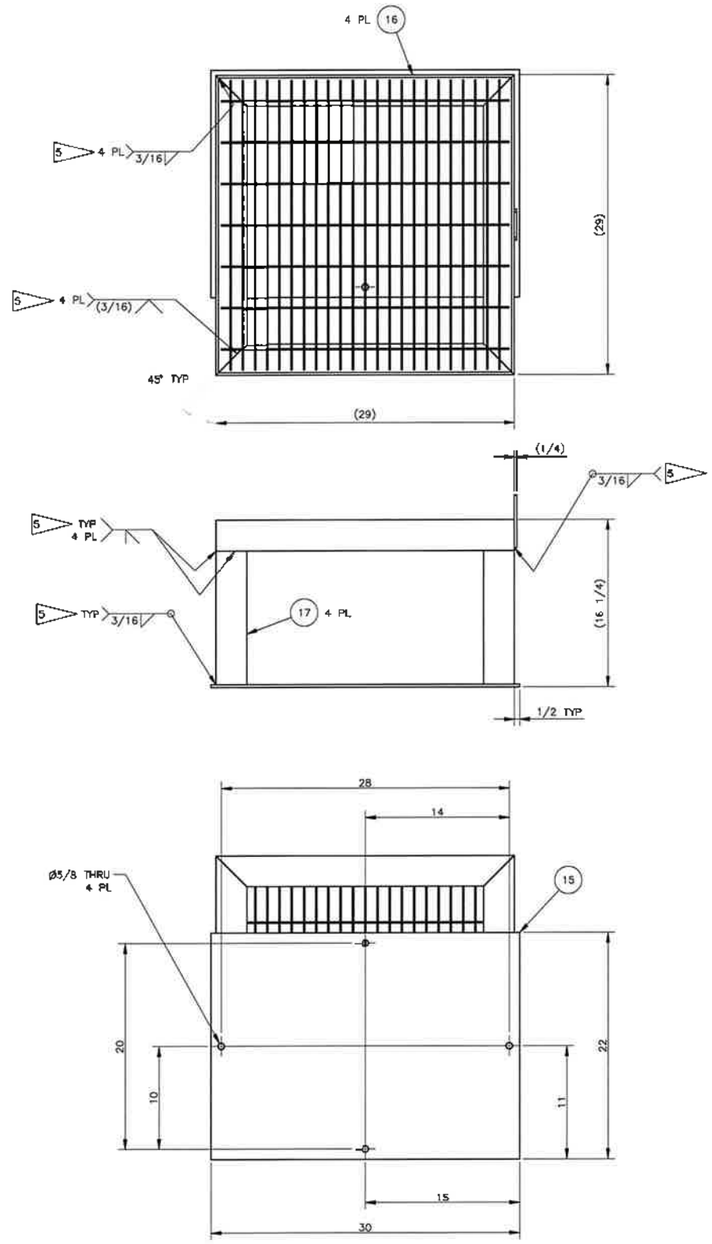

10 VENT FILTER FRAME
SCALE: 3/16
(GRATING REMOVED FOR CLARITY)

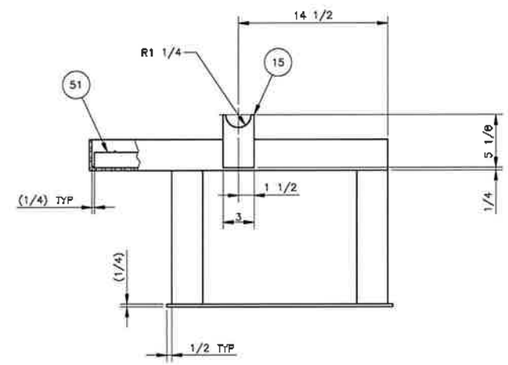

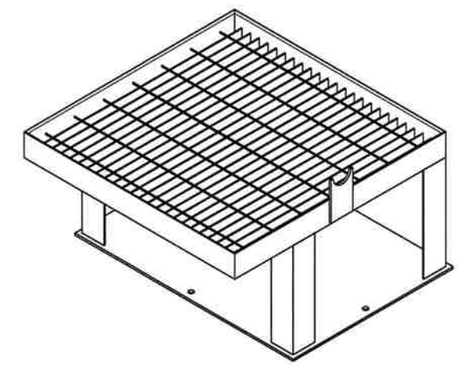

PAUL M. DORSH
STATE OF WASHINGTON
41918
REGISTERED
PROFESSIONAL ENGINEER
5/26/2020

DATE:
May 26, 2020
HANFORD RELEASE

DWG NUMBER	TITLE
DRAWING TRACEABILITY LIST	

REF NUMBER	TITLE
REFERENCES	
NEXT USED ON SHEET 1	

REV	DESCRIPTION
0	RELEASED PER EDT-882463

REVISIONS

BLDG NO 242-AL 242AL-41
MODEL NO 8407

CAUTION: NOT COMPLETE WITHOUT CURRENT CHANGE DOCUMENTS FROM DATABASE

	NAME	DATE	CONTRACT
DRAWN BY	W T ARNDT		
DESIGN LEAD	H A MENDEZ		
CHARACTERIZATION REVIEWER	C C JOSLYN		
DESIGN REVIEWER	P M DORSH		
DRAWING MANAGER	N W WILSON		

U.S. DEPARTMENT OF ENERGY
Office of River Protection

LERF BASIN 41
CATCH BASIN PIPING
ASSEMBLY

SIZE	DRAWING NUMBER	SHEET	REV
F	H-2-838771	9	00

SCALE SHOWN

29781

NOTES:
FOR GENERAL NOTES AND PARTS/MATERIAL SEE SHEET 1 AND 2.

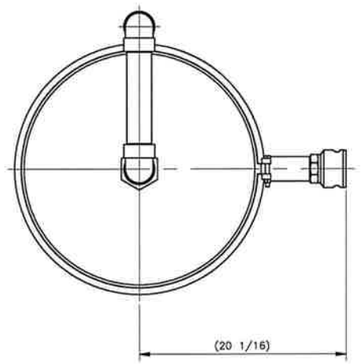

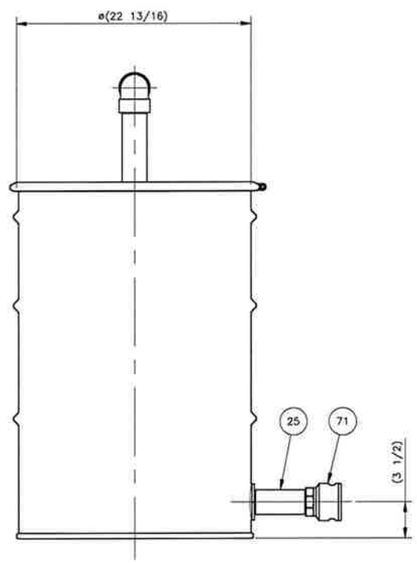

11 VENT FILTER ASSEMBLY
SCALE: 1/8

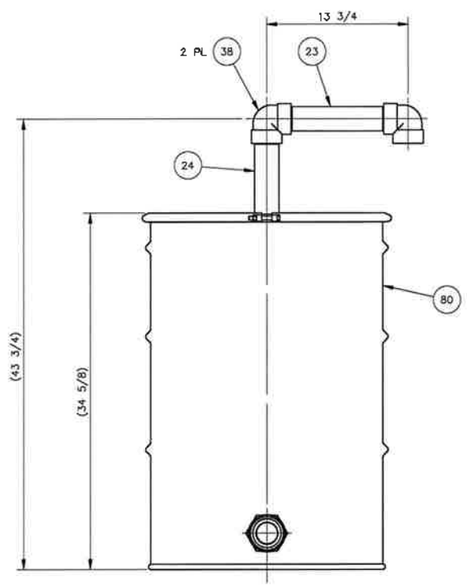

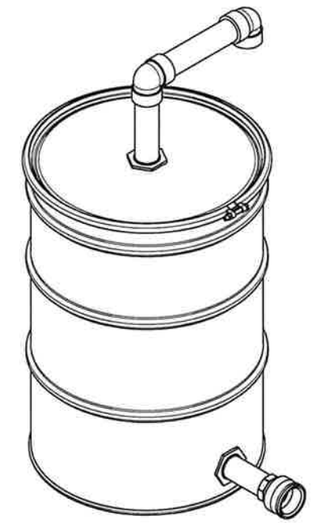

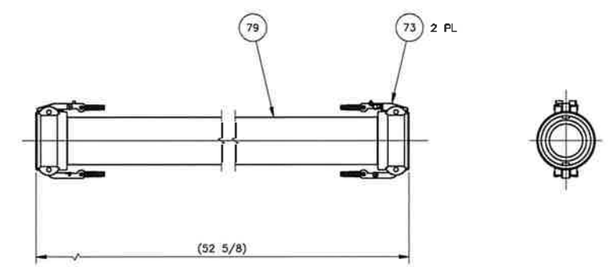

12 VENT HOSE ASSEMBLY
SCALE: 1/4

PAUL M. DORSH
STATE OF WASHINGTON
41918
REGISTERED
PROFESSIONAL ENGINEER
5/26/2020

DATE:
May 26, 2020
HANFORD RELEASE

DWG NUMBER	TITLE
DRAWING TRACEABILITY LIST	

REF NUMBER	TITLE
REFERENCES	
NEXT USED ON SHEET 1	

0	RELEASED PER EDT-682463	
REV	DESCRIPTION	
REVISIONS		

BLDG NO. 242-AL, 242AL-41
INDEX NO. 8407

CAUTION: NOT COMPLETE WITHOUT CURRENT CHANGE DOCUMENTS FROM DATABASE

	NAME	DATE
DRAFTER	W T ARNDT	5/26/2020
ENGINEERING DESIGN	H A MENDEZ	5/26/2020
ENGINEERING DESIGN REVIEWER	C C JOSLYN	5/26/2020
DESIGN ENGINEER	P M DORSH	5/26/2020
DESIGN AUTHORITY	N W WILSON	5/26/2020

U.S. DEPARTMENT OF ENERGY
Office of River Protection

LERF BASIN 41
CATCH BASIN PIPING
DETAILS

SIZE F | DRAWING NUMBER H-2-838771 | SHEET 10 | REV 00
SCALE: SHOWN

29784

DOCUMENT RELEASE AND CHANGE FORM

Prepared For the U.S. Department of Energy, Assistant Secretary for Environmental Management
By Washington River Protection Solutions, LLC., PO Box 850, Richland, WA 99352
Contractor For U.S. Department of Energy, Office of River Protection, under Contract DE-AC27-08RV14800

TRADEMARK DISCLAIMER: Reference herein to any specific commercial product, process, or service by trade name, trademark, manufacturer, or otherwise, does not necessarily constitute or imply its endorsement, recommendation, or favoring by the United States government or any agency thereof or its contractors or subcontractors. Printed in the United States of America.

Release Stamp

DATE:
May 26,2020
HANFORD RELEASE

1. **Doc No:** RPP-CALC-63650 **Rev.** 00

2. **Title:**
Leachate and Basin Pump Flow Calculation

3. **Project Number:** T1P226 ☐N/A

4. **Design Verification Required:** ☐Yes ☒No

5. **USQ Number:** ☒ N/A RPP-27195

6. **PrHA Number** **Rev.** ☒ N/A

Clearance Review Restriction Type: public

7. **Approvals**

Title	Name	Signature	Date
Clearance Review	Aardal, Janis D	*Aardal, Janis D*	05/26/2020
Design Authority	Wilson, Nathaniel W	*Wilson, Nathaniel W*	04/24/2020
Checker	Dixon, Kodi W	*Dixon, Kodi W*	04/14/2020
Document Control Approval	Alvarez, Efren	*Alvarez, Efren*	05/26/2020
Environmental Protection	Wall, Jeremy M	*Wall, Jeremy M*	04/29/2020
Originator	Gallegos, John F	*Gallegos, John F*	04/14/2020
Other Approver	Irwin, John	*Irwin, John*	05/14/2020
Responsible Engineering Manager	Huntington, Matthew R	*Huntington, Matthew R*	05/18/2020

8. **Description of Change and Justification**

Leachate and Basin Pump Flow calculation 90% submittal.

9. **TBDs or Holds** ☒N/A

10. **Related Structures, Systems, and Components**

a. **Related Building/Facilities** ☐N/A	b. **Related Systems** ☐N/A	c. **Related Equipment ID Nos. (EIN)** ☒N/A
ETF FACILITIES LERF FACILITIES	ETF LERF	

11. **Impacted Documents – Engineering** ☒N/A

Document Number	Rev.	Title

12. **Impacted Documents (Outside SPF):**

N/A

13. **Related Documents** ☐N/A

Document Number	Rev.	Title
MT-50497	00	Liquid Effluent Retention Facility (LERF) Basin 41

14. **Distribution**

Name	Organization
Angevine, Brennan T	MISSION ANALYSIS ENGINEERING
Blaak, Whitney S	COGNIZANT SYSTEM ENGINEERING
Demiter, Scott M	ETF OPERATIONS
Foster, Jim	242-A/AW/ETF OPERATIONS
Goessmann, Glen E	ENGINEERING PROGRAMS
Greenhalgh, Aaron M	TANK FARM PROJECTS ENGINEERING
Halgren, Dale L	ETF ENGINEERING
Harris, John W	SAFETY PROGRAM SERVICES RC/P
Joslyn, Cameron C	ETF ENGINEERING
McFerran, Brandon E	242-A/AW/ETF OPERATIONS
Omberg Carro, Susan K	NUCLEAR SAFETY
Powers, Daniel J	ETF ENGINEERING
Roosendaal, Gene D	TFP PROJECT MANAGEMENT
Rutherford, Wally	ETF ENGINEERING
Sackett, Tom E	TANK FARM PROJECTS
Samoska, Jerry A	INSTRUMENT & CNTRL ENGINEERING
Shultz, Milton V	NUCLEAR SAFETY
Smith, Gregory E	TANK FARM PROJECTS ENGINEERING
Smoot, Bill R	TFP RADCON
Swanson, Brad L	242-A/AW/ETF OPERATIONS
Wall, Jeremy M	RETRVL & CLOSURE/PROJ ENV CMPL

DOCUMENT RELEASE AND CHANGE FORM	**Doc No:** RPP-CALC-63650 **Rev.** 00

14. **Distribution**

Name	**Organization**
Wilson, Nathaniel W	ETF PROJECTS ENGINEERING

242AL-41 Leachate and Basin Pump Flow Calculation

Prepared by

Gallegos, JF
ARES ESD, a division of Sargent & Lundy Engineering Services, Inc., for
Washington River Protection Solutions, LLC

Date Published
April 2020

Prepared for the U.S. Department of Energy
Office of River Protection

Contract No. DE-AC27-08RV14800

Approved for Public Release;
Further Dissemination Unlimited

RPP-CALC-63650, Rev. 0

Sargent & Lundy Engineering Services, Inc.	**CALCULATION COVER SHEET**	**Page No.** 1 of 180	
		Date 4/10/2020	**Rev. No.** 0
		Calculation No: S54413.024-M-002	

Project No.	**Project Title:**	**Client:**
S54413.024	LERF Basin 41 Design	Washington River Protection Solutions, LLC.

Title:

242AL-41 Leachate and Basin Pump Flow Calculation

Purpose and Objective:

The purpose of this calculation is to ensure the 242-A Evaporation Stream Retention Basin (242AL-41 Basin) Leachate and Basin pump are adequately sized for their intended purpose. This calculation also verifies that Basin pump control valve MOV-41-1 and Leachate pump needle valve HV-41-11 are adequately sized to prevent pump runout without valve cavitation.

Rev. No.	Total Pages		Prepared By	Checked By	PM/TL
0	180	Print Name/ Sign:	Gallegos, JF, P.E.	Dixon, KW, P.E.	Dorsh, PM, P.E.
		Date:	4/14/2020	4/14/2020	4/14/2020

Revision Description (Revision Description/Affected Pages):

Initial release.

		Print Name/ Sign:			
		Date:			

Revision Description (Revision Description/Affected Pages):

RPP-CALC-63650, Rev. 0

CALCULATION REVIEW CHECKLIST

Project No.	Calculation No.	Rev. No.	Page No.
S54413.024	S54413.024-M-002	0	2 of 180

Items Checked	Accept Y	Accept N	Accept N/A	Description of Resolution for Unacceptable Items
1. Cover sheets properly completed.	√			
2. Calculation sheet headers complete with calculation number, revision number, etc.	√			
3. Calculation sheet contents are legible, accurate, and complete per format.	√			
4. Listed attachments included.	√			
5. Calculation objective clearly described.	√			
6. Criteria are suitable and properly referenced to task specific documents.	√			
7. Assumptions and input data selected, described, reasonable, and attached or referenced to task documents.	√			
8. Calculation method identified and appropriate for the design activity.	√			
9. Calculation results reasonable and correctly described in results and conclusions.	√			
10. Physical property calculations generated by CAD software verified via hand calculations.			√	
11. Computer program identified with version and revision.	√			
12. Computer input/output provided or referenced and reasonable.	√			
13. Computer run traceable to calculation (file #, etc.).	√			
14. Computer input/output data and problem type within validation/verification range of use.	√			
15. Computer program validation/verification addressed.	√			
16. Computer operating system in use for calculation preparation is the same as when the software was verified on machine.	√			

Calculation Checking Method	√	Applicable Pages
1. Direct Step-by-Step Check	√	All.
2. Reference Chart(s) or Book(s) Comparison (Append Documentation)		
3. Alternate Calculation (Append Documentation)		

Comments:
None.

Preparer (Print Name and Sign):	Date:
Gallegos, JF, P.E.	4/14/2020
Checker (Print Name and Sign):	**Date:**
Dixon, KW, P.E.	4/14/2020

Signatures obtained only after discrepancies are corrected and comments are resolved.

CALCULATION SHEET

Project No. S54413.024	**Calculation No.** S54413.024-M-002	**Rev.** 0	**Page No.** 3 of 180
Title: 242AL-41 Leachate and Basin Pump Flow Calculation			
Prepared By: Gallegos, JF, P.E.	**Date:** 4/10/2020	**Checked By:** Dixon, KW, P.E.	**Date:** 4/10/2020

TABLE OF CONTENTS

1.0 PURPOSE 6

2.0 METHODOLOGY 6
- 2.1 Background 6
- 2.2 System Model 7
  - 2.2.1 Catch Basin Pump Piping Routes Analyzed 7
  - 2.2.2 Basin Pump Recirculation Route 8
  - 2.2.3 Leachate Piping Route Analyzed 9
  - 2.2.4 Control Valve sizing 10

3.0 DESIGN INPUTS 11

4.0 ASSUMPTIONS 13

5.0 COMPUTER SOFTWARE 13

6.0 RESULTS 14
- 6.1 Leachate Pump and System Results 14
- 6.2 Basin Pump and System Results 15

7.0 CONCLUSIONS 16
- 7.1 Leachate Pump 16
- 7.2 Basin Pump 16
- 7.3 Control Valve Sizing 17

8.0 REFERENCES 18

Appendices

APPENDIX A
BASIN PUMP FATHOM MODEL

APPENDIX B
BASIN PUMP FATHOM RUN 1 INPUTS AND OUTPUTS

APPENDIX C
BASIN PUMP FATHOM RUN 2 INPUTS AND OUTPUTS

APPENDIX D
BASIN PUMP RECIRCULATION MODEL

APPENDIX E
BASIN PUMP RECIRCULATION FATHOM INPUTS AND OUTPUTS

APPENDIX F
LEACHATE PUMP FATHOM MODEL

APPENDIX G
LEACHATE PUMP FATHOM INPUTS AND OUTPUTS

Attachments

ATTACHMENT 1
LEACHATE PUMP CURVE

ATTACHMENT 2
BASIN PUMP CURVE

ATTACHMENT 3
CAVITATION CALCULATION

ATTACHMENT 4
FLOWTEK CUTSHEET

ATTACHMENT 5
SWAGELOK NEEDLE VALVE CUTSHEET

ATTACHMENT 6
LEACHATE STRAINER DATA

ATTACHMENT 7
3-WAY VALVE DATA SHEET

ATTACHMENT 8
FRP DATA SHEET

ATTACHMENT 9
67246-024-RFI-002-R0

Figures

Figure 2-1. Catch Basin Pump Routes Analyzed. 7
Figure 2-2. Basin Pump Scenario Chart 8
Figure 2-3. Leachate Route Analyzed. 9
Figure 2-4. Leachate Pump Scenario Chart. 10
Figure 6-1. Leachate Pump and System Curves. 14
Figure 6-3. Basin Pump and System Curves. 16

Tables

Table 6-1. Leachate Pump Operation Data. 14
Table 6-3. Basin Pump Operation Data. 15

Acronyms

dP	Differential Pressure
ETF	Effluent Treatment Facility
LERF	Liquid Effluent Retention Facility
WTP	Waste Treatment and Immobilization Plant

CALCULATION SHEET

Project No. S54413.024	**Calculation No.** S54413.024-M-002	**Rev.** 0	**Page No.** 6 of 180
Title: 242AL-41 Leachate and Basin Pump Flow Calculation			
Prepared By: Gallegos, JF, P.E.	**Date:** 4/10/2020	**Checked By:** Dixon, KW, P.E.	**Date:** 4/10/2020

1.0 PURPOSE

The purpose of this calculation is to ensure the 242-A Evaporation Stream Retention Basin (242AL-41 Basin) Leachate and Basin pump are adequately sized for their intended purpose. This calculation also verifies that Basin pump control valve MOV-41-1 and Leachate pump needle valve HV-41-11 are adequately sized to prevent pump runout without valve cavitation.

2.0 METHODOLOGY

2.1 Background

The Liquid Effluent Retention Facility (LERF) stores waste water from several Hanford sources for eventual processing through the Effluent Treatment Facility (ETF) via the respective Retention Basin pump. To ensure rainwater does not accumulate on top of the retention basin liner, a floating rainwater pump transports the accumulated rainwater into the retention basin. In addition, each retention basin is comprised of a double liner on the bottom of the basin and any fluid that passes through the first liner is returned to the respective basin via the Leachate pump. The original excavation of the LERF basins included the capacity for four basins; 242AL-41 (Basin 41), 242AL-42 (Basin 42), 242AL-43 (Basin 43), and 242AL-44 (Basin 44). However, only the infrastructure for Catch Basin 42, Catch Basin 43, and Catch Basin 44 were designed and installed. Therefore, there are currently only three operating LERF Basins.

As the Waste Treatment and Immobilization Plant (WTP) begins processing waste, additional LERF capacity will be required. The undeveloped Basin 41 has been allocated for design and installation of the necessary basin infrastructure to support the additional capacity requirement.

2.2 System Model

2.2.1 Catch Basin Pump Piping Routes Analyzed

The proposed LERF Basin piping system is comprised of four Basins with the option to pump from each Basin to the ETF. By inspection of the 15 operational lineups identified in RPP-RPT-61817, the highest head loss routes occur when originating from 242AL-41 Basin. Two of these operational lineups (#1 and #5) are evaluated in this analysis. Note that lineups #5 and #11 are identical relative to ETF feed. Both routes start at the bottom of 242AL-41 Basin and pass through piping in Basins 242AL-42 & 43. At 242AL-43 the transfer may be routed directly to the ETF through a 3” piping line (Run 1) or pass through 242AL-44 then to ETF through a 4” piping line (Run 2). Once at the ETF the 3” line is reduced to a 2” pipe and the 4” line is reduced to a 3” pipe. The 2” pipe is expanded to a 3” pipe and both lines enter a common 3” header. The common header piping is reduced to 2” pipe prior to entering the influent filters and expanded back to 3” pipe after exiting the filter. The piping size remains at 3” for the remainder of the route to the Tank 60A-TK-1. Also, a recirculation run, which is used for a pond mixture function, is analyzed. See Figure 2-1 for the Basin routes analyzed.

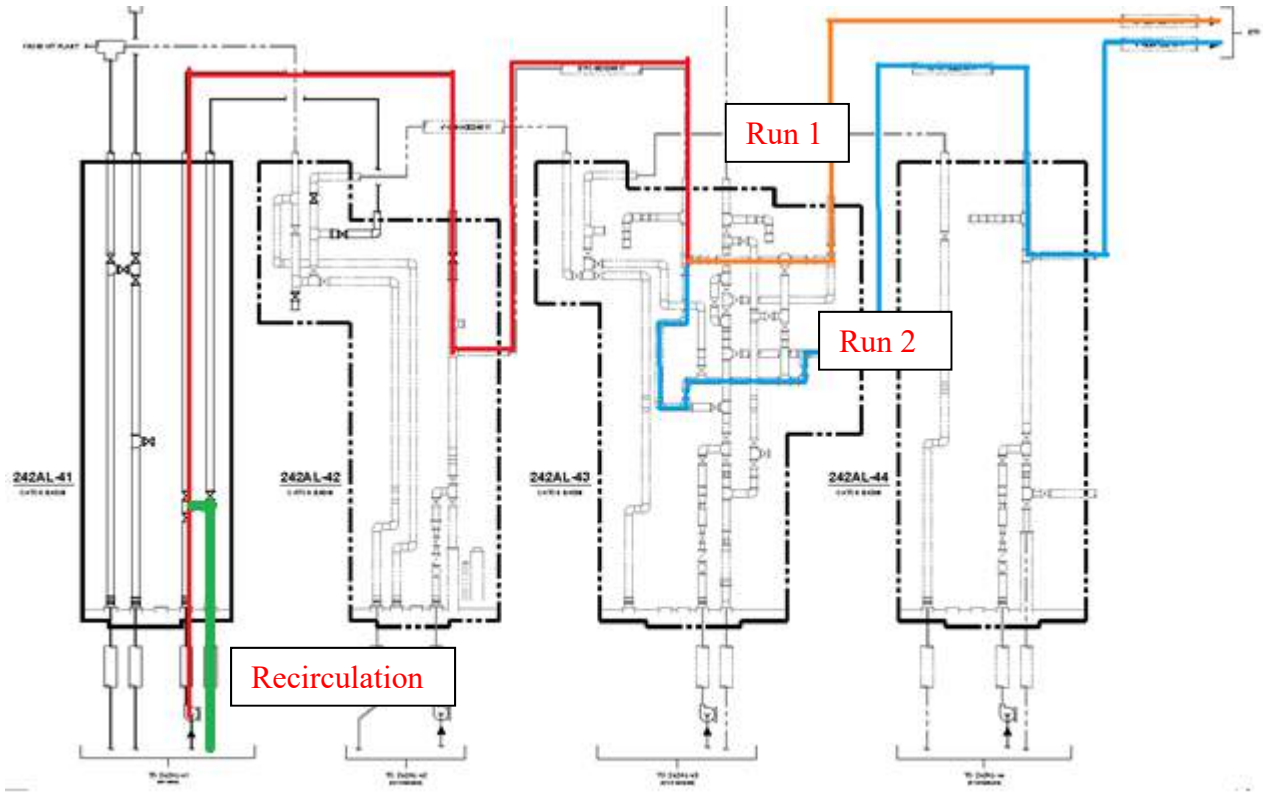

Figure 2-1. Catch Basin Pump Routes Analyzed.

Within the 2 routes identified above (Run 1 and Run 2), only basin fluid levels and influent filter differential pressure (dP) are varied for high and low head loss scenarios. Run 1 is based on operational lineup #1 per RPP-RPT-61817. Run 2 is based on operational lineup #5 or #11 per RPP-RPT-61817. Below are the route scenarios considered with the green blocks depicting the cases evaluated.

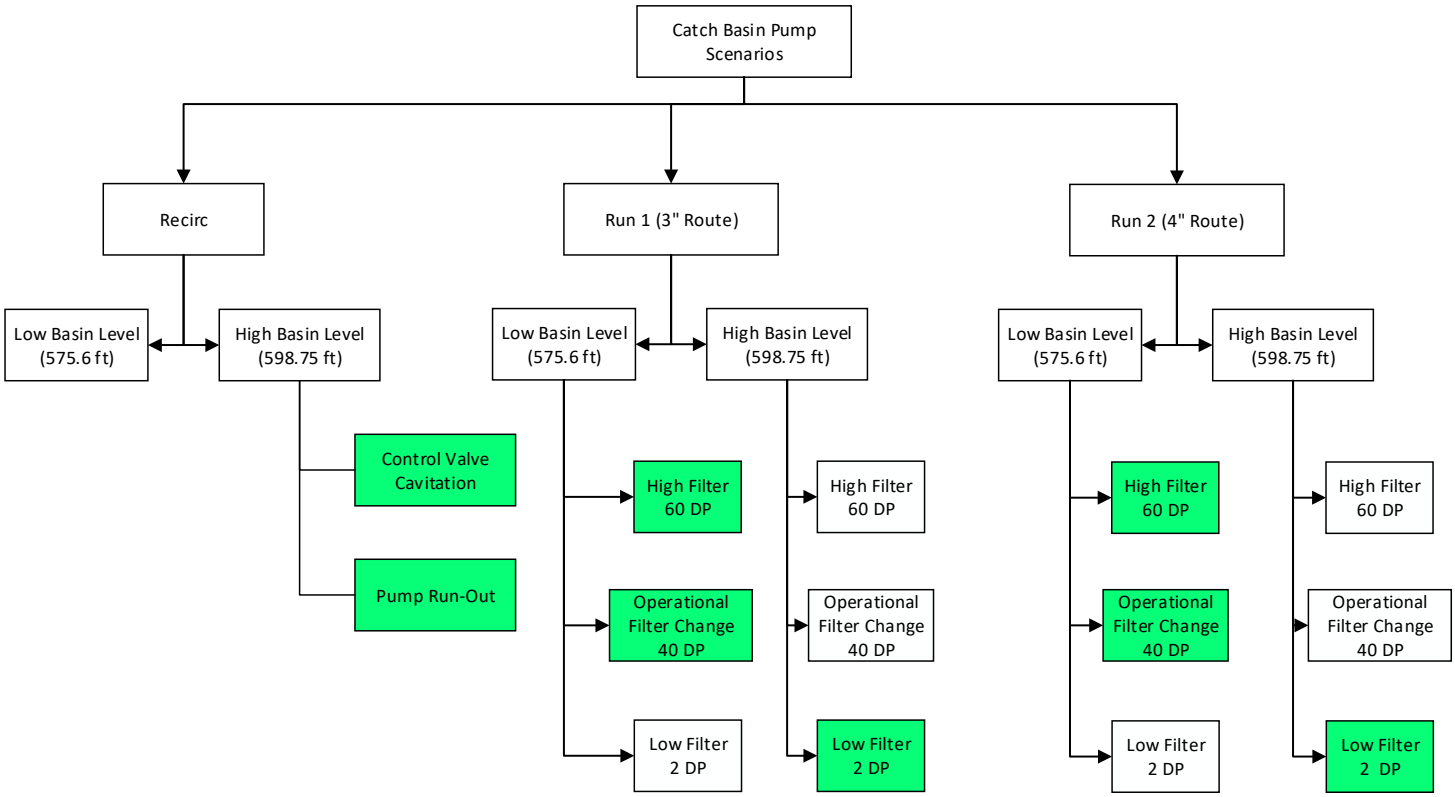

Figure 2-2. Basin Pump Scenario Chart

Note: Maximum differential pressure across influent is 60 psid, but filters are normally changed when they reach 40 psid (67246-024-RFI-002-R0, Section 3, Item 4). Since the filter is normally changed at 40 psid, this value will be included in the Low Basin Scenarios.

2.2.2 Basin Pump Recirculation Route

As shown in Figure 2-2 above, 8 Basin pump scenarios are analyzed. A low head loss recirculation operation is analyzed to ensure pump run-out does not occur. If throttling is required, a control valve cavitation check is analyzed. For transfer operations to ETF, a high, low and operational head loss scenario is evaluated for both Run 1 and Run 2. For these scenarios only basin fluid level and influent filter differential pressures are varied.

2.2.3 Leachate Piping Route Analyzed

The Leachate pump is at the bottom of the Basin and located between the two liners to remove water that leaks through the first liner. Piping follows the slope of the retention basin from the bottom to the respective catch basin, which is located approximate 25' higher. It is then routed back to the bottom of the respective Basin, thus returning any fluid that leaked past the first liner. Basin fluid levels are varied and manufacturer minimum and maximum continuous operating flow rates (2 and 22 gpm) are checked. If required, needle valve HV-41-11 percent open values will be determined to ensure the pump operates within these flow rates. See Figure 2-3 for the Leachate route analyzed. Note all retention basin leachate routes are identical. Although 242AL-44 is shown below as the example, the analysis is for a Leachate pump to be installed in 242AL-41.

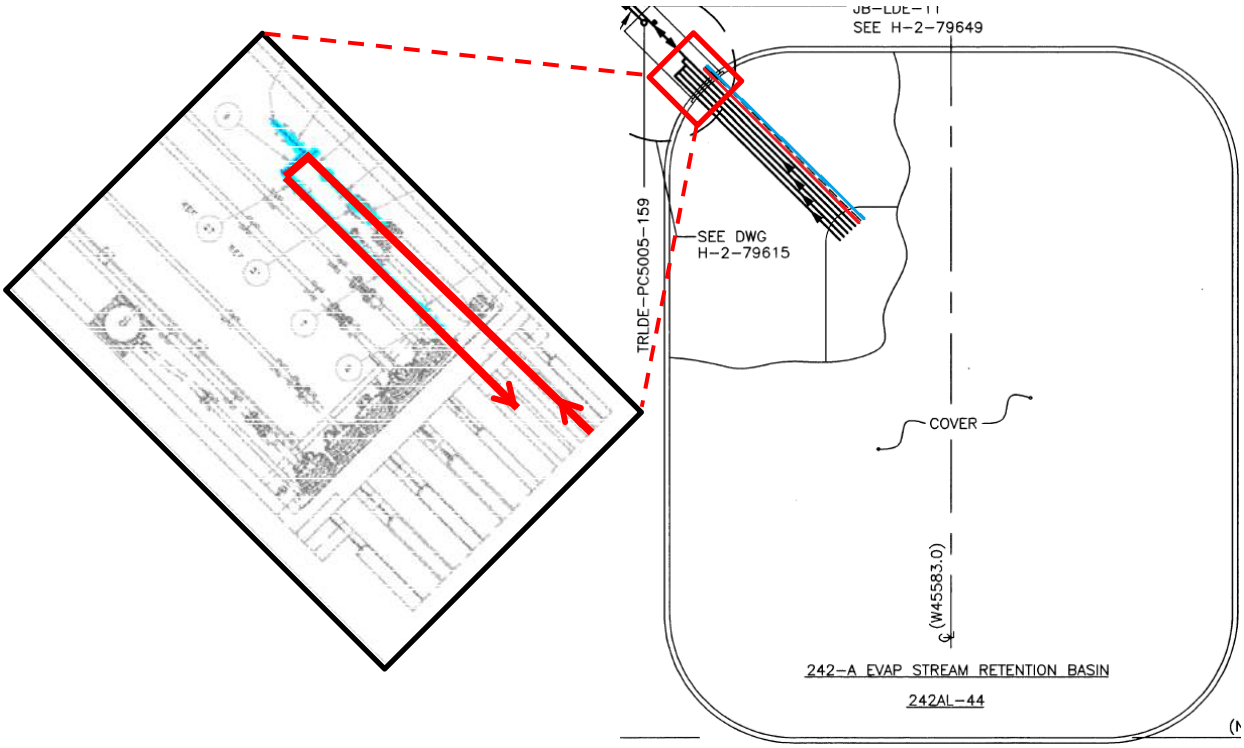

Figure 2-3. Leachate Route Analyzed.

Figure 2-4, indicates the Leachate pump scenarios considered. The green blocks depict the cases evaluated.

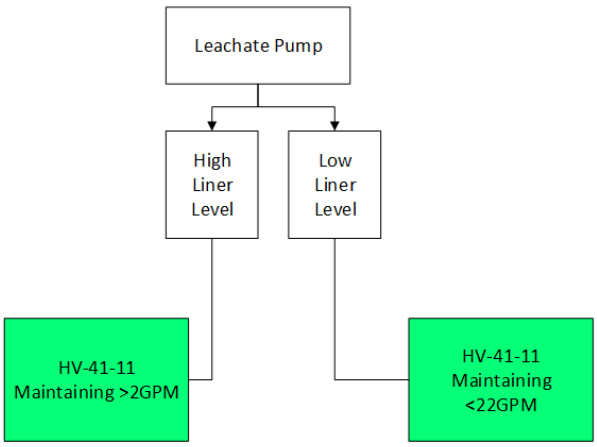

Figure 2-4. Leachate Pump Scenario Chart.

2.2.4 Control Valve sizing

MOV-41-1

LERF Catch Basin 41 control valve MOV-41-1 (H-2-88766) minimum and maximum percent open values are evaluated during recirculation operations. The minimum percent open value must ensure that the minimum pump flow rate (40 gpm) is achieved without cavitation occurring at the valve. This is determined by controlling the valve to allow 40 gpm of flow and checking for valve cavitation. If cavitation occurs the valve is opened further and checked iteratively until cavitation no longer occurs (see Attachment 3). The maximum percent open value ensures that the maximum pump runout flow rate (280 gpm) is not exceeded. This is determined by controlling the valve to allow 280 gpm of flow and recording the percent open value. The high basin fluid level recirculation scenario will bound all ETF transfer scenarios for valve cavitation since this scenario has the lowest head loss.

HV-41-11

If required, LERF Catch Basin 41 needle valve HV-41-11 (H-2-88766) minimum and maximum percent open values for maintaining the leachate pump manufacturer's minimum (2 gpm) and maximum (22 gpm) flow rates (see Attachment 1) are determined. Maximum valve percent open values are determined with a low basin level while maintaining 22 gpm. If throttling is required a minimum valve open percent is determined to ensure the minimum pump flowrate of 2 gpm is maintained during leachate operations.

CALCULATION SHEET

Project No. S54413.024	**Calculation No.** S54413.024-M-002	**Rev.** 0	**Page No.** 11 of 180
Title: 242AL-41 Leachate and Basin Pump Flow Calculation			
Prepared By: Gallegos, JF, P.E.	**Date:** 4/10/2020	**Checked By:** Dixon, KW, P.E.	**Date:** 4/10/2020

3.0 DESIGN INPUTS

1. All non-FRP pipe is modeled as carbon steel, with an absolute roughness of 0.0018 inches per Crane pg. A-24. This is higher than the default Fathom stainless steel roughness since the default value could not be independently verified.
2. FRP pipe absolute roughness is 1.7 $X10^{-5}$ ft (0.000204 in) (Attachment 8).
3. All FRP pipe dimensions are modeled as the nominal size per ASTM D2996, Table 4.
4. Fluid density is evaluated at 1 SpG for all scenarios (67246-024-RFI-002, Attachment 9).
5. Fluid viscosity is evaluated at 1 cP for all scenarios (67246-024-RFI-002, Attachment 9).
6. Target flow rate for Basin pump is 75 gpm (normal) and 150 gpm (max) (67246-024-RFI-002, Attachment 9).
7. All pipe sizes, fittings, and associated dimensions for the Leachate pump are extracted from H-2-838769.
8. All pipe sizes, fittings, and associated dimensions for the Basin pump are extracted from H-2-838768.
9. All Catch Basin 242AL-41 dimensions, fittings, and routes were extracted from H-2-838771.
10. All Catch Basin 242AL-42 dimensions, fittings, and routes were extracted from H-2-79613 and H-2-79617.
11. All Catch Basin 242AL-43 dimensions, fittings, and routes were extracted from H-2-79614 and H-2-79617.
12. All Catch Basin 242AL-44 dimensions, fittings, and routes were extracted from H-2-79615 and H-2-79617.
13. Catch Basin 242AL-41 to 242AL-42 is modeled per H-2-838765.
14. All Catch Basin 242AL-42 to Catch Basin 242AL-43 and 44 runs are modeled per H-2-79610.
15. Catch Basin 242AL-43 to ETF and Catch Basin 242AL-44 to ETF are modeled per H-2-88768.
16. The control valve MOV-41-1 is a Flowtek Full Port F15 V-Port 60° Ball Valve (H-2-838771). Cvs are per Manufacturer data (Attachment 4).
17. The needle valve MOV-41-11 is a Swagelok SS-18RF (H-2-838770). Cvs are per Manufacturer data (Attachment 5).

18. The basin maximum and minimum water levels are 601 ft (H-2-838750, Sh. 1) and 576.60 ft respectively (H-2-838774).

19. Leachate low fluid level is 574.50ft (H-2-838774). The leachate high fluid level is 576.60ft (H-2-838774) however is not accounted for as it will have minimal impact on the results.

20. Elevations and lengths from LERF to ETF are extracted from H-2-88768.

21. All ETF piping, fittings, and dimensions are modeled from H-2-89183, H-2-89200 and H-2-88974.

22. Orifice size of FO-60A-001 (H-2-88974, H-2-89183, and H-2-89183) is 1.361” inside diameter (ECN-642756).

23. Maximum and minimum operating differential pressure of an influent filter (30B-FL-1A, 60B-FL-1B, or 60B-FL-1C) are 60 psid and 2 psid, respectively (67246-024-RFI-002-R0). Although 60 psid is the maximum allowable operating differential pressure, filters are normally changed when they reach 40 psid (67246-024-RFI-002-R0).

24. The Leachate pump is a LOWARA pump model 1SC3/05/6CL40 per H-2-838769. The Leachate pump curve data is extracted from Manufacturer’s data in Attachment 1.

25. The Basin pump is a Gorman Rupp model SM4H65-X10 per H-2-838768. Basin pump curve data extracted from Manufacturer’s data in Attachment 2, Basin pump curve.

26. The 3-Way valve in Catch Basin 41 is a 4" Flowtek Model MPF150 per H-2-838771. This valve has a 90° and 180° Cv of 409 and 561, respectively per manufacturer data (Attachment 7).

27. The Leachate route strainer in Catch Basin 41 is a 1.5” Mueller Model 582-SS per H-2-838770. Using the manufacturer’s data point of (60gpm,1psid) (see Attachment 6), the fill as quadratic function is used in Fathom to create a resistance curve for the strainer.

28. The discharge piping into ETF Surge tank 60A-TK-1 is modeled at 609’ per H-2-89200. The piping discharges into atmospheric pressure and is never submerged.

29. Pressure loss due to expansion joints is not accounted for due to the short length and negligible pressure loss.

30. All constant inputs. Variances in pipe inside diameters pipe roughness, and expansion joints have minimal effect on the results of this evaluation. For the items listed above a nominal value is used regardless of them having a range. Also, note that intermediate elevations in the system have negligible effect on the results as well.

4.0 ASSUMPTIONS

No unverified assumptions.

5.0 COMPUTER SOFTWARE

The pipe flow modeling software, AFT Fathom™[2] Version 10.0 was used to model the piping system. This software is an engineering tool used in the evaluation of incompressible flow in pipe networks. The program was executed on a Dell™[3] computer having Service Tag No. JMKFDR2. This software has been validated through several hydraulic solution verification models that have been compared to publish results (Ref., ARES ESD V&V No. VV-19-11-024). Mathcad®[1] 15 was used for the hand calculations. All Mathcad®[2] 15 computations are checked using a handheld calculator.

[1] Mathcad® is a registered trademark of Parametric Technology Corporation., Needham, MA.
[2] Fathom is a registered trademark of Applied Flow Technologies, Colorado Springs, CO.
[3] Dell Technologies, Dell, EMC, Dell EMC, and other trademarks are trademarks of Dell Inc. or its subsidiaries.

6.0 RESULTS

6.1 Leachate Pump and System Results

Table 6-1. Leachate Pump Operation Data.

Data	Leachate Minimum Flow Model	Leachate Maximum Flow Model
Flow (gpm)	3.7	10.4
Head (ft)	157.3	112.6
Leachate Fluid Level (ft)	574.5	574.5
Basin Fluid Level (ft)	601	576.6
Needle Valve %Open	30	100

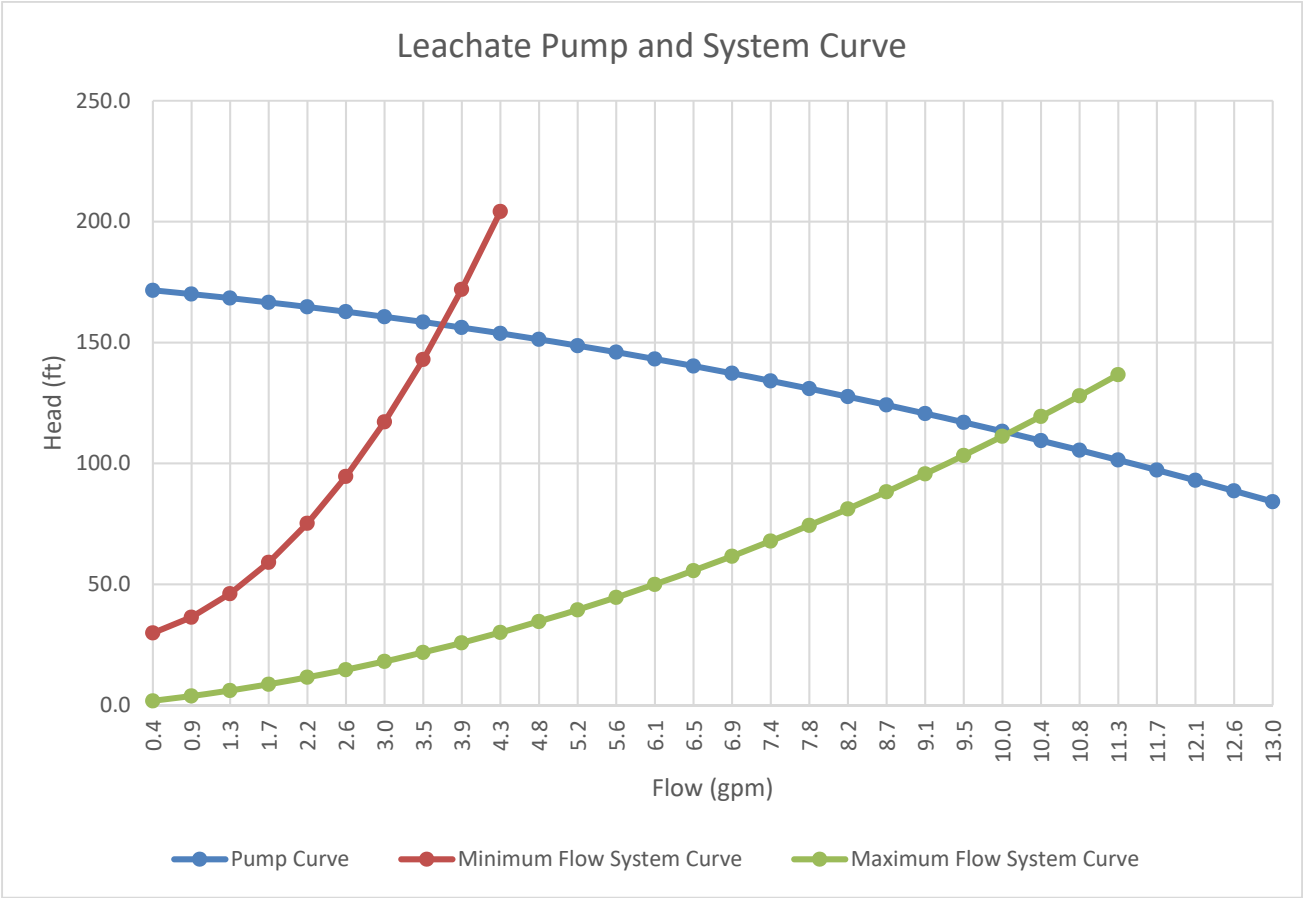

Figure 6-1. Leachate Pump and System Curves.

6.2 Basin Pump and System Results

Table 6-3. Basin Pump Operation Data.

Basin Pump Flow	Through 3" Neck Down Line (Run 1) High DP	[1]Through 3" Neck Down Line (Run 1) Filter Change DP	Through 3" Neck Down Line (Run 1) Low DP	Through 4" Neck Down Line (Run 2) High DP	[1]Through 4" Neck Down Line (Run 2) Filter Change DP	Through 4" Neck Down Line (Run 2) Low DP	Minimum Recirculation flow Back to the LERF Basin	Maximum Recirculation flow Back to the LERF Basin
Flow (gpm)	71.92	101.5	152.2	84.08	118.2	176.3	125.0	280
Head (ft)	207.1	194.5	163.7	202.4	185.6	145.1	181.7	35.2
Basin Fluid Level (ft)	576.6	576.6	601	576.6	576.6	601	N/A	N/A
Surge Tank Discharge Elev. (ft)	609	609	609	609	609	609	N/A	N/A
Filter Pressure Diff. (psid)	60	40	2	60	40	2	N/A	N/A
[2]Control Valve Position Open	100%	100%	100%	100%	100%	100%	30.86%	58.55%

Note: [1]Filter dP not normally operated past 40 psid (67246-024-RFI-002-R0).
[2]Control valve cavitation does not occur from 0%-100% position on all Run 1 and Run 2 scenarios.

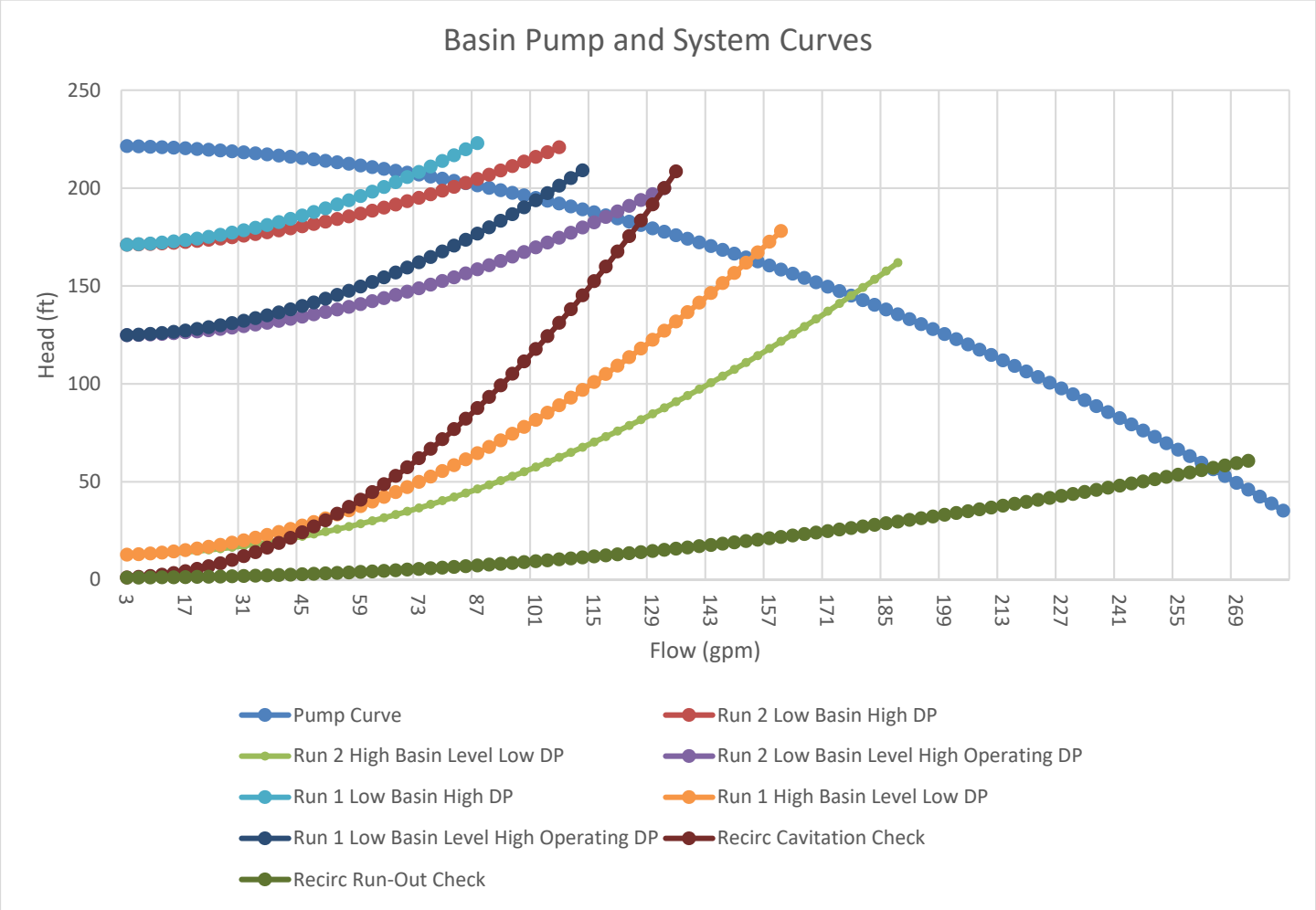

Figure 6-3. Basin Pump and System Curves.

7.0 CONCLUSIONS

7.1 Leachate Pump

The Leachate pump will operate between the minimum allowable flow rate of 3.7 gpm (Attachment 1) and the maximum allowable flow rate of 10.0 gpm with HV-41-11 at 30% and 100% Open, respectively.

7.2 Basin Pump

All Run 1 and Run 2 scenarios are capable of operating (i.e. controlled using MOV41-1) between the minimum (75 gpm) and maximum (150 gpm) target flow rates when flowing to ETF.

Recirculation operations require throttling of MOV41-1 between (30.86%) and (58.55%) open to operate below the pump runout flow rate (280 gpm) without cavitation at the valve.

7.3 Control Valve Sizing

Control valve MOV-41-1 is recommended to be set between 30.86% open and 58.55% open to ensure valve cavitation and Basin pump run-out does not occur (Attachment 3 and Attachment 2) during recirculation operations. Valve cavitation will not occur at any valve position during any Run 1 or 2 scenarios.

Needle valve MOV-41-11 is recommended to be left at 100% open since pump-run-out will not occur. However, if throttling is required then the valve should not close more than 30% open to ensure the minimum leachate pump flowrate is maintained.

8.0 REFERENCES

67246-024-RFI-002, *LERF Basin 41 Engineering Design*, Rev. 0, U.S. Department of Energy, Richland, WA.

ASTM D2996, *Standard Specifications for Filament-Wound "Fiberglass" (Glass-Fiber-Reinforced Thermosetting-Resin) Pipe*, 2017, ASTM International, West Conshohocken, PA.

Çengel, *Heat and Mass Transfer Fundamentals and Applications*, 4th Ed., McGraw Hill, New York, NY.

Emerson Process Management, *Control Valve Handbook*, Ed. 4th, Fisher Controls International, Marshalltown, IA.

H-2-79590, *Civil Plan, sections & Details Cell Basin Bottom Liner*, Rev. 3, U.S. Department of Energy, Richland, WA.

H-2-79591, *Civil Plan, Sections, & Det Cell Basin Top Liner*, Rev. 3, U.S. Department of Energy, Richland, WA.

H-2-79593, Sh. 1, *Civil Plan, Sections & Det Catch Basin*, Rev. 5, U.S. Department of Energy, Richland, WA.

H-2-79610, *Piping Plan Retention Basins*, Rev. 3, U.S. Department of Energy, Richland, WA.

H-2-79613, *Piping Plan Catch Basin 242AL-42*, Rev. 5, U.S. Department of Energy, Richland, WA.

H-2-79614, Sh. 1, *Piping Plan Catch Basin 242AL-43*, Rev. 6, U.S. Department of Energy, Richland, WA.

H-2-79615, *Piping Plan Catch Basin 242AL-44*, Rev. 5, U.S. Department of Energy, Richland, WA.

H-2-79617, *Piping Sections Catch Basins 242AL-42-43-44*, Rev. 3, U.S. Department of Energy, Richland, WA.

H-2-79620, Sh. 1, *Piping Elev Sect & Dets Leachate Pump Assembly*, Rev. 5, U.S. Department of Energy, Richland, WA.

H-2-79620, Sh. 2, *Piping Elev Sect & Dets Portable Pump Assembly*, Rev. 4, U.S. Department of Energy, Richland, WA.

H-2-838750, Sh. 1, *LERF BASIN 41 CIVIL TOP LINER*, Rev. 0, U.S. Department of Energy, Richland, WA.

H-2-838765, *LERF Basin 41 Mechanical General Arrangement*, Rev. 0, U.S. Department of Energy, Richland, WA.

H-2-838768, *LERF Basin 41 Basin Pump Assembly*, Rev. 0, U.S. Department of Energy, Richland, WA.

H-2-838769, *LERF Basin 41 Leachate Pump Assembly*, Rev. 0, U.S. Department of Energy, Richland, WA.

H-2-838771, *LERF Basin 41 Catch Basin Piping Detail*, Rev. 0, U.S. Department of Energy, Richland, WA.

H-2-838774, *LERF Basin 41 Mechanical Hydraulic Diagram*, Rev. 0, U.S. Department of Energy, Richland, WA.

H-2-88768, *Piping Plan/Profile 4”-60M-002-M17 & 3”-60M-001-M17*, Rev. 1, U.S. Department of Energy, Richland, WA.

H-2-88974, *Piping & Instm Diag Influent Reception System*, Rev. 19, U.S. Department of Energy, Richland, WA.

H-2-89183, *Piping Arrangement Plans & Sec Col Grid E, F-7,8*, Rev. 7, U.S. Department of Energy, Richland, WA

H-2-89200, *Piping Arrangement Plans & Sec. South Yard Area*, Rev. 5, U.S. Department of Energy, Richland, WA.

RPP-RPT-61817, *LERF Basin 242SL-41 Piping Alternatives Evaluation*, Rev. 0, U.S. Department of Energy, Richland, WA.

APPENDIX A

BASIN PUMP FATHOM MODEL

Sargent & Lundy Engineering Services, Inc.

CALCULATION SHEET

Project No.	S54413.024	**Calculation No.**	S54413.024-M-002	**Rev.**	0	**Page No.**	21 of 180
Title:	Leachate and Basin Pump Flow Calculation						
Prepared By:	Gallegos, JF, P.E.	**Date:**	4/10/2020	**Checked By:**	Dixon, KW, P.E.	**Date:**	4/10/2020

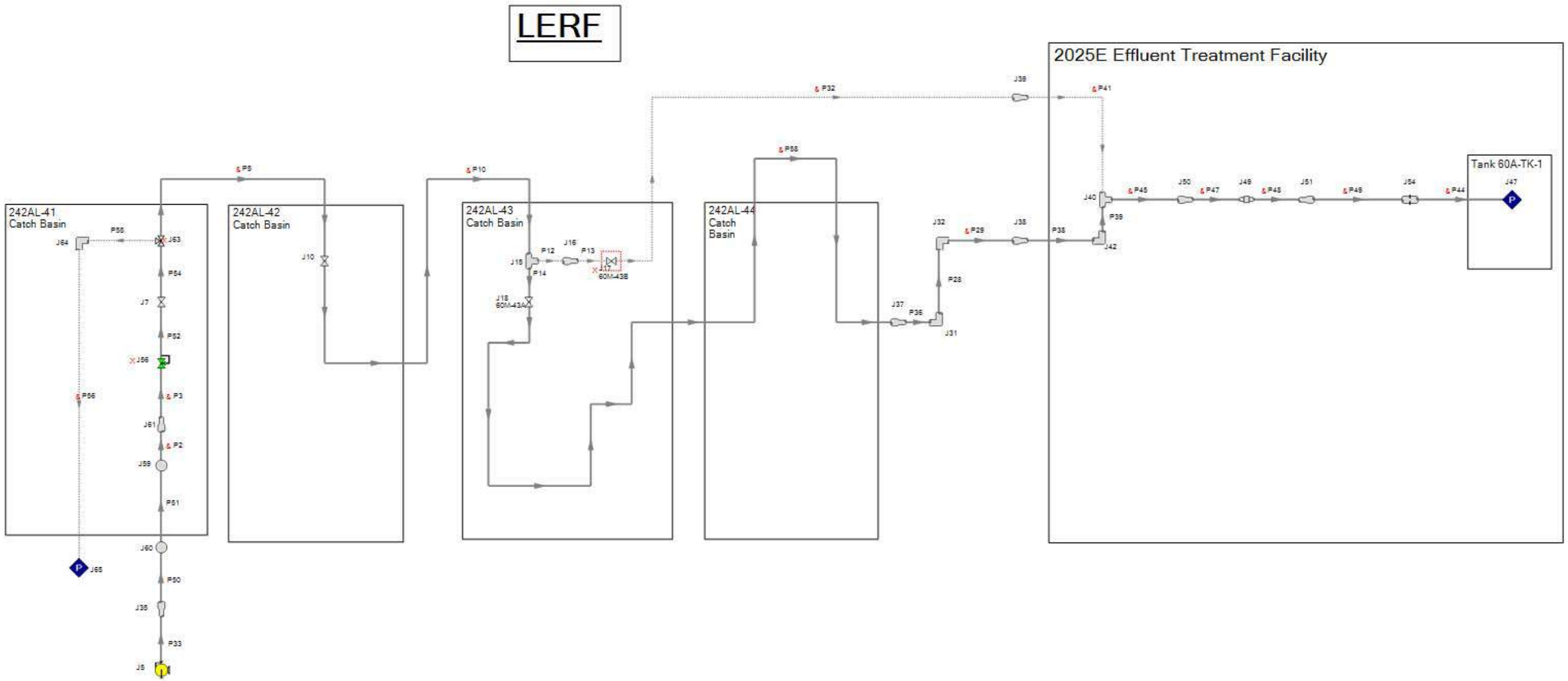

APPENDIX B

BASIN PUMP FATHOM RUN 1 INPUTS AND OUTPUTS

HIGH BASIN LEVEL/LOW FILTER DP

LOW BASIN LEVEL/HIGH FILTER DP

LOW BASIN LEVEL/HIGH OPERATING FILTER DP

CALCULATION SHEET

Project No. S54413.024	**Calculation No.** S54413.024-M-002	**Rev.** 0	**Page No.** 23 of 180
Title: Leachate and Basin Pump Flow Calculation			
Prepared By: Gallegos, JF, P.E.	**Date:** 4/10/2020	**Checked By:** Dixon, KW, P.E.	**Date:** 4/10/2020

HIGH BASIN LEVEL/LOW FILTER DP

CALCULATION SHEET

Project No. S54413.024	**Calculation No.** S54413.024-M-002	**Rev.** 0	**Page No.** 24 of 180
Title: Leachate and Basin Pump Flow Calculation			
Prepared By: Gallegos, JF, P.E.	**Date:** 4/10/2020	**Checked By:** Dixon, KW, P.E.	**Date:** 4/10/2020

AFT Fathom 10 (Model) 4/13/2020 Page 1	AFT Fathom Model	

General

Title: AFT Fathom Model
Input File: P:\Clients\Washington River Protection Solutions - WRPS 544\S54413.024 - LERF Basin 41 Design\Calculations\Mech\M-002 Flow\Rev 0\VV Files\LERF TransferRev0.fth
Scenario: Base Scenario/Run 1/High Basin Level Low DP

Number Of Pipes= 27
Number Of Junctions= 27

Pressure/Head Tolerance= 0.0001 relative change
Flow Rate Tolerance= 0.0001 relative change
Temperature Tolerance= 0.0001 relative change
Flow Relaxation= (Automatic)
Pressure Relaxation= (Automatic)

Constant Fluid Property Model
Fluid Database: User Specified
Fluid= User Specified
Density= 1 S.G. water
Viscosity= 1 centipoise
Vapor Pressure= Unspecified
Viscosity Model= Newtonian
Apply laminar and non-Newtonian correction to: Pipe Fittings & Losses, Junction K factors, Junction Special Losses, Junction Polynomials
Corrections applied to the following junctions: Branch, Reservoir, Assigned Flow, Assigned Pressure, Area Change, Bend, Tee or Wye, Spray Discharge, Relief Valve

Ambient Pressure (constant)= 1 atm
Gravitational Acceleration= 1 g
Turbulent Flow Above Reynolds Number= 4000
Laminar Flow Below Reynolds Number= 2300

Pipes

Pipe	Name	Pipe Defined	Length	Length Units	Hydraulic Diameter	Hydraulic Diam. Units	Friction Data Set	Roughness	Roughness Units	Losses (K)
2	Pipe	Yes	30	feet	2.067	inches	Standard	0.0018	inches	0.301856
3	Pipe	Yes	2	feet	4.026	inches	Standard	0.0018	inches	0.04
5	Pipe	Yes	378	feet	4	inches	Unspecified	0.000204	inches	0.5749724
10	Pipe	Yes	350	feet	8	inches	Unspecified	0.000204	inches	1.622009
12	Pipe	Yes	2	feet	8	inches	Unspecified	0.000204	inches	0
13	Pipe	Yes	1	feet	3	inches	Unspecified	0.000204	inches	0
14	Pipe	Yes	1	feet	8	inches	Unspecified	0.000204	inches	0
28	Pipe	Yes	30	feet	4	inches	Unspecified	0.000204	inches	0
29	Pipe	Yes	1521	feet	4	inches	Unspecified	0.000204	inches	2.38
32	Pipe	Yes	1221	feet	3	inches	Unspecified	0.000204	inches	4.702397
33	Pipe	Yes	1	feet	3.26	inches	Standard	0.0018	inches	0
36	Pipe	Yes	7	feet	4	inches	Unspecified	0.000204	inches	0
38	Pipe	Yes	20	feet	3.068	inches	Standard	0.0018	inches	0

CALCULATION SHEET

Project No. S54413.024	**Calculation No.** S54413.024-M-002	**Rev.** 0	**Page No.** 25 of 180
Title: Leachate and Basin Pump Flow Calculation			
Prepared By: Gallegos, JF, P.E.	**Date:** 4/10/2020	**Checked By:** Dixon, KW, P.E.	**Date:** 4/10/2020

AFT Fathom 10 (Model)
4/13/2020
Page 2

AFT Fathom Model

Pipe	Initial Flow	Initial Flow Units	Junctions (Up,Down)	Geometry	Material	Size	Type	Special Condition
2			59, 61	Cylindrical Pipe	Steel - ANSI	2 inch	schedule 40	None
3			61, 56	Cylindrical Pipe	Steel - ANSI	4 inch	schedule 40	None
5			63, 10	Cylindrical Pipe	User Specified			None
10			10, 15	Cylindrical Pipe	User Specified			None
12			15, 16	Cylindrical Pipe	User Specified			None
13			16, 17	Cylindrical Pipe	User Specified			None
14			15, 18	Cylindrical Pipe	User Specified			None
28			31, 32	Cylindrical Pipe	User Specified			None
29			32, 38	Cylindrical Pipe	User Specified			None
32			17, 39	Cylindrical Pipe	User Specified			None
33			5, 35	Cylindrical Pipe	Steel - ANSI	3 inch	Schedule 10	None
36			37, 31	Cylindrical Pipe	User Specified			None
38			38, 42	Cylindrical Pipe	Steel - ANSI	3 inch	STD (schedule 40)	None

Pipe	Name	Pipe Defined	Length	Length Units	Hydraulic Diameter	Hydraulic Diam. Units	Friction Data Set	Roughness	Roughness Units	Losses (K)
39	Pipe	Yes	10	feet	3.068	inches	Standard	0.0018	inches	0
41	Pipe	Yes	15	feet	2.067	inches	Standard	0.0018	inches	0.8678359
44	Pipe	Yes	50	feet	3.068	inches	Standard	0.0018	inches	2.606288
45	Pipe	Yes	30	feet	3.068	inches	Standard	0.0018	inches	2.008384
47	Pipe	Yes	1	feet	2.067	inches	Standard	0.0018	inches	0.8489699
48	Pipe	Yes	1	feet	2.067	inches	Standard	0.0018	inches	0.8489699
49	Pipe	Yes	20	feet	3.068	inches	Standard	0.0018	inches	1.25524
50	Pipe	Yes	5	feet	4.026	inches	Standard	0.0018	inches	0
51	Pipe	Yes	98.93	feet	4.26	inches	Standard	0.0018	inches	0
52	Pipe	Yes	5	feet	4.026	inches	Standard	0.0018	inches	0
54	Pipe	Yes	10	feet	4.026	inches	Standard	0.0018	inches	0
55	Pipe	Yes	5	feet	4.026	inches	Standard	0.0018	inches	0
56	Pipe	Yes	46	feet	4.026	inches	Standard	0.0018	inches	0.4752721
58	Pipe	Yes	350	feet	8	inches	Unspecified	0.000204	inches	6.21

CALCULATION SHEET

Project No. S54413.024	**Calculation No.** S54413.024-M-002	**Rev.** 0	**Page No.** 26 of 180
Title: Leachate and Basin Pump Flow Calculation			
Prepared By: Gallegos, JF, P.E.	**Date:** 4/10/2020	**Checked By:** Dixon, KW, P.E.	**Date:** 4/10/2020

AFT Fathom 10 (Model)
4/13/2020
Page 3

AFT Fathom Model

Pipe	Initial Flow	Initial Flow Units	Junctions (Up,Down)	Geometry	Material	Size	Type	Special Condition
39			42, 40	Cylindrical Pipe	Steel - ANSI	3 inch	STD (schedule 40)	None
41			39, 40	Cylindrical Pipe	Steel - ANSI	2 inch	STD (schedule 40)	None
44			54, 47	Cylindrical Pipe	Steel - ANSI	3 inch	STD (schedule 40)	None
45			40, 50	Cylindrical Pipe	Steel - ANSI	3 inch	STD (schedule 40)	None
47			50, 49	Cylindrical Pipe	Steel - ANSI	2 inch	STD (schedule 40)	None
48			49, 51	Cylindrical Pipe	Steel - ANSI	2 inch	STD (schedule 40)	None
49			51, 54	Cylindrical Pipe	Steel - ANSI	3 inch	STD (schedule 40)	None
50			35, 60	Cylindrical Pipe	Steel - ANSI	4 inch	STD (schedule 40)	None
51			60, 59	Cylindrical Pipe	Steel - ANSI	4 inch	Schedule 10	None
52			56, 7	Cylindrical Pipe	Steel - ANSI	4 inch	schedule 40	None
54			7, 63	Cylindrical Pipe	Steel - ANSI	4 inch	schedule 40	None
55			63, 64	Cylindrical Pipe	Steel - ANSI	4 inch	schedule 40	None
56			64, 65	Cylindrical Pipe	Steel - ANSI	4 inch	schedule 40	None
58			18, 37	Cylindrical Pipe	User Specified			None

Pipe Fittings & Losses

Pipe	Total K	Elbow/Bend Standard Threaded	Elbow/Bend Smooth Flanged	Valve Butterfly	Valve Plug	Other Tee
2	0.3	1 (0.3)				
3	0.04					1 (0.04)
5	0.57		3 (0.57)			
10	1.62		3 (0.48)			2 (1.14)
29	2.38		7 (2.38)			
32	4.7		8 (1.94)	2 (1.62)		2 (1.14)
41	0.87		2 (0.53)		1 (0.34)	
44	2.61		6 (1.51)			1 (1.1)
45	2.01		8 (2.01)			
47	0.85			1 (0.85)		
48	0.85			1 (0.85)		
49	1.26		5 (1.26)			
56	0.48		2 (0.48)			
58	6.21		10 (1.96)	3 (1.89)		6 (2.36)

Area Change Table

Area Change	Name	Object Defined	Inlet Elevation	Elevation Units	Initial Pressure	Initial Pressure Units	Database Source	Type
16	Area Change	Yes	606	feet				Conical
35	Area Change	Yes	576.6	feet				Conical
37	Area Change	Yes	606	feet				Conical

CALCULATION SHEET

Project No. S54413.024	**Calculation No.** S54413.024-M-002	**Rev.** 0	**Page No.** 27 of 180
Title: Leachate and Basin Pump Flow Calculation			
Prepared By: Gallegos, JF, P.E.	**Date:** 4/10/2020	**Checked By:** Dixon, KW, P.E.	**Date:** 4/10/2020

AFT Fathom 10 (Model)
4/13/2020
Page 4

AFT Fathom Model

Area Change	Geometry	Angle	Loss Factor
16	Contraction	45	13.30416
35	Expansion	45	0.1179652
37	Contraction	45	3.673761

Area Change	Name	Object Defined	Inlet Elevation	Elevation Units	Initial Pressure	Initial Pressure Units	Database Source	Type
38	Area Change	Yes	606	feet				Conical
39	Area Change	Yes	623.3	feet				Conical
50	Area Change	Yes	623.3	feet				Conical
51	Area Change	Yes	623.3	feet				Conical
61	Area Change	Yes	605.5	feet				Conical

Area Change	Geometry	Angle	Loss Factor
38	Contraction	45	0.3642007
39	Contraction	45	0.7135802
50	Contraction	45	0.8114334
51	Expansion	45	0.2967157
61	Expansion	45	0.5395717

Assigned Pressure Table

Assigned Pressure	Name	Object Defined	Inlet Elevation	Elevation Units	Initial Pressure	Initial Pressure Units	Database Source
47	Assigned Pressure	Yes	609	feet	1.000	atm	
65	Assigned Pressure	Yes	576	feet	1.000	atm	

Assigned Pressure	Pressure	Pressure Units	Pressure Type	Balance Energy	Balance Concentration	(Pipe #1) K In, K Out	(Pipe #2) K In, K Out	(Pipe #3) K In, K Out
47	1	atm	Stagnation	No	No	(P44) 1, 0		
65	1	atm	Stagnation	No	No	(P56) 0, 1		

Assigned Pressure	(Pipe #4) K In, K Out	(Pipe #5) K In, K Out	(Pipe #6) K In, K Out	(Pipe #7) K In, K Out	(Pipe #8) K In, K Out	(Pipe #9) K In, K Out	(Pipe #10) K In, K Out	(Pipe #11) K In, K Out
47								
65								

Assigned Pressure	(Pipe #12) K In, K Out	(Pipe #13) K In, K Out	(Pipe #14) K In, K Out	(Pipe #15) K In, K Out	(Pipe #16) K In, K Out	(Pipe #17) K In, K Out	(Pipe #18) K In, K Out	(Pipe #19) K In, K Out
47								
65								

Assigned Pressure	(Pipe #20) K In, K Out	(Pipe #21) K In, K Out	(Pipe #22) K In, K Out	(Pipe #23) K In, K Out	(Pipe #24) K In, K Out	(Pipe #25) K In, K Out
47						
65						

CALCULATION SHEET

Project No. S54413.024	**Calculation No.** S54413.024-M-002	**Rev.** 0	**Page No.** 28 of 180
Title: Leachate and Basin Pump Flow Calculation			
Prepared By: Gallegos, JF, P.E.	**Date:** 4/10/2020	**Checked By:** Dixon, KW, P.E.	**Date:** 4/10/2020

AFT Fathom 10 (Model) 4/13/2020 Page 5	AFT Fathom Model	

Bend Table

Bend	Name	Object Defined	Inlet Elevation	Elevation Units	Initial Pressure	Initial Pressure Units	Database Source	Type	Angle (Degrees)	R/D
31	Bend	Yes	606	feet				Smooth Bend	90	1
32	Bend	Yes	623.3	feet				Smooth Bend	90	1
42	Bend	Yes	623.3	feet				Smooth Bend	90	1
64	Bend	Yes	605.5	feet				Smooth Bend	90	1.5

Bend	Loss Factor
31	0.34
32	0.34
42	0.35864
64	0.237636

Branch Table

Branch	Name	Object Defined	Inlet Elevation	Elevation Units	Initial Pressure	Initial Pressure Units	Database Source	Special Condition	Boundary Flow (+ = in/- = out)
59	Branch	Yes	605.5	feet				None	
60	Branch	Yes	580	feet				None	

Branch	Boundary Flow Units	(Pipe #1) K In, K Out	(Pipe #2) K In, K Out	(Pipe #3) K In, K Out	(Pipe #4) K In, K Out	(Pipe #5) K In, K Out	(Pipe #6) K In, K Out	(Pipe #7) K In, K Out
59		(P2) 0, 0	(P51) 0, 0					
60		(P50) 0, 0	(P51) 0, 0					

Branch	(Pipe #8) K In, K Out	(Pipe #9) K In, K Out	(Pipe #10) K In, K Out	(Pipe #11) K In, K Out	(Pipe #12) K In, K Out	(Pipe #13) K In, K Out	(Pipe #14) K In, K Out	(Pipe #15) K In, K Out	(Pipe #16) K In, K Out
59									
60									

Branch	(Pipe #17) K In, K Out	(Pipe #18) K In, K Out	(Pipe #19) K In, K Out	(Pipe #20) K In, K Out	(Pipe #21) K In, K Out	(Pipe #22) K In, K Out	(Pipe #23) K In, K Out	(Pipe #24) K In, K Out	(Pipe #25) K In, K Out
59									
60									

Control Valve Table

Control Valve	Name	Object Defined	Inlet Elevation	Elevation Units	Initial Pressure	Initial Pressure Units	Database Source
56	Control Valve	Yes	605.5	feet			

CALCULATION SHEET

Project No. S54413.024	**Calculation No.** S54413.024-M-002	**Rev.** 0	**Page No.** 29 of 180
Title: Leachate and Basin Pump Flow Calculation			
Prepared By: Gallegos, JF, P.E.	**Date:** 4/10/2020	**Checked By:** Dixon, KW, P.E.	**Date:** 4/10/2020

AFT Fathom 10 (Model)
4/13/2020
Page 6

AFT Fathom Model

Control Valve	Special Condition	Valve Type	Control Setting	Control Units	Pressure/ Head Type	Inlet Failure Type	Outlet Failure Type	Full Open Loss Type
56	Fully Open - No Control	FCV	10	gal/min	N/A	Fully Open	N/A	Cv Table

Control Valve	Full Open Loss
56	437.29

General Component Table

General Component	Name	Object Defined	Inlet Elevation	Elevation Units	Initial Pressure	Initial Pressure Units	Database Source
49	General Component	Yes	623.3	feet			

General Component	Special Condition	Loss Model	Loss Value	Independent Variable	Ind. Variable Units	Dependent Variable	Dep. Variable Units
49	None	Resistance Curve	Variable	Vol. Flow Rate	gal/min	Pressure Loss	psid

General Component	Loss Constant a	Loss Constant b	Loss Constant c	Loss Constant d	Loss Constant e
49	2	0	0	0	0

Orifice Table

Orifice	Name	Object Defined	Inlet Elevation	Elevation Units	Initial Pressure	Initial Pressure Units	Database Source	Orifice Type	Flow Area Type
54	Orifice	Yes	623.3	feet				Sharp-Edged	Diameter

Orifice	Dimension	Dimension Units	R/D	Restricted Area	Restricted Area Units	Loss Model	Loss Value	Independent Variable	Ind. Variable Units
54	1.361	inches				K Constant	54.62305		

Orifice	Dependent Variable	Dep. Variable Units	Loss Constant a	Loss Constant b	Loss Constant c	Loss Constant d	Loss Constant e
54							

Pump Table

Pump	Name	Object Defined	Inlet Elevation	Elevation Units	Initial Pressure	Initial Pressure Units	Database Source	Special Condition	Pump Type
5	Pump	Yes	576.6	feet				None	Pump Curve

Pump	Design Flow Rate	Design Flow Rate Units	Current Configuration	Independent Variable	Ind. Variable Units	Dependent Variable	Dep. Variable Units	Pump Curve Constant a
5				Vol. Flow Rate	gal/min	Head Rise	feet	221.5061

CALCULATION SHEET

Project No. S54413.024	**Calculation No.** S54413.024-M-002	**Rev.** 0	**Page No.** 30 of 180
Title: Leachate and Basin Pump Flow Calculation			
Prepared By: Gallegos, JF, P.E.	**Date:** 4/10/2020	**Checked By:** Dixon, KW, P.E.	**Date:** 4/10/2020

AFT Fathom 10 (Model)
4/13/2020
Page 7

AFT Fathom Model

Pump	Pump Curve Constant b	Pump Curve Constant c	Pump Curve Constant d	Pump Curve Constant e	Runout Flow Rate	Runout Flow Rate Units	Speed	Control When Exceeded Only
5	-0.03898634	-0.002236957	0	0			100	

Pump	Heat Added To Fluid	Heat Added Units	Submerged Pump Pressure	Submerged Pump Pressure Units
5	0	Percent	601	feet

Tee or Wye Table

Tee or Wye	Name	Object Defined	Inlet Elevation	Elevation Units	Initial Pressure	Initial Pressure Units	Database Source	Tee/Wye Type
15	Tee or Wye	Yes	606	feet				Sharp Straight
40	Tee or Wye	Yes	623.3	feet				Sharp Straight

Tee or Wye	Loss Type	Angle	Pipes A, B, C
15	Detailed	90	14, 10, 12
40	Detailed	90	39, 41, 45

Three Way Valve Table

Three Way Valve	Name	Object Defined	Inlet Elevation	Elevation Units	Initial Pressure	Initial Pressure Units	Database Source
63	Three Way Valve	Yes	605.5	feet			

Three Way Valve	Special Condition	Loss Model	Percent Open	Cv Pipe #1	Cv Pipe #2
63	Pipe #2 Closed	Cv	100	561	0

Valve Table

Valve	Name	Object Defined	Inlet Elevation	Elevation Units	Initial Pressure	Initial Pressure Units	Database Source	Special Condition	Exit Valve	Exit Pressure
7	Valve	Yes	605.5	feet				None	No	
10	Valve	Yes	606	feet				None	No	
17	60M-43B	Yes	606	feet				None	No	
18	60M-43A	Yes	606	feet				Closed	No	

Valve	Exit Pressure Units	Restricted Area	Restricted Area Units	Loss Model	Loss Source	Loss Factor	Percent Open	Open Pct. Data Exists	Independent Variable
7				K Constant	N/A	0.76383		No	
10				K Constant	N/A	0.765		No	
17				K Constant	N/A	0.8099999		No	
18				K Constant	N/A	0.63		No	

CALCULATION SHEET

Project No. S54413.024	**Calculation No.** S54413.024-M-002	**Rev.** 0	**Page No.** 31 of 180
Title: Leachate and Basin Pump Flow Calculation			
Prepared By: Gallegos, JF, P.E.	**Date:** 4/10/2020	**Checked By:** Dixon, KW, P.E.	**Date:** 4/10/2020

AFT Fathom 10 (Model) 4/13/2020 Page 8	AFT Fathom Model	

Valve	Ind. Variable Units	Dependent Variable	Dep. Variable Units	Loss Constant a	Loss Constant b	Loss Constant c	Loss Constant d	Loss Constant e
7								
10								
17								
18								

CALCULATION SHEET

Project No. S54413.024	**Calculation No.** S54413.024-M-002	**Rev.** 0	**Page No.** 32 of 180
Title: Leachate and Basin Pump Flow Calculation			
Prepared By: Gallegos, JF, P.E.	**Date:** 4/10/2020	**Checked By:** Dixon, KW, P.E.	**Date:** 4/10/2020

AFT Fathom 10 (Output) 4/13/2020 Page 1	AFT Fathom Model	

Model Reference Information

General

Title: AFT Fathom Model
Analysis run on: 4/13/2020 10:37:04 AM
Application version: AFT Fathom Version 10 (2018.05.21)
Input File: P:\Clients\Washington River Protection Solutions - WRPS 544\S54413.024 - LERF Basin 41 Design\Calculations\Mech\M-002 Flow\Rev 0\VV Files\LERF TransferRev0.fth
Scenario: Base Scenario/Run 1/High Basin Level Low DP
Output File: P:\Clients\Washington River Protection Solutions - WRPS 544\S54413.024 - LERF Basin 41 Design\Calculations\Mech\M-002 Flow\Rev 0\VV Files\LERF TransferRev0_F5.out

Execution Time= 0.10 seconds
Total Number Of Head/Pressure Iterations= 0
Total Number Of Flow Iterations= 22
Total Number Of Temperature Iterations= 0
Number Of Pipes= 27
Number Of Junctions= 27
Matrix Method= Gaussian Elimination

Pressure/Head Tolerance= 0.0001 relative change
Flow Rate Tolerance= 0.0001 relative change
Temperature Tolerance= 0.0001 relative change
Flow Relaxation= (Automatic)
Pressure Relaxation= (Automatic)

Constant Fluid Property Model
Fluid Database: User Specified
Fluid= User Specified
Density= 1 S.G. water
Viscosity= 1 centipoise
Vapor Pressure= Unspecified
Viscosity Model= Newtonian
Apply laminar and non-Newtonian correction to: Pipe Fittings & Losses, Junction K factors, Junction Special Losses, Junction Polynomials
Corrections applied to the following junctions: Branch, Reservoir, Assigned Flow, Assigned Pressure, Area Change, Bend, Tee or Wye, Spray Discharge, Relief Valve

Ambient Pressure (constant)= 1 atm
Gravitational Acceleration= 1 g
Turbulent Flow Above Reynolds Number= 4000
Laminar Flow Below Reynolds Number= 2300
Total Inflow= 152.2 gal/min
Total Outflow= 152.2 gal/min
Maximum Static Pressure is 96.05 psia at Pipe 50 Inlet
Minimum Static Pressure is 1.918 psia at Pipe 56 Inlet

Warnings

No Warnings

Applied Standards

===== ANSI/HI 9.6.3-2017 - Rotodynamic Pumps - Guideline for Operating Regions =====
Pump 5 set to specific speed <=4500 (US Customary), with lower POR 70% and upper POR 120% of BEP

CALCULATION SHEET

Project No. S54413.024	**Calculation No.** S54413.024-M-002	**Rev.** 0	**Page No.** 33 of 180
Title: Leachate and Basin Pump Flow Calculation			
Prepared By: Gallegos, JF, P.E.	**Date:** 4/10/2020	**Checked By:** Dixon, KW, P.E.	**Date:** 4/10/2020

AFT Fathom 10 (Output) 4/13/2020 Page 2	AFT Fathom Model	

Pump Summary

Jct	Results Diagram	Name	Vol. Flow (gal/min)	Mass Flow (lbm/sec)	dP (psid)	dH (feet)	Overall Efficiency (Percent)	Speed (Percent)	Overall Power (hp)	BEP (gal/min)	% of BEP (Percent)	NPSHA (feet)
5	Show	Pump	152.2	21.15	70.93	163.7	N/A	100.0	6.297	N/A	N/A	N/A

Jct	NPSHR (feet)
5	N/A

Valve Summary

Jct	Name	Valve Type	Vol. Flow (gal/min)	Mass Flow (lbm/sec)	dP Stag. (psid)	dH (feet)	P Static In (psia)	Cv	K
7	Valve	REGULAR	152.2	21.15	0.07566	0.1747	76.66	553.4	0.7638
10	Valve	REGULAR	152.2	21.15	0.07776	0.1795	74.15	545.8	0.7650
17	60M-43B	REGULAR	152.2	21.15	0.26023	0.6008	73.66	298.4	0.8100
X18	60M-43A	REGULAR	0.0	0.00	N/A	N/A	74.09	N/A	N/A
56	Control Valve	FCV	152.2	21.15	0.12115	0.2797	76.81	437.3	1.2231
63 [P5]	Three Way Valve	THREE-WAY	152.2	21.15	0.07361	0.1699	76.58	561.0	0.7241
X63 [P55]	Three Way Valve	THREE-WAY	0.0	0.00	N/A	N/A	76.58	N/A	N/A

Jct	Valve State
7	Open
10	Open
17	Open
X18	Closed By User
56	Opened By User
63 [P5]	Open
X63 [P55]	Closed By User

Pipe Output Table

Pipe	Name	Vol. Flow Rate (gal/min)	Velocity (feet/sec)	P Static Max (psia)	P Static Min (psia)	Elevation Inlet (feet)	Elevation Outlet (feet)	dP Stag. Total (psid)	dP Static Total (psid)	dP Gravity (psid)
2	Pipe	152.2	14.5527	81.744	76.271	605.5	605.5	5.4736862	5.4736862	0.0000
3	Pipe	152.2	3.8360	76.828	76.812	605.5	605.5	0.0155604	0.0155604	0.0000
5	Pipe	152.2	3.8860	76.452	74.145	605.5	606.0	2.3069207	2.3069207	0.2166
10	Pipe	152.2	0.9715	74.163	74.085	606.0	606.0	0.0775837	0.0775837	0.0000
12	Pipe	152.2	0.9715	74.078	74.077	606.0	606.0	0.0003844	0.0003844	0.0000

Sargent & Lundy Engineering Services, Inc

CALCULATION SHEET

Project No. S54413.024	**Calculation No.** S54413.024-M-002	**Rev.** 0	**Page No.** 34 of 180
Title: Leachate and Basin Pump Flow Calculation			
Prepared By: Gallegos, JF, P.E.	**Date:** 4/10/2020	**Checked By:** Dixon, KW, P.E.	**Date:** 4/10/2020

AFT Fathom 10 (Output)
4/13/2020
Page 3

AFT Fathom Model

Pipe	dH (feet)	P Static In (psia)	P Static Out (psia)	P Stag. In (psia)	P Stag. Out (psia)
2	12.6366467	81.744	76.271	83.170	77.696
3	0.0359229	76.828	76.812	76.927	76.911
5	4.8257971	76.452	74.145	76.554	74.247
10	0.1791110	74.163	74.085	74.169	74.092
12	0.0008875	74.078	74.077	74.084	74.084

Pipe	Name	Vol. Flow Rate (gal/min)	Velocity (feet/sec)	P Static Max (psia)	P Static Min (psia)	Elevation Inlet (feet)	Elevation Outlet (feet)	dP Stag. Total (psid)	dP Static Total (psid)	dP Gravity (psid)
13	Pipe	152.2	6.9085	73.678	73.656	606.0	606.0	0.0216088	0.0216088	0.0000
14	Pipe	0.0	0.0000	74.092	74.092	606.0	606.0	0.0000000	0.0000000	0.0000
28	Pipe	0.0	0.0000	41.482	33.988	606.0	623.3	7.4936577	7.4936577	7.4937
29	Pipe	0.0	0.0000	41.482	33.988	623.3	606.0	-7.4936577	-7.4936577	-7.4937
32	Pipe	152.2	6.9085	73.396	38.007	606.0	623.3	35.3888164	35.3888164	7.4937
33	Pipe	152.2	5.8505	95.964	95.947	576.6	576.6	0.0166542	0.0166542	0.0000
36	Pipe	0.0	0.0000	41.482	41.482	606.0	606.0	0.0000000	0.0000000	0.0000
38	Pipe	0.0	0.0000	41.482	33.988	606.0	623.3	7.4936577	7.4936577	7.4937
39	Pipe	0.0	0.0000	33.988	33.988	623.3	623.3	0.0000000	0.0000000	0.0000
41	Pipe	152.2	14.5527	36.674	32.915	623.3	623.3	3.7588730	3.7588730	0.0000
44	Pipe	152.2	6.6056	14.402	10.143	623.3	609.0	-4.2589929	-4.2589929	-6.1942
45	Pipe	152.2	6.6056	33.694	32.426	623.3	623.3	1.2679385	1.2679385	0.0000
47	Pipe	152.2	14.5527	31.056	29.678	623.3	623.3	1.3784103	1.3784103	0.0000
48	Pipe	152.2	14.5527	27.678	26.299	623.3	623.3	1.3784103	1.3784103	0.0000
49	Pipe	152.2	6.6056	27.008	26.187	623.3	623.3	0.8207126	0.8207126	0.0000
50	Pipe	152.2	3.8360	96.051	94.550	576.6	580.0	1.5017492	1.5017492	1.4728
51	Pipe	152.2	3.4261	94.570	83.091	580.0	605.5	11.4788681	11.4788681	11.0456
52	Pipe	152.2	3.8360	76.691	76.662	605.5	605.5	0.0289956	0.0289956	0.0000
54	Pipe	152.2	3.8360	76.587	76.529	605.5	605.5	0.0579913	0.0579913	0.0000
55	Pipe	0.0	0.0000	1.918	1.918	605.5	605.5	0.0000000	0.0000000	0.0000
56	Pipe	0.0	0.0000	14.696	1.918	605.5	576.0	-12.7782114	-12.7782114	-12.7782
58	Pipe	0.0	0.0000	41.482	41.482	606.0	606.0	0.0000000	0.0000000	0.0000

CALCULATION SHEET

Project No. S54413.024	**Calculation No.** S54413.024-M-002	**Rev.** 0	**Page No.** 35 of 180
Title: Leachate and Basin Pump Flow Calculation			
Prepared By: Gallegos, JF, P.E.	**Date:** 4/10/2020	**Checked By:** Dixon, KW, P.E.	**Date:** 4/10/2020

AFT Fathom 10 (Output)
4/13/2020
Page 4

AFT Fathom Model

Pipe	dH (feet)	P Static In (psia)	P Static Out (psia)	P Stag. In (psia)	P Stag. Out (psia)
13	0.0498865	73.678	73.656	73.999	73.978
14	0.0000000	74.092	74.092	74.092	74.092
28	0.0000000	41.482	33.988	41.482	33.988
29	0.0000000	33.988	41.482	33.988	41.482
32	64.3992463	73.396	38.007	73.717	38.329
33	0.0384482	95.964	95.947	96.194	96.178
36	0.0000000	41.482	41.482	41.482	41.482
38	0.0000000	41.482	33.988	41.482	33.988
39	0.0000000	33.988	33.988	33.988	33.988
41	8.6777992	36.674	32.915	38.099	34.340
44	4.4676031	10.143	14.402	10.437	14.696
45	2.9271848	33.694	32.426	33.988	32.720
47	3.1822220	31.056	29.678	32.482	31.103
48	3.1822220	27.678	26.299	29.103	27.725
49	1.8947114	27.008	26.187	27.302	26.481
50	0.0669398	96.051	94.550	96.150	94.649
51	1.0003136	94.570	83.091	94.649	83.170
52	0.0669398	76.691	76.662	76.790	76.761
54	0.1338796	76.587	76.529	76.686	76.628
55	0.0000000	1.918	1.918	1.918	1.918
56	0.0000000	1.918	14.696	1.918	14.696
58	0.0000000	41.482	41.482	41.482	41.482

All Junction Table

Jct	Name	P Static In (psia)	P Static Out (psia)	P Stag. In (psia)	P Stag. Out (psia)	Vol. Flow Rate Thru Jct (gal/min)	Mass Flow Rate Thru Jct (lbm/sec)	Loss Factor (K)
5	Pump	25.035	95.964	25.265	96.194	152.2	21.15	0.0000
7	Valve	76.662	76.587	76.761	76.686	152.2	21.15	0.7638
10	Valve	74.145	74.163	74.247	74.169	152.2	21.15	0.7650
15	Tee or Wye	74.089	74.089	74.092	74.092	N/A	N/A	See Mult. Losses
16	Area Change	74.077	73.678	74.084	73.999	152.2	21.15	13.3042
17	60M-43B	73.656	73.396	73.978	73.717	152.2	21.15	0.8100
X18	60M-43A	74.092	41.482	74.092	41.482	0.0	0.00	0.0000
31	Bend	41.482	41.482	41.482	41.482	0.0	0.00	0.0000
32	Bend	33.988	33.988	33.988	33.988	0.0	0.00	0.0000
35	Area Change	95.947	96.051	96.178	96.150	152.2	21.15	0.1180
37	Area Change	41.482	41.482	41.482	41.482	0.0	0.00	0.0000
38	Area Change	41.482	41.482	41.482	41.482	0.0	0.00	0.0000
39	Area Change	38.007	36.674	38.329	38.099	152.2	21.15	0.7136

Sargent & Lundy Engineering Services, Inc

CALCULATION SHEET

Project No. S54413.024	**Calculation No.** S54413.024-M-002	**Rev.** 0	**Page No.** 36 of 180
Title: Leachate and Basin Pump Flow Calculation			
Prepared By: Gallegos, JF, P.E.	**Date:** 4/10/2020	**Checked By:** Dixon, KW, P.E.	**Date:** 4/10/2020

AFT Fathom 10 (Output)
4/13/2020
Page 5

AFT Fathom Model

Jct	Name	P Static In (psia)	P Static Out (psia)	P Stag. In (psia)	P Stag. Out (psia)	Vol. Flow Rate Thru Jct (gal/min)	Mass Flow Rate Thru Jct (lbm/sec)	Loss Factor (K)
40	Tee or Wye	33.653	33.653	33.988	33.988	N/A	N/A	See Mult. Losses
42	Bend	33.988	33.988	33.988	33.988	0.0	0.00	0.0000
47	Assigned Pressure	14.402	14.402	14.696	14.696	152.2	21.15	0.0000
49	General Component	29.678	27.678	31.103	29.103	152.2	21.15	1.4029
50	Area Change	32.426	31.056	32.720	32.482	152.2	21.15	0.8114
51	Area Change	26.299	27.008	27.725	27.302	152.2	21.15	0.2967
54	Orifice	26.187	10.143	26.481	10.437	152.2	21.15	54.6231
56	Control Valve	76.812	76.691	76.911	76.790	152.2	21.15	1.2231
59	Branch	83.091	81.744	83.170	83.170	152.2	21.15	0.0000
60	Branch	94.550	94.570	94.649	94.649	152.2	21.15	0.0000
61	Area Change	76.271	76.828	77.696	76.927	152.2	21.15	0.5396
63	Three Way Valve	76.583	76.583	76.828	76.828	N/A	N/A	See Mult. Losses
64	Bend	1.918	1.918	1.918	1.918	0.0	0.00	0.0000
65	Assigned Pressure	14.696	14.696	14.696	14.696	0.0	0.00	0.0000

CALCULATION SHEET

Project No. S54413.024	**Calculation No.** S54413.024-M-002	**Rev.** 0	**Page No.** 37 of 180
Title: Leachate and Basin Pump Flow Calculation			
Prepared By: Gallegos, JF, P.E.	**Date:** 4/10/2020	**Checked By:** Dixon, KW, P.E.	**Date:** 4/10/2020

LOW BASIN LEVEL/HIGH FILTER DP

CALCULATION SHEET

Project No. S54413.024	**Calculation No.** S54413.024-M-002	**Rev.** 0	**Page No.** 38 of 180
Title: Leachate and Basin Pump Flow Calculation			
Prepared By: Gallegos, JF, P.E.	**Date:** 4/10/2020	**Checked By:** Dixon, KW, P.E.	**Date:** 4/10/2020

AFT Fathom 10 (Model) 4/13/2020 Page 1	AFT Fathom Model	

General

Title: AFT Fathom Model
Input File: P:\Clients\Washington River Protection Solutions - WRPS 544\S54413.024 - LERF Basin 41 Design\Calculations\Mech\M-002 Flow\Rev 0\VV Files\LERF TransferRev0.fth
Scenario: Base Scenario/Run 1/Low Basin Level High DP

Number Of Pipes= 27
Number Of Junctions= 27

Pressure/Head Tolerance= 0.0001 relative change
Flow Rate Tolerance= 0.0001 relative change
Temperature Tolerance= 0.0001 relative change
Flow Relaxation= (Automatic)
Pressure Relaxation= (Automatic)

Constant Fluid Property Model
Fluid Database: User Specified
Fluid= User Specified
Density= 1 S.G. water
Viscosity= 1 centipoise
Vapor Pressure= Unspecified
Viscosity Model= Newtonian
Apply laminar and non-Newtonian correction to: Pipe Fittings & Losses, Junction K factors, Junction Special Losses, Junction Polynomials
Corrections applied to the following junctions: Branch, Reservoir, Assigned Flow, Assigned Pressure, Area Change, Bend, Tee or Wye, Spray Discharge, Relief Valve

Ambient Pressure (constant)= 1 atm
Gravitational Acceleration= 1 g
Turbulent Flow Above Reynolds Number= 4000
Laminar Flow Below Reynolds Number= 2300

Pipes

Pipe	Name	Pipe Defined	Length	Length Units	Hydraulic Diameter	Hydraulic Diam. Units	Friction Data Set	Roughness	Roughness Units	Losses (K)
2	Pipe	Yes	30	feet	2.067	inches	Standard	0.0018	inches	0.301856
3	Pipe	Yes	2	feet	4.026	inches	Standard	0.0018	inches	0.04
5	Pipe	Yes	378	feet	4	inches	Unspecified	0.000204	inches	0.5749724
10	Pipe	Yes	350	feet	8	inches	Unspecified	0.000204	inches	1.622009
12	Pipe	Yes	2	feet	8	inches	Unspecified	0.000204	inches	0
13	Pipe	Yes	1	feet	3	inches	Unspecified	0.000204	inches	0
14	Pipe	Yes	1	feet	8	inches	Unspecified	0.000204	inches	0
28	Pipe	Yes	30	feet	4	inches	Unspecified	0.000204	inches	0
29	Pipe	Yes	1521	feet	4	inches	Unspecified	0.000204	inches	2.38
32	Pipe	Yes	1221	feet	3	inches	Unspecified	0.000204	inches	4.702397
33	Pipe	Yes	1	feet	3.26	inches	Standard	0.0018	inches	0
36	Pipe	Yes	7	feet	4	inches	Unspecified	0.000204	inches	0
38	Pipe	Yes	20	feet	3.068	inches	Standard	0.0018	inches	0

CALCULATION SHEET

Project No. S54413.024	**Calculation No.** S54413.024-M-002	**Rev.** 0	**Page No.** 39 of 180
Title: Leachate and Basin Pump Flow Calculation			
Prepared By: Gallegos, JF, P.E.	**Date:** 4/10/2020	**Checked By:** Dixon, KW, P.E.	**Date:** 4/10/2020

AFT Fathom 10 (Model)
4/13/2020
Page 2

AFT Fathom Model

Pipe	Initial Flow	Initial Flow Units	Junctions (Up,Down)	Geometry	Material	Size	Type	Special Condition
2			59, 61	Cylindrical Pipe	Steel - ANSI	2 inch	schedule 40	None
3			61, 56	Cylindrical Pipe	Steel - ANSI	4 inch	schedule 40	None
5			63, 10	Cylindrical Pipe	User Specified			None
10			10, 15	Cylindrical Pipe	User Specified			None
12			15, 16	Cylindrical Pipe	User Specified			None
13			16, 17	Cylindrical Pipe	User Specified			None
14			15, 18	Cylindrical Pipe	User Specified			None
28			31, 32	Cylindrical Pipe	User Specified			None
29			32, 38	Cylindrical Pipe	User Specified			None
32			17, 39	Cylindrical Pipe	User Specified			None
33			5, 35	Cylindrical Pipe	Steel - ANSI	3 inch	Schedule 10	None
36			37, 31	Cylindrical Pipe	User Specified			None
38			38, 42	Cylindrical Pipe	Steel - ANSI	3 inch	STD (schedule 40)	None

Pipe	Name	Pipe Defined	Length	Length Units	Hydraulic Diameter	Hydraulic Diam. Units	Friction Data Set	Roughness	Roughness Units	Losses (K)
39	Pipe	Yes	10	feet	3.068	inches	Standard	0.0018	inches	0
41	Pipe	Yes	15	feet	2.067	inches	Standard	0.0018	inches	0.8678359
44	Pipe	Yes	50	feet	3.068	inches	Standard	0.0018	inches	2.606288
45	Pipe	Yes	30	feet	3.068	inches	Standard	0.0018	inches	2.008384
47	Pipe	Yes	1	feet	2.067	inches	Standard	0.0018	inches	0.8489699
48	Pipe	Yes	1	feet	2.067	inches	Standard	0.0018	inches	0.8489699
49	Pipe	Yes	20	feet	3.068	inches	Standard	0.0018	inches	1.25524
50	Pipe	Yes	5	feet	4.026	inches	Standard	0.0018	inches	0
51	Pipe	Yes	98.93	feet	4.26	inches	Standard	0.0018	inches	0
52	Pipe	Yes	5	feet	4.026	inches	Standard	0.0018	inches	0
54	Pipe	Yes	10	feet	4.026	inches	Standard	0.0018	inches	0
55	Pipe	Yes	5	feet	4.026	inches	Standard	0.0018	inches	0
56	Pipe	Yes	46	feet	4.026	inches	Standard	0.0018	inches	0.4752721
58	Pipe	Yes	350	feet	8	inches	Unspecified	0.000204	inches	6.21

CALCULATION SHEET

Project No. S54413.024	**Calculation No.** S54413.024-M-002	**Rev.** 0	**Page No.** 40 of 180
Title: Leachate and Basin Pump Flow Calculation			
Prepared By: Gallegos, JF, P.E.	**Date:** 4/10/2020	**Checked By:** Dixon, KW, P.E.	**Date:** 4/10/2020

AFT Fathom 10 (Model)
4/13/2020
Page 3

AFT Fathom Model

Pipe	Initial Flow	Initial Flow Units	Junctions (Up,Down)	Geometry	Material	Size	Type	Special Condition
39			42, 40	Cylindrical Pipe	Steel - ANSI	3 inch	STD (schedule 40)	None
41			39, 40	Cylindrical Pipe	Steel - ANSI	2 inch	STD (schedule 40)	None
44			54, 47	Cylindrical Pipe	Steel - ANSI	3 inch	STD (schedule 40)	None
45			40, 50	Cylindrical Pipe	Steel - ANSI	3 inch	STD (schedule 40)	None
47			50, 49	Cylindrical Pipe	Steel - ANSI	2 inch	STD (schedule 40)	None
48			49, 51	Cylindrical Pipe	Steel - ANSI	2 inch	STD (schedule 40)	None
49			51, 54	Cylindrical Pipe	Steel - ANSI	3 inch	STD (schedule 40)	None
50			35, 60	Cylindrical Pipe	Steel - ANSI	4 inch	STD (schedule 40)	None
51			60, 59	Cylindrical Pipe	Steel - ANSI	4 inch	Schedule 10	None
52			56, 7	Cylindrical Pipe	Steel - ANSI	4 inch	schedule 40	None
54			7, 63	Cylindrical Pipe	Steel - ANSI	4 inch	schedule 40	None
55			63, 64	Cylindrical Pipe	Steel - ANSI	4 inch	schedule 40	None
56			64, 65	Cylindrical Pipe	Steel - ANSI	4 inch	schedule 40	None
58			18, 37	Cylindrical Pipe	User Specified			None

Pipe Fittings & Losses

Pipe	Total K	Elbow/Bend Standard Threaded	Elbow/Bend Smooth Flanged	Valve Butterfly	Valve Plug	Other Tee
2	0.3	1 (0.3)				
3	0.04					1 (0.04)
5	0.57		3 (0.57)			
10	1.62		3 (0.48)			2 (1.14)
29	2.38		7 (2.38)			
32	4.7		8 (1.94)	2 (1.62)		2 (1.14)
41	0.87		2 (0.53)		1 (0.34)	
44	2.61		6 (1.51)			1 (1.1)
45	2.01		8 (2.01)			
47	0.85			1 (0.85)		
48	0.85			1 (0.85)		
49	1.26		5 (1.26)			
56	0.48		2 (0.48)			
58	6.21		10 (1.96)	3 (1.89)		6 (2.36)

Area Change Table

Area Change	Name	Object Defined	Inlet Elevation	Elevation Units	Initial Pressure	Initial Pressure Units	Database Source	Type
16	Area Change	Yes	606	feet				Conical
35	Area Change	Yes	576.6	feet				Conical
37	Area Change	Yes	606	feet				Conical

CALCULATION SHEET

Project No. S54413.024	**Calculation No.** S54413.024-M-002	**Rev.** 0	**Page No.** 41 of 180
Title: Leachate and Basin Pump Flow Calculation			
Prepared By: Gallegos, JF, P.E.	**Date:** 4/10/2020	**Checked By:** Dixon, KW, P.E.	**Date:** 4/10/2020

AFT Fathom 10 (Model)
4/13/2020
Page 4

AFT Fathom Model

Area Change	Geometry	Angle	Loss Factor
16	Contraction	45	13.30416
35	Expansion	45	0.1179652
37	Contraction	45	3.673761

Area Change	Name	Object Defined	Inlet Elevation	Elevation Units	Initial Pressure	Initial Pressure Units	Database Source	Type
38	Area Change	Yes	606	feet				Conical
39	Area Change	Yes	623.3	feet				Conical
50	Area Change	Yes	623.3	feet				Conical
51	Area Change	Yes	623.3	feet				Conical
61	Area Change	Yes	605.5	feet				Conical

Area Change	Geometry	Angle	Loss Factor
38	Contraction	45	0.3642007
39	Contraction	45	0.7135802
50	Contraction	45	0.8114334
51	Expansion	45	0.2967157
61	Expansion	45	0.5395717

Assigned Pressure Table

Assigned Pressure	Name	Object Defined	Inlet Elevation	Elevation Units	Initial Pressure	Initial Pressure Units	Database Source
47	Assigned Pressure	Yes	609	feet	1.000	atm	
65	Assigned Pressure	Yes	576	feet	1.000	atm	

Assigned Pressure	Pressure	Pressure Units	Pressure Type	Balance Energy	Balance Concentration	(Pipe #1) K In, K Out	(Pipe #2) K In, K Out	(Pipe #3) K In, K Out
47	1	atm	Stagnation	No	No	(P44) 1, 0		
65	1	atm	Stagnation	No	No	(P56) 0, 1		

Assigned Pressure	(Pipe #4) K In, K Out	(Pipe #5) K In, K Out	(Pipe #6) K In, K Out	(Pipe #7) K In, K Out	(Pipe #8) K In, K Out	(Pipe #9) K In, K Out	(Pipe #10) K In, K Out	(Pipe #11) K In, K Out
47								
65								

Assigned Pressure	(Pipe #12) K In, K Out	(Pipe #13) K In, K Out	(Pipe #14) K In, K Out	(Pipe #15) K In, K Out	(Pipe #16) K In, K Out	(Pipe #17) K In, K Out	(Pipe #18) K In, K Out	(Pipe #19) K In, K Out
47								
65								

Assigned Pressure	(Pipe #20) K In, K Out	(Pipe #21) K In, K Out	(Pipe #22) K In, K Out	(Pipe #23) K In, K Out	(Pipe #24) K In, K Out	(Pipe #25) K In, K Out
47						
65						

CALCULATION SHEET

Project No. S54413.024	**Calculation No.** S54413.024-M-002	**Rev.** 0	**Page No.** 42 of 180
Title: Leachate and Basin Pump Flow Calculation			
Prepared By: Gallegos, JF, P.E.	**Date:** 4/10/2020	**Checked By:** Dixon, KW, P.E.	**Date:** 4/10/2020

AFT Fathom 10 (Model) 4/13/2020 Page 5	AFT Fathom Model	

Bend Table

Bend	Name	Object Defined	Inlet Elevation	Elevation Units	Initial Pressure	Initial Pressure Units	Database Source	Type	Angle (Degrees)	R/D
31	Bend	Yes	606	feet				Smooth Bend	90	1
32	Bend	Yes	623.3	feet				Smooth Bend	90	1
42	Bend	Yes	623.3	feet				Smooth Bend	90	1
64	Bend	Yes	605.5	feet				Smooth Bend	90	1.5

Bend	Loss Factor
31	0.34
32	0.34
42	0.35864
64	0.237636

Branch Table

Branch	Name	Object Defined	Inlet Elevation	Elevation Units	Initial Pressure	Initial Pressure Units	Database Source	Special Condition	Boundary Flow (+ = in/- = out)
59	Branch	Yes	605.5	feet				None	
60	Branch	Yes	580	feet				None	

Branch	Boundary Flow Units	(Pipe #1) K In, K Out	(Pipe #2) K In, K Out	(Pipe #3) K In, K Out	(Pipe #4) K In, K Out	(Pipe #5) K In, K Out	(Pipe #6) K In, K Out	(Pipe #7) K In, K Out
59		(P2) 0, 0	(P51) 0, 0					
60		(P50) 0, 0	(P51) 0, 0					

Branch	(Pipe #8) K In, K Out	(Pipe #9) K In, K Out	(Pipe #10) K In, K Out	(Pipe #11) K In, K Out	(Pipe #12) K In, K Out	(Pipe #13) K In, K Out	(Pipe #14) K In, K Out	(Pipe #15) K In, K Out	(Pipe #16) K In, K Out
59									
60									

Branch	(Pipe #17) K In, K Out	(Pipe #18) K In, K Out	(Pipe #19) K In, K Out	(Pipe #20) K In, K Out	(Pipe #21) K In, K Out	(Pipe #22) K In, K Out	(Pipe #23) K In, K Out	(Pipe #24) K In, K Out	(Pipe #25) K In, K Out
59									
60									

Control Valve Table

Control Valve	Name	Object Defined	Inlet Elevation	Elevation Units	Initial Pressure	Initial Pressure Units	Database Source
56	Control Valve	Yes	605.5	feet			

CALCULATION SHEET

Project No. S54413.024	**Calculation No.** S54413.024-M-002	**Rev.** 0	**Page No.** 43 of 180
Title: Leachate and Basin Pump Flow Calculation			
Prepared By: Gallegos, JF, P.E.	**Date:** 4/10/2020	**Checked By:** Dixon, KW, P.E.	**Date:** 4/10/2020

AFT Fathom 10 (Model)
4/13/2020
Page 6

AFT Fathom Model

Control Valve	Special Condition	Valve Type	Control Setting	Control Units	Pressure/ Head Type	Inlet Failure Type	Outlet Failure Type	Full Open Loss Type
56	Fully Open - No Control	FCV	10	gal/min	N/A	Fully Open	N/A	Cv Table

Control Valve	Full Open Loss
56	437.29

General Component Table

General Component	Name	Object Defined	Inlet Elevation	Elevation Units	Initial Pressure	Initial Pressure Units	Database Source
49	General Component	Yes	623.3	feet			

General Component	Special Condition	Loss Model	Loss Value	Independent Variable	Ind. Variable Units	Dependent Variable	Dep. Variable Units
49	None	Resistance Curve	Variable	Vol. Flow Rate	gal/min	Pressure Loss	psid

General Component	Loss Constant a	Loss Constant b	Loss Constant c	Loss Constant d	Loss Constant e
49	60	0	0	0	0

Orifice Table

Orifice	Name	Object Defined	Inlet Elevation	Elevation Units	Initial Pressure	Initial Pressure Units	Database Source	Orifice Type	Flow Area Type
54	Orifice	Yes	623.3	feet				Sharp-Edged	Diameter

Orifice	Dimension	Dimension Units	R/D	Restricted Area	Restricted Area Units	Loss Model	Loss Value	Independent Variable	Ind. Variable Units
54	1.361	inches				K Constant	54.62305		

Orifice	Dependent Variable	Dep. Variable Units	Loss Constant a	Loss Constant b	Loss Constant c	Loss Constant d	Loss Constant e
54							

Pump Table

Pump	Name	Object Defined	Inlet Elevation	Elevation Units	Initial Pressure	Initial Pressure Units	Database Source	Special Condition	Pump Type
5	Pump	Yes	576.6	feet				None	Pump Curve

Pump	Design Flow Rate	Design Flow Rate Units	Current Configuration	Independent Variable	Ind. Variable Units	Dependent Variable	Dep. Variable Units	Pump Curve Constant a
5				Vol. Flow Rate	gal/min	Head Rise	feet	221.5061

CALCULATION SHEET

Project No. S54413.024	**Calculation No.** S54413.024-M-002	**Rev.** 0	**Page No.** 44 of 180
Title: Leachate and Basin Pump Flow Calculation			
Prepared By: Gallegos, JF, P.E.	**Date:** 4/10/2020	**Checked By:** Dixon, KW, P.E.	**Date:** 4/10/2020

AFT Fathom 10 (Model)
4/13/2020
Page 7

AFT Fathom Model

Pump	Pump Curve Constant b	Pump Curve Constant c	Pump Curve Constant d	Pump Curve Constant e	Runout Flow Rate	Runout Flow Rate Units	Speed	Control When Exceeded Only
5	-0.03898634	-0.002236957	0	0			100	

Pump	Heat Added To Fluid	Heat Added Units	Submerged Pump Pressure	Submerged Pump Pressure Units
5	0	Percent	576.6	feet

Tee or Wye Table

Tee or Wye	Name	Object Defined	Inlet Elevation	Elevation Units	Initial Pressure	Initial Pressure Units	Database Source	Tee/Wye Type
15	Tee or Wye	Yes	606	feet				Sharp Straight
40	Tee or Wye	Yes	623.3	feet				Sharp Straight

Tee or Wye	Loss Type	Angle	Pipes A, B, C
15	Detailed	90	14, 10, 12
40	Detailed	90	39, 41, 45

Three Way Valve Table

Three Way Valve	Name	Object Defined	Inlet Elevation	Elevation Units	Initial Pressure	Initial Pressure Units	Database Source
63	Three Way Valve	Yes	605.5	feet			

Three Way Valve	Special Condition	Loss Model	Percent Open	Cv Pipe #1	Cv Pipe #2
63	Pipe #2 Closed	Cv	100	561	0

Valve Table

Valve	Name	Object Defined	Inlet Elevation	Elevation Units	Initial Pressure	Initial Pressure Units	Database Source	Special Condition	Exit Valve	Exit Pressure
7	Valve	Yes	605.5	feet				None	No	
10	Valve	Yes	606	feet				None	No	
17	60M-43B	Yes	606	feet				None	No	
18	60M-43A	Yes	606	feet				Closed	No	

Valve	Exit Pressure Units	Restricted Area	Restricted Area Units	Loss Model	Loss Source	Loss Factor	Percent Open	Open Pct. Data Exists	Independent Variable
7				K Constant	N/A	0.76383		No	
10				K Constant	N/A	0.765		No	
17				K Constant	N/A	0.8099999		No	
18				K Constant	N/A	0.63		No	

CALCULATION SHEET

Project No. S54413.024	**Calculation No.** S54413.024-M-002	**Rev.** 0	**Page No.** 45 of 180
Title: Leachate and Basin Pump Flow Calculation			
Prepared By: Gallegos, JF, P.E.	**Date:** 4/10/2020	**Checked By:** Dixon, KW, P.E.	**Date:** 4/10/2020

AFT Fathom 10 (Model) 4/13/2020 Page 8	AFT Fathom Model	

Valve	Ind. Variable Units	Dependent Variable	Dep. Variable Units	Loss Constant a	Loss Constant b	Loss Constant c	Loss Constant d	Loss Constant e
7								
10								
17								
18								

CALCULATION SHEET

Project No. S54413.024	**Calculation No.** S54413.024-M-002	**Rev.** 0	**Page No.** 46 of 180
Title: Leachate and Basin Pump Flow Calculation			
Prepared By: Gallegos, JF, P.E.	**Date:** 4/10/2020	**Checked By:** Dixon, KW, P.E.	**Date:** 4/10/2020

AFT Fathom 10 (Output) 4/13/2020 Page 1	AFT Fathom Model	

Model Reference Information

General

Title: AFT Fathom Model
Analysis run on: 4/13/2020 10:36:58 AM
Application version: AFT Fathom Version 10 (2018.05.21)
Input File: P:\Clients\Washington River Protection Solutions - WRPS 544\S54413.024 - LERF Basin 41 Design\Calculations\Mech\M-002 Flow\Rev 0\VV Files\LERF TransferRev0.fth
Scenario: Base Scenario/Run 1/Low Basin Level High DP
Output File: P:\Clients\Washington River Protection Solutions - WRPS 544\S54413.024 - LERF Basin 41 Design\Calculations\Mech\M-002 Flow\Rev 0\VV Files\LERF TransferRev0_F4.out

Execution Time= 0.20 seconds
Total Number Of Head/Pressure Iterations= 0
Total Number Of Flow Iterations= 98
Total Number Of Temperature Iterations= 0
Number Of Pipes= 27
Number Of Junctions= 27
Matrix Method= Gaussian Elimination

Pressure/Head Tolerance= 0.0001 relative change
Flow Rate Tolerance= 0.0001 relative change
Temperature Tolerance= 0.0001 relative change
Flow Relaxation= (Automatic)
Pressure Relaxation= (Automatic)

Constant Fluid Property Model
Fluid Database: User Specified
Fluid= User Specified
Density= 1 S.G. water
Viscosity= 1 centipoise
Vapor Pressure= Unspecified
Viscosity Model= Newtonian
Apply laminar and non-Newtonian correction to: Pipe Fittings & Losses, Junction K factors, Junction Special Losses, Junction Polynomials
Corrections applied to the following junctions: Branch, Reservoir, Assigned Flow, Assigned Pressure, Area Change, Bend, Tee or Wye, Spray Discharge, Relief Valve

Ambient Pressure (constant)= 1 atm
Gravitational Acceleration= 1 g
Turbulent Flow Above Reynolds Number= 4000
Laminar Flow Below Reynolds Number= 2300
Total Inflow= 71.92 gal/min
Total Outflow= 71.92 gal/min
Maximum Static Pressure is 104.4 psia at Pipe 50 Inlet
Minimum Static Pressure is 1.918 psia at Pipe 56 Inlet

Warnings

No Warnings

Applied Standards

===== ANSI/HI 9.6.3-2017 - Rotodynamic Pumps - Guideline for Operating Regions =====
Pump 5 set to specific speed <=4500 (US Customary), with lower POR 70% and upper POR 120% of BEP

CALCULATION SHEET

Project No. S54413.024	**Calculation No.** S54413.024-M-002	**Rev.** 0	**Page No.** 47 of 180
Title: Leachate and Basin Pump Flow Calculation			
Prepared By: Gallegos, JF, P.E.	**Date:** 4/10/2020	**Checked By:** Dixon, KW, P.E.	**Date:** 4/10/2020

AFT Fathom 10 (Output) 4/13/2020 Page 2	AFT Fathom Model	

Pump Summary

Jct	Results Diagram	Name	Vol. Flow (gal/min)	Mass Flow (lbm/sec)	dP (psid)	dH (feet)	Overall Efficiency (Percent)	Speed (Percent)	Overall Power (hp)	BEP (gal/min)	% of BEP (Percent)	NPSHA (feet)
5	Show	Pump	71.92	9.995	89.72	207.1	N/A	100.0	3.764	N/A	N/A	N/A

Jct	NPSHR (feet)
5	N/A

Valve Summary

Jct	Name	Valve Type	Vol. Flow (gal/min)	Mass Flow (lbm/sec)	dP Stag. (psid)	dH (feet)	P Static In (psia)	Cv	K
7	Valve	REGULAR	71.92	9.995	0.01689	0.03900	90.25	553.4	0.7638
10	Valve	REGULAR	71.92	9.995	0.01736	0.04009	89.45	545.8	0.7650
17	60M-43B	REGULAR	71.92	9.995	0.05811	0.13414	89.33	298.4	0.8100
X18	60M-43A	REGULAR	0.00	0.000	N/A	N/A	89.43	N/A	N/A
56	Control Valve	FCV	71.92	9.995	0.02705	0.06245	90.29	437.3	1.2231
63 [P5]	Three Way Valve	THREE-WAY	71.92	9.995	0.01644	0.03794	90.23	561.0	0.7241
X63 [P55]	Three Way Valve	THREE-WAY	0.00	0.000	N/A	N/A	90.23	N/A	N/A

Jct	Valve State
7	Open
10	Open
17	Open
X18	Closed By User
56	Opened By User
63 [P5]	Open
X63 [P55]	Closed By User

Pipe Output Table

Pipe	Name	Vol. Flow Rate (gal/min)	Velocity (feet/sec)	P Static Max (psia)	P Static Min (psia)	Elevation Inlet (feet)	Elevation Outlet (feet)	dP Stag. Total (psid)	dP Static Total (psid)	dP Gravity (psid)
2	Pipe	71.92	6.8766	91.454	90.165	605.5	605.5	1.2890854	1.2890854	0.0000
3	Pipe	71.92	1.8126	90.289	90.286	605.5	605.5	0.0037777	0.0037777	0.0000
5	Pipe	71.92	1.8363	90.203	89.445	605.5	606.0	0.7576789	0.7576789	0.2166
10	Pipe	71.92	0.4591	89.449	89.429	606.0	606.0	0.0200773	0.0200773	0.0000
12	Pipe	71.92	0.4591	89.427	89.427	606.0	606.0	0.0001016	0.0001016	0.0000

Sargent & Lundy Engineering Services, Inc

CALCULATION SHEET

Project No. S54413.024	**Calculation No.** S54413.024-M-002	**Rev.** 0	**Page No.** 48 of 180
Title: Leachate and Basin Pump Flow Calculation			
Prepared By: Gallegos, JF, P.E.	**Date:** 4/10/2020	**Checked By:** Dixon, KW, P.E.	**Date:** 4/10/2020

AFT Fathom 10 (Output)
4/13/2020
Page 3

AFT Fathom Model

Pipe	dH (feet)	P Static In (psia)	P Static Out (psia)	P Stag. In (psia)	P Stag. Out (psia)
2	2.9760048	91.454	90.165	91.772	90.483
3	0.0087212	90.289	90.286	90.312	90.308
5	1.2491907	90.203	89.445	90.226	89.468
10	0.0463509	89.449	89.429	89.451	89.431
12	0.0002345	89.427	89.427	89.429	89.429

Pipe	Name	Vol. Flow Rate (gal/min)	Velocity (feet/sec)	P Static Max (psia)	P Static Min (psia)	Elevation Inlet (feet)	Elevation Outlet (feet)	dP Stag. Total (psid)	dP Static Total (psid)	dP Gravity (psid)
13	Pipe	71.92	3.2645	89.338	89.333	606.0	606.0	0.0055650	0.0055650	0.0000
14	Pipe	0.00	0.0000	89.431	89.431	606.0	606.0	0.0000000	0.0000000	0.0000
28	Pipe	0.00	0.0000	81.211	73.718	606.0	623.3	7.4936577	7.4936577	7.4937
29	Pipe	0.00	0.0000	81.211	73.718	623.3	606.0	-7.4936577	-7.4936577	-7.4937
32	Pipe	71.92	3.2645	89.275	74.649	606.0	623.3	14.6258741	14.6258741	7.4937
33	Pipe	71.92	2.7645	104.365	104.361	576.6	576.6	0.0040856	0.0040856	0.0000
36	Pipe	0.00	0.0000	81.211	81.211	606.0	606.0	0.0000000	0.0000000	0.0000
38	Pipe	0.00	0.0000	81.211	73.718	606.0	623.3	7.4936577	7.4936577	7.4937
39	Pipe	0.00	0.0000	73.718	73.718	623.3	623.3	0.0000000	0.0000000	0.0000
41	Pipe	71.92	6.8766	74.351	73.478	623.3	623.3	0.8727455	0.8727455	0.0000
44	Pipe	71.92	3.1214	14.630	8.812	623.3	609.0	-5.8182153	-5.8182153	-6.1942
45	Pipe	71.92	3.1214	73.652	73.355	623.3	623.3	0.2972286	0.2972286	0.0000
47	Pipe	71.92	6.8766	73.049	72.739	623.3	623.3	0.3100069	0.3100069	0.0000
48	Pipe	71.92	6.8766	12.739	12.429	623.3	623.3	0.3100069	0.3100069	0.0000
49	Pipe	71.92	3.1214	12.587	12.395	623.3	623.3	0.1926641	0.1926641	0.0000
50	Pipe	71.92	1.8126	104.384	102.904	576.6	580.0	1.4799861	1.4799861	1.4728
51	Pipe	71.92	1.6190	102.909	91.755	580.0	605.5	11.1541088	11.1541088	11.0456
52	Pipe	71.92	1.8126	90.259	90.251	605.5	605.5	0.0072325	0.0072325	0.0000
54	Pipe	71.92	1.8126	90.234	90.220	605.5	605.5	0.0144650	0.0144650	0.0000
55	Pipe	0.00	0.0000	1.918	1.918	605.5	605.5	0.0000000	0.0000000	0.0000
56	Pipe	0.00	0.0000	14.696	1.918	605.5	576.0	-12.7782114	-12.7782114	-12.7782
58	Pipe	0.00	0.0000	81.211	81.211	606.0	606.0	0.0000000	0.0000000	0.0000

CALCULATION SHEET

Project No. S54413.024	**Calculation No.** S54413.024-M-002	**Rev.** 0	**Page No.** 49 of 180
Title: Leachate and Basin Pump Flow Calculation			
Prepared By: Gallegos, JF, P.E.	**Date:** 4/10/2020	**Checked By:** Dixon, KW, P.E.	**Date:** 4/10/2020

AFT Fathom 10 (Output)
4/13/2020
Page 4

AFT Fathom Model

Pipe	dH (feet)	P Static In (psia)	P Static Out (psia)	P Stag. In (psia)	P Stag. Out (psia)
13	0.0128475	89.338	89.333	89.410	89.404
14	0.0000000	89.431	89.431	89.431	89.431
28	0.0000000	81.211	73.718	81.211	73.718
29	0.0000000	73.718	81.211	73.718	81.211
32	16.4655583	89.275	74.649	89.346	74.720
33	0.0094320	104.365	104.361	104.417	104.413
36	0.0000000	81.211	81.211	81.211	81.211
38	0.0000000	81.211	73.718	81.211	73.718
39	0.0000000	73.718	73.718	73.718	73.718
41	2.0148354	74.351	73.478	74.669	73.796
44	0.8679554	8.812	14.630	8.878	14.696
45	0.6861870	73.652	73.355	73.718	73.421
47	0.7156872	73.049	72.739	73.367	73.057
48	0.7156872	12.739	12.429	13.057	12.747
49	0.4447877	12.587	12.395	12.653	12.460
50	0.0166971	104.384	102.904	104.407	102.927
51	0.2505687	102.909	91.755	102.927	91.772
52	0.0166971	90.259	90.251	90.281	90.274
54	0.0333942	90.234	90.220	90.257	90.242
55	0.0000000	1.918	1.918	1.918	1.918
56	0.0000000	1.918	14.696	1.918	14.696
58	0.0000000	81.211	81.211	81.211	81.211

All Junction Table

Jct	Name	P Static In (psia)	P Static Out (psia)	P Stag. In (psia)	P Stag. Out (psia)	Vol. Flow Rate Thru Jct (gal/min)	Mass Flow Rate Thru Jct (lbm/sec)	Loss Factor (K)
5	Pump	14.645	104.365	14.696	104.417	71.92	9.995	0.0000
7	Valve	90.251	90.234	90.274	90.257	71.92	9.995	0.7638
10	Valve	89.445	89.449	89.468	89.451	71.92	9.995	0.7650
15	Tee or Wye	89.430	89.430	89.431	89.431	N/A	N/A	See Mult. Losses
16	Area Change	89.427	89.338	89.429	89.410	71.92	9.995	13.3042
17	60M-43B	89.333	89.275	89.404	89.346	71.92	9.995	0.8100
X18	60M-43A	89.431	81.211	89.431	81.211	0.00	0.000	0.0000
31	Bend	81.211	81.211	81.211	81.211	0.00	0.000	0.0000
32	Bend	73.718	73.718	73.718	73.718	0.00	0.000	0.0000
35	Area Change	104.361	104.384	104.413	104.407	71.92	9.995	0.1180
37	Area Change	81.211	81.211	81.211	81.211	0.00	0.000	0.0000
38	Area Change	81.211	81.211	81.211	81.211	0.00	0.000	0.0000
39	Area Change	74.649	74.351	74.720	74.669	71.92	9.995	0.7136

CALCULATION SHEET

Project No. S54413.024	**Calculation No.** S54413.024-M-002	**Rev.** 0	**Page No.** 50 of 180
Title: Leachate and Basin Pump Flow Calculation			
Prepared By: Gallegos, JF, P.E.	**Date:** 4/10/2020	**Checked By:** Dixon, KW, P.E.	**Date:** 4/10/2020

AFT Fathom 10 (Output)
4/13/2020
Page 5

AFT Fathom Model

Jct	Name	P Static In (psia)	P Static Out (psia)	P Stag. In (psia)	P Stag. Out (psia)	Vol. Flow Rate Thru Jct (gal/min)	Mass Flow Rate Thru Jct (lbm/sec)	Loss Factor (K)
40	Tee or Wye	73.643	73.643	73.718	73.718	N/A	N/A	See Mult. Losses
42	Bend	73.718	73.718	73.718	73.718	0.00	0.000	0.0000
47	Assigned Pressure	14.630	14.630	14.696	14.696	71.92	9.995	0.0000
49	General Component	72.739	12.739	73.057	13.057	71.92	9.995	188.4923
50	Area Change	73.355	73.049	73.421	73.367	71.92	9.995	0.8114
51	Area Change	12.429	12.587	12.747	12.653	71.92	9.995	0.2967
54	Orifice	12.395	8.812	12.460	8.878	71.92	9.995	54.6231
56	Control Valve	90.286	90.259	90.308	90.281	71.92	9.995	1.2231
59	Branch	91.755	91.454	91.772	91.772	71.92	9.995	0.0000
60	Branch	102.904	102.909	102.927	102.927	71.92	9.995	0.0000
61	Area Change	90.165	90.289	90.483	90.312	71.92	9.995	0.5396
63	Three Way Valve	90.232	90.232	90.242	90.242	N/A	N/A	See Mult. Losses
64	Bend	1.918	1.918	1.918	1.918	0.00	0.000	0.0000
65	Assigned Pressure	14.696	14.696	14.696	14.696	0.00	0.000	0.0000

CALCULATION SHEET

Project No. S54413.024	**Calculation No.** S54413.024-M-002	**Rev.** 0	**Page No.** 51 of 180
Title: Leachate and Basin Pump Flow Calculation			
Prepared By: Gallegos, JF, P.E.	**Date:** 4/10/2020	**Checked By:** Dixon, KW, P.E.	**Date:** 4/10/2020

LOW BASIN LEVEL/HIGH OPERATING FILTER DP

CALCULATION SHEET

Project No. S54413.024	**Calculation No.** S54413.024-M-002	**Rev.** 0	**Page No.** 52 of 180
Title: Leachate and Basin Pump Flow Calculation			
Prepared By: Gallegos, JF, P.E.	**Date:** 4/10/2020	**Checked By:** Dixon, KW, P.E.	**Date:** 4/10/2020

AFT Fathom 10 (Model) 4/13/2020 Page 1	AFT Fathom Model	

General

Title: AFT Fathom Model
Input File: P:\Clients\Washington River Protection Solutions - WRPS 544\S54413.024 - LERF Basin 41 Design\Calculations\Mech\M-002 Flow\Rev 0\VV Files\LERF TransferRev0.fth
Scenario: Base Scenario/Run 1/Low Basin Level High Operating DP

Number Of Pipes= 27
Number Of Junctions= 27

Pressure/Head Tolerance= 0.0001 relative change
Flow Rate Tolerance= 0.0001 relative change
Temperature Tolerance= 0.0001 relative change
Flow Relaxation= (Automatic)
Pressure Relaxation= (Automatic)

Constant Fluid Property Model
Fluid Database: User Specified
Fluid= User Specified
Density= 1 S.G. water
Viscosity= 1 centipoise
Vapor Pressure= Unspecified
Viscosity Model= Newtonian
Apply laminar and non-Newtonian correction to: Pipe Fittings & Losses, Junction K factors, Junction Special Losses, Junction Polynomials
Corrections applied to the following junctions: Branch, Reservoir, Assigned Flow, Assigned Pressure, Area Change, Bend, Tee or Wye, Spray Discharge, Relief Valve

Ambient Pressure (constant)= 1 atm
Gravitational Acceleration= 1 g
Turbulent Flow Above Reynolds Number= 4000
Laminar Flow Below Reynolds Number= 2300

Pipes

Pipe	Name	Pipe Defined	Length	Length Units	Hydraulic Diameter	Hydraulic Diam. Units	Friction Data Set	Roughness	Roughness Units	Losses (K)
2	Pipe	Yes	30	feet	2.067	inches	Standard	0.0018	inches	0.301856
3	Pipe	Yes	2	feet	4.026	inches	Standard	0.0018	inches	0.04
5	Pipe	Yes	378	feet	4	inches	Unspecified	0.000204	inches	0.5749724
10	Pipe	Yes	350	feet	8	inches	Unspecified	0.000204	inches	1.622009
12	Pipe	Yes	2	feet	8	inches	Unspecified	0.000204	inches	0
13	Pipe	Yes	1	feet	3	inches	Unspecified	0.000204	inches	0
14	Pipe	Yes	1	feet	8	inches	Unspecified	0.000204	inches	0
28	Pipe	Yes	30	feet	4	inches	Unspecified	0.000204	inches	0
29	Pipe	Yes	1521	feet	4	inches	Unspecified	0.000204	inches	2.38
32	Pipe	Yes	1221	feet	3	inches	Unspecified	0.000204	inches	4.702397
33	Pipe	Yes	1	feet	3.26	inches	Standard	0.0018	inches	0
36	Pipe	Yes	7	feet	4	inches	Unspecified	0.000204	inches	0
38	Pipe	Yes	20	feet	3.068	inches	Standard	0.0018	inches	0

CALCULATION SHEET

Project No. S54413.024	**Calculation No.** S54413.024-M-002	**Rev.** 0	**Page No.** 53 of 180
Title: Leachate and Basin Pump Flow Calculation			
Prepared By: Gallegos, JF, P.E.	**Date:** 4/10/2020	**Checked By:** Dixon, KW, P.E.	**Date:** 4/10/2020

AFT Fathom 10 (Model)
4/13/2020
Page 2

AFT Fathom Model

Pipe	Initial Flow	Initial Flow Units	Junctions (Up,Down)	Geometry	Material	Size	Type	Special Condition
2			59, 61	Cylindrical Pipe	Steel - ANSI	2 inch	schedule 40	None
3			61, 56	Cylindrical Pipe	Steel - ANSI	4 inch	schedule 40	None
5			63, 10	Cylindrical Pipe	User Specified			None
10			10, 15	Cylindrical Pipe	User Specified			None
12			15, 16	Cylindrical Pipe	User Specified			None
13			16, 17	Cylindrical Pipe	User Specified			None
14			15, 18	Cylindrical Pipe	User Specified			None
28			31, 32	Cylindrical Pipe	User Specified			None
29			32, 38	Cylindrical Pipe	User Specified			None
32			17, 39	Cylindrical Pipe	User Specified			None
33			5, 35	Cylindrical Pipe	Steel - ANSI	3 inch	Schedule 10	None
36			37, 31	Cylindrical Pipe	User Specified			None
38			38, 42	Cylindrical Pipe	Steel - ANSI	3 inch	STD (schedule 40)	None

Pipe	Name	Pipe Defined	Length	Length Units	Hydraulic Diameter	Hydraulic Diam. Units	Friction Data Set	Roughness	Roughness Units	Losses (K)
39	Pipe	Yes	10	feet	3.068	inches	Standard	0.0018	inches	0
41	Pipe	Yes	15	feet	2.067	inches	Standard	0.0018	inches	0.8678359
44	Pipe	Yes	50	feet	3.068	inches	Standard	0.0018	inches	2.606288
45	Pipe	Yes	30	feet	3.068	inches	Standard	0.0018	inches	2.008384
47	Pipe	Yes	1	feet	2.067	inches	Standard	0.0018	inches	0.8489699
48	Pipe	Yes	1	feet	2.067	inches	Standard	0.0018	inches	0.8489699
49	Pipe	Yes	20	feet	3.068	inches	Standard	0.0018	inches	1.25524
50	Pipe	Yes	5	feet	4.026	inches	Standard	0.0018	inches	0
51	Pipe	Yes	98.93	feet	4.26	inches	Standard	0.0018	inches	0
52	Pipe	Yes	5	feet	4.026	inches	Standard	0.0018	inches	0
54	Pipe	Yes	10	feet	4.026	inches	Standard	0.0018	inches	0
55	Pipe	Yes	5	feet	4.026	inches	Standard	0.0018	inches	0
56	Pipe	Yes	46	feet	4.026	inches	Standard	0.0018	inches	0.4752721
58	Pipe	Yes	350	feet	8	inches	Unspecified	0.000204	inches	6.21

CALCULATION SHEET

Project No. S54413.024	**Calculation No.** S54413.024-M-002	**Rev.** 0	**Page No.** 54 of 180
Title: Leachate and Basin Pump Flow Calculation			
Prepared By: Gallegos, JF, P.E.	**Date:** 4/10/2020	**Checked By:** Dixon, KW, P.E.	**Date:** 4/10/2020

AFT Fathom 10 (Model)
4/13/2020
Page 3

AFT Fathom Model

Pipe	Initial Flow	Initial Flow Units	Junctions (Up,Down)	Geometry	Material	Size	Type	Special Condition
39			42, 40	Cylindrical Pipe	Steel - ANSI	3 inch	STD (schedule 40)	None
41			39, 40	Cylindrical Pipe	Steel - ANSI	2 inch	STD (schedule 40)	None
44			54, 47	Cylindrical Pipe	Steel - ANSI	3 inch	STD (schedule 40)	None
45			40, 50	Cylindrical Pipe	Steel - ANSI	3 inch	STD (schedule 40)	None
47			50, 49	Cylindrical Pipe	Steel - ANSI	2 inch	STD (schedule 40)	None
48			49, 51	Cylindrical Pipe	Steel - ANSI	2 inch	STD (schedule 40)	None
49			51, 54	Cylindrical Pipe	Steel - ANSI	3 inch	STD (schedule 40)	None
50			35, 60	Cylindrical Pipe	Steel - ANSI	4 inch	STD (schedule 40)	None
51			60, 59	Cylindrical Pipe	Steel - ANSI	4 inch	Schedule 10	None
52			56, 7	Cylindrical Pipe	Steel - ANSI	4 inch	schedule 40	None
54			7, 63	Cylindrical Pipe	Steel - ANSI	4 inch	schedule 40	None
55			63, 64	Cylindrical Pipe	Steel - ANSI	4 inch	schedule 40	None
56			64, 65	Cylindrical Pipe	Steel - ANSI	4 inch	schedule 40	None
58			18, 37	Cylindrical Pipe	User Specified			None

Pipe Fittings & Losses

Pipe	Total K	Elbow/Bend Standard Threaded	Elbow/Bend Smooth Flanged	Valve Butterfly	Valve Plug	Other Tee
2	0.3	1 (0.3)				
3	0.04					1 (0.04)
5	0.57		3 (0.57)			
10	1.62		3 (0.48)			2 (1.14)
29	2.38		7 (2.38)			
32	4.7		8 (1.94)	2 (1.62)		2 (1.14)
41	0.87		2 (0.53)		1 (0.34)	
44	2.61		6 (1.51)			1 (1.1)
45	2.01		8 (2.01)			
47	0.85			1 (0.85)		
48	0.85			1 (0.85)		
49	1.26		5 (1.26)			
56	0.48		2 (0.48)			
58	6.21		10 (1.96)	3 (1.89)		6 (2.36)

Area Change Table

Area Change	Name	Object Defined	Inlet Elevation	Elevation Units	Initial Pressure	Initial Pressure Units	Database Source	Type
16	Area Change	Yes	606	feet				Conical
35	Area Change	Yes	576.6	feet				Conical
37	Area Change	Yes	606	feet				Conical

CALCULATION SHEET

Project No. S54413.024	**Calculation No.** S54413.024-M-002	**Rev.** 0	**Page No.** 55 of 180
Title: Leachate and Basin Pump Flow Calculation			
Prepared By: Gallegos, JF, P.E.	**Date:** 4/10/2020	**Checked By:** Dixon, KW, P.E.	**Date:** 4/10/2020

AFT Fathom 10 (Model)
4/13/2020
Page 4

AFT Fathom Model

Area Change	Geometry	Angle	Loss Factor
16	Contraction	45	13.30416
35	Expansion	45	0.1179652
37	Contraction	45	3.673761

Area Change	Name	Object Defined	Inlet Elevation	Elevation Units	Initial Pressure	Initial Pressure Units	Database Source	Type
38	Area Change	Yes	606	feet				Conical
39	Area Change	Yes	623.3	feet				Conical
50	Area Change	Yes	623.3	feet				Conical
51	Area Change	Yes	623.3	feet				Conical
61	Area Change	Yes	605.5	feet				Conical

Area Change	Geometry	Angle	Loss Factor
38	Contraction	45	0.3642007
39	Contraction	45	0.7135802
50	Contraction	45	0.8114334
51	Expansion	45	0.2967157
61	Expansion	45	0.5395717

Assigned Pressure Table

Assigned Pressure	Name	Object Defined	Inlet Elevation	Elevation Units	Initial Pressure	Initial Pressure Units	Database Source
47	Assigned Pressure	Yes	609	feet	1.000	atm	
65	Assigned Pressure	Yes	576	feet	1.000	atm	

Assigned Pressure	Pressure	Pressure Units	Pressure Type	Balance Energy	Balance Concentration	(Pipe #1) K In, K Out	(Pipe #2) K In, K Out	(Pipe #3) K In, K Out
47	1	atm	Stagnation	No	No	(P44) 1, 0		
65	1	atm	Stagnation	No	No	(P56) 0, 1		

Assigned Pressure	(Pipe #4) K In, K Out	(Pipe #5) K In, K Out	(Pipe #6) K In, K Out	(Pipe #7) K In, K Out	(Pipe #8) K In, K Out	(Pipe #9) K In, K Out	(Pipe #10) K In, K Out	(Pipe #11) K In, K Out
47								
65								

Assigned Pressure	(Pipe #12) K In, K Out	(Pipe #13) K In, K Out	(Pipe #14) K In, K Out	(Pipe #15) K In, K Out	(Pipe #16) K In, K Out	(Pipe #17) K In, K Out	(Pipe #18) K In, K Out	(Pipe #19) K In, K Out
47								
65								

Assigned Pressure	(Pipe #20) K In, K Out	(Pipe #21) K In, K Out	(Pipe #22) K In, K Out	(Pipe #23) K In, K Out	(Pipe #24) K In, K Out	(Pipe #25) K In, K Out
47						
65						

CALCULATION SHEET

Project No. S54413.024	**Calculation No.** S54413.024-M-002	**Rev.** 0	**Page No.** 56 of 180
Title: Leachate and Basin Pump Flow Calculation			
Prepared By: Gallegos, JF, P.E.	**Date:** 4/10/2020	**Checked By:** Dixon, KW, P.E.	**Date:** 4/10/2020

AFT Fathom 10 (Model) 4/13/2020 Page 5	AFT Fathom Model	

Bend Table

Bend	Name	Object Defined	Inlet Elevation	Elevation Units	Initial Pressure	Initial Pressure Units	Database Source	Type	Angle (Degrees)	R/D
31	Bend	Yes	606	feet				Smooth Bend	90	1
32	Bend	Yes	623.3	feet				Smooth Bend	90	1
42	Bend	Yes	623.3	feet				Smooth Bend	90	1
64	Bend	Yes	605.5	feet				Smooth Bend	90	1.5

Bend	Loss Factor
31	0.34
32	0.34
42	0.35864
64	0.237636

Branch Table

Branch	Name	Object Defined	Inlet Elevation	Elevation Units	Initial Pressure	Initial Pressure Units	Database Source	Special Condition	Boundary Flow (+ = in/- = out)
59	Branch	Yes	605.5	feet				None	
60	Branch	Yes	580	feet				None	

Branch	Boundary Flow Units	(Pipe #1) K In, K Out	(Pipe #2) K In, K Out	(Pipe #3) K In, K Out	(Pipe #4) K In, K Out	(Pipe #5) K In, K Out	(Pipe #6) K In, K Out	(Pipe #7) K In, K Out
59		(P2) 0, 0	(P51) 0, 0					
60		(P50) 0, 0	(P51) 0, 0					

Branch	(Pipe #8) K In, K Out	(Pipe #9) K In, K Out	(Pipe #10) K In, K Out	(Pipe #11) K In, K Out	(Pipe #12) K In, K Out	(Pipe #13) K In, K Out	(Pipe #14) K In, K Out	(Pipe #15) K In, K Out	(Pipe #16) K In, K Out
59									
60									

Branch	(Pipe #17) K In, K Out	(Pipe #18) K In, K Out	(Pipe #19) K In, K Out	(Pipe #20) K In, K Out	(Pipe #21) K In, K Out	(Pipe #22) K In, K Out	(Pipe #23) K In, K Out	(Pipe #24) K In, K Out	(Pipe #25) K In, K Out
59									
60									

Control Valve Table

Control Valve	Name	Object Defined	Inlet Elevation	Elevation Units	Initial Pressure	Initial Pressure Units	Database Source
56	Control Valve	Yes	605.5	feet			

CALCULATION SHEET

Project No. S54413.024	**Calculation No.** S54413.024-M-002	**Rev.** 0	**Page No.** 57 of 180
Title: Leachate and Basin Pump Flow Calculation			
Prepared By: Gallegos, JF, P.E.	**Date:** 4/10/2020	**Checked By:** Dixon, KW, P.E.	**Date:** 4/10/2020

AFT Fathom 10 (Model)
4/13/2020
Page 6

AFT Fathom Model

Control Valve	Special Condition	Valve Type	Control Setting	Control Units	Pressure/ Head Type	Inlet Failure Type	Outlet Failure Type	Full Open Loss Type
56	Fully Open - No Control	FCV	10	gal/min	N/A	Fully Open	N/A	Cv Table

Control Valve	Full Open Loss
56	437.29

General Component Table

General Component	Name	Object Defined	Inlet Elevation	Elevation Units	Initial Pressure	Initial Pressure Units	Database Source
49	General Component	Yes	623.3	feet			

General Component	Special Condition	Loss Model	Loss Value	Independent Variable	Ind. Variable Units	Dependent Variable	Dep. Variable Units
49	None	Resistance Curve	Variable	Vol. Flow Rate	gal/min	Pressure Loss	psid

General Component	Loss Constant a	Loss Constant b	Loss Constant c	Loss Constant d	Loss Constant e
49	40	0	0	0	0

Orifice Table

Orifice	Name	Object Defined	Inlet Elevation	Elevation Units	Initial Pressure	Initial Pressure Units	Database Source	Orifice Type	Flow Area Type
54	Orifice	Yes	623.3	feet				Sharp-Edged	Diameter

Orifice	Dimension	Dimension Units	R/D	Restricted Area	Restricted Area Units	Loss Model	Loss Value	Independent Variable	Ind. Variable Units
54	1.361	inches				K Constant	54.62305		

Orifice	Dependent Variable	Dep. Variable Units	Loss Constant a	Loss Constant b	Loss Constant c	Loss Constant d	Loss Constant e
54							

Pump Table

Pump	Name	Object Defined	Inlet Elevation	Elevation Units	Initial Pressure	Initial Pressure Units	Database Source	Special Condition	Pump Type
5	Pump	Yes	576.6	feet				None	Pump Curve

Pump	Design Flow Rate	Design Flow Rate Units	Current Configuration	Independent Variable	Ind. Variable Units	Dependent Variable	Dep. Variable Units	Pump Curve Constant a
5				Vol. Flow Rate	gal/min	Head Rise	feet	221.5061

Sargent & Lundy Engineering Services, Inc

CALCULATION SHEET

Project No. S54413.024	**Calculation No.** S54413.024-M-002	**Rev.** 0	**Page No.** 58 of 180
Title: Leachate and Basin Pump Flow Calculation			
Prepared By: Gallegos, JF, P.E.	**Date:** 4/10/2020	**Checked By:** Dixon, KW, P.E.	**Date:** 4/10/2020

AFT Fathom 10 (Model)
4/13/2020
Page 7

AFT Fathom Model

Pump	Pump Curve Constant b	Pump Curve Constant c	Pump Curve Constant d	Pump Curve Constant e	Runout Flow Rate	Runout Flow Rate Units	Speed	Control When Exceeded Only
5	-0.03898634	-0.002236957	0	0			100	

Pump	Heat Added To Fluid	Heat Added Units	Submerged Pump Pressure	Submerged Pump Pressure Units
5	0	Percent	576.6	feet

Tee or Wye Table

Tee or Wye	Name	Object Defined	Inlet Elevation	Elevation Units	Initial Pressure	Initial Pressure Units	Database Source	Tee/Wye Type
15	Tee or Wye	Yes	606	feet				Sharp Straight
40	Tee or Wye	Yes	623.3	feet				Sharp Straight

Tee or Wye	Loss Type	Angle	Pipes A, B, C
15	Detailed	90	14, 10, 12
40	Detailed	90	39, 41, 45

Three Way Valve Table

Three Way Valve	Name	Object Defined	Inlet Elevation	Elevation Units	Initial Pressure	Initial Pressure Units	Database Source
63	Three Way Valve	Yes	605.5	feet			

Three Way Valve	Special Condition	Loss Model	Percent Open	Cv Pipe #1	Cv Pipe #2
63	Pipe #2 Closed	Cv	100	561	0

Valve Table

Valve	Name	Object Defined	Inlet Elevation	Elevation Units	Initial Pressure	Initial Pressure Units	Database Source	Special Condition	Exit Valve	Exit Pressure
7	Valve	Yes	605.5	feet				None	No	
10	Valve	Yes	606	feet				None	No	
17	60M-43B	Yes	606	feet				None	No	
18	60M-43A	Yes	606	feet				Closed	No	

Valve	Exit Pressure Units	Restricted Area	Restricted Area Units	Loss Model	Loss Source	Loss Factor	Percent Open	Open Pct. Data Exists	Independent Variable
7				K Constant	N/A	0.76383		No	
10				K Constant	N/A	0.765		No	
17				K Constant	N/A	0.8099999		No	
18				K Constant	N/A	0.63		No	

CALCULATION SHEET

Project No. S54413.024	**Calculation No.** S54413.024-M-002	**Rev.** 0	**Page No.** 59 of 180
Title: Leachate and Basin Pump Flow Calculation			
Prepared By: Gallegos, JF, P.E.	**Date:** 4/10/2020	**Checked By:** Dixon, KW, P.E.	**Date:** 4/10/2020

AFT Fathom 10 (Model) 4/13/2020 Page 8	AFT Fathom Model	

Valve	Ind. Variable Units	Dependent Variable	Dep. Variable Units	Loss Constant a	Loss Constant b	Loss Constant c	Loss Constant d	Loss Constant e
7								
10								
17								
18								

CALCULATION SHEET

Project No. S54413.024	**Calculation No.** S54413.024-M-002	**Rev.** 0	**Page No.** 60 of 180
Title: Leachate and Basin Pump Flow Calculation			
Prepared By: Gallegos, JF, P.E.	**Date:** 4/10/2020	**Checked By:** Dixon, KW, P.E.	**Date:** 4/10/2020

AFT Fathom 10 (Output) 4/13/2020 Page 1	AFT Fathom Model	

Model Reference Information

General

Title: AFT Fathom Model
Analysis run on: 4/13/2020 10:37:10 AM
Application version: AFT Fathom Version 10 (2018.05.21)
Input File: P:\Clients\Washington River Protection Solutions - WRPS 544\S54413.024 - LERF Basin 41 Design\Calculations\Mech\M-002 Flow\Rev 0\VV Files\LERF TransferRev0.fth
Scenario: Base Scenario/Run 1/Low Basin Level High Operating DP
Output File: P:\Clients\Washington River Protection Solutions - WRPS 544\S54413.024 - LERF Basin 41 Design\Calculations\Mech\M-002 Flow\Rev 0\VV Files\LERF TransferRev0_F6.out

Execution Time= 0.13 seconds
Total Number Of Head/Pressure Iterations= 0
Total Number Of Flow Iterations= 48
Total Number Of Temperature Iterations= 0
Number Of Pipes= 27
Number Of Junctions= 27
Matrix Method= Gaussian Elimination

Pressure/Head Tolerance= 0.0001 relative change
Flow Rate Tolerance= 0.0001 relative change
Temperature Tolerance= 0.0001 relative change
Flow Relaxation= (Automatic)
Pressure Relaxation= (Automatic)

Constant Fluid Property Model
Fluid Database: User Specified
Fluid= User Specified
Density= 1 S.G. water
Viscosity= 1 centipoise
Vapor Pressure= Unspecified
Viscosity Model= Newtonian
Apply laminar and non-Newtonian correction to: Pipe Fittings & Losses, Junction K factors, Junction Special Losses, Junction Polynomials
Corrections applied to the following junctions: Branch, Reservoir, Assigned Flow, Assigned Pressure, Area Change, Bend, Tee or Wye, Spray Discharge, Relief Valve

Ambient Pressure (constant)= 1 atm
Gravitational Acceleration= 1 g
Turbulent Flow Above Reynolds Number= 4000
Laminar Flow Below Reynolds Number= 2300
Total Inflow= 101.5 gal/min
Total Outflow= 101.5 gal/min
Maximum Static Pressure is 98.88 psia at Pipe 50 Inlet
Minimum Static Pressure is 1.918 psia at Pipe 56 Inlet

Warnings

No Warnings

Applied Standards

===== ANSI/HI 9.6.3-2017 - Rotodynamic Pumps - Guideline for Operating Regions =====
Pump 5 set to specific speed <=4500 (US Customary), with lower POR 70% and upper POR 120% of BEP

CALCULATION SHEET

Project No. S54413.024	**Calculation No.** S54413.024-M-002	**Rev.** 0	**Page No.** 61 of 180
Title: Leachate and Basin Pump Flow Calculation			
Prepared By: Gallegos, JF, P.E.	**Date:** 4/10/2020	**Checked By:** Dixon, KW, P.E.	**Date:** 4/10/2020

AFT Fathom 10 (Output) 4/13/2020 Page 2	AFT Fathom Model	

Pump Summary

Jct	Results Diagram	Name	Vol. Flow (gal/min)	Mass Flow (lbm/sec)	dP (psid)	dH (feet)	Overall Efficiency (Percent)	Speed (Percent)	Overall Power (hp)	BEP (gal/min)	% of BEP (Percent)	NPSHA (feet)
5	Show	Pump	101.5	14.11	84.24	194.5	N/A	100.0	4.989	N/A	N/A	N/A

Jct	NPSHR (feet)
5	N/A

Valve Summary

Jct	Name	Valve Type	Vol. Flow (gal/min)	Mass Flow (lbm/sec)	dP Stag. (psid)	dH (feet)	P Static In (psia)	Cv	K
7	Valve	REGULAR	101.5	14.11	0.03367	0.07773	83.22	553.4	0.7638
10	Valve	REGULAR	101.5	14.11	0.03461	0.07989	81.91	545.8	0.7650
17	60M-43B	REGULAR	101.5	14.11	0.11581	0.26735	81.69	298.4	0.8100
X18	60M-43A	REGULAR	0.0	0.00	N/A	N/A	81.88	N/A	N/A
56	Control Valve	FCV	101.5	14.11	0.05391	0.12447	83.29	437.3	1.2231
63 [P5]	Three Way Valve	THREE-WAY	101.5	14.11	0.03276	0.07563	83.19	561.0	0.7241
X63 [P55]	Three Way Valve	THREE-WAY	0.0	0.00	N/A	N/A	83.19	N/A	N/A

Jct	Valve State
7	Open
10	Open
17	Open
X18	Closed By User
56	Opened By User
63 [P5]	Open
X63 [P55]	Closed By User

Pipe Output Table

Pipe	Name	Vol. Flow Rate (gal/min)	Velocity (feet/sec)	P Static Max (psia)	P Static Min (psia)	Elevation Inlet (feet)	Elevation Outlet (feet)	dP Stag. Total (psid)	dP Static Total (psid)	dP Gravity (psid)
2	Pipe	101.5	9.7080	85.549	83.050	605.5	605.5	2.4986336	2.4986336	0.0000
3	Pipe	101.5	2.5590	83.298	83.291	605.5	605.5	0.0072214	0.0072214	0.0000
5	Pipe	101.5	2.5923	83.128	81.906	605.5	606.0	1.2221192	1.2221192	0.2166
10	Pipe	101.5	0.6481	81.914	81.877	606.0	606.0	0.0373169	0.0373169	0.0000
12	Pipe	101.5	0.6481	81.873	81.873	606.0	606.0	0.0001870	0.0001870	0.0000

CALCULATION SHEET

Project No. S54413.024	**Calculation No.** S54413.024-M-002	**Rev.** 0	**Page No.** 62 of 180
Title: Leachate and Basin Pump Flow Calculation			
Prepared By: Gallegos, JF, P.E.	**Date:** 4/10/2020	**Checked By:** Dixon, KW, P.E.	**Date:** 4/10/2020

AFT Fathom 10 (Output)
4/13/2020
Page 3

AFT Fathom Model

Pipe	dH (feet)	P Static In (psia)	P Static Out (psia)	P Stag. In (psia)	P Stag. Out (psia)
2	5.7683888	85.549	83.050	86.183	83.684
3	0.0166714	83.298	83.291	83.342	83.335
5	2.3214054	83.128	81.906	83.174	81.951
10	0.0861505	81.914	81.877	81.917	81.880
12	0.0004318	81.873	81.873	81.876	81.876

Pipe	Name	Vol. Flow Rate (gal/min)	Velocity (feet/sec)	P Static Max (psia)	P Static Min (psia)	Elevation Inlet (feet)	Elevation Outlet (feet)	dP Stag. Total (psid)	dP Static Total (psid)	dP Gravity (psid)
13	Pipe	101.5	4.6086	81.695	81.685	606.0	606.0	0.0103637	0.0103637	0.0000
14	Pipe	0.0	0.0000	81.880	81.880	606.0	606.0	0.0000000	0.0000000	0.0000
28	Pipe	0.0	0.0000	66.423	58.929	606.0	623.3	7.4936577	7.4936577	7.4937
29	Pipe	0.0	0.0000	66.423	58.929	623.3	606.0	-7.4936577	-7.4936577	-7.4937
32	Pipe	101.5	4.6086	81.569	60.749	606.0	623.3	20.8200184	20.8200184	7.4937
33	Pipe	101.5	3.9028	98.837	98.829	576.6	576.6	0.0077661	0.0077661	0.0000
36	Pipe	0.0	0.0000	66.423	66.423	606.0	606.0	0.0000000	0.0000000	0.0000
38	Pipe	0.0	0.0000	66.423	58.929	606.0	623.3	7.4936577	7.4936577	7.4937
39	Pipe	0.0	0.0000	58.929	58.929	623.3	623.3	0.0000000	0.0000000	0.0000
41	Pipe	101.5	9.7080	60.156	58.452	623.3	623.3	1.7041305	1.7041305	0.0000
44	Pipe	101.5	4.4066	14.565	9.181	623.3	609.0	-5.3840459	-5.3840459	-6.1942
45	Pipe	101.5	4.4066	58.798	58.221	623.3	623.3	0.5778459	0.5778459	0.0000
47	Pipe	101.5	9.7080	57.611	56.995	623.3	623.3	0.6154996	0.6154996	0.0000
48	Pipe	101.5	9.7080	16.995	16.380	623.3	623.3	0.6154996	0.6154996	0.0000
49	Pipe	101.5	4.4066	16.695	16.321	623.3	623.3	0.3742924	0.3742924	0.0000
50	Pipe	101.5	2.5590	98.875	97.389	576.6	580.0	1.4863991	1.4863991	1.4728
51	Pipe	101.5	2.2855	97.398	86.148	580.0	605.5	11.2499642	11.2499642	11.0456
52	Pipe	101.5	2.5590	83.237	83.223	605.5	605.5	0.0136455	0.0136455	0.0000
54	Pipe	101.5	2.5590	83.190	83.162	605.5	605.5	0.0272910	0.0272910	0.0000
55	Pipe	0.0	0.0000	1.918	1.918	605.5	605.5	0.0000000	0.0000000	0.0000
56	Pipe	0.0	0.0000	14.696	1.918	605.5	576.0	-12.7782114	-12.7782114	-12.7782
58	Pipe	0.0	0.0000	66.423	66.423	606.0	606.0	0.0000000	0.0000000	0.0000

CALCULATION SHEET

Project No. S54413.024	**Calculation No.** S54413.024-M-002	**Rev.** 0	**Page No.** 63 of 180
Title: Leachate and Basin Pump Flow Calculation			
Prepared By: Gallegos, JF, P.E.	**Date:** 4/10/2020	**Checked By:** Dixon, KW, P.E.	**Date:** 4/10/2020

AFT Fathom 10 (Output)
4/13/2020
Page 4

AFT Fathom Model

Pipe	dH (feet)	P Static In (psia)	P Static Out (psia)	P Stag. In (psia)	P Stag. Out (psia)
13	0.0239258	81.695	81.685	81.838	81.828
14	0.0000000	81.880	81.880	81.880	81.880
28	0.0000000	66.423	58.929	66.423	58.929
29	0.0000000	58.929	66.423	58.929	66.423
32	30.7654669	81.569	60.749	81.712	60.892
33	0.0179290	98.837	98.829	98.939	98.932
36	0.0000000	66.423	66.423	66.423	66.423
38	0.0000000	66.423	58.929	66.423	58.929
39	0.0000000	58.929	58.929	58.929	58.929
41	3.9341852	60.156	58.452	60.790	59.086
44	1.8702862	9.181	14.565	9.312	14.696
45	1.3340250	58.798	58.221	58.929	58.351
47	1.4209529	57.611	56.995	58.245	57.630
48	1.4209529	16.995	16.380	17.630	17.014
49	0.8640979	16.695	16.321	16.826	16.452
50	0.0315022	98.875	97.389	98.919	97.433
51	0.4718620	97.398	86.148	97.433	86.183
52	0.0315022	83.237	83.223	83.281	83.267
54	0.0630044	83.190	83.162	83.234	83.206
55	0.0000000	1.918	1.918	1.918	1.918
56	0.0000000	1.918	14.696	1.918	14.696
58	0.0000000	66.423	66.423	66.423	66.423

All Junction Table

Jct	Name	P Static In (psia)	P Static Out (psia)	P Stag. In (psia)	P Stag. Out (psia)	Vol. Flow Rate Thru Jct (gal/min)	Mass Flow Rate Thru Jct (lbm/sec)	Loss Factor (K)
5	Pump	14.583	98.837	14.686	98.939	101.5	14.11	0.0000
7	Valve	83.223	83.190	83.267	83.234	101.5	14.11	0.7638
10	Valve	81.906	81.914	81.951	81.917	101.5	14.11	0.7650
15	Tee or Wye	81.878	81.878	81.880	81.880	N/A	N/A	See Mult. Losses
16	Area Change	81.873	81.695	81.876	81.838	101.5	14.11	13.3042
17	60M-43B	81.685	81.569	81.828	81.712	101.5	14.11	0.8100
X18	60M-43A	81.880	66.423	81.880	66.423	0.0	0.00	0.0000
31	Bend	66.423	66.423	66.423	66.423	0.0	0.00	0.0000
32	Bend	58.929	58.929	58.929	58.929	0.0	0.00	0.0000
35	Area Change	98.829	98.875	98.932	98.919	101.5	14.11	0.1180
37	Area Change	66.423	66.423	66.423	66.423	0.0	0.00	0.0000
38	Area Change	66.423	66.423	66.423	66.423	0.0	0.00	0.0000
39	Area Change	60.749	60.156	60.892	60.790	101.5	14.11	0.7136

Sargent & Lundy Engineering Services, Inc

CALCULATION SHEET

Project No. S54413.024	**Calculation No.** S54413.024-M-002	**Rev.** 0	**Page No.** 64 of 180
Title: Leachate and Basin Pump Flow Calculation			
Prepared By: Gallegos, JF, P.E.	**Date:** 4/10/2020	**Checked By:** Dixon, KW, P.E.	**Date:** 4/10/2020

AFT Fathom 10 (Output)
4/13/2020
Page 5

AFT Fathom Model

Jct	Name	P Static In (psia)	P Static Out (psia)	P Stag. In (psia)	P Stag. Out (psia)	Vol. Flow Rate Thru Jct (gal/min)	Mass Flow Rate Thru Jct (lbm/sec)	Loss Factor (K)
40	Tee or Wye	58.780	58.780	58.929	58.929	N/A	N/A	See Mult. Losses
42	Bend	58.929	58.929	58.929	58.929	0.0	0.00	0.0000
47	Assigned Pressure	14.565	14.565	14.696	14.696	101.5	14.11	0.0000
49	General Component	56.995	16.995	57.630	17.630	101.5	14.11	63.0507
50	Area Change	58.221	57.611	58.351	58.245	101.5	14.11	0.8114
51	Area Change	16.380	16.695	17.014	16.826	101.5	14.11	0.2967
54	Orifice	16.321	9.181	16.452	9.312	101.5	14.11	54.6231
56	Control Valve	83.291	83.237	83.335	83.281	101.5	14.11	1.2231
59	Branch	86.148	85.549	86.183	86.183	101.5	14.11	0.0000
60	Branch	97.389	97.398	97.433	97.433	101.5	14.11	0.0000
61	Area Change	83.050	83.298	83.684	83.342	101.5	14.11	0.5396
63	Three Way Valve	83.187	83.187	83.206	83.206	N/A	N/A	See Mult. Losses
64	Bend	1.918	1.918	1.918	1.918	0.0	0.00	0.0000
65	Assigned Pressure	14.696	14.696	14.696	14.696	0.0	0.00	0.0000

APPENDIX C

BASIN PUMP FATHOM RUN 2 INPUTS AND OUTPUTS

HIGH BASIN LEVEL/LOW FILTER DP

LOW BASIN LEVEL/HIGH FILTER DP

LOW BASIN LEVEL/HIGH OPERATING FILTER DP

CALCULATION SHEET

Project No. S54413.024	**Calculation No.** S54413.024-M-002	**Rev.** 0	**Page No.** 66 of 180
Title: Leachate and Basin Pump Flow Calculation			
Prepared By: Gallegos, JF, P.E.	**Date:** 4/10/2020	**Checked By:** Dixon, KW, P.E.	**Date:** 4/10/2020

HIGH BASIN LEVEL/LOW FILTER DP

CALCULATION SHEET

Project No. S54413.024	**Calculation No.** S54413.024-M-002	**Rev.** 0	**Page No.** 67 of 180
Title: Leachate and Basin Pump Flow Calculation			
Prepared By: Gallegos, JF, P.E.	**Date:** 4/10/2020	**Checked By:** Dixon, KW, P.E.	**Date:** 4/10/2020

AFT Fathom 10 (Model) 4/13/2020 Page 1	AFT Fathom Model	

General

Title: AFT Fathom Model
Input File: P:\Clients\Washington River Protection Solutions - WRPS 544\S54413.024 - LERF Basin 41 Design\Calculations\Mech\M-002 Flow\Rev 0\VV Files\LERF TransferRev0.fth
Scenario: Base Scenario/Run 2/High Basin Level Low DP

Number Of Pipes= 27
Number Of Junctions= 27

Pressure/Head Tolerance= 0.0001 relative change
Flow Rate Tolerance= 0.0001 relative change
Temperature Tolerance= 0.0001 relative change
Flow Relaxation= (Automatic)
Pressure Relaxation= (Automatic)

Constant Fluid Property Model
Fluid Database: User Specified
Fluid= User Specified
Density= 1 S.G. water
Viscosity= 1 centipoise
Vapor Pressure= Unspecified
Viscosity Model= Newtonian
Apply laminar and non-Newtonian correction to: Pipe Fittings & Losses, Junction K factors, Junction Special Losses, Junction Polynomials
Corrections applied to the following junctions: Branch, Reservoir, Assigned Flow, Assigned Pressure, Area Change, Bend, Tee or Wye, Spray Discharge, Relief Valve

Ambient Pressure (constant)= 1 atm
Gravitational Acceleration= 1 g
Turbulent Flow Above Reynolds Number= 4000
Laminar Flow Below Reynolds Number= 2300

Pipes

Pipe	Name	Pipe Defined	Length	Length Units	Hydraulic Diameter	Hydraulic Diam. Units	Friction Data Set	Roughness	Roughness Units	Losses (K)
2	Pipe	Yes	30	feet	2.067	inches	Standard	0.0018	inches	0.301856
3	Pipe	Yes	2	feet	4.026	inches	Standard	0.0018	inches	0.04
5	Pipe	Yes	378	feet	4	inches	Unspecified	0.000204	inches	0.5749724
10	Pipe	Yes	350	feet	8	inches	Unspecified	0.000204	inches	1.622009
12	Pipe	Yes	2	feet	8	inches	Unspecified	0.000204	inches	0
13	Pipe	Yes	1	feet	8	inches	Unspecified	0.000204	inches	0
14	Pipe	Yes	1	feet	8	inches	Unspecified	0.000204	inches	0
28	Pipe	Yes	30	feet	4	inches	Unspecified	0.000204	inches	0
29	Pipe	Yes	1521	feet	4	inches	Unspecified	0.000204	inches	2.38
32	Pipe	Yes	1221	feet	3	inches	Unspecified	0.000204	inches	4.702397
33	Pipe	Yes	1	feet	3.26	inches	Standard	0.0018	inches	0
36	Pipe	Yes	7	feet	4	inches	Unspecified	0.000204	inches	0
38	Pipe	Yes	20	feet	3.068	inches	Standard	0.0018	inches	0

CALCULATION SHEET

Project No. S54413.024	**Calculation No.** S54413.024-M-002	**Rev.** 0	**Page No.** 68 of 180
Title: Leachate and Basin Pump Flow Calculation			
Prepared By: Gallegos, JF, P.E.	**Date:** 4/10/2020	**Checked By:** Dixon, KW, P.E.	**Date:** 4/10/2020

AFT Fathom 10 (Model)
4/13/2020
Page 2

AFT Fathom Model

Pipe	Initial Flow	Initial Flow Units	Junctions (Up,Down)	Geometry	Material	Size	Type	Special Condition
2			59, 61	Cylindrical Pipe	Steel - ANSI	2 inch	schedule 40	None
3			61, 56	Cylindrical Pipe	Steel - ANSI	4 inch	schedule 40	None
5			63, 10	Cylindrical Pipe	User Specified			None
10			10, 15	Cylindrical Pipe	User Specified			None
12			15, 16	Cylindrical Pipe	User Specified			None
13			16, 17	Cylindrical Pipe	User Specified			None
14			15, 18	Cylindrical Pipe	User Specified			None
28			31, 32	Cylindrical Pipe	User Specified			None
29			32, 38	Cylindrical Pipe	User Specified			None
32			17, 39	Cylindrical Pipe	User Specified			None
33			5, 35	Cylindrical Pipe	Steel - ANSI	3 inch	Schedule 10	None
36			37, 31	Cylindrical Pipe	User Specified			None
38			38, 42	Cylindrical Pipe	Steel - ANSI	3 inch	STD (schedule 40)	None

Pipe	Name	Pipe Defined	Length	Length Units	Hydraulic Diameter	Hydraulic Diam. Units	Friction Data Set	Roughness	Roughness Units	Losses (K)
39	Pipe	Yes	10	feet	3.068	inches	Standard	0.0018	inches	0
41	Pipe	Yes	15	feet	2.067	inches	Standard	0.0018	inches	0.8678359
44	Pipe	Yes	50	feet	3.068	inches	Standard	0.0018	inches	2.606288
45	Pipe	Yes	30	feet	3.068	inches	Standard	0.0018	inches	2.008384
47	Pipe	Yes	1	feet	2.067	inches	Standard	0.0018	inches	0.8489699
48	Pipe	Yes	1	feet	2.067	inches	Standard	0.0018	inches	0.8489699
49	Pipe	Yes	20	feet	3.068	inches	Standard	0.0018	inches	1.25524
50	Pipe	Yes	5	feet	4.026	inches	Standard	0.0018	inches	0
51	Pipe	Yes	98.93	feet	4.26	inches	Standard	0.0018	inches	0
52	Pipe	Yes	5	feet	4.026	inches	Standard	0.0018	inches	0
54	Pipe	Yes	10	feet	4.026	inches	Standard	0.0018	inches	0
55	Pipe	Yes	5	feet	4.026	inches	Standard	0.0018	inches	0
56	Pipe	Yes	46	feet	4.026	inches	Standard	0.0018	inches	0.4752721
58	Pipe	Yes	350	feet	8	inches	Unspecified	0.000204	inches	6.21

CALCULATION SHEET

Project No. S54413.024	**Calculation No.** S54413.024-M-002	**Rev.** 0	**Page No.** 69 of 180
Title: Leachate and Basin Pump Flow Calculation			
Prepared By: Gallegos, JF, P.E.	**Date:** 4/10/2020	**Checked By:** Dixon, KW, P.E.	**Date:** 4/10/2020

AFT Fathom 10 (Model)
4/13/2020
Page 3

AFT Fathom Model

Pipe	Initial Flow	Initial Flow Units	Junctions (Up,Down)	Geometry	Material	Size	Type	Special Condition
39			42, 40	Cylindrical Pipe	Steel - ANSI	3 inch	STD (schedule 40)	None
41			39, 40	Cylindrical Pipe	Steel - ANSI	2 inch	STD (schedule 40)	None
44			54, 47	Cylindrical Pipe	Steel - ANSI	3 inch	STD (schedule 40)	None
45			40, 50	Cylindrical Pipe	Steel - ANSI	3 inch	STD (schedule 40)	None
47			50, 49	Cylindrical Pipe	Steel - ANSI	2 inch	STD (schedule 40)	None
48			49, 51	Cylindrical Pipe	Steel - ANSI	2 inch	STD (schedule 40)	None
49			51, 54	Cylindrical Pipe	Steel - ANSI	3 inch	STD (schedule 40)	None
50			35, 60	Cylindrical Pipe	Steel - ANSI	4 inch	STD (schedule 40)	None
51			60, 59	Cylindrical Pipe	Steel - ANSI	4 inch	Schedule 10	None
52			56, 7	Cylindrical Pipe	Steel - ANSI	4 inch	schedule 40	None
54			7, 63	Cylindrical Pipe	Steel - ANSI	4 inch	schedule 40	None
55			63, 64	Cylindrical Pipe	Steel - ANSI	4 inch	schedule 40	None
56			64, 65	Cylindrical Pipe	Steel - ANSI	4 inch	schedule 40	None
58			18, 37	Cylindrical Pipe	User Specified			None

Pipe Fittings & Losses

Pipe	Total K	Elbow/Bend Standard Threaded	Elbow/Bend Smooth Flanged	Valve Butterfly	Valve Plug	Other Tee
2	0.3	1 (0.3)				
3	0.04					1 (0.04)
5	0.57		3 (0.57)			
10	1.62		3 (0.48)			2 (1.14)
29	2.38		7 (2.38)			
32	4.7		8 (1.94)	2 (1.62)		2 (1.14)
41	0.87		2 (0.53)		1 (0.34)	
44	2.61		6 (1.51)			1 (1.1)
45	2.01		8 (2.01)			
47	0.85			1 (0.85)		
48	0.85			1 (0.85)		
49	1.26		5 (1.26)			
56	0.48		2 (0.48)			
58	6.21		10 (1.96)	3 (1.89)		6 (2.36)

Area Change Table

Area Change	Name	Object Defined	Inlet Elevation	Elevation Units	Initial Pressure	Initial Pressure Units	Database Source	Type
16	Area Change	Yes	606	feet				Conical
35	Area Change	Yes	576.6	feet				Conical
37	Area Change	Yes	606	feet				Conical

CALCULATION SHEET

Project No. S54413.024	**Calculation No.** S54413.024-M-002	**Rev.** 0	**Page No.** 70 of 180
Title: Leachate and Basin Pump Flow Calculation			
Prepared By: Gallegos, JF, P.E.	**Date:** 4/10/2020	**Checked By:** Dixon, KW, P.E.	**Date:** 4/10/2020

AFT Fathom 10 (Model)
4/13/2020
Page 4

AFT Fathom Model

Area Change	Geometry	Angle	Loss Factor
16	Expansion	45	0
35	Expansion	45	0.1179652
37	Contraction	45	3.673761

Area Change	Name	Object Defined	Inlet Elevation	Elevation Units	Initial Pressure	Initial Pressure Units	Database Source	Type
38	Area Change	Yes	606	feet				Conical
39	Area Change	Yes	623.3	feet				Conical
50	Area Change	Yes	623.3	feet				Conical
51	Area Change	Yes	623.3	feet				Conical
61	Area Change	Yes	605.5	feet				Conical

Area Change	Geometry	Angle	Loss Factor
38	Contraction	45	0.3642007
39	Contraction	45	0.7135802
50	Contraction	45	0.8114334
51	Expansion	45	0.2967157
61	Expansion	45	0.5395717

Assigned Pressure Table

Assigned Pressure	Name	Object Defined	Inlet Elevation	Elevation Units	Initial Pressure	Initial Pressure Units	Database Source
47	Assigned Pressure	Yes	609	feet	1.000	atm	
65	Assigned Pressure	Yes	576	feet	1.000	atm	

Assigned Pressure	Pressure	Pressure Units	Pressure Type	Balance Energy	Balance Concentration	(Pipe #1) K In, K Out	(Pipe #2) K In, K Out	(Pipe #3) K In, K Out
47	1	atm	Stagnation	No	No	(P44) 0, 1		
65	1	atm	Stagnation	No	No	(P56) 0, 1		

Assigned Pressure	(Pipe #4) K In, K Out	(Pipe #5) K In, K Out	(Pipe #6) K In, K Out	(Pipe #7) K In, K Out	(Pipe #8) K In, K Out	(Pipe #9) K In, K Out	(Pipe #10) K In, K Out	(Pipe #11) K In, K Out
47								
65								

Assigned Pressure	(Pipe #12) K In, K Out	(Pipe #13) K In, K Out	(Pipe #14) K In, K Out	(Pipe #15) K In, K Out	(Pipe #16) K In, K Out	(Pipe #17) K In, K Out	(Pipe #18) K In, K Out	(Pipe #19) K In, K Out
47								
65								

Assigned Pressure	(Pipe #20) K In, K Out	(Pipe #21) K In, K Out	(Pipe #22) K In, K Out	(Pipe #23) K In, K Out	(Pipe #24) K In, K Out	(Pipe #25) K In, K Out
47						
65						

CALCULATION SHEET

Project No. S54413.024	**Calculation No.** S54413.024-M-002	**Rev.** 0	**Page No.** 71 of 180
Title: Leachate and Basin Pump Flow Calculation			
Prepared By: Gallegos, JF, P.E.	**Date:** 4/10/2020	**Checked By:** Dixon, KW, P.E.	**Date:** 4/10/2020

AFT Fathom 10 (Model) 4/13/2020 Page 5	AFT Fathom Model	

Bend Table

Bend	Name	Object Defined	Inlet Elevation	Elevation Units	Initial Pressure	Initial Pressure Units	Database Source	Type	Angle (Degrees)	R/D
31	Bend	Yes	606	feet				Smooth Bend	90	1
32	Bend	Yes	623.3	feet				Smooth Bend	90	1
42	Bend	Yes	623.3	feet				Smooth Bend	90	1
64	Bend	Yes	605.5	feet				Smooth Bend	90	1.5

Bend	Loss Factor
31	0.34
32	0.34
42	0.35864
64	0.237636

Branch Table

Branch	Name	Object Defined	Inlet Elevation	Elevation Units	Initial Pressure	Initial Pressure Units	Database Source	Special Condition	Boundary Flow (+ = in/- = out)
59	Branch	Yes	605.5	feet				None	
60	Branch	Yes	580	feet				None	

Branch	Boundary Flow Units	(Pipe #1) K In, K Out	(Pipe #2) K In, K Out	(Pipe #3) K In, K Out	(Pipe #4) K In, K Out	(Pipe #5) K In, K Out	(Pipe #6) K In, K Out	(Pipe #7) K In, K Out
59		(P2) 0, 0	(P51) 0, 0					
60		(P50) 0, 0	(P51) 0, 0					

Branch	(Pipe #8) K In, K Out	(Pipe #9) K In, K Out	(Pipe #10) K In, K Out	(Pipe #11) K In, K Out	(Pipe #12) K In, K Out	(Pipe #13) K In, K Out	(Pipe #14) K In, K Out	(Pipe #15) K In, K Out	(Pipe #16) K In, K Out
59									
60									

Branch	(Pipe #17) K In, K Out	(Pipe #18) K In, K Out	(Pipe #19) K In, K Out	(Pipe #20) K In, K Out	(Pipe #21) K In, K Out	(Pipe #22) K In, K Out	(Pipe #23) K In, K Out	(Pipe #24) K In, K Out	(Pipe #25) K In, K Out
59									
60									

Control Valve Table

Control Valve	Name	Object Defined	Inlet Elevation	Elevation Units	Initial Pressure	Initial Pressure Units	Database Source
56	Control Valve	Yes	605.5	feet			

CALCULATION SHEET

Project No. S54413.024	**Calculation No.** S54413.024-M-002	**Rev.** 0	**Page No.** 72 of 180
Title: Leachate and Basin Pump Flow Calculation			
Prepared By: Gallegos, JF, P.E.	**Date:** 4/10/2020	**Checked By:** Dixon, KW, P.E.	**Date:** 4/10/2020

AFT Fathom 10 (Model)
4/13/2020
Page 6

AFT Fathom Model

Control Valve	Special Condition	Valve Type	Control Setting	Control Units	Pressure/ Head Type	Inlet Failure Type	Outlet Failure Type	Full Open Loss Type
56	Fully Open - No Control	FCV	10	gal/min	N/A	Fully Open	N/A	Cv Table

Control Valve	Full Open Loss
56	437.29

General Component Table

General Component	Name	Object Defined	Inlet Elevation	Elevation Units	Initial Pressure	Initial Pressure Units	Database Source
49	General Component	Yes	623.3	feet			

General Component	Special Condition	Loss Model	Loss Value	Independent Variable	Ind. Variable Units	Dependent Variable	Dep. Variable Units
49	None	Resistance Curve	Variable	Vol. Flow Rate	gal/min	Pressure Loss	psid

General Component	Loss Constant a	Loss Constant b	Loss Constant c	Loss Constant d	Loss Constant e
49	2	0	0	0	0

Orifice Table

Orifice	Name	Object Defined	Inlet Elevation	Elevation Units	Initial Pressure	Initial Pressure Units	Database Source	Orifice Type	Flow Area Type
54	Orifice	Yes	623.3	feet				Sharp-Edged	Diameter

Orifice	Dimension	Dimension Units	R/D	Restricted Area	Restricted Area Units	Loss Model	Loss Value	Independent Variable	Ind. Variable Units
54	1.361	inches				K Constant	54.62305		

Orifice	Dependent Variable	Dep. Variable Units	Loss Constant a	Loss Constant b	Loss Constant c	Loss Constant d	Loss Constant e
54							

Pump Table

Pump	Name	Object Defined	Inlet Elevation	Elevation Units	Initial Pressure	Initial Pressure Units	Database Source	Special Condition	Pump Type
5	Pump	Yes	576.6	feet				None	Pump Curve

Pump	Design Flow Rate	Design Flow Rate Units	Current Configuration	Independent Variable	Ind. Variable Units	Dependent Variable	Dep. Variable Units	Pump Curve Constant a
5				Vol. Flow Rate	gal/min	Head Rise	feet	221.5061

CALCULATION SHEET

Project No. S54413.024	**Calculation No.** S54413.024-M-002	**Rev.** 0	**Page No.** 73 of 180
Title: Leachate and Basin Pump Flow Calculation			
Prepared By: Gallegos, JF, P.E.	**Date:** 4/10/2020	**Checked By:** Dixon, KW, P.E.	**Date:** 4/10/2020

AFT Fathom 10 (Model)
4/13/2020
Page 7

AFT Fathom Model

Pump	Pump Curve Constant b	Pump Curve Constant c	Pump Curve Constant d	Pump Curve Constant e	Runout Flow Rate	Runout Flow Rate Units	Speed	Control When Exceeded Only
5	-0.03898634	-0.002236957	0	0			100	

Pump	Heat Added To Fluid	Heat Added Units	Submerged Pump Pressure	Submerged Pump Pressure Units
5	0	Percent	601	feet

Tee or Wye Table

Tee or Wye	Name	Object Defined	Inlet Elevation	Elevation Units	Initial Pressure	Initial Pressure Units	Database Source	Tee/Wye Type
15	Tee or Wye	Yes	606	feet				Sharp Straight
40	Tee or Wye	Yes	623.3	feet				Sharp Straight

Tee or Wye	Loss Type	Angle	Pipes A, B, C
15	Detailed	90	14, 10, 12
40	Detailed	90	39, 41, 45

Three Way Valve Table

Three Way Valve	Name	Object Defined	Inlet Elevation	Elevation Units	Initial Pressure	Initial Pressure Units	Database Source
63	Three Way Valve	Yes	605.5	feet			

Three Way Valve	Special Condition	Loss Model	Percent Open	Cv Pipe #1	Cv Pipe #2
63	Pipe #2 Closed	Cv	100	561	0

Valve Table

Valve	Name	Object Defined	Inlet Elevation	Elevation Units	Initial Pressure	Initial Pressure Units	Database Source	Special Condition	Exit Valve	Exit Pressure
7	Valve	Yes	605.5	feet				None	No	
10	Valve	Yes	606	feet				None	No	
17	60M-43B	Yes	606	feet				Closed	No	
18	60M-43A	Yes	606	feet				None	No	

Valve	Exit Pressure Units	Restricted Area	Restricted Area Units	Loss Model	Loss Source	Loss Factor	Percent Open	Open Pct. Data Exists	Independent Variable
7				K Constant	N/A	0.76383		No	
10				K Constant	N/A	0.765		No	
17				K Constant	N/A	0.63		No	
18				K Constant	N/A	0.63		No	

CALCULATION SHEET

Project No. S54413.024	**Calculation No.** S54413.024-M-002	**Rev.** 0	**Page No.** 74 of 180
Title: Leachate and Basin Pump Flow Calculation			
Prepared By: Gallegos, JF, P.E.	**Date:** 4/10/2020	**Checked By:** Dixon, KW, P.E.	**Date:** 4/10/2020

AFT Fathom 10 (Model) 4/13/2020 Page 8	AFT Fathom Model	

Valve	Ind. Variable Units	Dependent Variable	Dep. Variable Units	Loss Constant a	Loss Constant b	Loss Constant c	Loss Constant d	Loss Constant e
7								
10								
17								
18								

CALCULATION SHEET

Project No. S54413.024	**Calculation No.** S54413.024-M-002	**Rev.** 0	**Page No.** 75 of 180
Title: Leachate and Basin Pump Flow Calculation			
Prepared By: Gallegos, JF, P.E.	**Date:** 4/10/2020	**Checked By:** Dixon, KW, P.E.	**Date:** 4/10/2020

AFT Fathom 10 (Output) 4/13/2020 Page 1	AFT Fathom Model	

Model Reference Information

General

Title: AFT Fathom Model
Analysis run on: 4/13/2020 10:36:48 AM
Application version: AFT Fathom Version 10 (2018.05.21)
Input File: P:\Clients\Washington River Protection Solutions - WRPS 544\S54413.024 - LERF Basin 41 Design\Calculations\Mech\M-002 Flow\Rev 0\VV Files\LERF TransferRev0.fth
Scenario: Base Scenario/Run 2/High Basin Level Low DP
Output File: P:\Clients\Washington River Protection Solutions - WRPS 544\S54413.024 - LERF Basin 41 Design\Calculations\Mech\M-002 Flow\Rev 0\VV Files\LERF TransferRev0_F2.out

Execution Time= 0.08 seconds
Total Number Of Head/Pressure Iterations= 0
Total Number Of Flow Iterations= 21
Total Number Of Temperature Iterations= 0
Number Of Pipes= 27
Number Of Junctions= 27
Matrix Method= Gaussian Elimination

Pressure/Head Tolerance= 0.0001 relative change
Flow Rate Tolerance= 0.0001 relative change
Temperature Tolerance= 0.0001 relative change
Flow Relaxation= (Automatic)
Pressure Relaxation= (Automatic)

Constant Fluid Property Model
Fluid Database: User Specified
Fluid= User Specified
Density= 1 S.G. water
Viscosity= 1 centipoise
Vapor Pressure= Unspecified
Viscosity Model= Newtonian
Apply laminar and non-Newtonian correction to: Pipe Fittings & Losses, Junction K factors, Junction Special Losses, Junction Polynomials
Corrections applied to the following junctions: Branch, Reservoir, Assigned Flow, Assigned Pressure, Area Change, Bend, Tee or Wye, Spray Discharge, Relief Valve

Ambient Pressure (constant)= 1 atm
Gravitational Acceleration= 1 g
Turbulent Flow Above Reynolds Number= 4000
Laminar Flow Below Reynolds Number= 2300
Total Inflow= 176.3 gal/min
Total Outflow= 176.3 gal/min
Maximum Static Pressure is 87.91 psia at Pipe 50 Inlet
Minimum Static Pressure is 1.918 psia at Pipe 56 Inlet

Warnings

No Warnings

Applied Standards

===== ANSI/HI 9.6.3-2017 - Rotodynamic Pumps - Guideline for Operating Regions =====
Pump 5 set to specific speed <=4500 (US Customary), with lower POR 70% and upper POR 120% of BEP

CALCULATION SHEET

Project No. S54413.024	**Calculation No.** S54413.024-M-002	**Rev.** 0	**Page No.** 76 of 180
Title: Leachate and Basin Pump Flow Calculation			
Prepared By: Gallegos, JF, P.E.	**Date:** 4/10/2020	**Checked By:** Dixon, KW, P.E.	**Date:** 4/10/2020

AFT Fathom 10 (Output) 4/13/2020 Page 2	AFT Fathom Model	

Pump Summary

Jct	Results Diagram	Name	Vol. Flow (gal/min)	Mass Flow (lbm/sec)	dP (psid)	dH (feet)	Overall Efficiency (Percent)	Speed (Percent)	Overall Power (hp)	BEP (gal/min)	% of BEP (Percent)	NPSHA (feet)
5	Show	Pump	176.3	24.51	62.84	145.1	N/A	100.0	6.463	N/A	N/A	N/A

Jct	NPSHR (feet)
5	N/A

Valve Summary

Jct	Name	Valve Type	Vol. Flow (gal/min)	Mass Flow (lbm/sec)	dP Stag. (psid)	dH (feet)	P Static In (psia)	Cv	K
7	Valve	REGULAR	176.3	24.51	0.101558	0.23446	66.24	553.4	0.7638
10	Valve	REGULAR	176.3	24.51	0.104384	0.24098	63.01	545.8	0.7650
X17	60M-43B	REGULAR	0.0	0.00	N/A	N/A	62.94	N/A	N/A
18	60M-43A	REGULAR	176.3	24.51	0.005373	0.01240	62.93	2,405.8	0.6300
56	Control Valve	FCV	176.3	24.51	0.162624	0.37544	66.44	437.3	1.2231
63 [P5]	Three Way Valve	THREE-WAY	176.3	24.51	0.098809	0.22811	66.13	561.0	0.7241
X63 [P55]	Three Way Valve	THREE-WAY	0.0	0.00	N/A	N/A	66.13	N/A	N/A

Jct	Valve State
7	Open
10	Open
X17	Closed By User
18	Open
56	Opened By User
63 [P5]	Open
X63 [P55]	Closed By User

Pipe Output Table

Pipe	Name	Vol. Flow Rate (gal/min)	Velocity (feet/sec)	P Static Max (psia)	P Static Min (psia)	Elevation Inlet (feet)	Elevation Outlet (feet)	dP Stag. Total (psid)	dP Static Total (psid)	dP Gravity (psid)
2	Pipe	176.3	16.860	73.003	65.711	605.5	605.5	7.2921481	7.2921481	0.0000
3	Pipe	176.3	4.444	66.459	66.439	605.5	605.5	0.0206087	0.0206087	0.0000
5	Pipe	176.3	4.502	65.957	63.010	605.5	606.0	2.9473776	2.9473776	0.2166
10	Pipe	176.3	1.126	63.034	62.932	606.0	606.0	0.1013491	0.1013491	0.0000
12	Pipe	0.0	0.000	62.941	62.941	606.0	606.0	0.0000000	0.0000000	0.0000

Sargent & Lundy Engineering Services, Inc

CALCULATION SHEET

Project No. S54413.024	**Calculation No.** S54413.024-M-002	**Rev.** 0	**Page No.** 77 of 180
Title: Leachate and Basin Pump Flow Calculation			
Prepared By: Gallegos, JF, P.E.	**Date:** 4/10/2020	**Checked By:** Dixon, KW, P.E.	**Date:** 4/10/2020

AFT Fathom 10 (Output)
4/13/2020
Page 3

AFT Fathom Model

Pipe	dH (feet)	P Static In (psia)	P Static Out (psia)	P Stag. In (psia)	P Stag. Out (psia)
2	16.8347793	73.003	65.711	74.917	67.625
3	0.0475776	66.459	66.439	66.592	66.572
5	6.3043670	65.957	63.010	66.094	63.146
10	0.2339763	63.034	62.932	63.042	62.941
12	0.0000000	62.941	62.941	62.941	62.941

Pipe	Name	Vol. Flow Rate (gal/min)	Velocity (feet/sec)	P Static Max (psia)	P Static Min (psia)	Elevation Inlet (feet)	Elevation Outlet (feet)	dP Stag. Total (psid)	dP Static Total (psid)	dP Gravity (psid)
13	Pipe	0.0	0.000	62.941	62.941	606.0	606.0	0.0000000	0.0000000	0.0000
14	Pipe	176.3	1.126	62.932	62.932	606.0	606.0	0.0002500	0.0002500	0.0000
28	Pipe	176.3	4.502	62.531	54.827	606.0	623.3	7.7041611	7.7041611	7.4937
29	Pipe	176.3	4.502	54.781	51.277	623.3	606.0	3.5036158	3.5036158	-7.4937
32	Pipe	0.0	0.000	49.852	42.358	606.0	623.3	7.4936577	7.4936577	7.4937
33	Pipe	176.3	6.778	87.793	87.771	576.6	576.6	0.0220291	0.0220291	0.0000
36	Pipe	176.3	4.502	62.627	62.578	606.0	606.0	0.0491175	0.0491175	0.0000
38	Pipe	176.3	7.653	50.970	42.878	606.0	623.3	8.0921246	8.0921246	7.4937
39	Pipe	176.3	7.653	42.736	42.437	623.3	623.3	0.2992334	0.2992334	0.0000
41	Pipe	0.0	0.000	42.358	42.358	623.3	623.3	0.0000000	0.0000000	0.0000
44	Pipe	176.3	7.653	14.696	11.060	623.3	609.0	-3.6358456	-3.6358456	-6.1942
45	Pipe	176.3	7.653	41.964	40.274	623.3	623.3	1.6895448	1.6895448	0.0000
47	Pipe	176.3	16.860	38.435	36.587	623.3	623.3	1.8484113	1.8484113	0.0000
48	Pipe	176.3	16.860	34.587	32.738	623.3	623.3	1.8484113	1.8484113	0.0000
49	Pipe	176.3	7.653	33.690	32.596	623.3	623.3	1.0933697	1.0933697	0.0000
50	Pipe	176.3	4.444	87.911	86.400	576.6	580.0	1.5109794	1.5109794	1.4728
51	Pipe	176.3	3.969	86.427	74.811	580.0	605.5	11.6162951	11.6162951	11.0456
52	Pipe	176.3	4.444	66.276	66.238	605.5	605.5	0.0382258	0.0382258	0.0000
54	Pipe	176.3	4.444	66.136	66.060	605.5	605.5	0.0764515	0.0764515	0.0000
55	Pipe	0.0	0.000	1.918	1.918	605.5	605.5	0.0000000	0.0000000	0.0000
56	Pipe	0.0	0.000	14.696	1.918	605.5	576.0	-12.7782114	-12.7782114	-12.7782
58	Pipe	176.3	1.126	62.927	62.786	606.0	606.0	0.1404762	0.1404762	0.0000

CALCULATION SHEET

Project No. S54413.024	**Calculation No.** S54413.024-M-002	**Rev.** 0	**Page No.** 78 of 180
Title: Leachate and Basin Pump Flow Calculation			
Prepared By: Gallegos, JF, P.E.	**Date:** 4/10/2020	**Checked By:** Dixon, KW, P.E.	**Date:** 4/10/2020

AFT Fathom 10 (Output)
4/13/2020
Page 4

AFT Fathom Model

Pipe	dH (feet)	P Static In (psia)	P Static Out (psia)	P Stag. In (psia)	P Stag. Out (psia)
13	0.0000000	62.941	62.941	62.941	62.941
14	0.0005773	62.932	62.932	62.941	62.941
28	0.4859718	62.531	54.827	62.668	54.964
29	25.3884958	54.781	51.277	54.917	51.414
32	0.0000000	49.852	42.358	49.852	42.358
33	0.0508568	87.793	87.771	88.103	88.081
36	0.1133934	62.627	62.578	62.763	62.714
38	1.3816310	50.970	42.878	51.364	43.272
39	0.6908155	42.736	42.437	43.130	42.831
41	0.0000000	42.358	42.358	42.358	42.358
44	5.9062117	11.060	14.696	11.454	15.090
45	3.9005124	41.964	40.274	42.358	40.669
47	4.2672744	38.435	36.587	40.349	38.500
48	4.2672744	34.587	32.738	36.500	34.652
49	2.5241723	33.690	32.596	34.084	32.991
50	0.0882487	87.911	86.400	88.044	86.533
51	1.3175799	86.427	74.811	86.533	74.917
52	0.0882487	66.276	66.238	66.409	66.371
54	0.1764974	66.136	66.060	66.269	66.193
55	0.0000000	1.918	1.918	1.918	1.918
56	0.0000000	1.918	14.696	1.918	14.696
58	0.3243057	62.927	62.786	62.935	62.795

All Junction Table

Jct	Name	P Static In (psia)	P Static Out (psia)	P Stag. In (psia)	P Stag. Out (psia)	Vol. Flow Rate Thru Jct (gal/min)	Mass Flow Rate Thru Jct (lbm/sec)	Loss Factor (K)
5	Pump	24.956	87.793	25.265	88.103	176.3	24.51	0.0000
7	Valve	66.238	66.136	66.371	66.269	176.3	24.51	0.7638
10	Valve	63.010	63.034	63.146	63.042	176.3	24.51	0.7650
15	Tee or Wye	62.937	62.937	62.941	62.941	N/A	N/A	See Mult. Losses
16	Area Change	62.941	62.941	62.941	62.941	0.0	0.00	0.0000
X17	60M-43B	62.941	49.852	62.941	49.852	0.0	0.00	0.0000
18	60M-43A	62.932	62.927	62.941	62.935	176.3	24.51	0.6300
31	Bend	62.578	62.531	62.714	62.668	176.3	24.51	0.3400
32	Bend	54.827	54.781	54.964	54.917	176.3	24.51	0.3400
35	Area Change	87.771	87.911	88.081	88.044	176.3	24.51	0.1180
37	Area Change	62.786	62.627	62.795	62.763	176.3	24.51	3.6738
38	Area Change	51.277	50.970	51.414	51.364	176.3	24.51	0.3642
39	Area Change	42.358	42.358	42.358	42.358	0.0	0.00	0.0000

Sargent & Lundy Engineering Services, Inc

CALCULATION SHEET

Project No. S54413.024	**Calculation No.** S54413.024-M-002	**Rev.** 0	**Page No.** 79 of 180
Title: Leachate and Basin Pump Flow Calculation			
Prepared By: Gallegos, JF, P.E.	**Date:** 4/10/2020	**Checked By:** Dixon, KW, P.E.	**Date:** 4/10/2020

AFT Fathom 10 (Output)
4/13/2020
Page 5

AFT Fathom Model

Jct	Name	P Static In (psia)	P Static Out (psia)	P Stag. In (psia)	P Stag. Out (psia)	Vol. Flow Rate Thru Jct (gal/min)	Mass Flow Rate Thru Jct (lbm/sec)	Loss Factor (K)
40	Tee or Wye	42.183	42.183	42.358	42.358	N/A	N/A	See Mult. Losses
42	Bend	42.878	42.736	43.272	43.130	176.3	24.51	0.3586
47	Assigned Pressure	14.696	14.302	15.090	14.696	176.3	24.51	1.0000
49	General Component	36.587	34.587	38.500	36.500	176.3	24.51	1.0451
50	Area Change	40.274	38.435	40.669	40.349	176.3	24.51	0.8114
51	Area Change	32.738	33.690	34.652	34.084	176.3	24.51	0.2967
54	Orifice	32.596	11.060	32.991	11.454	176.3	24.51	54.6231
56	Control Valve	66.439	66.276	66.572	66.409	176.3	24.51	1.2231
59	Branch	74.811	73.003	74.917	74.917	176.3	24.51	0.0000
60	Branch	86.400	86.427	86.533	86.533	176.3	24.51	0.0000
61	Area Change	65.711	66.459	67.625	66.592	176.3	24.51	0.5396
63	Three Way Valve	66.133	66.133	66.193	66.193	N/A	N/A	See Mult. Losses
64	Bend	1.918	1.918	1.918	1.918	0.0	0.00	0.0000
65	Assigned Pressure	14.696	14.696	14.696	14.696	0.0	0.00	0.0000

CALCULATION SHEET

Project No. S54413.024	**Calculation No.** S54413.024-M-002	**Rev.** 0	**Page No.** 80 of 180
Title: Leachate and Basin Pump Flow Calculation			
Prepared By: Gallegos, JF, P.E.	**Date:** 4/10/2020	**Checked By:** Dixon, KW, P.E.	**Date:** 4/10/2020

LOW BASIN LEVEL/HIGH FILTER DP

CALCULATION SHEET

Project No. S54413.024	**Calculation No.** S54413.024-M-002	**Rev.** 0	**Page No.** 81 of 180
Title: Leachate and Basin Pump Flow Calculation			
Prepared By: Gallegos, JF, P.E.	**Date:** 4/10/2020	**Checked By:** Dixon, KW, P.E.	**Date:** 4/10/2020

AFT Fathom 10 (Model) 4/13/2020 Page 1	AFT Fathom Model	

General

Title: AFT Fathom Model
Input File: P:\Clients\Washington River Protection Solutions - WRPS 544\S54413.024 - LERF Basin 41 Design\Calculations\Mech\M-002 Flow\Rev 0\VV Files\LERF TransferRev0.fth
Scenario: Base Scenario/Run 2/Low Basin Level High DP

Number Of Pipes= 27
Number Of Junctions= 27

Pressure/Head Tolerance= 0.0001 relative change
Flow Rate Tolerance= 0.0001 relative change
Temperature Tolerance= 0.0001 relative change
Flow Relaxation= (Automatic)
Pressure Relaxation= (Automatic)

Constant Fluid Property Model
Fluid Database: User Specified
Fluid= User Specified
Density= 1 S.G. water
Viscosity= 1 centipoise
Vapor Pressure= Unspecified
Viscosity Model= Newtonian
Apply laminar and non-Newtonian correction to: Pipe Fittings & Losses, Junction K factors, Junction Special Losses, Junction Polynomials
Corrections applied to the following junctions: Branch, Reservoir, Assigned Flow, Assigned Pressure, Area Change, Bend, Tee or Wye, Spray Discharge, Relief Valve

Ambient Pressure (constant)= 1 atm
Gravitational Acceleration= 1 g
Turbulent Flow Above Reynolds Number= 4000
Laminar Flow Below Reynolds Number= 2300

Pipes

Pipe	Name	Pipe Defined	Length	Length Units	Hydraulic Diameter	Hydraulic Diam. Units	Friction Data Set	Roughness	Roughness Units	Losses (K)
2	Pipe	Yes	30	feet	2.067	inches	Standard	0.0018	inches	0.301856
3	Pipe	Yes	2	feet	4.026	inches	Standard	0.0018	inches	0.04
5	Pipe	Yes	378	feet	4	inches	Unspecified	0.000204	inches	0.5749724
10	Pipe	Yes	350	feet	8	inches	Unspecified	0.000204	inches	1.622009
12	Pipe	Yes	2	feet	8	inches	Unspecified	0.000204	inches	0
13	Pipe	Yes	1	feet	8	inches	Unspecified	0.000204	inches	0
14	Pipe	Yes	1	feet	8	inches	Unspecified	0.000204	inches	0
28	Pipe	Yes	30	feet	4	inches	Unspecified	0.000204	inches	0
29	Pipe	Yes	1521	feet	4	inches	Unspecified	0.000204	inches	2.38
32	Pipe	Yes	1221	feet	3	inches	Unspecified	0.000204	inches	4.702397
33	Pipe	Yes	1	feet	3.26	inches	Standard	0.0018	inches	0
36	Pipe	Yes	7	feet	4	inches	Unspecified	0.000204	inches	0
38	Pipe	Yes	20	feet	3.068	inches	Standard	0.0018	inches	0

CALCULATION SHEET

Project No. S54413.024	**Calculation No.** S54413.024-M-002	**Rev.** 0	**Page No.** 82 of 180
Title: Leachate and Basin Pump Flow Calculation			
Prepared By: Gallegos, JF, P.E.	**Date:** 4/10/2020	**Checked By:** Dixon, KW, P.E.	**Date:** 4/10/2020

AFT Fathom 10 (Model)
4/13/2020
Page 2

AFT Fathom Model

Pipe	Initial Flow	Initial Flow Units	Junctions (Up,Down)	Geometry	Material	Size	Type	Special Condition
2			59, 61	Cylindrical Pipe	Steel - ANSI	2 inch	schedule 40	None
3			61, 56	Cylindrical Pipe	Steel - ANSI	4 inch	schedule 40	None
5			63, 10	Cylindrical Pipe	User Specified			None
10			10, 15	Cylindrical Pipe	User Specified			None
12			15, 16	Cylindrical Pipe	User Specified			None
13			16, 17	Cylindrical Pipe	User Specified			None
14			15, 18	Cylindrical Pipe	User Specified			None
28			31, 32	Cylindrical Pipe	User Specified			None
29			32, 38	Cylindrical Pipe	User Specified			None
32			17, 39	Cylindrical Pipe	User Specified			None
33			5, 35	Cylindrical Pipe	Steel - ANSI	3 inch	Schedule 10	None
36			37, 31	Cylindrical Pipe	User Specified			None
38			38, 42	Cylindrical Pipe	Steel - ANSI	3 inch	STD (schedule 40)	None

Pipe	Name	Pipe Defined	Length	Length Units	Hydraulic Diameter	Hydraulic Diam. Units	Friction Data Set	Roughness	Roughness Units	Losses (K)
39	Pipe	Yes	10	feet	3.068	inches	Standard	0.0018	inches	0
41	Pipe	Yes	15	feet	2.067	inches	Standard	0.0018	inches	0.8678359
44	Pipe	Yes	50	feet	3.068	inches	Standard	0.0018	inches	2.606288
45	Pipe	Yes	30	feet	3.068	inches	Standard	0.0018	inches	2.008384
47	Pipe	Yes	1	feet	2.067	inches	Standard	0.0018	inches	0.8489699
48	Pipe	Yes	1	feet	2.067	inches	Standard	0.0018	inches	0.8489699
49	Pipe	Yes	20	feet	3.068	inches	Standard	0.0018	inches	1.25524
50	Pipe	Yes	5	feet	4.026	inches	Standard	0.0018	inches	0
51	Pipe	Yes	98.93	feet	4.26	inches	Standard	0.0018	inches	0
52	Pipe	Yes	5	feet	4.026	inches	Standard	0.0018	inches	0
54	Pipe	Yes	10	feet	4.026	inches	Standard	0.0018	inches	0
55	Pipe	Yes	5	feet	4.026	inches	Standard	0.0018	inches	0
56	Pipe	Yes	46	feet	4.026	inches	Standard	0.0018	inches	0.4752721
58	Pipe	Yes	350	feet	8	inches	Unspecified	0.000204	inches	6.21

CALCULATION SHEET

Project No. S54413.024	**Calculation No.** S54413.024-M-002	**Rev.** 0	**Page No.** 83 of 180
Title: Leachate and Basin Pump Flow Calculation			
Prepared By: Gallegos, JF, P.E.	**Date:** 4/10/2020	**Checked By:** Dixon, KW, P.E.	**Date:** 4/10/2020

AFT Fathom 10 (Model)
4/13/2020
Page 3

AFT Fathom Model

Pipe	Initial Flow	Initial Flow Units	Junctions (Up,Down)	Geometry	Material	Size	Type	Special Condition
39			42, 40	Cylindrical Pipe	Steel - ANSI	3 inch	STD (schedule 40)	None
41			39, 40	Cylindrical Pipe	Steel - ANSI	2 inch	STD (schedule 40)	None
44			54, 47	Cylindrical Pipe	Steel - ANSI	3 inch	STD (schedule 40)	None
45			40, 50	Cylindrical Pipe	Steel - ANSI	3 inch	STD (schedule 40)	None
47			50, 49	Cylindrical Pipe	Steel - ANSI	2 inch	STD (schedule 40)	None
48			49, 51	Cylindrical Pipe	Steel - ANSI	2 inch	STD (schedule 40)	None
49			51, 54	Cylindrical Pipe	Steel - ANSI	3 inch	STD (schedule 40)	None
50			35, 60	Cylindrical Pipe	Steel - ANSI	4 inch	STD (schedule 40)	None
51			60, 59	Cylindrical Pipe	Steel - ANSI	4 inch	Schedule 10	None
52			56, 7	Cylindrical Pipe	Steel - ANSI	4 inch	schedule 40	None
54			7, 63	Cylindrical Pipe	Steel - ANSI	4 inch	schedule 40	None
55			63, 64	Cylindrical Pipe	Steel - ANSI	4 inch	schedule 40	None
56			64, 65	Cylindrical Pipe	Steel - ANSI	4 inch	schedule 40	None
58			18, 37	Cylindrical Pipe	User Specified			None

Pipe Fittings & Losses

Pipe	Total K	Elbow/Bend Standard Threaded	Elbow/Bend Smooth Flanged	Valve Butterfly	Valve Plug	Other Tee
2	0.3	1 (0.3)				
3	0.04					1 (0.04)
5	0.57		3 (0.57)			
10	1.62		3 (0.48)			2 (1.14)
29	2.38		7 (2.38)			
32	4.7		8 (1.94)	2 (1.62)		2 (1.14)
41	0.87		2 (0.53)		1 (0.34)	
44	2.61		6 (1.51)			1 (1.1)
45	2.01		8 (2.01)			
47	0.85			1 (0.85)		
48	0.85			1 (0.85)		
49	1.26		5 (1.26)			
56	0.48		2 (0.48)			
58	6.21		10 (1.96)	3 (1.89)		6 (2.36)

Area Change Table

Area Change	Name	Object Defined	Inlet Elevation	Elevation Units	Initial Pressure	Initial Pressure Units	Database Source	Type
16	Area Change	Yes	606	feet				Conical
35	Area Change	Yes	576.6	feet				Conical
37	Area Change	Yes	606	feet				Conical

CALCULATION SHEET

Project No. S54413.024	**Calculation No.** S54413.024-M-002	**Rev.** 0	**Page No.** 84 of 180
Title: Leachate and Basin Pump Flow Calculation			
Prepared By: Gallegos, JF, P.E.	**Date:** 4/10/2020	**Checked By:** Dixon, KW, P.E.	**Date:** 4/10/2020

AFT Fathom 10 (Model)
4/13/2020
Page 4

AFT Fathom Model

Area Change	Geometry	Angle	Loss Factor
16	Expansion	45	0
35	Expansion	45	0.1179652
37	Contraction	45	3.673761

Area Change	Name	Object Defined	Inlet Elevation	Elevation Units	Initial Pressure	Initial Pressure Units	Database Source	Type
38	Area Change	Yes	606	feet				Conical
39	Area Change	Yes	623.3	feet				Conical
50	Area Change	Yes	623.3	feet				Conical
51	Area Change	Yes	623.3	feet				Conical
61	Area Change	Yes	605.5	feet				Conical

Area Change	Geometry	Angle	Loss Factor
38	Contraction	45	0.3642007
39	Contraction	45	0.7135802
50	Contraction	45	0.8114334
51	Expansion	45	0.2967157
61	Expansion	45	0.5395717

Assigned Pressure Table

Assigned Pressure	Name	Object Defined	Inlet Elevation	Elevation Units	Initial Pressure	Initial Pressure Units	Database Source
47	Assigned Pressure	Yes	609	feet	1.000	atm	
65	Assigned Pressure	Yes	576	feet	1.000	atm	

Assigned Pressure	Pressure	Pressure Units	Pressure Type	Balance Energy	Balance Concentration	(Pipe #1) K In, K Out	(Pipe #2) K In, K Out	(Pipe #3) K In, K Out
47	1	atm	Stagnation	No	No	(P44) 0, 1		
65	1	atm	Stagnation	No	No	(P56) 0, 1		

Assigned Pressure	(Pipe #4) K In, K Out	(Pipe #5) K In, K Out	(Pipe #6) K In, K Out	(Pipe #7) K In, K Out	(Pipe #8) K In, K Out	(Pipe #9) K In, K Out	(Pipe #10) K In, K Out	(Pipe #11) K In, K Out
47								
65								

Assigned Pressure	(Pipe #12) K In, K Out	(Pipe #13) K In, K Out	(Pipe #14) K In, K Out	(Pipe #15) K In, K Out	(Pipe #16) K In, K Out	(Pipe #17) K In, K Out	(Pipe #18) K In, K Out	(Pipe #19) K In, K Out
47								
65								

Assigned Pressure	(Pipe #20) K In, K Out	(Pipe #21) K In, K Out	(Pipe #22) K In, K Out	(Pipe #23) K In, K Out	(Pipe #24) K In, K Out	(Pipe #25) K In, K Out
47						
65						

CALCULATION SHEET

Project No. S54413.024	**Calculation No.** S54413.024-M-002	**Rev.** 0	**Page No.** 85 of 180
Title: Leachate and Basin Pump Flow Calculation			
Prepared By: Gallegos, JF, P.E.	**Date:** 4/10/2020	**Checked By:** Dixon, KW, P.E.	**Date:** 4/10/2020

AFT Fathom 10 (Model) 4/13/2020 Page 5	AFT Fathom Model	

Bend Table

Bend	Name	Object Defined	Inlet Elevation	Elevation Units	Initial Pressure	Initial Pressure Units	Database Source	Type	Angle (Degrees)	R/D
31	Bend	Yes	606	feet				Smooth Bend	90	1
32	Bend	Yes	623.3	feet				Smooth Bend	90	1
42	Bend	Yes	623.3	feet				Smooth Bend	90	1
64	Bend	Yes	605.5	feet				Smooth Bend	90	1.5

Bend	Loss Factor
31	0.34
32	0.34
42	0.35864
64	0.237636

Branch Table

Branch	Name	Object Defined	Inlet Elevation	Elevation Units	Initial Pressure	Initial Pressure Units	Database Source	Special Condition	Boundary Flow (+ = in/- = out)
59	Branch	Yes	605.5	feet				None	
60	Branch	Yes	580	feet				None	

Branch	Boundary Flow Units	(Pipe #1) K In, K Out	(Pipe #2) K In, K Out	(Pipe #3) K In, K Out	(Pipe #4) K In, K Out	(Pipe #5) K In, K Out	(Pipe #6) K In, K Out	(Pipe #7) K In, K Out
59		(P2) 0, 0	(P51) 0, 0					
60		(P50) 0, 0	(P51) 0, 0					

Branch	(Pipe #8) K In, K Out	(Pipe #9) K In, K Out	(Pipe #10) K In, K Out	(Pipe #11) K In, K Out	(Pipe #12) K In, K Out	(Pipe #13) K In, K Out	(Pipe #14) K In, K Out	(Pipe #15) K In, K Out	(Pipe #16) K In, K Out
59									
60									

Branch	(Pipe #17) K In, K Out	(Pipe #18) K In, K Out	(Pipe #19) K In, K Out	(Pipe #20) K In, K Out	(Pipe #21) K In, K Out	(Pipe #22) K In, K Out	(Pipe #23) K In, K Out	(Pipe #24) K In, K Out	(Pipe #25) K In, K Out
59									
60									

Control Valve Table

Control Valve	Name	Object Defined	Inlet Elevation	Elevation Units	Initial Pressure	Initial Pressure Units	Database Source
56	Control Valve	Yes	605.5	feet			

CALCULATION SHEET

Project No. S54413.024	**Calculation No.** S54413.024-M-002	**Rev.** 0	**Page No.** 86 of 180
Title: Leachate and Basin Pump Flow Calculation			
Prepared By: Gallegos, JF, P.E.	**Date:** 4/10/2020	**Checked By:** Dixon, KW, P.E.	**Date:** 4/10/2020

AFT Fathom 10 (Model)
4/13/2020
Page 6

AFT Fathom Model

Control Valve	Special Condition	Valve Type	Control Setting	Control Units	Pressure/ Head Type	Inlet Failure Type	Outlet Failure Type	Full Open Loss Type
56	Fully Open - No Control	FCV	10	gal/min	N/A	Fully Open	N/A	Cv Table

Control Valve	Full Open Loss
56	437.29

General Component Table

General Component	Name	Object Defined	Inlet Elevation	Elevation Units	Initial Pressure	Initial Pressure Units	Database Source
49	General Component	Yes	623.3	feet			

General Component	Special Condition	Loss Model	Loss Value	Independent Variable	Ind. Variable Units	Dependent Variable	Dep. Variable Units
49	None	Resistance Curve	Variable	Vol. Flow Rate	gal/min	Pressure Loss	psid

General Component	Loss Constant a	Loss Constant b	Loss Constant c	Loss Constant d	Loss Constant e
49	60	0	0	0	0

Orifice Table

Orifice	Name	Object Defined	Inlet Elevation	Elevation Units	Initial Pressure	Initial Pressure Units	Database Source	Orifice Type	Flow Area Type
54	Orifice	Yes	623.3	feet				Sharp-Edged	Diameter

Orifice	Dimension	Dimension Units	R/D	Restricted Area	Restricted Area Units	Loss Model	Loss Value	Independent Variable	Ind. Variable Units
54	1.361	inches				K Constant	54.62305		

Orifice	Dependent Variable	Dep. Variable Units	Loss Constant a	Loss Constant b	Loss Constant c	Loss Constant d	Loss Constant e
54							

Pump Table

Pump	Name	Object Defined	Inlet Elevation	Elevation Units	Initial Pressure	Initial Pressure Units	Database Source	Special Condition	Pump Type
5	Pump	Yes	576.6	feet				None	Pump Curve

Pump	Design Flow Rate	Design Flow Rate Units	Current Configuration	Independent Variable	Ind. Variable Units	Dependent Variable	Dep. Variable Units	Pump Curve Constant a
5				Vol. Flow Rate	gal/min	Head Rise	feet	221.5061

CALCULATION SHEET

Project No. S54413.024	**Calculation No.** S54413.024-M-002	**Rev.** 0	**Page No.** 87 of 180
Title: Leachate and Basin Pump Flow Calculation			
Prepared By: Gallegos, JF, P.E.	**Date:** 4/10/2020	**Checked By:** Dixon, KW, P.E.	**Date:** 4/10/2020

AFT Fathom 10 (Model) 4/13/2020 Page 7	AFT Fathom Model	

Pump	Pump Curve Constant b	Pump Curve Constant c	Pump Curve Constant d	Pump Curve Constant e	Runout Flow Rate	Runout Flow Rate Units	Speed	Control When Exceeded Only
5	-0.03898634	-0.002236957	0	0			100	

Pump	Heat Added To Fluid	Heat Added Units	Submerged Pump Pressure	Submerged Pump Pressure Units
5	0	Percent	576.6	feet

Tee or Wye Table

Tee or Wye	Name	Object Defined	Inlet Elevation	Elevation Units	Initial Pressure	Initial Pressure Units	Database Source	Tee/Wye Type
15	Tee or Wye	Yes	606	feet				Sharp Straight
40	Tee or Wye	Yes	623.3	feet				Sharp Straight

Tee or Wye	Loss Type	Angle	Pipes A, B, C
15	Detailed	90	14, 10, 12
40	Detailed	90	39, 41, 45

Three Way Valve Table

Three Way Valve	Name	Object Defined	Inlet Elevation	Elevation Units	Initial Pressure	Initial Pressure Units	Database Source
63	Three Way Valve	Yes	605.5	feet			

Three Way Valve	Special Condition	Loss Model	Percent Open	Cv Pipe #1	Cv Pipe #2
63	Pipe #2 Closed	Cv	100	561	0

Valve Table

Valve	Name	Object Defined	Inlet Elevation	Elevation Units	Initial Pressure	Initial Pressure Units	Database Source	Special Condition	Exit Valve	Exit Pressure
7	Valve	Yes	605.5	feet				None	No	
10	Valve	Yes	606	feet				None	No	
17	60M-43B	Yes	606	feet				Closed	No	
18	60M-43A	Yes	606	feet				None	No	

Valve	Exit Pressure Units	Restricted Area	Restricted Area Units	Loss Model	Loss Source	Loss Factor	Percent Open	Open Pct. Data Exists	Independent Variable
7				K Constant	N/A	0.76383		No	
10				K Constant	N/A	0.765		No	
17				K Constant	N/A	0.63		No	
18				K Constant	N/A	0.63		No	

CALCULATION SHEET

Project No. S54413.024	**Calculation No.** S54413.024-M-002	**Rev.** 0	**Page No.** 88 of 180
Title: Leachate and Basin Pump Flow Calculation			
Prepared By: Gallegos, JF, P.E.	**Date:** 4/10/2020	**Checked By:** Dixon, KW, P.E.	**Date:** 4/10/2020

AFT Fathom 10 (Model) 4/13/2020 Page 8	AFT Fathom Model	

Valve	Ind. Variable Units	Dependent Variable	Dep. Variable Units	Loss Constant a	Loss Constant b	Loss Constant c	Loss Constant d	Loss Constant e
7								
10								
17								
18								

CALCULATION SHEET

Project No. S54413.024	**Calculation No.** S54413.024-M-002	**Rev.** 0	**Page No.** 89 of 180
Title: Leachate and Basin Pump Flow Calculation			
Prepared By: Gallegos, JF, P.E.	**Date:** 4/10/2020	**Checked By:** Dixon, KW, P.E.	**Date:** 4/10/2020

AFT Fathom 10 (Output) 4/13/2020 Page 1	AFT Fathom Model	

Model Reference Information

General

Title: AFT Fathom Model
Analysis run on: 4/13/2020 10:36:42 AM
Application version: AFT Fathom Version 10 (2018.05.21)
Input File: P:\Clients\Washington River Protection Solutions - WRPS 544\S54413.024 - LERF Basin 41 Design\Calculations\Mech\M-002 Flow\Rev 0\VV Files\LERF TransferRev0.fth
Scenario: Base Scenario/Run 2/Low Basin Level High DP
Output File: P:\Clients\Washington River Protection Solutions - WRPS 544\S54413.024 - LERF Basin 41 Design\Calculations\Mech\M-002 Flow\Rev 0\VV Files\LERF TransferRev0_F1.out

Execution Time= 0.27 seconds
Total Number Of Head/Pressure Iterations= 0
Total Number Of Flow Iterations= 91
Total Number Of Temperature Iterations= 0
Number Of Pipes= 27
Number Of Junctions= 27
Matrix Method= Gaussian Elimination

Pressure/Head Tolerance= 0.0001 relative change
Flow Rate Tolerance= 0.0001 relative change
Temperature Tolerance= 0.0001 relative change
Flow Relaxation= (Automatic)
Pressure Relaxation= (Automatic)

Constant Fluid Property Model
Fluid Database: User Specified
Fluid= User Specified
Density= 1 S.G. water
Viscosity= 1 centipoise
Vapor Pressure= Unspecified
Viscosity Model= Newtonian
Apply laminar and non-Newtonian correction to: Pipe Fittings & Losses, Junction K factors, Junction Special Losses, Junction Polynomials
Corrections applied to the following junctions: Branch, Reservoir, Assigned Flow, Assigned Pressure, Area Change, Bend, Tee or Wye, Spray Discharge, Relief Valve

Ambient Pressure (constant)= 1 atm
Gravitational Acceleration= 1 g
Turbulent Flow Above Reynolds Number= 4000
Laminar Flow Below Reynolds Number= 2300
Total Inflow= 84.08 gal/min
Total Outflow= 84.08 gal/min
Maximum Static Pressure is 102.3 psia at Pipe 50 Inlet
Minimum Static Pressure is 1.918 psia at Pipe 56 Inlet

Warnings

No Warnings

Applied Standards

===== ANSI/HI 9.6.3-2017 - Rotodynamic Pumps - Guideline for Operating Regions =====
Pump 5 set to specific speed <=4500 (US Customary), with lower POR 70% and upper POR 120% of BEP

CALCULATION SHEET

Project No. S54413.024	**Calculation No.** S54413.024-M-002	**Rev.** 0	**Page No.** 90 of 180
Title: Leachate and Basin Pump Flow Calculation			
Prepared By: Gallegos, JF, P.E.	**Date:** 4/10/2020	**Checked By:** Dixon, KW, P.E.	**Date:** 4/10/2020

AFT Fathom 10 (Output) 4/13/2020 Page 2	AFT Fathom Model	

Pump Summary

Jct	Results Diagram	Name	Vol. Flow (gal/min)	Mass Flow (lbm/sec)	dP (psid)	dH (feet)	Overall Efficiency (Percent)	Speed (Percent)	Overall Power (hp)	BEP (gal/min)	% of BEP (Percent)	NPSHA (feet)
5	Show	Pump	84.08	11.68	87.68	202.4	N/A	100.0	4.300	N/A	N/A	N/A

Jct	NPSHR (feet)
5	N/A

Valve Summary

Jct	Name	Valve Type	Vol. Flow (gal/min)	Mass Flow (lbm/sec)	dP Stag. (psid)	dH (feet)	P Static In (psia)	Cv	K
7	Valve	REGULAR	84.08	11.68	0.023088	0.053302	87.63	553.4	0.7638
10	Valve	REGULAR	84.08	11.68	0.023731	0.054785	86.63	545.8	0.7650
X17	60M-43B	REGULAR	0.00	0.00	N/A	N/A	86.61	N/A	N/A
18	60M-43A	REGULAR	84.08	11.68	0.001221	0.002820	86.61	2,405.8	0.6300
56	Control Valve	FCV	84.08	11.68	0.036971	0.085351	87.68	437.3	1.2231
63 [P5]	Three Way Valve	THREE-WAY	84.08	11.68	0.022463	0.051859	87.61	561.0	0.7241
X63 [P55]	Three Way Valve	THREE-WAY	0.00	0.00	N/A	N/A	87.61	N/A	N/A

Jct	Valve State
7	Open
10	Open
X17	Closed By User
18	Open
56	Opened By User
63 [P5]	Open
X63 [P55]	Closed By User

Pipe Output Table

Pipe	Name	Vol. Flow Rate (gal/min)	Velocity (feet/sec)	P Static Max (psia)	P Static Min (psia)	Elevation Inlet (feet)	Elevation Outlet (feet)	dP Stag. Total (psid)	dP Static Total (psid)	dP Gravity (psid)
2	Pipe	84.08	8.0391	89.252	87.514	605.5	605.5	1.73839211	1.73839211	0.0000
3	Pipe	84.08	2.1190	87.684	87.679	605.5	605.5	0.00506283	0.00506283	0.0000
5	Pipe	84.08	2.1467	87.567	86.634	605.5	606.0	0.93272644	0.93272644	0.2166
10	Pipe	84.08	0.5367	86.639	86.613	606.0	606.0	0.02657444	0.02657444	0.0000
12	Pipe	0.00	0.0000	86.615	86.615	606.0	606.0	0.00000000	0.00000000	0.0000

Sargent & Lundy Engineering Services, Inc

CALCULATION SHEET

Project No. S54413.024	**Calculation No.** S54413.024-M-002	**Rev.** 0	**Page No.** 91 of 180
Title: Leachate and Basin Pump Flow Calculation			
Prepared By: Gallegos, JF, P.E.	**Date:** 4/10/2020	**Checked By:** Dixon, KW, P.E.	**Date:** 4/10/2020

AFT Fathom 10 (Output)
4/13/2020
Page 3

AFT Fathom Model

Pipe	dH (feet)	P Static In (psia)	P Static Out (psia)	P Stag. In (psia)	P Stag. Out (psia)
2	4.0132821	89.252	87.514	89.687	87.949
3	0.0116881	87.684	87.679	87.714	87.709
5	1.6533084	87.567	86.634	87.598	86.665
10	0.0613502	86.639	86.613	86.641	86.615
12	0.0000000	86.615	86.615	86.615	86.615

Pipe	Name	Vol. Flow Rate (gal/min)	Velocity (feet/sec)	P Static Max (psia)	P Static Min (psia)	Elevation Inlet (feet)	Elevation Outlet (feet)	dP Stag. Total (psid)	dP Static Total (psid)	dP Gravity (psid)
13	Pipe	0.00	0.0000	86.615	86.615	606.0	606.0	0.00000000	0.00000000	0.0000
14	Pipe	84.08	0.5367	86.613	86.613	606.0	606.0	0.00006694	0.00006694	0.0000
28	Pipe	84.08	2.1467	86.516	78.967	606.0	623.3	7.54907915	7.54907915	7.4937
29	Pipe	84.08	2.1467	83.567	78.957	623.3	606.0	-4.60995993	-4.60995993	-7.4937
32	Pipe	0.00	0.0000	83.225	75.731	606.0	623.3	7.49365768	7.49365768	7.4937
33	Pipe	84.08	3.2319	102.303	102.298	576.6	576.6	0.00546056	0.00546056	0.0000
36	Pipe	84.08	2.1467	86.540	86.527	606.0	606.0	0.01293168	0.01293168	0.0000
38	Pipe	84.08	3.6490	83.497	75.855	606.0	623.3	7.64128353	7.64128353	7.4937
39	Pipe	84.08	3.6490	75.823	75.749	623.3	623.3	0.07381292	0.07381292	0.0000
41	Pipe	0.00	0.0000	75.731	75.731	623.3	623.3	0.00000000	0.00000000	0.0000
44	Pipe	84.08	3.6490	14.696	9.037	623.3	609.0	-5.65941897	-5.65941897	-6.1942
45	Pipe	84.08	3.6490	75.642	75.240	623.3	623.3	0.40145639	0.40145639	0.0000
47	Pipe	84.08	8.0391	74.822	74.399	623.3	623.3	0.42290375	0.42290375	0.0000
48	Pipe	84.08	8.0391	14.399	13.976	623.3	623.3	0.42290375	0.42290375	0.0000
49	Pipe	84.08	3.6490	14.193	13.933	623.3	623.3	0.26013687	0.26013687	0.0000
50	Pipe	84.08	2.1190	102.329	100.847	576.6	580.0	1.48238796	1.48238796	1.4728
51	Pipe	84.08	1.8926	100.853	89.663	580.0	605.5	11.19003338	11.19003338	11.0456
52	Pipe	84.08	2.1190	87.642	87.632	605.5	605.5	0.00963438	0.00963438	0.0000
54	Pipe	84.08	2.1190	87.609	87.590	605.5	605.5	0.01926875	0.01926875	0.0000
55	Pipe	0.00	0.0000	1.918	1.918	605.5	605.5	0.00000000	0.00000000	0.0000
56	Pipe	0.00	0.0000	14.696	1.918	605.5	576.0	-12.77821141	-12.77821141	-12.7782
58	Pipe	84.08	0.5367	86.611	86.576	606.0	606.0	0.03546957	0.03546957	0.0000

CALCULATION SHEET

Project No. S54413.024	**Calculation No.** S54413.024-M-002	**Rev.** 0	**Page No.** 92 of 180
Title: Leachate and Basin Pump Flow Calculation			
Prepared By: Gallegos, JF, P.E.	**Date:** 4/10/2020	**Checked By:** Dixon, KW, P.E.	**Date:** 4/10/2020

AFT Fathom 10 (Output)
4/13/2020
Page 4

AFT Fathom Model

Pipe	dH (feet)	P Static In (psia)	P Static Out (psia)	P Stag. In (psia)	P Stag. Out (psia)
13	0.0000000	86.615	86.615	86.615	86.615
14	0.0001545	86.613	86.613	86.615	86.614
28	0.1279470	86.516	78.967	86.547	78.998
29	6.6573545	78.957	83.567	78.988	83.598
32	0.0000000	83.225	75.731	83.225	75.731
33	0.0126063	102.303	102.298	102.373	102.368
36	0.0298543	86.540	86.527	86.571	86.558
38	0.3408116	83.497	75.855	83.586	75.945
39	0.1704058	75.823	75.749	75.913	75.839
41	0.0000000	75.731	75.731	75.731	75.731
44	1.2345552	9.037	14.696	9.126	14.786
45	0.9268092	75.642	75.240	75.731	75.330
47	0.9763229	74.822	74.399	75.257	74.834
48	0.9763229	14.399	13.976	14.834	14.411
49	0.6005565	14.193	13.933	14.282	14.022
50	0.0222421	102.329	100.847	102.360	100.877
51	0.3335047	100.853	89.663	100.877	89.687
52	0.0222421	87.642	87.632	87.672	87.662
54	0.0444842	87.609	87.590	87.639	87.620
55	0.0000000	1.918	1.918	1.918	1.918
56	0.0000000	1.918	14.696	1.918	14.696
58	0.0818857	86.611	86.576	86.613	86.578

All Junction Table

Jct	Name	P Static In (psia)	P Static Out (psia)	P Stag. In (psia)	P Stag. Out (psia)	Vol. Flow Rate Thru Jct (gal/min)	Mass Flow Rate Thru Jct (lbm/sec)	Loss Factor (K)
5	Pump	14.626	102.303	14.696	102.373	84.08	11.68	0.0000
7	Valve	87.632	87.609	87.662	87.639	84.08	11.68	0.7638
10	Valve	86.634	86.639	86.665	86.641	84.08	11.68	0.7650
15	Tee or Wye	86.614	86.614	86.615	86.615	N/A	N/A	See Mult. Losses
16	Area Change	86.615	86.615	86.615	86.615	0.00	0.00	0.0000
X17	60M-43B	86.615	83.225	86.615	83.225	0.00	0.00	0.0000
18	60M-43A	86.613	86.611	86.614	86.613	84.08	11.68	0.6300
31	Bend	86.527	86.516	86.558	86.547	84.08	11.68	0.3400
32	Bend	78.967	78.957	78.998	78.988	84.08	11.68	0.3400
35	Area Change	102.298	102.329	102.368	102.360	84.08	11.68	0.1180
37	Area Change	86.576	86.540	86.578	86.571	84.08	11.68	3.6738
38	Area Change	83.567	83.497	83.598	83.586	84.08	11.68	0.3642
39	Area Change	75.731	75.731	75.731	75.731	0.00	0.00	0.0000

CALCULATION SHEET

Project No. S54413.024	**Calculation No.** S54413.024-M-002	**Rev.** 0	**Page No.** 93 of 180
Title: Leachate and Basin Pump Flow Calculation			
Prepared By: Gallegos, JF, P.E.	**Date:** 4/10/2020	**Checked By:** Dixon, KW, P.E.	**Date:** 4/10/2020

AFT Fathom 10 (Output)
4/13/2020
Page 5

AFT Fathom Model

Jct	Name	P Static In (psia)	P Static Out (psia)	P Stag. In (psia)	P Stag. Out (psia)	Vol. Flow Rate Thru Jct (gal/min)	Mass Flow Rate Thru Jct (lbm/sec)	Loss Factor (K)
40	Tee or Wye	75.692	75.692	75.731	75.731	N/A	N/A	See Mult. Losses
42	Bend	75.855	75.823	75.945	75.913	84.08	11.68	0.3586
47	Assigned Pressure	14.696	14.606	14.786	14.696	84.08	11.68	1.0000
49	General Component	74.399	14.399	74.834	14.834	84.08	11.68	137.9188
50	Area Change	75.240	74.822	75.330	75.257	84.08	11.68	0.8114
51	Area Change	13.976	14.193	14.411	14.282	84.08	11.68	0.2967
54	Orifice	13.933	9.037	14.022	9.126	84.08	11.68	54.6231
56	Control Valve	87.679	87.642	87.709	87.672	84.08	11.68	1.2231
59	Branch	89.663	89.252	89.687	89.687	84.08	11.68	0.0000
60	Branch	100.847	100.853	100.877	100.877	84.08	11.68	0.0000
61	Area Change	87.514	87.684	87.949	87.714	84.08	11.68	0.5396
63	Three Way Valve	87.606	87.606	87.620	87.620	N/A	N/A	See Mult. Losses
64	Bend	1.918	1.918	1.918	1.918	0.00	0.00	0.0000
65	Assigned Pressure	14.696	14.696	14.696	14.696	0.00	0.00	0.0000

CALCULATION SHEET

Project No. S54413.024	**Calculation No.** S54413.024-M-002	**Rev.** 0	**Page No.** 94 of 180
Title: Leachate and Basin Pump Flow Calculation			
Prepared By: Gallegos, JF, P.E.	**Date:** 4/10/2020	**Checked By:** Dixon, KW, P.E.	**Date:** 4/10/2020

LOW BASIN LEVEL/HIGH OPERATING FILTER DP

CALCULATION SHEET

Project No. S54413.024	**Calculation No.** S54413.024-M-002	**Rev.** 0	**Page No.** 95 of 180
Title: Leachate and Basin Pump Flow Calculation			
Prepared By: Gallegos, JF, P.E.	**Date:** 4/10/2020	**Checked By:** Dixon, KW, P.E.	**Date:** 4/10/2020

AFT Fathom 10 (Model) 4/13/2020 Page 1	AFT Fathom Model	

General

Title: AFT Fathom Model
Input File: P:\Clients\Washington River Protection Solutions - WRPS 544\S54413.024 - LERF Basin 41 Design\Calculations\Mech\M-002 Flow\Rev 0\VV Files\LERF TransferRev0.fth
Scenario: Base Scenario/Run 2/Low Basin Level High Operating DP

Number Of Pipes= 27
Number Of Junctions= 27

Pressure/Head Tolerance= 0.0001 relative change
Flow Rate Tolerance= 0.0001 relative change
Temperature Tolerance= 0.0001 relative change
Flow Relaxation= (Automatic)
Pressure Relaxation= (Automatic)

Constant Fluid Property Model
Fluid Database: User Specified
Fluid= User Specified
Density= 1 S.G. water
Viscosity= 1 centipoise
Vapor Pressure= Unspecified
Viscosity Model= Newtonian
Apply laminar and non-Newtonian correction to: Pipe Fittings & Losses, Junction K factors, Junction Special Losses, Junction Polynomials
Corrections applied to the following junctions: Branch, Reservoir, Assigned Flow, Assigned Pressure, Area Change, Bend, Tee or Wye, Spray Discharge, Relief Valve

Ambient Pressure (constant)= 1 atm
Gravitational Acceleration= 1 g
Turbulent Flow Above Reynolds Number= 4000
Laminar Flow Below Reynolds Number= 2300

Pipes

Pipe	Name	Pipe Defined	Length	Length Units	Hydraulic Diameter	Hydraulic Diam. Units	Friction Data Set	Roughness	Roughness Units	Losses (K)
2	Pipe	Yes	30	feet	2.067	inches	Standard	0.0018	inches	0.301856
3	Pipe	Yes	2	feet	4.026	inches	Standard	0.0018	inches	0.04
5	Pipe	Yes	378	feet	4	inches	Unspecified	0.000204	inches	0.5749724
10	Pipe	Yes	350	feet	8	inches	Unspecified	0.000204	inches	1.622009
12	Pipe	Yes	2	feet	8	inches	Unspecified	0.000204	inches	0
13	Pipe	Yes	1	feet	8	inches	Unspecified	0.000204	inches	0
14	Pipe	Yes	1	feet	8	inches	Unspecified	0.000204	inches	0
28	Pipe	Yes	30	feet	4	inches	Unspecified	0.000204	inches	0
29	Pipe	Yes	1521	feet	4	inches	Unspecified	0.000204	inches	2.38
32	Pipe	Yes	1221	feet	3	inches	Unspecified	0.000204	inches	4.702397
33	Pipe	Yes	1	feet	3.26	inches	Standard	0.0018	inches	0
36	Pipe	Yes	7	feet	4	inches	Unspecified	0.000204	inches	0
38	Pipe	Yes	20	feet	3.068	inches	Standard	0.0018	inches	0

CALCULATION SHEET

Project No. S54413.024	**Calculation No.** S54413.024-M-002	**Rev.** 0	**Page No.** 96 of 180
Title: Leachate and Basin Pump Flow Calculation			
Prepared By: Gallegos, JF, P.E.	**Date:** 4/10/2020	**Checked By:** Dixon, KW, P.E.	**Date:** 4/10/2020

AFT Fathom 10 (Model)
4/13/2020
Page 2

AFT Fathom Model

Pipe	Initial Flow	Initial Flow Units	Junctions (Up,Down)	Geometry	Material	Size	Type	Special Condition
2			59, 61	Cylindrical Pipe	Steel - ANSI	2 inch	schedule 40	None
3			61, 56	Cylindrical Pipe	Steel - ANSI	4 inch	schedule 40	None
5			63, 10	Cylindrical Pipe	User Specified			None
10			10, 15	Cylindrical Pipe	User Specified			None
12			15, 16	Cylindrical Pipe	User Specified			None
13			16, 17	Cylindrical Pipe	User Specified			None
14			15, 18	Cylindrical Pipe	User Specified			None
28			31, 32	Cylindrical Pipe	User Specified			None
29			32, 38	Cylindrical Pipe	User Specified			None
32			17, 39	Cylindrical Pipe	User Specified			None
33			5, 35	Cylindrical Pipe	Steel - ANSI	3 inch	Schedule 10	None
36			37, 31	Cylindrical Pipe	User Specified			None
38			38, 42	Cylindrical Pipe	Steel - ANSI	3 inch	STD (schedule 40)	None

Pipe	Name	Pipe Defined	Length	Length Units	Hydraulic Diameter	Hydraulic Diam. Units	Friction Data Set	Roughness	Roughness Units	Losses (K)
39	Pipe	Yes	10	feet	3.068	inches	Standard	0.0018	inches	0
41	Pipe	Yes	15	feet	2.067	inches	Standard	0.0018	inches	0.8678359
44	Pipe	Yes	50	feet	3.068	inches	Standard	0.0018	inches	2.606288
45	Pipe	Yes	30	feet	3.068	inches	Standard	0.0018	inches	2.008384
47	Pipe	Yes	1	feet	2.067	inches	Standard	0.0018	inches	0.8489699
48	Pipe	Yes	1	feet	2.067	inches	Standard	0.0018	inches	0.8489699
49	Pipe	Yes	20	feet	3.068	inches	Standard	0.0018	inches	1.25524
50	Pipe	Yes	5	feet	4.026	inches	Standard	0.0018	inches	0
51	Pipe	Yes	98.93	feet	4.26	inches	Standard	0.0018	inches	0
52	Pipe	Yes	5	feet	4.026	inches	Standard	0.0018	inches	0
54	Pipe	Yes	10	feet	4.026	inches	Standard	0.0018	inches	0
55	Pipe	Yes	5	feet	4.026	inches	Standard	0.0018	inches	0
56	Pipe	Yes	46	feet	4.026	inches	Standard	0.0018	inches	0.4752721
58	Pipe	Yes	350	feet	8	inches	Unspecified	0.000204	inches	6.21

CALCULATION SHEET

Project No. S54413.024	**Calculation No.** S54413.024-M-002	**Rev.** 0	**Page No.** 97 of 180
Title: Leachate and Basin Pump Flow Calculation			
Prepared By: Gallegos, JF, P.E.	**Date:** 4/10/2020	**Checked By:** Dixon, KW, P.E.	**Date:** 4/10/2020

AFT Fathom 10 (Model)
4/13/2020
Page 3

AFT Fathom Model

Pipe	Initial Flow	Initial Flow Units	Junctions (Up,Down)	Geometry	Material	Size	Type	Special Condition
39			42, 40	Cylindrical Pipe	Steel - ANSI	3 inch	STD (schedule 40)	None
41			39, 40	Cylindrical Pipe	Steel - ANSI	2 inch	STD (schedule 40)	None
44			54, 47	Cylindrical Pipe	Steel - ANSI	3 inch	STD (schedule 40)	None
45			40, 50	Cylindrical Pipe	Steel - ANSI	3 inch	STD (schedule 40)	None
47			50, 49	Cylindrical Pipe	Steel - ANSI	2 inch	STD (schedule 40)	None
48			49, 51	Cylindrical Pipe	Steel - ANSI	2 inch	STD (schedule 40)	None
49			51, 54	Cylindrical Pipe	Steel - ANSI	3 inch	STD (schedule 40)	None
50			35, 60	Cylindrical Pipe	Steel - ANSI	4 inch	STD (schedule 40)	None
51			60, 59	Cylindrical Pipe	Steel - ANSI	4 inch	Schedule 10	None
52			56, 7	Cylindrical Pipe	Steel - ANSI	4 inch	schedule 40	None
54			7, 63	Cylindrical Pipe	Steel - ANSI	4 inch	schedule 40	None
55			63, 64	Cylindrical Pipe	Steel - ANSI	4 inch	schedule 40	None
56			64, 65	Cylindrical Pipe	Steel - ANSI	4 inch	schedule 40	None
58			18, 37	Cylindrical Pipe	User Specified			None

Pipe Fittings & Losses

Pipe	Total K	Elbow/Bend Standard Threaded	Elbow/Bend Smooth Flanged	Valve Butterfly	Valve Plug	Other Tee
2	0.3	1 (0.3)				
3	0.04					1 (0.04)
5	0.57		3 (0.57)			
10	1.62		3 (0.48)			2 (1.14)
29	2.38		7 (2.38)			
32	4.7		8 (1.94)	2 (1.62)		2 (1.14)
41	0.87		2 (0.53)		1 (0.34)	
44	2.61		6 (1.51)			1 (1.1)
45	2.01		8 (2.01)			
47	0.85			1 (0.85)		
48	0.85			1 (0.85)		
49	1.26		5 (1.26)			
56	0.48		2 (0.48)			
58	6.21		10 (1.96)	3 (1.89)		6 (2.36)

Area Change Table

Area Change	Name	Object Defined	Inlet Elevation	Elevation Units	Initial Pressure	Initial Pressure Units	Database Source	Type
16	Area Change	Yes	606	feet				Conical
35	Area Change	Yes	576.6	feet				Conical
37	Area Change	Yes	606	feet				Conical

CALCULATION SHEET

Project No. S54413.024	**Calculation No.** S54413.024-M-002	**Rev.** 0	**Page No.** 98 of 180
Title: Leachate and Basin Pump Flow Calculation			
Prepared By: Gallegos, JF, P.E.	**Date:** 4/10/2020	**Checked By:** Dixon, KW, P.E.	**Date:** 4/10/2020

AFT Fathom 10 (Model)
4/13/2020
Page 4

AFT Fathom Model

Area Change	Geometry	Angle	Loss Factor
16	Expansion	45	0
35	Expansion	45	0.1179652
37	Contraction	45	3.673761

Area Change	Name	Object Defined	Inlet Elevation	Elevation Units	Initial Pressure	Initial Pressure Units	Database Source	Type
38	Area Change	Yes	606	feet				Conical
39	Area Change	Yes	623.3	feet				Conical
50	Area Change	Yes	623.3	feet				Conical
51	Area Change	Yes	623.3	feet				Conical
61	Area Change	Yes	605.5	feet				Conical

Area Change	Geometry	Angle	Loss Factor
38	Contraction	45	0.3642007
39	Contraction	45	0.7135802
50	Contraction	45	0.8114334
51	Expansion	45	0.2967157
61	Expansion	45	0.5395717

Assigned Pressure Table

Assigned Pressure	Name	Object Defined	Inlet Elevation	Elevation Units	Initial Pressure	Initial Pressure Units	Database Source
47	Assigned Pressure	Yes	609	feet	1.000	atm	
65	Assigned Pressure	Yes	576	feet	1.000	atm	

Assigned Pressure	Pressure	Pressure Units	Pressure Type	Balance Energy	Balance Concentration	(Pipe #1) K In, K Out	(Pipe #2) K In, K Out	(Pipe #3) K In, K Out
47	1	atm	Stagnation	No	No	(P44) 0, 1		
65	1	atm	Stagnation	No	No	(P56) 0, 1		

Assigned Pressure	(Pipe #4) K In, K Out	(Pipe #5) K In, K Out	(Pipe #6) K In, K Out	(Pipe #7) K In, K Out	(Pipe #8) K In, K Out	(Pipe #9) K In, K Out	(Pipe #10) K In, K Out	(Pipe #11) K In, K Out
47								
65								

Assigned Pressure	(Pipe #12) K In, K Out	(Pipe #13) K In, K Out	(Pipe #14) K In, K Out	(Pipe #15) K In, K Out	(Pipe #16) K In, K Out	(Pipe #17) K In, K Out	(Pipe #18) K In, K Out	(Pipe #19) K In, K Out
47								
65								

Assigned Pressure	(Pipe #20) K In, K Out	(Pipe #21) K In, K Out	(Pipe #22) K In, K Out	(Pipe #23) K In, K Out	(Pipe #24) K In, K Out	(Pipe #25) K In, K Out
47						
65						

Sargent & Lundy Engineering Services, Inc

CALCULATION SHEET

Project No. S54413.024	**Calculation No.** S54413.024-M-002	**Rev.** 0	**Page No.** 99 of 180
Title: Leachate and Basin Pump Flow Calculation			
Prepared By: Gallegos, JF, P.E.	**Date:** 4/10/2020	**Checked By:** Dixon, KW, P.E.	**Date:** 4/10/2020

AFT Fathom 10 (Model) 4/13/2020 Page 5	AFT Fathom Model	

Bend Table

Bend	Name	Object Defined	Inlet Elevation	Elevation Units	Initial Pressure	Initial Pressure Units	Database Source	Type	Angle (Degrees)	R/D
31	Bend	Yes	606	feet				Smooth Bend	90	1
32	Bend	Yes	623.3	feet				Smooth Bend	90	1
42	Bend	Yes	623.3	feet				Smooth Bend	90	1
64	Bend	Yes	605.5	feet				Smooth Bend	90	1.5

Bend	Loss Factor
31	0.34
32	0.34
42	0.35864
64	0.237636

Branch Table

Branch	Name	Object Defined	Inlet Elevation	Elevation Units	Initial Pressure	Initial Pressure Units	Database Source	Special Condition	Boundary Flow (+ = in/- = out)
59	Branch	Yes	605.5	feet				None	
60	Branch	Yes	580	feet				None	

Branch	Boundary Flow Units	(Pipe #1) K In, K Out	(Pipe #2) K In, K Out	(Pipe #3) K In, K Out	(Pipe #4) K In, K Out	(Pipe #5) K In, K Out	(Pipe #6) K In, K Out	(Pipe #7) K In, K Out
59		(P2) 0, 0	(P51) 0, 0					
60		(P50) 0, 0	(P51) 0, 0					

Branch	(Pipe #8) K In, K Out	(Pipe #9) K In, K Out	(Pipe #10) K In, K Out	(Pipe #11) K In, K Out	(Pipe #12) K In, K Out	(Pipe #13) K In, K Out	(Pipe #14) K In, K Out	(Pipe #15) K In, K Out	(Pipe #16) K In, K Out
59									
60									

Branch	(Pipe #17) K In, K Out	(Pipe #18) K In, K Out	(Pipe #19) K In, K Out	(Pipe #20) K In, K Out	(Pipe #21) K In, K Out	(Pipe #22) K In, K Out	(Pipe #23) K In, K Out	(Pipe #24) K In, K Out	(Pipe #25) K In, K Out
59									
60									

Control Valve Table

Control Valve	Name	Object Defined	Inlet Elevation	Elevation Units	Initial Pressure	Initial Pressure Units	Database Source
56	Control Valve	Yes	605.5	feet			

CALCULATION SHEET

Project No. S54413.024	**Calculation No.** S54413.024-M-002	**Rev.** 0	**Page No.** 100 of 180
Title: Leachate and Basin Pump Flow Calculation			
Prepared By: Gallegos, JF, P.E.	**Date:** 4/10/2020	**Checked By:** Dixon, KW, P.E.	**Date:** 4/10/2020

AFT Fathom 10 (Model)
4/13/2020
Page 6

AFT Fathom Model

Control Valve	Special Condition	Valve Type	Control Setting	Control Units	Pressure/ Head Type	Inlet Failure Type	Outlet Failure Type	Full Open Loss Type
56	Fully Open - No Control	FCV	10	gal/min	N/A	Fully Open	N/A	Cv Table

Control Valve	Full Open Loss
56	437.29

General Component Table

General Component	Name	Object Defined	Inlet Elevation	Elevation Units	Initial Pressure	Initial Pressure Units	Database Source
49	General Component	Yes	623.3	feet			

General Component	Special Condition	Loss Model	Loss Value	Independent Variable	Ind. Variable Units	Dependent Variable	Dep. Variable Units
49	None	Resistance Curve	Variable	Vol. Flow Rate	gal/min	Pressure Loss	psid

General Component	Loss Constant a	Loss Constant b	Loss Constant c	Loss Constant d	Loss Constant e
49	40	0	0	0	0

Orifice Table

Orifice	Name	Object Defined	Inlet Elevation	Elevation Units	Initial Pressure	Initial Pressure Units	Database Source	Orifice Type	Flow Area Type
54	Orifice	Yes	623.3	feet				Sharp-Edged	Diameter

Orifice	Dimension	Dimension Units	R/D	Restricted Area	Restricted Area Units	Loss Model	Loss Value	Independent Variable	Ind. Variable Units
54	1.361	inches				K Constant	54.62305		

Orifice	Dependent Variable	Dep. Variable Units	Loss Constant a	Loss Constant b	Loss Constant c	Loss Constant d	Loss Constant e
54							

Pump Table

Pump	Name	Object Defined	Inlet Elevation	Elevation Units	Initial Pressure	Initial Pressure Units	Database Source	Special Condition	Pump Type
5	Pump	Yes	576.6	feet				None	Pump Curve

Pump	Design Flow Rate	Design Flow Rate Units	Current Configuration	Independent Variable	Ind. Variable Units	Dependent Variable	Dep. Variable Units	Pump Curve Constant a
5				Vol. Flow Rate	gal/min	Head Rise	feet	221.5061

CALCULATION SHEET

Project No. S54413.024	**Calculation No.** S54413.024-M-002	**Rev.** 0	**Page No.** 101 of 180
Title: Leachate and Basin Pump Flow Calculation			
Prepared By: Gallegos, JF, P.E.	**Date:** 4/10/2020	**Checked By:** Dixon, KW, P.E.	**Date:** 4/10/2020

AFT Fathom 10 (Model)
4/13/2020
Page 7

AFT Fathom Model

Pump	Pump Curve Constant b	Pump Curve Constant c	Pump Curve Constant d	Pump Curve Constant e	Runout Flow Rate	Runout Flow Rate Units	Speed	Control When Exceeded Only
5	-0.03898634	-0.002236957	0	0			100	

Pump	Heat Added To Fluid	Heat Added Units	Submerged Pump Pressure	Submerged Pump Pressure Units
5	0	Percent	576.6	feet

Tee or Wye Table

Tee or Wye	Name	Object Defined	Inlet Elevation	Elevation Units	Initial Pressure	Initial Pressure Units	Database Source	Tee/Wye Type
15	Tee or Wye	Yes	606	feet				Sharp Straight
40	Tee or Wye	Yes	623.3	feet				Sharp Straight

Tee or Wye	Loss Type	Angle	Pipes A, B, C
15	Detailed	90	14, 10, 12
40	Detailed	90	39, 41, 45

Three Way Valve Table

Three Way Valve	Name	Object Defined	Inlet Elevation	Elevation Units	Initial Pressure	Initial Pressure Units	Database Source
63	Three Way Valve	Yes	605.5	feet			

Three Way Valve	Special Condition	Loss Model	Percent Open	Cv Pipe #1	Cv Pipe #2
63	Pipe #2 Closed	Cv	100	561	0

Valve Table

Valve	Name	Object Defined	Inlet Elevation	Elevation Units	Initial Pressure	Initial Pressure Units	Database Source	Special Condition	Exit Valve	Exit Pressure
7	Valve	Yes	605.5	feet				None	No	
10	Valve	Yes	606	feet				None	No	
17	60M-43B	Yes	606	feet				Closed	No	
18	60M-43A	Yes	606	feet				None	No	

Valve	Exit Pressure Units	Restricted Area	Restricted Area Units	Loss Model	Loss Source	Loss Factor	Percent Open	Open Pct. Data Exists	Independent Variable
7				K Constant	N/A	0.76383		No	
10				K Constant	N/A	0.765		No	
17				K Constant	N/A	0.63		No	
18				K Constant	N/A	0.63		No	

CALCULATION SHEET

Project No. S54413.024	**Calculation No.** S54413.024-M-002	**Rev.** 0	**Page No.** 102 of 180
Title: Leachate and Basin Pump Flow Calculation			
Prepared By: Gallegos, JF, P.E.	**Date:** 4/10/2020	**Checked By:** Dixon, KW, P.E.	**Date:** 4/10/2020

AFT Fathom 10 (Model) 4/13/2020 Page 8	AFT Fathom Model	

Valve	Ind. Variable Units	Dependent Variable	Dep. Variable Units	Loss Constant a	Loss Constant b	Loss Constant c	Loss Constant d	Loss Constant e
7								
10								
17								
18								

CALCULATION SHEET

Project No. S54413.024	**Calculation No.** S54413.024-M-002	**Rev.** 0	**Page No.** 103 of 180
Title: Leachate and Basin Pump Flow Calculation			
Prepared By: Gallegos, JF, P.E.	**Date:** 4/10/2020	**Checked By:** Dixon, KW, P.E.	**Date:** 4/10/2020

AFT Fathom 10 (Output) 4/13/2020 Page 1	AFT Fathom Model	

Model Reference Information

General

Title: AFT Fathom Model
Analysis run on: 4/13/2020 10:36:53 AM
Application version: AFT Fathom Version 10 (2018.05.21)
Input File: P:\Clients\Washington River Protection Solutions - WRPS 544\S54413.024 - LERF Basin 41 Design\Calculations\Mech\M-002 Flow\Rev 0\VV Files\LERF TransferRev0.fth
Scenario: Base Scenario/Run 2/Low Basin Level High Operating DP
Output File: P:\Clients\Washington River Protection Solutions - WRPS 544\S54413.024 - LERF Basin 41 Design\Calculations\Mech\M-002 Flow\Rev 0\VV Files\LERF TransferRev0_F3.out

Execution Time= 0.10 seconds
Total Number Of Head/Pressure Iterations= 0
Total Number Of Flow Iterations= 38
Total Number Of Temperature Iterations= 0
Number Of Pipes= 27
Number Of Junctions= 27
Matrix Method= Gaussian Elimination

Pressure/Head Tolerance= 0.0001 relative change
Flow Rate Tolerance= 0.0001 relative change
Temperature Tolerance= 0.0001 relative change
Flow Relaxation= (Automatic)
Pressure Relaxation= (Automatic)

Constant Fluid Property Model
Fluid Database: User Specified
Fluid= User Specified
Density= 1 S.G. water
Viscosity= 1 centipoise
Vapor Pressure= Unspecified
Viscosity Model= Newtonian
Apply laminar and non-Newtonian correction to: Pipe Fittings & Losses, Junction K factors, Junction Special Losses, Junction Polynomials
Corrections applied to the following junctions: Branch, Reservoir, Assigned Flow, Assigned Pressure, Area Change, Bend, Tee or Wye, Spray Discharge, Relief Valve

Ambient Pressure (constant)= 1 atm
Gravitational Acceleration= 1 g
Turbulent Flow Above Reynolds Number= 4000
Laminar Flow Below Reynolds Number= 2300
Total Inflow= 118.2 gal/min
Total Outflow= 118.2 gal/min
Maximum Static Pressure is 95.02 psia at Pipe 50 Inlet
Minimum Static Pressure is 1.918 psia at Pipe 56 Inlet

Warnings

No Warnings

Applied Standards

===== ANSI/HI 9.6.3-2017 - Rotodynamic Pumps - Guideline for Operating Regions =====
Pump 5 set to specific speed <=4500 (US Customary), with lower POR 70% and upper POR 120% of BEP

CALCULATION SHEET

Project No. S54413.024	**Calculation No.** S54413.024-M-002	**Rev.** 0	**Page No.** 104 of 180
Title: Leachate and Basin Pump Flow Calculation			
Prepared By: Gallegos, JF, P.E.	**Date:** 4/10/2020	**Checked By:** Dixon, KW, P.E.	**Date:** 4/10/2020

AFT Fathom 10 (Output)
4/13/2020
Page 2

AFT Fathom Model

Pump Summary

Jct	Results Diagram	Name	Vol. Flow (gal/min)	Mass Flow (lbm/sec)	dP (psid)	dH (feet)	Overall Efficiency (Percent)	Speed (Percent)	Overall Power (hp)	BEP (gal/min)	% of BEP (Percent)	NPSHA (feet)
5	Show	Pump	118.2	16.43	80.41	185.6	N/A	100.0	5.544	N/A	N/A	N/A

Jct	NPSHR (feet)
5	N/A

Valve Summary

Jct	Name	Valve Type	Vol. Flow (gal/min)	Mass Flow (lbm/sec)	dP Stag. (psid)	dH (feet)	P Static In (psia)	Cv	K
7	Valve	REGULAR	118.2	16.43	0.045635	0.105353	78.30	553.4	0.7638
10	Valve	REGULAR	118.2	16.43	0.046905	0.108285	76.63	545.8	0.7650
X17	60M-43B	REGULAR	0.0	0.00	N/A	N/A	76.60	N/A	N/A
18	60M-43A	REGULAR	118.2	16.43	0.002414	0.005573	76.59	2,405.8	0.6300
56	Control Valve	FCV	118.2	16.43	0.073074	0.168700	78.39	437.3	1.2231
63 [P5]	Three Way Valve	THREE-WAY	118.2	16.43	0.044399	0.102501	78.25	561.0	0.7241
X63 [P55]	Three Way Valve	THREE-WAY	0.0	0.00	N/A	N/A	78.25	N/A	N/A

Jct	Valve State
7	Open
10	Open
X17	Closed By User
18	Open
56	Opened By User
63 [P5]	Open
X63 [P55]	Closed By User

Pipe Output Table

Pipe	Name	Vol. Flow Rate (gal/min)	Velocity (feet/sec)	P Static Max (psia)	P Static Min (psia)	Elevation Inlet (feet)	Elevation Outlet (feet)	dP Stag. Total (psid)	dP Static Total (psid)	dP Gravity (psid)
2	Pipe	118.2	11.3021	81.414	78.062	605.5	605.5	3.3515086	3.3515086	0.0000
3	Pipe	118.2	2.9792	78.399	78.389	605.5	605.5	0.0096261	0.0096261	0.0000
5	Pipe	118.2	3.0180	78.170	76.630	605.5	606.0	1.5394681	1.5394681	0.2166
10	Pipe	118.2	0.7545	76.641	76.592	606.0	606.0	0.0490976	0.0490976	0.0000
12	Pipe	0.0	0.0000	76.596	76.596	606.0	606.0	0.0000000	0.0000000	0.0000

Sargent & Lundy Engineering Services, Inc

CALCULATION SHEET

Project No. S54413.024	**Calculation No.** S54413.024-M-002	**Rev.** 0	**Page No.** 105 of 180
Title: Leachate and Basin Pump Flow Calculation			
Prepared By: Gallegos, JF, P.E.	**Date:** 4/10/2020	**Checked By:** Dixon, KW, P.E.	**Date:** 4/10/2020

AFT Fathom 10 (Output)
4/13/2020
Page 3

AFT Fathom Model

Pipe	dH (feet)	P Static In (psia)	P Static Out (psia)	P Stag. In (psia)	P Stag. Out (psia)
2	7.7373508	81.414	78.062	82.274	78.922
3	0.0222230	78.399	78.389	78.458	78.449
5	3.0540427	78.170	76.630	78.231	76.692
10	0.1133475	76.641	76.592	76.645	76.596
12	0.0000000	76.596	76.596	76.596	76.596

Pipe	Name	Vol. Flow Rate (gal/min)	Velocity (feet/sec)	P Static Max (psia)	P Static Min (psia)	Elevation Inlet (feet)	Elevation Outlet (feet)	dP Stag. Total (psid)	dP Static Total (psid)	dP Gravity (psid)
13	Pipe	0.0	0.0000	76.596	76.596	606.0	606.0	0.0000000	0.0000000	0.0000
14	Pipe	118.2	0.7545	76.592	76.592	606.0	606.0	0.0001225	0.0001225	0.0000
28	Pipe	118.2	3.0180	76.406	68.811	606.0	623.3	7.5958509	7.5958509	7.4937
29	Pipe	118.2	3.0180	70.956	68.790	623.3	606.0	-2.1665350	-2.1665350	-7.4937
32	Pipe	0.0	0.0000	70.299	62.806	606.0	623.3	7.4936577	7.4936577	7.4937
33	Pipe	118.2	4.5437	94.969	94.958	576.6	576.6	0.0103313	0.0103313	0.0000
36	Pipe	118.2	3.0180	76.451	76.427	606.0	606.0	0.0238451	0.0238451	0.0000
38	Pipe	118.2	5.1301	70.818	63.045	606.0	623.3	7.7735968	7.7735968	7.4937
39	Pipe	118.2	5.1301	62.981	62.841	623.3	623.3	0.1399695	0.1399695	0.0000
41	Pipe	0.0	0.0000	62.806	62.806	623.3	623.3	0.0000000	0.0000000	0.0000
44	Pipe	118.2	5.1301	14.696	9.608	623.3	609.0	-5.0877765	-5.0877765	-6.1942
45	Pipe	118.2	5.1301	62.628	61.853	623.3	623.3	0.7757195	0.7757195	0.0000
47	Pipe	118.2	11.3021	61.026	60.193	623.3	623.3	0.8330673	0.8330673	0.0000
48	Pipe	118.2	11.3021	20.193	19.360	623.3	623.3	0.8330673	0.8330673	0.0000
49	Pipe	118.2	5.1301	19.788	19.285	623.3	623.3	0.5023209	0.5023209	0.0000
50	Pipe	118.2	2.9792	95.021	93.530	576.6	580.0	1.4908444	1.4908444	1.4728
51	Pipe	118.2	2.6609	93.542	82.226	580.0	605.5	11.3163144	11.3163144	11.0456
52	Pipe	118.2	2.9792	78.316	78.298	605.5	605.5	0.0180908	0.0180908	0.0000
54	Pipe	118.2	2.9792	78.252	78.216	605.5	605.5	0.0361816	0.0361816	0.0000
55	Pipe	0.0	0.0000	1.918	1.918	605.5	605.5	0.0000000	0.0000000	0.0000
56	Pipe	0.0	0.0000	14.696	1.918	605.5	576.0	-12.7782114	-12.7782114	-12.7782
58	Pipe	118.2	0.7545	76.589	76.523	606.0	606.0	0.0666791	0.0666791	0.0000

CALCULATION SHEET

Project No. S54413.024	**Calculation No.** S54413.024-M-002	**Rev.** 0	**Page No.** 106 of 180
Title: Leachate and Basin Pump Flow Calculation			
Prepared By: Gallegos, JF, P.E.	**Date:** 4/10/2020	**Checked By:** Dixon, KW, P.E.	**Date:** 4/10/2020

AFT Fathom 10 (Output)
4/13/2020
Page 4

AFT Fathom Model

Pipe	dH (feet)	P Static In (psia)	P Static Out (psia)	P Stag. In (psia)	P Stag. Out (psia)
13	0.0000000	76.596	76.596	76.596	76.596
14	0.0002829	76.592	76.592	76.596	76.596
28	0.2359251	76.406	68.811	76.468	68.872
29	12.2982876	68.790	70.956	68.851	71.018
32	0.0000000	70.299	62.806	70.299	62.806
33	0.0238511	94.969	94.958	95.108	95.097
36	0.0550492	76.451	76.427	76.512	76.489
38	0.6462722	70.818	63.045	70.995	63.222
39	0.3231361	62.981	62.841	63.158	63.018
41	0.0000000	62.806	62.806	62.806	62.806
44	2.5542589	9.608	14.696	9.785	14.873
45	1.7908394	62.628	61.853	62.806	62.030
47	1.9232336	61.026	60.193	61.886	61.053
48	1.9232336	20.193	19.360	21.053	20.220
49	1.1596667	19.788	19.285	19.965	19.463
50	0.0417647	95.021	93.530	95.081	93.590
51	0.6250393	93.542	82.226	93.590	82.274
52	0.0417647	78.316	78.298	78.376	78.357
54	0.0835295	78.252	78.216	78.312	78.276
55	0.0000000	1.918	1.918	1.918	1.918
56	0.0000000	1.918	14.696	1.918	14.696
58	0.1539365	76.589	76.523	76.593	76.527

All Junction Table

Jct	Name	P Static In (psia)	P Static Out (psia)	P Stag. In (psia)	P Stag. Out (psia)	Vol. Flow Rate Thru Jct (gal/min)	Mass Flow Rate Thru Jct (lbm/sec)	Loss Factor (K)
5	Pump	14.557	94.969	14.686	95.108	118.2	16.43	0.0000
7	Valve	78.298	78.252	78.357	78.312	118.2	16.43	0.7638
10	Valve	76.630	76.641	76.692	76.845	118.2	16.43	0.7650
15	Tee or Wye	76.594	76.594	76.596	76.596	N/A	N/A	See Mult. Losses
16	Area Change	76.596	76.596	76.596	76.596	0.0	0.00	0.0000
X17	60M-43B	76.596	70.299	76.596	70.299	0.0	0.00	0.0000
18	60M-43A	76.592	76.589	76.596	76.593	118.2	16.43	0.6300
31	Bend	76.427	76.406	76.489	76.468	118.2	16.43	0.3400
32	Bend	68.811	68.790	68.872	68.851	118.2	16.43	0.3400
35	Area Change	94.958	95.021	95.097	95.081	118.2	16.43	0.1180
37	Area Change	76.523	76.451	76.527	76.512	118.2	16.43	3.6738
38	Area Change	70.956	70.818	71.018	70.995	118.2	16.43	0.3642
39	Area Change	62.806	62.806	62.806	62.806	0.0	0.00	0.0000

CALCULATION SHEET

Project No. S54413.024	**Calculation No.** S54413.024-M-002	**Rev.** 0	**Page No.** 107 of 180
Title: Leachate and Basin Pump Flow Calculation			
Prepared By: Gallegos, JF, P.E.	**Date:** 4/10/2020	**Checked By:** Dixon, KW, P.E.	**Date:** 4/10/2020

AFT Fathom 10 (Output)
4/13/2020
Page 5

AFT Fathom Model

Jct	Name	P Static In (psia)	P Static Out (psia)	P Stag. In (psia)	P Stag. Out (psia)	Vol. Flow Rate Thru Jct (gal/min)	Mass Flow Rate Thru Jct (lbm/sec)	Loss Factor (K)
40	Tee or Wye	62.727	62.727	62.806	62.806	N/A	N/A	See Mult. Losses
42	Bend	63.045	62.981	63.222	63.158	118.2	16.43	0.3586
47	Assigned Pressure	14.696	14.519	14.873	14.696	118.2	16.43	1.0000
49	General Component	60.193	20.193	61.053	21.053	118.2	16.43	46.5188
50	Area Change	61.853	61.026	62.030	61.886	118.2	16.43	0.8114
51	Area Change	19.360	19.788	20.220	19.965	118.2	16.43	0.2967
54	Orifice	19.285	9.608	19.463	9.785	118.2	16.43	54.6231
56	Control Valve	78.389	78.316	78.449	78.376	118.2	16.43	1.2231
59	Branch	82.226	81.414	82.274	82.274	118.2	16.43	0.0000
60	Branch	93.530	93.542	93.590	93.590	118.2	16.43	0.0000
61	Area Change	78.062	78.399	78.922	78.458	118.2	16.43	0.5396
63	Three Way Valve	78.249	78.249	78.276	78.276	N/A	N/A	See Mult. Losses
64	Bend	1.918	1.918	1.918	1.918	0.0	0.00	0.0000
65	Assigned Pressure	14.696	14.696	14.696	14.696	0.0	0.00	0.0000

CALCULATION SHEET

Project No. S54413.024	**Calculation No.** S54413.024-M-002	**Rev.** 0	**Page No.** 108 of 180
Title: Leachate and Basin Pump Flow Calculation			
Prepared By: Gallegos, JF, P.E.	**Date:** 4/10/2020	**Checked By:** Dixon, KW, P.E.	**Date:** 4/10/2020

APPENDIX D

BASIN PUMP RECIRCULATION MODEL

CALCULATION SHEET

Project No. S54413.024	**Calculation No.** S54413.024-M-002	**Rev.** 0	**Page No.** 109 of 180
Title: Leachate and Basin Pump Flow Calculation			
Prepared By: Gallegos, JF, P.E.	**Date:** 4/10/2020	**Checked By:** Dixon, KW, P.E.	**Date:** 4/10/2020

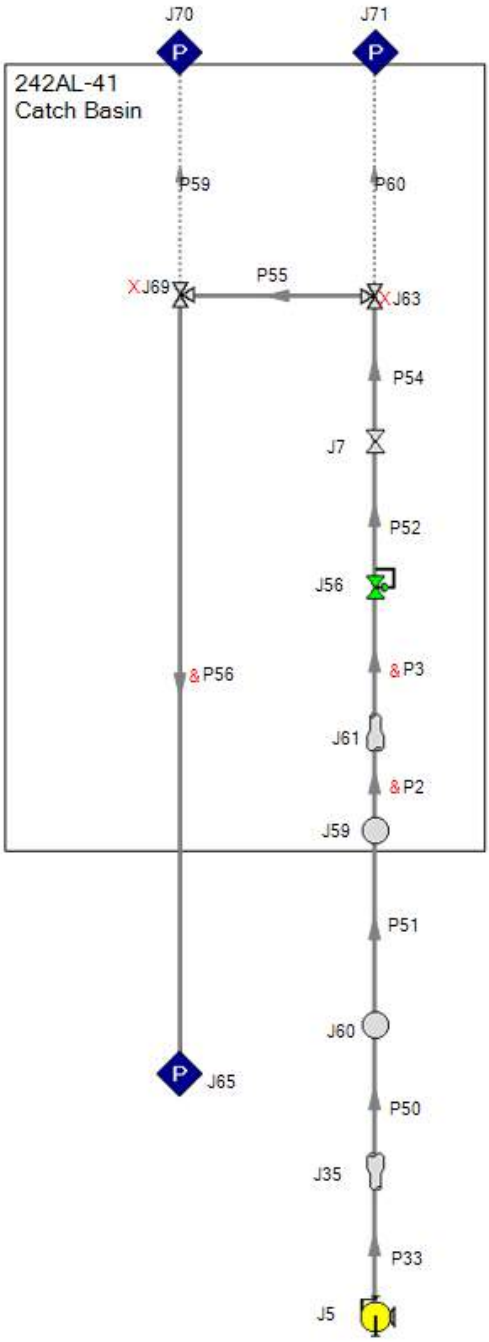

APPENDIX E

BASIN PUMP RECIRCULATION FATHOM INPUTS AND OUTPUTS

Control Valve Cavitation

Pump Run-Out

CALCULATION SHEET

Project No. S54413.024	**Calculation No.** S54413.024-M-002	**Rev.** 0	**Page No.** 111 of 180
Title: Leachate and Basin Pump Flow Calculation			
Prepared By: Gallegos, JF, P.E.	**Date:** 4/10/2020	**Checked By:** Dixon, KW, P.E.	**Date:** 4/10/2020

Control Valve Cavitation

CALCULATION SHEET

Project No. S54413.024	**Calculation No.** S54413.024-M-002	**Rev.** 0	**Page No.** 112 of 180
Title: Leachate and Basin Pump Flow Calculation			
Prepared By: Gallegos, JF, P.E.	**Date:** 4/10/2020	**Checked By:** Dixon, KW, P.E.	**Date:** 4/10/2020

AFT Fathom 10 (Model) 3/26/2020 Page 1	AFT Fathom Model	

General

Title: AFT Fathom Model
Input File: P:\Clients\Washington River Protection Solutions - WRPS 544\S54413.024 - LERF Basin 41 Design\Calculations\Mech\M-002 Flow\Rev 0\LERF TransferRev0.fth
Scenario: Base Scenario/RecircRunHighBasin/Cavitation Check

Number Of Pipes= 11
Number Of Junctions= 12

Pressure/Head Tolerance= 0.0001 relative change
Flow Rate Tolerance= 0.0001 relative change
Temperature Tolerance= 0.0001 relative change
Flow Relaxation= (Automatic)
Pressure Relaxation= (Automatic)

Constant Fluid Property Model
Fluid Database: User Specified
Fluid= User Specified
Density= 1 S.G. water
Viscosity= 1 centipoise
Vapor Pressure= Unspecified
Viscosity Model= Newtonian
Apply laminar and non-Newtonian correction to: Pipe Fittings & Losses, Junction K factors, Junction Special Losses, Junction Polynomials
Corrections applied to the following junctions: Branch, Reservoir, Assigned Flow, Assigned Pressure, Area Change, Bend, Tee or Wye, Spray Discharge, Relief Valve

Ambient Pressure (constant)= 1 atm
Gravitational Acceleration= 1 g
Turbulent Flow Above Reynolds Number= 4000
Laminar Flow Below Reynolds Number= 2300

Pipes

Pipe	Name	Pipe Defined	Length	Length Units	Hydraulic Diameter	Hydraulic Diam. Units	Friction Data Set	Roughness	Roughness Units	Losses (K)
2	Pipe	Yes	30	feet	4.026	inches	Standard	0.0018	inches	0.271584
3	Pipe	Yes	2	feet	2.067	inches	Standard	0.0018	inches	0.04
33	Pipe	Yes	1	feet	3.26	inches	Standard	0.0018	inches	0
50	Pipe	Yes	5	feet	4.026	inches	Standard	0.0018	inches	0
51	Pipe	Yes	98.93	feet	4.26	inches	Standard	0.0018	inches	0
52	Pipe	Yes	5	feet	4.026	inches	Standard	0.0018	inches	0
54	Pipe	Yes	10	feet	4.026	inches	Standard	0.0018	inches	0
55	Pipe	Yes	5	feet	4.026	inches	Standard	0.0018	inches	0
56	Pipe	Yes	46	feet	4.026	inches	Standard	0.0018	inches	0.4752721
59	Pipe	Yes	1	feet	3.068	inches	Standard	0.0018	inches	0
60	Pipe	Yes	1	feet	3.068	inches	Standard	0.0018	inches	0

CALCULATION SHEET

Project No. S54413.024	**Calculation No.** S54413.024-M-002	**Rev.** 0	**Page No.** 113 of 180
Title: Leachate and Basin Pump Flow Calculation			
Prepared By: Gallegos, JF, P.E.	**Date:** 4/10/2020	**Checked By:** Dixon, KW, P.E.	**Date:** 4/10/2020

AFT Fathom 10 (Model)
3/26/2020
Page 2

AFT Fathom Model

Pipe	Initial Flow	Initial Flow Units	Junctions (Up,Down)	Geometry	Material	Size	Type	Special Condition
2			59, 61	Cylindrical Pipe	Steel - ANSI	4 inch	schedule 40	None
3			61, 56	Cylindrical Pipe	Steel - ANSI	2 inch	schedule 40	None
33			5, 35	Cylindrical Pipe	Steel - ANSI	3 inch	Schedule 10	None
50			35, 60	Cylindrical Pipe	Steel - ANSI	4 inch	STD (schedule 40)	None
51			60, 59	Cylindrical Pipe	Steel - ANSI	4 inch	Schedule 10	None
52			56, 7	Cylindrical Pipe	Steel - ANSI	4 inch	schedule 40	None
54			7, 63	Cylindrical Pipe	Steel - ANSI	4 inch	schedule 40	None
55			63, 69	Cylindrical Pipe	Steel - ANSI	4 inch	schedule 40	None
56			69, 65	Cylindrical Pipe	Steel - ANSI	4 inch	schedule 40	None
59			69, 70	Cylindrical Pipe	Steel - ANSI	3 inch	STD (schedule 40)	None
60			63, 71	Cylindrical Pipe	Steel - ANSI	3 inch	STD (schedule 40)	None

Pipe Fittings & Losses

Pipe	Total K	Elbow/Bend Standard Threaded	Elbow/Bend Smooth Flanged	Other Tee
2	0.27	1 (0.27)		
3	0.04			1 (0.04)
56	0.48		2 (0.48)	

Area Change Table

Area Change	Name	Object Defined	Inlet Elevation	Elevation Units	Initial Pressure	Initial Pressure Units	Database Source	Type
35	Area Change	Yes	576.8	feet				Conical
61	Area Change	Yes	605.5	feet				Conical

Area Change	Geometry	Angle	Loss Factor
35	Expansion	45	0.1179652
61	Contraction	45	3.244747

Assigned Pressure Table

Assigned Pressure	Name	Object Defined	Inlet Elevation	Elevation Units	Initial Pressure	Initial Pressure Units	Database Source
65	Assigned Pressure	Yes	602	feet	1.000	atm	
70	Assigned Pressure	Yes	606	feet	1.000	atm	
71	Assigned Pressure	Yes	606	feet	1.000	atm	

Sargent & Lundy Engineering Services, Inc

CALCULATION SHEET

Project No. S54413.024	**Calculation No.** S54413.024-M-002	**Rev.** 0	**Page No.** 114 of 180
Title: Leachate and Basin Pump Flow Calculation			
Prepared By: Gallegos, JF, P.E.	**Date:** 4/10/2020	**Checked By:** Dixon, KW, P.E.	**Date:** 4/10/2020

AFT Fathom 10 (Model)
3/26/2020
Page 3

AFT Fathom Model

Assigned Pressure	Pressure	Pressure Units	Pressure Type	Balance Energy	Balance Concentration	(Pipe #1) K In, K Out	(Pipe #2) K In, K Out	(Pipe #3) K In, K Out
65	1	atm	Stagnation	No	No	(P56) 0, 1		
70	1	atm	Stagnation	No	No	(P59) 0, 0		
71	1	atm	Stagnation	No	No	(P60) 0, 0		

Assigned Pressure	(Pipe #4) K In, K Out	(Pipe #5) K In, K Out	(Pipe #6) K In, K Out	(Pipe #7) K In, K Out	(Pipe #8) K In, K Out	(Pipe #9) K In, K Out	(Pipe #10) K In, K Out	(Pipe #11) K In, K Out
65								
70								
71								

Assigned Pressure	(Pipe #12) K In, K Out	(Pipe #13) K In, K Out	(Pipe #14) K In, K Out	(Pipe #15) K In, K Out	(Pipe #16) K In, K Out	(Pipe #17) K In, K Out	(Pipe #18) K In, K Out	(Pipe #19) K In, K Out
65								
70								
71								

Assigned Pressure	(Pipe #20) K In, K Out	(Pipe #21) K In, K Out	(Pipe #22) K In, K Out	(Pipe #23) K In, K Out	(Pipe #24) K In, K Out	(Pipe #25) K In, K Out
65						
70						
71						

Branch Table

Branch	Name	Object Defined	Inlet Elevation	Elevation Units	Initial Pressure	Initial Pressure Units	Database Source	Special Condition	Boundary Flow (+ = in/- = out)
59	Branch	Yes	605.5	feet				None	
60	Branch	Yes	580	feet				None	

Branch	Boundary Flow Units	(Pipe #1) K In, K Out	(Pipe #2) K In, K Out	(Pipe #3) K In, K Out	(Pipe #4) K In, K Out	(Pipe #5) K In, K Out	(Pipe #6) K In, K Out	(Pipe #7) K In, K Out
59		(P2) 0, 0	(P51) 0, 0					
60		(P50) 0, 0	(P51) 0, 0					

Branch	(Pipe #8) K In, K Out	(Pipe #9) K In, K Out	(Pipe #10) K In, K Out	(Pipe #11) K In, K Out	(Pipe #12) K In, K Out	(Pipe #13) K In, K Out	(Pipe #14) K In, K Out	(Pipe #15) K In, K Out	(Pipe #16) K In, K Out
59									
60									

Branch	(Pipe #17) K In, K Out	(Pipe #18) K In, K Out	(Pipe #19) K In, K Out	(Pipe #20) K In, K Out	(Pipe #21) K In, K Out	(Pipe #22) K In, K Out	(Pipe #23) K In, K Out	(Pipe #24) K In, K Out	(Pipe #25) K In, K Out
59									
60									

Control Valve Table

CALCULATION SHEET

Project No. S54413.024	**Calculation No.** S54413.024-M-002	**Rev.** 0	**Page No.** 115 of 180
Title: Leachate and Basin Pump Flow Calculation			
Prepared By: Gallegos, JF, P.E.	**Date:** 4/10/2020	**Checked By:** Dixon, KW, P.E.	**Date:** 4/10/2020

AFT Fathom 10 (Model)
3/26/2020
Page 4

AFT Fathom Model

Control Valve	Name	Object Defined	Inlet Elevation	Elevation Units	Initial Pressure	Initial Pressure Units	Database Source	Special Condition	Valve Type
56	Control Valve	Yes	605.5	feet				None	FCV

Control Valve	Control Setting	Control Units	Pressure/ Head Type	Inlet Failure Type	Outlet Failure Type	Full Open Loss Type	Full Open Loss
56	125	gal/min	N/A	Fully Open	N/A	Cv Table	437.29

Pump Table

Pump	Name	Object Defined	Inlet Elevation	Elevation Units	Initial Pressure	Initial Pressure Units	Database Source	Special Condition	Pump Type
5	Pump	Yes	576.6	feet				None	Pump Curve

Pump	Design Flow Rate	Design Flow Rate Units	Current Configuration	Independent Variable	Ind. Variable Units	Dependent Variable	Dep. Variable Units	Pump Curve Constant a
5				Vol. Flow Rate	gal/min	Head Rise	feet	221.5061

Pump	Pump Curve Constant b	Pump Curve Constant c	Pump Curve Constant d	Pump Curve Constant e	Runout Flow Rate	Runout Flow Rate Units	Speed	Control When Exceeded Only
5	-0.03898634	-0.002236957	0	0			100	

Pump	Heat Added To Fluid	Heat Added Units
5	0	Percent

Three Way Valve Table

Three Way Valve	Name	Object Defined	Inlet Elevation	Elevation Units	Initial Pressure	Initial Pressure Units	Database Source
63	Three Way Valve	Yes	605.5	feet			
69	Three Way Valve	Yes	605.5	feet			

Three Way Valve	Special Condition	Loss Model	Percent Open	Cv Pipe #1	Cv Pipe #2
63	Pipe #2 Closed	Cv	100	561	0
69	Pipe #2 Closed	Cv	0	409	0

Valve Table

Valve	Name	Object Defined	Inlet Elevation	Elevation Units	Initial Pressure	Initial Pressure Units	Database Source	Special Condition	Exit Valve	Exit Pressure
7	Valve	Yes	605.5	feet				None	No	

Valve	Exit Pressure Units	Restricted Area	Restricted Area Units	Loss Model	Loss Source	Loss Factor	Percent Open	Open Pct. Data Exists	Independent Variable
7				K Constant	N/A	0.76383		No	

CALCULATION SHEET

Project No. S54413.024	**Calculation No.** S54413.024-M-002	**Rev.** 0	**Page No.** 116 of 180
Title: Leachate and Basin Pump Flow Calculation			
Prepared By: Gallegos, JF, P.E.	**Date:** 4/10/2020	**Checked By:** Dixon, KW, P.E.	**Date:** 4/10/2020

AFT Fathom 10 (Model) 3/26/2020 Page 5	AFT Fathom Model	

Valve	Ind. Variable Units	Dependent Variable	Dep. Variable Units	Loss Constant a	Loss Constant b	Loss Constant c	Loss Constant d	Loss Constant e
7								

CALCULATION SHEET

Project No. S54413.024	**Calculation No.** S54413.024-M-002	**Rev.** 0	**Page No.** 117 of 180
Title: Leachate and Basin Pump Flow Calculation			
Prepared By: Gallegos, JF, P.E.	**Date:** 4/10/2020	**Checked By:** Dixon, KW, P.E.	**Date:** 4/10/2020

AFT Fathom 10 (Output) 3/26/2020 Page 1	AFT Fathom Model	

Model Reference Information

General

Title: AFT Fathom Model
Analysis run on: 3/26/2020 3:25:48 PM
Application version: AFT Fathom Version 10 (2018.05.21)
Input File: P:\Clients\Washington River Protection Solutions - WRPS 544\S54413.024 - LERF Basin 41 Design\Calculations\Mech\M-002 Flow\Rev 0\LERF TransferRev0.fth
Scenario: Base Scenario/RecircRunHighBasin/Cavitation Check
Output File: P:\Clients\Washington River Protection Solutions - WRPS 544\S54413.024 - LERF Basin 41 Design\Calculations\Mech\M-002 Flow\Rev 0\LERF TransferRev0_F7.out

Execution Time= 0.05 seconds
Total Number Of Head/Pressure Iterations= 0
Total Number Of Flow Iterations= 2
Total Number Of Temperature Iterations= 0
Number Of Pipes= 11
Number Of Junctions= 12
Matrix Method= Gaussian Elimination

Pressure/Head Tolerance= 0.0001 relative change
Flow Rate Tolerance= 0.0001 relative change
Temperature Tolerance= 0.0001 relative change
Flow Relaxation= (Automatic)
Pressure Relaxation= (Automatic)

Constant Fluid Property Model
Fluid Database: User Specified
Fluid= User Specified
Density= 1 S.G. water
Viscosity= 1 centipoise
Vapor Pressure= Unspecified
Viscosity Model= Newtonian
Apply laminar and non-Newtonian correction to: Pipe Fittings & Losses, Junction K factors, Junction Special Losses, Junction Polynomials
Corrections applied to the following junctions: Branch, Reservoir, Assigned Flow, Assigned Pressure, Area Change, Bend, Tee or Wye, Spray Discharge, Relief Valve

Ambient Pressure (constant)= 1 atm
Gravitational Acceleration= 1 g
Turbulent Flow Above Reynolds Number= 4000
Laminar Flow Below Reynolds Number= 2300
Total Inflow= 125.0 gal/min
Total Outflow= 125.0 gal/min
Maximum Static Pressure is 103.9 psia at Pipe 50 Inlet
Minimum Static Pressure is 13.40 psia at Pipe 56 Inlet

Warnings

No Warnings

Applied Standards

===== ANSI/HI 9.6.3-2017 - Rotodynamic Pumps - Guideline for Operating Regions =====
Pump 5 set to specific speed <=4500 (US Customary), with lower POR 70% and upper POR 120% of BEP

CALCULATION SHEET

Project No. S54413.024	**Calculation No.** S54413.024-M-002	**Rev.** 0	**Page No.** 118 of 180
Title: Leachate and Basin Pump Flow Calculation			
Prepared By: Gallegos, JF, P.E.	**Date:** 4/10/2020	**Checked By:** Dixon, KW, P.E.	**Date:** 4/10/2020

AFT Fathom 10 (Output) 3/26/2020 Page 2	AFT Fathom Model	

Pump Summary

Jct	Results Diagram	Name	Vol. Flow (gal/min)	Mass Flow (lbm/sec)	dP (psid)	dH (feet)	Overall Efficiency (Percent)	Speed (Percent)	Overall Power (hp)	BEP (gal/min)	% of BEP (Percent)	NPSHA (feet)
5	Show	Pump	125.0	17.37	78.70	181.7	N/A	100.0	5.737	N/A	N/A	N/A

Jct	NPSHR (feet)
5	N/A

Valve Summary

Jct	Name	Valve Type	Vol. Flow (gal/min)	Mass Flow (lbm/sec)	dP Stag. (psid)	dH (feet)	P Static In (psig)	Cv	K
7	Valve	REGULAR	125.0	17.37	0.05103	0.1178	-1.045	553.35	0.7638
56	Control Valve	FCV	125.0	17.37	76.73226	177.1454	74.812	14.27	79.8046
63 [P55]	Three Way Valve	THREE-WAY	125.0	17.37	0.04965	0.1146	-1.099	561.00	0.7432
X63 [P60]	Three Way Valve	THREE-WAY	0.0	0.00	N/A	N/A	-1.099	N/A	N/A
69 [P56]	Three Way Valve	THREE-WAY	125.0	17.37	0.09341	0.2156	-1.169	409.00	1.3982
X69 [P59]	Three Way Valve	THREE-WAY	0.0	0.00	N/A	N/A	-1.169	N/A	N/A

Jct	Valve State	Open Percentage (Percent)
7	Open	N/A
56	Open	30.86
63 [P55]	Open	100.00
X63 [P60]	Closed By User	N/A
69 [P56]	Open	0.00
X69 [P59]	Closed By User	N/A

Pipe Output Table

Pipe	Name	Vol. Flow Rate (gal/min)	Velocity (feet/sec)	P Static Max (psig)	P Static Min (psig)	Elevation Inlet (feet)	Elevation Outlet (feet)	dP Stag. Total (psid)	dP Static Total (psid)	dP Gravity (psid)	dH (feet)
2	Pipe	125.0	3.150	76.3304	76.192	605.5	605.5	0.13858	0.13858	0.0000	0.31992
3	Pipe	125.0	11.951	75.0804	74.812	605.5	605.5	0.26807	0.26807	0.0000	0.61886
33	Pipe	125.0	4.805	89.1103	89.099	576.6	576.6	0.01148	0.01148	0.0000	0.02650
50	Pipe	125.0	3.150	89.1691	87.676	576.6	580.0	1.49283	1.49283	1.4728	0.04634
51	Pipe	125.0	2.814	87.6898	76.344	580.0	605.5	11.34587	11.34587	11.0456	0.69327
52	Pipe	125.0	3.150	-1.0253	-1.045	605.5	605.5	0.02007	0.02007	0.0000	0.04634
54	Pipe	125.0	3.150	-1.0964	-1.137	605.5	605.5	0.04014	0.04014	0.0000	0.09268

CALCULATION SHEET

Project No. S54413.024	**Calculation No.** S54413.024-M-002	**Rev.** 0	**Page No.** 119 of 180
Title: Leachate and Basin Pump Flow Calculation			
Prepared By: Gallegos, JF, P.E.	**Date:** 4/10/2020	**Checked By:** Dixon, KW, P.E.	**Date:** 4/10/2020

AFT Fathom 10 (Output)
3/26/2020
Page 3

AFT Fathom Model

Pipe	P Static In (psia)	P Static Out (psia)	P Stag. In (psia)	P Stag. Out (psia)
2	91.03	90.89	91.09	90.95
3	89.78	89.51	90.74	90.47
33	103.81	103.79	103.96	103.95
50	103.87	102.37	103.93	102.44
51	102.39	91.04	102.44	91.09
52	13.67	13.65	13.74	13.72
54	13.60	13.56	13.67	13.63

Pipe	Name	Vol. Flow Rate (gal/min)	Velocity (feet/sec)	P Static Max (psig)	P Static Min (psig)	Elevation Inlet (feet)	Elevation Outlet (feet)	dP Stag. Total (psid)	dP Static Total (psid)	dP Gravity (psid)	dH (feet)
55	Pipe	125.0	3.150	-1.1862	-1.206	605.5	605.5	0.02007	0.02007	0.0000	0.04634
56	Pipe	125.0	3.150	0.0000	-1.300	605.5	602.0	-1.29964	-1.29964	-1.5161	0.49962
59	Pipe	0.0	0.000	0.2166	0.000	605.5	606.0	0.21658	0.21658	0.2166	0.00000
60	Pipe	0.0	0.000	0.2166	0.000	605.5	606.0	0.21658	0.21658	0.2166	0.00000

Pipe	P Static In (psia)	P Static Out (psia)	P Stag. In (psia)	P Stag. Out (psia)
55	13.51	13.49	13.58	13.56
56	13.40	14.70	13.46	14.76
59	14.91	14.70	14.91	14.70
60	14.91	14.70	14.91	14.70

All Junction Table

Jct	Name	P Static In (psia)	P Static Out (psia)	P Stag. In (psia)	P Stag. Out (psia)	Vol. Flow Rate Thru Jct (gal/min)	Mass Flow Rate Thru Jct (lbm/sec)	Loss Factor (K)
5	Pump	25.11	103.81	25.27	103.96	125.0	17.37	0.0000
7	Valve	13.65	13.60	13.72	13.67	125.0	17.37	0.7638
35	Area Change	103.79	103.87	103.95	103.93	125.0	17.37	0.1180
56	Control Valve	89.51	13.67	90.47	13.74	125.0	17.37	79.8046
59	Branch	91.04	91.03	91.09	91.09	125.0	17.37	0.0000
60	Branch	102.37	102.39	102.44	102.44	125.0	17.37	0.0000
61	Area Change	90.89	89.78	90.95	90.74	125.0	17.37	3.2447
63	Three Way Valve	13.60	13.60	13.63	13.63	N/A	N/A	See Mult. Losses
65	Assigned Pressure	14.70	14.63	14.76	14.70	125.0	17.37	1.0000
69	Three Way Valve	13.53	13.53	13.56	13.56	N/A	N/A	See Mult. Losses
70	Assigned Pressure	14.70	14.70	14.70	14.70	0.0	0.00	0.0000
71	Assigned Pressure	14.70	14.70	14.70	14.70	0.0	0.00	0.0000

CALCULATION SHEET

Project No. S54413.024	**Calculation No.** S54413.024-M-002	**Rev.** 0	**Page No.** 120 of 180
Title: Leachate and Basin Pump Flow Calculation			
Prepared By: Gallegos, JF, P.E.	**Date:** 4/10/2020	**Checked By:** Dixon, KW, P.E.	**Date:** 4/10/2020

Pump Run-Out

CALCULATION SHEET

Project No. S54413.024	**Calculation No.** S54413.024-M-002	**Rev.** 0	**Page No.** 121 of 180
Title: Leachate and Basin Pump Flow Calculation			
Prepared By: Gallegos, JF, P.E.	**Date:** 4/10/2020	**Checked By:** Dixon, KW, P.E.	**Date:** 4/10/2020

AFT Fathom 10 (Model) 3/26/2020 Page 1	AFT Fathom Model	

General

Title: AFT Fathom Model
Input File: P:\Clients\Washington River Protection Solutions - WRPS 544\S54413.024 - LERF Basin 41 Design\Calculations\Mech\M-002 Flow\Rev 0\LERF TransferRev0.fth
Scenario: Base Scenario/RecircRunHighBasin/Run-Out Check

Number Of Pipes= 11
Number Of Junctions= 12

Pressure/Head Tolerance= 0.0001 relative change
Flow Rate Tolerance= 0.0001 relative change
Temperature Tolerance= 0.0001 relative change
Flow Relaxation= (Automatic)
Pressure Relaxation= (Automatic)

Constant Fluid Property Model
Fluid Database: User Specified
Fluid= User Specified
Density= 1 S.G. water
Viscosity= 1 centipoise
Vapor Pressure= Unspecified
Viscosity Model= Newtonian
Apply laminar and non-Newtonian correction to: Pipe Fittings & Losses, Junction K factors, Junction Special Losses, Junction Polynomials
Corrections applied to the following junctions: Branch, Reservoir, Assigned Flow, Assigned Pressure, Area Change, Bend, Tee or Wye, Spray Discharge, Relief Valve

Ambient Pressure (constant)= 1 atm
Gravitational Acceleration= 1 g
Turbulent Flow Above Reynolds Number= 4000
Laminar Flow Below Reynolds Number= 2300

Pipes

Pipe	Name	Pipe Defined	Length	Length Units	Hydraulic Diameter	Hydraulic Diam. Units	Friction Data Set	Roughness	Roughness Units	Losses (K)
2	Pipe	Yes	30	feet	4.026	inches	Standard	0.0018	inches	0.271584
3	Pipe	Yes	2	feet	2.067	inches	Standard	0.0018	inches	0.04
33	Pipe	Yes	1	feet	3.26	inches	Standard	0.0018	inches	0
50	Pipe	Yes	5	feet	4.026	inches	Standard	0.0018	inches	0
51	Pipe	Yes	98.93	feet	4.26	inches	Standard	0.0018	inches	0
52	Pipe	Yes	5	feet	4.026	inches	Standard	0.0018	inches	0
54	Pipe	Yes	10	feet	4.026	inches	Standard	0.0018	inches	0
55	Pipe	Yes	5	feet	4.026	inches	Standard	0.0018	inches	0
56	Pipe	Yes	46	feet	4.026	inches	Standard	0.0018	inches	0.4752721
59	Pipe	Yes	1	feet	3.068	inches	Standard	0.0018	inches	0
60	Pipe	Yes	1	feet	3.068	inches	Standard	0.0018	inches	0

CALCULATION SHEET

Project No. S54413.024	**Calculation No.** S54413.024-M-002	**Rev.** 0	**Page No.** 122 of 180
Title: Leachate and Basin Pump Flow Calculation			
Prepared By: Gallegos, JF, P.E.	**Date:** 4/10/2020	**Checked By:** Dixon, KW, P.E.	**Date:** 4/10/2020

AFT Fathom 10 (Model)
3/26/2020
Page 2

AFT Fathom Model

Pipe	Initial Flow	Initial Flow Units	Junctions (Up,Down)	Geometry	Material	Size	Type	Special Condition
2			59, 61	Cylindrical Pipe	Steel - ANSI	4 inch	schedule 40	None
3			61, 56	Cylindrical Pipe	Steel - ANSI	2 inch	schedule 40	None
33			5, 35	Cylindrical Pipe	Steel - ANSI	3 inch	Schedule 10	None
50			35, 60	Cylindrical Pipe	Steel - ANSI	4 inch	STD (schedule 40)	None
51			60, 59	Cylindrical Pipe	Steel - ANSI	4 inch	Schedule 10	None
52			56, 7	Cylindrical Pipe	Steel - ANSI	4 inch	schedule 40	None
54			7, 63	Cylindrical Pipe	Steel - ANSI	4 inch	schedule 40	None
55			63, 69	Cylindrical Pipe	Steel - ANSI	4 inch	schedule 40	None
56			69, 65	Cylindrical Pipe	Steel - ANSI	4 inch	schedule 40	None
59			69, 70	Cylindrical Pipe	Steel - ANSI	3 inch	STD (schedule 40)	None
60			63, 71	Cylindrical Pipe	Steel - ANSI	3 inch	STD (schedule 40)	None

Pipe Fittings & Losses

Pipe	Total K	Elbow/Bend Standard Threaded	Elbow/Bend Smooth Flanged	Other Tee
2	0.27	1 (0.27)		
3	0.04			1 (0.04)
56	0.48		2 (0.48)	

Area Change Table

Area Change	Name	Object Defined	Inlet Elevation	Elevation Units	Initial Pressure	Initial Pressure Units	Database Source	Type
35	Area Change	Yes	576.8	feet				Conical
61	Area Change	Yes	605.5	feet				Conical

Area Change	Geometry	Angle	Loss Factor
35	Expansion	45	0.1179652
61	Contraction	45	3.244747

Assigned Pressure Table

Assigned Pressure	Name	Object Defined	Inlet Elevation	Elevation Units	Initial Pressure	Initial Pressure Units	Database Source
65	Assigned Pressure	Yes	602	feet	1.000	atm	
70	Assigned Pressure	Yes	606	feet	1.000	atm	
71	Assigned Pressure	Yes	606	feet	1.000	atm	

Sargent & Lundy Engineering Services, Inc

CALCULATION SHEET

Project No. S54413.024	**Calculation No.** S54413.024-M-002	**Rev.** 0	**Page No.** 123 of 180
Title: Leachate and Basin Pump Flow Calculation			
Prepared By: Gallegos, JF, P.E.	**Date:** 4/10/2020	**Checked By:** Dixon, KW, P.E.	**Date:** 4/10/2020

AFT Fathom 10 (Model)
3/26/2020
Page 3

AFT Fathom Model

Assigned Pressure	Pressure	Pressure Units	Pressure Type	Balance Energy	Balance Concentration	(Pipe #1) K In, K Out	(Pipe #2) K In, K Out	(Pipe #3) K In, K Out
65	1	atm	Stagnation	No	No	(P56) 0, 0		
70	1	atm	Stagnation	No	No	(P59) 0, 0		
71	1	atm	Stagnation	No	No	(P60) 0, 0		

Assigned Pressure	(Pipe #4) K In, K Out	(Pipe #5) K In, K Out	(Pipe #6) K In, K Out	(Pipe #7) K In, K Out	(Pipe #8) K In, K Out	(Pipe #9) K In, K Out	(Pipe #10) K In, K Out	(Pipe #11) K In, K Out
65								
70								
71								

Assigned Pressure	(Pipe #12) K In, K Out	(Pipe #13) K In, K Out	(Pipe #14) K In, K Out	(Pipe #15) K In, K Out	(Pipe #16) K In, K Out	(Pipe #17) K In, K Out	(Pipe #18) K In, K Out	(Pipe #19) K In, K Out
65								
70								
71								

Assigned Pressure	(Pipe #20) K In, K Out	(Pipe #21) K In, K Out	(Pipe #22) K In, K Out	(Pipe #23) K In, K Out	(Pipe #24) K In, K Out	(Pipe #25) K In, K Out
65						
70						
71						

Branch Table

Branch	Name	Object Defined	Inlet Elevation	Elevation Units	Initial Pressure	Initial Pressure Units	Database Source	Special Condition	Boundary Flow (+ = in/- = out)
59	Branch	Yes	605.5	feet				None	
60	Branch	Yes	580	feet				None	

Branch	Boundary Flow Units	(Pipe #1) K In, K Out	(Pipe #2) K In, K Out	(Pipe #3) K In, K Out	(Pipe #4) K In, K Out	(Pipe #5) K In, K Out	(Pipe #6) K In, K Out	(Pipe #7) K In, K Out
59		(P2) 0, 0	(P51) 0, 0					
60		(P50) 0, 0	(P51) 0, 0					

Branch	(Pipe #8) K In, K Out	(Pipe #9) K In, K Out	(Pipe #10) K In, K Out	(Pipe #11) K In, K Out	(Pipe #12) K In, K Out	(Pipe #13) K In, K Out	(Pipe #14) K In, K Out	(Pipe #15) K In, K Out	(Pipe #16) K In, K Out
59									
60									

Branch	(Pipe #17) K In, K Out	(Pipe #18) K In, K Out	(Pipe #19) K In, K Out	(Pipe #20) K In, K Out	(Pipe #21) K In, K Out	(Pipe #22) K In, K Out	(Pipe #23) K In, K Out	(Pipe #24) K In, K Out	(Pipe #25) K In, K Out
59									
60									

Control Valve Table

CALCULATION SHEET

Project No. S54413.024	**Calculation No.** S54413.024-M-002	**Rev.** 0	**Page No.** 124 of 180
Title: Leachate and Basin Pump Flow Calculation			
Prepared By: Gallegos, JF, P.E.	**Date:** 4/10/2020	**Checked By:** Dixon, KW, P.E.	**Date:** 4/10/2020

AFT Fathom 10 (Model)
3/26/2020
Page 4

AFT Fathom Model

Control Valve	Name	Object Defined	Inlet Elevation	Elevation Units	Initial Pressure	Initial Pressure Units	Database Source	Special Condition	Valve Type
56	Control Valve	Yes	605.5	feet				None	FCV

Control Valve	Control Setting	Control Units	Pressure/ Head Type	Inlet Failure Type	Outlet Failure Type	Full Open Loss Type	Full Open Loss
56	280	gal/min	N/A	Fully Open	N/A	Cv Table	437.29

Pump Table

Pump	Name	Object Defined	Inlet Elevation	Elevation Units	Initial Pressure	Initial Pressure Units	Database Source	Special Condition	Pump Type
5	Pump	Yes	576.6	feet				None	Pump Curve

Pump	Design Flow Rate	Design Flow Rate Units	Current Configuration	Independent Variable	Ind. Variable Units	Dependent Variable	Dep. Variable Units	Pump Curve Constant a
5				Vol. Flow Rate	gal/min	Head Rise	feet	221.5061

Pump	Pump Curve Constant b	Pump Curve Constant c	Pump Curve Constant d	Pump Curve Constant e	Runout Flow Rate	Runout Flow Rate Units	Speed	Control When Exceeded Only
5	-0.03898634	-0.002236957	0	0			100	

Pump	Heat Added To Fluid	Heat Added Units
5	0	Percent

Three Way Valve Table

Three Way Valve	Name	Object Defined	Inlet Elevation	Elevation Units	Initial Pressure	Initial Pressure Units	Database Source
63	Three Way Valve	Yes	605.5	feet			
69	Three Way Valve	Yes	605.5	feet			

Three Way Valve	Special Condition	Loss Model	Percent Open	Cv Pipe #1	Cv Pipe #2
63	Pipe #2 Closed	Cv	100	561	0
69	Pipe #2 Closed	Cv	0	409	0

Valve Table

Valve	Name	Object Defined	Inlet Elevation	Elevation Units	Initial Pressure	Initial Pressure Units	Database Source	Special Condition	Exit Valve	Exit Pressure
7	Valve	Yes	605.5	feet				None	No	

Valve	Exit Pressure Units	Restricted Area	Restricted Area Units	Loss Model	Loss Source	Loss Factor	Percent Open	Open Pct. Data Exists	Independent Variable
7				K Constant	N/A	0.76383		No	

CALCULATION SHEET

Project No. S54413.024	**Calculation No.** S54413.024-M-002	**Rev.** 0	**Page No.** 125 of 180
Title: Leachate and Basin Pump Flow Calculation			
Prepared By: Gallegos, JF, P.E.	**Date:** 4/10/2020	**Checked By:** Dixon, KW, P.E.	**Date:** 4/10/2020

AFT Fathom 10 (Model) 3/26/2020 Page 5	AFT Fathom Model	

Valve	Ind. Variable Units	Dependent Variable	Dep. Variable Units	Loss Constant a	Loss Constant b	Loss Constant c	Loss Constant d	Loss Constant e
7								

CALCULATION SHEET

Project No. S54413.024	**Calculation No.** S54413.024-M-002	**Rev.** 0	**Page No.** 126 of 180
Title: Leachate and Basin Pump Flow Calculation			
Prepared By: Gallegos, JF, P.E.	**Date:** 4/10/2020	**Checked By:** Dixon, KW, P.E.	**Date:** 4/10/2020

AFT Fathom 10 (Output) 3/26/2020 Page 1	AFT Fathom Model	

Model Reference Information

General

Title: AFT Fathom Model
Analysis run on: 3/26/2020 3:25:53 PM
Application version: AFT Fathom Version 10 (2018.05.21)
Input File: P:\Clients\Washington River Protection Solutions - WRPS 544\S54413.024 - LERF Basin 41 Design\Calculations\Mech\M-002 Flow\Rev 0\LERF TransferRev0.fth
Scenario: Base Scenario/RecircRunHighBasin/Run-Out Check
Output File: P:\Clients\Washington River Protection Solutions - WRPS 544\S54413.024 - LERF Basin 41 Design\Calculations\Mech\M-002 Flow\Rev 0\LERF TransferRev0_F8.out

Execution Time= 0.03 seconds
Total Number Of Head/Pressure Iterations= 0
Total Number Of Flow Iterations= 2
Total Number Of Temperature Iterations= 0
Number Of Pipes= 11
Number Of Junctions= 12
Matrix Method= Gaussian Elimination

Pressure/Head Tolerance= 0.0001 relative change
Flow Rate Tolerance= 0.0001 relative change
Temperature Tolerance= 0.0001 relative change
Flow Relaxation= (Automatic)
Pressure Relaxation= (Automatic)

Constant Fluid Property Model
Fluid Database: User Specified
Fluid= User Specified
Density= 1 S.G. water
Viscosity= 1 centipoise
Vapor Pressure= Unspecified
Viscosity Model= Newtonian
Apply laminar and non-Newtonian correction to: Pipe Fittings & Losses, Junction K factors, Junction Special Losses, Junction Polynomials
Corrections applied to the following junctions: Branch, Reservoir, Assigned Flow, Assigned Pressure, Area Change, Bend, Tee or Wye, Spray Discharge, Relief Valve

Ambient Pressure (constant)= 1 atm
Gravitational Acceleration= 1 g
Turbulent Flow Above Reynolds Number= 4000
Laminar Flow Below Reynolds Number= 2300
Total Inflow= 280.0 gal/min
Total Outflow= 280.0 gal/min
Maximum Static Pressure is 40.04 psia at Pipe 50 Inlet
Minimum Static Pressure is 13.85 psia at Pipe 56 Inlet

Warnings

No Warnings

Applied Standards

===== ANSI/HI 9.6.3-2017 - Rotodynamic Pumps - Guideline for Operating Regions =====
Pump 5 set to specific speed <=4500 (US Customary), with lower POR 70% and upper POR 120% of BEP

CALCULATION SHEET

Project No. S54413.024	**Calculation No.** S54413.024-M-002	**Rev.** 0	**Page No.** 127 of 180
Title: Leachate and Basin Pump Flow Calculation			
Prepared By: Gallegos, JF, P.E.	**Date:** 4/10/2020	**Checked By:** Dixon, KW, P.E.	**Date:** 4/10/2020

AFT Fathom 10 (Output) 3/26/2020 Page 2	AFT Fathom Model	

Pump Summary

Jct	Results Diagram	Name	Vol. Flow (gal/min)	Mass Flow (lbm/sec)	dP (psid)	dH (feet)	Overall Efficiency (Percent)	Speed (Percent)	Overall Power (hp)	BEP (gal/min)	% of BEP (Percent)	NPSHA (feet)
5	Show	Pump	280.0	38.91	15.25	35.21	N/A	100.0	2.491	N/A	N/A	N/A

Jct	NPSHR (feet)
5	N/A

Valve Summary

Jct	Name	Valve Type	Vol. Flow (gal/min)	Mass Flow (lbm/sec)	dP Stag. (psid)	dH (feet)	P Static In (psia)	Cv	K
7	Valve	REGULAR	280.0	38.91	0.2560	0.5911	15.10	553.35	0.7638
56	Control Valve	FCV	280.0	38.91	7.8426	18.1056	18.54	99.98	1.6256
63 [P55]	Three Way Valve	THREE-WAY	280.0	38.91	0.2491	0.5751	14.84	561.00	0.7432
X63 [P60]	Three Way Valve	THREE-WAY	0.0	0.00	N/A	N/A	14.84	N/A	N/A
69 [P56]	Three Way Valve	THREE-WAY	280.0	38.91	0.4687	1.0820	14.50	409.00	1.3982
X69 [P59]	Three Way Valve	THREE-WAY	0.0	0.00	N/A	N/A	14.50	N/A	N/A

Jct	Valve State	Open Percentage (Percent)
7	Open	N/A
56	Open	58.55
63 [P55]	Open	100.00
X63 [P60]	Closed By User	N/A
69 [P56]	Open	0.00
X69 [P59]	Closed By User	N/A

Pipe Output Table

Pipe	Name	Vol. Flow Rate (gal/min)	Velocity (feet/sec)	P Static Max (psia)	P Static Min (psia)	Elevation Inlet (feet)	Elevation Outlet (feet)	dP Stag. Total (psid)	dP Static Total (psid)	dP Gravity (psid)	dH (feet)
2	Pipe	280.0	7.057	26.06	25.42	605.5	605.5	0.64178	0.64178	0.0000	1.4816
3	Pipe	280.0	26.771	19.84	18.54	605.5	605.5	1.29876	1.29876	0.0000	2.9983
33	Pipe	280.0	10.762	39.74	39.68	576.6	576.6	0.05344	0.05344	0.0000	0.1234
50	Pipe	280.0	7.057	40.04	38.47	576.6	580.0	1.56454	1.56454	1.4728	0.2119
51	Pipe	280.0	6.303	38.54	26.13	580.0	605.5	12.41226	12.41226	11.0456	3.1551
52	Pipe	280.0	7.057	15.19	15.10	605.5	605.5	0.09179	0.09179	0.0000	0.2119
54	Pipe	280.0	7.057	14.84	14.66	605.5	605.5	0.18358	0.18358	0.0000	0.4238

CALCULATION SHEET

Project No. S54413.024	**Calculation No.** S54413.024-M-002	**Rev.** 0	**Page No.** 128 of 180
Title: Leachate and Basin Pump Flow Calculation			
Prepared By: Gallegos, JF, P.E.	**Date:** 4/10/2020	**Checked By:** Dixon, KW, P.E.	**Date:** 4/10/2020

AFT Fathom 10 (Output)
3/26/2020
Page 3

AFT Fathom Model

Pipe	P Static In (psia)	P Static Out (psia)	P Stag. In (psia)	P Stag. Out (psia)
2	26.06	25.42	26.40	25.75
3	19.84	18.54	24.67	23.37
33	39.74	39.68	40.52	40.46
50	40.04	38.47	40.37	38.81
51	38.54	26.13	38.81	26.40
52	15.19	15.10	15.52	15.43
54	14.84	14.66	15.18	14.99

Pipe	Name	Vol. Flow Rate (gal/min)	Velocity (feet/sec)	P Static Max (psia)	P Static Min (psia)	Elevation Inlet (feet)	Elevation Outlet (feet)	dP Stag. Total (psid)	dP Static Total (psid)	dP Gravity (psid)	dH (feet)
55	Pipe	280.0	7.057	14.41	14.32	605.5	605.5	0.09179	0.09179	0.0000	0.2119
56	Pipe	280.0	7.057	14.36	13.85	605.5	602.0	-0.51227	-0.51227	-1.5161	2.3174
59	Pipe	0.0	0.000	14.91	14.70	605.5	606.0	0.21658	0.21658	0.2166	0.0000
60	Pipe	0.0	0.000	14.91	14.70	605.5	606.0	0.21658	0.21658	0.2166	0.0000

Pipe	P Static In (psia)	P Static Out (psia)	P Stag. In (psia)	P Stag. Out (psia)
55	14.41	14.32	14.74	14.65
56	13.85	14.36	14.18	14.70
59	14.91	14.70	14.91	14.70
60	14.91	14.70	14.91	14.70

All Junction Table

Jct	Name	P Static In (psia)	P Static Out (psia)	P Stag. In (psia)	P Stag. Out (psia)	Vol. Flow Rate Thru Jct (gal/min)	Mass Flow Rate Thru Jct (lbm/sec)	Loss Factor (K)
5	Pump	24.49	39.74	25.27	40.52	280.0	38.91	0.0000
7	Valve	15.10	14.84	15.43	15.18	280.0	38.91	0.7638
35	Area Change	39.68	40.04	40.46	40.37	280.0	38.91	0.1180
56	Control Valve	18.54	15.19	23.37	15.52	280.0	38.91	1.6256
59	Branch	26.13	26.06	26.40	26.40	280.0	38.91	0.0000
60	Branch	38.47	38.54	38.81	38.81	280.0	38.91	0.0000
61	Area Change	25.42	19.84	25.75	24.67	280.0	38.91	3.2447
63	Three Way Valve	14.84	14.84	14.99	14.99	N/A	N/A	See Mult. Losses
65	Assigned Pressure	14.36	14.36	14.70	14.70	280.0	38.91	0.0000
69	Three Way Valve	14.50	14.50	14.65	14.65	N/A	N/A	See Mult. Losses
70	Assigned Pressure	14.70	14.70	14.70	14.70	0.0	0.00	0.0000
71	Assigned Pressure	14.70	14.70	14.70	14.70	0.0	0.00	0.0000

CALCULATION SHEET

Project No. S54413.024	**Calculation No.** S54413.024-M-002	**Rev.** 0	**Page No.** 129 of 180
Title: Leachate and Basin Pump Flow Calculation			
Prepared By: Gallegos, JF, P.E.	**Date:** 4/10/2020	**Checked By:** Dixon, KW, P.E.	**Date:** 4/10/2020

APPENDIX F

LEACHATE PUMP FATHOM MODEL

CALCULATION SHEET

Project No. S54413.024	**Calculation No.** S54413.024-M-002	**Rev.** 0	**Page No.** 130 of 180
Title: Leachate and Basin Pump Flow Calculation			
Prepared By: Gallegos, JF, P.E.	**Date:** 4/10/2020	**Checked By:** Dixon, KW, P.E.	**Date:** 4/10/2020

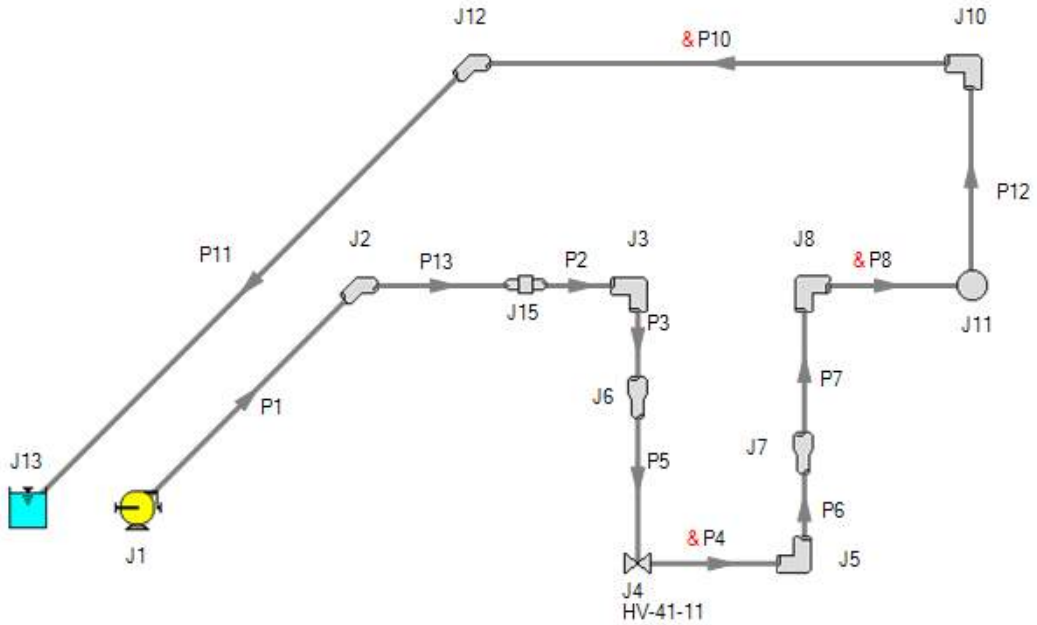

APPENDIX G

LEACHATE PUMP FATHOM INPUTS AND OUTPUTS

Minimum Flow

Maximum Flow

CALCULATION SHEET

Project No. S54413.024	**Calculation No.** S54413.024-M-002	**Rev.** 0	**Page No.** 132 of 180
Title: Leachate and Basin Pump Flow Calculation			
Prepared By: Gallegos, JF, P.E.	**Date:** 4/10/2020	**Checked By:** Dixon, KW, P.E.	**Date:** 4/10/2020

Minimum Flow

CALCULATION SHEET

Project No. S54413.024	**Calculation No.** S54413.024-M-002	**Rev.** 0	**Page No.** 133 of 180
Title: Leachate and Basin Pump Flow Calculation			
Prepared By: Gallegos, JF, P.E.	**Date:** 4/10/2020	**Checked By:** Dixon, KW, P.E.	**Date:** 4/10/2020

AFT Fathom 10 (Model) 3/26/2020 Page 1	AFT Fathom Model	

General

Title: AFT Fathom Model
Input File: P:\Clients\Washington River Protection Solutions - WRPS 544\S54413.024 - LERF Basin 41 Design\Calculations\Mech\M-002 Flow\Rev 0\LERF.fth
Scenario: Base Scenario/Goulds Pump/Minimum Flow

Number Of Pipes= 12
Number Of Junctions= 13

Pressure/Head Tolerance= 0.0001 relative change
Flow Rate Tolerance= 0.0001 relative change
Temperature Tolerance= 0.0001 relative change
Flow Relaxation= (Automatic)
Pressure Relaxation= (Automatic)

Constant Fluid Property Model
Fluid Database: User Specified
Fluid= User Specified
Density= 1 lbm/ft3
Viscosity= 1 centipoise
Vapor Pressure= Unspecified
Viscosity Model= Newtonian
Apply laminar and non-Newtonian correction to: Pipe Fittings & Losses, Junction K factors, Junction Special Losses, Junction Polynomials
Corrections applied to the following junctions: Branch, Reservoir, Assigned Flow, Assigned Pressure, Area Change, Bend, Tee or Wye, Spray Discharge, Relief Valve

Ambient Pressure (constant)= 1 atm
Gravitational Acceleration= 1 g
Turbulent Flow Above Reynolds Number= 4000
Laminar Flow Below Reynolds Number= 2300

Pipes

Pipe	Name	Pipe Defined	Length	Length Units	Hydraulic Diameter	Hydraulic Diam. Units	Friction Data Set	Roughness	Roughness Units	Losses (K)
1	Pipe	Yes	116	feet	1.682	inches	Standard	0.0018	inches	0
2	Pipe	Yes	1.5	feet	1.61	inches	Standard	0.0018	inches	0.04
3	Pipe	Yes	0.75	feet	1.61	inches	Standard	0.0018	inches	0
4	Pipe	Yes	0.5	feet	0.622	inches	Standard	0.0018	inches	0.364336
5	Pipe	Yes	0.75	feet	0.622	inches	Standard	0.0018	inches	0
6	Pipe	Yes	0.75	feet	0.546	inches	Standard	0.0018	inches	0
7	Pipe	Yes	0.75	feet	1.61	inches	Standard	0.0018	inches	0
8	Pipe	Yes	5	inches	1.61	inches	Standard	0.0018	inches	0.04
10	Pipe	Yes	9.8	feet	1.61	inches	Standard	0.0018	inches	0.06168
11	Pipe	Yes	116	feet	1.61	inches	Standard	0.0018	inches	0
12	Pipe	Yes	17	inches	1.61	inches	Standard	0.0018	inches	0
13	Pipe	Yes	1.5	feet	1.61	inches	Standard	0.0018	inches	0

CALCULATION SHEET

Project No. S54413.024	**Calculation No.** S54413.024-M-002	**Rev.** 0	**Page No.** 134 of 180
Title: Leachate and Basin Pump Flow Calculation			
Prepared By: Gallegos, JF, P.E.	**Date:** 4/10/2020	**Checked By:** Dixon, KW, P.E.	**Date:** 4/10/2020

AFT Fathom 10 (Model)
3/26/2020
Page 2

AFT Fathom Model

Pipe	Initial Flow	Initial Flow Units	Junctions (Up,Down)	Geometry	Material	Size	Type	Special Condition
1			1, 2	Cylindrical Pipe	Steel - ANSI	1-1/2 inch	Schedule 10	None
2			15, 3	Cylindrical Pipe	Steel - ANSI	1-1/2 inch	schedule 40	None
3			3, 6	Cylindrical Pipe	Steel - ANSI	1-1/2 inch	schedule 40	None
4			4, 5	Cylindrical Pipe	Steel - ANSI	1/2 inch	schedule 40	None
5			6, 4	Cylindrical Pipe	Steel - ANSI	1/2 inch	schedule 40	None
6			5, 7	Cylindrical Pipe	Steel - ANSI	1/2 inch	schedule 80	None
7			7, 8	Cylindrical Pipe	Steel - ANSI	1-1/2 inch	schedule 40	None
8			8, 11	Cylindrical Pipe	Steel - ANSI	1-1/2 inch	schedule 40	None
10			10, 12	Cylindrical Pipe	Steel - ANSI	1-1/2 inch	schedule 40	None
11			12, 13	Cylindrical Pipe	Steel - ANSI	1-1/2 inch	schedule 40	None
12			11, 10	Cylindrical Pipe	Steel - ANSI	1-1/2 inch	schedule 40	None
13			2, 15	Cylindrical Pipe	Steel - ANSI	1-1/2 inch	schedule 40	None

Pipe Fittings & Losses

Pipe	Total K	Elbow/Bend Smooth Flanged	Valve Ball	Other Tee
2	0.04			1 (0.04)
4	0.36	1 (0.36)		
8	0.04			1 (0.04)
10	0.06		1 (0.06)	

Area Change Table

Area Change	Name	Object Defined	Inlet Elevation	Elevation Units	Initial Pressure	Initial Pressure Units	Database Source	Type
6	Area Change	Yes	605.6	feet				Conical
7	Area Change	Yes	605.6	feet				Conical

Area Change	Geometry	Angle	Loss Factor
6	Contraction	90	16.05661
7	Expansion	90	0.7832083

Branch Table

Branch	Name	Object Defined	Inlet Elevation	Elevation Units	Initial Pressure	Initial Pressure Units	Database Source	Special Condition	Boundary Flow (+ = in/- = out)
11	Branch	Yes	605.6	feet				None	

CALCULATION SHEET

Project No. S54413.024	**Calculation No.** S54413.024-M-002	**Rev.** 0	**Page No.** 135 of 180
Title: Leachate and Basin Pump Flow Calculation			
Prepared By: Gallegos, JF, P.E.	**Date:** 4/10/2020	**Checked By:** Dixon, KW, P.E.	**Date:** 4/10/2020

AFT Fathom 10 (Model)
3/26/2020
Page 3

AFT Fathom Model

Branch	Boundary Flow Units	(Pipe #1) K In, K Out	(Pipe #2) K In, K Out	(Pipe #3) K In, K Out	(Pipe #4) K In, K Out	(Pipe #5) K In, K Out	(Pipe #6) K In, K Out	(Pipe #7) K In, K Out
11		(P8) 1.1, 0	(P12) 0, 0					

Branch	(Pipe #8) K In, K Out	(Pipe #9) K In, K Out	(Pipe #10) K In, K Out	(Pipe #11) K In, K Out	(Pipe #12) K In, K Out	(Pipe #13) K In, K Out	(Pipe #14) K In, K Out	(Pipe #15) K In, K Out	(Pipe #16) K In, K Out
11									

Branch	(Pipe #17) K In, K Out	(Pipe #18) K In, K Out	(Pipe #19) K In, K Out	(Pipe #20) K In, K Out	(Pipe #21) K In, K Out	(Pipe #22) K In, K Out	(Pipe #23) K In, K Out	(Pipe #24) K In, K Out	(Pipe #25) K In, K Out
11									

Pump Table

Pump	Name	Object Defined	Inlet Elevation	Elevation Units	Initial Pressure	Initial Pressure Units	Database Source	Special Condition	Pump Type
1	Pump	Yes	574.5	feet				None	Pump Curve

Pump	Design Flow Rate	Design Flow Rate Units	Current Configuration	Independent Variable	Ind. Variable Units	Dependent Variable	Dep. Variable Units	Pump Curve Constant a
1				Vol. Flow Rate	gal/min	Head Rise	feet	173.1132

Pump	Pump Curve Constant b	Pump Curve Constant c	Pump Curve Constant d	Pump Curve Constant e	Runout Flow Rate	Runout Flow Rate Units	Speed	Control When Exceeded Only
1	-3.244979	-0.2765802	0	0			100	

Pump	Heat Added To Fluid	Heat Added Units
1	0	Percent

Valve Table

Valve	Name	Object Defined	Inlet Elevation	Elevation Units	Initial Pressure	Initial Pressure Units	Database Source	Special Condition	Exit Valve	Exit Pressure
4	HV-41-11	Yes	605.6	feet				None	No	

Valve	Exit Pressure Units	Restricted Area	Restricted Area Units	Loss Model	Loss Source	Loss Factor	Percent Open	Open Pct. Data Exists	Independent Variable
4				Cv	Cv From Table	0.52	30	Yes	

Valve	Ind. Variable Units	Dependent Variable	Dep. Variable Units	Loss Constant a	Loss Constant b	Loss Constant c	Loss Constant d	Loss Constant e
4								

Bend Table

CALCULATION SHEET

Project No. S54413.024	**Calculation No.** S54413.024-M-002	**Rev.** 0	**Page No.** 136 of 180
Title: Leachate and Basin Pump Flow Calculation			
Prepared By: Gallegos, JF, P.E.	**Date:** 4/10/2020	**Checked By:** Dixon, KW, P.E.	**Date:** 4/10/2020

AFT Fathom 10 (Model)
3/26/2020
Page 4

AFT Fathom Model

Bend	Name	Object Defined	Inlet Elevation	Elevation Units	Initial Pressure	Initial Pressure Units	Database Source	Type	Angle (Degrees)	R/D
2	Bend	Yes	605.6	feet				Smooth Bend	45	1.5
3	Bend	Yes	605.6	feet				Smooth Bend	90	1.5
5	Bend	Yes	605.6	feet				Smooth Bend	90	1.5
8	Bend	Yes	605.6	feet				Smooth Bend	90	1.5
10	Bend	Yes	605.6	feet				Smooth Bend	90	1.5
12	Bend	Yes	605.6	feet				Smooth Bend	45	1.5

Bend	Loss Factor
2	0.2009148
3	0.28784
5	0.364336
8	0.28784
10	0.28784
12	0.2037692

General Component Table

General Component	Name	Object Defined	Inlet Elevation	Elevation Units	Initial Pressure	Initial Pressure Units	Database Source
15	General Component	Yes	605.6	feet			

General Component	Special Condition	Loss Model	Loss Value	Independent Variable	Ind. Variable Units	Dependent Variable	Dep. Variable Units
15	None	Resistance Curve	Variable	Vol. Flow Rate	gal/min	Pressure Loss	psid

General Component	Loss Constant a	Loss Constant b	Loss Constant c	Loss Constant d	Loss Constant e
15	5.551115E-17	0	0.0002777778	0	0

Reservoir Table

Reservoir	Name	Object Defined	Inlet Elevation	Elevation Units	Initial Pressure	Initial Pressure Units	Database Source	Liquid Elev.	Liquid Elev. Units
13	Reservoir	Yes						601	feet

Reservoir	Surface Pressure	Surface Pressure Units	Balance Energy	Balance Concentration	(Pipe #1) K In, K Out	(Pipe #2) K In, K Out	(Pipe #3) K In, K Out	(Pipe #4) K In, K Out
13	1	atm	No	No	(P11) 0, 0			

Reservoir	(Pipe #5) K In, K Out	(Pipe #6) K In, K Out	(Pipe #7) K In, K Out	(Pipe #8) K In, K Out	(Pipe #9) K In, K Out	(Pipe #10) K In, K Out	(Pipe #11) K In, K Out	(Pipe #12) K In, K Out	(Pipe #13) K In, K Out
13									

CALCULATION SHEET

Project No. S54413.024	**Calculation No.** S54413.024-M-002	**Rev.** 0	**Page No.** 137 of 180
Title: Leachate and Basin Pump Flow Calculation			
Prepared By: Gallegos, JF, P.E.	**Date:** 4/10/2020	**Checked By:** Dixon, KW, P.E.	**Date:** 4/10/2020

AFT Fathom 10 (Model)
3/26/2020
Page 5

AFT Fathom Model

Reservoir	(Pipe #14) K In, K Out	(Pipe #15) K In, K Out	(Pipe #16) K In, K Out	(Pipe #17) K In, K Out	(Pipe #18) K In, K Out	(Pipe #19) K In, K Out	(Pipe #20) K In, K Out	(Pipe #21) K In, K Out	(Pipe #22) K In, K Out
13									

Reservoir	(Pipe #23) K In, K Out	(Pipe #24) K In, K Out	(Pipe #25) K In, K Out	(Pipe #1) Depth	(Pipe #2) Depth	(Pipe #3) Depth	(Pipe #4) Depth	(Pipe #5) Depth	(Pipe #6) Depth
13				(P11) 576.6					

Reservoir	(Pipe #7) Depth	(Pipe #8) Depth	(Pipe #9) Depth	(Pipe #10) Depth	(Pipe #11) Depth	(Pipe #12) Depth	(Pipe #13) Depth	(Pipe #14) Depth	(Pipe #15) Depth
13									

Reservoir	(Pipe #16) Depth	(Pipe #17) Depth	(Pipe #18) Depth	(Pipe #19) Depth	(Pipe #20) Depth	(Pipe #21) Depth	(Pipe #22) Depth	(Pipe #23) Depth	(Pipe #24) Depth
13									

Reservoir	(Pipe #25) Depth	Pipe Depth Units
13		feet

CALCULATION SHEET

Project No. S54413.024	**Calculation No.** S54413.024-M-002	**Rev.** 0	**Page No.** 138 of 180
Title: Leachate and Basin Pump Flow Calculation			
Prepared By: Gallegos, JF, P.E.	**Date:** 4/10/2020	**Checked By:** Dixon, KW, P.E.	**Date:** 4/10/2020

AFT Fathom 10 (Output) 3/26/2020 Page 1	AFT Fathom Model	

Model Reference Information

General

Title: AFT Fathom Model
Analysis run on: 3/26/2020 3:28:03 PM
Application version: AFT Fathom Version 10 (2018.05.21)
Input File: P:\Clients\Washington River Protection Solutions - WRPS 544\S54413.024 - LERF Basin 41 Design\Calculations\Mech\M-002 Flow\Rev 0\LERF.fth
Scenario: Base Scenario/Goulds Pump/Minimum Flow
Output File: P:\Clients\Washington River Protection Solutions - WRPS 544\S54413.024 - LERF Basin 41 Design\Calculations\Mech\M-002 Flow\Rev 0\LERF_F1.out

Execution Time= 0.11 seconds
Total Number Of Head/Pressure Iterations= 0
Total Number Of Flow Iterations= 37
Total Number Of Temperature Iterations= 0
Number Of Pipes= 12
Number Of Junctions= 13
Matrix Method= Gaussian Elimination

Pressure/Head Tolerance= 0.0001 relative change
Flow Rate Tolerance= 0.0001 relative change
Temperature Tolerance= 0.0001 relative change
Flow Relaxation= (Automatic)
Pressure Relaxation= (Automatic)

Constant Fluid Property Model
Fluid Database: User Specified
Fluid= User Specified
Density= 1 lbm/ft3
Viscosity= 1 centipoise
Vapor Pressure= Unspecified
Viscosity Model= Newtonian
Apply laminar and non-Newtonian correction to: Pipe Fittings & Losses, Junction K factors, Junction Special Losses, Junction Polynomials
Corrections applied to the following junctions: Branch, Reservoir, Assigned Flow, Assigned Pressure, Area Change, Bend, Tee or Wye, Spray Discharge, Relief Valve

Ambient Pressure (constant)= 1 atm
Gravitational Acceleration= 1 g
Turbulent Flow Above Reynolds Number= 4000
Laminar Flow Below Reynolds Number= 2300
Total Inflow= 3.699 gal/min
Total Outflow= 3.699 gal/min
Maximum Static Pressure is 15.79 psia at Pipe 1 Inlet
Minimum Static Pressure is 14.68 psia at Pipe 11 Inlet

Warnings

No Warnings

Applied Standards

===== ANSI/HI 9.6.3-2017 - Rotodynamic Pumps - Guideline for Operating Regions =====
Pump 1 set to specific speed <=4500 (US Customary), with lower POR 70% and upper POR 120% of BEP

Sargent & Lundy Engineering Services, Inc

CALCULATION SHEET

Project No. S54413.024	**Calculation No.** S54413.024-M-002	**Rev.** 0	**Page No.** 139 of 180
Title: Leachate and Basin Pump Flow Calculation			
Prepared By: Gallegos, JF, P.E.	**Date:** 4/10/2020	**Checked By:** Dixon, KW, P.E.	**Date:** 4/10/2020

AFT Fathom 10 (Output)
3/26/2020
Page 2

AFT Fathom Model

Pump Summary

Jct	Results Diagram	Name	Vol. Flow (gal/min)	Mass Flow (lbm/sec)	dP (psid)	dH (feet)	Overall Efficiency (Percent)	Speed (Percent)	Overall Power (hp)	BEP (gal/min)	% of BEP (Percent)
1	Show	Pump	3.699	8.242E-03	1.093	157.3	N/A	100.0	2.357E-03	N/A	N/A

Jct	NPSHA (feet)	NPSHR (feet)
1	N/A	N/A

Valve Summary

Jct	Name	Valve Type	Vol. Flow (gal/min)	Mass Flow (lbm/sec)	dP Stag. (psid)	dH (feet)	P Static In (psia)	Cv	K	Valve State	Open Percentage (Percent)
4	HV-41-11	REGULAR	3.699	8.242E-03	0.8114	116.8	15.53	0.5200	492.8	Open	30.00

Reservoir Summary

Jct	Name	Type	Liq. Height (feet)	Liq. Elevation (feet)	Surface Pressure (psia)	Liquid Volume (feet3)	Liquid Mass (lbm)	Net Vol. Flow (gal/min)	Net Mass Flow (lbm/sec)
13	Reservoir	Infinite	N/A	601.0	14.70	N/A	N/A	3.699	8.242E-03

Pipe Output Table

Pipe	Name	Vol. Flow Rate (gal/min)	Velocity (feet/sec)	P Static Max (psia)	P Static Min (psia)	Elevation Inlet (feet)	Elevation Outlet (feet)	dP Stag. Total (psid)	dP Static Total (psid)	dP Gravity (psid)	dH (feet)
1	Pipe	3.699	0.5342	15.79	15.56	574.5	605.6	0.2306098	0.2306098	0.2160	2.10784
2	Pipe	3.699	0.5830	15.55	15.55	605.6	605.6	0.0002655	0.0002655	0.0000	0.03823
3	Pipe	3.699	0.5830	15.55	15.55	605.6	605.6	0.0001127	0.0001127	0.0000	0.01623
4	Pipe	3.699	3.9061	14.72	14.71	605.6	605.6	0.0082990	0.0082990	0.0000	1.19505
5	Pipe	3.699	3.9061	15.54	15.53	605.6	605.6	0.0050608	0.0050608	0.0000	0.72876
6	Pipe	3.699	5.0692	14.70	14.70	605.6	605.6	0.0085234	0.0085234	0.0000	1.22737
7	Pipe	3.699	0.5830	14.68	14.68	605.6	605.6	0.0001127	0.0001127	0.0000	0.01623
8	Pipe	3.699	0.5830	14.68	14.68	605.6	605.6	0.0001026	0.0001026	0.0000	0.01478
10	Pipe	3.699	0.5830	14.68	14.68	605.6	605.6	0.0015348	0.0015348	0.0000	0.22102
11	Pipe	3.699	0.5830	14.87	14.68	605.6	576.6	-0.1845451	-0.1845451	-0.2014	2.42551
12	Pipe	3.699	0.5830	14.68	14.68	605.6	605.6	0.0002130	0.0002130	0.0000	0.03067
13	Pipe	3.699	0.5830	15.56	15.56	605.6	605.6	0.0002255	0.0002255	0.0000	0.03247

CALCULATION SHEET

Project No. S54413.024	**Calculation No.** S54413.024-M-002	**Rev.** 0	**Page No.** 140 of 180
Title: Leachate and Basin Pump Flow Calculation			
Prepared By: Gallegos, JF, P.E.	**Date:** 4/10/2020	**Checked By:** Dixon, KW, P.E.	**Date:** 4/10/2020

AFT Fathom 10 (Output)
3/26/2020
Page 3

AFT Fathom Model

Pipe	P Static In (psia)	P Static Out (psia)	P Stag. In (psia)	P Stag. Out (psia)
1	15.79	15.56	15.79	15.56
2	15.55	15.55	15.55	15.55
3	15.55	15.55	15.55	15.55
4	14.72	14.71	14.72	14.71
5	15.54	15.53	15.54	15.53
6	14.70	14.70	14.71	14.70
7	14.68	14.68	14.68	14.68
8	14.68	14.68	14.68	14.68
10	14.68	14.68	14.68	14.68
11	14.68	14.87	14.68	14.87
12	14.68	14.68	14.68	14.68
13	15.56	15.56	15.56	15.56

All Junction Table

Jct	Name	P Static In (psia)	P Static Out (psia)	P Stag. In (psia)	P Stag. Out (psia)	Vol. Flow Rate Thru Jct (gal/min)	Mass Flow Rate Thru Jct (lbm/sec)	Loss Factor (K)
1	Pump	14.70	15.79	14.70	15.79	3.699	8.242E-03	0.000
2	Bend	15.56	15.56	15.56	15.56	3.699	8.242E-03	5.786
3	Bend	15.55	15.55	15.55	15.55	3.699	8.242E-03	7.849
4	HV-41-11	15.53	14.72	15.53	14.72	3.699	8.242E-03	492.791
5	Bend	14.71	14.70	14.71	14.71	3.699	8.242E-03	2.991
6	Area Change	15.55	15.54	15.55	15.54	3.699	8.242E-03	437.854
7	Area Change	14.70	14.68	14.70	14.68	3.699	8.242E-03	5.441
8	Bend	14.68	14.68	14.68	14.68	3.699	8.242E-03	7.849
10	Bend	14.68	14.68	14.68	14.68	3.699	8.242E-03	7.849
11	Branch	14.68	14.68	14.68	14.68	3.699	8.242E-03	0.000
12	Bend	14.68	14.68	14.68	14.68	3.699	8.242E-03	5.557
13	Reservoir	14.70	14.87	14.70	14.87	3.699	8.242E-03	0.000
15	General Component	15.56	15.55	15.56	15.55	3.699	8.242E-03	103.638

CALCULATION SHEET

Project No. S54413.024	**Calculation No.** S54413.024-M-002	**Rev.** 0	**Page No.** 141 of 180
Title: Leachate and Basin Pump Flow Calculation			
Prepared By: Gallegos, JF, P.E.	**Date:** 4/10/2020	**Checked By:** Dixon, KW, P.E.	**Date:** 4/10/2020

Maximum Flow

CALCULATION SHEET

Project No. S54413.024	**Calculation No.** S54413.024-M-002	**Rev.** 0	**Page No.** 142 of 180
Title: Leachate and Basin Pump Flow Calculation			
Prepared By: Gallegos, JF, P.E.	**Date:** 4/10/2020	**Checked By:** Dixon, KW, P.E.	**Date:** 4/10/2020

AFT Fathom 10 (Model) 3/26/2020 Page 1	AFT Fathom Model	

General

Title: AFT Fathom Model
Input File: P:\Clients\Washington River Protection Solutions - WRPS 544\S54413.024 - LERF Basin 41 Design\Calculations\Mech\M-002 Flow\Rev 0\LERF.fth
Scenario: Base Scenario/Goulds Pump/Maximum Flow

Number Of Pipes= 12
Number Of Junctions= 13

Pressure/Head Tolerance= 0.0001 relative change
Flow Rate Tolerance= 0.0001 relative change
Temperature Tolerance= 0.0001 relative change
Flow Relaxation= (Automatic)
Pressure Relaxation= (Automatic)

Constant Fluid Property Model
Fluid Database: User Specified
Fluid= User Specified
Density= 1 lbm/ft3
Viscosity= 1 centipoise
Vapor Pressure= Unspecified
Viscosity Model= Newtonian
Apply laminar and non-Newtonian correction to: Pipe Fittings & Losses, Junction K factors, Junction Special Losses, Junction Polynomials
Corrections applied to the following junctions: Branch, Reservoir, Assigned Flow, Assigned Pressure, Area Change, Bend, Tee or Wye, Spray Discharge, Relief Valve

Ambient Pressure (constant)= 1 atm
Gravitational Acceleration= 1 g
Turbulent Flow Above Reynolds Number= 4000
Laminar Flow Below Reynolds Number= 2300

Pipes

Pipe	Name	Pipe Defined	Length	Length Units	Hydraulic Diameter	Hydraulic Diam. Units	Friction Data Set	Roughness	Roughness Units	Losses (K)
1	Pipe	Yes	116	feet	1.682	inches	Standard	0.0018	inches	0
2	Pipe	Yes	1.5	feet	1.61	inches	Standard	0.0018	inches	0.04
3	Pipe	Yes	0.75	feet	1.61	inches	Standard	0.0018	inches	0
4	Pipe	Yes	0.5	feet	0.622	inches	Standard	0.0018	inches	0.364336
5	Pipe	Yes	0.75	feet	0.622	inches	Standard	0.0018	inches	0
6	Pipe	Yes	0.75	feet	0.546	inches	Standard	0.0018	inches	0
7	Pipe	Yes	0.75	feet	1.61	inches	Standard	0.0018	inches	0
8	Pipe	Yes	5	inches	1.61	inches	Standard	0.0018	inches	0.04
10	Pipe	Yes	9.8	feet	1.61	inches	Standard	0.0018	inches	0.06168
11	Pipe	Yes	116	feet	1.61	inches	Standard	0.0018	inches	0
12	Pipe	Yes	17	inches	1.61	inches	Standard	0.0018	inches	0
13	Pipe	Yes	1.5	feet	1.61	inches	Standard	0.0018	inches	0

CALCULATION SHEET

Project No. S54413.024	**Calculation No.** S54413.024-M-002	**Rev.** 0	**Page No.** 143 of 180
Title: Leachate and Basin Pump Flow Calculation			
Prepared By: Gallegos, JF, P.E.	**Date:** 4/10/2020	**Checked By:** Dixon, KW, P.E.	**Date:** 4/10/2020

AFT Fathom 10 (Model)
3/26/2020
Page 2

AFT Fathom Model

Pipe	Initial Flow	Initial Flow Units	Junctions (Up,Down)	Geometry	Material	Size	Type	Special Condition
1			1, 2	Cylindrical Pipe	Steel - ANSI	1-1/2 inch	Schedule 10	None
2			15, 3	Cylindrical Pipe	Steel - ANSI	1-1/2 inch	schedule 40	None
3			3, 6	Cylindrical Pipe	Steel - ANSI	1-1/2 inch	schedule 40	None
4			4, 5	Cylindrical Pipe	Steel - ANSI	1/2 inch	schedule 40	None
5			6, 4	Cylindrical Pipe	Steel - ANSI	1/2 inch	schedule 40	None
6			5, 7	Cylindrical Pipe	Steel - ANSI	1/2 inch	schedule 80	None
7			7, 8	Cylindrical Pipe	Steel - ANSI	1-1/2 inch	schedule 40	None
8			8, 11	Cylindrical Pipe	Steel - ANSI	1-1/2 inch	schedule 40	None
10			10, 12	Cylindrical Pipe	Steel - ANSI	1-1/2 inch	schedule 40	None
11			12, 13	Cylindrical Pipe	Steel - ANSI	1-1/2 inch	schedule 40	None
12			11, 10	Cylindrical Pipe	Steel - ANSI	1-1/2 inch	schedule 40	None
13			2, 15	Cylindrical Pipe	Steel - ANSI	1-1/2 inch	schedule 40	None

Pipe Fittings & Losses

Pipe	Total K	Elbow/Bend Smooth Flanged	Valve Ball	Other Tee
2	0.04			1 (0.04)
4	0.36	1 (0.36)		
8	0.04			1 (0.04)
10	0.06		1 (0.06)	

Area Change Table

Area Change	Name	Object Defined	Inlet Elevation	Elevation Units	Initial Pressure	Initial Pressure Units	Database Source	Type
6	Area Change	Yes	605.6	feet				Conical
7	Area Change	Yes	605.6	feet				Conical

Area Change	Geometry	Angle	Loss Factor
6	Contraction	90	16.05661
7	Expansion	90	0.7832083

Branch Table

Branch	Name	Object Defined	Inlet Elevation	Elevation Units	Initial Pressure	Initial Pressure Units	Database Source	Special Condition	Boundary Flow (+ = in/- = out)
11	Branch	Yes	605.6	feet				None	

CALCULATION SHEET

Project No. S54413.024	**Calculation No.** S54413.024-M-002	**Rev.** 0	**Page No.** 144 of 180
Title: Leachate and Basin Pump Flow Calculation			
Prepared By: Gallegos, JF, P.E.	**Date:** 4/10/2020	**Checked By:** Dixon, KW, P.E.	**Date:** 4/10/2020

AFT Fathom 10 (Model)
3/26/2020
Page 3

AFT Fathom Model

Branch	Boundary Flow Units	(Pipe #1) K In, K Out	(Pipe #2) K In, K Out	(Pipe #3) K In, K Out	(Pipe #4) K In, K Out	(Pipe #5) K In, K Out	(Pipe #6) K In, K Out	(Pipe #7) K In, K Out
11		(P8) 1.1, 0	(P12) 0, 0					

Branch	(Pipe #8) K In, K Out	(Pipe #9) K In, K Out	(Pipe #10) K In, K Out	(Pipe #11) K In, K Out	(Pipe #12) K In, K Out	(Pipe #13) K In, K Out	(Pipe #14) K In, K Out	(Pipe #15) K In, K Out	(Pipe #16) K In, K Out
11									

Branch	(Pipe #17) K In, K Out	(Pipe #18) K In, K Out	(Pipe #19) K In, K Out	(Pipe #20) K In, K Out	(Pipe #21) K In, K Out	(Pipe #22) K In, K Out	(Pipe #23) K In, K Out	(Pipe #24) K In, K Out	(Pipe #25) K In, K Out
11									

General Component Table

General Component	Name	Object Defined	Inlet Elevation	Elevation Units	Initial Pressure	Initial Pressure Units	Database Source
15	General Component	Yes	605.6	feet			

General Component	Special Condition	Loss Model	Loss Value	Independent Variable	Ind. Variable Units	Dependent Variable	Dep. Variable Units
15	None	Resistance Curve	Variable	Vol. Flow Rate	gal/min	Pressure Loss	psid

General Component	Loss Constant a	Loss Constant b	Loss Constant c	Loss Constant d	Loss Constant e
15	5.551115E-17	0	0.0002777778	0	0

Pump Table

Pump	Name	Object Defined	Inlet Elevation	Elevation Units	Initial Pressure	Initial Pressure Units	Database Source	Special Condition	Pump Type
1	Pump	Yes	574.5	feet				None	Pump Curve

Pump	Design Flow Rate	Design Flow Rate Units	Current Configuration	Independent Variable	Ind. Variable Units	Dependent Variable	Dep. Variable Units	Pump Curve Constant a
1				Vol. Flow Rate	gal/min	Head Rise	feet	173.1132

Pump	Pump Curve Constant b	Pump Curve Constant c	Pump Curve Constant d	Pump Curve Constant e	Runout Flow Rate	Runout Flow Rate Units	Speed	Control When Exceeded Only
1	-3.244979	-0.2765802	0	0			100	

Pump	Heat Added To Fluid	Heat Added Units
1	0	Percent

Reservoir Table

CALCULATION SHEET

Project No. S54413.024	**Calculation No.** S54413.024-M-002	**Rev.** 0	**Page No.** 145 of 180
Title: Leachate and Basin Pump Flow Calculation			
Prepared By: Gallegos, JF, P.E.	**Date:** 4/10/2020	**Checked By:** Dixon, KW, P.E.	**Date:** 4/10/2020

AFT Fathom 10 (Model)
3/26/2020
Page 4

AFT Fathom Model

Reservoir	Name	Object Defined	Inlet Elevation	Elevation Units	Initial Pressure	Initial Pressure Units	Database Source	Liquid Elev.	Liquid Elev. Units
13	Reservoir	Yes						576.6	feet

Reservoir	Surface Pressure	Surface Pressure Units	Balance Energy	Balance Concentration	(Pipe #1) K In, K Out	(Pipe #2) K In, K Out	(Pipe #3) K In, K Out	(Pipe #4) K In, K Out
13	1	atm	No	No	(P11) 0, 0			

Reservoir	(Pipe #5) K In, K Out	(Pipe #6) K In, K Out	(Pipe #7) K In, K Out	(Pipe #8) K In, K Out	(Pipe #9) K In, K Out	(Pipe #10) K In, K Out	(Pipe #11) K In, K Out	(Pipe #12) K In, K Out	(Pipe #13) K In, K Out
13									

Reservoir	(Pipe #14) K In, K Out	(Pipe #15) K In, K Out	(Pipe #16) K In, K Out	(Pipe #17) K In, K Out	(Pipe #18) K In, K Out	(Pipe #19) K In, K Out	(Pipe #20) K In, K Out	(Pipe #21) K In, K Out	(Pipe #22) K In, K Out
13									

Reservoir	(Pipe #23) K In, K Out	(Pipe #24) K In, K Out	(Pipe #25) K In, K Out	(Pipe #1) Depth	(Pipe #2) Depth	(Pipe #3) Depth	(Pipe #4) Depth	(Pipe #5) Depth	(Pipe #6) Depth
13				(P11) 576.6					

Reservoir	(Pipe #7) Depth	(Pipe #8) Depth	(Pipe #9) Depth	(Pipe #10) Depth	(Pipe #11) Depth	(Pipe #12) Depth	(Pipe #13) Depth	(Pipe #14) Depth	(Pipe #15) Depth
13									

Reservoir	(Pipe #16) Depth	(Pipe #17) Depth	(Pipe #18) Depth	(Pipe #19) Depth	(Pipe #20) Depth	(Pipe #21) Depth	(Pipe #22) Depth	(Pipe #23) Depth	(Pipe #24) Depth
13									

Reservoir	(Pipe #25) Depth	Pipe Depth Units
13		feet

Valve Table

Valve	Name	Object Defined	Inlet Elevation	Elevation Units	Initial Pressure	Initial Pressure Units	Database Source	Special Condition	Exit Valve	Exit Pressure
4	HV-41-11	Yes	605.6	feet				None	No	

Valve	Exit Pressure Units	Restricted Area	Restricted Area Units	Loss Model	Loss Source	Loss Factor	Percent Open	Open Pct. Data Exists	Independent Variable
4				Cv	Cv From Table	1.8	100	Yes	

Valve	Ind. Variable Units	Dependent Variable	Dep. Variable Units	Loss Constant a	Loss Constant b	Loss Constant c	Loss Constant d	Loss Constant e
4								

Bend Table

CALCULATION SHEET

Project No. S54413.024	**Calculation No.** S54413.024-M-002	**Rev.** 0	**Page No.** 146 of 180
Title: Leachate and Basin Pump Flow Calculation			
Prepared By: Gallegos, JF, P.E.	**Date:** 4/10/2020	**Checked By:** Dixon, KW, P.E.	**Date:** 4/10/2020

AFT Fathom 10 (Model)
3/26/2020
Page 5

AFT Fathom Model

Bend	Name	Object Defined	Inlet Elevation	Elevation Units	Initial Pressure	Initial Pressure Units	Database Source	Type	Angle (Degrees)	R/D
2	Bend	Yes	605.6	feet				Smooth Bend	45	1.5
3	Bend	Yes	605.6	feet				Smooth Bend	90	1.5
5	Bend	Yes	605.6	feet				Smooth Bend	90	1.5
8	Bend	Yes	605.6	feet				Smooth Bend	90	1.5
10	Bend	Yes	605.6	feet				Smooth Bend	90	1.5
12	Bend	Yes	605.6	feet				Smooth Bend	45	1.5

Bend	Loss Factor
2	0.2009148
3	0.28784
5	0.364336
8	0.28784
10	0.28784
12	0.2037692

CALCULATION SHEET

Project No. S54413.024	**Calculation No.** S54413.024-M-002	**Rev.** 0	**Page No.** 147 of 180
Title: Leachate and Basin Pump Flow Calculation			
Prepared By: Gallegos, JF, P.E.	**Date:** 4/10/2020	**Checked By:** Dixon, KW, P.E.	**Date:** 4/10/2020

AFT Fathom 10 (Output) 3/26/2020 Page 1	AFT Fathom Model	

Model Reference Information

General

Title: AFT Fathom Model
Analysis run on: 3/26/2020 1:06:56 PM
Application version: AFT Fathom Version 10 (2018.05.21)
Input File: P:\Clients\Washington River Protection Solutions - WRPS 544\S54413.024 - LERF Basin 41 Design\Calculations\Mech\M-002 Flow\Rev 0\LERF.fth
Scenario: Base Scenario/Goulds Pump/Maximum Flow
Output File: P:\Clients\Washington River Protection Solutions - WRPS 544\S54413.024 - LERF Basin 41 Design\Calculations\Mech\M-002 Flow\Rev 0\LERF_F2.out

Execution Time= 0.07 seconds
Total Number Of Head/Pressure Iterations= 0
Total Number Of Flow Iterations= 14
Total Number Of Temperature Iterations= 0
Number Of Pipes= 12
Number Of Junctions= 13
Matrix Method= Gaussian Elimination

Pressure/Head Tolerance= 0.0001 relative change
Flow Rate Tolerance= 0.0001 relative change
Temperature Tolerance= 0.0001 relative change
Flow Relaxation= (Automatic)
Pressure Relaxation= (Automatic)

Constant Fluid Property Model
Fluid Database: User Specified
Fluid= User Specified
Density= 1 lbm/ft3
Viscosity= 1 centipoise
Vapor Pressure= Unspecified
Viscosity Model= Newtonian
Apply laminar and non-Newtonian correction to: Pipe Fittings & Losses, Junction K factors, Junction Special Losses, Junction Polynomials
Corrections applied to the following junctions: Branch, Reservoir, Assigned Flow, Assigned Pressure, Area Change, Bend, Tee or Wye, Spray Discharge, Relief Valve

Ambient Pressure (constant)= 1 atm
Gravitational Acceleration= 1 g
Turbulent Flow Above Reynolds Number= 4000
Laminar Flow Below Reynolds Number= 2300
Total Inflow= 10.04 gal/min
Total Outflow= 10.04 gal/min
Maximum Static Pressure is 15.49 psia at Pipe 1 Inlet
Minimum Static Pressure is 14.54 psia at Pipe 11 Inlet

Warnings

No Warnings

Applied Standards

===== ANSI/HI 9.6.3-2017 - Rotodynamic Pumps - Guideline for Operating Regions =====
Pump 1 set to specific speed <=4500 (US Customary), with lower POR 70% and upper POR 120% of BEP

CALCULATION SHEET

Project No. S54413.024	**Calculation No.** S54413.024-M-002	**Rev.** 0	**Page No.** 148 of 180
Title: Leachate and Basin Pump Flow Calculation			
Prepared By: Gallegos, JF, P.E.	**Date:** 4/10/2020	**Checked By:** Dixon, KW, P.E.	**Date:** 4/10/2020

AFT Fathom 10 (Output) 3/26/2020 Page 2	AFT Fathom Model	

Pump Summary

Jct	Results Diagram	Name	Vol. Flow (gal/min)	Mass Flow (lbm/sec)	dP (psid)	dH (feet)	Overall Efficiency (Percent)	Speed (Percent)	Overall Power (hp)	BEP (gal/min)	% of BEP (Percent)
1	Show	Pump	10.04	0.02237	0.7822	112.6	N/A	100.0	4.581E-03	N/A	N/A

Jct	NPSHA (feet)	NPSHR (feet)
1	N/A	N/A

Valve Summary

Jct	Name	Valve Type	Vol. Flow (gal/min)	Mass Flow (lbm/sec)	dP Stag. (psid)	dH (feet)	P Static In (psia)	Cv	K	Valve State
4	HV-41-11	REGULAR	10.04	0.02237	0.4990	71.85	15.14	1.800	41.13	Open

Reservoir Summary

Jct	Name	Type	Liq. Height (feet)	Liq. Elevation (feet)	Surface Pressure (psia)	Liquid Volume (feet3)	Liquid Mass (lbm)	Net Vol. Flow (gal/min)	Net Mass Flow (lbm/sec)
13	Reservoir	Infinite	N/A	576.6	14.70	N/A	N/A	10.04	0.02237

Pipe Output Table

Pipe	Name	Vol. Flow Rate (gal/min)	Velocity (feet/sec)	P Static Max (psia)	P Static Min (psia)	Elevation Inlet (feet)	Elevation Outlet (feet)	dP Stag. Total (psid)	dP Static Total (psid)	dP Gravity (psid)	dH (feet)
1	Pipe	10.04	1.450	15.49	15.24	574.5	605.6	0.2557054	0.2557054	0.2160	5.72161
2	Pipe	10.04	1.583	15.21	15.21	605.6	605.6	0.0007207	0.0007207	0.0000	0.10378
3	Pipe	10.04	1.583	15.21	15.21	605.6	605.6	0.0003060	0.0003060	0.0000	0.04407
4	Pipe	10.04	10.603	14.64	14.62	605.6	605.6	0.0225270	0.0225270	0.0000	3.24389
5	Pipe	10.04	10.603	15.15	15.14	605.6	605.6	0.0137373	0.0137373	0.0000	1.97817
6	Pipe	10.04	13.760	14.59	14.57	605.6	605.6	0.0231362	0.0231362	0.0000	3.33161
7	Pipe	10.04	1.583	14.55	14.55	605.6	605.6	0.0003060	0.0003060	0.0000	0.04407
8	Pipe	10.04	1.583	14.55	14.55	605.6	605.6	0.0002786	0.0002786	0.0000	0.04012
10	Pipe	10.04	1.583	14.55	14.54	605.6	605.6	0.0041662	0.0041662	0.0000	0.59994
11	Pipe	10.04	1.583	14.70	14.54	605.6	576.6	-0.1535787	-0.1535787	-0.2014	6.88467
12	Pipe	10.04	1.583	14.55	14.55	605.6	605.6	0.0005781	0.0005781	0.0000	0.08324
13	Pipe	10.04	1.583	15.24	15.24	605.6	605.6	0.0006121	0.0006121	0.0000	0.08814

CALCULATION SHEET

Project No. S54413.024	**Calculation No.** S54413.024-M-002	**Rev.** 0	**Page No.** 149 of 180
Title: Leachate and Basin Pump Flow Calculation			
Prepared By: Gallegos, JF, P.E.	**Date:** 4/10/2020	**Checked By:** Dixon, KW, P.E.	**Date:** 4/10/2020

AFT Fathom 10 (Output)
3/26/2020
Page 3

AFT Fathom Model

Pipe	P Static In (psia)	P Static Out (psia)	P Stag. In (psia)	P Stag. Out (psia)
1	15.49	15.24	15.49	15.24
2	15.21	15.21	15.21	15.21
3	15.21	15.21	15.21	15.21
4	14.64	14.62	14.65	14.63
5	15.15	15.14	15.16	15.15
6	14.59	14.57	14.61	14.59
7	14.55	14.55	14.55	14.55
8	14.55	14.55	14.55	14.55
10	14.55	14.54	14.55	14.54
11	14.54	14.70	14.54	14.70
12	14.55	14.55	14.55	14.55
13	15.24	15.24	15.24	15.24

All Junction Table

Jct	Name	P Static In (psia)	P Static Out (psia)	P Stag. In (psia)	P Stag. Out (psia)	Vol. Flow Rate Thru Jct (gal/min)	Mass Flow Rate Thru Jct (lbm/sec)	Loss Factor (K)
1	Pump	14.71	15.49	14.71	15.49	10.04	0.02237	0.000
2	Bend	15.24	15.24	15.24	15.24	10.04	0.02237	2.131
3	Bend	15.21	15.21	15.21	15.21	10.04	0.02237	2.892
4	HV-41-11	15.14	14.64	15.15	14.65	10.04	0.02237	41.127
5	Bend	14.62	14.59	14.63	14.61	10.04	0.02237	1.102
6	Area Change	15.21	15.15	15.21	15.16	10.04	0.02237	161.306
7	Area Change	14.57	14.55	14.59	14.55	10.04	0.02237	2.004
8	Bend	14.55	14.55	14.55	14.55	10.04	0.02237	2.892
10	Bend	14.55	14.55	14.55	14.55	10.04	0.02237	2.892
11	Branch	14.55	14.55	14.55	14.55	10.04	0.02237	0.000
12	Bend	14.54	14.54	14.54	14.54	10.04	0.02237	2.047
13	Reservoir	14.70	14.70	14.70	14.70	10.04	0.02237	0.000
15	General Component	15.24	15.21	15.24	15.21	10.04	0.02237	103.638

CALCULATION SHEET

Project No. S54413.024	**Calculation No.** S54413.024-M-002	**Rev.** 0	**Page No.** 150 of 180
Title: Leachate and Basin Pump Flow Calculation			
Prepared By: Gallegos, JF, P.E.	**Date:** 4/10/2020	**Checked By:** Dixon, KW, P.E.	**Date:** 4/10/2020

ATTACHMENT 1

LEACHATE PUMP CURVE

CALCULATION SHEET

Project No. S54413.024	**Calculation No.** S54413.024-M-002	**Rev.** 0	**Page No.** 151 of 180
Title: Leachate and Basin Pump Flow Calculation			
Prepared By: Gallegos, JF, P.E.	**Date:** 4/10/2020	**Checked By:** Dixon, KW, P.E.	**Date:** 4/10/2020

Minimum Continuous Operating Flow Rate = 3.2 GPM
Maximum Continuous Operating Flow Rate = 13.3 GPM

LOWARA
a xylem brand

1SC SERIES - SINGLE PHASE VERSION
OPERATING CHARACTERISTICS

1SC	~ 3500 [rpm]	ISO 9906:2012 - Grade 3B

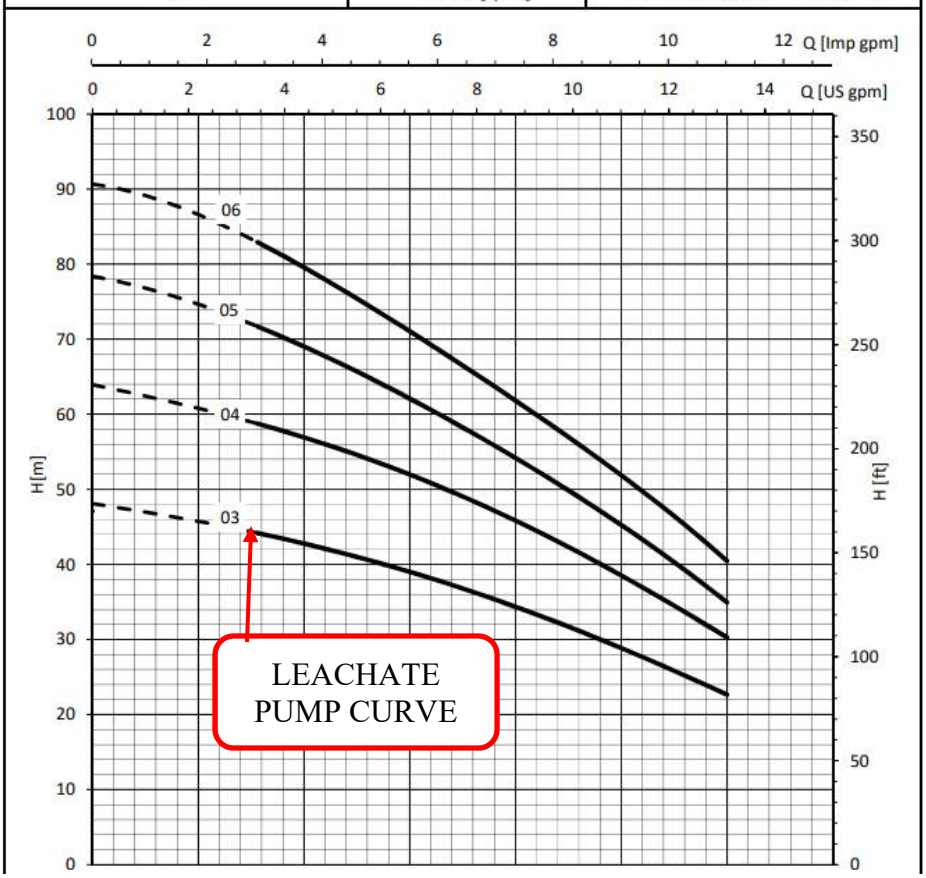

CALCULATION SHEET

Project No. S54413.024	**Calculation No.** S54413.024-M-002	**Rev.** 0	**Page No.** 152 of 180
Title: Leachate and Basin Pump Flow Calculation			
Prepared By: Gallegos, JF, P.E.	**Date:** 4/10/2020	**Checked By:** Dixon, KW, P.E.	**Date:** 4/10/2020

ATTACHMENT 2

BASIN PUMP CURVE

RPP-CALC-63650, Rev. 0

CALCULATION SHEET

Project No. S54413.024	**Calculation No.** S54413.024-M-002	**Rev.** 0	**Page No.** 153 of 180
Title: Leachate and Basin Pump Flow Calculation			
Prepared By: Gallegos, JF, P.E.	**Date:** 4/10/2020	**Checked By:** Dixon, KW, P.E.	**Date:** 4/10/2020

Minimum Continuous Operating Flow Rate = 40 GPM
Maximum Continuous Operating Flow Rate = 280 GPM

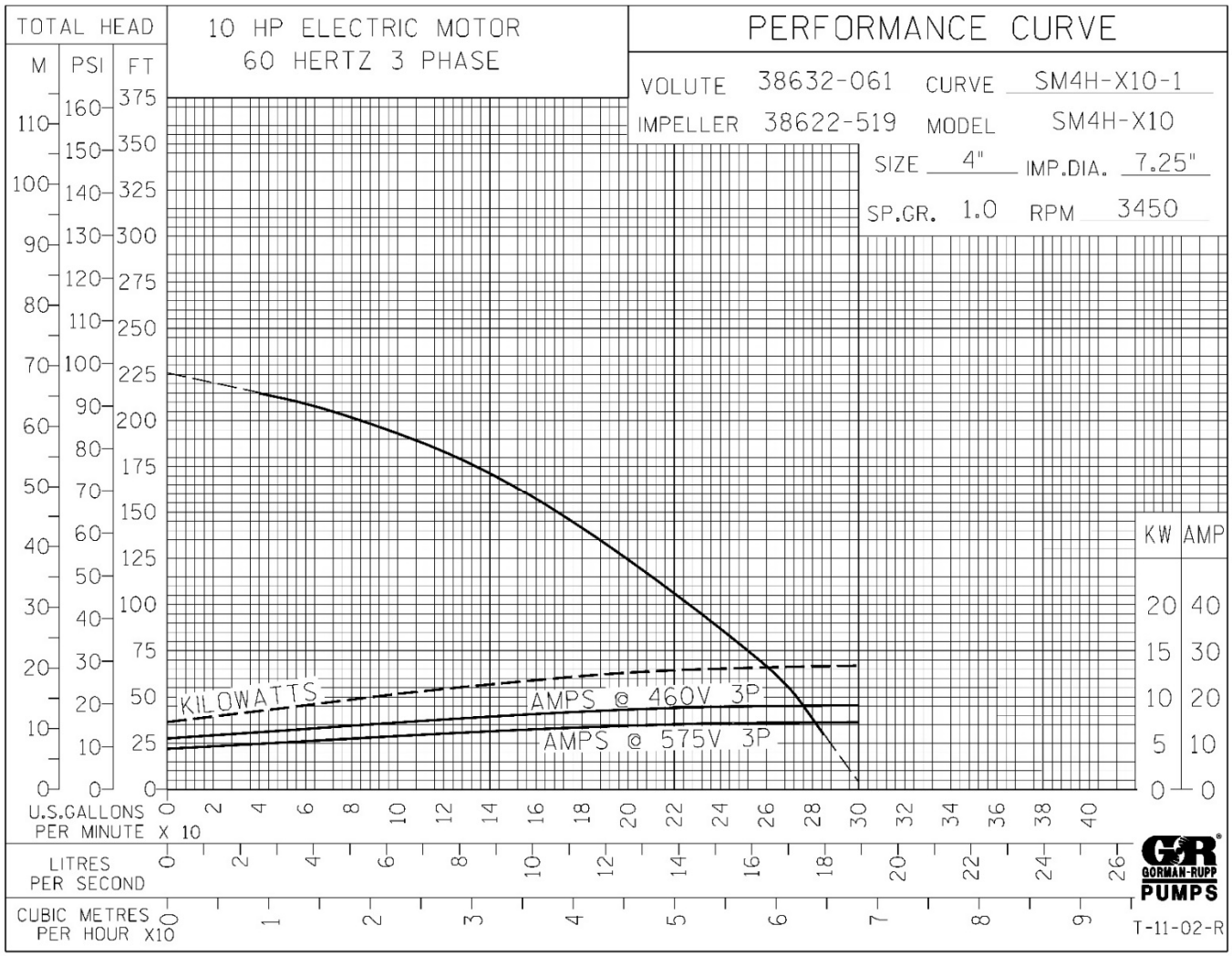

ATTACHMENT 3

CAVITATION CALCULATION

Sargent & Lundy Engineering Services, Inc

CALCULATION SHEET

Project No. S54413.024	**Calculation No.** S54413.024-M-002	**Rev.** 0	**Page No.** 155 of 180
Title: Leachate and Basin Pump Flow Calculation			
Prepared By: Gallegos, JF, P.E.	**Date:** 4/10/2020	**Checked By:** Dixon, KW, P.E.	**Date:** 4/10/2020

Control Valve Sizing

$\Delta P_{maxL} = F_L^2 \cdot (P_1 - F_F \cdot P_V)$ — Allowable sizing pressure drop for control valves without fittings (Control Valve Handbook, Pg. 115).

$F_F = 0.96 - 0.28 \cdot \sqrt{\frac{P_V}{P_C}}$ — Liquid critical pressure ratio factor (Control Valve Handbook, Pg. 115).

P_1 = "Upstream absolute static pressure"

P_2 = "Downstream absolute static pressure"

P_C = "Absolute thermodynamic critical pressure"

P_V = "Vapor pressure absolute of liquid at inlet temperature"

Flow Control Valve Sizing

$\Delta P := 76.73 psi$ ("Low Head Loss") — Calculated differential pressure across MOV-41-1 for the high basin level recirculation scenario

$P_1 := 74.81 psi + 1 atm = 89.5 psi$ — Upstream absolute static pressure of MOV-41-1 for the high basin level recirculation scenario.

$P_2 := P_1 - \Delta P = 12.8 psi$ — Downstream absolute static pressure of MOV-41-1 for the high basin level recirculation scenario.

$P_C := 3208 psi$ — Absolute thermodynamic critical pressure (Control Valve Handbook, Pg 205).

$P_V := 2.226 psi$ — Absolute vapor pressure at 130 °F, which is a bounding temperature (Lindeburg, Appendix 23.A, Attachment 9).

$\%O := 30.86\%$ — Percent open high head loss scenarios (Fathom Model Output).

CALCULATION SHEET

Project No. S54413.024	**Calculation No.** S54413.024-M-002	**Rev.** 0	**Page No.** 156 of 180
Title: Leachate and Basin Pump Flow Calculation			
Prepared By: Gallegos, JF, P.E.	**Date:** 4/10/2020	**Checked By:** Dixon, KW, P.E.	**Date:** 4/10/2020

$$F_L(x) := \text{linterp}\left[\begin{pmatrix}0\\10\\20\\30\\40\\50\\60\\70\\80\\90\\100\end{pmatrix}\%, \begin{pmatrix}0\\0.96\\0.95\\0.94\\0.93\\0.92\\0.90\\0.89\\0.86\\0.82\\0.75\end{pmatrix}, x\right]$$

Linear inerpolation of the V-Control Valve liquid pressure recovery factor (Attachment 1).

$$F_F := 0.96 - 0.28 \cdot \sqrt{\frac{P_V}{P_C}} = 0.95$$

Liquid critical pressure ratio factor (Control Valve Handbook, Pg. 115) for the high basin level recirculation scenario.

$$\Delta P_{maxL} := F_L(\%O)^2 \cdot \left(P_1 - F_F \cdot P_V\right) = 77 \cdot psi$$

Allowable sizing pressure drop for control valves without fittings (Control Valve Handbook, Pg. 115) for the high basin level recirculation scenario.

$$\Delta P_{maxL} = 77 \cdot psi$$

Calculated MOV-41-1 allowable pressure drop.

$$Check := \begin{cases} \text{"Design OK"} & \text{if } \Delta P_{maxL} \geq \Delta P \\ \text{"Redesign"} & \text{otherwise} \end{cases} = \text{"Design OK"}$$

CALCULATION SHEET

Project No. S54413.024	**Calculation No.** S54413.024-M-002	**Rev.** 0	**Page No.** 157 of 180
Title: Leachate and Basin Pump Flow Calculation			
Prepared By: Gallegos, JF, P.E.	**Date:** 4/10/2020	**Checked By:** Dixon, KW, P.E.	**Date:** 4/10/2020

ATTACHMENT 4

FLOWTEK CUTSHEET

Sargent & Lundy Engineering Services, Inc

CALCULATION SHEET

Project No. S54413.024	**Calculation No.** S54413.024-M-002	**Rev.** 0	**Page No.** 158 of 180
Title: Leachate and Basin Pump Flow Calculation			
Prepared By: Gallegos, JF, P.E.	**Date:** 4/10/2020	**Checked By:** Dixon, KW, P.E.	**Date:** 4/10/2020

FlowTek®
A Subsidiary of BRAY INTERNATIONAL, Inc.

V-Control Ball Valve Selection Guide
Technical Bulletin No. 1006
Date: September 2008 / Pg. 3 of 6

V-CONTROL BALL VALVE FLOW COEFFICIENT C_V CHARTS

Full Port 1/2" to 4" Triad and 1/2" to 12" F15/3

		Percent and Angle of Ball Rotation										
Valve Size	V-Port Angle	0%	10%	20%	30%	40%	50%	60%	70%	80%	90%	100%
1/2"	15°	0	0.04	0.17	0.43	0.68	0.98	1.62	2.09	2.84	3.61	4.18
1/2"	30°	0	0.04	0.23	0.47	0.77	1.19	1.83	2.47	3.43	4.65	5.55
1/2"	60°	0	0.04	0.28	0.73	1.11	1.83	2.92	4.29	7.00	9.43	12.78
1/2"	90	0	0.06	0.47	0.85	1.28	2.05	3.24	4.74	8.26	11.61	14.72
3/4"	15°	0	0.05	0.20	0.51	0.88	1.30	2.13	2.75	3.74	4.75	5.51
3/4"	30°	0	0.07	0.30	0.61	0.99	1.57	2.42	3.25	4.52	6.12	7.30
3/4"	60°	0	0.07	0.35	0.93	1.46	2.42	3.85	5.64	9.21	12.41	16.25
3/4"	90°	0	0.08	0.59	1.11	1.69	2.69	4.27	6.24	10.85	15.28	19.37
1"	15°	0	0.06	0.30	0.93	1.49	2.31	3.75	4.67	6.47	8.46	9.84
1"	30°	0	0.08	0.45	1.25	2.06	3.54	5.30	7.70	10.49	12.84	15.48
1"	60°	0	0.09	0.68	1.74	2.78	5.13	8.00	11.88	18.71	23.22	32.81
1"	90°	0	0.11	0.93	2.78	5.09	7.74	12.20	17.33	22.50	31.40	43.89
1-1/4"	15°	0	0.03	0.27	0.83	1.64	2.78	4.07	5.88	7.99	10.81	12.82
1-1/4"	30°	0	0.05	0.48	1.37	2.47	4.12	6.08	8.82	11.76	14.87	17.37
1-1/4"	60°	0	0.07	0.67	2.04	3.41	6.47	10.80	15.39	22.35	33.37	43.45
1-1/4"	90°	0	0.08	0.78	2.92	5.41	10.23	17.28	25.50	35.60	51.76	65.81
1-1/2"	15°	0	0.05	0.37	1.15	2.26	3.82	5.59	8.08	10.99	14.86	17.62
1-1/2"	30°	0	0.07	0.65	1.88	3.39	5.66	8.36	12.12	16.17	20.44	23.88
1-1/2"	60°	0	0.09	0.92	2.81	4.69	8.89	14.85	21.16	30.73	45.88	59.74
1-1/2"	90°	0	0.10	1.07	4.01	7.44	14.06	22.60	31.90	48.03	71.17	90.49
2"	15°	0	0.06	0.69	2.23	4.45	7.24	10.68	15.38	21.39	28.75	34.69
2"	30°	0	0.09	1.18	3.79	7.53	12.26	17.83	26.44	36.45	48.09	55.85
2"	60°	0	0.11	1.51	5.80	10.39	20.60	33.98	48.75	69.04	104.23	135.75
2"	90°	0	0.16	1.89	7.28	13.58	25.38	42.30	55.56	87.04	129.75	167.34
2-1/2"	15°	0	0.07	0.77	2.40	5.23	8.06	11.73	16.42	22.31	27.24	31.30
2-1/2"	30°	0	0.09	1.15	4.42	7.91	13.39	20.05	30.43	41.92	56.30	76.95
2-1/2"	60°	0	0.13	1.46	5.91	11.90	23.24	37.92	59.31	83.29	113.65	162.50
2-1/2"	90°	0	0.17	1.83	7.29	16.45	31.16	53.53	77.89	118.29	177.32	239.45
3"	15°	0	0.08	0.89	2.96	6.65	9.58	13.42	19.47	26.67	31.79	38.31
3"	30°	0	0.12	1.20	4.15	9.49	15.96	26.78	38.91	53.31	69.77	85.91
3"	60°	0	0.15	2.89	6.70	15.82	29.36	46.32	73.60	106.74	149.88	193.20
3"	90°	0	0.20	4.12	8.65	21.09	41.09	69.27	105.91	161.04	237.23	359.21
4"	15°	0	0.11	1.40	3.73	8.86	16.76	27.91	41.85	59.24	75.49	96.37
4"	30°	0	0.16	1.75	7.84	18.59	35.21	58.60	87.89	124.41	158.53	196.35
4"	60°	0	0.26	2.20	12.44	33.67	62.98	106.26	160.49	233.96	329.50	437.29
4"	90°	0	0.35	4.37	19.68	50.29	91.83	157.43	240.51	365.15	546.62	830.86
6"	15°	0	0.20	2.50	6.64	15.77	29.85	49.70	74.54	105.51	134.44	171.62
6"	30°	0	0.29	3.12	13.97	33.11	62.70	104.37	156.53	221.56	282.33	349.69
6"	60°	0	0.46	5.41	22.15	59.97	112.16	189.24	285.82	416.68	586.83	800.80
6"	90°	0	0.66	7.79	35.05	89.56	163.55	280.37	428.34	650.32	973.50	1479.70
8"	15°	0	0.34	4.23	11.32	26.84	50.80	84.58	126.84	195.00	345.50	692.07
8"	30°	0	0.49	5.32	23.77	56.35	106.70	177.62	266.39	377.06	480.47	595.11
8"	60°	0	0.79	6.66	23.81	102.06	190.87	322.06	486.41	709.11	998.69	1325.38
8"	90°	0	1.05	13.26	59.64	152.42	278.33	477.14	728.96	1106.69	1656.77	2518.18
10"	15°	0	0.53	6.62	17.69	41.94	79.38	132.15	198.20	350.00	545.00	856.36
10"	30°	0	0.77	8.31	37.14	88.05	166.73	277.53	416.24	589.16	750.74	929.87
10"	60°	0	1.23	10.41	37.20	159.47	298.23	503.22	760.02	1107.99	1560.45	2070.90
10"	90°	0	1.64	20.72	93.20	238.16	434.90	745.53	1139.00	1729.20	2588.70	3934.65
12"	15°	0	0.74	9.26	24.76	58.72	111.13	185.01	277.47	564.00	1101.07	1638.90
12"	30°	0	1.07	11.63	52.00	123.27	233.42	388.54	582.73	824.82	1051.03	1301.81
12"	60°	0	1.72	14.57	52.08	223.25	417.52	704.51	1064.03	1551.19	2184.63	2899.26
12"	90°	0	2.29	29.00	130.47	333.42	608.85	1043.74	1594.59	2420.88	3624.18	5508.51
Fl		0	0.96	0.95	0.94	0.93	0.92	0.90	0.89	0.86	0.82	0.75
Xt		0	0.98	0.77	0.71	0.67	0.64	0.63	0.62	0.55	0.43	0.40

Fl = Liquid Pressure Recovery Factor Xt= Pressure Drop Ratio Factor (Gas)

CALCULATION SHEET

Project No. S54413.024	**Calculation No.** S54413.024-M-002	**Rev.** 0	**Page No.** 159 of 180
Title: Leachate and Basin Pump Flow Calculation			
Prepared By: Gallegos, JF, P.E.	**Date:** 4/10/2020	**Checked By:** Dixon, KW, P.E.	**Date:** 4/10/2020

ATTACHMENT 5

SWAGELOK NEEDLE VALVE CUTSHEET

CALCULATION SHEET

Project No. S54413.024	**Calculation No.** S54413.024-M-002	**Rev.** 0	**Page No.** 160 of 180
Title: Leachate and Basin Pump Flow Calculation			
Prepared By: Gallegos, JF, P.E.	**Date:** 4/10/2020	**Checked By:** Dixon, KW, P.E.	**Date:** 4/10/2020

18 Series

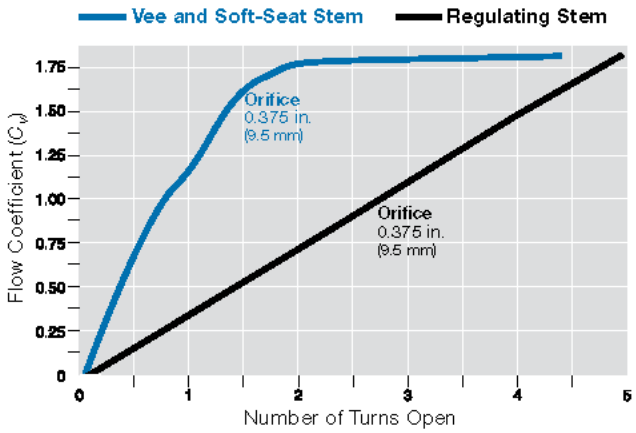

20 and 26 Series

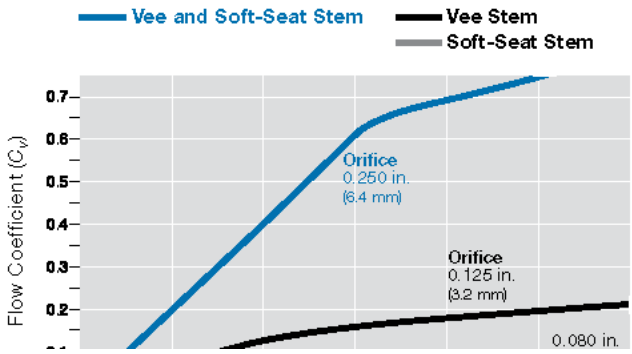

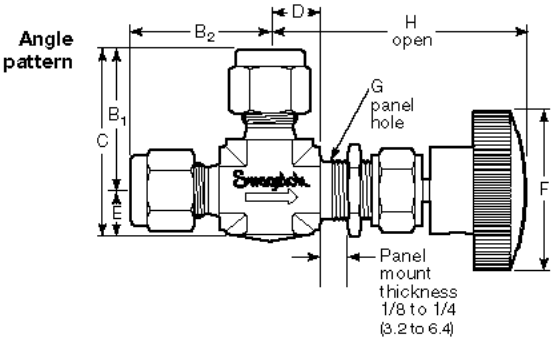

Stainless Steel Valves with Regulating Stems

Select an ordering number.

Alloy 400, Brass, and Steel Valves with Regulating Stems

Replace **SS** in the ordering number with a material designator.

Example: **M**-ORS2

Material	Designator
Alloy 400	M
Brass	B
Steel	S

Vee and Soft-Seat Stems

Replace **R** in the ordering number with **V** for a vee stem or **K** for a soft-seat stem with PCTFE stem tip.

Examples: SS-O**V**S2
SS-O**K**S2

Angle-Pattern Valves

Add **-A** to the ordering number.

Example: SS-ORS2-**A**

CALCULATION SHEET

Project No. S54413.024	**Calculation No.** S54413.024-M-002	**Rev.** 0	**Page No.** 161 of 180
Title: Leachate and Basin Pump Flow Calculation			
Prepared By: Gallegos, JF, P.E.	**Date:** 4/10/2020	**Checked By:** Dixon, KW, P.E.	**Date:** 4/10/2020

ATTACHMENT 6

LEACHATE STRAINER DATA

RPP-CALC-63650, Rev. 0

CALCULATION SHEET

Project No. S54413.024	**Calculation No.** S54413.024-M-002	**Rev.** 0	**Page No.** 162 of 180
Title: Leachate and Basin Pump Flow Calculation			
Prepared By: Gallegos, JF, P.E.	**Date:** 4/10/2020	**Checked By:** Dixon, KW, P.E.	**Date:** 4/10/2020

S-MS-PressureDrop-Y

Pressure Drop Chart

Y Strainers Screwed End

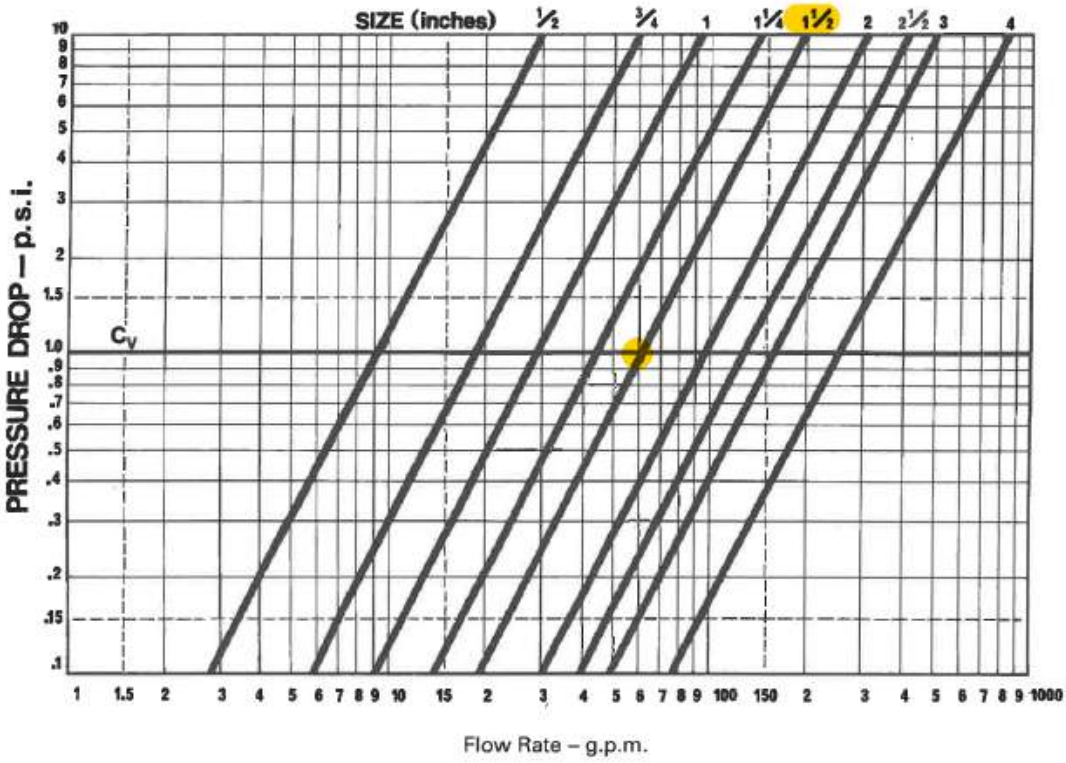

Above based on the flow of clean water through .033: - ¼" perforated metal screens. Consult our Engineering Department for pressure drop information on steam, gases or viscous fluids. See Theoretical Pressure Drop Curves for Screen Clogging In the Technical Data Section for multiplying factors for clogged screens.

Mueller Steam Specialty™

CALCULATION SHEET

Project No. S54413.024	**Calculation No.** S54413.024-M-002	**Rev.** 0	**Page No.** 163 of 180
Title: Leachate and Basin Pump Flow Calculation			
Prepared By: Gallegos, JF, P.E.	**Date:** 4/10/2020	**Checked By:** Dixon, KW, P.E.	**Date:** 4/10/2020

ATTACHMENT 7

3-WAY VALVE DATA SHEET

RPP-CALC-63650, Rev. 0

Sargent & Lundy Engineering Services, Inc

CALCULATION SHEET

Project No. S54413.024	**Calculation No.** S54413.024-M-002	**Rev.** 0	**Page No.** 164 of 180
Title: Leachate and Basin Pump Flow Calculation			
Prepared By: Gallegos, JF, P.E.	**Date:** 4/10/2020	**Checked By:** Dixon, KW, P.E.	**Date:** 4/10/2020

DIMENSIONS - MODEL MPF - CLASSES 150/300

SIZE ins (mm)	A 150	A1 300	øB	D	E	F	G	øH	øI*	J	K	L*	MPF150 Flange Dimensions M	N	S	T	MPF300 Flange Dimensions M1	N1	S1	T1
1/2 (15)	5.98 (152)	6.30 (160)	0.59 (15)	5.12 (130)	2.44 (62)	1.61 (41)	0.43 (11)	1.42 (36)	1.65 (42)	0.35 (9)	0.24 (6)	0.24 (6)	3.50 (89)	4	2.38 (60.5)	0.63 (16)	3.75 (95)	4	2.62 (66.5)	0.63 (16)
3/4 (20)	6.57 (167)	6.97 (177)	0.79 (20)	6.50 (165)	3.23 (82)	1.93 (49)	0.55 (14)	1.65 (42)	1.97 (50)	0.43 (11)	0.24 (6)	0.28 (7.1)	3.88 (98.5)	4	2.75 (69.8)	0.63 (16)	4.62 (117)	4	3.25 (82.5)	0.75 (19)
1 (25)	7.48 (190)	7.87 (200)	0.98 (25)	6.50 (165)	3.50 (89)	2.17 (55)	0.55 (14)	1.65 (42)	1.97 (50)	0.43 (11)	0.24 (6)	0.28 (7.1)	4.25 (108)	4	3.12 (79.2)	0.63 (16)	4.88 (124)	4	3.50 (89)	0.75 (19)
11/4 (32)	8.19 (208)	8.19 (208)	1.26 (32)	8.07 (205)	3.86 (98)	2.48 (63)	0.71 (18)	1.97 (50)	2.76 (70)	0.55 (14)	0.28 (7.1)	0.36 (9.2)	4.62 (117)	4	3.50 (89)	0.63 (16)	5.25 (133)	4	3.88 (98.5)	0.75 (19)
11/2 (40)	8.66 (220)	9.21 (234)	1.50 (38)	8.07 (205)	4.25 (108)	2.91 (74)	0.71 (18)	1.97 (50)	2.76 (70)	0.55 (14)	0.28 (7.1)	0.36 (9.2)	5.00 (127)	4	3.88 (98.5)	0.63 (16)	6.12 (155)	4	4.50 (114)	0.87 (22)
2 (50)	9.96 (253)	10.75 (273)	1.97 (50)	12.80 (325)	5.51 (140)	3.66 (93)	0.91 (23)	2.76 (70)	4.02 (102)	0.67 (17)	0.36 (9.2)	0.45 (11.4)	6.00 (152)	4	4.75 (120.6)	0.75 (19)	6.50 (165)	8	5.00 (127)	0.75 (19)
21/2 (65)	11.81 (300)	11.81 (300)	2.44 (62)	15.75 (400)	7.87 (200)	4.69 (119)	0.98 (25)	4.02 (102)	—	0.87 (22)	0.43 (11)	—	7.00 (177.8)	4	5.50 (139.7)	0.75 (19)	7.50 (190.5)	8	5.88 (149.4)	0.88 (22.4)
3 (80)	12.01 (305)	13.01 (330.4)	2.99 (76)	19.69 (500)	8.27 (210)	5.39 (137)	0.98 (25)	4.02 (102)	—	0.87 (22)	0.43 (11)	—	7.50 (190.5)	4	6.00 (152.4)	0.75 (19)	8.25 (209.6)	8	6.62 (168.2)	0.88 (22.4)
4 (100)	14.51 (368.5)	15.49 (393.5)	3.78 (96)	25.59 (650)	9.06 (230)	6.18 (157)	0.98 (25)	4.02 (102)	—	0.87 (22)	0.43 (11)	—	9.00 (228.6)	8	7.50 (190.5)	0.75 (19)	10.00 (254)	8	7.88 (200.2)	0.88 (22.4)
6 (150)	16.81 (427)	18.43 (468.1)	5.91 (150)	47.24 (1200)	8.66 (220)	6.28 (159.5)	2.40 (61)	4.92 (125)	—	1.42 (36)	M12	—	11.00 (279.4)	8	9.50 (241.3)	0.88 (22.4)	12.50 (317.5)	12	10.62 (269.8)	0.88 (22.4)
8 (200)	20.94 (532)	—	7.87 (200)	59.06 (1500)	10.31 (262)	7.91 (201)	2.40 (61)	4.92 (125)	—	1.42 (36)	M12	—	13.50 (342.9)	8	11.75 (298.5)	0.88 (22.4)	15.00 (381)	12	13.00 (330.2)	1.00 (25.4)

*Outer mounting bolt circle (I) and hole diameter (L) for 1/2"–2" valves not shown in drawing.

TORQUE – Models MPF150/MPF300

SIZE ins (mm)	1/2 (15)	3/4 (20)	1 (25)	1 1/4 (32)	1 1/2 (40)	2 (50)	2 1/2 (65)	3 (80)	4 (100)	6 (150)	8 (200)
Lbs-In	124	159	301	381	513	885	1239	2213	2830	6000	8000
Nm	14	18	34	43	58	100	140	250	320	678	904

Torque at maximum rated pressure, clean water, TFM seating material.

CV – Models MPF150/MPF300

SIZE ins (mm)	1/2 (15)	3/4 (20)	1 (25)	1 1/4 (32)	1 1/2 (40)	2 (50)	2 1/2 (65)	3 (80)	4 (100)	6 (150)	8 (200)
90°	8.1	15	24	40	65	106	171	255	409	1083	2007
180°	11	21	33	54	92	147	240	356	561	1509	2817

WEIGHT – Models MPF150 (4-Way, T Port)

SIZE ins (mm)	1/2 (15)	3/4 (20)	1 (25)	1 1/4 (32)	1 1/2 (40)	2 (50)	2 1/2 (65)	3 (80)	4 (100)	6 (150)	8 (200)
lbs	8.7	10.3	14.9	20.8	30.3	51.3	70.1	88.4	160.5	290.4	543
Kg	3.9	4.7	6.7	9.4	13.7	23.3	31.8	40.1	72.8	131.7	246.3

WEIGHT – Models MPF300 (4-Way, T Port)

SIZE ins (mm)	1/2 (15)	3/4 (20)	1 (25)	1 1/4 (32)	1 1/2 (40)	2 (50)	2 1/2 (65)	3 (80)	4 (100)	6 (150)
lbs	11.2	16	21.8	29.1	42.9	61	86.4	108.3	184.2	456.2
Kg	5.1	7.3	9.9	13.2	19.5	27.7	39.2	49.1	83.6	206.9

MPF150/MPF300
2-1/2" – 8" shown

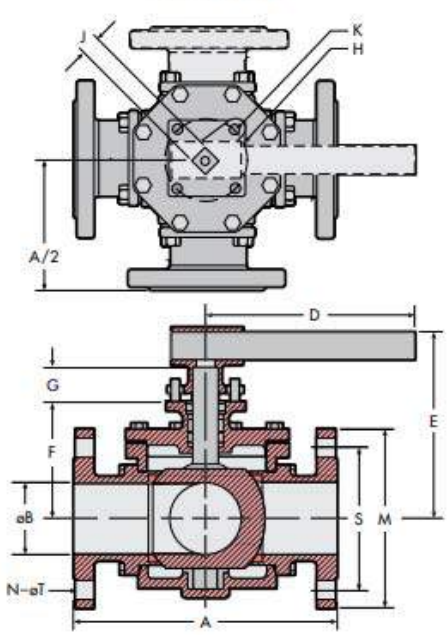

10

CALCULATION SHEET

Project No. S54413.024	**Calculation No.** S54413.024-M-002	**Rev.** 0	**Page No.** 165 of 180
Title: Leachate and Basin Pump Flow Calculation			
Prepared By: Gallegos, JF, P.E.	**Date:** 4/10/2020	**Checked By:** Dixon, KW, P.E.	**Date:** 4/10/2020

ATTACHMENT 8

FRP DATA SHEET

CALCULATION SHEET

Project No. S54413.024	**Calculation No.** S54413.024-M-002	**Rev.** 0	**Page No.** 166 of 180
Title: Leachate and Basin Pump Flow Calculation			
Prepared By: Gallegos, JF, P.E.	**Date:** 4/10/2020	**Checked By:** Dixon, KW, P.E.	**Date:** 4/10/2020

Conley Composites
an ANDRONACO INDUSTRIES company

EPOXY SCHEDULE 40/30
DOUBLE CONTAINED PIPING

ASTM DESIGNATION CODE RTRP-11FW1-2113

Conley Product Data

RUGGED TOP OF THE LINE PERFORMANCE ~ AFFORDABLE COST

Description

- Extra heavy duty filament wound piping for service up to 150 psi
- 60 mil double Nexus® reinforced corrosion barrier (inner liner)
- Premium aromatic amine cured product for operating temperatures up to 275°F
- Sizes available from 2" through 30"
- Complete line of filament wound fittings available
- In house fabrication facilities "From your blueprints to pipe assemblies"
- Color coding available
- Patented interlocking union for thermal expansion (US Patent #5449204 & 5368338)
- See Sch 40/30 Specification
- See Sch 40 Product Data
- See Sch 30 Product Data

Typical Applications

- Waste water treatment
- Steel pickling
- Automotive
- Petrochemical
- Pharmaceutical
- Chemical processing
- Brine and brackish water
- Jet fuel
- Gasoline – Diesel – Fuel Oil
- Cooling water
- Odor control
- Industrial waste
- Food and beverages
- Bridge, roof and floor drains

Performance

- Excellent chemical resistance inside and outside to a variety of caustics, acids, brines and petroleum products ~ See the chemical resistance chart for fluid services
- External UV/Corrosion barrier minimum 10/20 mil on all pipe and fittings
- 25 year guarantee against *'fiber blooming'* on all pipe and fittings
- Straight socket joining system (No expensive tapering tools required)

Specifications

- ASTM D2996 Filament-Wound "Fiberglass" Pipe
- ASTM D2310 Classification for Machine-Made "Fiberglass" Pipe
- ASTM D3567 Determining Dimensions of "Fiberglass" Pipe and Fittings
- ASTM D4024 Machine Made "Fiberglass" Flanges
- ASTM D5685 "Fiberglass" Pressure Pipe Fittings

Codes & Standards

- AWWA C950 Fiberglass Pressure Pipe Standards
- ASME B31.1 Power Piping Code
- ASME B31.3 Process Piping Code

Listings

- U.S. Federal Regulations FDA 21 CFR 175.300

Application Legislation

- 40 CFR 280. RCRA, Subtitle 1
- 40 CFR 264/5
- CERCLA "Superfund Act"

PDS4030E (12/14) 1

Sargent & Lundy Engineering Services, Inc

CALCULATION SHEET

Project No. S54413.024	**Calculation No.** S54413.024-M-002	**Rev.** 0	**Page No.** 167 of 180
Title: Leachate and Basin Pump Flow Calculation			
Prepared By: Gallegos, JF, P.E.	**Date:** 4/10/2020	**Checked By:** Dixon, KW, P.E.	**Date:** 4/10/2020

Schedule 40/30 Pipe Dimensional Data* and Pressure Ratings[1] from –50° to 275°F

[1] Static pressure rating; steady (stationary) pressure is created when using a gear pump, turbine pump, centrifugal pump, etc.
[2] Vacuum Service: A full vacuum within the pipe is equivalent to 14.7 psi external pressure at sea level. Contact Conley for higher external pressure ratings.

NOM SIZE	ANNULUS CLEAR (IN)	SPIDER MIN OPENING (IN)	ANNULUS VOLUME (GAL/FT)	COMBINED WEIGHT (LB/FT)	ANNULUS PRESS (PSI)	ANNULUS VAC PRESS (PSI)[2]
2"/4"	0.81	0.6	0.51	3.14	150	24.1
2"/6"	1.81	1.6	1.32	4.32	150	13.8
3"/6"	1.27	1.0	1.10	4.89	150	13.8
3"/8"	2.27	2.0	2.24	5.85	150	6.1
4"/6"	0.76	0.5	0.82	5.54	150	13.8
4"/8"	1.76	1.5	1.96	6.50	150	6.1
6"/8"	0.72	0.5	1.14	8.45	150	6.1
6"/10"	1.72	1.5	2.61	10.86	150	10.2
8"/10"	0.70	0.5	1.47	12.63	150	10.2
8"/12"	1.83	1.6	3.51	14.02	100	5.7
10"/12"	0.79	0.5	2.04	16.61	100	5.7
10"/14"	1.79	1.5	4.20	18.60	100	3.6
12"/14"	0.63	0.4	2.16	21.67	100	3.6
12"/16"	1.63	1.4	4.65	23.01	100	2.5
14"/16"	0.63	0.4	2.49	24.91	100	2.5
14"/18"	1.63	1.4	5.30	27.91	100	4.2
16"/18"	0.63	0.4	2.82	29.80	100	4.2
16"/20"	1.63	1.4	5.96	31.32	100	3.1
18"/20"	0.63	0.4	3.14	33.21	100	3.1
18"/24"	2.63	2.0	10.40	39.70	100	3.5
20"/24"	1.65	1.4	7.26	40.54	100	3.5
20"/30"	4.77	2.0	21.22	50.49	100	3.1
24"/30"	2.70	2.0	13.96	58.82	100	3.1

*All values are nominal. Minimum wall thickness shall not be less than 87.5% of nominal wall thickness in accordance with ASTM D2996.

NOTES:
For carrier pipe dimensions, see Schedule 40 Pipe Dimensional Data Table
For containment pipe dimensions, see Schedule 30 Pipe Dimensional Data Table

2 PDS4030E (12/14)

CALCULATION SHEET

Project No. S54413.024	**Calculation No.** S54413.024-M-002	**Rev.** 0	**Page No.** 168 of 180
Title: Leachate and Basin Pump Flow Calculation			
Prepared By: Gallegos, JF, P.E.	**Date:** 4/10/2020	**Checked By:** Dixon, KW, P.E.	**Date:** 4/10/2020

Support Spans (FT)

NOM SIZE	CARRIER PIPE TEMPERATURE							
	75	100	125	150	175	200	225	250
2"/4"	15.3	15.3	15.3	15.3	15.2	15.2	15.1	15.1
2"/6"	19.6	19.6	19.6	19.6	19.5	19.5	19.5	19.5
3"/6"	18.3	18.3	18.3	18.3	18.3	18.2	18.2	18.1
3"/8"	21.5	21.5	21.5	21.5	21.4	21.4	21.4	21.4
4"/6"	17.9	17.9	17.9	17.9	17.8	17.7	17.5	17.5
4"/8"	20.5	20.5	20.5	20.5	20.5	20.4	20.3	20.3
6"/8"	19.9	19.9	19.9	19.9	19.8	19.6	19.3	19.3
6"/10"	23.1	23.1	23.1	23.1	23.1	22.9	22.8	22.8
8"/10"	22.5	22.5	22.5	22.5	22.4	22.1	21.9	21.8
8"/12"	24.5	24.5	24.5	24.5	24.4	24.3	24.1	24.1
10"/12"	23.8	23.8	23.8	23.8	23.7	23.4	23.2	23.1
10"/14"	25.3	25.3	25.3	25.3	25.2	25.0	24.8	24.7
12"/14"	25.4	25.4	25.4	25.4	25.2	24.9	24.6	24.5
12"/16"	26.6	26.6	26.6	26.6	26.5	26.2	25.9	25.9
14"/16"	26.4	26.4	26.4	26.4	26.3	25.9	25.6	25.5
14"/18"	28.6	28.6	28.6	28.6	28.5	28.2	28.0	27.9
16"/18"	28.3	28.3	28.3	28.3	28.1	27.8	27.5	27.4
16"/20"	29.4	29.4	29.4	29.4	29.3	29.0	28.7	28.7
18"/20"	29.1	29.1	29.1	29.1	29.0	28.6	28.3	28.2
18"/24"	32.4	32.4	32.4	32.4	32.3	32.0	31.8	31.7
20"/24"	31.9	31.9	31.9	31.9	31.7	31.5	31.2	31.1
20"/30"	36.8	36.8	36.8	36.8	36.7	36.5	36.4	36.3
24"/30"	35.7	35.7	35.7	35.7	35.6	35.3	35.0	34.9

NOTE: These spans are valid for the containment pipe operating at ambient temperatures.

Span multipliers for fluids of different specific gravities

FLUID SPECIFIC GRAVITY							
AIR	0.75	0.9	**1.0**	1.1	1.25	1.5	2.0
1.40	1.07	1.02	**1.0**	0.98	0.95	0.90	0.84
(MULTIPLIER FOR CORRECTED SPAN LENGTHS)							

Span multipliers for fluids at different temperatures

FLUID TEMPERATURE						
75°F	100°F	150°F	200°F	225°F	250°F	275°F
1.0	0.98	0.93	0.88	0.84	0.80	0.75
(MULTIPLIER FOR CORRECTED SPAN LENGTHS)						

FDS4030E (12/14) 3

Sargent & Lundy Engineering Services, Inc

CALCULATION SHEET

Project No. S54413.024	**Calculation No.** S54413.024-M-002	**Rev.** 0	**Page No.** 169 of 180
Title: Leachate and Basin Pump Flow Calculation			
Prepared By: Gallegos, JF, P.E.	**Date:** 4/10/2020	**Checked By:** Dixon, KW, P.E.	**Date:** 4/10/2020

Anchor Loads Due to Restrained Thermal Expansion (LBS)

NOM SIZE	TEMPERATURE CHANGE IN CONTAINMENT PIPE			
	1°F	25°F	50°F	75°F
2"/4"	519	1,535	2,592	3,650
2"/6"	547	2,232	3,987	5,742
3"/6"	751	2,436	4,191	5,946
3"/8"	774	3,003	5,325	7,647
4"/6"	981	2,666	4,421	6,176
4"/8"	1,004	3,233	5,555	7,877
6"/8"	1,697	3,926	6,248	8,570
6"/10"	1,754	5,349	9,095	12,841
8"/10"	2,379	5,975	9,721	13,466
8"/12"	2,412	6,798	11,366	15,934
10"/12"	3,330	7,716	12,284	16,852
10"/14"	3,377	8,888	14,628	20,367
12"/14"	4,469	9,979	15,719	21,459
12"/16"	4,500	10,770	17,301	23,831
14"/16"	5,172	11,441	17,972	24,503
14"/18"	5,243	13,215	21,519	29,824
16"/18"	5,914	13,886	22,191	30,495
16"/20"	5,950	14,782	23,981	33,181
18"/20"	6,621	15,453	24,653	33,853
18"/24"	6,775	19,288	32,323	45,357
20"/24"	7,071	19,584	32,618	45,653
20"/30"	7,306	25,461	44,372	63,284
24"/30"	10,258	28,413	47,325	66,236

NOTE: Thermal end loads on anchors are independent of the carrier pipe temperature. The loads are based on the change in temperature of the containment pipe plus 10% or the maximum load from the carrier pipe at 150°F with uninsulated containment pipe.

4 PDS4030E (12/14)

CALCULATION SHEET

Project No. S54413.024	**Calculation No.** S54413.024-M-002	**Rev.** 0	**Page No.** 170 of 180
Title: Leachate and Basin Pump Flow Calculation			
Prepared By: Gallegos, JF, P.E.	**Date:** 4/10/2020	**Checked By:** Dixon, KW, P.E.	**Date:** 4/10/2020

Typical Properties

TEMPERATURE	75°F	250°F	
PROPERTY	VALUE	VALUE	METHOD
AXIAL TENSILE STRENGTH	14,200 psi	10,650 psi	ASTM D2105
AXIAL TENSILE DESIGN STRENGTH	3,550 psi	2,660 psi	ASTM D2105
AXIAL MODULUS OF ELASTICITY	1.75×10^6 psi	1.30×10^6 psi	ASTM D2105
COMPRESSIVE STRENGTH	22,750 psi	17,000 psi	ASTM D695
COMPRESSIVE DESIGN STRENGTH	5,685 psi	4,250 psi	ASTM D695
COMPRESSION MODULUS	2.80×10^6 psi	2.10×10^6 psi	ASTM D695
POISSON'S RATIO $V_{a/n}$ ($V_{n/a}$)	0.33 (0.23)		*CONLEY METHOD #20
BEAM BENDING, ULTIMATE STRESS	30,000 psi	22,500 psi	CONLEY METHOD 8
BEAM BENDING, DESIGN STRESS[1]	3,750 psi	2,810 psi	CONLEY METHOD 8
SHEAR MODULUS	1.30×10^6 psi	1.00×10^6 psi	*CONLEY METHOD #9
HYDROSTATIC DESIGN BASIS	16,000 psi	8,000 psi	ASTM D2992 PROCEDURE B
HYDROSTATIC BURST (WALL STRESS @ 72°F)	32,000 psi	24,000 psi	ASTM D1599
CIRCUMFERENTIAL MODULUS OF ELASTICITY	2.50×10^6 psi	1.87×10^6 psi	ASTM D1599
FLEXURAL MODULUS OF ELASTICITY	1.75×10^6 psi	1.30×10^6 psi	ASTM 2790
COEFFICIENT OF LINEAR THERMAL EXPANSION	$9.5 \times \frac{10^{-6}\ \text{IN}}{\text{IN-}^\circ\text{F}}$		CONLEY METHOD 3
COEFFICIENT OF THERMAL CONDUCTIVITY	$2.9\ \frac{\text{BTU/HR-IN}}{\text{FT}^2\text{-}^\circ\text{F}}$		CONLEY METHOD 16
SPECIFIC GRAVITY	1.85		
DENSITY	0.067 LB/CU IN		
DIELECTRIC STRENGTH	$535\ \frac{\text{VOLTS}}{\text{MIL}}$		ASTM D149
DEGREE OF CURE	175°C (347°F) Tg		DMA
HEAT DEFLECTION TEMPERATURE	150°C (302°F)		ISO 75-3
FLOW FACTOR (HAZEN-WILLIAMS)	150		
SURFACE ROUGHNESS	1.7×10^{-5} FEET		
MANNING'S "n"	0.009 INCH		

[1]Beam bending design stress is 1/8 of ultimate to allow for combined stress (bending and pressure)

PDS4030E (12/14) 5

CALCULATION SHEET

Project No. S54413.024	**Calculation No.** S54413.024-M-002	**Rev.** 0	**Page No.** 171 of 180
Title: Leachate and Basin Pump Flow Calculation			
Prepared By: Gallegos, JF, P.E.	**Date:** 4/10/2020	**Checked By:** Dixon, KW, P.E.	**Date:** 4/10/2020

ATTACHMENT 9

67246-024-RFI-002-R0

Sargent & Lundy Engineering Services, Inc

CALCULATION SHEET

Project No. S54413.024	**Calculation No.** S54413.024-M-002	**Rev.** 0	**Page No.** 172 of 180
Title: Leachate and Basin Pump Flow Calculation			
Prepared By: Gallegos, JF, P.E.	**Date:** 4/10/2020	**Checked By:** Dixon, KW, P.E.	**Date:** 4/10/2020

REQUEST FOR INFORMATION

Section 1 ***(Subcontractor)***

Subcontract No.: 67246 Rel No.: 024 RFI No. *(Subcontract No.-Rel. No.-RFI-Seq. No.-Rev. No.)*: 67246-024-RFI-002-R0

Subcontract Title: LERF Basin 41 Engineering Design

Project Title: LERF Basin 41 Design Project No.: T1P226

RFI Title/Description: Basin 41 pump design criteria

RFI Initiated By: Paul Dorsh Phone: 946-3300 Date of Request: 12/2/2019

E-Mailed To: Phone: Response Requested By: 12/9/2019

Section 2 ***(Subcontractor)***

Reference Drawing or Document:

N/A

Proposed Change to Document(s)? ☐ Yes ☒ No

Description of Request/Recommendation:

The currently installed LERF Basin pumps consist of a Berkeley submersible pump mounted a 6" Franklin submersible motor. The design requires the motor to be mounted below the pump to ensure proper motor cooling has occurred. This inherently locates the pump suction approximately 31" above the basin floor. To perform a full basin pump down this configuration requires Operations to remove the pump assembly and replace with a temporary pump that has a lower suction elevation.

As a part of the Basin 41 design, a new pump assembly will be designed to facilitate a full basin pump down. To aid in the pump selection a few pump design requirements need to be determined:

1. What is the target flow rate of the new pump?
2. What is the maximum operating design temperature?
3. What is the orifice size of FO-60A-001 on H-2-88974? Where is this located on H-2-89183?
4. What is the maximum and minimum differential pressure of Influent Filter(s) 60B-FL-1A? Where are they located on H-2-89183?
5. What is the fluid density to be used in the flow calculation?
6. What is the fluid viscosity to be used in the flow calculation?

Recommendation:

It appears that previous LERF pump designs target flow rates were nominally 140gpm. Industry standard process fluid temperatures are nominally 100F. Flow rates and temperatures above these values are achievable but will reduce the pump options available.

For the 30% submittal 40psid, 1SpG, and 1cP was used for questions #4, #5, and #6 respectively. All values need to be confirmed and/or updated for the 60% design submittal.

Requestor: Paul Dorsh Date: 12/2/2019

Page 1 of 2 A-6003-417 (REV 10)

Sargent & Lundy Engineering Services, Inc

CALCULATION SHEET

Project No. S54413.024	**Calculation No.** S54413.024-M-002	**Rev.** 0	**Page No.** 173 of 180
Title: Leachate and Basin Pump Flow Calculation			
Prepared By: Gallegos, JF, P.E.	**Date:** 4/10/2020	**Checked By:** Dixon, KW, P.E.	**Date:** 4/10/2020

REQUEST FOR INFORMATION (Continued)

Page 2 of 2

Section 1 ***(Subcontractor)***

Subcontract No.: 67246 Rel No.: 024 RFI No. *(Subcontract No.-Rel. No.-RFI-Seq. No.-Rev. No.)*: 67246-024-RFI-002-R0

Subcontract Title: LERF Basin 41 Engineering Design

Project Title: LERF Basin 41 Design Project No.: T1P226

RFI Title/Description: Basin 41 pump design criteria

Section 3 (WRPS)

Response to Request:

Basin pump design criteria is as follows:

1. Target flow rate for basin pump is 75 gpm (normal) and 150 gpm (max).

2. Nominal process liquid temperature at the LERF basins is 60 deg. F.

3. Orifice size of FO-60A-001 is 1.361" (ref. FO-60A-001 tag details in SmartPlant Foundation (SPF), ECN-642756, and H-2-88974, Sheet 1, Rev 19, Zone F6; see attached). This flow-restricting orifice is located on H-2-89183, Sheet 1, Rev 7 in Zone C3 and on Sheet 2, Rev 1 in Zone C4 (see attached).

4. Maximum differential pressure across influent filters is 60 psid, but filters are normally changed when they reach 40 psid. Assume a differential pressure across clean filters of 2 psid.

5. Use 1.0 specific gravity for fluid density.

6. Use 1.0 cP for fluid viscosity.

Engineer/Position *(if applicable)*: Nathaniel Wilson (PRJ DA) Date:

Contract Change Required?	☐ Yes ☒ No	Contract Change Request/CAL No.:	
Engineering Review Necessary?	☒ Yes ☐ No	Date Sent to Engineering:	12/6/2019
DCN/ECN/EDT Required?	☐ Yes ☒ No	DCN/ECN/EDT No.:	
Applicable TOC-MT Required?	☒ Yes ☐ No	TOC-MT No.:	MT-50497
Clarification Only?	☒ Yes ☐ No		

Responder:

Nathaniel Wilson (PRJ DA) — *Print First and Last Name* — *Signature* — 12/16/19 *Date*

Buyer's Technical Representative (BTR):

Steven Shepherd — *Print First and Last Name* — *Signature* — 12/16/19 *Date*

Page 2 of 2 A-6003-417 (REV 10)

CALCULATION SHEET

Project No. S54413.024	**Calculation No.** S54413.024-M-002	**Rev.** 0	**Page No.** 174 of 180
Title: Leachate and Basin Pump Flow Calculation			
Prepared By: Gallegos, JF, P.E.	**Date:** 4/10/2020	**Checked By:** Dixon, KW, P.E.	**Date:** 4/10/2020

67246-024-RFI-002-R0 (Basin 41 pump design criteria)
Attachment

FO-60A-001 tag details in SPF,
ECN-642756,
H-2-88974, Sheet 1, Rev 19, Zone F6,
H-2-89183, Sheet 1, Rev 7, Zone C3, and
H-2-89183, Sheet 2, Rev 1, Zone C4, all referenced in Item 3 response:

CALCULATION SHEET

Project No. S54413.024	**Calculation No.** S54413.024-M-002	**Rev.** 0	**Page No.** 175 of 180
Title: Leachate and Basin Pump Flow Calculation			
Prepared By: Gallegos, JF, P.E.	**Date:** 4/10/2020	**Checked By:** Dixon, KW, P.E.	**Date:** 4/10/2020

Details - ORIFICE ON 60A INLET ANALYZERS

Page 1

Main Details

Equipment/Component ID No. (EIN):	FO-60A-001
Equipment Title :	ORIFICE ON 60A INLET ANALYZERS

Project Details

Tag Classification Details

Classification Name:	MECHANICAL/PROCESS EQUIP
Tag Type:	FO, FLOW ORIFICE
Tag Sub-Type:	FO, FLOW ORIFICE

Structures, Systems, and Components

Primary Building/Facility:	2025E, 200 AREA EFFLUENT TREATMENT FACILITY
Secondary Building/Facility No./s:	
Primary System:	ETF-60A, INFLUENT RECEIVING/STAGING
Secondary System:	
Room:	
Parent EIN (Assembly):	

Technical Baseline Details

Technical Baseline?:	Y
Design Authority:	

General details

Creation Date:	10/22/2015 6:20:01 PM
Creation User:	superuser
Last Updated Date:	9/26/2017 8:09:43 PM

Configuration details

Object configuration:	PL_TOC
Object query configuration:	

Component Details

MEL Validated:	
Discontinued:	False
Status:	OPR
Asset Class:	Equipment
Department:	POPS
Manufacturer/Make:	
Model Number:	

Sargent & Lundy Engineering Services, Inc

CALCULATION SHEET

Project No. S54413.024	**Calculation No.** S54413.024-M-002	**Rev.** 0	**Page No.** 176 of 180
Title: Leachate and Basin Pump Flow Calculation			
Prepared By: Gallegos, JF, P.E.	**Date:** 4/10/2020	**Checked By:** Dixon, KW, P.E.	**Date:** 4/10/2020

Details - ORIFICE ON 60A INLET ANALYZERS

Page 2

Serial Number:
Spare Parts Catalog ID:

Safety Equipment Compliance

Safety Compliance Status: N/A

End of Service Life/Expiration Date
:
Next TSR Surveillance Late Due Date
:

Safety Classification

Safety Class: GS

DSA Safety SSC ID:

Hazardous Area Classification Details

Equipment Status (Active/Inactive):
Hazardous-area classification:
Comments/Basis:

Additional Details

Description (Key Words): ORIFICE = 1.361", LABELED A1249, 304SS, 150 PSI, 200 F

Description (Location): Location Room: 131

Size (Hp, KW, Dimensions, etc.):
Additional Information:
QA Level: Commercial

Regulatory Driver:
Suspect/Counterfeit Item: False

Label Details

Label size code (see TFC-ENG-STD-12
):
Number of sides:
Title:
Subtitle: ORIFICE ON 60A INLET ANALYZERS

Fed from (breakers, panels, etc.):
Label barcode (auto generated by SP
F): S166745WT

Vendor and Purchase Order Details

Vendor:
Vendor Phone No.:
VIN (Vendor Identification Number):
Purchase Order No.:
Purchase Order Date:
Date Acquired:
Date Installed:

Work Log Details

Work Log Type: 2 - Modify

CALCULATION SHEET

Project No. S54413.024	**Calculation No.** S54413.024-M-002	**Rev.** 0	**Page No.** 177 of 180
Title: Leachate and Basin Pump Flow Calculation			
Prepared By: Gallegos, JF, P.E.	**Date:** 4/10/2020	**Checked By:** Dixon, KW, P.E.	**Date:** 4/10/2020

Details - ORIFICE ON 60A INLET ANALYZERS

Page 3

Work Log Entry: Initial SmartPlant Foundation data import.

Sargent & Lundy Engineering Services, Inc

CALCULATION SHEET

Project No. S54413.024	**Calculation No.** S54413.024-M-002	**Rev.** 0	**Page No.** 178 of 180
Title: Leachate and Basin Pump Flow Calculation			
Prepared By: Gallegos, JF, P.E.	**Date:** 4/10/2020	**Checked By:** Dixon, KW, P.E.	**Date:** 4/10/2020

ENGINEERING CHANGE NOTICE **ESSENTIAL**

CPR 18

Page 1 of 4

1. ECN 642756

Proj. ECN

2. ECN Category (mark one)	3. Originator's Name, Organization, MSIN, and Telephone No.	4. USQ Required?	5. Date
Supplemental [X] Direct Revision [] Change ECN [] Temporary [] Standby [] Supersedure [] Cancel/Void []	LL Lin, 32230, S6-72, 372-2759	[] Yes [X] No	1/15/98
	6. Project Title/No./Work Order No. Install Restricting Orifice Plate In Influent Line/A4055	7. Bldg./Sys./Fac. No. 2025E/60A	8. Approval Designator NA
	9. Document Numbers Changed by this ECN (includes sheet no. and rev.) H-2-88974 Rev 8, Sh 1	10. Related ECN No(s). NA	11. Related PO No. None

12a. Modification Work	12b. Work Package No.	12c. Modification Work Complete	12d. Restored to Original Condition (Temp. or Standby ECN only)
[X] Yes (fill out Blk. 12b) [] No (NA Blks. 12b, 12c, 12d)	EL-98-00031/M	Design Authority/Cog. Engineer Signature & Date	NA Design Authority/Cog. Engineer Signature & Date

13a. Description of Change 13b. Design Baseline Document? [X] Yes [] No

Description of Changes:

Affected document: H-2-88974 Rev 8, Sh 1 P&ID Influent Reception System

See pages 3 and 4 of this ECN for details.

14a. Justification (mark one)

Criteria Change	[]	Design Improvement	[X]	Environmental	[]	Facility Deactivation	[]
As-Found	[]	Facilitate Const	[]	Const. Error/Omission	[]	Design Error/Omission	[]

14b. Justification Details

The current configuration results in discharging process water from the influent instrument loop to Sump 1. This discharge presents a major impact to the STT due to excessive quantity of waste to be reprocessed. Installing the restricting orifice will route the return from the instrument loop to process stream.

15. Distribution (include name, MSIN, and no. of copies)

L. L. Lin, S6-72, 1	J. E. Geary, S6-71, 1
N. J. Sullivan, S6-72, 1	E. A. McNamar, S6-72, 1
B. S. Darling, T4-05, 1	R. N. Wagner, S6-72, 1
D. L. Tubbs, S6-74, 1	D. L. Flyckt, S6-72, 1
N. A. Ballantyne, S6-72, 1	M. W. Bowman, S6-72, 1

RELEASE STAMP
JAN 20 1998
DATE: HANFORD RELEASE ID:
STA: 30 25

A-7900-013-2 (05/96) GEF095

A-7900-013-1

Sargent & Lundy Engineering Services, Inc

CALCULATION SHEET

Project No. S54413.024	**Calculation No.** S54413.024-M-002	**Rev.** 0	**Page No.** 179 of 180
Title: Leachate and Basin Pump Flow Calculation			
Prepared By: Gallegos, JF, P.E.	**Date:** 4/10/2020	**Checked By:** Dixon, KW, P.E.	**Date:** 4/10/2020

ENGINEERING CHANGE NOTICE Page 2 of 4 — 1. ECN (use no. from pg. 1): 642756

16. Design Verification Required	17. Cost Impact						18. Schedule Impact (days)	
	ENGINEERING			CONSTRUCTION				
[X] Yes	Additional	[na]	$	Additional	[na]	$	Improvement	[na]
[] No	Savings	[na]	$	Savings	[na]	$	Delay	[na]

19. Change Impact Review: Indicate the related documents (other than the engineering documents identified on Side 1) that will be affected by the change described in Block 13. Enter the affected document number in Block 20.

SDD/DD	[na]	Seismic/Stress Analysis	[na]	Tank Calibration Manual	[na]
Functional Design Criteria	[na]	Stress/Design Report	[na]	Health Physics Procedure	[na]
Operating Specification	[na]	Interface Control Drawing	[na]	Spares Multiple Unit Listing	[na]
Criticality Specification	[na]	Calibration Procedure	[na]	Test Procedures/Specification	[na]
Conceptual Design Report	[na]	Installation Procedure	[na]	Component Index	[x]
Equipment Spec.	[na]	Maintenance Procedure	[na]	ASME Coded Item	[na]
Const. Spec.	[na]	Engineering Procedure	[na]	Human Factor Consideration	[na]
Procurement Spec.	[na]	Operating Instruction	[na]	Computer Software	[na]
Vendor Information	[na]	Operating Procedure	[x]	Electric Circuit Schedule	[na]
OM Manual	[na]	Operational Safety Requirement	[na]	ICRS Procedure	[na]
FSAR/SAR	[na]	IEFD Drawing	[x]	Process Control Manual/Plan	[na]
Safety Equipment List	[na]	Cell Arrangement Drawing	[na]	Process Flow Chart	[na]
Radiation Work Permit	[na]	Essential Material Specification	[na]	Purchase Requisition	[na]
Environmental Impact Statement	[na]	Fac. Proc. Samp. Schedule	[na]	Tickler File	[na]
Environmental Report	[na]	Inspection Plan	[na]		[]
Environmental Permit	[na]	Inventory Adjustment Request	[na]		[]

20. Other Affected Documents: (NOTE: Documents listed below will not be revised by this ECN.) Signatures below indicate that the signing organization has been notified of other affected documents listed below.

Document Number/Revision	Document Number/Revision	Document Number Revision
POP 55F-001		
~~WHG~~-SD-ETF-OCD-001 HNF		

21. Approvals

	Signature	Date		Signature	Date
Design Authority	L. L. Lin	1-15-98	Design Agent	L. L. Lin	1-15-98
Cog. Eng.	L. L. Lin	1-15-98	PE		
Cog. Mgr.	N. J. Sullivan (informal review)	1-16-98	QA		
QA			Safety		
Safety			Design		
Environ.			Environ.		
Other			Other		

DEPARTMENT OF ENERGY

Signature or a Control Number that tracks the Approval Signature

ADDITIONAL

A-7900-013-3 (05/96) GEF096

CALCULATION SHEET

Project No. S54413.024	**Calculation No.** S54413.024-M-002	**Rev.** 0	**Page No.** 180 of 180
Title: Leachate and Basin Pump Flow Calculation			
Prepared By: Gallegos, JF, P.E.	**Date:** 4/10/2020	**Checked By:** Dixon, KW, P.E.	**Date:** 4/10/2020

ENGINEERING CHANGE NOTICE CONTINUATION SHEET Page 3 of 4

ECN 642756
Date 1/15/98

1. Install orifice plate FO-60A001 at the flange immediate upstream of valve 60A-035. The orifice plate shall be for 3" pipe, 1/8" in thickness, 1.361" inside diameter, 304 SS, and 150 psi rating.

2. Orifice plate installation is to meet the requirements of ETF piping spec class 153S. Test the new installation in accordance with ASME B31.3-1993 edition and addenda for Category D Fluid Service.

DOCUMENT RELEASE AND CHANGE FORM

Prepared For the U.S. Department of Energy, Assistant Secretary for Environmental Management
By Washington River Protection Solutions, LLC., PO Box 850, Richland, WA 99352
Contractor For U.S. Department of Energy, Office of River Protection, under Contract DE-AC27-08RV14800

TRADEMARK DISCLAIMER: Reference herein to any specific commercial product, process, or service by trade name, trademark, manufacturer, or otherwise, does not necessarily constitute or imply its endorsement, recommendation, or favoring by the United States government or any agency thereof or its contractors or subcontractors. Printed in the United States of America.

Release Stamp

DATE:
May 28,2020
HANFORD RELEASE

1. **Doc No:** RPP-CALC-63660 **Rev.** 00

2. **Title:**
LERF Basin 41 Liner Anchor Wall Design

3. **Project Number:** ☐N/A
T1P226

4. **Design Verification Required:**
☐Yes ☒No

5. **USQ Number:** ☒ N/A
RPP-27195

6. **PrHA Number** **Rev.** ☒ N/A

Clearance Review Restriction Type:
public

7. **Approvals**

Title	Name	Signature	Date
Clearance Review	Harrison, Sarah E	*Harrison, Sarah E*	05/28/2020
Design Authority	Wilson, Nathaniel W	*Wilson, Nathaniel W*	04/24/2020
Checker	Santos, Peter P	*Davidson, Ronald W for Santos, Peter P per email*	04/08/2020
Document Control Approval	Meinecke, Kathryn R	*Meinecke, Kathryn R*	05/26/2020
Environmental Protection	Wall, Jeremy M	*Wall, Jeremy M*	04/29/2020
Originator	Davidson, Ronald W	*Davidson, Ronald W*	04/08/2020
Other Approver	McShane, Michael P	*McShane, Michael P*	04/23/2020
Responsible Engineering Manager	Huntington, Matthew R	*Huntington, Matthew R*	04/29/2020

8. **Description of Change and Justification**

Initial Release.

9. **TBDs or Holds** ☒N/A

10. **Related Structures, Systems, and Components**

a. **Related Building/Facilities** ☐N/A	b. **Related Systems** ☐N/A	c. **Related Equipment ID Nos. (EIN)** ☒N/A
ETF FACILITIES LERF FACILITIES	ETF LERF	

11. **Impacted Documents – Engineering** ☒N/A

Document Number	Rev.	Title

12. **Impacted Documents (Outside SPF):**

N/A

13. **Related Documents** ☐N/A

Document Number	Rev.	Title
MT-50497	00	Liquid Effluent Retention Facility (LERF) Basin 41

14. **Distribution**

Name	Organization
Angevine, Brennan T	MISSION ANALYSIS ENGINEERING
Blaak, Whitney S	COGNIZANT SYSTEM ENGINEERING
Demiter, Scott M	ETF OPERATIONS
Foster, Jim	242-A/AW/ETF OPERATIONS
Goessmann, Glen E	ENGINEERING PROGRAMS
Greenhalgh, Aaron M	TANK FARM PROJECTS ENGINEERING
Halgren, Dale L	ETF ENGINEERING
Harris, John W	SAFETY PROGRAM SERVICES RC/P
Joslyn, Cameron C	ETF ENGINEERING
McFerran, Brandon E	242-A/AW/ETF OPERATIONS
McShane, Michael P	ENGINEERING PROGRAMS
Nelson, Richard L	
Omberg Carro, Susan K	NUCLEAR SAFETY
Powers, Daniel J	ETF ENGINEERING
Roosendaal, Gene D	TFP PROJECT MANAGEMENT
Rutherford, Wally	ETF ENGINEERING
Sackett, Tom E	TANK FARM PROJECTS
Samoska, Jerry A	INSTRUMENT & CNTRL ENGINEERING
Shultz, Milton V	NUCLEAR SAFETY
Smith, Gregory E	TANK FARM PROJECTS ENGINEERING

DOCUMENT RELEASE AND CHANGE FORM	**Doc No:** RPP-CALC-63660 **Rev.** 00

14. **Distribution**

Name	**Organization**
Smoot, Bill R	TFP RADCON
Swanson, Brad L	242-A/AW/ETF OPERATIONS
Wall, Jeremy M	RETRVL & CLOSURE/PROJ ENV CMPL
Wilson, Nathaniel W	ETF PROJECTS ENGINEERING

RPP-CALC-63660
Revision 0

LERF Basin 41 Liner Anchor Wall Design

Prepared by

RW Davidson
Sargent & Lundy for Washington River Protection Solutions, LLC

Date Published
April 2020

Prepared for the U.S. Department of Energy
Office of River Protection

Contract No. DE-AC27-08RV14800

5/19/2020

Sargent & Lundy Engineering Services, Inc.	**RPP-CALC-63660, Rev. 0** **CALCULATION COVER SHEET**	**Page No.** 1 of 40 **Date** 4/3/2020 **Rev. No.** 0 **Calculation No:** S54413.024-S-001

Project No.	**Project Title:**	**Client:**
S54413.024	LERF Basin 41 Design	Washington River Protection Solutions, LLC

Title:

LERF Basin 41 Liner Anchor Wall Design

Purpose and Objective:

The purpose of this calculation is to analyze the concrete wall footing and the anchor bolts for the LERF Basin 41 Liner Anchor Wall.

Rev. No.	Total Pages		Prepared By	Checked By	PM/TL
0	40	**Print Name/ Sign:**	RW Davidson, P.E.	PP Santos, P.E.	PM Dorsh, P.E.
		Date:	4/3/2020	4/7/2020	4/7/2020

Revision Description (Revision Description/Affected Pages):

Initial Release.

		Print Name/ Sign:			
		Date:			

Revision Description (Revision Description/Affected Pages):

Sargent & Lundy Engineering Services, Inc.

RPP-CALC-63660, Rev. 0

CALCULATION REVIEW CHECKLIST

Project No.	Calculation No.	Rev.	Page No.
S54413.024	S54413.024-S-001	0	2 of 40

Items Checked	Accept Y	Accept N	Accept N/A	Description of Resolution for Unacceptable Items
1. Cover sheets properly completed.	√			
2. Calculation sheet headers complete with calculation number, revision number, etc.	√			
3. Calculation sheet contents are legible, accurate, and complete per format.	√			
4. Listed attachments included.	√			
5. Calculation objective clearly described.	√			
6. Criteria are suitable and properly referenced to task specific documents.	√			
7. Assumptions and input data selected, described, reasonable, and attached or referenced to task documents.	√			
8. Calculation method identified and appropriate for the design activity.	√			
9. Calculation results reasonable and correctly described in results and conclusions.	√			
10. Physical property calculations generated by CAD software verified via hand calculations.			√	
11. Computer program identified with version and revision.			√	
12. Computer input/output provided or referenced and reasonable.			√	
13. Computer run traceable to calculation (file #, etc.).			√	
14. Computer input/output data and problem type within validation/verification range of use.			√	
15. Computer program validation/verification addressed.			√	
16. Computer operating system in use for calculation preparation is the same as when the software was verified on machine.			√	

Calculation Checking Method	√	Applicable Pages
1. Direct Step-by-Step Check	√	All Pages
2. Reference Chart(s) or Book(s) Comparison (Append Documentation)		
3. Alternate Calculation (Append Documentation)		

Comments:

Preparer (Print Name and Sign):	Date:
RW Davidson, P.E.	4/3/2020
Checker (Print Name and Sign):	**Date:**
PP Santos, P.E.	4/7/2020

Signatures obtained only after discrepancies are corrected and comments are resolved.

Sargent & Lundy Engineering Services, Inc.	RPP-CALC-63660, Rev. 0 **CALCULATION SHEET**		
Project No. S54413.024	**Calculation No.** S54413.024-S-001	**Rev.** 0	**Page No.** 3 of 40
Title: LERF Basin 41 Liner Anchor Wall Design			
Prepared By: RW Davidson	**Date:** 4/3/2020	**Checked By:** PP Santos	**Date:** 4/3/2020

TABLE OF CONTENTS

1.0 PURPOSE 4
2.0 METHODOLOGY 4
3.0 DESIGN INPUTS 4
4.0 ASSUMPTIONS 4
5.0 COMPUTER SOFTWARE 4
6.0 RESULTS 5
7.0 REFERENCES 5
7.0 REFERENCES, CONT'D 6
8.0 CALCULATIONS 7

Attachments

Attachment 1

Attachment 2

Acronyms

ACI	American Concrete Institute
ADH	Adhesive Anchor
AHR	Anchor
ASCE	American Society of Civil Engineers
DCR	Demand-to-Capacity Ratio
IBC	International Building Code
NDC	Natural Phenomena Design Category
WDC	Wind Design Category

1.0 PURPOSE

The purpose of this calculation is to analyze the concrete wall footing and the anchor bolts for the LERF Basin 41 Liner Anchor Wall.

2.0 METHODOLOGY

Wind, seismic and live loads on the anchor wall are calculated using ASCE 7-10, *Minimum Design Loads on Buildings and Other Structures* and TFC-ENG-STD-06, *Design Loads for Tank Farm Facilities*.

The concrete adhesive anchor bolts are analyzed using Chapter 17 of ACI 318, *Building Code Requirements for Structural Concrete and Commentary* and ESR-3187 for Hilti *HIT-HY 200 Adhesive Anchors and Post Installed Reinforcing Bar Connections in Concrete*. Stability of the concrete wall footing on soil is checked using IBC and *Principles of Foundation Engineering*.

The mechanically tensioned tower system is procured from an off the shelf manufacturer and is not analyzed in this calculation.

3.0 DESIGN INPUTS

1. The REVOC®[1] cover system is supplied as a pre-manufactured system installed by Layfield Group as shown in Attachment 1. Layfield has recommended to increase the counter weight and height of the tension towers to promote better cover folding. This design considers a counter weight of steel weighing approximately 160 lbf and a tensioning tower height of 6'-0" per drawing H-2-838750, SH 5.
2. The anchor wall is General Service per MT-50497.
3. The minimum concrete compressive strength is 4500 psi, (See RPP-SPEC-63632, Section 03 30 00).
4. The anchor rods are based on fractional stainless steel threaded rods using ASTM F593 material per ESR-3187, Table 11.
5. Dimension for the anchor wall are based on Drawings H-2-838750, SH 3.

4.0 ASSUMPTIONS

None.

5.0 COMPUTER SOFTWARE

No unverified computer software was used in this analysis. Mathcad®[2] 15.0 was used for the hand calculations. Calculations are checked using a handheld calculator.

1 REVOC is a registered trademark of LAYFIELD Group. Ltd., Richmond, B.C. Canada.
2 Mathcad is a registered trademark of PTC, Inc., Needham, Massachusetts.

6.0 RESULTS

The Hilti®[3] HIT-HY 200 adhesive anchors are adequate using a 1/2" stainless steel anchor bolts with a 2 3/4" minimum effective embedment depth and maximum embedment of 3 ½". The anchor wall is adequate with #4 rebar spaced 10" on-center longitudinally and 12" on-center transversely, each face.

TABLE: Results Summary

Tension Post Adhesive Anchors	**DCR**
DCR (tension)	0.27
DCR (shear)	0.02
DCR (per ACI 318, Equation 17.6.3)	0.27
Anchor Wall	**DCR**
DCR (shear)	0.006
DCR (torsion)	0.014
DCR (soil bearing)	0.24
Tension Post	**DCR**
DCR (weld)	0.23
DCR (combined axial, flexure, shear and torsion)	0.03

7.0 REFERENCES

ACI 318-14, *Building Code Requirements for Structural Concrete and Commentary*, 2014, American Concrete Institute, Farmington Hills, MI.

ACI SP-17 (14), "*The Reinforced Concrete Design Handbook, A Companion to ACI 318-14"*, Volume 1, American Concrete Institute, Farmington Hills, MI.

ASCE 7-2010, *Minimum Design Loads for Buildings and Other Structures*, 2010, American Society of Civil Engineers, Reston, VA.

Das, Braja M., *Principles of Foundation Engineering*, Sixth Ed., 2007, Cengage Learning, Stamford, CT.

ESR-3187, Hilti *HIT-HY 200 Adhesive Anchors and Post Installed Reinforcing Bar Connections in Concrete*, Issued March 2018, Revised April 2019, ICC Evaluation Services, Whittier, CA., (See Attachment 2 for Excerpt).

3 Hilti and HIT-HY are registered trademarks of Hilti Aktiengesellschaft, Schaan, Liechtenstein

7.0 REFERENCES, CONT'D

H-2-838750, Rev. 0, Sheets 1-5, *LERF Basin 41 Civil Top Liner, Top Liner Details,* U.S. Department of Energy, Richland, WA.

IBC 2015, *International Building Code*, International Code Council, 2015, Country Club Hills, IL.

MT-50497, Rev 00, Liquid Effluent Retention Facility (LERF) Basin 41, U.S. Department of Energy, Richland, WA.

RPP-SPEC-63632, Rev. 0, *Construction Specification For: LERF Basin 41 Design*, U.S. Department of Energy, Richland, WA.

TFC-ENG-STD-06, Rev. D-2, *Design Loads for Tank Farm Facilities*, U.S. Department of Energy, Richland, WA.

8.0 CALCULATIONS

8.1 Determine Wind Loads

$V := 110\text{mph}$ — Wind Speed (TFC-ENG-STD-06, Table 3, WDC-1/NDC-1).

$K_d := 0.90$ — Wind Direction factor (ASCE 7-10, Section 26.6 and Table 26.6-1 for Chimneys, Tanks and Similar Structures).

$K_z := 0.85$ — Velocity Pressure coefficient for Design Exposure C. (ASCE 7-10, Table 29.3-1 for 0-15 ft)

$K_{zt} := 1.0$ — Topographic factor. (ASCE 7-10, Section 26.8.2)

$G := 0.85$ — Gust Effect factor. (ASCE 7-10, Section 26.9.1)

$h := 6 \cdot ft = 6.0\,ft$ — Height of the tension tower.

$D := 8in$ — Nominal width of the tension tower.

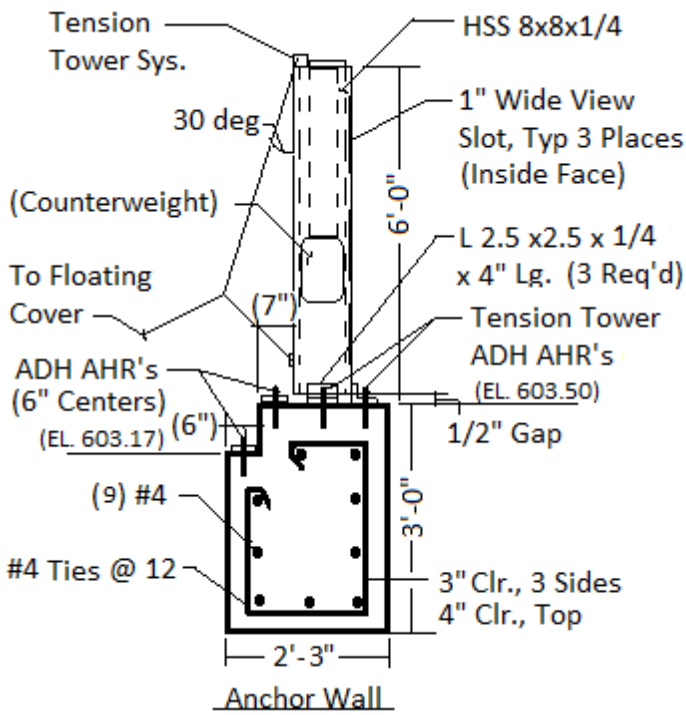

See Attachment 1 for additional details on REVOC cover system/mechanical tension tower.

$q_z := 0.00256 \cdot K_z \cdot K_{zt} \cdot K_d \cdot \left(\frac{V}{mph}\right)^2 \cdot psf = 23.7 \cdot psf$ — Velocity pressure calculated at mean height h. (ASCE 7-10, Equation 29.3-1)

$\frac{h}{D} = 9.0$ — Ratio of height of tension tower post to width of post.

$C_f := 1.5$ — Net force coefficient (interpolated) for square, wind normal to face, (ASCE 7-10, Figure 29.5-1)

$A_f := h \cdot D = 4.0 \cdot ft^2$ — Projected area normal to the wind.

$F_w := q_z \cdot G \cdot C_f \cdot A_f = 120.9\ lbf$ — Design wind load on other structures. (ASCE 7-10, Equation 29.5-1)

8.2 Determine Seismic Loads

$\gamma_{stl} := 490 \cdot pcf$ — Density of steel, (AISC 14th Ed., Table 17-12).

$Wt_{tower} := 19.61 \cdot \frac{lbf}{ft} \cdot h = 117.7\ lbf$ — Weight of tension tower member, (HSS 8x8x3/16), (AISC 14th Ed.,Table 1-12).

$Wt_{cwt} := (7in \cdot 7in \cdot 12in) \cdot \gamma_{stl} = 166.7\ lbf$ — Approximate weight of tension tower steel counterweight.

$Wt_{tot} := \left(Wt_{tower} + Wt_{cwt}\right) \cdot 1.15 = 327.1\ lbf$ — Total weight of tension tower system, (includes 15% contingency for misc. components, pulleys, cables etc.).

$S_{DS} := 0.588$ — Horizontal five-percent damped design spectral response acceleration at short periods. (TFC-ENG-STD-06)

$z_h := 0.0$ — Ratio of the height in structure of point of attachment of component to the average roof height of structure.

$I_p := 1.0$ — Component importance factor for SDC-1 loading. (TFC-ENG-STD-06)

$a_p := 1.0$ — Component amplification factor for other rigid components, limited deformability. (ASCE 7-10, Table 13.5-1)

$R_p := 2.5$ — Component response modification factor for other rigid components, limited deformability.. (ASCE 7-10, Table 13.5-1)

$$F_{pnom} := \frac{0.4 \cdot a_p \cdot S_{DS} \cdot \left(Wt_{tot}\right)}{\frac{R_p}{I_p}} [1 + 2(z_h)] = 30.8 \cdot lbf$$

The horizontal seismic force. (ASCE 7-10, Equation 13.3-1)

$F_{pmax} := 1.6 S_{DS} \cdot I_p \cdot \left(Wt_{tot}\right) = 307.7\ lbf$ — The maximum lateral seismic force. (ASCE 7-10, Equation 13.3-2)

$F_{pmin} := 0.3 S_{DS} \cdot I_p \cdot \left(Wt_{tot}\right) = 57.7\ lbf$ — The minimum lateral seismic force. (ASCE 7-10, Equation 13.3-3)

$$F_p := \begin{cases} F_{pmin} & \text{if } F_{pnom} < F_{pmin} \\ F_{pmax} & \text{if } F_{pnom} > F_{pmax} \\ F_{pnom} & \text{otherwise} \end{cases}$$

The minimum lateral force to use for design purposes.

$F_p = 57.7\ lbf$

$F_v := 0.2 S_{DS} \cdot Wt_{tot} = 38.5\ lbf$ — The design vertical seismic force. (ASCE 7-10, Section 13.3.1)

8.3 Determine Tension Tower Loads on the Anchor Bolts

The following section determines the anchor forces to withstand the worst case loading.

$\Omega_o := 2.5$ — Overstrength factor. (ASCE 7-10, Table 13-5.1, Supplement 1, required for anchorage to concrete).

$R_{cable} := \frac{Wt_{cwt}}{\cos(30 \cdot deg)} = 192.5\ lbf$ — Tension force on the top liner cable based on a 30 deg angle of cable from vertical plane of tension tower.

$F_{h_cable} := \sqrt{R_{cable}^2 - Wt_{cwt}^2} = 96.3\ lbf$ — Horizontal component of the tension cable force.

$F_h := \max\left(1.6F_{h_cable}, 1.0F_w + 1.0 \cdot F_{h_cable}, 1.0 \cdot F_p \cdot \Omega_o + 1.0 \cdot F_{h_cable}\right) = 240.5 \cdot lbf$ — LRFD horizontal load combinations per ASCE 7-10, Section 2.3.2.

$F_{v_comb} := \max\left(1.4 \cdot Wt_{tot}, 1.2 \cdot Wt_{tot} + 1.0 \cdot F_v\right) = 457.9\ lbf$ — LRFD vertical load combinations per ASCE 7-10, Section 2.3.2.

$M_{ot} := 1.0 \cdot F_p \cdot \Omega_o \cdot \frac{2}{3} \cdot h + 1.0 \cdot F_{h_cable} \cdot h = 13854.2 \cdot in \cdot lbf$ — Use LRFD seismic horizontal load combination, previously defined.

$M_{res} := \left(0.9Wt_{tot} - 1.0 \cdot F_v \cdot \Omega_o\right) \cdot 2 \cdot in = 396.4 \cdot in \cdot lbf$ — Use minimum LRFD vertical load combination per ASCE 7-10, Section 2.3.2.

$n := 3$ — Number of anchors in group

$Centroid_{ahrs} := \frac{[(n-1) \cdot 0 \cdot in + (n-2) \cdot 5.5 \cdot in]}{n}$

$Centroid_{ahrs} = 1.83 \cdot in$

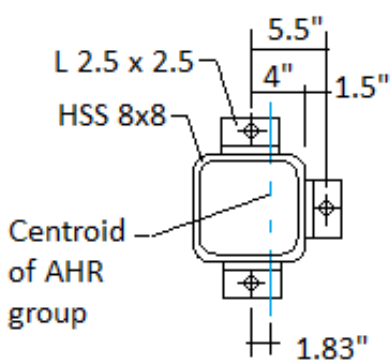

Plan View

$T_{stud} := \frac{M_{ot} - M_{res}}{3 \cdot \left(2 \cdot in + \frac{5.5 \cdot in}{3}\right)} = 1170.2\ lbf$ — Tension load per stud, 3 studs, based on the distance from the centroid of the tension tower anchor group to edge of L2.5 x 2.5 x 4 inch long clip in direction of applied load.

$V_{stud} := \frac{F_h}{3} = 80.2\ lbf$ — Shear load per stud, 3 studs.

8.4 Check Anchor Bolts in Accordance with ACI 318-14, Chapter 17

Define Constants

Based on 1/2" diameter ASTM F593 stainless steel threaded rods with 3 1/2" embedment depth

$n_a := 3$	The number of anchors per post.
$s_a := 5.5 \cdot in$	Minimum spacing of the tension tower anchors.
$h_{ef} := 2.75in$	The effective minimum embedment. (ESR-3187, Table 12 & 14)
$n_{a_t} := 3$	Number of anchors resisting tension. (Moment Couple)
$n_{a_v} := n_a = 3.0$	Number of anchors resisting shear.
$f'_c := 4500psi$	Compressive strength of concrete. (See Inputs)
$k_c := 17$	Effectiveness factor for cracked concrete. (ESR-3187, Table 12)
$\psi_{c_N} := 1.0$	Cracked concrete factor for post-installed anchor in cracked concrete. (ACI 318-14, Section 17.4.2.6)
$\phi_{t_s} := 0.65$	Strength reduction factor for steel failure in tension. (ESR-3187, Table 11)
$\phi_{t_c} := 0.65$	Strength reduction factor for concrete breakout failure in tension. (ESR-3187, Table 12)
$\phi_{v_s} := 0.60$	Strength reduction factor for steel failure in shear. (ESR-3187, Table 11).
$\phi_{v_c} := 0.70$	Strength reduction factor for concrete breakout failure in shear. (ESR-3187, Table 12)
$\phi_e := 0.75$	Tensile strength reduction factor for anchors in moderate or high seismic risk zones. (ACI 318-14 Section 17.2.3.4.4)
$\alpha_{v_seis} := 0.70$	Seismic shear reduction factor, (ESR-3187, Table 11).
$\phi_d := 0.65$	Bond strength reduction factor, (ESR-3187, Table 14 for dry & water saturated concrete installation conditions).
$c_{ac} := 2 \cdot h_{ef} = 5.5 \cdot in$	Critical edge distance factor for adhesive anchors. (ACI 318-14, Section 17.7.6)
$c_{a1} := 6 \cdot in - 1.5 \cdot in = 4.5 \cdot in$	Distance from center of anchor to edge of concrete in the direction of applied shear. (See ACI 318-14, Section 17.5.2.1 for illustration)
$c_{a2} := c_{ac} = 5.5 \cdot in$	Distance from center of anchor to edge of concrete in the direction perpendicular to applied shear (and c_{a1}). (See ACI 318-14, Section 17.5.2.1 for illustration)
$c_{a_min} := \min(c_{a1}, c_{a2}) = 4.5 \cdot in$	The minimum edge distance between the edge of the concrete and the nearest anchor. (primary tension tower anchor)
$h_{min} := h_{ef} + 1.25 \cdot in = 4.0 \cdot in$	The minimum member thickness. (ESR-3187, Table 12)
$h_a := 30in$	Actual concrete thickness. (H-2-838750)
$d := 0.5in$	The anchor diameter. (ESR-3187, Table 11)

Determine Steel Strength of Anchor in Tension

$$\text{Individual_Group} := \begin{cases} \text{"Analyze anchors individually according to ACI 318, Chapter 17"} & \text{if } 3 \cdot h_{ef} \le s_a \\ \text{"Analyze anchors as a group according to ACI 318, Chapter 17"} & \text{otherwise} \end{cases}$$

Individual_Group = "Analyze anchors as a group according to ACI 318, Chapter 17"

$N_{sa} := 14190\,\text{lbf}$

The tensile capacity of the anchor is based on ICC-ES Evaluation Report ESR-3187, Table 11, for ASTM F593, stainless steel threaded anchor rods, conservative.

$\phi N_{sa} := \phi_{t_s} \cdot N_{sa} = 9223.5\,\text{lbf}$

Tensile steel strength incorporating strength reduction factors.

Determine Concrete Breakout Strength of Anchorage in Tension

$$\psi_{ed_N} := \begin{cases} 1 & \text{if } c_{a_min} \ge 1.5 \cdot h_{ef} \\ 0.7 + 0.3 \cdot \dfrac{c_{a_min}}{1.5 \cdot h_{ef}} & \text{otherwise} \end{cases} = 1.0$$

The modification factor for edge effects. (ACI 318-14, Section 17.4.2.5)

$$\psi_{cp_N} := \begin{cases} 1 & \text{if } c_{a_min} \ge c_{ac} \\ \dfrac{\max(c_{a_min}, 1.5 \cdot h_{ef})}{c_{ac}} & \text{otherwise} \end{cases} = 0.8$$

Uncracked concrete pullout factor for post-installed anchors. (ACI 318-14, Section 17.4.2.7)

$\lambda := 1.0$

Modification factor for normalweight concrete. (ACI 318-14, Section 19.2.4.2)

$$N_b := k_c \cdot \lambda \cdot \sqrt{\frac{f'_c}{\text{psi}}} \cdot \left(\frac{h_{ef}}{\text{in}}\right)^{1.5} \text{lbf} = 5200.6\,\text{lbf}$$

Basic concrete breakout strength of a single anchor in tension in cracked concrete. (ACI 318-14, Equation 17.4.2.2a)

$A_{Nco} := 9 \cdot h_{ef}^2 = 68.1 \cdot \text{in}^2$

Projected concrete failure area of a single anchor with an edge distance equal to or greater than 1.5 x h_{ef}. (ACI 318-14, Equation 17.4.2.1c)

$$A_{Nc} := \left(\min(1.5 \cdot h_{ef}, c_{a1}) + s_a + 1.5 \cdot h_{ef}\right) \cdot \left(\min(1.5 \cdot h_{ef}, c_{a2}) + 2 \cdot s_a + 1.5 \cdot h_{ef}\right) = 264.7 \cdot \text{in}^2$$

$A_{Nc} := \min(n_a \cdot A_{Nco}, A_{Nc}) = 204.2 \cdot \text{in}^2$

Projected concrete failure area of the anchorage group. (ACI 318-14, Section 17.4.2.1 and Figure R17.4.2.1(b))

Set: $e'_N := 1.83 \cdot \text{in}$

Set the resultant tension force eccentricity with respect to centroid of the anchors in tension, previously defined. (ACI 318-14, Fig R17.4.2.4)

$$\psi_{ec_N} := \frac{1}{\left(1 + \dfrac{2 \cdot e'_N}{3 \cdot h_{ef}}\right)} = 0.7$$

Modification factor for anchor groups loaded eccentrically in tension. (ACI 318-14, Section 17.4.2.4, Equation 17.4.2.4)

$$N_{cbg} := \frac{A_{Nc}}{A_{Nco}} \cdot \psi_{ec_N} \cdot \psi_{ed_N} \cdot \psi_{c_N} \cdot \psi_{cp_N} \cdot N_b = 8842.3 \cdot \text{lbf}$$

Concrete breakout strength of the anchorage in tension. (ACI 318-14, Equation 17.4.2.1b)

$\phi N_{cb} := \phi_e \cdot \phi_{t_c} \cdot N_{cbg} = 4310.6\,\text{lbf}$

Tensile breakout strength incorporating strength reduction factors.

Determine Bond Strength of Adhesive Anchors in Tension

$\lambda_a := \lambda = 1.0$ — ACI 318-14, Section 17.2.6 and modification factor for normalweight concrete. (ACI 318-14, Section 19.2.4.2)

$\tau_{cr} := 1170 \cdot psi$ — Characteristic bond stress in cracked concrete, temperature range A, (ESR-3187, Table 14).

$\tau_{uncr} := 2220 \cdot psi$ — Characteristic bond stress in uncracked concrete, temperature range A, (ESR-3187, Table 14).

$d_a := d = 0.5 \cdot in$ — Anchor diameter, previously defined.

$N_{ba} := \lambda_a \cdot \tau_{cr} \cdot \pi \cdot d_a \cdot h_{ef} = 5054.0\ lbf$ — Basic bond strength of adhesive anchor, (ACI 318-14, Section 17.4.5.2)

$c_{Na} := 10 \cdot d_a \cdot \sqrt{\frac{\tau_{uncr}}{1100 \cdot psi}} = 7.1 \cdot in$ — Critical edge distance, (ACI 318-14, Equation 17.4.5.1d).

$A_{Nao} := (2 \cdot c_{Na})^2 = 201.8 \cdot in^2$ — Projected influence area for a single anchor, (ACI 318-14, Equation 17.4.5.1c).

$A_{Na} := (2 \cdot c_{Na} + 2s_a) \cdot (c_{Na} + c_{a_min} + s_a) = 431.1 \cdot in^2$ — Projected influence area for a group of anchors, (ACI 318-14, Figure R17.4.5.1).

$A_{Na} := n_a \cdot A_{Nao} = 605.5 \cdot in^2$ — Limiting value of A.Na per ACI 318-14, Section 17.4.5.1).

$\psi_{ed_Na} := 1.0 \qquad c_{a_min} = 4.5 \cdot in \quad > \quad c_{Na} = 7.1 \cdot in$ — Modification factor for edge effects, (ACI 318-14, Equation 17.4.5.4a).

$\psi_{cp_Na} := \frac{c_{a_min}}{c_{ac}} \qquad c_{a_min} = 4.5 \cdot in \quad < \quad c_{ac} = 5.5 \cdot in$ — Modification factor for adhesive anchors designed for uncracked concrete, (ACI 318-14, Equation 17.4.5.5a).

$e'_N := 1.83 \cdot in$ — Previously defined.

$\psi_{ec_Na} := \frac{1}{\left(1 + \frac{e'_N}{c_{Na}}\right)} = 0.8$ — Modification factor for adhesive anchor group loaded eccentrically in tension. (ACI 318-14, Equation 17.4.5.3)

$N_{ag} := \frac{A_{Na}}{A_{Nao}} \cdot \psi_{ec_Na} \cdot \psi_{ed_Na} \cdot \psi_{cp_Na} \cdot N_{ba} = 9864.1\ lbf$ — Nominal bond strength of group of adhesive anchors in tension, (ACI 318-14, Equation 17.4.5.1b).

$\phi N_{ag} := \phi_e \cdot \phi_d \cdot N_{ag} = 4808.7\ lbf$ — Nominal bond strength in tension for a group of adhesive anchors in tension incorporating strength reduction factors, (ACI 318-14, Equation 17.4.5.1b).

Determine Steel Strength of the Anchorage in Shear

$$\text{Individual_Group} := \begin{cases} \text{"Analyze anchors individually in shear according to ACI 318, Chapter 17"} & \text{if } 3\cdot c_{a1} \le s_a \\ \text{"Analyze anchors as a group in shear according to ACI 318, Chapter 17"} & \text{otherwise} \end{cases}$$

Individual_Group = "Analyze anchors as a group in shear according to ACI 318, Chapter 17"

$V_{sa} := 8515\cdot lbf$ — The steel strength in shear. (ESR-3187, Table 11, ASTM F593)

$\phi V_{sa} := \alpha_{v_seis}\cdot\phi_{v_s}\cdot V_{sa} = 3576.3\ lbf$ — Steel shear strength incorporating strength reduction factors.

Determine Concrete Breakout Strength of the Anchorage in Shear

$$\psi_{ed_V} := \begin{cases} 1.0 & \text{if } c_{a2} \ge 1.5\cdot c_{a1} \\ 0.7 + 0.3\cdot\dfrac{c_{a2}}{1.5\cdot c_{a1}} & \text{otherwise} \end{cases} = 0.9$$

Edge distance factor (Anchors not on a corner). (ACI 318-14, Section 17.5.2.6)

$\psi_{c_V} := 1.0$ — Cracked concrete factor without supplementary reinforcement, (ACI 318-14, Section 17.5.2.7)

$$\psi_{h_V} := \begin{cases} \sqrt{\dfrac{1.5\cdot c_{a1}}{h_a}} & \text{if } h_a < 1.5\cdot c_{a1} \\ 1 & \text{otherwise} \end{cases} = 1.00$$

Thickness modification factor. (ACI 318-14, Section 17.5.2.8)

$d_a := d = 0.5\cdot in$ — The outside diameter of the anchor.

$l_e := \min(8\cdot d_a, h_{ef}) = 2.8\cdot in$ — The load bearing length of anchor for shear. (ACI 318-14, Section 17.5.2.2)

$$V_b := \min\left[7\cdot\left(\frac{l_e}{d_a}\right)^{0.2}\cdot\sqrt{\frac{d_a}{in}}\cdot\lambda\cdot\sqrt{\frac{f'_c}{psi}}\cdot\left(\frac{c_{a1}}{in}\right)^{1.5}\cdot lbf,\ 9\cdot\lambda\cdot\sqrt{\frac{f'_c}{psi}}\cdot\left(\frac{c_{a1}}{in}\right)^{1.5}\cdot lbf\right] = 4457.4\cdot lbf$$

Basic concrete breakout strength of a single anchor in shear in cracked concrete. (ACI 318-14, Section 17.5.2.2)

$A_{Vco} := 4.5\cdot c_{a1}^2 = 91.1\cdot in^2$ — The projected area for a single anchor in a deep member with a distance from edges equal or greater than 1.5 x c_{a1}. (ACI 318-14, Equation 17.5.2.1c)

$A_{Vc} := \left[\left(2\cdot 1.5\cdot c_{a1}\right) + 2s_a\right]\cdot\min\left(1.5\cdot c_{a1}, h_a\right) = 165.4\cdot in^2$ — Projected concrete failure area of the anchorage. (ACI 318-14, Section 17.5.2.1 and Figure R17.5.2.1b)

$e'_V := 1.83\cdot in$ — Previously defined and is taken same as value for eccentricity of anchor group in tension.

$$\psi_{ec_V} := \frac{1}{\left(1 + \dfrac{2\cdot e'_V}{3\cdot c_{a1}}\right)} = 0.8$$

Modification factor for anchor group loaded eccentrically in shear. (ACI 318-14, Equation 17.5.2.5)

$$V_{cbg} := \frac{A_{Vc}}{A_{Vco}}\cdot\psi_{ec_V}\cdot\psi_{ed_V}\cdot\psi_{c_V}\cdot\psi_{h_V}\cdot V_b = 6010.4\cdot lbf$$

Nominal concrete breakout strength of anchorage in shear. (ACI 318-14, Equation 17.5.2.1a)

$\phi V_{cb} := \phi_{v_c}\cdot V_{cbg} = 4207.3\ lbf$ — Shear breakout strength incorporating strength reduction factors.

Determine Pryout Strength of the Anchorage in Shear

$k_{cp} := \begin{cases} 1 & \text{if } h_{ef} < 2.5\text{in} \\ 2 & \text{otherwise} \end{cases} = 2.0$

Coefficient for pryout strength. (ACI 318-14, Section 17.5.3.1)

$N_{cbg} = 8842.3\ \text{lbf}$ $N_{ag} = 9864.1\ \text{lbf}$

Use the lesser of N_{cbg} from Equation 17.4.2.1b or N_{ag} from 17.4.5.1b per ACI 318-14, Section 17.5.3.1).

$V_{cp} := k_{cp} \cdot N_{cbg} = 17684.7\ \text{lbf}$

The nominal pryout strength of the anchorage in shear per ACI 318-14, Equation 17.5.3.1a.

$\phi V_{cp} := \phi_{v_c} \cdot V_{cp} = 12379.3\ \text{lbf}$

Shear pryout strength incorporating strength reduction factors.

Determine Governing Failure Strength

$\text{Govern}_v := \begin{cases} \text{"Steel failure governs (Ductile Failure)."} & \text{if } \phi V_{sa} \le \min(\phi V_{cb}, \phi V_{cp}) \\ \text{"Concrete breakout governs (Brittle Failure)."} & \text{if } \phi V_{cb} < \min(\phi V_{sa}, \phi V_{cp}) \\ \text{"Concrete pryout governs (Brittle Failure)."} & \text{otherwise} \end{cases}$

$\text{Govern}_v = \text{"Steel failure governs (Ductile Failure)."}$

$\text{Shear}_{govern} := \begin{cases} \phi V_{sa} & \text{if } \phi V_{sa} \le \min(\phi V_{cb}, \phi V_{cp}) \\ \phi V_{cb} & \text{if } \phi V_{cb} < \min(\phi V_{sa}, \phi V_{cp}) \\ \phi V_{cp} & \text{otherwise} \end{cases}$

The governing allowable shear capacity of the anchorage.

$\text{Shear}_{govern} = 3576\ \text{lbf}$

$\text{Shear_Check} := \begin{cases} \text{"Anchor capacity in shear is OK."} & \text{if } \text{Shear}_{govern} > V_{stud} \\ \text{"Anchor capacity in shear is NOT OK"} & \text{otherwise} \end{cases}$

$V_{stud} = 80.2\ \text{lbf}$

$\text{Shear_Check} = \text{"Anchor capacity in shear is OK."}$

Check to determine the adequacy of the anchors in shear.

$\text{Govern}_t := \begin{cases} \text{"Steel failure governs (Ductile Failure)."} & \text{if } \phi N_{sa} \le \min(\phi N_{cb}, \phi N_{ag}) \\ \text{"Concrete breakout governs (Brittle Failure)."} & \text{if } \phi N_{cb} \le \min(\phi N_{sa}, \phi N_{ag}) \\ \text{"Bond strength governs (Brittle Failure)."} & \text{otherwise} \end{cases}$

$\text{Govern}_t = \text{"Concrete breakout governs (Brittle Failure)."}$

$\text{Tensile}_{govern} := \begin{cases} \phi N_{sa} & \text{if } \phi N_{sa} \le \min(\phi N_{cb}, \phi N_{ag}) \\ \phi N_{cb} & \text{if } \phi N_{cb} \le \min(\phi N_{sa}, \phi N_{ag}) \\ \phi N_{ag} & \text{otherwise} \end{cases}$

The governing allowable tensile capacity of the anchorage.

$\text{Tensile}_{govern} = 4311\ \text{lbf}$

$$Tension_Check := \begin{cases} \text{"Anchor capacity in tension is OK."} & \text{if } Tensile_{govern} > T_{stud} \\ \text{"Anchor capacity in tension is NOT OK"} & \text{otherwise} \end{cases}$$

$T_{stud} = 1170\,lbf$

Tension_Check = "Anchor capacity in tension is OK."

Check to determine the adequacy of the anchors in tension.

$$DCR_{tens} := \frac{T_{stud}}{Tensile_{govern}} = 0.27$$

$$DCR_{shear} := \frac{V_{stud}}{Shear_{govern}} = 0.02$$

$$DCR := \begin{cases} DCR_{tens} & \text{if } DCR_{shear} \le 0.2 \\ DCR_{shear} & \text{if } DCR_{tens} \le 0.2 \\ \frac{1}{1.2}\cdot\left(DCR_{tens} + DCR_{shear}\right) & \text{otherwise} \end{cases} = 0.27$$

The DCR ratio is less than 1.0; therefore, **OK**
ACI 318-14, Section 17.6.

8.5 Check Temperature and Shrinkage Reinforcement (based on ACI 318-14, Section 24.4.3.2)

Due to the (minimal) loads, the anchor wall is adequate for flexure and only temperature and shrinkage reinforcement is required for the rebar in the wall.

Table 24.4.3.2—Minimum ratios of deformed shrinkage and temperature reinforcement area to gross concrete area

Reinforcement type	f_y, psi	Minimum reinforcement ratio	
Deformed bars	< 60,000	0.0020	
Deformed bars or welded wire reinforcement	≥ 60,000	Greater of:	$\frac{0.0018 \times 60,000}{f_y}$
			0.0014

$h_c := 36in$ Thickness of the concrete wall.

$b := 27in$ Width of the wall for rebar design.

$A_{steel} := 0.0018 \cdot b \cdot h_c = 1.75 \cdot in^2$ Area of steel required by temperature and shrinkage. (ACI 318-14, Table 7.6.1.1)

$A_4 := 0.20in^2$ $n := 9$ Area and number of #4 bars. (ACI 318-14, Appendix A)

$A_{s_provided} := A_4 \cdot n = 1.8 \cdot in^2 > A_{steel} = 1.75 \cdot in^2$ The current design is adequate as designed with (9) #4 bars, continuous, w/# 4 ties @ 12".

24.4.3.3 The spacing of deformed shrinkage and temperature reinforcement shall not exceed the lesser of ***5h*** and 18 in.

$s_{long} := 10 \cdot in$ < $18 \cdot in$ OK

$s_{trans} := 12 \cdot in$ < $18 \cdot in$ OK

8.6 Check Minimum Reinforcement (based on ACI 318-14, Section 13.3.5 for Walls as Grade Beams)

$b_w := 27 \cdot in$ Width of wall.

$s_{long} = 10.0 \cdot in$ Rebar spacing for longitudinal bars, previously defined.

$s_{trans} = 12.0 \cdot in$ Rebar spacing for transverse bars, previously defined.

per ACI 318-14, Section 13.3.5 & 11.6:

Min long reinf $A_{s.l} := 0.0012 \cdot b_w \cdot s_{long} = 0.3 \cdot in^2$ Min transverse reinf $A_{s.t} := 0.0020 \cdot b_w \cdot s_{trans} = 0.6 \cdot in^2$

Table 11.6.1—Minimum reinforcement for walls with in-plane $V_u \le 0.5\phi V_c$

Wall type	Type of nonprestressed reinforcement	Bar/wire size	f_y, psi	Minimum longitudinal[1], ρ_ℓ	Minimum transverse, ρ_t
Cast-in-place	Deformed bars	≤ No. 5	≥ 60,000	0.0012	0.0020
			< 60,000	0.0015	0.0025
		> No. 5	Any	0.0015	0.0025
	Welded-wire reinforcement	≤ W31 or D31	Any	0.0012	0.0020
Precast[2]	Deformed bars or welded-wire reinforcement	Any	Any	0.0010	0.0010

$n := 4$ Minimum number of bars provided per rebar spacing.

$A_{s_prov_long} := A_4 \cdot n = 0.8 \cdot in^2$ #4 bars @ 10" spg OK > $A_{s.l} = 0.3 \cdot in^2$

$A_{s_prov_trans} := A_4 \cdot n = 0.8 \cdot in^2$ #4 ties @ 12" spg OK > $A_{s.t} = 0.6 \cdot in^2$

8.7 Check Shear Capacity of Anchor Wall

Table 7.4.2.2—Shear reinforcement requirements

Condition	Spacing		Provision in ACI 318-14
$V_u \le \phi V_c/2$	No shear reinforcement required		9.6.3.1
$\phi V_c/2 < V_u \le \phi V_c$	Minimum shear reinforcement $s \le \frac{d}{2} \le 24$ in.		9.6.3.1
$\phi V_c < V_u \le \phi V_c + \phi 4\sqrt{f'_c} b_w d$	Nonprestressed	$s \le \frac{d}{2} \le 24$ in.	9.7.6.2.2
	Prestressed	$s \le \frac{3h}{4} \le 24$ in.	
$\phi V_c + \phi 4\sqrt{f'_c} b_w d < V_u \le \phi V_c + \phi 8\sqrt{f'_c} b_w d$	Nonprestressed	$s \le \frac{d}{4} \le 12$ in.	9.7.6.2.2
	Prestressed	$s \le \frac{3h}{8} \le 12$ in.	
$V_u > \phi V_c + \phi 8\sqrt{f'_c} b_w d$	Increase cross section		22.5.1.2

$d := 36 \cdot in - 3 \cdot in - 0.5 \cdot in - \frac{0.5 \cdot in}{2} = 32.3 \cdot in$ — Distance from extreme compression fiber to centroid of longitudinal tension reinf.

$\phi_{shear} := 0.75$ — Shear reduction factor. (ACI 318-14, Table 21.2.1)

$\lambda = 1.0$ — Modification factor for normalweight concrete. (ACI 318-14, Section 19.2.4.2)

$\phi V_c := \phi_{shear} \cdot 2\lambda \cdot psi \cdot \sqrt{\frac{f'_c}{psi}} \cdot b_w \cdot d = 88 \cdot kip$ — Shear strength of the evaluated concrete anchor wall section. (ACI 318-14, Section 22.5.5.1)

$V_u := \sqrt{F_{v_comb}^2 + F_h^2} = 517.2\ lbf$ — Resultant shear demand.

$\frac{\phi V_c}{2} = 43808.8\ lbf \quad > \quad V_u$ — No shear reinforement is required per ACI 318-14 Table 7.4.2.2

$DCR_{shear} := \frac{V_u}{\phi V_c} = 0.006$

8.8 Check Torsional Shear on Anchor Wall

$A_{cp} := b_w \cdot h = 1944.0 \cdot in^2$ — Area enclosed by outside perimeter of section per SP-17 (14), Volume 1, Chapter 7, Figure 7.4.3a.

$P_{cp} := 2 \cdot (b_w + h) = 198.0 \cdot in$ — Outside perimeter of concrete section per SP-17 (14), Volume 1, Chapter 7, Figure 7.4.3a.

$\phi_t := 0.75$ — ACI 318-14, Table 21.2.1

$\phi T_{th} := \phi_t \cdot \lambda \cdot psi \cdot \sqrt{\frac{f'_c}{psi}} \cdot \frac{A_{cp}^2}{P_{cp}} = 80022.8 \cdot ft \cdot lbf$ — Threshold torsion ACI 318-14, Table 22.7.4.1 (a), nonprestressed member

$T_u := M_{ot} = 1154.5 \cdot ft \cdot lbf$ — Torsional moment on anchor wall, previously defined.

$\phi T_{th} = 80022.8 \cdot ft \cdot lbf \quad > \quad T_u = 1154.5 \cdot ft \cdot lbf$ — Torsional effects can be neglected, ACI 318-14, Section 22.7

$$DCR_{torsion} := \frac{T_u}{\phi T_{th}} = 0.014$$

8.9 Check Soil Bearing Pressure

The following section will determine if the concrete anchor wall is adequately sized to distribute the load to the soil at an adequate pressure

$l_{cf} := 36 \cdot in \cdot 2 + 8 \cdot in + 2.5 \cdot in \cdot 2 = 7.1\,ft$ — Length of the concrete wall considered (based on 45 deg distribution).

$w_{cf} := 27 \cdot in$ — The width of the concrete wall footing. (H-2-838750)

$t_{cf} := 36in$ — The depth of the concrete wall footing. (H-2-838750)

$\rho_c := 150pcf$ — Typical density of concrete.

$W_{cf} := \rho_c \cdot w_{cf} \cdot l_{cf} \cdot t_{cf} = 7171.9 \cdot lbf$ — The weight of a concrete footing.

$M_1 := 0.6F_w \cdot \frac{h}{2} = 217.5 \cdot ft \cdot lbf$ — In-plane moment on the footing. (ASCE 7-10, Section 2.4.1 Equation 5)

$M_2 := 0.7 \cdot F_p \cdot \frac{2}{3} \cdot h = 161.5 \cdot lbf \cdot ft$ — In-plane moment on the footing. (ASCE 7-10, Section 2.4.1 Equation 5)

$M := \max(M_1, M_2) = 217.5 \cdot ft \cdot lbf$ — Maximum in-plane moment on the anchor wall footing.

$Q := Wt_{tot} + W_{cf} = 7498.9\,lbf$ — The total vertical force bearing on the soil at each tower column.

$e := \frac{M}{Q} = 0.3 \cdot in$ — The resulting eccentricity, which is the moment divided by total bearing load. (Das, pg. 147, Equation 3.51)

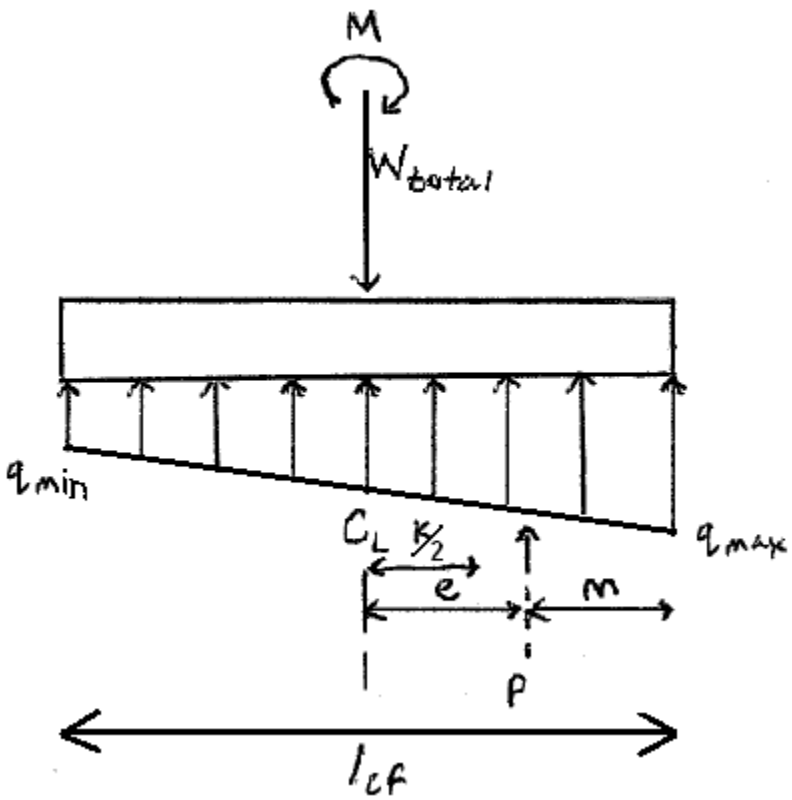

$$q_{min} := \max\left(\frac{Q}{w_{cf} \cdot l_{cf}} - \frac{6 \cdot M}{l_{cf}^2 w_{cf}}, 0psf\right) = 459.0 \cdot psf$$

Minimum Soil Pressure under footing. (Principles of Foundation Engineering, Das, Eq 3.53, pg 147)

$$q_{max} := \frac{Q}{w_{cf} \cdot l_{cf}} + \frac{6 \cdot M}{l_{cf}^2 w_{cf}} = 482.1 \cdot psf$$

Maximum Soil Pressure under footing. (Principles of Foundation Engineering, Das, Eq 3.52, pg 147)

$$p_{allow_sb} := 2000psf$$

The allowable bearing pressure of the soil. (IBC 2015, Table 1806.2, material class 3)

$$DCR_{sb} := \frac{q_{max}}{p_{allow_sb}} = 0.24$$

The demand capacity ratio for the soil bearing pressure. The footing has a DCR lower than 1.0, therefore it is **OK**.

8.9 Check Connection Clip Welds at Base of Tension Tower

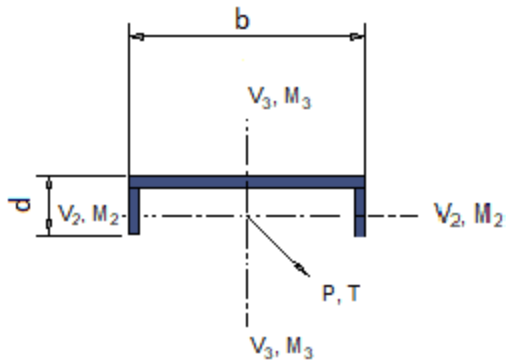

Weld Geometry:

$b := 4 \cdot in$ Weld width.

$d := 2 \cdot in$ Weld length.

$w_{act} := \frac{3}{16} \cdot in$ Weld size.

$F_{EXX} := 70 \cdot ksi$ Ultimate stress of the weld metal.

Envelope connection forces and moments, (conservative since loads are based on LRFD load combinations for AHR's)

$F_h = 240.5\ lbf$ Maximum horizontal load, previously defined.

$F_{v_comb} = 457.9\ lbf$ Maximum vertical load, previously defined.

$M_{ot} = 13854.2 \cdot in \cdot lbf$ Maximum moment, previously defined.

$P := 0 \cdot lbf$ $V_2 := \frac{F_h}{2} = 120.2\ lbf$ $V_3 := \frac{F_{v_comb}}{2} = 228.9\ lbf$

$T := \frac{M_{ot}}{2} = 6927.1 \cdot in \cdot lbf$ $M_2 := 0 \cdot in \cdot lbf$ $M_3 := 0 \cdot in \cdot lbf$

Weld Properties Per Blodgett 1991, Table 5, Page 7.4-7.

$C_2 := \frac{b}{2}$ $C_2 = 2.0 \cdot in$ The distance from the neutral axis to the outer fiber along the 2-2 axis.

$C_3 := \frac{d^2}{2d + b}$ $C_3 = 0.5 \cdot in$ The distance from the neutral axis to the outer fiber along the 3-3 axis.

$A_{w2} := b$ $A_{w2} = 4.0 \cdot in$ The linear shear area of the weld along the 2-2 axis.

$A_{w3} := 2 \cdot d$ $A_{w3} = 4.0 \cdot in$ The linear shear area of the weld along the 3-3 axis. (AISC SPEC, Eqn. C-G4-1)

$J_w := \frac{(b + 2d)^3}{12} - \frac{d^2 \cdot (b + d)^2}{(b + 2 \cdot d)}$ $\quad J_w = 24.7 \cdot in^3$ The linear polar moment of inertia.

$A_{lin} := \sqrt{\left(\frac{V_2}{A_{w2}} + \frac{T \cdot C_3}{J_w}\right)^2 + \left(\frac{V_3}{A_{w3}} + \frac{T \cdot C_2}{J_w}\right)^2}$ $\quad A_{lin} = 641.9 \cdot \frac{lbf}{in}$ Linear weld stress.

Check weld strength:

$\Omega_w := 2$ weld metal AISC SPEC., Table J2.5

$R_n := \frac{0.6 \cdot F_{EXX}}{\Omega_w}$ $\quad R_n = 21.0 \cdot ksi$ Allowable weld stress.

$R_u := \frac{A_{lin}}{0.707 w_{act}}$ $\quad R_u = 4.8 \cdot ksi$ Actual stress in the weld.

$DCR := \frac{R_u}{R_n} = 0.23$ The demand/capacity ratio is < 1; therefore, OK.

8.10 Check the Adequacy of the HSS Tension Tower Posts

Note: The HSS tension towers incorporate three narrow cutouts on the inside face of the posts for view ports. The cutouts are approximately 1" wide by 1'-6" long. Compression and shear checks are performed based on these net section areas.

8.10.1 HSS Tension Tower Posts Loaded in Compression (Column)

This section analyzes the tension tower HSS posts for compression under gravity and earthquake loading. This force will be included with the bending of the columns due to earthquake loading and cable tension loads.

Envelope connection forces and moments, (conservative since loads are based on LRFD load combinations for AHR's)

$F_{v_comb} = 457.9\ lbf$ Maximum vertical load, previously defined.

Common Steel Properties:

$\nu := 0.3$ Poisson ratio

$E := 29000 \cdot ksi$ Steel modulus of elasticity. (AISC 14th Ed., Table B4.1b)

Steel - rectangular HSS:

Rectangular HSS shall be fabricated from ASTM A500 Gr B:

$f_{y500} := 46000 \cdot psi$ minimum yield stress, AISC, Table 5-5.

$f_{u500} := 58000 \cdot psi$ minimum ultimate tensile stress, AISC Table 5-5.

Let: $F_y := f_{y500} = 46.0 \cdot ksi$ $F_u := f_{u500} = 58.0 \cdot ksi$

$$G := \frac{E}{2 \cdot (1 + \nu)} = 11153.8 \cdot ksi$$

Member properties ref AISC [2014]

Section input table (all sections in Manual of Steel Construction, Allowable Stress Design, Fourteenth Edition)

Member := "HSS8X8X1/4"

Variables in data file

Sect = "HSS8X8X1/4"

$H_t = 8.0 \cdot in$ $Wt = 25.8 \cdot plf$ $A = 7.10 \cdot in^2$

$b = 8.0 \cdot in$ $t_{nom} = 0.3 \cdot in$

$t_{des} = 0.2 \cdot in$ $b_t = 31.3$ $Ht_t = 31.3$

$I_x = 70.7 \cdot in^4$ $Z_x = 20.5 \cdot in^3$ $S_x = 17.7 \cdot in^3$ $r_x = 3.2 \cdot in$

$I_y = 70.7 \cdot in^4$ $Z_y = 20.5 \cdot in^3$ $S_y = 17.7 \cdot in^3$ $r_y = 3.2 \cdot in$

$J = 111.0 \cdot in^4$ $C = 28.1 \cdot in^3$

Nominal strength for compression members. (ANSI/AISC 360-14 Chapter E)

$\Omega_c := 1.67$ Safety factor for compression, AISC 14th Ed., Section B 3.7.

Flexural Buckling - E-3

Determine governing slenderness ratio

$r_x = 3.2 \cdot in$ HSS strong axis radius of gyration.

$r_y := r_x$ HSS weak axis radius of gyration.

Buckling over entire length of column:

$K := 2.1$ Estimated length factor for end fixity conditions of the column, (AISC 14th Ed., Comm. 7.2, Table C-A-7.1, Case (e))

$L := h$ Column height (previously defined).

$SR := \frac{K \cdot L}{r_x} = 48.0$ Slenderness ratio.

$\lambda_{cx} := SR = 48.0$ $\lambda_{cy} := SR = 48.0$

Limits for b/t ratio - Table B4.1

$\lambda_p := 1.12 \cdot \sqrt{\frac{E}{F_y}}$ $\lambda_p = 28.1$ Check for compact section - AISC 14th Ed., Table B4.1.

$\lambda_r := 1.40 \cdot \sqrt{\frac{E}{F_y}}$ $\lambda_r = 35.2$ Check for non-compact section - AISC 14th Ed., Table B4.1.

$b_t = 31.3$ $Ht_t = 31.3$ Width-to-thickness ratios.

$r_{b_t} := \begin{cases} b_t & \text{if } b_t \ge Ht_t \\ Ht_t & \text{otherwise} \end{cases}$ $r_{b_t} = 31.3$

$SECTION := \begin{cases} \text{"COMPACT"} & \text{if } r_{b_t} \le \lambda_p \\ \text{"NONCOMPACT"} & \text{if } \lambda_p < r_{b_t} \le \lambda_r \\ \text{"SLENDER"} & \text{otherwise} \end{cases}$ SECTION = "NONCOMPACT"

$\lambda_c := \max(\lambda_{cx}, \lambda_{cy})$ $\lambda_c = 48.0$ Maximum slenderness ratio.

$F_e := \frac{\pi^2 \cdot E}{\lambda_c^2}$ $F_e = 124.2 \cdot ksi$ Elastic buckling stress, AISC 14th Ed., Eq. E3-4.

$$F_{cr} := \begin{cases} 0.658^{\frac{F_y}{F_e}} \cdot F_y & \text{if } \lambda_c \le 4.71 \cdot \sqrt{\frac{E}{F_y}} \\ 0.877 \cdot F_e & \text{otherwise} \end{cases} \qquad F_{cr} = 39.4 \cdot ksi$$

AISC 14th Ed., Eq's E3-2 and E3-3.

$A_{g_net} := A - (t_{des} \cdot 1 \cdot in) = 6.9 \cdot in^2$ Net section area including the 1" wide by 1'-6" long view ports.

$P_n := F_{cr} \cdot A_{g_net}$ $P_n = 270.5 \cdot kip$ Nominal compressive strength, AISC 14th Ed., Eq. E3-1.

$P_c := \frac{P_n}{\Omega_c} = 162.0 \cdot kip$ Axial capacity of HSS 8x8x1/4

8.10.2 HSS Tension Tower Posts Loaded in Bending (Column)

Envelope connection forces and moments, (conservative since loads are based on LRFD load combinations for AHR's)

$M_{ot} = 13854.2 \cdot in \cdot lbf$ Maximum moment, previously defined.

Nominal strength for Square and Rectangular HSS and Box-Shaped Members in flexure. (ANSI/AISC 360-10 Chapter F-F7.)

$\Omega_b := 1.67$ Safety factor for flexure, AISC 14th Ed., Section F1.

SECTION = "NONCOMPACT"

Note: HSS is noncompact section. Limit state of local flange buckling and local web buckling apply. AISC 14th Ed., F7.2, F2.3

$M_n := (F_y \cdot Z_x) = 943.0 \cdot kip \cdot in$ Nominal flexural strength, AISC 14th Ed., Eq F7-1

$M_p := M_n$ AISC 14th Ed., Eq F7-1.

$M_{n_fb} := M_p - \left[(M_p - F_y \cdot S_x) \left(3.57 \cdot b_t \cdot \sqrt{\frac{F_y}{E}} - 4.0 \right) \right] = 885.0 \cdot kip \cdot in$ Nominal flexural strength for flange buckling, AISC 14th Ed., Eq. F7-2.

$M_{n_wb} := M_p - \left[(M_p - F_y \cdot S_x) \left(0.305 \cdot Ht_t \cdot \sqrt{\frac{F_y}{E}} - 0.738 \right) \right] = 989.1 \cdot kip \cdot in$ Nominal flexural strength for web buckling, AISC 14th Ed., Eq. F7-5.

$M_n := \min(M_{n_fb}, M_{n_wb}, M_p) = 885.0 \cdot kip \cdot in$ Nominal flexural strength, AISC 14th Ed., Section F7.

$M_c := \frac{M_n}{\Omega_b}$ $\quad M_c = 529.9 \cdot kip \cdot in$ Flexural capacity of HSS 8x8x1/4.

$DCR_{vc} := \frac{F_{v_comb}}{P_c} = 0.003$ The demand to capacity ratio for the tension tower posts in compression. Since the DCR is less than 1.0, the posts are adequate in compression.

$DCR_f := \frac{M_{ot}}{M_c} = 0.03$ The demand to capacity ratio for the tension tower posts in bending. Since the DCR is less than 1.0, the posts are adequate in bending.

8.10.3 HSS Tension Tower Posts Loaded in Shear (Column)

Envelope connection forces and moments, (conservative since loads are based on LRFD load combinations for AHR's)

$F_h = 240.5\ lbf$ Maximum horizontal load, previously defined.

Nominal strength for hollow rectangular members in shear (AISC 14th Edition Chapter G-G5);

The nominal shear strength, Vn, of rectangular HSS and box members shall be determined using the provisions of Section G2.1 with $A_w = 2ht$ where h for the width resisting the shear force shall be taken as the clear distance between the flanges less the inside corner radius on each side and $t_w = t_{des}$ and $k_v = 5$. If the corner radius is not known, h shall be taken as the corresponding outside dimension minus three times the thickness.

$h_{v.HSS} := H_t - 3 \cdot t_{des}$ $\quad A_{wx.HSS_net} := 2 \cdot h_{v.HSS} \cdot t_{des} - t_{des} \cdot 1 \cdot in = 3.2 \cdot in^2$

$b_{v.HSS} := b - 3 \cdot t_{des}$ $\quad A_{wy.HSS_net} := 2 \cdot b_{v.HSS} \cdot t_{des} - t_{des} \cdot 1 \cdot in = 3.2 \cdot in^2$

Net section areas including the 1" wide x 1'-6" lg. view ports.

Based on AISC 14th Eq's G2-3, G2-4 and G2-5 $\quad k_{v.HSS} := 5$

$$\lambda_{v.HSS} := \sqrt{\frac{k_{v.HSS} \cdot E}{F_y}} = 56.1$$

$$C_{vx.HSS} := \begin{cases} 1 & \text{if } \frac{b_{v.HSS}}{t_{des}} \le 1.10 \cdot (\lambda_{v.HSS}) \\ \frac{t_{des}}{b_{v.HSS}} \cdot 1.10 \cdot \sqrt{\frac{(k_{v.HSS}) \cdot E}{F_y}} & \text{if } 1.10 \cdot (\lambda_{v.HSS}) < \frac{b_{v.HSS}}{t_{des}} \le 1.37 \cdot \lambda_{v.HSS} \\ \left[\frac{1.51 \cdot E \cdot (k_{v.HSS})}{F_y} \cdot \left(\frac{t_{des}}{b_{v.HSS}}\right)^2\right] & \text{otherwise} \end{cases}$$

$\frac{b_{v.HSS}}{t_{des}} = 31.3$

$1.10 \cdot (\lambda_{v.HSS}) = 61.8$

$C_{vx.HSS} = 1.0$

$$C_{vy.HSS} := \begin{cases} 1 & \text{if } \dfrac{h_{v.HSS}}{t_{des}} \le 1.10\cdot(\lambda_{v.HSS}) \\ \dfrac{t_{des}}{h_{v.HSS}}\cdot 1.10\cdot\sqrt{\dfrac{(k_{v.HSS})\cdot E}{F_y}} & \text{if } 1.10\cdot\lambda_{v.HSS} < \dfrac{h_{v.HSS}}{t_{des}} \le 1.37\cdot\lambda_{v.HSS} \\ \left[\dfrac{1.51\cdot E\cdot(k_{v.HSS})}{F_y}\cdot\left(\dfrac{t_{des}}{h_{v.HSS}}\right)^2\right] & \text{otherwise} \end{cases}$$

$$\frac{h_{v.HSS}}{t_{des}} = 31.3$$

$$C_{vy.HSS} = 1.0$$

The nominal shear strength, V_n, of unstiffened or stiffened webs, according to the limit states of shear yielding and shear buckling AISC 14th Ed., Eq. G2-1, is:

$\Omega_v := 1.5$ ASD reduction factor for members in shear AISC 14th, Section G1

$V_{nx.HSS} := 0.6\cdot(F_y)\cdot(A_{wx.HSS_net})\cdot(C_{vx.HSS}) = 87.5\cdot kip$ AISC 14th Ed., Section G2-1.

$V_{ny.HSS} := 0.6\cdot(F_y)\cdot(A_{wy.HSS_net})\cdot(C_{vy.HSS}) = 87.5\cdot kip$ AISC 14th Ed., Section G2-1.

$V_{cx.HSS} := \dfrac{V_{nx.HSS}}{\Omega_v} = 58.3\cdot kip$ Factored allowable shear load for HSS strong axis.

$V_{cy.HSS} := \dfrac{V_{ny.HSS}}{\Omega_v} = 58.3\cdot kip$ Factored allowable shear load for HSS weak axis.

$DCR_{hs} := \dfrac{F_h}{V_{cx.HSS}} = 0.004$ The demand to capacity ratio for the tension tower posts in shear. Since the DCR is less than 1.0, the posts are adequate in shear.

8.10.4 HSS Tension Tower Posts Loaded in Torsion (Column)

Torsional Strength of Round and Rectangular HSS (AISC 14th Edition Chapter H-H3):

$$h_t_{HSS} := \max\left(\frac{b_{v.HSS}}{t_{des}}, \frac{h_{v.HSS}}{t_{des}}\right) = 31.3$$

AISC 14th Eq's H3-3, H3-4 and H3-5

$$2.45\cdot\sqrt{\frac{E}{F_y}} = 61.5$$

$$F_{cr.HSS.tor} := \begin{cases} 0.6\cdot(F_y) & \text{if } h_t_{HSS} \le 2.45\cdot\sqrt{\frac{E}{F_y}} \\ 0.6\cdot(F_y)\cdot\left(2.45\cdot\sqrt{\frac{E}{F_y}}\right)\cdot\frac{1}{h_t_{HSS}} & \text{if } 2.45\cdot\sqrt{\frac{E}{F_y}} < h_t_{HSS} \le 3.07\cdot\sqrt{\frac{E}{F_y}} \\ 0.458\cdot\pi^2\cdot E\cdot h_t_{HSS}^{-2} & \text{otherwise} \end{cases}$$

$$F_{cr.HSS.tor} = 27.6\cdot ksi$$

The nominal torsional strength, T_n, according to the limit states of torsional yielding and torsional buckling is:

$C_{HSS} := C = 28.1\cdot in^3$ HSS torsional constant, previously defined.

$T_{n.HSS} := (F_{cr.HSS.tor})\cdot(C_{HSS}) = 775.6\cdot kip\cdot in$ AISC 14th Ed., Eq. H3-1

The allowable torsional strength, Tn/Ω_T , for round and rectangular HSS shall be determined as follows:

$\Omega_T := 1.67$ ASD reduction factor for members in torsion AISC 14th Ed., Section H3.1.

$T_{c.HSS} := \frac{T_{n.HSS}}{\Omega_T} = 464.4\cdot kip\cdot in$ Factored allowable torsion on HSS

$ecc_{cable} := 2\cdot in$ Eccentricity of applied tension cable force at top of HSS post, conservative.

$DCR_t := \frac{F_h\cdot ecc_{cable}}{T_{c.HSS}} = 0.001$ The demand to capacity ratio for the tension tower posts in torsion. Since the DCR is less than 1.0, the posts are adequate in torsion.

8.10.5 HSS Tension Tower Posts Subject to Combined Axial, Flexure, Shear and Torsion

$DCR_{HSS} := DCR_{vc} + DCR_f + (DCR_{hs} + DCR_t)^2 = 0.03$ The DCR for members subject to combined torsion, shear, flexure and axial force is less than 1.0; Therefore, **OK**. (AISC 14th Ed., Eq. H3-6)

ATTACHMENT 1

REVOC® COVER TENSIONING TOWER SYSTEM

Sargent & Lundy Engineering Services, Inc.

RPP-CALC-63660, Rev. 0

CALCULATION SHEET

Project No. S54413.024	**Calculation No.** S54413.024-S-001	**Rev.** 0	**Page No.** 31 of 40
Title: LERF Basin 41 Liner Anchor Wall Design			
Prepared By: RW Davidson	**Date:** 4/3/2020	**Checked By:** PP Santos	**Date:** 4/3/2020

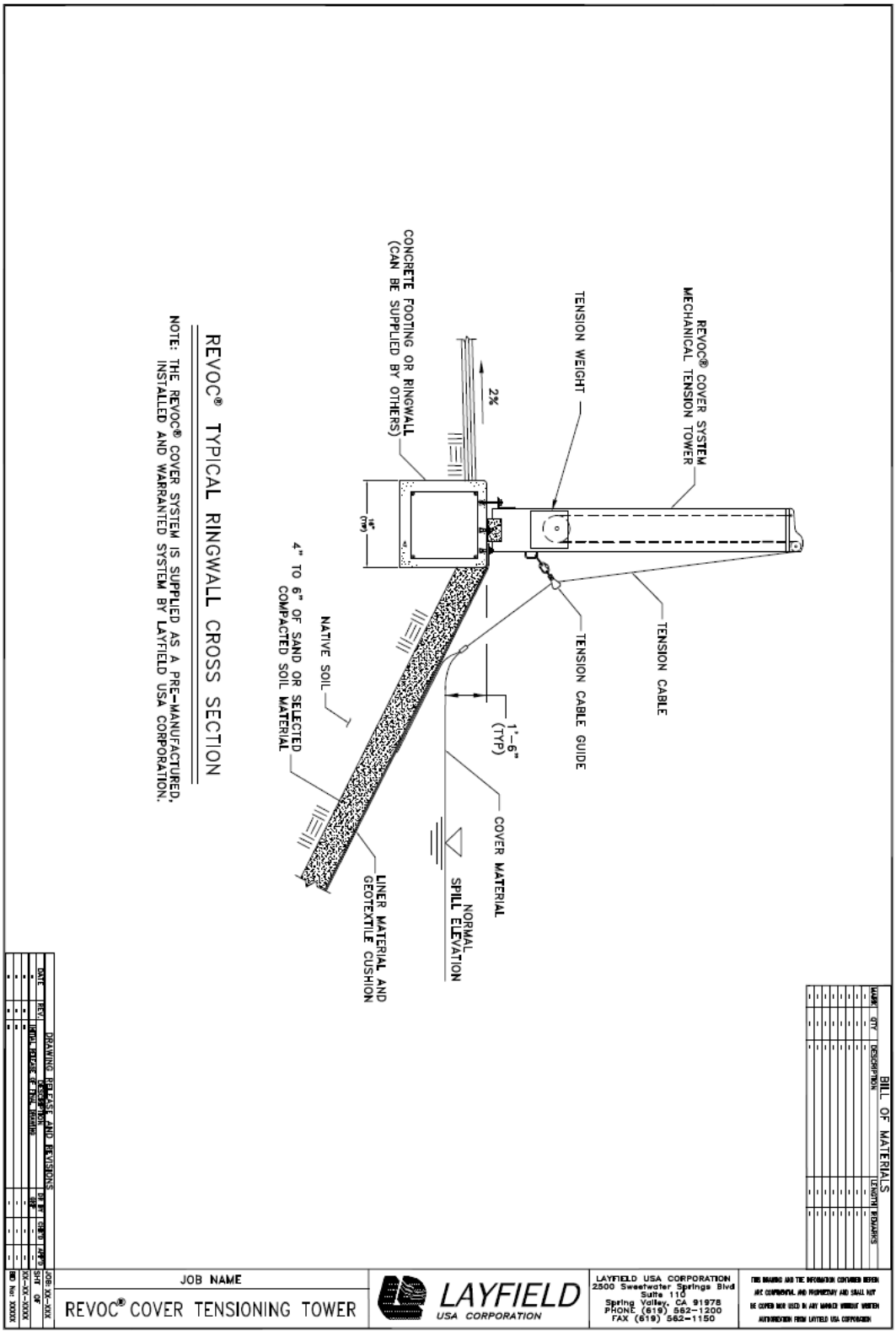

ATTACHMENT 2

ICC-ES EVALUATION REPORT

ESR -3187

HILTI HIT-HY 200 ADHESIVE ANCHORS AND POST INSTALLED REINFORCING BAR CONNECTIONS IN CONCRETE

(EXCERPT)

Sargent & Lundy Engineering Services, Inc.	RPP-CALC-63660, Rev. 0 **CALCULATION SHEET**		
Project No. S54413.024	**Calculation No.** S54413.024-S-001	**Rev.** 0	**Page No.** 33 of 40
Title: LERF Basin 41 Liner Anchor Wall Design			
Prepared By: RW Davidson	**Date:** 4/3/2020	**Checked By:** PP Santos	**Date:** 4/3/2020

ICC EVALUATION SERVICE

In Cooperation with Innovation RESEARCH LABS

Most Widely Accepted and Trusted

ICC-ES Evaluation Report

ICC-ES | (800) 423-6587 | (562) 699-0543 | www.icc-es.org

ESR-3187

Issued 03/2018
Revised 04/2019
This report is subject to renewal 03/2020.

DIVISION: 03 00 00—CONCRETE
SECTION: 03 16 00—CONCRETE ANCHORS
DIVISION: 05 00 00—METALS
SECTION: 05 05 19—POST-INSTALLED CONCRETE ANCHORS

REPORT HOLDER:

HILTI, INC.

EVALUATION SUBJECT:

HILTI HIT-HY 200 ADHESIVE ANCHORS AND POST INSTALLED REINFORCING BAR CONNECTIONS IN CONCRETE

ICC ES ICC ES PMG ICC ES LISTED

"2014 Recipient of Prestigious Western States Seismic Policy Council (WSSPC) Award in Excellence"

A Subsidiary of ICC INTERNATIONAL CODE COUNCIL

ICC-ES Evaluation Reports are not to be construed as representing aesthetics or any other attributes not specifically addressed, nor are they to be construed as an endorsement of the subject of the report or a recommendation for its use. There is no warranty by ICC Evaluation Service, LLC, express or implied, as to any finding or other matter in this report, or as to any product covered by the report.

ANSI ACCREDITED ISO/IEC 17065 Product Certification Body #1000

Copyright © 2019 ICC Evaluation Service, LLC. All rights reserved.

Sargent & Lundy Engineering Services, Inc.	RPP-CALC-63660, Rev. 0 CALCULATION SHEET		
Project No. S54413.024	**Calculation No.** S54413.024-S-001	**Rev.** 0	**Page No.** 34 of 40
Title: LERF Basin 41 Liner Anchor Wall Design			
Prepared By: RW Davidson	**Date:** 4/3/2020	**Checked By:** PP Santos	**Date:** 4/3/2020

ICC EVALUATION SERVICE — Most Widely Accepted and Trusted

ICC-ES Evaluation Report

ESR-3187

Reissued March 2018
Revised April 2019
This report is subject to renewal March 2020.

www.icc-es.org | (800) 423-6587 | (562) 699-0543 *A Subsidiary of the International Code Council®*

DIVISION: 03 00 00—CONCRETE
Section: 03 16 00—Concrete Anchors

DIVISION: 05 00 00—METALS
Section: 05 05 19—Post-installed Concrete Anchors

REPORT HOLDER:

HILTI, INC.

EVALUATION SUBJECT:

HILTI HIT-HY 200 ADHESIVE ANCHORS AND POST INSTALLED REINFORCING BAR CONNECTIONS IN CONCRETE

1.0 EVALUATION SCOPE

Compliance with the following codes:

- 2018, 2015, 2012, and 2009 *International Building Code®* (IBC)
- 2018, 2015, 2012, and 2009 *International Residential Code®* (IRC)
- 2013 *Abu Dhabi International Building Code* (ADIBC)†

†The ADIBC is based on the 2009 IBC. 2009 IBC code sections referenced in this report are the same sections in the ADIBC.

For evaluation for compliance with codes adopted by the Los Angeles Department of Building and Safety (LADBS), see ESR-3187 LABC and LARC Supplement.

For evaluation for compliance with the *National Building Code of Canada®* (NBCC), see listing report ELC-3187.

Property evaluated:

Structural

2.0 USES

Adhesive anchors and reinforcing bars installed using the Hilti HIT-HY 200 Adhesive Anchoring System and Post-Installed Reinforcing Bar System are used to resist static, wind and earthquake (Seismic Design Categories A through F) tension and shear loads in cracked and uncracked normal-weight concrete having a specified compressive strength, f'_c, of 2,500 psi to 8,500 psi (17.2 MPa to 58.6 MPa) [minimum of 24 MPa is required under ADIBC Appendix L, Section 5.1.1].

The anchor system complies with anchors as described in Section 1901.3 of the 2018 and 2015 IBC, Section 1909 of the 2012 IBC and is an alternative to cast-in-place anchors described in Section 1908 of the 2012 IBC, and Sections 1911 and 1912 of the 2009 IBC. The anchor systems may also be used where an engineered design is submitted in accordance with Section R301.1.3 of the IRC.

The post-installed reinforcing bar system is an alternative to cast-in-place reinforcing bars governed by ACI 318 and IBC Chapter 19.

3.0 DESCRIPTION

3.1 General:

The Hilti HIT-HY 200 Adhesive Anchoring System and Post-Installed Reinforcing Bar System are comprised of the following components:

- Hilti HIT-HY 200 adhesive packaged in foil packs (either Hilti HIT-HY 200-A or Hilti HIT-HY 200-R)
- Adhesive mixing and dispensing equipment
- Equipment for hole cleaning and adhesive injection

The Hilti HIT-HY 200 Adhesive Anchoring System may be used with continuously threaded rod, Hilti HIT-Z(-R) anchor rods, Hilti HIS-(R)N internally threaded inserts or deformed steel reinforcing bars as depicted in Figure 1. The Hilti HIT-HY 200 Post-Installed Reinforcing Bar System may only be used with deformed steel reinforcing bars as depicted in Figure 2. The primary components of the Hilti Adhesive Anchoring and Post-Installed Reinforcing Bar Systems, including the Hilti HIT-HY 200 Adhesive, HIT-RE-M static mixing nozzle and steel anchoring elements, are shown in Figure 6 of this report.

The manufacturer's printed Installation instructions (MPII), as included with each adhesive unit package, are replicated as Figure 9.

3.2 Materials:

3.2.1 Hilti HIT-HY 200 Adhesive: Hilti HIT-HY 200 Adhesive is an injectable, two-component hybrid adhesive. The two components are separated by means of a dual-cylinder foil pack attached to a manifold. The two components combine and react when dispensed through a static mixing nozzle attached to the manifold. Hilti HIT-HY 200 is available in 11.1-ounce (330 mL) and 16.9-ounce (500 mL) foil packs. The manifold attached to each foil pack is stamped with the adhesive expiration date. The shelf life, as indicated by the expiration date, applies to an unopened foil pack stored in a dry, dark environment and in accordance with Figure 9.

Hilti HIT-HY 200 Adhesive is available in two options, Hilti HIT-HY 200-A and Hilti HIT-HY 200-R. Both options are subject to the same technical data as set forth in this report. Hilti HIT-HY 200-A will have shorter working times

ICC-ES Evaluation Reports are not to be construed as representing aesthetics or any other attributes not specifically addressed, nor are they to be construed as an endorsement of the subject of the report or a recommendation for its use. There is no warranty by ICC Evaluation Service, LLC, express or implied, as to any finding or other matter in this report, or as to any product covered by the report.

Copyright © 2019 ICC Evaluation Service, LLC. All rights reserved.

and curing times than Hilti HIT-HY 200-R. The packaging for each option employs a different color, which helps the user distinguish between the two adhesives.

3.2.2 Hole Cleaning Equipment:

3.2.2.1 Standard Equipment: Standard hole cleaning equipment, comprised of steel wire brushes and air nozzles, is described in Figure 9 of this report.

3.2.2.2 Hilti Safe-Set™ System: The Hilti Safe-Set™ with Hilti HIT-HY 200 consists of one of the following:

- For the Hilti HIT-Z and HIT-Z-R anchor rods, hole cleaning is not required after drilling the hole, except if the hole is drilled with a diamond core drill bit.
- For the elements described in Sections 3.2.4.2 through 3.2.4.4 and Section 3.2.5, the Hilti TE-CD or TE-YD hollow carbide drill bit with a carbide drilling head conforming to ANSI B212.15. Used in conjunction with a Hilti vacuum with a minimum value for the maximum volumetric flow rate of 129 CFM (61 ℓ/s), the Hilti TE-CD or TE-YD drill bit will remove the drilling dust, automatically cleaning the hole.

3.2.3 Hole Preparation Equipment:

3.2.3.1 Hilti Safe-Set™ System: TE-YRT Roughening Tool: For the elements described in Sections 3.2.5.2 through 3.2.5.4 and Tables 12, 13, 16, 17, 21, and 23, the Hilti TE-YRT roughening tool with a carbide roughening head is used for hole preparation in conjunction with holes core drilled with a diamond core bit as illustrated in Figure 4.

3.2.4 Dispensers: Hilti HIT-HY 200 must be dispensed with manual or electric dispensers provided by Hilti.

3.2.5 Anchor Elements:

3.2.5.1 Hilti HIT-Z and HIT-Z-R Anchor Rods: Hilti HIT-Z and HIT-Z-R anchor rods have a conical shape on the embedded section and a threaded section above the concrete surface. Mechanical properties for the Hilti HIT-Z and HIT-Z-R anchor rods are provided in Table 2. The rods are available in diameters as shown in Table 7 and Figure 1. Hilti HIT-Z anchor rods are produced from carbon steel and furnished with a 0.005-millimeter-thick (5 μm) zinc electroplated coating. Hilti HIT-Z-R anchor rods are fabricated from grade 316 stainless steel.

3.2.5.2 Threaded Steel Rods: Threaded steel rods must be clean, continuously threaded rods (all-thread) in diameters as described in Tables 11 and 15 and Figure 1 of this report. Steel design information for common grades of threaded rods is provided in Table 3. Carbon steel threaded rods must be furnished with a 0.0002-inch-thick (0.005 mm) zinc electroplated coating complying with ASTM B633 SC 1 or must be hot-dipped galvanized complying with ASTM A153, Class C or D. Stainless steel threaded rods must comply with ASTM F593 or ISO 3506 A4. Threaded steel rods must be straight and free of indentations or other defects along their length. The ends may be stamped with identifying marks and the embedded end may be blunt cut or cut on the bias to a chisel point.

3.2.5.3 Steel Reinforcing Bars for use in Post-Installed Anchor Applications: Steel reinforcing bars are deformed bars as described in Table 4 of this report. Tables 11, 15, and 19 and Figure 1 summarize reinforcing bar size ranges. The embedded portions of reinforcing bars must be straight, and free of mill scale, rust, mud, oil and other coatings (other than zinc) that may impair the bond with the adhesive. Reinforcing bars must not be bent after installation except as set forth in ACI 318-14 26.6.3.1(b) or ACI 318-11 7.3.2, as applicable, with the additional condition that the bars must be bent cold, and heating of reinforcing bars to facilitate field bending is not permitted.

3.2.5.4 Hilti HIS-N and HIS-RN Inserts: Hilti HIS-N and HIS-RN inserts have a profile on the external surface and are internally threaded. Mechanical properties for Hilti HIS-N and HIS-RN inserts are provided in Table 5. The inserts are available in diameters and lengths as shown in Table 22 and Figure 1. Hilti HIS-N inserts are produced from carbon steel and furnished with a 0.005-millimeter-thick (5 μm) zinc electroplated coating complying with ASTM B633 SC 1. The stainless steel Hilti HIS-RN inserts are fabricated from X5CrNiMo17122 K700 steel conforming to DIN 17440. Specifications for common bolt types that may be used in conjunction with Hilti HIS-N and HIS-RN inserts are provided in Table 6. Bolt grade and material type (carbon, stainless) must be matched to the insert. Strength reduction factors, ϕ, corresponding to brittle steel elements must be used for Hilti HIS-N and HIS-RN inserts.

3.2.5.5 Ductility: In accordance with ACI 318-14 2.3 or ACI 318-11 D.1, as applicable, in order for a steel element to be considered ductile, the tested elongation must be at least 14 percent and reduction of area must be at least 30 percent. Steel elements with a tested elongation of less than 14 percent or a reduction of area of less than 30 percent, or both, are considered brittle. Values for various steel materials are provided in Tables 2, 3, and 6 of this report. Where values are nonconforming or unstated, the steel must be considered brittle.

3.2.6 Steel Reinforcing Bars for Use in Post-Installed Reinforcing Bar Connections: Steel reinforcing bars used in post-installed reinforcing bar connections are deformed bars (rebar) as depicted in Figures 2 and 3. Tables 25, 26, 27, and Figure 9 summarize reinforcing bar size ranges. The embedded portions of reinforcing bars must be straight, and free of mill scale, rust and other coatings that may impair the bond with the adhesive. Reinforcing bars must not be bent after installation, except as set forth in Section 26.6.3.1(a) of ACI 318-14 or Section 7.3.2 of ACI 318-11, as applicable, with the additional condition that the bars must be bent cold, and heating of reinforcing bars to facilitate field bending is not permitted.

3.3 Concrete:

Normal-weight concrete must comply with Sections 1903 and 1905 of the IBC, as applicable. The specified compressive strength of the concrete must be from 2,500 psi to 8,500 psi (17.2 MPa to 58.6 MPa) [minimum of 24 MPa is required under ADIBC Appendix L, Section 5.1.1].

4.0 DESIGN AND INSTALLATION

4.1 Strength Design of Post-Installed Anchors:

Refer to Table 1 for the design parameters for specific installed elements, and refer to Figure 4 and Section 4.1.4 for a flowchart to determine the applicable design bond strength or pullout strength.

4.1.1 General: The design strength of anchors under the 2018 and 2015 IBC and 2018 and 2015 IRC must be determined in accordance with ACI 318-14 and this report. The design strength of anchors under the 2012 and 2009 IBC, as well as the 2012 and 2009 IRC must be determined in accordance with ACI 318-11 and this report.

A design example according to the 2012 and 2009 IBC based on ACI 318-11 is given in Figure 7 of this report.

Design parameters are based on ACI 318-14 for use with the 2018 and 2015 IBC, and ACI 318-11 for use with the 2012 and 2009 IBC unless noted otherwise in Sections 4.1.1 through 4.1.11 of this report.

Sargent & Lundy Engineering Services, Inc.	RPP-CALC-63660, Rev. 0 **CALCULATION SHEET**		
Project No. S54413.024	**Calculation No.** S54413.024-S-001	**Rev.** 0	**Page No.** 36 of 40
Title: LERF Basin 41 Liner Anchor Wall Design			
Prepared By: RW Davidson	**Date:** 4/3/2020	**Checked By:** PP Santos	**Date:** 4/3/2020

TABLE 1—DESIGN TABLE INDEX

Design Table		Fractional		Metric	
		Table	Page	Table	Page
Hilti HIT-Z and HIT-Z-R Anchor Rod	Steel Strength - N_{sa}, V_{sa}	7	14	7	14
	Concrete Breakout - N_{cb}, N_{cbg}, V_{cb}, V_{cbg}, V_{cp}, V_{cpg}	8	15	8	15
	Pullout Strength – N_p	10	19	10	19
Standard Threaded Rod	Steel Strength - N_{sa}, V_{sa}	11	20	15	25
	Concrete Breakout - N_{cb}, N_{cbg}, V_{cb}, V_{cbg}, V_{cp}, V_{cpg}	12	22	16	26
	Bond Strength - N_a, N_{ag}	14	24	18	28
Hilti HIS-N and HIS-RN Internally Threaded Insert	Steel Strength - N_{sa}, V_{sa}	22	32	22	32
	Concrete Breakout - N_{cb}, N_{cbg}, V_{cb}, V_{cbg}, V_{cp}, V_{cpg}	23	33	23	33
	Bond Strength - N_a, N_{ag}	24	34	24	34

Design Table		Fractional		EU Metric		Canadian	
		Table	Page	Table	Page	Table	Page
Steel Reinforcing Bars	Steel Strength - N_{sa}, V_{sa}	11A	21	15	25	19	29
	Concrete Breakout - N_{cb}, N_{cbg}, V_{cb}, V_{cbg}, V_{cp}, V_{cpg}	12	22	16	26	20	30
	Bond Strength - N_a, N_{ag}	13	23	17	27	21	31
	Determination of development length for post-installed reinforcing bar connections	25	35	26	36	27	36

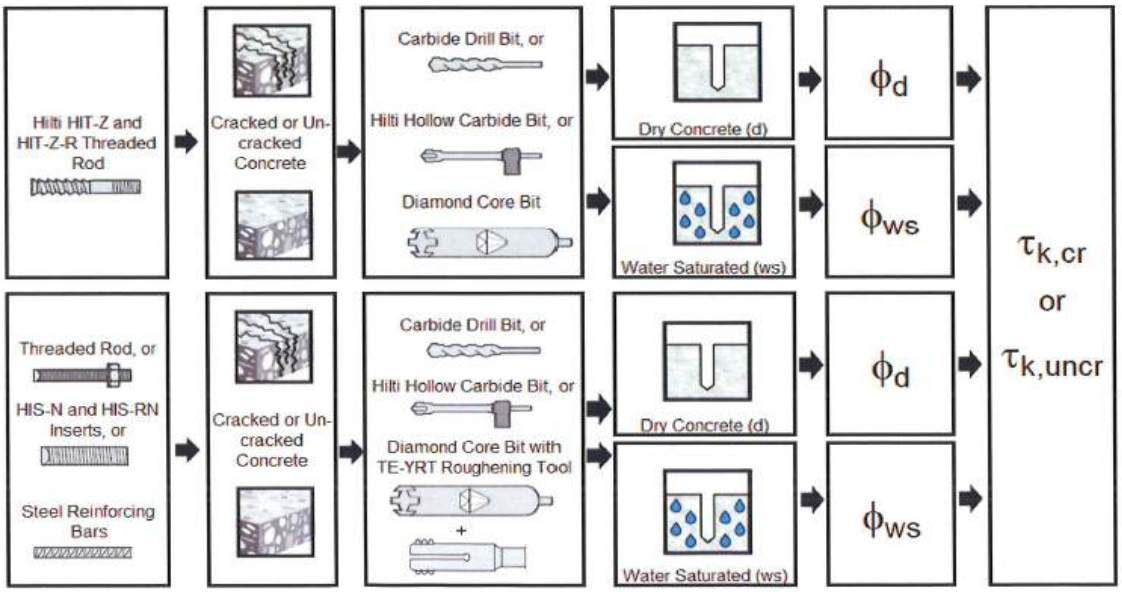

FIGURE 4—FLOWCHART FOR THE ESTABLISHMENT OF DESIGN BOND OR PULLOUT STRENGTH FOR POST-INSTALLED ADHESIVE ANCHORS

Sargent & Lundy Engineering Services, Inc.	RPP-CALC-63660, Rev. 0 **CALCULATION SHEET**		
Project No. S54413.024	**Calculation No.** S54413.024-S-001	**Rev.** 0	**Page No.** 37 of 40
Title: LERF Basin 41 Liner Anchor Wall Design			
Prepared By: RW Davidson	**Date:** 4/3/2020	**Checked By:** PP Santos	**Date:** 4/3/2020

Fractional Threaded Rod

Steel Strength

TABLE 11—STEEL DESIGN INFORMATION FOR FRACTIONAL THREADED ROD

DESIGN INFORMATION		Symbol	Units	Nominal rod diameter (in.)[1]						
				3/8	1/2	5/8	3/4	7/8	1	1 1/4
Rod O.D.		d	in. (mm)	0.375 (9.5)	0.5 (12.7)	0.625 (15.9)	0.75 (19.1)	0.875 (22.2)	1 (25.4)	1.25 (31.8)
Rod effective cross-sectional area		A_{se}	in.^{2} (mm^2)	0.0775 (50)	0.1419 (92)	0.2260 (146)	0.3345 (216)	0.4617 (298)	0.6057 (391)	0.9691 (625)
ISO 898-1 Class 5.8	Nominal strength as governed by steel strength	N_{sa}	lb (kN)	5,620 (25.0)	10,290 (45.8)	16,385 (72.9)	24,250 (107.9)	33,470 (148.9)	43,910 (195.3)	70,260 (312.5)
		V_{sa}	lb (kN)	3,370 (15.0)	6,175 (27.5)	9,830 (43.7)	14,550 (64.7)	20,085 (89.3)	26,345 (117.2)	42,155 (187.5)
	Reduction for seismic shear	$\alpha_{V,seis}$	-	0.70						
	Strength reduction factor ϕ for tension[2]	ϕ	-	0.65						
	Strength reduction factor ϕ for shear[2]	ϕ	-	0.60						
ASTM A193 B7	Nominal strength as governed by steel strength	N_{sa}	lb (kN)	9,685 (43.1)	17,735 (78.9)	28,250 (125.7)	41,810 (186.0)	57,710 (256.7)	75,710 (336.8)	121,135 (538.8)
		V_{sa}	lb (kN)	5,810 (25.9)	10,640 (47.3)	16,950 (75.4)	25,085 (111.6)	34,625 (154.0)	45,425 (202.1)	72,680 (323.3)
	Reduction for seismic shear	$\alpha_{V,seis}$	-	0.70						
	Strength reduction factor ϕ for tension[3]	ϕ	-	0.75						
	Strength reduction factor ϕ for shear[3]	ϕ	-	0.65						
ASTM F1554 Gr. 36	Nominal strength as governed by steel strength	N_{sa}	lb (kN)	- -	8,230 (36.6)	13,110 (58.3)	19,400 (86.3)	26,780 (119.1)	35,130 (156.3)	56,210 (250.0)
		V_{sa}	lb (kN)	- -	4,940 (22.0)	7,865 (35.0)	11,640 (51.8)	16,070 (71.5)	21,080 (93.8)	33,725 (150.0)
	Reduction factor, seismic shear	$\alpha_{V,seis}$	-	0.6						
	Strength reduction factor ϕ for tension[3]	ϕ	-	0.75						
	Strength reduction factor ϕ for shear[3]	ϕ	-	0.65						
ASTM F1554 Gr. 55	Nominal strength as governed by steel strength	N_{sa}	lb (kN)	- -	10,645 (47.4)	16,950 (75.4)	25,090 (111.6)	34,630 (154.0)	45,430 (202.1)	72,685 (323.3)
		V_{sa}	lb (kN)	- -	6,385 (28.4)	10,170 (45.2)	15,055 (67.0)	20,780 (92.4)	27,260 (121.3)	43,610 (194.0)
	Reduction factor, seismic shear	$\alpha_{V,seis}$	-	0.7						
	Strength reduction factor ϕ for tension[3]	ϕ	-	0.75						
	Strength reduction factor ϕ for shear[3]	ϕ	-	0.65						
ASTM F1554 Gr. 105	Nominal strength as governed by steel strength	N_{sa}	lb (kN)	- -	17,740 (78.9)	28,250 (125.7)	41,815 (186.0)	57,715 (256.7)	75,715 (336.8)	121,135 (538.8)
		V_{sa}	lb (kN)	- -	10,645 (47.4)	16,950 (75.4)	25,090 (111.6)	34,630 (154.0)	45,430 (202.1)	72,680 (323.3)
	Reduction factor, seismic shear	$\alpha_{V,seis}$	-	0.7						
	Strength reduction factor ϕ for tension[3]	ϕ	-	0.75						
	Strength reduction factor ϕ for shear[3]	ϕ	-	0.65						
ASTM F593, CW Stainless	Nominal strength as governed by steel strength	N_{sa}	lb (kN)	7,750 (34.5)	14,190 (63.1)	22,600 (100.5)	28,435 (126.5)	39,245 (174.6)	51,485 (229.0)	- -
		V_{sa}	lb (kN)	4,650 (20.7)	8,515 (37.9)	13,560 (60.3)	17,060 (75.9)	23,545 (104.7)	30,890 (137.4)	- -
	Reduction factor, seismic shear	$\alpha_{V,seis}$	-	0.7						-
	Strength reduction factor ϕ for tension[2]	ϕ	-	0.65						-
	Strength reduction factor ϕ for shear[2]	ϕ	-	0.60						-
ASTM A193, Gr. B(M), Class 1 Stainless	Nominal strength as governed by steel strength	N_{sa}	lb (kN)	-						55,240 (245.7)
		V_{sa}	lb (kN)	-						33,145 (147.4)
	Reduction factor, seismic shear	$\alpha_{V,seis}$	-	-						0.6
	Strength reduction factor ϕ for tension[2]	ϕ	-	-						0.75
	Strength reduction factor ϕ for shear[2]	ϕ	-	-						0.65

For **SI**: 1 inch = 25.4 mm, 1 lbf = 4.448 N. For **pound-inch** units: 1 mm = 0.03937 inches, 1 N = 0.2248 lbf

[1] Values provided for common rod material types are based on specified strengths and calculated in accordance with ACI 318-14 Eq. (17.4.1.2) and Eq (17.5.1.2b) or ACI 318-11 Eq. (D-2) and Eq. (D-29). Nuts and washers must be appropriate for the rod.

[2] For use with the load combinations of IBC Section 1605.2, ACI 318-14 5.3 or ACI 318-11 9.2, as set forth in ACI 318-14 17.3.3 or ACI 318-11 D.4.3. If the load combinations of ACI 318-11 Appendix C are used, the appropriate value of ϕ must be determined in accordance with ACI 318-11 D.4.4. Values correspond to a brittle steel element.

[3] For use with the load combinations of IBC Section 1605.2, ACI 318-14 5.3 or ACI 318-11 9.2, as set forth in ACI 318-14 17.3.3 or ACI 318-11 D.4.3. If the load combinations of ACI 318-11 Appendix C are used, the appropriate value of ϕ must be determined in accordance with ACI 318-11 D.4.4. Values correspond to a ductile steel element.

Sargent & Lundy Engineering Services, Inc.	RPP-CALC-63660, Rev. 0 **CALCULATION SHEET**		
Project No. S54413.024	**Calculation No.** S54413.024-S-001	**Rev.** 0	**Page No.** 39 of 40
Title: LERF Basin 41 Liner Anchor Wall Design			
Prepared By: RW Davidson	**Date:** 4/3/2020	**Checked By:** PP Santos	**Date:** 4/3/2020

Fractional Threaded Rod and Reinforcing Bars

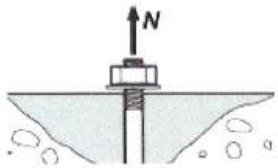

Concrete Breakout Strength

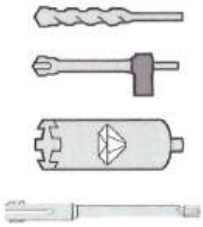

Carbide Bit or
Hilti Hollow Carbide Bit or
Diamond Core Bit + Roughening Tool

TABLE 12—CONCRETE BREAKOUT DESIGN INFORMATION FOR FRACTIONAL THREADED ROD AND REINFORCING BARS IN HOLES DRILLED WITH A HAMMER DRILL AND CARBIDE BIT (OR HILTI HOLLOW CARBIDE DRILL BIT) OR CORE DRILLED WITH A DIAMOND CORE BIT AND ROUGHENED WITH A HILTI ROUGHENING TOOL[1]

DESIGN INFORMATION	Symbol	Units	Nominal rod diameter (in.) / Reinforcing bar size							
			3/8 or #3	1/2 or #4	5/8 or #5	3/4 or #6	7/8 or #7	1 or #8	#9	1 1/4 or #10
Effectiveness factor for cracked concrete	$k_{c,cr}$	in-lb (SI)	17 (7.1)							
Effectiveness factor for uncracked concrete	$k_{c,uncr}$	in-lb (SI)	24 (10)							
Minimum Embedment	$h_{ef,min}$	in. (mm)	2 3/8 (60)	2 3/4 (70)	3 1/8 (79)	3 1/2 (89)	3 1/2 (89)	4 (102)	4 1/2 (114)	5 (127)
Maximum Embedment	$h_{ef,max}$	in. (mm)	7 1/2 (191)	10 (254)	12 1/2 (318)	15 (381)	17 1/2 (445)	20 (508)	22 1/2 (572)	25 (635)
Min. anchor spacing[3]	s_{min}	in. (mm)	1 7/8 (48)	2 1/2 (64)	3 1/8 (79)	3 3/4 (95)	4 3/8 (111)	5 (127)	5 5/8 (143)	6 1/4 (159)
Min. edge distance (Threaded rods)	c_{min}	in. (mm)	1¾ (45)	1¾ (45)	2 (3) (50) (3)	2 1/8 (3) (55) (3)	2¼ (3) (60) (3)	2¾ (3) (70) (3)	n/a	3 1/8 (3) (80) (3)
Min. edge distance (Reinforcing bars)[3]	c_{min}	-	5d; or see Section 4.1.9.2 of this report for design with reduced minimum edge distances							
Minimum concrete thickness	h_{min}	in. (mm)	h_{ef} + 1 1/4 (h_{ef} + 30)		$h_{ef} + 2d_0$ (4)					
Critical edge distance – splitting (for uncracked concrete)	c_{ac}	-	See Section 4.1.10.2 of this report.							
Strength reduction factor for tension, concrete failure modes, Condition B[2]	ϕ	-	0.65							
Strength reduction factor for shear, concrete failure modes, Condition B[2]	ϕ	-	0.70							

For **SI**: 1 inch ≅ 25.4 mm, 1 lbf = 4.448 N, 1 psi = 0.006897 MPa.
For pound-inch units: 1 mm = 0.03937 inches, 1 N = 0.2248 lbf, 1 MPa = 145.0 psi

[1] Additional setting information is described in Figure 9, Manufacturers Printed Installation Instructions (MPII).
[2] Values provided for post-installed anchors under Condition B without supplementary reinforcement as defined in ACI 318-14 17.3.3 or ACI 318-11 D.4.3.
[3] For installations with 1 3/4-inch edge distance, refer to Section 4.1.9.2 for spacing and maximum torque requirements.
[4] d_0 = hole diameter.

Sargent & Lundy Engineering Services, Inc.	RPP-CALC-63660, Rev. 0 **CALCULATION SHEET**		
Project No. S54413.024	**Calculation No.** S54413.024-S-001	**Rev.** 0	**Page No.** 40 of 40
Title: LERF Basin 41 Liner Anchor Wall Design			
Prepared By: RW Davidson	**Date:** 4/3/2020	**Checked By:** PP Santos	**Date:** 4/3/2020

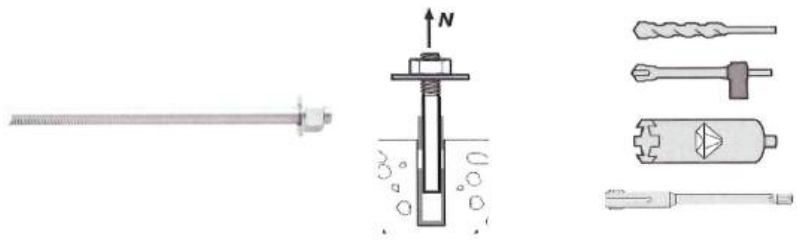

Fractional Threaded Rod | Bond Strength | Carbide Bit or Hilti Hollow Carbide Bit or Diamond Core Bit + Roughening Tool

TABLE 14—BOND STRENGTH DESIGN INFORMATION FOR FRACTIONAL THREADED ROD IN HOLES DRILLED WITH A HAMMER DRILL AND CARBIDE BIT (OR HILTI HOLLOW CARBIDE DRILL BIT) OR CORE DRILLED WITH A DIAMOND CORE BIT AND ROUGHENED WITH A HILTI ROUGHENING TOOL[1]

DESIGN INFORMATION		Symbol	Units	Nominal rod diameter (in.)						
				3/8	1/2	5/8	3/4	7/8	1	1 1/4
Minimum Embedment		$h_{ef,min}$	in. (mm)	2 3/8 (60)	2 3/4 (70)	3 1/8 (79)	3 1/2 (89)	3 1/2 (89)	4 (102)	5 (127)
Maximum Embedment		$h_{ef,max}$	in. (mm)	7 1/2 (191)	10 (254)	12 1/2 (318)	15 (381)	17 1/2 (445)	20 (508)	25 (635)
Temperature range A[2]	Characteristic bond strength in cracked concrete	$\tau_{k,cr}$	psi (MPa)	1,045 (7.2)	1,135 (7.8)	1,170 (8.1)	1,260 (8.7)	1,290 (8.9)	1,325 (9.1)	1,380 (9.5)
	Characteristic bond strength in uncracked concrete	$\tau_{k,uncr}$	psi (MPa)	2,220 (15.3)	2,220 (15.3)	2,220 (15.3)	2,220 (15.3)	2,220 (15.3)	2,220 (15.3)	2,220 (15.3)
Temperature range B[2]	Characteristic bond strength in cracked concrete	$\tau_{k,cr}$	psi (MPa)	1,045 (7.2)	1,135 (7.8)	1,170 (8.1)	1,260 (8.7)	1,290 (8.9)	1,325 (9.1)	1,380 (9.5)
	Characteristic bond strength in uncracked concrete	$\tau_{k,uncr}$	psi (MPa)	2,220 (15.3)	2,220 (15.3)	2,220 (15.3)	2,220 (15.3)	2,220 (15.3)	2,220 (15.3)	2,220 (15.3)
Temperature range C[2]	Characteristic bond strength in cracked concrete	$\tau_{k,cr}$	psi (MPa)	855 (5.9)	930 (6.4)	960 (6.6)	1,035 (7.1)	1,055 (7.3)	1,085 (7.5)	1,130 (7.8)
	Characteristic bond strength in uncracked concrete	$\tau_{k,uncr}$	psi (MPa)	1,820 (12.6)	1,820 (12.6)	1,820 (12.6)	1,820 (12.6)	1,820 (12.6)	1,820 (12.6)	1,820 (12.6)
Permissible installation conditions	Dry and water saturated concrete	Anchor Category	-	1						
		ϕ_d, ϕ_{ws}	-	0.65						
Reduction for seismic tension	Hammer drilled	$\alpha_{N,seis}$	-	0.88	0.99	0.99	1.0	1.0	0.95	0.99
	Core drilled + roughening	$\alpha_{N,seis}$	-	N/A		0.88	0.96	0.96	1.0	0.82

For **SI**: 1 inch ≡ 25.4 mm, 1 lbf = 4.448 N, 1 psi = 0.006897 MPa.
For pound-inch units: 1 mm = 0.03937 inches, 1 N = 0.2248 lbf, 1 MPa = 145.0 psi

[1] Bond strength values correspond to concrete compressive strength f'_c = 2,500 psi (17.2 MPa). For concrete compressive strength, f'_c, between 2,500 psi (17.2 MPa) and 8,000 psi (55.2 MPa) [minimum of 24 MPa is required under ADIBC Appendix L, Section 5.1.1], the tabulated characteristic bond strength may be increased by a factor of $(f'_c / 2{,}500)^{0.1}$ [For SI: $(f'_c / 17.2)^{0.1}$]. See Section 4.1.4 of this report for bond strength determination.
[2] Temperature range A: Maximum short term temperature = 130°F (55°C), Maximum long term temperature = 110°F (43°C).
Temperature range B: Maximum short term temperature = 176°F (80°C), Maximum long term temperature = 110°F (43°C).
Temperature range C: Maximum short term temperature = 248°F (120°C), Maximum long term temperature = 162°F (72°C).
Short term elevated concrete temperatures are those that occur over brief intervals, e.g., as a result of diurnal cycling. Long term concrete temperatures are roughly constant over significant periods of time.

DOCUMENT RELEASE AND CHANGE FORM

Prepared For the U.S. Department of Energy, Assistant Secretary for Environmental Management
By Washington River Protection Solutions, LLC., PO Box 850, Richland, WA 99352
Contractor For U.S. Department of Energy, Office of River Protection, under Contract DE-AC27-08RV14800

TRADEMARK DISCLAIMER: Reference herein to any specific commercial product, process, or service by trade name, trademark, manufacturer, or otherwise, does not necessarily constitute or imply its endorsement, recommendation, or favoring by the United States government or any agency thereof or its contractors or subcontractors. Printed in the United States of America.

Release Stamp

DATE:
May 26,2020
HANFORD RELEASE

1. **Doc No:** RPP-CALC-63664 **Rev.** 00

2. **Title:**
LERF Basin 41 Catch Basin Design

3. **Project Number:** ☐N/A
T1P226

4. **Design Verification Required:**
☐Yes ☒No

5. **USQ Number:** ☒ N/A
RPP-27195

6. **PrHA Number** **Rev.** ☒ N/A

Clearance Review Restriction Type:
public

7. **Approvals**

Title	Name	Signature	Date
Clearance Review	Harrison, Sarah E	*Harrison, Sarah E*	05/26/2020
Design Authority	Wilson, Nathaniel W	*Wilson, Nathaniel W*	04/28/2020
Checker	Santos, Peter P	*Santos, Peter P*	04/27/2020
Document Control Approval	Alvarez, Efren	*Alvarez, Efren*	05/26/2020
Environmental Protection	Wall, Jeremy M	*Wall, Jeremy M*	04/29/2020
Originator	Davidson, Ronald W	*Davidson, Ronald W*	04/27/2020
Other Approver	McShane, Michael P	*McShane, Michael P*	04/23/2020
Responsible Engineering Manager	Huntington, Matthew R	*Huntington, Matthew R*	04/29/2020

8. **Description of Change and Justification**

Initial Release.

9. **TBDs or Holds** ☒N/A

10. **Related Structures, Systems, and Components**

a. **Related Building/Facilities** ☐N/A	b. **Related Systems** ☐N/A	c. **Related Equipment ID Nos. (EIN)** ☒N/A
ETF FACILITIES LERF FACILITIES	ETF LERF	

11. **Impacted Documents – Engineering** ☒N/A

Document Number	Rev.	Title

12. **Impacted Documents (Outside SPF):**

N/A

13. **Related Documents** ☐N/A

Document Number	Rev.	Title
MT-50497	00	Liquid Effluent Retention Facility (LERF) Basin 41

14. **Distribution**

Name	Organization
Angevine, Brennan T	MISSION ANALYSIS ENGINEERING
Demiter, Scott M	ETF OPERATIONS
Foster, Jim	242-A/AW/ETF OPERATIONS
Goessmann, Glen E	ENGINEERING PROGRAMS
Greenhalgh, Aaron M	TANK FARM PROJECTS ENGINEERING
Halgren, Dale L	ETF ENGINEERING
Harris, John W	SAFETY PROGRAM SERVICES RC/P
Joslyn, Cameron C	ETF ENGINEERING
McFerran, Brandon E	242-A/AW/ETF OPERATIONS
McShane, Michael P	ENGINEERING PROGRAMS
Nelson, Richard L	
Omberg Carro, Susan K	NUCLEAR SAFETY
Powers, Daniel J	ETF ENGINEERING
Roosendaal, Gene D	TFP PROJECT MANAGEMENT
Rutherford, Wally	ETF ENGINEERING
Sackett, Tom E	TANK FARM PROJECTS
Samoska, Jerry A	INSTRUMENT & CNTRL ENGINEERING
Shultz, Milton V	NUCLEAR SAFETY
Smith, Gregory E	TANK FARM PROJECTS ENGINEERING
Smoot, Bill R	TFP RADCON
Swanson, Brad L	242-A/AW/ETF OPERATIONS

DOCUMENT RELEASE AND CHANGE FORM	**Doc No:** RPP-CALC-63664 **Rev.** 00

14. **Distribution**

Name	**Organization**
Wall, Jeremy M	RETRVL & CLOSURE/PROJ ENV CMPL
Wilson, Nathaniel W	ETF PROJECTS ENGINEERING

RPP-CALC-63664
Revision 0

LERF Basin 41 Catch Basin Design

Prepared by

RW Davidson
Sargent & Lundy for Washington River Protection Solutions, LLC

Date Published
April 2020

5/19/2020

Prepared for the U.S. Department of Energy
Office of River Protection

Contract No. DE-AC27-08RV14800

Approved for Public Release;
Further Dissemination Unlimited

Sargent & Lundy Engineering Services, Inc.	**RPP-CALC-63664, Rev. 0** **CALCULATION COVER SHEET**	**Page No.** 1 of 40 **Date** 04/27/2020 **Rev. No.** 1 **Calculation No:** S54413.024-S-002

Project No.	**Project Title:**	**Client:**
S54413.024	LERF Basin 41 Design	Washington River Protection Solutions, LLC

Title:

LERF Basin 41 Catch Basin Design

Purpose and Objective:

The purpose of this calculation is to design the concrete Catch Basin and pipe support anchors for Liquid Effluent Retention Facility (LERF) Basin 41.

Rev. No.	Total Pages		Prepared By	Checked By	PM/TL
0	31	**Print Name/ Sign:**	RW Davidson, P.E.	PP Santos, P.E.	PM Dorsh, P.E.
		Date:	04/03/2020	04/07/2020	04/07/2020

Revision Description (Revision Description/Affected Pages):

Initial Release.

1	40	**Print Name/ Sign:**	RW Davidson, P.E.	PP Santos, P.E.	PM Dorsh, P.E.
		Date:	04/27/2020	04/27/2020	04/27/2020

Revision Description (Revision Description/Affected Pages):

Added Section 8.12 which determines the loads on the weight anchor eye bolts and Section 8.13 which checks the 5/8” adhesive anchor rods used to attach the weight anchor eye bolts to the CB wall. Added Attachment 3 for HDPE pipe data. Added drawing reference. Table of Contents reflects addition of Attachment 3. Section 6.0 Results Table updated to add DCR results for 5/8” adhesive anchor rods for weight anchor eye bolts.

Sargent & Lundy Engineering Services, Inc.

RPP-CALC-63664, Rev. 0

CALCULATION REVIEW CHECKLIST

Project No.	Calculation No.	Rev.	Page No.
S54413.024	S54413.024-S-002	1	2 of 40

Items Checked	Accept Y	Accept N	Accept N/A	Description of Resolution for Unacceptable Items
1. Cover sheets properly completed.	√			
2. Calculation sheet headers complete with calculation number, revision number, etc.	√			
3. Calculation sheet contents are legible, accurate, and complete per format.	√			
4. Listed attachments included.	√			
5. Calculation objective clearly described.	√			
6. Criteria are suitable and properly referenced to task specific documents.	√			
7. Assumptions and input data selected, described, reasonable, and attached or referenced to task documents.	√			
8. Calculation method identified and appropriate for the design activity.	√			
9. Calculation results reasonable and correctly described in results and conclusions.	√			
10. Physical property calculations generated by CAD software verified via hand calculations.			√	
11. Computer program identified with version and revision.			√	
12. Computer input/output provided or referenced and reasonable.			√	
13. Computer run traceable to calculation (file #, etc.).			√	
14. Computer input/output data and problem type within validation/verification range of use.			√	
15. Computer program validation/verification addressed.			√	
16. Computer operating system in use for calculation preparation is the same as when the software was verified on machine.			√	

Calculation Checking Method	√	Applicable Pages
1. Direct Step-by-Step Check	√	All Pages
2. Reference Chart(s) or Book(s) Comparison (Append Documentation)		
3. Alternate Calculation (Append Documentation)		

Comments:

Preparer (Print Name and Sign):	Date:
RW Davidson, P.E.	04/27/2020
Checker (Print Name and Sign):	**Date:**
PP Santos, P.E.	04/27/2020

Signatures obtained only after discrepancies are corrected and comments are resolved.

Sargent & Lundy Engineering Services, Inc.	RPP-CALC-63664, Rev. 0 **CALCULATION SHEET**		
Project No. S54413.024	**Calculation No.** S54413.024-S-002	**Rev.** 1	**Page No.** 3 of 40
Title: LERF Basin 41 Catch Basin Design			
Prepared By: RW Davidson	**Date:** 4/27/2020	**Checked By:** PP Santos	**Date:** 4/27/2020

TABLE OF CONTENTS

1.0 PURPOSE 4
2.0 METHODOLOGY 4
3.0 DESIGN INPUTS 4
4.0 ASSUMPTIONS 4
5.0 COMPUTER SOFTWARE 4
6.0 RESULTS 5
7.0 REFERENCES 5
8.0 CALCULATIONS 7

Attachments

Attachment 1
ICC-ES Evaluation Report - ESR-3187 (Excerpt)
Attachment 2
Pipe Wall Thickness Data Sheet
Attachment 3
HDPE Pipe Data Sheet

Acronyms

ACI	American Concrete Institute
ASCE	American Society of Civil Engineers
CB	Catch Basin
CL	Center Line
DCR	Demand-to-Capacity Ratio
IBC	International Building Code
LERF	Liquid Effluent Retention Facility
LRFD	Load and Resistance Factor Design
NDC	Natural Phenomena Hazard Design Category
SpG	Specific Gravity
WDC	Wind Design Category

1.0 PURPOSE

The purpose of this calculation is to design the concrete Catch Basin (CB) and pipe support anchors for the Liquid Effluent Retention Facility (LERF) Basin 41.

2.0 METHODOLOGY

Wind, seismic, dead and fluid loads for the CB are calculated using ASCE 7-10, *Minimum Design Loads on Buildings and Other Structures* and TFC-ENG-STD-06, *Design Loads for Tank Farm Facilities*.

The concrete adhesive anchor bolts are analyzed using Chapter 17 of ACI 318, *Building Code Requirements for Structural Concrete and Commentary* and ESR-3187, Hilti *HIT-HY 200 Adhesive Anchors and Post Installed Reinforcing Bar Connections in Concrete*. Stability of the concrete catch basin on soil is checked using IBC and *Principles of Foundation Engineering*.

3.0 DESIGN INPUTS

1. Pipe support anchor loads are calculated using ASCE 7-10.
2. The CB is General Service per MT-50497.
3. The compressive strength of the concrete is 4500 psi per RPP-SPEC-63632.
4. Specific gravity of LERF fluid flow is taken as 1.0*SpG water per RPP-CALC-63650.
5. Nominal strength of anchor rods is based on ASTM F593 CW-1, stainless steel material per ESR-3187, Table 11 and RPP-SPEC-63632.
6. Dimensions of the CB are based on Drawing H-2-838751, Sheets 1-5.
7. Tributary spacing of the pipe supports are derived from Drawing H-2-838767, *LERF Basin 41, Catch Basin Assembly*, Sheet 3.
8. Pipe diameter, support details are found in H-2-838771, *LERF Basin 41, Catch Basin Piping Notes and Parts List, Isometric, Assembly & Details.*

4.0 ASSUMPTIONS

None.

5.0 COMPUTER SOFTWARE

No unverified computer software was used in this analysis. Mathcad®[1] 15.0 was used for the hand calculations. Calculations are checked using a handheld calculator.

1 Mathcad is a registered trademark of PTC, Inc., Needham, Massachusetts.

6.0 RESULTS

The Hilti®[2] HIT-HY 200 adhesive anchor system is adequate using a 1/2" stainless steel threaded anchor rods with 3 ½" embedment depth for the pipe support anchors and 5/8" stainless steel threaded anchor rods with 3 7/8" embedment depth for the weight anchors (eye bolts). The 8" concrete CB slab is adequate with #5 rebar spaced 9" on center each way.

TABLE: Results Summary	
Pipe Support Adhesive Anchors	**DCR**
DCR tension	0.07
DCR shear	0.01
DCR per ACI 318, Equation 17.6.3	0.01
Weight Anchor (Eye Bolt) Adhesive Anchors	**DCR**
DCR tension	0.45
DCR shear	0.08
DCR per ACI 318, Equation 17.6.3	0.45
CB Slab	**DCR**
DCR one-way shear	0.2
DCR punching shear	0.05
DCR soil bearing	0.19
Pipe Support Post Weld	**DCR**
DCR weld	0.59

7.0 REFERENCES

ACI 318-14, *Building Code Requirements for Structural Concrete and Commentary*, 2014, American Concrete Institute, Farmington Hills, MI.

AISC 325-11, *Steel Construction Manual, American Institute of Steel Construction, 14th Edition*, 2011, Chicago, IL.

ASCE 7-2010, *Minimum Design Loads for Buildings and Other Structures*, 2010, American Society of Civil Engineers, Reston, VA.

Das, Braja M., *Principles of Foundation Engineering*, Sixth Ed., 2007, Cengage Learning, Stamford, CT

2 Hilti and HIT-HY are registered trademarks of Hilti Aktiengesellschaft, Schaan, Liechtenstein

7.0 REFERENCES CONT'D

ESR-3187, Hilti *HIT-HY 200 Adhesive Anchors and Post Installed Reinforcing Bar Connections in Concrete*, Reissued March 2016, ICC Evaluation Services, Whittier, CA., (See Attachment 1 for Excerpt).

H-2-838750, Rev. 0, Sheet 1, *LERF Basin 41 Civil Top Liner*, U.S. Department of Energy, Richland, WA.

H-2-838751, Rev. 0, Sheets 1-5, *LERF Catch Basin 41 Structural Plan & Section, Details, and Elevation & Details*, U.S. Department of Energy, Richland, WA.

H-2-838767, Rev. 0, Sheets 1-11, *LERF Basin 41, Catch Basin Notes & Parts List, Isometric, Assembly, Sections, Details & Weldments*, U.S. Department of Energy, Richland, WA.

H-2-838771, Rev. 0, Sheets 1-10, *LERF Basin 41, Catch Basin Piping Notes and Parts List, Isometric, Assembly & Details,* U.S. Department of Energy, Richland, WA.

IBC 2015, *International Building Code*, International Code Council, 2015, Country Club Hills, IL.

MT-50497, Rev 00, Liquid Effluent Retention Facility (LERF) Basin 41, U.S. Department of Energy, Richland, WA.

PH-20, *Pipe Hangers & Supports*, B-Line Series Catalog.

RPP-CALC-63650, Rev 0, *Leachate and Basin Pump Flow Calculation,* U.S. Department of Energy, Richland, WA.

RPP-SPEC-63632, Rev 0, *Construction Specification for LERF Basin 41 Design*, U.S. Department of Energy, Richland, WA.

TFC-ENG-STD-06, Rev. D-2, *Design Loads for Tank Farm Facilities*, U.S. Department of Energy, Richland, WA.

8.0 CALCULATIONS

NOTE: Use B3088S-2 1/2 Seismic Base Stand dimensions to get maximum applied loads.

8.1 Determine Wind Loads

$V := 110mph$ — Wind Speed, (TFC-ENG-STD-06, Table 3 for WDC-1/NDC-1).

$K_d := 0.95$ — Wind Direction factor for Round Chimneys, Tanks and Similar Structures, (ASCE 7-10, Section 26.6 and Table 26.6-1).

$K_z := 0.85$ — Velocity Pressure coefficient for Design Exposure C. (ASCE 7-10, Table 29.3-1)

$K_{zt} := 1.0$ — Topographic factor. (ASCE 7-10, Section 26.8.2)

$G := 0.85$ — Gust Effect factor. (ASCE 7-10, Section 26.9.1)

$D_{post} := 2.88in$ — Outside diameter of B-Line B3088S-2 1/2 Seismic Base Stand, Sch 40.

$D_{pipe} := 4.5 \cdot in$ — Outside diameter of largest pipe 4" Sch. 40 (H-2-838767, Item 18).

$t_{base_plate} := \frac{3}{8}in$ — Plate Thickness of B3088S-2 1/2.

$C_{B3090} := \left(4in + \frac{1}{16}in\right) = 0.3\,ft$ — Distance from the bottom of the B3090 gusset to the certerline of the pipe (e.g., 'C' dimension in B-Line Catalog, page 132).

$h := \left(22in + \frac{1}{8}in\right) + t_{base_plate} + C_{B3090} = 2.2\,ft$ — Maximum seismic base stand height.

$s := \max\left[\left(282in + \frac{15}{16}in\right) - \left(105in + \frac{7}{8}in\right), \left(434in + \frac{15}{16}in\right) - \left(282in + \frac{15}{16}in\right)\right] = 14.8\,ft$ — Estimated contributary pipe and insuation length supported by one seismic base stand. (H-2-838767,SH 3 Section E3-E5)

$q_z := 0.00256 \cdot K_z \cdot K_{zt} \cdot K_d \cdot \left(\frac{V}{mph}\right)^2 \cdot psf = 25.0 \cdot psf$ — Velocity pressure calculated at mean height h. (ASCE 7-10, Equation 29.3-1)

$\frac{h}{D_{pipe}} = 5.9$ — Ratio of CL height of piping above CB floor to nominal diameter of pipe diameter used.

$\frac{D_{pipe}}{(in)} \cdot \sqrt{\frac{q_z}{(psf)}} = 22.5 > 2.5$ — ASCE 7-10, Figure 29.5-1 for Chimneys, tanks, rooftop Equipment, & Similar Structures).

$C_f := \left|\frac{(0.6 - 0.5)\cdot(7 - 1.5)}{(7 - 1)} - 0.6\right| = 0.51$ — Net force coefficient (by extrapolation), wind normal to face, (ASCE 7-10, Figure 29.5-1 for round Chimneys, tanks, rooftop Equipment, & Similar Structures).

$insul_{thk} := 5 \cdot in$ — Estimated insulation thickness.

$A_f := s \cdot \left(D_{pipe} + insul_{thk} \cdot 2\right) = 17.8 \cdot ft^2$ — Projected area normal to the wind including insulation.

$F_w := q_z \cdot G \cdot C_f \cdot A_f = 192.7\,lbf$ — Design wind load on other structures. (ASCE 7-10, Equation 29.5-1)

8.2 Determine Seismic Loads

$W_{base_stand} := \frac{1638lbf}{100} = 16.4\,lbf$

Weight of B3088S-2 1/2 Seismic Base Stand. (B-Line Catalog, page 128)

$W_{pipe_support} := \frac{586lbf}{100} = 5.9\,lbf$

Weight of B3090-4 Pipe Support with U-Bolt. (B-Line Catalog, page 132)

$W_{4_40s} := 11 \cdot plf \cdot s = 162.3\,lbf$

Estimated contributary pipe weight supported by one pipe support post based on 4" dia. Sch 40S SST pipe. (see Attachment 2)

$W_{insul} := 5 \cdot plf \cdot s = 73.8\,lbf$

Estimated weight of 5" thickness insulation.

$\rho_{waste} := 1.0 \cdot 62.4 \frac{lbf}{ft^3} = 62.400 \cdot \frac{lbf}{ft^3}$

Specific weight of basin fluid is based on RPP-CALC-63650, "Leachate and Basin Pump Flow Calculation" which uses the specific gravity of water.

$F_{wt} := \left[\frac{\pi \cdot \left[\left(D_{pipe} - 0.237 \cdot in \cdot 2\right)^2\right]}{4} \cdot s\right] \cdot \rho_{waste} = 81.4\,lbf$

Fluid weight is based on the full flow area of a Sch 40S 4-inch dia.stainless steel pipe (see Attachment 2), conservative.

$W_{tot} := \begin{pmatrix} W_{base_stand} \cdots \\ + W_{pipe_support} \cdots \\ + W_{4_40s} + W_{insul} + F_{wt} \end{pmatrix} \cdot 1.15 = 390.7\,lbf$

Estimated total dead load on one pipe support post including 15% contingency for miscellaneous pipe support fittings and pipe couplings etc.

$S_{DS} := 0.588$

Horizontal five-percent damped design spectral response acceleration at short periods. (TFC-ENG-STD-06)

$z_h := 1.0$

Ratio of the height in structure of point of attachment of component to the average roof height of structure.

$I_p := 1.0$

Component importance factor for SDC-1 loading. (TFC-ENG-STD-06)

$a_p := 2.5$

Component amplification factor for piping in accordance with ASME B31, joint made by welding or brazing. (ASCE 7-10, Table 13.6-1)

$R_p := 12$

Component response modification factor for piping in accordance with ASME B31, joint made by welding or brazing. (ASCE 7-10, Table 13.6-1)

$F_{pnom} := \frac{0.4 \cdot a_p \cdot S_{DS} \cdot \left(W_{tot}\right)}{\frac{R_p}{I_p}} [1 + 2(z_h)] = 57.4 \cdot lbf$

The horizontal seismic force. (ASCE 7-10, Equation 13.3-1)

$F_{pmax} := 1.6 S_{DS} \cdot I_p \cdot \left(W_{tot}\right) = 367.5\,lbf$

The maximum lateral seismic force. (ASCE 7-10, Equation 13.3-2)

$F_{pmin} := 0.3 S_{DS} \cdot I_p \cdot \left(W_{tot}\right) = 68.9\,lbf$

The minimum lateral seismic force. (ASCE 7-10, Equation 13.3-3)

$F_p := \begin{cases} F_{pmin} & \text{if } F_{pnom} < F_{pmin} \\ F_{pmax} & \text{if } F_{pnom} > F_{pmax} \\ F_{pnom} & \text{otherwise} \end{cases} \qquad F_p = 68.9\,lbf$

The minimum lateral force to use for design purposes.

$F_v := 0.2 S_{DS} \cdot W_{tot} = 45.9\,lbf$

The design vertical seismic force, (ASCE 7-10, Section 13.3.1).

8.3 Determine Piping Loads on the Anchors

The following section determines the anchor forces to withstand the worst case loading.

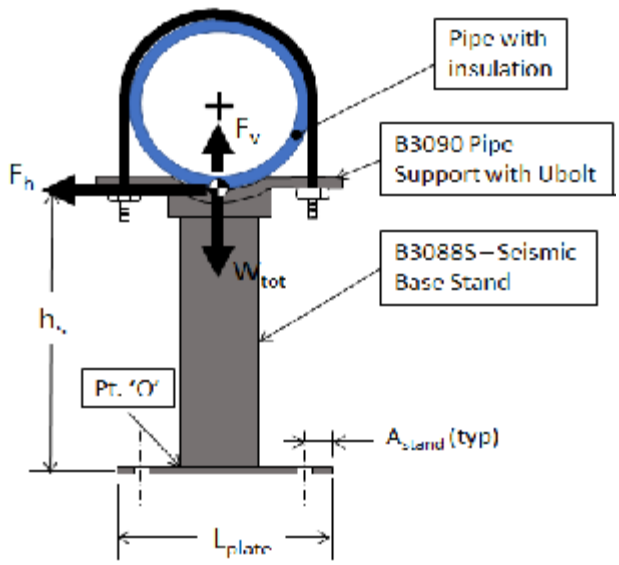

NOTE: Use B3088S-2 1/2 seismic base stand dimensions to get max moments, shears and axial force reactions, conservative.

$L_{plate} := 8.5in$ — Plate Size Length of B3088S-2 1/2 seismic base stand. (B-Line Catalog, page 128)

$A_{stand} := 1.25in$ — Edge distance/edge margin of plate fastening hole for B3088S-2 seismic base stand. (B-Line Catalog, page 128)

$D_{stand} := 2.88 \cdot in$ — Diameter of base stand -B3088S-2 1/2 seismic base stand. (B-Line Catalog, page 128)

$\Omega_o := 2.5$ — Overstrength factor, (ASCE 7-10, Table 13-5.1, Supplement 1 is required for anchorage to concrete)

$F_{h_calc} := \max(1.0F_w, 1.0 \cdot F_p \cdot \Omega_o) = 192.7 \cdot lbf$ — Calculated horizontal piping load combination per ASCE 7-10, Section 2.3.2 including overstrength factor.

$F_{h_B31.3} := 2107 \cdot lbf$ — Horizontal piping load combination per RPP-CALC-63779, Appendix H including overstrength factor.

$F_{h_comb} := \max(F_{h_calc}, F_{h_B31.3}) = 2107.0\ lbf$ — Governing horizontal piping load combination.

$F_{v_calc} := \max(1.4 \cdot W_{tot}, 1.2 \cdot W_{tot} + 1.0 \cdot F_v \cdot \Omega_o) = 583.7\ lbf$ — Calculated vertical piping load combination per ASCE 7-10, Section 2.3.2 load including overstrength factor.

$F_{v_B31.3} := 479 \cdot lbf$ — Vertical piping load combination per RPP-CALC-63779, Appendix H including overstrength factor.

$F_{v_comb} := \max(F_{v_calc}, F_{v_B31.3}) = 583.7\ lbf$ — Governing vertical piping load combination.

$h_s := h - \frac{D_{pipe}}{2} = 2.0\ ft$ — Base stand height.

$M_{ot_calc} := F_{h_calc} \cdot h_s = 390.4 \cdot ft \cdot lbf$ — Calculated overturning moment.

$M_{ot_B31.3} := 1899 \cdot ft \cdot lbf$ — Overturning moment combination per RPP-CALC-63779, Appendix H.

$$M_{ot} := \max\left(M_{ot_calc}, M_{ot_B31.3}\right) = 1899.0 \cdot ft \cdot lbf$$

$$T_{stud} := \frac{M_{ot}}{2 \cdot \left[\left(\frac{L_{plate}}{2} + \frac{D_{stand}}{2}\right) - A_{stand}\right]} = 2566.2\ lbf$$

Tension load per stud, 2 studs in tension, (moment arm is taken to face of seismic base stand, Pt. 'O', from tension side bolts, conservative).

$$V_{stud} := \frac{F_{h_comb}}{4} = 526.8\ lbf$$

Shear load per stud, 4 studs in shear.

8.4 Check Anchors in Accordance with ACI 318-14, Chapter 17

Define Constants

Use (4) 1/2" diameter fractional threaded rods with 3 1/2" minimum embedment depth

$n_a := 4$	The number of anchors per post.
$s_a := L_{plate} - A_{stand} \cdot 2 = 6.0 \cdot in$	The spacing of the anchors.
$h_{ef} := 2.75in$	The effective minimum embedment. (ESR-3187, Table 12 & 14)
$n_{a_t} := 2$	Number of anchors resisting tension. (Moment Couple)
$n_{a_v} := n_a = 4.0$	Number of anchors resisting shear.
$f'_c := 4500psi$	Compressive strength of concrete. (See Inputs)
$k_c := 17$	Effectiveness factor for cracked concrete. (ESR-3187, Table 12)
$\psi_{c_N} := 1.0$	Cracked concrete factor for post-installed anchor in cracked concrete. (ACI 318-14, Section 17.4.2.6)
$\phi_{t_s} := 0.65$	Strength reduction factor for steel failure in tension. (ESR-3187, Table 11, for ASTM F593 CW stainless steel material).
$\phi_{t_c} := 0.65$	Strength reduction factor for concrete breakout failure in tension. (ESR-3187, Table 12)
$\phi_{v_s} := 0.60$	Strength reduction factor for steel failure in shear. (ESR-3187, Table 11, for ASTM F593 CW stainless steel material).
$\phi_{v_c} := 0.70$	Strength reduction factor for concrete breakout failure in shear. (ESR-3187, Table 12)
$\phi_e := 0.75$	Tensile strength reduction factor for anchors in moderate or high seismic risk zones. (ACI 318-14 Section 17.2.3.4.4)
$\alpha_{v_seis} := 0.70$	Seismic shear reduction factor, (ESR-3187, Table 11).
$\phi_d := 0.75$	Bond strength reduction factor, (ESR-3187, Table 14).
$c_{ac} := 2 \cdot h_{ef} = 5.5 \cdot in$	Critical edge distance factor for adhesive anchors. (ACI 318-14, Section 17.7.6)
$c_{a1} := 6in$	Set minimum distance from the center of an anchor shaft to the edge of concrete in the direction of the applied shear. (See ACI 318-14, Section 17.5.2.1 for illustration)
$c_{a2} := 6in$	Set minimum distance from the center of an anchor shaft to the edge of concrete in the direction perpendicular to the applied shear (and c_{a1}). (See ACI 318-14, Section 17.5.2.1 for illustration)
$c_{a_min} := \min(c_{a1}, c_{a2}) = 6.0 \cdot in$	The minimum edge distance between the edge of the concrete and the nearest anchor.
$h_{min} := h_{ef} + 1.25 \cdot in = 4.0 \cdot in$	The minimum member thickness. (ESR-3187, Table 12)
$h_a := 8in$	Actual concrete thickness. (H-2-79571)
$d := 0.5in$	Anchor rod diameter.

Determine Steel Strength of Anchors in Tension

$c_{Na} := 5.0 \cdot in$ See bond strength of anchors in tension.

$$Individual_Group := \begin{cases} \text{"Analyze anchors individually according to ACI 318, Section 17.2.1.1"} & \text{if } 3 \cdot h_{ef} \le s_a \vee 2 \cdot c_{Na} \le s_a \\ \text{"Analyze anchors as a group according to ACI 318, Section 17.2.1.1"} & \text{otherwise} \end{cases}$$

$Individual_Group = \text{"Analyze anchors as a group according to ACI 318, Section 17.2.1.1"}$

$N_{sa} := 14190 lbf$ The nominal tensile strength of the threaded anchor rods is based on ASTM F593 CW, stainless steel material per ESR-3187, Table 11).

$\phi N_{sa} := \phi_{t_s} \cdot N_{sa} = 9223.5\, lbf$ Tensile steel strength incorporating strength reduction factors.

Determine Concrete Breakout Strength of Anchors in Tension

$$\psi_{ed_N} := \begin{cases} 1 & \text{if } c_{a_min} \ge 1.5 \cdot h_{ef} \\ 0.7 + 0.3 \cdot \dfrac{c_{a_min}}{1.5 \cdot h_{ef}} & \text{otherwise} \end{cases} = 1.0$$

The modification factor for edge effects. (ACI 318-14, Section 17.4.2.5)

$$\psi_{cp_N} := \begin{cases} 1 & \text{if } c_{a_min} \ge c_{ac} \\ \dfrac{\max(c_{a_min}, 1.5 \cdot h_{ef})}{c_{ac}} & \text{otherwise} \end{cases} = 1.0$$

Uncracked concrete pullout factor for post-installed anchors. (ACI 318-14, Section 17.4.2.7)

$\lambda := 1.0$ Modification factor for normalweight concrete. (ACI 318-14, Section 19.2.4.2)

$N_b := k_c \cdot \lambda \cdot \sqrt{\dfrac{f'_c}{psi}} \cdot \left(\dfrac{h_{ef}}{in}\right)^{1.5} lbf = 5200.6\, lbf$ Basic concrete breakout strength of a single anchor in tension in cracked concrete. (ACI 318-14, Equation 17.4.2.2a)

$A_{Nco} := 9 \cdot h_{ef}^2 = 68.1 \cdot in^2$ Projected concrete failure area of a single anchor with an edge distance equal to or greater than 1.5 x h_{ef}. (ACI 318-14, Equation 17.4.2.1c)

$A_{Nc} := (\min(1.5h_{ef}, c_{a1}) + s_a + 1.5 \cdot h_{ef}) \cdot (\min(1.5h_{ef}, c_{a2}) + s_a + 1.5 \cdot h_{ef}) = 203.1 \cdot in^2$

$A_{Nc} := \min(n_a \cdot A_{Nco}, A_{Nc}) = 203.1 \cdot in^2$

Projected concrete failure area of the anchorage. (ACI 318-14, Section 17.4.2.1 and Figure R17.4.2.1(b))

$N_{cb} := \dfrac{A_{Nc}}{A_{Nco}} \cdot \psi_{ed_N} \cdot \psi_{c_N} \cdot \psi_{cp_N} \cdot N_b = 15515.9 \cdot lbf$ Concrete breakout strength of the anchorage in tension. (ACI 318-14, Equation 17.4.2.1a)

$\phi N_{cb} := \phi_e \cdot \phi_{t_c} \cdot N_{cb} = 7564.0\, lbf$ Tensile breakout strength incorporating strength reduction factors.

Determine Bond Strength of Anchors in Tension

$\lambda_a := \lambda = 1.0$ — ACI 318-14, Section 17.2.6 and modification factor for normalweight concrete. (ACI 318-14, Section 19.2.4.2)

$\tau_{cr} := 1170 \cdot psi$ — Characteristic bond stress in cracked concrete, temperature range A, (ESR-3187, Table 14).

$\tau_{uncr} := 2220 \cdot psi$ — Characteristic bond stress in uncracked concrete, temperature range A, (ESR-3187, Table 14).

$d_a := d = 0.5 \cdot in$ — Anchor diameter, previously defined.

$N_{ba} := \lambda_a \cdot \tau_{cr} \cdot \pi \cdot d_a \cdot h_{ef} = 5054.0\ lbf$ — Basic bond strength of adhesive anchor, (ACI 318-14, Section 17.4.5.2)

$c_{Na} := 10 \cdot d_a \cdot \sqrt{\frac{\tau_{uncr}}{1100 \cdot psi}} = 7.1 \cdot in$ — Critical edge distance, (ACI 318-14, Equation 17.4.5.1d).

$A_{Nao} := (2 \cdot c_{Na})^2 = 201.8 \cdot in^2$ — Projected influence area for a single anchor, (ACI 318-14, Equation 17.4.5.1c).

$A_{Na} := (c_{Na} + s_a + c_{a_min}) \cdot (c_{Na} + s_a + c_{a_min}) = 364.9 \cdot in^2$ — Projected influence area for a group of anchors, (ACI 318-14, Fgure R17.4.5.1).

$A_{Na} := n_{a_t} \cdot A_{Nao} = 403.6 \cdot in^2$ — Limiting value of A.Na per ACI 318-14, Section 17.4.5.1).

$\Psi_{ed_Na} := 1.0$ $\quad c_{a_min} = 6.0 \cdot in > c_{Na} = 7.1 \cdot in$ — Modification factor for edge effects, ACI 318-14, Equation 17.4.5.4a).

$\Psi_{cp_Na} := 1.0$ $\quad c_{a_min} = 6.0 \cdot in > c_{ac} = 5.5 \cdot in$ — Modification factor for adhesive anchors designed for uncracked concrete, ACI 318-14, Equation 17.4.5.5a).

$N_a := \frac{A_{Na}}{A_{Nao}} \cdot \Psi_{ed_Na} \cdot \Psi_{cp_Na} \cdot N_{ba} = 10108.1\ lbf$ — Nominal bond strength in tension for a single adhesive anchor in tension, (ACI 318-14, Equation 17.4.5.1a).

$\phi N_a := \phi_e \cdot \phi_d \cdot \left(\frac{A_{Na}}{A_{Nao}} \cdot \Psi_{ed_Na} \cdot \Psi_{cp_Na} \cdot N_{ba} \right) = 5685.8\ lbf$ — Nominal bond strength in tension for a single adhesive anchor in tension incorporating strength reduction factors, (ACI 318-14, Equation 17.4.5.1a).

Determine Steel Strength of the Anchors in Shear

Individual_Group := | "Analyze anchors individually in shear according to ACI 318, Section 17.2.1.1" if $3 \cdot h_{ef} \le s_a$
| "Analyze anchors as a group in shear according to ACI 318, Section 17.2.1.1" otherwise

Individual_Group = "Analyze anchors as a group in shear according to ACI 318, Section 17.2.1.1"

$V_{sa} := 8515 \cdot lbf$ — The nominal shear strength of the threaded anchor rods is based on ASTM F593 CW, stainless steel material per ESR-3187, Table 11)

$\phi V_{sa} := \alpha_{v_seis} \cdot \phi_{v_s} \cdot V_{sa} = 3576.3\ lbf$ — Steel shear strength incorporating strength reduction factors.

Determine Concrete Breakout Strength of the Anchors in Shear

$$\psi_{ed_V} := \begin{cases} 1.0 & \text{if } c_{a2} \geq 1.5 \cdot c_{a1} \\ 0.7 + 0.3 \cdot \dfrac{c_{a2}}{1.5 \cdot c_{a1}} & \text{otherwise} \end{cases} = 0.9$$

Edge distance factor (Anchors not on a corner). (ACI 318-14, Section 17.5.2.6)

$\psi_{c_V} := 1.0$

Cracked concrete factor. (ACI 318-14, Section 17.5.2.7)

$$\psi_{h_V} := \begin{cases} \sqrt{\dfrac{1.5 \cdot c_{a1}}{h_a}} & \text{if } h_a < 1.5 \cdot c_{a1} \\ 1 & \text{otherwise} \end{cases} = 1.06$$

Thickness modification factor. (ACI 318-14, Section 17.5.2.8)

$d_a := d = 0.5 \cdot in$

The outside diameter of the anchor.

$l_e := \min(8 \cdot d_a, h_{ef}) = 2.8 \cdot in$

The load bearing length of anchor for shear. (ACI 318-14, Section 17.5.2.2)

$$V_b := \min\left[7 \cdot \left(\frac{l_e}{d_a}\right)^{0.2} \cdot \sqrt{\frac{d_a}{in}} \cdot \lambda \cdot \sqrt{\frac{f'_c}{psi}} \cdot \left(\frac{c_{a1}}{in}\right)^{1.5} \cdot lbf, 9 \cdot \lambda \cdot \sqrt{\frac{f'_c}{psi}} \cdot \left(\frac{c_{a1}}{in}\right)^{1.5} \cdot lbf\right] = 6862.6 \cdot lbf$$

Basic concrete breakout strength of a single anchor in shear in cracked concrete. (ACI 318-14, Section 17.5.2.2)

$A_{Vco} := 4.5 \cdot c_{a1}^2 = 162.0 \cdot in^2$

The projected area for a single anchor in a deep member with a distance from edges equal or greater than 1.5 x c_{a1}. (ACI 318-14, Equation 17.5.2.1c)

$A_{Vc} := (\min(c_{a2}, 1.5 \cdot c_{a1}) + 1.5 c_{a1}) \cdot \min(1.5 \cdot c_{a1}, h_a) = 120.0 \cdot in^2$

Projected concrete failure area of the anchorage. (ACI 318-14, Section 17.5.2.1 and Figure R17.5.2.1b)

$V_{cb} := \dfrac{A_{Vc}}{A_{Vco}} \cdot \psi_{ed_V} \cdot \psi_{c_V} \cdot \psi_{h_V} \cdot V_b = 4852.6 \cdot lbf$

Nominal concrete breakout strength of anchorage in shear. (ACI 318-14, Equation 17.5.2.1a)

$\phi V_{cb} := \phi_{v_c} \cdot V_{cb} = 3396.8\ lbf$

Shear breakout strength incorporating strength reduction factors.

Determine Pryout Strength of the Anchors in Shear

$$k_{cp} := \begin{cases} 1 & \text{if } h_{ef} < 2.5in \\ 2 & \text{otherwise} \end{cases} = 2.0$$

Coefficient for pryout strength. (ACI 318-14, Section 17.5.3.1)

$V_{cp} := k_{cp} \cdot \min(N_{cb}, N_a) = 20216.1\ lbf$

The nominal pryout strength of the anchorage in shear per ACI 318-14, Equation 17.5.3.1a.

$\phi V_{cp} := \phi_{v_c} \cdot V_{cp} = 14151.3\ lbf$

Shear pryout strength incorporating strength reduction factors.

Determine Governing Failure Strength

$$Govern_v := \begin{cases} \text{"Steel failure governs (Ductile Failure)."} & \text{if } \phi V_{sa} \le \min(\phi V_{cb}, \phi V_{cp}) \\ \text{"Concrete breakout governs (Brittle Failure)."} & \text{if } \phi V_{cb} < \min(\phi V_{sa}, \phi V_{cp}) \\ \text{"Concrete pryout governs (Brittle Failure)."} & \text{otherwise} \end{cases}$$

$Govern_v$ = "Concrete breakout governs (Brittle Failure)."

$$Shear_{govern} := \begin{cases} \phi V_{sa} & \text{if } \phi V_{sa} \le \min(\phi V_{cb}, \phi V_{cp}) \\ \phi V_{cb} & \text{if } \phi V_{cb} < \min(\phi V_{sa}, \phi V_{cp}) \\ \phi V_{cp} & \text{otherwise} \end{cases}$$

The governing allowable shear capacity of the anchorage.

$Shear_{govern} = 3397\,lbf$

$$Shear_Check := \begin{cases} \text{"Anchor capacity in shear is OK."} & \text{if } Shear_{govern} > V_{stud} \\ \text{"Anchor capacity in shear is NOT OK"} & \text{otherwise} \end{cases}$$

$V_{stud} = 526.8\,lbf$

Shear_Check = "Anchor capacity in shear is OK."

Check to determine the adequacy of the anchors in shear.

$$Govern_t := \begin{cases} \text{"Steel failure governs (Ductile Failure)."} & \text{if } \phi N_{sa} \le \min(\phi N_{cb}, \phi N_a) \\ \text{"Concrete breakout governs (Brittle Failure)."} & \text{if } \phi N_{cb} \le \min(\phi N_{sa}, \phi N_a) \\ \text{"Bond strength governs (Brittle Failure)."} & \text{otherwise} \end{cases}$$

$Govern_t$ = "Bond strength governs (Brittle Failure)."

$$Tensile_{govern} := \begin{cases} \phi N_{sa} & \text{if } \phi N_{sa} \le \min(\phi N_{cb}, \phi N_a) \\ \phi N_{cb} & \text{if } \phi N_{cb} \le \min(\phi N_{sa}, \phi N_a) \\ \phi N_a & \text{otherwise} \end{cases}$$

The governing allowable tensile capacity of the anchorage.

$Tensile_{govern} = 5686\,lbf$

$$Tension_Check := \begin{cases} \text{"Anchor capacity in tension is OK."} & \text{if } Tensile_{govern} > T_{stud} \\ \text{"Anchor capacity in tension is NOT OK"} & \text{otherwise} \end{cases}$$

$T_{stud} = 2566\,lbf$

Tension_Check = "Anchor capacity in tension is OK."

Check to determine the adequacy of the anchors in tension.

$$DCR_{tens} := \frac{T_{stud}}{Tensile_{govern}} = 0.45$$

$$DCR_{shear} := \frac{V_{stud}}{Shear_{govern}} = 0.16$$

$$DCR := \begin{cases} DCR_{tens} & \text{if } DCR_{shear} \le 0.2 \\ DCR_{shear} & \text{if } DCR_{tens} \le 0.2 \\ \frac{1}{1.2}\cdot\left(DCR_{tens} + DCR_{shear}\right) & \text{otherwise} \end{cases} = 0.45$$

The DCR ratio is less than 1.0; therefore, **OK** ACI 318-14, Section 17.6.

8.5 Check Temperature and Shrinkage Reinforcement Minimum Requirements for Catch Basin Slab

(REFERENCE: H-2-838751, Rev. B, Sheet 5, Zone D2-D3)

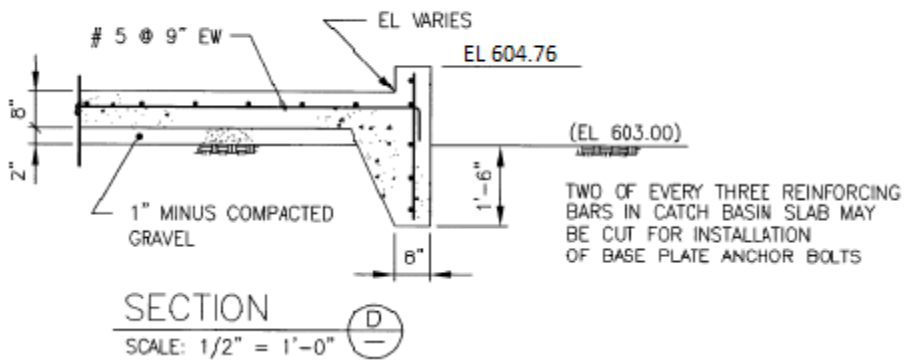

(REFERENCE: ACI 318-14)

Table 24.4.3.2—Minimum ratios of deformed shrinkage and temperature reinforcement area to gross concrete area

Reinforcement type	f_y, psi	Minimum reinforcement ratio	
Deformed bars	< 60,000	0.0020	
Deformed bars or welded wire reinforcement	≥ 60,000	Greater of:	$\frac{0.0018\times 60,000}{f_y}$
			0.0014

$h_c := 8in$ Thickness of the CB slab.

$b := 12in$ Width of slab for rebar design.

$(A_{reqd}) := 0.0018\cdot b\cdot h_c = 0.17\cdot in^2$ Area of steel required by temperature and shrinkage, (ACI 318-14, Table 24.4.3.2).

$A_{provided} := 0.41\cdot in^2 \quad > \quad (A_{reqd}) = 0.17\cdot in^2$ Area of steel (#5 @ 9") for 1 ft wide section.

The design is adequate with #5 bars @ 9" EW.

8.6 Check Spacing of Shrinkage and Temperature Reinforcement

Ref: ACI 318-14

24.4.3.3 The spacing of deformed shrinkage and temperature reinforcement shall not exceed the lesser of **5*h*** and 18 in.

$5 \cdot h_c = 40.0 \cdot in$

$Spg_{bars} := 9 \cdot in$ < $18 \cdot in$ OK

8.7 Check Minimum Flexural Reinforcement (based on ACI 318-14, Section 7.6 for one-way slabs)

$h_c := 8in$ Thickness of the CB slab.

$b := 12in$ Width of the slab for rebar design.

$(A_{reqd}) := 0.0018 \cdot b \cdot h_c = 0.17 \cdot in^2$ Area of steel required for flexure. (ACI 318-14, Table 7.6.1.1)

$A_{provided} := 0.41 \cdot in^2$ > $(A_{reqd}) = 0.17 \cdot in^2$ Area of steel #5 @ 9" for 1 ft wide section.

The design is adequate for minimum flexural reinforcement with #5 bars @ 9" EW

Ref: ACI 318-14

Table 7.6.1.1—$A_{s,min}$ for nonprestressed one-way slabs

Reinforcement type	f_y, psi	$A_{s,min}$	
Deformed bars	< 60,000	$0.0020A_g$	
Deformed bars or welded wire reinforcement	≥ 60,000	Greater of:	$\frac{0.0018 \times 60,000}{f_y} A_g$
			$0.0014A_g$

8.8 Check One-Way Shear Reinforcement

$d := 8 \cdot in - 3 \cdot in - 0.625 \cdot in - \frac{0.625 \cdot in}{2} = 4.1 \cdot in$ — Distance from extreme compression fiber to centroid of longitudinal tension reinf.

$\phi_{shear} := 0.75$ — Capacity reduction factor for shear, (ACI 318-14, Table 21.2.1)

$\lambda = 1.0$ — Modification factor for normalweight concrete. (ACI 318-14, Section 19.2.4.2)

$V_c := 2\lambda \cdot psi \cdot \sqrt{\frac{f'_c}{psi}} \cdot b \cdot d = 7 \cdot kip$ — Shear strength of the evaluated concrete CB slab section. (ACI 318-14, Section 22.5.5.1)

$f_y := 60ksi$ — Reinforcement yield strength.

$no_{bar} := 5$ — Rebar number. (H-2-838751, Sheet 5)

$d_b := \left(\frac{no_{bar}}{8}\right) \cdot in = 0.625 \cdot in$ — Rebar diameter based on rebar number.

$A_v := \frac{\pi \cdot (d_b)^2}{4}$ — Rebar Shear Area.

$spacing := 9in$ — Rebar Spacing. (H-2-838751, Sheet 5)

$V_s := \frac{f_y \cdot A_v \cdot d}{spacing} = 8309.1\ lbf$ — Steel Shear strength contribution adjusted for spacing. (ACI-318, Eqn. (22.5.10.5.3))

$V_n := V_c + V_s = 14849.6\ lbf$ — Nominal one-way shear strength. (ACI 318, Eqn. (22.5.1.1)

$\phi V_n := \phi_{shear} \cdot (V_c + V_s) = 11137.2\ lbf$ — Factored one-way shear strength.

$V_u := F_{v_comb} + \frac{M_{ot}}{\left(\frac{L_{plate}}{2}\right)} = 5945.6\ lbf$ — Shear demand.

$DCR := \frac{V_u}{\phi V_n} = 0.5$ — The DCR ratio is less than 1.0; therefore, **OK**.

8.9 Check Two-Way Punching Shear

$b_o := \left[L_{plate} + \left(\frac{d}{2}\right) \cdot 2\right] \cdot 4 = 50.3 \cdot in$ — Critical perimeter section "b_o" for two-way shear, ACI 318-14, Section 22.6.4.1 (a)

$\beta := 1.0$ — Ratio of long side to short side, square base plate.

$\alpha_s := 20$ — From Section 22.6.5.3 of ACI 318-14, define value for corner columns, conservative.

$\lambda := 1.0$ — Modification factor for normal weight concrete. (ACI 318-14, Section 19.2.4.2)

$v_{cA} := 4 \cdot \lambda \cdot \left(psi \cdot \sqrt{\frac{f'_c}{psi}} \right) = 268.3\ psi$ — Allowable shear loading, Table 22.6.5.2 from ACI 318-14.

$v_{cB} := \left(2 + \frac{4}{\beta} \right) \cdot \lambda \cdot \left(psi \cdot \sqrt{\frac{f'_c}{psi}} \right) = 402.5\ psi$ — Allowable shear loading, Table 22.6.5.2 from ACI 318-14.

$v_{cC} := \left(2 + \frac{\alpha_s \cdot d}{b_o} \right) \cdot \lambda \cdot \left(psi \cdot \sqrt{\frac{f'_c}{psi}} \right) = 242.6\ psi$ — Allowable shear loading, Table 22.6.5.2 from ACI 318-14.

$v_c := \min(v_{cA}, v_{cB}, v_{cC}) = 243\ psi$ — Nominal shear strength.

$V_{applied_punch_CB} := \frac{F_{v_comb}}{b_o \cdot d} + \frac{M_{ot}}{b_o \cdot d \cdot \frac{L_{plate}}{2}}$ — Applied punching shear load, including LRFD load factors per ACI 318-14, Table 5.3.1. Moment is applied as shear load acting at center of base plate.

where $L_{plate} = 8.5 \cdot in$

$V_{applied_punch_CB} = 29.1\ psi$

$DCR_{shear_punch_CB} := \frac{V_{applied_punch_CB}}{\phi_{shear} \cdot v_c} = 0.16$ — DCR is less than 1.0; therefore, **OK**.

8.10 Check CB Soil Bearing Pressure

The following section will determine if the concrete CB slab is adequately sized to distribute the load to the soil at an adequate pressure. Live load on CB slab ignored due to high concentration of piping systems distributed over CB floor.

$l_{cs} := L_{plate} + h_c \cdot 2 = 2.0\ ft$ — Length of CB slab section considered (based on 45 deg. distribution of loads at edges of pipe support base plate).

$w_{cs} := l_{cs}$ — Width of CB slab section considered.

$h_c = 8.0 \cdot in$ — Average thickness of the CB slab.

$\rho_c := 150 pcf$ — Typical density of concrete.

$W_{cs} := \rho_c \cdot w_{cs} \cdot l_{cs} \cdot h_c = 416.8 \cdot lbf$ — Weight of the CB slab area considered.

$M_1 := 0.6 F_w \cdot h = 255.9 \cdot ft \cdot lbf$ — In-plane moment on the slab area. (ASCE 7-10, Section 2.4.1 Equation 5)

where $h = 2.2 \cdot ft$

$M_2 := 0.7 \cdot F_p \cdot h = 106.8 \cdot lbf \cdot ft$ — In-plane moment on the slab area. (ASCE 7-10, Section 2.4.1 Equation 5)

$M_b := \max(M_1, M_2) = 255.9 \cdot ft \cdot lbf$ — Maximum in-plane moment on the slab area.

$Q := W_{tot} + 0.7 \cdot F_v + W_{cs} = 839.7\ lbf$ — The total unfactored vertical load bearing on the soil.

where $W_{tot} = 390.7\ lbf$

$$e_b := \frac{M_b}{Q} = 3.7 \cdot in$$

The resulting eccentricity, which is the moment divided by total bearing load. (Das, pg. 147, Equation 3.51)

$$m := \frac{l_{cs}}{2} - e_b = 0.7\,ft$$

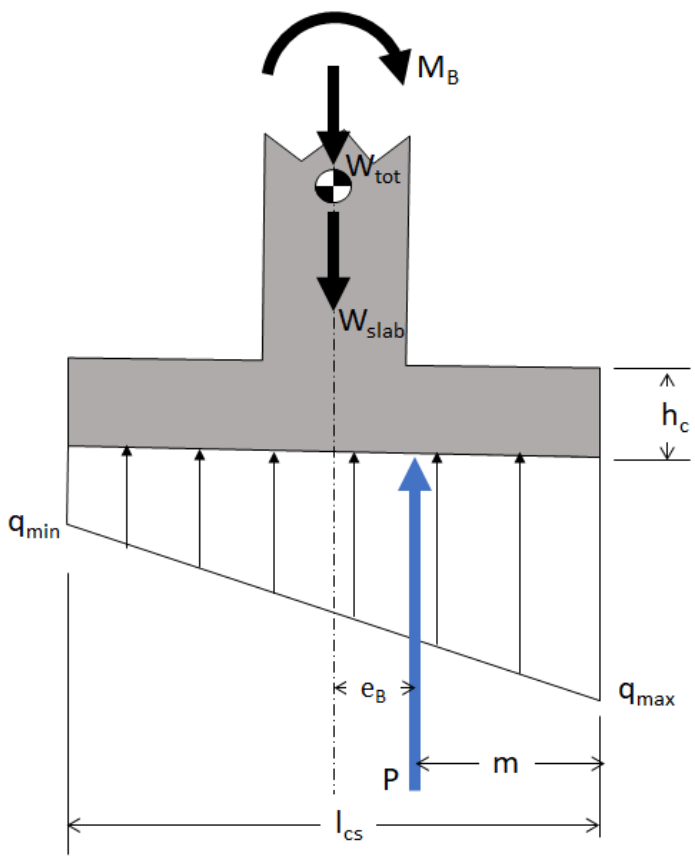

$$q_{min} := \max\left(\frac{Q}{w_{cs} \cdot l_{cs}} - \frac{6 \cdot M_b}{l_{cs}^2 w_{cs}}, 0psf\right) = 21.0 \cdot psf$$

Minimum Soil Pressure under slab area. (Principles of Foundation Engineering, Das, Eq 3.53, pg 147)

$$q_{max} := \frac{Q}{w_{cs} \cdot l_{cs}} + \frac{6 \cdot M_b}{l_{cs}^2 w_{cs}} = 381.9 \cdot psf$$

Maximum Soil Pressure under slab area. (Principles of Foundation Engineering, Das, Eq 3.52, pg 147)

$$p_{allow_sb} := 2000psf$$

The allowable bearing pressure of the soil. (IBC 2015, Table 1806.2, material class 3)

$$DCR_{sb} := \frac{q_{max}}{p_{allow_sb}} = 0.19$$

The demand capacity ratio for the soil bearing pressure. The CB slab area has a DCR lower than 1.0, therefore **OK**.

8.11 Check Post Base Weld

NOTE: Use B3088S-2 1/2 Dimensions.

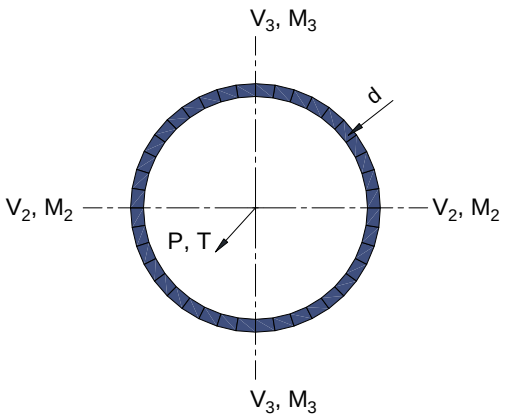

Weld Geometry:

$d := 2.88 \cdot in$ Diameter of weld.

$w_{act} := \frac{1}{4} \cdot in$ Weld size.

$F_{EXX} := 70ksi$ Ultimate stress of the weld metal.

Inputs from AISC 2010, Table J2.5:

$\Omega := 2.0$ The safety factor for welds.

$R_n := 0.6 \cdot F_{EXX}$ $R_n = 42.0 \cdot ksi$ Weld design strength.

$F_{h_comb} = 2107.0\ lbf$ Maximum horizontal load, previously defined.

$F_{v_comb} = 583.7\ lbf$ Mximum vertical load, previously defined.

$M_{ot} = 1899.0 \cdot ft \cdot lbf$ Maximum moment, previously defined.

Connection forces and moments:

$P := F_{v_comb}$ $V_2 := F_{h_comb} = 2107.0\ lbf$ $V_3 := 0 \cdot lbf$

$T := 0 \cdot in \cdot lbf$ $M_2 := M_{ot} = 1899.0 \cdot ft \cdot lbf$ $M_3 := 0 \cdot ft \cdot lbf$

Weld Properties Per Blodgett 1991, Table 5, Page 7.4-7.

$C := \frac{d}{2}$ $\quad C = 1.4 \cdot in$ The distance to the outer fiber.

$A_w := \pi \cdot d$ $\quad A_w = 9.0 \cdot in$ The linear area of the weld.

$A_{w_s} := \frac{1}{2} \cdot \pi \cdot d$ $\quad A_{w_s} = 4.5 \cdot in$ The linear shear area of the weld (AISC 2010, Section G6-1).

$S_w := \frac{\pi \cdot d^2}{4}$ $\quad S_w = 6.5 \cdot in^2$ The linear section modulus.

$J_w := \frac{\pi \cdot d^3}{4}$ $\quad J_w = 18.8 \cdot in^3$ The linear polar moment of inertia.

The resultant vectors for the bending moments and shears in the directions of 2-2 and 3-3 axes are:

$M := \sqrt{M_2^2 + M_3^2}$ $\quad M = 22788.0 \cdot in \cdot lbf$ $\quad V := \sqrt{V_2^2 + V_3^2}$ $\quad V = 2107.0 \cdot lbf$

$A_{lin} := \sqrt{\left(\frac{P}{A_w} + \frac{M}{S_w}\right)^2 + \left(\frac{V}{A_{w_s}} + \frac{T \cdot C}{J_w}\right)^2}$ $\quad A_{lin} = 3592.918 \cdot \frac{lbf}{in}$ Linear weld stress.

$R_u := \frac{A_{lin}}{0.707 w_{act}}$ $\quad R_u = 20.3 \cdot ksi$ Actual stress in the weld.

$DCR := \frac{\Omega \cdot R_u}{R_n} = 0.97$ The demand/capacity ratio is < 1; therefore, OK.

8.12 Determine Loads on CB Wall Weight Anchor Eye Bolts

$ID_{8_pipe} := 7.921 \cdot in$ $\quad Wt_{8_pipe} := 3.80 \cdot plf$ Weight and dimensions of 8" HDPE pipe based on SDR 26 (80 psi) pressure rating, (See Attachment 3).

$Wt_{filled} := \frac{\pi \cdot ID_{8_pipe}^2}{4} \cdot 150 \cdot \frac{lbf}{ft^3} + Wt_{8_pipe} = 55.1 \cdot plf$ Weight of 8" grout filled pipe per foot length.

$Invert_{top} := 603.17 \cdot ft$ Invert elevation of 8" HPDE pipe at top of liner. (See H-2-838750 SH 2, Section D & H-838767 SH 7, Section Q-Q)

$Invert_{bot} := 576.60 \cdot ft$ Invert elevation of 8" HPDE pipe at bottom of liner, (See H-2-838750, SH 1, Plan).

$L_{riser} := \sqrt{\left[\left(Invert_{top} - Invert_{bot}\right) \cdot 3\right]^2 + \left[\left(Invert_{top} - Invert_{bot}\right)^2\right]} = 84.0\ ft$ Based on 3:1 slope of top liner. (See H-2-838750, SH 1, Plan)

$Wt_{tot_8} := L_{riser} \cdot Wt_{filled} = 4632.2\ lbf$ Total weight of 8" HDPE grout filled pipe.

$angle := \tanh\left(\frac{1}{3}\right) = 18.4 \cdot deg$ Slope angle with respect to horizontal plane.

$F_{h_8pipe} := Wt_{tot_8} \cdot \sin(angle) = 1463.8\ lbf$ Down drag component along length of the 8" HDPE grout filled pipes. Neglect friction between pipes and liner bed, conservative.

8.13 Check Weight Anchor Eye Bolts in Accordance with ACI 318-14, Chapter 17

$T_{eye_bolt} := F_{h_8pipe} \cdot \cos(angle) = 1388.8\ lbf$ Tension load on weight anchor eye bolt.

$V_{eye_bolt} := F_{h_8pipe} \cdot \sin(angle) = 462.6\ lbf$ Shear load on weight anchor eye bolt.

Define Constants

Based on 5/8" diameter ASTM F593 stainless steel threaded rods with 3 7/8" maximum embedment depth

$n_a := 1$ The number of eye bolts per HPDE grouted pipe.

$s_a := 26 \cdot in$ Minimum spacing of the eye bolts. (See H-2-838767 SH 7, Section P-P)

$h_{ef} := 3.125 in$ The effective minimum embedment. (ESR-3187, Table 12 & 14)

$n_{a_t} := 1$ Number of eye bolts resisting tension.

$n_{a_v} := 1$ Number of eye bolts resisting shear.

$f'_c := 4500 psi$ Compressive strength of concrete. (See Inputs)

$k_c := 17$ Effectiveness factor for cracked concrete. (ESR-3187, Table 12)

$\psi_{c_N} := 1.0$ Cracked concrete factor for post-installed anchor in cracked concrete. (ACI 318-14, Section 17.4.2.6)

$\phi_{t_s} := 0.65$ Strength reduction factor for steel failure in tension. (ESR-3187, Table 11)

$\phi_{t_c} := 0.65$ Strength reduction factor for concrete breakout failure in tension. (ESR-3187, Table 12)

$\phi_{v_s} := 0.60$ Strength reduction factor for steel failure in shear. (ESR-3187, Table 11).

$\phi_{v_c} := 0.70$ Strength reduction factor for concrete breakout failure in shear. (ESR-3187, Table 12)

$\phi_e := 0.75$ Tensile strength reduction factor for anchors in moderate or high seismic risk zones. (ACI 318-14 Section 17.2.3.4.4)

$\alpha_{v_seis} := 0.70$ Seismic shear reduction factor, (ESR-3187, Table 11).

$\phi_d := 0.65$ Bond strength reduction factor, (ESR-3187, Table 14 for dry & water saturated concrete installation conditions).

$c_{ac} := 2 \cdot h_{ef} = 6.3 \cdot in$ Critical edge distance for adhesive anchors. (ACI 318-14, Section 17.7.6)

$c_{a1} := c_{ac} = 6.3 \cdot in$ Limiting distance from center of anchor to edge of concrete in the direction of applied load. (See ACI 318-14, Figures R17.4.2.1 and R17.5.2.1 for illustration)

$c_{a2} := c_{a1} = 6.3 \cdot in$ Limiting distance from center of anchor to edge of concrete in the direction perpendicular to applied load. (See ACI 318-14, Figures R17.4.2.1 and R17.5.2.1 for illustration)

$c_{a_min} := \min(c_{a1}, c_{a2}) = 6.3 \cdot in$ — The minimum edge distance between the edge of the concrete and the nearest anchor. (Note: Envelopes actual edges distance)

$h_{min} := h_{ef} + 1.25 \cdot in = 4.4 \cdot in$ — The minimum member thickness. (ESR-3187, Table 12)

$h_a := 24in$ — Actual concrete thickness. (H-2-838751 SH 2)

$d := 0.625in$ — The anchor diameter. (ESR-3187, Table 11)

Determine Steel Strength of Anchor in Tension

$$Individual_Group := \begin{cases} \text{"Analyze anchors individually according to ACI 318-14, Chapter 17"} & \text{if } 3 \cdot h_{ef} \le s_a \\ \text{"Analyze anchors as a group according to ACI 318-14, Section 17.2.1.1"} & \text{otherwise} \end{cases}$$

Individual_Group = "Analyze anchors individually according to ACI 318-14, Chapter 17"

$N_{sa} := 22600lbf$ — The tensile capacity of the anchor is based on ICC-ES Evaluation Report ESR-3187, Table 11, for ASTM F593, stainless steel threaded eye anchor rods.

$\phi N_{sa} := \phi_{t_s} \cdot N_{sa} = 14690.0\ lbf$ — Tensile steel strength incorporating strength reduction factors.

Determine Concrete Breakout Strength of Anchorage in Tension

$$\psi_{ed_N} := \begin{cases} 1 & \text{if } c_{a_min} \ge 1.5 \cdot h_{ef} \\ 0.7 + 0.3 \cdot \dfrac{c_{a_min}}{1.5 \cdot h_{ef}} & \text{otherwise} \end{cases} = 1.0$$

The modification factor for edge effects. (ACI 318-14, Section 17.4.2.5)

$$\psi_{cp_N} := \begin{cases} 1 & \text{if } c_{a_min} \ge c_{ac} \\ \dfrac{\max(c_{a_min}, 1.5 \cdot h_{ef})}{c_{ac}} & \text{otherwise} \end{cases} = 1.0$$

Uncracked concrete pullout factor for post-installed anchors. (ACI 318-14, Section 17.4.2.7)

$\lambda := 1.0$ — Modification factor for normalweight concrete. (ACI 318-14, Section 19.2.4.2)

$N_b := k_c \cdot \lambda \cdot \sqrt{\dfrac{f'_c}{psi}} \cdot \left(\dfrac{h_{ef}}{in}\right)^{1.5} lbf = 6299.9\ lbf$ — Basic concrete breakout strength of a single anchor in tension in cracked concrete. (ACI 318-14, Equation 17.4.2.2a)

$A_{Nco} := 9 \cdot h_{ef}^2 = 87.9 \cdot in^2$ — Projected concrete failure area of a single anchor with an edge distance equal to or greater than 1.5 x h_{ef}. (ACI 318-14, Equation 17.4.2.1c)

$A_{Nc} := (\min(1.5 \cdot h_{ef}, c_{a1}) + s_a + 1.5 \cdot h_{ef}) \cdot (\min(1.5 \cdot h_{ef}, c_{a2}) + 1.5 \cdot h_{ef}) = 331.6 \cdot in^2$

$A_{Nc} := \min(n_a \cdot A_{Nco}, A_{Nc}) = 87.9 \cdot in^2$

Projected concrete failure area of the anchorage group. (ACI 318-14, Section 17.4.2.1 and Figure R17.4.2.1(b))

$e'_N := 0 \cdot in$ — No eccentricity of the anchors in tension. (See ACI 318-14, Fig R17.4.2.4 for illustration)

$\psi_{ec_N} := \dfrac{1}{\left(1 + \dfrac{2 \cdot e'_N}{3 \cdot h_{ef}}\right)} = 1.0$

Modification factor for anchor groups loaded eccentrically in tension. (ACI 318-14, Section 17.4.2.4, Equation 17.4.2.4)

$N_{cbg} := \dfrac{A_{Nc}}{A_{Nco}} \cdot \psi_{ec_N} \cdot \psi_{ed_N} \cdot \psi_{c_N} \cdot \psi_{cp_N} \cdot N_b = 6299.9 \cdot lbf$

Concrete breakout strength of the anchorage in tension. (ACI 318-14, Equation 17.4.2.1b)

$\phi N_{cb} := \phi_e \cdot \phi_{t_c} \cdot N_{cbg} = 3071.2\ lbf$

Tensile breakout strength incorporating strength reduction factors.

Determine Bond Strength of Adhesive Anchors in Tension

$\lambda_a := \lambda = 1.0$

ACI 318-14, Section 17.2.6 and modification factor for normalweight concrete. (ACI 318-14, Section 19.2.4.2)

$\tau_{cr} := 1170 \cdot psi$

Characteristic bond stress in cracked concrete, temperature range A, (ESR-3187, Table 14).

$d_a := d = 0.6 \cdot in$

Anchor diameter, previously defined.

$N_{ba} := \lambda_a \cdot \tau_{cr} \cdot \pi \cdot d_a \cdot h_{ef} = 7179.0\ lbf$

Basic bond strength of adhesive anchor, (ACI 318-14, Section 17.4.5.2)

$c_{Na} := 10 \cdot d_a \cdot \sqrt{\dfrac{\tau_{cr}}{1100 \cdot psi}} = 6.4 \cdot in$

Critical edge distance, (ACI 318-14, Equation 17.4.5.1d).

$A_{Nao} := \left(2 \cdot c_{Na}\right)^2 = 166.2 \cdot in^2$

Projected influence area for a single anchor, (ACI 318-14, Equation 17.4.5.1c).

$A_{Na} := \left(2 \cdot c_{Na}\right) \cdot \left(c_{Na} + c_{a_min} + s_a\right) = 498.9 \cdot in^2$

Projected influence area for a group of anchors, (ACI 318-14, Figure R17.4.5.1).

$A_{Na} := n_a \cdot A_{Nao} = 166.2 \cdot in^2$

Limiting value of A.Na per ACI 318-14, Section 17.4.5.1).

$\psi_{ed_Na} := 1.0 \qquad c_{a_min} = 6.3 \cdot in \quad > \quad c_{Na} = 6.4 \cdot in$

Modification factor for edge effects, (ACI 318-14, Equation 17.4.5.4a).

$\psi_{cp_Na} := \dfrac{c_{a_min}}{c_{ac}} \qquad c_{a_min} = 6.3 \cdot in \quad < \quad c_{ac} = 6.3 \cdot in$

Modification factor for adhesive anchors designed for uncracked concrete, (ACI 318-14, Equation 17.4.5.5a).

$e'_N := 0 \cdot in$

Previously defined.

$\psi_{ec_Na} := \dfrac{1}{\left(1 + \dfrac{e'_N}{c_{Na}}\right)} = 1.0$

Modification factor for adhesive anchor group loaded eccentrically in tension. (ACI 318-14, Equation 17.4.5.3)

$N_{ag} := \dfrac{A_{Na}}{A_{Nao}} \cdot \psi_{ec_Na} \cdot \psi_{ed_Na} \cdot \psi_{cp_Na} \cdot N_{ba} = 7179.0\ lbf$

Nominal bond strength of group of adhesive anchors in tension, (ACI 318-14, Equation 17.4.5.1b).

$\phi N_{ag} := \phi_e \cdot \phi_d \cdot N_{ag} = 3499.8\ lbf$

Nominal bond strength in tension for a group of adhesive anchors in tension incorporating strength reduction factors, (ACI 318-14, Equation 17.4.5.1b).

Determine Steel Strength of the Anchorage in Shear

$$\text{Individual_Group} := \begin{cases} \text{"Analyze anchors individually in shear according to ACI 318-14, Chapter 17"} & \text{if } 3\cdot c_{a1} \le s_a \\ \text{"Analyze anchors as a group in shear according to ACI 318-14, Section 17.2.1.1"} & \text{otherwise} \end{cases}$$

Individual_Group = "Analyze anchors individually in shear according to ACI 318-14, Chapter 17"

$V_{sa} := 13560\cdot lbf$ — The steel strength in shear. (ESR-3187, Table 11, ASTM F593)

$\phi V_{sa} := \alpha_{v_seis}\cdot\phi_{v_s}\cdot V_{sa} = 5695.2\ lbf$ — Steel shear strength incorporating strength reduction factors.

Determine Concrete Breakout Strength of the Anchorage in Shear

$$\psi_{ed_V} := \begin{cases} 1.0 & \text{if } c_{a2} \ge 1.5\cdot c_{a1} \\ 0.7 + 0.3\cdot\dfrac{c_{a2}}{1.5\cdot c_{a1}} & \text{otherwise} \end{cases} = 0.9$$

Edge distance factor (Anchors not on a corner). (ACI 318-14, Section 17.5.2.6)

$\psi_{c_V} := 1.0$ — Cracked concrete factor without supplementary reinforcement, (ACI 318-14, Section 17.5.2.7)

$$\psi_{h_V} := \begin{cases} \sqrt{\dfrac{1.5\cdot c_{a1}}{h_a}} & \text{if } h_a < 1.5\cdot c_{a1} \\ 1 & \text{otherwise} \end{cases} = 1.00$$

Thickness modification factor. (ACI 318-14, Section 17.5.2.8)

$d_a := d = 0.6\cdot in$ — The outside diameter of the anchor.

$l_e := \min(8\cdot d_a, h_{ef}) = 3.1\cdot in$ — The load bearing length of anchor for shear. (ACI 318-14, Section 17.5.2.2)

$$V_b := \min\left[7\cdot\left(\frac{l_e}{d_a}\right)^{0.2}\cdot\sqrt{\frac{d_a}{in}}\cdot\lambda\cdot\sqrt{\frac{f'_c}{psi}}\cdot\left(\frac{c_{a1}}{in}\right)^{1.5}\cdot lbf,\ 9\cdot\lambda\cdot\sqrt{\frac{f'_c}{psi}}\cdot\left(\frac{c_{a1}}{in}\right)^{1.5}\cdot lbf\right] = 8003.1\cdot lbf$$

Basic concrete breakout strength of a single anchor in shear in cracked concrete. (ACI 318-14, Section 17.5.2.2)

$A_{Vco} := 4.5\cdot c_{a1}^2 = 175.8\cdot in^2$ — The projected area for a single anchor in a deep member with a distance from edges equal or greater than 1.5 x c_{a1}. (ACI 318-14, Equation 17.5.2.1c)

$A_{Vc} := [(2\cdot 1.5\cdot c_{a1}) + s_a]\cdot\min(1.5\cdot c_{a1}, h_a) = 419.5\cdot in^2$ — Projected concrete failure area of the anchorage. (ACI 318-14, Section 17.5.2.1 and Figure R17.5.2.1b)

$e'_V := 0\cdot in$ — No eccentricity of anchor group in shear.

$$\psi_{ec_V} := \frac{1}{\left(1 + \dfrac{2\cdot e'_V}{3\cdot c_{a1}}\right)} = 1.0$$

Modification factor for anchor group loaded eccentrically in shear. (ACI 318-14, Equation 17.5.2.5)

$$V_{cbg} := \frac{A_{Vc}}{A_{Vco}}\cdot\psi_{ec_V}\cdot\psi_{ed_V}\cdot\psi_{c_V}\cdot\psi_{h_V}\cdot V_b = 17190.7\cdot lbf$$

Nominal concrete breakout strength of anchorage in shear. (ACI 318-14, Equation 17.5.2.1a)

$\phi V_{cb} := \phi_{v_c}\cdot V_{cbg} = 12033.5\ lbf$ — Shear breakout strength incorporating strength reduction factors.

Determine Pryout Strength of the Anchorage in Shear

$k_{cp} := \begin{cases} 1 & \text{if } h_{ef} < 2.5\text{in} \\ 2 & \text{otherwise} \end{cases} = 2.0$

Coefficient for pryout strength. (ACI 318-14, Section 17.5.3.1)

$N_{cbg} = 6299.9\ \text{lbf}$ $N_{ag} = 7179.0\ \text{lbf}$

Use the lesser of N.cbg from Equation 17.4.2.1b or Nag from 17.4.5.1b per ACI 318-14, Section 17.5.3.1).

$V_{cp} := k_{cp} \cdot N_{cbg} = 12599.7\ \text{lbf}$

The nominal pryout strength of the anchorage in shear per ACI 318-14, Equation 17.5.3.1a.

$\phi V_{cp} := \phi_{v_c} \cdot V_{cp} = 8819.8\ \text{lbf}$

Shear pryout strength incorporating strength reduction factors.

Determine Governing Failure Strength

$\text{Govern}_t := \begin{cases} \text{"Steel failure governs (Ductile Failure)."} & \text{if } \phi N_{sa} \le \min(\phi N_{cb}, \phi N_{ag}) \\ \text{"Concrete breakout governs (Brittle Failure)."} & \text{if } \phi N_{cb} \le \min(\phi N_{sa}, \phi N_{ag}) \\ \text{"Bond strength governs (Brittle Failure)."} & \text{otherwise} \end{cases}$

$\text{Govern}_t = \text{"Concrete breakout governs (Brittle Failure)."}$

$\text{Tensile}_{govern} := \begin{cases} \phi N_{sa} & \text{if } \phi N_{sa} \le \min(\phi N_{cb}, \phi N_{ag}) \\ \phi N_{cb} & \text{if } \phi N_{cb} \le \min(\phi N_{sa}, \phi N_{ag}) \\ \phi N_{ag} & \text{otherwise} \end{cases}$

The governing allowable tensile capacity of the anchorage.

$\text{Tensile}_{govern} = 3071\ \text{lbf}$

$T_{eye_bolt} = 1388.8\ \text{lbf}$

$\text{Tension_Check} := \begin{cases} \text{"Anchor capacity in tension is OK."} & \text{if } \text{Tensile}_{govern} > T_{eye_bolt} \\ \text{"Anchor capacity in tension is NOT OK"} & \text{otherwise} \end{cases}$

$\text{Tension_Check} = \text{"Anchor capacity in tension is OK."}$

Check to determine the adequacy of the anchors in tension.

$$DCR_{tens} := \frac{T_{eye_bolt}}{\text{Tensile}_{govern}} = 0.45$$

$$Govern_v := \begin{cases} \text{"Steel failure governs (Ductile Failure)."} & \text{if } \phi V_{sa} \le \min(\phi V_{cb}, \phi V_{cp}) \\ \text{"Concrete breakout governs (Brittle Failure)."} & \text{if } \phi V_{cb} < \min(\phi V_{sa}, \phi V_{cp}) \\ \text{"Concrete pryout governs (Brittle Failure)."} & \text{otherwise} \end{cases}$$

$Govern_v$ = "Steel failure governs (Ductile Failure)."

$$Shear_{govern} := \begin{cases} \phi V_{sa} & \text{if } \phi V_{sa} \le \min(\phi V_{cb}, \phi V_{cp}) \\ \phi V_{cb} & \text{if } \phi V_{cb} < \min(\phi V_{sa}, \phi V_{cp}) \\ \phi V_{cp} & \text{otherwise} \end{cases}$$

The governing allowable shear capacity of the anchorage.

$Shear_{govern} = 5695\,lbf$

$V_{eye_bolt} = 462.6\,lbf$

$$Shear_Check := \begin{cases} \text{"Anchor capacity in shear is OK."} & \text{if } Shear_{govern} > V_{eye_bolt} \\ \text{"Anchor capacity in shear is NOT OK"} & \text{otherwise} \end{cases}$$

Shear_Check = "Anchor capacity in shear is OK."

Check to determine the adequacy of the anchors in shear.

$$DCR_{shear} := \frac{V_{eye_bolt}}{Shear_{govern}} = 0.08$$

$$DCR := \begin{cases} DCR_{tens} & \text{if } DCR_{shear} \le 0.2 \\ DCR_{shear} & \text{if } DCR_{tens} \le 0.2 \\ \frac{1}{1.2} \cdot (DCR_{tens} + DCR_{shear}) & \text{otherwise} \end{cases} = 0.45$$

The DCR ratio is less than 1.0; therefore, **OK**
ACI 318-14, Section 17.6.

ATTACHMENT 1

ICC-ES EVALUATION REPORT

ESR -3187

HILTI HIT-HY 200 ADHESIVE ANCHORS AND POST INSTALLED REINFORCING BAR CONNECTIONS IN CONCRETE

(EXCERPT)

Sargent & Lundy Engineering Services, Inc.	RPP-CALC-63664, Rev. 0 **CALCULATION SHEET**		
Project No. S54413.024	**Calculation No.** S54413.024-S-002	**Rev.** 1	**Page No.** 30 of 40
Title: LERF Basin 41 Catch Basin Design			
Prepared By: RW Davidson	**Date:** 4/27/2020	**Checked By:** PP Santos	**Date:** 4/27/2020

ICC EVALUATION SERVICE

In Cooperation with Innovation RESEARCH LABS

Most Widely Accepted and Trusted

ICC-ES Evaluation Report

ICC-ES | (800) 423-6587 | (562) 699-0543 | www.icc-es.org

ESR-3187

Issued 03/2018
Revised 04/2019
This report is subject to renewal 03/2020.

DIVISION: 03 00 00—CONCRETE
SECTION: 03 16 00—CONCRETE ANCHORS
DIVISION: 05 00 00—METALS
SECTION: 05 05 19—POST-INSTALLED CONCRETE ANCHORS

REPORT HOLDER:

HILTI, INC.

EVALUATION SUBJECT:

HILTI HIT-HY 200 ADHESIVE ANCHORS AND POST INSTALLED REINFORCING BAR CONNECTIONS IN CONCRETE

ICC ES ICC ES PMG ICC ES LISTED

"2014 Recipient of Prestigious Western States Seismic Policy Council (WSSPC) Award in Excellence"

A Subsidiary of ICC INTERNATIONAL CODE COUNCIL

ICC-ES Evaluation Reports are not to be construed as representing aesthetics or any other attributes not specifically addressed, nor are they to be construed as an endorsement of the subject of the report or a recommendation for its use. There is no warranty by ICC Evaluation Service, LLC, express or implied, as to any finding or other matter in this report, or as to any product covered by the report.

ANSI ACCREDITED ISO/IEC 17065 Product Certification Body #1000

Copyright © 2019 ICC Evaluation Service, LLC. All rights reserved.

Sargent & Lundy Engineering Services, Inc.	RPP-CALC-63664, Rev. 0 CALCULATION SHEET		
Project No. S54413.024	**Calculation No.** S54413.024-S-002	**Rev.** 1	**Page No.** 31 of 40
Title: LERF Basin 41 Catch Basin Design			
Prepared By: RW Davidson	**Date:** 4/27/2020	**Checked By:** PP Santos	**Date:** 4/27/2020

ICC EVALUATION SERVICE — Most Widely Accepted and Trusted

ICC-ES Evaluation Report

ESR-3187

Reissued March 2018
Revised April 2019
This report is subject to renewal March 2020.

www.icc-es.org | (800) 423-6587 | (562) 699-0543 — *A Subsidiary of the International Code Council®*

DIVISION: 03 00 00—CONCRETE
Section: 03 16 00—Concrete Anchors

DIVISION: 05 00 00—METALS
Section: 05 05 19—Post-installed Concrete Anchors

REPORT HOLDER:

HILTI, INC.

EVALUATION SUBJECT:

HILTI HIT-HY 200 ADHESIVE ANCHORS AND POST INSTALLED REINFORCING BAR CONNECTIONS IN CONCRETE

1.0 EVALUATION SCOPE

Compliance with the following codes:

- 2018, 2015, 2012, and 2009 *International Building Code®* (IBC)
- 2018, 2015, 2012, and 2009 *International Residential Code®* (IRC)
- 2013 *Abu Dhabi International Building Code* (ADIBC)†

†The ADIBC is based on the 2009 IBC. 2009 IBC code sections referenced in this report are the same sections in the ADIBC.

For evaluation for compliance with codes adopted by the Los Angeles Department of Building and Safety (LADBS), see ESR-3187 LABC and LARC Supplement.

For evaluation for compliance with the *National Building Code of Canada®* (NBCC), see listing report ELC-3187.

Property evaluated:

Structural

2.0 USES

Adhesive anchors and reinforcing bars installed using the Hilti HIT-HY 200 Adhesive Anchoring System and Post-Installed Reinforcing Bar System are used to resist static, wind and earthquake (Seismic Design Categories A through F) tension and shear loads in cracked and uncracked normal-weight concrete having a specified compressive strength, f'_c, of 2,500 psi to 8,500 psi (17.2 MPa to 58.6 MPa) [minimum of 24 MPa is required under ADIBC Appendix L, Section 5.1.1].

The anchor system complies with anchors as described in Section 1901.3 of the 2018 and 2015 IBC, Section 1909 of the 2012 IBC and is an alternative to cast-in-place anchors described in Section 1908 of the 2012 IBC, and Sections 1911 and 1912 of the 2009 IBC. The anchor systems may also be used where an engineered design is submitted in accordance with Section R301.1.3 of the IRC.

The post-installed reinforcing bar system is an alternative to cast-in-place reinforcing bars governed by ACI 318 and IBC Chapter 19.

3.0 DESCRIPTION

3.1 General:

The Hilti HIT-HY 200 Adhesive Anchoring System and Post-Installed Reinforcing Bar System are comprised of the following components:

- Hilti HIT-HY 200 adhesive packaged in foil packs (either Hilti HIT-HY 200-A or Hilti HIT-HY 200-R)
- Adhesive mixing and dispensing equipment
- Equipment for hole cleaning and adhesive injection

The Hilti HIT-HY 200 Adhesive Anchoring System may be used with continuously threaded rod, Hilti HIT-Z(-R) anchor rods, Hilti HIS-(R)N internally threaded inserts or deformed steel reinforcing bars as depicted in Figure 1. The Hilti HIT-HY 200 Post-Installed Reinforcing Bar System may only be used with deformed steel reinforcing bars as depicted in Figure 2. The primary components of the Hilti Adhesive Anchoring and Post-Installed Reinforcing Bar Systems, including the Hilti HIT-HY 200 Adhesive, HIT-RE-M static mixing nozzle and steel anchoring elements, are shown in Figure 6 of this report.

The manufacturer's printed Installation instructions (MPII), as included with each adhesive unit package, are replicated as Figure 9.

3.2 Materials:

3.2.1 Hilti HIT-HY 200 Adhesive: Hilti HIT-HY 200 Adhesive is an injectable, two-component hybrid adhesive. The two components are separated by means of a dual-cylinder foil pack attached to a manifold. The two components combine and react when dispensed through a static mixing nozzle attached to the manifold. Hilti HIT-HY 200 is available in 11.1-ounce (330 mL) and 16.9-ounce (500 mL) foil packs. The manifold attached to each foil pack is stamped with the adhesive expiration date. The shelf life, as indicated by the expiration date, applies to an unopened foil pack stored in a dry, dark environment and in accordance with Figure 9.

Hilti HIT-HY 200 Adhesive is available in two options, Hilti HIT-HY 200-A and Hilti HIT-HY 200-R. Both options are subject to the same technical data as set forth in this report. Hilti HIT-HY 200-A will have shorter working times

ICC-ES Evaluation Reports are not to be construed as representing aesthetics or any other attributes not specifically addressed, nor are they to be construed as an endorsement of the subject of the report or a recommendation for its use. There is no warranty by ICC Evaluation Service, LLC, express or implied, as to any finding or other matter in this report, or as to any product covered by the report.

Copyright © 2019 ICC Evaluation Service, LLC. All rights reserved.

and curing times than Hilti HIT-HY 200-R. The packaging for each option employs a different color, which helps the user distinguish between the two adhesives.

3.2.2 Hole Cleaning Equipment:

3.2.2.1 Standard Equipment: Standard hole cleaning equipment, comprised of steel wire brushes and air nozzles, is described in Figure 9 of this report.

3.2.2.2 Hilti Safe-Set™ System: The Hilti Safe-Set™ with Hilti HIT-HY 200 consists of one of the following:

- For the Hilti HIT-Z and HIT-Z-R anchor rods, hole cleaning is not required after drilling the hole, except if the hole is drilled with a diamond core drill bit.
- For the elements described in Sections 3.2.4.2 through 3.2.4.4 and Section 3.2.5, the Hilti TE-CD or TE-YD hollow carbide drill bit with a carbide drilling head conforming to ANSI B212.15. Used in conjunction with a Hilti vacuum with a minimum value for the maximum volumetric flow rate of 129 CFM (61 ℓ/s), the Hilti TE-CD or TE-YD drill bit will remove the drilling dust, automatically cleaning the hole.

3.2.3 Hole Preparation Equipment:

3.2.3.1 Hilti Safe-Set™ System: TE-YRT Roughening Tool: For the elements described in Sections 3.2.5.2 through 3.2.5.4 and Tables 12, 13, 16, 17, 21, and 23, the Hilti TE-YRT roughening tool with a carbide roughening head is used for hole preparation in conjunction with holes core drilled with a diamond core bit as illustrated in Figure 4.

3.2.4 Dispensers: Hilti HIT-HY 200 must be dispensed with manual or electric dispensers provided by Hilti.

3.2.5 Anchor Elements:

3.2.5.1 Hilti HIT-Z and HIT-Z-R Anchor Rods: Hilti HIT-Z and HIT-Z-R anchor rods have a conical shape on the embedded section and a threaded section above the concrete surface. Mechanical properties for the Hilti HIT-Z and HIT-Z-R anchor rods are provided in Table 2. The rods are available in diameters as shown in Table 7 and Figure 1. Hilti HIT-Z anchor rods are produced from carbon steel and furnished with a 0.005-millimeter-thick (5 μm) zinc electroplated coating. Hilti HIT-Z-R anchor rods are fabricated from grade 316 stainless steel.

3.2.5.2 Threaded Steel Rods: Threaded steel rods must be clean, continuously threaded rods (all-thread) in diameters as described in Tables 11 and 15 and Figure 1 of this report. Steel design information for common grades of threaded rods is provided in Table 3. Carbon steel threaded rods must be furnished with a 0.0002-inch-thick (0.005 mm) zinc electroplated coating complying with ASTM B633 SC 1 or must be hot-dipped galvanized complying with ASTM A153, Class C or D. Stainless steel threaded rods must comply with ASTM F593 or ISO 3506 A4. Threaded steel rods must be straight and free of indentations or other defects along their length. The ends may be stamped with identifying marks and the embedded end may be blunt cut or cut on the bias to a chisel point.

3.2.5.3 Steel Reinforcing Bars for use in Post-Installed Anchor Applications: Steel reinforcing bars are deformed bars as described in Table 4 of this report. Tables 11, 15, and 19 and Figure 1 summarize reinforcing bar size ranges. The embedded portions of reinforcing bars must be straight, and free of mill scale, rust, mud, oil and other coatings (other than zinc) that may impair the bond with the adhesive. Reinforcing bars must not be bent after installation except as set forth in ACI 318-14 26.6.3.1(b) or ACI 318-11 7.3.2, as applicable, with the additional condition that the bars must be bent cold, and heating of reinforcing bars to facilitate field bending is not permitted.

3.2.5.4 Hilti HIS-N and HIS-RN Inserts: Hilti HIS-N and HIS-RN inserts have a profile on the external surface and are internally threaded. Mechanical properties for Hilti HIS-N and HIS-RN inserts are provided in Table 5. The inserts are available in diameters and lengths as shown in Table 22 and Figure 1. Hilti HIS-N inserts are produced from carbon steel and furnished with a 0.005-millimeter-thick (5 μm) zinc electroplated coating complying with ASTM B633 SC 1. The stainless steel Hilti HIS-RN inserts are fabricated from X5CrNiMo17122 K700 steel conforming to DIN 17440. Specifications for common bolt types that may be used in conjunction with Hilti HIS-N and HIS-RN inserts are provided in Table 6. Bolt grade and material type (carbon, stainless) must be matched to the insert. Strength reduction factors, ϕ, corresponding to brittle steel elements must be used for Hilti HIS-N and HIS-RN inserts.

3.2.5.5 Ductility: In accordance with ACI 318-14 2.3 or ACI 318-11 D.1, as applicable, in order for a steel element to be considered ductile, the tested elongation must be at least 14 percent and reduction of area must be at least 30 percent. Steel elements with a tested elongation of less than 14 percent or a reduction of area of less than 30 percent, or both, are considered brittle. Values for various steel materials are provided in Tables 2, 3, and 6 of this report. Where values are nonconforming or unstated, the steel must be considered brittle.

3.2.6 Steel Reinforcing Bars for Use in Post-Installed Reinforcing Bar Connections: Steel reinforcing bars used in post-installed reinforcing bar connections are deformed bars (rebar) as depicted in Figures 2 and 3. Tables 25, 26, 27, and Figure 9 summarize reinforcing bar size ranges. The embedded portions of reinforcing bars must be straight, and free of mill scale, rust and other coatings that may impair the bond with the adhesive. Reinforcing bars must not be bent after installation, except as set forth in Section 26.6.3.1(a) of ACI 318-14 or Section 7.3.2 of ACI 318-11, as applicable, with the additional condition that the bars must be bent cold, and heating of reinforcing bars to facilitate field bending is not permitted.

3.3 Concrete:

Normal-weight concrete must comply with Sections 1903 and 1905 of the IBC, as applicable. The specified compressive strength of the concrete must be from 2,500 psi to 8,500 psi (17.2 MPa to 58.6 MPa) [minimum of 24 MPa is required under ADIBC Appendix L, Section 5.1.1].

4.0 DESIGN AND INSTALLATION

4.1 Strength Design of Post-Installed Anchors:

Refer to Table 1 for the design parameters for specific installed elements, and refer to Figure 4 and Section 4.1.4 for a flowchart to determine the applicable design bond strength or pullout strength.

4.1.1 General: The design strength of anchors under the 2018 and 2015 IBC and 2018 and 2015 IRC must be determined in accordance with ACI 318-14 and this report. The design strength of anchors under the 2012 and 2009 IBC, as well as the 2012 and 2009 IRC must be determined in accordance with ACI 318-11 and this report.

A design example according to the 2012 and 2009 IBC based on ACI 318-11 is given in Figure 7 of this report.

Design parameters are based on ACI 318-14 for use with the 2018 and 2015 IBC, and ACI 318-11 for use with the 2012 and 2009 IBC unless noted otherwise in Sections 4.1.1 through 4.1.11 of this report.

Sargent & Lundy Engineering Services, Inc.	**RPP-CALC-63664, Rev. 0** **CALCULATION SHEET**		
Project No. S54413.024	**Calculation No.** S54413.024-S-002	**Rev.** 1	**Page No.** 33 of 40
Title: LERF Basin 41 Catch Basin Design			
Prepared By: RW Davidson	**Date:** 4/27/2020	**Checked By:** PP Santos	**Date:** 4/27/2020

TABLE 1—DESIGN TABLE INDEX

Design Table		Fractional		Metric	
		Table	Page	Table	Page
Hilti HIT-Z and HIT-Z-R Anchor Rod	Steel Strength - N_{sa}, V_{sa}	7	14	7	14
	Concrete Breakout - N_{cb}, N_{cbg}, V_{cb}, V_{cbg}, V_{cp}, V_{cpg}	8	15	8	15
	Pullout Strength – N_p	10	19	10	19
Standard Threaded Rod	Steel Strength - N_{sa}, V_{sa}	11	20	15	25
	Concrete Breakout - N_{cb}, N_{cbg}, V_{cb}, V_{cbg}, V_{cp}, V_{cpg}	12	22	16	26
	Bond Strength - N_a, N_{ag}	14	24	18	28
Hilti HIS-N and HIS-RN Internally Threaded Insert	Steel Strength - N_{sa}, V_{sa}	22	32	22	32
	Concrete Breakout - N_{cb}, N_{cbg}, V_{cb}, V_{cbg}, V_{cp}, V_{cpg}	23	33	23	33
	Bond Strength - N_a, N_{ag}	24	34	24	34

Design Table		Fractional		EU Metric		Canadian	
		Table	Page	Table	Page	Table	Page
Steel Reinforcing Bars	Steel Strength - N_{sa}, V_{sa}	11A	21	15	25	19	29
	Concrete Breakout - N_{cb}, N_{cbg}, V_{cb}, V_{cbg}, V_{cp}, V_{cpg}	12	22	16	26	20	30
	Bond Strength - N_a, N_{ag}	13	23	17	27	21	31
	Determination of development length for post-installed reinforcing bar connections	25	35	26	36	27	36

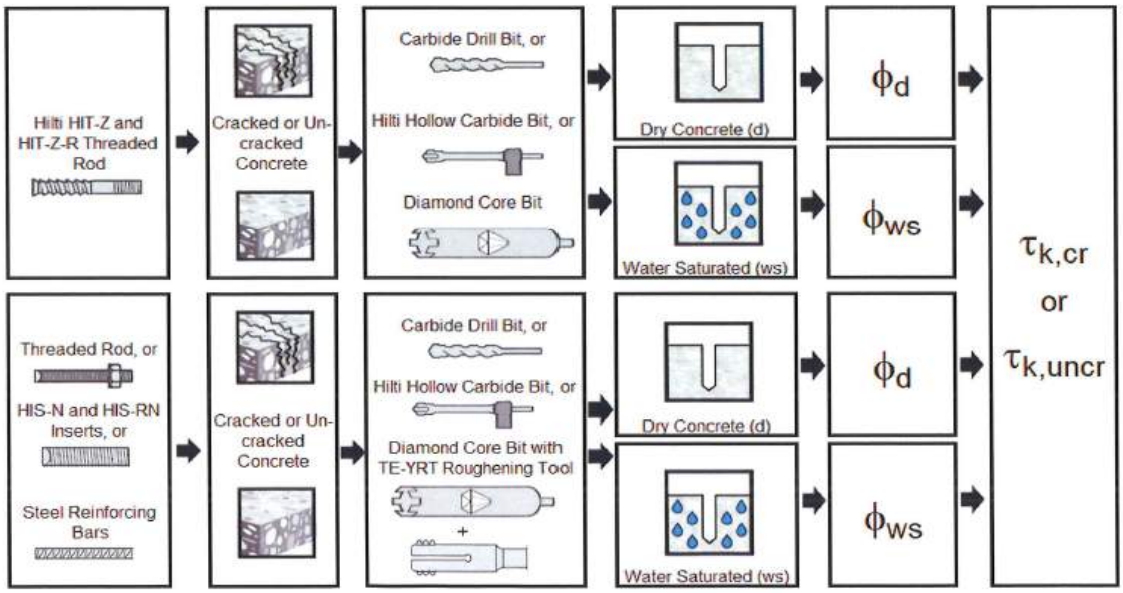

FIGURE 4—FLOWCHART FOR THE ESTABLISHMENT OF DESIGN BOND OR PULLOUT STRENGTH FOR POST-INSTALLED ADHESIVE ANCHORS

Sargent & Lundy Engineering Services, Inc.	**RPP-CALC-63664, Rev. 0** **CALCULATION SHEET**		
Project No. S54413.024	**Calculation No.** S54413.024-S-002	**Rev.** 1	**Page No.** 34 of 40
Title: LERF Basin 41 Catch Basin Design			
Prepared By: RW Davidson	**Date:** 4/27/2020	**Checked By:** PP Santos	**Date:** 4/27/2020

Fractional Threaded Rod

Steel Strength

TABLE 11—STEEL DESIGN INFORMATION FOR FRACTIONAL THREADED ROD

DESIGN INFORMATION		Symbol	Units	Nominal rod diameter (in.)[1]						
				3/8	1/2	5/8	3/4	7/8	1	1 1/4
Rod O.D.		d	in. (mm)	0.375 (9.5)	0.5 (12.7)	0.625 (15.9)	0.75 (19.1)	0.875 (22.2)	1 (25.4)	1.25 (31.8)
Rod effective cross-sectional area		A_{se}	in.^{2} (mm^2)	0.0775 (50)	0.1419 (92)	0.2260 (146)	0.3345 (216)	0.4617 (298)	0.6057 (391)	0.9691 (625)
ISO 898-1 Class 5.8	Nominal strength as governed by steel strength	N_{sa}	lb (kN)	5,620 (25.0)	10,290 (45.8)	16,385 (72.9)	24,250 (107.9)	33,470 (148.9)	43,910 (195.3)	70,260 (312.5)
		V_{sa}	lb (kN)	3,370 (15.0)	6,175 (27.5)	9,830 (43.7)	14,550 (64.7)	20,085 (89.3)	26,345 (117.2)	42,155 (187.5)
	Reduction for seismic shear	$\alpha_{V,seis}$	-	0.70						
	Strength reduction factor ϕ for tension[2]	ϕ	-	0.65						
	Strength reduction factor ϕ for shear[2]	ϕ	-	0.60						
ASTM A193 B7	Nominal strength as governed by steel strength	N_{sa}	lb (kN)	9,685 (43.1)	17,735 (78.9)	28,250 (125.7)	41,810 (186.0)	57,710 (256.7)	75,710 (336.8)	121,135 (538.8)
		V_{sa}	lb (kN)	5,810 (25.9)	10,640 (47.3)	16,950 (75.4)	25,085 (111.6)	34,625 (154.0)	45,425 (202.1)	72,680 (323.3)
	Reduction for seismic shear	$\alpha_{V,seis}$	-	0.70						
	Strength reduction factor ϕ for tension[3]	ϕ	-	0.75						
	Strength reduction factor ϕ for shear[3]	ϕ	-	0.65						
ASTM F1554 Gr. 36	Nominal strength as governed by steel strength	N_{sa}	lb (kN)	- -	8,230 (36.6)	13,110 (58.3)	19,400 (86.3)	26,780 (119.1)	35,130 (156.3)	56,210 (250.0)
		V_{sa}	lb (kN)	- -	4,940 (22.0)	7,865 (35.0)	11,640 (51.8)	16,070 (71.5)	21,080 (93.8)	33,725 (150.0)
	Reduction factor, seismic shear	$\alpha_{V,seis}$	-	0.6						
	Strength reduction factor ϕ for tension[3]	ϕ	-	0.75						
	Strength reduction factor ϕ for shear[3]	ϕ	-	0.65						
ASTM F1554 Gr. 55	Nominal strength as governed by steel strength	N_{sa}	lb (kN)	- -	10,645 (47.4)	16,950 (75.4)	25,090 (111.6)	34,630 (154.0)	45,430 (202.1)	72,685 (323.3)
		V_{sa}	lb (kN)	- -	6,385 (28.4)	10,170 (45.2)	15,055 (67.0)	20,780 (92.4)	27,260 (121.3)	43,610 (194.0)
	Reduction factor, seismic shear	$\alpha_{V,seis}$	-	0.7						
	Strength reduction factor ϕ for tension[3]	ϕ	-	0.75						
	Strength reduction factor ϕ for shear[3]	ϕ	-	0.65						
ASTM F1554 Gr. 105	Nominal strength as governed by steel strength	N_{sa}	lb (kN)	- -	17,740 (78.9)	28,250 (125.7)	41,815 (186.0)	57,715 (256.7)	75,715 (336.8)	121,135 (538.8)
		V_{sa}	lb (kN)	- -	10,645 (47.4)	16,950 (75.4)	25,090 (111.6)	34,630 (154.0)	45,430 (202.1)	72,680 (323.3)
	Reduction factor, seismic shear	$\alpha_{V,seis}$	-	0.7						
	Strength reduction factor ϕ for tension[3]	ϕ	-	0.75						
	Strength reduction factor ϕ for shear[3]	ϕ	-	0.65						
ASTM F593, CW Stainless	Nominal strength as governed by steel strength	N_{sa}	lb (kN)	7,750 (34.5)	14,190 (63.1)	22,600 (100.5)	28,435 (126.5)	39,245 (174.6)	51,485 (229.0)	- -
		V_{sa}	lb (kN)	4,650 (20.7)	8,515 (37.9)	13,560 (60.3)	17,060 (75.9)	23,545 (104.7)	30,890 (137.4)	- -
	Reduction factor, seismic shear	$\alpha_{V,seis}$	-	0.7						-
	Strength reduction factor ϕ for tension[2]	ϕ	-	0.65						-
	Strength reduction factor ϕ for shear[2]	ϕ	-	0.60						-
ASTM A193, Gr. 8(M), Class 1 Stainless	Nominal strength as governed by steel strength	N_{sa}	lb (kN)	-						55,240 (245.7)
		V_{sa}	lb (kN)	-						33,145 (147.4)
	Reduction factor, seismic shear	$\alpha_{V,seis}$	-	-						0.6
	Strength reduction factor ϕ for tension[2]	ϕ	-	-						0.75
	Strength reduction factor ϕ for shear[2]	ϕ	-	-						0.65

For **SI**: 1 inch = 25.4 mm, 1 lbf = 4.448 N. For **pound-inch** units: 1 mm = 0.03937 inches, 1 N = 0.2248 lbf

[1] Values provided for common rod material types are based on specified strengths and calculated in accordance with ACI 318-14 Eq. (17.4.1.2) and Eq (17.5.1.2b) or ACI 318-11 Eq. (D-2) and Eq. (D-29). Nuts and washers must be appropriate for the rod.

[2] For use with the load combinations of IBC Section 1605.2, ACI 318-14 5.3 or ACI 318-11 9.2, as set forth in ACI 318-14 17.3.3 or ACI 318-11 D.4.3. If the load combinations of ACI 318-11 Appendix C are used, the appropriate value of ϕ must be determined in accordance with ACI 318-11 D.4.4. Values correspond to a brittle steel element.

[3] For use with the load combinations of IBC Section 1605.2, ACI 318-14 5.3 or ACI 318-11 9.2, as set forth in ACI 318-14 17.3.3 or ACI 318-11 D.4.3. If the load combinations of ACI 318-11 Appendix C are used, the appropriate value of ϕ must be determined in accordance with ACI 318-11 D.4.4. Values correspond to a ductile steel element.

Sargent & Lundy Engineering Services, Inc.	RPP-CALC-63664, Rev. 0 **CALCULATION SHEET**		
Project No. S54413.024	**Calculation No.** S54413.024-S-002	**Rev.** 1	**Page No.** 35 of 40
Title: LERF Basin 41 Catch Basin Design			
Prepared By: RW Davidson	**Date:** 4/27/2020	**Checked By:** PP Santos	**Date:** 4/27/2020

Fractional Threaded Rod and Reinforcing Bars

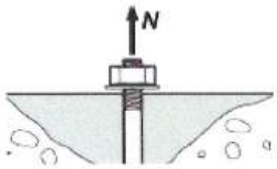

Concrete Breakout Strength

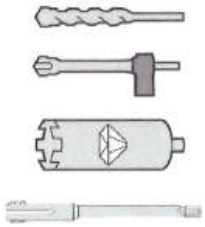

Carbide Bit or
Hilti Hollow Carbide Bit or
Diamond Core Bit + Roughening Tool

TABLE 12—CONCRETE BREAKOUT DESIGN INFORMATION FOR FRACTIONAL THREADED ROD AND REINFORCING BARS IN HOLES DRILLED WITH A HAMMER DRILL AND CARBIDE BIT (OR HILTI HOLLOW CARBIDE DRILL BIT) OR CORE DRILLED WITH A DIAMOND CORE BIT AND ROUGHENED WITH A HILTI ROUGHENING TOOL[1]

DESIGN INFORMATION	Symbol	Units	Nominal rod diameter (in.) / Reinforcing bar size							
			3/8 or #3	1/2 or #4	5/8 or #5	3/4 or #6	7/8 or #7	1 or #8	#9	1 1/4 or #10
Effectiveness factor for cracked concrete	$k_{c,cr}$	in-lb (SI)	17 (7.1)							
Effectiveness factor for uncracked concrete	$k_{c,uncr}$	in-lb (SI)	24 (10)							
Minimum Embedment	$h_{ef,min}$	in. (mm)	2 3/8 (60)	2 3/4 (70)	3 1/8 (79)	3 1/2 (89)	3 1/2 (89)	4 (102)	4 1/2 (114)	5 (127)
Maximum Embedment	$h_{ef,max}$	in. (mm)	7 1/2 (191)	10 (254)	12 1/2 (318)	15 (381)	17 1/2 (445)	20 (508)	22 1/2 (572)	25 (635)
Min. anchor spacing[3]	s_{min}	in. (mm)	1 7/8 (48)	2 1/2 (64)	3 1/8 (79)	3 3/4 (95)	4 3/8 (111)	5 (127)	5 5/8 (143)	6 1/4 (159)
Min. edge distance (Threaded rods)	c_{min}	in. (mm)	1¾ (45)	1¾ (45)	2 (3) (50) (3)	2 1/8 (3) (55) (3)	2¼ (3) (60) (3)	2¾ (3) (70) (3)	n/a	3 1/8 (3) (80) (3)
Min. edge distance (Reinforcing bars)[3]	c_{min}	-	5d; or see Section 4.1.9.2 of this report for design with reduced minimum edge distances							
Minimum concrete thickness	h_{min}	in. (mm)	h_{ef} + 1 1/4 (h_{ef} + 30)		$h_{ef} + 2d_0$ (4)					
Critical edge distance – splitting (for uncracked concrete)	c_{ac}	-	See Section 4.1.10.2 of this report.							
Strength reduction factor for tension, concrete failure modes, Condition B[2]	ϕ	-	0.65							
Strength reduction factor for shear, concrete failure modes, Condition B[2]	ϕ	-	0.70							

For **SI**: 1 inch ≡ 25.4 mm, 1 lbf = 4.448 N, 1 psi = 0.006897 MPa.
For pound-inch units: 1 mm = 0.03937 inches, 1 N = 0.2248 lbf, 1 MPa = 145.0 psi

[1] Additional setting information is described in Figure 9, Manufacturers Printed Installation Instructions (MPII).
[2] Values provided for post-installed anchors under Condition B without supplementary reinforcement as defined in ACI 318-14 17.3.3 or ACI 318-11 D.4.3.
[3] For installations with 1 3/4-inch edge distance, refer to Section 4.1.9.2 for spacing and maximum torque requirements.
[4] d_0 = hole diameter.

Sargent & Lundy Engineering Services, Inc.	**RPP-CALC-63664, Rev. 0** **CALCULATION SHEET**		
Project No. S54413.024	**Calculation No.** S54413.024-S-002	**Rev.** 1	**Page No.** 36 of 40
Title: LERF Basin 41 Catch Basin Design			
Prepared By: RW Davidson	**Date:** 4/27/2020	**Checked By:** PP Santos	**Date:** 4/27/2020

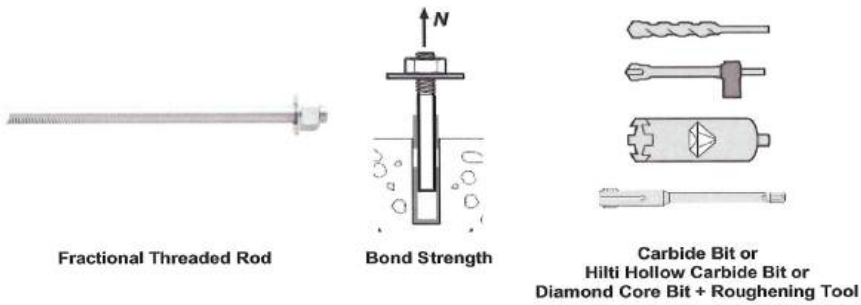

TABLE 14—BOND STRENGTH DESIGN INFORMATION FOR FRACTIONAL THREADED ROD IN HOLES DRILLED WITH A HAMMER DRILL AND CARBIDE BIT (OR HILTI HOLLOW CARBIDE DRILL BIT) OR CORE DRILLED WITH A DIAMOND CORE BIT AND ROUGHENED WITH A HILTI ROUGHENING TOOL[1]

DESIGN INFORMATION		Symbol	Units	Nominal rod diameter (in.)						
				3/8	1/2	5/8	3/4	7/8	1	1 1/4
Minimum Embedment		$h_{ef,min}$	in. (mm)	2 3/8 (60)	2 3/4 (70)	3 1/8 (79)	3 1/2 (89)	3 1/2 (89)	4 (102)	5 (127)
Maximum Embedment		$h_{ef,max}$	in. (mm)	7 1/2 (191)	10 (254)	12 1/2 (318)	15 (381)	17 1/2 (445)	20 (508)	25 (635)
Temperature range A[2]	Characteristic bond strength in cracked concrete	$\tau_{k,cr}$	psi (MPa)	1,045 (7.2)	1,135 (7.8)	1,170 (8.1)	1,260 (8.7)	1,290 (8.9)	1,325 (9.1)	1,380 (9.5)
	Characteristic bond strength in uncracked concrete	$\tau_{k,uncr}$	psi (MPa)	2,220 (15.3)	2,220 (15.3)	2,220 (15.3)	2,220 (15.3)	2,220 (15.3)	2,220 (15.3)	2,220 (15.3)
Temperature range B[2]	Characteristic bond strength in cracked concrete	$\tau_{k,cr}$	psi (MPa)	1,045 (7.2)	1,135 (7.8)	1,170 (8.1)	1,260 (8.7)	1,290 (8.9)	1,325 (9.1)	1,380 (9.5)
	Characteristic bond strength in uncracked concrete	$\tau_{k,uncr}$	psi (MPa)	2,220 (15.3)	2,220 (15.3)	2,220 (15.3)	2,220 (15.3)	2,220 (15.3)	2,220 (15.3)	2,220 (15.3)
Temperature range C[2]	Characteristic bond strength in cracked concrete	$\tau_{k,cr}$	psi (MPa)	855 (5.9)	930 (6.4)	960 (6.6)	1,035 (7.1)	1,055 (7.3)	1,085 (7.5)	1,130 (7.8)
	Characteristic bond strength in uncracked concrete	$\tau_{k,uncr}$	psi (MPa)	1,820 (12.6)	1,820 (12.6)	1,820 (12.6)	1,820 (12.6)	1,820 (12.6)	1,820 (12.6)	1,820 (12.6)
Permissible installation conditions	Dry and water saturated concrete	Anchor Category	-	1						
		ϕ_d, ϕ_{ws}	-	0.65						
Reduction for seismic tension	Hammer drilled	$\alpha_{N,seis}$	-	0.88	0.99	0.99	1.0	1.0	0.95	0.99
	Core drilled + roughening	$\alpha_{N,seis}$	-	N/A		0.88	0.96	0.96	1.0	0.82

For **SI**: 1 inch ≡ 25.4 mm, 1 lbf = 4.448 N, 1 psi = 0.006897 MPa.
For pound-inch units: 1 mm = 0.03937 inches, 1 N = 0.2248 lbf, 1 MPa = 145.0 psi

[1] Bond strength values correspond to concrete compressive strength f'_c = 2,500 psi (17.2 MPa). For concrete compressive strength, f'_c, between 2,500 psi (17.2 MPa) and 8,000 psi (55.2 MPa) [minimum of 24 MPa is required under ADIBC Appendix L, Section 5.1.1], the tabulated characteristic bond strength may be increased by a factor of $(f'_c / 2{,}500)^{0.1}$ [For SI: $(f'_c / 17.2)^{0.1}$]. See Section 4.1.4 of this report for bond strength determination.
[2] Temperature range A: Maximum short term temperature = 130°F (55°C), Maximum long term temperature = 110°F (43°C).
Temperature range B: Maximum short term temperature = 176°F (80°C), Maximum long term temperature = 110°F (43°C).
Temperature range C: Maximum short term temperature = 248°F (120°C), Maximum long term temperature = 162°F (72°C).
Short term elevated concrete temperatures are those that occur over brief intervals, e.g., as a result of diurnal cycling. Long term concrete temperatures are roughly constant over significant periods of time.

ATTACHMENT 2

PIPE WALL THICKNESS DATA SHEET

Sargent & Lundy Engineering Services, Inc.	**RPP-CALC-63664, Rev. 0** **CALCULATION SHEET**		
Project No. S54413.024	**Calculation No.** S54413.024-S-002	**Rev.** 1	**Page No.** 38 of 40
Title: LERF Basin 41 Catch Basin Design			
Prepared By: RW Davidson	**Date:** 4/27/2020	**Checked By:** PP Santos	**Date:** 4/27/2020

"Annealed" Welded and Seamless Comparison of Wall Thicknesses

- Alloys Stocked Include Types 304-L and 316-L. Other corrosion resistant alloys are available.
- Specifications: ASTM A 312
- Stocked in 17 - 24 foot random mill lengths, plain ends.
- "Annealed" pipe is used when the specifications referenced are required and is available only in the NPS diameters and schedule wall thickness shown. Welded "annealed" pipe is available per ASTM A 312, ASI SA-312 and ASTM A 358, A 376, A 409 and MIL-P-24691 (corrosion tested) and is stocked in most sizes thr 24" diameter. Seamless "annealed" pipe is available per ASTM A 312 and MIL-P-24691 (corrosion tested) is stocked through 4" size.

Nominal Pipe Size	Outside Diameter	Sch 5s	Lbs/ft	Sch 10s	Lbs/Ft	Sch 40s	Lbs/Ft	Sch 80s	Lbs/Ft	Sch 160	Lbs/Ft	XX Strong	Lbs
1/8	.405			.049	.19	.068	.25	.095	.32				
1/4	.540			.065	.31	.088	.40	.119	.50				
3/8	.675			.065	.43	.091	.58	.126	.76				
1/2	.840	.065	.55	.083	.69	.109	.87	.147	1.1	.187	1.3	.294	1.8
3/4	1.050	.065	.70	.083	.88	.113	1.2	.154	1.5	.218	2.0	.308	2.5
1	1.315	.065	.88	.109	1.4	.133	1.7	.179	2.2	.250	2.9	.358	3.7
1 1/4	1.660	.065	1.1	.109	1.8	.140	2.3	.191	3.1	.250	3.9	.382	5.3
1 1/2	1.900	.065	1.3	.109	2.1	.145	2.8	.200	3.7	.281	5.0	.400	6.6
2	2 3/8	.065	1.6	.109	2.7	.154	3.7	.218	5.1	.343	7.6	.436	9.2
2 1/2	2 7/8	.083	2.5	.120	3.6	.203	5.9	.276	7.8	.375	10.2	.552	14.
3	3 1/2	.083	3.1	.120	4.4	.216	7.8	.300	10.5	.438	14.7	.600	19.
3 1/2	4	.083	3.6	.120	5.1	.226	9.3	.318	12.8			.636	23.
4	4 1/2	.083	4.0	.120	5.7	.237	11.0	.337	15.3	.531	23.0	.674	28.
5	5 9/16	.109	6.5	.134	8.0	.258	15.0	.375	21.3	.625	33.7	.750	39.
6	6 5/8	.109	7.8	.134	9.5	.280	19.4	.432	29.2	.719	46.4	.864	54.
8	8 5/8	.109	10.1	.148	13.7	.322	29.2	.500	44.4	.906	76.5	.875	74.
10	10 3/4	.134	15.6	.165	19.1	.365	41.4	.500	56.0	1.125	118	1.00	107
12	12 3/4	.156	21.5	.180	24.7	.375	50.7	.500	67.0	1.312	164	1.00	128
	14	.156	23.6	.188	28.4	.375	55.9	.500	73.8				
	16	.165	28.6	.188	32.5	.375	64.1	.500	84.7				
	18	.165	32.2	.188	36.6	.375	72.3	.500	95.7				
	20	.188	40.7	.218	47.1	.375	80.5	.500	107				
	22	.188	44.8	.218	51.9	.375	88.7	.500	118				
	24	.218	56.7	.250	64.9	.375	96.9	.500	128				
	26					.375	105	.500	139				
	28					.375	113	.500	150				
	30	.250	81.3	.312	101	.375	121	.500	161				
	32					.375	130	.500	172				
	34					.375	138	.500	183				
	36					.375	146	.500	194				
	40					.375	162	.500	216				
	42					.375	171	.500	227				
	48					.375	195	.500	260				

ATTACHMENT 3

HDPE PIPE DATA SHEET

Sargent & Lundy Engineering Services, Inc.	RPP-CALC-63664, Rev. 0 **CALCULATION SHEET**		
Project No. S54413.024	**Calculation No.** S54413.024-S-002	**Rev.** 1	**Page No.** 40 of 40
Title: LERF Basin 41 Catch Basin Design			
Prepared By: RW Davidson	**Date:** 4/27/2020	**Checked By:** PP Santos	**Date:** 4/27/2020

HDPE Water/Sewer | IPS

PRESSURE-RATED HDPE PIPE

JM Eagle

DELIVERING GOOD WATER TO YOU

SUBMITTAL AND DATA SHEET

HDPE IRON PIPE SIZE (IPS) PRESSURE PIPE

PIPE SIZE (IN)	AVG.O.D. (IN)	MIN. T. (IN)	AVG I.D. (IN)	WGT (LBS/FT)	MIN. T. (IN)	AVG I.D. (IN)	WGT (LBS/FT)	MIN. T. (IN)	AVG I.D. (IN)	WGT (LBS/FT)
		DR 7 (335 psi)			DR 9 (250 psi)			DR 11 (200 psi)		
4	4.500	0.643	3.137	3.40	0.500	3.440	2.75	0.409	3.633	2.30
5	5.375	0.795	3.747	4.85	0.618	4.109	3.92	0.506	4.338	3.29
6	6.625	0.946	4.619	7.36	0.736	5.065	5.96	0.602	5.349	4.99
7	7.125	1.018	5.056	8.52	0.792	5.446	6.89	0.648	5.751	5.78
8	8.625	1.232	6.013	12.48	0.958	6.594	10.09	0.784	6.963	8.46
10	10.750	1.536	7.494	19.40	1.194	8.219	15.68	0.977	8.679	13.14
12	12.750	1.821	8.889	27.28	1.417	9.746	22.07	1.159	10.293	18.49
14	14.000	2.000	9.760	32.90	1.556	10.107	26.61	1.273	11.301	22.30
16	16.000	2.286	11.154	42.97	1.778	12.231	34.75	1.455	12.915	29.12
18	18.000	2.571	12.549	54.37	2.000	13.760	43.97	1.636	14.532	36.84
20	20.000	2.857	13.943	67.13	2.222	15.289	54.28	1.818	16.146	45.49
22	22.000	3.143	15.337	81.23	2.444	16.819	65.68	2.000	17.760	55.05
24	24.000	3.429	16.732	96.67	2.667	18.346	78.18	2.182	19.374	65.52
26	26.000	N/A	N/A	N/A	2.889	19.875	91.75	2.364	20.988	76.90
28	28.000	N/A	N/A	N/A	3.111	21.405	106.40	2.545	22.605	89.15
30	30.000	N/A	N/A	N/A	3.333	22.934	122.13	2.727	24.219	102.35
32	32.000	N/A	N/A	N/A	N/A	N/A	N/A	2.909	25.833	116.46
34	34.000	N/A	N/A	N/A	N/A	N/A	N/A	3.091	27.447	131.48
36	36.000	N/A	N/A	N/A	N/A	N/A	N/A	3.273	29.061	147.41

Product Standard:
ANSI/AWWA C906
ASTM F714
ASTM D3035
Pipe Compound:
PPI TR-4 PE 4710, ASTM D3350
Cell Class 445574 C/E
Certification: ANSI/NSF 61, ANSI/NSF 14*
Additional Option:
Perforated (4" - 8")*

Nominal Laying Length: 40/50 feet (Laying length tolerances are in accordance with AWWA and ASTM standards)
Coil option available upon request for size 6" and below.
Installation: JM Eagle™ HDPE Water/Sewer Installation Guide

Manning Coefficient (n) = 0.009
Hazen-Williams Coefficient (c) = 150

*Supply may vary based on plant location. Please call regarding availability.

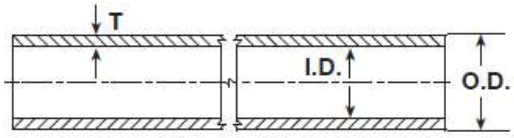

T: (Wall Thickness) **I.D.:** (Inside Diameter) **O.D.:** (Outside Diameter)

PIPE SIZE (IN)	AVG.O.D. (IN)	MIN. T. (IN)	AVG I.D. (IN)	WGT (LBS/FT)	MIN. T. (IN)	AVG I.D. (IN)	WGT (LBS/FT)	MIN. T. (IN)	AVG I.D. (IN)	WGT (LBS/FT)
		DR 13.5 (160 psi)			DR 17 (125 psi)			DR 19 (111 psi)		
4	4.500	0.333	3.794	1.91	0.265	3.938	1.55	0.237	3.998	1.39
5	5.375	0.412	4.531	2.73	0.327	4.705	2.21	0.283	4.775	1.99
6	6.625	0.491	5.584	4.15	0.390	5.798	3.35	0.349	5.885	3.02
7	7.125	0.528	6.006	4.80	0.420	6.237	3.88	0.375	6.330	3.49
8	8.625	0.639	7.270	7.03	0.507	7.550	5.68	0.454	7.663	5.12
10	10.750	0.796	9.062	10.92	0.632	9.410	8.82	0.566	9.550	7.95
12	12.750	0.944	10.749	15.36	0.750	11.160	12.41	0.671	11.327	11.19
14	14.000	1.037	11.802	18.52	0.824	12.253	14.98	0.737	12.438	13.49
16	16.000	1.185	13.488	24.19	0.941	14.005	19.55	0.842	14.215	17.61
18	18.000	1.333	15.174	30.61	1.059	15.755	24.75	0.947	15.992	22.29
20	20.000	1.481	16.860	37.79	1.176	17.507	30.53	1.053	17.768	27.52
22	22.000	1.630	18.544	45.75	1.294	19.257	36.86	1.158	19.545	33.30
24	24.000	1.778	20.231	54.44	1.412	21.007	43.99	1.263	21.322	39.63
26	26.000	1.926	21.917	63.89	1.529	22.759	51.61	1.368	23.100	46.51
28	28.000	2.074	23.603	74.09	1.647	24.508	59.87	1.474	24.875	53.94
30	30.000	2.222	25.289	85.04	1.765	26.258	68.74	1.579	26.653	61.92
32	32.000	2.370	26.967	96.76	1.882	28.010	78.18	1.684	28.430	70.45
34	34.000	2.519	28.660	109.26	2.000	29.760	88.28	1.790	30.205	79.54
36	36.000	2.667	30.346	122.49	2.118	31.510	98.98	1.895	31.983	89.17
42	42.000	3.111	35.404	166.70	2.471	36.761	134.72	2.211	37.314	121.37
48	48.000	3.556	40.462	217.76	2.824	42.013	175.97	2.526	42.644	158.52
54	54.000	N/A	N/A	N/A	3.177	47.265	222.67	2.842	47.975	200.63

PIPE SIZE (IN)	AVG.O.D. (IN)	MIN. T. (IN)	AVG I.D. (IN)	WGT (LBS/FT)	MIN. T. (IN)	AVG I.D. (IN)	WGT (LBS/FT)	MIN. T. (IN)	AVG I.D. (IN)	WGT (LBS/FT)
		DR 21 (100 psi)			DR 26 (80 psi)			DR 32.5 (63 psi)		
4	4.500	0.214	4.046	1.27	0.173	4.133	1.03	0.138	4.207	0.83
5	5.375	0.265	4.832	1.81	0.214	4.936	1.48	0.171	5.025	1.19
6	6.625	0.315	5.957	2.74	0.255	6.084	2.24	0.204	6.193	1.81
7	7.125	0.340	6.406	3.18	0.274	6.544	2.59	0.219	6.661	2.09
8	8.625	0.411	7.754	4.66	0.332	7.921	3.80	0.265	8.063	3.06
10	10.750	0.512	9.665	7.24	0.413	9.874	5.90	0.331	10.048	4.77
12	12.750	0.607	11.463	10.17	0.490	11.711	8.30	0.392	11.919	6.69
14	14.000	0.667	12.586	12.28	0.538	12.895	10.00	0.431	13.086	8.08
16	16.000	0.762	14.385	16.03	0.615	14.696	13.07	0.492	14.957	10.54
18	18.000	0.857	16.183	20.28	0.692	16.533	16.54	0.554	16.826	13.36
20	20.000	0.952	17.982	25.03	0.769	18.370	20.43	0.615	18.696	16.48
22	22.000	1.048	19.778	30.31	0.846	20.206	24.72	0.677	20.565	19.95
24	24.000	1.143	21.577	36.06	0.923	22.043	29.42	0.738	22.435	23.72
26	26.000	1.238	23.375	42.32	1.000	23.880	34.53	0.800	24.304	27.86
28	28.000	1.333	25.174	49.07	1.077	25.717	40.05	0.862	26.173	32.33
30	30.000	1.429	26.971	56.36	1.154	27.554	45.98	0.923	28.043	37.09
32	32.000	1.542	28.730	64.11	1.231	29.390	52.31	0.985	29.912	42.22
34	34.000	1.619	30.568	72.36	1.308	31.227	59.06	1.046	31.782	47.63
36	36.000	1.714	32.366	81.12	1.385	33.064	66.22	1.108	33.651	53.42
42	42.000	2.000	37.760	110.43	1.615	38.576	90.08	1.292	39.261	72.68
48	48.000	2.286	43.154	144.25	1.846	44.086	117.68	1.477	44.869	94.95
54	54.000	2.571	48.549	182.51	2.077	49.597	148.95	1.662	50.477	120.20
63	63.000	3.000	56.640	248.46	2.423	57.863	202.73	1.938	58.891	163.53

DOCUMENT RELEASE AND CHANGE FORM

Prepared For the U.S. Department of Energy, Assistant Secretary for Environmental Management
By Washington River Protection Solutions, LLC., PO Box 850, Richland, WA 99352
Contractor For U.S. Department of Energy, Office of River Protection, under Contract DE-AC27-08RV14800

TRADEMARK DISCLAIMER: Reference herein to any specific commercial product, process, or service by trade name, trademark, manufacturer, or otherwise, does not necessarily constitute or imply its endorsement, recommendation, or favoring by the United States government or any agency thereof or its contractors or subcontractors. Printed in the United States of America.

Release Stamp

DATE:
May 26,2020
HANFORD RELEASE

1. **Doc No:** RPP-CALC-63664 **Rev.** 00

2. **Title:**
LERF Basin 41 Catch Basin Design

3. **Project Number:** ☐N/A
T1P226

4. **Design Verification Required:**
☐Yes ☒No

5. **USQ Number:** ☒ N/A
RPP-27195

6. **PrHA Number** **Rev.** ☒ N/A

Clearance Review Restriction Type:
public

7. **Approvals**

Title	Name	Signature	Date
Clearance Review	Harrison, Sarah E	*Harrison, Sarah E*	05/26/2020
Design Authority	Wilson, Nathaniel W	*Wilson, Nathaniel W*	04/28/2020
Checker	Santos, Peter P	*Santos, Peter P*	04/27/2020
Document Control Approval	Alvarez, Efren	*Alvarez, Efren*	05/26/2020
Environmental Protection	Wall, Jeremy M	*Wall, Jeremy M*	04/29/2020
Originator	Davidson, Ronald W	*Davidson, Ronald W*	04/27/2020
Other Approver	McShane, Michael P	*McShane, Michael P*	04/23/2020
Responsible Engineering Manager	Huntington, Matthew R	*Huntington, Matthew R*	04/29/2020

8. **Description of Change and Justification**

Initial Release.

9. **TBDs or Holds** ☒N/A

10. **Related Structures, Systems, and Components**

a. **Related Building/Facilities** ☐N/A	b. **Related Systems** ☐N/A	c. **Related Equipment ID Nos. (EIN)** ☒N/A
ETF FACILITIES LERF FACILITIES	ETF LERF	

11. **Impacted Documents – Engineering** ☒N/A

Document Number	Rev.	Title

12. **Impacted Documents (Outside SPF):**

N/A

13. **Related Documents** ☐N/A

Document Number	Rev.	Title
MT-50497	00	Liquid Effluent Retention Facility (LERF) Basin 41

14. **Distribution**

Name	Organization
Angevine, Brennan T	MISSION ANALYSIS ENGINEERING
Demiter, Scott M	ETF OPERATIONS
Foster, Jim	242-A/AW/ETF OPERATIONS
Goessmann, Glen E	ENGINEERING PROGRAMS
Greenhalgh, Aaron M	TANK FARM PROJECTS ENGINEERING
Halgren, Dale L	ETF ENGINEERING
Harris, John W	SAFETY PROGRAM SERVICES RC/P
Joslyn, Cameron C	ETF ENGINEERING
McFerran, Brandon E	242-A/AW/ETF OPERATIONS
McShane, Michael P	ENGINEERING PROGRAMS
Nelson, Richard L	
Omberg Carro, Susan K	NUCLEAR SAFETY
Powers, Daniel J	ETF ENGINEERING
Roosendaal, Gene D	TFP PROJECT MANAGEMENT
Rutherford, Wally	ETF ENGINEERING
Sackett, Tom E	TANK FARM PROJECTS
Samoska, Jerry A	INSTRUMENT & CNTRL ENGINEERING
Shultz, Milton V	NUCLEAR SAFETY
Smith, Gregory E	TANK FARM PROJECTS ENGINEERING
Smoot, Bill R	TFP RADCON
Swanson, Brad L	242-A/AW/ETF OPERATIONS

DOCUMENT RELEASE AND CHANGE FORM	**Doc No:** RPP-CALC-63664 **Rev.** 00

14. **Distribution**

Name	**Organization**
Wall, Jeremy M	RETRVL & CLOSURE/PROJ ENV CMPL
Wilson, Nathaniel W	ETF PROJECTS ENGINEERING

RPP-CALC-63664
Revision 0

LERF Basin 41 Catch Basin Design

Prepared by

RW Davidson
Sargent & Lundy for Washington River Protection Solutions, LLC

Date Published
April 2020

5/19/2020

Prepared for the U.S. Department of Energy
Office of River Protection

Contract No. DE-AC27-08RV14800

Approved for Public Release;
Further Dissemination Unlimited

Sargent & Lundy Engineering Services, Inc.	**RPP-CALC-63664, Rev. 0** **CALCULATION COVER SHEET**	**Page No.** 1 of 40 **Date** 04/27/2020 **Rev. No.** 1 **Calculation No:** S54413.024-S-002

Project No.	**Project Title:**	**Client:**
S54413.024	LERF Basin 41 Design	Washington River Protection Solutions, LLC

Title:

LERF Basin 41 Catch Basin Design

Purpose and Objective:

The purpose of this calculation is to design the concrete Catch Basin and pipe support anchors for Liquid Effluent Retention Facility (LERF) Basin 41.

Rev. No.	Total Pages		Prepared By	Checked By	PM/TL
0	31	**Print Name/ Sign:**	RW Davidson, P.E.	PP Santos, P.E.	PM Dorsh, P.E.
		Date:	04/03/2020	04/07/2020	04/07/2020

Revision Description (Revision Description/Affected Pages):

Initial Release.

1	40	**Print Name/ Sign:**	RW Davidson, P.E.	PP Santos, P.E.	PM Dorsh, P.E.
		Date:	04/27/2020	04/27/2020	04/27/2020

Revision Description (Revision Description/Affected Pages):

Added Section 8.12 which determines the loads on the weight anchor eye bolts and Section 8.13 which checks the 5/8” adhesive anchor rods used to attach the weight anchor eye bolts to the CB wall. Added Attachment 3 for HDPE pipe data. Added drawing reference. Table of Contents reflects addition of Attachment 3. Section 6.0 Results Table updated to add DCR results for 5/8” adhesive anchor rods for weight anchor eye bolts.

Sargent & Lundy Engineering Services, Inc.

RPP-CALC-63664, Rev. 0

CALCULATION REVIEW CHECKLIST

Project No.	Calculation No.	Rev.	Page No.
S54413.024	S54413.024-S-002	1	2 of 40

Items Checked	Accept Y	Accept N	Accept N/A	Description of Resolution for Unacceptable Items
1. Cover sheets properly completed.	√			
2. Calculation sheet headers complete with calculation number, revision number, etc.	√			
3. Calculation sheet contents are legible, accurate, and complete per format.	√			
4. Listed attachments included.	√			
5. Calculation objective clearly described.	√			
6. Criteria are suitable and properly referenced to task specific documents.	√			
7. Assumptions and input data selected, described, reasonable, and attached or referenced to task documents.	√			
8. Calculation method identified and appropriate for the design activity.	√			
9. Calculation results reasonable and correctly described in results and conclusions.	√			
10. Physical property calculations generated by CAD software verified via hand calculations.			√	
11. Computer program identified with version and revision.			√	
12. Computer input/output provided or referenced and reasonable.			√	
13. Computer run traceable to calculation (file #, etc.).			√	
14. Computer input/output data and problem type within validation/verification range of use.			√	
15. Computer program validation/verification addressed.			√	
16. Computer operating system in use for calculation preparation is the same as when the software was verified on machine.			√	

Calculation Checking Method	√	Applicable Pages
1. Direct Step-by-Step Check	√	All Pages
2. Reference Chart(s) or Book(s) Comparison (Append Documentation)		
3. Alternate Calculation (Append Documentation)		

Comments:

Preparer (Print Name and Sign):	Date:
RW Davidson, P.E.	04/27/2020
Checker (Print Name and Sign):	**Date:**
PP Santos, P.E.	04/27/2020

Signatures obtained only after discrepancies are corrected and comments are resolved.

Sargent & Lundy Engineering Services, Inc.	RPP-CALC-63664, Rev. 0 **CALCULATION SHEET**		
Project No. S54413.024	**Calculation No.** S54413.024-S-002	**Rev.** 1	**Page No.** 3 of 40
Title: LERF Basin 41 Catch Basin Design			
Prepared By: RW Davidson	**Date:** 4/27/2020	**Checked By:** PP Santos	**Date:** 4/27/2020

TABLE OF CONTENTS

1.0 PURPOSE 4
2.0 METHODOLOGY 4
3.0 DESIGN INPUTS 4
4.0 ASSUMPTIONS 4
5.0 COMPUTER SOFTWARE 4
6.0 RESULTS 5
7.0 REFERENCES 5
8.0 CALCULATIONS 7

Attachments

Attachment 1
ICC-ES Evaluation Report - ESR-3187 (Excerpt)
Attachment 2
Pipe Wall Thickness Data Sheet
Attachment 3
HDPE Pipe Data Sheet

Acronyms

ACI	American Concrete Institute
ASCE	American Society of Civil Engineers
CB	Catch Basin
CL	Center Line
DCR	Demand-to-Capacity Ratio
IBC	International Building Code
LERF	Liquid Effluent Retention Facility
LRFD	Load and Resistance Factor Design
NDC	Natural Phenomena Hazard Design Category
SpG	Specific Gravity
WDC	Wind Design Category

1.0 PURPOSE

The purpose of this calculation is to design the concrete Catch Basin (CB) and pipe support anchors for the Liquid Effluent Retention Facility (LERF) Basin 41.

2.0 METHODOLOGY

Wind, seismic, dead and fluid loads for the CB are calculated using ASCE 7-10, *Minimum Design Loads on Buildings and Other Structures* and TFC-ENG-STD-06, *Design Loads for Tank Farm Facilities*.

The concrete adhesive anchor bolts are analyzed using Chapter 17 of ACI 318, *Building Code Requirements for Structural Concrete and Commentary* and ESR-3187, Hilti *HIT-HY 200 Adhesive Anchors and Post Installed Reinforcing Bar Connections in Concrete*. Stability of the concrete catch basin on soil is checked using IBC and *Principles of Foundation Engineering*.

3.0 DESIGN INPUTS

1. Pipe support anchor loads are calculated using ASCE 7-10.
2. The CB is General Service per MT-50497.
3. The compressive strength of the concrete is 4500 psi per RPP-SPEC-63632.
4. Specific gravity of LERF fluid flow is taken as 1.0*SpG water per RPP-CALC-63650.
5. Nominal strength of anchor rods is based on ASTM F593 CW-1, stainless steel material per ESR-3187, Table 11 and RPP-SPEC-63632.
6. Dimensions of the CB are based on Drawing H-2-838751, Sheets 1-5.
7. Tributary spacing of the pipe supports are derived from Drawing H-2-838767, *LERF Basin 41, Catch Basin Assembly*, Sheet 3.
8. Pipe diameter, support details are found in H-2-838771, *LERF Basin 41, Catch Basin Piping Notes and Parts List, Isometric, Assembly & Details.*

4.0 ASSUMPTIONS

None.

5.0 COMPUTER SOFTWARE

No unverified computer software was used in this analysis. Mathcad®[1] 15.0 was used for the hand calculations. Calculations are checked using a handheld calculator.

1 Mathcad is a registered trademark of PTC, Inc., Needham, Massachusetts.

6.0 RESULTS

The Hilti®[2] HIT-HY 200 adhesive anchor system is adequate using a 1/2" stainless steel threaded anchor rods with 3 ½" embedment depth for the pipe support anchors and 5/8" stainless steel threaded anchor rods with 3 7/8" embedment depth for the weight anchors (eye bolts). The 8" concrete CB slab is adequate with #5 rebar spaced 9" on center each way.

TABLE: Results Summary	
Pipe Support Adhesive Anchors	**DCR**
DCR tension	0.07
DCR shear	0.01
DCR per ACI 318, Equation 17.6.3	0.01
Weight Anchor (Eye Bolt) Adhesive Anchors	**DCR**
DCR tension	0.45
DCR shear	0.08
DCR per ACI 318, Equation 17.6.3	0.45
CB Slab	**DCR**
DCR one-way shear	0.2
DCR punching shear	0.05
DCR soil bearing	0.19
Pipe Support Post Weld	**DCR**
DCR weld	0.59

7.0 REFERENCES

ACI 318-14, *Building Code Requirements for Structural Concrete and Commentary*, 2014, American Concrete Institute, Farmington Hills, MI.

AISC 325-11, *Steel Construction Manual, American Institute of Steel Construction, 14th Edition*, 2011, Chicago, IL.

ASCE 7-2010, *Minimum Design Loads for Buildings and Other Structures*, 2010, American Society of Civil Engineers, Reston, VA.

Das, Braja M., *Principles of Foundation Engineering*, Sixth Ed., 2007, Cengage Learning, Stamford, CT

2 Hilti and HIT-HY are registered trademarks of Hilti Aktiengesellschaft, Schaan, Liechtenstein

7.0 REFERENCES CONT'D

ESR-3187, Hilti *HIT-HY 200 Adhesive Anchors and Post Installed Reinforcing Bar Connections in Concrete*, Reissued March 2016, ICC Evaluation Services, Whittier, CA., (See Attachment 1 for Excerpt).

H-2-838750, Rev. 0, Sheet 1, *LERF Basin 41 Civil Top Liner*, U.S. Department of Energy, Richland, WA.

H-2-838751, Rev. 0, Sheets 1-5, *LERF Catch Basin 41 Structural Plan & Section, Details, and Elevation & Details*, U.S. Department of Energy, Richland, WA.

H-2-838767, Rev. 0, Sheets 1-11, *LERF Basin 41, Catch Basin Notes & Parts List, Isometric, Assembly, Sections, Details & Weldments*, U.S. Department of Energy, Richland, WA.

H-2-838771, Rev. 0, Sheets 1-10, *LERF Basin 41, Catch Basin Piping Notes and Parts List, Isometric, Assembly & Details,* U.S. Department of Energy, Richland, WA.

IBC 2015, *International Building Code*, International Code Council, 2015, Country Club Hills, IL.

MT-50497, Rev 00, Liquid Effluent Retention Facility (LERF) Basin 41, U.S. Department of Energy, Richland, WA.

PH-20, *Pipe Hangers & Supports*, B-Line Series Catalog.

RPP-CALC-63650, Rev 0, *Leachate and Basin Pump Flow Calculation,* U.S. Department of Energy, Richland, WA.

RPP-SPEC-63632, Rev 0, *Construction Specification for LERF Basin 41 Design*, U.S. Department of Energy, Richland, WA.

TFC-ENG-STD-06, Rev. D-2, *Design Loads for Tank Farm Facilities*, U.S. Department of Energy, Richland, WA.

8.0 CALCULATIONS

NOTE: Use B3088S-2 1/2 Seismic Base Stand dimensions to get maximum applied loads.

8.1 Determine Wind Loads

$V := 110mph$ — Wind Speed, (TFC-ENG-STD-06, Table 3 for WDC-1/NDC-1).

$K_d := 0.95$ — Wind Direction factor for Round Chimneys, Tanks and Similar Structures, (ASCE 7-10, Section 26.6 and Table 26.6-1).

$K_z := 0.85$ — Velocity Pressure coefficient for Design Exposure C. (ASCE 7-10, Table 29.3-1)

$K_{zt} := 1.0$ — Topographic factor. (ASCE 7-10, Section 26.8.2)

$G := 0.85$ — Gust Effect factor. (ASCE 7-10, Section 26.9.1)

$D_{post} := 2.88in$ — Outside diameter of B-Line B3088S-2 1/2 Seismic Base Stand, Sch 40.

$D_{pipe} := 4.5 \cdot in$ — Outside diameter of largest pipe 4" Sch. 40 (H-2-838767, Item 18).

$t_{base_plate} := \frac{3}{8}in$ — Plate Thickness of B3088S-2 1/2.

$C_{B3090} := \left(4in + \frac{1}{16}in\right) = 0.3\,ft$ — Distance from the bottom of the B3090 gusset to the certerline of the pipe (e.g., 'C' dimension in B-Line Catalog, page 132).

$h := \left(22in + \frac{1}{8}in\right) + t_{base_plate} + C_{B3090} = 2.2\,ft$ — Maximum seismic base stand height.

$s := \max\left[\left(282in + \frac{15}{16}in\right) - \left(105in + \frac{7}{8}in\right), \left(434in + \frac{15}{16}in\right) - \left(282in + \frac{15}{16}in\right)\right] = 14.8\,ft$ — Estimated contributary pipe and insuation length supported by one seismic base stand. (H-2-838767,SH 3 Section E3-E5)

$q_z := 0.00256 \cdot K_z \cdot K_{zt} \cdot K_d \cdot \left(\frac{V}{mph}\right)^2 \cdot psf = 25.0 \cdot psf$ — Velocity pressure calculated at mean height h. (ASCE 7-10, Equation 29.3-1)

$\frac{h}{D_{pipe}} = 5.9$ — Ratio of CL height of piping above CB floor to nominal diameter of pipe diameter used.

$\frac{D_{pipe}}{(in)} \cdot \sqrt{\frac{q_z}{(psf)}} = 22.5 > 2.5$ — ASCE 7-10, Figure 29.5-1 for Chimneys, tanks, rooftop Equipment, & Similar Structures).

$C_f := \left|\frac{(0.6 - 0.5)\cdot(7 - 1.5)}{(7 - 1)} - 0.6\right| = 0.51$ — Net force coefficient (by extrapolation), wind normal to face, (ASCE 7-10, Figure 29.5-1 for round Chimneys, tanks, rooftop Equipment, & Similar Structures).

$insul_{thk} := 5 \cdot in$ — Estimated insulation thickness.

$A_f := s \cdot \left(D_{pipe} + insul_{thk} \cdot 2\right) = 17.8 \cdot ft^2$ — Projected area normal to the wind including insulation.

$F_w := q_z \cdot G \cdot C_f \cdot A_f = 192.7\,lbf$ — Design wind load on other structures. (ASCE 7-10, Equation 29.5-1)

8.2 Determine Seismic Loads

$W_{base_stand} := \frac{1638lbf}{100} = 16.4\,lbf$

Weight of B3088S-2 1/2 Seismic Base Stand. (B-Line Catalog, page 128)

$W_{pipe_support} := \frac{586lbf}{100} = 5.9\,lbf$

Weight of B3090-4 Pipe Support with U-Bolt. (B-Line Catalog, page 132)

$W_{4_40s} := 11 \cdot plf \cdot s = 162.3\,lbf$

Estimated contributary pipe weight supported by one pipe support post based on 4" dia. Sch 40S SST pipe. (see Attachment 2)

$W_{insul} := 5 \cdot plf \cdot s = 73.8\,lbf$

Estimated weight of 5" thickness insulation.

$\rho_{waste} := 1.0 \cdot 62.4 \frac{lbf}{ft^3} = 62.400 \cdot \frac{lbf}{ft^3}$

Specific weight of basin fluid is based on RPP-CALC-63650, "Leachate and Basin Pump Flow Calculation" which uses the specific gravity of water.

$F_{wt} := \left[\frac{\pi \cdot \left[\left(D_{pipe} - 0.237 \cdot in \cdot 2\right)^2\right]}{4} \cdot s\right] \cdot \rho_{waste} = 81.4\,lbf$

Fluid weight is based on the full flow area of a Sch 40S 4-inch dia.stainless steel pipe (see Attachment 2), conservative.

$W_{tot} := \begin{pmatrix} W_{base_stand} \cdots \\ + W_{pipe_support} \cdots \\ + W_{4_40s} + W_{insul} + F_{wt} \end{pmatrix} \cdot 1.15 = 390.7\,lbf$

Estimated total dead load on one pipe support post including 15% contingency for miscellaneous pipe support fittings and pipe couplings etc.

$S_{DS} := 0.588$

Horizontal five-percent damped design spectral response acceleration at short periods. (TFC-ENG-STD-06)

$z_h := 1.0$

Ratio of the height in structure of point of attachment of component to the average roof height of structure.

$I_p := 1.0$

Component importance factor for SDC-1 loading. (TFC-ENG-STD-06)

$a_p := 2.5$

Component amplification factor for piping in accordance with ASME B31, joint made by welding or brazing. (ASCE 7-10, Table 13.6-1)

$R_p := 12$

Component response modification factor for piping in accordance with ASME B31, joint made by welding or brazing. (ASCE 7-10, Table 13.6-1)

$F_{pnom} := \frac{0.4 \cdot a_p \cdot S_{DS} \cdot \left(W_{tot}\right)}{\frac{R_p}{I_p}} [1 + 2(z_h)] = 57.4 \cdot lbf$

The horizontal seismic force. (ASCE 7-10, Equation 13.3-1)

$F_{pmax} := 1.6 S_{DS} \cdot I_p \cdot \left(W_{tot}\right) = 367.5\,lbf$

The maximum lateral seismic force. (ASCE 7-10, Equation 13.3-2)

$F_{pmin} := 0.3 S_{DS} \cdot I_p \cdot \left(W_{tot}\right) = 68.9\,lbf$

The minimum lateral seismic force. (ASCE 7-10, Equation 13.3-3)

$F_p := \begin{cases} F_{pmin} & \text{if } F_{pnom} < F_{pmin} \\ F_{pmax} & \text{if } F_{pnom} > F_{pmax} \\ F_{pnom} & \text{otherwise} \end{cases} \qquad F_p = 68.9\,lbf$

The minimum lateral force to use for design purposes.

$F_v := 0.2 S_{DS} \cdot W_{tot} = 45.9\,lbf$

The design vertical seismic force, (ASCE 7-10, Section 13.3.1).

8.3 Determine Piping Loads on the Anchors

The following section determines the anchor forces to withstand the worst case loading.

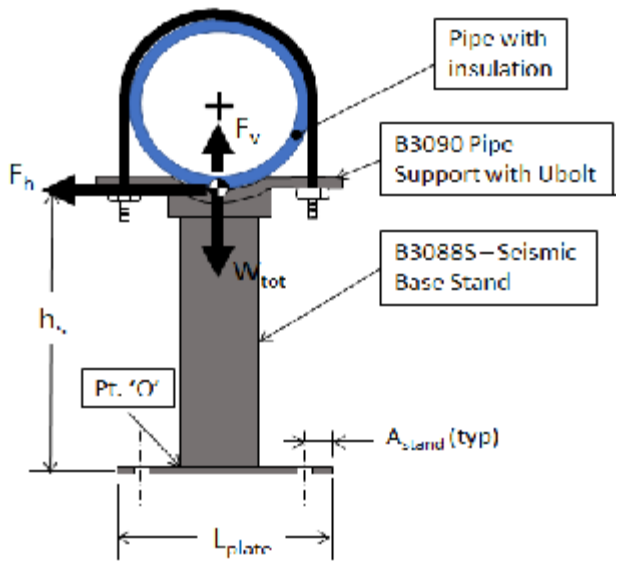

NOTE: Use B3088S-2 1/2 seismic base stand dimensions to get max moments, shears and axial force reactions, conservative.

$L_{plate} := 8.5in$ — Plate Size Length of B3088S-2 1/2 seismic base stand. (B-Line Catalog, page 128)

$A_{stand} := 1.25in$ — Edge distance/edge margin of plate fastening hole for B3088S-2 seismic base stand. (B-Line Catalog, page 128)

$D_{stand} := 2.88 \cdot in$ — Diameter of base stand -B3088S-2 1/2 seismic base stand. (B-Line Catalog, page 128)

$\Omega_o := 2.5$ — Overstrength factor, (ASCE 7-10, Table 13-5.1, Supplement 1 is required for anchorage to concrete)

$F_{h_calc} := \max(1.0F_w, 1.0 \cdot F_p \cdot \Omega_o) = 192.7 \cdot lbf$ — Calculated horizontal piping load combination per ASCE 7-10, Section 2.3.2 including overstrength factor.

$F_{h_B31.3} := 2107 \cdot lbf$ — Horizontal piping load combination per RPP-CALC-63779, Appendix H including overstrength factor.

$F_{h_comb} := \max(F_{h_calc}, F_{h_B31.3}) = 2107.0\ lbf$ — Governing horizontal piping load combination.

$F_{v_calc} := \max(1.4 \cdot W_{tot}, 1.2 \cdot W_{tot} + 1.0 \cdot F_v \cdot \Omega_o) = 583.7\ lbf$ — Calculated vertical piping load combination per ASCE 7-10, Section 2.3.2 load including overstrength factor.

$F_{v_B31.3} := 479 \cdot lbf$ — Vertical piping load combination per RPP-CALC-63779, Appendix H including overstrength factor.

$F_{v_comb} := \max(F_{v_calc}, F_{v_B31.3}) = 583.7\ lbf$ — Governing vertical piping load combination.

$h_s := h - \frac{D_{pipe}}{2} = 2.0\ ft$ — Base stand height.

$M_{ot_calc} := F_{h_calc} \cdot h_s = 390.4 \cdot ft \cdot lbf$ — Calculated overturning moment.

$M_{ot_B31.3} := 1899 \cdot ft \cdot lbf$ — Overturning moment combination per RPP-CALC-63779, Appendix H.

$$M_{ot} := \max\left(M_{ot_calc}, M_{ot_B31.3}\right) = 1899.0 \cdot ft \cdot lbf$$

$$T_{stud} := \frac{M_{ot}}{2 \cdot \left[\left(\frac{L_{plate}}{2} + \frac{D_{stand}}{2}\right) - A_{stand}\right]} = 2566.2\ lbf$$

Tension load per stud, 2 studs in tension, (moment arm is taken to face of seismic base stand, Pt. 'O', from tension side bolts, conservative).

$$V_{stud} := \frac{F_{h_comb}}{4} = 526.8\ lbf$$

Shear load per stud, 4 studs in shear.

8.4 Check Anchors in Accordance with ACI 318-14, Chapter 17

Define Constants

Use (4) 1/2" diameter fractional threaded rods with 3 1/2" minimum embedment depth

$n_a := 4$	The number of anchors per post.
$s_a := L_{plate} - A_{stand} \cdot 2 = 6.0 \cdot in$	The spacing of the anchors.
$h_{ef} := 2.75in$	The effective minimum embedment. (ESR-3187, Table 12 & 14)
$n_{a_t} := 2$	Number of anchors resisting tension. (Moment Couple)
$n_{a_v} := n_a = 4.0$	Number of anchors resisting shear.
$f'_c := 4500psi$	Compressive strength of concrete. (See Inputs)
$k_c := 17$	Effectiveness factor for cracked concrete. (ESR-3187, Table 12)
$\psi_{c_N} := 1.0$	Cracked concrete factor for post-installed anchor in cracked concrete. (ACI 318-14, Section 17.4.2.6)
$\phi_{t_s} := 0.65$	Strength reduction factor for steel failure in tension. (ESR-3187, Table 11, for ASTM F593 CW stainless steel material).
$\phi_{t_c} := 0.65$	Strength reduction factor for concrete breakout failure in tension. (ESR-3187, Table 12)
$\phi_{v_s} := 0.60$	Strength reduction factor for steel failure in shear. (ESR-3187, Table 11, for ASTM F593 CW stainless steel material).
$\phi_{v_c} := 0.70$	Strength reduction factor for concrete breakout failure in shear. (ESR-3187, Table 12)
$\phi_e := 0.75$	Tensile strength reduction factor for anchors in moderate or high seismic risk zones. (ACI 318-14 Section 17.2.3.4.4)
$\alpha_{v_seis} := 0.70$	Seismic shear reduction factor, (ESR-3187, Table 11).
$\phi_d := 0.75$	Bond strength reduction factor, (ESR-3187, Table 14).
$c_{ac} := 2 \cdot h_{ef} = 5.5 \cdot in$	Critical edge distance factor for adhesive anchors. (ACI 318-14, Section 17.7.6)
$c_{a1} := 6in$	Set minimum distance from the center of an anchor shaft to the edge of concrete in the direction of the applied shear. (See ACI 318-14, Section 17.5.2.1 for illustration)
$c_{a2} := 6in$	Set minimum distance from the center of an anchor shaft to the edge of concrete in the direction perpendicular to the applied shear (and c_{a1}). (See ACI 318-14, Section 17.5.2.1 for illustration)
$c_{a_min} := \min(c_{a1}, c_{a2}) = 6.0 \cdot in$	The minimum edge distance between the edge of the concrete and the nearest anchor.
$h_{min} := h_{ef} + 1.25 \cdot in = 4.0 \cdot in$	The minimum member thickness. (ESR-3187, Table 12)
$h_a := 8in$	Actual concrete thickness. (H-2-79571)
$d := 0.5in$	Anchor rod diameter.

Determine Steel Strength of Anchors in Tension

$c_{Na} := 5.0 \cdot in$ See bond strength of anchors in tension.

$$Individual_Group := \begin{cases} \text{"Analyze anchors individually according to ACI 318, Section 17.2.1.1"} & \text{if } 3 \cdot h_{ef} \le s_a \vee 2 \cdot c_{Na} \le s_a \\ \text{"Analyze anchors as a group according to ACI 318, Section 17.2.1.1"} & \text{otherwise} \end{cases}$$

$Individual_Group = \text{"Analyze anchors as a group according to ACI 318, Section 17.2.1.1"}$

$N_{sa} := 14190 lbf$ The nominal tensile strength of the threaded anchor rods is based on ASTM F593 CW, stainless steel material per ESR-3187, Table 11).

$\phi N_{sa} := \phi_{t_s} \cdot N_{sa} = 9223.5\, lbf$ Tensile steel strength incorporating strength reduction factors.

Determine Concrete Breakout Strength of Anchors in Tension

$$\psi_{ed_N} := \begin{cases} 1 & \text{if } c_{a_min} \ge 1.5 \cdot h_{ef} \\ 0.7 + 0.3 \cdot \dfrac{c_{a_min}}{1.5 \cdot h_{ef}} & \text{otherwise} \end{cases} = 1.0$$

The modification factor for edge effects. (ACI 318-14, Section 17.4.2.5)

$$\psi_{cp_N} := \begin{cases} 1 & \text{if } c_{a_min} \ge c_{ac} \\ \dfrac{\max(c_{a_min}, 1.5 \cdot h_{ef})}{c_{ac}} & \text{otherwise} \end{cases} = 1.0$$

Uncracked concrete pullout factor for post-installed anchors. (ACI 318-14, Section 17.4.2.7)

$\lambda := 1.0$ Modification factor for normalweight concrete. (ACI 318-14, Section 19.2.4.2)

$N_b := k_c \cdot \lambda \cdot \sqrt{\dfrac{f'_c}{psi}} \cdot \left(\dfrac{h_{ef}}{in}\right)^{1.5} lbf = 5200.6\, lbf$ Basic concrete breakout strength of a single anchor in tension in cracked concrete. (ACI 318-14, Equation 17.4.2.2a)

$A_{Nco} := 9 \cdot h_{ef}^2 = 68.1 \cdot in^2$ Projected concrete failure area of a single anchor with an edge distance equal to or greater than 1.5 x h_{ef}. (ACI 318-14, Equation 17.4.2.1c)

$A_{Nc} := (\min(1.5h_{ef}, c_{a1}) + s_a + 1.5 \cdot h_{ef}) \cdot (\min(1.5h_{ef}, c_{a2}) + s_a + 1.5 \cdot h_{ef}) = 203.1 \cdot in^2$

$A_{Nc} := \min(n_a \cdot A_{Nco}, A_{Nc}) = 203.1 \cdot in^2$

Projected concrete failure area of the anchorage. (ACI 318-14, Section 17.4.2.1 and Figure R17.4.2.1(b))

$N_{cb} := \dfrac{A_{Nc}}{A_{Nco}} \cdot \psi_{ed_N} \cdot \psi_{c_N} \cdot \psi_{cp_N} \cdot N_b = 15515.9 \cdot lbf$ Concrete breakout strength of the anchorage in tension. (ACI 318-14, Equation 17.4.2.1a)

$\phi N_{cb} := \phi_e \cdot \phi_{t_c} \cdot N_{cb} = 7564.0\, lbf$ Tensile breakout strength incorporating strength reduction factors.

Determine Bond Strength of Anchors in Tension

$\lambda_a := \lambda = 1.0$ — ACI 318-14, Section 17.2.6 and modification factor for normalweight concrete. (ACI 318-14, Section 19.2.4.2)

$\tau_{cr} := 1170 \cdot psi$ — Characteristic bond stress in cracked concrete, temperature range A, (ESR-3187, Table 14).

$\tau_{uncr} := 2220 \cdot psi$ — Characteristic bond stress in uncracked concrete, temperature range A, (ESR-3187, Table 14).

$d_a := d = 0.5 \cdot in$ — Anchor diameter, previously defined.

$N_{ba} := \lambda_a \cdot \tau_{cr} \cdot \pi \cdot d_a \cdot h_{ef} = 5054.0\ lbf$ — Basic bond strength of adhesive anchor, (ACI 318-14, Section 17.4.5.2)

$c_{Na} := 10 \cdot d_a \cdot \sqrt{\frac{\tau_{uncr}}{1100 \cdot psi}} = 7.1 \cdot in$ — Critical edge distance, (ACI 318-14, Equation 17.4.5.1d).

$A_{Nao} := (2 \cdot c_{Na})^2 = 201.8 \cdot in^2$ — Projected influence area for a single anchor, (ACI 318-14, Equation 17.4.5.1c).

$A_{Na} := (c_{Na} + s_a + c_{a_min}) \cdot (c_{Na} + s_a + c_{a_min}) = 364.9 \cdot in^2$ — Projected influence area for a group of anchors, (ACI 318-14, Fgure R17.4.5.1).

$A_{Na} := n_{a_t} \cdot A_{Nao} = 403.6 \cdot in^2$ — Limiting value of A.Na per ACI 318-14, Section 17.4.5.1).

$\Psi_{ed_Na} := 1.0$ $\quad c_{a_min} = 6.0 \cdot in > c_{Na} = 7.1 \cdot in$ — Modification factor for edge effects, ACI 318-14, Equation 17.4.5.4a).

$\Psi_{cp_Na} := 1.0$ $\quad c_{a_min} = 6.0 \cdot in > c_{ac} = 5.5 \cdot in$ — Modification factor for adhesive anchors designed for uncracked concrete, ACI 318-14, Equation 17.4.5.5a).

$N_a := \frac{A_{Na}}{A_{Nao}} \cdot \Psi_{ed_Na} \cdot \Psi_{cp_Na} \cdot N_{ba} = 10108.1\ lbf$ — Nominal bond strength in tension for a single adhesive anchor in tension, (ACI 318-14, Equation 17.4.5.1a).

$\phi N_a := \phi_e \cdot \phi_d \cdot \left(\frac{A_{Na}}{A_{Nao}} \cdot \Psi_{ed_Na} \cdot \Psi_{cp_Na} \cdot N_{ba} \right) = 5685.8\ lbf$ — Nominal bond strength in tension for a single adhesive anchor in tension incorporating strength reduction factors, (ACI 318-14, Equation 17.4.5.1a).

Determine Steel Strength of the Anchors in Shear

Individual_Group := | "Analyze anchors individually in shear according to ACI 318, Section 17.2.1.1" if $3 \cdot h_{ef} \le s_a$
| "Analyze anchors as a group in shear according to ACI 318, Section 17.2.1.1" otherwise

Individual_Group = "Analyze anchors as a group in shear according to ACI 318, Section 17.2.1.1"

$V_{sa} := 8515 \cdot lbf$ — The nominal shear strength of the threaded anchor rods is based on ASTM F593 CW, stainless steel material per ESR-3187, Table 11)

$\phi V_{sa} := \alpha_{v_seis} \cdot \phi_{v_s} \cdot V_{sa} = 3576.3\ lbf$ — Steel shear strength incorporating strength reduction factors.

Determine Concrete Breakout Strength of the Anchors in Shear

$$\psi_{ed_V} := \begin{cases} 1.0 & \text{if } c_{a2} \geq 1.5 \cdot c_{a1} \\ 0.7 + 0.3 \cdot \dfrac{c_{a2}}{1.5 \cdot c_{a1}} & \text{otherwise} \end{cases} = 0.9$$

Edge distance factor (Anchors not on a corner). (ACI 318-14, Section 17.5.2.6)

$\psi_{c_V} := 1.0$

Cracked concrete factor. (ACI 318-14, Section 17.5.2.7)

$$\psi_{h_V} := \begin{cases} \sqrt{\dfrac{1.5 \cdot c_{a1}}{h_a}} & \text{if } h_a < 1.5 \cdot c_{a1} \\ 1 & \text{otherwise} \end{cases} = 1.06$$

Thickness modification factor. (ACI 318-14, Section 17.5.2.8)

$d_a := d = 0.5 \cdot in$

The outside diameter of the anchor.

$l_e := \min(8 \cdot d_a, h_{ef}) = 2.8 \cdot in$

The load bearing length of anchor for shear. (ACI 318-14, Section 17.5.2.2)

$$V_b := \min\left[7 \cdot \left(\frac{l_e}{d_a}\right)^{0.2} \cdot \sqrt{\frac{d_a}{in}} \cdot \lambda \cdot \sqrt{\frac{f'_c}{psi}} \cdot \left(\frac{c_{a1}}{in}\right)^{1.5} \cdot lbf, 9 \cdot \lambda \cdot \sqrt{\frac{f'_c}{psi}} \cdot \left(\frac{c_{a1}}{in}\right)^{1.5} \cdot lbf\right] = 6862.6 \cdot lbf$$

Basic concrete breakout strength of a single anchor in shear in cracked concrete. (ACI 318-14, Section 17.5.2.2)

$A_{Vco} := 4.5 \cdot c_{a1}^2 = 162.0 \cdot in^2$

The projected area for a single anchor in a deep member with a distance from edges equal or greater than 1.5 x c_{a1}. (ACI 318-14, Equation 17.5.2.1c)

$A_{Vc} := (\min(c_{a2}, 1.5 \cdot c_{a1}) + 1.5 c_{a1}) \cdot \min(1.5 \cdot c_{a1}, h_a) = 120.0 \cdot in^2$

Projected concrete failure area of the anchorage. (ACI 318-14, Section 17.5.2.1 and Figure R17.5.2.1b)

$V_{cb} := \dfrac{A_{Vc}}{A_{Vco}} \cdot \psi_{ed_V} \cdot \psi_{c_V} \cdot \psi_{h_V} \cdot V_b = 4852.6 \cdot lbf$

Nominal concrete breakout strength of anchorage in shear. (ACI 318-14, Equation 17.5.2.1a)

$\phi V_{cb} := \phi_{v_c} \cdot V_{cb} = 3396.8\ lbf$

Shear breakout strength incorporating strength reduction factors.

Determine Pryout Strength of the Anchors in Shear

$$k_{cp} := \begin{cases} 1 & \text{if } h_{ef} < 2.5in \\ 2 & \text{otherwise} \end{cases} = 2.0$$

Coefficient for pryout strength. (ACI 318-14, Section 17.5.3.1)

$V_{cp} := k_{cp} \cdot \min(N_{cb}, N_a) = 20216.1\ lbf$

The nominal pryout strength of the anchorage in shear per ACI 318-14, Equation 17.5.3.1a.

$\phi V_{cp} := \phi_{v_c} \cdot V_{cp} = 14151.3\ lbf$

Shear pryout strength incorporating strength reduction factors.

Determine Governing Failure Strength

$$Govern_v := \begin{cases} \text{"Steel failure governs (Ductile Failure)."} & \text{if } \phi V_{sa} \le \min(\phi V_{cb}, \phi V_{cp}) \\ \text{"Concrete breakout governs (Brittle Failure)."} & \text{if } \phi V_{cb} < \min(\phi V_{sa}, \phi V_{cp}) \\ \text{"Concrete pryout governs (Brittle Failure)."} & \text{otherwise} \end{cases}$$

$Govern_v$ = "Concrete breakout governs (Brittle Failure)."

$$Shear_{govern} := \begin{cases} \phi V_{sa} & \text{if } \phi V_{sa} \le \min(\phi V_{cb}, \phi V_{cp}) \\ \phi V_{cb} & \text{if } \phi V_{cb} < \min(\phi V_{sa}, \phi V_{cp}) \\ \phi V_{cp} & \text{otherwise} \end{cases}$$

The governing allowable shear capacity of the anchorage.

$Shear_{govern} = 3397\,lbf$

$$Shear_Check := \begin{cases} \text{"Anchor capacity in shear is OK."} & \text{if } Shear_{govern} > V_{stud} \\ \text{"Anchor capacity in shear is NOT OK"} & \text{otherwise} \end{cases}$$

$V_{stud} = 526.8\,lbf$

Shear_Check = "Anchor capacity in shear is OK."

Check to determine the adequacy of the anchors in shear.

$$Govern_t := \begin{cases} \text{"Steel failure governs (Ductile Failure)."} & \text{if } \phi N_{sa} \le \min(\phi N_{cb}, \phi N_a) \\ \text{"Concrete breakout governs (Brittle Failure)."} & \text{if } \phi N_{cb} \le \min(\phi N_{sa}, \phi N_a) \\ \text{"Bond strength governs (Brittle Failure)."} & \text{otherwise} \end{cases}$$

$Govern_t$ = "Bond strength governs (Brittle Failure)."

$$Tensile_{govern} := \begin{cases} \phi N_{sa} & \text{if } \phi N_{sa} \le \min(\phi N_{cb}, \phi N_a) \\ \phi N_{cb} & \text{if } \phi N_{cb} \le \min(\phi N_{sa}, \phi N_a) \\ \phi N_a & \text{otherwise} \end{cases}$$

The governing allowable tensile capacity of the anchorage.

$Tensile_{govern} = 5686\,lbf$

$$Tension_Check := \begin{cases} \text{"Anchor capacity in tension is OK."} & \text{if } Tensile_{govern} > T_{stud} \\ \text{"Anchor capacity in tension is NOT OK"} & \text{otherwise} \end{cases}$$

$T_{stud} = 2566\,lbf$

Tension_Check = "Anchor capacity in tension is OK."

Check to determine the adequacy of the anchors in tension.

$$DCR_{tens} := \frac{T_{stud}}{Tensile_{govern}} = 0.45$$

$$DCR_{shear} := \frac{V_{stud}}{Shear_{govern}} = 0.16$$

$$DCR := \begin{cases} DCR_{tens} & \text{if } DCR_{shear} \le 0.2 \\ DCR_{shear} & \text{if } DCR_{tens} \le 0.2 \\ \frac{1}{1.2}\cdot\left(DCR_{tens} + DCR_{shear}\right) & \text{otherwise} \end{cases} = 0.45$$

The DCR ratio is less than 1.0; therefore, **OK** ACI 318-14, Section 17.6.

8.5 Check Temperature and Shrinkage Reinforcement Minimum Requirements for Catch Basin Slab

(REFERENCE: H-2-838751, Rev. B, Sheet 5, Zone D2-D3)

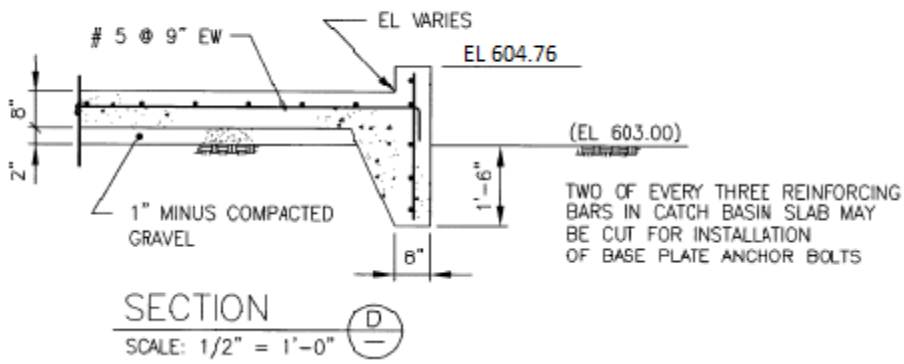

(REFERENCE: ACI 318-14)

Table 24.4.3.2—Minimum ratios of deformed shrinkage and temperature reinforcement area to gross concrete area

Reinforcement type	f_y, psi	Minimum reinforcement ratio	
Deformed bars	< 60,000	0.0020	
Deformed bars or welded wire reinforcement	≥ 60,000	Greater of:	$\frac{0.0018\times 60,000}{f_y}$
			0.0014

$h_c := 8in$ Thickness of the CB slab.

$b := 12in$ Width of slab for rebar design.

$(A_{reqd}) := 0.0018\cdot b\cdot h_c = 0.17\cdot in^2$ Area of steel required by temperature and shrinkage, (ACI 318-14, Table 24.4.3.2).

$A_{provided} := 0.41\cdot in^2 \quad > \quad (A_{reqd}) = 0.17\cdot in^2$ Area of steel (#5 @ 9") for 1 ft wide section.

The design is adequate with #5 bars @ 9" EW.

8.6 Check Spacing of Shrinkage and Temperature Reinforcement

Ref: ACI 318-14

24.4.3.3 The spacing of deformed shrinkage and temperature reinforcement shall not exceed the lesser of **5*h*** and 18 in.

$5 \cdot h_c = 40.0 \cdot in$

$Spg_{bars} := 9 \cdot in$ < $18 \cdot in$ OK

8.7 Check Minimum Flexural Reinforcement (based on ACI 318-14, Section 7.6 for one-way slabs)

$h_c := 8in$ Thickness of the CB slab.

$b := 12in$ Width of the slab for rebar design.

$(A_{reqd}) := 0.0018 \cdot b \cdot h_c = 0.17 \cdot in^2$ Area of steel required for flexure. (ACI 318-14, Table 7.6.1.1)

$A_{provided} := 0.41 \cdot in^2$ > $(A_{reqd}) = 0.17 \cdot in^2$ Area of steel #5 @ 9" for 1 ft wide section.

The design is adequate for minimum flexural reinforcement with #5 bars @ 9" EW

Ref: ACI 318-14

Table 7.6.1.1—$A_{s,min}$ for nonprestressed one-way slabs

Reinforcement type	f_y, psi	$A_{s,min}$	
Deformed bars	< 60,000	$0.0020A_g$	
Deformed bars or welded wire reinforcement	≥ 60,000	Greater of:	$\frac{0.0018 \times 60,000}{f_y} A_g$
			$0.0014A_g$

8.8 Check One-Way Shear Reinforcement

$d := 8 \cdot in - 3 \cdot in - 0.625 \cdot in - \frac{0.625 \cdot in}{2} = 4.1 \cdot in$ — Distance from extreme compression fiber to centroid of longitudinal tension reinf.

$\phi_{shear} := 0.75$ — Capacity reduction factor for shear, (ACI 318-14, Table 21.2.1)

$\lambda = 1.0$ — Modification factor for normalweight concrete. (ACI 318-14, Section 19.2.4.2)

$V_c := 2\lambda \cdot psi \cdot \sqrt{\frac{f'_c}{psi}} \cdot b \cdot d = 7 \cdot kip$ — Shear strength of the evaluated concrete CB slab section. (ACI 318-14, Section 22.5.5.1)

$f_y := 60ksi$ — Reinforcement yield strength.

$no_{bar} := 5$ — Rebar number. (H-2-838751, Sheet 5)

$d_b := \left(\frac{no_{bar}}{8}\right) \cdot in = 0.625 \cdot in$ — Rebar diameter based on rebar number.

$A_v := \frac{\pi \cdot (d_b)^2}{4}$ — Rebar Shear Area.

$spacing := 9in$ — Rebar Spacing. (H-2-838751, Sheet 5)

$V_s := \frac{f_y \cdot A_v \cdot d}{spacing} = 8309.1\ lbf$ — Steel Shear strength contribution adjusted for spacing. (ACI-318, Eqn. (22.5.10.5.3))

$V_n := V_c + V_s = 14849.6\ lbf$ — Nominal one-way shear strength. (ACI 318, Eqn. (22.5.1.1)

$\phi V_n := \phi_{shear} \cdot (V_c + V_s) = 11137.2\ lbf$ — Factored one-way shear strength.

$V_u := F_{v_comb} + \frac{M_{ot}}{\left(\frac{L_{plate}}{2}\right)} = 5945.6\ lbf$ — Shear demand.

$DCR := \frac{V_u}{\phi V_n} = 0.5$ — The DCR ratio is less than 1.0; therefore, **OK**.

8.9 Check Two-Way Punching Shear

$b_o := \left[L_{plate} + \left(\frac{d}{2}\right) \cdot 2\right] \cdot 4 = 50.3 \cdot in$ — Critical perimeter section "b_o" for two-way shear, ACI 318-14, Section 22.6.4.1 (a)

$\beta := 1.0$ — Ratio of long side to short side, square base plate.

$\alpha_s := 20$ — From Section 22.6.5.3 of ACI 318-14, define value for corner columns, conservative.

$\lambda := 1.0$ — Modification factor for normal weight concrete. (ACI 318-14, Section 19.2.4.2)

$v_{cA} := 4 \cdot \lambda \cdot \left(psi \cdot \sqrt{\frac{f'_c}{psi}} \right) = 268.3\ psi$ — Allowable shear loading, Table 22.6.5.2 from ACI 318-14.

$v_{cB} := \left(2 + \frac{4}{\beta} \right) \cdot \lambda \cdot \left(psi \cdot \sqrt{\frac{f'_c}{psi}} \right) = 402.5\ psi$ — Allowable shear loading, Table 22.6.5.2 from ACI 318-14.

$v_{cC} := \left(2 + \frac{\alpha_s \cdot d}{b_o} \right) \cdot \lambda \cdot \left(psi \cdot \sqrt{\frac{f'_c}{psi}} \right) = 242.6\ psi$ — Allowable shear loading, Table 22.6.5.2 from ACI 318-14.

$v_c := \min(v_{cA}, v_{cB}, v_{cC}) = 243\ psi$ — Nominal shear strength.

$V_{applied_punch_CB} := \frac{F_{v_comb}}{b_o \cdot d} + \frac{M_{ot}}{b_o \cdot d \cdot \frac{L_{plate}}{2}}$ — Applied punching shear load, including LRFD load factors per ACI 318-14, Table 5.3.1. Moment is applied as shear load acting at center of base plate.

where $L_{plate} = 8.5 \cdot in$

$V_{applied_punch_CB} = 29.1\ psi$

$DCR_{shear_punch_CB} := \frac{V_{applied_punch_CB}}{\phi_{shear} \cdot v_c} = 0.16$ — DCR is less than 1.0; therefore, **OK**.

8.10 Check CB Soil Bearing Pressure

The following section will determine if the concrete CB slab is adequately sized to distribute the load to the soil at an adequate pressure. Live load on CB slab ignored due to high concentration of piping systems distributed over CB floor.

$l_{cs} := L_{plate} + h_c \cdot 2 = 2.0\ ft$ — Length of CB slab section considered (based on 45 deg. distribution of loads at edges of pipe support base plate).

$w_{cs} := l_{cs}$ — Width of CB slab section considered.

$h_c = 8.0 \cdot in$ — Average thickness of the CB slab.

$\rho_c := 150 pcf$ — Typical density of concrete.

$W_{cs} := \rho_c \cdot w_{cs} \cdot l_{cs} \cdot h_c = 416.8 \cdot lbf$ — Weight of the CB slab area considered.

$M_1 := 0.6 F_w \cdot h = 255.9 \cdot ft \cdot lbf$ — In-plane moment on the slab area. (ASCE 7-10, Section 2.4.1 Equation 5)

where $h = 2.2 \cdot ft$

$M_2 := 0.7 \cdot F_p \cdot h = 106.8 \cdot lbf \cdot ft$ — In-plane moment on the slab area. (ASCE 7-10, Section 2.4.1 Equation 5)

$M_b := \max(M_1, M_2) = 255.9 \cdot ft \cdot lbf$ — Maximum in-plane moment on the slab area.

$Q := W_{tot} + 0.7 \cdot F_v + W_{cs} = 839.7\ lbf$ — The total unfactored vertical load bearing on the soil.

where $W_{tot} = 390.7\ lbf$

$$e_b := \frac{M_b}{Q} = 3.7 \cdot in$$

The resulting eccentricity, which is the moment divided by total bearing load. (Das, pg. 147, Equation 3.51)

$$m := \frac{l_{cs}}{2} - e_b = 0.7\,ft$$

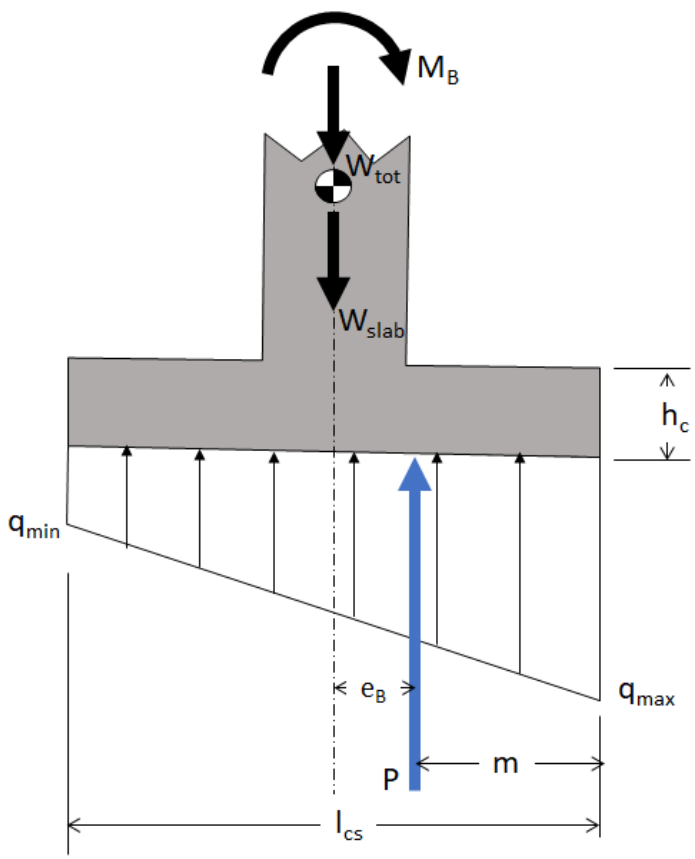

$$q_{min} := \max\left(\frac{Q}{w_{cs} \cdot l_{cs}} - \frac{6 \cdot M_b}{l_{cs}^2 w_{cs}}, 0psf\right) = 21.0 \cdot psf$$

Minimum Soil Pressure under slab area. (Principles of Foundation Engineering, Das, Eq 3.53, pg 147)

$$q_{max} := \frac{Q}{w_{cs} \cdot l_{cs}} + \frac{6 \cdot M_b}{l_{cs}^2 w_{cs}} = 381.9 \cdot psf$$

Maximum Soil Pressure under slab area. (Principles of Foundation Engineering, Das, Eq 3.52, pg 147)

$$p_{allow_sb} := 2000psf$$

The allowable bearing pressure of the soil. (IBC 2015, Table 1806.2, material class 3)

$$DCR_{sb} := \frac{q_{max}}{p_{allow_sb}} = 0.19$$

The demand capacity ratio for the soil bearing pressure. The CB slab area has a DCR lower than 1.0, therefore **OK**.

8.11 Check Post Base Weld

NOTE: Use B3088S-2 1/2 Dimensions.

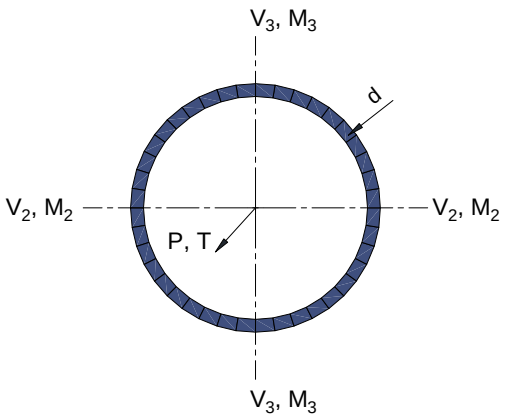

Weld Geometry:

$d := 2.88 \cdot in$ Diameter of weld.

$w_{act} := \frac{1}{4} \cdot in$ Weld size.

$F_{EXX} := 70ksi$ Ultimate stress of the weld metal.

Inputs from AISC 2010, Table J2.5:

$\Omega := 2.0$ The safety factor for welds.

$R_n := 0.6 \cdot F_{EXX}$ $R_n = 42.0 \cdot ksi$ Weld design strength.

$F_{h_comb} = 2107.0\ lbf$ Maximum horizontal load, previously defined.

$F_{v_comb} = 583.7\ lbf$ Mximum vertical load, previously defined.

$M_{ot} = 1899.0 \cdot ft \cdot lbf$ Maximum moment, previously defined.

Connection forces and moments:

$P := F_{v_comb}$ $V_2 := F_{h_comb} = 2107.0\ lbf$ $V_3 := 0 \cdot lbf$

$T := 0 \cdot in \cdot lbf$ $M_2 := M_{ot} = 1899.0 \cdot ft \cdot lbf$ $M_3 := 0 \cdot ft \cdot lbf$

Weld Properties Per Blodgett 1991, Table 5, Page 7.4-7.

$C := \frac{d}{2}$ $\quad C = 1.4 \cdot in$ The distance to the outer fiber.

$A_w := \pi \cdot d$ $\quad A_w = 9.0 \cdot in$ The linear area of the weld.

$A_{w_s} := \frac{1}{2} \cdot \pi \cdot d$ $\quad A_{w_s} = 4.5 \cdot in$ The linear shear area of the weld (AISC 2010, Section G6-1).

$S_w := \frac{\pi \cdot d^2}{4}$ $\quad S_w = 6.5 \cdot in^2$ The linear section modulus.

$J_w := \frac{\pi \cdot d^3}{4}$ $\quad J_w = 18.8 \cdot in^3$ The linear polar moment of inertia.

The resultant vectors for the bending moments and shears in the directions of 2-2 and 3-3 axes are:

$M := \sqrt{M_2^2 + M_3^2}$ $\quad M = 22788.0 \cdot in \cdot lbf$ $\quad V := \sqrt{V_2^2 + V_3^2}$ $\quad V = 2107.0 \cdot lbf$

$A_{lin} := \sqrt{\left(\frac{P}{A_w} + \frac{M}{S_w}\right)^2 + \left(\frac{V}{A_{w_s}} + \frac{T \cdot C}{J_w}\right)^2}$ $\quad A_{lin} = 3592.918 \cdot \frac{lbf}{in}$ Linear weld stress.

$R_u := \frac{A_{lin}}{0.707 w_{act}}$ $\quad R_u = 20.3 \cdot ksi$ Actual stress in the weld.

$DCR := \frac{\Omega \cdot R_u}{R_n} = 0.97$ The demand/capacity ratio is < 1; therefore, OK.

8.12 Determine Loads on CB Wall Weight Anchor Eye Bolts

$ID_{8_pipe} := 7.921 \cdot in$ $\quad Wt_{8_pipe} := 3.80 \cdot plf$ Weight and dimensions of 8" HDPE pipe based on SDR 26 (80 psi) pressure rating, (See Attachment 3).

$Wt_{filled} := \frac{\pi \cdot ID_{8_pipe}^2}{4} \cdot 150 \cdot \frac{lbf}{ft^3} + Wt_{8_pipe} = 55.1 \cdot plf$ Weight of 8" grout filled pipe per foot length.

$Invert_{top} := 603.17 \cdot ft$ Invert elevation of 8" HPDE pipe at top of liner. (See H-2-838750 SH 2, Section D & H-838767 SH 7, Section Q-Q)

$Invert_{bot} := 576.60 \cdot ft$ Invert elevation of 8" HPDE pipe at bottom of liner, (See H-2-838750, SH 1, Plan).

$L_{riser} := \sqrt{\left[\left(Invert_{top} - Invert_{bot}\right) \cdot 3\right]^2 + \left[\left(Invert_{top} - Invert_{bot}\right)^2\right]} = 84.0\ ft$ Based on 3:1 slope of top liner. (See H-2-838750, SH 1, Plan)

$Wt_{tot_8} := L_{riser} \cdot Wt_{filled} = 4632.2\ lbf$ Total weight of 8" HDPE grout filled pipe.

$angle := \tanh\left(\frac{1}{3}\right) = 18.4 \cdot deg$ Slope angle with respect to horizontal plane.

$F_{h_8pipe} := Wt_{tot_8} \cdot \sin(angle) = 1463.8\ lbf$ Down drag component along length of the 8" HDPE grout filled pipes. Neglect friction between pipes and liner bed, conservative.

8.13 Check Weight Anchor Eye Bolts in Accordance with ACI 318-14, Chapter 17

$T_{eye_bolt} := F_{h_8pipe} \cdot \cos(angle) = 1388.8\ lbf$ Tension load on weight anchor eye bolt.

$V_{eye_bolt} := F_{h_8pipe} \cdot \sin(angle) = 462.6\ lbf$ Shear load on weight anchor eye bolt.

Define Constants

Based on 5/8" diameter ASTM F593 stainless steel threaded rods with 3 7/8" maximum embedment depth

$n_a := 1$ The number of eye bolts per HPDE grouted pipe.

$s_a := 26 \cdot in$ Minimum spacing of the eye bolts. (See H-2-838767 SH 7, Section P-P)

$h_{ef} := 3.125 in$ The effective minimum embedment. (ESR-3187, Table 12 & 14)

$n_{a_t} := 1$ Number of eye bolts resisting tension.

$n_{a_v} := 1$ Number of eye bolts resisting shear.

$f'_c := 4500 psi$ Compressive strength of concrete. (See Inputs)

$k_c := 17$ Effectiveness factor for cracked concrete. (ESR-3187, Table 12)

$\psi_{c_N} := 1.0$ Cracked concrete factor for post-installed anchor in cracked concrete. (ACI 318-14, Section 17.4.2.6)

$\phi_{t_s} := 0.65$ Strength reduction factor for steel failure in tension. (ESR-3187, Table 11)

$\phi_{t_c} := 0.65$ Strength reduction factor for concrete breakout failure in tension. (ESR-3187, Table 12)

$\phi_{v_s} := 0.60$ Strength reduction factor for steel failure in shear. (ESR-3187, Table 11).

$\phi_{v_c} := 0.70$ Strength reduction factor for concrete breakout failure in shear. (ESR-3187, Table 12)

$\phi_e := 0.75$ Tensile strength reduction factor for anchors in moderate or high seismic risk zones. (ACI 318-14 Section 17.2.3.4.4)

$\alpha_{v_seis} := 0.70$ Seismic shear reduction factor, (ESR-3187, Table 11).

$\phi_d := 0.65$ Bond strength reduction factor, (ESR-3187, Table 14 for dry & water saturated concrete installation conditions).

$c_{ac} := 2 \cdot h_{ef} = 6.3 \cdot in$ Critical edge distance for adhesive anchors. (ACI 318-14, Section 17.7.6)

$c_{a1} := c_{ac} = 6.3 \cdot in$ Limiting distance from center of anchor to edge of concrete in the direction of applied load. (See ACI 318-14, Figures R17.4.2.1 and R17.5.2.1 for illustration)

$c_{a2} := c_{a1} = 6.3 \cdot in$ Limiting distance from center of anchor to edge of concrete in the direction perpendicular to applied load. (See ACI 318-14, Figures R17.4.2.1 and R17.5.2.1 for illustration)

$c_{a_min} := \min(c_{a1}, c_{a2}) = 6.3 \cdot in$ — The minimum edge distance between the edge of the concrete and the nearest anchor. (Note: Envelopes actual edges distance)

$h_{min} := h_{ef} + 1.25 \cdot in = 4.4 \cdot in$ — The minimum member thickness. (ESR-3187, Table 12)

$h_a := 24in$ — Actual concrete thickness. (H-2-838751 SH 2)

$d := 0.625in$ — The anchor diameter. (ESR-3187, Table 11)

Determine Steel Strength of Anchor in Tension

$$Individual_Group := \begin{cases} \text{"Analyze anchors individually according to ACI 318-14, Chapter 17"} & \text{if } 3 \cdot h_{ef} \le s_a \\ \text{"Analyze anchors as a group according to ACI 318-14, Section 17.2.1.1"} & \text{otherwise} \end{cases}$$

Individual_Group = "Analyze anchors individually according to ACI 318-14, Chapter 17"

$N_{sa} := 22600lbf$ — The tensile capacity of the anchor is based on ICC-ES Evaluation Report ESR-3187, Table 11, for ASTM F593, stainless steel threaded eye anchor rods.

$\phi N_{sa} := \phi_{t_s} \cdot N_{sa} = 14690.0\ lbf$ — Tensile steel strength incorporating strength reduction factors.

Determine Concrete Breakout Strength of Anchorage in Tension

$$\psi_{ed_N} := \begin{cases} 1 & \text{if } c_{a_min} \ge 1.5 \cdot h_{ef} \\ 0.7 + 0.3 \cdot \dfrac{c_{a_min}}{1.5 \cdot h_{ef}} & \text{otherwise} \end{cases} = 1.0$$

The modification factor for edge effects. (ACI 318-14, Section 17.4.2.5)

$$\psi_{cp_N} := \begin{cases} 1 & \text{if } c_{a_min} \ge c_{ac} \\ \dfrac{\max(c_{a_min}, 1.5 \cdot h_{ef})}{c_{ac}} & \text{otherwise} \end{cases} = 1.0$$

Uncracked concrete pullout factor for post-installed anchors. (ACI 318-14, Section 17.4.2.7)

$\lambda := 1.0$ — Modification factor for normalweight concrete. (ACI 318-14, Section 19.2.4.2)

$N_b := k_c \cdot \lambda \cdot \sqrt{\dfrac{f'_c}{psi}} \cdot \left(\dfrac{h_{ef}}{in}\right)^{1.5} lbf = 6299.9\ lbf$ — Basic concrete breakout strength of a single anchor in tension in cracked concrete. (ACI 318-14, Equation 17.4.2.2a)

$A_{Nco} := 9 \cdot h_{ef}^2 = 87.9 \cdot in^2$ — Projected concrete failure area of a single anchor with an edge distance equal to or greater than 1.5 x h_{ef}. (ACI 318-14, Equation 17.4.2.1c)

$A_{Nc} := (\min(1.5 \cdot h_{ef}, c_{a1}) + s_a + 1.5 \cdot h_{ef}) \cdot (\min(1.5 \cdot h_{ef}, c_{a2}) + 1.5 \cdot h_{ef}) = 331.6 \cdot in^2$

$A_{Nc} := \min(n_a \cdot A_{Nco}, A_{Nc}) = 87.9 \cdot in^2$

Projected concrete failure area of the anchorage group. (ACI 318-14, Section 17.4.2.1 and Figure R17.4.2.1(b))

$e'_N := 0 \cdot in$ — No eccentricity of the anchors in tension. (See ACI 318-14, Fig R17.4.2.4 for illustration)

$\psi_{ec_N} := \dfrac{1}{\left(1 + \dfrac{2 \cdot e'_N}{3 \cdot h_{ef}}\right)} = 1.0$

Modification factor for anchor groups loaded eccentrically in tension. (ACI 318-14, Section 17.4.2.4, Equation 17.4.2.4)

$N_{cbg} := \dfrac{A_{Nc}}{A_{Nco}} \cdot \psi_{ec_N} \cdot \psi_{ed_N} \cdot \psi_{c_N} \cdot \psi_{cp_N} \cdot N_b = 6299.9 \cdot lbf$

Concrete breakout strength of the anchorage in tension. (ACI 318-14, Equation 17.4.2.1b)

$\phi N_{cb} := \phi_e \cdot \phi_{t_c} \cdot N_{cbg} = 3071.2\ lbf$

Tensile breakout strength incorporating strength reduction factors.

Determine Bond Strength of Adhesive Anchors in Tension

$\lambda_a := \lambda = 1.0$

ACI 318-14, Section 17.2.6 and modification factor for normalweight concrete. (ACI 318-14, Section 19.2.4.2)

$\tau_{cr} := 1170 \cdot psi$

Characteristic bond stress in cracked concrete, temperature range A, (ESR-3187, Table 14).

$d_a := d = 0.6 \cdot in$

Anchor diameter, previously defined.

$N_{ba} := \lambda_a \cdot \tau_{cr} \cdot \pi \cdot d_a \cdot h_{ef} = 7179.0\ lbf$

Basic bond strength of adhesive anchor, (ACI 318-14, Section 17.4.5.2)

$c_{Na} := 10 \cdot d_a \cdot \sqrt{\dfrac{\tau_{cr}}{1100 \cdot psi}} = 6.4 \cdot in$

Critical edge distance, (ACI 318-14, Equation 17.4.5.1d).

$A_{Nao} := \left(2 \cdot c_{Na}\right)^2 = 166.2 \cdot in^2$

Projected influence area for a single anchor, (ACI 318-14, Equation 17.4.5.1c).

$A_{Na} := \left(2 \cdot c_{Na}\right) \cdot \left(c_{Na} + c_{a_min} + s_a\right) = 498.9 \cdot in^2$

Projected influence area for a group of anchors, (ACI 318-14, Figure R17.4.5.1).

$A_{Na} := n_a \cdot A_{Nao} = 166.2 \cdot in^2$

Limiting value of A.Na per ACI 318-14, Section 17.4.5.1).

$\psi_{ed_Na} := 1.0 \qquad c_{a_min} = 6.3 \cdot in \quad > \quad c_{Na} = 6.4 \cdot in$

Modification factor for edge effects, (ACI 318-14, Equation 17.4.5.4a).

$\psi_{cp_Na} := \dfrac{c_{a_min}}{c_{ac}} \qquad c_{a_min} = 6.3 \cdot in \quad < \quad c_{ac} = 6.3 \cdot in$

Modification factor for adhesive anchors designed for uncracked concrete, (ACI 318-14, Equation 17.4.5.5a).

$e'_N := 0 \cdot in$

Previously defined.

$\psi_{ec_Na} := \dfrac{1}{\left(1 + \dfrac{e'_N}{c_{Na}}\right)} = 1.0$

Modification factor for adhesive anchor group loaded eccentrically in tension. (ACI 318-14, Equation 17.4.5.3)

$N_{ag} := \dfrac{A_{Na}}{A_{Nao}} \cdot \psi_{ec_Na} \cdot \psi_{ed_Na} \cdot \psi_{cp_Na} \cdot N_{ba} = 7179.0\ lbf$

Nominal bond strength of group of adhesive anchors in tension, (ACI 318-14, Equation 17.4.5.1b).

$\phi N_{ag} := \phi_e \cdot \phi_d \cdot N_{ag} = 3499.8\ lbf$

Nominal bond strength in tension for a group of adhesive anchors in tension incorporating strength reduction factors, (ACI 318-14, Equation 17.4.5.1b).

Determine Steel Strength of the Anchorage in Shear

$$\text{Individual_Group} := \begin{cases} \text{"Analyze anchors individually in shear according to ACI 318-14, Chapter 17"} & \text{if } 3\cdot c_{a1} \le s_a \\ \text{"Analyze anchors as a group in shear according to ACI 318-14, Section 17.2.1.1"} & \text{otherwise} \end{cases}$$

Individual_Group = "Analyze anchors individually in shear according to ACI 318-14, Chapter 17"

$V_{sa} := 13560\cdot lbf$ — The steel strength in shear. (ESR-3187, Table 11, ASTM F593)

$\phi V_{sa} := \alpha_{v_seis}\cdot\phi_{v_s}\cdot V_{sa} = 5695.2\ lbf$ — Steel shear strength incorporating strength reduction factors.

Determine Concrete Breakout Strength of the Anchorage in Shear

$$\psi_{ed_V} := \begin{cases} 1.0 & \text{if } c_{a2} \ge 1.5\cdot c_{a1} \\ 0.7 + 0.3\cdot\dfrac{c_{a2}}{1.5\cdot c_{a1}} & \text{otherwise} \end{cases} = 0.9$$

Edge distance factor (Anchors not on a corner). (ACI 318-14, Section 17.5.2.6)

$\psi_{c_V} := 1.0$ — Cracked concrete factor without supplementary reinforcement, (ACI 318-14, Section 17.5.2.7)

$$\psi_{h_V} := \begin{cases} \sqrt{\dfrac{1.5\cdot c_{a1}}{h_a}} & \text{if } h_a < 1.5\cdot c_{a1} \\ 1 & \text{otherwise} \end{cases} = 1.00$$

Thickness modification factor. (ACI 318-14, Section 17.5.2.8)

$d_a := d = 0.6\cdot in$ — The outside diameter of the anchor.

$l_e := \min(8\cdot d_a, h_{ef}) = 3.1\cdot in$ — The load bearing length of anchor for shear. (ACI 318-14, Section 17.5.2.2)

$$V_b := \min\left[7\cdot\left(\frac{l_e}{d_a}\right)^{0.2}\cdot\sqrt{\frac{d_a}{in}}\cdot\lambda\cdot\sqrt{\frac{f'_c}{psi}}\cdot\left(\frac{c_{a1}}{in}\right)^{1.5}\cdot lbf,\ 9\cdot\lambda\cdot\sqrt{\frac{f'_c}{psi}}\cdot\left(\frac{c_{a1}}{in}\right)^{1.5}\cdot lbf\right] = 8003.1\cdot lbf$$

Basic concrete breakout strength of a single anchor in shear in cracked concrete. (ACI 318-14, Section 17.5.2.2)

$A_{Vco} := 4.5\cdot c_{a1}^2 = 175.8\cdot in^2$ — The projected area for a single anchor in a deep member with a distance from edges equal or greater than 1.5 x c_{a1}. (ACI 318-14, Equation 17.5.2.1c)

$A_{Vc} := [(2\cdot 1.5\cdot c_{a1}) + s_a]\cdot\min(1.5\cdot c_{a1}, h_a) = 419.5\cdot in^2$ — Projected concrete failure area of the anchorage. (ACI 318-14, Section 17.5.2.1 and Figure R17.5.2.1b)

$e'_V := 0\cdot in$ — No eccentricity of anchor group in shear.

$$\psi_{ec_V} := \frac{1}{\left(1 + \dfrac{2\cdot e'_V}{3\cdot c_{a1}}\right)} = 1.0$$

Modification factor for anchor group loaded eccentrically in shear. (ACI 318-14, Equation 17.5.2.5)

$$V_{cbg} := \frac{A_{Vc}}{A_{Vco}}\cdot\psi_{ec_V}\cdot\psi_{ed_V}\cdot\psi_{c_V}\cdot\psi_{h_V}\cdot V_b = 17190.7\cdot lbf$$

Nominal concrete breakout strength of anchorage in shear. (ACI 318-14, Equation 17.5.2.1a)

$\phi V_{cb} := \phi_{v_c}\cdot V_{cbg} = 12033.5\ lbf$ — Shear breakout strength incorporating strength reduction factors.

Determine Pryout Strength of the Anchorage in Shear

$k_{cp} := \begin{cases} 1 & \text{if } h_{ef} < 2.5\text{in} \\ 2 & \text{otherwise} \end{cases} = 2.0$

Coefficient for pryout strength. (ACI 318-14, Section 17.5.3.1)

$N_{cbg} = 6299.9\ \text{lbf}$ $N_{ag} = 7179.0\ \text{lbf}$

Use the lesser of N.cbg from Equation 17.4.2.1b or Nag from 17.4.5.1b per ACI 318-14, Section 17.5.3.1).

$V_{cp} := k_{cp} \cdot N_{cbg} = 12599.7\ \text{lbf}$

The nominal pryout strength of the anchorage in shear per ACI 318-14, Equation 17.5.3.1a.

$\phi V_{cp} := \phi_{v_c} \cdot V_{cp} = 8819.8\ \text{lbf}$

Shear pryout strength incorporating strength reduction factors.

Determine Governing Failure Strength

$\text{Govern}_t := \begin{cases} \text{"Steel failure governs (Ductile Failure)."} & \text{if } \phi N_{sa} \le \min(\phi N_{cb}, \phi N_{ag}) \\ \text{"Concrete breakout governs (Brittle Failure)."} & \text{if } \phi N_{cb} \le \min(\phi N_{sa}, \phi N_{ag}) \\ \text{"Bond strength governs (Brittle Failure)."} & \text{otherwise} \end{cases}$

$\text{Govern}_t = \text{"Concrete breakout governs (Brittle Failure)."}$

$\text{Tensile}_{govern} := \begin{cases} \phi N_{sa} & \text{if } \phi N_{sa} \le \min(\phi N_{cb}, \phi N_{ag}) \\ \phi N_{cb} & \text{if } \phi N_{cb} \le \min(\phi N_{sa}, \phi N_{ag}) \\ \phi N_{ag} & \text{otherwise} \end{cases}$

The governing allowable tensile capacity of the anchorage.

$\text{Tensile}_{govern} = 3071\ \text{lbf}$

$T_{eye_bolt} = 1388.8\ \text{lbf}$

$\text{Tension_Check} := \begin{cases} \text{"Anchor capacity in tension is OK."} & \text{if } \text{Tensile}_{govern} > T_{eye_bolt} \\ \text{"Anchor capacity in tension is NOT OK"} & \text{otherwise} \end{cases}$

$\text{Tension_Check} = \text{"Anchor capacity in tension is OK."}$

Check to determine the adequacy of the anchors in tension.

$$DCR_{tens} := \frac{T_{eye_bolt}}{\text{Tensile}_{govern}} = 0.45$$

$$Govern_v := \begin{cases} \text{"Steel failure governs (Ductile Failure)."} & \text{if } \phi V_{sa} \le \min(\phi V_{cb}, \phi V_{cp}) \\ \text{"Concrete breakout governs (Brittle Failure)."} & \text{if } \phi V_{cb} < \min(\phi V_{sa}, \phi V_{cp}) \\ \text{"Concrete pryout governs (Brittle Failure)."} & \text{otherwise} \end{cases}$$

$Govern_v$ = "Steel failure governs (Ductile Failure)."

$$Shear_{govern} := \begin{cases} \phi V_{sa} & \text{if } \phi V_{sa} \le \min(\phi V_{cb}, \phi V_{cp}) \\ \phi V_{cb} & \text{if } \phi V_{cb} < \min(\phi V_{sa}, \phi V_{cp}) \\ \phi V_{cp} & \text{otherwise} \end{cases}$$

The governing allowable shear capacity of the anchorage.

$Shear_{govern} = 5695\,lbf$

$V_{eye_bolt} = 462.6\,lbf$

$$Shear_Check := \begin{cases} \text{"Anchor capacity in shear is OK."} & \text{if } Shear_{govern} > V_{eye_bolt} \\ \text{"Anchor capacity in shear is NOT OK"} & \text{otherwise} \end{cases}$$

Shear_Check = "Anchor capacity in shear is OK."

Check to determine the adequacy of the anchors in shear.

$$DCR_{shear} := \frac{V_{eye_bolt}}{Shear_{govern}} = 0.08$$

$$DCR := \begin{cases} DCR_{tens} & \text{if } DCR_{shear} \le 0.2 \\ DCR_{shear} & \text{if } DCR_{tens} \le 0.2 \\ \frac{1}{1.2} \cdot (DCR_{tens} + DCR_{shear}) & \text{otherwise} \end{cases} = 0.45$$

The DCR ratio is less than 1.0; therefore, **OK**
ACI 318-14, Section 17.6.

ATTACHMENT 1

ICC-ES EVALUATION REPORT

ESR -3187

HILTI HIT-HY 200 ADHESIVE ANCHORS AND POST INSTALLED REINFORCING BAR CONNECTIONS IN CONCRETE

(EXCERPT)

Sargent & Lundy Engineering Services, Inc.	RPP-CALC-63664, Rev. 0 **CALCULATION SHEET**		
Project No. S54413.024	**Calculation No.** S54413.024-S-002	**Rev.** 1	**Page No.** 30 of 40
Title: LERF Basin 41 Catch Basin Design			
Prepared By: RW Davidson	**Date:** 4/27/2020	**Checked By:** PP Santos	**Date:** 4/27/2020

ICC EVALUATION SERVICE

In Cooperation with Innovation RESEARCH LABS

Most Widely Accepted and Trusted

ICC-ES Evaluation Report

ICC-ES | (800) 423-6587 | (562) 699-0543 | www.icc-es.org

ESR-3187

Issued 03/2018
Revised 04/2019
This report is subject to renewal 03/2020.

DIVISION: 03 00 00—CONCRETE
SECTION: 03 16 00—CONCRETE ANCHORS
DIVISION: 05 00 00—METALS
SECTION: 05 05 19—POST-INSTALLED CONCRETE ANCHORS

REPORT HOLDER:

HILTI, INC.

EVALUATION SUBJECT:

HILTI HIT-HY 200 ADHESIVE ANCHORS AND POST INSTALLED REINFORCING BAR CONNECTIONS IN CONCRETE

ICC ES ICC ES PMG ICC ES LISTED

"2014 Recipient of Prestigious Western States Seismic Policy Council (WSSPC) Award in Excellence"

A Subsidiary of ICC INTERNATIONAL CODE COUNCIL

ICC-ES Evaluation Reports are not to be construed as representing aesthetics or any other attributes not specifically addressed, nor are they to be construed as an endorsement of the subject of the report or a recommendation for its use. There is no warranty by ICC Evaluation Service, LLC, express or implied, as to any finding or other matter in this report, or as to any product covered by the report.

ANSI ACCREDITED ISO/IEC 17065 Product Certification Body #1000

Copyright © 2019 ICC Evaluation Service, LLC. All rights reserved.

Sargent & Lundy Engineering Services, Inc.	RPP-CALC-63664, Rev. 0 CALCULATION SHEET		
Project No. S54413.024	**Calculation No.** S54413.024-S-002	**Rev.** 1	**Page No.** 31 of 40
Title: LERF Basin 41 Catch Basin Design			
Prepared By: RW Davidson	**Date:** 4/27/2020	**Checked By:** PP Santos	**Date:** 4/27/2020

ICC EVALUATION SERVICE — Most Widely Accepted and Trusted

ICC-ES Evaluation Report

ESR-3187

Reissued March 2018
Revised April 2019
This report is subject to renewal March 2020.

www.icc-es.org | (800) 423-6587 | (562) 699-0543 — *A Subsidiary of the International Code Council®*

DIVISION: 03 00 00—CONCRETE
Section: 03 16 00—Concrete Anchors

DIVISION: 05 00 00—METALS
Section: 05 05 19—Post-installed Concrete Anchors

REPORT HOLDER:

HILTI, INC.

EVALUATION SUBJECT:

HILTI HIT-HY 200 ADHESIVE ANCHORS AND POST INSTALLED REINFORCING BAR CONNECTIONS IN CONCRETE

1.0 EVALUATION SCOPE

Compliance with the following codes:

- 2018, 2015, 2012, and 2009 *International Building Code®* (IBC)
- 2018, 2015, 2012, and 2009 *International Residential Code®* (IRC)
- 2013 *Abu Dhabi International Building Code* (ADIBC)†

†The ADIBC is based on the 2009 IBC. 2009 IBC code sections referenced in this report are the same sections in the ADIBC.

For evaluation for compliance with codes adopted by the Los Angeles Department of Building and Safety (LADBS), see ESR-3187 LABC and LARC Supplement.

For evaluation for compliance with the *National Building Code of Canada®* (NBCC), see listing report ELC-3187.

Property evaluated:

Structural

2.0 USES

Adhesive anchors and reinforcing bars installed using the Hilti HIT-HY 200 Adhesive Anchoring System and Post-Installed Reinforcing Bar System are used to resist static, wind and earthquake (Seismic Design Categories A through F) tension and shear loads in cracked and uncracked normal-weight concrete having a specified compressive strength, f'_c, of 2,500 psi to 8,500 psi (17.2 MPa to 58.6 MPa) [minimum of 24 MPa is required under ADIBC Appendix L, Section 5.1.1].

The anchor system complies with anchors as described in Section 1901.3 of the 2018 and 2015 IBC, Section 1909 of the 2012 IBC and is an alternative to cast-in-place anchors described in Section 1908 of the 2012 IBC, and Sections 1911 and 1912 of the 2009 IBC. The anchor systems may also be used where an engineered design is submitted in accordance with Section R301.1.3 of the IRC.

The post-installed reinforcing bar system is an alternative to cast-in-place reinforcing bars governed by ACI 318 and IBC Chapter 19.

3.0 DESCRIPTION

3.1 General:

The Hilti HIT-HY 200 Adhesive Anchoring System and Post-Installed Reinforcing Bar System are comprised of the following components:

- Hilti HIT-HY 200 adhesive packaged in foil packs (either Hilti HIT-HY 200-A or Hilti HIT-HY 200-R)
- Adhesive mixing and dispensing equipment
- Equipment for hole cleaning and adhesive injection

The Hilti HIT-HY 200 Adhesive Anchoring System may be used with continuously threaded rod, Hilti HIT-Z(-R) anchor rods, Hilti HIS-(R)N internally threaded inserts or deformed steel reinforcing bars as depicted in Figure 1. The Hilti HIT-HY 200 Post-Installed Reinforcing Bar System may only be used with deformed steel reinforcing bars as depicted in Figure 2. The primary components of the Hilti Adhesive Anchoring and Post-Installed Reinforcing Bar Systems, including the Hilti HIT-HY 200 Adhesive, HIT-RE-M static mixing nozzle and steel anchoring elements, are shown in Figure 6 of this report.

The manufacturer's printed Installation instructions (MPII), as included with each adhesive unit package, are replicated as Figure 9.

3.2 Materials:

3.2.1 Hilti HIT-HY 200 Adhesive: Hilti HIT-HY 200 Adhesive is an injectable, two-component hybrid adhesive. The two components are separated by means of a dual-cylinder foil pack attached to a manifold. The two components combine and react when dispensed through a static mixing nozzle attached to the manifold. Hilti HIT-HY 200 is available in 11.1-ounce (330 mL) and 16.9-ounce (500 mL) foil packs. The manifold attached to each foil pack is stamped with the adhesive expiration date. The shelf life, as indicated by the expiration date, applies to an unopened foil pack stored in a dry, dark environment and in accordance with Figure 9.

Hilti HIT-HY 200 Adhesive is available in two options, Hilti HIT-HY 200-A and Hilti HIT-HY 200-R. Both options are subject to the same technical data as set forth in this report. Hilti HIT-HY 200-A will have shorter working times

ICC-ES Evaluation Reports are not to be construed as representing aesthetics or any other attributes not specifically addressed, nor are they to be construed as an endorsement of the subject of the report or a recommendation for its use. There is no warranty by ICC Evaluation Service, LLC, express or implied, as to any finding or other matter in this report, or as to any product covered by the report.

Copyright © 2019 ICC Evaluation Service, LLC. All rights reserved.

and curing times than Hilti HIT-HY 200-R. The packaging for each option employs a different color, which helps the user distinguish between the two adhesives.

3.2.2 Hole Cleaning Equipment:

3.2.2.1 Standard Equipment: Standard hole cleaning equipment, comprised of steel wire brushes and air nozzles, is described in Figure 9 of this report.

3.2.2.2 Hilti Safe-Set™ System: The Hilti Safe-Set™ with Hilti HIT-HY 200 consists of one of the following:

- For the Hilti HIT-Z and HIT-Z-R anchor rods, hole cleaning is not required after drilling the hole, except if the hole is drilled with a diamond core drill bit.
- For the elements described in Sections 3.2.4.2 through 3.2.4.4 and Section 3.2.5, the Hilti TE-CD or TE-YD hollow carbide drill bit with a carbide drilling head conforming to ANSI B212.15. Used in conjunction with a Hilti vacuum with a minimum value for the maximum volumetric flow rate of 129 CFM (61 ℓ/s), the Hilti TE-CD or TE-YD drill bit will remove the drilling dust, automatically cleaning the hole.

3.2.3 Hole Preparation Equipment:

3.2.3.1 Hilti Safe-Set™ System: TE-YRT Roughening Tool: For the elements described in Sections 3.2.5.2 through 3.2.5.4 and Tables 12, 13, 16, 17, 21, and 23, the Hilti TE-YRT roughening tool with a carbide roughening head is used for hole preparation in conjunction with holes core drilled with a diamond core bit as illustrated in Figure 4.

3.2.4 Dispensers: Hilti HIT-HY 200 must be dispensed with manual or electric dispensers provided by Hilti.

3.2.5 Anchor Elements:

3.2.5.1 Hilti HIT-Z and HIT-Z-R Anchor Rods: Hilti HIT-Z and HIT-Z-R anchor rods have a conical shape on the embedded section and a threaded section above the concrete surface. Mechanical properties for the Hilti HIT-Z and HIT-Z-R anchor rods are provided in Table 2. The rods are available in diameters as shown in Table 7 and Figure 1. Hilti HIT-Z anchor rods are produced from carbon steel and furnished with a 0.005-millimeter-thick (5 μm) zinc electroplated coating. Hilti HIT-Z-R anchor rods are fabricated from grade 316 stainless steel.

3.2.5.2 Threaded Steel Rods: Threaded steel rods must be clean, continuously threaded rods (all-thread) in diameters as described in Tables 11 and 15 and Figure 1 of this report. Steel design information for common grades of threaded rods is provided in Table 3. Carbon steel threaded rods must be furnished with a 0.0002-inch-thick (0.005 mm) zinc electroplated coating complying with ASTM B633 SC 1 or must be hot-dipped galvanized complying with ASTM A153, Class C or D. Stainless steel threaded rods must comply with ASTM F593 or ISO 3506 A4. Threaded steel rods must be straight and free of indentations or other defects along their length. The ends may be stamped with identifying marks and the embedded end may be blunt cut or cut on the bias to a chisel point.

3.2.5.3 Steel Reinforcing Bars for use in Post-Installed Anchor Applications: Steel reinforcing bars are deformed bars as described in Table 4 of this report. Tables 11, 15, and 19 and Figure 1 summarize reinforcing bar size ranges. The embedded portions of reinforcing bars must be straight, and free of mill scale, rust, mud, oil and other coatings (other than zinc) that may impair the bond with the adhesive. Reinforcing bars must not be bent after installation except as set forth in ACI 318-14 26.6.3.1(b) or ACI 318-11 7.3.2, as applicable, with the additional condition that the bars must be bent cold, and heating of reinforcing bars to facilitate field bending is not permitted.

3.2.5.4 Hilti HIS-N and HIS-RN Inserts: Hilti HIS-N and HIS-RN inserts have a profile on the external surface and are internally threaded. Mechanical properties for Hilti HIS-N and HIS-RN inserts are provided in Table 5. The inserts are available in diameters and lengths as shown in Table 22 and Figure 1. Hilti HIS-N inserts are produced from carbon steel and furnished with a 0.005-millimeter-thick (5 μm) zinc electroplated coating complying with ASTM B633 SC 1. The stainless steel Hilti HIS-RN inserts are fabricated from X5CrNiMo17122 K700 steel conforming to DIN 17440. Specifications for common bolt types that may be used in conjunction with Hilti HIS-N and HIS-RN inserts are provided in Table 6. Bolt grade and material type (carbon, stainless) must be matched to the insert. Strength reduction factors, ϕ, corresponding to brittle steel elements must be used for Hilti HIS-N and HIS-RN inserts.

3.2.5.5 Ductility: In accordance with ACI 318-14 2.3 or ACI 318-11 D.1, as applicable, in order for a steel element to be considered ductile, the tested elongation must be at least 14 percent and reduction of area must be at least 30 percent. Steel elements with a tested elongation of less than 14 percent or a reduction of area of less than 30 percent, or both, are considered brittle. Values for various steel materials are provided in Tables 2, 3, and 6 of this report. Where values are nonconforming or unstated, the steel must be considered brittle.

3.2.6 Steel Reinforcing Bars for Use in Post-Installed Reinforcing Bar Connections: Steel reinforcing bars used in post-installed reinforcing bar connections are deformed bars (rebar) as depicted in Figures 2 and 3. Tables 25, 26, 27, and Figure 9 summarize reinforcing bar size ranges. The embedded portions of reinforcing bars must be straight, and free of mill scale, rust and other coatings that may impair the bond with the adhesive. Reinforcing bars must not be bent after installation, except as set forth in Section 26.6.3.1(a) of ACI 318-14 or Section 7.3.2 of ACI 318-11, as applicable, with the additional condition that the bars must be bent cold, and heating of reinforcing bars to facilitate field bending is not permitted.

3.3 Concrete:

Normal-weight concrete must comply with Sections 1903 and 1905 of the IBC, as applicable. The specified compressive strength of the concrete must be from 2,500 psi to 8,500 psi (17.2 MPa to 58.6 MPa) [minimum of 24 MPa is required under ADIBC Appendix L, Section 5.1.1].

4.0 DESIGN AND INSTALLATION

4.1 Strength Design of Post-Installed Anchors:

Refer to Table 1 for the design parameters for specific installed elements, and refer to Figure 4 and Section 4.1.4 for a flowchart to determine the applicable design bond strength or pullout strength.

4.1.1 General: The design strength of anchors under the 2018 and 2015 IBC and 2018 and 2015 IRC must be determined in accordance with ACI 318-14 and this report. The design strength of anchors under the 2012 and 2009 IBC, as well as the 2012 and 2009 IRC must be determined in accordance with ACI 318-11 and this report.

A design example according to the 2012 and 2009 IBC based on ACI 318-11 is given in Figure 7 of this report.

Design parameters are based on ACI 318-14 for use with the 2018 and 2015 IBC, and ACI 318-11 for use with the 2012 and 2009 IBC unless noted otherwise in Sections 4.1.1 through 4.1.11 of this report.

Sargent & Lundy Engineering Services, Inc.	**RPP-CALC-63664, Rev. 0** **CALCULATION SHEET**		
Project No. S54413.024	**Calculation No.** S54413.024-S-002	**Rev.** 1	**Page No.** 33 of 40
Title: LERF Basin 41 Catch Basin Design			
Prepared By: RW Davidson	**Date:** 4/27/2020	**Checked By:** PP Santos	**Date:** 4/27/2020

TABLE 1—DESIGN TABLE INDEX

Design Table		Fractional		Metric	
		Table	Page	Table	Page
Hilti HIT-Z and HIT-Z-R Anchor Rod	Steel Strength - N_{sa}, V_{sa}	7	14	7	14
	Concrete Breakout - N_{cb}, N_{cbg}, V_{cb}, V_{cbg}, V_{cp}, V_{cpg}	8	15	8	15
	Pullout Strength – N_p	10	19	10	19
Standard Threaded Rod	Steel Strength - N_{sa}, V_{sa}	11	20	15	25
	Concrete Breakout - N_{cb}, N_{cbg}, V_{cb}, V_{cbg}, V_{cp}, V_{cpg}	12	22	16	26
	Bond Strength - N_a, N_{ag}	14	24	18	28
Hilti HIS-N and HIS-RN Internally Threaded Insert	Steel Strength - N_{sa}, V_{sa}	22	32	22	32
	Concrete Breakout - N_{cb}, N_{cbg}, V_{cb}, V_{cbg}, V_{cp}, V_{cpg}	23	33	23	33
	Bond Strength - N_a, N_{ag}	24	34	24	34

Design Table		Fractional		EU Metric		Canadian	
		Table	Page	Table	Page	Table	Page
Steel Reinforcing Bars	Steel Strength - N_{sa}, V_{sa}	11A	21	15	25	19	29
	Concrete Breakout - N_{cb}, N_{cbg}, V_{cb}, V_{cbg}, V_{cp}, V_{cpg}	12	22	16	26	20	30
	Bond Strength - N_a, N_{ag}	13	23	17	27	21	31
	Determination of development length for post-installed reinforcing bar connections	25	35	26	36	27	36

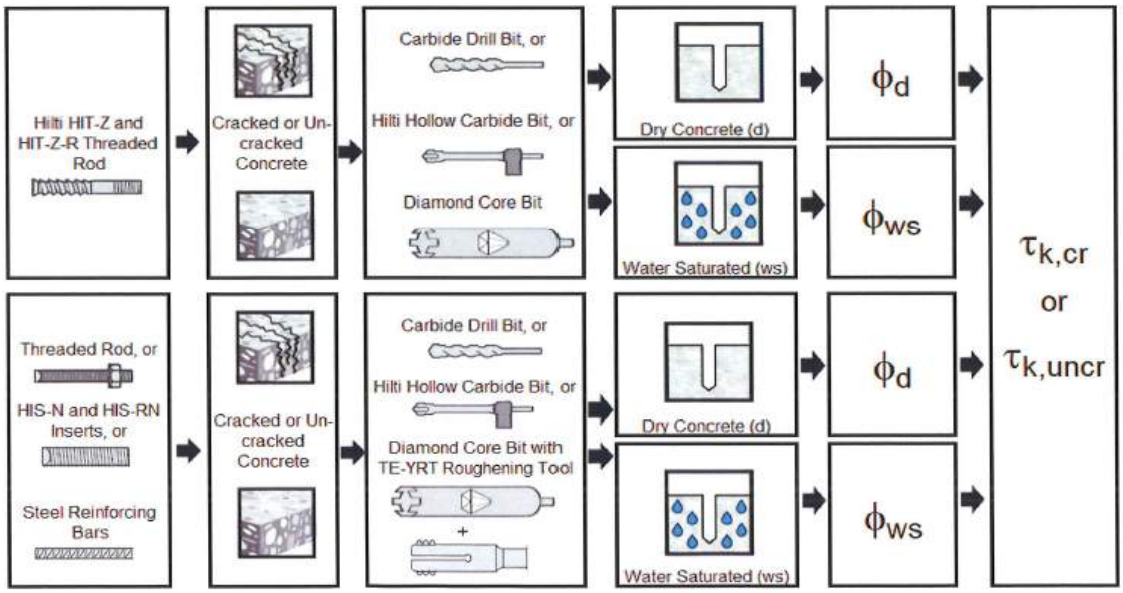

FIGURE 4—FLOWCHART FOR THE ESTABLISHMENT OF DESIGN BOND OR PULLOUT STRENGTH FOR POST-INSTALLED ADHESIVE ANCHORS

Sargent & Lundy Engineering Services, Inc.	**RPP-CALC-63664, Rev. 0** **CALCULATION SHEET**		
Project No. S54413.024	**Calculation No.** S54413.024-S-002	**Rev.** 1	**Page No.** 34 of 40
Title: LERF Basin 41 Catch Basin Design			
Prepared By: RW Davidson	**Date:** 4/27/2020	**Checked By:** PP Santos	**Date:** 4/27/2020

Fractional Threaded Rod

Steel Strength

TABLE 11—STEEL DESIGN INFORMATION FOR FRACTIONAL THREADED ROD

DESIGN INFORMATION		Symbol	Units	Nominal rod diameter (in.)[1]						
				3/8	1/2	5/8	3/4	7/8	1	1 1/4
Rod O.D.		d	in. (mm)	0.375 (9.5)	0.5 (12.7)	0.625 (15.9)	0.75 (19.1)	0.875 (22.2)	1 (25.4)	1.25 (31.8)
Rod effective cross-sectional area		A_{se}	in.^{2} (mm^2)	0.0775 (50)	0.1419 (92)	0.2260 (146)	0.3345 (216)	0.4617 (298)	0.6057 (391)	0.9691 (625)
ISO 898-1 Class 5.8	Nominal strength as governed by steel strength	N_{sa}	lb (kN)	5,620 (25.0)	10,290 (45.8)	16,385 (72.9)	24,250 (107.9)	33,470 (148.9)	43,910 (195.3)	70,260 (312.5)
		V_{sa}	lb (kN)	3,370 (15.0)	6,175 (27.5)	9,830 (43.7)	14,550 (64.7)	20,085 (89.3)	26,345 (117.2)	42,155 (187.5)
	Reduction for seismic shear	$\alpha_{V,seis}$	-	0.70						
	Strength reduction factor ϕ for tension[2]	ϕ	-	0.65						
	Strength reduction factor ϕ for shear[2]	ϕ	-	0.60						
ASTM A193 B7	Nominal strength as governed by steel strength	N_{sa}	lb (kN)	9,685 (43.1)	17,735 (78.9)	28,250 (125.7)	41,810 (186.0)	57,710 (256.7)	75,710 (336.8)	121,135 (538.8)
		V_{sa}	lb (kN)	5,810 (25.9)	10,640 (47.3)	16,950 (75.4)	25,085 (111.6)	34,625 (154.0)	45,425 (202.1)	72,680 (323.3)
	Reduction for seismic shear	$\alpha_{V,seis}$	-	0.70						
	Strength reduction factor ϕ for tension[3]	ϕ	-	0.75						
	Strength reduction factor ϕ for shear[3]	ϕ	-	0.65						
ASTM F1554 Gr. 36	Nominal strength as governed by steel strength	N_{sa}	lb (kN)	- -	8,230 (36.6)	13,110 (58.3)	19,400 (86.3)	26,780 (119.1)	35,130 (156.3)	56,210 (250.0)
		V_{sa}	lb (kN)	- -	4,940 (22.0)	7,865 (35.0)	11,640 (51.8)	16,070 (71.5)	21,080 (93.8)	33,725 (150.0)
	Reduction factor, seismic shear	$\alpha_{V,seis}$	-	0.6						
	Strength reduction factor ϕ for tension[3]	ϕ	-	0.75						
	Strength reduction factor ϕ for shear[3]	ϕ	-	0.65						
ASTM F1554 Gr. 55	Nominal strength as governed by steel strength	N_{sa}	lb (kN)	- -	10,645 (47.4)	16,950 (75.4)	25,090 (111.6)	34,630 (154.0)	45,430 (202.1)	72,685 (323.3)
		V_{sa}	lb (kN)	- -	6,385 (28.4)	10,170 (45.2)	15,055 (67.0)	20,780 (92.4)	27,260 (121.3)	43,610 (194.0)
	Reduction factor, seismic shear	$\alpha_{V,seis}$	-	0.7						
	Strength reduction factor ϕ for tension[3]	ϕ	-	0.75						
	Strength reduction factor ϕ for shear[3]	ϕ	-	0.65						
ASTM F1554 Gr. 105	Nominal strength as governed by steel strength	N_{sa}	lb (kN)	- -	17,740 (78.9)	28,250 (125.7)	41,815 (186.0)	57,715 (256.7)	75,715 (336.8)	121,135 (538.8)
		V_{sa}	lb (kN)	- -	10,645 (47.4)	16,950 (75.4)	25,090 (111.6)	34,630 (154.0)	45,430 (202.1)	72,680 (323.3)
	Reduction factor, seismic shear	$\alpha_{V,seis}$	-	0.7						
	Strength reduction factor ϕ for tension[3]	ϕ	-	0.75						
	Strength reduction factor ϕ for shear[3]	ϕ	-	0.65						
ASTM F593, CW Stainless	Nominal strength as governed by steel strength	N_{sa}	lb (kN)	7,750 (34.5)	14,190 (63.1)	22,600 (100.5)	28,435 (126.5)	39,245 (174.6)	51,485 (229.0)	- -
		V_{sa}	lb (kN)	4,650 (20.7)	8,515 (37.9)	13,560 (60.3)	17,060 (75.9)	23,545 (104.7)	30,890 (137.4)	- -
	Reduction factor, seismic shear	$\alpha_{V,seis}$	-	0.7						-
	Strength reduction factor ϕ for tension[2]	ϕ	-	0.65						-
	Strength reduction factor ϕ for shear[2]	ϕ	-	0.60						-
ASTM A193, Gr. 8(M), Class 1 Stainless	Nominal strength as governed by steel strength	N_{sa}	lb (kN)	-						55,240 (245.7)
		V_{sa}	lb (kN)	-						33,145 (147.4)
	Reduction factor, seismic shear	$\alpha_{V,seis}$	-	-						0.6
	Strength reduction factor ϕ for tension[2]	ϕ	-	-						0.75
	Strength reduction factor ϕ for shear[2]	ϕ	-	-						0.65

For **SI**: 1 inch = 25.4 mm, 1 lbf = 4.448 N. For **pound-inch** units: 1 mm = 0.03937 inches, 1 N = 0.2248 lbf

[1] Values provided for common rod material types are based on specified strengths and calculated in accordance with ACI 318-14 Eq. (17.4.1.2) and Eq (17.5.1.2b) or ACI 318-11 Eq. (D-2) and Eq. (D-29). Nuts and washers must be appropriate for the rod.

[2] For use with the load combinations of IBC Section 1605.2, ACI 318-14 5.3 or ACI 318-11 9.2, as set forth in ACI 318-14 17.3.3 or ACI 318-11 D.4.3. If the load combinations of ACI 318-11 Appendix C are used, the appropriate value of ϕ must be determined in accordance with ACI 318-11 D.4.4. Values correspond to a brittle steel element.

[3] For use with the load combinations of IBC Section 1605.2, ACI 318-14 5.3 or ACI 318-11 9.2, as set forth in ACI 318-14 17.3.3 or ACI 318-11 D.4.3. If the load combinations of ACI 318-11 Appendix C are used, the appropriate value of ϕ must be determined in accordance with ACI 318-11 D.4.4. Values correspond to a ductile steel element.

Sargent & Lundy Engineering Services, Inc.	RPP-CALC-63664, Rev. 0 **CALCULATION SHEET**		
Project No. S54413.024	**Calculation No.** S54413.024-S-002	**Rev.** 1	**Page No.** 35 of 40
Title: LERF Basin 41 Catch Basin Design			
Prepared By: RW Davidson	**Date:** 4/27/2020	**Checked By:** PP Santos	**Date:** 4/27/2020

Fractional Threaded Rod and Reinforcing Bars

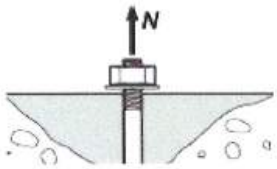

Concrete Breakout Strength

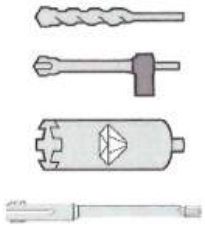

Carbide Bit or
Hilti Hollow Carbide Bit or
Diamond Core Bit + Roughening Tool

TABLE 12—CONCRETE BREAKOUT DESIGN INFORMATION FOR FRACTIONAL THREADED ROD AND REINFORCING BARS IN HOLES DRILLED WITH A HAMMER DRILL AND CARBIDE BIT (OR HILTI HOLLOW CARBIDE DRILL BIT) OR CORE DRILLED WITH A DIAMOND CORE BIT AND ROUGHENED WITH A HILTI ROUGHENING TOOL[1]

DESIGN INFORMATION	Symbol	Units	Nominal rod diameter (in.) / Reinforcing bar size							
			3/8 or #3	1/2 or #4	5/8 or #5	3/4 or #6	7/8 or #7	1 or #8	#9	1 1/4 or #10
Effectiveness factor for cracked concrete	$k_{c,cr}$	in-lb (SI)	17 (7.1)							
Effectiveness factor for uncracked concrete	$k_{c,uncr}$	in-lb (SI)	24 (10)							
Minimum Embedment	$h_{ef,min}$	in. (mm)	2 3/8 (60)	2 3/4 (70)	3 1/8 (79)	3 1/2 (89)	3 1/2 (89)	4 (102)	4 1/2 (114)	5 (127)
Maximum Embedment	$h_{ef,max}$	in. (mm)	7 1/2 (191)	10 (254)	12 1/2 (318)	15 (381)	17 1/2 (445)	20 (508)	22 1/2 (572)	25 (635)
Min. anchor spacing[3]	s_{min}	in. (mm)	1 7/8 (48)	2 1/2 (64)	3 1/8 (79)	3 3/4 (95)	4 3/8 (111)	5 (127)	5 5/8 (143)	6 1/4 (159)
Min. edge distance (Threaded rods)	c_{min}	in. (mm)	1¾ (45)	1¾ (45)	2 (3) (50) (3)	2 1/8 (3) (55) (3)	2¼ (3) (60) (3)	2¾ (3) (70) (3)	n/a	3 1/8 (3) (80) (3)
Min. edge distance (Reinforcing bars)[3]	c_{min}	-	5d; or see Section 4.1.9.2 of this report for design with reduced minimum edge distances							
Minimum concrete thickness	h_{min}	in. (mm)	h_{ef} + 1 1/4 (h_{ef} + 30)		$h_{ef} + 2d_0$ (4)					
Critical edge distance – splitting (for uncracked concrete)	c_{ac}	-	See Section 4.1.10.2 of this report.							
Strength reduction factor for tension, concrete failure modes, Condition B[2]	ϕ	-	0.65							
Strength reduction factor for shear, concrete failure modes, Condition B[2]	ϕ	-	0.70							

For **SI**: 1 inch ≡ 25.4 mm, 1 lbf = 4.448 N, 1 psi = 0.006897 MPa.
For pound-inch units: 1 mm = 0.03937 inches, 1 N = 0.2248 lbf, 1 MPa = 145.0 psi

[1] Additional setting information is described in Figure 9, Manufacturers Printed Installation Instructions (MPII).
[2] Values provided for post-installed anchors under Condition B without supplementary reinforcement as defined in ACI 318-14 17.3.3 or ACI 318-11 D.4.3.
[3] For installations with 1 3/4-inch edge distance, refer to Section 4.1.9.2 for spacing and maximum torque requirements.
[4] d_0 = hole diameter.

Sargent & Lundy Engineering Services, Inc.	**RPP-CALC-63664, Rev. 0** **CALCULATION SHEET**		
Project No. S54413.024	**Calculation No.** S54413.024-S-002	**Rev.** 1	**Page No.** 36 of 40
Title: LERF Basin 41 Catch Basin Design			
Prepared By: RW Davidson	**Date:** 4/27/2020	**Checked By:** PP Santos	**Date:** 4/27/2020

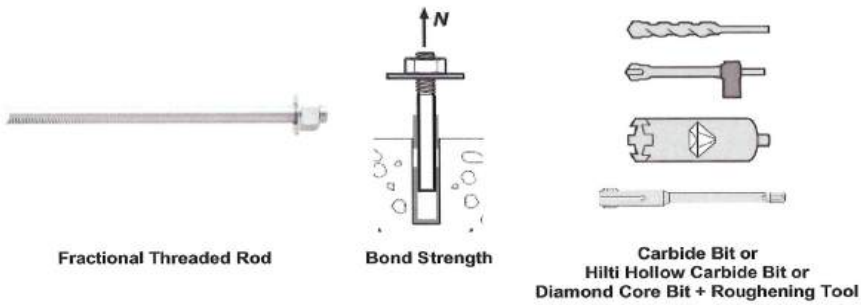

TABLE 14—BOND STRENGTH DESIGN INFORMATION FOR FRACTIONAL THREADED ROD IN HOLES DRILLED WITH A HAMMER DRILL AND CARBIDE BIT (OR HILTI HOLLOW CARBIDE DRILL BIT) OR CORE DRILLED WITH A DIAMOND CORE BIT AND ROUGHENED WITH A HILTI ROUGHENING TOOL[1]

DESIGN INFORMATION		Symbol	Units	Nominal rod diameter (in.)						
				3/8	1/2	5/8	3/4	7/8	1	1 1/4
Minimum Embedment		$h_{ef,min}$	in. (mm)	2 3/8 (60)	2 3/4 (70)	3 1/8 (79)	3 1/2 (89)	3 1/2 (89)	4 (102)	5 (127)
Maximum Embedment		$h_{ef,max}$	in. (mm)	7 1/2 (191)	10 (254)	12 1/2 (318)	15 (381)	17 1/2 (445)	20 (508)	25 (635)
Temperature range A[2]	Characteristic bond strength in cracked concrete	$\tau_{k,cr}$	psi (MPa)	1,045 (7.2)	1,135 (7.8)	1,170 (8.1)	1,260 (8.7)	1,290 (8.9)	1,325 (9.1)	1,380 (9.5)
	Characteristic bond strength in uncracked concrete	$\tau_{k,uncr}$	psi (MPa)	2,220 (15.3)	2,220 (15.3)	2,220 (15.3)	2,220 (15.3)	2,220 (15.3)	2,220 (15.3)	2,220 (15.3)
Temperature range B[2]	Characteristic bond strength in cracked concrete	$\tau_{k,cr}$	psi (MPa)	1,045 (7.2)	1,135 (7.8)	1,170 (8.1)	1,260 (8.7)	1,290 (8.9)	1,325 (9.1)	1,380 (9.5)
	Characteristic bond strength in uncracked concrete	$\tau_{k,uncr}$	psi (MPa)	2,220 (15.3)	2,220 (15.3)	2,220 (15.3)	2,220 (15.3)	2,220 (15.3)	2,220 (15.3)	2,220 (15.3)
Temperature range C[2]	Characteristic bond strength in cracked concrete	$\tau_{k,cr}$	psi (MPa)	855 (5.9)	930 (6.4)	960 (6.6)	1,035 (7.1)	1,055 (7.3)	1,085 (7.5)	1,130 (7.8)
	Characteristic bond strength in uncracked concrete	$\tau_{k,uncr}$	psi (MPa)	1,820 (12.6)	1,820 (12.6)	1,820 (12.6)	1,820 (12.6)	1,820 (12.6)	1,820 (12.6)	1,820 (12.6)
Permissible installation conditions	Dry and water saturated concrete	Anchor Category	-	1						
		ϕ_d, ϕ_{ws}	-	0.65						
Reduction for seismic tension	Hammer drilled	$\alpha_{N,seis}$	-	0.88	0.99	0.99	1.0	1.0	0.95	0.99
	Core drilled + roughening	$\alpha_{N,seis}$	-	N/A		0.88	0.96	0.96	1.0	0.82

For **SI**: 1 inch ≡ 25.4 mm, 1 lbf = 4.448 N, 1 psi = 0.006897 MPa.
For pound-inch units: 1 mm = 0.03937 inches, 1 N = 0.2248 lbf, 1 MPa = 145.0 psi

[1] Bond strength values correspond to concrete compressive strength f'_c = 2,500 psi (17.2 MPa). For concrete compressive strength, f'_c, between 2,500 psi (17.2 MPa) and 8,000 psi (55.2 MPa) [minimum of 24 MPa is required under ADIBC Appendix L, Section 5.1.1], the tabulated characteristic bond strength may be increased by a factor of $(f'_c / 2{,}500)^{0.1}$ [For SI: $(f'_c / 17.2)^{0.1}$]. See Section 4.1.4 of this report for bond strength determination.
[2] Temperature range A: Maximum short term temperature = 130°F (55°C), Maximum long term temperature = 110°F (43°C).
Temperature range B: Maximum short term temperature = 176°F (80°C), Maximum long term temperature = 110°F (43°C).
Temperature range C: Maximum short term temperature = 248°F (120°C), Maximum long term temperature = 162°F (72°C).
Short term elevated concrete temperatures are those that occur over brief intervals, e.g., as a result of diurnal cycling. Long term concrete temperatures are roughly constant over significant periods of time.

ATTACHMENT 2

PIPE WALL THICKNESS DATA SHEET

Sargent & Lundy Engineering Services, Inc.	**RPP-CALC-63664, Rev. 0** **CALCULATION SHEET**		
Project No. S54413.024	**Calculation No.** S54413.024-S-002	**Rev.** 1	**Page No.** 38 of 40
Title: LERF Basin 41 Catch Basin Design			
Prepared By: RW Davidson	**Date:** 4/27/2020	**Checked By:** PP Santos	**Date:** 4/27/2020

"Annealed" Welded and Seamless Comparison of Wall Thicknesses

- Alloys Stocked Include Types 304-L and 316-L. Other corrosion resistant alloys are available.
- Specifications: ASTM A 312
- Stocked in 17 - 24 foot random mill lengths, plain ends.
- "Annealed" pipe is used when the specifications referenced are required and is available only in the NPS diameters and schedule wall thickness shown. Welded "annealed" pipe is available per ASTM A 312, ASI SA-312 and ASTM A 358, A 376, A 409 and MIL-P-24691 (corrosion tested) and is stocked in most sizes thr 24" diameter. Seamless "annealed" pipe is available per ASTM A 312 and MIL-P-24691 (corrosion tested) is stocked through 4" size.

Nominal Pipe Size	Outside Diameter	Sch 5s	Lbs/ft	Sch 10s	Lbs/Ft	Sch 40s	Lbs/Ft	Sch 80s	Lbs/Ft	Sch 160	Lbs/Ft	XX Strong	Lbs
1/8	.405			.049	.19	.068	.25	.095	.32				
1/4	.540			.065	.31	.088	.40	.119	.50				
3/8	.675			.065	.43	.091	.58	.126	.76				
1/2	.840	.065	.55	.083	.69	.109	.87	.147	1.1	.187	1.3	.294	1.8
3/4	1.050	.065	.70	.083	.88	.113	1.2	.154	1.5	.218	2.0	.308	2.5
1	1.315	.065	.88	.109	1.4	.133	1.7	.179	2.2	.250	2.9	.358	3.7
1 1/4	1.660	.065	1.1	.109	1.8	.140	2.3	.191	3.1	.250	3.9	.382	5.3
1 1/2	1.900	.065	1.3	.109	2.1	.145	2.8	.200	3.7	.281	5.0	.400	6.6
2	2 3/8	.065	1.6	.109	2.7	.154	3.7	.218	5.1	.343	7.6	.436	9.2
2 1/2	2 7/8	.083	2.5	.120	3.6	.203	5.9	.276	7.8	.375	10.2	.552	14.
3	3 1/2	.083	3.1	.120	4.4	.216	7.8	.300	10.5	.438	14.7	.600	19.
3 1/2	4	.083	3.6	.120	5.1	.226	9.3	.318	12.8			.636	23.
4	4 1/2	.083	4.0	.120	5.7	.237	11.0	.337	15.3	.531	23.0	.674	28.
5	5 9/16	.109	6.5	.134	8.0	.258	15.0	.375	21.3	.625	33.7	.750	39.
6	6 5/8	.109	7.8	.134	9.5	.280	19.4	.432	29.2	.719	46.4	.864	54.
8	8 5/8	.109	10.1	.148	13.7	.322	29.2	.500	44.4	.906	76.5	.875	74.
10	10 3/4	.134	15.6	.165	19.1	.365	41.4	.500	56.0	1.125	118	1.00	107
12	12 3/4	.156	21.5	.180	24.7	.375	50.7	.500	67.0	1.312	164	1.00	128
	14	.156	23.6	.188	28.4	.375	55.9	.500	73.8				
	16	.165	28.6	.188	32.5	.375	64.1	.500	84.7				
	18	.165	32.2	.188	36.6	.375	72.3	.500	95.7				
	20	.188	40.7	.218	47.1	.375	80.5	.500	107				
	22	.188	44.8	.218	51.9	.375	88.7	.500	118				
	24	.218	56.7	.250	64.9	.375	96.9	.500	128				
	26					.375	105	.500	139				
	28					.375	113	.500	150				
	30	.250	81.3	.312	101	.375	121	.500	161				
	32					.375	130	.500	172				
	34					.375	138	.500	183				
	36					.375	146	.500	194				
	40					.375	162	.500	216				
	42					.375	171	.500	227				
	48					.375	195	.500	260				

ATTACHMENT 3

HDPE PIPE DATA SHEET

Sargent & Lundy Engineering Services, Inc.	RPP-CALC-63664, Rev. 0 **CALCULATION SHEET**		
Project No. S54413.024	**Calculation No.** S54413.024-S-002	**Rev.** 1	**Page No.** 40 of 40
Title: LERF Basin 41 Catch Basin Design			
Prepared By: RW Davidson	**Date:** 4/27/2020	**Checked By:** PP Santos	**Date:** 4/27/2020

HDPE Water/Sewer | IPS

PRESSURE-RATED HDPE PIPE

JM Eagle

DELIVERING GOOD WATER TO YOU

SUBMITTAL AND DATA SHEET

HDPE IRON PIPE SIZE (IPS) PRESSURE PIPE

PIPE SIZE (IN)	AVG.O.D. (IN)	MIN. T. (IN)	AVG I.D. (IN)	WGT (LBS/FT)	MIN. T. (IN)	AVG I.D. (IN)	WGT (LBS/FT)	MIN. T. (IN)	AVG I.D. (IN)	WGT (LBS/FT)
		DR 7 (335 psi)			DR 9 (250 psi)			DR 11 (200 psi)		
4	4.500	0.643	3.137	3.40	0.500	3.440	2.75	0.409	3.633	2.30
5	5.375	0.795	3.747	4.85	0.618	4.109	3.92	0.506	4.338	3.29
6	6.625	0.946	4.619	7.36	0.736	5.065	5.96	0.602	5.349	4.99
7	7.125	1.018	5.056	8.52	0.792	5.446	6.89	0.648	5.751	5.78
8	8.625	1.232	6.013	12.48	0.958	6.594	10.09	0.784	6.963	8.46
10	10.750	1.536	7.494	19.40	1.194	8.219	15.68	0.977	8.679	13.14
12	12.750	1.821	8.889	27.28	1.417	9.746	22.07	1.159	10.293	18.49
14	14.000	2.000	9.760	32.90	1.556	10.107	26.61	1.273	11.301	22.30
16	16.000	2.286	11.154	42.97	1.778	12.231	34.75	1.455	12.915	29.12
18	18.000	2.571	12.549	54.37	2.000	13.760	43.97	1.636	14.532	36.84
20	20.000	2.857	13.943	67.13	2.222	15.289	54.28	1.818	16.146	45.49
22	22.000	3.143	15.337	81.23	2.444	16.819	65.68	2.000	17.760	55.05
24	24.000	3.429	16.732	96.67	2.667	18.346	78.18	2.182	19.374	65.52
26	26.000	N/A	N/A	N/A	2.889	19.875	91.75	2.364	20.988	76.90
28	28.000	N/A	N/A	N/A	3.111	21.405	106.40	2.545	22.605	89.15
30	30.000	N/A	N/A	N/A	3.333	22.934	122.13	2.727	24.219	102.35
32	32.000	N/A	N/A	N/A	N/A	N/A	N/A	2.909	25.833	116.46
34	34.000	N/A	N/A	N/A	N/A	N/A	N/A	3.091	27.447	131.48
36	36.000	N/A	N/A	N/A	N/A	N/A	N/A	3.273	29.061	147.41

Product Standard:
ANSI/AWWA C906
ASTM F714
ASTM D3035
Pipe Compound:
PPI TR-4 PE 4710, ASTM D3350
Cell Class 445574 C/E
Certification: ANSI/NSF 61, ANSI/NSF 14*
Additional Option:
Perforated (4" - 8")*

Nominal Laying Length: 40/50 feet (Laying length tolerances are in accordance with AWWA and ASTM standards)
Coil option available upon request for size 6" and below.
Installation: JM Eagle™ HDPE Water/Sewer Installation Guide

Manning Coefficient (n) = 0.009
Hazen-Williams Coefficient (c) = 150

*Supply may vary based on plant location. Please call regarding availability.

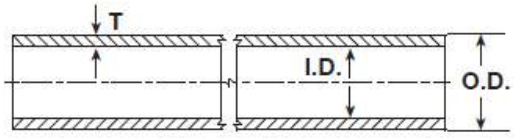

T: (Wall Thickness) **I.D.:** (Inside Diameter) **O.D.:** (Outside Diameter)

PIPE SIZE (IN)	AVG.O.D. (IN)	MIN. T. (IN)	AVG I.D. (IN)	WGT (LBS/FT)	MIN. T. (IN)	AVG I.D. (IN)	WGT (LBS/FT)	MIN. T. (IN)	AVG I.D. (IN)	WGT (LBS/FT)
		DR 13.5 (160 psi)			DR 17 (125 psi)			DR 19 (111 psi)		
4	4.500	0.333	3.794	1.91	0.265	3.938	1.55	0.237	3.998	1.39
5	5.375	0.412	4.531	2.73	0.327	4.705	2.21	0.283	4.775	1.99
6	6.625	0.491	5.584	4.15	0.390	5.798	3.35	0.349	5.885	3.02
7	7.125	0.528	6.006	4.80	0.420	6.237	3.88	0.375	6.330	3.49
8	8.625	0.639	7.270	7.03	0.507	7.550	5.68	0.454	7.663	5.12
10	10.750	0.796	9.062	10.92	0.632	9.410	8.82	0.566	9.550	7.95
12	12.750	0.944	10.749	15.36	0.750	11.160	12.41	0.671	11.327	11.19
14	14.000	1.037	11.802	18.52	0.824	12.253	14.98	0.737	12.438	13.49
16	16.000	1.185	13.488	24.19	0.941	14.005	19.55	0.842	14.215	17.61
18	18.000	1.333	15.174	30.61	1.059	15.755	24.75	0.947	15.992	22.29
20	20.000	1.481	16.860	37.79	1.176	17.507	30.53	1.053	17.768	27.52
22	22.000	1.630	18.544	45.75	1.294	19.257	36.86	1.158	19.545	33.30
24	24.000	1.778	20.231	54.44	1.412	21.007	43.99	1.263	21.322	39.63
26	26.000	1.926	21.917	63.89	1.529	22.759	51.61	1.368	23.100	46.51
28	28.000	2.074	23.603	74.09	1.647	24.508	59.87	1.474	24.875	53.94
30	30.000	2.222	25.289	85.04	1.765	26.258	68.74	1.579	26.653	61.92
32	32.000	2.370	26.967	96.76	1.882	28.010	78.18	1.684	28.430	70.45
34	34.000	2.519	28.660	109.26	2.000	29.760	88.28	1.790	30.205	79.54
36	36.000	2.667	30.346	122.49	2.118	31.510	98.98	1.895	31.983	89.17
42	42.000	3.111	35.404	166.70	2.471	36.761	134.72	2.211	37.314	121.37
48	48.000	3.556	40.462	217.76	2.824	42.013	175.97	2.526	42.644	158.52
54	54.000	N/A	N/A	N/A	3.177	47.265	222.67	2.842	47.975	200.63

PIPE SIZE (IN)	AVG.O.D. (IN)	MIN. T. (IN)	AVG I.D. (IN)	WGT (LBS/FT)	MIN. T. (IN)	AVG I.D. (IN)	WGT (LBS/FT)	MIN. T. (IN)	AVG I.D. (IN)	WGT (LBS/FT)
		DR 21 (100 psi)			DR 26 (80 psi)			DR 32.5 (63 psi)		
4	4.500	0.214	4.046	1.27	0.173	4.133	1.03	0.138	4.207	0.83
5	5.375	0.265	4.832	1.81	0.214	4.936	1.48	0.171	5.025	1.19
6	6.625	0.315	5.957	2.74	0.255	6.084	2.24	0.204	6.193	1.81
7	7.125	0.340	6.406	3.18	0.274	6.544	2.59	0.219	6.661	2.09
8	8.625	0.411	7.754	4.66	0.332	7.921	3.80	0.265	8.063	3.06
10	10.750	0.512	9.665	7.24	0.413	9.874	5.90	0.331	10.048	4.77
12	12.750	0.607	11.463	10.17	0.490	11.711	8.30	0.392	11.919	6.69
14	14.000	0.667	12.586	12.28	0.538	12.895	10.00	0.431	13.086	8.08
16	16.000	0.762	14.385	16.03	0.615	14.696	13.07	0.492	14.957	10.54
18	18.000	0.857	16.183	20.28	0.692	16.533	16.54	0.554	16.826	13.36
20	20.000	0.952	17.982	25.03	0.769	18.370	20.43	0.615	18.696	16.48
22	22.000	1.048	19.778	30.31	0.846	20.206	24.72	0.677	20.565	19.95
24	24.000	1.143	21.577	36.06	0.923	22.043	29.42	0.738	22.435	23.72
26	26.000	1.238	23.375	42.32	1.000	23.880	34.53	0.800	24.304	27.86
28	28.000	1.333	25.174	49.07	1.077	25.717	40.05	0.862	26.173	32.33
30	30.000	1.429	26.971	56.36	1.154	27.554	45.98	0.923	28.043	37.09
32	32.000	1.542	28.730	64.11	1.231	29.390	52.31	0.985	29.912	42.22
34	34.000	1.619	30.568	72.36	1.308	31.227	59.06	1.046	31.782	47.63
36	36.000	1.714	32.366	81.12	1.385	33.064	66.22	1.108	33.651	53.42
42	42.000	2.000	37.760	110.43	1.615	38.576	90.08	1.292	39.261	72.68
48	48.000	2.286	43.154	144.25	1.846	44.086	117.68	1.477	44.869	94.95
54	54.000	2.571	48.549	182.51	2.077	49.597	148.95	1.662	50.477	120.20
63	63.000	3.000	56.640	248.46	2.423	57.863	202.73	1.938	58.891	163.53

DOCUMENT RELEASE AND CHANGE FORM

Prepared For the U.S. Department of Energy, Assistant Secretary for Environmental Management
By Washington River Protection Solutions, LLC., PO Box 850, Richland, WA 99352
Contractor For U.S. Department of Energy, Office of River Protection, under Contract DE-AC27-08RV14800

TRADEMARK DISCLAIMER: Reference herein to any specific commercial product, process, or service by trade name, trademark, manufacturer, or otherwise, does not necessarily constitute or imply its endorsement, recommendation, or favoring by the United States government or any agency thereof or its contractors or subcontractors. Printed in the United States of America.

Release Stamp

DATE:
May 19,2020
HANFORD RELEASE

1. **Doc No:** RPP-CALC-63745 **Rev.** 00

2. **Title:**
LERF Basin 41 Construction Equipment Limitations for Liner and Geotextile Protection

3. **Project Number:** T1P226 ☐N/A

4. **Design Verification Required:** ☐Yes ☒No

5. **USQ Number:** ☒ N/A RPP-27195

6. **PrHA Number** **Rev.** ☒ N/A

Clearance Review Restriction Type: public

7. **Approvals**

Title	Name	Signature	Date
Clearance Review	Ayers, Lynn M	*Ayers, Lynn M*	05/19/2020
Design Authority	Wilson, Nathaniel W	*Wilson, Nathaniel W*	04/24/2020
Checker	Debban, Jeremy A	*Debban, Jeremy A*	04/10/2020
Document Control Approval	Scales, Anthony	*Scales, Anthony*	05/19/2020
Environmental Protection	Wall, Jeremy M	*Wall, Jeremy M*	04/29/2020
Originator	Dorsh, Paul M	*Dorsh, Paul M*	04/10/2020
Other Approver	McShane, Michael P	*McShane, Michael P*	05/07/2020
Responsible Engineering Manager	Huntington, Matthew R	*Huntington, Matthew R*	04/29/2020

8. **Description of Change and Justification**

Initial Release.

Design checks were performed in accordance with Sargent & Lundy ESD Quality Assurance Procedure (QAP). Becasue of the General Service status of the equipment, a graded approach was applied and design verification was not performed as allowed by QAP 3.5, Design Verification.

Note that Paul Dorsh is signing as Originator for Taylor Grant and Jeremy Debban is signing as Checker for Darrel Packard. Taylor Grant and Darrel Packard are not currently in SPF.

The trademark attribution information below is applicable, and should be added to the next revision.

Bobcat is a registered trademark of Clark Equipment Company, West Fargo, North Dakota.

9. **TBDs or Holds** ☒N/A

10. **Related Structures, Systems, and Components**

a. **Related Building/Facilities** ☐N/A	b. **Related Systems** ☐N/A	c. **Related Equipment ID Nos. (EIN)** ☒N/A
LERF FACILITIES	LERF	

11. **Impacted Documents – Engineering** ☒N/A

Document Number	Rev.	Title

12. **Impacted Documents (Outside SPF):**

N/A

13. **Related Documents** ☐N/A

Document Number	Rev.	Title
MT-50497	00	Liquid Effluent Retention Facility (LERF) Basin 41

14. **Distribution**

Name	Organization
Angevine, Brennan T	MISSION ANALYSIS ENGINEERING
Blaak, Whitney S	COGNIZANT SYSTEM ENGINEERING
Demiter, Scott M	ETF OPERATIONS
Foster, Jim	242-A/AW/ETF OPERATIONS
Goessmann, Glen E	ENGINEERING PROGRAMS
Greenhalgh, Aaron M	TANK FARM PROJECTS ENGINEERING
Halgren, Dale L	ETF ENGINEERING
Harris, John W	SAFETY PROGRAM SERVICES RC/P
Joslyn, Cameron C	ETF ENGINEERING
McFerran, Brandon E	242-A/AW/ETF OPERATIONS
McShane, Michael P	ENGINEERING PROGRAMS
Omberg Carro, Susan K	NUCLEAR SAFETY

DOCUMENT RELEASE AND CHANGE FORM	**Doc No:** RPP-CALC-63745 **Rev.** 00

14. **Distribution**

Name	**Organization**
Powers, Daniel J	ETF ENGINEERING
Roosendaal, Gene D	TFP PROJECT MANAGEMENT
Rutherford, Wally	ETF ENGINEERING
Sackett, Tom E	TANK FARM PROJECTS
Samoska, Jerry A	INSTRUMENT & CNTRL ENGINEERING
Shultz, Milton V	NUCLEAR SAFETY
Smith, Gregory E	TANK FARM PROJECTS ENGINEERING
Smoot, Bill R	TFP RADCON
Swanson, Brad L	242-A/AW/ETF OPERATIONS
Wall, Jeremy M	RETRVL & CLOSURE/PROJ ENV CMPL
Wilson, Nathaniel W	ETF PROJECTS ENGINEERING

RPP-CALC-63745
Revision 0

LERF Basin 41 Construction Equipment Limitations for Liner and Geotextile Protection

Prepared by

G. T. Grant
Sargent & Lundy for Washington River Protection Solutions, LLC

Date Published
April 2020

washington river protection solutions

DAVID E. NIELSON
STATE OF WASHINGTON
28592
REGISTERED
PROFESSIONAL ENGINEER

5-18-2020

Prepared for the U.S. Department of Energy
Office of River Protection

Contract No. DE-AC27-08RV14800

Approved for Public Release;
Further Dissemination Unlimited

RPP-CALC-63745, Rev. 0

Sargent & Lundy Engineering Services, Inc.	**CALCULATION COVER SHEET**	**Page No.** 1 of 51	
		Date 04/08/2020	**Rev. No.** 0
		Calculation No: S54413.024-C-001	

Project No.	**Project Title:**	**Client:**
S54413.024	LERF Basin 41 Design	Washington River Protection Solutions

Title:

LERF Basin 41 Construction Equipment Limitations for Liner and Geotextile Protection

Purpose and Objective:

The purpose of this calculation is to estimate the risk of damage to the secondary (bottom) HDPE-liner during construction. The greatest risk for damage is expected when the gravel drainage layer is spread using lightweight construction equipment. A geotextile will be installed over the HDPE liner prior to placing and spreading the gravel. The potential for damaging the geotextile will be evaluated first; the potential for damage to the liner will then be evaluated if necessary.

Rev. No.	Total Pages		Prepared By	Checked By	PM/TL
0	51	**Print Name/ Sign:**	G. Taylor Grant	Darrel J. Packard	Paul M. Dorsh, P.E.
		Date:	04/08/2020	4/9/2020	4/10/2020

Revision Description (Revision Description/Affected Pages):

		Print Name/ Sign:			
		Date:			

Revision Description (Revision Description/Affected Pages):

RPP-CALC-63745, Rev. 0

CALCULATION REVIEW CHECKLIST

Project No.	Calculation No.	Rev. No.	Page No.
S54413.024	S54413.024-C-001	0	2 of 51

Items Checked	Accept Y	Accept N	Accept N/A	Description of Resolution for Unacceptable Items
1. Cover sheets properly completed.	√			
2. Calculation sheet headers complete with calculation number, revision number, etc.	√			
3. Calculation sheet contents are legible, accurate, and complete per format.	√			
4. Listed attachments included.	√			
5. Calculation objective clearly described.	√			
6. Criteria are suitable and properly referenced to task specific documents.	√			
7. Assumptions and input data selected, described, reasonable, and attached or referenced to task documents.	√			
8. Calculation method identified and appropriate for the design activity.	√			
9. Calculation results reasonable and correctly described in results and conclusions.	√			
10. Physical property calculations generated by CAD software verified via hand calculations.			√	
11. Computer program identified with version and revision.			√	
12. Computer input/output provided or referenced and reasonable.			√	
13. Computer run traceable to calculation (file #, etc.).			√	
14. Computer input/output data and problem type within validation/verification range of use.			√	
15. Computer program validation/verification addressed.			√	
16. Computer operating system in use for calculation preparation is the same as when the software was verified on machine.			√	

Calculation Checking Method	√	Applicable Pages
1. Direct Step-by-Step Check	√	
2. Reference Chart(s) or Book(s) Comparison (Append Documentation)		
3. Alternate Calculation (Append Documentation)		

Comments:

Preparer (Print Name and Sign):	Date:
G. Taylor Grant	4/8/2020
Checker (Print Name and Sign):	**Date:**
Darrel Packard	4/9/2020

CALCULATION SHEET

Project No. S54413.024	**Calculation No.** S54413.024-C-001	**Rev.** 0	**Page No.** 3 of 51
Title: LERF Basin 41 Construction Equipment Limitations for Liner and Geotextile Protection			
Prepared By: G. Taylor Grant	**Date:** 04/08/2020	**Checked By:** Darrel J. Packard	**Date:** 04/09/2020

TABLE OF CONTENTS

1.0 PURPOSE 5

2.0 METHODOLOGY 5

3.0 DESIGN INPUTS 5
- 3.1 Gravel Drainage Layer 5
- 3.2 Construction Equipment 6

4.0 ASSUMPTIONS 6

5.0 COMPUTER SOFTWARE 6

6.0 RESULTS 7

7.0 REFERENCES 7

8.0 CALCULATIONS 8
- 8.1 Burst Resistance (Ref. 1, Section 2.5.2): 8
- 8.2 Tensile Strength Requirements (Ref. 1, Section 2.5.3): 9
- 8.3 Puncture Strength Requirements (Ref. 1, Section 2.5.4): 10

Attachments

ATTACHMENT – 1 – DESIGNING WITH GEOSYNTHETICS, 6TH EDITION

ATTACHMENT – 2 – GEOTEXTILE CUT SHEETS

ATTACHMENT – 3 – BOBCAT T550 SKID-STEER SPECIFICATIONS

ATTACHMENT – 4 – GEOSYNTHTIC INSTITUTE GRI TEST METHOD GT12(a) – ASTM VERSION

ATTACHMENT – 5 – CORRELATION OF ASTM D4833 AND D6241 GEOTEXTILE PUNCTURE TEST METHODS AND RESULTS FOR USE ON WISDOT PROJECTS

ATTACHMENT – 6 – H-2-838749, SHEET 1, REV. 0, LERF BASIN 41 CIVIL SECONDARY LINER

ATTACHMENT – 7 – WSDOT M41-10 9-03.12(5) GRAVEL BACKFILL FOR DRYWELLS GRADATION

ATTACHMENT – 8 – CAT D6 DOZER SPECIFICATIONS

CALCULATION SHEET

Project No. S54413.024	**Calculation No.** S54413.024-C-001	**Rev.** 0	**Page No.** 4 of 51
Title: LERF Basin 41 Construction Equipment Limitations for Liner and Geotextile Protection			
Prepared By: G. Taylor Grant	**Date:** 04/08/2020	**Checked By:** Darrel J. Packard	**Date:** 04/09/2020

Acronyms

ASTM	ASTM International or American Society for Testing and Materials
DCR	Demand-to-Capacity Ratio
GCL	Geosynthetic Clay Liner
HDPE	High Density Polyethylene
LERF	Liquid Effluent Retention Facility

CALCULATION SHEET

Project No. S54413.024	**Calculation No.** S54413.024-C-001	**Rev.** 0	**Page No.** 5 of 51
Title: LERF Basin 41 Construction Equipment Limitations for Liner and Geotextile Protection			
Prepared By: G. Taylor Grant	**Date:** 04/08/2020	**Checked By:** Darrel J. Packard	**Date:** 04/09/2020

1.0 PURPOSE

The purpose of this calculation is to estimate the risk of damage to the secondary (bottom) HDPE-liner during construction. The greatest risk for damage is expected when the gravel drainage layer is spread using lightweight construction equipment. A geotextile will be installed over the HDPE liner prior to placing and spreading the gravel. The potential for damaging the geotextile will be evaluated first; the potential for damage to the liner will then be evaluated if necessary.

2.0 METHODOLOGY

The liner system along the basin floor is comprised of (from top to bottom):

- Primary HDPE liner
- GCL
- Geotextile
- Gravel Drainage Layer
- Geotextile
- Secondary HDPE liner
- Geotextile
- Soil/Bentonite mixture
- Geotextile

Beneath the gravel drainage layer is a geotextile with the secondary HDPE liner underneath the geotextile. The geotextile will be analyzed for its burst, tensile, and puncture strength, and compared to typical values to ensure sufficient strength to protect the secondary HDPE liner during construction. Typical geotextile strength values will come from Reference 2. The required burst, tensile, and puncture strengths will be calculated in accordance with Section 2.5.2 “Burst Resistance,” 2.5.3 “Tensile Strength,” and 2.5.4 “Puncture Resistance” in Reference 1. The results of the calculations will be used to specify the required geotextile strengths.

3.0 DESIGN INPUTS

3.1 Gravel Drainage Layer

The gravel drainage layer “shall conform to WSDOT M41-10 9-03.12(5) Gravel Backfill for Drywells gradation, or an approved equal” (Reference 7, Section 31-90-52 2.1.D.1.a.ii). The maximum sieve size for this gradation is 1.5” and requires 99-100% of material to pass. The maximum dimeter will be used in these calculations.

Gravel diameter = d_a = 1.5 in (Reference 7)

3.2 Construction Equipment

A Bobcat skid-steer (or similar) will be allowed above the liner. Its use will be limited to spreading gravel, and it will never drive on less than 0.5 feet of gravel. Information regarding the weight and balance of the assumed Bobcat model T550 skid-steer was obtained from Cat's website.

Bobcat ground pressure = p_{bobcat}` = 5.8 psi (Reference 3)

A dozer could potentially be used for spreading gravel. A Cat D6 dozer ground pressure is obtained from Cat's website.

Dozer ground pressure = p_{dozer}` = 7.9 psi (Reference 8)

The maximum ground pressure of the construction equipment will be used in the following calculations.

Equipment ground pressure = p` = MAX($p_{bobcat}$`, p_{dozer}`) = 7.9 psi

4.0 ASSUMPTIONS

No assumptions have been made in this calculation.

5.0 COMPUTER SOFTWARE

No unverified computer software was used in this analysis. Calculations are checked using a handheld calculator.

CALCULATION SHEET

Project No. S54413.024	**Calculation No.** S54413.024-C-001	**Rev.** 0	**Page No.** 7 of 51
Title: LERF Basin 41 Construction Equipment Limitations for Liner and Geotextile Protection			
Prepared By: G. Taylor Grant	**Date:** 04/08/2020	**Checked By:** Darrel J. Packard	**Date:** 04/09/2020

6.0 RESULTS

A summary of results is shown below.

Item	Parameter	DCR	Remark
Geotextile	Burst	0.061	
	Tensile	0.008	
	Puncture	0.081	

A summary of material requirements is shown below.

Item	Parameter	Requirement
Geotextile	Burst	N/A
	Tensile	N/A - Tension will be controlled by liner stress in Calculation S54413.024-C-004 / RPP-CALC-63748 Rev. 0
	Puncture	700 lbs (ASTM D6241)

The burst and tensile forces acting on the geotextile are negligible compared to the capacities of the HDPE liner. The puncture force calculated in Section 8.3 (56.45 lbs, ASTM D4833) is less than the required HDPE material strength of 108 lbs given in the specifications. The required strengths of the HDPE liner will be controlled by Calculation S54413.024-C-004 / RPP-CALC-63748 Rev. 0, *Side Slope Liner Stresses*.

7.0 REFERENCES

1) Koerner, Robert M., *Designing with Geosynthetics*, 6th Edition

2) Tencate geotextile cut sheets.

3) Bobcat S740 Skid-steer Specifications

4) Geosynthetic Institute, GRI Test Method GT12(a) – ASTM Version, *Test Methods and Properties for Nonwoven Geotextiles Used as Protection (or Cushioning) Materials*

5) Elhajjar, Rani, Hani H. Titi, Stacy Van Dyke, and Hamid Erfanian, *Correlation of ASTM D4833 and D6241 Geotextile Puncture Test Methods and Results for Use on WisDOT Projects*, 2017

6) H-2-838749, Sheet 1, Rev. 0, LERF Basin 41 Civil Secondary Liner

7) RPP-SPEC-63632, Rev. 0, LERF Basin 41 Design Construction Specification

8) CAT D6 Dozer Specifications

CALCULATION SHEET

Project No. S54413.024	**Calculation No.** S54413.024-C-001	**Rev.** 0	**Page No.** 8 of 51
Title: LERF Basin 41 Construction Equipment Limitations for Liner and Geotextile Protection			
Prepared By: G. Taylor Grant	**Date:** 04/08/2020	**Checked By:** Darrel J. Packard	**Date:** 04/09/2020

8.0 CALCULATIONS

8.1 Burst Resistance (Ref. 1, Section 2.5.2):

Section 2.5.2 in Reference 1 discusses geotextiles to be used as a soil separator. The below calculation will be compared to ASTM D3786 (Mullen Burst Strength) because "the field situation is analogous to the ASTM D3786 (Mullen) burst test…" according to Reference 1, Page 178.

The below equation is from Reference 1, Attachment 1, Page 179.

$FS = (p_{test} \times d_{test}) / (\Pi RF \times p` \times d_v)$

Where the below values are defined on Reference 1, Attachment 1, Pages 178 and 179, unless noted:

FS = factor of safety for burst resistance

d_v = the maximum void diameter in between individual stones
$\approx 0.33 \times d_a = 0.33 \times 1.5$ in = 0.495 in

d_{test} = the diameter of the burst test device = 30 mm

ΠRF = cumulative reduction factors = 2.5 (Reference 1, Attachment 1, Table 2.8a, Page 175, max. value for Separation – Installation Damage)

p_{test} = burst pressure of the geotextile at failure

The above equation can be rewritten to solve for p_{test} which will result in the geotextiles burst strength:

$p_{test} = (FS \times \Pi RF \times p` \times d_v) / (d_{test})$

The factor of safety will be determined once the required and allowable strengths have been determined, therefore set FS = 1.

$p_{test} = (FS \times \Pi RF \times p` \times d_v) / (d_{test}) = (1 \times 2.5 \times 7.9 \text{ psi} \times 0.495 \text{ in}) / (1.181 \text{ in}) = 8.28 \text{ psi}$

Reference 2 provides several cut sheets of geotextiles. The Mullen Burst Strength of a typical geotextile subjected to the Mullen Burst Test has a strength of 135 psi – 740 psi (ASTM D3786). Conservatively use a strength of 135 psi.

$DCR = p_{test} / 135 \text{ psi} = 8.28 \text{ psi} / 135 \text{ psi} = 0.061$

Although the Mullen Burst Strength is not a common test method for geotextiles anymore, the resulting DCR demonstrates the geotextiles ability to resist bursting under the applied loads.

CALCULATION SHEET

Project No. S54413.024	**Calculation No.** S54413.024-C-001	**Rev.** 0	**Page No.** 9 of 51
Title: LERF Basin 41 Construction Equipment Limitations for Liner and Geotextile Protection			
Prepared By: G. Taylor Grant	**Date:** 04/08/2020	**Checked By:** Darrel J. Packard	**Date:** 04/09/2020

8.2 Tensile Strength Requirements (Ref. 1, Section 2.5.3):

Section 2.5.3 in Reference 1 discusses the tensile stress in geotextile that can develop when voids are present in between stones on top of the geotextile. See Figure 2.23 below from Reference 1, Page 182.

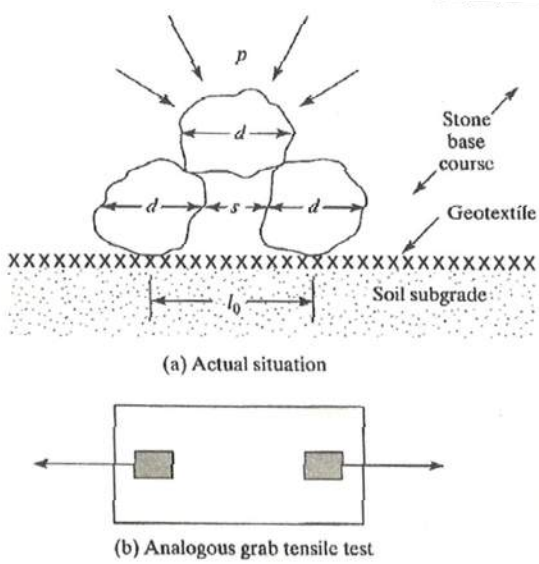

Figure 2.23 Geotextile being subjected to tensile stress as surface pressure is applied and stone base attempts to spread laterally.

The required strength of the geotextile will be based on Equation 2.29 from Reference 1, Page 182:

$T_{reqd} = p` \times d_v^2 \times f(\varepsilon)$

Where:

p` is defined in Section 3.2

d_v is defined in Section 8.1

f(ε) is the geotextiles strain function. A consistent minimum elongation is 0.50 (Reference 2). Example 2.9 in Reference 1, Page 183 used f(ε)=0.52. Set f(ε)=1.0 to be conservative.

$T_{reqd} = p` \times d_v^2 \times f(\varepsilon) = 7.9 \text{ psi} \times (0.495 \text{ in})^2 \times 1.0 = 1.94 \text{ lbs}$

The required grab tensile strength is 230 lbs (Reference 4, Table 1a) for a 10 oz/sy geotextile.

DCR = 1.94 lbs / 230 lbs = 0.008

CALCULATION SHEET

Project No. S54413.024	**Calculation No.** S54413.024-C-001	**Rev.** 0	**Page No.** 10 of 51
Title: LERF Basin 41 Construction Equipment Limitations for Liner and Geotextile Protection			
Prepared By: G. Taylor Grant	**Date:** 04/08/2020	**Checked By:** Darrel J. Packard	**Date:** 04/09/2020

8.3 Puncture Strength Requirements (Ref. 1, Section 2.5.4):

Section 2.5.4 in Reference 1 discusses the required puncture resistance of the geotextile. The puncture resistance of a geotextile is important to prevent damage to the geotextile from small object, stones, etc, that may be pressed against the geotextile. This is illustrated below in Figure 2.24 from Reference 1, Page 184.

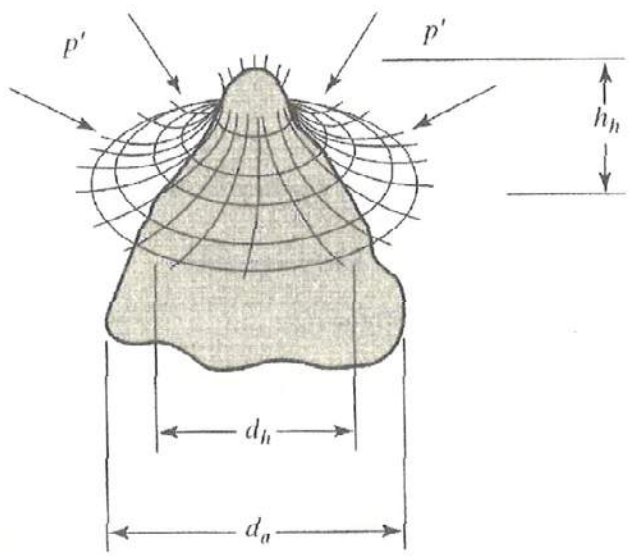

Figure 2.24 Visualization of a stone puncturing a geotextile as pressure is applied from above.

The required puncture strength of the geotextile is determined by Equation 2.30 from Reference 1, Page 184:

$F_{req} = p` \times d_a^2 \times S_1 \times S_2 \times S_3$

Where:

p` is defined in Section 3.2

d_a is defined in Section 3.1

S_1 is a "protrusion factor of the puncturing object," defined in Table 2.9 in Reference 1, Page 185.

S_2 is a "scale factor to adjust the ASTM D4833 puncture test value that uses an 8.0 mm diameter puncture probe to the actual puncturing object," defined in Table 2.9 in Reference 1, Page 185.

S_3 is a "shape factor to adjust the ASTM D4833 flat puncture probe to the actual shape of the puncturing object," defined in Table 2.9 in Reference 1, Page 185.

CALCULATION SHEET

Project No. S54413.024	**Calculation No.** S54413.024-C-001	**Rev.** 0	**Page No.** 11 of 51
Title: LERF Basin 41 Construction Equipment Limitations for Liner and Geotextile Protection			
Prepared By: G. Taylor Grant	**Date:** 04/08/2020	**Checked By:** Darrel J. Packard	**Date:** 04/09/2020

Table 2.9 from Reference 1, Page 185 is shown below:

TABLE 2.9 RECOMMENDED VALUES FOR INDEPENDENT FACTORS USED IN PUNCTURE ANALYSIS (DIMENSIONLESS)

Puncturing Object	S_1	S_2	S_3
angular & relatively large	0.9	0.8	0.9
angular & relatively small	0.6	0.6	0.7
subrounded & relatively large	0.7	0.6	0.6
subrounded & relatively small	0.4	0.4	0.5
rounded & relatively large	0.5	0.4	0.4
rounded & relatively small	0.2	0.2	0.3

S_1 = protrusion factor
S_2 = scale factor
S_3 = shape factor
} see Eq. 2.30

The values for S_1, S_2, and S_3 will conservatively be taken as the values for a puncturing object that is "angular & relatively large."

$S_1 = 0.9$

$S_2 = 0.8$

$S_3 = 0.9$

The required puncture strength is:

$F_{req} = p` \times d_a^2 \times S_1 \times S_2 \times S_3 = 7.9 \text{ psi} \times (1.5 \text{ in})^2 \times 0.9 \times 0.8 \times 0.9 = 11.52 \text{ lbs}$

The required puncture strength calculated above is for use with ASTM D4833. Current industry practice uses ASTM D6241 more commonly, however there is not a one-to-one correlation between the two ASTM methods. A correlation between the two ASTM methods is developed in Reference 5.

$F_{req_CBR} = 4.90 \times F_{req} = 4.90 \times 11.52 \text{ lbs} = 56.45 \text{ lbs}$

The required geotextile puncture strength in accordance with ASTM D6241 is 700 lbs.

DCR = 56.45 lbs / 700 lbs = 0.081

CALCULATION SHEET

Project No. S54413.024	**Calculation No.** S54413.024-C-001	**Rev.** 0	**Page No.** 12 of 51
Title: LERF Basin 41 Construction Equipment Limitations for Liner and Geotextile Protection			
Prepared By: G. Taylor Grant	**Date:** 04/08/2020	**Checked By:** Darrel J. Packard	**Date:** 04/09/2020

ATTACHMENT – 1 – DESIGN WITH GEOSYNTHETICS, 6TH EDITION

Sargent & Lundy Engineering Services, Inc.

CALCULATION SHEET

Project No.	S54413.024	**Calculation No.**	S54413.024-C-001	**Rev.**	0	**Page No.** 13 of 51	
Title:	LERF Basin 41 Construction Equipment Limitations for Liner and Geotextile Protection						
Prepared By:	G. Taylor Grant	**Date:** 04/08/2020	**Checked By:**	Darrel J. Packard		**Date:**	04/09/2020

modified for the anticipated in-situ conditions. This could be done directly in the test procedure, for example by conducting a completely simulated performance test; but in most cases, this simply is not possible. Simulating installation damage, performing long-term creep testing, using site-specific liquids, reproducing in-situ pore water stresses, providing complete stress state modeling, and so on are generally not feasible. To account for such differences between the laboratory measured test value and the desired performance value, two approaches can be taken:

1. Require an extremely high factor of safety at the end of a problem.
2. Use reduction factors on the laboratory-generated test value to make it into a site-specific allowable value.

At the suggestion of Voskamp and Risseeuw [66], the latter alternative of *reduction factors* (RF values) will be used in this book. By doing this, the usual value of factor of safety can be assessed in the final analysis. Our approach will be to refer to the general laboratory-obtained value as an "ultimate" value and to modify it by reduction factors to obtain an "allowable" value. See [67] for additional rationale and numeric values.

2.4.1 Strength Related Problems

For problems dealing with geotextile strength, such as in separation and reinforcement applications, the formulation of the allowable values takes the form of equation 2.24a. Typical ranges of values for reduction factors for different applications are given in table 2.8a. These values must be tempered by the site-specific considerations. Also, note that if the laboratory test includes the mechanism listed, it would appear in the equation as a value of 1.0.

$$T_{allow} = T_{ult}\left(\frac{1}{RF_{ID} \times RF_{CR} \times RF_{CBD}}\right) \tag{2.24a}$$

$$T_{allow} = T_{ult}\left(\frac{1}{\Pi RF}\right) \tag{2.24b}$$

TABLE 2.8a RECOMMENDED STRENGTH REDUCTION FACTOR VALUES FOR USE IN EQ. 2.24a

Area	Range of Reduction Factors		
	Installation Damage	Creep*	Chemical/Biological Degradation**
Separation	1.1 to 2.5	1.5 to 2.5	1.0 to 1.5
Cushioning	1.1 to 2.0	1.2 to 1.5	1.0 to 2.0
Unpaved roads	1.1 to 2.0	1.5 to 2.5	1.0 to 1.5
Walls	1.1 to 2.0	2.0 to 4.0	1.0 to 1.5
Embankments	1.1 to 2.0	2.0 to 3.5	1.0 to 1.5
Bearing and foundations	1.1 to 2.0	2.0 to 4.0	1.0 to 1.5
Slope stabilization	1.1 to 1.5	2.0 to 3.0	1.0 to 1.5
Pavement overlays	1.1 to 1.5	1.0 to 2.0	1.0 to 1.5
Railroads (filter/sep.)	1.5 to 3.0	1.0 to 1.5	1.5 to 2.0
Flexible forms	1.1 to 1.5	1.5 to 3.0	1.0 to 1.5
Silt fences	1.1 to 1.5	1.5 to 2.5	1.0 to 1.5

*The low end of the range refers to applications which have relatively short service lifetimes and/or situations where creep deformations are not critical to the overall system performance.
**Previous editions of this book have listed biological degradation as a separate reduction factor. As described in Section 2.3.6, however, there is no evidence of such degradation for the polymers used to manufacture geotextiles.

where
T_{allow} = allowable tensile strength,
T_{ult} = ultimate tensile strength,
RF_{ID} = reduction factor for installation damage (≥ 1.0),
RF_{CR} = reduction factor for creep (≥ 1.0),
RF_{CBD} = reduction factor for chemical and biological degradation (≥ 1.0), and
ΠRF = value of cumulative reduction factors (≥ 1.0).

Note that equation 2.24a could have included additional site-specific terms, such as reduction factors for seams and for intentionally made holes. It also could have been formulated with fractional multipliers (values ≤ 1.0) and placed in the numerator of the equation or on the opposite side of the equation as with the *load and reduction factor design method* (LRFD). While the equation indicates tensile strength, it can be applied to burst strength, tear strength, puncture strength, impact strength, and so on.

Sargent & Lundy Engineering Services, Inc.

CALCULATION SHEET

Project No.	S54413.024	**Calculation No.**	S54413.024-C-001	**Rev.**	0	**Page No.** 14 of 51	
Title:	LERF Basin 41 Construction Equipment Limitations for Liner and Geotextile Protection						
Prepared By:	G. Taylor Grant	**Date:** 04/08/2020	**Checked By:**	Darrel J. Packard		**Date:**	04/09/2020

2.4.2 Flow Related Problems

For problems dealing with flow through or within a geotextile, such as filtration and drainage applications, the formulation of the allowable values takes the form of equation 2.25a. Typical values for reduction factors are given in table 2.8b. Note that these values must be tempered by the site-specific conditions as in section 2.4.1. If the laboratory test includes the mechanism listed, it would appear in the equation as a value of 1.0.

$$q_{allow} = q_{ult}\left(\frac{1}{RF_{SCB} \times RF_{CR} \times RF_{IN} \times RF_{CC} \times RF_{BC}}\right) \quad (2.25a)$$

$$q_{allow} = q_{ult}\left(\frac{1}{\Pi RF}\right) \quad (2.25b)$$

where

q_{allow} = allowable flow rate,
q_{ult} = ultimate flow rate,
RF_{SCB} = reduction factor for soil clogging and blinding (≥ 1.0),
RF_{CR} = reduction factor for creep reduction of void space (≥ 1.0),
RF_{IN} = reduction factor for adjacent materials intruding into geotextile's void space (≥ 1.0),
RF_{CC} = reduction factor for chemical clogging (≥ 1.0),
RF_{BC} = reduction factor for biological clogging (≥ 1.0), and
ΠRF = value of cumulative reduction factors (≥ 1.0).

TABLE 2.8b RECOMMENDED FLOW REDUCTION FACTOR VALUES FOR USE IN EQUATION 2.25a

Application	Range of Reduction Factors				
	Soil Clogging and Blinding*	Creep Reduction of Voids	Intrusion into Voids	Chemical Clogging**	Biological Clogging***
Retaining wall filters	2.0 to 4.0	1.5 to 2.0	1.0 to 1.2	1.0 to 1.2	1.0 to 1.3
Underdrain filters	2.0 to 10	1.0 to 1.5	1.0 to 1.2	1.2 to 1.5	2.0 to 4.0***
Erosion control filters	2.0 to 10	1.0 to 1.5	1.0 to 1.2	1.0 to 1.2	2.0 to 4.0
Landfill filters	2.0 to 10	1.5 to 2.0	1.0 to 1.2	1.2 to 1.5	2.0 to 5.0***
Gravity drainage	2.0 to 4.0	2.0 to 3.0	1.0 to 1.2	1.2 to 1.5	1.2 to 1.5
Pressure drainage	2.0 to 3.0	2.0 to 3.0	1.0 to 1.2	1.1 to 1.3	1.1 to 1.3

*If stone rip-rap or concrete blocks cover the surface of the geotextile use either the upper values, orinclude an addition reduction factor.
**Values can be higher particularly for high alkalinity groundwater.
***Values can be higher for extremely high microorganism content and/or growth of organisms and plant/vegetation roots.

As with the equation 2.24 for strength reduction, this flow reduction equation could also have additional site-specific terms included, e.g., blocking of a portion of the geotextile's surface by rip-rap or concrete blocks.

2.5 DESIGNING FOR SEPARATION

Application areas for geotextiles used for the separation function were given in section 1.3.3. There are indeed many specific applications, and it could said, in a general sense, that geotextiles always serve a separation function. If they do not serve this function, any other function, including the primary function, will not be served properly. This should not give the impression that the geotextile function of separation always play a secondary role. Many situations call for separation only, and in such cases the geotextiles do serve a significant and worthwhile purpose.

2.5.1 Separation Applications

There are many geotextile applications where separation is the major function. Certainly, the use of thick and heavy geotextiles used to cushion geomembranes against stone puncture falls into this category. Since it is geomembrane-related it will be addressed in chapter 5. A much more common application that best illustrates the use of geotextiles as separators is its placement between a reasonably firm soil subgrade (beneath) and a stone base course, aggregate, or ballast (above). We say "reasonably firm" because it is assumed that the subgrade deformation is not sufficiently large to mobilize uniformly high-tensile stress in the geotextile. (The application of geotextiles in unpaved roads on soft soils with membrane-type reinforcement is treated later in section 2.6.1.) Thus, for a separation function to occur, the geotextile has only to be placed on the soil subgrade and then have stone placed, spread, and compacted on top of it. The subsequent deformations are very localized and occur around each individual stone particle. A number of design scenarios can be developed showing what geotextile properties are required for this type of situation.

Sargent & Lundy Engineering Services, Inc.

CALCULATION SHEET

Project No.	S54413.024	**Calculation No.**	S54413.024-C-001	**Rev.**	0	**Page No.** 15 of 51	
Title:	LERF Basin 41 Construction Equipment Limitations for Liner and Geotextile Protection						
Prepared By:	G. Taylor Grant	**Date:** 04/08/2020	**Checked By:**	Darrel J. Packard		**Date:**	04/09/2020

2.5.2 Burst Resistance

Consider a geotextile on a soil subgrade with stone of average particle diameter (d_a) placed above it. If the stone is uniformly sized, there will be voids within it that will be available for the geotextile to enter. This entry is caused by the simultaneous action of the traffic loads being transmitted to the stone, through the geotextile, and into the underlying soil. The stressed soil then tries to push the geotextile up into the voids within the stone. The situation is shown schematically in figure 2.21. Giroud [68] provides a formulation for the required geotextile strength that can be adopted for this application.

$$T_{reqd} = \frac{1}{2} p' d_v [f(\varepsilon)] \tag{2.26}$$

where

T_{reqd} = required geotextile strength,
p' = stress on the geotextile that is slightly less than, p, the tire inflation pressure at the ground surface,
d_v = maximum void diameter of the stone $\cong 0.33 d_a$,
d_a = the average stone diameter,
$f(\varepsilon)$ = strain function of the deformed geotextile
$= \frac{1}{4}\left(\frac{2y}{b} + \frac{b}{2y}\right)$, in which
b = width of opening (or void)
y = deformation into the opening (or void)

The field situation is analogous to the ASTM D3786 (Mullen) burst test, which has the geotextile being stressed into a gradually increasing hemispherical shape until it fails (recall section 2.3.3). Thus, the adapted form of equation 2.26 is as follows:

$$T_{ult} = \frac{1}{2} p_{test} d_{test} [f(\varepsilon)] \tag{2.27}$$

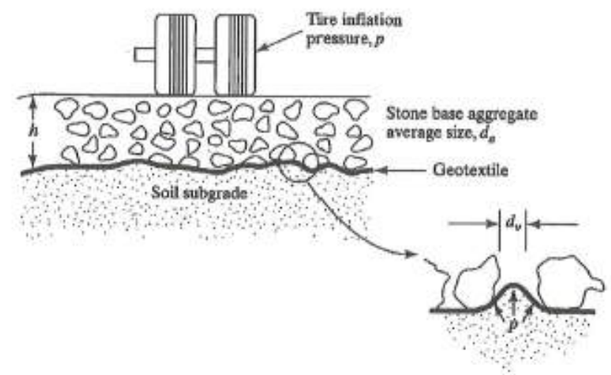

Figure 2.21 Geotextile being forced up into voids of stone base by traffic tire loads.

where

T_{ult} = ultimate geotextile strength,
p_{test} = burst pressure of the geotextile at failure (its strength), and
d_{test} = diameter of the burst test device (= 30 mm).

Knowing that $T_{allow} = T_{ult}/(\Pi RF)$, where ΠRF = cumulative reduction factors, we can formulate an expression for the factor-of-safety (FS) as follows:

$$FS = \frac{T_{allow}}{T_{reqd}} = \frac{(p_{test}\, d_{test})}{(\Pi RF) p' d_v}$$

For example, if d_{test} = 30 mm; $d_v = 0.33\, d_a$; and $\Pi RF = 1.5$ (which is reasonable since creep is not an issue with this application), then the FS value is the following, with d_a in units of mm.

Sargent & Lundy Engineering Services, Inc.

CALCULATION SHEET

Project No.	S54413.024	**Calculation No.**	S54413.024-C-001	**Rev.** 0	**Page No.** 16 of 51
Title:	LERF Basin 41 Construction Equipment Limitations for Liner and Geotextile Protection				
Prepared By:	G. Taylor Grant	**Date:** 04/08/2020	**Checked By:** Darrel J. Packard		**Date:** 04/09/2020

$$FS = \frac{p_{test}(30)}{(1.5)p'(0.33d_a)}$$

$$FS = \frac{60.6p_{test}}{p'd_a} \qquad (2.28)$$

Example 2.8:

Given a truck with 700 kPa tire inflation pressure on a poorly graded aggregate layer consisting of 50 mm maximum-size stone. What is the factor of safety using a geotextile beneath the aggregate having an ultimate burst strength of 2000 kPa and cumulative reduction factors of 1.5.

Solution: Assuming that the tire inflation pressure is not significantly reduced through the thickness of the stone base, we can solve equation 2.28 as follows:

$$FS = \frac{60.6(2000)}{700(50)}$$

$$FS = 3.5$$

Note that with the reduction factors of 1.5 already included, the resulting factor of safety value is acceptable.

For a range of stone base particle diameters (d_a), values of tire inflation pressure (p'), and cumulative reduction factors of 1.5, along with a factor of safety of 2.0, we can generate the design guide in figure 2.22. Here it can be seen that stone size is quite significant insofar as the required burst pressure values are concerned. Note also that these are poorly graded aggregates and that the presence of fines will lessen the severity of the design; hence this approach should be considered to be a worst-case design.

2.5.3 Tensile Strength

Continuing the discussion of geotextile roadway separation, there are other processes acting on the geotextile simultaneous as its

tendency to burst in an out-of-plane mode. One of these is tensile stress being mobilized by in-plane deformation. This occurs as the geotextile is locked into position by stone-base aggregate above it and soil subgrade below it. A lateral, or in-plane, tensile stress in the geotextile is mobilized when an upper piece of aggregate is forced between two lower pieces that are in contact with the geotextile. The analogy to the grab tensile test can be readily visualized, as illustrated in figure 2.23. Here we can estimate the maximum strain that the geotextile will undergo as the upper stone wedges itself down to the level of the geotextile. Using the dimensions shown (where $S \simeq d/2$ and l_f = deformed geotextile length), the maximum strain with no slippage nor stone breakage can be calculated.

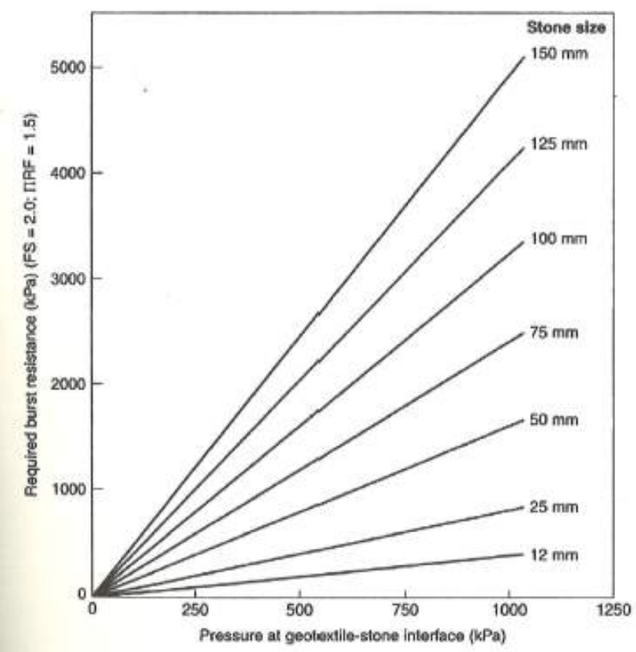

Figure 2.22 Design guide for burst analysis of geotextile used in a separation function based on cumulative reduction factors of 1.5 and a factor of safety of 2.0

Sargent & Lundy Engineering Services, Inc.

CALCULATION SHEET

Project No.	S54413.024	**Calculation No.**	S54413.024-C-001	**Rev.** 0	**Page No.** 17 of 51
Title:	LERF Basin 41 Construction Equipment Limitations for Liner and Geotextile Protection				
Prepared By:	G. Taylor Grant	**Date:** 04/08/2020	**Checked By:** Darrel J. Packard		**Date:** 04/09/2020

$$\varepsilon = \frac{l_f - l_o}{l_o}(100)$$
$$= \frac{[d + 2(d/2)] - 3(d/2)}{3(d/2)}(100)$$
$$= \frac{4(d/2) - 3(d/2)}{3(d/2)}(100)$$
$$\varepsilon = 33\%$$

Note that the preceding assumptions result in a strain that is independent of particle size. Thus, the strain in the geotextile could be as high as 33% given the idealized (upper bound) assumptions stated above. Now the tensile force being mobilized is related to the pressure exerting on the stone as follows [68]:

$$T_{reqd} = p'(d_v)^2 [f(\varepsilon)] \tag{2.29}$$

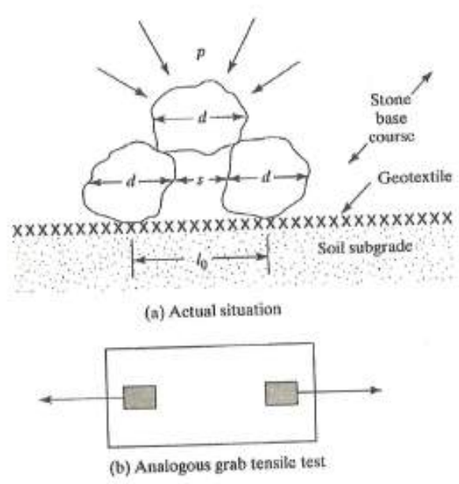

Figure 2.23 Geotextile being subjected to tensile stress as surface pressure is applied and stone base attempts to spread laterally.

where

T_{reqd} = required grab tensile force,
p' = applied pressure,
d_v = maximum void diameter $\simeq 0.33\ d_a$, where
d_a = average stone diameter, and
$f(\varepsilon)$ = strain function of the deformed geotextile
$= \frac{1}{4}\left(\frac{2y}{b} + \frac{b}{2y}\right)$, where
b = width of stone void, and
y = deformation into stone void.

Example 2.9:

Given a truck with 700 kPa tire inflation pressure on a stone base course consisting of 50 mm maximum-size stone with a geotextile beneath it. Calculate (a) the required grab tensile stress on the geotextile, and (b) the factor of safety for a geotextile whose grab strength at 33% is 500 N with cumulative reduction factors of 2.5. Use a value of f(ε) = 0.52.

Solution: (a) Using an empirical relationship that $d_v = 0.33\ d_a$ and the value of $f(\varepsilon) = 0.52$, the required grab tensile strength is as follows:

$$T_{reqd} = p'(d_v)^2(0.52)$$
$$= p'(0.33d_a)^2(0.52)$$
$$= 0.057p'd_a^2$$
$$= 0.057(700)(1000)(0.050)^2$$
$$T_{reqd} = 100N$$

(b) The factor of safety on a 500 N grab tensile geotextile at 33% strain with reduction factors of 2.5 is as follows:

Sargent & Lundy Engineering Services, Inc.

CALCULATION SHEET

Project No.	S54413.024	**Calculation No.**	S54413.024-C-001	**Rev.**	0	**Page No.**	18 of 51
Title:	LERF Basin 41 Construction Equipment Limitations for Liner and Geotextile Protection						
Prepared By:	G. Taylor Grant	**Date:**	04/08/2020	**Checked By:**	Darrel J. Packard	**Date:**	04/09/2020

$$FS = \frac{T_{allow}}{T_{reqd}}$$

$$= \frac{500/2.5}{100}$$

$FS = 2.0$, *which is acceptable.*

2.5.4 Puncture Resistance

The geotextile must always survive the installation process. This is not just related to the roadway separation function; indeed, fabric survivability is critical in all types of applications; without it the best of designs are futile (recall figure 2.18). In this regard, sharp stones, tree stumps, roots, miscellaneous debris, and other items, either on the ground surface beneath the geotextile or placed above it, could puncture through the geotextile during backfilling and when traffic loads are imposed. The design method suggested for this situation is shown schematically in figure 2.24. For these conditions, the vertical force exerted on the geotextile (which is gradually tightening around the protruding object) is as follows:

$$F_{reqd} = p' d_a^2 S_1 S_2 S_3 \tag{2.30}$$

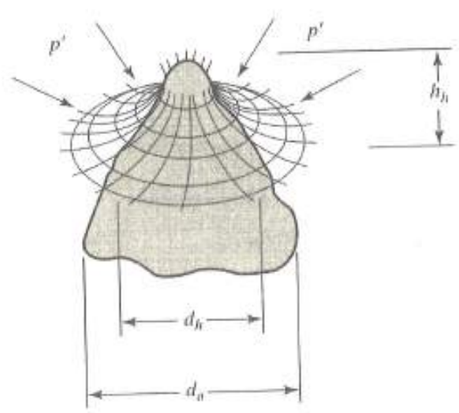

Figure 2.24 Visualization of a stone puncturing a geotextile as pressure is applied from above.

where

F_{reqd} = required vertical puncturing force to be resisted,
d_a = average diameter of the puncturing aggregate or sharp object,
p' = pressure exerted on the geotextile (approximately 100% of tire inflation pressure at the ground surface for thin covering thicknesses),
S_1 = protrusion factor of the puncturing object (see table 2.9),
S_2 = scale factor to adjust the ASTM D4833 puncture test value that uses a 8.0 mm diameter puncture probe to the actual puncturing object (see table 2.9),
S_3 = shape factor to adjust the ASTM D4833 flat puncture probe to the actual shape of the puncturing object (see table 2.9).

TABLE 2.9 RECOMMENDED VALUES FOR INDEPENDENT FACTORS USED IN PUNCTURE ANALYSIS (DIMENSIONLESS)

Puncturing Object	S_1	S_2	S_3
angular & relatively large	0.9	0.8	0.9
angular & relatively small	0.6	0.6	0.7
subrounded & relatively large	0.7	0.6	0.6
subrounded & relatively small	0.4	0.4	0.5
rounded & relatively large	0.5	0.4	0.4
rounded & relatively small	0.2	0.2	0.3

S_1 = protrusion factor
S_2 = scale factor
S_3 = shape factor
} see Eq. 2.30

Example 2.10:

What is the factor of safety against puncture of a geotextile from a subrounded 25 mm diameter stone on the ground surface mobilized by a loaded truck with tire inflation pressure of 550 kPa traveling on the surface of the base course? The geotextile has an ultimate puncture strength of 300 N according to ASTM D4833.

CALCULATION SHEET

Project No. S54413.024	**Calculation No.** S54413.024-C-001	**Rev.** 0	**Page No.** 19 of 51
Title: LERF Basin 41 Construction Equipment Limitations for Liner and Geotextile Protection			
Prepared By: G. Taylor Grant	**Date:** 04/08/2020	**Checked By:** Darrel J. Packard	**Date:** 04/09/2020

ATTACHMENT – 2 – GEOTEXTILE CUT SHEETS

Sargent & Lundy Engineering Services, Inc.

CALCULATION SHEET

Project No. S54413.024	**Calculation No.** S54413.024-C-001	**Rev.** 0	**Page No.** 20 of 51
Title: LERF Basin 41 Construction Equipment Limitations for Liner and Geotextile Protection			
Prepared By: G. Taylor Grant	**Date:** 04/08/2020	**Checked By:** Darrel J. Packard	**Date:** 04/09/2020

TENCATE Mirafi®

TENCATE GEOSYNTHETICS
Americas

Mirafi® S1000

Drainage Separation

Mirafi® S1000 is a needlepunched nonwoven geotextile composed of polypropylene fibers, which are formed into a stable network such that the fibers retain their relative position. Mirafi® S1000 is inert to biological degradation and resists naturally encountered chemicals, alkalis, and acids.

TenCate Geosynthetics Americas Laboratories are accredited by Geosynthetic Accreditation Institute – Laboratory Accreditation Program (GAI-LAP).

Mechanical Properties	Test Method	Unit	Minimum Average Roll Value
Weight	ASTM D5261	oz/yd² (g/m²)	10.0 (339)
Thickness	ASTM D5199	mils (mm)	115 (2.9)
Grab Tensile Strength	ASTM D4632	lbs (N)	270 (1202)
Grab Tensile Elongation	ASTM D4632	%	50
Trapezoid Tear Strength	ASTM D4533	lbs (N)	105 (467)
CBR Puncture Strength	ASTM D6241	lbs (N)	725 (3226)
			Minimum Roll Value
Permittivity	ASTM D4491	sec⁻¹	1.2
Permeability	ASTM D4491	cm/sec	0.32
Flow Rate	ASTM D4491	gal/min/ft² (l/min/m²)	85 (3463)
			Maximum Opening Size
Apparent Opening Size (AOS)	ASTM D4751	U.S. Sieve (mm)	100 (0.15)
			Minimum Test Value
UV Resistance (at 500 hours)	ASTM D4355	% strength retained	80

Physical Properties	Unit	Roll Size
Roll Dimensions (width x length)	ft (m)	15 x 300 (4.5 x 91)
Roll Area	yd² (m²)	500 (418)

Disclaimer: TenCate assumes no liability for the accuracy or completeness of this information or for the ultimate use by the purchaser. TenCate disclaims any and all express, implied, or statutory standards, warranties or guarantees, including without limitation any implied warranty as to merchantability or fitness for a particular purpose or arising from a course of dealing or usage of trade as to any equipment, materials, or information furnished herewith. This document should not be construed as engineering advice.

Mirafi® is a registered trademark of Nicolon Corporation.

Copyright © 2015 Nicolon Corporation. All Rights Reserved.

365 South Holland Drive
Pendergrass, GA 30567

Tel 706 693 2226
Tel 888 795 0808

Fax 706 693 4400
www.tencate.com

FGS000384
ETQR22

GAI-LAP-25-97

Sargent & Lundy Engineering Services, Inc.

CALCULATION SHEET

Project No. S54413.024	**Calculation No.** S54413.024-C-001	**Rev.** 0	**Page No.** 21 of 51
Title: LERF Basin 41 Construction Equipment Limitations for Liner and Geotextile Protection			
Prepared By: G. Taylor Grant	**Date:** 04/08/2020	**Checked By:** Darrel J. Packard	**Date:** 04/09/2020

TENCATE Mirafi

Mirafi® 180N

Mirafi® 180N is a nonwoven geotextile composed of polypropylene fibers, which are formed into a stable network such that the fibers retain their relative position. 180N is inert to biological degradation and resists naturally encountered chemicals, alkalis, and acids.

Mechanical Properties	Test Method	Unit	Minimum Average Roll Value	
			MD	CD
Grab Tensile Strength	ASTM D 4632	kN (lbs)	0.9 (205)	0.9 (205)
Grab Tensile Elongation	ASTM D 4632	%	50	50
Trapezoid Tear Strength	ASTM D 4533	kN (lbs)	0.36 (80)	0.36 (80)
Mullen Burst Strength	ASTM D 3786	kPa (psi)	2618 (380)	
Puncture Strength[1]	ASTM D 4833	kN (lbs)	0.58 (130)	
CBR Puncture Strength	ASTM D 6241	kN (lbs)	2.22 (500)	
Apparent Opening Size (AOS)	ASTM D 4751	mm (U.S. Sieve)	0.180 (80)	
Permittivity	ASTM D 4491	sec^{-1}	1.2	
Permeability	ASTM D 4491	cm/sec	0.21	
Flow Rate	ASTM D 4491	$l/min/m^2$ ($gal/min/ft^2$)	3866 (95)	
UV Resistance (at 500 hours)	ASTM D 4355	% strength retained	70	

[1] ASTM D 4833 has been replaced with ASTM D 6241

Physical Properties	Test Method	Unit	Typical Value
Weight	ASTM D 5261	g/m^2 (oz/yd^2)	278 (8.2)
Thickness	ASTM D 5199	mm (mils)	2.1 (82.5)
Roll Dimensions (width x length)	--	m (ft)	4.5 x 91 (15 x 300)
Roll Area	--	m^2 (yd^2)	418 (500)
Estimated Roll Weight	--	kg (lb)	124 (273)

Disclaimer: TenCate assumes no liability for the accuracy or completeness of this information or for the ultimate use by the purchaser. TenCate disclaims any and all express, implied, or statutory standards, warranties or guarantees, including without limitation any implied warranty as to merchantability or fitness for a particular purpose or arising from a course of dealing or usage of trade as to any equipment, materials, or information furnished herewith. This document should not be construed as engineering advice.

TENCATE materials that make a difference

JPSS000351
ETQR12

Sargent & Lundy Engineering Services, Inc.

CALCULATION SHEET

Project No. S54413.024	**Calculation No.** S54413.024-C-001	**Rev.** 0	**Page No.** 22 of 51
Title: LERF Basin 41 Construction Equipment Limitations for Liner and Geotextile Protection			
Prepared By: G. Taylor Grant	**Date:** 04/08/2020	**Checked By:** Darrel J. Packard	**Date:** 04/09/2020

TENCATE Mirafi®

FILTRATION PROTECTION

Mirafi® S-Series Nonwoven Polypropylene Geotextiles

for geomembrane liner protection, landfill gas collection, and landfill drainage systems

Mirafi® S-Series Nonwoven Geotextiles

TenCate® develops and produces materials that function to increase performance, reduce costs and deliver measurable results by working with our customers to provide advanced solutions.

The Difference Mirafi® S-Series Nonwoven Geotextiles Make:

- Construction. Mirafi® S-Series polypropylene nonwoven geotextiles easily conform to the ground or trench surface for trouble-free installation.
- Strength. Mirafi® S-Series geotextiles withstand installation stresses with high puncture and tear resistance.
- Drainage. High permittivity properties provide high water flow rates while providing excellent soil retention.
- Environmental. Mirafi® S-Series geotextiles are chemically stable in a wide range of aggressive environments.
- Cost Effective. Mirafi® S-Series geotextiles provide economical solutions to many civil engineering applications including a cost-effective alternative to graded-aggregate filters.

APPLICATIONS

Mirafi® S-Series nonwoven geotextiles are used in a wide variety of applications in the environmental market. These include separation, filtration, and protection applications.

Mirafi® S-Series nonwovens are used in critical subsurface drainage systems, soil separation, permanent erosion control, HDPE and other geomembranes in landfill construction. These geotextiles provide the required puncture strength and abrasion resistance to withstand installation and application stresses to create an effective long-term solution. Other applications for Mirafi® S-Series nonwovens in landfill applications include leachate collection/removal systems and for gas collection and venting systems.

Nonwoven geotextiles play a critical role in the collection of liquids in waste containment systems. The nonwoven geotextiles prevent clogging of the collection pipes and drainage aggregates. The successful removal of these liquids is critical to the performance of the landfill site. Mirafi® S-Series geotextiles assist in maintaining an outlet for gases to escape from below the liner systems. Gases may also travel within the nonwoven fabrics laterally until it reaches a vent. For these collection systems to be effective, they must have a properly designed protective filter. Mirafi® S-Series Nonwoven Geotextiles allow designers flexibility in finding an economic source of a specific aggregate gradation and assuring that the in-place aggregate provides effective filter performance.

INSTALLATION GUIDELINES*

Mirafi® S-Series should be handled and deployed in a way that prevents damage to the geotextile. The subgrade surface should be even and free of debris of any kind. Adjacent panels of Mirafi® S Series geotextile shall be overlapped, sewn or heat-seamed unless another method of seaming is specified by the engineer. It is important that overlapped panels of nonwoven geotextile be continuously joined to prevent any migration of soil through the overlaps. Overlap requirements for Mirafi® S-Series geotextiles should be specified by the project engineer or agency or follow the most current AASHTO M288 geotextile installation guidelines in absence of project specifications. In windy conditions, the outside edges of deployed panels of Mirafi® S-Series geotextile should be weighted down with sandbags or an equivalent manner as directed by the project engineer or agency. The sandbags should remain in place until the adjacent geotextile panel is fastened or until an overlying layer of material is placed.

* These guidelines serve as a general basis for installation. Detailed instructions are available from your TenCate® representative.

Protective & Outdoor Fabrics
Aerospace Composites
Armour Composites
Geosynthetics
Industrial Fabrics
Synthetic Grass

TENCATE materials that make a difference

Sargent & Lundy Engineering Services, Inc.

CALCULATION SHEET

Project No. S54413.024	**Calculation No.** S54413.024-C-001	**Rev.** 0	**Page No.** 23 of 51
Title: LERF Basin 41 Construction Equipment Limitations for Liner and Geotextile Protection			
Prepared By: G. Taylor Grant	**Date:** 04/08/2020	**Checked By:** Darrel J. Packard	**Date:** 04/09/2020

TENCATE Mirafi®

Mirafi® S-Series Nonwoven Polypropylene Geotextiles

for geomembrane liner protection, landfill gas collection, and landfill drainage systems

Property / Test Method	Units	S600	S800	S1000	S1200	S1600
MECHANICAL PROPERTIES						
Weight	oz/yd²	6	8	10	12	16
ASTM D5261	(g/m²)	(203)	(271)	(339)	(407)	(542)
Thickness	mils	80	90	115	130	175
ASTN D5199	(mm)	(2.0)	(2.3)	(2.9)	(3.3)	(4.4)
Grab Tensile Strength	lbs	170	230	270	320	425
ASTM D4632	(N)	(757)	(1024)	(1202)	(1424)	(1891)
Grab Tensile Elongation	%	50	50	50	50	50
ASTM D4632						
Trapezoid Tear Strength	lbs	70	95	105	125	155
ASTM D4533	(N)	(312)	(423)	(467)	(556)	(690)
CBR Puncture Strength	lbs	450	600	725	900	1200
ASTM D6241	(N)	(2003)	(2670)	(3226)	(4005)	(5340)
UV Resistance after 500 hrs.	% strength	80	80	80	80	80
ASTM D4355						
HYDRAULIC PROPERTIES						
Apparent Opening Size (AOS)	US Sieve	80	100	100	100	100
ASTM D4751	(mm)	(0.18)	(0.15)	(0.15)	(0.15)	(0.15)
Permittivity	sec⁻¹	1.5	1.4	1.2	0.9	0.7
ASTM D4491						
Flow Rate	gal/min/ft²	110	110	85	65	50
ASTM D4491	(l/min/m²)	(4481)	(4481)	(3463)	(2648)	(2037)
Packaging						
Roll Width	ft (m)	15 (4.5)	15 (4.5)	15 (4.5)	15 (4.5)	15 (4.5)
Roll Length	ft (m)	300 (91)	300 (91)	300 (91)	300 (91)	300 (91)
Area	yd² (m²)	500 (418)	500 (418)	500 (418)	500 (418)	500 (418)

Values and methods could change without notice

Mirafi® S-Series Nonwoven Geotextiles

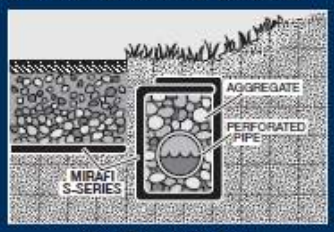

Cut-off/Interceptor Drain

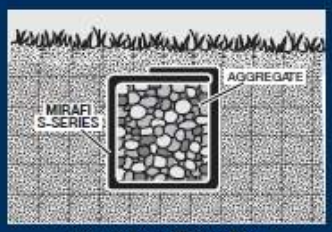

French Drain Without Pipe

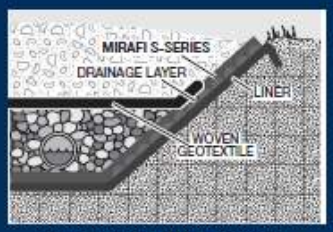

Liner Protection Within a Landfill

TenCate® Geosynthetics Americas assumes no liability for the accuracy or completeness of this information or for the ultimate use by the purchaser. TenCate® Geosynthetics Americas disclaims any and all express, implied, or statutory standards, warranties or guarantees, including without limitation any implied warranty as to merchantability or fitness for a particular purpose or arising from a course of dealing or usage of trade as to any equipment, materials, or information furnished herewith. This document should not be construed as engineering advice.

Mirafi® is a registered trademark of TenCate® Geosynthetics Americas. © 2013 TenCate Geosynthetics North America

POS.S0817

365 South Holland Drive Tel 800 685 9990 Fax 706 693 4400
Pendergrass, GA 30567 Tel 706 693 2226 www.mirafi.com

TENCATE materials that make a difference

Sargent & Lundy Engineering Services, Inc.

CALCULATION SHEET

Project No. S54413.024	**Calculation No.** S54413.024-C-001	**Rev.** 0	**Page No.** 24 of 51
Title: LERF Basin 41 Construction Equipment Limitations for Liner and Geotextile Protection			
Prepared By: G. Taylor Grant	**Date:** 04/08/2020	**Checked By:** Darrel J. Packard	**Date:** 04/09/2020

GEOSYNTHETICS

Mirafi® N-Series Nonwoven Polypropylene Geotextiles

For Soil Separation, Filtration and Protection

Ten Cate Nicolon

DESCRIPTION
Drainfield 3' x 360' (1,080 sq-ft.)
Drainfield 4' x 360' (1,440 sq-ft.)
135N – 3' x 360' (1,080 sq-ft.) - 3 oz.
140NL – 12.5' x 360' (4,500 sq-ft.) - 3.8 oz. 157-140NL125
140NL – 15' x 360' (5,400 sq-ft.) - 3.8 oz. 157-140NL15
140NC – 12.5' x 360' (4,500 sq-ft.) - 4 oz. 157-140NC125
140NC – 15' x 360' (5,400 sq-ft.) - 4 oz. 157-140NC15
140N – 12.5' x 360' (4,500 sq-ft.) - 4.5 oz. 157-140N125
140N – 15' x 360' (5,400 sq-ft.) - 4.5 oz. 157-140N15
160N – 15' x 300' (4,500 sq-ft.) - 6 oz. 157-160N15
170N - 15' x 300' (4,500 sq-ft.) - 7 oz. 157-170N15
180N – 15' x 300' (4,500 sq-ft.) - 8 oz. 157-180N15
1100N – 15' x 300' (4,500 sq-ft.) - 10 oz. 157-1100N15
1120N – 15' x 300' (4,500 sq-ft.) - 12 oz. 157-1120N
1160N – 15' x 150' (2,250 sq-ft.) - 16 oz. 157-1160N

CUSTOM SIZES AVAILABLE BY SPECIAL ORDER

PRODUCT DESCRIPTION

Mirafi N-Series products are nonwoven geotextiles comprised of polypropylene staple fibers. Mirafi N-Series Nonwoven Polypropylene Geotextiles provide excellent physical and hydraulic properties in addition to high tensile strengths.

FEATURES AND BENEFITS

- **Construction.** Mirafi N-Series geotextiles easily conform to the ground or trench surface for trouble-free installation.
- **Strength.** Mirafi N-Series geotextiles withstand severe installation stresses with high puncture and burst resistance.
- **Filtration.** High permeability properties provide high water flow rates while providing excellent filtration properties.
- **Environmental.** Mirafi N-Series geotextiles are chemically stable in a wide range of aggressive environments.
- **Cost effective.** Mirafi N-Series geotextiles provide economical solutions to many civil engineering applications including a cost-effective alternative to graded-aggregate filters.

APPLICATIONS

Mirafi N-Series Nonwovens are used in a wide variety of applications including separation, filtration, and protection applications.

Lightweight nonwovens are predominantly used for subsurface drainage applications along highways, within embankments, under airfields, and athletic fields. For these drainage structures to be effective, they must have a properly designed protective filter. Mirafi N-Series Nonwoven Geotextiles eliminate the problems of determining the aggregate gradation required to match soil conditions, finding a convenient and economical source of a specific aggregate gradation, transporting and placing graded aggregate, and assuring that the in-place aggregate gradation provides effective filter performance.

Heavyweight nonwovens are used in critical subsurface drainage systems, soil separation, permanent erosion control, and geomembrane liner protection within landfills. These geotextiles provide the required strength and abrasion resistance to withstand installation and application stresses to create an effective, long-term solution.

PROPERTY / TEST METHOD	UNITS	140NL	CALTRANS 140NC	140N	160N	170N	CALTRANS 180N	1100N	1120N	1160N
MECHANICAL PROPERTIES										
Grab Tensile Strength ASTM D 4632										
–Strength @ Ultimate	kN (lbs)	0.40 (90)	0.45 (100)	0.53 (120)	0.71 (160)	0.80 (180)	0.9 (205)	1.11 (250)	1.34 (300)	1.69 (380)
–Elongation @ Ultimate	%	50	50	50	50	50	50	50	50	50
Mullen Burst Strength ASTM D 3786	kPa (p.s.i.)	1205 (175)	1447 (210)	1550 (225)	2100 (305)	2273 (330)	2618 (380)	3445 (500)	4030 (585)	5098 (740)
Trapezoidal Tear Strength ASTM D 4355	kN (lbs)	0.16 (35)	0.20 (45)	0.22 (50)	0.27 (60)	0.33 (75)	0.36 (80)	0.45 (100)	0.51 (115)	0.62 (140)
Puncture Strength ASTM D 4833	kN (lbs)	0.24 (55)	0.30 (65)	0.30 (65)	0.42 (95)	0.46 (105)	0.58 (130)	0.69 (155)	0.78 (175)	1.05 (235)
UV Resistance after 500 hrs. ASTM D 4355	% strength	70	70	70	70	70	70	70	70	70
HYDRAULIC PROPERTIES										
Apparent Opening Size (AOS) ASTM D 4751	US Sieve	60	70	70	70	80	80	100	100	100
	mm	0.25	0.212	0.212	0.212	0.180	0.180	0.150	0.150	0.150
Permittivity ASTM D 4491	sec-1	2.0	1.9	1.8	1.4	1.4	1.2	1.0	0.8	0.7
Flow Rate ASTM D 4491	l/min/m² (gal/min/ft²)	5907 (145)	5698 (140)	5500 (135)	4477 (110)	4278 (105)	3866 (95)	3056 (75)	2648 (65)	2037 (50)

NOTE: All Mechanical Properties and Hydraulic Properties shown are Minimum Average Roll Values (MARV).

88-8 White Cap CONSTRUCTION SUPPLY

Your Caltrans Product Specialist: Kathy Brooks 800.936.6626

CALCULATION SHEET

Project No. S54413.024	**Calculation No.** S54413.024-C-001	**Rev.** 0	**Page No.** 25 of 51
Title: LERF Basin 41 Construction Equipment Limitations for Liner and Geotextile Protection			
Prepared By: G. Taylor Grant	**Date:** 04/08/2020	**Checked By:** Darrel J. Packard	**Date:** 04/09/2020

ATTACHMENT – 3 – BOBCAT T550 SKID-STEER SPECIFICATIONS

Sargent & Lundy Engineering Services, Inc.

CALCULATION SHEET

Project No. S54413.024	**Calculation No.** S54413.024-C-001	**Rev.** 0	**Page No.** 26 of 51
Title: LERF Basin 41 Construction Equipment Limitations for Liner and Geotextile Protection			
Prepared By: G. Taylor Grant	**Date:** 04/08/2020	**Checked By:** Darrel J. Packard	**Date:** 04/09/2020

12/19/2019 Compare Bobcat Compact Track Loaders - Bobcat Company

SHARE

Loaders / Compact Track Loaders

Compare Models

To compare models, start by selecting products using the dropdown menus.

Standard Optional N/A Not Applicable

Units US

Configuration	Bobcat T550 Standard	Bobcat T550 Roller Suspension Option	Select product...	Select product...
Emissions Tier (EPA)	Tier 4	Tier 4		
Engine Cooling	Liquid			
Engine Fuel	Diesel			
Horsepower	66 hp			
Turbocharged Engine	✓			

Performance

Rated Operating Capacity (ISO)	1,995 lb	1,895 lb		
Operating Capacity (50% of Tip)	2850 lb	2707 lb		
Tipping Load	5700 lb	5414 lb		
Operating Weight	7557 lb	7758 lb		
Travel Speed	7.1 mph	7.1 mph		
Travel Speed (2-speed option)	10.4 mph	n/a		
Ground Pressure (Rubber)	4.9 psi	5.8 psi		

https://www.bobcat.com/loaders/compact-track-loaders/compare-models 1/3

Sargent & Lundy Engineering Services, Inc.

CALCULATION SHEET

Project No. S54413.024	**Calculation No.** S54413.024-C-001	**Rev.** 0	**Page No.** 27 of 51
Title: LERF Basin 41 Construction Equipment Limitations for Liner and Geotextile Protection			
Prepared By: G. Taylor Grant	**Date:** 04/08/2020	**Checked By:** Darrel J. Packard	**Date:** 04/09/2020

12/19/2019 Compare Bobcat Compact Track Loaders - Bobcat Company

Capacities

Fuel Tank	36.5 gal	36.5 gal		

Hydraulic System

System Relief @ Quick Couplers	3,500 psi			
Auxiliary Std Flow	17.1 gal/min			
Auxiliary High Flow	26.7 gal/min			

Dimension

Length	133 in			
Length without Attachment	104.6 in			
Length with Standard Bucket	133 in			
Width	67 in	71.5 in		
Width (with bucket)	68 in	74 in		
Height	77.8 in			
Height with Operator Cab	77.8 in			
Height to Bucket Hinge Pin	114.5 in			
Reach @ Maximum Height	19.3 in			
Turning Radius	80 in	80 in		
Length of track on ground	54.1 in			
Track Width	12.6 in			
Track Width - Optional	15.8 in			

https://www.bobcat.com/loaders/compact-track-loaders/compare-models 2/3

Sargent & Lundy Engineering Services, Inc.

CALCULATION SHEET

Project No. S54413.024	**Calculation No.** S54413.024-C-001	**Rev.** 0	**Page No.** 28 of 51
Title: LERF Basin 41 Construction Equipment Limitations for Liner and Geotextile Protection			
Prepared By: G. Taylor Grant	**Date:** 04/08/2020	**Checked By:** Darrel J. Packard	**Date:** 04/09/2020

12/19/2019 Compare Bobcat Compact Track Loaders - Bobcat Company

Features

Joystick Control	✓		
Air Conditioning	✓		
Backup Alarm	■		
BICS System (Interlock)	■		
Cab Heater	✓		
Operating Lights	■		
Suspension Seat	■		
Two Speed Travel	N/A		
Deluxe Instrumentation	✓		
Engine Shutdown	■		
Hydraulic Bucket Positioning	✓		
High Flow Option	✓		
Auxiliary Hydraulics	■		
Bob-Tach Attachment System	■		
Power Bob-Tach	✓		
ACS (Switchable Controls)	✓		
Ride Control	✓		
Horn	■		

Certain specification(s) are based on engineering calculations and are not actual measurements. Specification(s) are provided for comparison purposes only and are subject to change without notice. Specification(s) for your individual equipment will vary based on normal variations in design, manufacturing, operating conditions, and other factors.

https://www.bobcat.com/loaders/compact-track-loaders/compare-models 3/3

CALCULATION SHEET

Project No. S54413.024	**Calculation No.** S54413.024-C-001	**Rev.** 0	**Page No.** 29 of 51
Title: LERF Basin 41 Construction Equipment Limitations for Liner and Geotextile Protection			
Prepared By: G. Taylor Grant	**Date:** 04/08/2020	**Checked By:** Darrel J. Packard	**Date:** 04/09/2020

ATTACHMENT – 4 – GEOSYNTHTIC INSTITUTE GRI TEST METHOD GT12(A) – ASTM VERSION

CALCULATION SHEET

Project No. S54413.024	**Calculation No.** S54413.024-C-001	**Rev.** 0	**Page No.** 30 of 51
Title: LERF Basin 41 Construction Equipment Limitations for Liner and Geotextile Protection			
Prepared By: G. Taylor Grant	**Date:** 04/08/2020	**Checked By:** Darrel J. Packard	**Date:** 04/09/2020

Geosynthetic Institute
475 Kedron Avenue
Folsom, PA 19033-1208 USA
TEL (610) 522-8440
FAX (610) 522-8441

Rev. 2: March 3, 2016
Revision Schedule: pg. 7

GRI Test Method GT12(a)* - ASTM Version

Standard Specification for

"Test Methods and Properties for Nonwoven Geotextiles Used as Protection (or Cushioning) Materials"

This specification was developed by the Geosynthetic Research Institute (GRI) with the cooperation of the member organizations for general use by the public. It is completely optional in this regard and can be superseded by other existing or new specifications on the subject matter in whole or in part. Neither GRI, the Geosynthetic Institute, nor any of its related institutes, warrant or indemnifies any materials produced according to this specification either at this time or in the future.

1. Scope

1.1 This specification covers nonwoven geotextile test properties for subsequent use as protection (or cushioning) materials.

Note 1: The typical use will be as a protective covering or underlayment of a geomembrane against puncture or tear due to rock, stones, concrete or other hard surfaces and/or objects.

1.2 This specification sets forth a set of physical, mechanical and endurance properties that must be met, or exceeded by the geotextile being manufactured.

1.3 In the context of quality systems and management, this specification represents a manufacturing quality control (MQC) document.

Note 2: Manufacturing quality control represents those actions taken by a manufacturer to assure that a product represents the stated objective and properties set forth in the specification.

*This GRI standard is developed by the Geosynthetic Research Institute through consultation and review by the member organizations. This specification will be reviewed at least every 2-years, or on an as-required basis. In this regard it is subject to change at any time. The most recent revision date is the effective version.

Copyright © 2002, 2013 Geosynthetic Institute
All rights reserved

Note 3: This particular specification for nonwoven protection geotextiles falls under the concept of MQC.

3.3 Minimum Average Roll Value (MARV) – For geosynthetics, a manufacturing quality control tool used to allow manufacturers to establish published values such that the user/purchaser will have a 97.7% confidence that the property in question will meet published values. For normally distributed data, "MARV" is calculated as the typical value minus two (2) standard deviations from documented quality control test results for a defined population from one specific test method associated with one specific property.

4. Material Classification and Formulation

4.1 This specification covers geotextiles used as protection (or cushioning) materials.

4.2 The type of resins are usually polypropylene, polyester or polyethylene, but other resins are also possible in this regard.

4.3 The type of geotextile style is designated as a nonwoven since research has shown these fabrics to be most effective in the typical applications toward which this specification is directed. While needle-punched nonwovens are usually used, heat bonded and resin dipped manufacturing styles (or others) can also be considered.

5. Specification Requirements

5.1 The geotextiles for use as protection (or cushioning) materials shall conform to Table 1. The table is given in English units and in SI (Metric) units. The conversion from English to SI units is "soft".

5.2 Since there are a number of geotextile puncture test methods available, Table 2 is provided. Either of these tests can be considered to be an alternative test replacing ASTM D4833 in Table 1. The decision to make such a replacement must be agreed upon by the parties involved. The table is given in English units and in SI (Metric) units. The conversion from English to SI units is "soft".

5.3 The required values for all properties in Tables 1 and 2 are to be minimum average roll values (MARV) except UV resistance which is a minimum value.

6. Workmanship and Appearance

6.1 The finished geotextile shall have good appearance qualities. It shall be free from such defects that would affect the specific properties of the geotextile, or its proper functioning.

6.2 General manufacturing procedures shall be performed in accordance with the manufacturer's internal quality control guide and/or documents.

Sargent & Lundy Engineering Services, Inc.

CALCULATION SHEET

Project No. S54413.024	**Calculation No.** S54413.024-C-001	**Rev.** 0	**Page No.** 32 of 51
Title: LERF Basin 41 Construction Equipment Limitations for Liner and Geotextile Protection			
Prepared By: G. Taylor Grant	**Date:** 04/08/2020	**Checked By:** Darrel J. Packard	**Date:** 04/09/2020

USA Units

Table 1(a) – Required Properties, Test Methods and Values for Geotextiles Used as Geomembrane Protection (or Cushioning) Materials

Property(1)	Test Method ASTM	Unit	Mass/Unit Area (oz/yd^2)					
Mass per unit area	D5261	oz/yd^2	10	12	16	24	32	60
Grab tensile strength	D4632	lb	230	300	370	450	500	630
Grab tensile elongation	D4632	%	50	50	50	50	50	50
Trap. tear strength	D4533	lb	95	115	145	200	215	290
Puncture (CBR) strength	D6241	lb	700	800	900	1100	1700	2400
UV resistance(2)	D7238	%	70	70	70	70	70	70

Notes:
(1) All values are MARV except UV resistance; it is a minimum value.
(2) Evaluation to be on 2.0 inch strip tensile specimens per ASTM D 5035 after 500 lt. hrs. exposure.

S.I. (Metric) Units

Table 1(b) – Required Properties, Test Methods and Values for Geotextiles Used as Geomembrane Protection (or Cushioning) Materials

Property(1)	Test Method ASTM	Unit	Mass/Unit Area (g/m^2)					
Mass per unit area	D5261	g/m^2	340	406	542	812	1080	2000
Grab tensile strength	D4632	kN	1.02	1.33	1.64	2.00	2.25	2.80
Grab tensile elongation	D4632	%	50	50	50	50	50	50
Trap. tear strength	D4533	kN	0.42	0.51	0.64	0.89	0.96	1.27
Puncture (CBR) strength	D6241	kN	3.11	3.56	4.00	4.90	7.56	10.60
UV resistance(2)	D7238	%	70	70	70	70	70	70

Notes:
(1) All values are MARV except UV resistance; it is a minimum value.
(2) Evaluation to be on 50 mm strip tensile specimens per ASTM D5035 after 500 lt. hrs. exposure.

CALCULATION SHEET

Project No. S54413.024	**Calculation No.** S54413.024-C-001	**Rev.** 0	**Page No.** 33 of 51
Title: LERF Basin 41 Construction Equipment Limitations for Liner and Geotextile Protection			
Prepared By: G. Taylor Grant	**Date:** 04/08/2020	**Checked By:** Darrel J. Packard	**Date:** 04/09/2020

ATTACHMENT – 5 – CORRELATION OF ASTM D4833 AND D6241 GEOTEXTILE PUNCTURE TEST METHODS AND RESULTS FOR USE ON WISDOT PROJECTS

Sargent & Lundy Engineering Services, Inc.

CALCULATION SHEET

Project No. S54413.024	**Calculation No.** S54413.024-C-001	**Rev.** 0	**Page No.** 34 of 51
Title: LERF Basin 41 Construction Equipment Limitations for Liner and Geotextile Protection			
Prepared By: G. Taylor Grant	**Date:** 04/08/2020	**Checked By:** Darrel J. Packard	**Date:** 04/09/2020

Correlation of ASTM D4833 and D6241 Geotextile Puncture Test Methods and Results for Use on WisDOT Projects

Rani Elhajjar, Ph.D., P.E.
Hani H. Titi, Ph.D., P.E.
Stacy Van Dyke, M.S.
and
Hamid Erfanian, M.S.

Department of Civil and Environmental Engineering
University of Wisconsin – Milwaukee
3200 N. Cramer St. Milwaukee, WI 53211

WisDOT ID no. 0092-15-07

May 2017

WISCONSIN DEPARTMENT OF TRANSPORTATION
RESEARCH & LIBRARY UNIT

WHRP
WISCONSIN HIGHWAY RESEARCH PROGRAM

WISCONSIN DOT
PUTTING RESEARCH TO WORK

Chapter 6

Proposed Geotextile Specification Limits

This chapter presents a summary of test results correlation and comparison from the geotextile industry data. In addition, a set of proposed specification limits are presented based on WisDOT geotextiles types.

6.1 Geotextile Industry Data

Minimum average roll values (MARV) for a subset of the geotextiles tested in this project were found through research and data collection of vendor specification sheets. Table 6.1 and 6.2 show the results in context of the vendor provided MARV numbers. The research team also obtained additional data and information from geotextile manufacturers that included both CBR and pin puncture strength test data as well as published values of CBR and pin puncture strength. These new data obtained are summarized in Tables B1 and B2 in Appendix B. In addition, the data values are used to provide a comparison to the models developed based on the experimental study conducted herein.

Table 6.1 Comparison of Phase 1 to Industry MARV

Geotextile Material Type	ASTM Test	No. of Tests	Average Puncture Load, lbs (N)	Standard Deviation in Puncture Load, lbs (N)	Coefficient of Variation in Puncture Load (%)	Average Elongation, in (mm)
A (nonwoven) 4 oz/yd^2	D4833	15	73 (324)	10 (43)	13.3	0.50 (12.7)
	D6241	10	362 (1611)	41 (184)	11.4	1.89 (48.0)
	D6241/D4833 Ratio: 4.9					
	MARV-D6241 Puncture load, lbs (N) : 250 (1113)					
B (woven) 4 oz/yd^2	D4833	15	100 (443)	7 (29)	6.6	0.35 (8.9)
	D6241	10	733 (3261)	20 (92)	2.8	1.40 (35.6)
	D6241/D4833 Ratio: 7.3					
	MARV-D6241 Puncture load, lbs (N) : 700 (3115)					
C	D4833	15	115 (510)	21 (93)	18.3	0.46 (11.7)

CALCULATION SHEET

Project No. S54413.024	**Calculation No.** S54413.024-C-001	**Rev.** 0	**Page No.** 36 of 51
Title: LERF Basin 41 Construction Equipment Limitations for Liner and Geotextile Protection			
Prepared By: G. Taylor Grant	**Date:** 04/08/2020	**Checked By:** Darrel J. Packard	**Date:** 04/09/2020

(nonwoven) 8 oz/yd^2	D6241	15	595 (2648)	57 (255)	9.6	1.88 (47.8)
	D6241/D4833 Ratio: 5.2					
	MARV-D6241 Puncture load, lbs (N) : 500 (2224)					
D (woven) 8 oz/yd^2	D4833	10	178 (790)	18 (81)	10.3	0.46 (11.7)
	D6241	15	1392 (6190)	151 (673)	10.9	1.44 (36.6)
	D6241/D4833 Ratio: 7.8					
	MARV-D6241 Puncture load, lbs (N) : 1250 (5563)					
E (nonwoven) 12 oz/yd^2	D4833	10	240 (1069)	16 (73)	6.8	0.59 (15.0)
	D6241	15	1268 (5642)	101 (451)	8.0	2.47 (62.7)
	D6241/D4833 Ratio: 5.3					
	MARV-D6241 Puncture load, lbs (N) : 900 (4005)					

Table 6.2: Comparison of Phase 2 test values to industry MARV

Fabric Type	Project Number and Date	Vendor/Type	MARV			Testing – Average Values			
			D4833 MARV	D6241 MARV	D6241/D4833 Ratio-MARV	D4833 (N) -WISDOT	D4833 (N) - UWM	D6241 (N) - UWM	D6241/D4833 Ratio-UWM
DF	1195-13-71	Propex Geotex 401 (non-woven)	289	1380	4.8	213	148	950	6.5
DF	1170-01-70	Willacochee Industrial Fabrics, Winfab 400N (non-woven)	289	1380	4.8	227	158	627	4.0
DF	9200-04-71	Hanes Geo Components Terra Tex N07 (non-woven)	467	2110	4.5	472	499	2759	5.5
DF	1030-11-70	Tencate – Mirafi 140N (non-woven)	300	1380	4.6	480	463	2600	5.6

DF	2753-06-71	Geosynthetics ST180N (non-woven)	467	-	-	452	295	1084	3.7
DF	1060-33-73	Propex Geotex 701 (non-woven)	445	2047	4.6	497	274	880	3.2
SAS	1133-03-71	Propex 701 (non-woven)	445	2113	4.7	509	342	1731	5.1
SAS	8160-14-71	Geosynthetics ST180N (non-woven)	467	-	-	465	300	1312	4.4
SAS	1060-33-75	Tencate Mirafi 170N (non-woven)	460	2003	4.4	540	391	1845	4.7

6.2 Experimental Data Based Models

The results of the experimental data obtained from Phase I and II for both woven and nonwoven geotextiles are summarized in Table 6.3 (see Figures 4.30 to 4.35 in Chapter 4).

Table 6.3: Correlations between CBR and pin puncture strength based on the experimental test results.

Geotextile Test Result		**Correlation: PS(CBR) = α × PS(Pin)**	**R^2**
Phase I	Woven	PS(CBR) = 7.46 × PS(Pin)	0.98
	Nonwoven	PS(CBR) = 5.19 × PS(Pin)	0.98
Phase II	Woven	PS(CBR) = 4.28 × PS(Pin)	0.85
	Nonwoven	PS(CBR) = 5.57 × PS(Pin)	0.85
Combined (Phase I and Phase II)	Woven	PS(CBR) = 6.36 × PS(Pin)	0.91
	Nonwoven	PS(CBR) = 4.90 × PS(Pin)	0.92

PS(CBR): CBR Puncture Strength (N, lbs) from ASTM D6241
PS(Pin): Pin Puncture Strength (N, lbs) from ASTM D4833
α: Correlation Constant

These models have a good coefficient of correlation values and will be used to propose the average minimum limits for geotextile CBR puncture strength for WisDOT. The current pin puncture strength based WisDOT specifications are summarized in Table 6.4.

CALCULATION SHEET

Project No. S54413.024	**Calculation No.** S54413.024-C-001	**Rev.** 0	**Page No.** 38 of 51
Title: LERF Basin 41 Construction Equipment Limitations for Liner and Geotextile Protection			
Prepared By: G. Taylor Grant	**Date:** 04/08/2020	**Checked By:** Darrel J. Packard	**Date:** 04/09/2020

The results of the nonwoven geotextiles in Phase I & II (*PS(CBR) = 4.90 × PS(Pin)*) are selected to propose for the specifications. These results have a 0.92 coefficient of determination, which is a good correlation with the largest number of test points of 142. Further, using this set of data does not bias the factor to the woven specimens which achieve the highest benefit from moving to the CBR standard. The data obtained from the geotextile industry tests/specifications are compiled and presented in Figure 6.1. The results show that the data compiled from the industry is within a reasonable agreement of the models presented in this report. The analysis of geotextile industry data for the nonwoven geotextiles showed the following correlations: ~ *PS(CBR) = 4.75 × PS(Pin)*, which is a reasonable outcome compared with the model obtained from the experimental test results. Additionally as a result of the phase III additional tests conducted, we include a recommendation to include a minimum UV stability for the geotextiles based on possible exposure in the field.

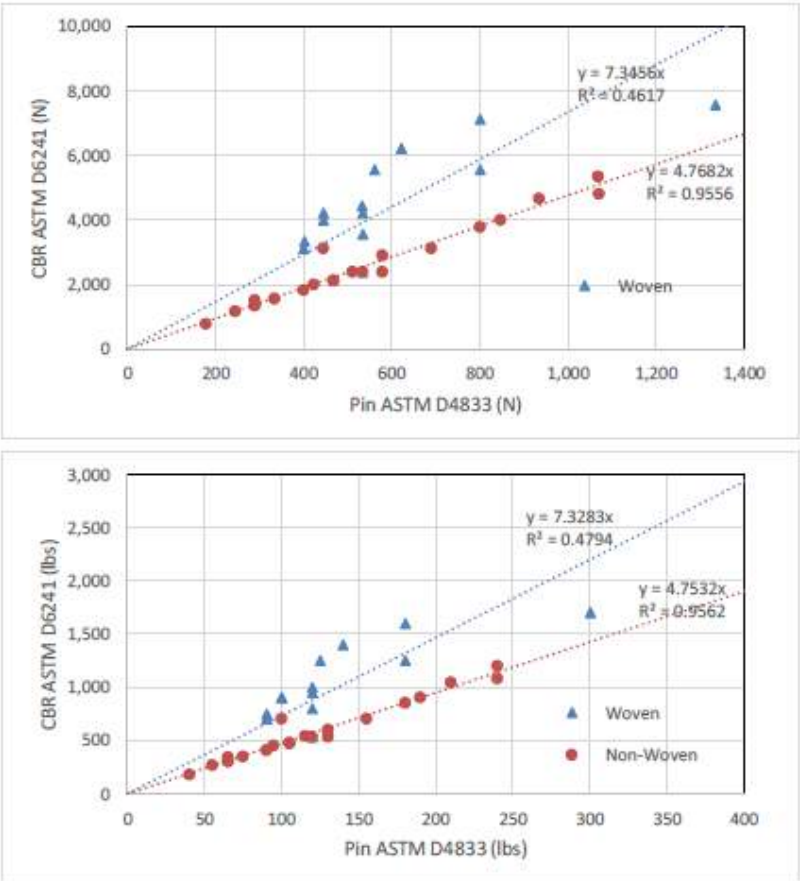

Figure 6.1 Industry data shown for comparative purposes (in SI and U.S. customary units)

Sargent & Lundy Engineering Services, Inc.

CALCULATION SHEET

Project No. S54413.024	**Calculation No.** S54413.024-C-001	**Rev.** 0	**Page No.** 39 of 51
Title: LERF Basin 41 Construction Equipment Limitations for Liner and Geotextile Protection			
Prepared By: G. Taylor Grant	**Date:** 04/08/2020	**Checked By:** Darrel J. Packard	**Date:** 04/09/2020

Table 6.4 Current and proposed WisDOT specification limits

Geotextile Type	Minimum Puncture Strength (Average)			
	Current WisDOT Specifications Based on ASTM D4833 (Pin)		Proposed WisDOT Specifications Based on ASTM D6241 (CBR)	
	lbs.	N	lbs.	N
Subgrade Aggregate Separation (SAS)	70	300	340	1500
Marsh Stabilization (MS)	NA	NA	NA	NA
Drainage Filtration (DF), Schedule A	40	175	190	840
Drainage Filtration (DF), Schedule B	70	300	340	1500
Drainage Filtration (DF), Schedule C	70	311	340	1500
Subgrade Reinforcement (SR)	NA (145)*	NA (650)*	NA (700)**	NA(3100)**
Riprap (R)	80	350	390	1700
Heavy Riprap (HR)	100	440	490	2100
Modified Subgrade Aggregate Separation Type C (SAS-C)	70	300	340	1500
Embankment Stabilization (ES)	NA	NA	NA	NA
UV Radiation Stabilization ASTM D4355 for 500 hours of exposure – 50% Retention of Strength				

* Specification values are obtained from WisDOT project documents.

** Based on same data from WisDOT project documents

106

Chapter 7

Summary

The results from Phase 1 and II show that the CBR puncture strength can possibly be predicted for woven and nonwoven PP materials. The Woven PP materials exhibit a CBR puncture strength approximately double that of nonwoven PP materials with the same mass per unit area. The CBR displacement/elongation at puncture failure is determined by weave type rather than mass per unit area for PP materials. D6241 appears to correlate more with the weight of the fabric. We also found that the CBR puncture strength failure of a woven material is likely a function of filament tensile strength and CBR failure of nonwoven materials is a function of fiber-fiber contact area. When the results from D4833 are compared with the obtained values from WisDOT using the same standard, we see similar results obtained. Industry obtained minimum average roll value (MARV) numbers for both methods show similar correlations to the results obtained. The results also show consistent higher values for D6241 compared to the values from D4833. The outliers with high strength from the D6241 approach sometimes correlate with the higher strength (e.g. Group5 SAS), however in other cases (e.g. in the DF) series we do not see this correlation. Finally, in the proposed specifications in Chapter 6 we recommend values based on the correlations obtained in this report to enable and justify transitions to the new ASTM D6241 standard.

CALCULATION SHEET

Project No. S54413.024	**Calculation No.** S54413.024-C-001	**Rev.** 0	**Page No.** 41 of 51
Title: LERF Basin 41 Construction Equipment Limitations for Liner and Geotextile Protection			
Prepared By: G. Taylor Grant	**Date:** 04/08/2020	**Checked By:** Darrel J. Packard	**Date:** 04/09/2020

ATTACHMENT – 6 – H-2-838749, SHEET 1, REV. 0, LERF BASIN 41 CIVIL SECONDARY LINER

Sargent & Lundy Engineering Services, Inc.

CALCULATION SHEET

Project No.	S54413.024	**Calculation No.**	S54413.024-C-001	**Rev.** 0	**Page No.** 42 of 51
Title:	LERF Basin 41 Construction Equipment Limitations for Liner and Geotextile Protection				
Prepared By:	G. Taylor Grant	**Date:** 04/08/2020	**Checked By:** Darrel J. Packard		**Date:** 04/09/2020

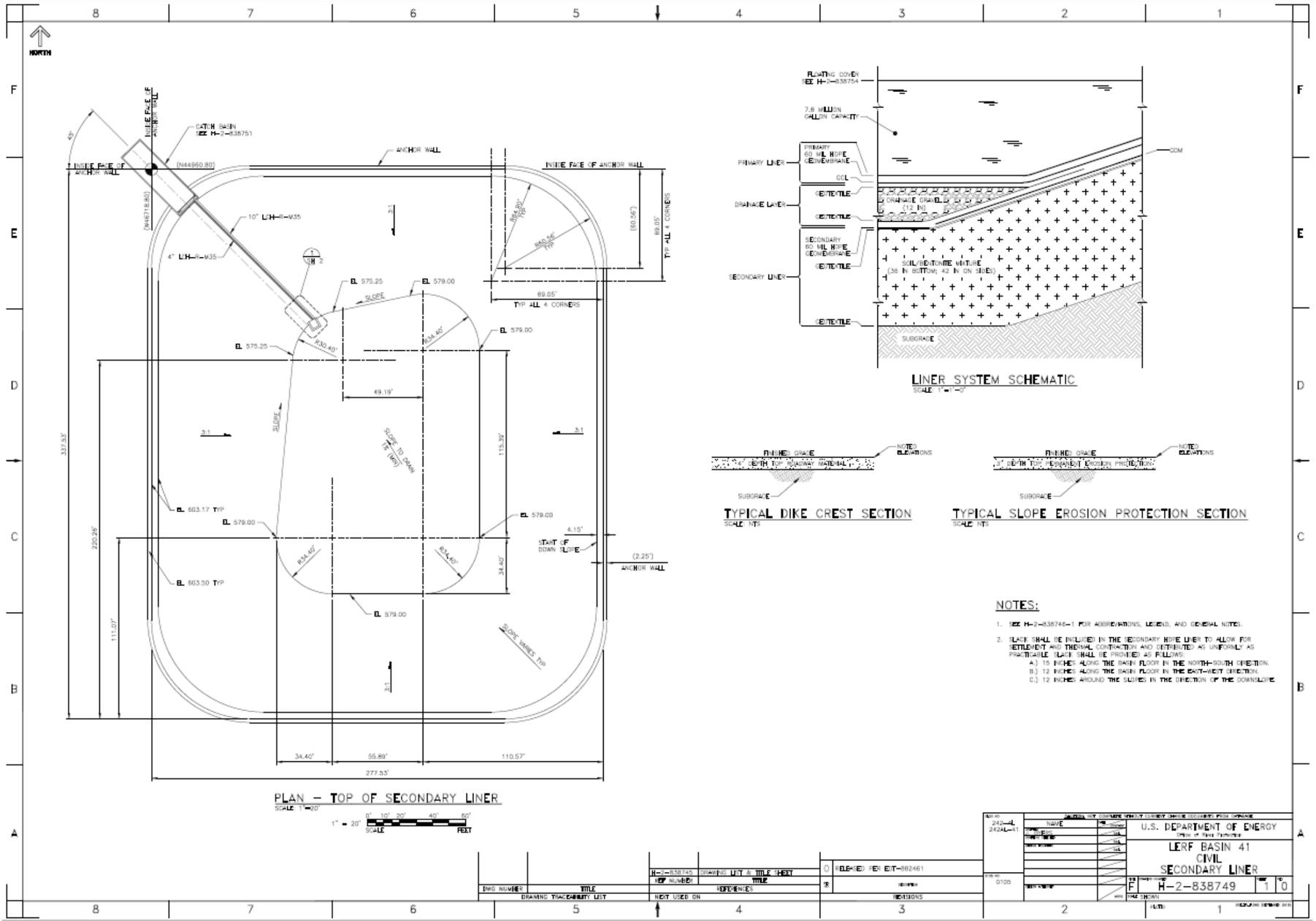

CALCULATION SHEET

Project No. S54413.024	**Calculation No.** S54413.024-C-001	**Rev.** 0	**Page No.** 43 of 51
Title: LERF Basin 41 Construction Equipment Limitations for Liner and Geotextile Protection			
Prepared By: G. Taylor Grant	**Date:** 04/08/2020	**Checked By:** Darrel J. Packard	**Date:** 04/09/2020

ATTACHMENT – 7 – WSDOT M41-10 9-03.12(5) GRAVEL BACKFILL FOR DRYWELLS GRADATION

CALCULATION SHEET

Project No. S54413.024	**Calculation No.** S54413.024-C-001	**Rev.** 0	**Page No.** 44 of 51
Title: LERF Basin 41 Construction Equipment Limitations for Liner and Geotextile Protection			
Prepared By: G. Taylor Grant	**Date:** 04/08/2020	**Checked By:** Darrel J. Packard	**Date:** 04/09/2020

9-03.12(5) Gravel Backfill for Drywells

Gravel backfill for drywells shall conform to the following gradings:

Sieve Size	Percent Passing
1½"	99-100
1"	50-100
¾"	0-20
⅜"	0-2
No. 200	0-1.5

As an alternative, AASHTO grading No. 4 may be used in accordance with Section 9-03.1(4)C. Alkali silica reactivity testing is not required.

9-03.13 Backfill for Sand Drains

Backfill for sand drains shall conform to the following grading:

Sieve Size	Percent Passing
½"	90-100
No. 4	57-100
No. 10	40-100
No. 50	3-30
No. 100	0-4
No. 200	0-3.0

All percentages are by weight.

That portion of backfill retained on a No. 4 sieve shall contain not more than 0.05 percent by weight of wood waste.

9-03.13(1) Sand Drainage Blanket

Aggregate for the sand drainage blanket shall consist of granular material, free from wood, bark, or other extraneous material and shall meet the following requirements for grading:

Sieve Size	Percent Passing
2½"	90-100
No. 4	24-100
No. 10	14-100
No. 50	0-30
No. 100	0-7.0
No. 200	0-3.0

All percentages are by weight.

That portion of backfill retained on a No. 4 sieve shall contain not more than 0.05 percent by weight of wood waste.

CALCULATION SHEET

Project No. S54413.024	**Calculation No.** S54413.024-C-001	**Rev.** 0	**Page No.** 45 of 51
Title: LERF Basin 41 Construction Equipment Limitations for Liner and Geotextile Protection			
Prepared By: G. Taylor Grant	**Date:** 04/08/2020	**Checked By:** Darrel J. Packard	**Date:** 04/09/2020

ATTACHMENT – 8 – CAT D6 DOZER SPECIFICATIONS

Sargent & Lundy Engineering Services, Inc.

CALCULATION SHEET

Project No. S54413.024	**Calculation No.** S54413.024-C-001	**Rev.** 0	**Page No.** 46 of 51
Title: LERF Basin 41 Construction Equipment Limitations for Liner and Geotextile Protection			
Prepared By: G. Taylor Grant	**Date:** 04/08/2020	**Checked By:** Darrel J. Packard	**Date:** 04/09/2020

PRODUCT SPECIFICATIONS FOR D6

ENGINE

Engine Model	Cat C9.3B
Power - Net	215 HP
Emissions	U.S. EPA Tier 4 Final, EU Stage V, Korea Tier 4 Final
Net Power - Rated - ISO 9249/SAE J1349	215 HP
Net Power - Rated - ISO 9249/SAE J1349 (DIN)	219 HP
Build Number	20A
Note (1)	Rated horsepower at 2,200 rpm
Note (2)	All non-road Tier 4 Interim and Final, Stage IIIB, IV and V and Korea Tier 4 Final diesel engines are required to use only ultra-low sulfur diesel (ULSD) fuels containing 15 ppm (mg/kg) sulfur or less. Biodiesel blends up to B20 (20% blend by volume) are acceptable when blended with 15 ppm (mg/kg) sulfur or less ULSD. B20 should meet ASTM D7467 specification (biodiesel blend stock should meet Cat biodiesel spec, ASTM D6751 or EN 14214). Cat DEO-ULS or oils that meet the Cat ECF-3, API CJ-4 and ACEA E9 specification are required. Consult your OMM for further machine specific fuel recommendations.
Note (3)	Diesel Exhaust Fluid (DEF) used in Cat Selective Catalytic Reduction (SCR) systems must meet the requirements outlined in the International Organization for Standardization (ISO) standard 22241.
Note (4)	Basic machine specs provided below. For complete specifications and dimensions by configuration, blade and track shoe offerings and more, please visit the product download section to view the full D6/D6 XE Technical Specifications.

CALCULATION SHEET

Project No. S54413.024	**Calculation No.** S54413.024-C-001	**Rev.** 0	**Page No.** 47 of 51
Title: LERF Basin 41 Construction Equipment Limitations for Liner and Geotextile Protection			
Prepared By: G. Taylor Grant	**Date:** 04/08/2020	**Checked By:** Darrel J. Packard	**Date:** 04/09/2020

DIMENSIONS – LGP VPAT (30-IN)

Operating Weight	50650 lb

TRANSMISSION

Power Train	Fully Automatic 4-Speed Powershift

SERVICE REFILL CAPACITIES

Fuel Tank	90 gal (US)
DEF Tank	7.4 gal (US)

AIR CONDITIONING SYSTEM

Air Conditioning	The air conditioning system on this machine contains the fluorinated greenhouse gas refrigerant R134a (Global Warming Potential = 1430). The system contains 1.36 kg of refrigerant which has a CO2 equivalent of 1.946 metric tonnes.

D6 PUSH ARM

Operating Weight	48500 lb
Ground Pressure	7.9 psi
Width of Standard Shoe	24 in
Blade	Semi-Universal (SU)
Blade Capacity	7.5 yd^3

D6 LGP (30-IN) PUSH ARM

CALCULATION SHEET

Project No. S54413.024	**Calculation No.** S54413.024-C-001	**Rev.** 0	**Page No.** 48 of 51
Title: LERF Basin 41 Construction Equipment Limitations for Liner and Geotextile Protection			
Prepared By: G. Taylor Grant	**Date:** 04/08/2020	**Checked By:** Darrel J. Packard	**Date:** 04/09/2020

Operating Weight	50130 lb
Ground Pressure	6.6 psi
Width of Standard Shoe	30 in
Blade	Semi-Universal (SU)
Blade Capacity	7.6 yd³

D6 LGP (36-IN) PUSH ARM

Operating Weight	52615 lb
Ground Pressure	5.1 psi
Width of Standard Shoe	36 in
Blade	Straight
Blade Capacity	5 yd³

D6 VPAT

Operating Weight	49030 lb
Ground Pressure	7.1 psi
Width of Standard Shoe	24 in
Blade	VPAT
Blade Capacity	5.4 yd³

D6 LGP (30-IN) VPAT

Operating Weight	50650 lb
Ground Pressure	5.8 psi
Width of Standard Shoe	30 in

Sargent & Lundy Engineering Services, Inc.

CALCULATION SHEET

Project No. S54413.024	**Calculation No.** S54413.024-C-001	**Rev.** 0	**Page No.** 49 of 51
Title: LERF Basin 41 Construction Equipment Limitations for Liner and Geotextile Protection			
Prepared By: G. Taylor Grant	**Date:** 04/08/2020	**Checked By:** Darrel J. Packard	**Date:** 04/09/2020

Width of Standard Shoe	30 in
Blade	VPAT
Blade Capacity	5.9 yd³

D6 LGP (36-IN) VPAT

Operating Weight	51875 lb
Ground Pressure	5 psi
Width of Standard Shoe	36 in
Blade	VPAT
Blade Capacity	6.5 yd³

D6 STANDARD EQUIPMENT

POWER TRAIN

- Hydraulic reversing fan
- Double reduction planetary final drives
- Cat C9.3B diesel engine
- Fully-automatic 4-speed transmission

OPERATOR ENVIRONMENT

- Cloth seat
- Added storage areas
- Electrohydraulic implement and steering controls
- Lights - 6 LED
- Communication radio ready
- Cab mounted modular Heating/Ventilation/Air Conditioning (HVAC) system
- Fully redesigned cab, sound suppressed, with Integrated Roll Over Protective Structure (ROPS)
- Integrated rearview camera
- Adjustable operator controls/armrests
- Full-color 10-inch (254 mm) liquid crystal touch screen display

CALCULATION SHEET

Project No. S54413.024	**Calculation No.** S54413.024-C-001	**Rev.** 0	**Page No.** 50 of 51
Title: LERF Basin 41 Construction Equipment Limitations for Liner and Geotextile Protection			
Prepared By: G. Taylor Grant	**Date:** 04/08/2020	**Checked By:** Darrel J. Packard	**Date:** 04/09/2020

CAT TECHNOLOGY

Slope Indicate

Product Link, Cellular PLE641

Attachment Ready Option (ARO) with Assist/Cat GRADE with Slope Assist

UNDERCARRIAGE

Redesigned track roller frame

SERVICE AND MAINTENANCE

Ecology drains

30-minute cab removal

Rear access ladder

Fire extinguisher mounting provision

Shovel holder

Underhood work light

Ground level service center

HYDRAULICS

Independent steering and implement pumps

Load sensing hydraulics

ATTACHMENTS

Ripper-ready rear hydraulics

D6 OPTIONAL EQUIPMENT

OPERATOR ENVIRONMENT

Premium lights - 12 LED

Integrated warning lights

Deluxe leather heated/ventilated seat

CAT TECHNOLOGY

Cat GRADE with 3D

Product Link Elite PLE631 - Dual Cellular/Satellite

BLADES

CALCULATION SHEET

Project No. S54413.024	**Calculation No.** S54413.024-C-001	**Rev.** 0	**Page No.** 51 of 51
Title: LERF Basin 41 Construction Equipment Limitations for Liner and Geotextile Protection			
Prepared By: G. Taylor Grant	**Date:** 04/08/2020	**Checked By:** Darrel J. Packard	**Date:** 04/09/2020

Semi-Universal

Straight blade

Angle blade

Foldable VPAT - under 3 m (9.9 ft) transport width (Not available in all regions)

Variable Pitch Angle Tilt (VPAT)

Waste/Landfill

INDERCARRIAGE

Moderate Service or Extreme Service track shoes

10-Roller Fine Grading undercarriage

Heavy Duty (HDXL with DuraLink) or SystemOne

ERVICE AND MAINTENANCE

Refilling fuel pump (EU only)

TTACHMENTS

High lift ripper with straight or curved shanks

Winch

Forestry and Waste Special Arrangements

Counterweights

Ripper and winch-ready rear hydraulics

Side screens

Rear screen - hinged or fixed

Sweeps

Drawbar

DOCUMENT RELEASE AND CHANGE FORM

Prepared For the U.S. Department of Energy, Assistant Secretary for Environmental Management
By Washington River Protection Solutions, LLC., PO Box 850, Richland, WA 99352
Contractor For U.S. Department of Energy, Office of River Protection, under Contract DE-AC27-08RV14800

TRADEMARK DISCLAIMER: Reference herein to any specific commercial product, process, or service by trade name, trademark, manufacturer, or otherwise, does not necessarily constitute or imply its endorsement, recommendation, or favoring by the United States government or any agency thereof or its contractors or subcontractors. Printed in the United States of America.

Release Stamp

DATE:
May 27, 2020
HANFORD RELEASE

1. **Doc No:** RPP-CALC-63746 **Rev.** 00

2. **Title:**
LERF Basin 41 Static and Dynamic Loads on Leachate Pipe

3. **Project Number:** ☐N/A
T1P226

4. **Design Verification Required:**
☐Yes ☒No

5. **USQ Number:** ☒ N/A
RPP-27195

6. **PrHA Number** **Rev.** ☒ N/A

Clearance Review Restriction Type:
public

7. **Approvals**

Title	Name	Signature	Date
Clearance Review	Ayers, Lynn M	*Ayers, Lynn M*	05/19/2020
Design Authority	Wilson, Nathaniel W	*Wilson, Nathaniel W*	04/23/2020
Checker	Debban, Jeremy A	*Debban, Jeremy A*	04/10/2020
Document Control Approval	Scales, Anthony	*Scales, Anthony*	05/19/2020
Environmental Protection	Wall, Jeremy M	*Wall, Jeremy M*	04/29/2020
Originator	Dorsh, Paul M	*Dorsh, Paul M*	04/10/2020
Other Approver	McShane, Michael P	*McShane, Michael P*	05/07/2020
Responsible Engineering Manager	Huntington, Matthew R	*Huntington, Matthew R*	05/12/2020

8. **Description of Change and Justification**

Initial Release.

Design checks were performed in accordance with Sargent & Lundy ESD Quality Assurance Procedure (QAP). Becasue of the General Service status of the equipment, a graded approach was applied and design verification was not performed as allowed by QAP 3.5, Design Verification.

Note that Paul Dorsh is signing as Originator for Taylor Grant and Jeremy Debban is signing as Checker for Darrel Packard. Taylor Grant and Darrel Packard are not currently in SPF.

The trademark attribution information below is applicable, and should be added to the next revision.

Bobcat is a registered trademark of Clark Equipment Company, West Fargo, North Dakota.

9. **TBDs or Holds** ☒N/A

10. **Related Structures, Systems, and Components**

a. **Related Building/Facilities** ☐N/A	b. **Related Systems** ☐N/A	c. **Related Equipment ID Nos. (EIN)** ☒N/A
LERF FACILITIES	LERF	

11. **Impacted Documents – Engineering** ☒N/A

Document Number	Rev.	Title

12. **Impacted Documents (Outside SPF):**

N/A

13. **Related Documents** ☐N/A

Document Number	Rev.	Title
MT-50497	00	Liquid Effluent Retention Facility (LERF) Basin 41

14. **Distribution**

Name	Organization
Angevine, Brennan T	MISSION ANALYSIS ENGINEERING
Blaak, Whitney S	COGNIZANT SYSTEM ENGINEERING
Demiter, Scott M	ETF OPERATIONS
Foster, Jim	242-A/AW/ETF OPERATIONS
Goessmann, Glen E	ENGINEERING PROGRAMS
Greenhalgh, Aaron M	TANK FARM PROJECTS ENGINEERING
Halgren, Dale L	ETF ENGINEERING
Harris, John W	SAFETY PROGRAM SERVICES RC/P
Joslyn, Cameron C	ETF ENGINEERING
McFerran, Brandon E	242-A/AW/ETF OPERATIONS
McShane, Michael P	ENGINEERING PROGRAMS
Omberg Carro, Susan K	NUCLEAR SAFETY

DOCUMENT RELEASE AND CHANGE FORM	**Doc No:** RPP-CALC-63746 **Rev.** 00

14. **Distribution**

Name	**Organization**
Powers, Daniel J	ETF ENGINEERING
Roosendaal, Gene D	TFP PROJECT MANAGEMENT
Rutherford, Wally	ETF ENGINEERING
Sackett, Tom E	TANK FARM PROJECTS
Samoska, Jerry A	INSTRUMENT & CNTRL ENGINEERING
Shultz, Milton V	NUCLEAR SAFETY
Smith, Gregory E	TANK FARM PROJECTS ENGINEERING
Smoot, Bill R	TFP RADCON
Swanson, Brad L	242-A/AW/ETF OPERATIONS
Wall, Jeremy M	RETRVL & CLOSURE/PROJ ENV CMPL
Wilson, Nathaniel W	ETF PROJECTS ENGINEERING

RPP-CALC-63746
Revision 0

LERF Basin 41 Static and Dynamic Loads on Leachate Pipe

Prepared by

G. T. Grant
Sargent & Lundy for Washington River Protection Solutions, LLC

Date Published
April 2020

washington river protection solutions

DAVID E. NIELSON
STATE OF WASHINGTON
28592
REGISTERED
PROFESSIONAL ENGINEER

5-18-2020

Prepared for the U.S. Department of Energy
Office of River Protection

Contract No. DE-AC27-08RV14800

A-6007-231 (REV 0)

Approved for Public Release;
Further Dissemination Unlimited

RPP-CALC-63746 Rev. 0

Sargent & Lundy Engineering Services, Inc.	**CALCULATION COVER SHEET**	**Page No.** 1 of 52	
		Date 04/07/2020	**Rev. No.** 0
		Calculation No: S54413.024-C-002	

Project No.	**Project Title:**	**Client:**
S54413.024	LERF Basin 41 Design	Washington River Protection Solutions

Title:

LERF Basin 41 Static and Dynamic Loads on Leachate Pipe

Purpose and Objective:

The purpose of this calculation is to demonstrate the ability of the 4” and 10” diameter leachate pipes in the northwest corner of the basin to withstand both static and dynamic loads expected during construction and operation.

Rev. No.	Total Pages		Prepared By	Checked By	PM/TL
0	52	Print Name/ Sign:	G. Taylor Grant	Darrel J. Packard	Paul M. Dorsh, P.E.
		Date:	04/07/2020	4/9/2020	4/10/2020

Revision Description (Revision Description/Affected Pages):

		Print Name/ Sign:			
		Date:			

Revision Description (Revision Description/Affected Pages):

RPP-CALC-63746 Rev. 0

CALCULATION REVIEW CHECKLIST

Project No.	Calculation No.	Rev. No.	Page No.
S54413.024	S54413.024-C-002	0	2 of 52

Items Checked	Accept Y	Accept N	Accept N/A	Description of Resolution for Unacceptable Items
1. Cover sheets properly completed.	√			
2. Calculation sheet headers complete with calculation number, revision number, etc.	√			
3. Calculation sheet contents are legible, accurate, and complete per format.	√			
4. Listed attachments included.	√			
5. Calculation objective clearly described.	√			
6. Criteria are suitable and properly referenced to task specific documents.	√			
7. Assumptions and input data selected, described, reasonable, and attached or referenced to task documents.	√			
8. Calculation method identified and appropriate for the design activity.	√			
9. Calculation results reasonable and correctly described in results and conclusions.	√			
10. Physical property calculations generated by CAD software verified via hand calculations.			√	
11. Computer program identified with version and revision.			√	
12. Computer input/output provided or referenced and reasonable.			√	
13. Computer run traceable to calculation (file #, etc.).			√	
14. Computer input/output data and problem type within validation/verification range of use.			√	
15. Computer program validation/verification addressed.			√	
16. Computer operating system in use for calculation preparation is the same as when the software was verified on machine.			√	

Calculation Checking Method	√	Applicable Pages
1. Direct Step-by-Step Check	√	
2. Reference Chart(s) or Book(s) Comparison (Append Documentation)		
3. Alternate Calculation (Append Documentation)		

Comments:

Preparer (Print Name and Sign):	Date:
G. Taylor Grant	4/7/2020
Checker (Print Name and Sign):	**Date:**
Darrel Packard	4/9/2020

CALCULATION SHEET

Project No. S54413.024	**Calculation No.** S54413.024-C-002	**Rev.** 0	**Page No.** 3 of 52
Title: LERF Basin 41 Static and Dynamic Loads on Leachate Pipe			
Prepared By: G. Taylor Grant	**Date:** 04/07/2020	**Checked By:** Darrel J. Packard	**Date:** 04/09/2020

TABLE OF CONTENTS

1.0 PURPOSE 5

2.0 METHODOLOGY 5
- 2.1 Pipes 5
- 2.2 Loads 5
- 2.3 Acceptance Criteria 5

3.0 DESIGN INPUTS 6
- 3.1 Basin Geometry 6
- 3.2 Gravel Drainage Layer 6
- 3.3 Pipes 6
- 3.4 Construction Equipment 6
- 3.5 Unit Weight of Leachate 7

4.0 ASSUMPTIONS 7

5.0 COMPUTER SOFTWARE 7

6.0 RESULTS 7

7.0 REFERENCES 8

8.0 CALCULATIONS 9
- 8.1 Loads on Pipe During Normal Operation 9
- 8.2 Pipe Deflection During Normal Operation 9
- 8.3 Pipe Buckling During Normal Operation 10
- 8.4 Gravel Drainage Layer Loads During Construction 11
- 8.5 Construction Equipment Loads During Construction 11

Attachments

ATTACHMENT – 1 – H-2-838749, SHEET 1, REV. 0, LERF BASIN 41 CIVIL SECONDARY LINER
H-2-838749, SHEET 2, REV. 0, LERF BASIN 41 CIVIL SECONDARY LINER DETAILS

ATTACHMENT – 2 – DRISCOPLEX 9200 HDPE LINER PIPE CUT SHEETS

ATTACHMENT – 3 – EPA/600/2-88/052, LINING OF WASTE CONTAINMENT AND OTHER IMPOUNDMENT FACILITIES

ATTACHMENT – 4 – PLASIC PIPES INSTITUTE HANDBOOK OF PE PIPE

ATTACHMENT – 5 – SD-LEF-TI-005 REV 1 CALCULATION 3, STATIC AND DYNAMIC LOADS ON LEACHATE RISER

ATTACHMENT – 6 – BOBCAT S740 SKID-STEER SPECIFICATIONS

ATTACHMENT – 7 – CAT D6 DOZER SPECIFICATIONS

CALCULATION SHEET

Project No. S54413.024	**Calculation No.** S54413.024-C-002	**Rev.** 0	**Page No.** 4 of 52
Title: LERF Basin 41 Static and Dynamic Loads on Leachate Pipe			
Prepared By: G. Taylor Grant	**Date:** 04/07/2020	**Checked By:** Darrel J. Packard	**Date:** 04/09/2020

Acronyms

DCR	Demand-to-Capacity Ratio
DR	Dimension Ratio
LERF	Liquid Effluent Retention Facility

Sargent & Lundy Engineering Services, Inc.

CALCULATION SHEET

Project No. S54413.024	**Calculation No.** S54413.024-C-002	**Rev.** 0	**Page No.** 5 of 52
Title: LERF Basin 41 Static and Dynamic Loads on Leachate Pipe			
Prepared By: G. Taylor Grant	**Date:** 04/07/2020	**Checked By:** Darrel J. Packard	**Date:** 04/09/2020

1.0 PURPOSE

The purpose of this calculation is to demonstrate the ability of the 4” and 10” diameter leachate pipes in the northwest corner of the basin to withstand both static and dynamic loads expected during construction and operation.

2.0 METHODOLOGY

2.1 Pipes

The pipes that will be analyzed are a 4” diameter perforated pipe and a 10” diameter perforated pipe as shown on drawing H-2-838749, Sheet 2, Rev. 0 (Attachment 1). In general, smaller diameter pipes can withstand loads better than larger diameter pipes, so the 10” diameter pipe will be analyzed.

2.2 Loads

The pipes and cover material are shown in Sections C and D on drawing H-2-838749, Sheet 2, Rev. 0 (Attachment 1). The pipes will be subjected to loads from the gravel drainage layer, effluent, placement of the gravel drainage layer, and construction equipment traveling over the pipes. Loads from other sources are possible, as mentioned in Section 3.5 Design Loads in Reference 6, however, loads from other sources are not expected to control.

During normal operation, the pipes will be subjected to the gravel drainage layer and the effluent loads concurrently. During construction, the pipe will be subjected to placement of the gravel drainage layer and construction equipment traveling over the pipes, which will be nonconcurrent. Placement of the gravel drainage layer will be analyzed by applying an impact factor to the unit weight of gravel, and then analyzing as a static system.

2.3 Acceptance Criteria

Pipe deflection and buckling capacity will be calculated for during normal operation, and buckling capacity will be calculated for during construction.

The deflection will be calculated using the Iowa Formula, given in Reference 1, Appendix I, Section I.2.3 “Deflection,” using normal operating loads. The allowable deflection is given in Reference 1, Appendix I, Section I.2.7 “Procedures for Calculating Required Pipe Strength.”

The buckling capacity of the pipe will be calculated using the Luscher Equation, given in Reference 3, Page 221 “Luscher Equation for Constrained Buckling Below Ground Water Level.” This equation will be used to calculate the allowable compressive pressure on the pipe. The allowable compressive pressure will be compared to the normal operating loads, placement of the gravel drainage layer loads, and the construction equipment loads to determine if the pipe is adequate for resisting buckling.

3.0 DESIGN INPUTS

3.1 Basin Geometry

The basin geometry is given in the below drawings. These drawings are included in Attachment 1.

H-2-838749, Sheet 1, Rev. 0

H-2-838749, Sheet 2, Rev. 0

D_e = The maximum possible depth of effluent in the basin. The lowest point of the basin that effluent could reach is the top of the primary liner (Attachment 1, Drawing H-2-838749, Sheet 1, Liner System Schematic) and is elevation 576.50' (Attachment 1, Drawing H-2-838749, Sheet 2, Detail 2). The highest elevation around the perimeter of the basin is the top of concrete of the anchor wall and is 603.50' (Attachment 1, Drawing H-2-838750, Sheet 1, Section C). Therefore, D_e = top elevation – bottom elevation = 603.50' – 576.50' = 27.00'.

The actual top of effluent elevation is less than the top of the concrete anchor wall, but this freeboard will conservatively be disregarded.

3.2 Gravel Drainage Layer

The height of the gravel drainage layer is 2 feet. (Drawing H-2-838749, Sheet 2, Rev. 0, Section C). The height of gravel on top of each pipe is therefore:

Height of gravel above 10" pipe = B_{p10} = 2 ft – 10 in = 14 in

Height of gravel above 4" pipe = B_{p4} = 2 ft – 4 in = 20 in

Unit weight of gravel = W_g = 135 pcf (Engineering Judgement)

3.3 Pipes

The leachate pipes are shown in Drawing H-2-838749, Sheet 2, Rev. 0, Detail 1.

Large pipe diameter = d_l = 10 in

Small pipe diameter = d_s = 4 in

3.4 Construction Equipment

The largest piece of construction equipment expected above the pipes will be a Bobcat S740 skid-steer (or similar). The below values are provided from Bobcat's website, see Reference 5.

The bobcat width of wheelbase = x_{bobcat} = 48.3 in

The bobcat operating weight = W_{bobcat} = 8794 lbs

Near the sump of the basin, a dozer could potentially be used for spreading gravel. The below values are from Cat's website, see Reference 9.

The dozer width of wheelbase = x_{dozer} = 76 in

The dozer operating weight = W_{dozer} = 52615 lbs

3.5 Unit Weight of Leachate

The unit weight of leachate is taken from Reference 4, Page 1.

Unit weight of leachate = W_e = 62.4 pcf

4.0 ASSUMPTIONS

There are no assumptions in this calculation. Engineering judgement, where used, is documented herein.

5.0 COMPUTER SOFTWARE

No unverified computer software was used in this analysis. Calculations are checked using a handheld calculator.

6.0 RESULTS

A summary of results is below.

Load Case	Item	DCR	Remarks
Norm. Operating	Deflection	0.761	
Norm. Operating	Buckling	0.924	
Const. Gravel	Buckling	<0.924	Loads less than during normal operation
Const. Equipment	Buckling	>1	Add note to drawings: No construction equipment nor vehicle shall drive over the leachate pipes after installation.

Property	Required	Remarks
Pipe Dimension Ratio	DR ≤26	

CALCULATION SHEET

Project No. S54413.024	**Calculation No.** S54413.024-C-002	**Rev.** 0	**Page No.** 8 of 52
Title: LERF Basin 41 Static and Dynamic Loads on Leachate Pipe			
Prepared By: G. Taylor Grant	**Date:** 04/07/2020	**Checked By:** Darrel J. Packard	**Date:** 04/09/2020

7.0 REFERENCES

1) EPA/600/2-88/052, Lining of Waste Containment and Other Impoundment Facilities, 1988
2) Driscoplex 9200 HDPE Liner Pipe cut sheets
3) Handbook of PE Pipe, 2nd Edition, Chapter 6 - Design of PE Piping Systems, Plastic Pipes Institute
4) SD-LEF-TI-005 REV 1 Calculation 3, *Static and Dynamic Loads on Leachate Riser*, 1991
5) Bobcat S740 Skid-steer Specifications
6) TFC-ENG-STD-06, REV D-2, *DESIGN LOADS FOR TANK FARM FACILITIES*
7) H-2-838749, SHEET 1, REV. 0, Basin Bottom Liner Plan, Section and Details
8) H-2-838749, SHEET 2, REV. 0, Basin Bottom Liner Details
9) CAT D6 Dozer Specifications

Sargent & Lundy Engineering Services, Inc.

CALCULATION SHEET

Project No. S54413.024	**Calculation No.** S54413.024-C-002	**Rev.** 0	**Page No.** 9 of 52
Title: LERF Basin 41 Static and Dynamic Loads on Leachate Pipe			
Prepared By: G. Taylor Grant	**Date:** 04/07/2020	**Checked By:** Darrel J. Packard	**Date:** 04/09/2020

8.0 CALCULATIONS

8.1 Loads on Pipe During Normal Operation

The sum of vertical pressures acting on the pipe are:

$\sigma_a = D_e \times W_e + W_g \times B_{p10} = 27 \text{ ft} \times 62.4 \text{ pcf} + 135 \text{ pcf} \times 14 \text{ in} = 12.79 \text{ psi}$

The stress on the pipe will need to be adjusted to account for the ½ inch perforations at 8 inch spacing.

The length of perforation per foot: (Reference 1, Page I-10)

$p = (½ \text{ in} / 8 \text{ in}) \times 12 \text{ in} = 0.75 \text{ ft}$

Adjusting for the ½ inch perforations @ 8inch spacing: (Reference 1, Page I-10)

$\sigma_d = [12 \text{ in} / (12 \text{ in} – p)] \times \sigma_a = [12 \text{ in} / (12 \text{ in} –0.75 \text{ ft})] \times 12.79 \text{ psi} = 13.64 \text{ psi}$

8.2 Pipe Deflection During Normal Operation

Pipe deflection will be calculated using the Iowa Formula given in Reference 1, Pages I-10, I-12, and I-13:

$\Delta_y = T_l \times (Bc \times \sigma_d \times K \times r^3) / (E \times I + 0.061 \times E` \times r^3)$

Time lagging factor: $T_l = 1.0$ (Reference 1, Page I-10, no time lag is expected)

Modulus of passive soil resistance:

$E` = 300$ psi (Reference 1, Page I-11, gravel will not be compacted – minimum value used)

Bedding factor: $K = 0.1$ (Reference 1 page I-11, conservative value)

Modulus of elasticity: $E = 120000$ psi (Reference 2)

Mean radius of pipe: $r = 5$ in

Pipe width: $B_c = 10.75$ in (Reference 2)

Pipe wall thickness: $t = 0.413$ in (Reference 2, DR 26.0)

Pipe moment of inertia: $I = t^3 / 12 = (0.413 \text{ in})^3 / 12 = 0.00587 \text{ in}^3$

Deflection: $\Delta_y = T_l \times (B_c \times \sigma_d \times K \times r^3) / (E \times I + 0.061 \times E` \times r^3)$

= 1.0 x [10.75 in x 13.64 psi x 0.1 x (5 in)^3] / [120000 psi x 0.00587 in^3 + 0.061 x 300 psi x (5 in)^3]

= 0.613 in

The allowable deflection is given in Reference 1, Page I-16 and is a range of 5%-10% of the pipe width. The average of the range of allowable deflection will be used as the acceptance criteria.

Δ_{yall} = ½(0.05 + 0.10) x B_c = ½(0.05 + 0.1) x 10.75 in = 0.806 in

DCR: $DCR_{\Delta y} = \Delta_y / \Delta_{yall}$ = 0.613 in / 0.806 in = 0.761

8.3 Pipe Buckling During Normal Operation

Reference 1, Page I-13 states that a pipe's buckling capacity should be provided by the pipe manufacturer. Performance Pipe's website refers to the Plastic Pipes Institute Handbook of PE Pipe (Reference 3) for design guidance, which will be used to calculate the pipe's buckling capacity.

Pipe buckling will not be a concern when the basin is empty. For buckling scenarios, it is assumed the basin will be full, therefore, the section "Luscher Equation for Constrained Buckling Below Ground Water Level" will be used (Reference 3, Page 221).

Allowable compressive stress: P_{wc} = (5.65 / N) x {(R x B` x E` x E) / [(12 x (DR – 1)^3]}$^{0.5}$

Buoyancy reduction factor: R = 1 – 0.33 x H_{GW} / H

Where:

H_{GW} = the height of water above the pipe

H = the height of cover above the pipe

The buoyancy factor reduces the allowable compressive stress in the pipe. The reduction factor is 1 when there is no groundwater acting on the pipe. When the groundwater is at the top of the soil layer, then the reduction factor is 1 – 0.33 = 0.67. This is assumed to be the greatest reduction factor, and will be used.

R = 1 – 0.33 x 1 = 0.67

B` = 1 / [1 + 4 x e^(-0.065 x B_{p10})] = 1 / [1 + 4 x e^(-0.065 x 1.167)]

B` = 0.212

Dimension ratio: DR = 26

Safety Factor: N = 2. Reference 3, Page 222 states that "the designer should apply a safety factor commensurate with the application." It is recommended for thermoplastic pipes a safety factor of 2 should be applied. A factor of safety of 2 for this application is reasonable.

Allowable compressive stress: $P_{wc} = (5.65 / N) \times \{(R \times B` \times E` \times E) / [(12 \times (DR - 1)^3]\}^{0.5}$

$= (5.65 / 2) \times \{(0.67 \times 0.212 \times 300 \times 120000) / [(12 \times (26 - 1)^3]\}^{0.5}$

$= 14.76$ psi

DCR: $DCR_b = \sigma_d / P_{wc} = 13.64 \text{ psi} / 14.76 \text{ psi} = 0.924$

The applied loads are conservative since the leachate will not reach a depth of 27 feet during normal operation.

8.4 Gravel Drainage Layer Loads During Construction

The gravel drainage layer will be analyzed with an impact factor in order to determine the effects of placing the 2' thick gravel drainage layer.

Height of gravel to be placed around of pipe:

$B_g = 24$ in

Stress on pipe with a 1.5 impact factor:

$\sigma_{ac} = 1.5 \times (W_g \times B_g) = 1.5 \times (135 \text{ pcf} \times 24 \text{ in}) = 2.81$ psi

The stress of the gravel with an impact factor is less than that of the during operation stress determined in section 8.1, therefore, the stress in section 8.1 will govern.

8.5 Construction Equipment Loads During Construction

The weight of construction equipment traveling over the pipe after it has been installed has been analyzed for a similar scenario in Reference 4. The weight of the equipment in Reference 4, however, is less than the weight of the Bobcat model given in Reference 5 and the dozer model given in Reference 9. The calculations in Reference 4 concluded that small construction equipment could damage the pipe after it had been installed, and therefore should be avoided by small construction equipment.

Given the results in Reference 4 and that the Bobcat model in Reference 5 and dozer model in Reference 9 both weigh more than the equipment used in Reference 4, a note will be on the design drawings that deal with the leachate pipes that state "no construction equipment nor vehicle shall drive over the leachate pipes after installation."

CALCULATION SHEET

Project No. S54413.024	**Calculation No.** S54413.024-C-002	**Rev.** 0	**Page No.** 12 of 52
Title: LERF Basin 41 Static and Dynamic Loads on Leachate Pipe			
Prepared By: G. Taylor Grant	**Date:** 04/07/2020	**Checked By:** Darrel J. Packard	**Date:** 04/09/2020

ATTACHMENT – 1 - H-2-838749, SHEET 1, REV. 0, LERF BASIN 41 CIVIL SECONDARY LINER
H-2-838749, SHEET 2, REV. 0, LERF BASIN 41 CIVIL SECONDARY LINER DETAILS

Sargent & Lundy Engineering Services, Inc.

CALCULATION SHEET

Project No.	S54413.024	**Calculation No.**	S54413.024-C-002	**Rev.**	0	**Page No.**	13 of 52
Title:	LERF Basin 41 Static and Dynamic Loads on Leachate Pipe						
Prepared By:	G. Taylor Grant	**Date:**	04/07/2020	**Checked By:**	Darrel J. Packard	**Date:**	04/09/2020

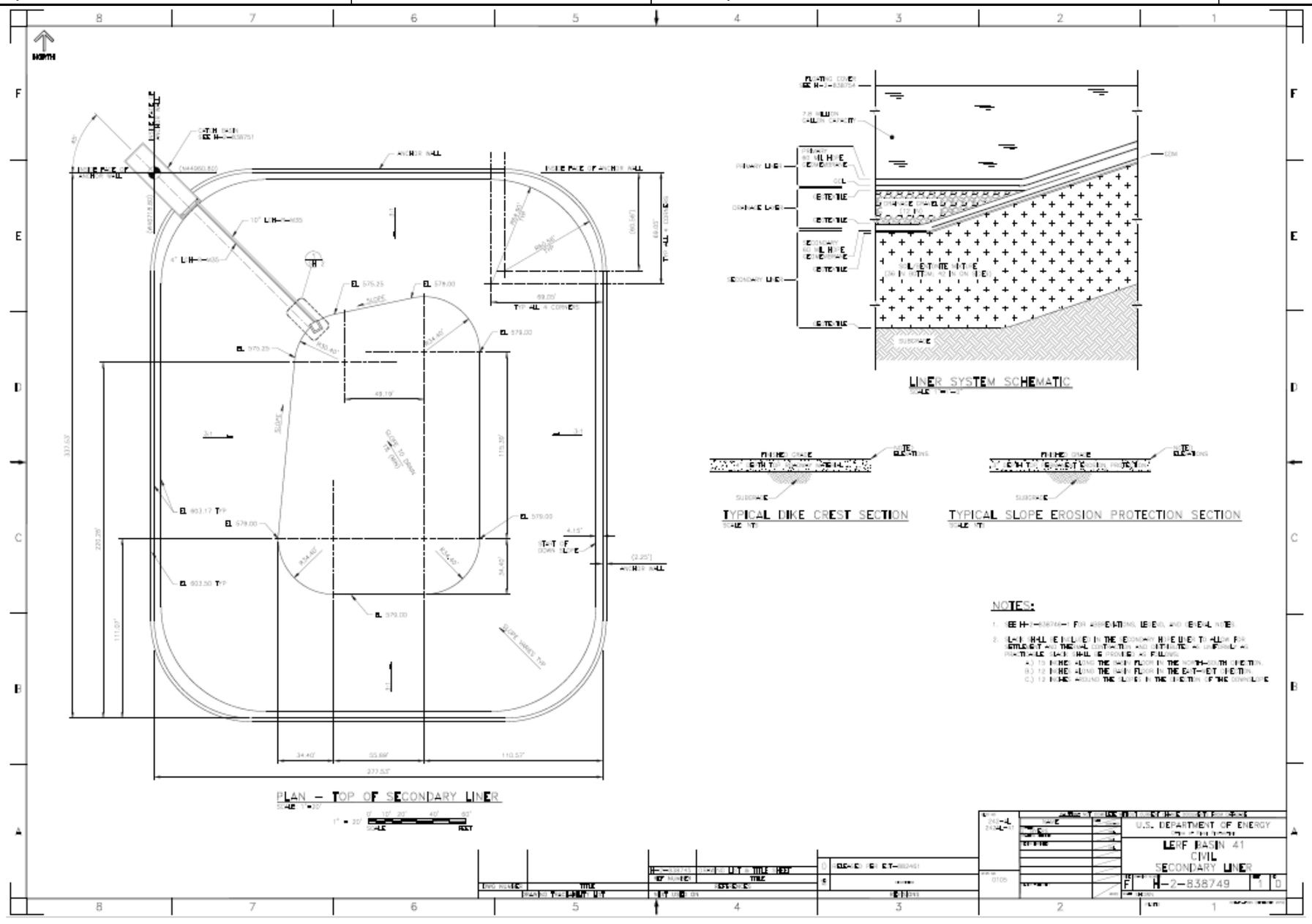

Sargent & Lundy Engineering Services, Inc.

CALCULATION SHEET

Project No.	S54413.024	**Calculation No.**	S54413.024-C-002	**Rev.**	0	**Page No.**	14 of 52
Title:	LERF Basin 41 Static and Dynamic Loads on Leachate Pipe						
Prepared By:	G. Taylor Grant	**Date:**	04/07/2020	**Checked By:**	Darrel J. Packard	**Date:**	04/09/2020

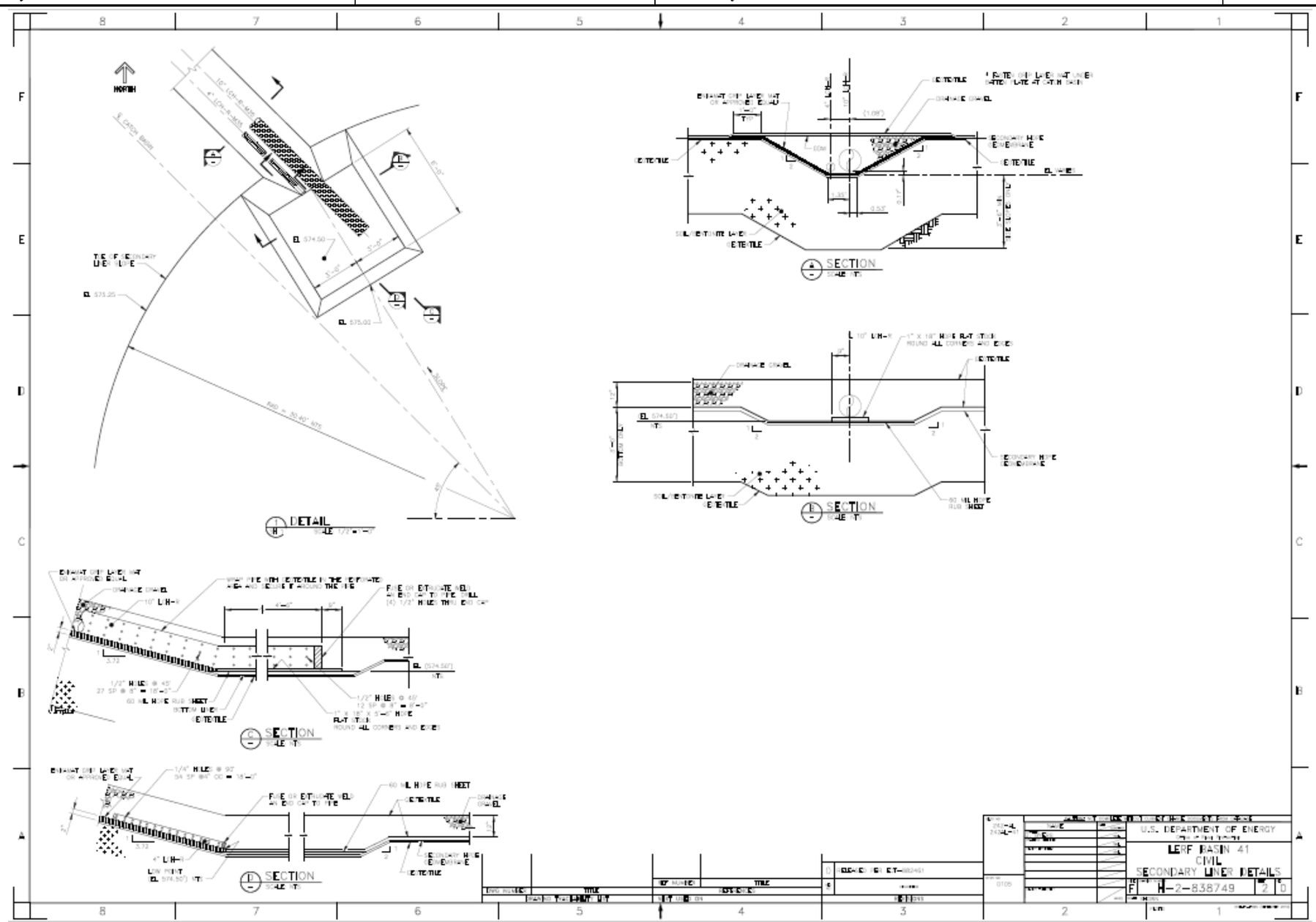

CALCULATION SHEET

Project No. S54413.024	**Calculation No.** S54413.024-C-002	**Rev.** 0	**Page No.** 15 of 52
Title: LERF Basin 41 Static and Dynamic Loads on Leachate Pipe			
Prepared By: G. Taylor Grant	**Date:** 04/07/2020	**Checked By:** Darrel J. Packard	**Date:** 04/09/2020

ATTACHMENT – 2 - DRISCOPLEX 9200 HDPE LINER PIPE CUT SHEETS

Sargent & Lundy Engineering Services, Inc.

CALCULATION SHEET

Project No. S54413.024	**Calculation No.** S54413.024-C-002	**Rev.** 0	**Page No.** 16 of 52
Title: LERF Basin 41 Static and Dynamic Loads on Leachate Pipe			
Prepared By: G. Taylor Grant	**Date:** 04/07/2020	**Checked By:** Darrel J. Packard	**Date:** 04/09/2020

PERFORMANCE PIPE
A Division of Chevron Phillips Chemical Company LP

Iron Pipe Size (IPS) and Dimension Data — PE4710 (PE3408)

DriscoPlex® Pipe for Municipal and Industrial Applications

Pressure Ratings are calculated using 0.63 design factor for HDS at 73°F as listed in PPI TR-4 for PE 4710 materials. HDPE can accomodate up to 1.5 times the pipe pressure rating for a recurring surge and up to 2.0 times the pipe pressure rating for an occasional surge. Temperature, Chemical, and Environmental use considerations may require use of additional design factors.

Pressure Rating		125 psi DR 17.0			100 psi DR 21.0			80 psi DR 26.0			63 psi DR 32.5			
Nominal Pipe Size	IPS OD (in)	Minimum Wall (in)	Average ID (in)	Weight (lbs/ft)	Minimum Wall (in)	Average ID (in)	Weight (lbs/ft)	Minimum Wall (in)	Average ID (in)	Weight (lbs/ft)	Minimum Wall (in)	Average ID (in)	Weight (lbs/ft)	Nominal Pipe Size
1 1/4"	1.660													1 1/4"
1 1/2"	1.900													1 1/2"
2"	2.375	0.140	2.078	0.43										2"
3"	3.500	0.206	3.063	0.94										3"
4"	4.500	0.265	3.938	1.55	0.214	4.046	1.27							4"
6"	6.625	0.390	5.798	3.36	0.315	5.957	2.75	0.255	6.084	2.24	0.204	6.193	1.81	6"
8"	8.625	0.507	7.550	5.69	0.411	7.754	4.66	0.332	7.921	3.80	0.265	8.063	3.07	8"
10"	10.750	0.632	9.410	8.83	0.512	9.665	7.24	0.413	9.874	5.91	0.331	10.048	4.77	10"
12"	12.750	0.750	11.160	12.43	0.607	11.463	10.19	0.490	11.711	8.31	0.392	11.919	6.71	12"
14"	14.000	0.824	12.253	14.98	0.667	12.586	12.28	0.538	12.859	10.02	0.431	13.086	8.09	14"
16"	16.000	0.941	14.005	19.57	0.762	14.385	16.04	0.615	14.696	13.09	0.492	14.957	10.56	16"
18"	18.000	1.059	15.755	24.77	0.857	16.183	20.30	0.692	16.533	16.57	0.554	16.826	13.37	18"
20"	20.000	1.176	17.507	30.58	0.952	17.982	25.07	0.769	18.370	20.45	0.615	18.696	16.50	20"
22"	22.000	1.294	19.257	37.00	1.048	19.778	30.33	0.846	20.206	24.75	0.677	20.565	19.97	22"
24"	24.000	1.412	21.007	44.03	1.143	21.577	36.10	0.923	22.043	29.45	0.738	22.435	23.76	24"
26"	26.000	1.529	22.759	51.67	1.238	23.375	42.36	1.000	23.880	34.57	0.800	24.304	27.89	26"
28"	28.000	1.647	24.508	59.93	1.333	25.174	49.13	1.077	25.717	40.09	0.862	26.173	32.34	28"
30"	30.000	1.765	26.258	68.80	1.429	26.971	56.40	1.154	27.554	46.02	0.923	28.043	37.13	30"
32"	32.000	1.882	28.010	78.28	1.524	28.769	64.17	1.231	29.390	52.36	0.985	29.912	42.24	32"
34"	34.000	2.000	29.760	88.37	1.619	30.568	72.44	1.308	31.227	59.11	1.046	31.782	47.69	34"
36"	36.000	2.118	31.510	99.07	1.714	32.366	81.21	1.385	33.064	66.27	1.108	33.651	53.46	36"
42"	42.000	2.471	36.761	134.84	2.000	37.760	110.54	1.615	38.576	90.20	1.292	39.261	72.77	42"
48"	48.000	2.824	42.013	176.12	2.286	43.154	144.38	1.846	44.086	117.81	1.477	44.869	95.05	48"
54"	54.000	3.176	47.266	222.90	2.571	48.549	182.73	2.077	49.597	149.10	1.662	50.477	120.29	54"

This size and dimension chart is intended for reference purposes. It should not be used in place of the advice from a licensed Professional Engineer. Pipe weights are calculated in accordance with PPI TR-7. Average inside diameter is calculated using IPS OD and Minimum wall plus 6% for use in estimating fluid flows. Actual ID will vary. When designing components to fit the pipe ID, refer to pipe dimension and tolerances in the applicable pipe manufacturing specification.

Visit www.performancepipe.com for the most current literature.

Bulletin: PP 152-4710

February 2015 Supersedes all previous publications
© 2001-2015 Chevron Phillips Chemical Company LP

Sargent & Lundy Engineering Services, Inc.

CALCULATION SHEET

Project No. S54413.024	**Calculation No.** S54413.024-C-002	**Rev.** 0	**Page No.** 17 of 52
Title: LERF Basin 41 Static and Dynamic Loads on Leachate Pipe			
Prepared By: G. Taylor Grant	**Date:** 04/07/2020	**Checked By:** Darrel J. Packard	**Date:** 04/09/2020

PERFORMANCE PIPE
A Division of Chevron Phillips Chemical Company LP

PerformancePipe.com

DRISCOPLEX® 9200
HDPE LINER DATA SHEET

DriscoPlex® 9200 Liner meets or exceeds:

ASTM D3350
cell classification PE445574C
PPI TR-4 designation PE4710
Produced to Customer Specific sizes

DriscoPlex® 9200 Liner for:

Lining existing pipelines for service in
Oil & Gas Gathering, Coal Bed Methane,
Raw Water, Brine Water,
Landfill Methane, Landfill Leachate, etc.
Iron Pipe Size OD (IPS) ¾" to 54",
40' and 50' Joints / Solid Black

NOMINAL PIPE PROPERTIES [1]	UNIT	TEST METHOD	VALUE PE4710
Density	gms / cm^3	ASTM D1505	.960 (black)
Melt Index (MI) Condition 190°C / 2.16kg	gms / 10 minutes	ASTM D1238	0.08
Hydrostatic Design Basis 73° F (23° C)	psi	ASTM D2837	1600
Hydrostatic Design Basis 140° F (60° C)	psi	ASTM D2837	1000
Color: UV Stabilizer [C]	—	ASTM D3350	Min 2% Carbon Black
NOMINAL MATERIAL PROPERTIES [1] [2]	**UNIT**	**TEST METHOD**	**VALUE PE4710**
Flexural Modulus 2% Secant – 16:1 span: depth. 0.5 in / min.	psi	ASTM D790	>120,000
Tensile Strength at Yield	psi	ASTM D638 Type IV	>3500
Elongation at Break 2 in / min., Type IV Bar	%	ASTM D638	>800
Elastic Modulus	psi	ASTM D638	>175,000
Hardness	Shore D	ASTM D2240	62
PENT	hrs	ASTM F1473	>500
Vicat Softening Temperature	°F	ASTM D1525	256
Brittleness Temperature	°F	ASTM D746	< -103
Thermal Expansion	in / in / °F	ASTM D696	1.0 x 10^{-4}

1. This is not a product specification and does not guarantee or establish specific minimum or maximum values or manufacturing tolerance for material or piping products to be supplied.
2. Values obtained from tests of specimens taken from piping product may vary from these typical values.

When Performance Matters Rely on Performance Pipe

Bulletin: PP112 / October 2015

© 2015 Chevron Phillips Chemical Company LP

Performance Pipe, a division of Chevron Phillips Chemical Company LP | 5085 W. Park Blvd | Suite 500 | Plano, TX 75093 | Phone: 800-527-0662 | Fax: 972-599-7348

This data sheet provides typical properties for Performance Pipe piping products. Before using this product, the user is advised and cautioned to make their own determination and assessment of the safety and suitability of the product for the specific use in question and is further advised against relying on the information contained herein as it may relate to any specific use or application. It is the ultimate responsibility of the user to ensure that the product is suited and the information is application to the user's specific application. Chevron Phillips Chemical Company LP does not make, and expressly disclaims, all warranties, including warranties of merchantability or fitness for a particular purpose, regardless of whether oral or written, express or implied, allegedly arising from any usage of any trade or from any course of dealing in connection with the use of information contained herein or the product itself. The user expressly assumes all risk and liability, whether based in contract, tort or otherwise, in connection with the use of the information contained herein or the product itself. Further, information contained herein is given without reference to any intellectual property issues, as well as federal, state or local laws which may be encountered in the use thereof. Such questions should be investigated by the user. The data sheet may change periodically. Visit www.Performance Pipe.com for the most current data sheet.

CALCULATION SHEET

Project No. S54413.024	**Calculation No.** S54413.024-C-002	**Rev.** 0	**Page No.** 18 of 52
Title: LERF Basin 41 Static and Dynamic Loads on Leachate Pipe			
Prepared By: G. Taylor Grant	**Date:** 04/07/2020	**Checked By:** Darrel J. Packard	**Date:** 04/09/2020

ATTACHMENT – 3 – EPA/600/2-88/052, LINING OF WASTE CONTAINMENT AND OTHER IMPOUNDMENT FACILITIES

where

W = force per unit length of pipe, and

B_c = outside diameter of pipe.

I.2.2.2 Positive Projecting Condition (Figure I-4)--

This condition is assumed to exist whenever the top of the pipe is at or above the level of the bottom of the unit. In this case, the load on the pipe can be assumed to be equal to the weight of a prism of overlying waste fill with a width B_c and height H_f plus the weight of a similar prism of gravel backfill above the pipe; because the pressure due to the gravel backfill typically will be small compared to the pressure due to the waste fill, the vertical pressure on the top of the pipe can be assumed to be equal to the unit weight of the waste fill multiplied by the distance from top of the waste fill to top of pipe, thus:

$$\sigma_v = (\omega_f)(H_f).$$

I.2.2.3 Perforated Pipe--

Perforations will reduce the effective length of pipe available to carry loads and resist deflection. The effect of perforations can be taken into account by using an increased load per nominal unit length of the pipe. If l_p equals the cumulative length in inches of perforations per foot of pipe, the increased vertical stress to be used equals:

$$(\sigma_v)_{design} = \frac{12}{12-l_p} \times (\sigma_v)_{actual}.$$

I.2.3 Deflection

A well-accepted formula for calculating flexible pipe deflection under earth loading is that developed by Spangler. This equation, also known as the Iowa formula, is presented together with suggested values for its various constants in the 1970 edition of the American Society of Civil Engineers (ASCE) Manual of Practice, No. 37, Chapter 9, Section E, Subsection 1, and is as follows:

$$\Delta y = D_e \frac{KWr^3}{EI + 0.061\,E'r^3}$$

where,

Δy = horizontal and vertical deflection of the pipe (in.),

D_e = a factor, generally taken at a conservative value of 1.5, compensating for the lag or time dependent behavior of the soil/pipe systems (dimensionless),

Sargent & Lundy Engineering Services, Inc.

CALCULATION SHEET

Project No. S54413.024	**Calculation No.** S54413.024-C-002	**Rev.** 0	**Page No.** 20 of 52
Title: LERF Basin 41 Static and Dynamic Loads on Leachate Pipe			
Prepared By: G. Taylor Grant	**Date:** 04/07/2020	**Checked By:** Darrel J. Packard	**Date:** 04/09/2020

W = vertical load acting on the pipe per unit of pipe length (lb/in.),

r = mean radius of the pipe (in.),

E = modulus of elasticity of the pipe materials (psi),

E' = modulus of passive soil resistance (psi) (normally estimated to be 300 psi for soils of Proctor density of 65%, and 700 psi for soils of Proctor density of at least 90%),

K = bedding constant, reflecting the support the pipe receives from the bottom of the trench (dimensionless) (a conservative value generally taken is 0.10), and

I = moment of inertia of pipe wall per unit of length (in.^{4}/in.); for any round pipe, $I = t^3/12$ where t is the average thickness (in).

The equation can be rewritten to express pipe deflection as a decimal fraction of the pipe diameter, B_c, and to relate it to the vertical stress on the pipe as follows:

$$\frac{W}{B_c} = \sigma_v = \frac{(\Delta y)}{(B_c)}\left(\frac{EI + 0.061E'r^3}{D_e K r^3}\right).$$

Solutions to this equation are shown graphically in Fig. J-7 where the quantity $\sigma_v/(\Delta y/B_c)$ has been plotted against the passive soil modulus E'. The relationship between $\sigma_v/(\Delta y/B_c)$ and E' has been shown for four plastic pipes: 4 and 6-in. Schedule 40 and 4 and 6-in. Schedule 80 PVC pipe. In computing the quantity EI for these pipes, a reduced modulus was used to account for creep of the plastic pipe. A value equal to 142,000 psi was used to correspond to the modulus at 50 years under sustained loading (see Janson, 1974). Also shown is the relationship for EI = 0. This would represent a relationship between $\sigma_v/(\Delta y/B_c)$ and E', if the stiffness of the pipe is neglected.

In addition to using the chart to check the adequacy of a given pipe, the chart can be used to determine the necessary value of EI/r^3 which the pipe must have for given values of $\sigma_{max}/(\Delta y/B_c)$ and E'. Although it is customary to use either 300 or 700 psi for the value of the modulus of passive soil resistance, it should be noted that the modulus of elasticity of a coarse grained soil (sand or gravel) increases with increasing pressure (or depth in the ground). Thus, it should be expected that the modulus of passive soil resistance also would increase with increasing pressure or depth of fill.

The term EI in Spangler's equation reflects the pipe's contribution to the total resistance to deflection under load offered by the pipe/soil system. This term, known as the pipe's Stiffness Factor, is related to the pipe's behavior under parallel plate loading as per ASTM D2412, "External Loading Properties of Plastic Pipe by Parallel Plate Loading," by the following expression:

$$EI = 0.149r^3(F/\Delta y),$$

where

E, I and r are as previously defined:

F = the recorded load (lb/linear in.) required to produce a pipe deflection Δy, and

Δy = the pipe's deflection (in.).

Minimum values of the term $F/\Delta y$, called Pipe Stiffness, are set according to Pipe DR (dimension ratio) by the ASTM PVC Sewer Pipe Specifications D3033 and D3034. The DR represents the ratio of the pipe's average outside diameter to its minimum wall thickness. Thus, for each DR there is a corresponding minimum specified value of $F/\Delta y$.

The above expression for EI can be substituted into the previous equation for deflection to obtain the following:

$$\frac{\sigma_v}{(\Delta y/B_c)} = \frac{(0.149F/Wy) + 0.061E'}{D_e K}.$$

Solutions to this equation can be made on a graph similar to Figure I-7 where the quantity $\sigma_v/(\Delta y/B_c)$ is plotted against the soil modulus E' for several values of $F/\Delta y$.

I.2.4 Buckling Capacity

The capacity of a buried plastic drain pipe to support vertical stresses may be limited by buckling. Estimates of the vertical stresses at which buckling of the 6-in. Schedule 40 PVC pipe (the most flexible of the four pipes shown) will occur are indicated by the curve in Figure I-7. For the four pipes shown, buckling would not be a controlling factor. However, it could be a controlling factor, depending on the flexibility of the pipe and the modulus of passive soil resistance. Specific information for other sizes and pipe materials proposed for use in the collection system should be secured from the pipe manufacturer.

I.2.5 Compressive Strength

The capacity of the pipe to support vertical stresses may be influenced by the circumferential compressive strength of the pipe. The designer or

reviewer should secure up-to-date information on circumferential compressive strength characteristics from the manufacturer of the type of pipe proposed for use.

I.2.6 Construction Loadings

A pipe correctly designed to withstand loading from a high fill can fail from loading received during construction. Although only a fraction of a stationary wheel or tracked vehicle load applied at the ground surface over a trench is transmitted to a pipe through the trench backfill, the percentage increases rapidly as the vertical distance between the loaded surface and the top of the pipe decreases. In addition, moving loads cause impact loading which is generally considered to have a 1.5 to 2.0 multiplier effect over stationary loading.

In general, equipment should not cross leachate collection drains installed in trenches with shallow cover or in projecting installations. When equipment must be routed across a drain, impact loading can be minimized by mounding material over the pipe to provide a vertical separation of 4 ft between the loaded surface and the top of the pipe.

I.2.7 Procedures for Calculating Required Pipe Strength

The procedures used to select the proper strength pipe are illustrated in the following examples:

Trench Installation (Figures I-5 and I-8)

Given: Z = 1 ft - 8 in. H_f = 100 ft waste fill

B_d = 1 ft - 6 in. ω_f = 50 pcf

K_μ' = 0.19 γ = 110 pcf

pipe diameter = 4 in.

Determine: Required pipe strength/schedule.

Step 1 - Determine the maximum vertical pressure σ_v (psi) acting on the top of the pipe:

$$\frac{Z}{B_d} = \frac{1.67}{1.5} = 1.11, \text{ and}$$

$$q_f = (\omega_f)\, H_f = 100\ (50)$$

$$= 5000 \text{ psf.}$$

CALCULATION SHEET

Project No. S54413.024	**Calculation No.** S54413.024-C-002	**Rev.** 0	**Page No.** 23 of 52
Title: LERF Basin 41 Static and Dynamic Loads on Leachate Pipe			
Prepared By: G. Taylor Grant	**Date:** 04/07/2020	**Checked By:** Darrel J. Packard	**Date:** 04/09/2020

ATTACHMENT – 4 – PLASIC PIPES INSTITUTE HANDBOOK OF PE PIPE

raised to a power. Therefore the lower the DR, the higher the resistance. Buried pipe has an added resistance due to support (or constraint) from the surrounding soil.

Non-pressurized pipes or gravity flow pipes are most likely to have a net compressive stress in the pipe wall and, therefore, the allowable buckling pressure should be calculated and compared to the total (soil and ground water) pressure. For most pressure pipe applications, the fluid pressure in the pipe exceeds the external pressure, and the net stress in the pipe wall is tensile. Buckling needs only be considered for that time the pipe is not under pressure, such as during and immediately after construction and during system shut-downs and, in cases in which a surge pressure event can produce a temporary negative internal pressure. Under these circumstances the pipe will react much stiffer to buckling as its modulus is higher under short term loading. When designing, select a modulus appropriate for the duration of the negative external pressure. For pipe that are subjected to negative pressure due to surge, consideration should be given to selecting a DR that gives the pipe sufficient unconstrained collapse strength to resist the full applied negative pressure without support for the soil. This is to insure against construction affects that result in the embedment material not developing its full design strength.

This chapter gives two equations for calculating buckling. The modified Luscher Equation is for buried pipes that are beneath the ground water level, subject to vacuum pressure, or under live load with a shallow cover. These forces act to increase even the slightest eccentricity in the pipe wall by following deformation inward. While soil pressure alone can create instability, soil is less likely to follow deformation inward, particularly if it is granular. So, dry ground buckling is only considered for deep applications and is given by the Moore-Selig Equation found in the section, "Buckling of Pipes in Deep, Dry Fills".

Luscher Equation for Constrained Buckling Below Ground Water Level

For pipes below the ground water level, operating under a full or partial vacuum, or subject to live load, Luscher's equation may be used to determine the allowable constrained buckling pressure. Equation 3-15 and 3-16 are for DR and profile pipe respectively.

(3-15)
$$P_{WC} = \frac{5.65}{N}\sqrt{RB'E'\frac{E}{12(DR-1)^3}}$$

(3-16)
$$P_{WC} = \frac{5.65}{N}\sqrt{RB'E'\frac{EI}{D_M{}^3}}$$

WHERE
P_{WC} = allowable constrained buckling pressure, lb/in²
N = safety factor

(3-17) $$R = 1 - 0.33\frac{H_{GW}}{H}$$

WHERE
R = buoyancy reduction factor
H_{GW} = height of ground water above pipe, ft
H = depth of cover, ft

(3-18) $$B' = \frac{1}{1 + 4e^{(-0.065H)}}$$

WHERE
e = natural log base number, 2.71828
E' = soil reaction modulus, psi
E = apparent modulus of elasticity, psi
DR = Dimension Ratio
I = pipe wall moment of inertia, in⁴/in ($t^3/12$, if solid wall construction)
D_M = Mean diameter ($D_I + 2z$ or $D_O - t$), in

Although buckling occurs rapidly, long-term external pressure can gradually deform the pipe to the point of instability. This behavior is considered viscoelastic and can be accounted for in Equations 3-15 and 3-16 by using the apparent modulus of elasticity value for the appropriate time and temperature of the loading. For instance, a vacuum event is resisted by the short-term value of the modulus whereas continuous ground water pressure would be resisted by the 50 year value. For modulus values see Appendix, Chapter 3.

For pipes buried with less than 4 ft or a full diameter of cover, Equations 3-15 and 3-16 may have limited applicability. In this case the designer may want to use Equations 3-39 and 3-40.

The designer should apply a safety factor commensurate with the application. A safety factor of 2.0 has been used for thermoplastic pipe.

The allowable constrained buckling pressure should be compared to the total vertical stress acting on the pipe crown from the combined load of soil, and ground water or floodwater. It is prudent to check buckling resistance against a ground water level for a 100-year-flood. In this calculation the total vertical stress is typically taken as the prism load pressure for saturated soil, plus the fluid pressure of any floodwater above the ground surface.

CALCULATION SHEET

Project No. S54413.024	**Calculation No.** S54413.024-C-002	**Rev.** 0	**Page No.** 26 of 52
Title: LERF Basin 41 Static and Dynamic Loads on Leachate Pipe			
Prepared By: G. Taylor Grant	**Date:** 04/07/2020	**Checked By:** Darrel J. Packard	**Date:** 04/09/2020

ATTACHMENT – 5 – SD-LEF-TI-005 REV 1 CALCULATION 3, STATIC AND DYNAMIC LOADS ON LEACHATE RISER

RPP-CALC-63746 Rev. 0

Sargent & Lundy Engineering Services, Inc.

CALCULATION SHEET

Project No. S54413.024	**Calculation No.** S54413.024-C-002	**Rev.** 0	**Page No.** 27 of 52
Title: LERF Basin 41 Static and Dynamic Loads on Leachate Pipe			
Prepared By: G. Taylor Grant	**Date:** 04/07/2020	**Checked By:** Darrel J. Packard	**Date:** 04/09/2020

HANFORD HNF-SD-LEF-TI-005 Rev. 1 Page No. 1 of Revision 0

DESIGN ANALYSIS

Client WHC WO/Job No. W-105/ER1162

Subject Static & Dynamic Loads on Leachate Pipe Date 3/28/91 By 3/28/91 Checked 3/28/91 By S D Packard

Location Revised By

These calculations demonstrate the ability of the secondary leachate pipe to withstand both normally expected and construction-impact loadings.

References: 1. Lining of Waste Containment and Other Impoundment Facilities, EPA/600/2-88/052.
2. Driscopipe Catalogue, 'Driscopipe Systems Design,' and 'Driscopipe 8600 Dimensions and Pressure Ratings.'
3. ECOS Part B Appl., Sweet-Edward/EMCON, Prj. 8401.08

DIMENSIONS:

in = 1L ft = 12·in cm = 2.54·in lb = 1M s = 1T

$si = in^2$ $sf = ft^2$ $ci = in^3$ $cf = ft^3$

VARIABLES:

From drawing H-2-79591: Elevation of effluent surface = 598.6 feet
Elevation of bottom of sump = 576.6 feet

Depth of Effluent: $D_e := 22 \cdot ft$

From drawing H-2-79790: Large LCH-R: $D_1 := 10 \cdot in$

Small LCH-R: $d_s := 4 \cdot in$

Backfill on Pipe: $B_p := 1.1 \cdot 12 \cdot in - 10 \cdot in$ $B_p = 3.2 \cdot inches$

Normal working values:

Weight of Effluent: $W_e := 62.4 \frac{lb}{cf}$ Weight of Gravel: $W_g := 145 \frac{lb}{cf}$

CALCULATIONS:

VERTICAL PRESSURE (From EPA, page I-16):

$\sigma_a := D_e \cdot W_e + W_g \cdot B_p$ $\sigma_a = 9.802 \cdot pounds \cdot inches^{-2}$

Attachment 2-3

18

RPP-CALC-63746 Rev. 0

Sargent & Lundy Engineering Services, Inc.

CALCULATION SHEET

Project No. S54413.024	**Calculation No.** S54413.024-C-002	**Rev.** 0	**Page No.** 28 of 52
Title: LERF Basin 41 Static and Dynamic Loads on Leachate Pipe			
Prepared By: G. Taylor Grant	**Date:** 04/07/2020	**Checked By:** Darrel J. Packard	**Date:** 04/09/2020

KAISER ENGINEERS HANFORD — HNF-SD-LEF-TI-005 Rev. 1 — Page No. 2 of — Revision 0

DESIGN ANALYSIS

Client WHC — WO/Job No. W405/ER1162

Subject Loads on LCH.P — Date 2/28/91 — By [illegible]

Checked 3/08/91 — By [illegible]

Location — Revised — By

Adjusting for perforations (from EPA, page I-10):

A half-inch hole every eight inches is equivalent to a 3/4 inch hole each foot:

$$\sigma_d := \frac{12}{12 - .75}\cdot\sigma_a \qquad \sigma_d = 10.455\ \text{pounds}\cdot\text{inches}^{-2}$$

DEFLECTION ('Iowa' formula, EPA page I-10):

Time Lagging Factor: $T_1 := 1.0$ (Due to a liquid rather than a soil overburden, and the small abount of gravel backfill, no time lag is expected or used.)

Modulus of Passive Soil Resistance: $R_s := 300\ \frac{lb}{si}$

(This is a minimum, as gravel will not be compacted during construction.)

Bedding Factor: $K := 0.1$

Pipe characteristic values are those for Driscopipe 8600, as found in 'Driscopipe Engineering Characteristics' and 'Dimensions and Pressure Ratings.' This brand of pipe conforms to the M-35 Pipe Code.

Modulus of Elasticity: $E := 110000\ \frac{lb}{si}$ (Driscopipe 8600)

Mean Radius of Pipe: $r := 10\ in$ — Pipe Width: $B_c := 10.75\ in$

Pipe MOI (as per EPA page I-11): $SDR := 25.3$

Wall thickness: $t := .425\ in$

$$I := \frac{t^3}{12}$$

Attachment 2-1

19

RPP-CALC-63746 Rev. 0

Sargent & Lundy Engineering Services, Inc.

CALCULATION SHEET

Project No. S54413.024	**Calculation No.** S54413.024-C-002	**Rev.** 0	**Page No.** 29 of 52
Title: LERF Basin 41 Static and Dynamic Loads on Leachate Pipe			
Prepared By: G. Taylor Grant	**Date:** 04/07/2020	**Checked By:** Darrel J. Packard	**Date:** 04/09/2020

KAISER ENGINEERS HANFORD — HNF-SD-LEF-TI-005 Rev 1 — Page No. 3 of — Revision 0

DESIGN ANALYSIS

Client WHC — WO/Job No. W-165/EB1163

Subject Loads on LCH-2 — Date 3/28/91 By [illegible]

Checked 3/28/91 By G. T. Grant

Location — Revised — By

IOWA FORMULA:

$$def := \frac{\sigma_d \cdot T_1 \cdot K \cdot r^3 \cdot B_c}{E \cdot I + 0.061 \cdot R_s \cdot r^3} \qquad def = 0.591 \cdot inches$$

Allowable pipe deflection ratio: EPA gives a range of .05 to 0.1 (page I-16).

$$dr := \frac{def}{r} \qquad dr = 0.059 \qquad 0.05 < 0.059 < 0.1$$

Safety Factor:

$$\frac{0.1}{dr} = 1.691$$

BUCKLING FAILURE (checked as per "Driscopipe Systems Design", page 54):

Stress in pipe wall:

$$S_a := (SDR - 1) \cdot \frac{\sigma_d}{2} \qquad S_a = 127.032 \cdot pounds \cdot inches^{-2}$$

From Chart 25, page 53 of "Systems Design" $E_t = 97500 \cdot psi^{-1}$

Critical Collapse Differential Pressure:

$$P_c := 2.32 \cdot \frac{E_t}{SDR^3} \qquad P_c = 13.968 \cdot pounds \cdot inches^{-2}$$

Attachment 2-5

20

Sargent & Lundy Engineering Services, Inc.

CALCULATION SHEET

Project No. S54413.024	**Calculation No.** S54413.024-C-002	**Rev.** 0	**Page No.** 30 of 52
Title: LERF Basin 41 Static and Dynamic Loads on Leachate Pipe			
Prepared By: G. Taylor Grant	**Date:** 04/07/2020	**Checked By:** Darrel J. Packard	**Date:** 04/09/2020

KAISER ENGINEERS HANFORD HNF-SD-LEF-TI-005 REV 1 Page No. 4 of Revision C

DESIGN ANALYSIS

Client WHC WO/Job No. W-105/ER1162

Subject Loads on LCH-R Date 3/22/91 By [illegible]

Checked 3/28/91 By [illegible]

Location Revised By

Chart 26, page 53 of "Systems Design" gives values of soil resistivity. Gravel values are not listed, so the previous assumed value of 300 psi will be used.

Critical Buckling Pressure:

$$P_{cb} := .8 \cdot \left[R_s \cdot P_c\right]^{.5} \qquad P_{cb} = 51.786 \cdot pounds \cdot inches^{-2}$$

Safety Factor:

$$\frac{P_{cb}}{\sigma_d} = 4.953$$

The values for deflection failure and buckling failure determined above indicate that the selected pipe is acceptable under normal basin conditions.

CONSTRUCTION LOADING
(As per Ref. 3)

Variables:

P = static load imposed by construction equipment
Pd = dynamic load imposed by construction equipment
Tw = total weight of construction equipment
W = weight per axle of construction equipment
da = distance between axles
R = hypotenuse distance to off-pipe axle

Values:

$T_w := 2000 \cdot lb \qquad W := T_w \cdot .5 \qquad d_a := 60 \cdot in$

$$R := \left[B_p^2 + d_a^2\right]^{.5}$$

Attachment 2-6

21

RPP-CALC-63746 Rev. 0

Sargent & Lundy Engineering Services, Inc.

CALCULATION SHEET

Project No. S54413.024	**Calculation No.** S54413.024-C-002	**Rev.** 0	**Page No.** 31 of 52
Title: LERF Basin 41 Static and Dynamic Loads on Leachate Pipe			
Prepared By: G. Taylor Grant	**Date:** 04/07/2020	**Checked By:** Darrel J. Packard	**Date:** 04/09/2020

HANFORD

HNF-SD-LEF-TI-005 Rev1

DESIGN ANALYSIS

Page No. 3 of

Revision 0

Client WHC

WO/Job No. W-105 / ER1162

Subject Loads on LCH -R

Date 3/28/91 By [illegible]

Checked 3/28/91 By D.D. Corbet

Location

Revised By

$$P := \frac{3 \cdot W \cdot B_p^3}{2 \cdot \pi \cdot R^5} + \frac{3 \cdot W}{2 \cdot \pi \cdot B_p^2} \qquad P = 46.627 \cdot \text{pounds} \cdot \text{inches}^{-2}$$

Add 50% for dynamic loading:

$$P_d := P \cdot 1.5 \qquad P_d = 69.941 \cdot \text{pounds} \cdot \text{inches}^{-2}$$

Deflection due to dynamic loading by equipment:

$$def_d := \frac{P_d \cdot T_1 \cdot K \cdot r_c^3 \cdot B}{E \cdot I + 0.061 \cdot R_s^3 \cdot r} \qquad def_d = 3.956 \cdot \text{inches}$$

Buckling due to dynamic loading:

Critical buckling stress was determined above. The safety factor under dynamic conditions is:

Critical Stress: $P_{cb} = 51.786 \cdot \text{pounds} \cdot \text{inches}^{-2}$

Dynamic Load Stress: $P_d = 69.941 \cdot \text{pounds} \cdot \text{inches}^{-2}$

Safety Factor: $\frac{P_{cb}}{P_d} = 0.74$

Attachment 2-7

22

Sargent & Lundy Engineering Services, Inc.

CALCULATION SHEET

Project No. S54413.024	**Calculation No.** S54413.024-C-002	**Rev.** 0	**Page No.** 32 of 52
Title: LERF Basin 41 Static and Dynamic Loads on Leachate Pipe			
Prepared By: G. Taylor Grant	**Date:** 04/07/2020	**Checked By:** Darrel J. Packard	**Date:** 04/09/2020

KAISER ENGINEERS HANFORD HNF-SD-LEF-TI-005 Rev1 Page No. 6 of Revision 0

DESIGN ANALYSIS

Client WHC WO/Job No. W-705/ER1162

Subject Loads on LCH-R Date 3/28/91 By [illegible]

Checked 3/28/91 By [illegible]

Location Revised By

The above analyses demonstrate that while the leachate riser pipe has adequate strength to withstand the static load imposed by a filled basin, it is too weak to support a dynamic load imposed by small construction equipment. The riser, however, extends only four feet into the Northwest corner of the basin, and can easily be avoided during placement of the gravel leachate collection system.

Attachment 2-8

23

CALCULATION SHEET

Project No. S54413.024	**Calculation No.** S54413.024-C-002	**Rev.** 0	**Page No.** 33 of 52
Title: LERF Basin 41 Static and Dynamic Loads on Leachate Pipe			
Prepared By: G. Taylor Grant	**Date:** 04/07/2020	**Checked By:** Darrel J. Packard	**Date:** 04/09/2020

ATTACHMENT – 6 – BOBCAT S740 SKID-STEER SPECIFICATIONS

Sargent & Lundy Engineering Services, Inc.

CALCULATION SHEET

Project No. S54413.024	**Calculation No.** S54413.024-C-002	**Rev.** 0	**Page No.** 34 of 52
Title: LERF Basin 41 Static and Dynamic Loads on Leachate Pipe			
Prepared By: G. Taylor Grant	**Date:** 04/07/2020	**Checked By:** Darrel J. Packard	**Date:** 04/09/2020

SHARE

Skid-Steer Loaders / S740 Skid-Steer Loader

Specifications & Options

Standard Optional N/A Not Applicable

Units US

	Bobcat S740
Emissions Tier (EPA)	Tier 4
Engine Cooling	Liquid
Engine Fuel	Diesel
Horsepower	74 hp
Turbocharged Engine	✓

Performance

Rated Operating Capacity (ISO)	3,100 lb
Tipping Load	6200 lb
Operating Weight	8794 lb
Travel Speed	7.1 mph
Travel Speed (2-speed option)	12.3 mph

Capacities

Fuel Tank	23.9 gal

CALCULATION SHEET

Project No. S54413.024	**Calculation No.** S54413.024-C-002	**Rev.** 0	**Page No.** 35 of 52
Title: LERF Basin 41 Static and Dynamic Loads on Leachate Pipe			
Prepared By: G. Taylor Grant	**Date:** 04/07/2020	**Checked By:** Darrel J. Packard	**Date:** 04/09/2020

12/23/2019 S740 Skid-Steer Loader Specs & Options - Bobcat Company

Hydraulic System

System Relief @ Quick Couplers	3,500 psi
Auxiliary Std Flow	23 gal/min
Auxiliary High Flow	30.5 gal/min

Dimension

Length	141.6 in
Length without Attachment	114.3 in
Length with Standard Bucket	141.6 in
Width	72.1 in
Width (with bucket)	74 in
Height	81.3 in
Height with Operator Cab	81.3 in
Height to Bucket Hinge Pin	132 in
Reach @ Maximum Height	31.5 in
Turning Radius	85.8 in
Wheelbase	48.3 in

https://www.bobcat.com/loaders/skid-steer-loaders/models/s740/specs-options 2/4

CALCULATION SHEET

Project No. S54413.024	**Calculation No.** S54413.024-C-002	**Rev.** 0	**Page No.** 36 of 52
Title: LERF Basin 41 Static and Dynamic Loads on Leachate Pipe			
Prepared By: G. Taylor Grant	**Date:** 04/07/2020	**Checked By:** Darrel J. Packard	**Date:** 04/09/2020

ATTACHMENT – 7 - CAT D6 DOZER SPECIFICATIONS

Sargent & Lundy Engineering Services, Inc.

CALCULATION SHEET

Project No. S54413.024	**Calculation No.** S54413.024-C-002	**Rev.** 0	**Page No.** 37 of 52
Title: LERF Basin 41 Static and Dynamic Loads on Leachate Pipe			
Prepared By: G. Taylor Grant	**Date:** 04/07/2020	**Checked By:** Darrel J. Packard	**Date:** 04/09/2020

PRODUCT SPECIFICATIONS FOR D6

ENGINE

Engine Model	Cat C9.3B
Power - Net	215 HP
Emissions	U.S. EPA Tier 4 Final, EU Stage V, Korea Tier 4 Final
Net Power - Rated - ISO 9249/SAE J1349	215 HP
Net Power - Rated - ISO 9249/SAE J1349 (DIN)	219 HP
Build Number	20A
Note (1)	Rated horsepower at 2,200 rpm
Note (2)	All non-road Tier 4 Interim and Final, Stage IIIB, IV and V and Korea Tier 4 Final diesel engines are required to use only ultra-low sulfur diesel (ULSD) fuels containing 15 ppm (mg/kg) sulfur or less. Biodiesel blends up to B20 (20% blend by volume) are acceptable when blended with 15 ppm (mg/kg) sulfur or less ULSD. B20 should meet ASTM D7467 specification (biodiesel blend stock should meet Cat biodiesel spec, ASTM D6751 or EN 14214). Cat DEO-ULS or oils that meet the Cat ECF-3, API CJ-4 and ACEA E9 specification are required. Consult your OMM for further machine specific fuel recommendations.
Note (3)	Diesel Exhaust Fluid (DEF) used in Cat Selective Catalytic Reduction (SCR) systems must meet the requirements outlined in the International Organization for Standardization (ISO) standard 22241.
Note (4)	Basic machine specs provided below. For complete specifications and dimensions by configuration, blade and track shoe offerings and more, please visit the product download section to view the full D6/D6 XE Technical Specifications.

CALCULATION SHEET

Project No. S54413.024	**Calculation No.** S54413.024-C-002	**Rev.** 0	**Page No.** 38 of 52
Title: LERF Basin 41 Static and Dynamic Loads on Leachate Pipe			
Prepared By: G. Taylor Grant	**Date:** 04/07/2020	**Checked By:** Darrel J. Packard	**Date:** 04/09/2020

DIMENSIONS – LGP VPAT (30-IN)

Operating Weight	50650 lb

TRANSMISSION

Power Train	Fully Automatic 4-Speed Powershift

SERVICE REFILL CAPACITIES

Fuel Tank	90 gal (US)
DEF Tank	7.4 gal (US)

AIR CONDITIONING SYSTEM

Air Conditioning	The air conditioning system on this machine contains the fluorinated greenhouse gas refrigerant R134a (Global Warming Potential = 1430). The system contains 1.36 kg of refrigerant which has a CO2 equivalent of 1.946 metric tonnes.

D6 PUSH ARM

Operating Weight	48500 lb
Ground Pressure	7.9 psi
Width of Standard Shoe	24 in
Blade	Semi-Universal (SU)
Blade Capacity	7.5 yd^3

D6 LGP (30-IN) PUSH ARM

Operating Weight	50130 lb
Ground Pressure	6.6 psi
Width of Standard Shoe	30 in
Blade	Semi-Universal (SU)
Blade Capacity	7.6 yd³

D6 LGP (36-IN) PUSH ARM

Operating Weight	52615 lb
Ground Pressure	5.1 psi
Width of Standard Shoe	36 in
Blade	Straight
Blade Capacity	5 yd³

D6 VPAT

Operating Weight	49030 lb
Ground Pressure	7.1 psi
Width of Standard Shoe	24 in
Blade	VPAT
Blade Capacity	5.4 yd³

D6 LGP (30-IN) VPAT

Operating Weight	50650 lb
Ground Pressure	5.8 psi
Width of Standard Shoe	30 in

Width of Standard Shoe	30 in
Blade	VPAT
Blade Capacity	5.9 yd³

D6 LGP (36-IN) VPAT

Operating Weight	51875 lb
Ground Pressure	5 psi
Width of Standard Shoe	36 in
Blade	VPAT
Blade Capacity	6.5 yd³

D6 STANDARD EQUIPMENT

POWER TRAIN

- Hydraulic reversing fan
- Double reduction planetary final drives
- Cat C9.3B diesel engine
- Fully-automatic 4-speed transmission

OPERATOR ENVIRONMENT

- Cloth seat
- Added storage areas
- Electrohydraulic implement and steering controls
- Lights - 6 LED
- Communication radio ready
- Cab mounted modular Heating/Ventilation/Air Conditioning (HVAC) system
- Fully redesigned cab, sound suppressed, with Integrated Roll Over Protective Structure (ROPS)
- Integrated rearview camera
- Adjustable operator controls/armrests
- Full-color 10-inch (254 mm) liquid crystal touch screen display

CAT TECHNOLOGY

Slope Indicate

Product Link, Cellular PLE641

Attachment Ready Option (ARO) with Assist/Cat GRADE with Slope Assist

UNDERCARRIAGE

Redesigned track roller frame

SERVICE AND MAINTENANCE

Ecology drains

30-minute cab removal

Rear access ladder

Fire extinguisher mounting provision

Shovel holder

Underhood work light

Ground level service center

HYDRAULICS

Independent steering and implement pumps

Load sensing hydraulics

ATTACHMENTS

Ripper-ready rear hydraulics

D6 OPTIONAL EQUIPMENT

OPERATOR ENVIRONMENT

Premium lights - 12 LED

Integrated warning lights

Deluxe leather heated/ventilated seat

CAT TECHNOLOGY

Cat GRADE with 3D

Product Link Elite PLE631 - Dual Cellular/Satellite

BLADES

Semi-Universal

Straight blade

Angle blade

Foldable VPAT - under 3 m (9.9 ft) transport width (Not available in all regions)

Variable Pitch Angle Tilt (VPAT)

Waste/Landfill

INDERCARRIAGE

Moderate Service or Extreme Service track shoes

10-Roller Fine Grading undercarriage

Heavy Duty (HDXL with DuraLink) or SystemOne

ERVICE AND MAINTENANCE

Refilling fuel pump (EU only)

TTACHMENTS

High lift ripper with straight or curved shanks

Winch

Forestry and Waste Special Arrangements

Counterweights

Ripper and winch-ready rear hydraulics

Side screens

Rear screen - hinged or fixed

Sweeps

Drawbar

Sargent & Lundy Engineering Services, Inc.

CALCULATION SHEET

Project No. S54413.024	**Calculation No.** S54413.024-C-002	**Rev.** 0	**Page No.** 43 of 52
Title: LERF Basin 41 Static and Dynamic Loads on Leachate Pipe			
Prepared By: G. Taylor Grant	**Date:** 04/07/2020	**Checked By:** Darrel J. Packard	**Date:** 04/09/2020

D6/D6 XE

Track-Type Tractors

Technical Specifications

Engine

Engine Model	Cat® C9.3B	
Emissions	U.S. EPA Tier 4 Final, EU Stage V, Korea Tier 4 Final	
Build Number	20A	
Net Power (Rated) – D6 2,200 rpm/D6 XE 1,700 rpm		
ISO 9249/SAE J1349	161 kW	215 hp
ISO 9249/SAE J1349 (DIN)		219 hp
D6 Engine Power (Maximum) – 1,200 rpm		
ISO 14396	187 kW	251 hp
ISO 14396 (DIN)		254 hp
D6 XE Engine Power (Maximum) – 1,400 rpm		
ISO 14396	177 kW	237 hp
ISO 14396 (DIN)		241 hp
Bore	115 mm	4.5 in
Stroke	149 mm	5.9 in
Displacement	9.3 L	567 in³

- The new Cat C9.3B engine features a new high pressure common rail fuel system, simplified engine system electronics, and simplified air system through the removal of the previously used exhaust gas recirculation (EGR) system.
- The XE drive train allows the engine to operate in a tighter rpm range, 1,400-1,700 rpm, which helps extend engine life and provide improved fuel economy. The increased drive train efficiency also allows the machine to provide more engine power to the ground, resulting in greater machine performance.
- Net power advertised is the power available at the engine flywheel when the engine is equipped with a fan, air cleaner, clean emissions module and alternator.
- No derating required up to 2286 m (7,500 ft). Above this, automatic derating occurs.
- All non-road Tier 4 Interim and Final, Stage IIIB, IV and V and Korea Tier 4 Final diesel engines are required to use only ultra-low sulfur diesel (ULSD) fuels containing 15 ppm (mg/kg) sulfur or less. Biodiesel blends up to B20 (20% blend by volume) are acceptable when blended with 15 ppm (mg/kg) sulfur or less ULSD. B20 should meet ASTM D7467 specification (biodiesel blend stock should meet Cat biodiesel spec, ASTM D6751 or EN 14214). Cat DEO-ULS™ or oils that meet the Cat ECF-3, API CJ-4, and ACEA E9 specification are required. Consult your OMM for further machine specific fuel recommendations.
- Diesel Exhaust Fluid (DEF) used in Cat Selective Catalytic Reduction (SCR) systems must meet the requirements outlined in the International Organization for Standardization (ISO) standard 22241.

D6 XE Drive Train

Type	Electric Drive
Electric Drive System Nominal Voltage	715 Volts

CAT®

CALCULATION SHEET

Project No. S54413.024	**Calculation No.** S54413.024-C-002	**Rev.** 0	**Page No.** 44 of 52
Title: LERF Basin 41 Static and Dynamic Loads on Leachate Pipe			
Prepared By: G. Taylor Grant	**Date:** 04/07/2020	**Checked By:** Darrel J. Packard	**Date:** 04/09/2020

D6/D6 XE Track-Type Tractors Specifications

Maximum Drawbar Power		
D6	114 kW	153 hp
D6 XE	119 kW	160 hp

D6 Travel Speed		
1.0 Forward	3.6 km/h	2.2 mph
1.5 Forward	4.9 km/h	3.0 mph
2.0 Forward	6.5 km/h	4.0 mph
2.5 Forward	9.2 km/h	5.7 mph
3.0 Forward	11.7 km/h	7.2 mph
1.0 Reverse	3.6 km/h	2.2 mph
1.5 Reverse	4.9 km/h	3.0 mph
2.0 Reverse	6.5 km/h	4.0 mph
2.5 Reverse	8.7 km/h	5.4 mph
3.0 Reverse	11.7 km/h	7.2 mph

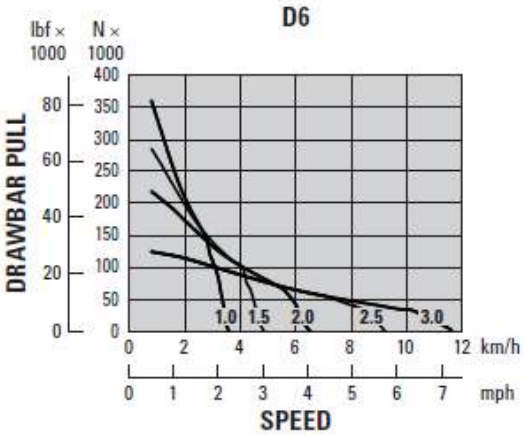

NOTE: Usable pull will depend on traction and weight of machine.

D6 XE Travel Speed		
1.0 Forward	3.6 km/h	2.2 mph
1.5 Forward	4.9 km/h	3.0 mph
2.0 Forward	6.5 km/h	4.0 mph
2.5 Forward	9.2 km/h	5.7 mph
3.0 Forward	11.7 km/h	7.2 mph
1.0 Reverse	3.6 km/h	2.2 mph
1.5 Reverse	4.9 km/h	3.0 mph
2.0 Reverse	6.5 km/h	4.0 mph
2.5 Reverse	9.2 km/h	5.7 mph
3.0 Reverse	11.7 km/h	7.2 mph

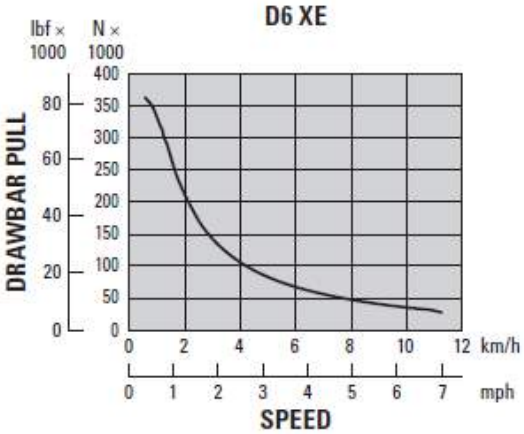

NOTE: Usable pull will depend on traction and weight of machine.

- The fully automatic D6 4-speed transmission, with lock-up clutch torque divider, continuously optimizes gear and engine speed for the application.
- The D6 XE Electric Drive power train has no gears to shift. The dozer automatically optimizes power and efficiency for the application and provides constant power to the ground.
- Thirty ground speed selections are available for both power trains, from 0.0 to 3.0 in 0.1 increments.

2

CALCULATION SHEET

Project No. S54413.024	**Calculation No.** S54413.024-C-002	**Rev.** 0	**Page No.** 45 of 52
Title: LERF Basin 41 Static and Dynamic Loads on Leachate Pipe			
Prepared By: G. Taylor Grant	**Date:** 04/07/2020	**Checked By:** Darrel J. Packard	**Date:** 04/09/2020

D6/D6 XE Track-Type Tractors Specifications

Hydraulic Controls – Maximum Operating Flows

	D6 (1,900 rpm engine speed*)		D6 XE (1,700 rpm engine speed*)	
Implement Pump Maximum Flow	212 L/min	56 gal/min	212 L/min	56 gal/min
Steering Pump Maximum Flow	198 L/min	52 gal/min	240 L/min	63 gal/min
Fan Pump Flow at Maximum Fan (1,550 rpm)	42 L/min	11 gal/min	—	—
Fan Pump Flow at Maximum Fan (1,625 rpm)	—	—	44 L/min	12 gal/min

*Engine speed varies with load and travel speed. A high idle/low working load speed shown.

Hydraulic Controls – Maximum Operating Pressures

Implement Relief*	27 600 ± 500 kPa	4,000 ± 73 psi
Steering – D6 (89 cc pump)**		
Electronic Relief	42 500 ± 1000 kPa	6,168 ± 145 psi
System Maximum Relief	47 800 ± 1000 kPa	6,938 ± 145 psi
Steering – D6 XE (100 cc pump)***		
Electronic Relief	44 500 ± 1000 kPa	6,459 ± 145 psi
System Maximum Relief	47 800 ± 1000 kPa	6,938 ± 145 psi

*Implement relief pressure increased over prior model D6 tractors. Consult with your dealer prior to using older vintage or third party implements.

**The same differential steering system is used for both power trains. This system maintains full power to both tracks to provide best-in-class turning with a loaded blade.

***The D6 XE power train utilizes a larger steering pump and enhanced steering controls to provide more steering power, compared to the D6 power train, to turn larger loads and to improve maneuverability. This includes the ability to counter-rotate in gear.

Steering

The D6 XE power train provides up to a 45 percent steering radius reduction compared to the D6. The D6 XE offers in-gear counter rotation for increased maneuverability.

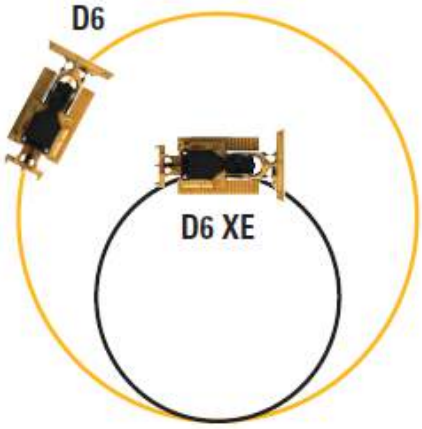

3

Sargent & Lundy Engineering Services, Inc.

CALCULATION SHEET

Project No. S54413.024	**Calculation No.** S54413.024-C-002	**Rev.** 0	**Page No.** 46 of 52
Title: LERF Basin 41 Static and Dynamic Loads on Leachate Pipe			
Prepared By: G. Taylor Grant	**Date:** 04/07/2020	**Checked By:** Darrel J. Packard	**Date:** 04/09/2020

D6/D6 XE Track-Type Tractors Specifications

Configuration Tables – D6/D6 XE

	Configuration	D6/D6 XE*	
	Operating Weight**	22 000 kg	48,500 lb
	Shipping Weight***	19 060 kg	42,020 lb
	Ground Pressure (ISO 16754)	54 kPa	7.9 psi
	Undercarriage (Standard)	42 Section with 7 Bottom Rollers	
1	Track Gauge	1.930 m	76 in
2	Width of Maximum Track Shoe	0.610 m	24 in
3	Width over Tracks	2.540 m	100 in
	Width over Trunnions	2.692 m	106 in
4	Length of Track on Ground	2.964 m	116.7 in
	Ground Contact Area (ISO 16754)	3.992 m²	6188 in²
	Track Pitch	0.2028 m	7.9 in
	Grouser Height (Moderate Service)	0.065 m	2.6 in
	Ground Clearance	0.361 m	14.2 in
	Oscillation at Front Idler	0.103 m	4.0 in
5	Machine Height****	3.172 m	124.9 in
6	Length of Machine without Blade	4.730 m	186.2 in

All dimensions above with Heavy Duty undercarriage with Moderate Service shoes of maximum width for configuration, 6 SU blade, and calculated per ISO 16754 unless otherwise specified.

*XE power train adds 0.7 kPA (0.1 psi) and 273 kg (600 lb) to the published ground pressure and weights.

**Operating weight includes blade, lubricants, coolant, full fuel tank, ROPS/FOPS cab, drawbar, and 75 kg (165 lb) operator.

***Shipping weight includes blade lift cylinders, lubricants, coolant, 10% fuel, ROPS/FOPS cab, and drawbar.

****Machine height from tip of grouser to top of Product Link™ Antenna. For sweeps, add 66 mm (2.6 in) to overall machine height. For forestry sweeps, add 122 mm (4.4 in). With Extreme Service Track Shoes add 12 mm (0.5 in). When Cat GRADE with 3D antennas are installed there is no addition to machine height.

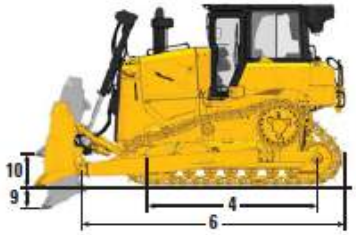

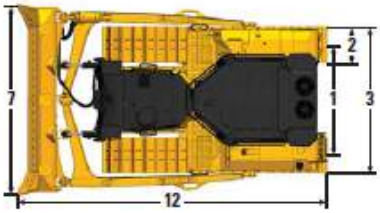

Blades

	Configuration	6 SU		6 SU Landfill		6A	
	Capacity (ISO 9246)	5.7 m³	7.5 yd³	11.2 m³	14.6 yd³	4.2 m³	5.5 yd³
7	Width across End Bits	3.312 m	10 ft 10.4 in	3.312 m	10 ft 10.4 in	4.389 m	14 ft 4.8 in
	Width without End Bits	3.246 m	10 ft 7.8 in	3.246 m	10 ft 7.8 in	4.250 m	13 ft 11.3 in
	Width across End Bits (Blade Angled)	N/A		N/A		3.982 m	13 ft 0.8 in
	Width without End Bits (Blade Angled)	N/A		N/A		3.858 m	12 ft 7.9 in
	Maximum Blade Angle	N/A		N/A		25 degrees	
8	Height	1.408 m	4 ft 7.4 in	2.027 m	6 ft 7.8 in	1.150 m	3 ft 9.3 in
9	Dig Depth	0.502 m	19.8 in	0.502 m	19.8 in	0.595 m	23.4 in
10	Lift Height	1.180 m	46.5 in	1.180 m	46.5 in	1.084 m	42.7 in
11	Maximum Tilt at Blade Corner	0.564 m	22.2 in	0.564 m	22.2 in	0.599 m	23.6 in
	Maximum Tilt Angle	9.8 degrees		9.8 degrees		7.8 degrees	
	Pitch Adjustment	±4.2 degrees		±4.2 degrees		N/A	
12	Length of Machine (Blade Straight)	5.436 m	17 ft 10.0 in	5.436 m	17 ft 10.0 in	5.377 m	17 ft 7.7 in
	Length of Machine (Blade Angled)	N/A		N/A		6.418 m	21 ft 0.7 in
	Weight (Blade)	1373 kg	3,027 lb	1592 kg	3,510 lb	1253 kg	2,762 lb
	Weight (Blade and Push Arms)	2608 kg	5,750 lb	2827 kg	6,232 lb	3394 kg	7,842 lb

Sargent & Lundy Engineering Services, Inc.

CALCULATION SHEET

Project No. S54413.024	**Calculation No.** S54413.024-C-002	**Rev.** 0	**Page No.** 47 of 52
Title: LERF Basin 41 Static and Dynamic Loads on Leachate Pipe			
Prepared By: G. Taylor Grant	**Date:** 04/07/2020	**Checked By:** Darrel J. Packard	**Date:** 04/09/2020

D6/D6 XE Track-Type Tractors Specifications

Configuration Tables – D6/D6 XE LGP (30 in)

	Configuration	D6/D6 XE*	
	Operating Weight**	22 740 kg	50,130 lb
	Shipping Weight***	19 580 kg	43,165 lb
	Ground Pressure (ISO 16754)	46 kPA	6.6 psi
	Undercarriage (Standard)	42 Section with 7 Bottom Rollers	
1	Track Gauge	2.080 m	82 in
2	Width of Maximum Track Shoe	0.760 m	30 in
3	Width over Tracks	2.840 m	111.8 in
	Width over Trunnions	2.994 m	117.9 in
4	Length of Track on Ground	2.964 m	116.7 in
	Ground Contact Area (ISO 16754)	4.990 m²	7,735 in²
	Track Pitch	0.2028 m	7.9 in
	Grouser Height (Moderate Service)	0.065 m	2.6 in
	Ground Clearance	0.361 m	14.2 in
	Oscillation at Front Idler	0.100 m	3.9 in
5	Machine Height****	3.172 m	124.9 in
6	Length of Machine without Blade	4.730 m	186.2 in

All dimensions above with Heavy Duty undercarriage with Moderate Service shoes of maximum width for configuration, 6 SU blade, and calculated per ISO 16754 unless otherwise specified.

*XE power train adds 0.7 kPA (0.1 psi) and 273 kg (600 lb) to the published ground pressure and weights.

**Operating weight includes blade, lubricants, coolant, full fuel tank, ROPS/FOPS cab, drawbar, and 75 kg (165 lb) operator.

***Shipping weight includes blade lift cylinders, lubricants, coolant, 10% fuel, ROPS/FOPS cab, and drawbar.

****Machine height from tip of grouser to top of Product Link Antenna. For sweeps, add 66 mm (2.6 in) to overall machine height. For forestry sweeps, add 122 mm (4.4 in). With Extreme Service Track Shoes add 12 mm (0.5 in). When Cat GRADE with 3D antennas are installed there is no addition to machine height.

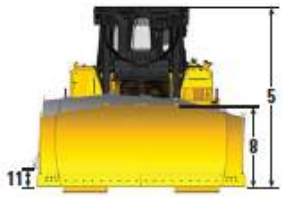

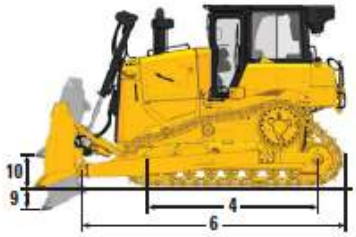

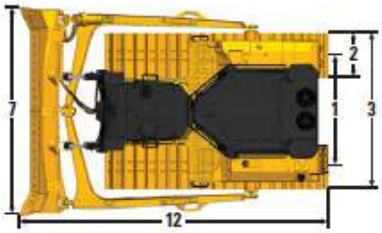

Blades

	Configuration	6 SU LGP (30 in)		6 SU LGP (30 in) Landfill		6A LGP (30 in)	
	Capacity (ISO 9246)	5.8 m³	7.6 yd³	12.3 m³	16.1 yd³	4.6 m³	6.0 yd³
7	Width across End Bits	3.613 m	11 ft 10.2 in	3.613 m	11 ft 10.2 in	4.735 m	15 ft 6.4 in
	Width without End Bits	3.551 m	11 ft 7.8 in	3.551 m	11 ft 7.8 in	4.596 m	15 ft 1.0 in
	Width across End Bits (Blade Angled)	N/A		N/A		4.295 m	14 ft 1.1 in
	Width without End Bits (Blade Angled)	N/A		N/A		4.172 m	13 ft 8.3 in
	Maximum Blade Angle	N/A		N/A		25 degrees	
8	Height	1.408 m	4 ft 7.4 in	2.027 m	6 ft 7.8 in	1.150 m	3 ft 9.3 in
9	Dig Depth	0.502 m	19.8 in	0.502 m	19.8 in	0.568 m	22.3 in
10	Lift Height	1.180 m	46.5 in	1.180 m	46.5 in	1.125 m	44.3 in
11	Maximum Tilt at Blade Corner	0.551 m	21.7 in	0.551 m	21.7 in	0.640 m	25.2 in
	Maximum Tilt Angle	8.8 degrees		8.8 degrees		7.8 degrees	
	Pitch Adjustment	±4.2 degrees		±4.2 degrees		N/A	
12	Length of Machine (Blade Straight)	5.436 m	17 ft 10.0 in	5.436 m	17 ft 10.0 in	5.448 m	17 ft 10.5 in
	Length of Machine (Blade Angled)	N/A		N/A		6.561 m	21 ft 6.3 in
	Weight (Blade)	1446 kg	3,188 lb	1700 kg	3,748 lb	1350 kg	2,976 lb
	Weight (Blade and Push Arms)	2827 kg	6,232 lb	2973 kg	6,554 lb	3414 kg	7,527 lb

Sargent & Lundy Engineering Services, Inc.

CALCULATION SHEET

Project No. S54413.024	**Calculation No.** S54413.024-C-002	**Rev.** 0	**Page No.** 48 of 52
Title: LERF Basin 41 Static and Dynamic Loads on Leachate Pipe			
Prepared By: G. Taylor Grant	**Date:** 04/07/2020	**Checked By:** Darrel J. Packard	**Date:** 04/09/2020

D6/D6 XE Track-Type Tractors Specifications

Configuration Tables – D6/D6 XE LGP (36 in)

	Configuration	D6/D6 XE*	
	Operating Weight**	23 866 kg	52,615 lb
	Shipping Weight***	21 165 kg	46,660 lb
	Ground Pressure (ISO 16754)	35 kPa	5.1 psi
	Undercarriage (Standard)	45 Section with 8 Bottom Rollers	
1	Track Gauge	2.286 m	90 in
2	Width of Maximum Track Shoe	0.915 m	36 in
3	Width over Tracks	3.200 m	126.0 in
	Width over Trunnions	3.491 m	137.4 in
4	Length of Track on Ground	3.247 m	127.8 in
	Ground Contact Area (ISO 16754)	6.505 m²	10,083 in²
	Track Pitch	0.2028 m	7.9 in
	Grouser Height (Moderate Service)	0.065 m	2.6 in
	Ground Clearance	0.411 m	16.2 in
	Oscillation at Front Idler	0.116 m	4.6 in
5	Machine Height****	3.222 m	126.9 in
6	Length of Machine without Blade	5.040 m	198.4 in

All dimensions above with Heavy Duty undercarriage with Moderate Service shoes of maximum width for configuration, 6 S blade, and calculated per ISO 16754 unless otherwise specified.

*XE power train adds 0.7 kPA (0.1 psi) and 273 kg (600 lb) to the published ground pressure and weights.

**Operating weight includes blade, lubricants, coolant, full fuel tank, ROPS/FOPS cab, drawbar, and 75 kg (165 lb) operator.

***Shipping weight includes blade lift cylinders, lubricants, coolant, 10% fuel, ROPS/FOPS cab, and drawbar.

****Machine height from tip of grouser to top of Product Link Antenna. For sweeps, add 66 mm (2.6 in) to overall machine height. For forestry sweeps, add 122 mm (4.4 in). With Extreme Service Track Shoes add 12 mm (0.5 in). When Cat GRADE with 3D antennas are installed there is no addition to machine height.

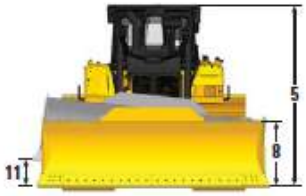

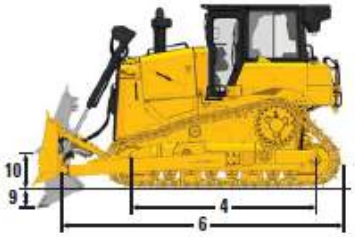

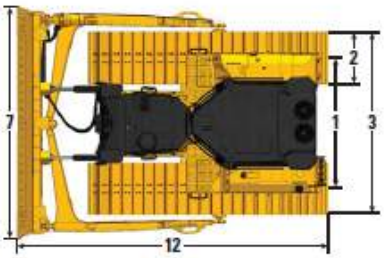

Blades

	Configuration	6 S LGP (36 in)		6 S LGP (36 in) Landfill		6A LGP (36 in)	
	Capacity (ISO 9246)	3.8 m³	5.0 yd³	9.40 m³	12.3 yd³	5.0 m³	6.5 yd³
7	Width across End Bits	4.063 m	13 ft 4 in	4.063 m	13 ft 4 in	5.100 m	16 ft 8.8 in
	Width without End Bits	3.917 m	12 ft 10.2 in	3.917 m	12 ft 10.2 in	4.961 m	16 ft 3.3 in
	Width across End Bits (Blade Angled)	N/A		N/A		4.626 m	15 ft 2.1 in
	Width without End Bits (Blade Angled)	N/A		N/A		4.502 m	14 ft 9.2 in
	Maximum Blade Angle	N/A		N/A		25 degrees	
8	Height	1.108 m	3 ft 7.6 in	1.767 m	3 ft 7.6 in	1.150 m	3 ft 9.3 in
9	Dig Depth	0.600 m	1 ft 11.6 in	0.600 m	1 ft 11.6 in	0.719 m	28.3 in
10	Lift Height	1.080 m	3 ft 6.5 in	1.080 m	3 ft 6.5 in	1.173 m	46.2 in
11	Maximum Tilt at Blade Corner	0.500 m	1 ft 7.7 in	0.500 m	1 ft 7.7 in	0.689 m	27.1 in
	Maximum Tilt Angle	8.8 degrees		8.8 degrees		7.8 degrees	
	Pitch Adjustment	±4.2 degrees		±4.2 degrees		N/A	
12	Length of Machine (Blade Straight)	5.483 m	17 ft 11.9 in	5.483 m	17 ft 11.9 in	5.960 m	19 ft 6.6 in
	Length of Machine (Blade Angled)	N/A		N/A		6.996 m	22 ft 10.3 in
	Weight (Blade)	1220 kg	2,690 lb	1432 kg	3,157 lb	1453 kg	3,203 lb
	Weight (Blade and Push Arms)	2370 kg	5,225 lb	2582 kg	5,692 lb	3618 kg	7,976 lb

6

Sargent & Lundy Engineering Services, Inc.

CALCULATION SHEET

Project No. S54413.024	**Calculation No.** S54413.024-C-002	**Rev.** 0	**Page No.** 49 of 52
Title: LERF Basin 41 Static and Dynamic Loads on Leachate Pipe			
Prepared By: G. Taylor Grant	**Date:** 04/07/2020	**Checked By:** Darrel J. Packard	**Date:** 04/09/2020

D6/D6 XE Track-Type Tractors Specifications

Configuration Tables – D6/D6 XE VPAT

	Configuration	D6/D6 XE*	
	Operating Weight**	22 240 kg	49,030 lb
	Shipping Weight***	20 500 kg	45,195 lb
	Ground Pressure (ISO 16754)	49 kPa	7.1 psi
	Undercarriage (Standard)	45 Section with 8 Bottom Rollers	
1	Track Gauge	2.080 m	82 in
2	Width of Maximum Track Shoe	0.610 m	24 in
3	Width over Tracks	2.690 m	105.9 in
4	Length of Track on Ground	3.247 m	127.8 in
	Ground Contact Area (ISO 16754)	4.473 m²	6,933 in²
	Track Pitch	0.2028 m	7.9 in
	Grouser Height (Moderate Service)	0.065 m	2.6 in
	Ground Clearance	0.422 m	16.6 in
	Oscillation at Front Idler	0.112 m	4.4 in
5	Machine Height****	3.222 m	126.9 in
6	Length of Machine without Blade	5.134 m	202.1 in

All dimensions above with Heavy Duty undercarriage with Moderate Service shoes of maximum width for configuration, VPAT blade, and calculated per ISO 16754 unless otherwise specified.

*XE power train adds 0.7 kPA (0.1 psi) and 273 kg (600 lb) to the published ground pressure and weights.

**Operating weight includes blade, lubricants, coolant, full fuel tank, ROPS/FOPS cab, drawbar, and 75 kg (165 lb) operator.

***Shipping weight includes blade lift cylinders, C-frame, lubricants, coolant, 10% fuel, ROPS/FOPS cab, and drawbar.

****Machine height from tip of grouser to top of Product Link Antenna. For sweeps, add 66 mm (2.6 in) to overall machine height. For forestry sweeps, add 122 mm (4.4 in). With Extreme Service Track Shoes add 12 mm (0.5 in). When Cat GRADE with 3D antennas are installed there is no addition to machine height.

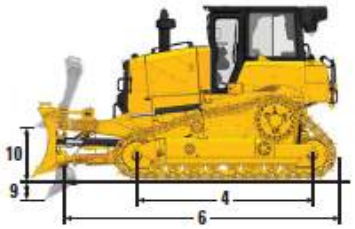

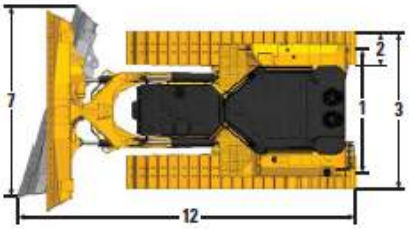

Blade

	Configuration	6 VPAT	
	Capacity (ISO 9246)	4.1 m³	5.4 yd³
7	Width across End Bits	3.680 m	12 ft 0.9 in
	Width without End Bits	3.570 m	11 ft 8.6 in
	Width across End Bits (Blade Angled)	3.363 m	11 ft 0.4 in
	Width without End Bits (Blade Angled)	3.266 m	10 ft 8.6 in
	Maximum Blade Angle	24.1 degrees	
8	Height	1.312 m	4 ft 3.7 in
9	Dig Depth	0.698 m	27.5 in
10	Lift Height	1.131 m	44.5 in
11	Maximum Tilt at Blade Corner	0.576 m	22.7 in
	Maximum Tilt Angle	9 degrees	
	Pitch Adjustment	+3.1/–2.9 degrees	
12	Length of Machine (Blade Straight)	5.662 m	18 ft 6.9 in
	Length of Machine (Blade Angled)	6.365 m	20 ft 10.6 in
	Weight (Blade)	1414 kg	3,117 lb

7

Sargent & Lundy Engineering Services, Inc.

CALCULATION SHEET

Project No. S54413.024	**Calculation No.** S54413.024-C-002	**Rev.** 0	**Page No.** 50 of 52
Title: LERF Basin 41 Static and Dynamic Loads on Leachate Pipe			
Prepared By: G. Taylor Grant	**Date:** 04/07/2020	**Checked By:** Darrel J. Packard	**Date:** 04/09/2020

D6/D6 XE Track-Type Tractors Specifications

Configuration Tables – D6/D6 XE LGP VPAT (30 in)

	Configuration	D6/D6 XE*	
	Operating Weight**	22 975 kg	50,650 lb
	Shipping Weight***	21 125 kg	46,575 lb
	Ground Pressure (ISO 16754)	40 kPa	5.8 psi
	Undercarriage (Standard)	46 Section with 8 Bottom Rollers	
	Undercarriage (Optional)	46 Section with 10 Bottom Rollers	
1	Track Gauge	2.286 m	90 in
2	Width of Maximum Track Shoe	0.760 m	30 in
3	Width over Tracks	3.046 m	119.9 in
4	Length of Track on Ground	3.355 m	132.1 in
	Ground Contact Area (ISO 16754)	5.591 m²	8,666 in²
	Track Pitch	0.2028 m	7.9 in
	Grouser Height (Moderate Service)	0.065 m	2.6 in
	Ground Clearance	0.390 m	15.4 in
	Oscillation at Front Idler	0.121 m	4.8 in
5	Machine Height****	3.222 m	126.9 in
6	Length of Machine without Blade	5.134 m	202.1 in

All dimensions above with Heavy Duty undercarriage with Moderate Service shoes of maximum width for configuration, VPAT blade, and calculated per ISO 16754 unless otherwise specified.

*XE power train adds 0.7 kPA (0.1 psi) and 273 kg (600 lb) to the published ground pressure and weights.

**Operating weight includes blade, lubricants, coolant, full fuel tank, ROPS/FOPS cab, drawbar, and 75 kg (165 lb) operator.

***Shipping weight includes blade lift cylinders, C-frame, lubricants, coolant, 10% fuel, ROPS/FOPS cab, and drawbar.

****Machine height from tip of grouser to top of Product Link Antenna. For sweeps, add 66 mm (2.6 in) to overall machine height. For forestry sweeps, add 122 mm (4.4 in). With Extreme Service Track Shoes add 12 mm (0.5 in). When Cat GRADE with 3D antennas are installed there is no addition to machine height.

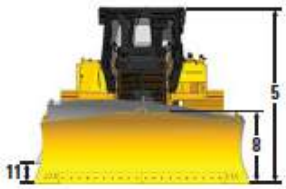

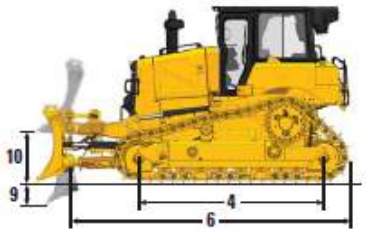

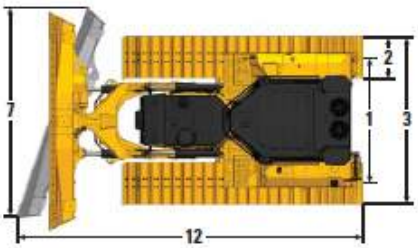

Blade

	Configuration	6 VPAT LGP (30 in)	
	Capacity (ISO 9246)	4.5 m³	5.9 yd³
7	Width across End Bits	4.000 m	13 ft 1.5 in
	Width without End Bits	3.890 m	12 ft 9.1 in
	Width across End Bits (Blade Angled)	3.655 m	11 ft 11.9 in
	Width without End Bits (Blade Angled)	3.554 m	11 ft 7.9 in
	Maximum Blade Angle	24.1 degrees	
8	Height	1.312 m	4 ft 3.7 in
9	Dig Depth	0.698 m	27.5 in
10	Lift Height	1.131 m	44.5 in
11	Maximum Tilt at Blade Corner	0.625 m	24.6 in
	Maximum Tilt Angle	9 degrees	
	Pitch Adjustment	+3.1/–2.9 degrees	
12	Length of Machine (Blade Straight)	5.662 m	18 ft 6.9 in
	Length of Machine (Blade Angled)	6.430 m	21 ft 1.1 in
	Weight (Blade)	1516 kg	3,342 lb

8

Sargent & Lundy Engineering Services, Inc.

CALCULATION SHEET

Project No. S54413.024	**Calculation No.** S54413.024-C-002	**Rev.** 0	**Page No.** 51 of 52
Title: LERF Basin 41 Static and Dynamic Loads on Leachate Pipe			
Prepared By: G. Taylor Grant	**Date:** 04/07/2020	**Checked By:** Darrel J. Packard	**Date:** 04/09/2020

D6/D6 XE Track-Type Tractors Specifications

Configuration Tables – D6/D6 XE LGP VPAT (36 in)

	Configuration	D6/D6 XE*	
	Operating Weight**	23 530 kg	51,875 lb
	Shipping Weight***	21 580 kg	47,575 lb
	Ground Pressure (ISO 16754)	35 kPa	5.0 psi
	Undercarriage (Standard)	46 Section with 8 Bottom Rollers	
	Undercarriage (Optional)	46 Section with 10 Bottom Rollers	
1	Track Gauge	2.39 m	94 in
2	Width of Maximum Track Shoe	0.915 m	36 in
3	Width over Tracks	3.305 m	130.1 in
4	Length of Track on Ground	3.355 m	132.1 in
	Ground Contact Area (ISO 16754)	6.709 m²	9,510 in²
	Track Pitch	0.2028 m	7.9 in
	Grouser Height (Moderate Service)	0.065 m	2.6 in
	Ground Clearance	0.383 m	15.1 in
	Oscillation at Front Idler	0.121 m	4.8 in
5	Machine Height****	3.222 m	126.9 in
6	Length of Machine without Blade	5.134 m	202.1 in

All dimensions above with Heavy Duty undercarriage with Moderate Service shoes of maximum width for configuration, VPAT blade, and calculated per ISO 16754 unless otherwise specified.

*XE power train adds 0.7 kPA (0.1 psi) and 273 kg (600 lb) to the published ground pressure and weights.

**Operating weight includes blade, lubricants, coolant, full fuel tank, ROPS/FOPS cab, tow point, and 75 kg (165 lb) operator.

***Shipping weight includes blade lift cylinders, C-frame, lubricants, coolant, 10% fuel, ROPS/FOPS cab, and tow point.

****Machine height from tip of grouser to top of Product Link Antenna. For sweeps, add 66 mm (2.6 in) to overall machine height. For forestry sweeps, add 122 mm (4.4 in). With Extreme Service Track Shoes add 12 mm (0.5 in). When Cat GRADE with 3D antennas are installed there is no addition to machine height.

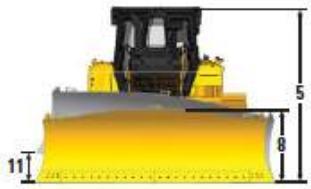

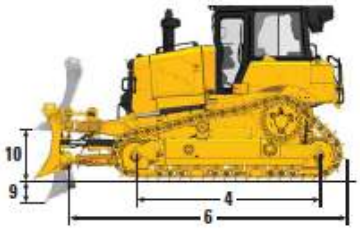

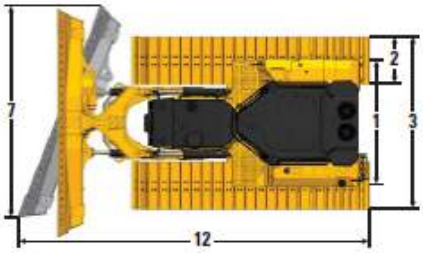

Blade

	Configuration	6 VPAT LGP (36 in)	
	Capacity (ISO 9246)	4.86 m³	6.5 yd³
7	Width across End Bits	4.340 m	14 ft 2.9 in
	Width without End Bits	4.230 m	13 ft 10.5 in
	Width across End Bits (Blade Angled)	3.966 m	13 ft 0.1 in
	Width without End Bits (Blade Angled)	3.868 m	12 ft 8.3 in
	Maximum Blade Angle	24.1 degrees	
8	Height	1.312 m	4 ft 3.7 in
9	Dig Depth	0.698 m	27.5 in
10	Lift Height	1.131 m	44.5 in
11	Maximum Tilt at Blade Corner	0.684 m	26.9 in
	Maximum Tilt Angle	9 degrees	
	Pitch Adjustment	+3.1/–2.9 degrees	
12	Length of Machine (Blade Straight)	5.662 m	18 ft 6.9 in
	Length of Machine (Blade Angled)	6.500 m	21 ft 3.9 in
	Weight (Blade)	1617 kg	3,565 lb

9

Sargent & Lundy Engineering Services, Inc.

CALCULATION SHEET

Project No. S54413.024	**Calculation No.** S54413.024-C-002	**Rev.** 0	**Page No.** 52 of 52
Title: LERF Basin 41 Static and Dynamic Loads on Leachate Pipe			
Prepared By: G. Taylor Grant	**Date:** 04/07/2020	**Checked By:** Darrel J. Packard	**Date:** 04/09/2020

D6/D6 XE Track-Type Tractors Specifications

Configuration Tables – D6/D6 XE LGP Folding VPAT (30 in) – *EU only*

	Configuration	D6/D6 XE*	
	Operating Weight**	22 360 kg	49,295 lb
	Shipping Weight***	19 775 kg	43,595 lb
	Ground Pressure (ISO 16754)	45 kPa	6.5 psi
	Undercarriage (Standard)	46 Section with 8 Bottom Rollers	
	Undercarriage (Optional)	46 Section with 10 Bottom Rollers	
1	Track Gauge	2.286 m	90 in
2	Width of Standard Track Shoe****	0.660 m	26 in
	Optional Maximum Track Shoe****	0.760 m	30 in
3	Width over Tracks	2.946 m	116.0 in
4	Length of Track on Ground	3.355 m	132.1 in
	Ground Contact Area (ISO 16754)	4.845 m²	7,510 in²
	Track Pitch	0.2028 m	7.9 in
	Grouser Height (Moderate Service)	0.065 m	2.6 in
	Ground Clearance	0.390 m	15.4 in
	Oscillation at Front Idler	0.121 m	4.8 in
5	Machine Height*****	3.222 m	126.9 in
6	Length of Machine without Blade	5 134 m	202.1 in

All dimensions above with Heavy Duty undercarriage with Moderate Service shoes of standard width for configuration, Foldable VPAT blade, and calculated per ISO 16754 unless otherwise specified.

*XE power train adds 0.7 kPA (0.1 psi) and 273 kg (600 lb) to the published ground pressure and weights.

**Operating weight includes blade, lubricants, coolant, full fuel tank, ROPS/FOPS cab, drawbar, and 75 kg (165 lb) operator.

***Shipping weight includes blade lift cylinders, C-frame, lubricants, coolant, 10% fuel, ROPS/FOPS cab, and drawbar.

****Standard track shoe width ensures 3.0 m shipping width with blade folded. Optional 30 inch track shoes provide lower ground pressure of 42 kPa (6.1 psi). Increases shipping width to 3.046 m (120.0 in).

*****Machine height from tip of grouser to top of Product Link Antenna. For sweeps, add 66 mm (2.6 in) to overall machine height. For forestry sweeps, add 122 mm (4.4 in). With Extreme Service Track Shoes add 12 mm (0.5 in). When Cat GRADE with 3D antennas are installed there is no addition to machine height.

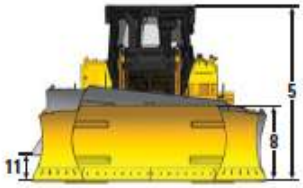

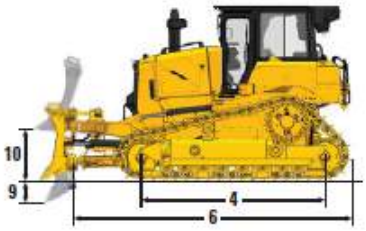

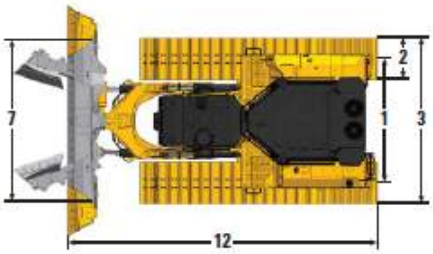

Blade

	Configuration	6 VPAT LGP Folding (30 in)	
	Capacity (ISO 9246)	5.2 m³	6.8 yd³
7	Width across End Bits	4.229 m	13 ft 10.5 in
	Width without End Bits	4.115 m	13 ft 6.0 in
	Width of Folded Blade	2.960 m	9 ft 8.5 in
	Maximum Blade Angle	24.1 degrees	
8	Height	1.312 m	4 ft 3.7 in
9	Dig Depth	0.698 m	27.5 in
10	Lift Height	1.131 m	44.5 in
11	Maximum Tilt at Blade Corner	0.659 m	26.0 in
	Maximum Tilt Angle	9 degrees	
	Pitch Adjustment	+3.1/–2.9 degrees	
12	Length of Machine (Blade Straight)	5.662 m	18 ft 6.9 in
	Length of Machine (Blade Angled)	6.643 m	21 ft 9.5 in
	Weight (Blade)	2254 kg	4,969 lb

10

DOCUMENT RELEASE AND CHANGE FORM

Prepared For the U.S. Department of Energy, Assistant Secretary for Environmental Management
By Washington River Protection Solutions, LLC., PO Box 850, Richland, WA 99352
Contractor For U.S. Department of Energy, Office of River Protection, under Contract DE-AC27-08RV14800

TRADEMARK DISCLAIMER: Reference herein to any specific commercial product, process, or service by trade name, trademark, manufacturer, or otherwise, does not necessarily constitute or imply its endorsement, recommendation, or favoring by the United States government or any agency thereof or its contractors or subcontractors. Printed in the United States of America.

Release Stamp

DATE:
May 20,2020
HANFORD RELEASE

1. **Doc No:** RPP-CALC-63747 **Rev.** 00

2. **Title:**
LERF Basin 41 Wind Uplift Forces and Required Ballast

3. **Project Number:** ☐N/A
T1P226

4. **Design Verification Required:**
☐Yes ☒No

5. **USQ Number:** ☒ N/A
RPP-27195

6. **PrHA Number** **Rev.** ☒ N/A

Clearance Review Restriction Type:
public

7. **Approvals**

Title	Name	Signature	Date
Clearance Review	Harrison, Sarah E	*Harrison, Sarah E*	05/20/2020
Design Authority	Wilson, Nathaniel W	*Wilson, Nathaniel W*	04/23/2020
Checker	Debban, Jeremy A	*Debban, Jeremy A*	04/10/2020
Document Control Approval	Hood, Evan	*Hood, Evan*	05/19/2020
Environmental Protection	Wall, Jeremy M	*Wall, Jeremy M*	04/30/2020
Originator	Dorsh, Paul M	*Dorsh, Paul M*	04/10/2020
Other Approver	McShane, Michael P	*McShane, Michael P*	05/18/2020
Responsible Engineering Manager	Huntington, Matthew R	*Huntington, Matthew R*	05/19/2020

8. **Description of Change and Justification**

Initial Release.

Design checks were performed in accordance with Sargent & Lundy ESD Quality Assurance Procedure (QAP). Becasue of the General Service status of the equipment, a graded approach was applied and design verification was not performed as allowed by QAP 3.5, Design Verification.

Note that Paul Dorsh is signing as Originator for Taylor Grant and Jeremy Debban is signing as Checker for Darrel Packard. Taylor Grant and Darrel Packard are not currently in SPF.

The following trademark statement applies to this calculation and will be added to the document at the next revision:

Excel is a registered trademark of the Microsoft Corporation, Redmond, Washington.

9. **TBDs or Holds** ☒N/A

10. **Related Structures, Systems, and Components**

a. **Related Building/Facilities** ☐N/A	b. **Related Systems** ☐N/A	c. **Related Equipment ID Nos. (EIN)** ☒N/A
LERF FACILITIES	LERF	

11. **Impacted Documents – Engineering** ☒N/A

Document Number	Rev.	Title

12. **Impacted Documents (Outside SPF):**

N/A

13. **Related Documents** ☐N/A

Document Number	Rev.	Title
MT-50497	00	Liquid Effluent Retention Facility (LERF) Basin 41

14. **Distribution**

Name	Organization
Angevine, Brennan T	MISSION ANALYSIS ENGINEERING
Blaak, Whitney S	COGNIZANT SYSTEM ENGINEERING
Demiter, Scott M	ETF OPERATIONS
Foster, Jim	242-A/AW/ETF OPERATIONS
Goessmann, Glen E	ENGINEERING PROGRAMS
Greenhalgh, Aaron M	TANK FARM PROJECTS ENGINEERING
Halgren, Dale L	ETF ENGINEERING
Harris, John W	SAFETY PROGRAM SERVICES RC/P
Joslyn, Cameron C	ETF ENGINEERING
McFerran, Brandon E	242-A/AW/ETF OPERATIONS
McShane, Michael P	ENGINEERING PROGRAMS
Omberg Carro, Susan K	NUCLEAR SAFETY
Powers, Daniel J	ETF ENGINEERING

DOCUMENT RELEASE AND CHANGE FORM	**Doc No:** RPP-CALC-63747 **Rev.** 00

14. **Distribution**

Name	**Organization**
Roosendaal, Gene D	TFP PROJECT MANAGEMENT
Rutherford, Wally	ETF ENGINEERING
Sackett, Tom E	TANK FARM PROJECTS
Samoska, Jerry A	INSTRUMENT & CNTRL ENGINEERING
Shultz, Milton V	NUCLEAR SAFETY
Smith, Gregory E	TANK FARM PROJECTS ENGINEERING
Smoot, Bill R	TFP RADCON
Swanson, Brad L	242-A/AW/ETF OPERATIONS
Wall, Jeremy M	RETRVL & CLOSURE/PROJ ENV CMPL
Wilson, Nathaniel W	ETF PROJECTS ENGINEERING

RPP-CALC-63747
Revision 0

LERF Basin 41 Wind Uplift Forces and Required Ballast

Prepared by

G. T. Grant
Sargent & Lundy for Washington River Protection Solutions, LLC

Date Published
May 2020

washington river protection solutions

DAVID E. NIELSON
STATE OF WASHINGTON
28592
REGISTERED
PROFESSIONAL ENGINEER

5-18-2020

Prepared for the U.S. Department of Energy
Office of River Protection

Contract No. DE-AC27-08RV14800

A-6007-231 (REV 0)

Approved for Public Release;
Further Dissemination Unlimited

RPP-CALC-63747 Rev. 0

Sargent & Lundy Engineering Services, Inc.	**CALCULATION COVER SHEET**	**Page No.** 1 of 17	
		Date 05/14/2020	**Rev. No.** 1
		Calculation No: S54413.024-C-003	

Project No.	**Project Title:**	**Client:**
S54413.024	LERF Basin 41 Design	Washington River Protection Solutions

Title:

LERF Basin 41 Wind Uplift Forces and Required Ballast

Purpose and Objective:

The purpose of this calculation is to determine the required ballast to counteract wind uplift forces on the HDPE liner system. Ballast will be determined in the form of sandbags for during construction and water for post construction.

Rev. No.	Total Pages		Prepared By	Checked By	PM/TL
0	16	**Print Name/ Sign:**	G. Taylor Grant	Darrel J. Packard	Paul M. Dorsh, P.E.
		Date:	04/07/2020	4/9/2020	4/9/2020

Revision Description (Revision Description/Affected Pages):

1	17	**Print Name/ Sign:**	G. Taylor Grant	Darrel J. Packard	Paul M. Dorsh, P.E.
		Date:	05/14/2020	05/15/2020	05/15/2020

Revision Description (Revision Description/Affected Pages):

Revised the design wind speed for during construction from 64 mph to 82 mph. Expanded Section 8.2 to calculate the wind uplift force due to an 80 mph wind speed and a 90 mph wind speed, then used linear interpolation to calculate the wind uplift force due to an 82 mph wind speed. (Affected Sections 3.1, 6.0, and 8.2)

Added 2 acronyms. (Affected Page 3)

Updated Attachment 4. (Affected Attachment 4)

RPP-CALC-63747 Rev. 0

Sargent & Lundy Engineering Services, Inc.

CALCULATION REVIEW CHECKLIST

Project No.	Calculation No.	Page No.
S54413.024	S54413.024-C-003 Rev. 1	2 of 17

Items Checked	Accept Y	Accept N	Accept N/A	Description of Resolution for Unacceptable Items
1. Cover sheets properly completed.	√			
2. Calculation sheet headers complete with calculation number, revision number, etc.	√			
3. Calculation sheet contents are legible, accurate, and complete per format.	√			
4. Listed attachments included.	√			
5. Calculation objective clearly described.	√			
6. Criteria are suitable and properly referenced to task specific documents.	√			
7. Assumptions and input data selected, described, reasonable, and attached or referenced to task documents.	√			
8. Calculation method identified and appropriate for the design activity.	√			
9. Calculation results reasonable and correctly described in results and conclusions.	√			
10. Physical property calculations generated by CAD software verified via hand calculations.			√	
11. Computer program identified with version and revision.			√	
12. Computer input/output provided or referenced and reasonable.			√	
13. Computer run traceable to calculation (file #, etc.).			√	
14. Computer input/output data and problem type within validation/verification range of use.			√	
15. Computer program validation/verification addressed.			√	
16. Computer operating system in use for calculation preparation is the same as when the software was verified on machine.			√	

Calculation Checking Method	√	Applicable Pages
1. Direct Step-by-Step Check	√	
2. Reference Chart(s) or Book(s) Comparison (Append Documentation)		
3. Alternate Calculation (Append Documentation)		

Comments:

Preparer (Print Name and Sign):	Date:
G. Taylor Grant	5/14/2020
Checker (Print Name and Sign):	**Date:**
Darrel Packard	5/15/2020

CALCULATION SHEET

Project No. S54413.024	**Calculation No.** S54413.024-C-003 Rev. 1		**Page No.** 3 of 17
Title: LERF Basin 41 Wind Uplift Forces and Required Ballast			
Prepared By: G. Taylor Grant	**Date:** 05/14/2020	**Checked By:** Darrel J. Packard	**Date:** 05/15/2020

TABLE OF CONTENTS

1.0 PURPOSE 4

2.0 METHODOLOGY 4

3.0 DESIGN INPUTS 4
- 3.1 Wind Speed 4
- 3.2 Water Weight 4
- 3.3 Liner Weight 4
- 3.4 Sandbag Weight 4

4.0 ASSUMPTIONS 5

5.0 COMPUTER SOFTWARE 5

6.0 RESULTS 5

7.0 REFERENCES 5

8.0 CALCULATIONS 5
- 8.1 Operation 5
- 8.2 Construction 6

Attachments

ATTACHMENT – 1 – GEOSYTHETIC DESIGN GUIDANCE FOR HAZARDOUS WASTE LANDFILL CELLS AND SURFACE IMPOUNDMENTS

ATTACHMENT – 2 – ARGU AMERICA HDPE SMOOTH LINER CUT SHEET

ATTACHMENT – 3 – TFC-ENG-STD-06, REV D-2, DESIGN LOADS FOR TANK FARM FACILITIES

ATTACHMENT – 4 – H-2-838750, SHEET 1, REV. 0, LERF BASIN 41 CIVIL PRIMARY LINER

Acronyms

DCR	Demand-to-Capacity Ratio
HDPE	High Density Polyethylene
LERF	Liquid Effluent Retention Facility
mph	mile per hour
psf	pound per square foot

CALCULATION SHEET

Project No. S54413.024	**Calculation No.** S54413.024-C-003 Rev. 1		**Page No.** 4 of 17
Title: LERF Basin 41 Wind Uplift Forces and Required Ballast			
Prepared By: G. Taylor Grant	**Date:** 05/14/2020	**Checked By:** Darrel J. Packard	**Date:** 05/15/2020

1.0 PURPOSE

The purpose of this calculation is to determine the required ballast to counteract wind uplift forces on the HDPE liner system. Ballast will be determined in the form of sandbags for during construction and water for post construction.

2.0 METHODOLOGY

Geosynthetic Design Guidance for Hazardous Waste Landfill Cells and Surface Impoundments (Reference 1) has a procedure on Pages VI-14 and VI-34 to calculate the wind uplift forces on a basin liner system. This method will be used to calculate the maximum wind uplift forces on the liner system. The required water level to counteract the wind uplift will then be determined.

This calculation provides a recommended sandbag spacing for securing the HDPE liner during construction, however, the Contractor is ultimately responsible for securing the HDPE liner during construction.

3.0 DESIGN INPUTS

3.1 Wind Speed

Design Loads for Tank Farm Facilities, TFC-ENG-STD-06, REV D-2, Table 3 (Reference 3, Page 30) provides the design wind speed of 110 mph. This will be the design wind speed for anchorage calculations during operation. During construction, a reduced wind load may be used since it will be temporary. The reduced wind load for during construction is from Table 3, Note e, and is 82 mph (Reference 3, Page 30)

V_{op} = 110 mph

V_{con} = 82 mph

3.2 Water Weight

Weight of water =W_w = 62.4 pcf

3.3 Liner Weight

The weight of the HDPE liner is taken as 4200 lbs per 13800 sf (Reference 2).

Weight of the HDPE liner = W_L = 4200 lbs / 13800 sf = 0.304 psf

3.4 Sandbag Weight

The weight of a sandbag is taken as 50 lbs. The Contractor may need to adjust the recommended spacing determined in this calculation based on actual sandbag weight, or other ballast used.

Weight of sandbag = W_S = 50 lbs

CALCULATION SHEET

Project No. S54413.024	**Calculation No.** S54413.024-C-003 Rev. 1		**Page No.** 5 of 17
Title: LERF Basin 41 Wind Uplift Forces and Required Ballast			
Prepared By: G. Taylor Grant	**Date:** 05/14/2020	**Checked By:** Darrel J. Packard	**Date:** 05/15/2020

4.0 ASSUMPTIONS

No assumptions have been made in this calculation.

5.0 COMPUTER SOFTWARE

No unverified computer software was used in this analysis. Calculations are checked using a handheld calculator. Microsoft Excel was used to generate graphs. The Microsoft Excel generated graphs were checked using a handheld calculator.

6.0 RESULTS

During operation and while the basin is empty, a water depth of 6 inches will counteract the wind uplift forces. During construction, it is recommended to provide one 50 lb sandbag per 3.11 sf.

7.0 REFERENCES

1) Richardson, Gregory N., and Robert M. Koerner, *Geosynthetic Design Guidance for Hazardous Waste Landfill Cells and Surface Impoundments*, Hazardous Waste Engineering Research Laboratory, Office of Research and Development, U.S. Environmental Protection Agency
2) ARGU America HDPE Smooth Liner Cut Sheet
3) TFC-ENG-STD-06 REV D-2, Design Loads for Tank Farm Facilities
4) H-2-838750, Sheet 1, Rev. 0, LERF Basin 41 Civil Primary Liner

8.0 CALCULATIONS

8.1 Operation

Table 6.2 from Reference 1, Page VI-14, is below and provides wind uplift forces based on design wind speeds and the height above ground. For basins located below grade it is permitted to graph the wind uplift force versus height above ground for a given wind speed, and then use extrapolation to determine the wind uplift force (Reference 1, Page VI-13).

Table 6.2 Wind Uplift Forces, PSF (Factory Mutual System)

Height Above Ground, (ft)	Wind Isotach, mph (Figure 6.2): City, Suburban Areas, Towns and Wooded Areas					Flat, Open Country, or Open Coastal Belt>1500ft from Coast					
	70	80	90	100	110	70	80	90	100	110	120
0-15	10*	11	14	17	20	14	18	23	29	35	41
30	10	13	17	21	25	16	21	27	33	40	48
50	12	15	19	24	29	18	24	30	37	44	53
75	14	18	22	27	33	20	26	33	40	49	58

* Uplift Pressures in PSF

CALCULATION SHEET

Project No. S54413.024	**Calculation No.** S54413.024-C-003 Rev. 1	**Page No.** 6 of 17
Title: LERF Basin 41 Wind Uplift Forces and Required Ballast		
Prepared By: G. Taylor Grant	**Date:** 05/14/2020	**Checked By:** Darrel J. Packard / **Date:** 05/15/2020

The below graph provides the wind uplift for a 110 mph wind speed. The maximum uplift force occurs at the top of the basin.

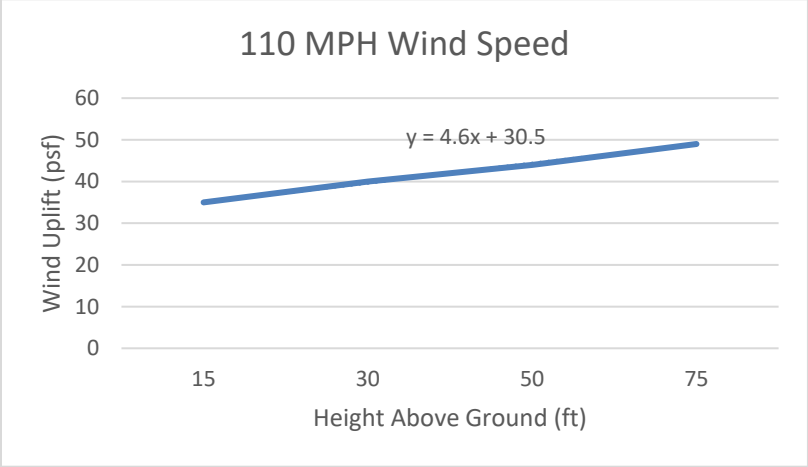

At height above ground = 0 ft, the uplift force U_{op} = 30.5 psf.

When the basin is complete but empty, uplift forces may be resisted by water.

Height of water = $(U_{op} – W_L) / W_w$ = (30.5 psf – 0.304 psf) / 62.4 pcf = 0.48 ft = 5.8 inch

Maintaining a water depth of 6 inches will result in a DCR = 5.8/6 = 0.967 < 1 okay

8.2 Construction

Table 6.2 from Reference 1, Page VI-14, provides wind uplift forces based on design wind speeds at 10 mph intervals. The uplift force will be determined for an 80 mph wind speed and a 90 mph wind speed. Linear interpolation will be used to determine the uplift force for V_{con} = 82 mph.

The below graph provides the wind uplift for V_{con_80} = 80 mph wind speed. The maximum uplift force occurs at the top of the basin.

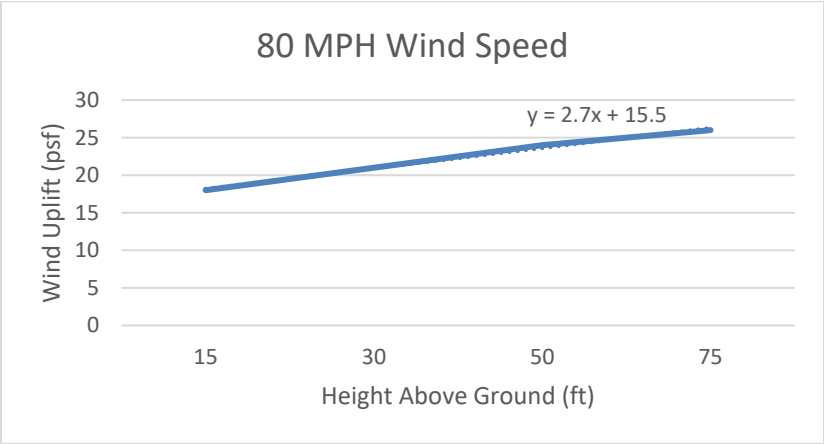

CALCULATION SHEET

Project No. S54413.024	**Calculation No.** S54413.024-C-003 Rev. 1	**Page No.** 7 of 17
Title: LERF Basin 41 Wind Uplift Forces and Required Ballast		
Prepared By: G. Taylor Grant	**Date:** 05/14/2020	**Checked By:** Darrel J. Packard	**Date:** 05/15/2020

At height above ground = 0 ft, the uplift force U_{con_80} = 15.5 psf.

The below graph provides the wind uplift for V_{con_90} = 90 mph wind speed. The maximum uplift force occurs at the top of the basin.

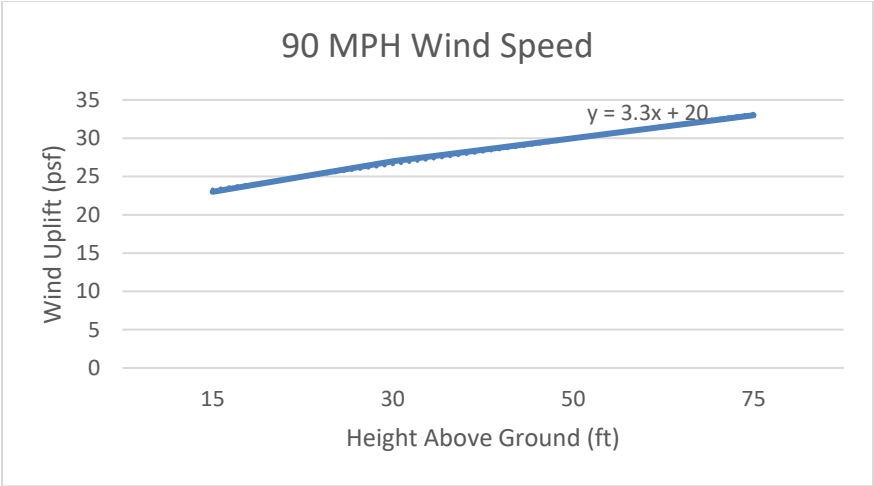

At height above ground = 0 ft, the uplift force U_{con_90} = 20 psf.

Uplift force at 82 mph = $U_{con} = U_{con_80} + [(U_{con_90} – U_{con_80}) / (V_{con_90} – V_{con_80})] \times (V_{con} – V_{con_80})$

$= 15.5 \text{ psf} + [(20 \text{ psf} – 15.5 \text{ psf}) / (90 \text{ mph} – 80 \text{ mph})] \times (82 \text{ mph} – 80 \text{ mph})$

$= 16.4$ mph

Sandbag spacing = $S_{con} = W_S / (U_{con} – W_L)$ = 50 lbs / (16.4 psf – 0.304 psf) = 3.11 sf

It is recommended to place sandbags at least one 50 lb bag per 3.11 sf.

CALCULATION SHEET

Project No. S54413.024	**Calculation No.** S54413.024-C-003 Rev. 1		**Page No.** 8 of 17
Title: LERF Basin 41 Wind Uplift Forces and Required Ballast			
Prepared By: G. Taylor Grant	**Date:** 05/14/2020	**Checked By:** Darrel J. Packard	**Date:** 05/15/2020

ATTACHMENT – 1 - GEOSYTHETIC DESIGN GUIDANCE FOR HAZARDOUS WASTE LANDFILL CELLS AND SURFACE IMPOUNDMENTS

Sargent & Lundy Engineering Services, Inc.

CALCULATION SHEET

Project No. S54413.024	**Calculation No.** S54413.024-C-003 Rev. 1	**Page No.** 9 of 17
Title: LERF Basin 41 Wind Uplift Forces and Required Ballast		
Prepared By: G. Taylor Grant	**Date:** 05/14/2020	**Checked By:** Darrel J. Packard	**Date:** 05/15/2020

temperature limitations. This is particularly true with the thermoplastic materials, since their properties change with temperature. Temperature also affects the rate that solvents will evaporate and the rate that seams become strong. Most manufacturers suggest that their adhesive systems work best when the temperature of the liner material itself is above 60° F. When ambient temperatures are below 60° F and a solvent adhesive system is being used, heat guns can provide an effective means to help bring the temperature of the liner material up to ideal conditions. Extreme caution must be exercised when using heat guns around flammable solvents, which may ignite, and cholorinated solvents which may generate toxic gas.

Cold weather seaming requires that the field crew exercise caution when making seams to assure that the temperature of the liner material reaches minimum acceptable conditions. A cold weather contact adhesive is sometimes used. Field seaming during precipitation must be avoided. Depending upon the location and the weather conditions, the number of panels placed in one day should not exceed the number which can be seamed in one day. This assures that, should bad weather conditions occur overnight, unseamed panels will not be left on the subgrade, subject to damage, especially from wind.

Wind Uplift Forces--

Wind blowing over a geomembrane exerts varying amounts of uplift force depending on the velocity of the wind and the roughness of the surrounding land. When not adequately resisted by sandbags, the membrane will lift off the ground and exert tear stresses on the sheet and seams. Such wind induced stresses have been responsible for numerous failures. Using methods developed by the flat roof industry, some insight into the problem can be gained.

In the absence of site specific data, design wind speeds for the USA are given in Figure 6.2. These values are annual extremes based on a 100-year mean recurrence intervals and represent worst case situations. These contour values are used directly with Table 6.2 to determine the wind uplift value based on elevation above ground and surface roughness. Thus the method is applicable for FMLs placed at the ground level and on elevated caps. For FMLs below grade we recommend a linear extrapolation as demonstrated in Design Example 6.1. It should be noted that the roofing industry recognizes that the perimeter and corners of sheets are the initiating points for uplift and compensate accordingly. For example, they multiply the perimeter uplift forces by 2 and the corner values by 3 for added safety. The temporary nature of a liner installation may not justify such conservatism.

Anchoring--

Proper anchoring of the liner around the facility perimeter, as well as conscientious tailoring and sealing of the liner around penetrating structures, are essential to satisfactory liner performance. Generally, in cut-and-fill type facilities, it is recommended that the liner material be anchored at the top of the dike or berm one of two ways: (1) using the trench-and-backfill method, or (2) anchoring to a concrete structure. The trench-and-backfill method seems to be recommended most often by liner manufacturers, probably due to its simplicity and economy. Excavation of the anchor trench in preparation for laying the liner is usually accomplished with a trenching machine or by using the blade of a motor

CALCULATION SHEET

Project No. S54413.024	**Calculation No.** S54413.024-C-003 Rev. 1		**Page No.** 10 of 17
Title: LERF Basin 41 Wind Uplift Forces and Required Ballast			
Prepared By: G. Taylor Grant	**Date:** 05/14/2020	**Checked By:** Darrel J. Packard	**Date:** 05/15/2020

Table 6.2 Wind Uplift Forces, PSF (Factory Mutual System)

Height Above Ground, (ft)	Wind Isotach, mph (Figure 6.2) City, Suburban Areas, Towns and Wooded Areas 70	80	90	100	110	Flat, Open Country, or Open Coastal Belt>1500ft from Coast 70	80	90	100	110	120
0-15	10*	11	14	17	20	14	18	23	29	35	41
30	10	13	17	21	25	16	21	27	33	40	48
50	12	15	19	24	29	18	24	30	37	44	53
75	14	18	22	27	33	20	26	33	40	49	58

* Uplift Pressures in PSF

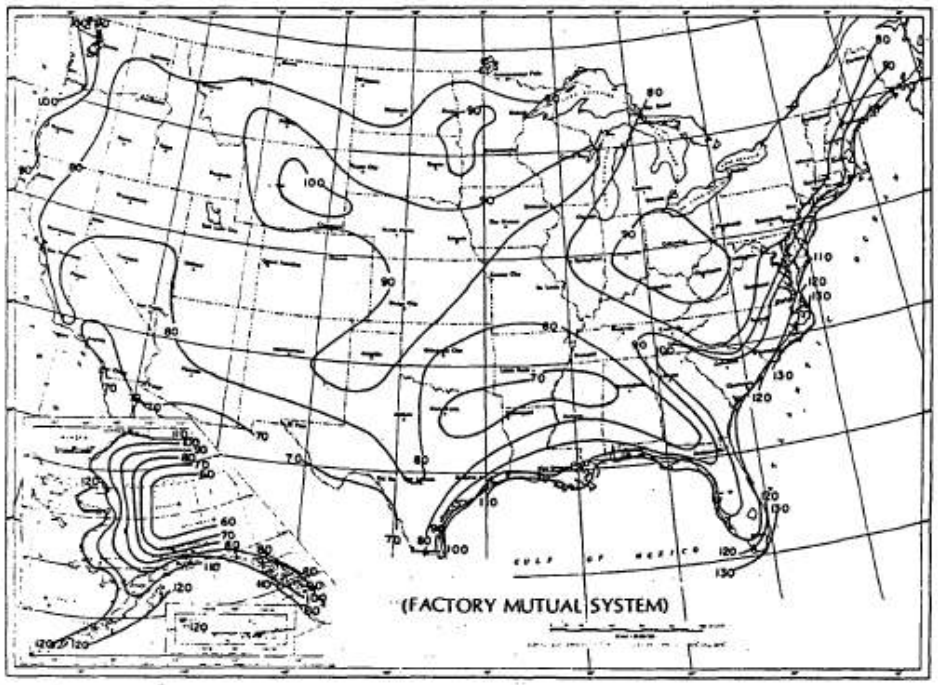

Figure 6.2 Design Maximum Wind Speeds

EPA VI - 14

RPP-CALC-63747 Rev. 0

Sargent & Lundy Engineering Services, Inc.

CALCULATION SHEET

Project No. S54413.024	**Calculation No.** S54413.024-C-003 Rev. 1	**Page No.** 11 of 17
Title: LERF Basin 41 Wind Uplift Forces and Required Ballast		

Prepared By: G. Taylor Grant	**Date:** 05/14/2020	**Checked By:** Darrel J. Packard	**Date:** 05/15/2020

Cell Component: FLEXIBLE MEMBRANE

Consideration: WIND LIFT: CALCULATE THE REQUIRED SANDBAG SPACING FOR FML/FMC PANELS DURING PLACEMENT.

Required Material Properties	Range	Test	Standard
FLEXIBLE MEMBRANE • UNIT WEIGHT	3-20 OSY	DENSITY	ASTM D792

Draft NIG Minimum

Analysis Procedure:

(1) DETERMINE DESIGN MAXIMUM WIND SPEED, V_{WIND}

• USE SITE SPECIFIC DATA OR REFERENCE FIG 6.2

(2) DETERMINE WIND-UPLIFT PRESSURE, P_{WIND}

• REFERENCE TABLE 6.2 w/ $V_{WIND} \rightarrow P_{WIND}$

NOTE: PERFORM LINEAR INTERPOLATION FOR DEPTHS < 0 FT

(3) CALCULATE SAND BAG SPACING

• W_S = WEIGHT OF SANDBAG

• TRIBUTARY AREA = P_{WIND}/W_S = TA

(4) CALCULATE DESIGN RATIO

DR = TA/[ACTUAL FIELD TRIBUTARY AREA]

Design Ratio:

DR_{MIN} = 1.1 (SHORT-TERM ONLY)

References:

FACTORY MUTUAL SYSTEM

Example:

GIVEN:

• PHILADELPHIA, PA
  - ANNUAL EXTREME WIND SPEED (FIG 6.2)
    V_{WIND} = 80 MPH
• WIND = 100 YR EXTREME, OPEN COUNTRY
• FML DEPTH = -20 to +20 FT
• SANDBAG = 80 lb. @ 1 PER 10 SQ. FT.
• HEIGHT TO FM = -20 FT, 0 FT, +20 FT

(1) DETERMINE DESIGN MAXIMUM WIND SPEED, V_{WIND}

V_{WIND} = 80 MPH (REF FIG 6.2)

(2) DETERMINE WIND UP-LIFT PRESSURE, P_{WIND}

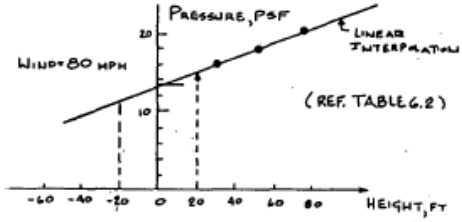

DEPTH -20 FT → 11 PSF
0 FT → 14 PSF
20 FT → 15 PSF

(3) CALCULATE SAND BAG SPACING

-20 FT → 80 lb/11 PSF = 7.3 SQ. FT.
0 FT → 80 lb/14 PSF = 5.7 SQ. FT.
+20 FT → 80 lb/15 PSF = 5.3 SQ. FT.

(4) CALCULATE DESIGN RATIOS

-20 FT. ⇒ 7.3/10.0 = 0.73 NG
0 FT ⇒ 5.7/10.0 = 0.57 NG
+20 FT → 5.3/10.0 = 0.53 NG

Example No. 6.1

EPA VI-34

CALCULATION SHEET

Project No. S54413.024	**Calculation No.** S54413.024-C-003 Rev. 1		**Page No.** 12 of 17
Title: LERF Basin 41 Wind Uplift Forces and Required Ballast			
Prepared By: G. Taylor Grant	**Date:** 05/14/2020	**Checked By:** Darrel J. Packard	**Date:** 05/15/2020

ATTACHMENT – 2 – ARGU AMERICA HDPE SMOOTH LINER CUT SHEET

CALCULATION SHEET

Project No. S54413.024	**Calculation No.** S54413.024-C-003 Rev. 1		**Page No.** 13 of 17
Title: LERF Basin 41 Wind Uplift Forces and Required Ballast			
Prepared By: G. Taylor Grant	**Date:** 05/14/2020	**Checked By:** Darrel J. Packard	**Date:** 05/15/2020

GEOSYNTHETICS

agru
The Plastics Experts.

Smooth Liner®

HIGH DENSITY POLYETHYLENE

PRODUCT DATA

Property	Test Method	Frequency	Minimum Average Values				
Thickness (minimum avg), mil (mm)	ASTM D5199	Per Roll	30 (0.75)	40 (1.0)	60 (1.5)	80 (2.0)	100 (2.5)
Thickness (minimum), mil (mm)			27 (0.68)	36 (0.9)	54 (1.35)	72 (1.8)	90 (2.25)
Density, g/cc, minimum	ASTM D792, Method B	200,000 lb	0.94	0.94	0.94	0.94	0.94
Tensile Properties (both directions)	ASTM D6693, Type IV						
Strength @ Yield, lb/in width (N/mm)	2in/minute	20,000 lb	66 (11.6)	88 (15.4)	132 (23.1)	176 (30.8)	220 (38.5)
Elongation @ Yield, % (GL=1.3 in)			12	12	12	12	12
Strength @ Break, lb/in width (N/mm)			120 (21)	160 (28)	240 (42)	320 (56)	400 (70)
Elongation @ Break, % (GL=2.0 in)			700	700	700	700	700
Tear Resistance, lbs (N)	ASTM D1004	45,000 lb	22 (98)	30 (133)	45 (200)	60 (267)	72 (320)
Puncture Resistance, lbs (N)	ASTM D4833	45,000 lb	60 (267)	80 (356)	120 (534)	160 (712)	190 (845)
Carbon Black Content, % (range)	ASTM D4218	20,000 lb	2 - 3	2 - 3	2 - 3	2 - 3	2 - 3
Carbon Black Dispersion (Category)	ASTM D5596	45,000 lb	Only near spherical agglomerates: 10 views Cat. 1 or 2				
Stress Crack Resistance (SP NCTL), hrs.	ASTM D5397 Appendix	200,000 lb	500	500	500	500	500
Oxidative Induction Time, minutes	ASTM D3895, 200°C, 1 atm O_2	200,000 lb	≥140	≥140	≥140	≥140	≥140

AGRU America's geomembranes are certified to pass Low Temp. Brittleness via ASTM D746 (-80°C), Dimensional Stability via ASTM D1204 (±2% @ 100°C). Oven Aging and UV Resistance are tested per GRI GM 13. These product specifications meet or exceed GRI's GM13.

SUPPLY INFORMATION (STANDARD ROLL DIMENSIONS)

THICKNESS		WIDTH		LENGTH		AREA (APPROX.)	
mil	mm	ft	m	ft	m	ft^2	m^2
30	0.75	23	7	1,175	358	27,025	2,511
40	1.0	23	7	900	274	20,700	1,923
60	1.5	23	7	600	183	13,800	1,282
80	2.0	23	7	455	139	10,465	972
100	2.5	23	7	365	111	8,395	780

Note:

Average roll weight is 4,200 lbs (1,905 kg). All rolls are supplied with two slings. Rolls are wound on 6" core. Special length available upon request. Roll length and width have a tolerance of ±1%. The weight values may change due to project specifications (i.e. absolute minimum thickness or special roll length) or shipping requirments (i.e. international containerized shipments).

All information, recommendations and suggestions appearing in this literature concerning the use of our products are based upon tests and data believed to be reliable; however, it is the users responsibility to determine the suitability for their own use of the products described herein. Since the actual use by others is beyond our control, no guarantee or warranty of any kind, expressed or implied, is made by AGRU America as to the effects of such use or the results to be obtained, nor does AGRU America assume any liability in connection herewith. Any statement made herein may not be absolutely complete since additional information may be necessary or desirable when particular or exceptional conditions or circumstances exist or because of applicable laws or government regulations. Nothing herein is to be construed as permission or as a recommendation to infringe any patent.

AGRU America, Inc.
500 Garrison Road
Georgetown, SC 29440 USA

(800) 373-2478 | Fax: (843) 546-0516
salesmkg@agruamerica.com
Revision Date: December 3, 2018 12:42 PM

This information is provided for reference purposes only and is not intended as a waranty or guarantee. AGRU America, Inc. assumes no liability in connection with the use of this information.

www.agruamerica.com

CALCULATION SHEET

Project No. S54413.024	**Calculation No.** S54413.024-C-003 Rev. 1		**Page No.** 14 of 17
Title: LERF Basin 41 Wind Uplift Forces and Required Ballast			
Prepared By: G. Taylor Grant	**Date:** 05/14/2020	**Checked By:** Darrel J. Packard	**Date:** 05/15/2020

ATTACHMENT – 3 – TFC-ENG-STD-06, REV D-2, DESIGN LOADS FOR TANK FARM FACILITIES

CALCULATION SHEET

Project No. S54413.024	**Calculation No.** S54413.024-C-003 Rev. 1		**Page No.** 15 of 17
Title: LERF Basin 41 Wind Uplift Forces and Required Ballast			
Prepared By: G. Taylor Grant	**Date:** 05/14/2020	**Checked By:** Darrel J. Packard	**Date:** 05/15/2020

Design Loads for Tank Farm Facilities	Manual	Engineering
	Document	TFC-ENG-STD-06, REV D-2
	Page	30 of 34
	Issue Date	July 31, 2019

Table 3. Wind Load.

		WDC-3	WDC-2	WDC-1/ NDC-0[e]
Basic Straight Wind Design Speed (3-Second Gust), V	Nominal[a] [c]	95 mi/h	91 mi/h	85 mi/h
	Ultimate[b] [c]	122 mi/h[f]	115 mi/h	110 mi/h
Exposure Category		C[d]	C[d]	C[d]

NOTES:

(a) For use with IBC 2009, ASCE 7-05, and other compatible codes and standards, including the exceptions of IBC 2015, Section 1609.1.1.

(b) For use with IBC 2015, ASCE 7-10, and other compatible codes and standards.

(c) Conversion of Nominal Wind speed to Ultimate Wind Speed (Basic Wind Speed ASCE 7-10 corresponds to the rounded value from the following relationship: $V_{asd} = V_{ult} \sqrt{0.6}$ (IBC 2015 Equation 16-33).

(d) Exposure "C," flat and generally open terrain, should be used for all construction unless it can be shown that the necessary permanent shielding will be provided by natural terrain (not including shielding from trees or adjacent buildings).

(e) NDC-0 SSCs shall be designed for WDC-1 wind loading. Wind loads on temporary SSCs erected for a period of less than 180 days, and Construction Project SSCs may be designed to a reduced basic straight wind design speed, provided wind damage to the structure:

1. Will not result in injury to personnel.
2. Will not result in damage to permanent SSCs.
3. Will not result in significant cost to repair or replace the temporary structure.

The reduced basic straight wind design speed shall be based on ASCE 37, but should not be less than 82 mi/h (ultimate)/64 mi/h (nominal) for a 3-Second Gust.

(f) The WDC-3 wind loading of 122 mph is determined from ANSI/ANS-2.3 Figure 4 for Region III wind hazard Site at return period of 2500 years. There are no requirements for extreme wind missile design at the Hanford Site. This is based on the PWHA site specific wind speed for WDC-3 of 96 mph, which is less than the 110 mph missile criteria of DOE-STD-1020-2016.

CALCULATION SHEET

Project No. S54413.024	**Calculation No.** S54413.024-C-003 Rev. 1		**Page No.** 16 of 17
Title: LERF Basin 41 Wind Uplift Forces and Required Ballast			
Prepared By: G. Taylor Grant	**Date:** 05/14/2020	**Checked By:** Darrel J. Packard	**Date:** 05/15/2020

ATTACHMENT – 4 – H-2-838750, SHEET 1, REV. 0, LERF BASIN 41 CIVIL PRIMARY LINER

RPP-CALC-63747, Rev. 0

Sargent & Lundy Engineering Services, Inc.

CALCULATION SHEET

Project No.	S54413.024	**Calculation No.**	S54413.024-C-003 Rev. 1		**Page No.** 17 of 17
Title:	LERF Basin 41 Wind Uplift Forces and Required Ballast				
Prepared By:	G. Taylor Grant	**Date:** 05/14/2020	**Checked By:**	Darrel J. Packard	**Date:** 05/15/2020

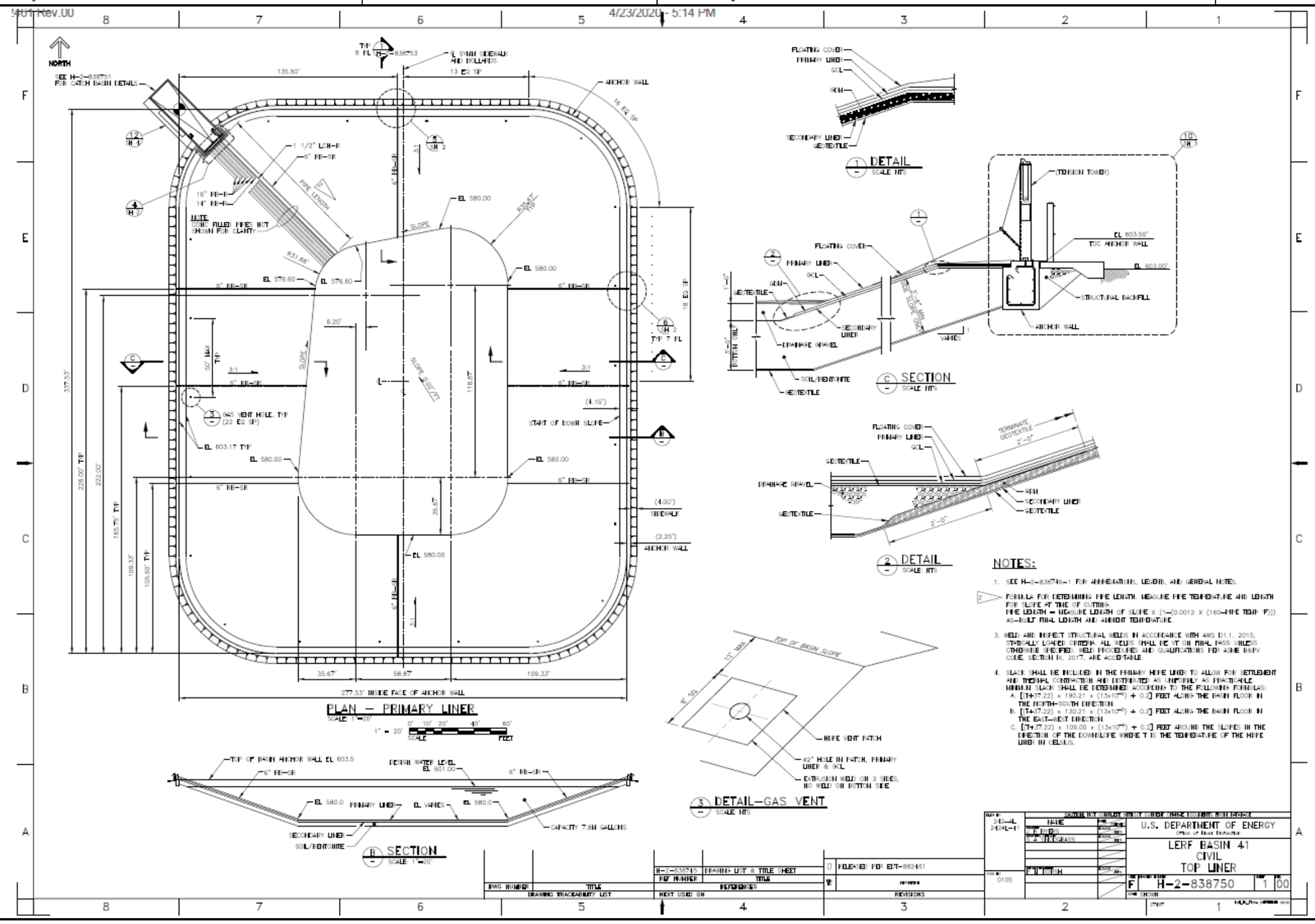

DOCUMENT RELEASE AND CHANGE FORM

Prepared For the U.S. Department of Energy, Assistant Secretary for Environmental Management
By Washington River Protection Solutions, LLC., PO Box 850, Richland, WA 99352
Contractor For U.S. Department of Energy, Office of River Protection, under Contract DE-AC27-08RV14800

TRADEMARK DISCLAIMER: Reference herein to any specific commercial product, process, or service by trade name, trademark, manufacturer, or otherwise, does not necessarily constitute or imply its endorsement, recommendation, or favoring by the United States government or any agency thereof or its contractors or subcontractors. Printed in the United States of America.

Release Stamp

DATE:
May 20, 2020
HANFORD RELEASE

1. **Doc No:** RPP-CALC-63748 **Rev.** 00

2. **Title:**
LERF Basin 41 Side Slope Liner Stresses

3. **Project Number:** ☐N/A
T1P226

4. **Design Verification Required:**
☐Yes ☒No

5. **USQ Number:** ☒ N/A
RPP-27195

6. **PrHA Number** **Rev.** ☒ N/A

Clearance Review Restriction Type:
public

7. **Approvals**

Title	Name	Signature	Date
Clearance Review	Aardal, Janis D	*Aardal, Janis D*	05/19/2020
Design Authority	Wilson, Nathaniel W	*Wilson, Nathaniel W*	04/23/2020
Checker	Debban, Jeremy A	*Debban, Jeremy A*	04/10/2020
Document Control Approval	Hood, Evan	*Hood, Evan*	05/19/2020
Environmental Protection	Wall, Jeremy M	*Wall, Jeremy M*	04/29/2020
Originator	Dorsh, Paul M	*Dorsh, Paul M*	04/10/2020
Other Approver	McShane, Michael P	*McShane, Michael P*	05/13/2020
Responsible Engineering Manager	Huntington, Matthew R	*Huntington, Matthew R*	05/14/2020

8. **Description of Change and Justification**

Initial Release.

Design checks were performed in accordance with Sargent & Lundy ESD Quality Assurance Procedure (QAP). Becasue of the General Service status of the equipment, a graded approach was applied and design verification was not performed as allowed by QAP 3.5, Design Verification.

Note that Paul Dorsh is signing as Originator for Taylor Grant and Jeremy Debban is signing as Checker for Darrel Packard. Taylor Grant and Darrel Packard are not currently in SPF.

9. **TBDs or Holds** ☒N/A

10. **Related Structures, Systems, and Components**

a. **Related Building/Facilities** ☐N/A	b. **Related Systems** ☐N/A	c. **Related Equipment ID Nos. (EIN)** ☒N/A
LERF FACILITIES	LERF	

11. **Impacted Documents – Engineering** ☒N/A

Document Number	Rev.	Title

12. **Impacted Documents (Outside SPF):**

N/A

13. **Related Documents** ☐N/A

Document Number	Rev.	Title
MT-50497	00	Liquid Effluent Retention Facility (LERF) Basin 41

14. **Distribution**

Name	Organization
Angevine, Brennan T	MISSION ANALYSIS ENGINEERING
Blaak, Whitney S	COGNIZANT SYSTEM ENGINEERING
Demiter, Scott M	ETF OPERATIONS
Foster, Jim	242-A/AW/ETF OPERATIONS
Goessmann, Glen E	ENGINEERING PROGRAMS
Greenhalgh, Aaron M	TANK FARM PROJECTS ENGINEERING
Halgren, Dale L	ETF ENGINEERING
Harris, John W	SAFETY PROGRAM SERVICES RC/P
Joslyn, Cameron C	ETF ENGINEERING
McFerran, Brandon E	242-A/AW/ETF OPERATIONS
McShane, Michael P	ENGINEERING PROGRAMS
Omberg Carro, Susan K	NUCLEAR SAFETY
Powers, Daniel J	ETF ENGINEERING
Roosendaal, Gene D	TFP PROJECT MANAGEMENT
Rutherford, Wally	ETF ENGINEERING
Sackett, Tom E	TANK FARM PROJECTS

DOCUMENT RELEASE AND CHANGE FORM	**Doc No:** RPP-CALC-63748 **Rev.** 00

14. **Distribution**

Name	**Organization**
Samoska, Jerry A	INSTRUMENT & CNTRL ENGINEERING
Shultz, Milton V	NUCLEAR SAFETY
Smith, Gregory E	TANK FARM PROJECTS ENGINEERING
Smoot, Bill R	TFP RADCON
Swanson, Brad L	242-A/AW/ETF OPERATIONS
Wall, Jeremy M	RETRVL & CLOSURE/PROJ ENV CMPL
Wilson, Nathaniel W	ETF PROJECTS ENGINEERING

RPP-CALC-63748
Revision 0

LERF Basin 41 Side Slope Liner Stresses

Prepared by

G. T. Grant
Sargent & Lundy for Washington River Protection Solutions, LLC

Date Published
April 2020

washington river protection solutions

DAVID E. NIELSON
STATE OF WASHINGTON
28592
REGISTERED
PROFESSIONAL ENGINEER

5-18-2020

Prepared for the U.S. Department of Energy
Office of River Protection

Contract No. DE-AC27-08RV14800

A-6007-231 (REV 0)

Approved for Public Release;
Further Dissemination Unlimited

RPP-CALC-63748 Rev. 0

Sargent & Lundy Engineering Services, Inc.	**CALCULATION COVER SHEET**	**Page No.** 1 of 32 **Date** 04/08/2020 **Rev. No.** 0 **Calculation No:** S54413.024-C-004

Project No.	**Project Title:**	**Client:**
S54413.024	LERF Basin 41 Design	Washington River Protection Solutions

Title:

LERF Basin 41 Side Slope Liner Stresses

Purpose and Objective:

The purpose of this calculation is to determine the stresses in the liner system for LERF Basin 41, except for the northwest corner of the basin which contains the effluent collection and removal piping system. That corner contains gravel and is in calculation S54413.024-C-005 / RPP-CALC-63749.

The calculated liner stresses will be used to determine the required material strengths to ensure that no liner material will be stressed beyond its capacity.

Rev. No.	Total Pages		Prepared By	Checked By	PM/TL
0	32	Print Name/ Sign:	G. Taylor Grant	Darrel J. Packard	Paul M. Dorsh, P.E.
		Date:	04/08/2020	4/9/2020	4/9/2020

Revision Description (Revision Description/Affected Pages):

		Print Name/ Sign:			
		Date:			

Revision Description (Revision Description/Affected Pages):

RPP-CALC-63748 Rev. 0

Sargent & Lundy Engineering Services, Inc.

CALCULATION REVIEW CHECKLIST

Project No.	Calculation No.	Rev. No.	Page No.
S54413.024	S54413.024-C-004	0	2 of 32

Items Checked	Accept Y	Accept N	Accept N/A	Description of Resolution for Unacceptable Items
1. Cover sheets properly completed.	√			
2. Calculation sheet headers complete with calculation number, revision number, etc.	√			
3. Calculation sheet contents are legible, accurate, and complete per format.	√			
4. Listed attachments included.	√			
5. Calculation objective clearly described.	√			
6. Criteria are suitable and properly referenced to task specific documents.	√			
7. Assumptions and input data selected, described, reasonable, and attached or referenced to task documents.	√			
8. Calculation method identified and appropriate for the design activity.	√			
9. Calculation results reasonable and correctly described in results and conclusions.	√			
10. Physical property calculations generated by CAD software verified via hand calculations.			√	
11. Computer program identified with version and revision.			√	
12. Computer input/output provided or referenced and reasonable.			√	
13. Computer run traceable to calculation (file #, etc.).			√	
14. Computer input/output data and problem type within validation/verification range of use.			√	
15. Computer program validation/verification addressed.			√	
16. Computer operating system in use for calculation preparation is the same as when the software was verified on machine.			√	

Calculation Checking Method	√	Applicable Pages
1. Direct Step-by-Step Check	√	
2. Reference Chart(s) or Book(s) Comparison (Append Documentation)		
3. Alternate Calculation (Append Documentation)		

Comments:

Preparer (Print Name and Sign):	Date:
G. Taylor Grant	4/8/2020
Checker (Print Name and Sign):	**Date:**
Darrel Packard	4/9/2020

CALCULATION SHEET

Project No. S54413.024	**Calculation No.** S54413.024-C-004	**Rev.** 0	**Page No.** 3 of 32
Title: LERF Basin 41 Side Slope Liner Stresses			
Prepared By: G. Taylor Grant	**Date:** 04/08/2020	**Checked By:** Darrel J. Packard	**Date:** 04/09/2020

TABLE OF CONTENTS

1.0 PURPOSE 5

2.0 METHODOLOGY 5

3.0 DESIGN INPUTS 5
- 3.1 Friction Angles 5
- 3.2 Basin Geometry 6
- 3.3 Effluent Weight 7
- 3.4 Gravel 7

4.0 ASSUMPTIONS 7

5.0 COMPUTER SOFTWARE 7

6.0 RESULTS 7

7.0 REFERENCES 8

8.0 CALCULATIONS 8
- 8.1 Primary Liner 8
- 8.2 GCL 9
- 8.3 Geotextile 9
- 8.4 GDM 10
- 8.5 Secondary Liner 11

Attachments

ATTACHMENT – 1 – H-2-838749, SHEET 1, REV. 0, LERF BASIN 41 CIVIL SECONDARY LINER
H-2-838749, SHEET 2, REV. 0, LERF BASIN 41 CIVIL SECONDARY LINER DETAILS
H-2-838750, SHEET 1, REV. 0, LERF BASIN 41 CIVIL PRIMARY LINER

ATTACHMENT – 2 –DESIGNING WITH GEOSYNTHETICS, 6TH EDITION

ATTACHMENT – 3 – GEOSYNTHETIC INSTITUTE GRI-GN4 STANDARD

ATTACHMENT – 4 – FREE BODY DIAGRAM OF LINER FORCES

ATTACHMENT – 5 – HNF-SD-LEF-TI-005 REV 1 CALCULATION 5 SIDE SLOPE LINER STRESSES

CALCULATION SHEET

Project No. S54413.024	**Calculation No.** S54413.024-C-004	**Rev.** 0	**Page No.** 4 of 32
Title: LERF Basin 41 Side Slope Liner Stresses			
Prepared By: G. Taylor Grant	**Date:** 04/08/2020	**Checked By:** Darrel J. Packard	**Date:** 04/09/2020

Acronyms

cf	cubic foot (ft^3)
DCR	Demand-to-Capacity Ratio
deg	degree (angle)
ft	foot (length)
GCL	Geosynthetic Clay Liner
GDM	Geosynthetic Drainage Material
HDPE	High Density Polyethylene
lb	pound force
LERF	Liquid Effluent Retention Facility
psf	pound per square foot (lb/ft^2)
psi	pound per square inch (lb/in^2)
pcf	pound per cubic foot (lb/ft^3)
plf	pound per lineal foot (lb/ft)
sf	square feet

Sargent & Lundy Engineering Services, Inc.

CALCULATION SHEET

Project No. S54413.024	**Calculation No.** S54413.024-C-004	**Rev.** 0	**Page No.** 5 of 32
Title: LERF Basin 41 Side Slope Liner Stresses			
Prepared By: G. Taylor Grant	**Date:** 04/08/2020	**Checked By:** Darrel J. Packard	**Date:** 04/09/2020

1.0 PURPOSE

The purpose of this calculation is to determine the stresses in the liner system for LERF Basin 41, except for the northwest corner of the basin which contains the effluent collection and removal piping system. This corner contains gravel and is a separate calculation. The liner stresses will be used to specify minimum required material strengths.

2.0 METHODOLOGY

The forces on each layer of the liner system will be analyzed, beginning at the top layer. Although the liquid waste (essentially water) in the basins is a shearless fluid, the approach taken in the calculation will be to assume shear forces are transmitted at the waste-primary liner interface. This will result in a conservative approach. The stresses in the liner layers will be analyzed at the toe of the slope around the basin floor. This will be the location of the greatest liquid depth which will cause the greatest stresses.

The liner system along the slopes in the basin is comprised of (from top to bottom):

- Primary HDPE liner
- GCL
- Geotextile
- GDM
- Secondary HDPE liner
- Geotextile
- Soil/Bentonite mixture
- Geotextile

The Primary HDPE liner and the Secondary HDPE liner are also referred to as the “top” and “bottom” liners, respectively, in the drawings. This calculation deals with the interface between two layers, so often there will be phrases such as “top of X layer to bottom of Y layer.” For this reason, the top HDPE liner will herein be referred to as the primary and the bottom HDPE liner will herein be referred to as the secondary.

3.0 DESIGN INPUTS

3.1 Friction Angles

The friction angles between two materials are taken from Reference 1. Where similar surface-to-surface interfaces are not provided in Reference 1, similar surface-to-similar surface angles are used. The friction angles are presented below, along with remarks.

Friction Angle	Remarks
d_2 = 10 deg	Bottom of primary liner to top of GCL. This is the angle of smooth HDPE to slit film geotextile (Reference 1, Page 540)

d_i = 15 deg	The internal friction angle of the GCL. This is the friction angle at internal interfaces of the material (Reference 1, Table 6.1, Page 770). The average internal friction value of the four GCL samples was taken for the Hydration With Mild Leachate – Free Swell case.
d_4 = 24 deg	Bottom of GCL to top of geotextile. This is the angle of geomembrane to geotextile (woven slit film) combinations, and interface assumed to be similar to GCL-geotextile (Reference 1, Page 540).

The below friction angles between two materials are taken from Reference 2. These friction angles are for similar materials that will be installed. The friction angles are presented below, along with remarks.

Friction Angle	Remarks
d_6 = 15 deg	Bottom of geotextile to top of GDM. Value is based on geonet to smooth HDPE, which is expected to be similar to geonet to geotextile.
d_8 = 12 deg	Bottom of GDM to top of secondary liner. Value is based on geonet to smooth HDPE.
d_{10} = 7.6 deg	Bottom of secondary liner to top of soil/bentonite layer. Reference 2 derived a range of friction angles between smooth HDPE and clay soils, and range from 7.6 to 18.3 degrees. The lowest value will be used.

3.2 Basin Geometry

The basin geometry is given in the below drawings. These drawings are included in Attachment 1.

H-2-838749, Sheet 1, Rev. 0

H-2-838750, Sheet 1, Rev. 0

H_e = The maximum possible depth of effluent around the toe of the basin. The lowest point of the basin that effluent could reach is the top of the primary liner (Attachment 1, Drawing H-2-838749, Sheet 1, Liner System Schematic) and is elevation 576.50’ (Attachment 1, Drawing H-2-838749, Sheet 1). The highest elevation around the perimeter of the basin is the top of concrete of the anchor wall and is 603.50’ (Attachment 1, Drawing H-2-838750, Sheet 1, Section C). Therefore, H_e = top elevation – bottom elevation = 603.50’ – 576.50’ = 27.00’.

Slope = the greatest slope (in degrees) around the basin. The slopes along the north, south, east, and west sides are all 3:1 (Attachment 1, Drawing H-2-838749, Sheet 1, and Attachment 1, Drawing H-2-838750, Sheet 1). Around the radii the slope will be slightly shallower than the 3:1 along the sides. Therefore, the Slope = 1/3 = 0.33 = 18.43 degrees.

3.3 Effluent Weight

The unit weight of effluent = S_l = 62.4 pcf (Reference 2)

3.4 Gravel

Unit weight of gravel = S_{gravel} = 135 pcf (Engineering Judgement)

4.0 ASSUMPTIONS

There are no assumptions in this calculation. Engineering judgement, where used, is documented herein.

5.0 COMPUTER SOFTWARE

No unverified computer software was used in this analysis. Calculations are checked using a handheld calculator.

6.0 RESULTS

A summary of the calculated DCRs is presented below.

Layer	Tension, Shear, or Normal Stress	DCR
Primary Liner	Tension	$DCR_{\sigma p}$ = 0.164
GCL	Internal Shear	DCR_{tibc} = 0.658
Geotextile	Tension	$DCR_{\sigma geo}$ = 0.262
GDM	Tension	$DCR_{\sigma net}$ = 0.173
	Normal	DCR_{Nnet} = 0.096
Secondary Liner	Tension	$DCR_{\sigma s}$ = 0.093

The required material properties are presented below. (Reference 7)

Layer	Property	Required Value
Primary Liner	Tension Yield Strength	≥2000 psi
	Thickness	≥60 mils
GCL	Internal Friction Angle	≥15 deg
Geotextile	Thickness	≥70 mils
	Tear Strength	≥95 lb
GDM	Tension Yield Strength	≥540 plf
	Compressive Strength	≥120 psi
Secondary Liner	Tension Yield Strength	≥2000 psi
	Thickness	≥60 mils

7.0 REFERENCES

1) Koerner, Robert M., *Designing with Geosynthetics*, 6th Edition
2) HNF-SD-LEF-TI-005 R1, Calculation 5, Side Slope Liner Stresses, 1990
3) Geosynthetic Institute, GRI-GN4 Standard, *Test Methods, Required Properties and Testing Frequency* for Biplanar Geonets and Biplanar Geonet Composites
4) H-2-838749, Sheet 1, Rev. 0, LERF Basin 41 Civil Secondary Liner
5) H-2-838749, Sheet 2, Rev. 0, LERF Basin 41 Civil Secondary Liner Details
6) H-2-838750, Sheet 1, Rev. 0, LERF Basin 41 Civil Primary Liner
7) RPP-SPEC-63632, Rev. 0, LERF Basin 41 Design Construction Specification

8.0 CALCULATIONS

8.1 Primary Liner

Weight of liquid acting on a one-foot wide strip of liner:

$W_1 = S_1 \times H_e \times 1\text{ ft} = 62.4\text{ pcf} \times 27\text{ ft} \times 1\text{ ft} = 1684.80\text{ plf}$

Force acting down the slope of the primary liner due to the weight of the liquid:

$F_1 = W_1 \times \sin(\text{slope}) = 1684.80\text{ plf} \times \sin(18.43\text{ deg}) = 532.64\text{ plf}$

Normal force resisting the liquid weight:

$N = W_1 = 1684.80\text{ plf}$

Shear force below the primary liner:

$F_2 = N \times \tan(d_2) = 1684.80\text{ plf} \times \tan(10\text{ deg}) = 297.08\text{ plf}$

$F_1 - F_2 = 532.64\text{ plf} - 297.08\text{ plf} = 235.56\text{ plf}$

Since $F_1 > F_2$ the primary liner is in tension.

Thickness of primary liner:

$t_p = 60\text{ mil} = 0.06\text{ in}$

Required tensile yield stress of HDPE:

σ_{py} = 2000 psi

Actual tensile stress in primary liner:

$\sigma_{pact} = (F_1 - F_2) / t_p$ = (532.64 plf – 297.08 plf) / 0.06 in = 327.17 psi

DCR for tensile stresses in the primary liner:

$DCR_{\sigma p} = \sigma_{pact} / \sigma_{py}$ = 327.17 psi / 2000 psi = 0.164 < 1.0 okay

8.2 GCL

Shear force acting on the GCL:

$F_3 = F_2$ = 297.08 plf (equal and opposite force to F_2)

Shear force below the GCL:

F_4 = N x tan(d_4) = 1684.80 plf x tan(24 deg) = 750.12 plf

$F_3 - F_4$ = 297.08 plf – 750.12 plf = -453.04 plf

Since $F_3 < F_4$ the GCL layer is not in tension.

Check the internal stresses at the internal interfaces in the GCL:

Internal force resulting from the normal force:

F_i = N x tan(d_i) = 1684.80 plf x tan(15 deg) = 451.44 plf

DCR at internal interface of GCL:

$DCR_{tibc} = F_3 / F_i$ = 297.08 plf / 451.44 plf = 0.658 < 1.0 okay

8.3 Geotextile

Shear force acting on the geotextile:

$F_5 = F_4$ = 750.12 plf (conservative because the shear force acting on the geotextile is limited by the shear force that the primary liner can transfer to the GCL, i.e. F_4 cannot exceed F_3)

Shear force below the geotextile:

F_6 = N x tan(d_6) = 1684.80 plf x tan(15 deg) = 451.44 plf

$F_5 - F_6 = 750.12$ plf – 451.44 plf = 298.68 plf

Since $F_5 > F_6$ the geotextile is in tension.

Calculate the tensile stresses:

Required thickness of geotextile:

$t_{geo} = 0.070$ in

Actual tensile stress in geotextile:

$\sigma_{geoact} = (F_5 - F_6) / t_{geo} = (750.12 \text{ plf} - 451.44 \text{ plf}) / 0.07 \text{ in} = 355.57$ psi

Required strength of geotextile:

$\sigma_{geoall} = 95 \text{ lb} / (t_{geo} \times 1 \text{ in}) = 95 \text{ lb} / (0.070 \text{ in} \times 1 \text{ in}) = 1357.14$ psi

DCR for tensile stresses in geotextile:

$DCR_{\sigma geo} = \sigma_{geoact} / \sigma_{geoall} = 355.57 \text{ psi} / 1357.14 \text{ psi} = 0.262 < 1.0$ okay

8.4 GDM

Shear force acting on the GDM:

$F_7 = F_6 = 451.44$ plf

Shear force below the GDM:

$F_8 = N \times \tan(d_8) = 1684.80 \text{ plf} \times \tan(12 \text{ deg}) = 358.12$ plf

$F_7 - F_8 = 451.44 \text{ plf} - 358.12 \text{ plf} = 93.32$ plf

Since $F_7 > F_8$ the GDM is in tension.

Calculate the tensile stresses:

Required GDM yield stress in roll direction:

$\sigma_{nety} = 540$ plf

$\sigma_{netact} = F_7 - F_8 = 451.44 \text{ plf} - 358.12 \text{ plf} = 93.32$ plf

DCR for tensile stresses in GDM:

$DCR_{\sigma net} = \sigma_{netact} / \sigma_{nety} = 93.32$ plf / 540 plf = 0.173 < 1.0 okay

Now calculate the normal stresses on the GDM. This is important because if the GDM is compressed then it may not be able to adequately transmit effluent.

$\sigma_{Nnetact} = S_1 \times H_b = 62.4$ pcf x 27 ft = 1684.80 psf

Required allowable compressive stress:

$\sigma_{Nnetall} = 120$ psi = 17280 psf (Reference 3)

DCR for normal stresses in GDM:

$DCR_{Nnet} = \sigma_{Nnetact} / \sigma_{Nnetall} = 1684.80$ psf / 17280 psf = 0.096 < 1.0 okay

8.5 Secondary Liner

Shear force acting on the secondary liner:

$F_9 = F_8 = 358.12$ plf

Shear force below the secondary liner:

$F_{10} = N \times \sin(d_{10}) = 1684.80$ plf x tan(7.6 deg) = 224.80 plf

$F_9 - F_{10} = 358.12$ plf – 224.80 plf = 133.32 plf

Since $F_9 > F_{10}$ the secondary liner is in tension.

Thickness of the secondary liner:

$t_s = t_p = 60$ mil = 0.060 inch

Required tensile yield stress of HDPE:

$\sigma_{sy} = \sigma_{py} = 2000$ psi

Actual tensile stress in secondary liner:

$\sigma_{sact} = (F_9 - F_{10}) / t_s = (358.12$ plf – 224.80 plf) / 0.06 in = 185.17 psi

DCR for tensile stresses in the secondary liner:

$DCR_{\sigma s} = \sigma_{sact} / \sigma_{sy} = 185.17$ psi / 2000 psi = 0.093 < 1.0 okay

CALCULATION SHEET

Project No. S54413.024	**Calculation No.** S54413.024-C-004	**Rev.** 0	**Page No.** 12 of 32
Title: LERF Basin 41 Side Slope Liner Stresses			
Prepared By: G. Taylor Grant	**Date:** 04/08/2020	**Checked By:** Darrel J. Packard	**Date:** 04/09/2020

ATTACHMENT – 1 - H-2-838749, SHEET 1, REV. 0, LERF BASIN 41 CIVIL SECONDARY LINER
H-2-838749, SHEET 2, REV. 0, LERF BASIN 41 CIVIL SECONDARY LINER DETAILS
H-2-838750, SHEET 1, REV. 0, CIVIL PRIMARY LINER

Sargent & Lundy Engineering Services, Inc.

CALCULATION SHEET

Project No.	S54413.024	**Calculation No.**	S54413.024-C-004	**Rev.**	0	**Page No.**	13 of 32
Title:	LERF Basin 41 Side Slope Liner Stresses						
Prepared By:	G. Taylor Grant	**Date:**	04/08/2020	**Checked By:**	Darrel J. Packard	**Date:**	04/09/2020

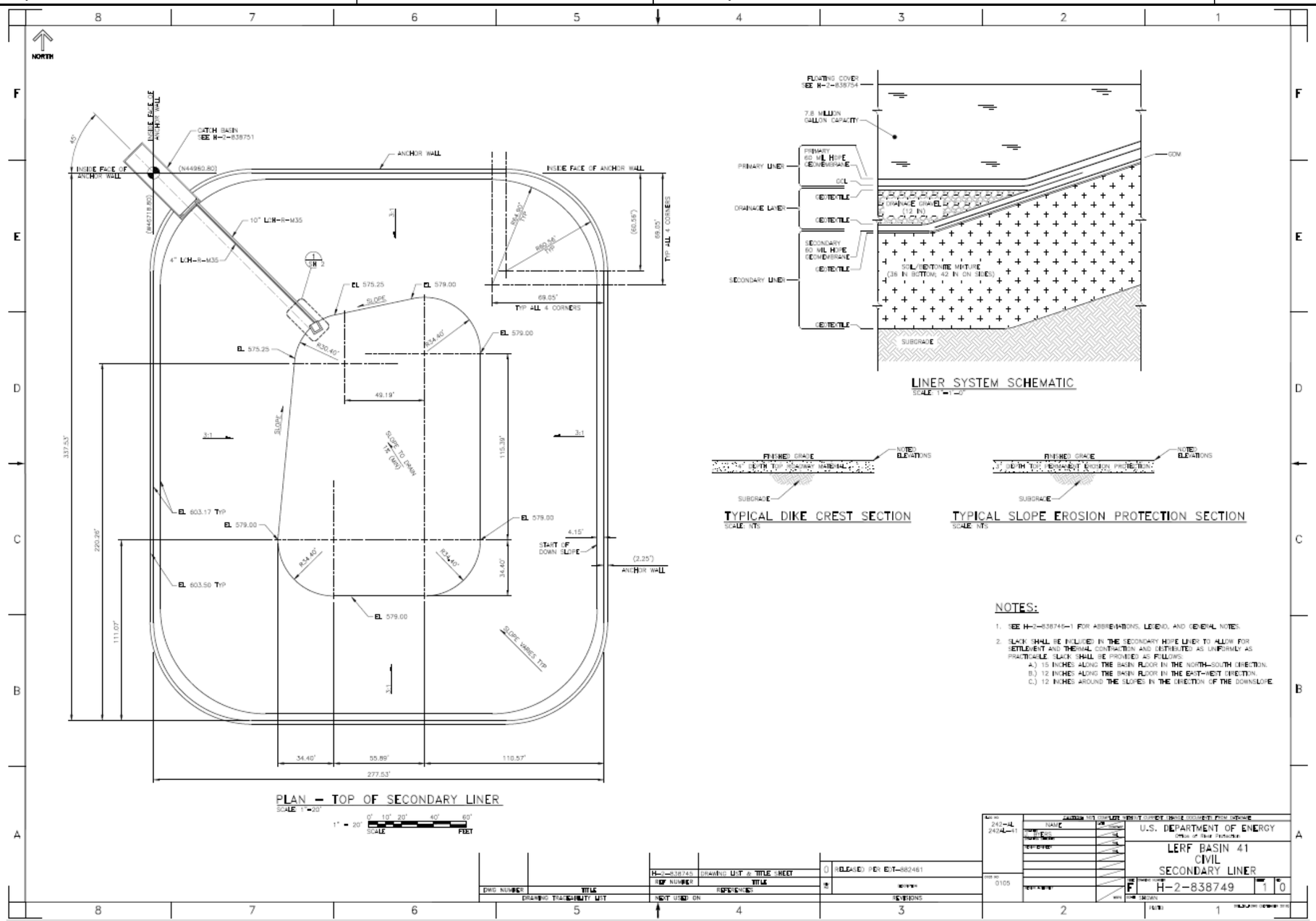

RPP-CALC-63748, Rev. 0

Sargent & Lundy Engineering Services, Inc.

CALCULATION SHEET

Project No.	S54413.024	**Calculation No.**	S54413.024-C-004	**Rev.**	0	**Page No.**	14 of 32
Title:	LERF Basin 41 Side Slope Liner Stresses						
Prepared By:	G. Taylor Grant	**Date:**	04/08/2020	**Checked By:**	Darrel J. Packard	**Date:**	04/09/2020

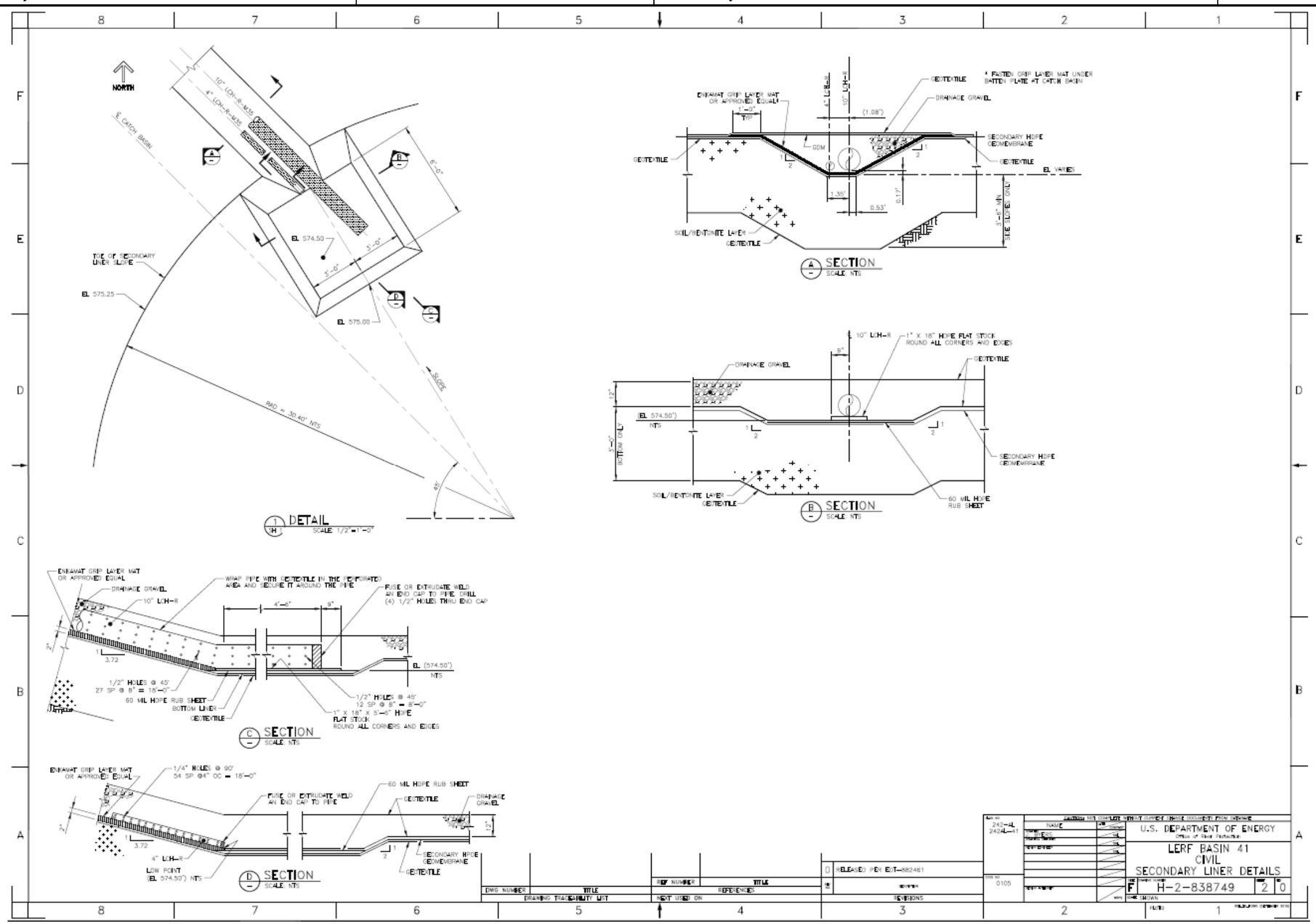

RPP-CALC-63748, Rev. 0

Sargent & Lundy Engineering Services, Inc.

CALCULATION SHEET

Project No.	S54413.024	**Calculation No.**	S54413.024-C-004	**Rev.**	0	**Page No.**	15 of 32
Title:	LERF Basin 41 Side Slope Liner Stresses						
Prepared By:	G. Taylor Grant	**Date:**	04/08/2020	**Checked By:**	Darrel J. Packard	**Date:**	04/09/2020

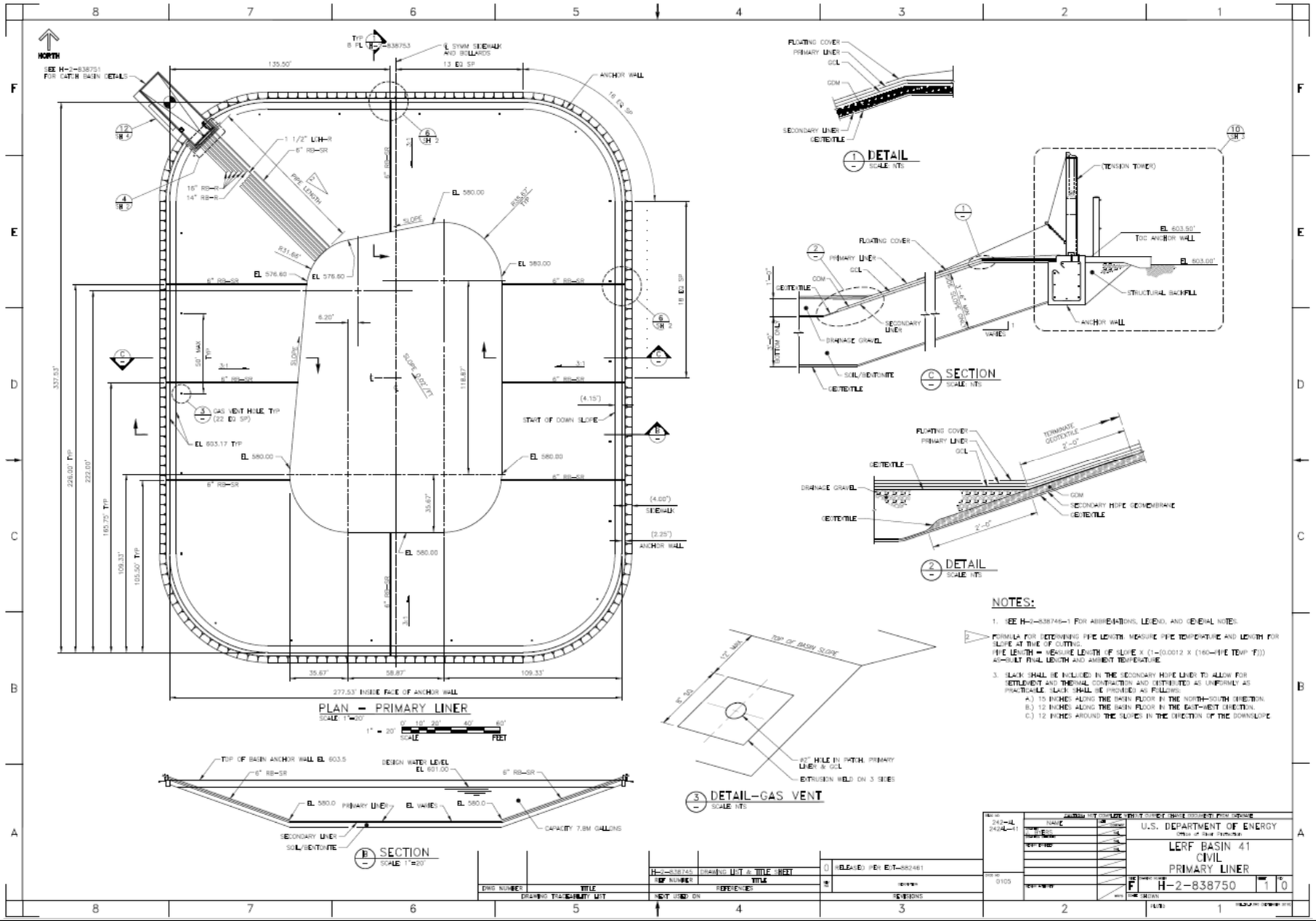

CALCULATION SHEET

Project No. S54413.024	**Calculation No.** S54413.024-C-004	**Rev.** 0	**Page No.** 16 of 32
Title: LERF Basin 41 Side Slope Liner Stresses			
Prepared By: G. Taylor Grant	**Date:** 04/08/2020	**Checked By:** Darrel J. Packard	**Date:** 04/09/2020

ATTACHMENT – 2 - DESIGNING WITH GEOSYNTHETICS, 6TH EDITION

Sargent & Lundy Engineering Services, Inc.

CALCULATION SHEET

Project No. S54413.024	**Calculation No.** S54413.024-C-004	**Rev.** 0	**Page No.** 17 of 32
Title: LERF Basin 41 Side Slope Liner Stresses			
Prepared By: G. Taylor Grant	**Date:** 04/08/2020	**Checked By:** Darrel J. Packard	**Date:** 04/09/2020

TABLE 2.4 PEAK SOIL-TO-GEOTEXTILE FRICTION ANGLES AND EFFICIENCIES (IN PARENTHESES) FOR SELECTED COHESIONLESS SOILS

Geotextile type	Concrete sand $\varphi = 30$ deg.	Rounded sand $\varphi = 28$ deg.	Silty sand $\varphi = 26$ deg.
Woven, monofilament	26 deg. (84%)	–	–
Woven, slit film	24 deg. (77%)	24 deg. (84%)	23 deg. (87%)
Nonwoven, heat bonded	26 deg. (84%)	–	–
Nonwoven, needle punched	30 deg. (100%)	26 deg. (92%)	25 deg. (96%)

Source: After Martin, et al. [35]

Note: *Literature values such as the above should not be used in critical designs. Site specific geotextiles and soils must be individually tested and evaluated in accordance with the particular project conditions, e.g., saturation, type of liquid, normal stress, consolidation time, shear rate, displacement amount, etc.*

dependent on the normal force applied to the soil, which mobilizes shearing resistances on both surfaces of the geotextile.

Since the test greatly resembles a direct shear test, albeit with stationary soil on both sides of the tensioned geotextile, a possible design strategy is to take direct shear test results (for both sides of the geotextile) and use these values for pullout design purposes. However, this may not be a conservative practice.

Test results by Collios et al. [36] show a relationship of pullout test results to shear test results with some notable exceptions. For pullout testing, if the soil particles are smaller than the geotextile openings, efficiencies are high; if not, they can be low. In all cases, however, pullout test resistances are less than the sum of the direct shear test resistances. This is due to the fact that the geotextile is taut in the pullout test and exhibits large deformations. This, in turn, causes the soil particles to reorient themselves into a reduced shear strength mode at the soil-to-geotextile interfaces, resulting in lower pullout resistance. The stress state mobilized in this test is both interesting and complex as evidenced by the approximate one-hundred technical references on this topic.

2.3.4 Hydraulic Properties

Unlike the physical and mechanical properties just discussed, traditional tests on textile materials rarely have hydraulic applications;

Sargent & Lundy Engineering Services, Inc.

CALCULATION SHEET

Project No. S54413.024	**Calculation No.** S54413.024-C-004	**Rev.** 0	**Page No.** 18 of 32
Title: LERF Basin 41 Side Slope Liner Stresses			
Prepared By: G. Taylor Grant	**Date:** 04/08/2020	**Checked By:** Darrel J. Packard	**Date:** 04/09/2020

TABLE 5.6 PEAK FRICTION VALUES AND EFFICIENCIES OF VARIOUS GEOSYNTEHTIC INTERFACES*

(a) Soil-to-Geomembrane Friction Angles

Geomembrane	Soil type: Concrete sand ($\phi = 30°$)		Ottawa sand ($\phi = 28°$)		Mica schist sand ($\phi = 26°$)	
HDPE						
textured	30°	(1.00)	26°	(0.92)	22°	(0.83)
smooth	18°	(0.56)	18°	(0.61)	17°	(0.63)
PVC						
rough	27°	(0.88)	—	—	25°	(0.96)
smooth	25°	(0.81)	—	—	21°	(0.79)
fPP-R	25°	(0.81)	21°	(0.72)	23°	(0.87)

(b) Geomembrane-to-Geotextile Friction Angles

Geotextile	Geomembrane: HDPE Textured	HDPE Smooth	PVC Rough	PVC Smooth	fPP-R
Nonwoven, needle punched	32°	8°	23°	21°	15°
Nonwoven heat bonded	28°	11°	20°	18°	21°
Woven, monofilament	19°	6°	11°	10°	9°
Woven, slit film	32°	10°	28°	24°	13°

(c) Soil-to-Geotextile Friction Angles

Geotextile	Soil type: Concrete sand ($\phi = 30°$)		Concrete sand ($\phi = 30°$)		Mica schist sand ($\phi = 26°$)	
Nonwoven, needle punched	30°	(1.00)	26°	(0.92)	25°	(0.96)
Nonwoven heat bonded	26°	(0.84)	—	—	—	—
Woven, monofilament	26°	(0.84)	—	—	—	—
Woven, slit film	24°	(0.77)	24°	(0.84)	23°	(0.87)

*Efficiency values (in parentheses) are based on the relationship E = (tan

Sargent & Lundy Engineering Services, Inc.

CALCULATION SHEET

Project No. S54413.024	**Calculation No.** S54413.024-C-004	**Rev.** 0	**Page No.** 19 of 32
Title: LERF Basin 41 Side Slope Liner Stresses			
Prepared By: G. Taylor Grant	**Date:** 04/08/2020	**Checked By:** Darrel J. Packard	**Date:** 04/09/2020

TABLE 6.1 SUMMARY OF GCL INTERNAL DIRECT SHEAR TEST RESULTS

Designation		Hydration with Distilled Water			Hydration with Tap Water		
		Dry*	Constrained Swell	Free Swell	Dry*	Contrained Swell	Free Swell
GCL-1	ϕ (degrees)	37°	16°	0°	37°	18°	0°
	c (kPa)	6.9	2.8	4.1	6.9	2.8	3.4
GCL-2	ϕ (degrees)	36°	31°	10°	36°	34°	15°
	c (kPa)	68	6.9	9.0	68	6.9	6.9
GCL-3	ϕ (degrees)	42°	37°	23°	42°	43°	26°
	c (kPa)	14	8.5	4.8	14	5.5	10
GCL-4	ϕ (degrees)	26°	19°	0°	26°	18°	0°
	c (kPa)	50	4.8	2.8	50	4.8	3.4

Designation		Hydration with Mild Leachate			Hydration with Harsh Leachate		
		Dry	Constrained Swell	Free Swell	Dry	Contrained Swell	Free Swell
GCL-1	ϕ (degrees)	37°	24°	4°	37°	19°	0°
	c (kPa)	6.9	6.2	3.4	6.9	5.5	2.8
GCL-2	ϕ (degrees)	36°	43°	20°	36°	39°	30°
	c (kPa)	68	4.8	12	68	4.1	8.3
GCL-3	ϕ (degrees)	42°	39°	25°	42°	45°	32°
	c (kPa)	14	8.3	14	14	4.8	12
GCL-4	ϕ (degrees)	26°	18°	13°	26°	13°	0°
	c (kPa)	50	4.8	3.4	50	7.6	3.4

Designation		Hydration with Diesel Fuel		
		Dry	Constrained Swell	Free Swell
GCL-1	ϕ (degrees)	37°	37°	38°
	c (kPa)	6.9	6.9	6.2
GCL-2	ϕ (degrees)	36°	36°	46°
	c (kPa)	68	68	4.8
GCL-3	ϕ (degrees)	42°	42°	40°
	c (kPa)	14	6.2	4.8
GCL-4	ϕ (degrees)	26°	24°	29°
	c (kPa)	50	4.1	6.2

**Dry* refers to the GCL as received, placed under desired normal stress, then sheared at midplane.

Constrained swell refers to GCL hydrated under the desired normal stress, then sheared at the midplane.

Free swell refers to GCL hydrated under zero normal stress, then placed under the desired normal stress, and immediately sheared at midplane.

Source: After Leisher [4].

CALCULATION SHEET

Project No. S54413.024	**Calculation No.** S54413.024-C-004	**Rev.** 0	**Page No.** 20 of 32
Title: LERF Basin 41 Side Slope Liner Stresses			
Prepared By: G. Taylor Grant	**Date:** 04/08/2020	**Checked By:** Darrel J. Packard	**Date:** 04/09/2020

ATTACHMENT – 3 - GEOSYNTHETIC INSTITUTE GRI-GN4 STANDARD

Geosynthetic Institute
475 Kedron Avenue
Folsom, PA 19033-1208 USA
TEL (610) 522-8440
FAX (610) 522-8441

Final: October 3, 2018
Revision Schedule on Page 10

GRI-GN4 Standard*

Standard Specification for

"Test Methods, Required Properties and Testing Frequency for Biplanar Geonets and Biplanar Geonet Composites"

This specification was developed by the Geosynthetic Research Institute (GRI) with the cooperation of the member organizations for general use by the public. It is completely optional in this regard and can be superseded by other existing or new specifications on the subject matter in whole or in part. Neither GRI, the Geosynthetic Institute, nor any of its related institutes, warrant or indemnifies any materials produced according to this specification either at this time or in the future.

1. Scope

1.1 This generic specification covers biplanar geonets and biplanar geonet composites (sometimes called geocomposites) for subsequent use in transmitting liquids within the manufactured plane of the materials.

Note 1: This specification does not cover triplanar geonets or drainage composites made therefrom. It also does not cover the category of geosynthetic drainage materials called "geospacers".

1.2 This specification sets forth a set of physical, mechanical, hydraulic, and endurance properties that must be met, or exceeded by the product being manufactured.

Note 2: The specification is based on tap water being the transmitted liquid. It can be modified to accommodate other liquids as agreed upon by the parties involved.

*This GRI standard specification is developed by the Geosynthetic Research Institute through consultation and review by the member organizations. This specification will be reviewed at least every 2-years, or on an as-required basis. In this regard it is subject to change at any time. The most recent revision date is the effective version and it is kept current on the Institute's Website <<geosynthetic.institute.org>>.

Note 5: In a drainage geocomposite, the geonet serves the primary function of drainage, whereas the geotextile(s) serves the dual functions of separation and filtration.

4.2 The geonets covered in this specification are made from a formulation consisting of high density polyethylene (density ≥ 0.950 g/cc), in a weight percentage of approximately 97%, with about 2% carbon black, and the remainder being antioxidants for protection during extrusion and long-term service performance.

Note 6: The density of the base resin will be slightly lower, e.g., ≥ 0.940 g/cc, however, this is still in the category of high density polyethylene (HDPE).

4.3 The resin shall be virgin material with no more than 25% rework. If rework is used, it must be a similar formulation as the parent material.

4.4 No post consumer resin (PCR) of any type shall be added to the formulation.

4.5 The type of geotextile is commonly a needle punched nonwoven polypropylene thermally bonded to the geonet core in the manufacturing facility.

4.6 In this specification, the geotextile properties follow the AASHTO M288-16 specification since it is used on a widespread basis in providing for separation and filtration functions. If the site-specific design calls for a different geotextile, or one with different properties, it must be communicated between the parties involved.

Note 7: Alternative geotextiles are burnished needle punched nonwovens (one or both sides), heat-bonded nonwovens, slit-film wovens or monofilament wovens.

5. Specification Requirements

5.1 The geonets, before lamination with geotextiles, shall conform to Table 1 which is given in three nominal thicknesses. Other thicknesses up to 400 mils (10.2 mm) are possible and information is available from the respective manufacturers. Table 1a is given in English units and Table 1b in S.I. units. The conversion from English to S.I. units is "soft". The values listed are "minimum average" values except for carbon black which is a range.

Note 8: To obtain the minimum average value, the number of test values required by the respective standard is numerically averaged and the value must equal or exceed the listed specification value.

5.2 The geotextiles, before lamination to the geonet, shall conform to Table 1 which is given in two mass per unit area values. Other mass per unit areas are possible and information is available from the respective manufacturers.

Sargent & Lundy Engineering Services, Inc.

CALCULATION SHEET

Project No.	S54413.024	**Calculation No.**	S54413.024-C-004	**Rev.**	0	**Page No.**	23 of 32
Title:	LERF Basin 41 Side Slope Liner Stresses						
Prepared By:	G. Taylor Grant	**Date:**	04/08/2020	**Checked By:**	Darrel J. Packard	**Date:**	04/09/2020

U.S. English Units

Table 1(a) – MQC Specification for Biplanar Geonets and Geonet Composites

Property	Test Method	Test Value Based on Geonet Thickness						Test Frequency
(a) Geonet (before lamination)		**200 mil**		**250 mil**		**300 mil**		
Thickness(1), mils (min. ave.)	D5199	200		250		300		per 50,000 lb.
Density(2), g/cc (min. ave.)	D1505/D792	0.95		0.95		0.95		per 50,000 lb.
Carbon Black Content, % (range)	D1603/D4218	1.5 to 3.0		1.5 to 3.0		1.5 to 3.0		per 100,000 lb.
Tensile Strength(3), lb. (min. ave.)	D7179	180		240		300		per 50,000 lb.
Compressive Strength(4), lb/in.^{2} (min. ave.)	D6364	120		120		120		per 100,000 lb.
Flow Rate/Width(5), gal/min-ft (min. ave.)	D4716	5.0		7.2		9.0		per 200,000 lb.
(b) Geotextile (before lamination)(6)								
Mass/Unit Area, oz/sy (MARV)	D5261	6	8	6	8	6	8	Note (7)
Grab Strength, lb. (MARV)	D4632	157	200	157	200	157	200	
Grab Elongation, % (MARV)	D4632	50	50	50	50	50	50	
Tear Strength, lb. (MARV)	D4533	55	80	55	80	55	80	
Puncture Strength, lb. (MARV)	D6241	310	430	310	430	310	430	
Permittivity, sec^{-1} (MARV)	D4491	0.2	0.2	0.2	0.2	0.2	0.2	
AOS, mm (MaxARV)	D4751	0.25	0.25	0.25	0.25	0.25	0.25	
UV Stability, % ret. (500 hr.)	D4355	50	50	50	50	50	50	
(c) Single-Sided Laminated Composite								
Flow Rate/Width(5), gal/min-ft (min. ave.)	D4716	2.7	2.2	3.9	3.2	4.9	4.0	per 200,000 lb.
Ply Adhesion(8), lb./in. (min. ave.)	D7005	1.0	1.0	1.0	1.0	1.0	1.0	per 100,000 lb.
(d) Double-Sided Laminated Composite								
Flow Rate/Width(5), gal/min-ft (min.-ave.)	D4716	2.0	1.5	2.9	2.2	3.6	2.7	per 200,000 lb.
Ply Adhesion(8), lb./in. (min. ave.)	D7005	1.0	1.0	1.0	1.0	1.0	1.0	per 100,000 lb.

(1) The diameter of the presser foot shall be 2.22 in. and the pressure shall be 2.9 lb./in^2.
(2) Density is of the formulated material; the base resin will be slightly lower.
(3) This is the average peak value for five equally spaced machine direction tests across the roll width.
(4) Test to be conducted using Section 6.3, the movable plate method.
(5) Geonets shall be tested between rigid end platens at a hydraulic gradient of 1.0 (hence, this is also the "transmissivity"); a pressure of 10,000 lb./ft^2, and a seating dwell time of 15 min. If specimen is a geocomposite the geotextile side(s) should be tested using flexible boundaries. Test values are for machine direction only.
(6) These values are Class 1 and Class 2 of the AASHTO M288-00 specification for drainage (filtration) requirements of 15 to 50% fines passing #200 sieve. Generally, one or the other will be used.
(7) Since these geotextile values are MARV, the statistics needed to obtain such values dictate the frequency of testing.
(8) This is the average of five equally spaced machine direction tests across the roll width of the single-sided geocomposite. Both sides should be tested for the double-sided geocomposite.

GRI-GN4 - 8 of 10

CALCULATION SHEET

Project No. S54413.024	**Calculation No.** S54413.024-C-004	**Rev.** 0	**Page No.** 24 of 32
Title: LERF Basin 41 Side Slope Liner Stresses			
Prepared By: G. Taylor Grant	**Date:** 04/08/2020	**Checked By:** Darrel J. Packard	**Date:** 04/09/2020

ATTACHMENT – 4 – FREE BODY DIAGRAM OF LINER FORCES

Sargent & Lundy Engineering Services, Inc.

CALCULATION SHEET

Project No. S54413.024	**Calculation No.** S54413.024-C-004	**Rev.** 0	**Page No.** 25 of 32
Title: LERF Basin 41 Side Slope Liner Stresses			
Prepared By: G. Taylor Grant	**Date:** 04/08/2020	**Checked By:** Darrel J. Packard	**Date:** 04/09/2020

Free body diagram of forces on the Liner System around the basin perimeter (excluding the northwest corner).

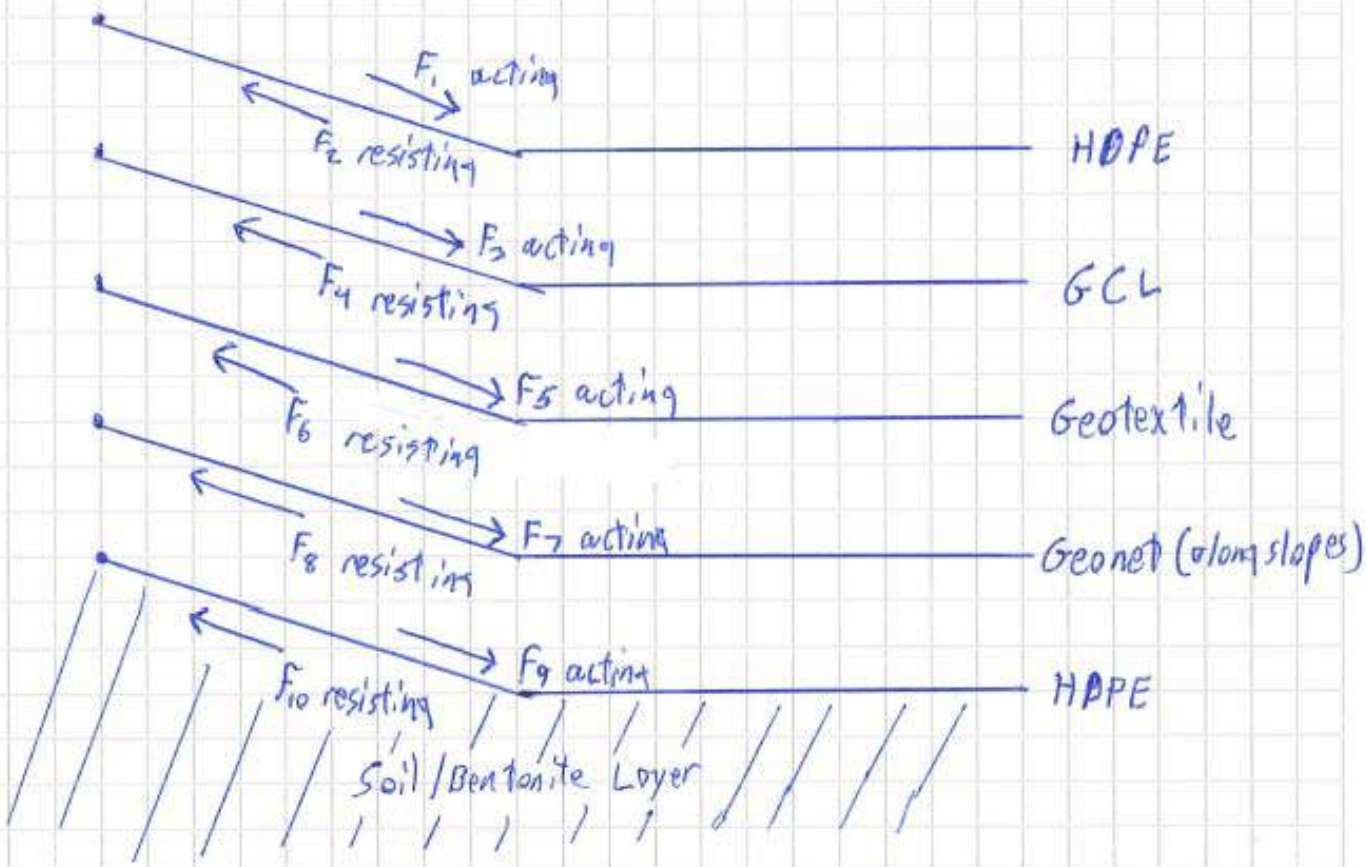

CALCULATION SHEET

Project No. S54413.024	**Calculation No.** S54413.024-C-004	**Rev.** 0	**Page No.** 26 of 32
Title: LERF Basin 41 Side Slope Liner Stresses			
Prepared By: G. Taylor Grant	**Date:** 04/08/2020	**Checked By:** Darrel J. Packard	**Date:** 04/09/2020

ATTACHMENT – 5 – HNF-SD-LEF-TI-005 REV 1 CALCULATION 5 SIDE SLOPE LINER STRESSES

Sargent & Lundy Engineering Services, Inc.

CALCULATION SHEET

Project No. S54413.024	**Calculation No.** S54413.024-C-004	**Rev.** 0	**Page No.** 27 of 32
Title: LERF Basin 41 Side Slope Liner Stresses			
Prepared By: G. Taylor Grant	**Date:** 04/08/2020	**Checked By:** Darrel J. Packard	**Date:** 04/09/2020

KAISER ENGINEERS HANFORD HNF-SD-LEF-TI-005 Rev 1 Page No. 1 of 18

DESIGN ANALYSIS Revision 0

Client WHC WO/Job No. ER-0156

Subject Interim Retention Storage Basins (IRSB) Date 9/19/90 By DKB

Checked 9/25/90 By R Hillebrand

Location 242 A-L, 200 East Revised By

SIDE SLOPE LINER STRESSES

1.0 OBJECTIVE

This calculation addresses the stresses in the liner system for the W-105 Retention Basins, except for the one corner of each basin containing the piping systems. This corner contains gravel and separate calculation. A separate calculation, "Side Slope Liner Stability - Pipe Trench" addresses stresses and stability at the pipe trench.

2.0 DESIGN INPUTS

2.1 References

2.1.1 Koerner, R.M., "Designing with Geosynthetics," 2nd Edition, Prentice Hall, Sections 5.6.8, 5,3, 5.1.3.8, and as referenced below, 1990.

2.1.2 Industrial Fabric Association International, "The Use of Geosynthetics in Waste Containment," Presentation Handout, Page 7, undated.

2.1.3 Letter to W. Simpson, James Clem Corporation, from Geoservices, Inc., "Report on the Direct Shear Testing of Selected CLAYMAX CL," Table 1 and Attachment 1, dated 10 March 1989.

2.1.4 Technical Report to Acme Concrete Company from Chen-Northern, Inc., "Tests of Drainage Gravel for the Grout Vault Storage Facility, Kaiser B714 Project," dated 26 February 1990.

2.1.5 Akzo Industrial Systems Company, "ENKAMAT "S" Reinforced Grip Layer Matting [RGLM], Specifications," Asheville, NC 28802, undated.

2.1.6 Mathsoft, Inc., "Mathcad Version 2.5 User's Guide," Cambridge, Ma 02139, June 1989.

2.1.7 Lettter to W. Simpson, James Clem Corporation from R. H. Swan, Jr., GeoServices, Inc, Consulting Engineers, "Report on the Direct Shear Testing of Selected CLAYMAX CL Interfaces, GeoServices Project Number: P1157, GeoServices Document Number: NL89038," Norcross, Georgia, dated March 10, 1989.

35

Sargent & Lundy Engineering Services, Inc.

CALCULATION SHEET

Project No. S54413.024	**Calculation No.** S54413.024-C-004	**Rev.** 0	**Page No.** 28 of 32
Title: LERF Basin 41 Side Slope Liner Stresses			
Prepared By: G. Taylor Grant	**Date:** 04/08/2020	**Checked By:** Darrel J. Packard	**Date:** 04/09/2020

HANFORD HNF-SD-LEF-TI-005 Rev1: DESIGN ANALYSIS Revision 0

Client WHC WO/Job No. ER-0156

Subject Interim Retention Storage Basins (IRSB) Date 9/19/90 By DKO

Checked 9/25/90 By RHollenbach

Location 242 AL, 200 East Revised By

Other references are listed below when applied to a specific area of the calculation.

2.2 Units Required for Calculation (This Information Required for MATHCAD)

ft ≡ 1L lb ≡ 1M sec ≡ 1T

(In this calculation "lb" represents "pounds-mass", the base unit of mass. "lbf is used for force, see below.)

II. Angular measure

rad ≡ 1

$$deg \equiv \frac{\pi}{180} \cdot rad$$

III. Derived units: Length

$$in \equiv \frac{ft}{12} \qquad m \equiv \frac{ft}{.3048} \qquad mil \equiv 0.001 \cdot in$$

$$cm \equiv 0.01 \cdot m$$

IV. Derived units: Mass

$$slug \equiv 32.174 \cdot lb$$

V. Derived units: Time

$$min \equiv 60 \cdot sec \qquad hr \equiv 3600 \cdot sec \qquad day \equiv 24 \cdot hr$$

$$yr \equiv 365.2422 \cdot day$$ (tropical year)

VI. Derived units: Area, Volume

$$gal \equiv 0.1337 \cdot ft^3$$

36

Sargent & Lundy Engineering Services, Inc.

CALCULATION SHEET

Project No. S54413.024	**Calculation No.** S54413.024-C-004	**Rev.** 0	**Page No.** 29 of 32
Title: LERF Basin 41 Side Slope Liner Stresses			
Prepared By: G. Taylor Grant	**Date:** 04/08/2020	**Checked By:** Darrel J. Packard	**Date:** 04/09/2020

KAISER ENGINEERS HANFORD HNF-SD-LEF-TI-005 Rev 1 Page No. 3 of 10

DESIGN ANALYSIS Revision 0

Client WHC WO/Job No. ER-0156

Subject Interim Retention Storage Basins (IRSB) Date 9/19/90 By DKB

Checked SEP 25 1990 By R. Hollenbach

Location 242 AL, 200 East Revised By

VII. Derived units: Acceleration

$$g = 32.174 \cdot \frac{ft}{sec^2}$$ (acceleration of gravity)

VIII. Derived units: Force, Pressure

$$lbf = g \cdot lb$$ (pound force)

$$psi = \frac{lbf}{in^2}$$

2.3 Given or Known Data

$$\rho_1 := 1.94 \cdot \frac{slug}{ft^3}$$ Density of liquid waste

$$S_1 := \rho_1 \cdot g$$

$$S_1 = 62.4 \cdot \frac{lbf}{ft^3}$$ Specific weight of liquid waste

$$S_{gravel} := 122.1 \cdot \frac{lbf}{ft^3}$$ Maximum specific weight of gravel layer, per Reference 2.1.4

$$H_b := 603.5 \cdot ft - 576.60 \cdot ft$$

37

Sargent & Lundy Engineering Services, Inc.

CALCULATION SHEET

Project No. S54413.024	**Calculation No.** S54413.024-C-004	**Rev.** 0	**Page No.** 30 of 32
Title: LERF Basin 41 Side Slope Liner Stresses			
Prepared By: G. Taylor Grant	**Date:** 04/08/2020	**Checked By:** Darrel J. Packard	**Date:** 04/09/2020

HANFORD HNF-SD-LEF-TI-005 Rev1 Revision 0

DESIGN ANALYSIS

Client WHC WO/Job No. ER-0156

Subject Interim Retention Storage Basins (IRSB) Date 9/19/90 By DKB

Checked SEP 25 1990 By R Hellen Lech

Location 242 AL, 200 East Revised By

$H_b = 26.9 \cdot ft$ Maximum internal height of basin. The highest liquid level will be several feet below the maximum basin height. Using 0the maximum basin height as the liquid height is a conservative assumption.

Determine maximum slope angle: The nominal slope angle is 18.4 degress, corresponding to a slope of 3:1. However, some areas may have a slightly steeper slope.

Reference: Drawing No. H-2-79590, Sheet 1 of 1, Rev. 1, Zone E-6, E-8.

$T_{elev} := 603.5 \cdot ft$ Top elevation of dike

$B_{elev} := 576.6 \cdot ft$ Bottom elevation at vicinity of sump

$\delta_{elev} := T_{elev} - B_{elev}$ Vertical distance for calculating slope angle.

$\delta_{length} := 73.0 \cdot ft$ Horizontal distance (minimum identified) for calculating slope angle.

$$slope := \frac{\delta_{elev}}{\delta_{length}}$$

$slope = 0.4$

$\beta := atan(slope)$

$\beta = 20.2 \cdot deg$ Maximum slope angle. The maximum angle will be used during the calculation, as a conservative assumption.

38

Sargent & Lundy Engineering Services, Inc.

CALCULATION SHEET

Project No. S54413.024	**Calculation No.** S54413.024-C-004	**Rev.** 0	**Page No.** 31 of 32
Title: LERF Basin 41 Side Slope Liner Stresses			
Prepared By: G. Taylor Grant	**Date:** 04/08/2020	**Checked By:** Darrel J. Packard	**Date:** 04/09/2020

KAISER ENGINEERS HANFORD HNF-SD-LEF-TI-005 Rev1. Page No. 5 of 18 Revision 0

DESIGN ANALYSIS

Client WHC WO/Job No. ER-0156
Subject Interim Retention Storage Basins (IRSB) Date 9/19/90 By DKB
Checked By R Hallock
Location 242 AL, 200 East Revised By

2.4 Friction Angles

Figure 1 presents the layers of the basin liner systems, while Figure 2 offers an expanded view of the layers. The top liner is referred to as the primary liner in this calculation, while the bottom liner is referred to as the secondary liner.
The expressions "primary" and "secondary" are used in the referenced documentation. "Top" and "bottom" are used on project drawings.

Friction angles represent the coeficient of friction at the layer boundaries. They are presented below, along with remarks.

ANGLE	REMARKS
$\delta_2 := 10 \cdot deg$	Bottom of primary liner to top of bentonite carpet liner. This is the value of smooth HDPE to slit film geotextile (Reference 2.1.1, Page 382)--probably conservative.
$\delta_4 := 24 \cdot deg$	Bottom of bentonite carpet liner to top of geotextile. This angle is based on Reference 2.1.1, Page 382, for geomembrane-to-geotextile (woven slit film) combinations, an interface assumed to be similar to bentonite carpet liner-geotextile.
$\delta_i := 12 \cdot deg$	The "internal" friction angle for the bentonite carpet liner. This is the friction angle at internal interfaces of the material, from Reference 2.1.7.
$\delta_6 := 15 \cdot deg$	Bottom of geotextile to top of geonet. Per Reference 2.1.1, Page 468, the angle for geonet to smooth HDPE is 12 (see $\delta(8)$ below), so 15 degrees is taken to be a valid conservative value for geotextile to geonet.

39

DOE Richland, WA

Sargent & Lundy Engineering Services, Inc.

CALCULATION SHEET

Project No. S54413.024	**Calculation No.** S54413.024-C-004	**Rev.** 0	**Page No.** 32 of 32
Title: LERF Basin 41 Side Slope Liner Stresses			
Prepared By: G. Taylor Grant	**Date:** 04/08/2020	**Checked By:** Darrel J. Packard	**Date:** 04/09/2020

KAISER ENGINEERS HANFORD

HNF-SD-LEF-TI-005 Rev1

Page No. 6 of 18

Revision 0

DESIGN ANALYSIS

Client WHC WO/Job No. ER-0156

Subject Interim Retention Storage Basins (IRSB) Date 9/19/90 By DKB

Checked SEP 25 1990 By

Location 242 AL, 200 East Revised By

$\delta_8 := 12 \cdot deg$ Bottom of geonet to top of secondary liner.

Value is based on Reference 2.1.1, Page 468 for geonet to smooth HDPE .

$\delta_{10} := 7.6 \cdot deg$ Bottom of secondary liner to top of soil/bentonite layer.

Reference 2.1.1, Page 382-384, including Table 5.6, provides friction values and efficiencies for soil-to-geomembrane interfaces. From these data, friction angles for smooth HDPE to clay soils were derived, and range from 7.6 to 18.3 degrees.

The data provided in the reference are for various types of undrained clays. Project W-105 uses a soil/bentonite mix, and a friction angle of 7.6 degrees is expected to be technically conservative.

2.5 Calculation

The approach will be to analyze forces on each layer of the system, beginning at the top. It is based on Reference 2.1.1, "Designing with Geosynthetics," Section 5.6.8.

Assumption:

Although the liquid waste (essentially water) in the basins is a shearless fluid, the approach taken in the calculation will be to assume shear forces are transmitted at the waste-primary liner interface. This will result in a technically conservative approach.

Calculation for Primary Liner

$W_1 := S_1 \cdot H_b \cdot 1 \cdot ft$ weight of liquid acting on one foot strip of liner.

40

DOCUMENT RELEASE AND CHANGE FORM

Prepared For the U.S. Department of Energy, Assistant Secretary for Environmental Management
By Washington River Protection Solutions, LLC., PO Box 850, Richland, WA 99352
Contractor For U.S. Department of Energy, Office of River Protection, under Contract DE-AC27-08RV14800

TRADEMARK DISCLAIMER: Reference herein to any specific commercial product, process, or service by trade name, trademark, manufacturer, or otherwise, does not necessarily constitute or imply its endorsement, recommendation, or favoring by the United States government or any agency thereof or its contractors or subcontractors. Printed in the United States of America.

Release Stamp

DATE:
May 26,2020
HANFORD RELEASE

1. **Doc No:** RPP-CALC-63749 **Rev.** 00

2. **Title:**
LERF Basin 41 Side Slope Liner Stability and Stress - Pipe Trench

3. **Project Number:** ☐N/A
T1P226

4. **Design Verification Required:**
☐Yes ☒No

5. **USQ Number:** ☒ N/A
RPP-27195

6. **PrHA Number** **Rev.** ☒ N/A

Clearance Review Restriction Type:
public

7. **Approvals**

Title	Name	Signature	Date
Clearance Review	Raymer, Julia R	*Raymer, Julia R*	05/26/2020
Design Authority	Wilson, Nathaniel W	*Wilson, Nathaniel W*	04/24/2020
Checker	Debban, Jeremy A	*Debban, Jeremy A*	04/10/2020
Document Control Approval	Hood, Evan	*Hood, Evan*	05/19/2020
Environmental Protection	Wall, Jeremy M	*Wall, Jeremy M*	04/29/2020
Originator	Dorsh, Paul M	*Dorsh, Paul M*	04/10/2020
Other Approver	McShane, Michael P	*McShane, Michael P*	05/13/2020
Responsible Engineering Manager	Huntington, Matthew R	*Huntington, Matthew R*	04/29/2020

8. **Description of Change and Justification**

Initial Release.

Design checks were performed in accordance with Sargent & Lundy ESD Quality Assurance Procedure (QAP). Because of the General Service statusof the equipment, a graded approach was applied and design verification was not performed as allowed by QAP 3.5, Design Verification.

Note that Paul Dorsh is signing as Originator for Taylor Grant and Jeremy Debban is signing as Checker for Darrel Packard. Taylor Grant and Darrel Packard are not currently in SPF.

9. **TBDs or Holds** ☒N/A

10. **Related Structures, Systems, and Components**

a. **Related Building/Facilities** ☐N/A	b. **Related Systems** ☐N/A	c. **Related Equipment ID Nos. (EIN)** ☒N/A
LERF FACILITIES	LERF	

11. **Impacted Documents – Engineering** ☒N/A

Document Number	Rev.	Title

12. **Impacted Documents (Outside SPF):**

N/A

13. **Related Documents** ☐N/A

Document Number	Rev.	Title
MT-50497	00	Liquid Effluent Retention Facility (LERF) Basin 41

14. **Distribution**

Name	Organization
Angevine, Brennan T	MISSION ANALYSIS ENGINEERING
Blaak, Whitney S	COGNIZANT SYSTEM ENGINEERING
Demiter, Scott M	ETF OPERATIONS
Goessmann, Glen E	ENGINEERING PROGRAMS
Greenhalgh, Aaron M	TANK FARM PROJECTS ENGINEERING
Halgren, Dale L	ETF ENGINEERING
Harris, John W	SAFETY PROGRAM SERVICES RC/P
Joslyn, Cameron C	ETF ENGINEERING
McFerran, Brandon E	242-A/AW/ETF OPERATIONS
McShane, Michael P	ENGINEERING PROGRAMS
Omberg Carro, Susan K	NUCLEAR SAFETY
Powers, Daniel J	ETF ENGINEERING
Roosendaal, Gene D	TFP PROJECT MANAGEMENT
Rutherford, Wally	ETF ENGINEERING
Sackett, Tom E	TANK FARM PROJECTS
Samoska, Jerry A	INSTRUMENT & CNTRL ENGINEERING

DOCUMENT RELEASE AND CHANGE FORM	**Doc No:** RPP-CALC-63749 **Rev.** 00

14. **Distribution**

Name	**Organization**
Shultz, Milton V	NUCLEAR SAFETY
Smith, Gregory E	TANK FARM PROJECTS ENGINEERING
Smoot, Bill R	TFP RADCON
Swanson, Brad L	242-A/AW/ETF OPERATIONS
Wall, Jeremy M	RETRVL & CLOSURE/PROJ ENV CMPL
Wilson, Nathaniel W	ETF PROJECTS ENGINEERING

RPP-CALC-63749
Revision 0

LERF Basin 41 Side Slope Liner Stability and Stress – Pipe Trench

Prepared by

G. T. Grant
Sargent & Lundy for Washington River Protection Solutions, LLC

Date Published
May 2020

5-21-2020

washington river protection solutions

Prepared for the U.S. Department of Energy
Office of River Protection

Contract No. DE-AC27-08RV14800

A-6007-231 (REV 0)

Approved for Public Release;
Further Dissemination Unlimited

RPP-CALC-63749 Rev. 0

Sargent & Lundy Engineering Services, Inc.	**CALCULATION COVER SHEET**	**Page No.** 1 of 30 **Date** 05/21/2020 **Rev. No.** 1 **Calculation No:** S54413.024-C-005

Project No.	**Project Title:**	**Client:**
S54413.024	LERF Basin 41 Design	Washington River Protection Solutions

Title:

LERF Basin 41 Side Slope Liner Stability and Stress – Pipe Trench

Purpose and Objective:

The purpose of this calculation is to determine the stresses in the liner system adjacent to the effluent piping system in the northwest corner of LERF Basin 41. The liner system beyond the northwest corner is in calculation S54413.024-C-004 / RPP-CALC-63748.

The calculated liner stresses will be used to determine the required material strengths to ensure that no liner material will be stressed beyond its capacity.

Rev. No.	Total Pages		Prepared By	Checked By	PM/TL
0	30	**Print Name/ Sign:**	G. Taylor Grant	Darrel J. Packard	Paul M. Dorsh, P.E.
		Date:	04/08/2020	4/09/2020	4/09/2020

Revision Description (Revision Description/Affected Pages):

1	30	**Print Name/ Sign:**	G. Taylor Grant	Darrel J. Packard	Paul M. Dorsh, P.E.
		Date:	05/21/2020	05/21/2020	05/21/2020

Revision Description (Revision Description/Affected Pages):

Removed Attachment 4 and renumbered Attachment 5 to Attachment 4.

Formatted Section 8 so that each Subsection is on its own page.

RPP-CALC-63749 Rev. 0

CALCULATION REVIEW CHECKLIST

Project No.	Calculation No.	Page No.
S54413.024	S54413.024-C-005 Rev. 1	2 of 30

Items Checked	Accept Y	Accept N	Accept N/A	Description of Resolution for Unacceptable Items
1. Cover sheets properly completed.	✓			
2. Calculation sheet headers complete with calculation number, revision number, etc.	✓			
3. Calculation sheet contents are legible, accurate, and complete per format.	✓			
4. Listed attachments included.	✓			
5. Calculation objective clearly described.	✓			
6. Criteria are suitable and properly referenced to task specific documents.	✓			
7. Assumptions and input data selected, described, reasonable, and attached or referenced to task documents.	✓			
8. Calculation method identified and appropriate for the design activity.	✓			
9. Calculation results reasonable and correctly described in results and conclusions.	✓			
10. Physical property calculations generated by CAD software verified via hand calculations.			✓	
11. Computer program identified with version and revision.			✓	
12. Computer input/output provided or referenced and reasonable.			✓	
13. Computer run traceable to calculation (file #, etc.).			✓	
14. Computer input/output data and problem type within validation/verification range of use.			✓	
15. Computer program validation/verification addressed.			✓	
16. Computer operating system in use for calculation preparation is the same as when the software was verified on machine.			✓	

Calculation Checking Method	√	Applicable Pages
1. Direct Step-by-Step Check	✓	
2. Reference Chart(s) or Book(s) Comparison (Append Documentation)		
3. Alternate Calculation (Append Documentation)		

Comments:

Preparer (Print Name and Sign):	Date:
G. Taylor Grant	05/21/2020
Checker (Print Name and Sign):	**Date:**
Darrel Packard	05/21/2020

Signatures obtained only after discrepancies are corrected and comments are resolved.

CALCULATION SHEET

Project No. S54413.024	**Calculation No.** S54413.024-C-005 Rev. 1		**Page No.** 3 of 30
Title: LERF Basin 41 Side Slope Liner Stability and Stress – Pipe Trench			
Prepared By: G. Taylor Grant	**Date:** 05/21/2020	**Checked By:** Darrel J. Packard	**Date:** 05/21/2020

TABLE OF CONTENTS

1.0 PURPOSE 5

2.0 METHODOLOGY 5

3.0 DESIGN INPUTS 5
- 3.1 Friction Angles 5
- 3.2 Basin Geometry 6
- 3.3 Primary and Secondary Liner Thickness 6
- 3.4 Geotextile Thickness 6
- 3.5 Effluent Weight 7
- 3.6 Gravel 7

4.0 ASSUMPTIONS 7

5.0 COMPUTER SOFTWARE 7

6.0 RESULTS 7

7.0 REFERENCES 8

8.0 CALCULATIONS 9
- 8.1 Primary Liner 9
- 8.2 GCL 10
- 8.3 Geotextile 11
- 8.4 Gravel 12
- 8.5 Grip Layer Mat 13
- 8.6 Secondary Liner 14

Attachments

ATTACHMENT – 1 – H-2-838749, SHEET 1, REV. 0, LERF BASIN 41 CIVIL SECONDARY LINER
H-2-838749, SHEET 2, REV. 0, LERF BASIN 41 CIVIL SECONDARY LINER DETAILS
H-2-838750, SHEET 1, REV. 0, LERF BASIN 41 CIVIL PRIMARY LINER

ATTACHMENT – 2 –DESIGNING WITH GEOSYNTHETICS, 6TH EDITION

ATTACHMENT – 3 – FREE BODY DIAGRAM OF LINER FORCES

ATTACHMENT – 4 – HNF-SD-LEF-TI-005 REV 1 CALCULATION 6 SIDE SLOPE LINER STABILITY AND STRESS – PIPE TRENCH

CALCULATION SHEET

Project No. S54413.024	**Calculation No.** S54413.024-C-005 Rev. 1		**Page No.** 4 of 30
Title: LERF Basin 41 Side Slope Liner Stability and Stress – Pipe Trench			
Prepared By: G. Taylor Grant	**Date:** 05/21/2020	**Checked By:** Darrel J. Packard	**Date:** 05/21/2020

Acronyms

cf	cubic foot (ft^3)
DCR	Demand-to-Capacity Ratio
deg	degree (angle)
ft	foot (length)
GCL	Geosynthetic Clay Liner
GDM	Geosynthetic Drainage Material
HDPE	High Density Polyethylene
lb	pound force
LERF	Liquid Effluent Retention Facility
psf	pound per square foot (lb/ft^2)
psi	pound per square inch (lb/in^2)
pcf	pound per cubic foot (lb/ft^3)
plf	pound per lineal foot (lb/ft)
sf	square feet

CALCULATION SHEET

Project No. S54413.024	**Calculation No.** S54413.024-C-005 Rev. 1		**Page No.** 5 of 30
Title: LERF Basin 41 Side Slope Liner Stability and Stress – Pipe Trench			
Prepared By: G. Taylor Grant	**Date:** 05/21/2020	**Checked By:** Darrel J. Packard	**Date:** 05/21/2020

1.0 PURPOSE

The purpose of this calculation is to determine the stability of the liner system at the northwest corner of the basin containing the pipe trench. The pipe trench is lined with gravel and a grip layer mat. Attachments 1 and 3 show the liner layers and free body diagram of the liner forces.

A separate calculation addresses the stresses along the side slopes for the balance of the basin containing geonet. Since the composite liner systems are identical down to either the GDM or gravel, the results of the companion calculation are quite similar, and will serve as one basis for this calculation, down to the point where gravel replaces the GDM.

2.0 METHODOLOGY

The forces on each layer of the liner system will be analyzed, beginning at the top layer. Although the liquid waste (essentially water) in the basin is a shearless fluid, the approach taken in the calculation will be to assume shear forces are transmitted at the waste-primary liner interface. This will result in a conservative approach. The stresses in the liner layers will be analyzed at the toe of the slope around the basin floor. This will be the location of the greatest liquid depth which will cause the greatest stresses.

3.0 DESIGN INPUTS

3.1 Friction Angles

The friction angles between two materials are taken from Reference 1. Where similar surface-to-surface interfaces are not provided in Reference 1, similar surface-to-similar surface angles are used. The friction angles are presented below, along with remarks.

Friction Angle	Remarks
d_2 = 10 deg	Bottom of primary liner to top of GCL. This is the angle of smooth HDPE to slit film geotextile (Reference 1, Page 540)
d_i = 15 deg	The internal friction angle of the GCL. This is the friction angle at internal interfaces of the material (Reference 1, Table 6.1, Page 770). The average internal friction value of the four GCL samples was taken for the Hydration With Mild Leachate – Free Swell case.
d_4 = 24 deg	Bottom of GCL to top of geotextile. This is the friction angle of geomembrane to geotextile (woven slit film) combinations, and interface assumed to be similar to GCL-geotextile (Reference 1, Page 540).
d_6 = 26 deg	Bottom of geotextile to top of gravel. This is the friction angle of nonwoven, needle punched geotextile to rounded sand (Reference 1, Page 140).

d_{10} = 15 deg	Bottom of grip layer mat to top of secondary liner. This is the friction angle of Enkamat to smooth geomembrane (Reference 6, Page 490).

The below friction angles between two materials are taken from Reference 2. These friction angles are for similar materials that will be installed. The friction angles are presented below, along with remarks.

Friction Angle	Remarks
d_8 = 25 deg	Bottom of gravel to top of grip layer mat. Based on an example referenced in Reference 2.
d_{12} = 7.6 deg	Bottom of secondary liner to top of soil/bentonite layer. Reference 2 derived a range of friction angles between smooth HDPE and clay soils, and range from 7.6 to 18.3 degrees. The lowest value will be used.

3.2 Basin Geometry

The basin geometry is given in the below drawings. These drawings are included in Attachment 1.

H-2-838749, Sheet 1, Rev. 0

H-2-838749, Sheet 2, Rev. 0

H-2-838750, Sheet 1, Rev. 0

H_e = The maximum possible depth of effluent around the toe of the basin. The lowest point of the basin that effluent could reach is the top of the primary liner (Attachment 1, Drawing H-2-838749, Sheet 1, Liner System Schematic) and is elevation 576.50’ (Attachment 1, Drawing H-2-838750, Sheet 1). The highest elevation around the perimeter of the basin is the top of concrete of the anchor wall and is 603.50’ (Attachment 1, Drawing H-2-838750, Sheet 1, Section C). Therefore, H_e = top elevation – bottom elevation = 603.50’ – 576.50’ = 27.00’.

Slope = the greatest slope (in degrees) around the radius of the northwest corner. The slope is a 3.72:1 (Attachment 1, Drawing H-2-838749, Sheet 2), therefore the Slope = 1/3.72 = 0.27 = 15.05 degrees.

3.3 Primary and Secondary Liner Thickness

The specified thickness of the HDPE Liner = t_p = 60 mil = 0.06 in (Reference 7)

3.4 Geotextile Thickness

The specified thickness of the geotextile = t_{geo} = 70 mil = 0.07 in (Reference 7)

3.5 Effluent Weight

The unit weight of effluent = S_l = 62.4 pcf (Reference 2)

3.6 Gravel

The unit weight of gravel = S_{gravel} = 135 pcf (Engineering Judgement)

4.0 ASSUMPTIONS

There are no assumptions in this calculation. Engineering judgement, where used, is documented herein.

5.0 COMPUTER SOFTWARE

No unverified computer software was used in this analysis. Calculations are checked using a handheld calculator.

6.0 RESULTS

A summary of the calculated DCRs is presented below.

Layer	Tension, Shear, or Normal Stress	DCR
Primary Liner	Tension	$DCR_{\sigma p}$ = 0.098
GCL	Internal Shear	DCR_{tibc} = 0.658
Geotextile	Shear	$DCR\tau_{geo}$ = 0.658
Grip Layer Mat	Tension	$DCR_{\sigma g}$ = 0.193
Secondary Liner	Tension	$DCR_{\sigma s}$ = 0.182

The required material properties are presented below. (Reference 7 unless noted)

Layer	Type	Required Value
Primary Liner	Tension Yield Strength	≥2000 psi
	Thickness	≥60 mils
GCL	Internal Friction Angle	≥15 deg
Geotextile	Thickness	≥70 mils
	Tear Strength	≥95 lb
Grip Layer Mat	Tension Yield Strength (Reference 4)	≥2000 plf

Secondary Liner	Tension Yield Strength	≥2000 psi
	Thickness	≥60 mils

7.0 REFERENCES

1) Koerner, Robert M., *Designing with Geosynthetics*, 6th Edition

2) HNF-SD-LEF-TI-005 R1, Calculation 6, Side Slope Liner Stability and Stress – Pipe Trench, 1990

3) H-2-838749, Sheet 1, Rev. 0, LERF Basin 41 Civil Secondary Liner

4) H-2-838749, Sheet 2, Rev. 0, LERF Basin 41 Civil Secondary Liner Details

5) H-2-838750, Sheet 1, Rev. 0, LERF Basin 41 Civil Primary Liner

6) 4th International Conference on Geotextiles Geomembranes and Related Products Volume 2, *Geosynthetics for Safe Waste Disposal*, Hoekstra, S. E. and H.C. Berkhout

7) RPP-SPEC-63632, Rev. 0, LERF Basin 41 Design Construction Specification

CALCULATION SHEET

Project No. S54413.024	**Calculation No.** S54413.024-C-005 Rev. 1		**Page No.** 9 of 30
Title: LERF Basin 41 Side Slope Liner Stability and Stress – Pipe Trench			
Prepared By: G. Taylor Grant	**Date:** 05/21/2020	**Checked By:** Darrel J. Packard	**Date:** 05/21/2020

8.0 CALCULATIONS

8.1 Primary Liner

Weight of liquid acting on a one-foot wide strip of liner:

$W_1 = S_1 \times H_b \times 1\text{ ft} = 62.4\text{ pcf} \times 27\text{ ft} \times 1\text{ ft} = 1684.80\text{ plf}$

Force acting down the slope of the primary liner due to the weight of the liquid:

$F_1 = W_1 \times \sin(\text{slope}) = 1684.80\text{ plf} \times \sin(15.05\text{ deg}) = 437.48\text{ plf}$

Normal force resisting the liquid weight:

$N = W_1 = 1684.80\text{ plf}$

Shear force below the primary liner:

$F_2 = N \times \tan(d_2) = 1684.80\text{ plf} \times \tan(10\text{ deg}) = 297.08\text{ plf}$

$F_1 - F_2 = 437.48\text{ plf} - 297.08\text{ plf} = 140.40\text{ plf}$

Since $F_1 > F_2$ the primary liner is in tension.

Thickness of primary liner:

$t_p = 60\text{ mil} = 0.06\text{ in}$

Required tensile yield stress of HDPE:

$\sigma_{py} = 2000\text{ psi}$

Actual tensile stress in primary liner:

$\sigma_{pact} = (F_1 - F_2) / t_p = (437.48\text{ plf} - 297.08\text{ plf}) / 0.06\text{ in} = 195.00\text{ psi}$

DCR for tensile stresses in the primary liner:

$DCR_{\sigma p} = \sigma_{pact} / \sigma_{pacy} = 195.00\text{ psi} / 2000\text{ psi} = 0.098 < 1.0$ okay

8.2 GCL

Shear force acting on the GCL:

$F_3 = F_2 = 297.08$ plf (equal and opposite force to F_2)

Shear force below the GCL:

$F_4 = N \times \tan(d_4) = 1684.80 \text{ plf} \times \tan(24 \text{ deg}) = 750.12 \text{ plf}$

$F_3 - F_4 = 297.08 \text{ plf} - 750.12 \text{ plf} = -453.04 \text{ plf}$

Since $F_3 < F_4$ the GCL is not in tension.

Check the internal stresses at the internal interfaces in the GCL:

Internal force resulting from the normal force:

$F_i = N \times \tan(d_i) = 1684.80 \text{ plf} \times \tan(15 \text{ deg}) = 451.44 \text{ plf}$

DCR at internal interface of GCL:

$DCR_{tibc} = F_3 / F_i = 297.08 \text{ plf} / 451.44 \text{ plf} = 0.658 < 1.0$ okay

8.3 Geotextile

Shear force acting on the geotextile:

$F_5 = F_4 = 750.12$ plf (conservative because the shear force acting on the geotextile is limited by the shear force that the primary liner can transfer to the GCL, i.e. F_4 cannot exceed F_3)

Shear force below the geotextile:

$F_6 = N \times \tan(d_6) = 1684.80 \text{ plf} \times \tan(26 \text{ deg}) = 821.73 \text{ plf}$

$F_5 - F_6 = 750.12 \text{ plf} - 821.73 \text{ plf} = -71.61 \text{ plf}$

Since $F_5 < F_6$ the geotextile is in shear.

Calculate the shear stress:

Required thickness of geotextile:

$t_{geo} = 0.070$ in

Actual shear stress in geotextile:

$\tau_{geoact} = F_5 / t_{geo} = 750.12 \text{ plf} / 0.07 \text{ in} = 893.00$ psi

Required strength of geotextile:

$\tau_{geoall} = 95 \text{ lb} / (t_{geo} \times 1 \text{ in}) = 95 \text{ lb} / (0.070 \text{ in} \times 1 \text{ in}) = 1357.14$ psi

DCR for tensile stresses in geotextile:

$DCR\tau_{geo} = \tau_{geoact} / \tau_{geoall} = 893.00 \text{ psi} / 1357.14 \text{ psi} = 0.658 < 1.0$ okay

CALCULATION SHEET

Project No. S54413.024	**Calculation No.** S54413.024-C-005 Rev. 1		**Page No.** 12 of 30
Title: LERF Basin 41 Side Slope Liner Stability and Stress – Pipe Trench			
Prepared By: G. Taylor Grant	**Date:** 05/21/2020	**Checked By:** Darrel J. Packard	**Date:** 05/21/2020

8.4 Gravel

The weight of the gravel layer will be addressed:

The thickness of the gravel layer is 2 feet.

$h_{gravel} = 2$ ft

The weight of gravel is:

$W_{gravel} = S_{gravel} \times h_{gravel} \times 1$ ft x cos(slope) = 135 pcf x 2 ft x 1 ft x cos(15.05) = 260.74 plf

Normal force at the bottom of the gravel layer:

$G_n = N + W_{gravel}$ = 1684.80 plf + 260.74 plf = 1945.54 plf

Set F_7 equal and opposite to F_6 (shear force beneath the geotextile)

$F_7 = F_6$ = 821.73 plf

Shear force below the gravel:

$F_8 = G_n \times \sin(d_8)$ = 1945.54 plf x tan(25 deg) = 907.22 plf

$F_7 - F_8$ = 821.73 plf – 907.22 plf = -85.49 plf

Since $F_7 > F_8$ the gravel is in compression.

8.5 Grip Layer Mat

Shear force acting on the grip layer mat:

$F_9 = F_8 = 907.22$ plf

Shear force below the grip layer mat:

$F_{10} = G_n \times \tan(d_{10}) = 1945.54$ plf x tan(15 deg) = 521.31 plf

$F_9 - F_{10} = 907.22$ plf – 521.31 plf = 385.91 plf

Since $F_9 > F_{10}$ the grip layer mat is in tension.

Required tensile strength of grip layer mat:

$\sigma_{gy} = 2000$ plf

Actual tensile stress in primary liner:

$\sigma_{gact} = F_9 - F_{10} = 907.22$ plf – 521.31 plf = 385.91 plf

DCR for tensile stresses in the grip layer mat:

$DCR_{\sigma g} = \sigma_{gact} / \sigma_{gy} = 385.91$ plf / 2000 plf = 0.193 < 1.0 okay

8.6 Secondary Liner

Shear force acting on the secondary liner:

$F_{11} = F_{10} = 521.31$ plf

Shear force below the secondary liner:

$F_{12} = G_n \times \tan(d_{12}) = 1945.54$ plf x tan(7.6 deg) = 259.59 plf

$F_{11} - F_{12} = 521.31$ plf – 259.59 plf = 261.72 plf

Since $F_{11} > F_{12}$ the secondary liner is in tension.

Thickness of the secondary liner:

$t_s = t_p = 60$ mil = 0.060 inch

Required tensile yield stress of HDPE:

$\sigma_{sy} = \sigma_{py} = 2000$ psi

Actual tensile stress in secondary liner:

$\sigma_{secact} = (F_{11} - F_{12}) / t_s = (521.31$ plf – 259.59 plf) / 0.06 in = 363.50 psi

DCR for tensile stresses in the secondary liner:

$DCR_{\sigma s} = \sigma_{secant} / \sigma_{sy} = 363.50$ psi / 2000 psi = 0.182 < 1.0 okay

CALCULATION SHEET

Project No. S54413.024	**Calculation No.** S54413.024-C-005 Rev. 1		**Page No.** 15 of 30
Title: LERF Basin 41 Side Slope Liner Stability and Stress – Pipe Trench			
Prepared By: G. Taylor Grant	**Date:** 05/21/2020	**Checked By:** Darrel J. Packard	**Date:** 05/21/2020

ATTACHMENT – 1 – H-2-838749, SHEET 1, REV. 0, LERF BASIN 41 CIVIL SECONDARY LINER
H-2-838749, SHEET 2, REV. 0, LERF BASIN 41 CIVIL SECONDARY LINER DETAILS
H-2-838750, SHEET 1, REV. 0, LERF BASIN 41 CIVIL PRIMARY LINER

Sargent & Lundy Engineering Services, Inc.

CALCULATION SHEET

Project No. S54413.024	**Calculation No.** S54413.024-C-005 Rev. 1		**Page No.** 16 of 30
Title: LERF Basin 41 Side Slope Liner Stability and Stress – Pipe Trench			
Prepared By: G. Taylor Grant	**Date:** 05/21/2020	**Checked By:** Darrel J. Packard	**Date:** 05/21/2020

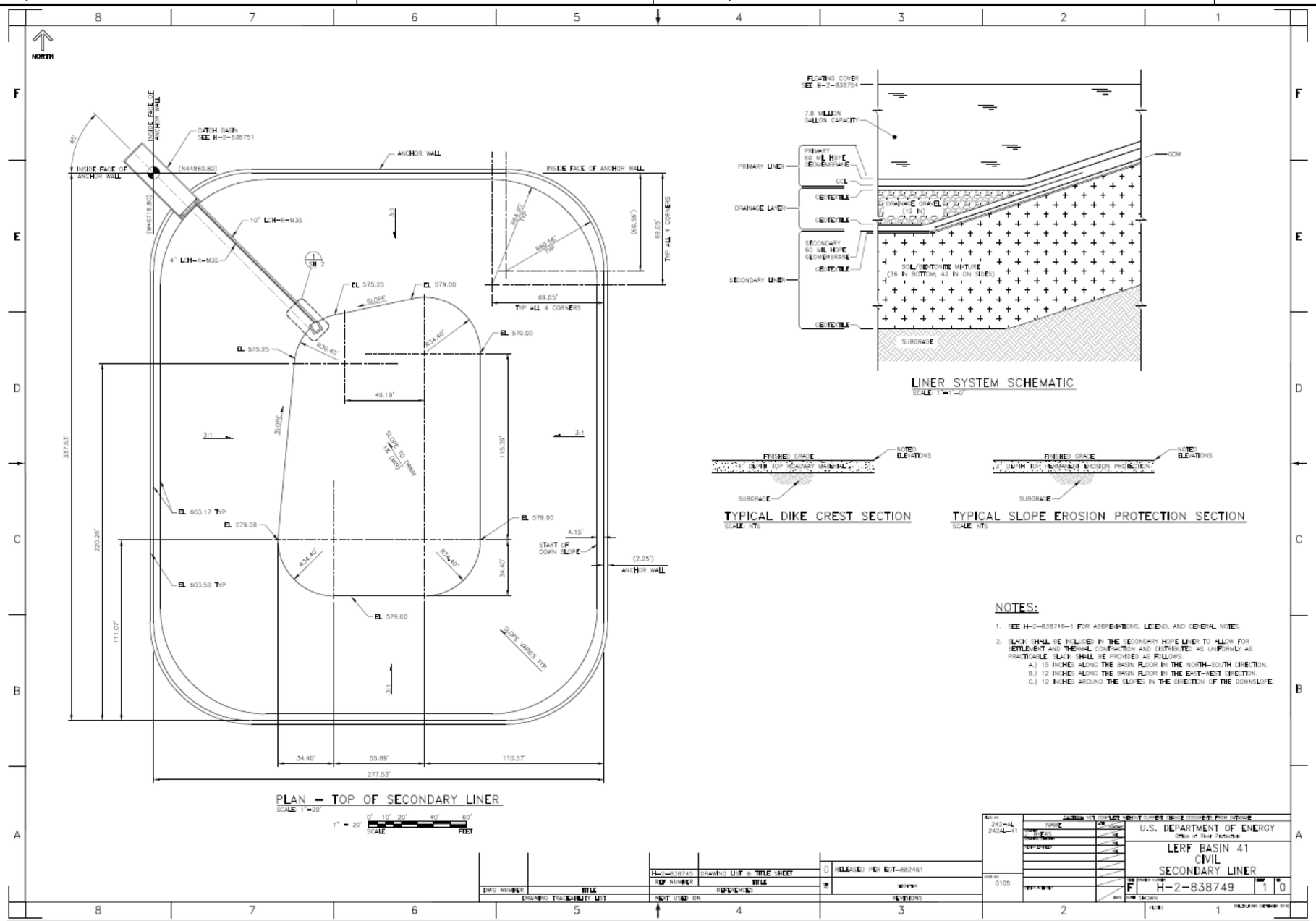

Sargent & Lundy Engineering Services, Inc.

CALCULATION SHEET

Project No.	S54413.024	**Calculation No.**	S54413.024-C-005 Rev. 1		**Page No.** 17 of 30
Title:	LERF Basin 41 Side Slope Liner Stability and Stress – Pipe Trench				
Prepared By:	G. Taylor Grant	**Date:** 05/21/2020	**Checked By:**	Darrel J. Packard	**Date:** 05/21/2020

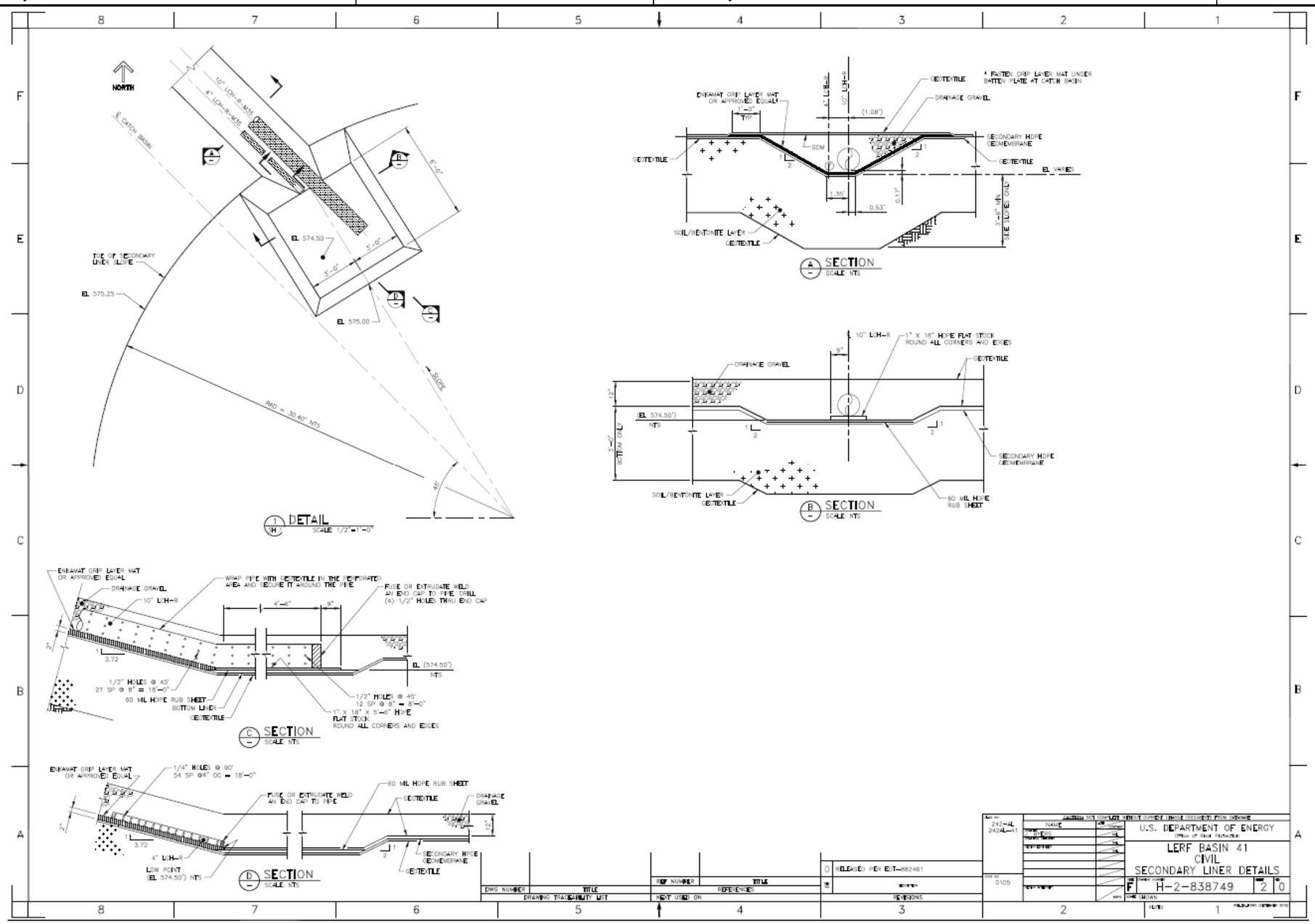

RPP-CALC-63749, Rev. 0

Sargent & Lundy Engineering Services, Inc.

CALCULATION SHEET

Project No.	S54413.024	**Calculation No.**	S54413.024-C-005 Rev. 1		**Page No.** 18 of 30
Title:	LERF Basin 41 Side Slope Liner Stability and Stress – Pipe Trench				
Prepared By:	G. Taylor Grant	**Date:** 05/21/2020	**Checked By:**	Darrel J. Packard	**Date:** 05/21/2020

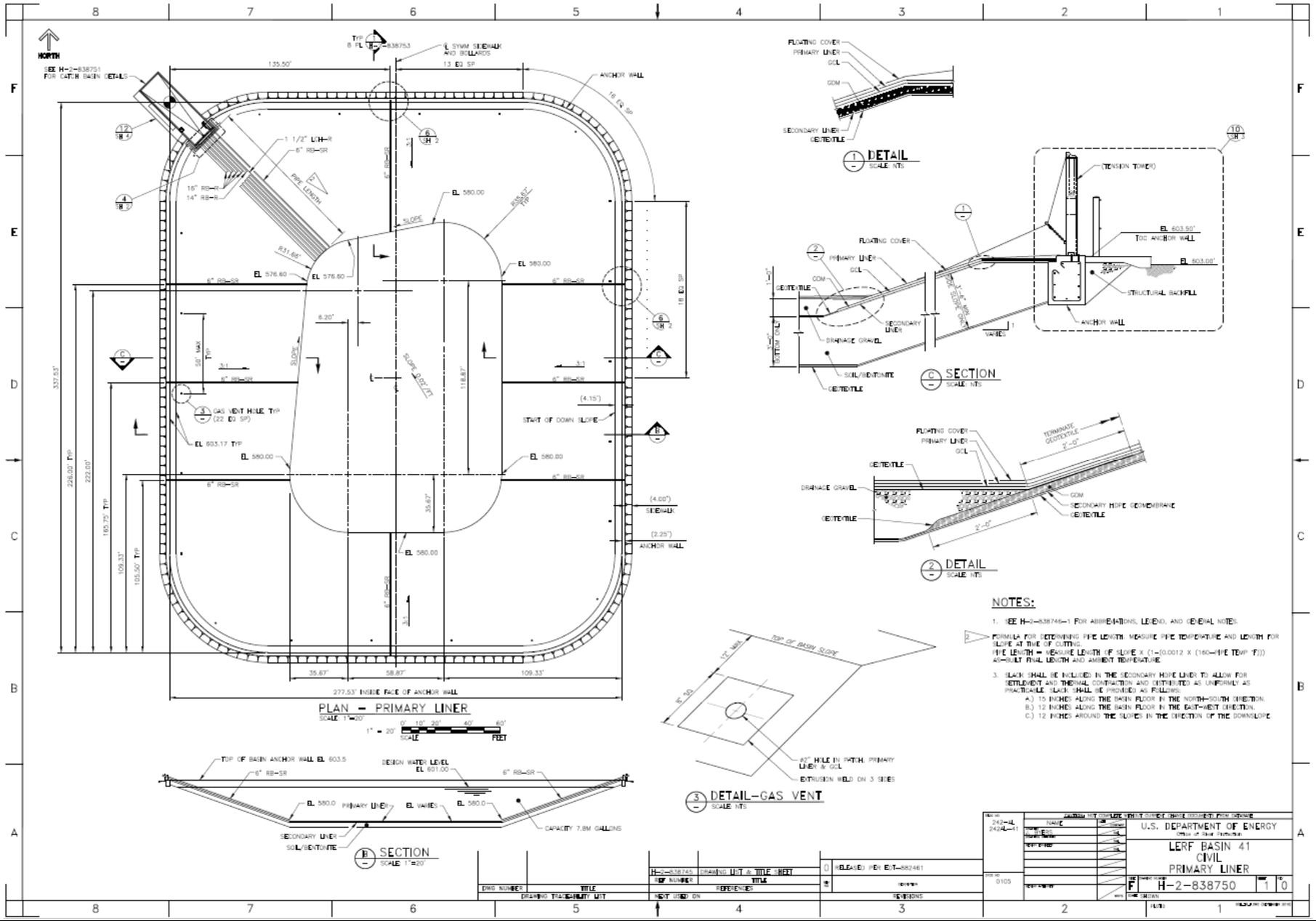

CALCULATION SHEET

Project No. S54413.024	**Calculation No.** S54413.024-C-005 Rev. 1		**Page No.** 19 of 30
Title: LERF Basin 41 Side Slope Liner Stability and Stress – Pipe Trench			
Prepared By: G. Taylor Grant	**Date:** 05/21/2020	**Checked By:** Darrel J. Packard	**Date:** 05/21/2020

ATTACHMENT – 2 – DESIGNING WITH GEOSYNTHETICS, 6TH EDITION

Sargent & Lundy Engineering Services, Inc.

CALCULATION SHEET

Project No. S54413.024	**Calculation No.** S54413.024-C-005 Rev. 1		**Page No.** 20 of 30
Title: LERF Basin 41 Side Slope Liner Stability and Stress – Pipe Trench			
Prepared By: G. Taylor Grant	**Date:** 05/21/2020	**Checked By:** Darrel J. Packard	**Date:** 05/21/2020

TABLE 2.4 PEAK SOIL-TO-GEOTEXTILE FRICTION ANGLES AND EFFICIENCIES (IN PARENTHESES) FOR SELECTED COHESIONLESS SOILS

Geotextile type	Concrete sand $\varphi = 30$ deg.	Rounded sand $\varphi = 28$ deg.	Silty sand $\varphi = 26$ deg.
Woven, monofilament	26 deg. (84%)	–	–
Woven, slit film	24 deg. (77%)	24 deg. (84%)	23 deg. (87%)
Nonwoven, heat bonded	26 deg. (84%)	–	–
Nonwoven, needle punched	30 deg. (100%)	26 deg. (92%)	25 deg. (96%)

Source: After Martin, et al. [35]

Note: *Literature values such as the above should not be used in critical designs. Site specific geotextiles and soils must be individually tested and evaluated in accordance with the particular project conditions, e.g., saturation, type of liquid, normal stress, consolidation time, shear rate, displacement amount, etc.*

dependent on the normal force applied to the soil, which mobilizes shearing resistances on both surfaces of the geotextile.

Since the test greatly resembles a direct shear test, albeit with stationary soil on both sides of the tensioned geotextile, a possible design strategy is to take direct shear test results (for both sides of the geotextile) and use these values for pullout design purposes. However, this may not be a conservative practice.

Test results by Collios et al. [36] show a relationship of pullout test results to shear test results with some notable exceptions. For pullout testing, if the soil particles are smaller than the geotextile openings, efficiencies are high; if not, they can be low. In all cases, however, pullout test resistances are less than the sum of the direct shear test resistances. This is due to the fact that the geotextile is taut in the pullout test and exhibits large deformations. This, in turn, causes the soil particles to reorient themselves into a reduced shear strength mode at the soil-to-geotextile interfaces, resulting in lower pullout resistance. The stress state mobilized in this test is both interesting and complex as evidenced by the approximate one-hundred technical references on this topic.

2.3.4 Hydraulic Properties

Unlike the physical and mechanical properties just discussed, traditional tests on textile materials rarely have hydraulic applications;

Sargent & Lundy Engineering Services, Inc.

CALCULATION SHEET

Project No. S54413.024	**Calculation No.** S54413.024-C-005 Rev. 1		**Page No.** 21 of 30
Title: LERF Basin 41 Side Slope Liner Stability and Stress – Pipe Trench			
Prepared By: G. Taylor Grant	**Date:** 05/21/2020	**Checked By:** Darrel J. Packard	**Date:** 05/21/2020

TABLE 5.6 PEAK FRICTION VALUES AND EFFICIENCIES OF VARIOUS GEOSYNTEHTIC INTERFACES*

(a) Soil-to-Geomembrane Friction Angles

Geomembrane	Soil type: Concrete sand ($\phi = 30°$)		Ottawa sand ($\phi = 28°$)		Mica schist sand ($\phi = 26°$)	
HDPE						
textured	30°	(1.00)	26°	(0.92)	22°	(0.83)
smooth	18°	(0.56)	18°	(0.61)	17°	(0.63)
PVC						
rough	27°	(0.88)	—	—	25°	(0.96)
smooth	25°	(0.81)	—	—	21°	(0.79)
fPP-R	25°	(0.81)	21°	(0.72)	23°	(0.87)

(b) Geomembrane-to-Geotextile Friction Angles

Geotextile	Geomembrane: HDPE Textured	HDPE Smooth	PVC Rough	PVC Smooth	fPP-R
Nonwoven, needle punched	32°	8°	23°	21°	15°
Nonwoven heat bonded	28°	11°	20°	18°	21°
Woven, monofilament	19°	6°	11°	10°	9°
Woven, slit film	32°	10°	28°	24°	13°

(c) Soil-to-Geotextile Friction Angles

Geotextile	Soil type: Concrete sand ($\phi = 30°$)		Concrete sand ($\phi = 30°$)		Mica schist sand ($\phi = 26°$)	
Nonwoven, needle punched	30°	(1.00)	26°	(0.92)	25°	(0.96)
Nonwoven heat bonded	26°	(0.84)	—	—	—	—
Woven, monofilament	26°	(0.84)	—	—	—	—
Woven, slit film	24°	(0.77)	24°	(0.84)	23°	(0.87)

*Efficiency values (in parentheses) are based on the relationship E = (tan

Sargent & Lundy Engineering Services, Inc.

CALCULATION SHEET

Project No. S54413.024	**Calculation No.** S54413.024-C-005 Rev. 1		**Page No.** 22 of 30
Title: LERF Basin 41 Side Slope Liner Stability and Stress – Pipe Trench			
Prepared By: G. Taylor Grant	**Date:** 05/21/2020	**Checked By:** Darrel J. Packard	**Date:** 05/21/2020

TABLE 6.1 SUMMARY OF GCL INTERNAL DIRECT SHEAR TEST RESULTS

Designation		Hydration with Distilled Water			Hydration with Tap Water		
		Dry*	Constrained Swell	Free Swell	Dry*	Contrained Swell	Free Swell
GCL-1	ϕ (degrees)	37°	16°	0°	37°	18°	0°
	c (kPa)	6.9	2.8	4.1	6.9	2.8	3.4
GCL-2	ϕ (degrees)	36°	31°	10°	36°	34°	15°
	c (kPa)	68	6.9	9.0	68	6.9	6.9
GCL-3	ϕ (degrees)	42°	37°	23°	42°	43°	26°
	c (kPa)	14	8.5	4.8	14	5.5	10
GCL-4	ϕ (degrees)	26°	19°	0°	26°	18°	0°
	c (kPa)	50	4.8	2.8	50	4.8	3.4

Designation		Hydration with Mild Leachate			Hydration with Harsh Leachate		
		Dry	Constrained Swell	Free Swell	Dry	Contrained Swell	Free Swell
GCL-1	ϕ (degrees)	37°	24°	4°	37°	19°	0°
	c (kPa)	6.9	6.2	3.4	6.9	5.5	2.8
GCL-2	ϕ (degrees)	36°	43°	20°	36°	39°	30°
	c (kPa)	68	4.8	12	68	4.1	8.3
GCL-3	ϕ (degrees)	42°	39°	25°	42°	45°	32°
	c (kPa)	14	8.3	14	14	4.8	12
GCL-4	ϕ (degrees)	26°	18°	13°	26°	13°	0°
	c (kPa)	50	4.8	3.4	50	7.6	3.4

Designation		Hydration with Diesel Fuel		
		Dry	Constrained Swell	Free Swell
GCL-1	ϕ (degrees)	37°	37°	38°
	c (kPa)	6.9	6.9	6.2
GCL-2	ϕ (degrees)	36°	36°	46°
	c (kPa)	68	68	4.8
GCL-3	ϕ (degrees)	42°	42°	40°
	c (kPa)	14	6.2	4.8
GCL-4	ϕ (degrees)	26°	24°	29°
	c (kPa)	50	4.1	6.2

**Dry* refers to the GCL as received, placed under desired normal stress, then sheared at midplane.

Constrained swell refers to GCL hydrated under the desired normal stress, then sheared at the midplane.

Free swell refers to GCL hydrated under zero normal stress, then placed under the desired normal stress, and immediately sheared at midplane.

Source: After Leisher [4].

CALCULATION SHEET

Project No. S54413.024	**Calculation No.** S54413.024-C-005 Rev. 1		**Page No.** 23 of 30
Title: LERF Basin 41 Side Slope Liner Stability and Stress – Pipe Trench			
Prepared By: G. Taylor Grant	**Date:** 05/21/2020	**Checked By:** Darrel J. Packard	**Date:** 05/21/2020

ATTACHMENT – 3 – FREE BODY DIAGRAM OF LINER FORCES

CALCULATION SHEET

Project No. S54413.024	**Calculation No.** S54413.024-C-005 Rev. 1		**Page No.** 24 of 30
Title: LERF Basin 41 Side Slope Liner Stability and Stress – Pipe Trench			
Prepared By: G. Taylor Grant	**Date:** 05/21/2020	**Checked By:** Darrel J. Packard	**Date:** 05/21/2020

Free body diagram of forces on the Liner System around the piping system in the northwest corner of the basin.

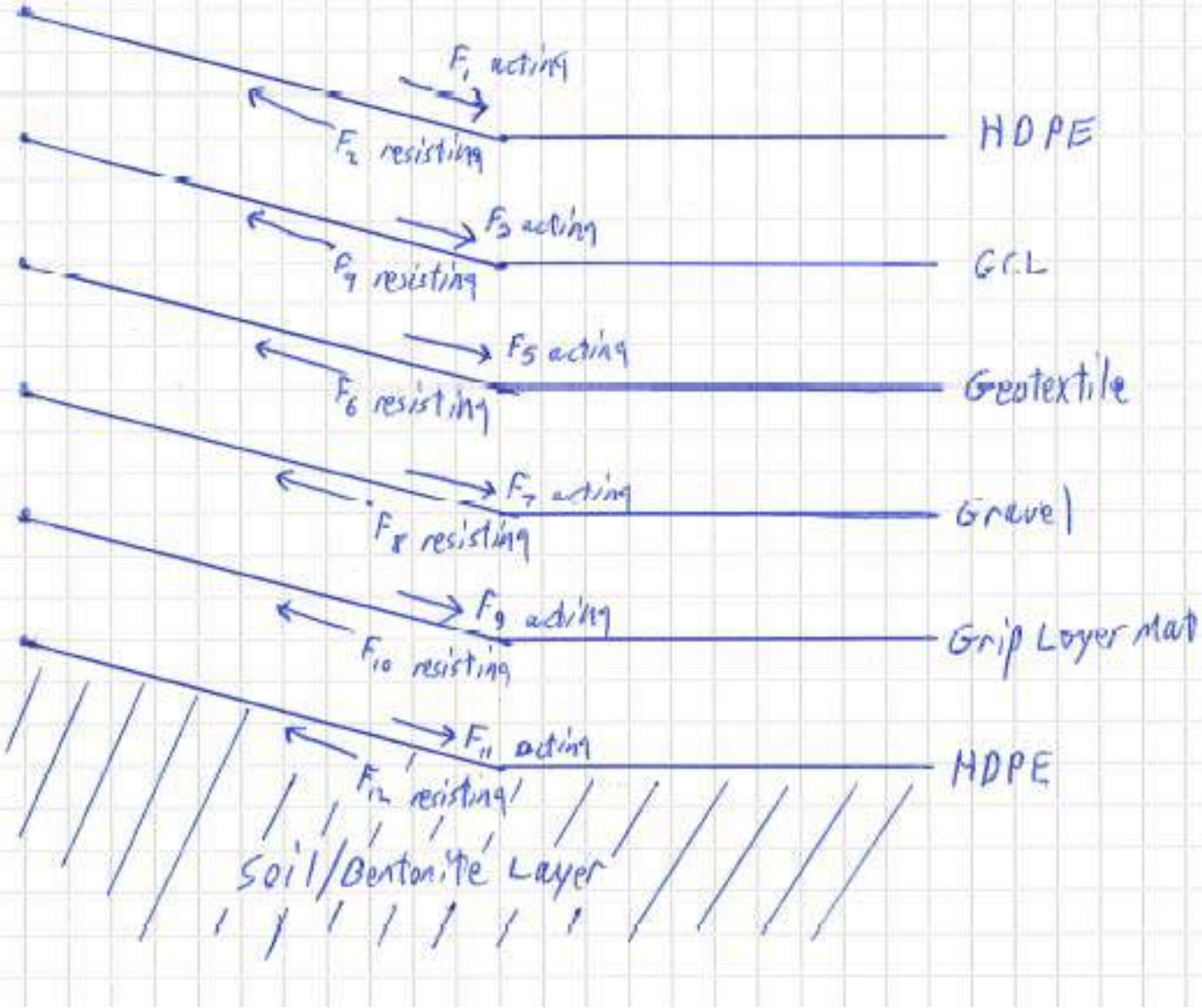

CALCULATION SHEET

Project No. S54413.024	**Calculation No.** S54413.024-C-005 Rev. 1		**Page No.** 25 of 30
Title: LERF Basin 41 Side Slope Liner Stability and Stress – Pipe Trench			
Prepared By: G. Taylor Grant	**Date:** 05/21/2020	**Checked By:** Darrel J. Packard	**Date:** 05/21/2020

ATTACHMENT – 4 – HNF-SD-LEF-TI-005 REV 1 CALCULATION 6 SIDE SLOPE LINER STABILITY AND STRESS – PIPE TRENCH

Sargent & Lundy Engineering Services, Inc.

CALCULATION SHEET

Project No. S54413.024	**Calculation No.** S54413.024-C-005 Rev. 1		**Page No.** 26 of 30
Title: LERF Basin 41 Side Slope Liner Stability and Stress – Pipe Trench			
Prepared By: G. Taylor Grant	**Date:** 05/21/2020	**Checked By:** Darrel J. Packard	**Date:** 05/21/2020

HNF-SD-LEF-TI-005 Rev 1

KAISER ENGINEERS HANFORD

Page No. 1 of 19

Revision 0

DESIGN ANALYSIS

Client WHC WO/Job No. ER-0156/W-105

Subject Side-Slope Liner Stability + Stresses: Pipe Trench Date 9/20/90 By DKD Checked SEP 25 1990 By RHL

Location 242 A L, 200 East Revised By

SIDE SLOPE LINER STABILITY - PIPE TRENCH

1.0 OBJECTIVE

This calculation addresses the stability of the liner system at the corner containing the pipe trench, for the W-105 Retention basins. The pipe trench is lined with gravel and a grip layer mat, refer to Project Drawing No. H-2-79590. The remainder of the 3-to-1 side sloped areas of the basins use a geonet in lieu of the gravel and grip layer mat.

A separate calculation addresses stresses along the side slopes containing geonet. Since the composite liner systems are identical down to either the geonet or gravel/grip layer mat, the results of the companion calculation are quite similar, and will serve as one basis for this calculation, down to the point where gravel replaces the geonet.

2.0 DESIGN INPUTS

2.1 References

2.1.1 Koerner, R.M., "Designing with Geosynthetics," 2nd Edition, Prentice Hall, Sections 5.6.8, 5,3, 5.1.3.8, and as referenced below, 1990.

2.1.2 Industrial Fabric Association International, "The Use of Geosynthetics in Waste Containment," Presentation Handout, Page 7, undated.

2.1.3 Letter to W. Simpson, James Clem Corporation, from Geoservices, Inc., "Report on the Direct Shear Testing of Selected CLAYMAX CL," Table 1 and Attachment 1, dated 10 March 1989.

2.1.4 Technical Report to Acme Concrete Company from Chen-Northern, Inc., "Tests of Drainage Gravel for the Grout Vault Storage Facility, Kaiser B714 Project," dated 26 February 1990.

2.1.5 Akzo Industrial Systems Company, "ENKAMAT "S" Reinforced Grip Layer Matting [RGLM], Specifications," Asheville, NC 28802, undated.

2.1.6 Mathsoft, Inc., "Mathcad Version 2.5 User's Guide," Cambridge, Ma 02139, June 1989.

2.1.7 Letter to W. Simpson, James Clem Corporation from R. H.

Sargent & Lundy Engineering Services, Inc.

CALCULATION SHEET

Project No. S54413.024	**Calculation No.** S54413.024-C-005 Rev. 1		**Page No.** 27 of 30
Title: LERF Basin 41 Side Slope Liner Stability and Stress – Pipe Trench			
Prepared By: G. Taylor Grant	**Date:** 05/21/2020	**Checked By:** Darrel J. Packard	**Date:** 05/21/2020

HNF-SD-LEF-TI-005 Rev 1

KAISER ENGINEERS HANFORD

Page No. 2 of 19

Revision 0

DESIGN ANALYSIS

Client WHC WO/Job No. ER-0156/W-105

Subject Side-Slope Liner Stability + Stresses: Pipe Trench Date 9/20/90 By DKD

Checked SEP 25 1990 By

Location 242 A L, 200 East Revised By

Swan, Jr., GeoServices, Inc, Consulting Engineers, "Report on the Direct Shear Testing of Selected CLAYMAX CL Interfaces, GeoServices Project Number: P1157, GeoServices Document Number: NL89038," Norcross, Georgia, Dated March 10, 1989.

Other references are listed below when applied to a specific area of the calculation.

2.2 Units for Required for Calculation (This Information
I. Base unitsATHCAD)

ft ≡ 1L lb ≡ 1M sec ≡ 1T

(In this document "lb" represents "pounds-mass", the base unit of mass. "lbf is used for force, see below.)

II. Angular measure

rad ≡ 1

$$deg \equiv \frac{\pi}{180} \cdot rad$$

III. Derived units: Length

$$in \equiv \frac{ft}{12} \qquad m \equiv \frac{ft}{.3048} \qquad mil \equiv 0.001 \cdot in$$

$$cm \equiv 0.01 \cdot m$$

IV. Derived units: Mass

$$slug \equiv 32.174 \cdot lb$$

V. Derived units: Time

$$min \equiv 60 \cdot sec \qquad hr \equiv 3600 \cdot sec \qquad day \equiv 24 \cdot hr$$

$$yr \equiv 365.2422 \cdot day \quad \text{(tropical year)}$$

VI. Derived units: Area, Volume

$$gal \equiv 0.1337 \cdot ft^3$$

58

Sargent & Lundy Engineering Services, Inc.

CALCULATION SHEET

Project No. S54413.024	**Calculation No.** S54413.024-C-005 Rev. 1		**Page No.** 28 of 30
Title: LERF Basin 41 Side Slope Liner Stability and Stress – Pipe Trench			
Prepared By: G. Taylor Grant	**Date:** 05/21/2020	**Checked By:** Darrel J. Packard	**Date:** 05/21/2020

HNF-SD-LEF-TI-005 Rev 1.

KAISER ENGINEERS HANFORD

Page No. 3 of 19

Revision 0

DESIGN ANALYSIS

Client WHC WO/Job No. ER-0156/W-105

Subject Side-Slope Liner Stability + Stresses: Pipe Trench Date 9/20/90 By DKD

Checked SEP 25 1990 By

Location 242 A L, 200 East Revised By

VII. Derived units: Acceleration

$$g = 32.174 \cdot \frac{ft}{sec^2}$$ (acceleration of gravity)

VIII. Derived units: Force, Pressure

$lbf = g \cdot lb$ (pound force)

$$psi = \frac{lbf}{in^2}$$

2.3 Given or Known Data

$$\rho_1 := 1.94 \cdot \frac{slug}{ft^3}$$ Density of liquid waste

$$S_1 := \rho_1 \cdot g$$

$$S_1 = 62.4 \cdot \frac{lbf}{ft^3}$$ Specific weight of liquid waste

$$S_{gravel} := 122.1 \cdot \frac{lbf}{ft^3}$$ Maximum specific weight of gravel layer, per Reference 2.1.4

$$H_b := 603.5 \cdot ft - 576.60 \cdot ft$$

$$H_b = 26.9 \cdot ft$$ Maximum internal height of basin. The highest liquid level will be several feet below the maximum basin height. Using the maximum internal height of the basin is a conservative assumption.

59

Sargent & Lundy Engineering Services, Inc.

CALCULATION SHEET

Project No. S54413.024	**Calculation No.** S54413.024-C-005 Rev. 1		**Page No.** 29 of 30
Title: LERF Basin 41 Side Slope Liner Stability and Stress – Pipe Trench			
Prepared By: G. Taylor Grant	**Date:** 05/21/2020	**Checked By:** Darrel J. Packard	**Date:** 05/21/2020

HNF-SD-LEF-TI-005 Rev1.

KAISER ENGINEERS HANFORD

Page No. 4 of 19
Revision 0

DESIGN ANALYSIS

Client WHC
WO/Job No. ER-0156/W-105
Subject Side-Slope Liner Stability + Stresses: Pipe Trench
Date 9/20/90 By DKD
Checked SEP 25 1990 By
Location 242 A2, 200 East
Revised By

$\beta := 18.4 \cdot deg$ Slope angle corresponding to a slope of 3:1. Actually, the slope in the corner is somewhat less that 3:1 so this is a conservative assumption.

2.4 Friction Angles

Figure 1 presents the layers of the basin liner systems, while Figure 2 offers an expanded view of the layers. The top liner is referred to as the primary liner in this calculation, and the bottom liner is referred to as the secondary liner. The expressions "primary" and "secondary" are used in the referenced documentation.

Friction angles represent the coeficient of friction at the layer boundaries. They are presented below, along with remarks.

ANGLE	REMARKS
$\delta_2 := 10 \cdot deg$	Bottom of primary liner to top of bentonite carpet liner. This is the value of smooth HDPE to slit film geotextile (Reference 2.1.1, Page 382)--probably conservative.
$\delta_4 := 24 \cdot deg$	Bottom of bentonite carpet liner to top of geotextile. This angle is based on Reference 2.1.1, Page 382, for geomembrane-to-geotextile (woven slit film) combinations, an interface assumed to be similar to bentonite carpet liner-geotextile.
$\delta_i := 12 \cdot deg$	The "internal" friction angle for the bentonite carpet liner. This is the friction angle at internal interfaces of the material, from Reference 2.1.7.
$\delta_6 := 30 \cdot deg$	Bottom of geotextile to top of gravel.

60

Sargent & Lundy Engineering Services, Inc.

CALCULATION SHEET

Project No. S54413.024	**Calculation No.** S54413.024-C-005 Rev. 1		**Page No.** 30 of 30
Title: LERF Basin 41 Side Slope Liner Stability and Stress – Pipe Trench			
Prepared By: G. Taylor Grant	**Date:** 05/21/2020	**Checked By:** Darrel J. Packard	**Date:** 05/21/2020

HNF-SD-LEF-TI-005 Rev1.

KAISER ENGINEERS HANFORD

Page No. 5 of 19
Revision 0

DESIGN ANALYSIS

Client WHC
WO/Job No. ER-0156/W-105
Subject Side-Slope Liner Stability + Stresses: Pipe Trench
Date 9/20/90 By DKD
Checked SEP 25 1990 By
Revised By
Location 242 A L, 200 East

Per Reference 2.1.1, Page 382, this angle is for nonwoven, needle-punched geotextile to concrete sand. The friction angle for gravel is expected to be slightly higher.

$\delta_8 := 25 \cdot deg$ Bottom of gravel to top of Enkamat S grid.

Value based on example for the South Hampton Landfill, Reference 2.1.5.

$\delta_{10} := 12 \cdot deg$ Bottom of Enkamat S, or similar, grid to to of secondary liner.

Value based on example for the South Hampton Landfill,Reference 2.1.5.

$\delta_{12} := 7.6 \cdot deg$ Bottom of secondary liner to top of soil/bentonite layer.

"Reference 2.1.1, Page 382-384, including Table 5.6, provides friction values and efficiencies for soil-to-geomembrane interfaces. From these data, friction angles for smooth HDPE to clay soils were derived, and range from 7.6 to 18.3 degrees.

The data provided in the reference are for various types of undrained clays. Project W-105 uses a soil/bentonite mix, and a friction angle of 7.6 degrees is expected to be technically conservative.

2.5 Calculation

The approach will be to analyze forces on each layer of the system, beginning at the top. It is based on Reference 2.1.1, "Designing with Geosynthetics," Section 5.6.8.

Assumption:

Although the liquid waste (essentially water) in the basins is a shearless fluid, the approach taken in the this calculation will be to assume shear forces are transmitted at the waste-primary liner interface. This will result in a technically conservative approach.

61

DOCUMENT RELEASE AND CHANGE FORM

Prepared For the U.S. Department of Energy, Assistant Secretary for Environmental Management
By Washington River Protection Solutions, LLC., PO Box 850, Richland, WA 99352
Contractor For U.S. Department of Energy, Office of River Protection, under Contract DE-AC27-08RV14800

TRADEMARK DISCLAIMER: Reference herein to any specific commercial product, process, or service by trade name, trademark, manufacturer, or otherwise, does not necessarily constitute or imply its endorsement, recommendation, or favoring by the United States government or any agency thereof or its contractors or subcontractors. Printed in the United States of America.

Release Stamp

DATE:
May 26,2020
HANFORD RELEASE

1. **Doc No:** RPP-CALC-63750 **Rev.** 00

2. **Title:**
LERF Basin 41 Settlement of Foundation Soils

3. **Project Number:** ☐N/A
T1P226

4. **Design Verification Required:**
☐Yes ☒No

5. **USQ Number:** ☒ N/A
RPP-27195

6. **PrHA Number** **Rev.** ☒ N/A

Clearance Review Restriction Type:
public

7. **Approvals**

Title	Name	Signature	Date
Clearance Review	Raymer, Julia R	*Raymer, Julia R*	05/26/2020
Design Authority	Wilson, Nathaniel W	*Wilson, Nathaniel W*	04/24/2020
Checker	Debban, Jeremy A	*Debban, Jeremy A*	04/08/2020
Document Control Approval	Meinecke, Kathryn R	*Meinecke, Kathryn R*	05/26/2020
Environmental Protection	Wall, Jeremy M	*Wall, Jeremy M*	04/30/2020
Originator	Dorsh, Paul M	*Dorsh, Paul M*	04/08/2020
Other Approver	McShane, Michael P	*McShane, Michael P*	05/13/2020
Responsible Engineering Manager	Huntington, Matthew R	*Huntington, Matthew R*	05/14/2020

8. **Description of Change and Justification**

Initial Release.

Design checks were performed in accordance with Sargent & Lundy ESD Quality Assurance Procedure (QAP). Because of the General Service status of the equipment, a graded approach was applied and design verification was not performed as allowed by QAP 3.5, Design Verification.

Note that Paul Dorsh is signing as Originator for Joshua Bickett and Jeremy Debban is signing as Checker for David Nielson. Joshua Bickett and David Nielson are not currently in SPF.

9. **TBDs or Holds** ☒N/A

10. **Related Structures, Systems, and Components**

a. **Related Building/Facilities** ☐N/A	b. **Related Systems** ☐N/A	c. **Related Equipment ID Nos. (EIN)** ☒N/A
LERF FACILITIES	LERF	

11. **Impacted Documents – Engineering** ☒N/A

Document Number	Rev.	Title

12. **Impacted Documents (Outside SPF):**

N/A

13. **Related Documents** ☐N/A

Document Number	Rev.	Title
MT-50497	00	Liquid Effluent Retention Facility (LERF) Basin 41

14. **Distribution**

Name	Organization
Angevine, Brennan T	MISSION ANALYSIS ENGINEERING
Blaak, Whitney S	COGNIZANT SYSTEM ENGINEERING
Demiter, Scott M	ETF OPERATIONS
Foster, Jim	242-A/AW/ETF OPERATIONS
Goessmann, Glen E	ENGINEERING PROGRAMS
Greenhalgh, Aaron M	TANK FARM PROJECTS ENGINEERING
Halgren, Dale L	ETF ENGINEERING
Harris, John W	SAFETY PROGRAM SERVICES RC/P
Joslyn, Cameron C	ETF ENGINEERING
McFerran, Brandon E	242-A/AW/ETF OPERATIONS
McShane, Michael P	ENGINEERING PROGRAMS
Omberg Carro, Susan K	NUCLEAR SAFETY
Powers, Daniel J	ETF ENGINEERING
Roosendaal, Gene D	TFP PROJECT MANAGEMENT
Rutherford, Wally	ETF ENGINEERING

DOCUMENT RELEASE AND CHANGE FORM	**Doc No:** RPP-CALC-63750 **Rev.** 00

14. **Distribution**

Name	**Organization**
Sackett, Tom E	TANK FARM PROJECTS
Samoska, Jerry A	INSTRUMENT & CNTRL ENGINEERING
Shultz, Milton V	NUCLEAR SAFETY
Smith, Gregory E	TANK FARM PROJECTS ENGINEERING
Smoot, Bill R	TFP RADCON
Swanson, Brad L	242-A/AW/ETF OPERATIONS
Wall, Jeremy M	RETRVL & CLOSURE/PROJ ENV CMPL
Wilson, Nathaniel W	ETF PROJECTS ENGINEERING

RPP-CALC-63750
Revision 0

LERF Basin 41 Settlement of Foundation Soils

Prepared by

Joshua M. Bickett
Sargent & Lundy for Washington River Protection Solutions, LLC

Date Published
April 2020

washington river protection solutions

DAVID E. NIELSON
STATE OF WASHINGTON
28592
REGISTERED
PROFESSIONAL ENGINEER
5-18-2020

Prepared for the U.S. Department of Energy
Office of River Protection

Contract No. DE-AC27-08RV14800

A-6007-231 (REV 0)

Approved for Public Release;
Further Dissemination Unlimited

RPP-CALC-63750, Rev. 0

Sargent & Lundy Engineering Services, Inc.	**CALCULATION COVER SHEET**	**Page No.** 1 of 13	
		Date 4/8/2020	**Rev. No.** 0
		Calculation No: S54413.024-C-006	

Project No.	**Project Title:**	**Client:**
54413.024	LERF Basin 41	WRPS

Title:
LERF Basin 41 Settlement of Foundation Soils

Purpose and Objective:

The purpose of this calculation is to evaluate the LERF Basin 41 for the following items:

- Settlement of foundation soils
- Settlement of soil-bentonite layer

Rev. No.	Total Pages		Prepared By	Checked By	PM/TL
0	13	**Print Name/ Sign:**	Joshua M. Bickett	David E. Nielson, P.E.	Paul M. Dorsh, P.E.
		Date:	4/8/2020	4/8/2020	4/8/2020

Revision Description (Revision Description/Affected Pages):
Initial Release

		Print Name/ Sign:			
		Date:			

Revision Description (Revision Description/Affected Pages):

RPP-CALC-63750, Rev. 0

Sargent & Lundy Engineering Services, Inc.

CALCULATION REVIEW CHECKLIST

Project No.	Calculation No.	Rev. No.	Page No.
54413.024	S54413.024-C-006	0	2 of 13

Items Checked	Accept Y	Accept N	Accept N/A	Description of Resolution for Unacceptable Items
1. Cover sheets properly completed.	√			
2. Calculation sheet headers complete with calculation number, revision number, etc.	√			
3. Calculation sheet contents are legible, accurate, and complete per format.	√			
4. Listed attachments included.			√	
5. Calculation objective clearly described.	√			
6. Criteria are suitable and properly referenced to task specific documents.	√			
7. Assumptions and input data selected, described, reasonable, and attached or referenced to task documents.	√			
8. Calculation method identified and appropriate for the design activity.	√			
9. Calculation results reasonable and correctly described in results and conclusions.	√			
10. Physical property calculations generated by CAD software verified via hand calculations.			√	
11. Computer program identified with version and revision.			√	
12. Computer input/output provided or referenced and reasonable.			√	
13. Computer run traceable to calculation (file #, etc.).			√	
14. Computer input/output data and problem type within validation/verification range of use.			√	
15. Computer program validation/verification addressed.			√	
16. Computer operating system in use for calculation preparation is the same as when the software was verified on machine.			√	

Calculation Checking Method	√	Applicable Pages
1. Direct Step-by-Step Check	√	ALL
2. Reference Chart(s) or Book(s) Comparison (Append Documentation)		
3. Alternate Calculation (Append Documentation)		

Comments:

Preparer (Print Name and Sign):	Date:
Joshua M. Bickett	4/8/2020
Checker (Print Name and Sign):	**Date:**
David E. Nielson, P.E.	4/8/2020

Signatures obtained only after discrepancies are corrected and comments are resolved.

CALCULATION SHEET

Project No. 54413.024	**Calculation No.** S54413.024-C-006	**Rev.** 0	**Page No.** 3 of 13
Title: LERF Basin 41 Evaluation of Dike Settlement Analysis			
Prepared By: Joshua M. Bickett	**Date:** 4/8/2020	**Checked By:** David E. Nielson, P.E.	**Date:** 4/8/2020

TABLE OF CONTENTS

1.0 PURPOSE 5

2.0 METHODOLOGY 5
- 2.1 Design Basis Soil Properties 5
- 2.2 Design Requirements 5
- 2.3 Seismic Accelerations 6
- 2.4 Flood and Hydrodynamic Loading 7
- 2.5 Wind Loading 7
- 2.6 Surcharge Loading 7
- 2.7 Precipitation 7
- 2.8 Volcanic 7
- 2.9 Settlement Analysis 8
- 2.10 Acceptance Criteria 8

3.0 DESIGN INPUT 8

4.0 ASSUMPTIONS 9

5.0 CALCULATIONS 9
- 5.1 Design Basis Soil Parameters 9
- 5.2 Settlement of Foundation Soils 10
- 5.3 Settlement of Soil-Bentonite Layer 12
- 5.4 Settlement Summary 12

6.0 CONCLUSIONS 12

7.0 REFERENCES 13

CALCULATION SHEET

Project No. 54413.024	**Calculation No.** S54413.024-C-006	**Rev.** 0	**Page No.** 4 of 13
Title: LERF Basin 41 Evaluation of Dike Settlement Analysis			
Prepared By: Joshua M. Bickett	**Date:** 4/8/2020	**Checked By:** David E. Nielson, P.E.	**Date:** 4/8/2020

Acronyms

DOE	Department of Energy
FDC	Flood Design Category
LERF	Liquid Effluent Retention Facility
MCE	Maximum Considered Earthquake
NAD	North American Datum
NDC	Natural Phenomena Design Category
NPH	Natural Phenomena Hazard
PDC	Precipitation Design Category
SCRD	Supplemented Contractor Requirements Document
SDC	Seismic Design Category
SSC	Structures, Systems and Components
TOC	Tank Operations Contractor
VDC	Volcanic Design Category
WDC	Wind Design Category

CALCULATION SHEET

Project No. 54413.024	**Calculation No.** S54413.024-C-006	**Rev.** 0	**Page No.** 5 of 13
Title: LERF Basin 41 Evaluation of Dike Settlement Analysis			
Prepared By: Joshua M. Bickett	**Date:** 4/8/2020	**Checked By:** David E. Nielson, P.E.	**Date:** 4/8/2020

1.0 PURPOSE

The purpose of this calculation is to evaluate the Liquid Effluent Retention Facility (LERF) Basin 41 for the following items:

- Settlement of foundation soils
- Settlement of soil-bentonite layer

The analyses performed herein are for the LERF Basin 41 Project adjacent to Area 200 East (and immediately adjacent to existing LERF Basins 42, 43 and 44) at the U.S. Department of Energy (DOE) Hanford Site in the State of Washington.

2.0 METHODOLOGY

2.1 Design Basis Soil Properties

Geotechnical and Seismic Design Input identified in Section 3.0 of this analysis is reviewed to establish the design basis soil profile and soil properties. The parameters and profile documented in the Existing Design Analysis identified in Section 3.0 of this analysis for LERF Basins 42, 43, 44 are utilized for this analysis after verifying consistency with the Geotechnical and Seismic Design Input. The elastic modulus and Poisson's Ratio are required parameters to be established. The basis for the compressibility of the soil bentonite layer is established by reference to the data reported in HNF-SD-LEF-TI-005.

The groundwater level observations provided in the Geotechnical and Seismic Design Input are utilized as the design groundwater for analysis.

2.2 Design Requirements

Current DOE requirements for both general design criteria and natural phenomena hazard (NPH) mitigation for the Hanford site are in Supplemented Contractor Requirements Document (SCRD) DOE O 420.1C and DOE STD-1020-2016.

DOE-STD-1020-2016 provides NPH design and evaluation criteria for seismic, wind, flood, precipitation, lightning, and volcanic hazards based on natural phenomena design categories (NDCs). The LERF Basin 41 Project is NDC-1. The design requirements are summarized in TFC-ENG-STD-06.

TFC-ENG-STD-06 establishes structural design loads and acceptance criteria for use in designing new Structures, Systems, and Components (SSCs), evaluating existing SSCs, evaluating anchorage effects of new and modified systems on existing SSCs, and designing additions and modifications to existing SSCs.

TFC-ENG-STD-06 fulfills three objectives:

- NPH requirements with DOE and other requirements governing design and evaluation of SSCs,

- Limit requirements and NPH criteria to those applicable to the DOE Hanford Site Tank Operations Contractor (TOC), which are applied to LERF Basin 41, and
- Stipulate the appropriate levels of depth, rigor, and thoroughness in complying with the requirements.

SSCs are designed and evaluated to withstand loads associated with the operation of the facility and the effects of NPHs. DOE O 420.1C, IBC 2015 and ASCE 7-10 are used as the minimum basic design requirements for DOE facilities.

The SSCs need not be subjected simultaneously to any combination of extreme wind, seismic ground motions, volcanic ashfall, and flood. However, common cause events are to be evaluated as single events.

SSCs are categorized into the following individual NDCs (recall LERF Basin 41 is NDC-1):

- For seismic hazards, Seismic Design Categories: SDC-1
- For extreme wind hazards, including straight-line wind, tornado, and hurricane hazards, Wind Design Categories: WDC-1
- For flood hazards, including seiche, tsunami, and other flood hazards, Flood Design Categories: FDC-1
- For precipitation hazards, Precipitation Design Categories: PDC-1
- For volcanic eruption hazards, Volcanic Design Categories: VDC-1.

2.3 Seismic Accelerations

Per TFC-ENG-STD-06 the return period for seismic design is not specifically defined for SDC-1 but is the same as that achieved for IBC-2015 for Risk Category II, $I_P = 1.0$ (ASCE 7-10), for Limit States A, B, C, or D.

Seismic analyses include horizontal and vertical components of motion expressed as a percentage of gravity. A site-specific maximum considered earthquake (MCE) spectra and design spectra (2/3MCE) are developed in Figure 50 of RPP-RPT-27570 for the site, which are based on a 2,500-year return period.

Given that is not appropriate to couple the seismic acceleration with static loads in a long term settlement analysis, the seismic design criteria is not applicable herein. Also, given the deep groundwater table, liquefaction induced ground surface settlement is not required. Ground surface settlement of unsaturated granular material is negligible and does not require analysis.

2.4 Flood and Hydrodynamic Loading

Per TFC-ENG-STD-06 the return period for flood analysis of structures not exposed to submersion for FDC-1 is 100 years. Flood and hydrodynamic loading are not input for a settlement analysis given the temporary nature of the loading condition.

2.5 Wind Loading

Per TFC-ENG-STD-06 the return period for extreme straight line wind loading analysis for WDC-1. The wind loads are defined as Exposure Category C with nominal 3-second gusts at 85 miles per hour and ultimate 3-second gusts at 110 miles per hour.

Wind loading is neglected as a design load for these analyses based the temporary nature of the loading condition and standard geotechnical engineering practice for settlement analysis.

2.6 Surcharge Loading

Surcharge for temporary loads (operating equipment or traffic) are considered as 500 psf. These traffic loads are not considered appropriate to include in the settlement analysis given the short duration of application and the location (dike crest, not on the liner) area. Sustained surcharge loads (generically includes ash, snow, etc) possibly contributing to the settlement magnitude of the overall basin system are anticipated to be small and can be represented by a 50 psf uniform load.

2.7 Precipitation

Per TFC-ENG-STD-06 the return period for precipitation structural loading analysis for PDC-1 is 100 years. The design basis precipitation load is 1.8 inch per TFC-ENG-STD-06 and intensity of 1 inch per hour per DOC 1961.

Loading due to PDC-1 rainfall is considered as temporary and analysis is not required to be specifically evaluated herein.

Per TFC-ENG-STD-06 the design snow load is 15 psf, which is bounded by the uniform 50 psf pressure established in the surcharge loading section above.

2.8 Volcanic

Per TFC-ENG-STD-06 the return period for volcanic ashfall structural load analysis for VDC-1 is 100 years. Ash loading considerations are considered bounded by the surcharge load analysis and are not required to be specifically evaluated herein.

2.9 Settlement Analysis

The profile analyzed herein is determined based on the maximum dike heights, topographic considerations, nearby structures (including existing basins), the soil conditions, and maximum retained effluent height. The location of maximum settlement is within the basin under the maximum retained effluent load and sustained surcharge.

At low stresses and strains, settlement of granular soils can be modelled using an elastic response. The settlement of the basin with base dimensions B (width) and L (length) on granular soil can be calculated using an elastic analysis defined in Bowles (1997):

$$\Delta H = q_0 * B * \Delta H = q_0 * B * \left(\frac{(1-\mu^2)}{E_s}\right) * I_s * I_f$$

Where;

ΔH = settlement (ft)
q_o = intensity of contact pressure (psf)
B = least lateral dimension of contact pressure (ft)
μ = Poisson's Ratio from Table 2-7 Bowles (1997)
E_s = Elastic (Young's) Modulus of the soil (psf) from Table 2-8 Bowles (1997)
I_s = Shape Factor $= I_1 + [(1-2\mu)/(1-\mu)]*I_2$
I_1 = Table 5-2 Bowles (1997)
I_2 = Table 5-2 Bowles (1997)
I_f = Depth Factor (conservatively neglected)

2.10 Acceptance Criteria

There are no acceptance criteria for these settlement analyses. The magnitude of settlement determined herein is input for evaluation of liner stress.

3.0 DESIGN INPUT

Topographic Data:

Existing site topographic survey is provided on the Project Design Drawings.

Horizontal Datum: NAD83

Vertical Datum: 200E (based on PT 29 Reference Drawing No. H-2-2310, Rev. 9)

Project Design Drawings:

H-2-838747, Sheet 1

H-2-838748, Sheet 1

H-2-838749, Sheet 1

H-2-838749, Sheet 2

H-2-838750, Sheet 1

Geotechnical and Seismic Data:

Shannon & Wilson, Inc. (1994a)

Shannon & Wilson, Inc. (1994b)

Shannon & Wilson, Inc. (1994c)

RPP-RPT-27570

Existing Design Analysis:

HNF-SD-LEF-TI-005

Design Standards:

TFC-ENG-STD-06

DOE-STD-1020-2016

DOE O 420.1C

4.0 ASSUMPTIONS

There are no assumptions that require further verification in these analyses. Engineering judgement, where used, is documented herein.

5.0 CALCULATIONS

5.1 Design Basis Soil Parameters

Based on the review of the geotechnical and seismic design input it is determined the design soil profile, soil parameters and groundwater level used in the existing analysis (HNF-SD-LEF-TI-005) can be used for this analysis of LERF Basin 41. The in situ subsurface material is subdivided into stratigraphic units based on constituents, structure, geotechnical engineering properties, stress history and geologic deposition.

Design Soil Profile

Natural Site Soil: Sand and Gravel
μ = 0.4 from Table 2-7 Bowles (1997)
E_s = 1,440,000 psf from Table 2-8 Bowles (1997) and HNF-SD-LEF-TI-005.

Soil-Bentonite: Sand and Bentonite
2.5 percent compression at 1300 psf, 19.6 percent moisture content and dry density of 104.2 pcf.

Groundwater is deep at the site, well below the bottom of the basin. Thus, it does not affect the settlement analyses. Groundwater is considered to be encountered at depths greater than 200 feet below the ground surface.

5.2 Settlement of Foundation Soils

Per Bowles (1997). the settlement of a rectangular base with dimensions B and L on an elastic half-space can be computed using an equation satisfying the Theory of Elasticity.

$$\Delta H = q_0 * B * \Delta H = q_0 * B * \left(\frac{(1-\mu^2)}{E_s}\right) * I_s * I_f$$

ΔH = settlement, in units of feet

q_0 = Intensity of contact pressure; since the impounded fluid is essentially water, the unit weight of the impounded fluid is approximately 62.4 pcf, conservatively use 65.0 pcf. Contact pressure on the liner then equals fluid unit weight multiplied by the depth of fluid. At the toe of the interior dike slope the fluid depth is 21 ft (max. fluid level – Top of liner Elevation = El. 601 − El. 580 = 21 ft). To conservatively represent the average fluid depth in the balance of the basin a depth of 23 ft is used (max. fluid level – average top of liner Elevation = El. 601 − El. 578 = 23 ft).

Interior Dike Slope Toe = 65 pounds per cubic foot * 21 feet = 1,365 pounds per square foot (psf)
Average Balance of Basin = 65 pounds per cubic foot * 23 feet = 1,495 pounds per square foot (psf)

To account for miscellaneous "sustained" environmental loads (surcharge loads) add 50 psf per the Design Requirements section of this analysis.

Thereby

$q_{0\ toe}$ = 1,365 psf + 50 psf = 1,415 psf
$q_{0\ ave}$ = 1,495 psf + 50 psf = 1,545 psf

CALCULATION SHEET

Project No. 54413.024	**Calculation No.** S54413.024-C-006	**Rev.** 0	**Page No.** 11 of 13
Title: LERF Basin 41 Evaluation of Dike Settlement Analysis			
Prepared By: Joshua M. Bickett	**Date:** 4/8/2020	**Checked By:** David E. Nielson, P.E.	**Date:** 4/8/2020

B = Least lateral dimension of contact area. Per the Project Design Drawings, the minimum planned width of the basin bottoms is approximately 120 feet and the approximately length, L = 180 feet.

μ = 0.4

E_s = 1,440,000 psf

Settlement of the natural soil at the toe of the interior dike slope (a basin corner) is calculated as follows:

I_s = Shape Factor; settlement was calculated to a depth of 120 feet below the basin bottom (H in ft). N = H/B = 120'/120' = 1.0 and M = L/B = 180/120 = 1.5. Referring to Table 5-2 in Bowles (1997), I_1= 0.132, and I_2=0.100.

$$I_s = I_1 + \left(\frac{1-2\mu}{1-\mu}\right) * I_2 = = 0.132 + \left(\frac{1-2(0.4)}{1-0.4}\right) * 0.100 = 0.165$$

I_f = Depth Ratio Factor (conservatively) taken as 1.0.

Inserting the above figures into the original equation gives:

$$\Delta H = 1{,}415 \text{ psf} * 120\, ft * \left(\frac{(1-(0.4)^2}{1{,}440{,}000}\right) * \ 0.165 * 1.0 = 0.016 \text{ feet} = 0.19 \text{ inch, use 0.25 inch.}$$

Settlement of the natural soil for the balance of the basin is calculated as follows:

I_s = Shape Factor; settlement was calculated to a depth of 120 feet below the basin bottom (H in ft). N = H/B' = 120'/60' = 2.0 and M = L'/B' = 90/60 = 1.5. Referring to Table 5-2 in Bowles (1997), I_1= 0.292, and I_2=0.086.

$$I_s = I_1 + \left(\frac{1-2\mu}{1-\mu}\right) * I_2 = 0.292 + \left(\frac{1-2(0.4)}{1-0.4}\right) * 0.086 = 0.321$$

I_f = Depth Ratio Factor (conservatively) taken as 1.0.

Inserting the above figures into the original equation gives:

$$\Delta H = 4 * \ 1{,}545 \text{ psf} * 60\, ft * \left(\frac{(1-(0.4)^2}{1{,}440{,}000}\right) * \ 0.321 * 1.0 = 0.069 \text{ feet} = 0.83 \text{ inches, use 1.0 inch.}$$

5.3 Settlement of Soil-Bentonite Layer

As documented in HNF-SD-LEF-TI-005, consolidation testing was performed on borrow sand and bentonite mix, at 8 percent mix ratio, determined the consolidation at approximately 1300 psf was about 2.5 percent. Use 3.0 percent to represent the slightly higher pressures in this analysis. The moisture content of the as-tested material was 19.6 percent. Higher mix ratios (on the order of 10 to 15 percent bentonite) are not expected to significantly impact the compressibility of the soil-bentonite mix. Therefore, compression of the 36-inch (bottom) and 42-inch (side/corner) thick soil-bentonite liner can be calculated as:

$\Delta H = \left(\frac{3.0}{100}\right) * 36 \text{ inches} = 1.08 \text{ inches}$, say 1.10 inches at bottom of basin.

$\Delta H = \left(\frac{3.0}{100}\right) * 42 \text{ inches} = 1.26 \text{ inches}$, say 1.25 inches at side/corner of basin.

5.4 Settlement Summary

Combining the settlement magnitudes of the soil-bentonite and foundation soil at the corner of the basin results in a total settlement of 1.50 inches (0.25 inch + 1.25 inch = 1.50 inch).

Combining the settlement magnitudes of the soil-bentonite and foundation soil at the center of the basin results in a total settlement of 2.25 inches (1.00 inch + 1.10 inch = 2.10 inch, use 2.25 inches).

6.0 CONCLUSIONS

The basin liner can be designed to accommodate settlement of 2.25 inches at the center of the basin and 1.50 inches of settlement at the corner of the basin under full depth of retained effluent and miscellaneous surcharge loads (NDCs).

The settlement around the perimeter of the basin where the liner is anchored can be considered as 0 inches.

The differential settlement between the dike crest and the basin corner is 1.50 inches. The differential settlement between the center of the basin and the corners of the basin is 0.75 inch (2.25 inches – 1.50 inch = 0.75 inch).

CALCULATION SHEET

Project No. 54413.024	**Calculation No.** S54413.024-C-006	**Rev.** 0	**Page No.** 13 of 13
Title: LERF Basin 41 Evaluation of Dike Settlement Analysis			
Prepared By: Joshua M. Bickett	**Date:** 4/8/2020	**Checked By:** David E. Nielson, P.E.	**Date:** 4/8/2020

7.0 REFERENCES

ASCE 7-10, "Minimum Design Loads for Buildings and Other Structures".

Bowles, Joseph E. (1997), *Foundation Analysis and Design*, 5th Ed., McGraw-Hill Companies, Inc.

DOE O 420.1C, "Facility Safety."

DOE-STD-1020-2016, "Natural Phenomena Hazards Analysis and Design Criteria for DOE Facilities."

HNF-SD-LEF-TI-005, Rev. 1, Calculations for Liquid Effluent Retention Facility Part B Permit Application, August 22, 1997.

International Code Council (IBC 2015), 2015 International Building Code.

RPP-RPT-27570, Rev. 0, Development of PC2 Surface Spectra for Double-Shell Tank Facilities, DOE Hanford Site in Washington State, February 2, 2006.

Shannon & Wilson, Inc. (1994a) Geotechnical Investigation KEH W236A, Multi-Function Wast Tank Facility – Hanford Site Richland, Washington, Volume 1, January 1994.

Shannon & Wilson, Inc. (1994b), Draft Geotechnical Investigation KEH W-236A, Multi-Function Waste Tank Facility 200 West Area Addition Richland, Washington, March 1994.

Shannon & Wilson, Inc. (1994c), Final Report of Geotechnical Studies; ICF KH Project W 320, Tank 241-C-106 Waste Retrieval and Sluicing System; 200 East Area, Hanford Site, April 14, 1994.

TFC-ENG-STD-06, Rev D-2, Design Load for Tank Farm Facilities, July 31, 2019.

DOCUMENT RELEASE AND CHANGE FORM

Prepared For the U.S. Department of Energy, Assistant Secretary for Environmental Management
By Washington River Protection Solutions, LLC., PO Box 850, Richland, WA 99352
Contractor For U.S. Department of Energy, Office of River Protection, under Contract DE-AC27-08RV14800

TRADEMARK DISCLAIMER: Reference herein to any specific commercial product, process, or service by trade name, trademark, manufacturer, or otherwise, does not necessarily constitute or imply its endorsement, recommendation, or favoring by the United States government or any agency thereof or its contractors or subcontractors. Printed in the United States of America.

Release Stamp

DATE:
May 26,2020
HANFORD RELEASE

1. **Doc No:** RPP-CALC-63751 **Rev.** 00

2. **Title:**
LERF Basin 41 Thermal Expansion/Contraction Potential, HDPE Liner

3. **Project Number:** T1P226 ☐N/A

4. **Design Verification Required:** ☐Yes ☒No

5. **USQ Number:** ☒ N/A RPP-27195

6. **PrHA Number** **Rev.** ☒ N/A

Clearance Review Restriction Type: public

7. **Approvals**

Title	Name	Signature	Date
Clearance Review	Ayers, Lynn M	*Ayers, Lynn M*	05/26/2020
Design Authority	Wilson, Nathaniel W	*Wilson, Nathaniel W*	04/24/2020
Checker	Debban, Jeremy A	*Debban, Jeremy A*	04/10/2020
Document Control Approval	Meinecke, Kathryn R	*Meinecke, Kathryn R*	05/26/2020
Environmental Protection	Wall, Jeremy M	*Wall, Jeremy M*	04/30/2020
Originator	Dorsh, Paul M	*Dorsh, Paul M*	04/10/2020
Other Approver	McShane, Michael P	*McShane, Michael P*	05/12/2020
Responsible Engineering Manager	Huntington, Matthew R	*Huntington, Matthew R*	05/14/2020

8. **Description of Change and Justification**

Initial Release.

Design checks were performed in accordance with Sargent & Lundy ESD Quality Assurance Procedure (QAP). Because of the General Service status of the equipment, a graded approach was applied and design verification was not performed as allowed by QAP 3.5, Design Verification.

Note that Paul Dorsh is signing as Originator for Taylor Grant and Jeremy Debban is signing as Checker for Darrel Packard. Taylor Grant and Darrel Packard are not currently in SPF.

9. **TBDs or Holds** ☒N/A

10. **Related Structures, Systems, and Components**

a. **Related Building/Facilities** ☐N/A	b. **Related Systems** ☐N/A	c. **Related Equipment ID Nos. (EIN)** ☒N/A
LERF FACILITIES	LERF	

11. **Impacted Documents – Engineering** ☒N/A

Document Number	Rev.	Title

12. **Impacted Documents (Outside SPF):**

N/A

13. **Related Documents** ☐N/A

Document Number	Rev.	Title
MT-50497	00	Liquid Effluent Retention Facility (LERF) Basin 41

14. **Distribution**

Name	Organization
Angevine, Brennan T	MISSION ANALYSIS ENGINEERING
Blaak, Whitney S	COGNIZANT SYSTEM ENGINEERING
Demiter, Scott M	ETF OPERATIONS
Foster, Jim	242-A/AW/ETF OPERATIONS
Goessmann, Glen E	ENGINEERING PROGRAMS
Greenhalgh, Aaron M	TANK FARM PROJECTS ENGINEERING
Halgren, Dale L	ETF ENGINEERING
Harris, John W	SAFETY PROGRAM SERVICES RC/P
Joslyn, Cameron C	ETF ENGINEERING
McFerran, Brandon E	242-A/AW/ETF OPERATIONS
McShane, Michael P	ENGINEERING PROGRAMS
Omberg Carro, Susan K	NUCLEAR SAFETY
Powers, Daniel J	ETF ENGINEERING
Roosendaal, Gene D	TFP PROJECT MANAGEMENT
Rutherford, Wally	ETF ENGINEERING
Sackett, Tom E	TANK FARM PROJECTS

DOCUMENT RELEASE AND CHANGE FORM	**Doc No:** RPP-CALC-63751 **Rev.** 00

14. **Distribution**

Name	**Organization**
Samoska, Jerry A	INSTRUMENT & CNTRL ENGINEERING
Shultz, Milton V	NUCLEAR SAFETY
Smith, Gregory E	TANK FARM PROJECTS ENGINEERING
Smoot, Bill R	TFP RADCON
Swanson, Brad L	242-A/AW/ETF OPERATIONS
Wall, Jeremy M	RETRVL & CLOSURE/PROJ ENV CMPL
Wilson, Nathaniel W	ETF PROJECTS ENGINEERING

RPP-CALC-63751
Revision 0

LERF Basin 41 Thermal Expansion/Contraction Potential, HDPE Liner

Prepared by

G. T. Grant
Sargent & Lundy for Washington River Protection Solutions, LLC

Date Published
April 2020

washington river protection solutions

DAVID E. NIELSON
STATE OF WASHINGTON
28592
REGISTERED
PROFESSIONAL ENGINEER
5-18-2020

Prepared for the U.S. Department of Energy
Office of River Protection

Contract No. DE-AC27-08RV14800

A-6007-231 (REV 0)

Approved for Public Release;
Further Dissemination Unlimited

RPP-CALC-63751 Rev. 0

Sargent & Lundy Engineering Services, Inc.	**CALCULATION COVER SHEET**	**Page No.** 1 of 14	
		Date 04/07/2020	**Rev. No.** 0
		Calculation No: S54413.024-C-007	

Project No.	**Project Title:**	**Client:**
S54413.024	LERF Basin 41 Design	Washington River Protection Solutions

Title:

LERF Basin 41 Thermal Expansion/Contraction Potential, HDPE Liner

Purpose and Objective:

The purpose of this calculation is to determine the amount of slack necessary in the HDPE liner system to allow for thermal contraction and expansion due to environmental temperature changes. The amount of slack necessary to prevent tension in the HDPE liner due to thermal contraction will be specified on the design drawings.

Rev. No.	Total Pages		Prepared By	Checked By	PM/TL
0	14	Print Name/ Sign:	G. Taylor Grant	Darrel J. Packard	Paul M. Dorsh, P.E.
		Date:	04/07/2020	4/9/2020	4/9/2020

Revision Description (Revision Description/Affected Pages):

		Print Name/ Sign:			
		Date:			

Revision Description (Revision Description/Affected Pages):

RPP-CALC-63751 Rev. 0

CALCULATION REVIEW CHECKLIST

Project No.	Calculation No.	Rev. No.	Page No.
S54413.024	S54413.024-C-007	0	2 of 14

Items Checked	Accept Y	Accept N	Accept N/A	Description of Resolution for Unacceptable Items
1. Cover sheets properly completed.	√			
2. Calculation sheet headers complete with calculation number, revision number, etc.	√			
3. Calculation sheet contents are legible, accurate, and complete per format.	√			
4. Listed attachments included.	√			
5. Calculation objective clearly described.	√			
6. Criteria are suitable and properly referenced to task specific documents.	√			
7. Assumptions and input data selected, described, reasonable, and attached or referenced to task documents.	√			
8. Calculation method identified and appropriate for the design activity.	√			
9. Calculation results reasonable and correctly described in results and conclusions.	√			
10. Physical property calculations generated by CAD software verified via hand calculations.			√	
11. Computer program identified with version and revision.			√	
12. Computer input/output provided or referenced and reasonable.			√	
13. Computer run traceable to calculation (file #, etc.).			√	
14. Computer input/output data and problem type within validation/verification range of use.			√	
15. Computer program validation/verification addressed.			√	
16. Computer operating system in use for calculation preparation is the same as when the software was verified on machine.			√	

Calculation Checking Method	√	Applicable Pages
1. Direct Step-by-Step Check	√	
2. Reference Chart(s) or Book(s) Comparison (Append Documentation)		
3. Alternate Calculation (Append Documentation)		

Comments:

Preparer (Print Name and Sign):	Date:
G. Taylor Grant	4/7/2020
Checker (Print Name and Sign):	**Date:**
Darrel Packard	4/9/2020

CALCULATION SHEET

Project No. S54413.024	**Calculation No.** S54413.024-C-007	**Rev.** 0	**Page No.** 3 of 14
Title: LERF Basin 41 Thermal Expansion/Contraction Potential, HDPE Liner			
Prepared By: G. Taylor Grant	**Date:** 04/07/2020	**Checked By:** Darrel J. Packard	**Date:** 04/09/2020

TABLE OF CONTENTS

1.0 PURPOSE 4
2.0 METHODOLOGY 4
3.0 DESIGN INPUTS 4
4.0 ASSUMPTIONS 4
5.0 COMPUTER SOFTWARE 4
6.0 RESULTS 5
7.0 REFERENCES 5
8.0 CALCULATIONS 6

Attachments

ATTACHMENT – 1 – H-2-838750, SHEET 1, REV. 0, LERF BASIN 41 CIVIL PRIMARY LINER (REFERENCE 1)

ATTACHMENT – 2 – DESIGNING WITH GEOSYNTHETICS, TABLE 5.10 (REFERENCE 2)

ATTACHMENT – 3 – TFC-ENG-STD-06, REV D-2, DESIGN LOADS FOR TANK FARM FACILITIES, PAGE 12 of 34 (REFERENCE 3)

ATTACHMENT – 4 – GEOSYTHETIC DESIGN GUIDANCE FOR HAZARDOUS WASTE LANDFILL CELLS AND SURFACE IMPOUNDMENTS, PAGE VII-6 (REFERENCE 4)

Acronyms

HDPE	High Density Polyethylene
LERF	Liquid Effluent Retention Facility

CALCULATION SHEET

Project No. S54413.024	**Calculation No.** S54413.024-C-007	**Rev.** 0	**Page No.** 4 of 14
Title: LERF Basin 41 Thermal Expansion/Contraction Potential, HDPE Liner			
Prepared By: G. Taylor Grant	**Date:** 04/07/2020	**Checked By:** Darrel J. Packard	**Date:** 04/09/2020

1.0 PURPOSE

The purpose of this calculation is to determine the amount of slack necessary in the HDPE liners to allow for thermal contraction and expansion due to environmental temperature changes. The amount of slack necessary to prevent tension in the HDPE liner due to thermal contraction will be specified on the design drawings.

2.0 METHODOLOGY

The HDPE liners will be analyzed to determine the maximum expansion and contraction along the width and length of the basin. The greatest length and width of the HDPE liner across the basin, thermal coefficient of linear expansion, and the maximum temperature changes will be used to calculate the maximum expansion and contraction of the HDPE liner.

There is no acceptance criteria for the expansion and contraction. The result of this calculation will be used to specify the required slack of the HDPE liner on the design drawings.

3.0 DESIGN INPUTS

The thermal coefficient of linear expansion will come from Reference 2, Attachment 2, Table 5.10, Page 552. The table provides a range of coefficient of linear expansion for HDPE liners, therefore the greatest value is conservatively chosen. Coefficient of linear expansion = C_{le} = $13x10^{-5}$ /ºC

The design drawing (Reference 1, Attachment 1) will be used to determine the greatest length and greatest width of the HDPE liner.

The minimum temperature to be designed for is from Reference 3, Attachment 3, Section 3.5.9 *Thermal Forces*. This section states "structures shall be designed for movements resulting from the maximum seasonal temperature change (-25ºF to +115ºF)." The minimum temperature of -25ºF will be used in the analysis. Low temperature = t_l = -25ºF = -31.67ºC.

The maximum temperature to be designed for is from Reference 4, Attachment 4, Page VII-6. This reference states that "the actual temperatures reached at the bottom and sides of a solid waste landfill have been measured and values as high as 160ºF." The maximum temperature of 160ºF will be used in the analysis. High temperature = t_h = 160ºF = 71.11ºC.

4.0 ASSUMPTIONS

No assumptions have been made in this calculation.

5.0 COMPUTER SOFTWARE

No unverified computer software was used in this analysis. Calculations are checked using a handheld calculator.

CALCULATION SHEET

Project No. S54413.024	**Calculation No.** S54413.024-C-007	**Rev.** 0	**Page No.** 5 of 14
Title: LERF Basin 41 Thermal Expansion/Contraction Potential, HDPE Liner			
Prepared By: G. Taylor Grant	**Date:** 04/07/2020	**Checked By:** Darrel J. Packard	**Date:** 04/09/2020

6.0 RESULTS

The below values represent the maximum potential contraction of the HDPE liners due to environmental temperature changes.

Location	Maximum Contraction	Remarks
Bottom Length	2.54 ft	
Bottom Width	1.74 ft	
Side Slopes	1.46 ft	

The maximum contraction shown in the table above represents the expected contraction of the HDPE liner when the temperature is -25ºF and the temperature during installation was 160ºF. Since the required slack is dependent upon the temperature at the time of installation, the equation to calculate the required slack based on installation temperature will be provided on the design drawings for the Installer to calculate.

7.0 REFERENCES

1) H-2-838750, Sheet 1, Rev. 0, LERF Basin 41 Civil Primary Liner

2) Koerner, Robert M., *Designing with Geosynthetics*, 6th Edition

3) TFC-ENG-STD-06 REV D-2, Design Loads for Tank Farm Facilities

4) Richardson, Gregory N., and Robert M. Koerner, *Geosynthetic Design Guidance for Hazardous Waste Landfill Cells and Surface Impoundments*, Hazardous Waste Engineering Research Laboratory, Office of Research and Development, U.S. Environmental Protection Agency

CALCULATION SHEET

Project No. S54413.024	**Calculation No.** S54413.024-C-007	**Rev.** 0	**Page No.** 6 of 14
Title: LERF Basin 41 Thermal Expansion/Contraction Potential, HDPE Liner			
Prepared By: G. Taylor Grant	**Date:** 04/07/2020	**Checked By:** Darrel J. Packard	**Date:** 04/09/2020

8.0 CALCULATIONS

Maximum length of basin floor = l_{bf} = 35.67 ft + 118.87 ft + 35.67 ft = 190.21 ft (Reference 1, Attachment 1)

Maximum width of basin floor = w_{bf} = 35.67 ft + 58.87 ft + 35.67 ft = 130.21 ft (Reference 1, Attachment 1)

Maximum side slope length = d_s = 109.00 ft (Reference 1, Attachment 1)

Maximum thermal contraction:

Side slopes:

$ss_e = (t_l - t_h) \times d_s \times C_{le} = (-31.67^oC - 71.11^oC) \times 109.00 \text{ ft} \times 13\times10^{-5} /C^o = -1.46 \text{ ft}$

Bottom width:

$bw_e = (t_l - t_h) \times w_{bf} \times C_{le} = (-31.67^oC - 71.11^oC) \times 130.21 \text{ ft} \times 13\times10^{-5} /C^o = -1.74 \text{ ft}$

Bottom length:

$bl_e = (t_l - t_h) \times l_{bf} \times C_{le} = (-31.67^oC - 71.11^oC) \times 190.21\text{ft} \times 13\times10^{-5} /C^o = -2.54 \text{ ft}$

CALCULATION SHEET

Project No. S54413.024	**Calculation No.** S54413.024-C-007	**Rev.** 0	**Page No.** 7 of 14
Title: LERF Basin 41 Thermal Expansion/Contraction Potential, HDPE Liner			
Prepared By: G. Taylor Grant	**Date:** 04/07/2020	**Checked By:** Darrel J. Packard	**Date:** 04/09/2020

ATTACHMENT – 1 - H-2-838750, SHEET 1, REV. 0, LERF BASIN 41 CIVIL PRIMARY LINER

RPP-CALC-63751, Rev. 0

Sargent & Lundy Engineering Services, Inc.

CALCULATION SHEET

Project No.	S54413.024	**Calculation No.**	S54413.024-C-007	**Rev.**	0	**Page No.**	8 of 14
Title:	LERF Basin 41 Thermal Expansion/Contraction Potential, HDPE Liner						
Prepared By:	G. Taylor Grant	**Date:**	04/07/2020	**Checked By:**	Darrel J. Packard	**Date:**	04/09/2020

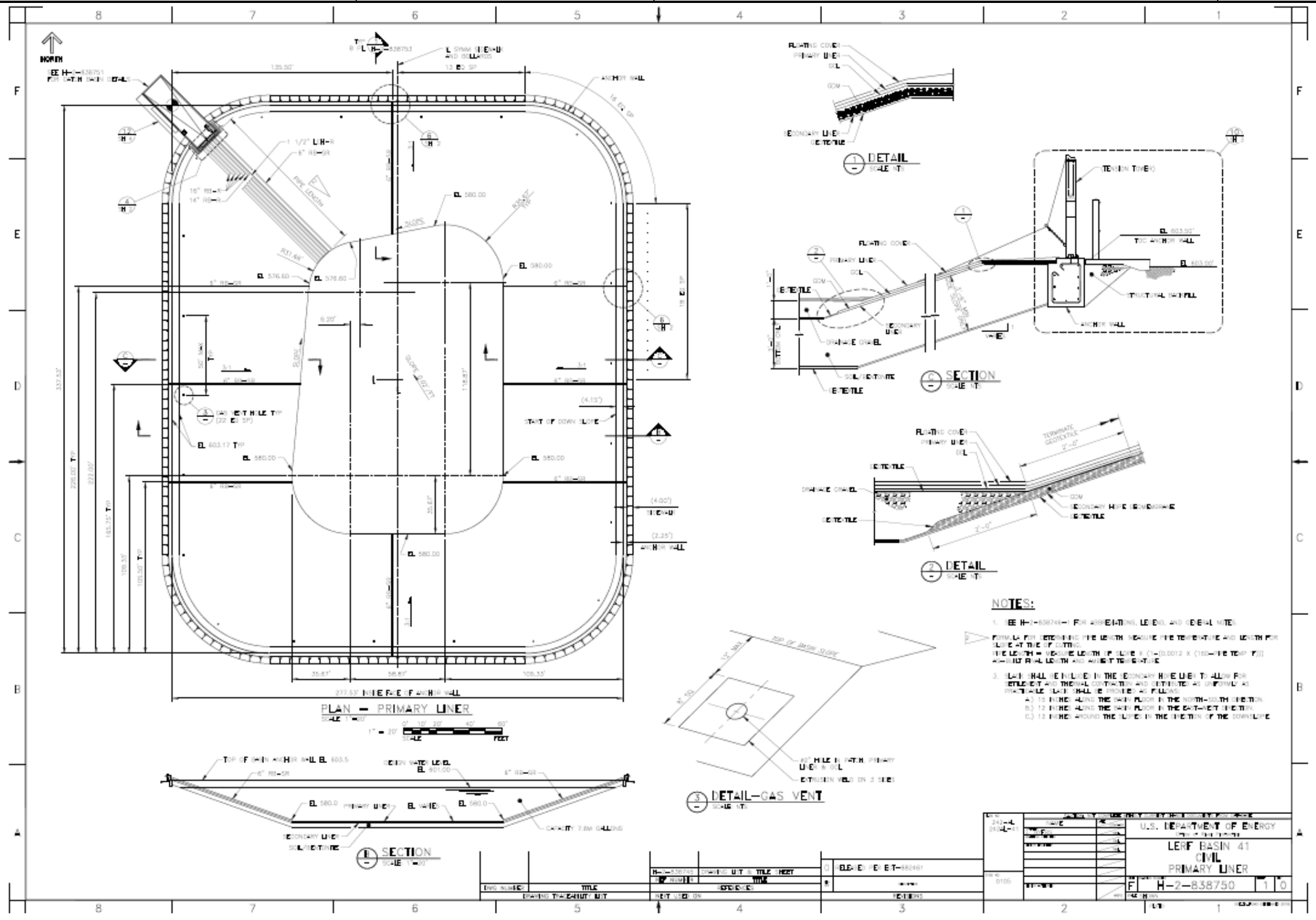

CALCULATION SHEET

Project No. S54413.024	**Calculation No.** S54413.024-C-007	**Rev.** 0	**Page No.** 9 of 14
Title: LERF Basin 41 Thermal Expansion/Contraction Potential, HDPE Liner			
Prepared By: G. Taylor Grant	**Date:** 04/07/2020	**Checked By:** Darrel J. Packard	**Date:** 04/09/2020

ATTACHMENT – 2 – DESIGNING WITH GEOSYNTHETICS, TABLE 5.10

Sargent & Lundy Engineering Services, Inc.

CALCULATION SHEET

Project No.	S54413.024	**Calculation No.**	S54413.024-C-007	**Rev.**	0	**Page No.**	10 of 14
Title:	LERF Basin 41 Thermal Expansion/Contraction Potential, HDPE Liner						
Prepared By:	G. Taylor Grant	**Date:**	04/07/2020	**Checked By:**	Darrel J. Packard	**Date:**	04/09/2020

cold has on the constructability of the system is that flexibility is decreased and seams are more difficult to make. The latter point is perhaps the most significant aspect of extremely cold conditions. The proposed seaming method should be attempted at site-installation temperatures on test specimens on simulated subgrades and evaluated to see that a satisfactory seam strength will indeed result.

Thermal Contraction and Expansion. There are a number of procedures that can be used to determine the coefficient of thermal contraction or expansion of a material—for example, ASTM D2102 and D2259 for contraction, and D1042, and D1204 for expansion and dimensional changes. All of them subject the test specimen to a constant source of cold (or heat) and carefully measure the separation distance between two given initial locations. Some typical data are presented in table 5.10. Example 5.3 uses this data to illustrate the effect during the installation of a geomembrane.

TABLE 5.10 COEFFICIENTS OF THERMAL LINEAR EXPANSIVITY

Polymer Type	Thermal Linear Expansivity ($\times 10^{-5}$/°C)
Polyethylene	
high-density	11 - 13
medium-density	14 - 16
low-density	10 - 12
linear-low-density	15 - 25
Polypropylene	5 - 9
Polyvinyl chloride	
unplasticized (e.g., pipe)	5 - 10
plasticized (e.g., geomembrane)	7 - 25
Polyamide	
nylon 6	7 - 9
nylon 66	7 - 9
Polystyrene	3 - 7
Polyester	5 - 9

Example 5.3

Calculate the amount of expansion that is generated during the installation of a HDPE liner for a surface impoundment anticipating a 40°C temperature increase from the coldest to warmest part of the day. Base the calculations on a 30 m distance and the range of thermal expansion values of table 5.10.

Solution: Minimum slack: 11×10^{-5} (40)(30)(1000) = 132 mm

Maximum slack: 13×10^{-5} (40)(30)(1000) = 156 mm

It is easily seen that the calculated amounts in example 5.3 are quite significant and that considerations for temperature expansion (or contraction) are important field-placement issues.

Oxidation. Whenever a free radical is created (e.g., on a carbon atom in the polyethylene chain), oxygen can create progressive long-term degradation. Oxygen combines with the free radical to form a hydroperoxy radical, which is passed around within the molecular structure. It eventually reacts with another polymer chain, creating a new free radical and causing chain scission. The reaction generally accelerates once it is triggered, as shown in the following equations:

$$R^{\cdot} + O_2 \rightarrow ROO^{\cdot} \quad (5.11)$$
$$ROO^{\cdot} + RH \rightarrow ROOH + R^{\cdot} \quad (5.12)$$

where

$R^{\cdot}$ = free radical
$ROO^{\cdot}$ = hydroperoxy-free radical
RH = polymer chain
$ROOH$ = oxidized polymer chain

CALCULATION SHEET

Project No. S54413.024	**Calculation No.** S54413.024-C-007	**Rev.** 0	**Page No.** 11 of 14
Title: LERF Basin 41 Thermal Expansion/Contraction Potential, HDPE Liner			
Prepared By: G. Taylor Grant	**Date:** 04/07/2020	**Checked By:** Darrel J. Packard	**Date:** 04/09/2020

ATTACHMENT – 3 – TFC-ENG-STD-06, REV D-2, DESIGN LOADS FOR TANK FARM FACILITIES, PAGE 12 OF 34

CALCULATION SHEET

Project No. S54413.024	**Calculation No.** S54413.024-C-007	**Rev.** 0	**Page No.** 12 of 14
Title: LERF Basin 41 Thermal Expansion/Contraction Potential, HDPE Liner			
Prepared By: G. Taylor Grant	**Date:** 04/07/2020	**Checked By:** Darrel J. Packard	**Date:** 04/09/2020

Basement or other rigid walls exposed to ordinary compacted backfill shall be designed for a static equivalent fluid pressure of 55 lb/ft^2, based on an at-rest earth pressure coefficient, K_o, of 0.50 and a soil density of 110 lb/ft^3.

Rigid walls exposed to backfill compacted to at least 75% of relative density shall be designed for 77 lb/ft^2, based on a K_o of 0.70 and a soil density of 110 lb/ft^3.

Superimposed lateral pressures resulting from uniform surcharge loadings shall be calculated by using appropriate earth pressure coefficients as shown above. Resultant forces from point and line loads shall be added.

3.5.9 Thermal Forces
(5.1.7)

The design of structures shall include the effects of stresses and movements resulting from variations in temperature. Structures shall be designed for movements resulting from the maximum seasonal temperature change (-25°F to +115°F). The design shall provide for the lags between air temperatures and the interior temperatures of massive concrete members or structures. Consideration shall be given to passive soil loading resulting from thermal growth of sub grade structures. See TFC-ENG-STD-02 for additional environmental/seasonal conditions.

3.5.10 Creep and Shrinkage Forces
(5.1.7)

Concrete and masonry structures shall be investigated for stresses and deformations induced by creep and shrinkage. For concrete and masonry structures, the minimum linear coefficient of shrinkage shall be 0.005 in/in., unless a detailed analysis is undertaken. The theoretical shrinkage displacement shall be computed as the product of the linear coefficient and the length of the member.

3.5.11 Ice Loads
(5.1.4, 5.1.6)

Ice loading shall be evaluated for ice-sensitive structures such as those with lattice type framing in accordance with the requirements of ASCE 7 Chapter 10. The equivalent radial ice thickness due to freezing rain is 0.25 inch, with a concurrent wind speed (3-second gust) of 40 mph.

For hoarfrost effects on ventilation systems refer to TFC-ENG-STD-07.

3.5.12 Load Combinations
(5.1.4, 5.1.6)

Load combinations, allowable stresses, deformation and strength requirements for load conditions for NDC-1 and NDC-2 SSCs, shall comply with IBC Section 1605 for Risk Category II and Risk Category IV SSCs. Load combinations, allowable stresses, deformation and strength requirements for NDC-3 SDCs shall comply with ACI 349 and AISC N690. The exception to this is that for seismic hazards the failure of an SSC shall be defined in terms of its limit state. Additional load combination requirements may apply based on industry standards identified in Section 3.6 below.

CALCULATION SHEET

Project No. S54413.024	**Calculation No.** S54413.024-C-007	**Rev.** 0	**Page No.** 13 of 14
Title: LERF Basin 41 Thermal Expansion/Contraction Potential, HDPE Liner			
Prepared By: G. Taylor Grant	**Date:** 04/07/2020	**Checked By:** Darrel J. Packard	**Date:** 04/09/2020

ATTACHMENT – 4 – GEOSYNTHETIC DESIGN GUIDANCE FOR HAZARDOUS WASTE LANDFILL CELLS AND SURFACE IMPOUNDMENTS, PAGE VII-6

Sargent & Lundy Engineering Services, Inc.

CALCULATION SHEET

Project No. S54413.024	**Calculation No.** S54413.024-C-007	**Rev.** 0	**Page No.** 14 of 14
Title: LERF Basin 41 Thermal Expansion/Contraction Potential, HDPE Liner			
Prepared By: G. Taylor Grant	**Date:** 04/07/2020	**Checked By:** Darrel J. Packard	**Date:** 04/09/2020

These temperatures cannot be reached unless some unnatural event occurs. Unfortunately, landfill fires are not at all uncommon and in such cases these high temperatures can be reached. They would be disastrous to the integrity of the FML.

The actual temperatures reached at the bottom and sides of a solid waste landfill have been measured and values as high as 160 °F have been reached. As shown in Table 7.3, Wolfgang (1959) gives a very comprehensive list of the burning characteristics of fibers. While not of direct concern to the FML itself, such elevated temperatures will actively promote biological growth which was discussed previously.

Table 7.3 Burning Characteristics of FML Polymeric Materials, after Wolfgang (1959)

Fiber	Polyethylene	Polypropylene	Polystyrene
Before touching flame	Melts, shrinks and curls from flame	Shrinks rapidly from flame, curls and melts	Melts, shrinks, and curls from flame
In flame	Melts and burns	Melts, ignites with difficulty	Melts and burns
After leaving	Burns rapidly	Burns slowly	Burns rapidly with production of great deal of soot
Odor	Burning paraffin	Faintly like burning asphalt	Benzene hyacinth
Ash	Soft, round same color as fiber	Hard, round light tan	Soft, round, same color as fiber

Environmental Stress Cracking

Stress cracking of polyethylene has been reported as early as 1950 by Carey (ASTM Bull, ASTBA, No. 167, July 1950), and its significance has been recognized via ASTM Standard D1693 entitled "Environmental Stress-Cracking of Ethylene Plastics". Under certain conditions of stress and in the presence of environments such as soaps, wetting agents, oils, detergents, or organic substances, ethylene plastics may exhibit mechanical failure by cracking. Figure 7.1a shows the existence of such cracking which occurred on laboratory test specimens but has also been similarly seen in field applications.

By definition, stress-crack is an external or internal rupture in a plastic caused by a tensile stress lower than the short term mechanical strength of the material. Failure is usually interpreted by visable

DOCUMENT RELEASE AND CHANGE FORM

Prepared For the U.S. Department of Energy, Assistant Secretary for Environmental Management
By Washington River Protection Solutions, LLC., PO Box 850, Richland, WA 99352
Contractor For U.S. Department of Energy, Office of River Protection, under Contract DE-AC27-08RV14800

TRADEMARK DISCLAIMER: Reference herein to any specific commercial product, process, or service by trade name, trademark, manufacturer, or otherwise, does not necessarily constitute or imply its endorsement, recommendation, or favoring by the United States government or any agency thereof or its contractors or subcontractors. Printed in the United States of America.

Release Stamp

DATE:
May 26, 2020
HANFORD RELEASE

1. **Doc No:** RPP-CALC-63752 **Rev.** 00

2. **Title:**
LERF Basin 41 Evaluation of Dike Stability and Erosion

3. **Project Number:** T1P226 ☐N/A

4. **Design Verification Required:** ☐Yes ☒No

5. **USQ Number:** ☒ N/A RPP-27195

6. **PrHA Number** **Rev.** ☒ N/A

Clearance Review Restriction Type: public

7. **Approvals**

Title	Name	Signature	Date
Clearance Review	Aardal, Janis D	*Aardal, Janis D*	05/26/2020
Design Authority	Wilson, Nathaniel W	*Wilson, Nathaniel W*	05/04/2020
Checker	Debban, Jeremy A	*Debban, Jeremy A*	04/09/2020
Document Control Approval	Meinecke, Kathryn R	*Meinecke, Kathryn R*	05/26/2020
Environmental Protection	Wall, Jeremy M	*Wall, Jeremy M*	04/30/2020
Originator	Dorsh, Paul M	*Dorsh, Paul M*	04/09/2020
Other Approver	McShane, Michael P	*McShane, Michael P*	05/13/2020
Responsible Engineering Manager	Huntington, Matthew R	*Huntington, Matthew R*	05/14/2020

8. **Description of Change and Justification**

Initial Release.

Design checks were performed in accordance with Sargent & Lundy ESD Quality Assurance Procedure (QAP). Because of the General Service status of the equipment, a graded approach was applied and design verification was not performed as allowed by QAP 3.5, Design Verification.

Note that Paul Dorsh is signing as Originator for Joshua Bickett and Jeremy Debban is signing as Checker for David Nielson. Joshua Bickett and David Nielson are not currently in SPF.

Note: Section 5.0, Geo-Studio is a registered trademark of GEO-SLOPE International Ltd., Calgary, Alberta, Canada.

9. **TBDs or Holds** ☒N/A

10. **Related Structures, Systems, and Components**

a. **Related Building/Facilities** ☐N/A	b. **Related Systems** ☐N/A	c. **Related Equipment ID Nos. (EIN)** ☒N/A
LERF FACILITIES	LERF	

11. **Impacted Documents – Engineering** ☒N/A

Document Number	Rev.	Title

12. **Impacted Documents (Outside SPF):**

N/A

13. **Related Documents** ☐N/A

Document Number	Rev.	Title
MT-50497	00	Liquid Effluent Retention Facility (LERF) Basin 41

14. **Distribution**

Name	Organization
Angevine, Brennan T	MISSION ANALYSIS ENGINEERING
Blaak, Whitney S	COGNIZANT SYSTEM ENGINEERING
Demiter, Scott M	ETF OPERATIONS
Foster, Jim	242-A/AW/ETF OPERATIONS
Goessmann, Glen E	ENGINEERING PROGRAMS
Greenhalgh, Aaron M	TANK FARM PROJECTS ENGINEERING
Halgren, Dale L	ETF ENGINEERING
Harris, John W	SAFETY PROGRAM SERVICES RC/P
Joslyn, Cameron C	ETF ENGINEERING
McFerran, Brandon E	242-A/AW/ETF OPERATIONS
McShane, Michael P	ENGINEERING PROGRAMS
Omberg Carro, Susan K	NUCLEAR SAFETY
Powers, Daniel J	ETF ENGINEERING
Roosendaal, Gene D	TFP PROJECT MANAGEMENT
Rutherford, Wally	ETF ENGINEERING

DOCUMENT RELEASE AND CHANGE FORM	**Doc No:** RPP-CALC-63752 **Rev.** 00

14. **Distribution**

Name	**Organization**
Sackett, Tom E	TANK FARM PROJECTS
Samoska, Jerry A	INSTRUMENT & CNTRL ENGINEERING
Shultz, Milton V	NUCLEAR SAFETY
Smith, Gregory E	TANK FARM PROJECTS ENGINEERING
Smoot, Bill R	TFP RADCON
Swanson, Brad L	242-A/AW/ETF OPERATIONS
Wall, Jeremy M	RETRVL & CLOSURE/PROJ ENV CMPL
Wilson, Nathaniel W	ETF PROJECTS ENGINEERING

RPP-CALC-63752
Revision 0

LERF Basin 41 Evaluation of Dike Stability and Erosion

Prepared by

Joshua M. Bickett
Sargent & Lundy for Washington River Protection Solutions, LLC

Date Published
April 2020

DAVID E. NIELSON
STATE OF WASHINGTON
28592
REGISTERED
PROFESSIONAL ENGINEER
5-18-2020

washington river protection solutions

Prepared for the U.S. Department of Energy
Office of River Protection

Contract No. DE-AC27-08RV14800

A-6007-231 (REV 0)

Approved for Public Release;
Further Dissemination Unlimited

RPP-CALC-63752, Rev. 0

Sargent & Lundy Engineering Services, Inc.	**CALCULATION COVER SHEET**	**Page No.** 1 of 28
		Date 4/29/2020 / **Rev. No.** 1
		Calculation No: S54413.024-C-008

Project No.	**Project Title:**	**Client:**
54413.024	LERF Basin 41	WRPS

Title:
LERF Basin 41 Evaluation of Dike Stability and Erosion

Purpose and Objective:

The purpose of this calculation is to evaluate the Liquid Effluent Retention Facility (LERF) Basin 41 for the following items:

- Global slope stability,
- Internal slope stability
- Structural stability,
- Erosion stability, and
- Piping.

Rev. No.	Total Pages		Prepared By	Checked By	PM/TL
0	28	**Print Name/ Sign:**	Joshua M. Bickett *signature on file*	David E. Nielson, P.E. *signature on file*	Paul M. Dorsh, P.E. *signature on file*
		Date:	4/9/2020	4/9/2020	4/9/2020

Revision Description (Revision Description/Affected Pages):
Initial Release

1	28	**Print Name/ Sign:**	Joshua M. Bickett	David E. Nielson, P.E.	Paul M. Dorsh, P.E.
		Date:	4/29/2020	4/29/2020	4/29/2020

Revision Description (Revision Description/Affected Pages):
Revised Pages 6, 12, 13, 20, 21 and 22 to include material piping evaluation.

RPP-CALC-63752, Rev. 0

CALCULATION REVIEW CHECKLIST

Project No.	Calculation No.	Rev. No.	Page No.
54413.024	S54413.024-C-008	1	2 of 28

Items Checked	Accept Y	Accept N	Accept N/A	Description of Resolution for Unacceptable Items
1. Cover sheets properly completed.	√			
2. Calculation sheet headers complete with calculation number, revision number, etc.	√			
3. Calculation sheet contents are legible, accurate, and complete per format.	√			
4. Listed attachments included.	√			
5. Calculation objective clearly described.	√			
6. Criteria are suitable and properly referenced to task specific documents.	√			
7. Assumptions and input data selected, described, reasonable, and attached or referenced to task documents.	√			
8. Calculation method identified and appropriate for the design activity.	√			
9. Calculation results reasonable and correctly described in results and conclusions.	√			
10. Physical property calculations generated by CAD software verified via hand calculations.			√	
11. Computer program identified with version and revision.	√			
12. Computer input/output provided or referenced and reasonable.	√			
13. Computer run traceable to calculation (file #, etc.).	√			
14. Computer input/output data and problem type within validation/verification range of use.	√			
15. Computer program validation/verification addressed.	√			
16. Computer operating system in use for calculation preparation is the same as when the software was verified on machine.	√			

Calculation Checking Method	√	Applicable Pages
1. Direct Step-by-Step Check	√	ALL
2. Reference Chart(s) or Book(s) Comparison (Append Documentation)		
3. Alternate Calculation (Append Documentation)		

Comments:

Preparer (Print Name and Sign):	Date:
Joshua M. Bickett	4/29/2020
Checker (Print Name and Sign):	**Date:**
David E. Nielson, P.E.	4/29/2020

Signatures obtained only after discrepancies are corrected and comments are resolved.

CALCULATION SHEET

Project No. 54413.024	**Calculation No.** S54413.024-C-008	**Rev.** 1	**Page No.** 3 of 28
Title: LERF Basin 41 Evaluation of Dike Stability and Erosion			
Prepared By: Joshua M. Bickett	**Date:** 4/29/2020	**Checked By:** David E. Nielson, P.E.	**Date:** 4/29/2020

TABLE OF CONTENTS

1.0 PURPOSE 6

2.0 METHODOLOGY 6
- 2.1 Critical Sections 6
- 2.2 Design Basis Soil Properties 6
- 2.3 Design Requirements 7
- 2.4 Site Classification for Seismic Design 8
- 2.5 Seismic Accelerations 8
- 2.6 Flood and Hydrodynamic Loading 8
- 2.7 Wind Loading 9
- 2.8 Surcharge Loading 9
- 2.9 Precipitation 10
- 2.10 Volcanic 10
- 2.11 Global Slope Stability Analysis 10
- 2.12 Internal Slope Stability Analysis 11
- 2.13 Structural Stability 12
- 2.14 Erosion Stability 12
- 2.15 Piping 12
- 2.16 Acceptance Criteria 13

3.0 DESIGN INPUTS 13

4.0 ASSUMPTIONS 14

5.0 COMPUTER SOFTWARE 14

6.0 CALCULATIONS 14
- 6.1 Critical Sections 14
- 6.2 Design Basis Soil Parameters 16
- 6.3 Site Class 17
- 6.4 Seismic Accelerations 17
- 6.5 Surcharge Loading 17
- 6.6 Global Slope Stability Analysis 17
- 6.7 Internal Slope Stability Analysis 19
- 6.8 Structural Stability 19
- 6.9 Erosion Stability 20
- 6.10 Piping 20

7.0 CONCLUSIONS 21

8.0 REFERENCES 22

CALCULATION SHEET

Project No. 54413.024	**Calculation No.** S54413.024-C-008	**Rev.** 1	**Page No.** 4 of 28
Title: LERF Basin 41 Evaluation of Dike Stability and Erosion			
Prepared By: Joshua M. Bickett	**Date:** 4/29/2020	**Checked By:** David E. Nielson, P.E.	**Date:** 4/29/2020

Attachments

Attachment 1
Slope/W Input/Output Results 23

Attachment 2
Slope/W Audit Trail 27

Figures

Figure 6-1. Critical Global Stability Analysis Section Location 15

Tables

Table 6-1. Global Slope Stability Analysis Results 18

CALCULATION SHEET

Project No. 54413.024	**Calculation No.** S54413.024-C-008	**Rev.** 1	**Page No.** 5 of 28
Title: LERF Basin 41 Evaluation of Dike Stability and Erosion			
Prepared By: Joshua M. Bickett	**Date:** 4/29/2020	**Checked By:** David E. Nielson, P.E.	**Date:** 4/29/2020

Acronyms

DOE	Department of Energy
FDC	Flood Design Category
FS	Factor of Safety or Safety Factor
LERF	Liquid Effluent Retention Facility
MCE	Maximum Considered Earthquake
NAD	North American Datum
NDC	Natural Phenomena Design Category
NPH	Natural Phenomena Hazard
PDC	Precipitation Design Category
PGA	Peak Ground Acceleration
SCRD	Supplemented Contractor Requirements Document
SDC	Seismic Design Category
SSC	Structures, Systems and Components
TOC	Tank Operations Contractor
VDC	Volcanic Design Category
WDC	Wind Design Category

CALCULATION SHEET

Project No. 54413.024	**Calculation No.** S54413.024-C-008	**Rev.** 1	**Page No.** 6 of 28
Title: LERF Basin 41 Evaluation of Dike Stability and Erosion			
Prepared By: Joshua M. Bickett	**Date:** 4/29/2020	**Checked By:** David E. Nielson, P.E.	**Date:** 4/29/2020

1.0 PURPOSE

The purpose of this calculation is to evaluate the Liquid Effluent Retention Facility (LERF) Basin 41 for the following items:

- Global slope stability,
- Internal slope stability
- Structural stability,
- Erosion stability, and
- Piping.

The analyses performed herein are for the LERF Basin 41 Project adjacent to Area 200 East (and immediately adjacent to existing LERF Basins 42, 43 and 44) at the DOE Hanford Site in the State of Washington.

2.0 METHODOLOGY

2.1 Critical Sections

The critical section(s) for these analyses are determined based on the steepest terrain conditions adjacent to the development area, maximum dike heights, topographic considerations, property limitations, nearby structures (including existing basins), the soil conditions, and location of surcharge loading.

2.2 Design Basis Soil Properties

Geotechnical and Seismic Design Input identified in Section 3.0 of this analysis is reviewed to establish the design basis soil profile and soil properties. The parameters and profile documented in the Existing Design Analysis identified in Section 3.0 of this analysis for LERF Basins 42, 43, 44 are utilized for this analysis after verifying consistency with the Geotechnical and Seismic Design Input. The existing geotechnical data is supplemented with published literature values through correlation of material type or engineering judgment, where required.

The groundwater level observations provided in the Geotechnical and Seismic Design Input are utilized as the design groundwater for analysis.

2.3 Design Requirements

Current DOE requirements for both general design criteria and natural phenomena hazard (NPH) mitigation for the Hanford site are in Supplemented Contractor Requirements Document (SCRD) DOE O 420.1C and DOE STD-1020-2016.

DOE-STD-1020-2016 provides NPH design and evaluation criteria for seismic, wind, flood, precipitation, lightning, and volcanic hazards based on natural phenomena design categories (NDCs). The LERF Basin 41 Project is NDC-1. The design requirements are summarized in TFC-ENG-STD-06.

TFC-ENG-STD-06 establishes structural design loads and acceptance criteria for use in designing new Structures, Systems, and Components (SSCs), evaluating existing SSCs, evaluating anchorage effects of new and modified systems on existing SSCs, and designing additions and modifications to existing SSCs.

TFC-ENG-STD-06 fulfills three objectives:

- Integration of the Natural Phenomena Hazards (NPH) requirements with U.S. Department of Energy (DOE) and other requirements governing design and evaluation of SSCs,
- Limit requirements and NPH criteria to those applicable to the DOE Hanford Site Tank Operations Contractor (TOC), which are applied to LERF Basin 41, and
- Stipulate the appropriate levels of depth, rigor, and thoroughness in complying with the requirements.

SSCs are designed and evaluated to withstand loads associated with the operation of the facility and the effects of NPHs. DOE O 420.1C, IBC 2015 and ASCE 7-10 are used as the minimum basic design requirements for DOE facilities.

The SSCs need not be subjected simultaneously to any combination of extreme wind, seismic ground motions, volcanic ashfall, and flood. However, common cause events are to be evaluated as single events.

SSCs are categorized into the following individual NDCs (recall LERF Basin 41 is NDC-1):

- For seismic hazards, Seismic Design Categories: SDC-1
- For extreme wind hazards, including straight-line wind, tornado, and hurricane hazards, Wind Design Categories: WDC-1

- For flood hazards, including seiche, tsunami, and other flood hazards, Flood Design Categories: FDC-1
- For precipitation hazards, Precipitation Design Categories: PDC-1
- For volcanic eruption hazards, Volcanic Design Categories: VDC-1.

2.4 Site Classification for Seismic Design

In accordance with IBC 2015, the definitions provided in Table 20.3-1 of Chapter 20 in ASCE 7-10 are utilized to establish the seismic site classification for seismic design. Per Section 2.3.2 on page 2.46 of RPP-RPT-27570, the site is considered to meet the definition of Class C. This conclusion in RPP-RPT-27570 is compared to IBC 2015 requirements to verify Class C remains valid for design on this project.

2.5 Seismic Accelerations

Per TFC-ENG-STD-06 the return period for seismic design is not specifically defined for SDC-1 but is the same as that achieved for IBC 2015 for Risk Category II, $I_P = 1.0$ (ASCE 7-10), for Limit States A, B, C, or D.

Seismic analyses include horizontal and vertical components of motion expressed as a percentage of gravity. A site-specific maximum considered earthquake (MCE) spectra and design spectra (2/3MCE) are developed in Figure 50 of RPP-RPT-27570 for the site, which are based on a 2,500-year return period. The peak ground surface acceleration (PGA) for horizontal and vertical directions are of interest in this geotechnical analysis for slope stability. The design PGA is taken as the spectral acceleration at a 100 Hz frequency from the Figure 50 in RPP-RPT-27570.

Horizontal seismic PGA can be verified from Figure 22-7 in ASCE 7-10, which is based on a similar return period as the site-specific analysis. To scale the horizontal acceleration from Class B site to Class C site, a value of 1.2 is used per Table 11.8-1 in ASCE 7-10.

After obtaining the PGA values for the site, the values are correlated appropriately for the seismic global slope stability analysis using a coefficient per Melo and Sharma (2004). A typical and industry accepted horizontal coefficient for analysis is 1/2 of the PGA. Typically, literature references recommend values between 1/4 and 3/4 of the PGA. This analysis utilizes 0.5 as the coefficient factor consistent with the industry standard.

2.6 Flood and Hydrodynamic Loading

Per TFC-ENG-STD-06 the return period for flood analysis of structures not exposed to submersion for FDC-1 is 100 years. Given that any flooding on the exterior of the LERF Basin 41 would act as a buttressing (resisting) force, flood and hydrodynamic loading are not applicable for analysis of the exterior slope. Any flood or hydrodynamic loading conditions on the exterior slope are bounded by the analysis performed for the seismic and surcharge analyses.

Hydrodynamic load due to the seismic event for the retained fluid is calculated in accordance with Eq. 4 on page 8 of USBR 2011 for use in the Structural Stability analysis check of sliding. The pressure distribution is parabolic in shape. However, the maximum calculated pressure and the base of the fluid is applied uniformly throughout the full depth of the fluid as a conservative approximation. The pressure at the bottom of the retained effluent is calculated as follows:

$p = C_p \gamma_{effluent} a h$ Equation 4, page 8, USBR 2011

Where;

p = seismic induced pressure (psf)
C_p = pressure coefficient (0.3 based on basin geometry) determined from Figure 4b in USBR 2011
$\gamma_{effluent}$ = density of retained fluid (pcf)
a = seismic acceleration as percent of gravity
h = depth of fluid retained (ft)

The seismic force P_s is conservatively approximately as the pressure, p, times the depth of the fluid, h.

2.7 Wind Loading

Per TFC-ENG-STD-06 the return period for extreme straight line wind loading analysis for WDC-1. The wind loads are defined as Exposure Category C with nominal 3-second gusts at 85 miles per hour and ultimate 3-second gusts at 110 miles per hour.

Wind loading is neglected as a design load for these analyses based on the limited projection of the LERF Basin 41 dike above grade and standard geotechnical engineering practice for embankment analysis. Any wind loads are negligible and a specific analysis is bounded by the seismic and surcharge loading analyses.

2.8 Surcharge Loading

The static loading information for temporary loads (operating equipment or traffic) are considered as 500 psf. Typical traffic surcharge loading is taken as 250 psf, thus using 500 psf is considered conservative for typical applications. The traffic loading surcharge bounds analysis for other structural environmental loading surcharge conditions such as snow, rainfall, ash, etc. In the analysis model, the surcharge loading represents an infinitely long surcharge since the model is only two-dimensional. This is conservative relative to the actual area loading condition of these items.

Surcharge loading is not combined with other intermittent loading conditions, such as seismic loading. Sustained surcharge loads contributing to the stability of the slopes are conservatively neglected for the analyses. Sustained surcharge loads contributing to the driving forces in the slope stability are not present per the design drawings; therefore, these are not required in the analysis.

2.9 Precipitation

Per TFC-ENG-STD-06 the return period for precipitation structural loading analysis for PDC-1 is 100 years. The design basis precipitation load is 1.8 inch per TFC-ENG-STD-06 and intensity of 1 inch per hour per DOC 1961.

Rainfall intensity is considered for erosion stability evaluation of the dike side slopes. Structural loading on the dike for global stability analysis is considered bounded by the surcharge load analysis and is not required to be specifically evaluated herein.

2.10 Volcanic

Per TFC-ENG-STD-06 the return period for volcanic ashfall structural load analysis for VDC-1 is 100 years. Ash loading considerations are considered bounded by the surcharge load analysis and are not required to be specifically evaluated herein.

2.11 Global Slope Stability Analysis

Interior Dike Slope

The analysis is performed utilizing the GeoStudio SLOPE/W software. Three (3) general loading cases are analyzed: (1) normal static, (2) static with surcharge loading, and (3) seismic.

The slope stability analysis methodology used in the evaluation is based on the limit equilibrium concept. The limit equilibrium concept involves calculating a factor of safety against a failure by comparing the resisting (stabilizing) forces and/or moments within the mass of the structure to driving (destabilizing) forces and/or moments. The main destabilizing factor is the self-weight of the slope mass under normal loading conditions. A number of limit equilibrium methods have been developed over the last several decades to analyze the stability of slopes. The Morgenstern-Price method is used in this calculation since it is the most numerically robust analytical tool available in the computer software.

In a global slope stability analysis, the factor of safety is evaluated along a series of surfaces located through the slope mass. These surfaces are a series of small straight lines at the bases of slices, which are each analyzed for forces to establish the overall factor of safety. The software determines the location of the critical slip surface, which has the lowest factor of safety by analyzing a large number of potential failure surfaces, typically on the order of 10,000 to 20,000, that are systematically generated. The method used to locate the critical slip surface for the basin dike wall is the entry and exit approach.

Global stability analysis verifies deep seated potential failure surfaces exist with a minimum safety factor documented in the acceptance criteria. Near surface stability (shallow failure surfaces or erosion) of the dike slopes is evaluated as part of the erosion stability analysis. The internal structural stability analyses for the interfaces between materials is evaluated as part of the internal slope stability analysis.

Rapid drawdown analysis for the interior slopes of this structure is not required given that the liner system prevents saturation of the dike from the retained effluent. Rapid drawdown analysis due to site flooding for the exterior slopes is not required given the free draining nature of the dike materials.

Exterior Dike Slope

The global stability of the exterior dike slope is evaluated using a conservative simplified approach considering the slope as an infinite slope using the same methodology discussed in Section 2.14 below. This simplified approach is appropriate given that the external dike slope is separated from the interior dike slope by a large dike crest (approximately 38 ft) and since the existing dike slope will not undergo significant modification which has proven to be stable since its construction as part of Basin 42, Basin 43 and Basin 44 work. Per the discussion in USACE 2003, page C-27, Section C-7, the infinite slope analysis method is appropriate for cohesionless soil slopes and accurately represents other analysis methods, such as circular potential failure surfaces with multiple slices (the approach used to analyze the interior dike slope).

The seismic accelerations are accounted for in the analysis by considering the pseudostatic coefficients documented in Section 2.5 of this analysis as a reduction in normal force and additional driving force. It is conservative to consider the horizontal and vertical seismic components acting simultaneously in directions parallel and normal to the slope, respectively. Thereby; the normal (resisting) force is reduced to 92 percent of normal condition (1g – 0.08g = 0.92g) and the driving force is increased by 11 percent from normal condition (1g + 0.11g = 1.11g).

Surcharge loading case is not required to be specifically analyzed since it is bounded by the normal and seismic loading casing considered.

2.12 Internal Slope Stability Analysis

Internal slope stability is evaluated to verify sloughing does not occur on the interior side slopes due to the sliding resistance of dissimilar materials. The evaluation is performed by comparing the frictional resistance between the lower most layer of geotextile and the controlling material immediately adjacent to the geotextile in the profile (soil-bentonite mix). The evaluation is used to establish the critical side slope angle (maximum steepness a slide slope can be while maintaining the minimum safety factor). The ultimate frictional resistance between a non-woven needle punched geotextile and the soil-bentonite mix layer is taken as 100 percent of the soil-bentonite friction angle (φ) per Table 2.4 on page 140 of Koerner 2012 and evaluated using the following relationship:

FS = tan(1.0φ)/tan(s) USACE 2003, page C-29, equation C-27

Where;
FS = Safety factor
s = Dike Slope

2.13 Structural Stability

Sliding stability of the basin dike is analyzed by comparison of the resisting forces to the driving forces to confirm an adequate safety factor is available in the design.

Overturning of the exterior dike is not a possible failure mechanism since the earthen dike cannot exhibit sufficient tension to act as a rigid body to overturn. The earthen dike can only exhibit compression resistance.

2.14 Erosion Stability

Erosion stability of a 3” layer thickness of 1/2” minimum particle size crushed stone (if a thicker layer is used or currently present it is more conservative – note the thickness analyzed does not enter into the numerical evaluation and the thickness is only mentioned since it is mentioned in the existing basin analyses) is evaluated in HNF-SD-LEF-TI-005, Rev 1. The analysis was performed for the existing LERF basins and determined to be stable for the applicable rainfall conditions. Utilizing a similar surfacing material for the slope surface it is considered stable based on the previous analysis and engineering judgement.

Shallow surface failures (sloughing) are evaluated by comparing the frictional resistance of the surface material (friction angle, φ) to side slope angles to establish the critical slide slope angle (maximum steepness a slide slope can be while maintaining the minimum safety factor) using the following relationship:

FS = tan(φ)/tan(s) USACE 2003, page C-29, equation C-27

Terms in the above equation are defined above.

2.15 Piping

The potential for piping of material is evaluated in accordance with USACE 1993 by comparing the potential exit gradient to the critical gradient for the dike material. A conservative seepage path is considered as only the width of the dike crest (38 ft), to demonstrate the high safety factor for this potential failure mechanism. A more detailed analysis is not required since this approach conservatively neglects the contributions of all liner systems and conservatively represents the seepage path length.

2.16 Acceptance Criteria

Acceptable global slope stability safety factors are 1.5 for normal long term static loading (USACE 2003) and 1.3 for surcharge with static loading (also temporary, construction, or infrequent conditions) (USACE 2003). For seismic loading conditions, the standard minimum safety factor typically ranges from 1.0 to 1.15 (Melo and Sharma 2004) depending on the compatibility with the horizontal seismic coefficient. For this analysis, a value of 1.1 is used for the minimum acceptable safety factor with the horizontal coefficient of 0.5.

The acceptable safety factor for structural stability, internal slope stability, and erosion stability is 1.5.

The minimum safety factor for piping is 5 (USACE 1993).

3.0 DESIGN INPUTS

Topographic Data:

Existing site topographic survey and design elevations are provided on the Project Design Drawings.

Horizontal Datum: WCS South Zone NAD83

Vertical Datum: 200E

Project Design Drawings:

H-2-838747, Sheet 1

H-2-838748, Sheet 1

H-2-838749, Sheet 1

H-2-838749, Sheet 2

H-2-838750, Sheet 1

Geotechnical and Seismic Data:

Shannon & Wilson, Inc. (1994a)

Shannon & Wilson, Inc. (1994b)

Shannon & Wilson, Inc. (1994c)

RPP-RPT-27570

Existing Design Analysis:

HNF-SD-LEF-TI-005

Design Standards:

TFC-ENG-STD-06

DOE-STD-1020-2016

DOE O 420.1C

4.0 ASSUMPTIONS

There are no assumptions that require further verification in this analysis. Engineering judgement, where used, is documented herein.

5.0 COMPUTER SOFTWARE

The slope stability analyses are performed using GeoStudio 2012 SLOPE/W program Version 8.0 (Geo-Slope International Ltd. 2014). This program has been verified and validated in accordance with Sargent & Lundy (S&L) Standard Operating Procedure (SOP 0204). The S&L program number is 03.7.747-8.0. The computer runs are performed on S&L Computer No. ZL11226. The list of controlled files for this software is included in Attachment 2 as the long form audit trail.

6.0 CALCULATIONS

6.1 Critical Sections

The approximate location of the critical section for global stability analysis is identified is shown in red on the following figure:

CALCULATION SHEET

Project No. 54413.024	**Calculation No.** S54413.024-C-008	**Rev.** 1	**Page No.** 15 of 28
Title: LERF Basin 41 Evaluation of Dike Stability and Erosion			
Prepared By: Joshua M. Bickett	**Date:** 4/29/2020	**Checked By:** David E. Nielson, P.E.	**Date:** 4/29/2020

Figure 6-1 – Critical Global Stability Analysis Section Location

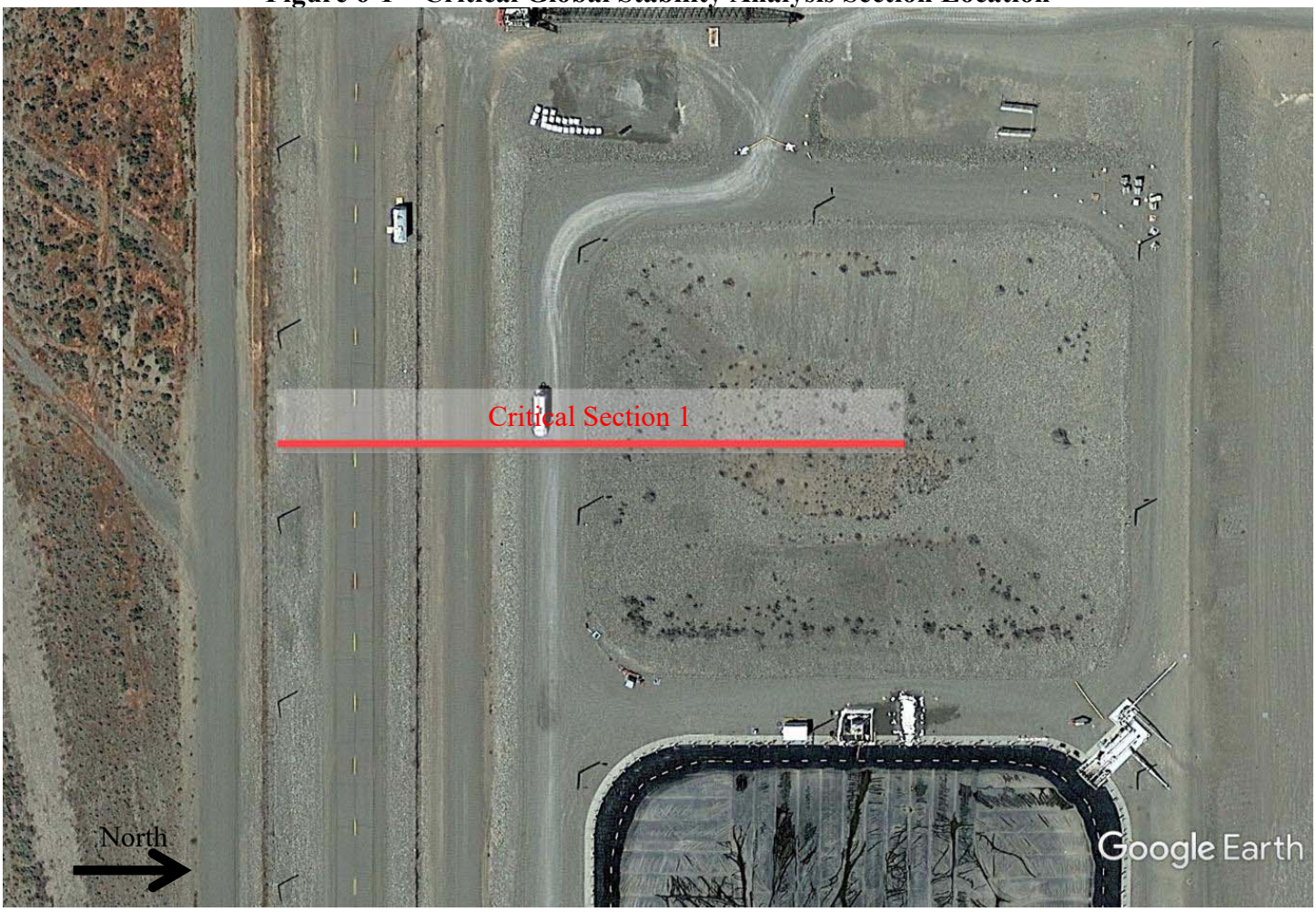

The typical bottom (toe) of the slope on the interior of the basin is near elevation 580 ft, which is the top of the gravel drainage layer. On the interior of the basin bottom the elevation varies because it slopes to drain to the sump. Near the sump pit in the northwest corner of the basin, the top of the gravel drainage layer at the toe of the slope is approximately elevation 575.5 ft. The top of the soil bentonite layer is nominally 1 ft below the liner elevation. The slope stability analysis models the bottom of the basin (top of the soil bentonite layer) at elevation 575 ft to conservatively represent the overall site condition (given the cohesionless nature of the profile the bottom of elevation of the basin does not play a significant role in the analysis because the slope approaches an infinite slope when considering the depth of failure surface to the height of the slope). The gravel drainage layer is not included in the analysis since it is only installed in the bottom of the basin. The top of the anchor wall is elevation 603.5 ft, and the dike crest is modeled as elevation 603 ft in the slope stability analysis. Prevailing grade at the critical section location on the exterior of the basin is elevation 595 ft. The interior dike slope is 3H:1V and the exterior slope is 2.25H:1V.

6.2 Design Basis Soil Parameters

Based on the review of the geotechnical and seismic design input, it is determined that the design soil profile, soil parameters and groundwater level used in the existing analysis (HNF-SD-LEF-TI-005) can be used for this analysis of LERF Basin 41. The geotechnical and seismic design input indicates that higher strength parameters are justifiable for the site; however, it is conservative to utilize the existing analysis parameters for design. The in situ subsurface material is subdivided into stratigraphic units based on constituents, structure, geotechnical engineering properties, stress history and geologic deposition.

Design Soil Profile

Dike Materials: Sand and Gravel
Moist Unit Wt. γ_{moist} = 135 pcf (HNF-SD-LEF-TI-005),
Friction Angle, φ' = 33 degrees (HNF-SD-LEF-TI-005)

Natural Site Soil: Sand and Gravel
Moist Unit Wt. γ_{moist} = 135 pcf, (Engineering Judgment)
Friction Angle, φ' = 37 degrees (Use 33 degrees) (Shannon & Wilson 1994a)

Soil-Bentonite: Sand (soil) and Bentonite
Moist Unit Wt. γ_{moist} = 100 pcf (HNF-SD-LEF-TI-005),
Friction Angle, φ' = 30 degrees (HNF-SD-LEF-TI-005)

Gravel Drainage Layer: Gravel
Moist Unit Wt. γ_{moist} = 135 pcf,(Engineering Judgment)
Friction Angle, φ' = 40 degrees (Sturm 2001, page 131, Figure 4.13)

Gravel Surface Cover: Gravel
Moist Unit Wt. γ_{moist} = 135 pcf (Engineering Judgement),
Friction Angle, φ' = 40 degrees (Sturm 2001, page 131, Figure 4.13)

Groundwater is deep at the site (approximately elevation 400 ft per Shannon & Wilson 1994a), well below the bottom of the basin. Thus, it does not affect the stability analyses. Groundwater is considered to be encountered at depths greater than 200 feet below the ground surface (included in the slope stability analyses at elevation 550 ft for modeling purposes only).

6.3 Site Class

Per RPP-RPT-27570, the harmonic average of the shear wave velocity in the upper 100 feet of the soil profile is approximately 1400 feet per second. This considers approximately 14 feet of fill with a shear wave velocity of 1000 feet per second. The natural site soil exhibits shear wave velocities higher than 1000 feet per second.

In accordance with IBC 2015, the definitions provided in Table 20.3-1 of Chapter 20 in ASCE 7-10 are utilized to establish the seismic site classification for seismic design. It is confirmed that the site meets the definition of Class C per ASCE 7-10, which is defined as a site with an average shear wave velocity between 1,200 and 2,500 feet per second.

6.4 Seismic Accelerations

Per Figure 50 of RPP-RPT-27570 at 100 Hz, the design horizontal PGA is 0.2148g (use 0.22g) and the design vertical PGA is 0.1566g (use 0.16g).

The horizontal PGA for the site in Figure 22-7 in ASCE 7-10 is approximately 0.18g, which is applicable for a site Class B. To scale the horizontal acceleration from a Class B site to a Class C site, a value of 1.2 is used per Table 11.8-1 in ASCE 7-10. Thereby, the horizontal PGA is 0.216g (0.18g*1.2 = 0.216g). This comparison shows good agreement and the use of 0.22g horizontal PGA is validated.

Using the pseudostatic slope stability analysis slope stability coefficient per Melo and Sharma (2004) of 0.5, the global slope stability analyses utilize a horizontal acceleration of 0.11g (0.22g * 0.5 = 0.11g) and a vertical acceleration of 0.08g (0.16g * 0.5 = 0.08g).

6.5 Surcharge Loading

An infinite strip (10 ft wide) with a pressure of 500 psf is applied to the crest of the dike for slope stability analyses.

6.6 Global Slope Stability Analysis

Internal Dike Slope

The detailed input/output sheets of the analysis are included Attachment 1 of this calculation. The sheets include a depiction of the critical slip surface and safety factor for each case analyzed. The input/output also include the subsurface profile parameters, stratigraphy, surcharge loading, and seismic loading where applicable. The following tables summarize the results of the computer analyses.

Table 6-1 – Global Slope Stability Analysis Results

Model Analysis No.	Analysis Case	Calculated Safety Factor	Result	Page No.
---	**Section 1**	---	---	---
01	Normal Case Interior Slope (long term condition)	1.97	OK	22
02	Normal Case + Surcharge Interior Slope (intermittent condition)	1.97	OK	23
03	Seismic Case Interior Slope (intermittent condition)	1.40	OK	24

The acceptance criteria are provided in Section 2.15 of this analysis.

Exterior Dike Slope

The static, long term condition analysis for the exterior dike slope is documented as follows (recall the minimum safety factor is 1.5):

$FS = \tan(\varphi)/\tan(s)$

Rearranging the equation to solve for s results in the following:

$s = \tan^{-1}[\tan(1.0\ \varphi)/FS]$

$s = \tan^{-1}[\tan(1.0 * 33 \text{ degrees})/1.5] = 23.41$ degrees = 2.3H:1V (use 2.25H:1V for design, given the conservative method of analysis and since overburden of surface erosion protection material is neglected).

The seismic, intermittent condition analysis for the exterior dike slope is documented as follows (recall the minimum safety factor is 1.1):

$s = \tan^{-1}[(0.92)*\tan(1.0\ \varphi)/FS/(1.11)]$

$s = \tan^{-1}[[(0.92)*\tan(1.0 * 33 \text{ degrees})/1.1/(1.11)] = 26.07$ degrees = 2.0H:1V (use 2.25H:1V for design).

Thereby, the exterior dike slope is validated for a slope of 2.25H:1V.

6.7 Internal Slope Stability Analysis

Comparing the frictional resistance between the soil bentonite mix and the lower most geotextile layer to side slope angles establishes the critical slide slope angle (maximum steepness a slide slope can be while maintaining the minimum safety factor). Recall the minimum safety factor is 1.5.
Thereby;

$FS = \tan(1.0\varphi)/\tan(s)$

Rearranging the equation to solve for s results in the following:

$s = \tan^{-1}[\tan(1.0\ \varphi)/FS]$

$s = \tan^{-1}[\tan(1.0 * 30 \text{ degrees})/1.5] = 21.1 \text{ degrees} = 2.6H{:}1V$ (use 3H:1V for design)

Thus, the slopes on the interior of the basin cannot exceed 2.6H:1V to maintain the minimum safety factor, which is not a limitation applicable to slopes within/immediately around the sump pit since these are confined with drainage gravel. Localized steeper slopes in sump area are considered stable due to the confinement.

6.8 Structural Stability

Sliding stability of the basin dike is analyzed by comparison of the resisting forces to the driving forces to confirm an adequate safety factor is available in the design.

The weight of the embankment is calculated using 125 pcf unit weight. The sliding evaluation is performed as follows:

Top (crest) width:	38 ft
Height:	8 ft = 603 ft – 595 ft)
Interior Slope:	3H:1V (design)
Exterior Slope:	2.25H:1V (conservative, actual is 3H:1V)
Base Width:	80 ft (at elevation 595 ft)
Cross Section Area:	472 sf = 0.5*8 ft * 24 ft + 38 ft *8 ft + 0.5 * 8 ft * 18 ft
Static Dike Weight:	59,000 lbs/ft = 472 sf * 125 pcf
Seismic Weight:	49,560 lbs/ft (49.5 kips) = 59,000 lbs/ft * (1g-0.16g)
Horz. Seismic Load:	12,980 lbs/ft (13.0 kips) = 59,000 lbs/ft * 0.22g
Max. Fluid Height:	6 ft = 601 ft – 595 ft
Fluid Weight:	62.4 pcf, use 65 pcf
Static Fluid Load:	1,170 lbs/ft (1.2 kips) = 0.5 * 6 ft * 6 ft * 65 pcf
Fluid Uplift Load:	0 lbs/ft (no groundwater, no saturated dike due to liner)
Seismic Fluid Load:	154.4 lbs/ft (0.2 kips) = $[C_p*\gamma_{effluent}*a*h]*h$ = 0.3 * 65pcf * 0.22g * 6ft * 6ft
Ice Load:	3,000 lbs/ft (3 kips) (HNF-SD-LEF-TI-005)

Driving Force: 17.4 k/ft = 13 k + 1.2 k + 0.2 k + 3 k
Resisting Force: 32.1 k/ft = 49.5 k * tan(33 degrees)
Safety Factor: 1.84 = 32.1 k / 17.4 k ….OK

6.9 Erosion Stability

Based on the previous analysis completed in HNF-SD-LEF-TI-005 and engineering judgment, erosion of the gravel surface material on the exterior slope of the dike during the design rainfall event of 1 inch per hour does not require numerical evaluation. A 0.5 inch minimum crushed stone size is adequate for use.

Shallow slope surface failures (sloughing erosion) of the Gravel Surface Cover material is evaluated by comparing the frictional resistance internally (or between it and the dike material) to the critical slope angle for stability while maintaining the minimum safety factor. Recall the minimum safety factor is 1.5.

Thereby;

$FS = \tan(\varphi)/\tan(s)$

Rearranging the equation to solve for s results in the following:

$s = \tan^{-1}[\tan(\varphi)/FS]$

$s = \tan^{-1}[\tan(40 \text{ degrees})/1.5] = 29.2$ degrees = 1.79H:1V (use 2.25H:1V for design with FS>1.5) …OK

Thus, the slopes on the exterior of the basin at 2.25H:1V maintain the minimum safety factor.

6.10 Piping

Per Page 4-22 of USACE 1993, the critical gradient, i_c, for sand is 1 (sand is a conservative representation of the material used for dike construction, which is sand and gravel). Considering a conservative seepage path length of 38 ft (dike crest width) and head pressure differential of 6 ft (fluid level at elevation 601 ft and prevailing grade at elevation 595 ft), the exit gradient, i_e, is 0.16 (head loss / length = 6 ft /38 ft = 0.16).

Thereby, the safety factor, FS, for piping is 6.25 ($FS = i_c / i_e = 1 / 0.16 = 6.25$), which exceeds the minimum for acceptance criterion of 5. Therefore, the dike is stable for piping considerations.

Sargent & Lundy Engineering Services, Inc.

CALCULATION SHEET

Project No. 54413.024	**Calculation No.** S54413.024-C-008	**Rev.** 1	**Page No.** 21 of 28
Title: LERF Basin 41 Evaluation of Dike Stability and Erosion			
Prepared By: Joshua M. Bickett	**Date:** 4/29/2020	**Checked By:** David E. Nielson, P.E.	**Date:** 4/29/2020

7.0 CONCLUSIONS

Refer to the Design Input section of this analysis for the design drawings validated herein.

Interior side slopes (including the soil-bentonite mix) of the basin are stable for the NDCs at 3H:1V.

Exterior side slopes of the basin are stable for the NDCs at 2.25H:1V.

Global slope stability analysis determined that the interior dike slope maintains a safety factor 1.97 for normal static condition, 1.97 for static condition with surcharge, and 1.40 for the design seismic event.

Global slope stability analysis determined that the exterior dike slope maintains a safety factor of approximately 1.5 for normal static condition and exceeding 1.1 for the design seismic event. The surcharge load case maintains an adequate safety factor by inspection and numerical analysis is not required.

Structural stability is validated by sliding check and demonstrating a safety factor of 1.84. Overturning is not a plausible mechanism of failure and does not require a numerical evaluation.

Crushed stone surfacing material with minimum particle size of 0.5 inch is stable for use on the exterior slope for erosion protection.

The dike is stable for piping considerations by exhibiting a safety factor of at least 6.25.

Per the analysis contained herein, the dike will withstand the stress of the pressure exerted by the types and amounts of wastes to be placed in the impoundment; and will not fail due to scouring or piping, without dependence on any liner system included in the surface impoundment construction.

8.0 REFERENCES

ASCE 7-10, "Minimum Design Loads for Buildings and Other Structures".

DOE-STD-1020-2016, "Natural Phenomena Hazards Analysis and Design Criteria for DOE Facilities."

DOE O 420.1C, "Facility Safety."

Geo-Slope International Ltd. (2014) "SLOPE/W V. 8.0 for Windows 7".

HNF-SD-LEF-TI-005, Rev. 1, Calculations for Liquid Effluent Retention Facility Part B Permit Application, August 22, 1997.

International Code Council (IBC 2015), 2015 International Building Code.

Koerner, R. (2012), "Designing with Geosynthetics", Xlibris, 6th Ed. Vol. 1.

Melo, C. and Sharma, S. (2004), "Seismic Coefficients for Pseudostatic Slope Analysis", 13th World Conference on Earthquake Engineering, Vancouver, B.C., Canada, August 1-6, 2004, Paper No. 369.

RPP-RPT-27570, Rev. 0, Development of PC2 Surface Spectra for Double-Shell Tank Facilities, DOE Hanford Site in Washington State, February 2, 2006.

Shannon & Wilson, Inc. (1994a) Geotechnical Investigation KEH W236A, Multi-Function Wast Tank Facility – Hanford Site Richland, Washington, Volume 1, January 1994.

Shannon & Wilson, Inc. (1994b), Draft Geotechnical Investigation KEH W-236A, Multi-Function Waste Tank Facility 200 West Area Addition Richland, Washington, March 1994.

Shannon & Wilson, Inc. (1994c), Final Report of Geotechnical Studies; ICF KH Project W 320, Tank 241-C-106 Waste Retrieval and Sluicing System; 200 East Area, Hanford Site, April 14, 1994.

Sturm, T. (2001), "Open Channel Hydraulics", McGraw-Hill.

TFC-ENG-STD-06, Rev D-2, Design Load for Tank Farm Facilities, July 31, 2019.

US Army Corps of Engineers (USACE 1993), "Seepage Analysis and Control for Dams", Engineering Manual, EM 1110-2-1901, April 30, 1993.

US Army Corps of Engineers (USACE 2003), "Slope Stability", Engineering Manual, EM 1110-2-1902, October 31, 2003.

U.S. Bureau of Reclamation (USBR 2011), "Seismic Induced Loads on Spillway Gates, Phase I – Literature Review", Report No. DSO-11-06, September 2011.

U.S. Department of Commerce (DOC 1961), Rainfall Frequency Atlas of the United States for Durations of 30 Minutes to 24 hours and Return Periods from 1 to 100 years, Technical Paper No. 40, May 1961.

CALCULATION SHEET

Project No. 54413.024	**Calculation No.** S54413.024-C-008	**Rev.** 1	**Page No.** 23 of 28
Title: LERF Basin 41 Evaluation of Dike Stability and Erosion			
Prepared By: Joshua M. Bickett	**Date:** 4/29/2020	**Checked By:** David E. Nielson, P.E.	**Date:** 4/29/2020

ATTACHMENT 1
SLOPE/W INPUT/OUTPUT RESULTS

CALCULATION SHEET

Project No. 54413.024	**Calculation No.** S54413.024-C-008	**Rev.** 1	**Page No.** 24 of 28
Title: LERF Basin 41 Evaluation of Dike Stability and Erosion			
Prepared By: Joshua M. Bickett	**Date:** 4/29/2020	**Checked By:** David E. Nielson, P.E.	**Date:** 4/29/2020

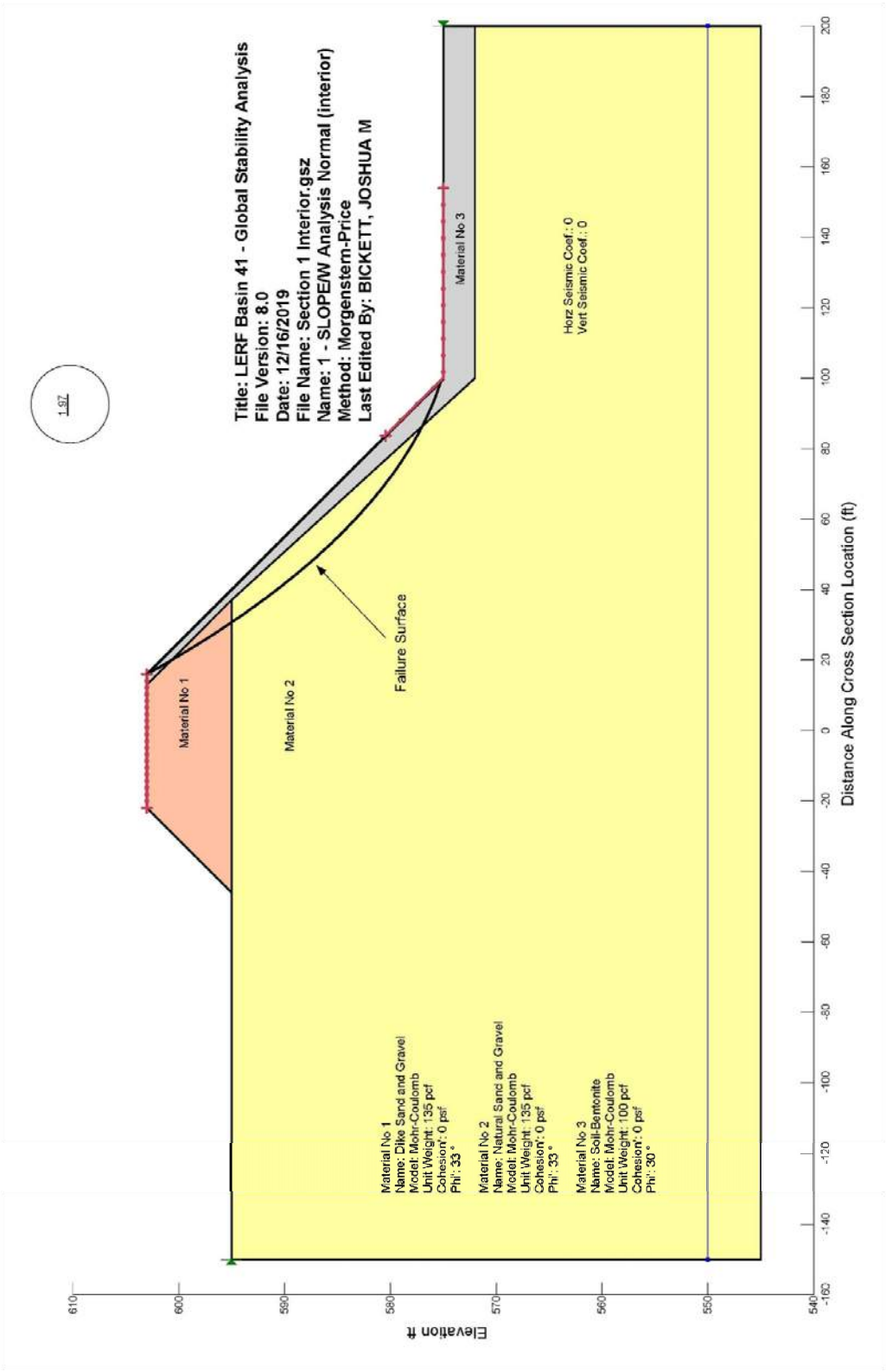

CALCULATION SHEET

Project No. 54413.024	**Calculation No.** S54413.024-C-008	**Rev.** 1	**Page No.** 25 of 28
Title: LERF Basin 41 Evaluation of Dike Stability and Erosion			
Prepared By: Joshua M. Bickett	**Date:** 4/29/2020	**Checked By:** David E. Nielson, P.E.	**Date:** 4/29/2020

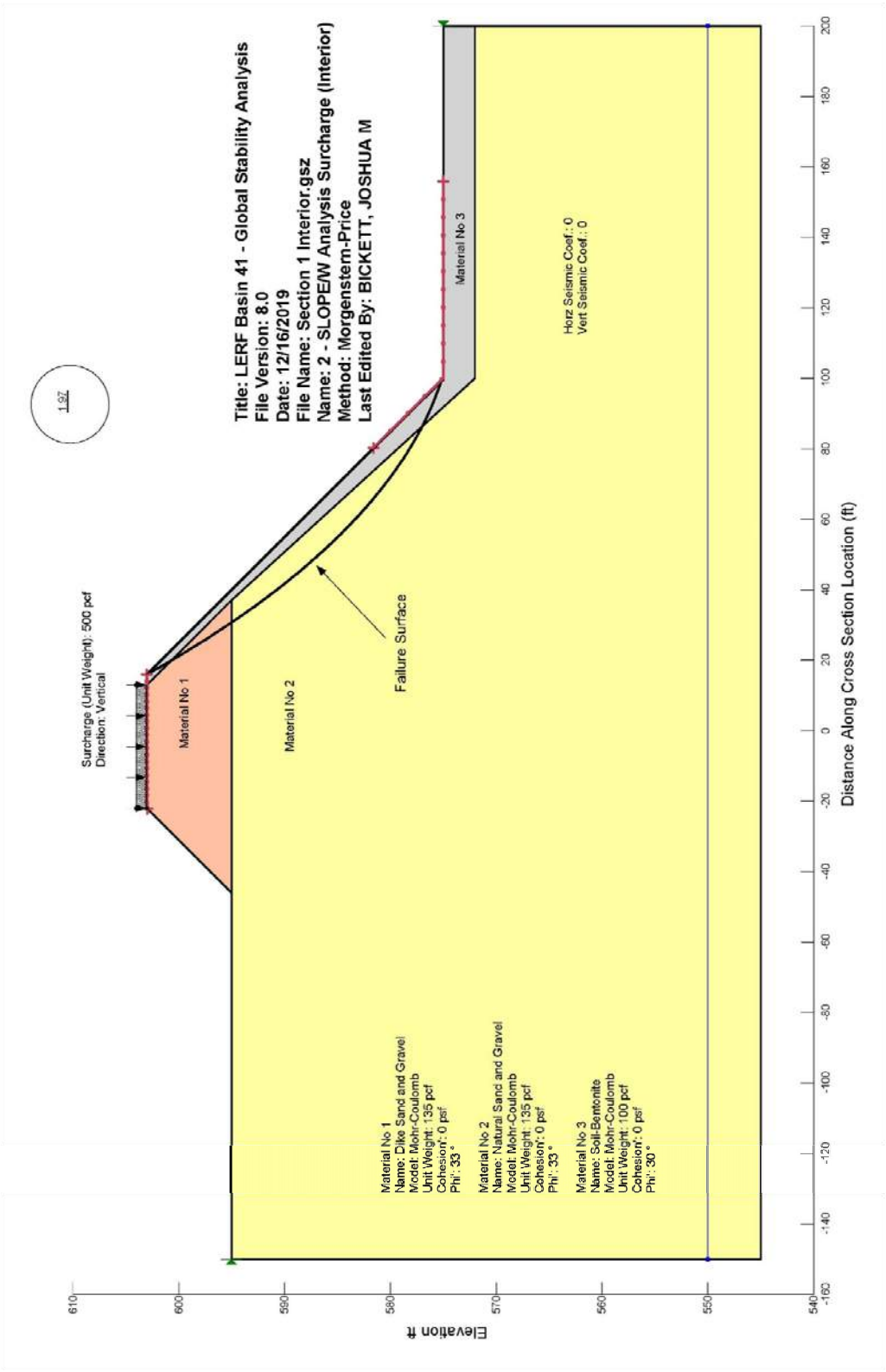

CALCULATION SHEET

Project No. 54413.024	**Calculation No.** S54413.024-C-008	**Rev.** 1	**Page No.** 26 of 28
Title: LERF Basin 41 Evaluation of Dike Stability and Erosion			
Prepared By: Joshua M. Bickett	**Date:** 4/29/2020	**Checked By:** David E. Nielson, P.E.	**Date:** 4/29/2020

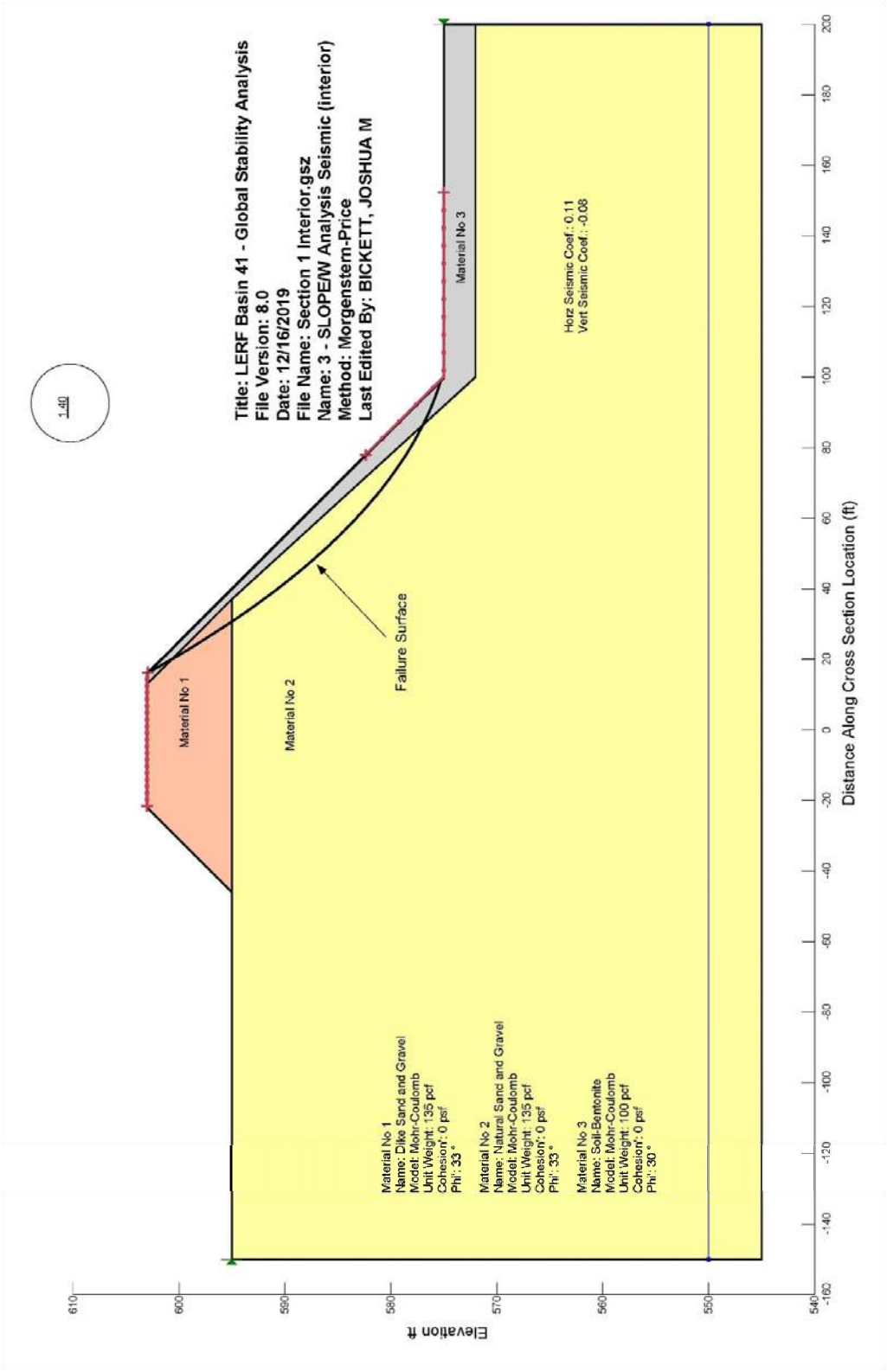

CALCULATION SHEET

Project No. 54413.024	**Calculation No.** S54413.024-C-008	**Rev.** 1	**Page No.** 27 of 28
Title: LERF Basin 41 Evaluation of Dike Stability and Erosion			
Prepared By: Joshua M. Bickett	**Date:** 4/29/2020	**Checked By:** David E. Nielson, P.E.	**Date:** 4/29/2020

ATTACHMENT 2
SLOPE/W AUDIT TRAIL

CALCULATION SHEET

Project No. 54413.024	**Calculation No.** S54413.024-C-008	**Rev.** 1	**Page No.** 28 of 28
Title: LERF Basin 41 Evaluation of Dike Stability and Erosion			
Prepared By: Joshua M. Bickett	**Date:** 4/29/2020	**Checked By:** David E. Nielson, P.E.	**Date:** 4/29/2020

Controlled File Detail - SLOPE/W (S&L Program No. 03.7.747-8.0)
Type: 2 Status: C Effective Date: 01-31-2018
Executed 12-16-2019 10:45

Controlled File Path: \\SNLVS5\SYS3\OPS$\SLO74780\Bin\

File Size Date/Time Stamp File Name
========== ========== ==========

67424 11-29-2012 17:12 cm2lapack_42.dll
174944 11-29-2012 17:12 cm2math1_42.dll
123752 11-29-2012 17:12 cm2meshtools1d_42.dll
127848 11-29-2012 17:12 cm2meshtools2d_42.dll
309096 11-29-2012 17:12 cm2meshtools_42.dll
21336 11-29-2012 17:12 cm2misc_42.dll
421728 11-29-2012 17:12 cm2quadmesh_42.dll
276320 11-29-2012 17:12 cm2triamesh_42.dll
132728 11-29-2012 17:38 Ctran1.dll
182904 11-29-2012 17:38 Ctran3.dll
279160 11-29-2012 17:35 CtranSolver.dll
1453432 11-29-2012 17:12 FNP_ACT_Installer.dll
270200 11-29-2012 17:12 FnpCommsSoap.dll
59512 11-29-2012 17:36 GeoCmd.exe
2036856 11-29-2012 17:38 GeoLicense.exe
4691064 11-29-2012 17:38 GeoLicense_libFNP.dll
751136 11-29-2012 17:37 GeoStudio.chm
1649784 11-29-2012 17:38 GeoStudio.exe
2951288 11-29-2012 17:37 GsDlg.dll
1225848 11-29-2012 17:33 GsDoc.dll
4553848 11-29-2012 17:33 GSI.dll
4691064 11-29-2012 17:33 GSI_libFNP.dll
2842744 11-29-2012 17:35 GSIDB.dll
3428984 11-29-2012 17:35 GSILIB.dll
4857464 11-29-2012 17:36 GSRes.All.1033.dll
4771960 11-29-2012 17:36 GSRes.All.2052.dll
265336 11-29-2012 17:32 GSRes.Core.1033.dll
276088 11-29-2012 17:32 GSRes.Core.2052.dll
2912888 11-29-2012 17:33 gsv6.dll
2995832 11-29-2012 17:33 gsv7.dll
841336 11-29-2012 17:36 GsView.dll
434176 11-29-2012 17:12 GSW32.EXE
253952 11-29-2012 17:12 GSWAG32.DLL
167936 11-29-2012 17:12 GSWDLL32.DLL
736160 11-29-2012 17:12 libiomp5md.dll
1683456 11-29-2012 17:12 Ltclr13n.dll
255488 11-29-2012 17:12 Ltdis13n.dll
205312 11-29-2012 17:12 Ltefx13n.dll
136704 11-29-2012 17:12 Ltfil13n.dll
310272 11-29-2012 17:12 Ltimg13n.dll
416768 11-29-2012 17:12 Ltkrn13n.dll
4342088 11-29-2012 17:12 mfc100.dll
13866496 11-29-2012 17:12 mkl_custom.dll
173688 11-29-2012 17:35 MNGSRV.dll
421200 11-29-2012 17:12 msvcp100.dll
770384 11-29-2012 17:12 msvcr100.dll
724088 11-29-2012 17:33 OC.dll
193144 11-29-2012 17:38 Quake1.dll
137336 11-29-2012 17:38 Quake3.dll
466552 11-29-2012 17:35 QuakeSolver.dll
133752 11-29-2012 17:38 Seep1.dll
133752 11-29-2012 17:38 Seep3.dll
291960 11-29-2012 17:35 SeepSolver.dll
131192 11-29-2012 17:38 Sigma1.dll
136312 11-29-2012 17:38 Sigma3.dll
408184 11-29-2012 17:35 SigmaSolver.dll
357496 11-29-2012 17:38 Slope1.dll
232056 11-29-2012 17:38 Slope3.dll
415352 11-29-2012 17:35 SlopeSolver.dll
83064 11-29-2012 17:36 SolveServer.exe
132728 11-29-2012 17:38 Temp1.dll
137336 11-29-2012 17:38 Temp3.dll
205432 11-29-2012 17:35 TempSolver.dll
133752 11-29-2012 17:38 Vadose1.dll
137336 11-29-2012 17:38 Vadose3.dll
300664 11-29-2012 17:35 VadoseSolver.dll
51024 11-29-2012 17:12 vcomp100.dll

DOCUMENT RELEASE AND CHANGE FORM

Prepared For the U.S. Department of Energy, Assistant Secretary for Environmental Management
By Washington River Protection Solutions, LLC., PO Box 850, Richland, WA 99352
Contractor For U.S. Department of Energy, Office of River Protection, under Contract DE-AC27-08RV14800

TRADEMARK DISCLAIMER: Reference herein to any specific commercial product, process, or service by trade name, trademark, manufacturer, or otherwise, does not necessarily constitute or imply its endorsement, recommendation, or favoring by the United States government or any agency thereof or its contractors or subcontractors. Printed in the United States of America.

Release Stamp

DATE: May 26,2020

HANFORD RELEASE

1. **Doc No:** RPP-CALC-63755 **Rev.** 00

2. **Title:**
LERF Basin 41 Travel Time for Leachate

3. **Project Number:** T1P226 ☐N/A

4. **Design Verification Required:** ☐Yes ☒No

5. **USQ Number:** ☒ N/A RPP-27195

6. **PrHA Number** **Rev.** ☒ N/A

Clearance Review Restriction Type: public

7. **Approvals**

Title	Name	Signature	Date
Clearance Review	Raymer, Julia R	*Raymer, Julia R*	05/26/2020
Design Authority	Wilson, Nathaniel W	*Wilson, Nathaniel W*	04/29/2020
Checker	Debban, Jeremy A	*Debban, Jeremy A*	04/10/2020
Document Control Approval	Meinecke, Kathryn R	*Meinecke, Kathryn R*	05/26/2020
Environmental Protection	Wall, Jeremy M	*Wall, Jeremy M*	04/29/2020
Originator	Dorsh, Paul M	*Dorsh, Paul M*	04/10/2020
Other Approver	McShane, Michael P	*McShane, Michael P*	05/13/2020
Responsible Engineering Manager	Huntington, Matthew R	*Huntington, Matthew R*	05/14/2020

8. **Description of Change and Justification**

Initial Release.

Design checks were performed in accordance with Sargent & Lundy ESD Quality Assurance Procedure (QAP). Because of the General Service status of the equipment, a graded approach was applied and design verification was not performed as allowed by QAP 3.5, Design Verification.

Note that Paul Dorsh is signing as Originator for G. Taylor Grant and Jeremy Debban is signing as Checker for Darrel J. Packard who are not currently in SPF.

9. **TBDs or Holds** ☒N/A

10. **Related Structures, Systems, and Components**

a. **Related Building/Facilities** ☐N/A	b. **Related Systems** ☐N/A	c. **Related Equipment ID Nos. (EIN)** ☒N/A
LERF FACILITIES	LERF	

11. **Impacted Documents – Engineering** ☒N/A

Document Number	Rev.	Title

12. **Impacted Documents (Outside SPF):**

N/A

13. **Related Documents** ☐N/A

Document Number	Rev.	Title
MT-50497	00	Liquid Effluent Retention Facility (LERF) Basin 41

14. **Distribution**

Name	Organization
Angevine, Brennan T	MISSION ANALYSIS ENGINEERING
Blaak, Whitney S	COGNIZANT SYSTEM ENGINEERING
Demiter, Scott M	ETF OPERATIONS
Foster, Jim	242-A/AW/ETF OPERATIONS
Goessmann, Glen E	ENGINEERING PROGRAMS
Greenhalgh, Aaron M	TANK FARM PROJECTS ENGINEERING
Halgren, Dale L	ETF ENGINEERING
Harris, John W	SAFETY PROGRAM SERVICES RC/P
Joslyn, Cameron C	ETF ENGINEERING
McFerran, Brandon E	242-A/AW/ETF OPERATIONS
McShane, Michael P	ENGINEERING PROGRAMS
Omberg Carro, Susan K	NUCLEAR SAFETY
Powers, Daniel J	ETF ENGINEERING
Roosendaal, Gene D	TFP PROJECT MANAGEMENT
Rutherford, Wally	ETF ENGINEERING
Sackett, Tom E	TANK FARM PROJECTS

DOCUMENT RELEASE AND CHANGE FORM	**Doc No:** RPP-CALC-63755 **Rev.** 00

14. **Distribution**

Name	**Organization**
Samoska, Jerry A	INSTRUMENT & CNTRL ENGINEERING
Shultz, Milton V	NUCLEAR SAFETY
Smith, Gregory E	TANK FARM PROJECTS ENGINEERING
Smoot, Bill R	TFP RADCON
Swanson, Brad L	242-A/AW/ETF OPERATIONS
Wall, Jeremy M	RETRVL & CLOSURE/PROJ ENV CMPL
Wilson, Nathaniel W	ETF PROJECTS ENGINEERING

RPP-CALC-63755
Revision 0

LERF Basin 41 Travel Time for Leachate

Prepared by

G. T. Grant
Sargent & Lundy for Washington River Protection Solutions, LLC

Date Published
April 2020

washington river protection solutions

DAVID E. NIELSON
STATE OF WASHINGTON
28592
REGISTERED
PROFESSIONAL ENGINEER

5-18-2020

Prepared for the U.S. Department of Energy
Office of River Protection

Contract No. DE-AC27-08RV14800

A-6007-231 (REV 0)

Approved for Public Release;
Further Dissemination Unlimited

RPP-CALC-63755, Rev. 0

Sargent & Lundy Engineering Services, Inc.	**CALCULATION COVER SHEET**	**Page No.** 1 of 14	
		Date 04/07/2020	**Rev. No.** 0
		Calculation No: S54413.024-C-011	

Project No.	**Project Title:**	**Client:**
S54413.024	LERF Basin 41 Design	Washington River Protection Solutions

Title:

LERF Basin 41 Travel Time for Leachate

Purpose and Objective:

The purpose of this calculation is to establish that the leachate collection and removal system will meet the EPAs requirement that a leak be detected "at the earliest practicable time."

Rev. No.	Total Pages		Prepared By	Checked By	PM/TL
0	14	**Print Name/ Sign:**	G. Taylor Grant	Darrel J. Packard	Paul M. Dorsh, P.E.
		Date:	04/07/2020	4/9/2020	4/9/2020

Revision Description (Revision Description/Affected Pages):

		Print Name/ Sign:			
		Date:			

Revision Description (Revision Description/Affected Pages):

RPP-CALC-63755, Rev. 0

Sargent & Lundy Engineering Services, Inc.

CALCULATION REVIEW CHECKLIST

Project No.	Calculation No.	Rev. No.	Page No.
S54413.024	S54413.024-C-011	0	2 of 14

Items Checked	Accept Y	Accept N	Accept N/A	Description of Resolution for Unacceptable Items
1. Cover sheets properly completed.	√			
2. Calculation sheet headers complete with calculation number, revision number, etc.	√			
3. Calculation sheet contents are legible, accurate, and complete per format.	√			
4. Listed attachments included.	√			
5. Calculation objective clearly described.	√			
6. Criteria are suitable and properly referenced to task specific documents.	√			
7. Assumptions and input data selected, described, reasonable, and attached or referenced to task documents.	√			
8. Calculation method identified and appropriate for the design activity.	√			
9. Calculation results reasonable and correctly described in results and conclusions.	√			
10. Physical property calculations generated by CAD software verified via hand calculations.			√	
11. Computer program identified with version and revision.			√	
12. Computer input/output provided or referenced and reasonable.			√	
13. Computer run traceable to calculation (file #, etc.).			√	
14. Computer input/output data and problem type within validation/verification range of use.			√	
15. Computer program validation/verification addressed.			√	
16. Computer operating system in use for calculation preparation is the same as when the software was verified on machine.			√	

Calculation Checking Method	√	Applicable Pages
1. Direct Step-by-Step Check	√	
2. Reference Chart(s) or Book(s) Comparison (Append Documentation)		
3. Alternate Calculation (Append Documentation)		

Comments:

Preparer (Print Name and Sign):	Date:
G. Taylor Grant	4/7/2020
Checker (Print Name and Sign):	**Date:**
Darrel Packard	4/9/2020

CALCULATION SHEET

Project No. S54413.024	**Calculation No.** S54413.024-C-011	**Rev.** 0	**Page No.** 3 of 14
Title: LERF Basin 41 Travel Time for Leachate			
Prepared By: G. Taylor Grant	**Date:** 04/07/2020	**Checked By:** Darrel J. Packard	**Date:** 04/09/2020

TABLE OF CONTENTS

1.0 PURPOSE 4
2.0 METHODOLOGY 4
3.0 DESIGN INPUTS 4
3.1 Gravel Drainage Layer Hydraulic Conductivity 4
3.2 Basin Bottom Slope 4
4.0 ASSUMPTIONS 5
5.0 COMPUTER SOFTWARE 5
6.0 RESULTS 5
7.0 REFERENCES 5
8.0 CALCULATIONS 5
8.1 Basin Bottom Slope 5
8.2 Gravel Drainage Layer Hydraulic Conductivity 5

Attachments

ATTACHMENT – 1 – H-2-838749, SHEET 1, REV. 0, LERF BASIN 41 CIVIL SECONDARY LINER

ATTACHMENT – 2 – EPA/530-SW-91-088, ENVIRONMENTAL FACT SHEET

ATTACHMENT – 3 – WAC 173-303-650

Acronyms

DCR	Demand-to-Capacity Ratio
EPA	U.S. Environmental Protection Agency
LERF	Liquid Effluent Retention Facility
WAC	Washington Administrative Code

CALCULATION SHEET

Project No. S54413.024	**Calculation No.** S54413.024-C-011	**Rev.** 0	**Page No.** 4 of 14
Title: LERF Basin 41 Travel Time for Leachate			
Prepared By: G. Taylor Grant	**Date:** 04/07/2020	**Checked By:** Darrel J. Packard	**Date:** 04/09/2020

1.0 PURPOSE

The purpose of this calculation is to establish that the leachate collection and removal system will meet the EPAs requirement that a leak be detected "at the earliest practicable time."

2.0 METHODOLOGY

The EPA requires that a leak be detected "at the earliest practicable time" (Attachment 2, Reference 2, Page 2). The travel time for leachate will be checked to ensure that unreasonable travel time will not occur. Former proposed EPA rules would have required a leak to be detected within 24 hours.

The Washington Administrative Code WAC-173-303-650 (Attachment 3, Reference 3) subsection (2)(j)(iii) states that

"The leachate collection and removal system between the liners, and immediately above the bottom composite liner in the case of multiple leachate collection and removal systems, is also a leak detection system. This leak detection system must be capable of detecting, collecting, and removing leaks of dangerous constituents at the earliest practicable time through all areas of the top liner likely to be exposed to waste or leachate during the active life and post-closure care period. The requirements for a leak detection system in this paragraph are satisfied by installation of a system that is, at a minimum:

(A) Constructed with a bottom slope of one percent or more;

(B) Constructed of granular drainage materials with a hydraulic conductivity of 1×10^{-1} cm/sec or more and a thickness of 12 inches (30.5 cm) or more; or constructed of synthetic or geonet drainage materials with a transmissivity of 3×10^{-4} m^2/sec or more;

…."

Section (2)(j)(iii) contains five subsections (A-E), however, only subsections (2)(j)(iii)(A) and (2)(j)(iii)(B) contain the geometric and hydraulic conductivity requirements that will affect the travel time from the furthest point of the basin to the sump. Therefore, the basin shall be designed to meet the requirements set forth in subsections (2)(j)(iii)(A) and (2)(j)(iii)(B).

3.0 DESIGN INPUTS

3.1 Gravel Drainage Layer Hydraulic Conductivity

The minimum hydraulic conductivity of the gravel drainage layer shall be = k = 0.1 cm/sec.

3.2 Basin Bottom Slope

The basin bottom slope = S = 0.01 ft/ft.

CALCULATION SHEET

Project No. S54413.024	**Calculation No.** S54413.024-C-011	**Rev.** 0	**Page No.** 5 of 14
Title: LERF Basin 41 Travel Time for Leachate			
Prepared By: G. Taylor Grant	**Date:** 04/07/2020	**Checked By:** Darrel J. Packard	**Date:** 04/09/2020

4.0 ASSUMPTIONS

No assumptions have been made in this calculation.

5.0 COMPUTER SOFTWARE

No unverified computer software was used in this analysis. Calculations are checked using a handheld calculator.

6.0 RESULTS

A summary of requirements is present below:

Item	Required Value	Remarks
Basin Bottom Slope	≥1%	
Gravel Drainage Layer Hydraulic Conductivity	≥0.1 cm/sec	

7.0 REFERENCES

1) H-2-838749, Sheet 1, Rev. 0, LERF Basin 41 Civil Secondary Liner
2) EPA/530-SW-91-088, January 1992, Environmental Fact Sheet
3) Washington Administrative Code WAC 173-303-650, https://apps.leg.wa.gov/WAC/default.aspx?cite=173-303-650

8.0 CALCULATIONS

8.1 Basin Bottom Slope

The basin bottom slope = S_{actual} = 1% (Attachment 1, Reference 1).

The required basin bottom slope = $S_{required}$ = 1% (Attachment 3, Reference 3).

The actual basin bottom slope is equal to the required, therefore WAC 173-303-650 subsection (2)(j)(iii)(A) is satisfied.

8.2 Gravel Drainage Layer Hydraulic Conductivity

The hydraulic conductivity = H_{actual} = 0.1 cm/sec.

The required hydraulic conductivity = $H_{required}$ = 0.1 cm/sec.

The actual gravel drainage layer hydraulic conductivity is equal to the required, therefore WAC 173-303-650 subsection (2)(j)(iii)(B) is satisfied.

CALCULATION SHEET

Project No. S54413.024	**Calculation No.** S54413.024-C-011	**Rev.** 0	**Page No.** 6 of 14
Title: LERF Basin 41 Travel Time for Leachate			
Prepared By: G. Taylor Grant	**Date:** 04/07/2020	**Checked By:** Darrel J. Packard	**Date:** 04/09/2020

ATTACHMENT – 1 - H-2-838749, SHEET 1, REV. 0, LERF BASIN 41 CIVIL SECONDAY LINER

RPP-CALC-63755, Rev. 0

Sargent & Lundy Engineering Services, Inc.

CALCULATION SHEET

Project No.	S54413.024	**Calculation No.**	S54413.024-C-011	**Rev.**	0	**Page No.**	7 of 14
Title:	LERF Basin 41 Travel Time for Leachate						
Prepared By:	G. Taylor Grant	**Date:**	04/07/2020	**Checked By:**	Darrel J. Packard	**Date:**	04/09/2020

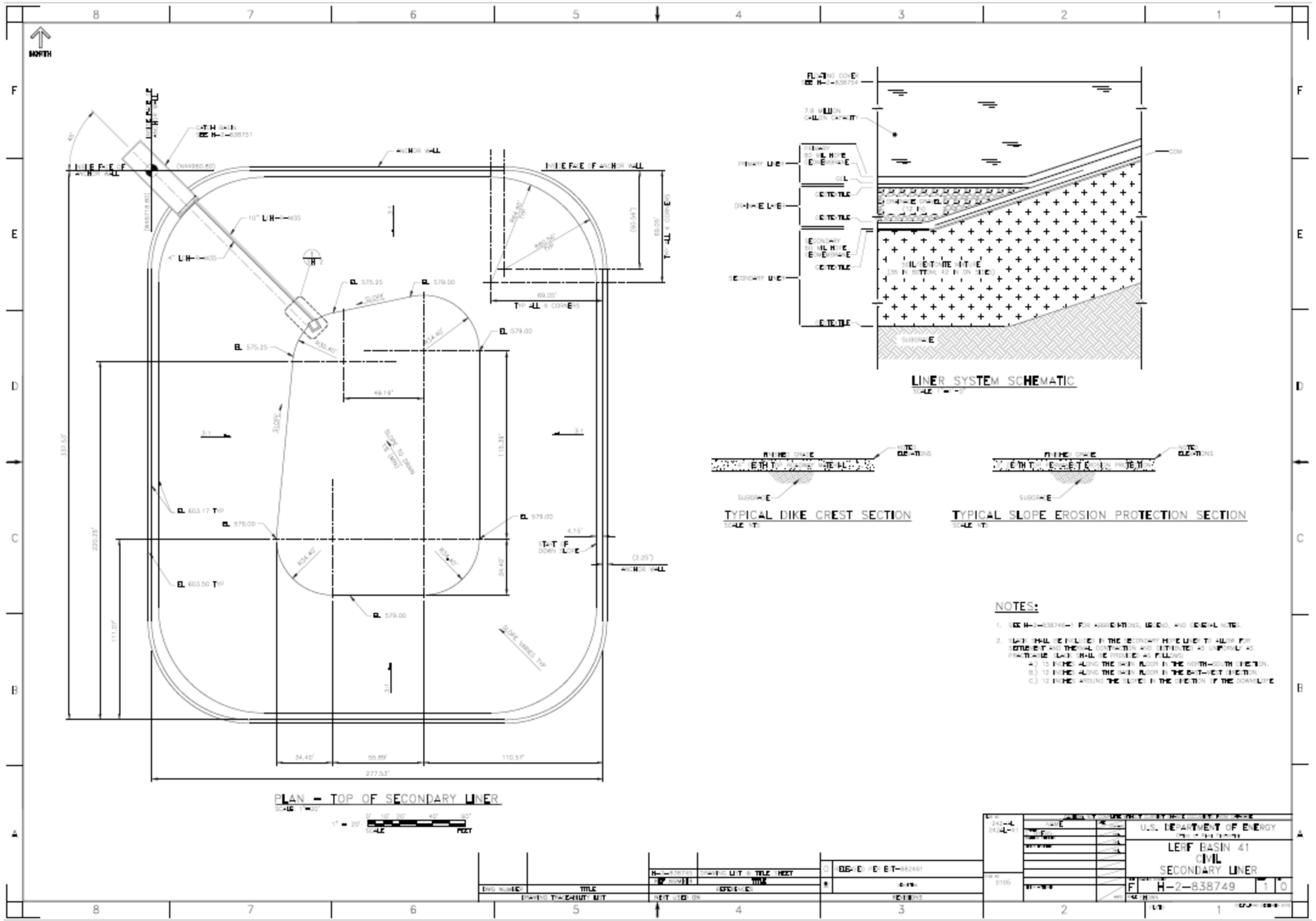

CALCULATION SHEET

Project No. S54413.024	**Calculation No.** S54413.024-C-011	**Rev.** 0	**Page No.** 8 of 14
Title: LERF Basin 41 Travel Time for Leachate			
Prepared By: G. Taylor Grant	**Date:** 04/07/2020	**Checked By:** Darrel J. Packard	**Date:** 04/09/2020

ATTACHMENT – 1 - EPA/530-SW-91-088, ENVIRONMENTAL FACT SHEET

United States Environmental Protection Agency

Office of Solid Waste and Emergency Response Washington DC 20460

EPA/530-SW-91-088 January 1992

Office of Solid Waste

EPA

Environmental Fact Sheet

EPA Releases Final Rule on Liners and Leak Detection Systems

EPA has released a final rule instituting minimum standards for double liners, leachate collection and removal systems, leak detection systems, and construction quality assurance programs at hazardous waste surface impoundments, landfills, and waste piles. These standards will decrease the risk of contaminant release to the environment.

Background

Subtitle C of the 1976 Resource Conservation and Recovery Act (RCRA) creates a comprehensive program for the safe management of hazardous waste. In 1984, Congress passed the Hazardous and Solid Waste Amendments (HSWA), which mandated even stricter standards for the regulation of hazardous waste.

In 1982 and 1985, EPA issued standards for the design and operation of hazardous waste landfills, surface impoundments, and waste piles. These rules required use of liners and leachate collection systems at hazardous waste land disposal units. In some cases, units were required to have two liners.

On March 28, 1986, EPA proposed amendments to the standards for liner system designs. On May 29, 1987, EPA proposed new requirements for leak detection systems at certain hazardous waste land disposal units. The proposed rule also created requirements for reporting and responding to leaks.

Action

This rule finalizes requirements mandated by HSWA and proposed in the March 28, 1986 and May 29, 1987 Federal Registers. The new requirements are summarized as follows:

(1) The final rule requires that new hazardous waste surface impoundments, landfills, waste piles, and lateral expansions and replacements of existing units have a double liner that includes a composite bottom consisting of a synthetic liner (e.g. rubber or plastic) over a soil/clay layer, and a leachate collection and removal system between the liners. Waste piles and landfills must also have a leachate collection and removal system above the liners.

(2) The rule adds technical design and performance standards to the leachate collection and removal system between the liners to ensure that it also functions as a leak detection system to detect leaks in the top liner at the earliest practicable time. Owners and operators may obtain a variance for an alternative system based on site-specific conditions.

(3) EPA is establishing an action leakage rate that will trigger specific response actions. Owners and operators must describe their intended response actions in a response action plan.

(4) Finally, this rule requires owners and operators to prepare and implement a construction quality assurance (CQA) program. Sound CQA has proven to be effective for improving the performance of land disposal units.

For Further Information

For further information, or to order a copy of the Federal Register notice, please contact the RCRA/Superfund Hotline, Monday through Friday, 8:30 a.m. to 4:30 p.m. EST. The national toll-free number is (800) 424-9346, or TDD (800) 553-7672 for the hearing impaired. In the Washington, D.C., area, the number is (703) 920-9810 or TDD (703) 486-3323.

CALCULATION SHEET

Project No. S54413.024	**Calculation No.** S54413.024-C-011	**Rev.** 0	**Page No.** 11 of 14
Title: LERF Basin 41 Travel Time for Leachate			
Prepared By: G. Taylor Grant	**Date:** 04/07/2020	**Checked By:** Darrel J. Packard	**Date:** 04/09/2020

ATTACHMENT – 3 – WAC 173-303-650

Sargent & Lundy Engineering Services, Inc.

CALCULATION SHEET

Project No. S54413.024	**Calculation No.** S54413.024-C-011	**Rev.** 0	**Page No.** 12 of 14
Title: LERF Basin 41 Travel Time for Leachate			
Prepared By: G. Taylor Grant	**Date:** 04/07/2020	**Checked By:** Darrel J. Packard	**Date:** 04/09/2020

WAC 173-303-650 Surface impoundments. (1) Applicability. The regulations in this section apply to owners and operators of facilities that use surface impoundments to treat, store, or dispose of dangerous waste.

(2) Design and operating requirements.

(a)(i) Any surface impoundment that is not covered by (j) of this subsection must have a liner for all portions of the impoundment (except for an existing portion of a surface impoundment). The liner must be designed, constructed, and installed to prevent any migration of wastes out of the impoundment to the adjacent subsurface soil or groundwater or surface water at any time during the active life (including the closure period) of the impoundment. The liner may be constructed of materials that may allow wastes to migrate into the liner (but not into the adjacent subsurface soil or groundwater or surface water) during the active life of the facility, provided that the impoundment is closed in accordance with subsection (6)(a)(i) of this section. For impoundments that will be closed in accordance with subsection (6)(a)(ii) of this section, the liner must be constructed of materials that can prevent wastes from migrating into the liner during the active life of the facility. The liner must be:

(A) Constructed of materials that have appropriate chemical properties and sufficient strength and thickness to prevent failure due to pressure gradients (including static head and external hydrogeologic forces), physical contact with the waste or leachate to which they are exposed, climatic conditions, the stress of installation, and the stress of daily operation;

(B) Placed upon a foundation or base capable of providing support to the liner and resistance to pressure gradients above and below the liner to prevent failure of the liner due to settlement, compression, or uplift;

(C) Installed to cover all surrounding earth likely to be in contact with the waste or leachate; and

(D) For EHW management, the owner or operator must submit an engineering report with their permit application under WAC 173-303-806(4) stating the basis for selecting the liner(s). The report must be certified by an independent, qualified registered professional engineer.

(ii) The owner or operator of a new surface impoundment installed after October 31, 1984, and in which liquid EHW is managed must:

(A) Install a double lined system which incorporates the specifications of subsection (3)(a), (b), and (c) of this section; and

(B) Must comply with either the groundwater monitoring requirements of WAC 173-303-645, or the unsaturated zone monitoring requirements of WAC 173-303-655(6).

(b) The owner or operator will be exempted from the requirements of (a) of this subsection, if the department finds, based on a demonstration by the owner or operator, that alternate design and operating practices, together with location characteristics, will prevent the migration of any dangerous constituents listed in WAC 173-303-9905, or which otherwise cause his wastes to be regulated under this chapter, into the groundwater or surface water at any future time. In deciding whether to grant an exemption, the department will consider:

(i) The nature and quantity of the wastes;

(ii) The proposed alternate design and operation;

(iii) The hydrogeologic setting of the facility, including the attenuative capacity and thickness of the liners and soils present between the impoundment and groundwater or surface water; and

Certified on 10/25/2019 WAC 173-303-650 Page 1

CALCULATION SHEET

Project No. S54413.024	**Calculation No.** S54413.024-C-011	**Rev.** 0	**Page No.** 13 of 14
Title: LERF Basin 41 Travel Time for Leachate			
Prepared By: G. Taylor Grant	**Date:** 04/07/2020	**Checked By:** Darrel J. Packard	**Date:** 04/09/2020

(iv) All other factors which would influence the quality and mobility of the leachate produced and the potential for it to migrate to groundwater or surface water.

(c) A surface impoundment must be designed, constructed, maintained, and operated to prevent overtopping resulting from normal or abnormal operations; overfilling; wind and wave action; rainfall; run-on; malfunctions of level controllers, alarms, and other equipment; and human error.

(d) A surface impoundment must be designed so that any flow of waste into the impoundment can be immediately shut off in the event of overtopping or liner failure.

(e) A surface impoundment must be designed to repel birds.

(f) A surface impoundment must have dikes that are designed, constructed, and maintained with sufficient structural integrity to prevent their failure. In ensuring structural integrity, it must not be presumed that the liner system will function without leakage during the active life of the unit.

(g) Earthen dikes must be kept free of:

(i) Perennial woody plants with root systems which could weaken its structural integrity; and

(ii) Burrowing mammals which could weaken its structural integrity or create leaks through burrows.

(h) Earthen dikes must have a protective cover, such as grass, shale or rock to minimize wind and water erosion and to preserve their structural integrity.

(i) The department will specify in the permit all design and operating practices that are necessary to ensure that the requirements of this subsection are satisfied.

(j) The owner or operator of each new surface impoundment unit on which construction commences after January 29, 1992, each lateral expansion of a surface impoundment unit on which construction commences after July 29, 1992, and each replacement of an existing surface impoundment unit that is to commence reuse after July 29, 1992, must install two or more liners and a leachate collection and removal system between such liners. "Construction commences" is as defined in WAC 173-303-040 under "existing TSD facility."

(i) The liner system must include:

(A) A top liner designed and constructed of materials (e.g., a geomembrane) to prevent the migration of dangerous constituents into such liner during the active life and post-closure care period; and

(B) A composite bottom liner, consisting of at least two components. The upper component must be designed and constructed of materials (e.g., a geomembrane) to prevent the migration of dangerous constituents into this component during the active life and post-closure care period. The lower component must be designed and constructed of materials to minimize the migration of dangerous constituents if a breach in the upper component were to occur. The lower component must be constructed of at least 3 feet (91 cm) of compacted soil material with a hydraulic conductivity of no more than 1×10^{-7} cm/sec.

(ii) The liners must comply with (a)(i)(A), (B), and (C) of this subsection.

(iii) The leachate collection and removal system between the liners, and immediately above the bottom composite liner in the case of multiple leachate collection and removal systems, is also a leak detection system. This leak detection system must be capable of detecting, collecting, and removing leaks of dangerous constituents at the

Sargent & Lundy Engineering Services, Inc.

CALCULATION SHEET

Project No. S54413.024	**Calculation No.** S54413.024-C-011	**Rev.** 0	**Page No.** 14 of 14
Title: LERF Basin 41 Travel Time for Leachate			
Prepared By: G. Taylor Grant	**Date:** 04/07/2020	**Checked By:** Darrel J. Packard	**Date:** 04/09/2020

earliest practicable time through all areas of the top liner likely to be exposed to waste or leachate during the active life and post-closure care period. The requirements for a leak detection system in this paragraph are satisfied by installation of a system that is, at a minimum:

(A) Constructed with a bottom slope of one percent or more;

(B) Constructed of granular drainage materials with a hydraulic conductivity of 1 x 10^{-1} cm/sec or more and a thickness of 12 inches (30.5 cm) or more; or constructed of synthetic or geonet drainage materials with a transmissivity of 3 x 10^{-4} m^2/sec or more;

(C) Constructed of materials that are chemically resistant to the waste managed in the surface impoundment and the leachate expected to be generated, and of sufficient strength and thickness to prevent collapse under the pressures exerted by overlying wastes and any waste cover materials or equipment used at the surface impoundment;

(D) Designed and operated to minimize clogging during the active life and post-closure care period; and

(E) Constructed with sumps and liquid removal methods (e.g., pumps) of sufficient size to collect and remove liquids from the sump and prevent liquids from backing up into the drainage layer. Each unit must have its own sump(s). The design of each sump and removal system must provide a method for measuring and recording the volume of liquids present in the sump and of liquids removed.

(iv) The owner or operator will collect and remove pumpable liquids in the sumps to minimize the head on the bottom liner.

(v) The owner or operator of a leak detection system that is not located completely above the seasonal high water table must demonstrate that the operation of the leak detection system will not be adversely affected by the presence of groundwater.

(k) The department may approve alternative design or operating practices to those specified in (j) of this subsection if the owner or operator demonstrates to the department that such design and operating practices, together with location characteristics:

(i) Will prevent the migration of any dangerous constituent into the groundwater or surface water at least as effectively as the liners and leachate collection and removal system specified in (j) of this subsection; and

(ii) Will allow detection of leaks of dangerous constituents through the top liner at least as effectively.

(l) The double liner requirement set forth in (j) of this subsection may be waived by the department for any monofill, if:

(i) The monofill contains only dangerous wastes from foundry furnace emission controls or metal casting molding sand, and such wastes do not contain constituents which would render the wastes dangerous for reasons other than the toxicity characteristic in WAC 173-303-090(8) or the toxicity criteria at WAC 173-303-100(5); and

(ii)(A) The monofill has at least one liner for which there is no evidence that such liner is leaking. For the purposes of this paragraph, the term "liner" means a liner designed, constructed, installed, and operated to prevent dangerous waste from passing into the liner at any time during the active life of the facility, or a liner designed, constructed, installed, and operated to prevent dangerous waste from migrating beyond the liner to adjacent subsurface soil, groundwater, or surface water at any time during the active life of the facility. In the case of any surface impoundment which has been exempted from the requirements of (j) of this subsection on the basis

Certified on 10/25/2019 WAC 173-303-650 Page 3

DOCUMENT RELEASE AND CHANGE FORM

Prepared For the U.S. Department of Energy, Assistant Secretary for Environmental Management
By Washington River Protection Solutions, LLC., PO Box 850, Richland, WA 99352
Contractor For U.S. Department of Energy, Office of River Protection, under Contract DE-AC27-08RV14800

TRADEMARK DISCLAIMER: Reference herein to any specific commercial product, process, or service by trade name, trademark, manufacturer, or otherwise, does not necessarily constitute or imply its endorsement, recommendation, or favoring by the United States government or any agency thereof or its contractors or subcontractors. Printed in the United States of America.

Release Stamp

DATE:
May 26,2020
HANFORD RELEASE

1. **Doc No:** RPP-CALC-63756 **Rev.** 00

2. **Title:**
LERF Basin 41 Leachate Collection and Removal System Parameters

3. **Project Number:** T1P226 ☐N/A

4. **Design Verification Required:** ☐Yes ☒No

5. **USQ Number:** ☒ N/A RPP-27195

6. **PrHA Number** **Rev.** ☒ N/A

Clearance Review Restriction Type: public

7. **Approvals**

Title	Name	Signature	Date
Clearance Review	Raymer, Julia R	*Raymer, Julia R*	05/26/2020
Design Authority	Wilson, Nathaniel W	*Wilson, Nathaniel W*	04/24/2020
Checker	Debban, Jeremy A	*Debban, Jeremy A*	04/10/2020
Document Control Approval	Alvarez, Efren	*Alvarez, Efren*	05/26/2020
Environmental Protection	Wall, Jeremy M	*Wall, Jeremy M*	04/13/2020
Originator	Dorsh, Paul M	*Dorsh, Paul M*	04/10/2020
Other Approver	McShane, Michael P	*McShane, Michael P*	05/13/2020
Responsible Engineering Manager	Huntington, Matthew R	*Huntington, Matthew R*	04/28/2020

8. **Description of Change and Justification**

Initial Release.

Design checks were performed in accordance with Sargent & Lundy ESD Quality Assurance Procedure (QAP). Because of the General Service status of the equipment, a graded approach was applied and design verification was not performed as allowed by QAP 3.5, Design Verification.

Note that Paul Dorsh is signing as Originator for G. Taylor Grant and Jeremy Debban is signing as Checker for Darrel J. Packard who are not currently in SPF.

9. **TBDs or Holds** ☒N/A

10. **Related Structures, Systems, and Components**

a. **Related Building/Facilities** ☐N/A	b. **Related Systems** ☐N/A	c. **Related Equipment ID Nos. (EIN)** ☒N/A
LERF FACILITIES	LERF	

11. **Impacted Documents – Engineering** ☒N/A

Document Number	Rev.	Title

12. **Impacted Documents (Outside SPF):**

N/A

13. **Related Documents** ☐N/A

Document Number	Rev.	Title
MT-50497	00	Liquid Effluent Retention Facility (LERF) Basin 41

14. **Distribution**

Name	Organization
Angevine, Brennan T	MISSION ANALYSIS ENGINEERING
Blaak, Whitney S	COGNIZANT SYSTEM ENGINEERING
Demiter, Scott M	ETF OPERATIONS
Foster, Jim	242-A/AW/ETF OPERATIONS
Goessmann, Glen E	ENGINEERING PROGRAMS
Greenhalgh, Aaron M	TANK FARM PROJECTS ENGINEERING
Harris, John W	SAFETY PROGRAM SERVICES RC/P
Joslyn, Cameron C	ETF ENGINEERING
McFerran, Brandon E	242-A/AW/ETF OPERATIONS
McShane, Michael P	ENGINEERING PROGRAMS
Omberg Carro, Susan K	NUCLEAR SAFETY
Powers, Daniel J	ETF ENGINEERING
Roosendaal, Gene D	TFP PROJECT MANAGEMENT
Rutherford, Wally	ETF ENGINEERING
Sackett, Tom E	TANK FARM PROJECTS
Samoska, Jerry A	INSTRUMENT & CNTRL ENGINEERING

DOCUMENT RELEASE AND CHANGE FORM	**Doc No:** RPP-CALC-63756 **Rev.** 00

14. **Distribution**

Name	**Organization**
Shultz, Milton V	NUCLEAR SAFETY
Smith, Gregory E	TANK FARM PROJECTS ENGINEERING
Smoot, Bill R	TFP RADCON
Stamper, Lavonne J	ETF ENGINEERING
Swanson, Brad L	242-A/AW/ETF OPERATIONS
Wall, Jeremy M	RETRVL & CLOSURE/PROJ ENV CMPL
Wilson, Nathaniel W	ETF PROJECTS ENGINEERING

RPP-CALC-63756
Revision 0

LERF Basin 41 Leachate Collection and Removal System Parameters

Prepared by

G. T. Grant
Sargent & Lundy for Washington River Protection Solutions, LLC

Date Published
April 2020

DAVID E. NIELSON
STATE OF WASHINGTON
28592
REGISTERED
PROFESSIONAL ENGINEER
5-18-2020

washington river protection solutions

Prepared for the U.S. Department of Energy
Office of River Protection

Contract No. DE-AC27-08RV14800

A-6007-231 (REV 0)

Approved for Public Release;
Further Dissemination Unlimited

RPP-CALC-63756, Rev. 0

Sargent & Lundy Engineering Services, Inc.	**CALCULATION COVER SHEET**	**Page No.** 1 of 24	
		Date 04/07/2020	**Rev. No.** 0
		Calculation No: S54413.024-C-012	

Project No.	**Project Title:**	**Client:**
S54413.024	LERF Basin 41 Design	Washington River Protection Solutions

Title:

LERF Basin 41 Leachate Collection and Removal System Parameters

Purpose and Objective:

The purpose of this calculation is to determine the required capacity of the gravel drainage layer in order to handle postulated leaks during operation of the basin.

Rev. No.	Total Pages		Prepared By	Checked By	PM/TL
0	24	**Print Name/ Sign:**	G. Taylor Grant	Darrel J. Packard	Paul M. Dorsh, P.E.
		Date:	04/07/2020	4/9/2020	4/9/2020

Revision Description (Revision Description/Affected Pages):

		Print Name/ Sign:			
		Date:			

Revision Description (Revision Description/Affected Pages):

RPP-CALC-63756, Rev. 0

CALCULATION REVIEW CHECKLIST

Project No.	Calculation No.	Rev. No.	Page No.
S54413.024	S54413.024-C-012	0	2 of 24

Items Checked	Accept Y	Accept N	Accept N/A	Description of Resolution for Unacceptable Items
1. Cover sheets properly completed.	√			
2. Calculation sheet headers complete with calculation number, revision number, etc.	√			
3. Calculation sheet contents are legible, accurate, and complete per format.	√			
4. Listed attachments included.	√			
5. Calculation objective clearly described.	√			
6. Criteria are suitable and properly referenced to task specific documents.	√			
7. Assumptions and input data selected, described, reasonable, and attached or referenced to task documents.	√			
8. Calculation method identified and appropriate for the design activity.	√			
9. Calculation results reasonable and correctly described in results and conclusions.	√			
10. Physical property calculations generated by CAD software verified via hand calculations.			√	
11. Computer program identified with version and revision.			√	
12. Computer input/output provided or referenced and reasonable.			√	
13. Computer run traceable to calculation (file #, etc.).			√	
14. Computer input/output data and problem type within validation/verification range of use.			√	
15. Computer program validation/verification addressed.			√	
16. Computer operating system in use for calculation preparation is the same as when the software was verified on machine.			√	

Calculation Checking Method	√	Applicable Pages
1. Direct Step-by-Step Check	√	
2. Reference Chart(s) or Book(s) Comparison (Append Documentation)		
3. Alternate Calculation (Append Documentation)		

Comments:

Preparer (Print Name and Sign):	Date:
G. Taylor Grant	4/7/2020
Checker (Print Name and Sign):	**Date:**
Darrel Packard	4/9/2020

CALCULATION SHEET

Project No. S54413.024	**Calculation No.** S54413.024-C-012	**Rev.** 0	**Page No.** 3 of 24
Title: LERF Basin 41 Leachate Collection and Removal System Parameters			
Prepared By: G. Taylor Grant	**Date:** 04/07/2020	**Checked By:** Darrel J. Packard	**Date:** 04/09/2020

TABLE OF CONTENTS

1.0 PURPOSE 5

2.0 METHODOLOGY 5

3.0 DESIGN INPUTS 5
- 3.1 Hydraulic Conductivity 5
- 3.2 Leachate Leakage Rate 5
- 3.3 Gravel Drainage Layer 6
- 3.4 Basin Floor Slope 6
- 3.5 Maximum Length Along Basin Floor 6
- 3.6 Basin Area 6
- 3.7 Gravel Drainage Layer Porosity 6

4.0 ASSUMPTIONS 7

5.0 COMPUTER SOFTWARE 7

6.0 RESULTS 7

7.0 REFERENCES 7

8.0 CALCULATIONS 8

Attachments

ATTACHMENT – 1 – H-2-838749, SHEET 1, REV. 0, LERF BASIN 41 CIVIL SECONDARY LINER

ATTACHMENT – 2 – GEOSYNTHETIC DESIGN GUIDANCE FOR HAZARDOUS WASTE LANDFILL CELLS AND SURFACE IMPOUNDMENT

ATTACHMENT – 3 – STORMWATER INFILTRATION IN HIGHWAY EMBANKMENTS – SATURATED HYDRAULIC CONDUCTIVITY ESTIMATION FOR UNCOMPACTED AND COMPACTED SOILS, TABLE 3

ATTACHMENT – 4 – WAC 173-303-650

ATTACHMENT – 5 – HANFORD SITE DANGEROUS WASTE PERMIT #WA7890008967, ADDENDUM C.5.8

CALCULATION SHEET

Project No. S54413.024	**Calculation No.** S54413.024-C-012	**Rev.** 0	**Page No.** 4 of 24
Title: LERF Basin 41 Leachate Collection and Removal System Parameters			
Prepared By: G. Taylor Grant	**Date:** 04/07/2020	**Checked By:** Darrel J. Packard	**Date:** 04/09/2020

Acronyms

GDM	Geosynthetic Drainage Material
GPM	Gallon per Minute
HDPE	High Density Polyethylene
LCR	Leachate Collection/Removal System
LERF	Liquid Effluent Retention Facility
WAC	Washington Administrative Code

CALCULATION SHEET

Project No. S54413.024	**Calculation No.** S54413.024-C-012	**Rev.** 0	**Page No.** 5 of 24
Title: LERF Basin 41 Leachate Collection and Removal System Parameters			
Prepared By: G. Taylor Grant	**Date:** 04/07/2020	**Checked By:** Darrel J. Packard	**Date:** 04/09/2020

1.0 PURPOSE

The purpose of this calculation is to determine the required capacity of the gravel drainage layer that is located between the two composite liners in order to handle postulated leaks during operation of the basin.

2.0 METHODOLOGY

A gravel drainage layer is located in between the primary (top) liner system and the secondary (bottom) liner system (see Reference 1, Attachment 1, Drawing H-2-838749 Sheet 1). This gravel drainage layer will convey any effluent that leaks through the primary (top) liner system to a pump in the northwest corner of the basin.

Design Guidance for Hazardous Waste Landfill Cells and Surface Impoundments, Page III-2 (Reference 3, Attachment 2) provides guidance for the design of leachate collection and removal systems. The provided guidance is:

- "The drainage layer should include a pipe network which is designed to efficiently collect leachate. The spacing of the pipe network should be sufficient to ensure that no more than 1 foot of leachate will collect in the LCR. The pipe and drainage layer materials should be chemically resistant to the waste and leachate. The pipe should also be strong enough to withstand expected loading."

Design Guidance for Hazardous Waste Landfill Cells and Surface Impoundments, Page III-2 (Reference 3, Attachment 2), also provides guidance for the basin bottom slope, gravel drainage layer hydraulic conductivity, and gravel drainage layer thickness, however, the required basin bottom slope, gravel drainage layer hydraulic conductivity, and gravel drainage layer thickness comes from the WAC-173-303-650 (Reference 6, Attachment 4) subsection (2)(j)(iii). These requirements are analyzed in calculation RPP-CALC-63755, Rev. 0, and the results are provided as design inputs in Sections 3.1, 3.3, and 3.4.

The gravel drainage layer will be designed to meet the above requirements. Note that the pipe strength is determined in calculation RPP-CALC-63746, Rev, 0.

3.0 DESIGN INPUTS

3.1 Hydraulic Conductivity

The minimum hydraulic conductivity of the gravel drainage layer is given in Reference 6, Reference 7, and Attachment 4.

Hydraulic conductivity = K = 0.1 cm/sec.

3.2 Leachate Leakage Rate

The leachate design leakage rate through the primary liner is 2100 gal/day/acre and is given in Reference 8, Attachment 5, Section C5.8.

Leachate leakage rate = e = 2100 gal/day/acre.

3.3 Gravel Drainage Layer

The gravel drainage layer sits on the bottom of the basin, between the primary and secondary liners. A GDM is used along the side slopes that will drain into the gravel drainage layer. The area of the gravel drainage layer on the bottom of the basin is given in drawing H-2-838749 Sheet 1 (Reference 1, Attachment 1). The bottom area of the gravel drainage layer is:

Gravel Area = [(149.79 x 55.89) – (6.20 x 6.70)] + (115.39 x 34.40) + [109.19 x ½(23.70+34.40)]

+ [49.19 x ½(24.2+34.40)] + (¾ x π x 34.40^2) + (¼ x π x 30.40^2)

= 8330.22 + 3969.42 + 3171.97 + 1441.27 + 2788.23 + 725.83 = 20427 sf

The height of the gravel drainage layer is given in References 6, 7, and Attachment 4, and is 12 inches.

The volume of the gravel drainage layer will be the Gravel Area times the height of the gravel drainage layer. This will be conservative because it will not include additional volume from the side slopes.

3.4 Basin Floor Slope

The slope of the basin floor is given in Reference 6, Reference 7, and Attachment 4.

A slope of 1% is equal to $\alpha = \tan^{-1}(1\%) = \tan^{-1}(0.01) = 0.573$ deg.

3.5 Maximum Length Along Basin Floor

The maximum length along the basin floor is from the southeast corner to the northwest corner. This length is the furthest length possible that any effluent could travel through the gravel drainage layer to the pump in the northwest corner. The maximum length = L = 179 ft (Reference 1, Attachment 1).

3.6 Basin Area

The total basin area that may contribute to effluent leakage is given in drawing H-2-838749 Sheet 1 (Reference 1, Attachment 1). This area is = Basin Area = 337.53 ft x 277.53 ft = 93674.70 sf = 2.15 acre.

3.7 Gravel Drainage Layer Porosity

The gravel drainage layer porosity is conservatively estimated based on Reference 4, Table 3, Page 45. This table provides uncompacted porosities for numerous soil samples with varying gradations. The gravel drainage layer specified for LERF Basin 41 is "WSDOT M41-10 9-03.12(5) Gravel Backfill for Drywells gradation, or an approved equal" (Reference 5, Section 31-90-52 2.1.D.1.a.ii). In general, the specified gradation has more gravel and less fines than the samples provided in Reference 4. The porosity is conservatively set near the low end of values provided in table 3 of Reference 4.

The gravel drainage layer porosity = n = 0.30.

4.0 ASSUMPTIONS

No assumptions have been made in this calculation.

5.0 COMPUTER SOFTWARE

No unverified computer software was used in this analysis. Calculations are checked using a handheld calculator.

6.0 RESULTS

A summary table of the results is below.

Item	Parameter	Requirement	Calculated
Leachate	Maximum Depth	<1 ft	0.657 ft
Pump	Pump Capacity	>3.14 gpm	3.14 gpm

The maximum height of leachate in the gravel drainage layer is less than the allowable of 1 ft. The required pump capacity will be incorporated in the pump selection.

7.0 REFERENCES

1) H-2-838749, Sheet 1, Rev. 0, LERF Basin 41 Civil Secondary Liner

2) H-2-838749, Sheet 2, Rev. 0, LERF Basin 41 Civil Secondary Liner Details

3) Richardson, Gregory N., and Robert M. Koerner, *Geosynthetic Design Guidance for Hazardous Waste Landfill Cells and Surface Impoundments*, Hazardous Waste Engineering Research Laboratory, U.S. EPA

4) Allen, Tony M., *Stormwater Infiltration in Highway Embankments – Saturated Hydraulic Conductivity Estimation for Uncompacted and Compacted Soils*, Research Report WA-RD 872.1, Washington State Department of Transportation, October 2017

5) RPP-SPEC-63632, Rev. 0, LERF Basin 41 Design Construction Specification

6) Washington Administrative Code WAC 173-303-650, https://apps.leg.wa.gov/WAC/default.aspx?cite=173-303-650

7) RPP-CALC-63755, Rev. 0 LERF Basin 41 Travel Time for Leachate

8) Hanford Site Dangerous Waste Permit #WA7890008967, Addendum C.5.8

CALCULATION SHEET

Project No. S54413.024	**Calculation No.** S54413.024-C-012	**Rev.** 0	**Page No.** 8 of 24
Title: LERF Basin 41 Leachate Collection and Removal System Parameters			
Prepared By: G. Taylor Grant	**Date:** 04/07/2020	**Checked By:** Darrel J. Packard	**Date:** 04/09/2020

8.0 CALCULATIONS

The maximum height of effluent will be determined by Equation 3.6 in Reference 3, Attachment 2, Page III-4.

The maximum height of effluent is:

$H_{max} = L/(2n) \times \{[e/K+\tan^2(\alpha)]^{0.5} - \tan(\alpha)\}$

Where:

L is defined in Section 3.5

n is defined in Section 3.7

K is defined in Section 3.1

α is defined in Section 3.4

e is the percolation velocity in cm/sec, defined in Section 3.2

e = 2100 gal/day/acre x 0.1337 cf/gal x 1 acre/43560 sf x 30.48 cm/ft x 1 day/24 hr

x 1 hr/3600 sec

x 2.15 acres

$= 4.89 \times 10^{-6}$ cm/sec

$H_{max} = 179/(2 \times 0.3) \times [4.89\times10^{-6} / 0.1 + \tan^2(0.0573^o)]^{0.5} - \tan(0.573^o) = 0.657$ ft

The height of the leachate is less than the maximum allowed of 1 foot.

Determine the minimum pump capacity to discharge effluent.

e = 2100 gal/day/acre x 2.15 acre x 1 day / 24 hr x 1 hr / 60 min = 3.14 gpm

The pump shall be capable of pumping at least 3.14 gpm.

CALCULATION SHEET

Project No. S54413.024	**Calculation No.** S54413.024-C-012	**Rev.** 0	**Page No.** 9 of 24
Title: LERF Basin 41 Leachate Collection and Removal System Parameters			
Prepared By: G. Taylor Grant	**Date:** 04/07/2020	**Checked By:** Darrel J. Packard	**Date:** 04/09/2020

ATTACHMENT – 1 - H-2-838749, SHEET 1, REV. 0, LERF BASIN 41 CIVIL SECONDARY LINER H-2-838749, SHEET 2, REV. 0, LERF BASIN 41 CIVIL SECONDARY LINER DETAILS

Sargent & Lundy Engineering Services, Inc.

CALCULATION SHEET

Project No.	S54413.024	**Calculation No.**	S54413.024-C-012	**Rev.**	0	**Page No.**	10 of 24
Title:	LERF Basin 41 Leachate Collection and Removal System Parameters						
Prepared By:	G. Taylor Grant	**Date:**	04/07/2020	**Checked By:**	Darrel J. Packard	**Date:**	04/09/2020

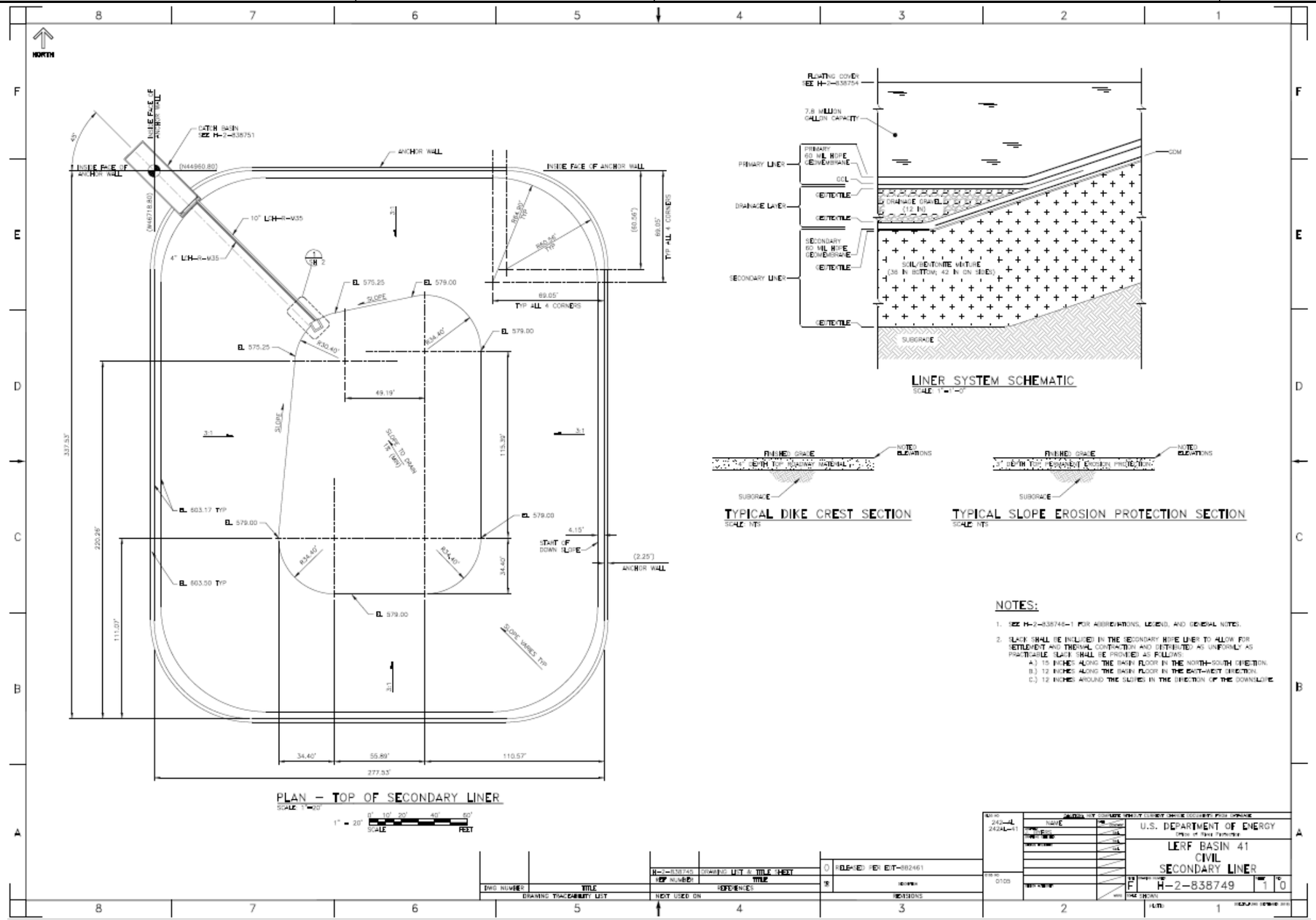

RPP-CALC-63756, Rev. 0

Sargent & Lundy Engineering Services, Inc.

CALCULATION SHEET

Project No.	S54413.024	**Calculation No.**	S54413.024-C-012	**Rev.**	0	**Page No.**	11 of 24
Title:	LERF Basin 41 Leachate Collection and Removal System Parameters						
Prepared By:	G. Taylor Grant	**Date:** 04/07/2020	**Checked By:**	Darrel J. Packard		**Date:**	04/09/2020

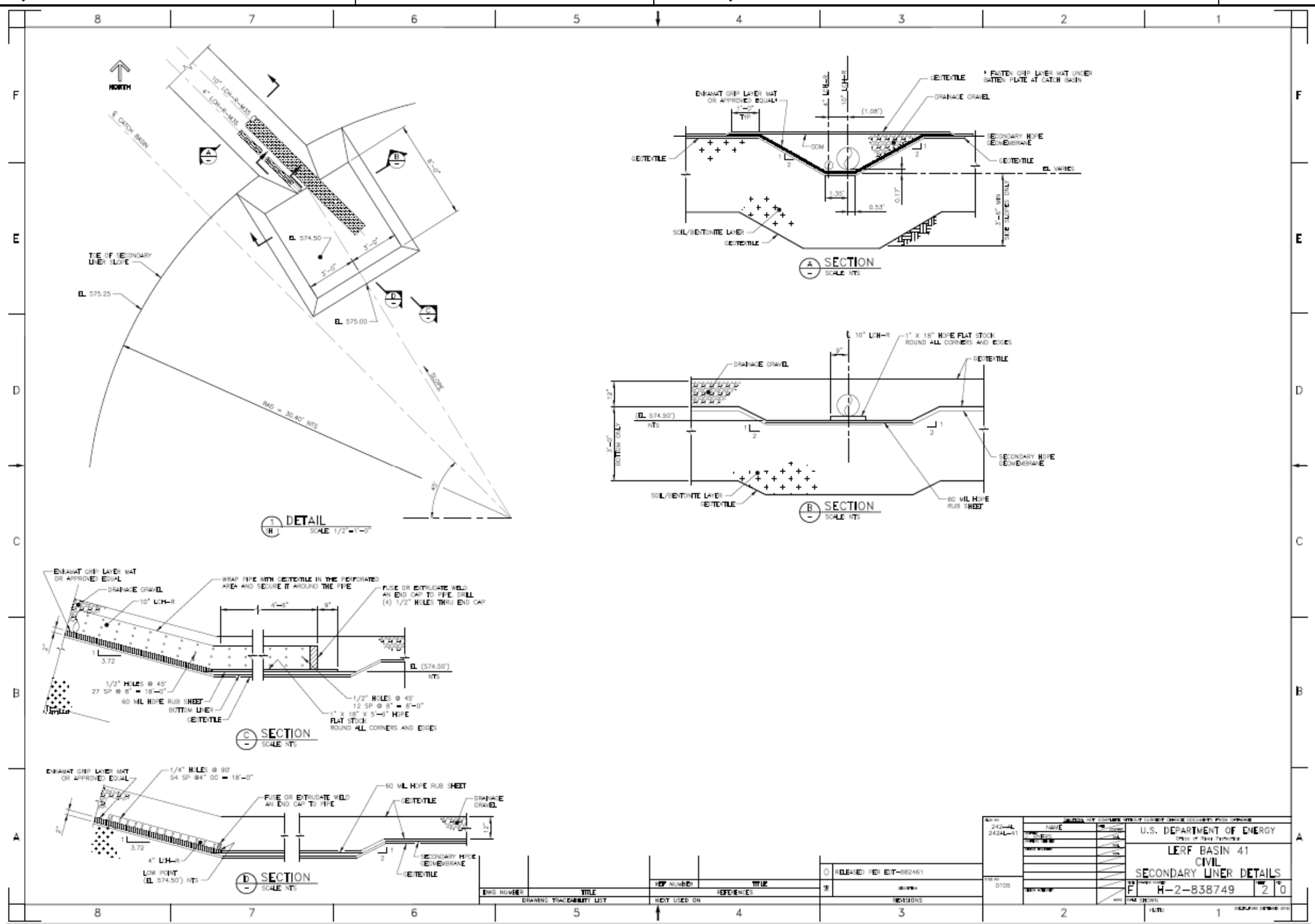

CALCULATION SHEET

Project No. S54413.024	**Calculation No.** S54413.024-C-012	**Rev.** 0	**Page No.** 12 of 24
Title: LERF Basin 41 Leachate Collection and Removal System Parameters			
Prepared By: G. Taylor Grant	**Date:** 04/07/2020	**Checked By:** Darrel J. Packard	**Date:** 04/09/2020

ATTACHMENT – 2 - GEOSYNTHETIC DESIGN GUIDANCE FOR HAZARDOUS WASTE LANDFILL CELLS AND SURFACE IMPOUNDMENT

Sargent & Lundy Engineering Services, Inc.

CALCULATION SHEET

Project No. S54413.024	**Calculation No.** S54413.024-C-012	**Rev.** 0	**Page No.** 13 of 24
Title: LERF Basin 41 Leachate Collection and Removal System Parameters			
Prepared By: G. Taylor Grant	**Date:** 04/07/2020	**Checked By:** Darrel J. Packard	**Date:** 04/09/2020

LEACHATE COLLECTION/REMOVAL SYSTEMS

Leachate is defined as "any liquid, including any suspended components in the liquid, that has percolated through or drained from hazardous waste" (40CFR 260.10). Leachate is generated by the draining of liquids from within the waste mass and from the infiltration of water from the surface of the cell. Additionally, the LCR system is commonly used during operation of the facility to remove surface water that has drained into the cell. This water is assumed to be leachate. The quantity of leachate generated depends on the types of waste, operational procedures, cover efficiency, and water balance within the cell at a particular time. Liquid input to the cell includes liquids in the deposited waste and surface liquids resulting from precipitation or surface water. Liquid output includes evaporation, transpiration, and seepage from the facility (Bass, 1986). Techniques for estimating leachate volume are discussed by Schroeder, et al (1984).

Minimum Technology Guidance (MTG) provided by EPA (1985) provides technical guidance on minimun design standards for LCR systems. Specific guidance on leachate collection systems design includes the following:

- A granular drainage layer should be at least 30 cm (12 in.) thick with a minimum hydraulic conductivity of 1×10^{-2} cm/sec and a minimum bottom final slope of 2% after long term settlement.
- Synthetic drainage layers may be used if they are equivalent to the granular design, including chemical compatibility, flow under load, clogging resistance, and protection of the FML.
- The drainage layer should include a pipe network which is designed to efficiently collect leachate. The spacing of the pipe network should be sufficient to ensure that no more than 1 foot of leachate will collect in the LCR. The pipe and drainage layer materials should be chemically resistant to the waste and leachate. The pipe should also be strong enough to withstand expected loading.
- A filter layer (granular or synthetic) should be used above the drainage layer to prevent clogging.
- The LCR system must cover the bottom and sidewalls of the unit.

Geosynthetic components within the LCR can, therefore, include a synthetic drainage layer used to replace the granular layer or the pipe network itself, and filter fabric designed to prevent clogging of the drain pipes or synthetic drainage lines.

<u>Transmissivity Criteria</u>

A geosynthetic system used to replace the granular drainage layer must provide either the minimum planar flow capacity defined by the Minimun Technology Guidance or that required to maintain the liquid levels over the liner at less than 30 cm (1 ft). The planar flow of liquids through the LCR is defined by Darcy's equation as

EPA III - 2

CALCULATION SHEET

Project No. S54413.024	**Calculation No.** S54413.024-C-012	**Rev.** 0	**Page No.** 14 of 24
Title: LERF Basin 41 Leachate Collection and Removal System Parameters			
Prepared By: G. Taylor Grant	**Date:** 04/07/2020	**Checked By:** Darrel J. Packard	**Date:** 04/09/2020

$$q = K_p \, i \, A \qquad \text{Eq(3.1)}$$

$$q = K_p \, [dh/L] \, W \, t \qquad \text{Eq(3.2)}$$

where q is the flow rate, K_p is the permeability coefficient in the plane of the geosynthetic, dh is the head loss, L is the flow length, W is the width of the drainage layer, and t is the thickness of the drainage layer. Because the thickness of most geosynthetic systems is difficult to quantify, Equation 3.2 is commonly expressed as

$$q = [K_p \, t] \, [dh/L] \, W \qquad \text{Eq(3.3)}$$

$$q = \theta \, [dh/L] \, W \qquad \text{Eq(3.4)}$$

where θ is defined as the transmissivity of the drainage layer. Substituting minimum drainage layer properties as defined in the current MTG guidance criteria (30 cm thickness and a minimum permeability of 1×10^{-2} cm/sec) results in a minimum required drainage layer transmissivity of 3×10^{-5} m^2/s.

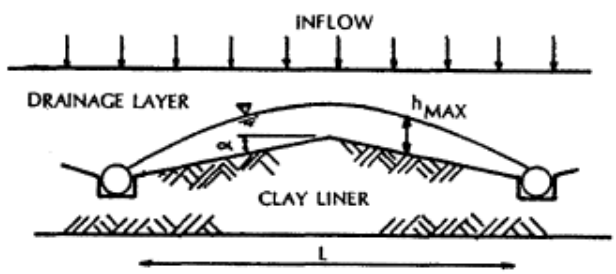

Figure 3.2 Leachate Head vs Collector Pipe Spacing

The minimum transmissivity of an LCR may also be controlled by the requirement to maintain no more than 30 cm (1 foot) of leachate head acting on the liner at all times. Conventional granular leachate control systems are designed so that the maximum one foot head acting on the FML remains within the drain layer. The head acting on the FML is controlled by the rate at which leachate is being generated and collected within the system, the hydraulic properties of the LCR, and the spacing of the collector pipes within the LCR. These parameters are shown on Figure 3.2. The maximum head acting on the FML for a uniform rate of leachate generation is given by

Sargent & Lundy Engineering Services, Inc.

CALCULATION SHEET

Project No. S54413.024	**Calculation No.** S54413.024-C-012	**Rev.** 0	**Page No.** 15 of 24
Title: LERF Basin 41 Leachate Collection and Removal System Parameters			
Prepared By: G. Taylor Grant	**Date:** 04/07/2020	**Checked By:** Darrel J. Packard	**Date:** 04/09/2020

$$H_{max} = \frac{L\sqrt{c}}{2}\left[\frac{\tan^2\alpha}{c} + 1 - \frac{\tan\alpha}{c}\sqrt{\tan^2\alpha + c}\right] \qquad \text{Eq(3.5)}$$

where c is defined as the inflow rate, q, divided by the hydraulic conductivity of the LCR. The greatest uncertainty associated with this calculation is accurately estimating the rate of leakage generated at the LCR boundary. While beyond the scope of this document, methods for estimating this quantity have been detailed by Wong(1977), Scharch(1981), and Demetracopoulos(1984). This method has been supplemented by an alternate procedure proposed by Moore (EPA,1983b) that is based on the percolation velocity of the leachate. The maximim leachate head using this method is given by

$$H_{max} = \frac{L}{2n}\left[\sqrt{\frac{e}{K} + \tan^2\alpha} - \tan\alpha\right] \qquad \text{Eq(3.6)}$$

where e is the percolation velocity based on conversion of the annual percipitation rate into a uniform velocity (cm/sec) and K is the hydraulic conductivity of the layer. The percolation velocity is equivalent to the inflow rate but is based on the assumption of a given percentage percolation of precipitation into the cell while the inflow rate is influenced by soil permeability, waste characteristics, etc. In these designs, the leachate phreatic surface remains within the LCR system.

Geosynthetic LCR systems are very thin when compared to equivalent-flow granular LCR systems. Thus the one foot of head that may act on the FML would not physically remain within the synthetic LCR layer. The one foot head must be interpreted as a design-applied pressure that is assumed to act at the interface between the synthetic LCR and the overlying soil. The required transmissivity of a synthetic LCR is computed by equating the rate of leachate inflow to the LCR with the flow capacity of the LCR. For a of synthetic LCR, the volume of leachate entering the system is equal to

$$Q_{in} = q_{in}\, L\, W \qquad \text{Eq(3.7)}$$

where q_{in} is the inflow rate of leakage generated at the waste LCR boundary, L is the effective length of the LCR and W is the width. The quantity of leachate that can flow through the LCR system is given by

$$Q_{LCR} = 2\,T\,[1 + L\sin(\phi)/2]/L \qquad \text{Eq(3.8)}$$

where ϕ is the slope of the LCR. Equating the leachate inflow and flow capacity of the LCR, an expression for the minimum value of transmissivity of the LCR is obtained as

$$\theta = \frac{qL^2}{4h_{max} + 2L\sin\phi} \qquad \text{Eq(3.9)}$$

The percolation velocity e can be substituted for q. Example 3.1 details the computation steps required to evaluate the mimimum transmissivity based on percolation velocity and leachate inflow criteria.

EPA III - 4

CALCULATION SHEET

Project No. S54413.024	**Calculation No.** S54413.024-C-012	**Rev.** 0	**Page No.** 16 of 24
Title: LERF Basin 41 Leachate Collection and Removal System Parameters			
Prepared By: G. Taylor Grant	**Date:** 04/07/2020	**Checked By:** Darrel J. Packard	**Date:** 04/09/2020

ATTACHMENT – 3 – STORMWATER INFILTRATION IN HIGHWAY EMBANKMENTS – SATURATED HYDRAULIC CONDUCTIVITY ESTIMATION FOR UNCOMPACTED AND COMPACTED SOILS, TABLE 3

Sargent & Lundy Engineering Services, Inc.

CALCULATION SHEET

Project No. S54413.024	**Calculation No.** S54413.024-C-012	**Rev.** 0	**Page No.** 17 of 24
Title: LERF Basin 41 Leachate Collection and Removal System Parameters			
Prepared By: G. Taylor Grant	**Date:** 04/07/2020	**Checked By:** Darrel J. Packard	**Date:** 04/09/2020

Table 3. Comparison of uncompacted and compacted specimen properties for tests conducted in this study.

[1]Soil	Uncompacted Dry Unit Weight (pcf)	Compacted Dry Unit Weight, γ_m (pcf)	Specific Gravity, G_s[3]	Uncompacted Porosity, n	Compacted Porosity, n	Uncompacted Void Ratio, e	Compacted Void Ratio, e
Natural alluvial soil (silt) – Chehalis River	118	--	2.76*	0.55	--	1.24	--
Natural alluvial soil (silt) – Chehalis River	114	--	2.76	0.55	--	1.23	--
Extreme Fine End - 0.005 mm	114	113	2.73*	0.33	0.34	0.493	0.52
Extreme Fine End - 0.01 mm	107	111	2.67*	0.37	0.34	0.59	0.52
Fine End Sand - 0.12 mm (rigid wall)	108	--	2.67	0.36	--	0.55	--
Fine End Sand - 0.12 mm (rigid wall)	113	119	2.67	0.33	0.29	0.49	0.41
Fine End Sand - 0.12 mm	--	122	2.67	--	0.27	--	0.37
Fine End Sand - 0.17 mm (rigid wall)	111	117	2.67	0.34	0.30	0.52	0.43
Fine End Sand - 0.17 mm (rigid wall)	111	--	2.67	0.34	--	0.52	--
Fine End Sand - 0.17 mm	--	123	2.67	--	0.26	--	0.35
Fine End Sand - 0.23 mm (rigid wall)	116	127	2.67	0.31	0.25	0.45	0.33
Fine End Sand - 0.26 mm (rigid wall)	96	102	2.67*	0.43	0.39	0.75	0.64
Fine End Sand - 0.26 mm (rigid wall)	--	106	2.67	--	0.36	--	0.56
Fine End Sand - 0.26 mm	--	120	2.67	--	0.29	--	0.41
Coarse Sand/Gravel – 1.2 mm (rigid wall)	113	115	2.67	0.32	0.31	0.47	0.45
Coarse Sand/Gravel – 1.55 mm (rigid wall)	117	124	2.67*	0.30	0.26	0.43	0.35
Coarse Sand/Gravel – 2.18 mm (rigid wall)	113	120	2.67	0.32	0.28	0.47	0.39
Coarse Sand/Gravel – 2.9 mm (rigid wall)	109	119	2.68	0.35	0.29	0.54	0.41
Coarse Sand/Gravel – 3.9 mm (rigid wall)	107	111	2.68	0.36	0.34	0.56	0.52
Coarse Sand/Gravel – 5.8 mm (rigid wall)	117	119	2.68*	0.29	0.32	0.41	0.52
Coarse Sand/Gravel – 8.4 mm (rigid wall)	--	113	2.68	--	0.32	--	0.47
Gravel = 4%, Sand = 66%, Silt = 30%	92	121	2.71	0.45	0.28	0.83	0.40
Gravel = 4%, Sand = 66%, Silt = 30%	-	128	2.71	--	0.23	-	0.30
Gravel = 19%, Sand = 51%, Silt = 30%	104	132	2.71*	0.39	0.22	0.63	0.28
Gravel = 19%, Sand = 51%, Silt = 30%	-	134	2.71	--	0.21	-	0.26
Gravel = 45%, Sand = 25%, Silt = 30%	102	130	2.71	0.40	0.23	0.66	0.30
Gravel = 45%, Sand = 25%, Silt = 30%	-	136	2.71	--	0.20	-	0.24
Gravel = 5%, Sand = 75%, Silt = 20%	96	129	2.76	0.44	0.25	0.79	0.33
Gravel = 49%, Sand = 31%, Silt = 20%	120	130	2.76	0.30	0.25	0.43	0.33
Gravel = 23%, Sand = 57%, Silt = 20%	117	138	2.76*	0.32	0.20	0.48	0.25
Gravel = 55%, Sand = 35%, Silt = 10%	125	137	2.77	0.28	0.20	0.38	0.26
Gravel = 26%, Sand = 64%, Silt = 10%	110	135	2.77*	0.36	0.22	0.57	0.28
Gravel = 26%, Sand = 64%, Silt = 10%	104	128	2.77	0.40	0.26	0.67	0.35
Gravel = 6%, Sand = 84%, Silt = 10%	103	125	2.77	0.40	0.27	0.67	0.38
Fine End Gravel Borrow (rigid wall)	102	118	2.67	0.39	0.29	0.63	0.42
Fine End Gravel Borrow (rigid wall)	100	120	2.67	0.40	0.28	0.66	0.39
Fine End Gravel Borrow (rigid wall)	102	121	2.67	0.39	0.27	0.63	0.37
Select Borrow (rigid wall)	113	123	2.68*	0.32	0.26	0.48	0.36
Select Borrow (rigid wall)	107	122	2.68	0.36	0.27	0.56	0.38
Select Borrow (rigid wall)	113	122	2.68	0.33	0.27	0.48	0.37
Common Borrow (rigid wall)	110	126	2.67	0.34	0.24	0.51	0.32
Common Borrow (rigid wall)	110	121	2.67	0.34	0.27	0.51	0.38
Common Borrow (rigid wall)	107	124	2.67	0.36	0.26	0.56	0.35
Sandy Glacial Outwash (rigid wall)	113	123	2.67*	0.32	0.26	0.48	0.35
Sandy Glacial Outwash (rigid wall)	111	122	2.67	0.33	0.27	0.50	0.37
Sandy Glacial Outwash (rigid wall)	110	122	2.67	0.34	0.27	0.52	0.37
Course Gravel Borrow (rigid wall)	108	115	2.67	0.35	0.31	0.53	0.45
Course Gravel Borrow (rigid wall)	108	114	2.67	0.35	0.31	0.53	0.45
Course Gravel Borrow (rigid wall)	108	114	2.67	0.36	0.32	0.55	0.46

[1]Tests were conducted in flexible wall permeameter, except where noted.
[2]As compacted specimen moisture content was 8% for flex wall tests and 6% for rigid wall tests.
[3]Specific Gravity, G_s, assumed to be 2.67 for soils with no measurement of G_s (typical for glacially derived soils in the Puget Sound region), or was assumed to be the same as measured G_s for a similar soil (same source with approximately the same gradation).
*Measured G_s for soil.

CALCULATION SHEET

Project No. S54413.024	**Calculation No.** S54413.024-C-012	**Rev.** 0	**Page No.** 18 of 24
Title: LERF Basin 41 Leachate Collection and Removal System Parameters			
Prepared By: G. Taylor Grant	**Date:** 04/07/2020	**Checked By:** Darrel J. Packard	**Date:** 04/09/2020

ATTACHMENT – 4 – WAC 173-303-650

CALCULATION SHEET

Project No. S54413.024	**Calculation No.** S54413.024-C-012	**Rev.** 0	**Page No.** 19 of 24
Title: LERF Basin 41 Leachate Collection and Removal System Parameters			
Prepared By: G. Taylor Grant	**Date:** 04/07/2020	**Checked By:** Darrel J. Packard	**Date:** 04/09/2020

WAC 173-303-650 Surface impoundments. (1) Applicability. The regulations in this section apply to owners and operators of facilities that use surface impoundments to treat, store, or dispose of dangerous waste.

(2) Design and operating requirements.

(a)(i) Any surface impoundment that is not covered by (j) of this subsection must have a liner for all portions of the impoundment (except for an existing portion of a surface impoundment). The liner must be designed, constructed, and installed to prevent any migration of wastes out of the impoundment to the adjacent subsurface soil or groundwater or surface water at any time during the active life (including the closure period) of the impoundment. The liner may be constructed of materials that may allow wastes to migrate into the liner (but not into the adjacent subsurface soil or groundwater or surface water) during the active life of the facility, provided that the impoundment is closed in accordance with subsection (6)(a)(i) of this section. For impoundments that will be closed in accordance with subsection (6)(a)(ii) of this section, the liner must be constructed of materials that can prevent wastes from migrating into the liner during the active life of the facility. The liner must be:

(A) Constructed of materials that have appropriate chemical properties and sufficient strength and thickness to prevent failure due to pressure gradients (including static head and external hydrogeologic forces), physical contact with the waste or leachate to which they are exposed, climatic conditions, the stress of installation, and the stress of daily operation;

(B) Placed upon a foundation or base capable of providing support to the liner and resistance to pressure gradients above and below the liner to prevent failure of the liner due to settlement, compression, or uplift;

(C) Installed to cover all surrounding earth likely to be in contact with the waste or leachate; and

(D) For EHW management, the owner or operator must submit an engineering report with their permit application under WAC 173-303-806(4) stating the basis for selecting the liner(s). The report must be certified by an independent, qualified registered professional engineer.

(ii) The owner or operator of a new surface impoundment installed after October 31, 1984, and in which liquid EHW is managed must:

(A) Install a double lined system which incorporates the specifications of subsection (3)(a), (b), and (c) of this section; and

(B) Must comply with either the groundwater monitoring requirements of WAC 173-303-645, or the unsaturated zone monitoring requirements of WAC 173-303-655(6).

(b) The owner or operator will be exempted from the requirements of (a) of this subsection, if the department finds, based on a demonstration by the owner or operator, that alternate design and operating practices, together with location characteristics, will prevent the migration of any dangerous constituents listed in WAC 173-303-9905, or which otherwise cause his wastes to be regulated under this chapter, into the groundwater or surface water at any future time. In deciding whether to grant an exemption, the department will consider:

(i) The nature and quantity of the wastes;

(ii) The proposed alternate design and operation;

(iii) The hydrogeologic setting of the facility, including the attenuative capacity and thickness of the liners and soils present between the impoundment and groundwater or surface water; and

Certified on 10/25/2019 WAC 173-303-650 Page 1

CALCULATION SHEET

Project No. S54413.024	**Calculation No.** S54413.024-C-012	**Rev.** 0	**Page No.** 20 of 24
Title: LERF Basin 41 Leachate Collection and Removal System Parameters			
Prepared By: G. Taylor Grant	**Date:** 04/07/2020	**Checked By:** Darrel J. Packard	**Date:** 04/09/2020

(iv) All other factors which would influence the quality and mobility of the leachate produced and the potential for it to migrate to groundwater or surface water.

(c) A surface impoundment must be designed, constructed, maintained, and operated to prevent overtopping resulting from normal or abnormal operations; overfilling; wind and wave action; rainfall; run-on; malfunctions of level controllers, alarms, and other equipment; and human error.

(d) A surface impoundment must be designed so that any flow of waste into the impoundment can be immediately shut off in the event of overtopping or liner failure.

(e) A surface impoundment must be designed to repel birds.

(f) A surface impoundment must have dikes that are designed, constructed, and maintained with sufficient structural integrity to prevent their failure. In ensuring structural integrity, it must not be presumed that the liner system will function without leakage during the active life of the unit.

(g) Earthen dikes must be kept free of:

(i) Perennial woody plants with root systems which could weaken its structural integrity; and

(ii) Burrowing mammals which could weaken its structural integrity or create leaks through burrows.

(h) Earthen dikes must have a protective cover, such as grass, shale or rock to minimize wind and water erosion and to preserve their structural integrity.

(i) The department will specify in the permit all design and operating practices that are necessary to ensure that the requirements of this subsection are satisfied.

(j) The owner or operator of each new surface impoundment unit on which construction commences after January 29, 1992, each lateral expansion of a surface impoundment unit on which construction commences after July 29, 1992, and each replacement of an existing surface impoundment unit that is to commence reuse after July 29, 1992, must install two or more liners and a leachate collection and removal system between such liners. "Construction commences" is as defined in WAC 173-303-040 under "existing TSD facility."

(i) The liner system must include:

(A) A top liner designed and constructed of materials (e.g., a geomembrane) to prevent the migration of dangerous constituents into such liner during the active life and post-closure care period; and

(B) A composite bottom liner, consisting of at least two components. The upper component must be designed and constructed of materials (e.g., a geomembrane) to prevent the migration of dangerous constituents into this component during the active life and post-closure care period. The lower component must be designed and constructed of materials to minimize the migration of dangerous constituents if a breach in the upper component were to occur. The lower component must be constructed of at least 3 feet (91 cm) of compacted soil material with a hydraulic conductivity of no more than 1×10^{-7} cm/sec.

(ii) The liners must comply with (a)(i)(A), (B), and (C) of this subsection.

(iii) The leachate collection and removal system between the liners, and immediately above the bottom composite liner in the case of multiple leachate collection and removal systems, is also a leak detection system. This leak detection system must be capable of detecting, collecting, and removing leaks of dangerous constituents at the

Certified on 10/25/2019 WAC 173-303-650 Page 2

earliest practicable time through all areas of the top liner likely to be exposed to waste or leachate during the active life and post-closure care period. The requirements for a leak detection system in this paragraph are satisfied by installation of a system that is, at a minimum:

(A) Constructed with a bottom slope of one percent or more;

(B) Constructed of granular drainage materials with a hydraulic conductivity of 1 x 10^{-1} cm/sec or more and a thickness of 12 inches (30.5 cm) or more; or constructed of synthetic or geonet drainage materials with a transmissivity of 3 x 10^{-4} m^2/sec or more;

(C) Constructed of materials that are chemically resistant to the waste managed in the surface impoundment and the leachate expected to be generated, and of sufficient strength and thickness to prevent collapse under the pressures exerted by overlying wastes and any waste cover materials or equipment used at the surface impoundment;

(D) Designed and operated to minimize clogging during the active life and post-closure care period; and

(E) Constructed with sumps and liquid removal methods (e.g., pumps) of sufficient size to collect and remove liquids from the sump and prevent liquids from backing up into the drainage layer. Each unit must have its own sump(s). The design of each sump and removal system must provide a method for measuring and recording the volume of liquids present in the sump and of liquids removed.

(iv) The owner or operator will collect and remove pumpable liquids in the sumps to minimize the head on the bottom liner.

(v) The owner or operator of a leak detection system that is not located completely above the seasonal high water table must demonstrate that the operation of the leak detection system will not be adversely affected by the presence of groundwater.

(k) The department may approve alternative design or operating practices to those specified in (j) of this subsection if the owner or operator demonstrates to the department that such design and operating practices, together with location characteristics:

(i) Will prevent the migration of any dangerous constituent into the groundwater or surface water at least as effectively as the liners and leachate collection and removal system specified in (j) of this subsection; and

(ii) Will allow detection of leaks of dangerous constituents through the top liner at least as effectively.

(l) The double liner requirement set forth in (j) of this subsection may be waived by the department for any monofill, if:

(i) The monofill contains only dangerous wastes from foundry furnace emission controls or metal casting molding sand, and such wastes do not contain constituents which would render the wastes dangerous for reasons other than the toxicity characteristic in WAC 173-303-090(8) or the toxicity criteria at WAC 173-303-100(5); and

(ii)(A) The monofill has at least one liner for which there is no evidence that such liner is leaking. For the purposes of this paragraph, the term "liner" means a liner designed, constructed, installed, and operated to prevent dangerous waste from passing into the liner at any time during the active life of the facility, or a liner designed, constructed, installed, and operated to prevent dangerous waste from migrating beyond the liner to adjacent subsurface soil, groundwater, or surface water at any time during the active life of the facility. In the case of any surface impoundment which has been exempted from the requirements of (j) of this subsection on the basis

CALCULATION SHEET

Project No. S54413.024	**Calculation No.** S54413.024-C-012	**Rev.** 0	**Page No.** 22 of 24
Title: LERF Basin 41 Leachate Collection and Removal System Parameters			
Prepared By: G. Taylor Grant	**Date:** 04/07/2020	**Checked By:** Darrel J. Packard	**Date:** 04/09/2020

ATTACHMENT – 5 – HANFORD SITE DANGEROUS WASTE PERMIT #WA7890008967, ADDENDUM C.5.8

Sargent & Lundy Engineering Services, Inc.

CALCULATION SHEET

Project No. S54413.024	**Calculation No.** S54413.024-C-012	**Rev.** 0	**Page No.** 23 of 24
Title: LERF Basin 41 Leachate Collection and Removal System Parameters			
Prepared By: G. Taylor Grant	**Date:** 04/07/2020	**Checked By:** Darrel J. Packard	**Date:** 04/09/2020

Calculations demonstrate that fluid from a small hole (0.08 inch) (*Requirements for Hazardous Waste Landfill Design, Construction, and Closure*, EPA/625/4-89/022, 1989, p. 122) at the furthest end of the basin, under a low head situation, would travel to the sump in less than 24 hours (*Calculations for Liquid Effluent Retention Facility Part B Permit Application*, HNF-SD-LEF-TI-005, 1997). Additional calculations indicate the capacity of the pump to remove leachate is sufficient to allow time to readily identify a leak and activate emergency procedures (HNF-SD-LEF-TI-005, 1997).

The fluid level in each leachate sump is required to be maintained below 13 inches to prevent significant liquid backup into the drainage layer. The leachate pump is activated when the liquid level in the sump reaches about 11 inches, and is shut off when the sump liquid level reaches about 7 inches. This operation may be done either manually or automatically. Liquid level control is accomplished with conductivity probes that trigger relays selected specifically for application to submersible pumps and leachate fluids. A flow meter/totalizer on the leachate return pipe measures fluid volumes pumped and pumping rate from the leachate collection sumps, and indicates volume and flow rate on local readouts. In addition, a timer on the leachate pump tracks the cumulative pump operating time. Other instrumentation provided is real-time continuous level monitoring with readout at the catch basin. Leachate levels are monitored at least weekly. A sampling port is provided in the leachate piping system at the catch basin. The leak rate through the primary liner can be calculated using two methods: 1) measured as the leachate flow meter/totalizer readings (flow meters/totalizers are located on the outflow line from the collection sumps in the bottom of the LERF Basins), and 2) calculated using the pump operating time readings multiplied by the pump flow rate (the pump runs at a constant flow rate). Calculations using either method are sufficient for compliance. For more information on inspections, refer to Addendum I.

The stainless steel leachate pump delivers 5 gallons per minute. The leachate pump returns draw liquid from the sump via 1.5-inch pipe and discharges into the basin through 1.5-inch high-density polyethylene pipe.

C.5.7 Construction Quality Assurance

The construction quality assurance plan and complete report of construction quality assurance inspection and testing results are provided in *242-A Evaporator Interim Retention Basin Construction Quality Assurance Plan* (CQAPLN2.QS.1149, Rev. 4, KEH 1991). A general description of construction quality assurance procedures is outlined in the following paragraphs.

For excavation of the basins and construction of the dikes, regular inspections were conducted to ensure compliance with procedures and drawings, and compaction tests were performed on the dike soils.

For the soil/bentonite layer, test fills were first conducted in accordance with EPA guidance to demonstrate compaction procedures and to confirm compaction and permeability requirements can be met. The ratio of bentonite to soil and moisture content was monitored; lifts did not exceed 6 inches before compaction, and specific compaction procedures were followed. Laboratory and field tests of soil properties were performed for each lift and for the completed test fill. The same suite of tests was conducted for each lift during the laying of the soil/bentonite admixture in the basins.

Geotextiles and geomembranes were laid in accordance with detailed procedures and quality assurance programs provided by the manufacturers and installers. These included destructive and nondestructive tests on the geomembrane seams, and documentation of field test results and repairs.

C.5.8 Proposed Action Leakage Rate and Response Action Plan

An action leakage rate limit is established where action must be taken due to excessive leakage from the primary liner. The action leak rate is based on the maximum design flow rate the leak detection system can remove without the fluid head on the bottom liner exceeding 12 inches. The limiting factor in the leachate removal rate is the hydraulic conductivity of the drainage gravel. An action leakage rate

(also called the rapid or large leak rate) of 2,100 gallons per acre per day was calculated for each basin (*Calculation of the Rapid or Large Leak Rate for LERF Basins in the 200 East Area*, WHC-SD-EN-TI-009, 1992).

When it is determined that the action leakage rate has been exceeded, the response action plan will follow the actions in WAC 173-303-650(11)(b) and (c), which includes notification of Ecology in writing within 7 days, assessing possible causes of the leak, and determining whether waste receipt should be curtailed and/or the basin emptied.

C.5.9 Dike Structural Integrity Engineering Certification

The structural integrity of the dikes was certified attesting to the structural integrity of the dikes, signed by a Qualified, Registered Professional Engineer.

C.5.10 Management of Ignitable, Reactive, or Incompatible Wastes

Although ignitable or reactive aqueous waste might be received in small quantities at LERF, such aqueous waste is mixed with dilute solutions in the basins, removing the ignitable or reactive characteristics. For compatibility requirements with the LERF liner, refer to Addendum B, Waste Analysis Plan.

C.5.11 Cover Construction, Materials, and Operation

Each basin is equipped with a floating cover stretched over each basin above the primary liner. The floating covers prevent evaporation and intrusion from dust, precipitation, vegetation, animals, and birds. The three LERF Basins 42, 43, and 44 either have a very low-density polyethylene cover (VLDPE), or a chlorosulfonated polyethylene (CSPE) cover.

Both VLDPE and CSPE covers contain carbon black for UV light protection, and anti-oxidants to prevent heat degradation. Both cover materials were determined to be compatible with the LERF Basin waste acceptance criteria. The VLDPE covers have seaming enhancers to improve the covers ability to be welded; while the CSPE cover uses modern seaming equipment that does not need seaming enhancers for the material to perform its required function. Typical manufacturer's limited warranty for weathering of VLDPE products is 20-years (Poly America, undated), whereas CSPE provides a 30-year limited manufacturer's warranty for weathering. This provides a margin of safety for the anticipated use of the LERF for aqueous waste storage.

The covers are anchored and tensioned at the concrete wall at the top of the dikes, using a patented mechanical tensioning system. Figure C.15 depicts the tension mechanism and the anchor wall at the perimeter of each basin. A patented tensioning system is employed to prevent wind from lifting the cover and automatically accommodate changes in liquid level in the basins. The cover tension mechanism consists of a cable running from the flexible geosynthetic cover over a pulley on the tension tower (located on the concrete anchor wall) to a dead man anchor. These anchors (blocks) hang from the cables inside of the tension towers. The anchor wall also provides for solid attachment of the liner layers and the cover, using a 1/4-inch batten and neoprene gasket to bolt the layers to the concrete wall, effectively sealing the basin from the intrusion of light, precipitation, and airborne dust (Figure C.15). Thermal stresses also are experienced by the floating cover. Sufficient slack was included in the design to accommodate thermal contraction and expansion.

C.6 Air Emissions Control

This section addresses the 200 Area ETF requirements of Air Emission Standards for Process Vents, under 40 CFR 264, Subpart AA (WAC 173-303-690 incorporated by reference) and Subpart CC. The requirements of 40 CFR 264, Subpart BB (WAC 173-303-691) is not applicable because aqueous waste with 10 percent or greater organic concentration would not be acceptable for processing at the ETF.

DOCUMENT RELEASE AND CHANGE FORM

Prepared For the U.S. Department of Energy, Assistant Secretary for Environmental Management
By Washington River Protection Solutions, LLC., PO Box 850, Richland, WA 99352
Contractor For U.S. Department of Energy, Office of River Protection, under Contract DE-AC27-08RV14800

TRADEMARK DISCLAIMER: Reference herein to any specific commercial product, process, or service by trade name, trademark, manufacturer, or otherwise, does not necessarily constitute or imply its endorsement, recommendation, or favoring by the United States government or any agency thereof or its contractors or subcontractors. Printed in the United States of America.

Release Stamp

DATE: May 27,2020 HANFORD RELEASE

1. **Doc No:** RPP-CALC-63780 **Rev.** 00

2. **Title:**
LERF Basin 41 Buried Piping Analysis

3. **Project Number:** T1P226 ☐N/A

4. **Design Verification Required:** ☐Yes ☒No

5. **USQ Number:** ☒ N/A RPP-27195

6. **PrHA Number** **Rev.** ☒ N/A

Clearance Review Restriction Type: public

7. **Approvals**

Title	Name	Signature	Date
Clearance Review	Raymer, Julia R	*Raymer, Julia R*	05/27/2020
Design Authority	Wilson, Nathaniel W	*Wilson, Nathaniel W*	05/04/2020
Checker	Huisingh, Jeffrey S	*Huisingh, Jeffrey S*	05/13/2020
Document Control Approval	Meinecke, Kathryn R	*Meinecke, Kathryn R*	05/27/2020
Environmental Protection	Wall, Jeremy M	*Wall, Jeremy M*	05/14/2020
Originator	Williams, Jacob D	*Williams, Jacob D*	05/13/2020
Other Approver	Lovelady, James T	*Lovelady, James T*	05/14/2020
Other Approver	Dorsh, Paul M	*Dorsh, Paul M*	05/13/2020
Responsible Engineering Manager	Huntington, Matthew R	*Huntington, Matthew R*	05/14/2020

8. **Description of Change and Justification**

Original issue.

This calculation documents the evaluation of four, new, double-containment fiberglass reinforced plastic (FRP) pipe lines in support of the Liquid Effluent Retention Facility (LERF) Basin 41 Design project. This calculation evaluates the adequacy of these lines relative to deadweight, seismic, wind, and other design loads as specified in TFC-ENG-STD-06, and the American Society of Mechanical Engineers (ASME) B31.3 Process Piping Code. The International Organization for Standardization's (ISO) code for glass-reinforced plastics (GRP) piping, ISO 14692, is utilized as a supplemental verification of system flexibility as well as a means to determine support and anchor loads.

9. **TBDs or Holds** ☒N/A

10. **Related Structures, Systems, and Components**

a. **Related Building/Facilities** ☐N/A	b. **Related Systems** ☐N/A	c. **Related Equipment ID Nos. (EIN)** ☒N/A
ETF FACILITIES LERF FACILITIES	ETF LERF	

11. **Impacted Documents – Engineering** ☐N/A

Document Number	Rev.	Title
RPP-CALC-63779	00	LERF Basin 41 Catch Basin Piping Analysis

12. **Impacted Documents (Outside SPF):**

N/A

13. **Related Documents** ☐N/A

Document Number	Rev.	Title
H-2-79613 SH 001	05	PIPING PLAN CATCH BASIN 242AL-42
H-2-79616 SH 001	03	PIPING SECTIONS CATCH BASINS 242AL-42-43-44
H-2-79633 SH 001	02	PIPE SUPPORTS
H-2-79634 SH 001	03	PIPE SUPPORTS
H-2-838765 SH 001	00	LERF BASIN 41 MECHANICAL GENERAL ARRANGEMENT
H-2-838765 SH 002	00	LERF BASIN 41 MECHANICAL SECTIONS AND DETAILS
H-2-838765 SH 003	00	LERF BASIN 41 MECHANICAL DETAILS
H-2-838765 SH 004	00	LERF BASIN 41 MECHANICAL SECTIONS AND DETAILS
H-2-838765 SH 005	00	LERF BASIN 41 MECHANICAL SECTIONS AND DETAILS
H-2-838765 SH 006	00	LERF BASIN 41 MECHANICAL SECTIONS
H-2-838765 SH 007	00	LERF BASIN 41 MECHANICAL SECTIONS
H-2-838765 SH 008	00	LERF BASIN 41 MECHANICAL DETAILS
H-2-88772 SH 001	02	P I P I N G S E C T I O N S
H-2-88773 SH 001	02	P I P E S U P P O R T S
MT-50497	00	Liquid Effluent Retention Facility (LERF) Basin 41

DOCUMENT RELEASE AND CHANGE FORM

Doc No: RPP-CALC-63780 **Rev.** 00

14. **Distribution**

Name	**Organization**
Angevine, Brennan T	MISSION ANALYSIS ENGINEERING
Blaak, Whitney S	COGNIZANT SYSTEM ENGINEERING
Demiter, Scott M	ETF OPERATIONS
Foster, Jim	242-A/AW/ETF OPERATIONS
Goessmann, Glen E	ENGINEERING PROGRAMS
Greenhalgh, Aaron M	TANK FARM PROJECTS ENGINEERING
Halgren, Dale L	ETF ENGINEERING
Harris, John W	SAFETY PROGRAM SERVICES RC/P
Joslyn, Cameron C	ETF ENGINEERING
Lovelady, James T	DESIGN SERVICES
McFerran, Brandon E	242-A/AW/ETF OPERATIONS
Omberg Carro, Susan K	NUCLEAR SAFETY
O'Meara, Sean P	ETF ENGINEERING
Powers, Daniel J	ETF ENGINEERING
Roosendaal, Gene D	TFP PROJECT MANAGEMENT
Rutherford, Wally	ETF ENGINEERING
Sackett, Tom E	TANK FARM PROJECTS
Samoska, Jerry A	INSTRUMENT & CNTRL ENGINEERING
Shultz, Milton V	NUCLEAR SAFETY
Smith, Gregory E	TANK FARM PROJECTS ENGINEERING
Smoot, Bill R	TFP RADCON
Swanson, Brad L	242-A/AW/ETF OPERATIONS
Wall, Jeremy M	RETRVL & CLOSURE/PROJ ENV CMPL
Wilson, Nathaniel W	ETF PROJECTS ENGINEERING

RPP-CALC-63780
Revision 0

LERF Basin 41 Buried Piping Analysis

Prepared by

JD Williams
Sargent & Lundy for Washington River Protection Solutions, LLC

Date Published
May 2020

Prepared for the U.S. Department of Energy
Office of River Protection

Contract No. DE-AC27-08RV14800

Approved for Public Release;
Further Dissemination Unlimited

RPP-CALC-63780, Rev. 0

Sargent & Lundy Engineering Services, Inc.	**CALCULATION COVER SHEET**	**Page No.** 1 of 192 **Date** 5/13/20 **Rev. No.** 0 **Calculation No:** S54413.024-M-001

Project No.	**Project Title:**	**Client:**
S54413.024	LERF Basin 41 Design	Washington River Protection Solutions, LLC

Title:

LERF Basin 41 Buried Piping Analysis

Purpose and Objective:

This calculation documents the evaluation of four, new, double-containment fiberglass reinforced plastic (FRP) pipelines in support of the Liquid Effluent Retention Facility (LERF) Basin 41 Design project. This calculation evaluates the adequacy of these lines relative to deadweight, seismic, wind, and other design loads as specified in TFC-ENG-STD-06, and the American Society of Mechanical Engineers (ASME) B31.3 Process Piping Code. The International Organization for Standardization's (ISO) code for glass-reinforced plastics (GRP) piping, ISO 14692, is utilized as a supplemental verification of system flexibility as well as a means to determine support and anchor loads.

Rev. No.	**Total Pages**		**Prepared By**	**Checked By**	**PM/TL**
0	192	**Print Name/ Sign:**	JD Williams, P.E.	JS Huisingh, P.E.	PM Dorsh, P.E.
		Date:	5/13/20	5/13/20	5/13/20

Revision Description (Revision Description/Affected Pages):

Original Issue.

		Print Name/ Sign:			
		Date:			

Revision Description (Revision Description/Affected Pages):

RPP-CALC-63780, Rev. 0

CALCULATION REVIEW CHECKLIST

Project No.	Calculation No.	Rev. No.	Page No.
S54413.024	S54413.024-M-001	0	2 of 192

Items Checked	Accept Y	Accept N	Accept N/A	Description of Resolution for Unacceptable Items
1. Cover sheets properly completed.	√			
2. Calculation sheet headers complete with calculation number, revision number, etc.	√			
3. Calculation sheet contents are legible, accurate, and complete per format.	√			
4. Listed attachments included.	√			
5. Calculation objective clearly described.	√			
6. Criteria are suitable and properly referenced to task specific documents.	√			
7. Assumptions and input data selected, described, reasonable, and attached or referenced to task documents.	√			
8. Calculation method identified and appropriate for the design activity.	√			
9. Calculation results reasonable and correctly described in results and conclusions.	√			
10. Physical property calculations generated by CAD software verified via hand calculations.			√	
11. Computer program identified with version and revision.	√			
12. Computer input/output provided or referenced and reasonable.	√			
13. Computer run traceable to calculation (file #, etc.).	√			
14. Computer input/output data and problem type within validation/verification range of use.	√			
15. Computer program validation/verification addressed.	√			
16. Computer operating system in use for calculation preparation is the same as when the software was verified on machine.	√			

Calculation Checking Method	√	Applicable Pages
1. Direct Step-by-Step Check	√	All.
2. Reference Chart(s) or Book(s) Comparison (Append Documentation)		
3. Alternate Calculation (Append Documentation)		

Comments:

Preparer (Print Name and Sign):	Date:
J. D. Williams	5/13/20
Checker (Print Name and Sign):	**Date:**
J.S. Huisingh	5/13/20

Signatures obtained only after discrepancies are corrected and comments are resolved.

CALCULATION SHEET

Project No. S54413.024	**Calculation No.** S54413.024-M-001	**Rev.** 0	**Page No.** 3 of 192
Title: LERF Basin 41 Buried Piping Analysis			
Prepared By: JD Williams	**Date:** 5/13/20	**Checked By:** JS Huisingh	**Date:** 5/13/20

TABLE OF CONTENTS

1.0 PURPOSE 5
2.0 METHODOLOGY 5
3.0 DESIGN INPUTS 20
4.0 ASSUMPTIONS 23
5.0 COMPUTER SOFTWARE 24
6.0 RESULTS 24
7.0 REFERENCES 27
8.0 CALCULATIONS 29

Appendices

Appendix A
LERF Piping Drawings

Appendix B
AutoPIPE Model Isometric Views

Appendix C
Model Input and Output Report

Attachments

Attachment 1
AutoPIPE SOIL Modeling Information

Attachment 2
New FRP Pipe Data (Conley Composites)

Attachment 3
Existing FRP Pipe Data

Attachment 4
AWWA M54 Fiberglass Pipe Design Data

Attachment 5
67246-024-RFI-002 – Fluid Specific Gravity

Attachment 6
Pipe Insulation Data

Attachment 7
Conley Composites AWWA M45 External Loading Calculations

Figures

Figure 2-1. Conley Composites ISO 14692 Design Envelopes. 11
Figure 2-2. Representation of Primary Pipe Support Guide. 13
Figure 2-3. Double Containment Pipe End Closures 14
Figure 2-4. Support-Anchor Detail 14
Figure 2-5. Conley Double-Containment Tee 16
Figure 2-6. New Tee & Existing Pipe Splicing Configuration 17
Figure 6-1. Maximum Pipe Stress in New FRP Pipe 25

Tables

Table 2-1. Summary of Design Conditions. (3 sheets) 6
Table 6-1. Bounding Support Reaction Loads on New Pipe Supports. 26
Table 6-2. Bounding Support Reaction Loads on Existing Pipe Supports. 26

Acronyms

AISC	American Institute of Steel Construction
ALA	American Lifelines Alliance
ASCE	American Society of Civil Engineers
ASME	American Society of Mechanical Engineers
DCR	Demand-to-Capacity Ratio
FRP	Fiber-Reinforced Plastics
GRP	Glass-Reinforced Plastics
HDB	Hydrostatic Design Basis Stress
HDS	Hydrostatic Design Stress
ISO	International Organization for Standardization
LERF	Liquid Effluent Retention Facility
WT	Waste Transfer
WTP	Waste Treatment Plant

CALCULATION SHEET

Project No. S54413.024	**Calculation No.** S54413.024-M-001	**Rev.** 0	**Page No.** 5 of 192
Title: LERF Basin 41 Buried Piping Analysis			
Prepared By: JD Williams	**Date:** 5/13/20	**Checked By:** JS Huisingh	**Date:** 5/13/20

1.0 PURPOSE

This calculation documents the evaluation of four, new, double-containment fiberglass reinforced plastic (FRP) pipelines in support of the Liquid Effluent Retention Facility (LERF) Basin 41 Design project. This calculation evaluates the adequacy of these lines relative to deadweight, seismic, wind, and other design loads as specified in TFC-ENG-STD-06, and the American Society of Mechanical Engineers (ASME[1]) B31.3 Process Piping Code. The International Organization for Standardization's (ISO) code for glass-reinforced plastics (GRP) piping, ISO 14692, is utilized as a supplemental verification of system flexibility as well as a means to determine support and anchor loads.

2.0 METHODOLOGY

The majority of the pipe is buried in long, straight runs, with relatively short sections of above-ground piping found at the LERF catch basins, where connections are made to new and existing piping. Two of the new lines branch off of existing buried piping (a 3"x6" evaporator condensate line [3" EVAP COND-PC5000-M17] and a 4"x8" waste treatment plant line [4"-WTP-001-M17]) and run to the new, above-ground stainless steel piping at the catch basin of the new LERF Basin 41. The other two new lines run between the new, above-ground stainless steel piping at the new LERF Basin 41 and the existing FRP piping at the catch basin of the existing LERF Basin 42. These new lines are depicted in design drawing H-2-838765.

In this section, a description is given of how and why the provisions of Chapter VII of the ASME B31.3 Code, which pertains to non-metallic piping, are utilized in this calculation. Section 2.2 of this calculation (see below) contains a description of why this different approach to piping analysis was chosen instead of a more typical approach for ASME B31.3 stress analysis as has been done for metallic piping systems. Section A319.4.1 within the "Flexibility & Support" section of B31.3's Chapter VII states, "No formal analysis is required for a piping system that … (c) is laid out with a conservative margin of inherent flexibility, or employs joining methods or expansion joint devices, or a combination of these methods, in accordance with manufacturers' instructions." Following guidance from FRP manufacturer Conley Composites, the general arrangement of the piping system found in design drawing H-2-838765 was developed, including (but not limited to) the use of expansion joints near changes in pipe material (i.e., to stainless steel piping), regularly-spaced guides between the primary and secondary piping of double containment pipes, anchor-type pipe supports near changes in direction, interlocking unions for long runs of double containment pipes, and deadweight supports at valve locations. Therefore, the B31.3 requirement from Section A319.4.1 is judged to have been met.

The minimum wall thickness check for internal pressure per ASME B31.3, Section A304.1.2(c) is performed in Section 8.5 of this calculation. The service design factor spoken of in section A304.1.2(c) and used in the thickness check was conservatively chosen as described in the Design Inputs. The design stress in the wall thickness check (Equation 26c of Chapter VII of B31.3) is the HDB stress value that is addressed in a Section 2.2. Results for this check are summarized in the Results section.

Conley Composites provided pipe external loading calculations following the AWWA M45, Fiberglass Pipe Design manual. These were done for the secondary containment pipes (6-inch and 8-inch) at burial depths of 2

[1] ASME is the registered trademark of the American Society of Mechanical Engineers, New York, NY.

feet and 12 feet. There are no wheel loads applied in the calculations since there are no crane or other vehicle crossings near where the new analyzed pipes will be installed. The Conley calculations satisfy the B31.3 external loading requirement in Section A302.3.3(c)(2).

To provide a supplemental means of verifying the inherent flexibility of the subject transfer piping, it is modeled as shown on the design drawing H-2-838765 using the Bentley AutoPIPE™[2] piping analysis software. (See Section 5.0 for relevant computer and analytical software information and Appendix B for model isometric images.) This supplemental analysis evaluates this piping that is designed and fabricated with materials in accordance with the ASTM standards listed in ASME Code B31.3-2016 (which is the code of record per RPP-SPEC-63632—see Design Input 2) using the ISO 14692-2002 code for *Petroleum and Natural Gas Industries – Glass-Reinforced Plastics (GRP) Piping* to analyze it in AutoPIPE. Although the pipe stresses are analyzed using the ISO code, the ASME B31.3 design conditions are addressed in the next section.

2.1 Summary Tabulation of ASME B31.3 Code Design Conditions

Table 2-1 below, presents a summary discussion of ASME B31.3 design conditions.

Table 2-1. Summary of Design Conditions. (5 sheets)

ASME B31.3, Section 301 Design Condition	Summary of Requirement	Description of Application of Requirement in Analysis
301.2 Design Pressure		
301.2.1 General	The design pressure of each component in a piping system shall be not less than the pressure at the most severe condition of coincident internal or external pressure and temperature (minimum or maximum) expected during service ...	The selection of components has considered design pressure as appropriate. The system design conditions are addressed in the AutoPIPE supplemental analysis.
301.2.2 Required Pressure Containment or Relief	Provision shall be made to safely contain or relieve … any pressure to which the piping may be subjected. Piping not protected by a pressure-relieving device, or that can be isolated from a pressure-relieving device, shall be designed for at least the highest expected pressure.	The deadhead pressure of new Basin 41 pump is ~100 psig (RPP-CALC-63650 Att. 2), which will not challenge 150 psig design pressure of new piping. Given 100 psig max. op. pressure of existing piping, new piping design pressures will likewise not be challenged.

[2] Bentley AutoPIPE is a registered trademark of Bentley Systems, Exton, PA.

Table 2-1. Summary of Design Conditions. (5 sheets)

ASME B31.3, Section 301 Design Condition	Summary of Requirement	Description of Application of Requirement in Analysis
301.3 Design Temperature		
301.3.1 Design Minimum Temperature	The design minimum temperature is the lowest component temperature expected in service. This temperature may establish special design requirements and material qualification requirements. See also paras. 301.4.4 and 323.2.2.	The minimum design ambient temperature is -25º F for FRP pipes above grade and exposed to the atmosphere. However, the minimum temperatures used in the AutoPIPE supplemental analysis for the buried portions of piping is 32º F (see *Design Inputs*) for cold contents (boundingly low) or empty lines. These are appropriately addressed in the AutoPIPE supplemental analysis and do not mandate special design requirements or material qualifications for this system.
301.3.2 Uninsulated Components	*Describe any special, justified allowances for considering piping and component temperatures to be other than that of the fluid design temperatures.* (Content summarized.)	Carrier piping temperature is taken to be equal to that of the contents including the case when the system is off and the piping and contents cool down to the ambient cold temperatures. (See *Design Inputs*) (See row above regarding 32° F piping.) All above ground piping is insulated.
301.3.3 Externally Insulated Piping	The component design temperature shall be the fluid temperature unless calculations, tests, or service experience based on measurements support the use of another temperature. Where piping is heated or cooled by tracing or jacketing, this effect shall be considered in establishing component design temperatures.	Addressed in the AutoPIPE model supplemental analysis.
301.3.4 Internally Insulated Piping	The component design temperature shall be based on heat transfer calculations or tests.	N/A – The assembly is not internally insulated.
301.4 Ambient Effects		
301.4.1 Cooling – Effects on Pressure	The cooling of a gas or vapor in a piping system may reduce the pressure sufficiently to create an internal vacuum. In such a case, the piping shall be capable of withstanding the external pressure at the lower temperature, or provision shall be made to break the vacuum.	N/A: These systems are designed to transfer and distribute liquid (~water) at temperatures that preclude significant vapor content. Also, the piping is free draining into the LERF basins because valves are not expected to be closed during operation. Due to this free-draining nature, when not operating, fluid is not expected to be trapped between valves in the system.

CALCULATION SHEET

Project No. S54413.024	**Calculation No.** S54413.024-M-001	**Rev.** 0	**Page No.** 8 of 192
Title: LERF Basin 41 Buried Piping Analysis			
Prepared By: JD Williams	**Date:** 5/13/20	**Checked By:** JS Huisingh	**Date:** 5/13/20

Table 2-1. Summary of Design Conditions. (5 sheets)

ASME B31.3, Section 301 Design Condition	Summary of Requirement	Description of Application of Requirement in Analysis
301.4.2 Fluid Expansion Effects	Provision shall be made in the design either to withstand or to relieve increased pressure caused by the heating of static fluid in a piping component. …	N/A: The piping is free draining into the LERF basins because valves are not expected to be closed during operation. Due to this free-draining nature, when not operating, fluid is not expected to be trapped between valves in the system.
301.4.3 Atmospheric Icing	Where the design minimum temperature of a piping system is below 0 °C (32 °F), the possibility of moisture condensation and buildup of ice shall be considered and provisions made in the design to avoid resultant malfunctions. …	N/A - Valves on above-ground piping are insulated and heat-traced, so build-up of ice and resultant malfunctioning of valves is precluded.
301.4.4 Low Ambient Temperature	Consideration shall be given to low ambient temperature conditions for displacement stress analysis.	Consideration for low ambient temperature conditions is addressed in this evaluation.
301.5 Dynamic Effects		
301.5.1 Impact	Impact forces caused by external or internal conditions (including changes in flow rate, hydraulic shock, liquid or solid slugging, flashing, and geysering) shall be taken into account in the design of piping.	The LERF piping is located in a remote location and is not expected to experience any external impact conditions. Changes in flow rates, liquid slugging, etc. may be encountered, and are discussed in the *Methodology* section and addressed in the AutoPIPE model as judged to be appropriate. Geysering is not an issue since maximum system operating temperature (150 ºF, see *Design Inputs*) will not cause boiling. Flashing is not an issue since the system pressures and temperatures will not cause vaporization of the fluid. Fluid transient loads are also discussed in the *Methodology* section.
301.5.2 Wind	The effect of wind loading shall be taken into account in the design of exposed piping. …	Addressed in the AutoPIPE model supplemental analysis.
301.5.3 Earthquake	The effect of earthquake loading shall be taken into account in the design of piping. The analysis considerations and loads may be as described in ASCE 7. …	Earthquake loading is addressed in the AutoPIPE model supplemental analysis.
301.5.4 Vibration	Piping shall be designed, arranged, and supported so as to eliminate excessive and harmful effects of vibration that may arise from such sources as impact, pressure pulsation, turbulent flow vortices, resonance in compressors, and wind.	N/A – There are no significant sources of vibration for the subject buried piping and above-ground piping.
301.5.5 Discharge Reactions	Piping shall be designed, arranged, and supported so as to withstand reaction forces due to let-down or discharge of fluids.	Applicable pressure and fluid loadings are addressed in the subsections below in the *Methodology* section.

CALCULATION SHEET

Project No. S54413.024	**Calculation No.** S54413.024-M-001	**Rev.** 0	**Page No.** 9 of 192
Title: LERF Basin 41 Buried Piping Analysis			
Prepared By: JD Williams	**Date:** 5/13/20	**Checked By:** JS Huisingh	**Date:** 5/13/20

Table 2-1. Summary of Design Conditions. (5 sheets)

ASME B31.3, Section 301 Design Condition	Summary of Requirement	Description of Application of Requirement in Analysis
301.6 Weight Effects		
301.6.1 Live Loads	These loads include the weight of the medium transported or the medium used for test. Snow and ice loads due to both environmental and operating conditions shall be considered.	Fluid weight, fluid thrust loads at bends, and snow and ice loads are considered for this piping. Fluid thrust loads are addressed in the *Methodology* section. Due to the relatively small diameter of the insulated piping and the low sustained load DCRs, the potential snow and ice loads on the above-ground portions of the piping are considered insignificant and are not included in the supplemental analysis.
301.6.2 Dead Loads	These loads consist of the weight of piping components, insulation, and other superimposed permanent loads supported by the piping.	Addressed in the AutoPIPE model supplemental analysis.
301.7 Thermal Expansion and Contraction Effects		
301.7.1 Thermal Loads Due to Restraints	These loads consist of thrusts and moments that arise when free thermal expansion and contraction of the piping are prevented by restraints or anchors.	Addressed in the AutoPIPE model supplemental analysis.
301.7.2 Loads Due to Temperature Gradients	These loads arise from stresses in pipe walls resulting from large rapid temperature changes or from unequal temperature distribution as may result from a high heat flux through a comparatively thick pipe or stratified two-phase flow causing bowing of the line.	N/A - Because the transfer piping is not subject to large, rapid temperature changes or significant, unequal temperature distribution, this loading will not be analyzed in this calculation.
301.7.3 Loads Due to Differences in Expansion Characteristics	These loads result from differences in thermal expansion where materials with different thermal expansion coefficients are combined, as in bimetallic, lined, jacketed, or metallic–nonmetallic piping.	Addressed in the AutoPIPE model supplemental analysis.
301.8 Effects of Support, Anchor, and Terminal Movement	The effects of movements of piping supports, anchors, and connected equipment shall be taken into account in the design of piping. These movements may result from the flexibility and/or thermal expansion of equipment, supports, or anchors; and from settlement, tidal movements, or wind sway.	Addressed in the AutoPIPE model supplemental analysis.
301.9 Reduced Ductility Effects	The harmful effects of reduced ductility shall be taken into account in the design of piping. The effects may, for example, result from welding, heat treatment, forming, bending, or low operating temperatures, including the chilling effect of sudden loss of pressure on highly volatile fluids. Low ambient temperatures expected during operation shall be considered.	Due to the nature of the materials used (FRP piping), reduced ductility effects are not necessary for this calculation.
301.10 Cyclic Effects	Fatigue due to pressure cycling, thermal cycling, and other cyclic loadings shall be considered in the design of piping. …	N/A – No significant cyclic effects are expected.

Table 2-1. Summary of Design Conditions. (5 sheets)

ASME B31.3, Section 301 Design Condition	Summary of Requirement	Description of Application of Requirement in Analysis
301.11 Air Condensation Effects	At operating temperatures below −191° C (−312° F) in ambient air, condensation and oxygen enrichment occur. These shall be considered in selecting materials, including insulation, and adequate shielding and/or disposal shall be provided.	N/A – Because the transfer piping is not subject to −312° F and below, air condensation effects need not be analyzed in this calculation.

2.2 Applications of the ASME B31.3 Code and the ISO 14692 Code for FRP Piping

As stated previously in this calculation, the GRP ISO 14692 piping code (hereafter also referred to as "the code" [with a lower case "c"]), is utilized in a supplemental pipe stress analysis to verify system flexibility. This supplemental analysis is also used as a means to extract support and anchor loads from the new LERF Basin 41 FRP piping. Typically, the ASME B31.3 Process Piping Code (hereafter also referred to as "the Code" [capitalized]) is used to analyze process piping, but the B31.3 Code does not provide in its appendices the required analysis data such as allowable stress values, thermal expansion coefficients, and modulus of elasticity values at design temperatures for filament wound epoxy FRP pipe like it does for metallic pipe.

In B31.3 Chapter VII (*Nonmetallic Piping and Piping Lined With Nonmetals*), Section A302.3 (*Allowable Stresses and Other Design Limits*) states that Table B-3, *Listed Specifications for Filament Wound and Centrifugally Cast Reinforced Thermosetting Resin and Reinforced Plastic Mortar Pipe*, provides listings of specifications that meet the criteria of paragraph A302.3.2(c). Listed in this table are ASTM D2996 and D2997, which are the standard specifications for filament-wound fiberglass pipe and centrifugally cast fiberglass pipe, respectively, which are employed in this design.

Paragraph A302.3.2(c) of the Code, mentioned above, states that the hydrostatic design basis stress (HDB) values for materials listed in Table B-3 shall be obtained by the procedures in ASTM D2992 and are valid only at 73° F. It also states that the hydrostatic design stress (HDS) shall be obtained by multiplying the HDB by a service (design) factor selected for the application and that when using the static HDB, the service (design) factor *F* shall not exceed 0.5. The B31.3 Code also states that the Code's intent in not to specify such service factors but leaves this decision to the designer to decide in consideration of service conditions and the engineering properties of the selected materials.

Paragraph A302.3(a) states that the use of HDS for calculations other than pressure design has not been verified and that the bases for determining allowable stresses and pressures are outlined in para. A302.3.2 (which was discussed earlier). In para. A302.3.3(c), the Code refers to non-B31.3 codes and standards for use as the basis of stress limits from external loadings. Here, the Code points away from its own content to other ASTM standards and codes to develop an HDB/HDS and to qualify the FRP pipe for loads other than pressure loads.

Conley Composites (manufacturer of ASTM D2996 filament-wound fiberglass pipe) performed the ASTM D2992 calculations for the HDB (see Attachment 2) after testing their pipe following that standard D2992. This demonstrated that their filament-wound pipe has HDB values of 16,000 psi at 75° F and 8,000 psi at 250° F.

Because the B31.3 Code cannot use this information directly to analyze the pipe for more than simple pressure loading, and because AutoPIPE has the option to use the ISO 14692 code, which facilitates the selection of service factors to aid in the evaluation of GRP, this latter code was utilized in the supplemental analysis to verify system flexibility. Conley developed the required idealized short-term and long-term design envelopes per the ISO 14692 code (shown in Figure 2, Part 3 of that code) which is used in AutoPIPE to determine allowable stresses. Note the calculated design envelopes in Figure 2-1 below with added descriptive terms at identified node points.

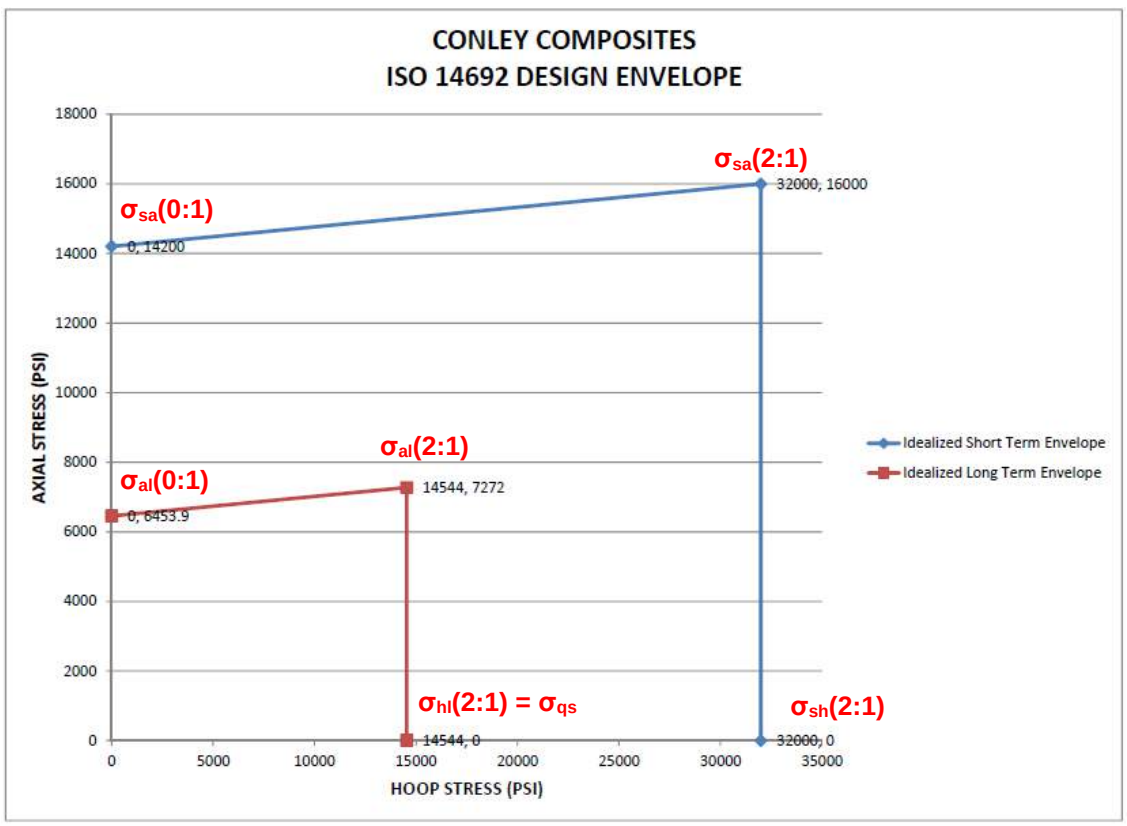

Figure 2-1. Conley Composites ISO 14692 Design Envelopes.

Similar to ASTM D2992's use of HDB, the ISO 14692 code uses what it calls the "qualified stress." A Conley Composites representative explained in detail (in Attachment 2) that the ISO 14692 code uses the ASTM D2992 test data to arrive at a qualified stress in a different way that he describes below:

> *ASTM D2992 has the manufacturer calculate the Long Term Hydrostatic Strength (LTHS) at 100,000 hrs (~11.5 yrs) and 438,000 hrs (50 yrs) and establishes the Hydrostatic Design Basis (HDB) or allowable hoop stress σ(2:1) based on the range these values fall in. Our calculated values for the LTHS at 100,000 and 438,000 hrs are*

17802 psi and 16719 psi respectively. Following Table 1 of ASTM D2992 our established and published HDB is therefore 16,000 psi with this method as ASTM D2992 correlates an HDB per a given range of calculated LTHS.

As we discussed, the ISO-14692 allows the use of ASTM D2992 to establish the qualified pressure as called out in ISO 14692-2 Table 1 and 6.2.3.1. The difference is that when establishing the qualified stress or pressure, which are relatable through product geometry (diameter and wall thickness), the time interval that is considered is 20 years or 175,200 hrs. ISO 14692 also takes the lower confidence level at this time instead of the mean value or the value established by the regression line. Since ASTM D2992 is establishing a hoop stress and our testing methodology was per ASTM D2992 Procedure B (static pressure) with unrestrained ends, the stress we are evaluating is σ(2:1) for the Lower confidence level at a 20 year time. So when considering ISO 14692 the 20 year lower confidence level hoop stress or $\sigma(2:1)_{20yrLCL}$ is σ_{qs}. This is the ISO 14692 version of HDB, evaluated at the 20 year time with the conservancy that the lower confidence level brings.

He also stated that the qualified stresses arrived at using the ISO 14692 code, used to establish the allowable stress limits for the material, resulted (in the case of Conley's test data) in being more conservative than the values arrived at when directly following ASTM D2992 methods. In addition to using ISO 14692, in order to be more conservative and get more representative results at specific temperatures, the values used in the supplemental analysis for "qualified stress" are the (reduced) "HDB" values that were calculated in Section 8.0 through interpolation between the HDB values provided at 75° F and 250° F by Conley (see Attachment 2).

2.3 Miscellaneous Modeling Notes

The following approaches used or features employed in the AutoPIPE modeling of the subject FRP piping were judged to be significant enough to warrant the discussions provided. Piping loadings considered are discussed in subsequent sections.

2.3.1 Support and Anchorage

The underground pipe lines are a pipe-in-pipe design in which the smaller (3-in. and 4-in. nominal) pipe is the primary (or process or carrier) pipe that is relied upon to confine and convey the fluid while the outer, larger (6-in. and 8-in. nominal) pipe is the secondary (or containment or encasement) pipe to capture any potential leak and drain it to appropriate collection points. Where double-contained pipes are employed, the primary pipe is supported entirely by the secondary pipe via guides (2-degree-of-freedom [four-way] restraints installed within the annulus of the two pipes). Guide supports (see Figure 2-2) are installed inside pipe-in-pipe spools from the manufacturer at maximum spacings of 10 ft (see Attachment 2). These guides allow the primary pipe to slide axially along the interior of the secondary pipe while restraining the primary pipe laterally.

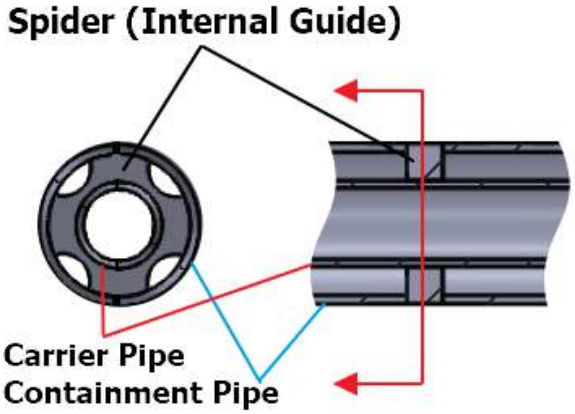

Figure 2-2. Representation of Primary Pipe Support Guide.

There are two locations where interlocking unions are employed to rigidly connect the inner and outer piping. This occurs near the middle of the two long pipe runs between Basins 41 and 42. This is done to accommodate the recommendation from Conley Composites to axially restrain the inner pipe in this way.

The other guide supports in the model are on the encasement pipes (or un-encased primary pipes) where they are connected to vertical steel support members (pipe or HSS) connected to the LERF catch basins or to a concrete anchor footing outside of the basins. These guide supports have small gaps on both sides of the pipe. (See support details on drawing H-2-838765.)

Another type of support used in the model is a V-stop (vertical, two-direction restraint), where the pipe is supported vertically but allowed to slide axially and laterally (with respect to the pipe it supports) and rotate around any axis. There is a large gap at the top of these supports (also called “shoes” in AutoPIPE) so that they can displace vertically upwards without any restraint.

Another support type used on the existing pipe is a Line Stop (axially restraining the pipe). The catch basin at LERF Basin 42 has many angled “kicker”-type steel members welded to vertical support members. At these locations in AutoPIPE, vertical steel members were modeled with line stop supports connected to the top of them (attached to a nearby pipe node point) to simulate the effects of the angled kicker providing axial restraint (with respect to the pipe).

The containment piping is terminated over the LERF Catch Basins as shown on the design drawings (H-2-838765). These end closures are shown in the figure below and are modeled in AutoPIPE by connecting the inner and outer pipes at nearly-coincident nodes using a rigid beam element which anchors the outer pipe to the inner pipe at that location. In reality, these end closure connections are quite rigid and the modeling is representative of the inherent rigidity between the carrier and containment pipes at these locations. It is noted that for the two lines going between Basin 41 and Basin 42, each has an end closure with a vent port at its respective high side (elevation-wise) of the line for pressure testing purposes.

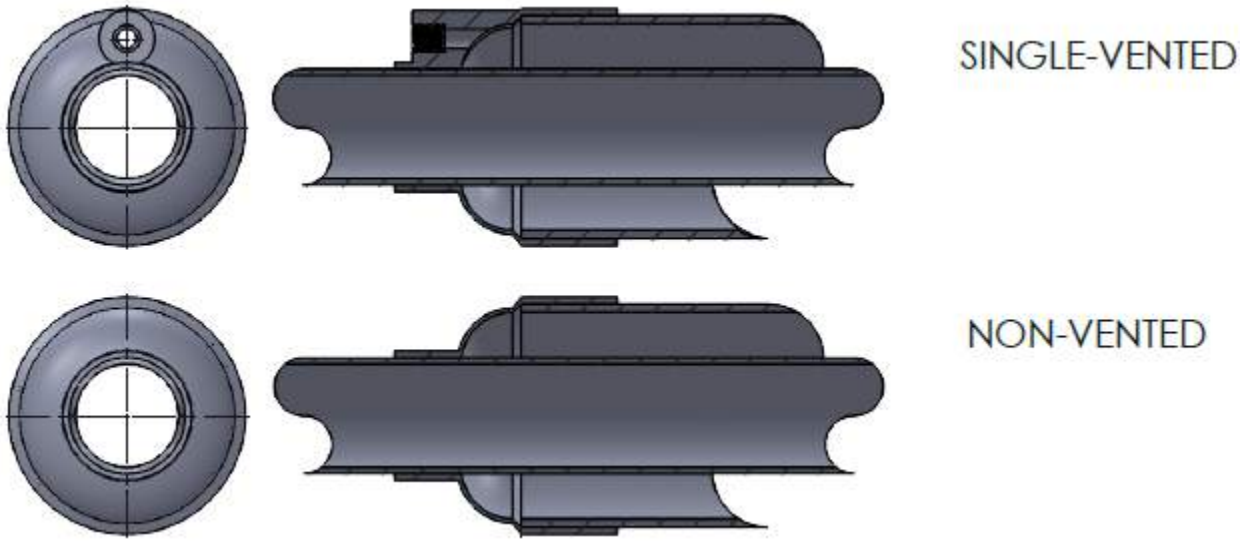

Figure 2-3. Double Containment Pipe End Closures

The last type of pipe support is what shall be called in this calculation a *support-anchor* which is a 5-degree of freedom restraint (not restraining torsion) with the use of dual U-bolts and shear collars as shown in the figure below. These supports are utilized near the 45-degree bend just off of the catch basin at Basin 41. They are modeled in AutoPIPE with their support beams attached directly to the pipe. Although this type of connection restrains 6 degrees of freedom, the imposed fictitious torsional restraint does not significantly affect the system flexibility and overall response.

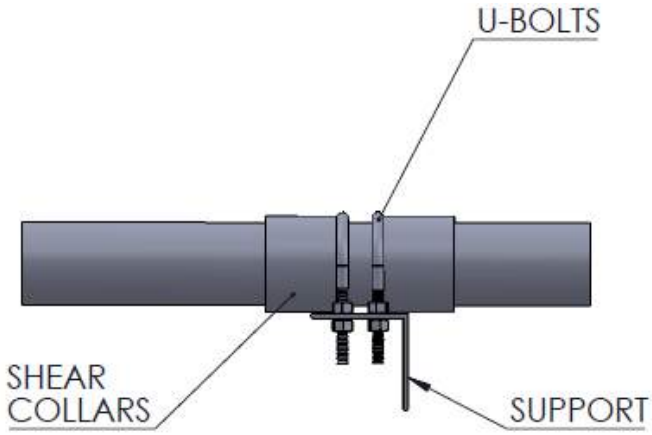

Figure 2-4. Support-Anchor Detail

The anchors (six-degree of freedom restraints) modeled in AutoPIPE are found at the rigid riser connections of the pipes in the two catch basins (LERF Basin 41 and 42); at specified ends of the existing buried pipe within the berm, which are located ~45 feet inside and along the length of the berm, just north of the LERF basins; and

also at a soil penetration point of one existing 12" FRP pipe[3]. See Appendix B for AutoPIPE model screenshots.

2.4 Connections to Existing FRP Pipes

The table below specifies the differences between the existing and new FRP piping and whether or not custom adapters are required at the connections between the existing and new pipes.

Table 2-2. Existing & New FRP Pipe Data.

EXISTING PIPE	Pipe Size	Pipe OD	Manufacturer/Type	Custom Adapter Required?
Evaporator Piping	3"	3.5"	Fibercast FRP Pipe Centrifugally Cast, Epoxy, Centricast III EP	NO
	6"	6.625"		YES
WTP Piping	4"	4.552"	Bondstrand FRP Pipe Filament-wound, Epoxy, Series 4000	YES
	8"	8.678"		YES
NEW PIPE	**Pipe Size**	**Pipe OD**	**Manufacturer/Type**	
	3"	3.47"	Conley FRP Pipe Filament Wound, Epoxy Series 40	
	6"	6.57"		
	4"	4.48"		
	8"	8.60"		

Conley Composites sent the following three points to take note of in preparation to connect to existing FRP pipes (see Conley email in Attachment 2):

> *(1.) When connecting Conley FRP pipe with FRP pipe from a different manufacture, Conley will manufacture an adapter fitting to make the connection if difference in diameter greater than 0.040".*
>
> *(2.) Bonding of FRP pipe is a mechanical bond that relies on good preparation and cleanliness. Epoxy will bond to Epoxy as well as Vinyl FRP pipe.*
>
> *(3.) Generally, it is recommended that an anchor be installed when mating to piping from a different manufacture. In this case, the anchor will not be required. As stated, the buried pipe will see low temperature fluctuations.*

[3] The lateral stiffnesses at the soil penetration point (for the existing pipe) are set to 0 to allow the pipe to grow/displace axially.

Additional notes on those points:

- As shown in the table above, the existing 6", 4", and 8" pipes will require custom adapter fittings from Conley while the existing 3" pipe will only require a standard fitting from Conley.
- All three of the FRP pipe types in the table above are epoxy resin pipes, so bonding will not pose an issue.
- The new Conley pipe is filament wound FRP pipe. The strengths of the existing pipes (filament-wound and centrifugally-cast) are of comparable magnitudes to the new Conley pipe such that when the new piping is shown to be adequate with a conservative margin of safety, adequacy may also be judged of the existing pipes.

The new pipe will tee into the existing pipe using a Conley prefabricated tee-in-tee piece as shown below:

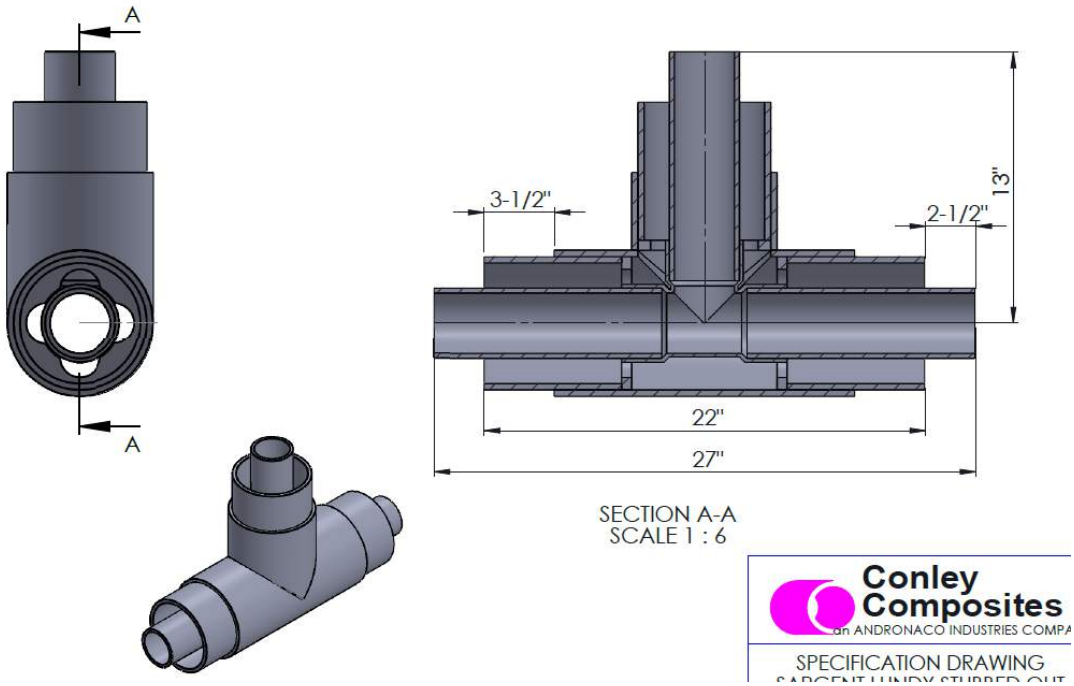

Figure 2-5. Conley Double-Containment Tee

The method of splicing in the tee will be as shown below with clam-shell type couplings (standard or custom adapters):

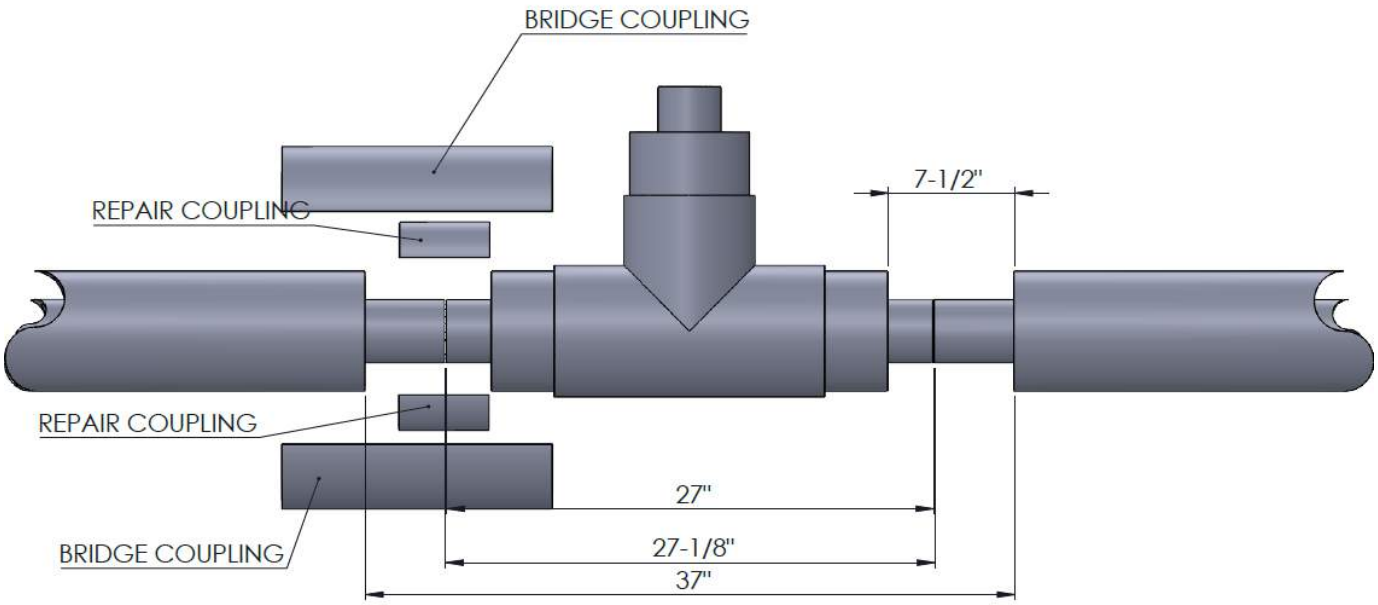

Figure 2-6. New Tee & Existing Pipe Splicing Configuration

2.5 Piping Loading Considerations for Analysis

Steps described in the WRPS engineering standard TFC-ENG-DESIGN-C-60 are used to identify the design conditions and load combinations imposed on the waste transfer piping. In the supplemental analysis, all relevant load combinations are reviewed. The highest demand-to-capacity ratios (DCRs) for code stresses from these load combinations are summarized at the end of the input and output AutoPIPE report presented in Appendix C.

2.5.1 Thermal Loading

Although thermal stress ranges are typically evaluated in the ASME B31.3 Code, allowable stresses for thermal loads are not provided in ISO 14692; the evaluation of thermal loading is left to the system designer. In ISO 14692, the primary and secondary piping is evaluated for the combined stress due to gravity, pressure, and thermal load effects. The thermal effects are added to the stress evaluation through the supplemental flexibility analysis due to temperature change of the pipe between the ambient (installation) temperature and the largest change in temperature (cold or hot). The three operating cases that are analyzed in AutoPIPE are described as follows:

1) Operating Case 1 (*Hot-in-Hot, Pressurized*): Both the primary and secondary pipes are pressurized. Buried piping and above-ground piping are all taken to be at the hot design temperature of 150° F. This thermal case uses a low ambient temperature of 60° F. (See *Design Inputs*.)

2) Operating Case 2 (*Cold-in-Cold, No Pressure*) The system is off, so neither the primary nor secondary pipes are pressurized, but they are both at the cold design temperatures of -25° F (for above ground, outermost pipes) and both are at 32° F (for buried pipe). This thermal case uses a high ambient temperature of 80° F. (See *Design Inputs*.)

3) Operating Case 3 (*Hot-in-Cold, Pressurized*): Both the primary and secondary pipes are pressurized, the secondary pipes are cold (-25° F for above ground pipe; 32° F for buried pipe), and the primary piping is hot (120° F for both above-ground and buried pipe). (See *Design Inputs*.) This type of operating case often produces the worst-case thermal displacements and support loading conditions. This operating case evaluates an expanding primary pipe within a contracting secondary pipe.

To be consistent with the ASME B31.3 Code and TFC-ENG-DESIGN-C-60, the support reactions are products of the operating cases above (see paragraph below with excerpt from B31.3).

> **319.3.1 Thermal Expansion Data**
> *(a)…*
> *(b) Values for Reactions.* Values of thermal displacements to be used in determining total displacement strains for computation of reactions on supports and connected equipment shall be determined as the algebraic difference between the value at maximum (or minimum) temperature for the thermal cycle under analysis and the value at the temperature expected during installation.

The thermal loading for displacement-based reactions is defined in two generalized cases: 1) a temperature range from 80° F to the cold (ambient) design condition, and 2) a temperature range from 60° F to the hot design temperature condition. Because the Conley FRP pipe has a thermal expansion coefficient (see Conley pipe data in Attachment 2) based on a difference in temperature (not various values over a range of temperatures), thermal expansion coefficients at the associated design temperatures were calculated in Section 8.0 using the appropriate high or low ambient temperature and manually input in the AutoPIPE supplemental analysis.

2.5.2 Seismic Loading

Using the acceleration values cited in TFC-ENG-STD-06 paragraph 3.5.5.2 and following the methodology in Chapter 13 of ASCE 7, seismic accelerations were calculated (see Design Inputs and Section 8.0 Calculations). The controlling load combination (reference ASCE 7 Section 2.4.1) is D + 0.7E, where D is the dead load demand and E is the seismic demand. As a general service system, the LERF piping will be analyzed to NDC-1 criteria per Design Input 12. NOTE: A static earthquake analysis is used to satisfy requirements for the seismic evaluation for NDC-1 piping. The FRP piping is evaluated based on the ISO 14692 Code. A separate structural analysis addresses the evaluation of the structural adequacy of the primary pipe supports (see the *Results* section).

2.5.3 Fluid Loads

2.5.3.1 Thrust Forces on Bends Due to Normal Operation and Occasional Loads

Thrust loads for normal operation and from pump start-ups could be applied at the midpoints of the elbows in the model. The normal operating loads could be applied in the two in-plane directions at the bends in

association with gravity loadings. However, given the sizes of the carrier pipes and the maximum expected flow rates, the resulting calculated thrust forces that could act at the 3-in. & 4-in. primary piping elbows were found to be very small (<10 lbf) and were therefore judged to be negligible and not included in the AutoPIPE supplemental analysis.

2.5.3.2 Transient (e.g., Water Hammer) Loads

Evaluation of occasional loads due to transient pressures is not required. The new piping and components being installed as part of this project's scope have a pressure capacity greater than or equal to that of the existing system. Therefore, the new piping is considered sufficient to handle all existing transient pressures from existing transient initiators. New transient initiators include the installation of LV-P41-4-1 located in Catch Basin 41. However, this valve has a 30 second closure time which significantly exceeds the communication time of the system and will introduce negligible transient pressures.

2.5.4 Wind Loads

The wind loading criteria is taken from Table 3 of TFC-ENG-STD-06 for a WDC-1 classification for general service systems. It employs an ultimate design wind speed of 110 mph and Exposure Category C.

3.0 DESIGN INPUTS

1. Dimensions and details for the new, FRP lines are per drawing H-2-838765. (See Appendix A.)
2. Code of Record: B31.3 2016 (RPP-SPEC-63632, Section 40 40 00, Part 1, Subsection 1.2)
3. Operating/Ambient Temperatures:
   - A. Above Ground Pipe:
     - i. Carrier:
       - a. Hot: 150° F (RPP-SPEC-63632, Section 40 40 00—Attachment 2 of that section) in ambient hot air. Considered to be 120 °F when operating in Load Case 3 at cold ambient temperatures.
       - b. Cold: -25° F (Minimum ambient temperature per TFC-STD-02, Section 3.1.1 for exposed piping.) Used for empty pipes in Load Case 2.
     - ii. Containment:
       - a. Hot: 150° F (RPP-SPEC-63632, Section 40 40 00—Attachment 2 of that section) in ambient hot air.
       - b. Cold: -25° F (Minimum ambient temperature per TFC-STD-02, Section 3.1.1 for exposed piping.)
   - B. Buried Pipe:
     - i. Carrier:
       - a. Hot: 120° F (RPP-SPEC-63632, Section 40 40 00—Attachment 2 of that section)
       - b. Cold: 32° F (Conservative cold temperature for buried pipe at a burial depth greater than 3 ft, which is below frost line. See Design Input 7.A. Also see TFC-ENG-STD-02 Table 2 and Table B-1 at 3ft.) Used for empty pipes in Load Case 2.
     - ii. Containment:
       - a. Hot: 100° F (Conservative, RPP-SPEC-63632, Section 40 40 00—Attachment 2 of that section, given that the pipe temperature will stay around that of the soil at the buried depth. Also see TFC-ENG-STD-02 Table 2 and Table B-1 at 3ft.)
       - b. Cold: 32° F (Conservative cold temperature for buried pipe at a burial depth greater than 3 ft, which is below frost line. See Design Input 7.A. Also see TFC-ENG-STD-02 Table 2 and Table B-1 at 3ft.)

C. The temperature of piping at the time of installation is unknown. Therefore, per TFC-ENG-DESIGN-C-60, Table 2(a), the ambient temperature is taken to be 60° F for the hot case and 80° F for the cold case.

4. Operating Pressures (RPP-SPEC-63632, Section 40 40 00—Attachment 2 of that section):

A. Carrier (Inner) Pipe: 150 psig

B. Containment (Outer) Pipe: 50 psig

5. New Piping Data[4]:

A. Material: Carrier and containment pipe are Conley double containment FRP pipe utilizing Conley Aromatic® amine cured epoxy resin. FRP pipe construction is filament wound fiberglass-reinforced thermosetting epoxy resin pressure pipe manufactured per ASTM D2996—Type 1, Grade 1, Class F (RTRP-11FW). (RPP-SPEC-63632, Section 40 40 00—Attachment 2 of that section.)

B. Pipe Properties (Attachment 2; see also Section 8.0 Calculations):

i. Thermal Expansion Coefficient: $\alpha = 9.5*10^{-6}$ in/in/° F

ii. Poisson's ratio: Stress in the hoop direction, $\nu_{ha} = 0.23$

iii. Axial Modulus of Elasticity: $1.75*10^6$ psi (at 75° F) & $1.30*10^6$ psi (at 250° F)

iv. Hydrostatic Design Basis (HDB): 16,000 psi (at 75° F) and 8,000 psi (at 250° F)

6. Existing Piping Data:
(Note: HNF-27957 documents the pipe classes for the 200 Area ETF, Load-In, and LERF systems.)

A. 3"/6" Pipe: Fibercast® Centricast III EP[5] centrifugally cast epoxy resin fiberglass pipe manufactured in accordance with ASTM D2997 classification of RTRP, Type II, Grade 1, Class C. (See Attachment 3.)

B. 4"/8" Pipe: Bondstrand Series 4000 filament-wound epoxy resin fiberglass pipe manufactured in accordance with ASTM D2996 classifications of RTRP-11FE-1112 & -1113. (See Attachment 3.)

---

[4] New connected, above-ground, stainless steel piping at the catch basin (LERF Basin 41) has been modeled and analyzed separately in RPP-CALC-63779. The model analyzed in that calculation is used in the current analysis only to more accurately simulate the boundary conditions at the connections between the new FRP piping and the new stainless steel piping at the catch basin at LERF Basin 41. The stainless steel piping is not being evaluated or reported on in this calculation. Design inputs, including pipe properties and operating conditions from RPP-CALC-63779 are utilized for the stainless steel piping in this analysis.

[5] HNF-27957 calls out Centricast RB-1520 piping in their Class M-17 (System 60M) pipe description, but references W-105-C3, Rev. 1 M-17 piping specification which calls out Centricast III EP piping which has reinforcement thickness that is approximately half that of the RB-1520 piping. Old specifications do not indicate which Centricast series was ultimately used. However, we know that the Conley product strength in the new design is equal to or weaker than that of the existing pipe such that if the new piping stresses are acceptable, so will be the stresses for the existing piping.

CALCULATION SHEET

Project No. S54413.024	**Calculation No.** S54413.024-M-001	**Rev.** 0	**Page No.** 22 of 192
Title: LERF Basin 41 Buried Piping Analysis			
Prepared By: JD Williams	**Date:** 5/13/20	**Checked By:** JS Huisingh	**Date:** 5/13/20

7. Buried Pipe Data (See Section 8.0 Calculations):
   - A. Average depth (H) of pipe centerline (see screenshots in Mathcad file)
     - i. 3"/6" Pipes = 8ft + 9.94in
     - ii. 4"/8" Upper Pipes = 3ft + 9.13in
     - iii. 4"/8" Lower Pipes = 8ft + 9.94in
   - B. Coating factor for fusion bonded epoxy = 0.6 (ASCE 2001, Table B.1)
   - C. Soil Data (See Section 2.0 Methodology):
     - i. Crushed rock (pipe bedding and initial backfill material) – (RPP-SPEC-63632, Section 31 23 33, Subsection 2.1.E.3)
       - a. Class I soil class (Attachment 2 & Attachment 4)
       - b. Density: 110 lbf/ft^3 (See Section 2.0 Methodology)
       - c. Internal friction angle: $\Phi = 40°$ (Attachment 1)
       - d. Cohesion value: c = 0 (Attachment 1)
     - ii. Site Soil (final backfill only)
       - a. Density: 110 lbf/ft^3 (TFC-ENG-STD-06)
       - b. Internal friction angle: $\Phi = 40°$ (Attachment 1)

8. Conley FRP Pipe Geometry (See Section 8.0 & Attachment 2):

Nom. Pipe Diameter	Pipe Series	Pipe O.D.	(Outer) UV Thickness	Pipe Reinf. Thickness	Reinf. O.D.*	Reinf. I.D.**	Fitting Reinf. Thickness***
3"	40	3.47"	0.040"	0.135"	3.39"	3.12"	0.295"
4"	40	4.48"	0.020"	0.160"	4.44"	4.12"	0.295"
6"	30	6.38"	0.020"	0.110"	6.34"	6.12"	0.410"
8"	30	8.38"	0.020"	0.110"	8.34"	8.12"	0.410"

* Reinf. O.D. = Pipe O.D. – 2 (UV Thickness)
** Reinf. I.D. = Reinf. O.D. – 2 (Reinf. Thickness)
*** See Attachment 2.

9. Corrosion-erosion allowance for FRP pipe is neglected since the pipe has a corrosion barrier (inner liner) which has a thickness of 0.060". (See Attachment 2.)

10. Specific gravity of contents is 1.0, but conservatively modeled using a value of 1.5. (See Attachment 5.)

11. The pipe insulation (for above-ground containment and exposed carrier pipes) was originally specified in RPP-SPEC-63632, Section 40 42 13 to be 2" thick black rubber "Armaflex" type pipe insulation, which has a maximum density of 6 lbf/ft^3. The current supplemental AutoPIPE analysis uses this density. However, per client direction, the specification for this insulation has since changed to be 2" of Owens Corning FoamGlas insulation, which has a maximum density of 7.5 lbf/ft^3 (see Attachment 6). Considering the weights of the double contained piping, the contents, and the insulation, the new, heavier insulation increases the weight per foot of contents filled double contained piping by less than 5%. Given that all DCRs for new insulated FRP piping do not exceed 0.80 (see Section 6.1), it is apparent that this additional weight does not threaten the results of this analysis nor justify rerunning the supplemental analysis with this slight difference in insulation density. Therefore, no rerun of the supplemental analysis is necessary.

12. The effluent lines are classified as general service lines and as such TFC-ENG-STD-06 requires the system to be designed to NPH (Natural Phenomena Hazard) Design Category (NDC)-1. (See design category comparisons in Table 1 of TFC-ENG-STD-06.) TFC-ENG-STD-06 invokes the International Building Code [IBC] which also invokes ASCE 7 in which Ip=1.0 such that equivalent static seismic values of Ah = 0.123g and Av = 0.082g are calculated (see Section 8.0 Calculations) and applied in the supplemental analysis. Also reference TFC-ENG-STD-06 Section 3.5.5.1, 3.5.5.2, and Table 6.

13. The service design factor used in the wall thickness calculation is taken as 0.2. Section A302.3.2(c)(2) states that when using the static HDB[S], the service design factor *F* shall not exceed 0.5. The service design factor is selected based on different conditions, including but not limited to installation, environment, temperature, hazard involved, life expectancy desired, and the properties of the pipe selected. The buried piping evaluated herein is general service, carrying water (very minor contamination levels), with no water hammer loadings expected. Also, the entire system is dual contained. In general, there is very low risk involved with this piping. Therefore, the factor of 0.2 is judged to be a conservatively low service design factor.

4.0 ASSUMPTIONS

There are no unverified assumptions in this calculation. Engineering judgments are used and justified in the body of the calculation.

5.0 COMPUTER SOFTWARE

The pipe stress analysis modeling software, Bentley AutoPIPE CONNECT Edition generation, Version 11.01.00.24 was used to model the piping assembly and perform the supplemental stress analysis per the ISO 14692 GRP Piping Code. The program was executed on a Dell computer; model Dell Precision™[6] Tower 3620, Service Tag Number JMKFRD2, with an S&L ID of GDV11145. This software has been validated as documented in ARES ESD V&V No. VV-19-10-042, Rev. 0.

Mathcad®[7] 15.0 (M045) was used for the hand calculations. Calculations are checked step by step.

6.0 RESULTS

6.1 ASME B31.3 Evaluation Results

As stated in the Methodology section, the minimum wall thickness check for internal pressure per ASME B31.3, Section A304.1.2(c) is performed in Section 8.5 where it is shown that the Series 40 and 30 pipe (i.e,. for inner and outer FRP pipes, respectively), is all adequate for the internal pressures expected in the system and meet the Code requirement for minimum required wall thickness. Also, as shown in manufacturer-provided, AWWA M45-based buried piping (external load) calculations in Attachment 7, the outer FRP pipes (6-inch and 8-inch) are structurally adequate to handle the external (burial) loads and thereby meet the external loading requirement in Section A302.3.3(c)(2) of the Code.

6.2 Overall Supplemental Analysis Results

The maximum stress DCR among all associated buried transfer piping is 0.80 at Point X40 (4-in. primary elbow) for the combined stress due to gravity, pressure, and thermal loadings. (See stress isometric below.) It is also noted for reference that among the existing regions of piping that were modeled for the sake of determining representative stresses on newly-connected piping, the maximum stress DCR is 0.83 at Point W58 (8-in. pipe near tee) for the occasional stress due to seismic loads. Given that all stress DCRs associated with this supplemental analysis are less than 1.0, the subject piping is found to perform acceptably under anticipated loadings per ISO 14692 requirements and Hanford standards cited previously.

[6] Dell Precision is a registered trademark of Dell Computer Corporation, One Dell Way, Round Rock, TX 78682.
[7] Mathcad is a registered trademark of Parametric Technology Corporation., Needham, Massachusetts.

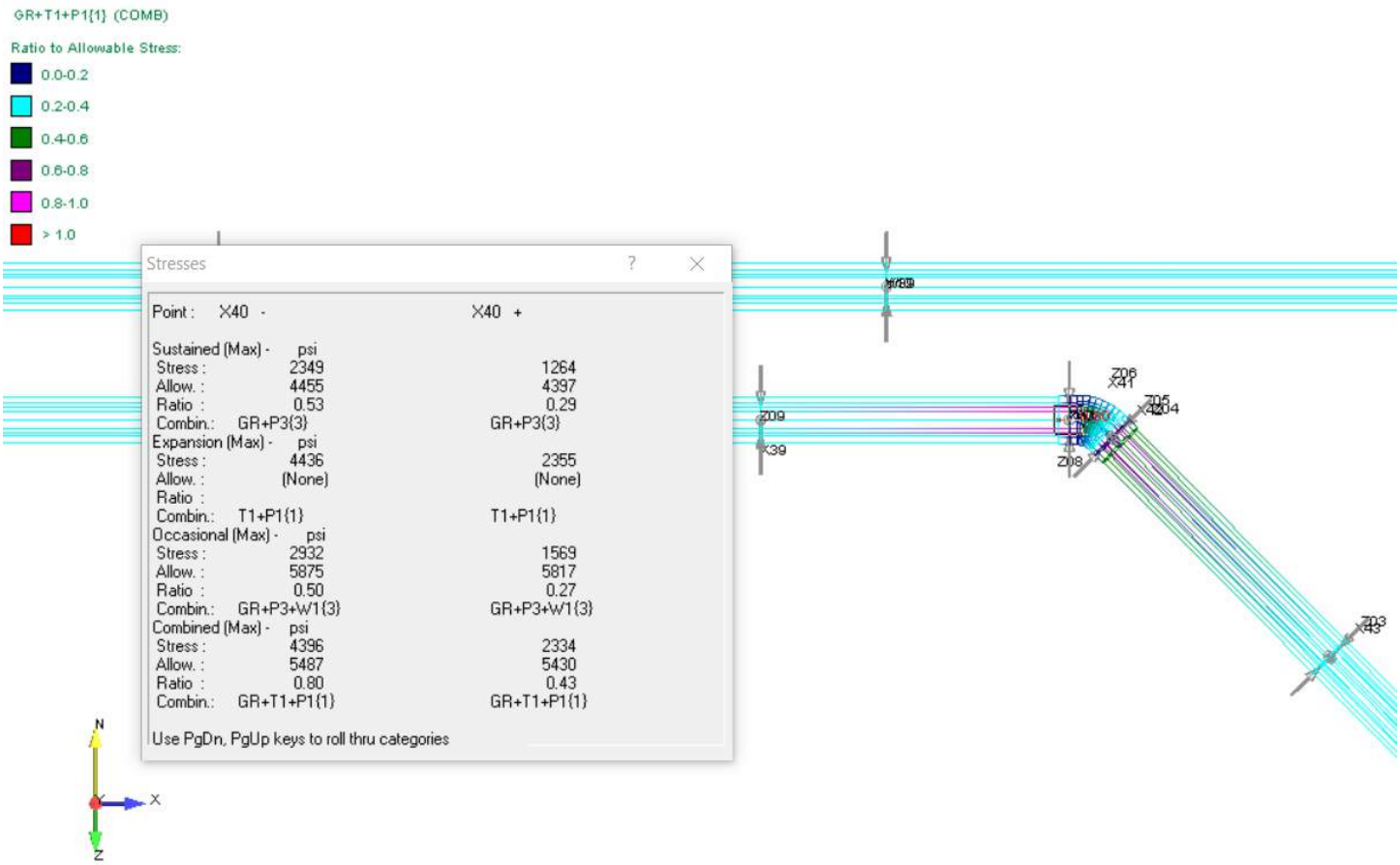

Figure 6-1. Maximum Pipe Stress in New FRP Pipe

The anchor and support loadings from the supplemental analysis are summarized in Section 6.3 below.

6.3 Piping Support Loads

Designs of associated supports and anchors are presented in design drawing H-2-838765. Primary piping supports (i.e., guides, vertical supports) for both primary and secondary piping are structurally evaluated in RPP-CALC-63779, Appendix H. No evaluation of existing supports for existing piping that is tied into and affected by the new FRP piping analyzed herein is necessary as the supports are judged to be adequate by comparison to the loading of the new piping and the types of supports used for the new piping. As shown in Table 6-1 and Table 6-2, the maximum moment on the new support bases bounds the maximum moment on the support bases for the existing pipe supports. Also, the support types used on the existing piping are judged to be structurally adequate for the relatively low forces reported in the AutoPIPE analysis and in the tables below.

CALCULATION SHEET

Project No. S54413.024	**Calculation No.** S54413.024-M-001	**Rev.** 0	**Page No.** 26 of 192
Title: LERF Basin 41 Buried Piping Analysis			
Prepared By: JD Williams	**Date:** 5/13/20	**Checked By:** JS Huisingh	**Date:** 5/13/20

Table 6-1. Bounding Support Reaction Loads on New Pipe Supports.

Support Node Point	Support Type*	Support Location	Vertical Load** (lbf)	Lateral Load (Transverse to Pipe Axis) (lbf)	Maximum Moment at Support Base (lbf*ft)
Z52	HSS Guide	ON Catch Basin 42	204	429	2282
Y45	HSS Guide	OFF Catch Basin 41	567	264	858
Y54	HSS Guide	ON Catch Basin 41	296	381	697

* See drawing H-2-838765.
** Actual vertical load concurrent with maximum lateral load.

Table 6-2. Bounding Support Reaction Loads on Existing Pipe Supports.

Support Node Point	Support Type*	Support Location	Vertical Load** (lbf)	Lateral Load (Transverse to Pipe Axis) (lbf)	Maximum Moment at Support Base (lbf*ft)
W65	HSS Guide	ON Catch Basin 42	490	1109	2063
AC02	HSS Guide	OFF Catch Basin 42	1258	455	1201

* See drawings H-2-79633 and H-2-79634.
** Actual vertical load concurrent with maximum lateral load.

7.0 REFERENCES

AISC 14th Edition, *Steel Construction Manual*, American Institute of Steel Construction, Inc., 2011, Chicago, IL.

ARES ESD, a division of Sargent & Lundy Engineering Services, Inc. V&V No. VV-19-10-042, Rev. 0, *Bentley AutoPIPE CONNECT Edition*, Version 11.01.00.24 (available upon request).

ASCE 2001; Guidelines for the Design of Buried Steel Pipe; 2001; American Lifelines Alliance, contracted under a cooperative agreement between the American Society of Civil Engineers and the Federal Emergency Management Agency, Reston, VA.

ASCE 7-10, *Minimum Design Loads for Buildings and Other Structures*, American Society of Civil Engineers, Reston, VA.

ASME B31.3-2016, *Process Piping*, American Society of Mechanical Engineers, New York, NY.

ASTM D2992-18, Standard Practice for Obtaining Hydrostatic or Pressure Design Basis for “Fiberglass” (Glass-Fiber-Reinforced Thermosetting Resin) Pipe and Fittings, ASTM International, West Conshohocken, PA.

ASTM D2996-17, Standard Specification for Filament-Wound “Fiberglass” (Glass-Fiber-Reinforced Thermosetting Resin) Pipe, ASTM International, West Conshohocken, PA.

ASTM D2997-15, Standard Specification for Centrifugally Cast “Fiberglass” (Glass-Fiber-Reinforced Thermosetting Resin) Pipe, ASTM International, West Conshohocken, PA.

AWWA M45, Third Edition, *Fiberglass Pipe Design*, American Water Works Association, Denver, CO, 2014.

Das, B.M., *Principles of Foundation Engineering*, Sixth Edition, Cengage Learning, Stamford, CT, 2007.

HNF-27957, Rev. 3, *200 Area ETF, Load-In, and LERF Pipe Class Specification*, U.S. Department of Energy, Richland, WA.

H-2-79633, Rev. 2, W-105 LERF 242-A EVAP CON INTERIM RETNN BASIN, *Pipe Supports*, U.S. Department of Energy, Richland, WA.

H-2-79634, Rev. 3, W-105 LERF 242-A EVAP CON INTERIM RETNN BASIN, *Pipe Supports*, U.S. Department of Energy, Richland, WA.

H-2-838765, Rev. 0, *LERF Basin 41, Mechanical, General Arrangement, Sections and Details, Etc.*, U.S. Department of Energy, Richland, WA.

ISO 14692:2002, Parts 1-4, *Petroleum and Natural Gas Industries — Glass-reinforced Plastics (GRP) Piping*, International Organization for Standardization.

Lindeburg, Michael R., *Civil Engineering Reference Manual*, 11th Edition, Professional Publications, Inc., Belmont, CA, 2008.

RPP-CALC-63650, Rev. 0, *242AL-41 Leachate and Basin Pump flow Calculation*, U.S. Department of Energy, Richland, WA.

RPP-CALC-63779, Rev. 0, *ASME B31.3 Evaluation of the LERF Basin 41 Stainless Steel Piping*, U.S. Department of Energy, Richland, WA.

RPP-SPEC-63632, Rev. 0, *LERF Basin 41 Design Construction Specification*, U.S. Department of Energy, Richland, WA.

TFC-ENG-DESIGN-C-60, Rev. A-3, Preparation of Piping Analyses for Waste Transfer Systems, U.S. Department of Energy, Richland, WA.

TFC-ENG-STD-02, Rev. B-0, *Environmental/Seasonal Requirements for TOC Systems, Structures, and Components*, U.S. Department of Energy, Richland, WA.

TFC-ENG-STD-06, Rev. D-2, *Design Loads for Tank Farm Facilities*, U.S. Department of Energy, Richland, WA.

CALCULATION SHEET

Project No. S54413.024	**Calculation No.** S54413.024-M-001	**Rev.** 0	**Page No.** 29 of 192
Title: LERF Basin 41 Buried Piping Analysis			
Prepared By: JD Williams	**Date:** 5/13/20	**Checked By:** JS Huisingh	**Date:** 5/13/20

8.0 CALCULATIONS

CALCULATION SHEET

Project No. S54413.024	**Calculation No.** S54413.024-M-001	**Rev.** 0	**Page No.** 40 of 192
Title: LERF Basin 41 Buried Piping Analysis			
Prepared By: JD Williams	**Date:** 5/13/20	**Checked By:** JS Huisingh	**Date:** 5/13/20

APPENDIX A

LERF PIPING DRAWINGS

RPP-CALC-63780, Rev. 0

CALCULATION SHEET

Project No. S54413.024	**Calculation No.** S54413.024-M-001	**Rev.** 0	**Page No.** 41 of 192
Title: LERF Basin 41 Buried Piping Analysis			
Prepared By: JD Williams	**Date:** 5/13/20	**Checked By:** JS Huisingh	**Date:** 5/13/20

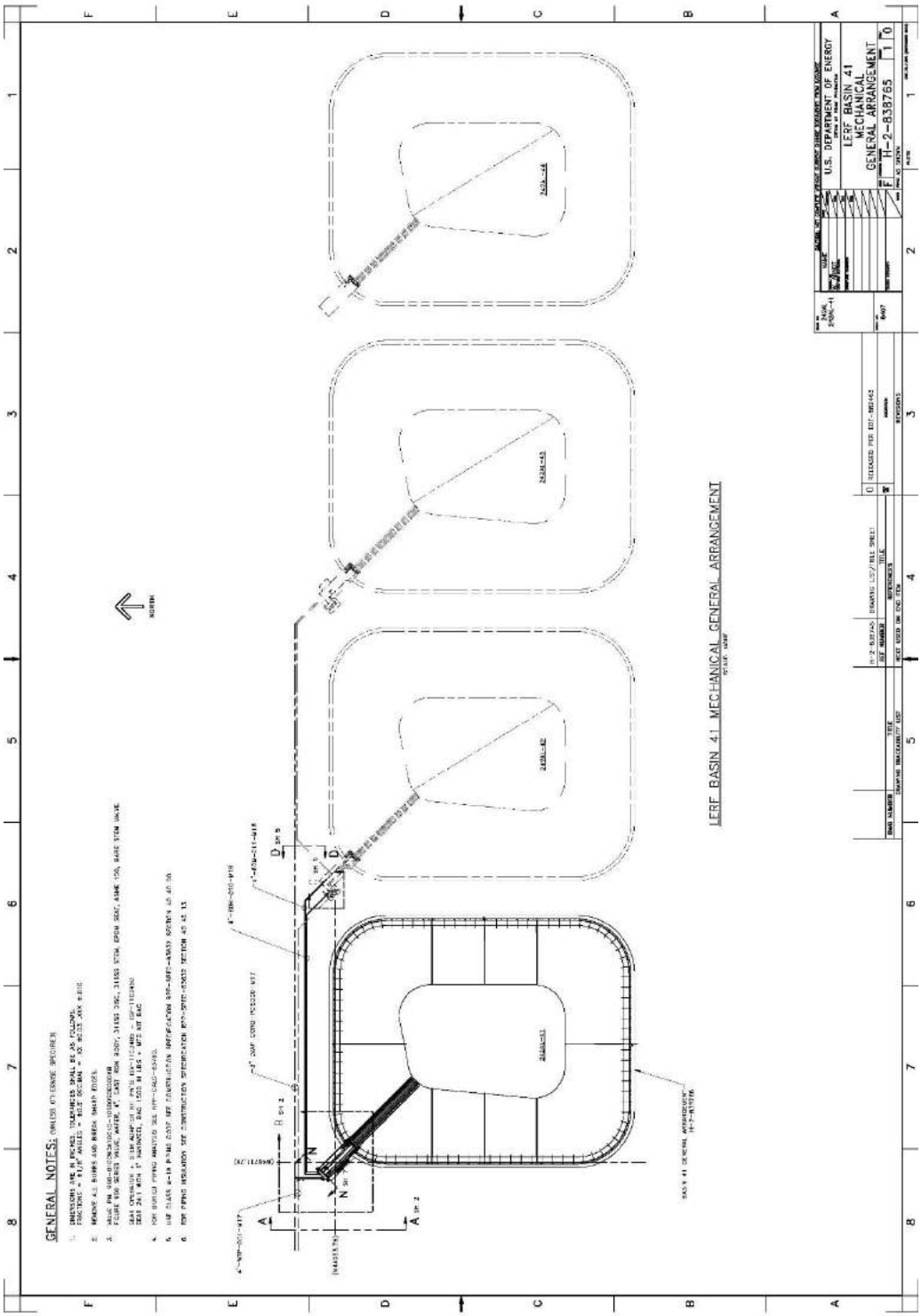

CALCULATION SHEET

Project No. S54413.024	**Calculation No.** S54413.024-M-001	**Rev.** 0	**Page No.** 42 of 192
Title: LERF Basin 41 Buried Piping Analysis			
Prepared By: JD Williams	**Date:** 5/13/20	**Checked By:** JS Huisingh	**Date:** 5/13/20

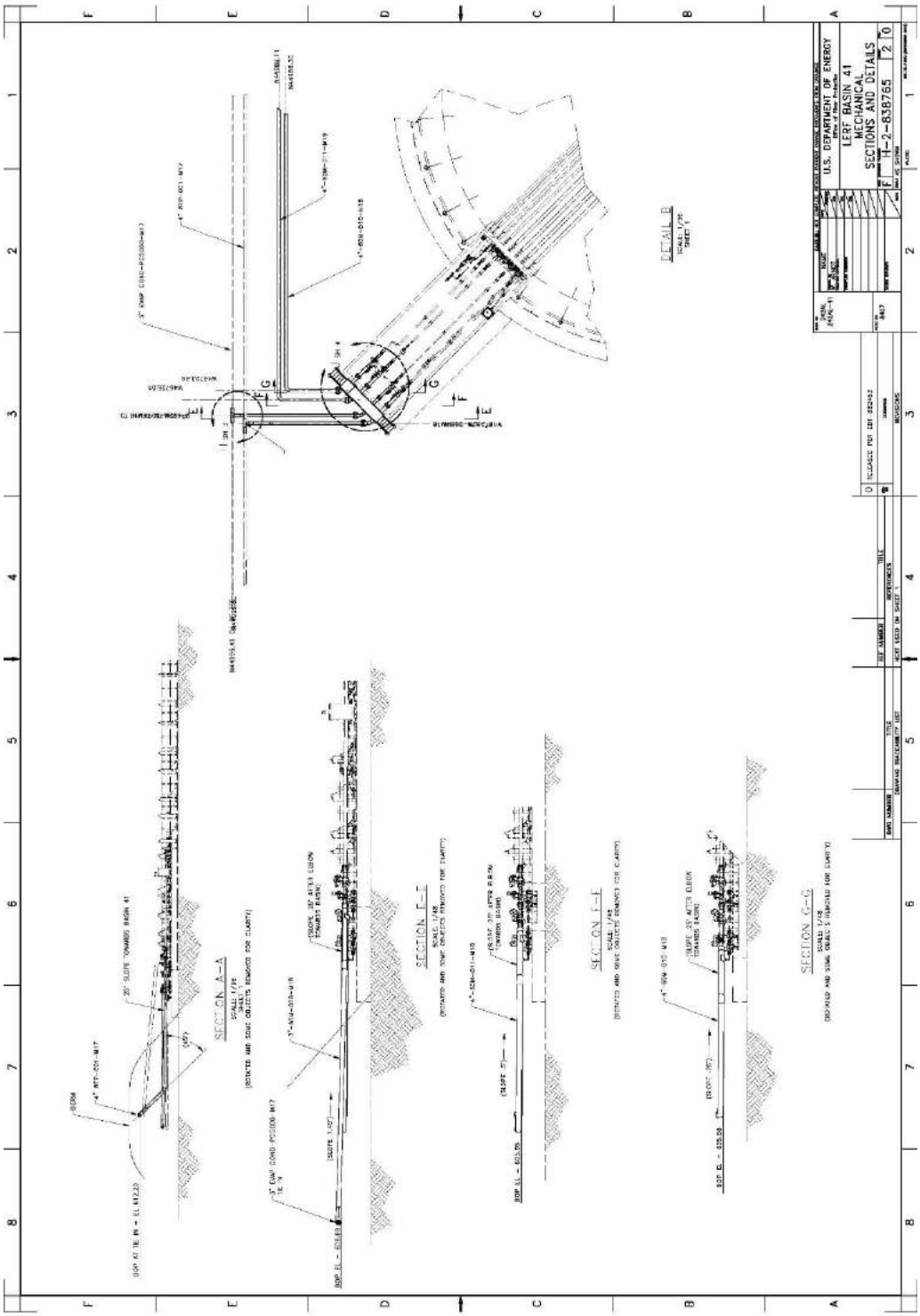

CALCULATION SHEET

Project No. S54413.024	**Calculation No.** S54413.024-M-001	**Rev.** 0	**Page No.** 43 of 192
Title: LERF Basin 41 Buried Piping Analysis			
Prepared By: JD Williams	**Date:** 5/13/20	**Checked By:** JS Huisingh	**Date:** 5/13/20

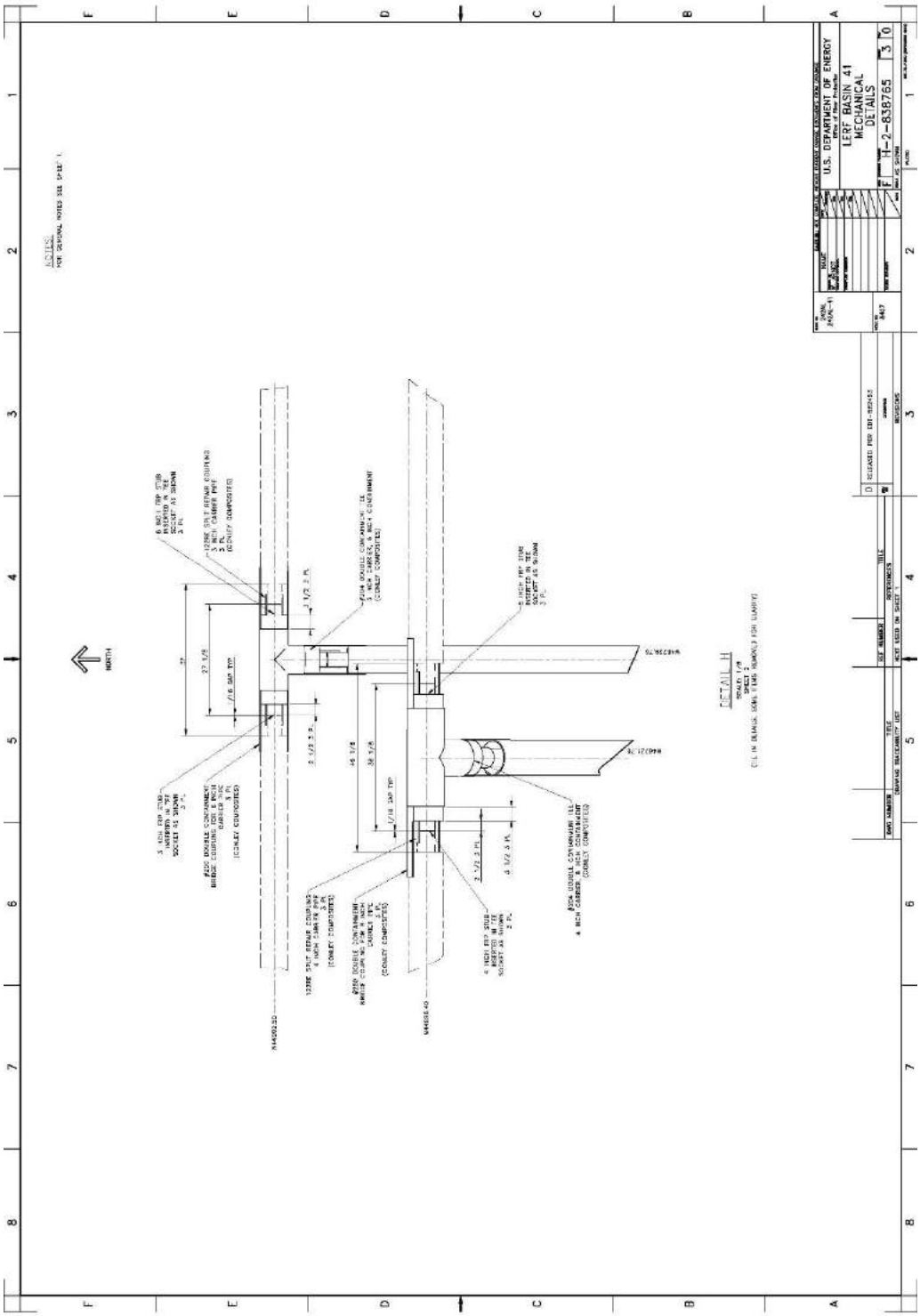

RPP-CALC-63780, Rev. 0

CALCULATION SHEET

Project No. S54413.024	**Calculation No.** S54413.024-M-001	**Rev.** 0	**Page No.** 44 of 192
Title: LERF Basin 41 Buried Piping Analysis			
Prepared By: JD Williams	**Date:** 5/13/20	**Checked By:** JS Huisingh	**Date:** 5/13/20

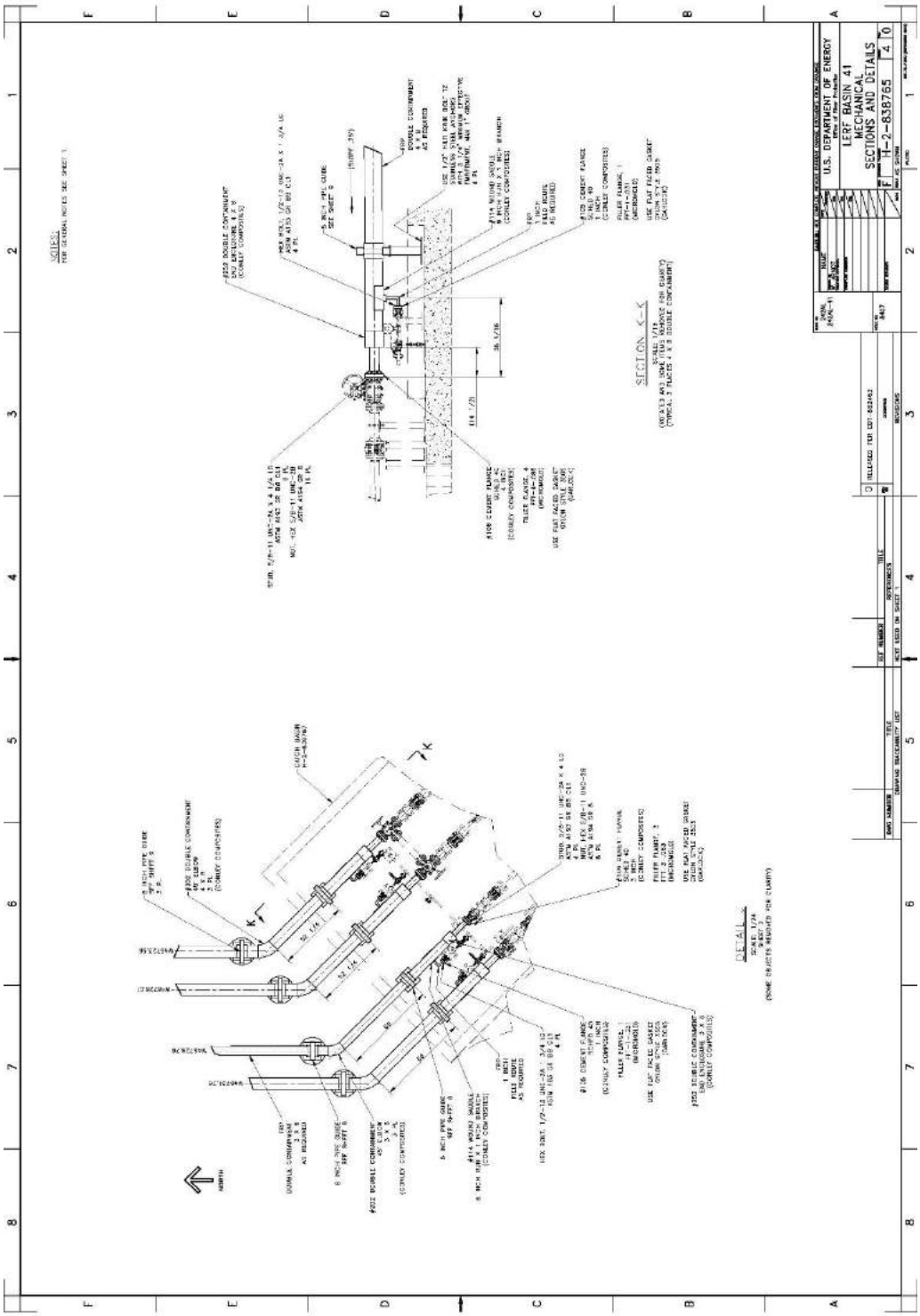

RPP-CALC-63780, Rev. 0

CALCULATION SHEET

Project No. S54413.024	**Calculation No.** S54413.024-M-001	**Rev.** 0	**Page No.** 45 of 192
Title: LERF Basin 41 Buried Piping Analysis			
Prepared By: JD Williams	**Date:** 5/13/20	**Checked By:** JS Huisingh	**Date:** 5/13/20

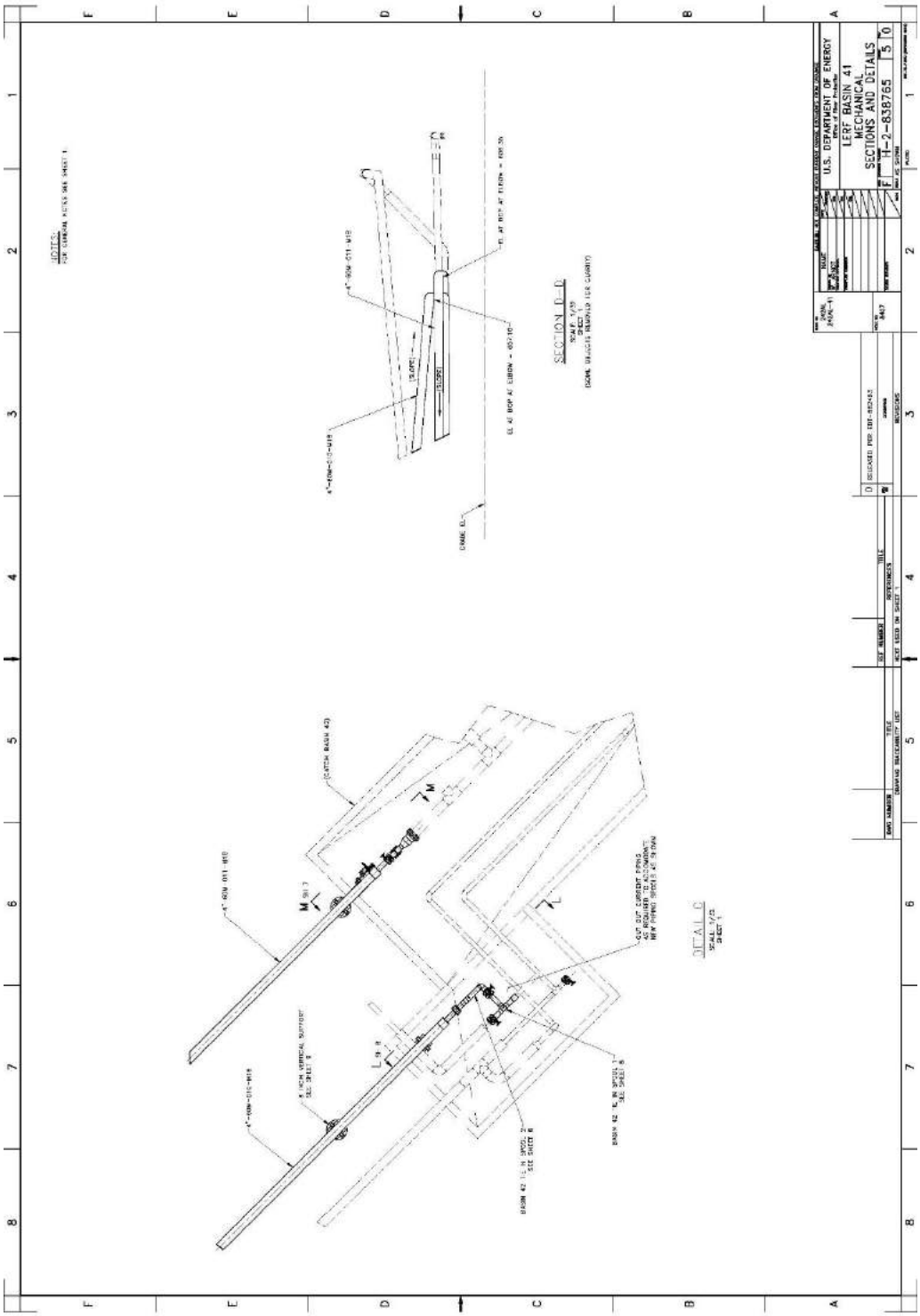

CALCULATION SHEET

Project No. S54413.024	**Calculation No.** S54413.024-M-001	**Rev.** 0	**Page No.** 46 of 192
Title: LERF Basin 41 Buried Piping Analysis			
Prepared By: JD Williams	**Date:** 5/13/20	**Checked By:** JS Huisingh	**Date:** 5/13/20

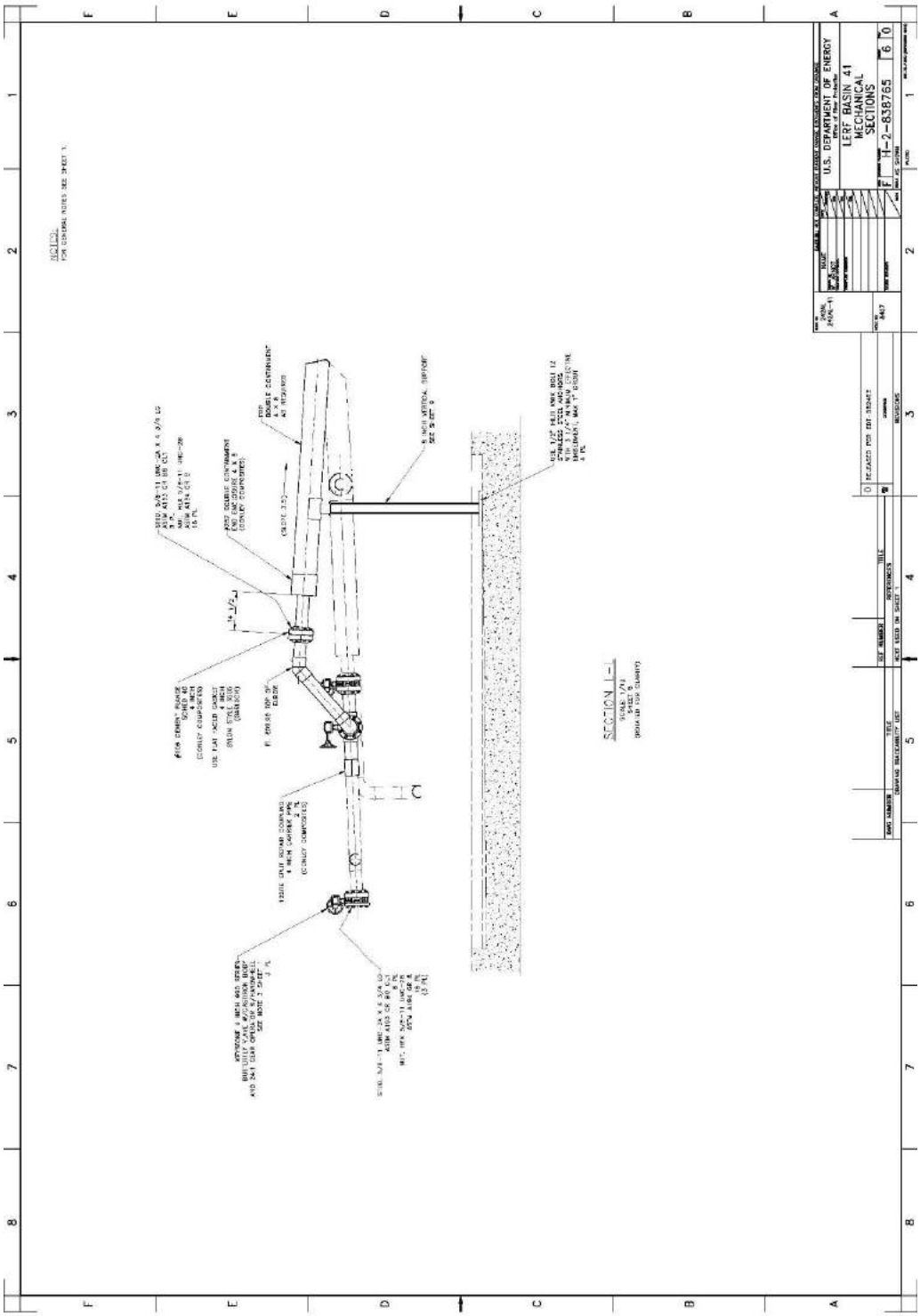

RPP-CALC-63780, Rev. 0

CALCULATION SHEET

Project No. S54413.024	**Calculation No.** S54413.024-M-001	**Rev.** 0	**Page No.** 47 of 192
Title: LERF Basin 41 Buried Piping Analysis			
Prepared By: JD Williams	**Date:** 5/13/20	**Checked By:** JS Huisingh	**Date:** 5/13/20

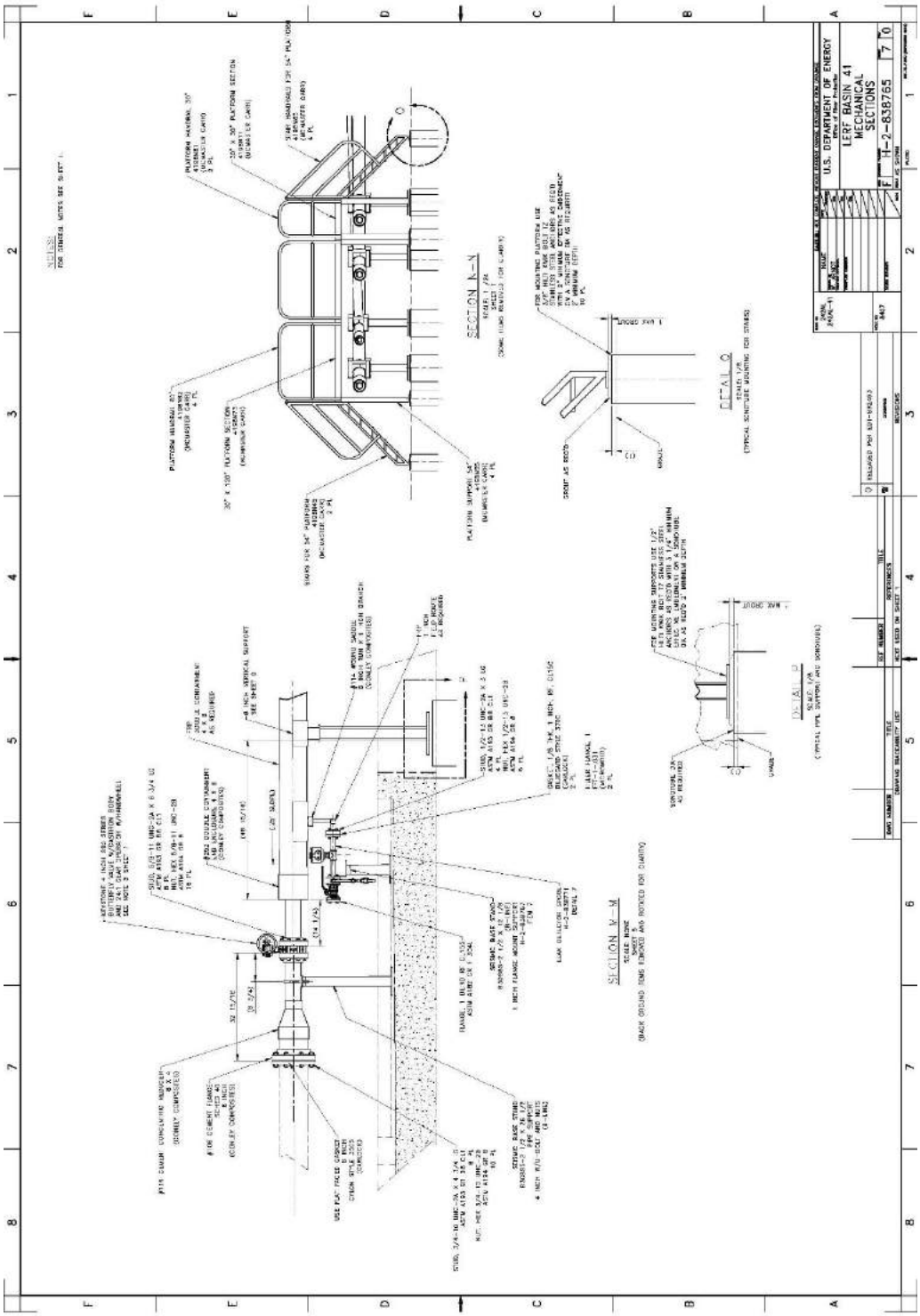

CALCULATION SHEET

Project No. S54413.024	**Calculation No.** S54413.024-M-001	**Rev.** 0	**Page No.** 48 of 192
Title: LERF Basin 41 Buried Piping Analysis			
Prepared By: JD Williams	**Date:** 5/13/20	**Checked By:** JS Huisingh	**Date:** 5/13/20

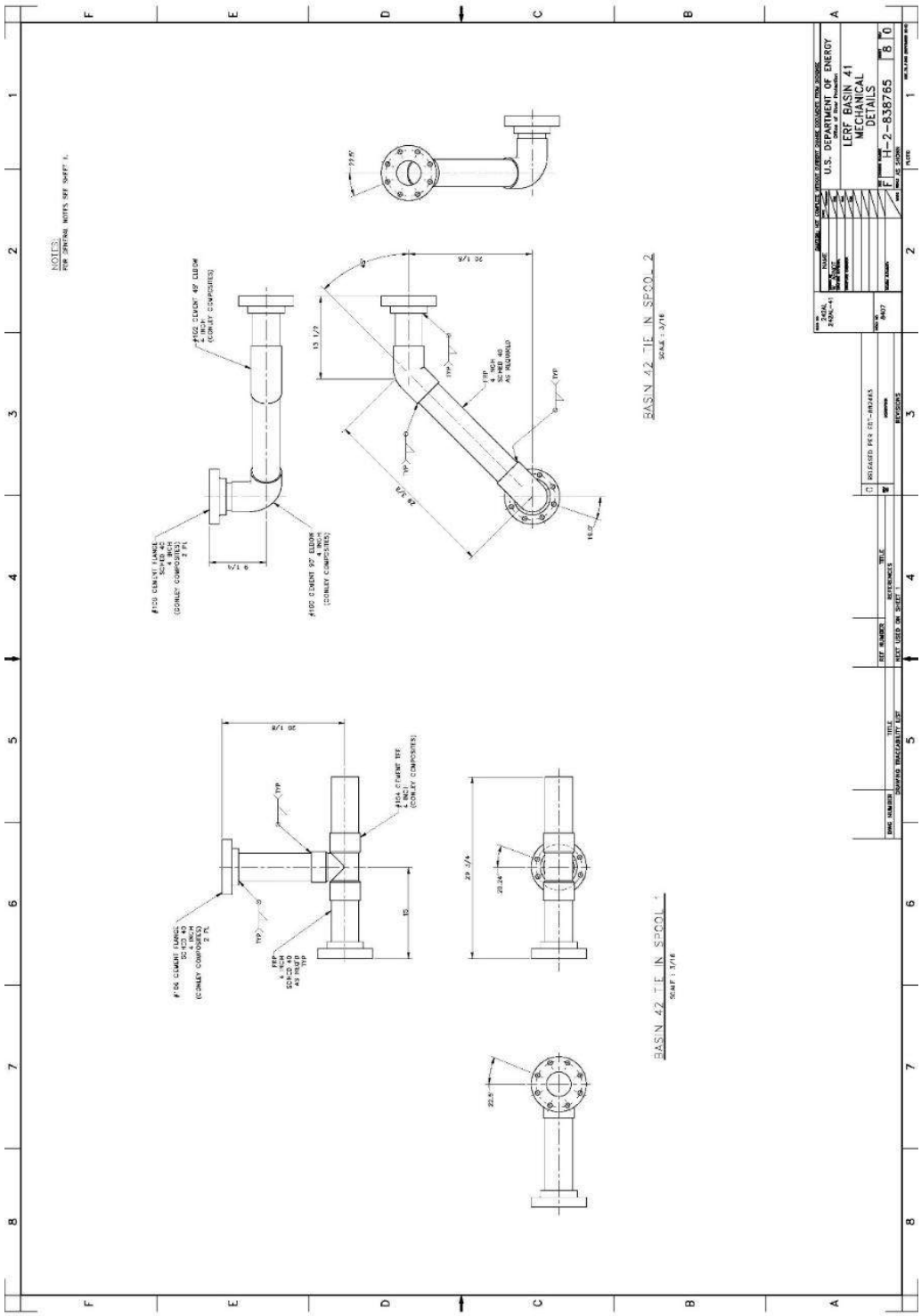

RPP-CALC-63780, Rev. 0

CALCULATION SHEET

Project No. S54413.024	**Calculation No.** S54413.024-M-001	**Rev.** 0	**Page No.** 49 of 192
Title: LERF Basin 41 Buried Piping Analysis			
Prepared By: JD Williams	**Date:** 5/13/20	**Checked By:** JS Huisingh	**Date:** 5/13/20

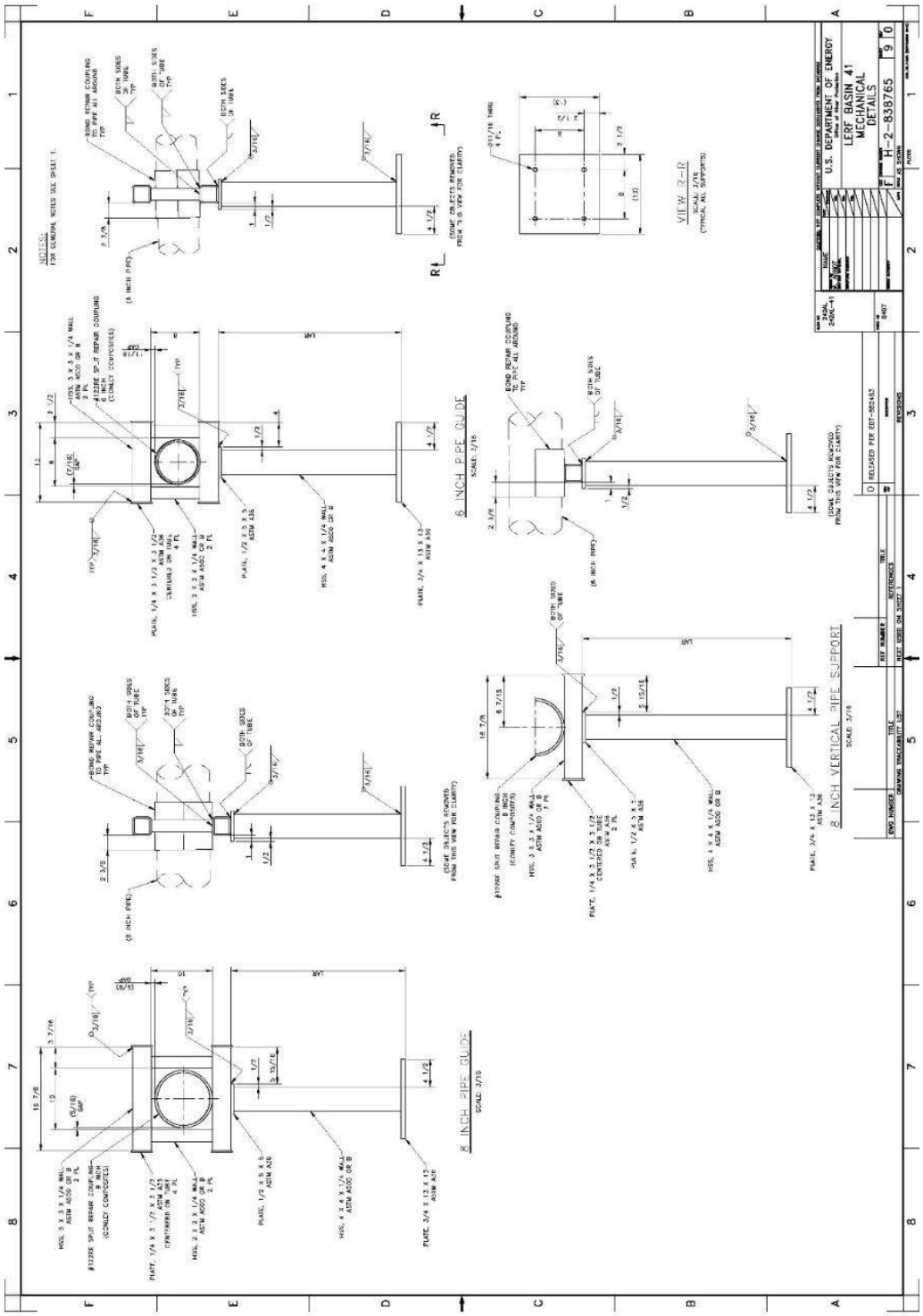

RPP-CALC-63780, Rev. 0

CALCULATION SHEET

Project No. S54413.024	**Calculation No.** S54413.024-M-001	**Rev.** 0	**Page No.** 50 of 192
Title: LERF Basin 41 Buried Piping Analysis			
Prepared By: JD Williams	**Date:** 5/13/20	**Checked By:** JS Huisingh	**Date:** 5/13/20

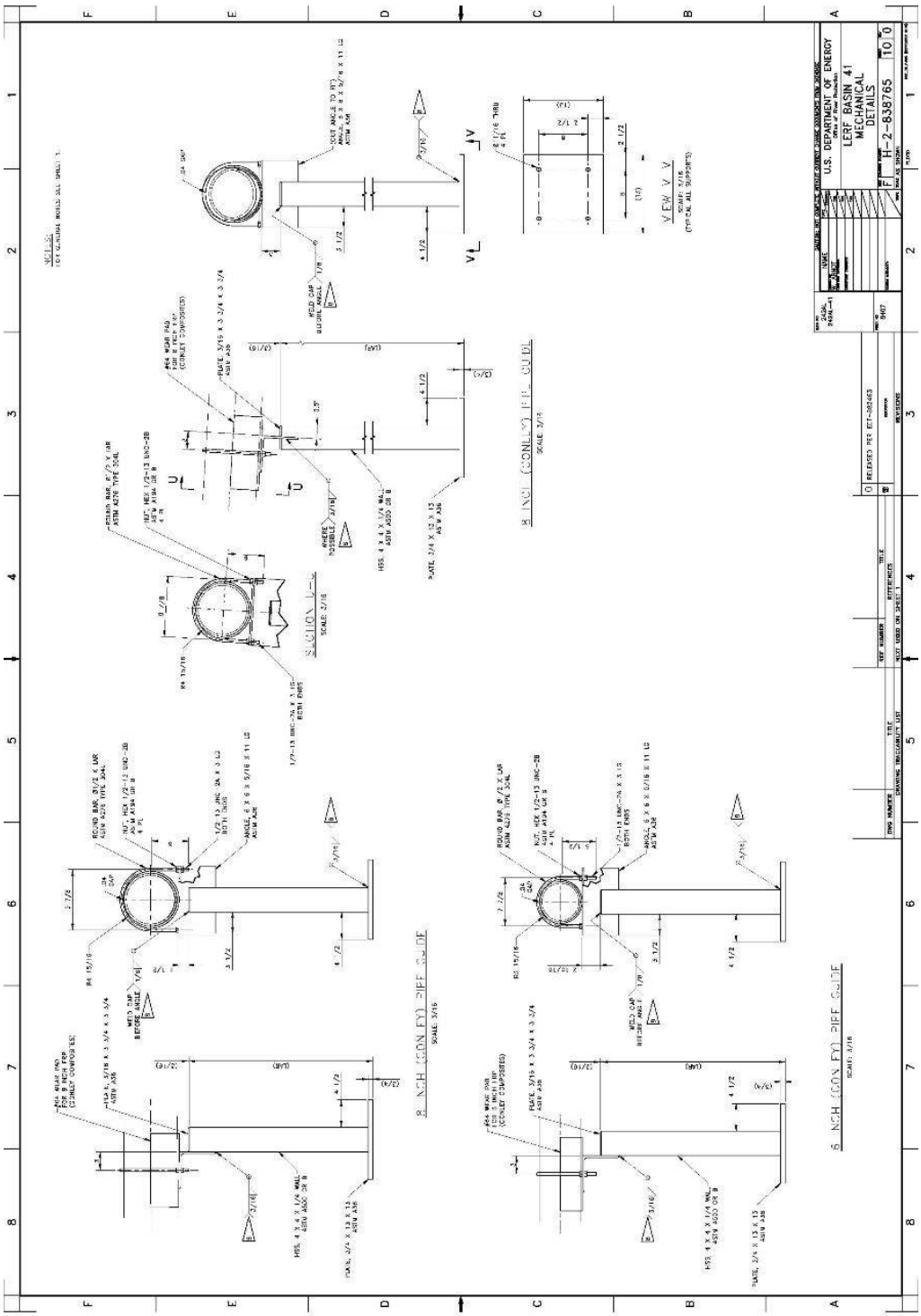

RPP-CALC-63780, Rev. 0

CALCULATION SHEET

Project No. S54413.024	**Calculation No.** S54413.024-M-001	**Rev.** 0	**Page No.** 51 of 192
Title: LERF Basin 41 Buried Piping Analysis			
Prepared By: JD Williams	**Date:** 5/13/20	**Checked By:** JS Huisingh	**Date:** 5/13/20

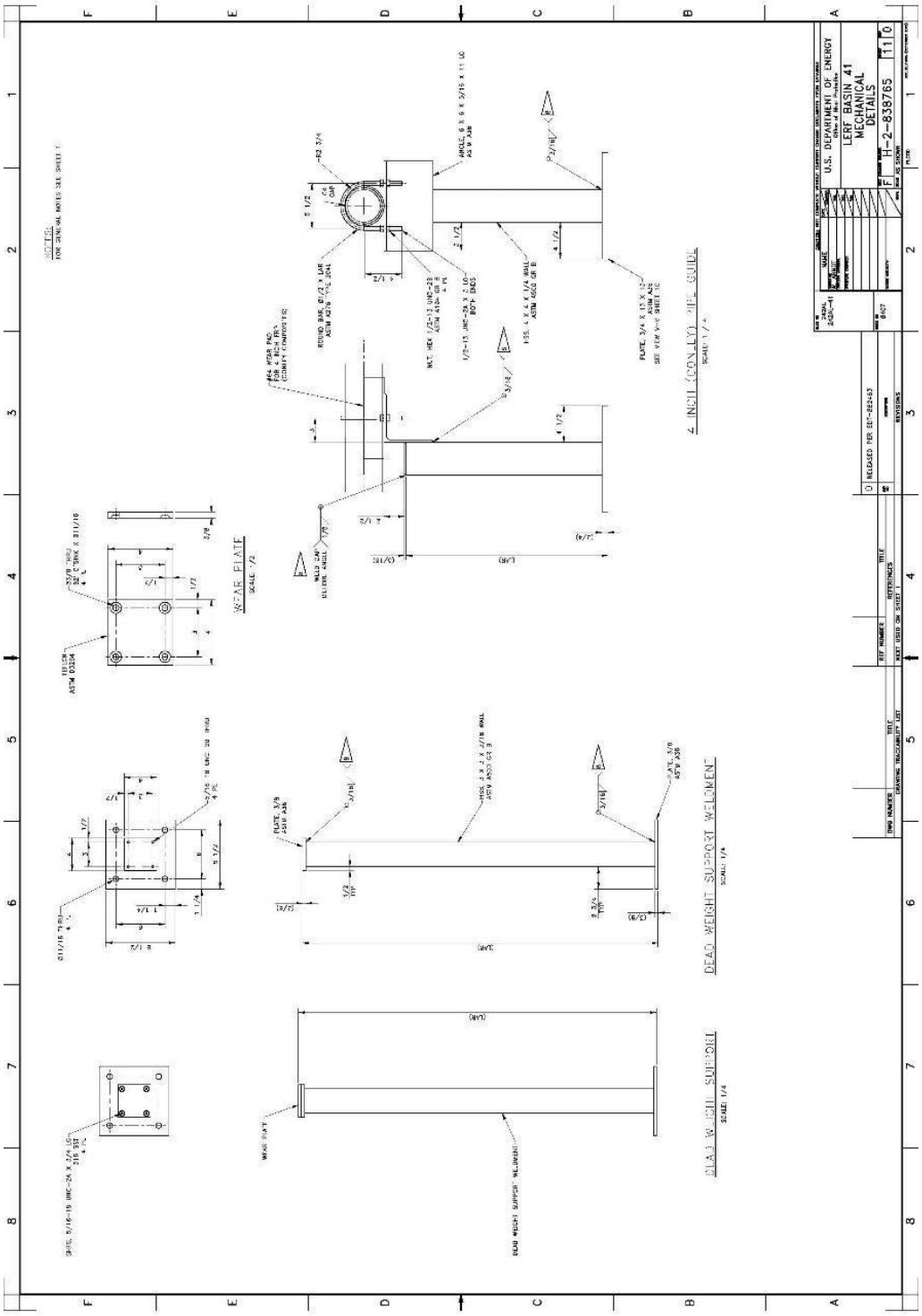

CALCULATION SHEET

Project No. S54413.024	**Calculation No.** S54413.024-M-001	**Rev.** 0	**Page No.** 52 of 192
Title: LERF Basin 41 Buried Piping Analysis			
Prepared By: JD Williams	**Date:** 5/13/20	**Checked By:** JS Huisingh	**Date:** 5/13/20

APPENDIX B

AUTOPIPE MODEL ISOMETRIC VIEWS

CALCULATION SHEET

Project No. S54413.024	**Calculation No.** S54413.024-M-001	**Rev.** 0	**Page No.** 53 of 192
Title: LERF Basin 41 Buried Piping Analysis			
Prepared By: JD Williams	**Date:** 5/13/20	**Checked By:** JS Huisingh	**Date:** 5/13/20

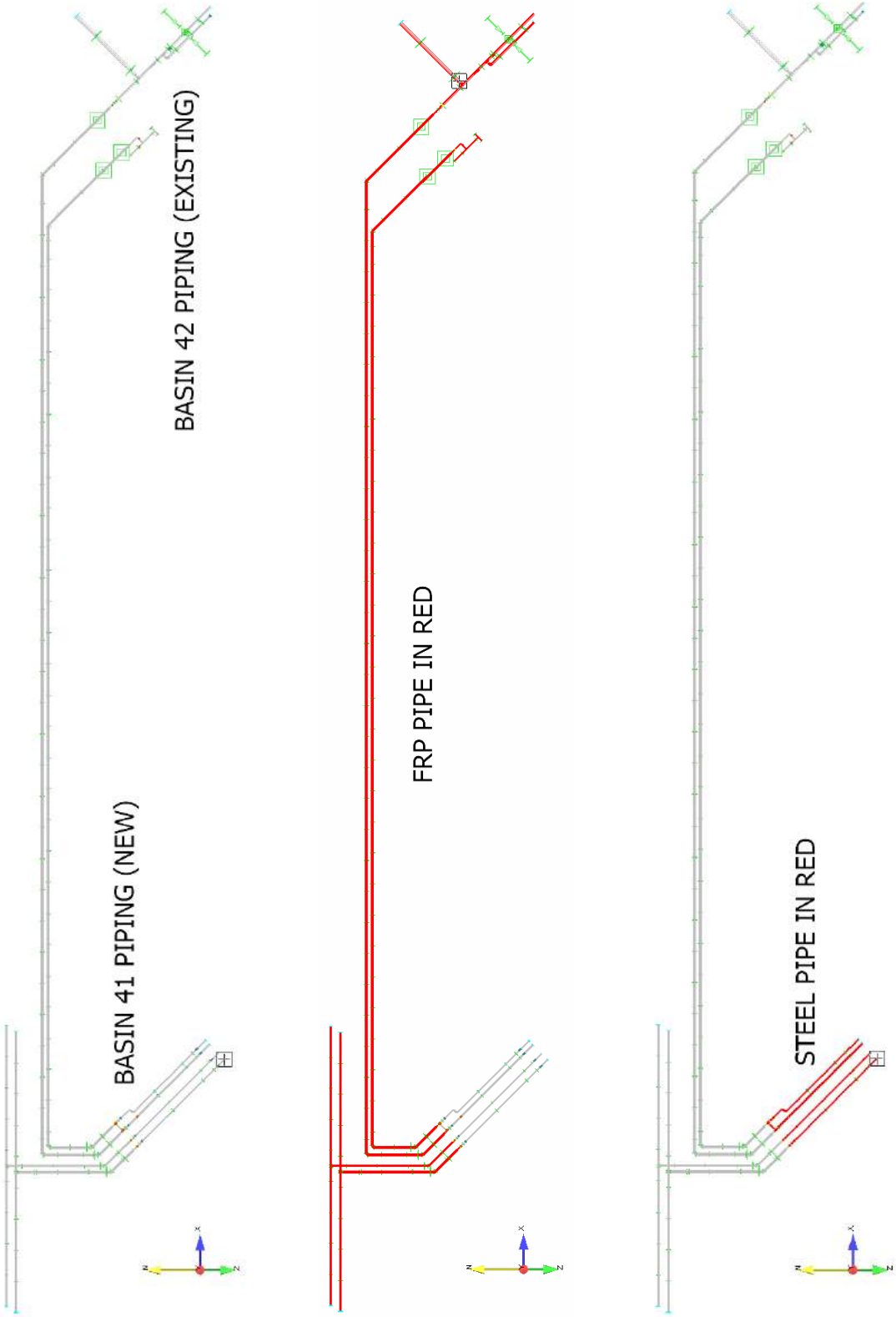

CALCULATION SHEET

Project No. S54413.024	**Calculation No.** S54413.024-M-001	**Rev.** 0	**Page No.** 54 of 192
Title: LERF Basin 41 Buried Piping Analysis			
Prepared By: JD Williams	**Date:** 5/13/20	**Checked By:** JS Huisingh	**Date:** 5/13/20

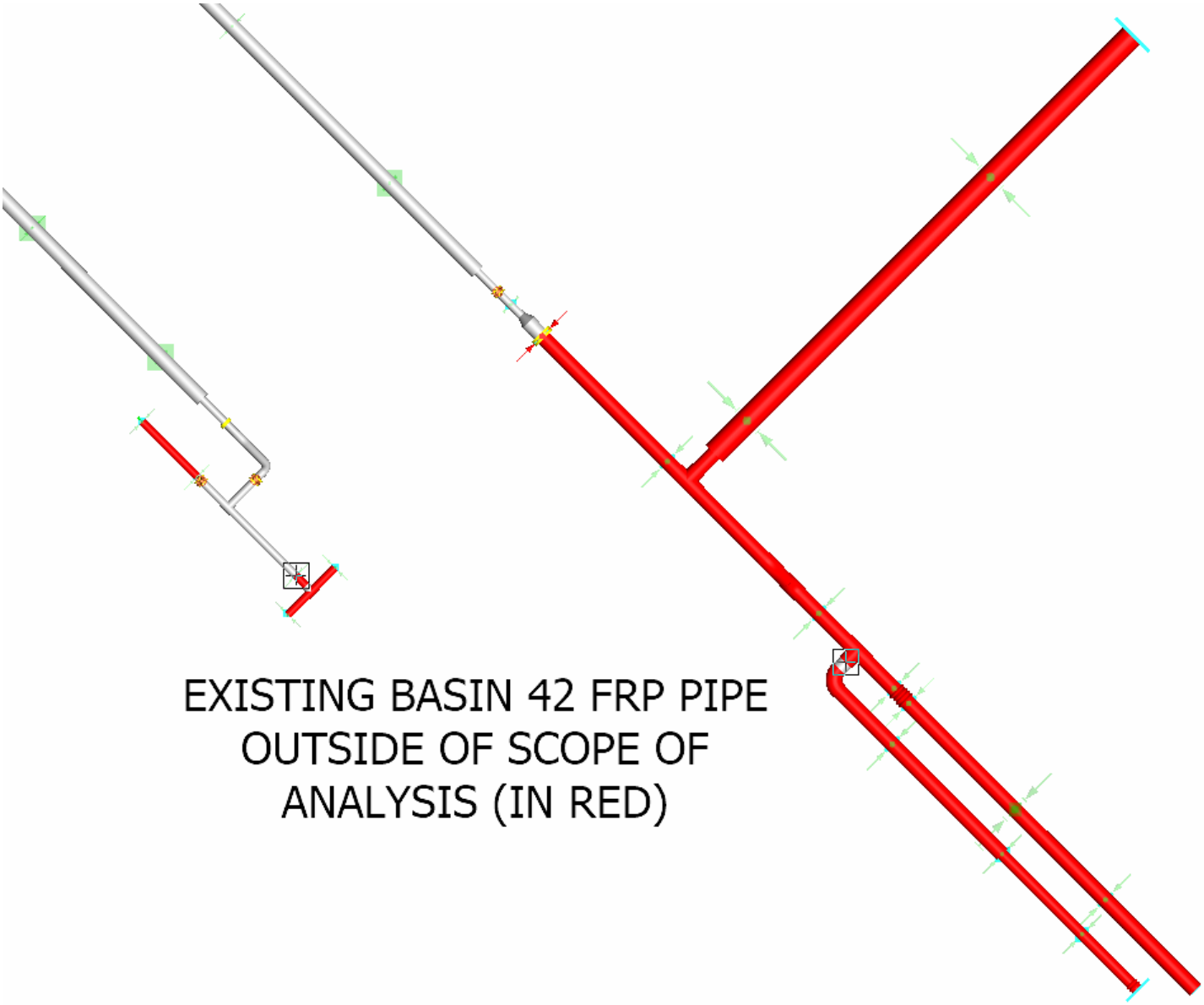

CALCULATION SHEET

Project No. S54413.024	**Calculation No.** S54413.024-M-001	**Rev.** 0	**Page No.** 55 of 192
Title: LERF Basin 41 Buried Piping Analysis			
Prepared By: JD Williams	**Date:** 5/13/20	**Checked By:** JS Huisingh	**Date:** 5/13/20

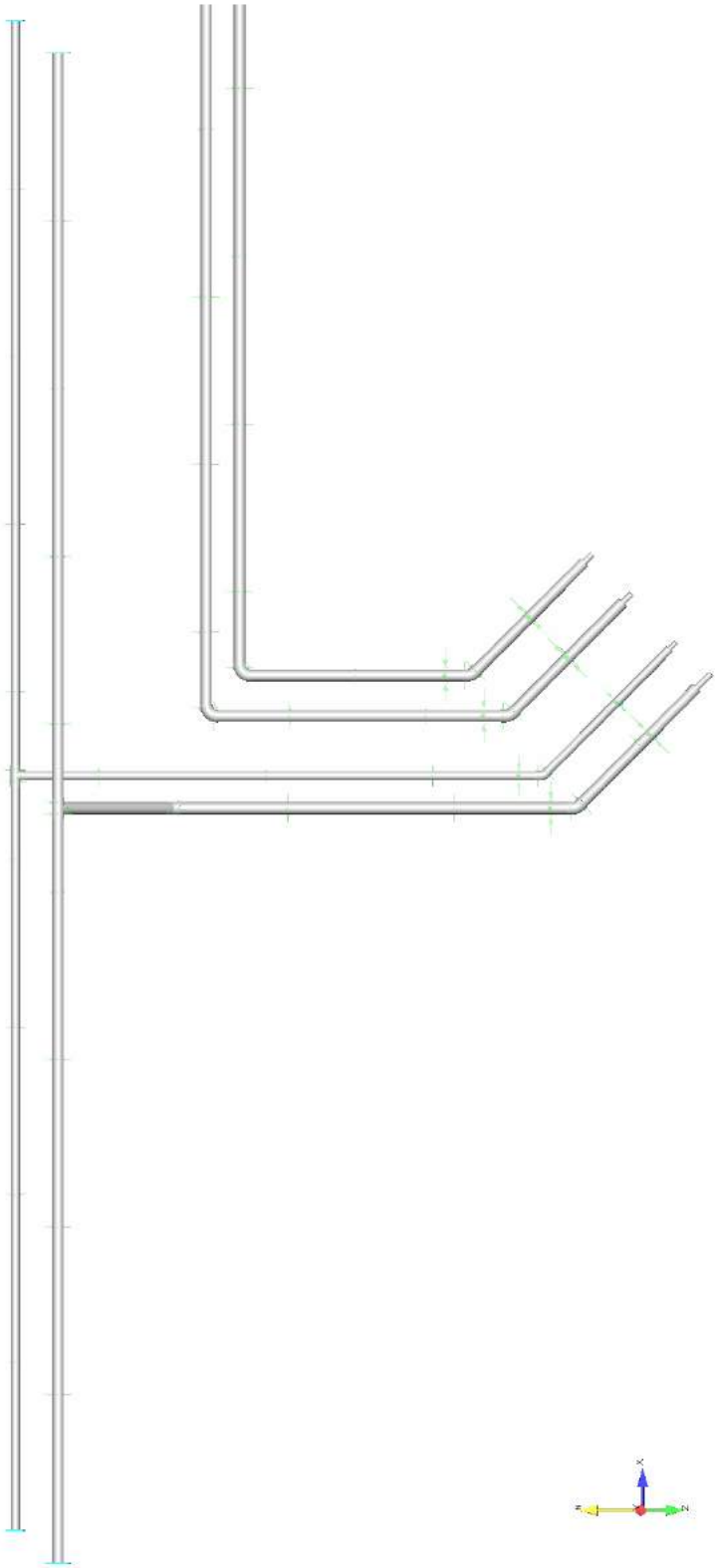

CALCULATION SHEET

Project No. S54413.024	**Calculation No.** S54413.024-M-001	**Rev.** 0	**Page No.** 56 of 192
Title: LERF Basin 41 Buried Piping Analysis			
Prepared By: JD Williams	**Date:** 5/13/20	**Checked By:** JS Huisingh	**Date:** 5/13/20

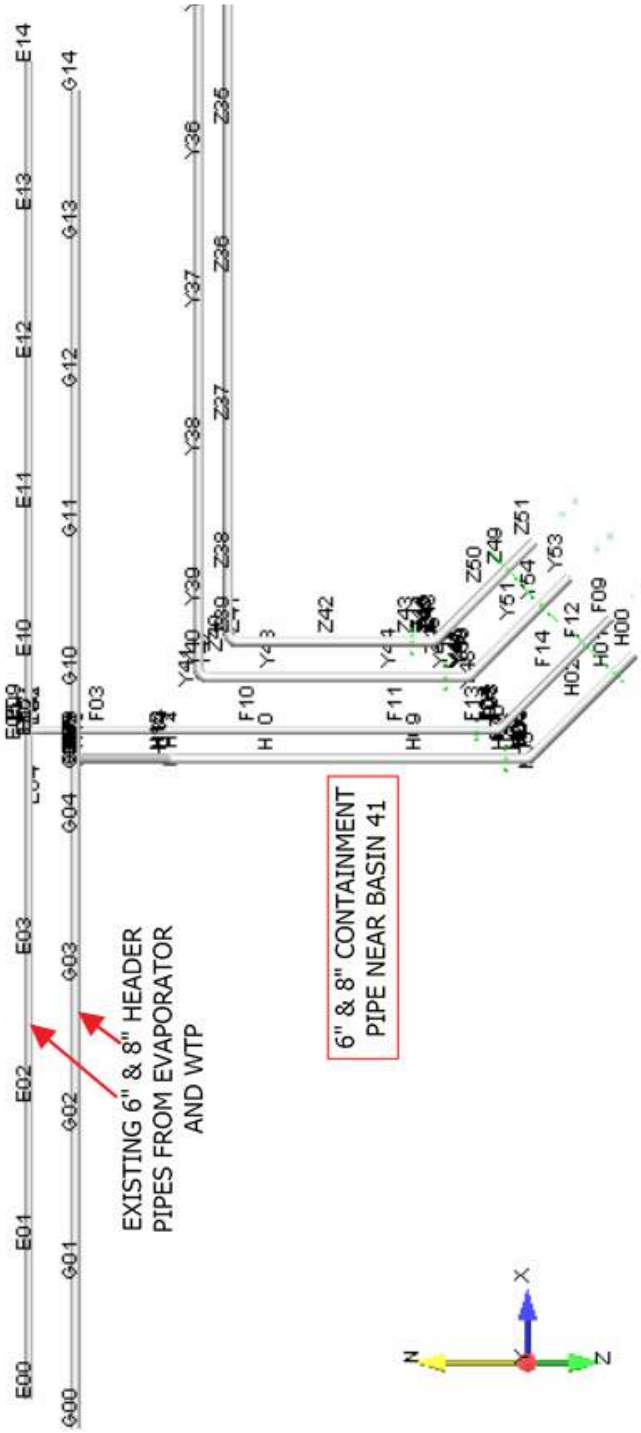

CALCULATION SHEET

Project No. S54413.024	**Calculation No.** S54413.024-M-001	**Rev.** 0	**Page No.** 57 of 192
Title: LERF Basin 41 Buried Piping Analysis			
Prepared By: JD Williams	**Date:** 5/13/20	**Checked By:** JS Huisingh	**Date:** 5/13/20

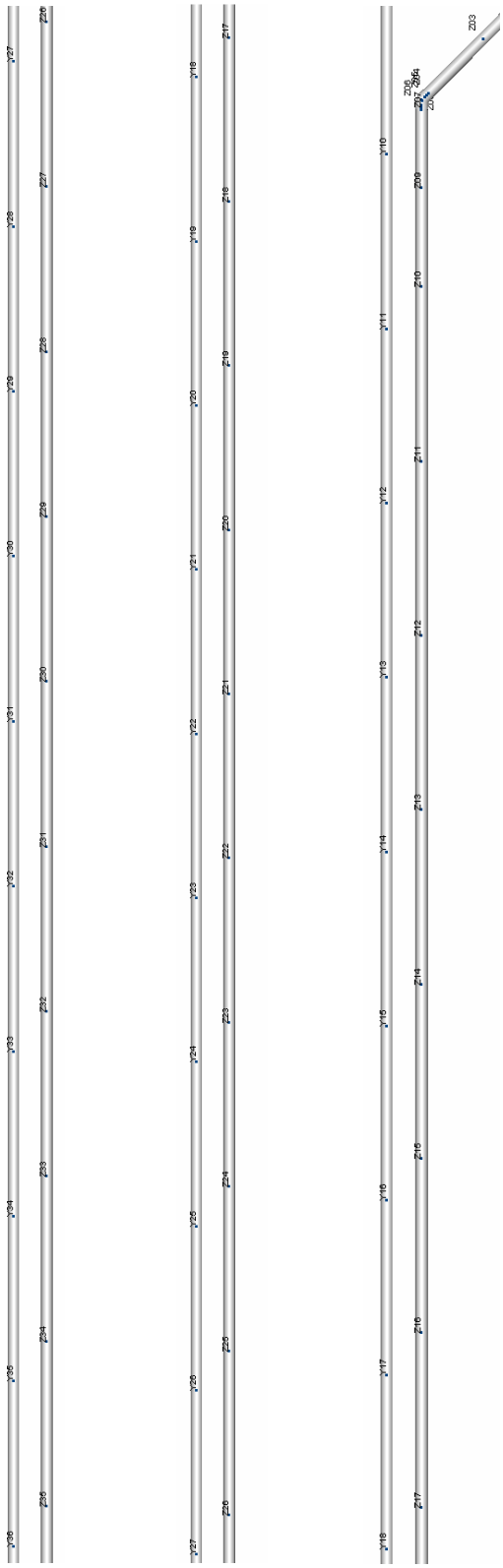

CALCULATION SHEET

Project No. S54413.024	**Calculation No.** S54413.024-M-001	**Rev.** 0	**Page No.** 58 of 192
Title: LERF Basin 41 Buried Piping Analysis			
Prepared By: JD Williams	**Date:** 5/13/20	**Checked By:** JS Huisingh	**Date:** 5/13/20

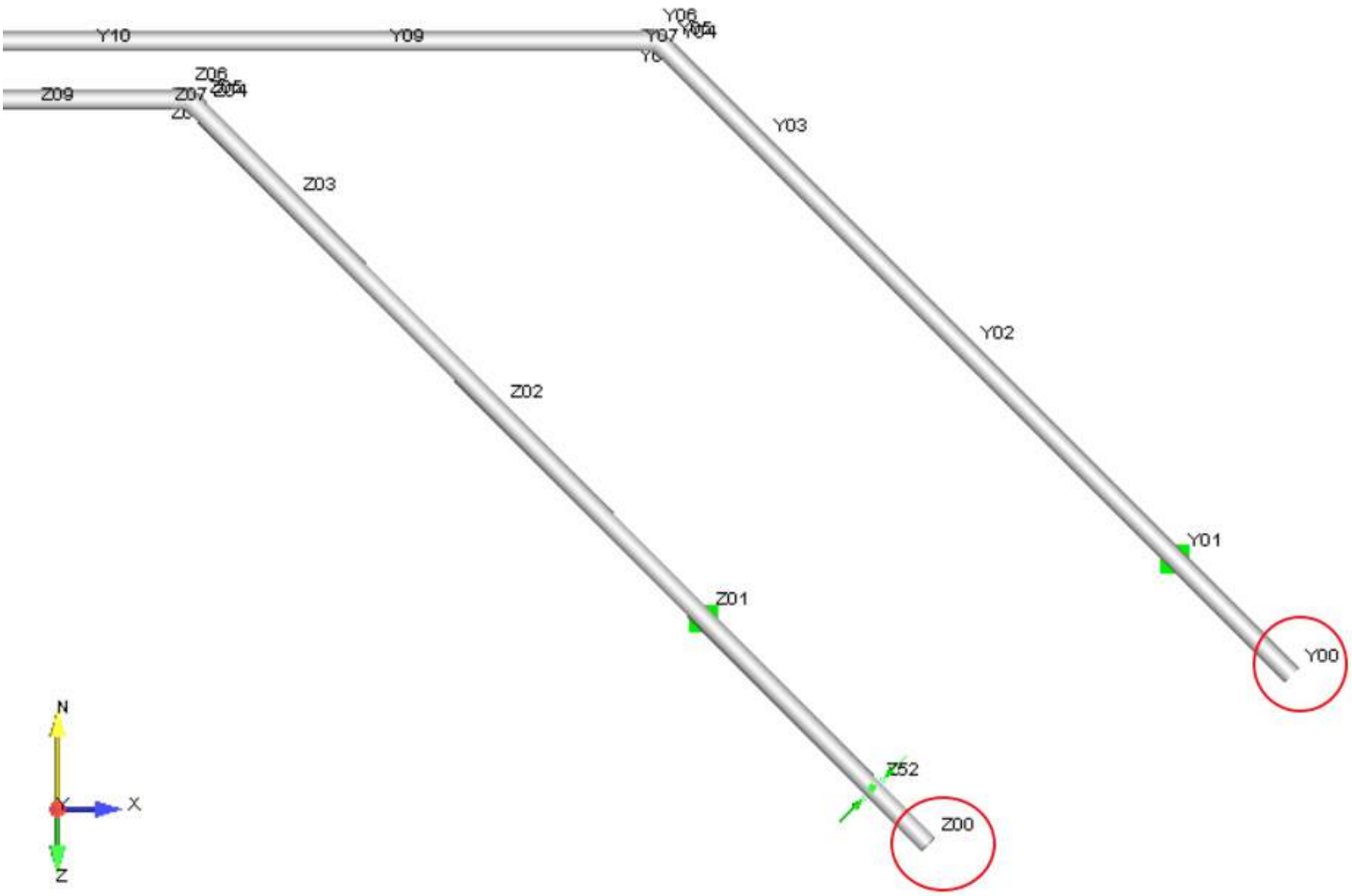

END OF 8" CONTAINMENT PIPES NEAR BASIN 42

CALCULATION SHEET

Project No. S54413.024	**Calculation No.** S54413.024-M-001	**Rev.** 0	**Page No.** 59 of 192
Title: LERF Basin 41 Buried Piping Analysis			
Prepared By: JD Williams	**Date:** 5/13/20	**Checked By:** JS Huisingh	**Date:** 5/13/20

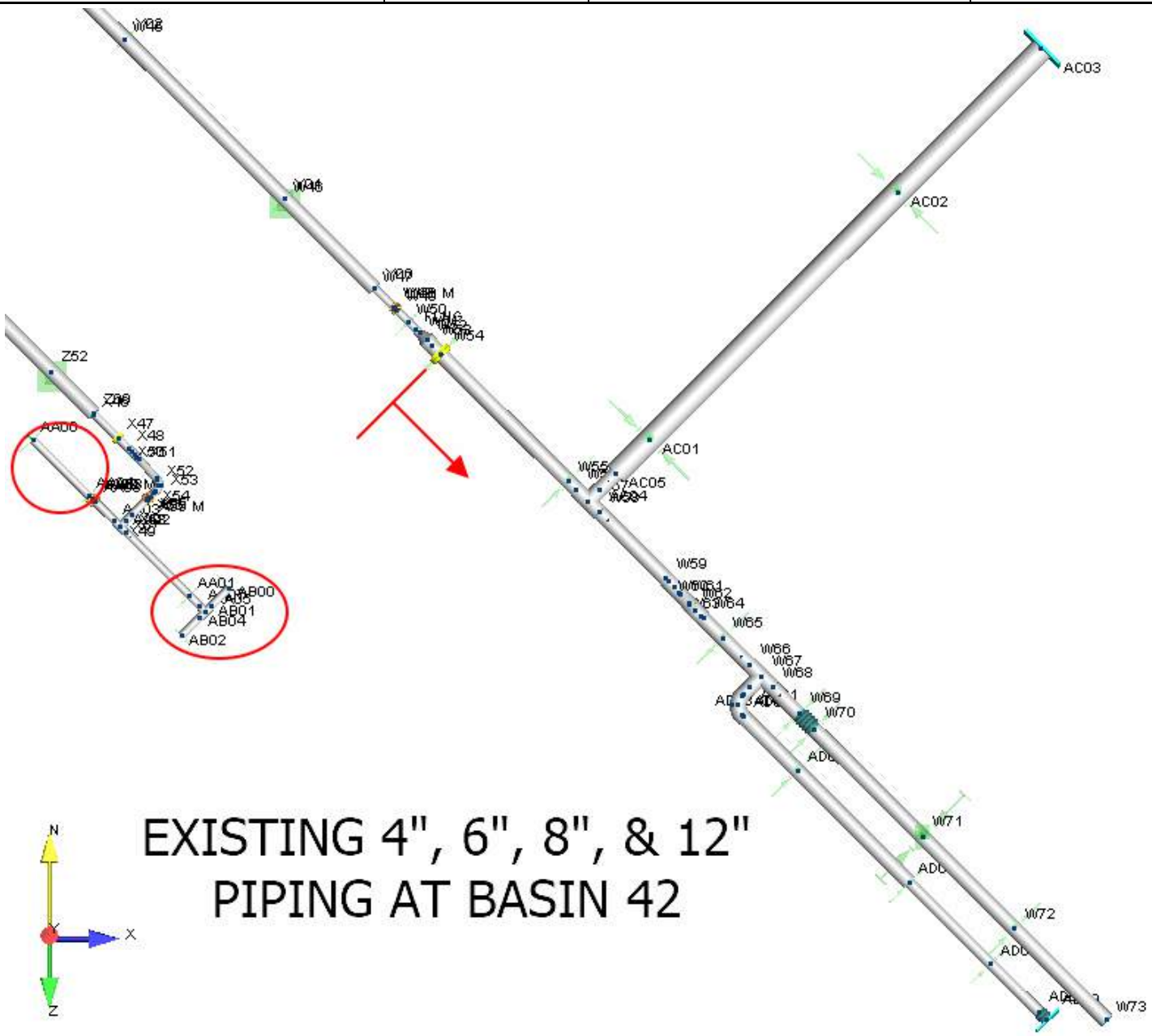

CALCULATION SHEET

Project No. S54413.024	**Calculation No.** S54413.024-M-001	**Rev.** 0	**Page No.** 60 of 192
Title: LERF Basin 41 Buried Piping Analysis			
Prepared By: JD Williams	**Date:** 5/13/20	**Checked By:** JS Huisingh	**Date:** 5/13/20

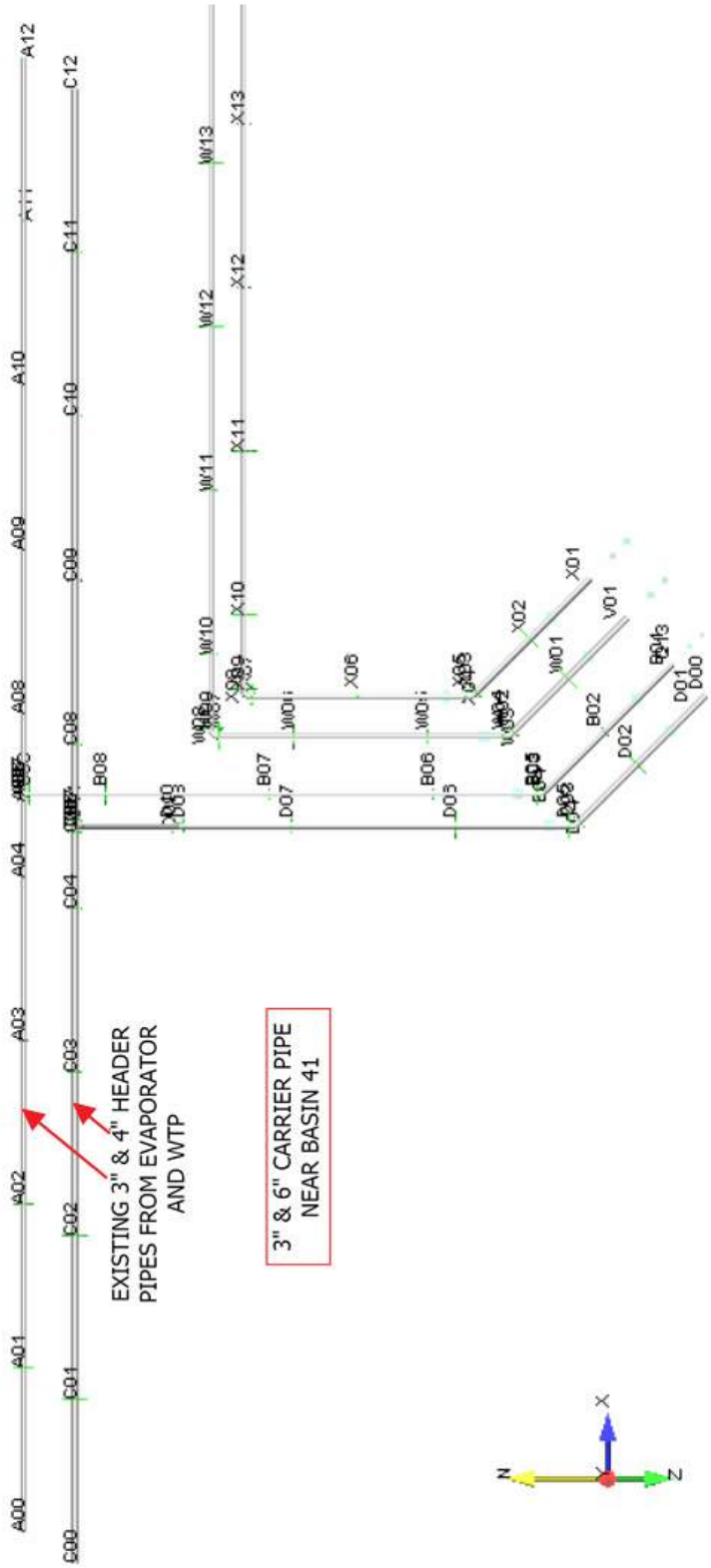

CALCULATION SHEET

Project No. S54413.024	**Calculation No.** S54413.024-M-001	**Rev.** 0	**Page No.** 61 of 192
Title: LERF Basin 41 Buried Piping Analysis			
Prepared By: JD Williams	**Date:** 5/13/20	**Checked By:** JS Huisingh	**Date:** 5/13/20

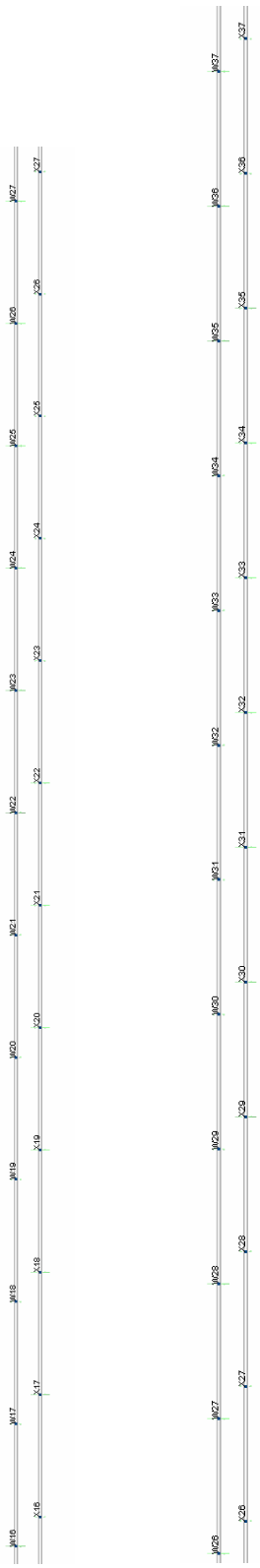

CALCULATION SHEET

Project No. S54413.024	**Calculation No.** S54413.024-M-001	**Rev.** 0	**Page No.** 62 of 192
Title: LERF Basin 41 Buried Piping Analysis			
Prepared By: JD Williams	**Date:** 5/13/20	**Checked By:** JS Huisingh	**Date:** 5/13/20

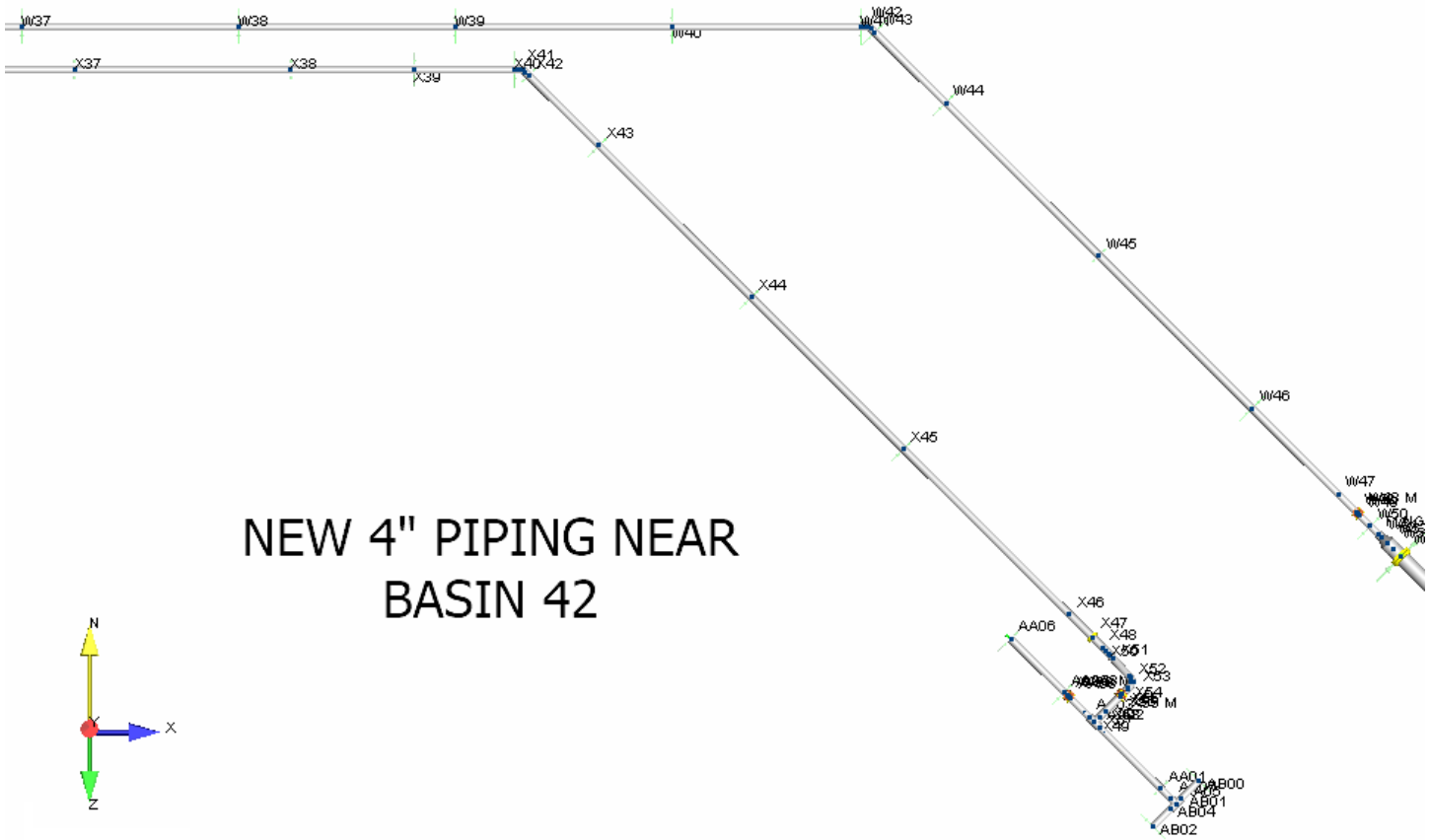

CALCULATION SHEET

Project No. S54413.024	**Calculation No.** S54413.024-M-001	**Rev.** 0	**Page No.** 63 of 192
Title: LERF Basin 41 Buried Piping Analysis			
Prepared By: JD Williams	**Date:** 5/13/20	**Checked By:** JS Huisingh	**Date:** 5/13/20

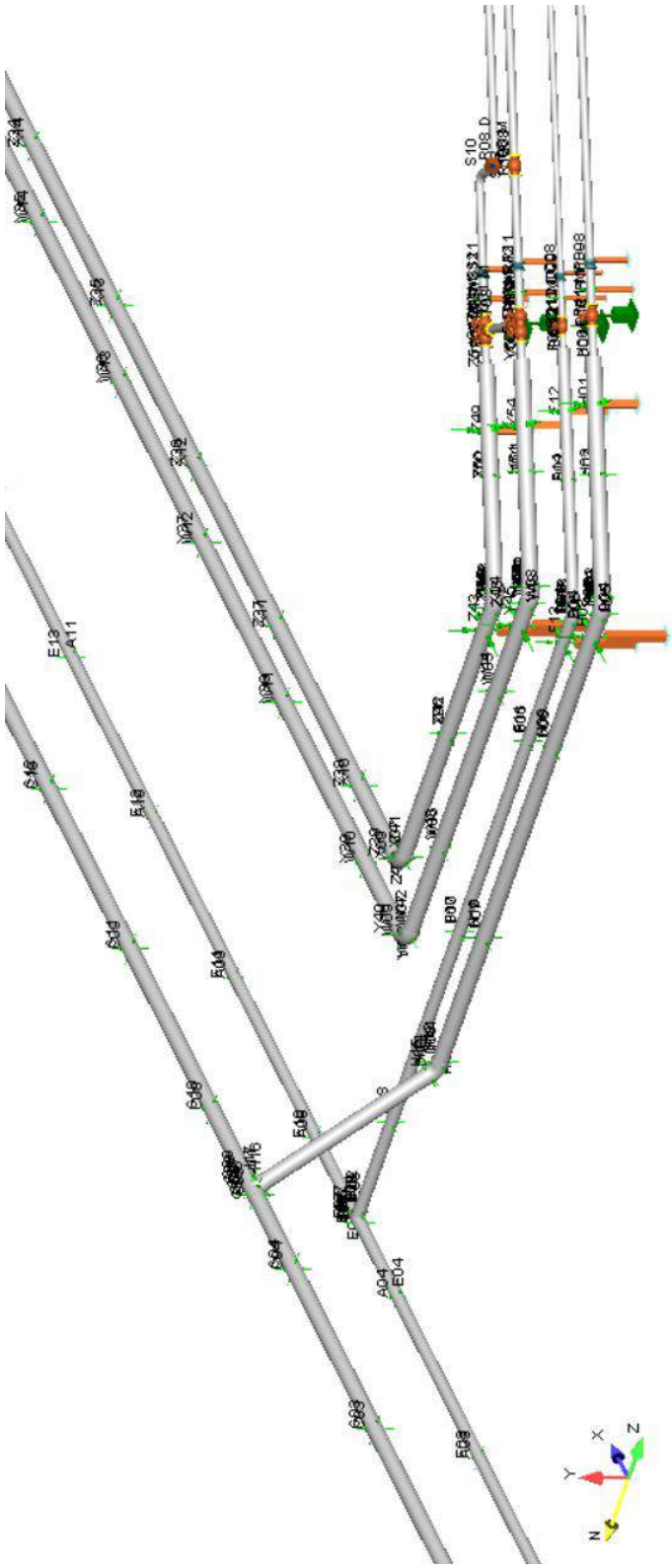

CALCULATION SHEET

Project No. S54413.024	**Calculation No.** S54413.024-M-001	**Rev.** 0	**Page No.** 64 of 192
Title: LERF Basin 41 Buried Piping Analysis			
Prepared By: JD Williams	**Date:** 5/13/20	**Checked By:** JS Huisingh	**Date:** 5/13/20

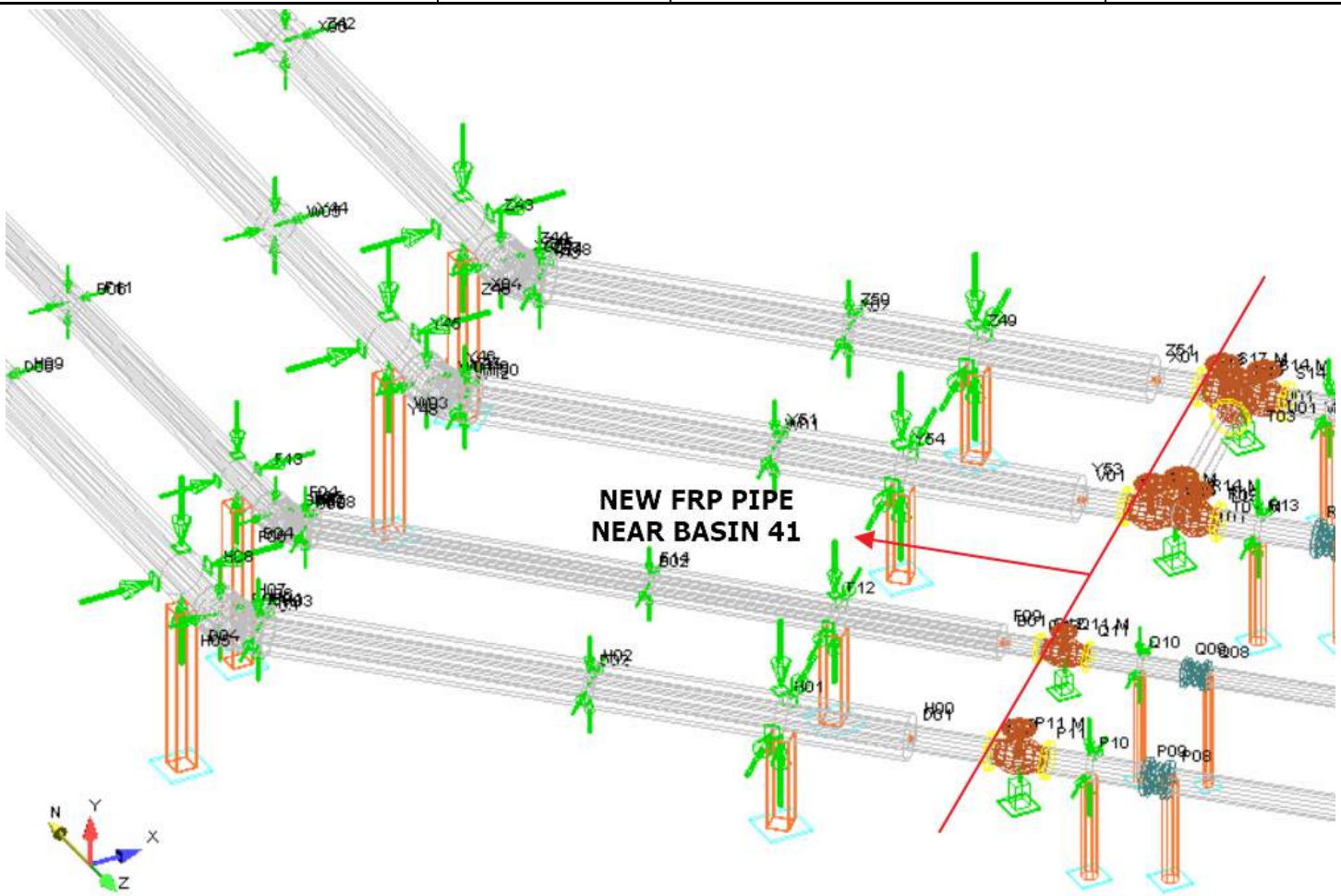

CALCULATION SHEET

Project No. S54413.024	**Calculation No.** S54413.024-M-001	**Rev.** 0	**Page No.** 65 of 192
Title: LERF Basin 41 Buried Piping Analysis			
Prepared By: JD Williams	**Date:** 5/13/20	**Checked By:** JS Huisingh	**Date:** 5/13/20

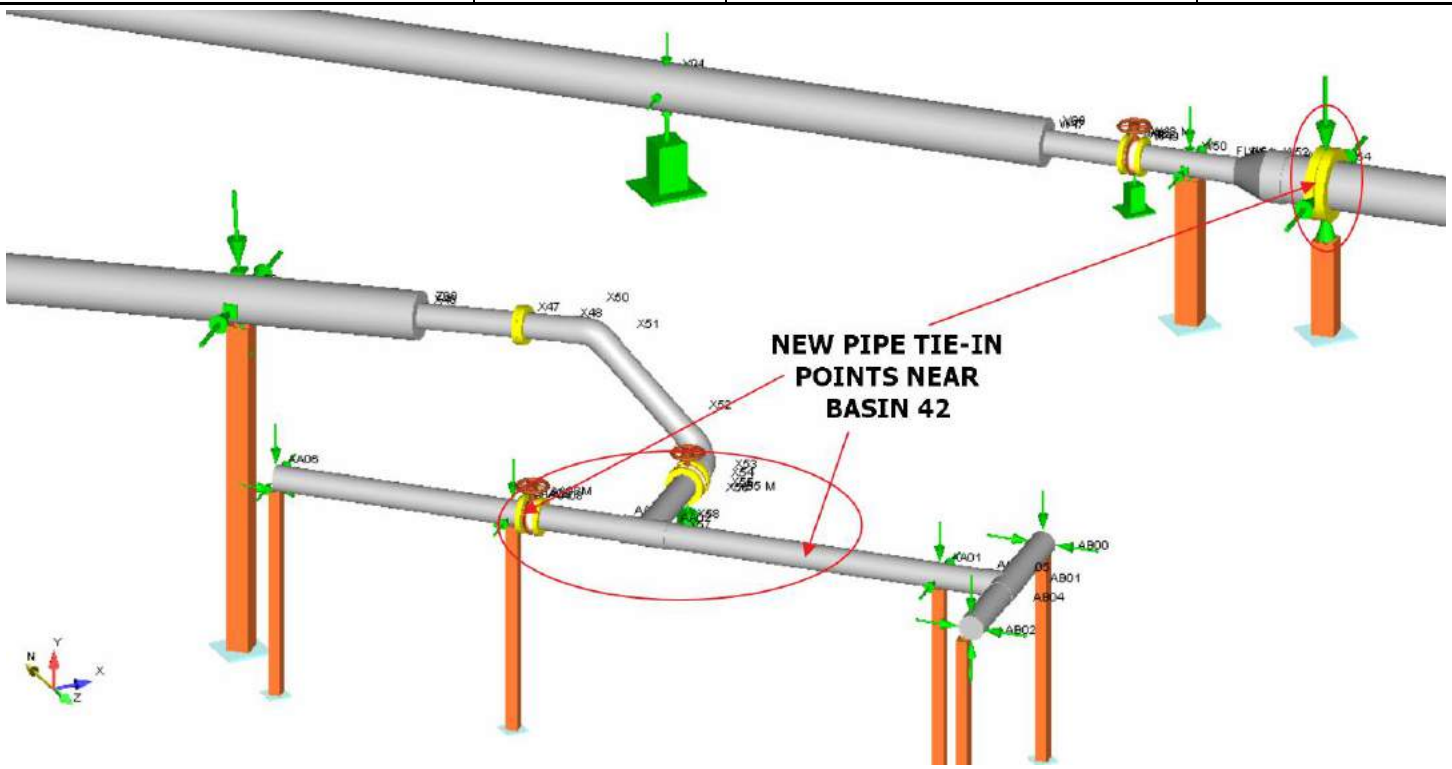

CALCULATION SHEET

Project No. S54413.024	**Calculation No.** S54413.024-M-001	**Rev.** 0	**Page No.** 66 of 192
Title: LERF Basin 41 Buried Piping Analysis			
Prepared By: JD Williams	**Date:** 5/13/20	**Checked By:** JS Huisingh	**Date:** 5/13/20

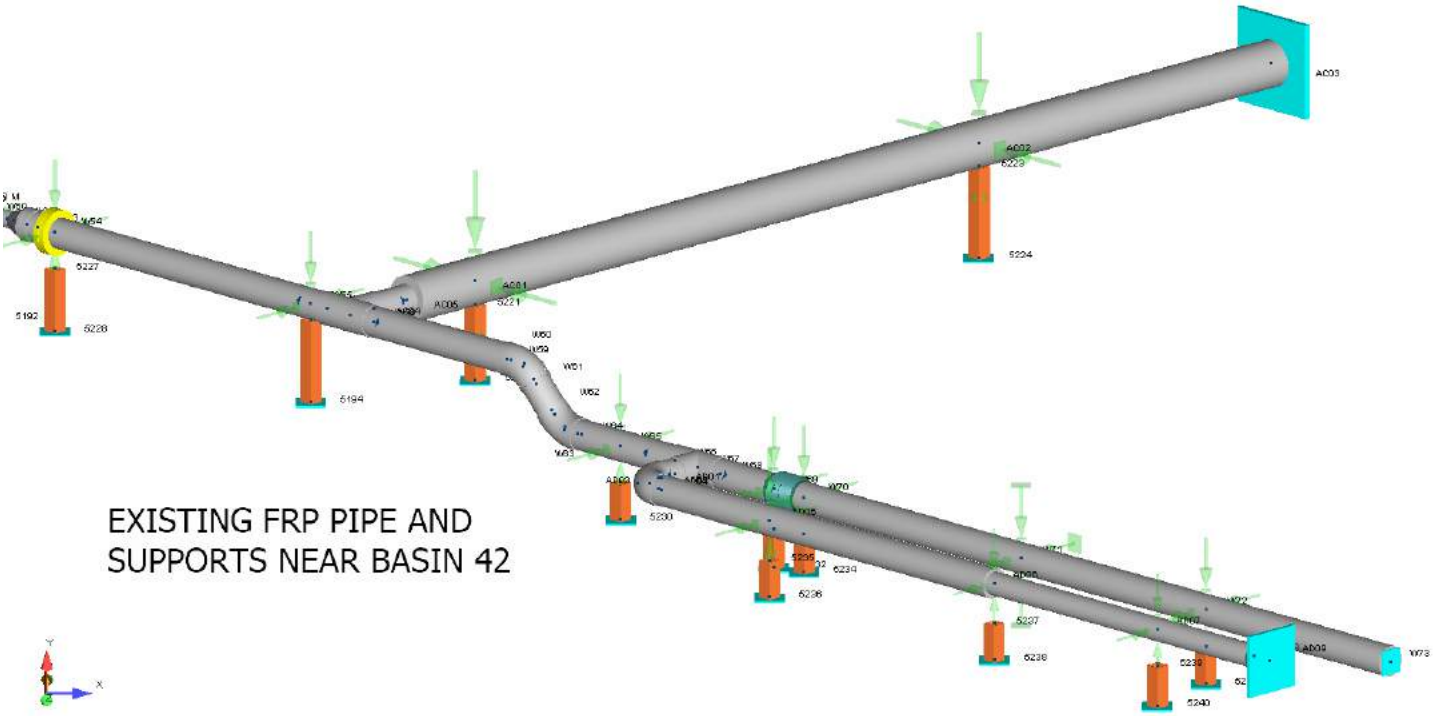

APPENDIX C

MODEL INPUT AND OUTPUT REPORT

Given the large model size, the amount of input and output has been significantly abbreviated as noted below. A representative sampling is provided below.

Additional information can be made available upon request.

CALCULATION SHEET

Project No. S54413.024	**Calculation No.** S54413.024-M-001	**Rev.** 0	**Page No.** 68 of 192
Title: LERF Basin 41 Buried Piping Analysis			
Prepared By: JD Williams	**Date:** 5/13/20	**Checked By:** JS Huisingh	**Date:** 5/13/20

```
-----------------------------------------------------------------------------------------------------------
LERF_FRP_3m
04/24/2020                                                                          BENTLEY
12:37 PM                                                                            AutoPIPE Advanced 11.01.00.24
-----------------------------------------------------------------------------------------------------------
```

```
        *                           *******   **  *******   *******
       ***              **         **    **  **  **    **  **
      ** **            ******       **    **  **  **    **  **
     **   **    **   **  **   *****  *******   **  *******   *****
    *********  **   **  **  **   **  **        **  **        **
   **       **  **   **  **  **   **  **        **  **        **
  **         **  *****   **   *****  **        **  **        *******
```

Pipe Stress Analysis and Design Program

Version: 11.01.00.24

Edition: Advanced

Developed and Maintained by

BENTLEY SYSTEMS, INCORPORATED
1600 Riviera Ave., Suite 300
Walnut Creek, CA 94596

CALCULATION SHEET

Project No. S54413.024	**Calculation No.** S54413.024-M-001	**Rev.** 0	**Page No.** 69 of 192
Title: LERF Basin 41 Buried Piping Analysis			
Prepared By: JD Williams	**Date:** 5/13/20	**Checked By:** JS Huisingh	**Date:** 5/13/20

```
-----------------------------------------------------------------------------------------------------------
LERF_FRP_3m
04/24/2020                                                                          BENTLEY
12:37 PM                                                                            AutoPIPE Advanced 11.01.00.24
-----------------------------------------------------------------------------------------------------------


          ************************************************************
          **                                                        **
          **              AUTOPIPE SYSTEM INFORMATION               **
          **                                                        **
          ************************************************************


          SYSTEM NAME : LERF_FRP_3m

          PROJECT ID  :


          PREPARED BY  : ______________________________

          CHECKED BY   : ______________________________

          1ST APPROVER : ______________________________

          2ND APPROVER : ______________________________


          PIPING CODE            : ISO 14692

          YEAR                   : 2002 + 2005 addenda

          VERTICAL AXIS          : Y

          AMBIENT TEMPERATURE    :   60.0 deg F

          COMPONENT LIBRARY      : ISOGRPP

          MATERIAL LIBRARY       : ISOGRPM

          MODEL REVISION NUMBER  :   173
```

CALCULATION SHEET

Project No. S54413.024	**Calculation No.** S54413.024-M-001	**Rev.** 0	**Page No.** 70 of 192
Title: LERF Basin 41 Buried Piping Analysis			
Prepared By: JD Williams	**Date:** 5/13/20	**Checked By:** JS Huisingh	**Date:** 5/13/20

LERF_FRP_3m
04/24/2020 BENTLEY
12:37 PM AutoPIPE Advanced 11.01.00.24

T A B L E O F C O N T E N T S

Components..... 1
Coordinates..... 87
Segment Data..... 99
Pipe Properties..... 100
Material Properties..... 102
Material Allowables..... 104
Temperature and Pressure..... 106
Soil Properties..... 120
Loads Summary..... 129
Support..... 139
Bend..... 153
Tee..... 157
Center of Gravity..... 158
Analysis Summary..... 159
Restraint Reactions..... 177
Code Compliance..... 414
Result Summary.....11068

CALCULATION SHEET

Project No. S54413.024	**Calculation No.** S54413.024-M-001	**Rev.** 0	**Page No.** 71 of 192
Title: LERF Basin 41 Buried Piping Analysis			
Prepared By: JD Williams	**Date:** 5/13/20	**Checked By:** JS Huisingh	**Date:** 5/13/20

```
-----------------------------------------------------------------------------------------------------------
LERF_FRP_3m
04/24/2020                                                    BENTLEY
12:36 PM                                                      AutoPIPE Advanced 11.01.00.24  MODEL  PAGE   1
-----------------------------------------------------------------------------------------------------------

                 C O M P O N E N T   D A T A   L I S T I N G

 ---------------------------------------------------------------------------
 *** SEGMENT A

 ---------------------------------------------------------------------------
 From A00 to A01, DX= 10.00 ft                                        Run

 PIPE DATA:
   Pipe Id= 3CON40, Material= NS, Poisson= 0.230, Nom Size= 3.000, OD= 3.390 inch, Sch= NS,
   Wall Thk= 0.135 inch, Mill= 0.017 inch, Cor= 0 inch, Pipe Density= 115.80 lb/cu.ft,
   Pipe Unit Wgt= 1.11 lb/ft, Content Sp Gr= 1.500, Content Unit Wgt= 4.97 lb/ft, Insul Thk= 2.000 inch,
   Insul Material= OTHER, Insul Density= 6.00 lb/cu.ft, Insul Unit Wgt= 1.41 lb/ft, Cladding Thickness = 0 inch,
   Lining Thk= 0 inch, Long Weld factor= 1.00, Circ Weld factor= 1.00, Long Modulus= 1.75000 E6 psi,
   Hoop Modulus= 2.50000 E6 psi, Shear Modulus= 1.30000 E6 psi, Sc= 6454.0 psi, Syc= 0.0 psi

 OPERATING DATA:
   P1= 150.00 psi, P2= 0 psi, P3= 150.00 psi, T1= 120.00 deg F, T2= 32.00 deg F, T3= 120.00 deg F,
   Exp1= 0.68400 in/100ft, Exp2= -0.54700 in/100ft, Exp3= 0.68400 in/100ft, E1= 1.63000 E6 psi,
   E2= 1.86000 E6 psi, E3= 1.63000 E6 psi, Sh1= 0.85 psi, Sh2= 0.85 psi, Sh3= 0.85 psi

 POINT DATA:
   A00, Coordinates, X= -45.07 ft, Y= -0.28 ft, Z= -0.01 ft

 SUPPORT DATA:
   A00, Anchor, KTX= Rigid, KTY= Rigid, KTZ= Rigid, KRX= Rigid, KRY= Rigid, KRZ= Rigid

 ---------------------------------------------------------------------------
 From A01 to A02, DX= 10.00 ft                                        Run

 POINT DATA:
   A01, Coordinates, X= -35.07 ft, Y= -0.28 ft, Z= -0.01 ft

 SUPPORT DATA:
   A01, Guide, Support Id= A03  1, Connected to E01, Tag No.= INT, Comp.Wt = 0.000 lb, Stiffness= RIGID

 ---------------------------------------------------------------------------
 From A02 to A03, DX= 10.00 ft                                        Run

 POINT DATA:
   A02, Coordinates, X= -25.07 ft, Y= -0.28 ft, Z= -0.01 ft

 SUPPORT DATA:
   A02, Guide, Support Id= A04  1, Connected to E02, Tag No.= INT, Comp.Wt = 0.000 lb, Stiffness= RIGID

 ---------------------------------------------------------------------------
 From A03 to A04, DX= 10.00 ft                                        Run

 POINT DATA:
   A03, Coordinates, X= -15.07 ft, Y= -0.28 ft, Z= -0.01 ft

 SUPPORT DATA:
   A03, Guide, Support Id= A05  1, Connected to E03, Tag No.= INT, Comp.Wt = 0.000 lb, Stiffness= RIGID

 ---------------------------------------------------------------------------
 From A04 to A05, DX= 4.66 ft                                         Run
```

CALCULATION SHEET

Project No. S54413.024	**Calculation No.** S54413.024-M-001	**Rev.** 0	**Page No.** 72 of 192
Title: LERF Basin 41 Buried Piping Analysis			
Prepared By: JD Williams	**Date:** 5/13/20	**Checked By:** JS Huisingh	**Date:** 5/13/20

```
-----------------------------------------------------------------------------------------------------------
LERF_FRP_3m
04/24/2020                                                    BENTLEY
12:36 PM                                                      AutoPIPE Advanced 11.01.00.24  MODEL  PAGE   2
-----------------------------------------------------------------------------------------------------------

                 C O M P O N E N T   D A T A   L I S T I N G

 POINT DATA:
   A04, Coordinates, X= -5.07 ft, Y= -0.28 ft, Z= -0.01 ft

 SUPPORT DATA:
   A04, Guide, Support Id= A06  1, Connected to E04, Tag No.= INT, Comp.Wt = 0.000 lb, Stiffness= RIGID

 ---------------------------------------------------------------------------
 From A05 to A06, DX= 0.34 ft                                        Run

 PIPE DATA:
   Pipe Id= FITT3, Material= NS, OD= 3.710 inch, Wall Thk= 0.295 inch, Mill= 0.037 inch,
   Pipe Density= 115.80 lb/cu.ft, Pipe Unit Wgt= 2.55 lb/ft, Content Sp Gr= 1.500, Content Unit Wgt= 4.97 lb/ft,
   Insul Density= 6.00 lb/cu.ft, Insul Unit Wgt= 1.49 lb/ft, Syc= 0.0 psi

 POINT DATA:
   A05, Coordinates, X= -0.41 ft, Y= -0.28 ft, Z= -0.01 ft

 SUPPORT DATA:
   A05, Guide, Support Id= A12  1, Connected to E06, Tag No.= INT, Comp.Wt = 0.000 lb, Stiffness= RIGID

 ---------------------------------------------------------------------------
 From A06 to A07, DX= 0.34 ft                                        Tee

 COMPONENT DATA (Tee Header, Center= A06):
   Reinforced tee, SIFI= 1.52, SIFO= 1.52, Pad thick= 0.00 inch

 POINT DATA:
   A06, Coordinates, X= -0.07 ft, Y= -0.28 ft, Z= -0.01 ft

 ---------------------------------------------------------------------------
 From A07 to A08, DX= 4.66 ft                                        Run

 PIPE DATA:
   Pipe Id= 3CON40, Material= NS, OD= 3.390 inch, Wall Thk= 0.135 inch, Mill= 0.017 inch,
   Pipe Density= 115.80 lb/cu.ft, Pipe Unit Wgt= 1.11 lb/ft, Content Sp Gr= 1.500, Content Unit Wgt= 4.97 lb/ft,
   Insul Density= 6.00 lb/cu.ft, Insul Unit Wgt= 1.41 lb/ft, Syc= 0.0 psi

 POINT DATA:
   A07, Coordinates, X= 0.27 ft, Y= -0.28 ft, Z= -0.01 ft

 SUPPORT DATA:
   A07, Guide, Support Id= A11  1, Connected to E08, Tag No.= INT, Comp.Wt = 0.000 lb, Stiffness= RIGID

 ---------------------------------------------------------------------------
 From A08 to A09, DX= 10.00 ft                                       Run

 POINT DATA:
   A08, Coordinates, X= 4.93 ft, Y= -0.28 ft, Z= -0.01 ft

 SUPPORT DATA:
   A08, Guide, Support Id= A07  1, Connected to E10, Tag No.= INT, Comp.Wt = 0.000 lb, Stiffness= RIGID

 ---------------------------------------------------------------------------
 From A09 to A10, DX= 10.00 ft                                       Run
```

```
-----------------------------------------------------------------------------------------------------------
LERF_FRP_3m
04/24/2020                                                    BENTLEY
12:36 PM                                                      AutoPIPE Advanced 11.01.00.24  MODEL  PAGE   3
-----------------------------------------------------------------------------------------------------------

                 C O M P O N E N T   D A T A   L I S T I N G

 POINT DATA:
   A09, Coordinates, X= 14.93 ft, Y= -0.28 ft, Z= -0.01 ft

 SUPPORT DATA:
   A09, Guide, Support Id= A08  1, Connected to E11, Tag No.= INT, Comp.Wt = 0.000 lb, Stiffness= RIGID

 ---------------------------------------------------------------------------
 From A10 to A11, DX= 10.00 ft                                      Run

 POINT DATA:
   A10, Coordinates, X= 24.93 ft, Y= -0.28 ft, Z= -0.01 ft

 SUPPORT DATA:
   A10, Guide, Support Id= A09  1, Connected to E12, Tag No.= INT, Comp.Wt = 0.000 lb, Stiffness= RIGID

 ---------------------------------------------------------------------------
 From A11 to A12, DX= 10.00 ft, DZ= 0 ft, L= 10.00 ft               Run

 POINT DATA:
   A11, Coordinates, X= 34.93 ft, Y= -0.28 ft, Z= -0.01 ft
   A12, Coordinates, X= 44.93 ft, Y= -0.28 ft, Z= -0.01 ft

 SUPPORT DATA:
   A11, Guide, Support Id= A10  1, Connected to E13, Tag No.= INT, Comp.Wt = 0.000 lb, Stiffness= RIGID
   A12, Anchor, KTX= Rigid, KTY= Rigid, KTZ= Rigid, KRX= Rigid, KRY= Rigid, KRZ= Rigid

 ---------------------------------------------------------------------------
 ---------------------------------------------------------------------------
 *** SEGMENT B

 ---------------------------------------------------------------------------
 From Q13 to B01, DX= -0.33 ft, DZ= -0.33 ft, L= 0.47 ft            Junc

 PIPE DATA:
   Pipe Id= 3CON40, Material= NS, Pipe Density= 115.80 lb/cu.ft, Pipe Unit Wgt= 1.11 lb/ft,
   Content Sp Gr= 1.500, Content Unit Wgt= 4.97 lb/ft

 OPERATING DATA:
   T1= 150.00 deg F, T2= -25.00 deg F, Exp1= 1.02600 in/100ft, Exp2= -1.19700 in/100ft, E1= 1.56000 E6 psi,
   E2= 2.01000 E6 psi

 POINT DATA:
   Q13, Coordinates, X= 7.88 ft, Y= -0.28 ft, Z= 39.56 ft

 ---------------------------------------------------------------------------
 From B01 to B02, DX= -3.78 ft, DY= 0 ft, DZ= -3.78 ft, L= 5.35 ft  Run

 POINT DATA:
   B01, Coordinates, X= 7.55 ft, Y= -0.28 ft, Z= 39.23 ft

 ---------------------------------------------------------------------------
 From B02 to B03, DX= -3.63 ft, DZ= -3.63 ft, L= 5.13 ft            Run

 POINT DATA:
   B02, Coordinates, X= 3.77 ft, Y= -0.28 ft, Z= 35.44 ft
```

CALCULATION SHEET

Project No. S54413.024	**Calculation No.** S54413.024-M-001	**Rev.** 0	**Page No.** 74 of 192
Title: LERF Basin 41 Buried Piping Analysis			
Prepared By: JD Williams	**Date:** 5/13/20	**Checked By:** JS Huisingh	**Date:** 5/13/20

```
-----------------------------------------------------------------------------------------------------------
LERF_FRP_3m
04/24/2020                                                    BENTLEY
12:36 PM                                                      AutoPIPE Advanced 11.01.00.24  MODEL  PAGE   4
-----------------------------------------------------------------------------------------------------------

                C O M P O N E N T   D A T A   L I S T I N G

 SUPPORT DATA:
   B02, Guide, Support Id= B11  1, Connected to F14, Tag No.= INT, Comp.Wt = 0.000 lb, Stiffness= RIGID

 ---------------------------------------------------------------------------
 From B03 to B04, DX= -0.21 ft, DZ= -0.21 ft, L= 0.30 ft                Run

 PIPE DATA:
   Pipe Id= FITT3, Material= NS, OD= 3.710 inch, Wall Thk= 0.295 inch, Mill= 0.037 inch,
   Pipe Density= 115.80 lb/cu.ft, Pipe Unit Wgt= 2.55 lb/ft, Content Sp Gr= 1.500, Content Unit Wgt= 4.97 lb/ft,
   Insul Density= 6.00 lb/cu.ft, Insul Unit Wgt= 1.49 lb/ft, Syc= 0.0 psi

 POINT DATA:
   B03, Coordinates, X= 0.14 ft, Y= -0.28 ft, Z= 31.81 ft

 SUPPORT DATA:
   B03, Guide, Support Id= B05  1, Connected to F07, Tag No.= INT, Comp.Wt = 0.000 lb, Stiffness= RIGID

 ---------------------------------------------------------------------------
 From B04 to B05, DZ= -0.30 ft                                          Bend

 COMPONENT DATA (Bend, TIP= B04, Near= B04 N, Mid= B04 M, Far= B04 F):
    , Radius= 3.92 inch, Bend angle= 45.00 deg, Mid point at 50.00 percent, End flanges= 0, Flex= Auto,
   SIFI Circ= 2.50, SIFO Circ= 2.50, SIFI Long= 1.25, SIFO Long= 1.00

 POINT DATA:
   B04, Coordinates, X= -0.07 ft, Y= -0.28 ft, Z= 31.60 ft
   B04 N, Coordinates, X= 0.03 ft, Y= -0.28 ft, Z= 31.70 ft
   B04 M, Coordinates, X= -0.04 ft, Y= -0.28 ft, Z= 31.59 ft
   B04 F, Coordinates, X= -0.07 ft, Y= -0.28 ft, Z= 31.47 ft

 ---------------------------------------------------------------------------
 From B05 to B06, DZ= -6.31 ft                                          Run

 PIPE DATA:
   Pipe Id= 3CON40, Material= NS, OD= 3.390 inch, Wall Thk= 0.135 inch, Mill= 0.017 inch,
   Pipe Density= 115.80 lb/cu.ft, Pipe Unit Wgt= 1.11 lb/ft, Content Sp Gr= 1.500, Content Unit Wgt= 4.97 lb/ft,
   Insul Density= 6.00 lb/cu.ft, Insul Unit Wgt= 1.41 lb/ft, Syc= 0.0 psi

 POINT DATA:
   B05, Coordinates, X= -0.07 ft, Y= -0.28 ft, Z= 31.30 ft

 SUPPORT DATA:
   B05, Guide, Support Id= B06  1, Connected to F05, Tag No.= INT, Comp.Wt = 0.000 lb, Stiffness= RIGID

 ---------------------------------------------------------------------------
 From B06 to B07, DZ= -10.00 ft                                         Run

 POINT DATA:
   B06, Coordinates, X= -0.07 ft, Y= -0.28 ft, Z= 24.99 ft

 SUPPORT DATA:
   B06, Guide, Support Id= B08  1, Connected to F11, Tag No.= INT, Comp.Wt = 0.000 lb, Stiffness= RIGID

 ---------------------------------------------------------------------------
 From B07 to B08, DZ= -10.00 ft                                         Run
```

```
-----------------------------------------------------------------------------------------------------------
LERF_FRP_3m
04/24/2020                                                    BENTLEY
12:36 PM                                                      AutoPIPE Advanced 11.01.00.24  MODEL  PAGE   5
-----------------------------------------------------------------------------------------------------------

                 C O M P O N E N T   D A T A   L I S T I N G

 OPERATING DATA:
   T1= 120.00 deg F, T2= 32.00 deg F, Exp1= 0.68400 in/100ft, Exp2= -0.54700 in/100ft, E1= 1.63000 E6 psi,
   E2= 1.86000 E6 psi

 POINT DATA:
   B07, Coordinates, X= -0.07 ft, Y= -0.28 ft, Z= 14.99 ft

 SUPPORT DATA:
   B07, Guide, Support Id= B07  2, Connected to F10, Tag No.= INT, Comp.Wt = 0.000 lb, Stiffness= RIGID

 ---------------------------------------------------------------------------
 From B08 to B09, DZ= -4.66 ft                                        Run

 POINT DATA:
   B08, Coordinates, X= -0.07 ft, Y= -0.28 ft, Z= 4.99 ft

 SUPPORT DATA:
   B08, Guide, Support Id= B03  1, Connected to F03, Tag No.= INT, Comp.Wt = 0.000 lb, Stiffness= RIGID

 ---------------------------------------------------------------------------
 From B09 to A06, DZ= -0.34 ft                                        Run

 PIPE DATA:
   Pipe Id= FITT3, Material= NS, OD= 3.710 inch, Wall Thk= 0.295 inch, Mill= 0.037 inch,
   Pipe Density= 115.80 lb/cu.ft, Pipe Unit Wgt= 2.55 lb/ft, Content Sp Gr= 1.500, Content Unit Wgt= 4.97 lb/ft,
   Insul Density= 6.00 lb/cu.ft, Insul Unit Wgt= 1.49 lb/ft, Syc= 0.0 psi

 POINT DATA:
   B09, Coordinates, X= -0.07 ft, Y= -0.28 ft, Z= 0.33 ft
   A06, Coordinates, X= -0.07 ft, Y= -0.28 ft, Z= -0.01 ft

 SUPPORT DATA:
   B09, Guide, Support Id= B07  1, Connected to F01, Tag No.= INT, Comp.Wt = 0.000 lb, Stiffness= RIGID

 ---------------------------------------------------------------------------
 ---------------------------------------------------------------------------
 *** SEGMENT C

 ---------------------------------------------------------------------------
 From C00 to C01, DX= 10.00 ft                                        Run

 PIPE DATA:
   Pipe Id= 4CON40, Material= NS, Nom Size= 4 in, OD= 4.440 inch, Wall Thk= 0.160 inch, Mill= 0.020 inch,
   Pipe Density= 115.80 lb/cu.ft, Pipe Unit Wgt= 1.73 lb/ft, Content Sp Gr= 1.500, Content Unit Wgt= 8.67 lb/ft,
   Insul Density= 6.00 lb/cu.ft, Insul Unit Wgt= 1.69 lb/ft, Syc= 0.0 psi

 POINT DATA:
   C00, Coordinates, X= -47.00 ft, Y= 6.00 ft, Z= 3.10 ft

 SUPPORT DATA:
   C00, Anchor, KTX= Rigid, KTY= Rigid, KTZ= Rigid, KRX= Rigid, KRY= Rigid, KRZ= Rigid

 ---------------------------------------------------------------------------
 From C01 to C02, DX= 10.00 ft                                        Run
```

CALCULATION SHEET

Project No. S54413.024	**Calculation No.** S54413.024-M-001	**Rev.** 0	**Page No.** 76 of 192
Title: LERF Basin 41 Buried Piping Analysis			
Prepared By: JD Williams	**Date:** 5/13/20	**Checked By:** JS Huisingh	**Date:** 5/13/20

```
-----------------------------------------------------------------------------------------------------------
LERF_FRP_3m
04/24/2020                                                    BENTLEY
12:36 PM                                                      AutoPIPE Advanced 11.01.00.24  MODEL  PAGE   6
-----------------------------------------------------------------------------------------------------------

                 C O M P O N E N T   D A T A   L I S T I N G

 POINT DATA:
   C01, Coordinates, X= -37.00 ft, Y= 6.00 ft, Z= 3.10 ft

 SUPPORT DATA:
   C01, Guide, Support Id= C03  1, Connected to G01, Tag No.= INT, Comp.Wt = 0.000 lb, Stiffness= RIGID

 ---------------------------------------------------------------------------
 From C02 to C03, DX= 10.00 ft                                        Run

 POINT DATA:
   C02, Coordinates, X= -27.00 ft, Y= 6.00 ft, Z= 3.10 ft

 SUPPORT DATA:
   C02, Guide, Support Id= C04  1, Connected to G02, Tag No.= INT, Comp.Wt = 0.000 lb, Stiffness= RIGID

 ---------------------------------------------------------------------------
 From C03 to C04, DX= 10.00 ft                                        Run

 POINT DATA:
   C03, Coordinates, X= -17.00 ft, Y= 6.00 ft, Z= 3.10 ft

 SUPPORT DATA:
   C03, Guide, Support Id= C05  1, Connected to G03, Tag No.= INT, Comp.Wt = 0.000 lb, Stiffness= RIGID

 ---------------------------------------------------------------------------
 From C04 to C05, DX= 4.66 ft                                         Run

 POINT DATA:
   C04, Coordinates, X= -7.00 ft, Y= 6.00 ft, Z= 3.10 ft

 SUPPORT DATA:
   C04, Guide, Support Id= C06  1, Connected to G04, Tag No.= INT, Comp.Wt = 0.000 lb, Stiffness= RIGID

 ---------------------------------------------------------------------------
 From C05 to C06, DX= 0.34 ft                                         Run

 PIPE DATA:
   Pipe Id= FITT4, Material= NS, OD= 4.710 inch, Wall Thk= 0.295 inch, Mill= 0.037 inch,
   Pipe Density= 115.80 lb/cu.ft, Pipe Unit Wgt= 3.29 lb/ft, Content Sp Gr= 1.500, Content Unit Wgt= 8.67 lb/ft,
   Insul Density= 6.00 lb/cu.ft, Insul Unit Wgt= 1.76 lb/ft, Syc= 0.0 psi

 POINT DATA:
   C05, Coordinates, X= -2.34 ft, Y= 6.00 ft, Z= 3.10 ft

 SUPPORT DATA:
   C05, Guide, Support Id= C13  1, Connected to G06, Tag No.= INT, Comp.Wt = 0.000 lb, Stiffness= RIGID

 ---------------------------------------------------------------------------
 From C06 to C07, DX= 0.34 ft                                         Tee

 COMPONENT DATA (Tee Header, Center= C06):
   Reinforced tee, SIFI= 1.74, SIFO= 1.74, Pad thick= 0.00 inch

 POINT DATA:
   C06, Coordinates, X= -2.00 ft, Y= 6.00 ft, Z= 3.10 ft
```

```
-----------------------------------------------------------------------------------------------------------
LERF_FRP_3m
04/24/2020                                                    BENTLEY
12:36 PM                                                      AutoPIPE Advanced 11.01.00.24  MODEL  PAGE   7
-----------------------------------------------------------------------------------------------------------

                 C O M P O N E N T   D A T A   L I S T I N G

 ---------------------------------------------------------------------------
 From C07 to C08, DX= 4.66 ft                                        Run

 PIPE DATA:
   Pipe Id= 4CON40, Material= NS, OD= 4.440 inch, Wall Thk= 0.160 inch, Mill= 0.020 inch,
   Pipe Density= 115.80 lb/cu.ft, Pipe Unit Wgt= 1.73 lb/ft, Content Sp Gr= 1.500, Content Unit Wgt= 8.67 lb/ft,
   Insul Density= 6.00 lb/cu.ft, Insul Unit Wgt= 1.69 lb/ft, Syc= 0.0 psi

 POINT DATA:
   C07, Coordinates, X= -1.66 ft, Y= 6.00 ft, Z= 3.10 ft

 SUPPORT DATA:
   C07, Guide, Support Id= C12  1, Connected to G08, Tag No.= INT, Comp.Wt = 0.000 lb, Stiffness= RIGID

 ---------------------------------------------------------------------------
 From C08 to C09, DX= 10.00 ft                                       Run

 POINT DATA:
   C08, Coordinates, X= 3.00 ft, Y= 6.00 ft, Z= 3.10 ft

 SUPPORT DATA:
   C08, Guide, Support Id= C07  1, Connected to G10, Tag No.= INT, Comp.Wt = 0.000 lb, Stiffness= RIGID

 ---------------------------------------------------------------------------
 From C09 to C10, DX= 10.00 ft                                       Run

 POINT DATA:
   C09, Coordinates, X= 13.00 ft, Y= 6.00 ft, Z= 3.10 ft

 SUPPORT DATA:
   C09, Guide, Support Id= C08  1, Connected to G11, Tag No.= INT, Comp.Wt = 0.000 lb, Stiffness= RIGID

 ---------------------------------------------------------------------------
 From C10 to C11, DX= 10.00 ft                                       Run

 POINT DATA:
   C10, Coordinates, X= 23.00 ft, Y= 6.00 ft, Z= 3.10 ft

 SUPPORT DATA:
   C10, Guide, Support Id= C09  1, Connected to G12, Tag No.= INT, Comp.Wt = 0.000 lb, Stiffness= RIGID

 ---------------------------------------------------------------------------
 From C11 to C12, DX= 10.00 ft                                       Run

 POINT DATA:
   C11, Coordinates, X= 33.00 ft, Y= 6.00 ft, Z= 3.10 ft
   C12, Coordinates, X= 43.00 ft, Y= 6.00 ft, Z= 3.10 ft

 SUPPORT DATA:
   C11, Guide, Support Id= C10  1, Connected to G13, Tag No.= INT, Comp.Wt = 0.000 lb, Stiffness= RIGID
   C12, Anchor, KTX= Rigid, KTY= Rigid, KTZ= Rigid, KRX= Rigid, KRY= Rigid, KRZ= Rigid

 ---------------------------------------------------------------------------
 ---------------------------------------------------------------------------
 *** SEGMENT D
```

CALCULATION SHEET

Project No. S54413.024	**Calculation No.** S54413.024-M-001	**Rev.** 0	**Page No.** 78 of 192
Title: LERF Basin 41 Buried Piping Analysis			
Prepared By: JD Williams	**Date:** 5/13/20	**Checked By:** JS Huisingh	**Date:** 5/13/20

```
-----------------------------------------------------------------------------------------------------------
LERF_FRP_3m
04/24/2020                                                    BENTLEY
12:36 PM                                                      AutoPIPE Advanced 11.01.00.24  MODEL  PAGE   8
-----------------------------------------------------------------------------------------------------------

                 C O M P O N E N T   D A T A   L I S T I N G

 ---------------------------------------------------------------------------
 From D00 to D01, DX= -0.84 ft, DZ= -0.84 ft, L= 1.19 ft                Junc

 PIPE DATA:
   Pipe Id= 4CON40, Material= NS, Pipe Density= 115.80 lb/cu.ft, Pipe Unit Wgt= 1.73 lb/ft,
   Content Sp Gr= 1.500, Content Unit Wgt= 8.67 lb/ft

 OPERATING DATA:
   T1= 150.00 deg F, T2= -25.00 deg F, Exp1= 1.02600 in/100ft, Exp2= -1.19700 in/100ft, E1= 1.56000 E6 psi,
   E2= 2.01000 E6 psi

 POINT DATA:
   D00, Coordinates, X= 6.01 ft, Y= -0.28 ft, Z= 41.63 ft

 ---------------------------------------------------------------------------
 From D01 to D02, DX= -3.40 ft, DZ= -3.40 ft, L= 4.81 ft                Run

 POINT DATA:
   D01, Coordinates, X= 5.17 ft, Y= -0.28 ft, Z= 40.79 ft

 ---------------------------------------------------------------------------
 From D02 to D03, DX= -3.50 ft, DZ= -3.50 ft, L= 4.95 ft                Run

 POINT DATA:
   D02, Coordinates, X= 1.77 ft, Y= -0.28 ft, Z= 37.39 ft

 SUPPORT DATA:
   D02, Guide, Support Id= D13  1, Connected to H02, Tag No.= INT, Comp.Wt = 0.000 lb, Stiffness= RIGID

 ---------------------------------------------------------------------------
 From D03 to D04, DX= -0.27 ft, DZ= -0.27 ft, L= 0.38 ft                Run

 PIPE DATA:
   Pipe Id= FITT4, Material= NS, OD= 4.710 inch, Wall Thk= 0.295 inch, Mill= 0.037 inch,
   Pipe Density= 115.80 lb/cu.ft, Pipe Unit Wgt= 3.29 lb/ft, Content Sp Gr= 1.500, Content Unit Wgt= 8.67 lb/ft,
   Insul Density= 6.00 lb/cu.ft, Insul Unit Wgt= 1.76 lb/ft, Syc= 0.0 psi

 POINT DATA:
   D03, Coordinates, X= -1.73 ft, Y= -0.28 ft, Z= 33.89 ft

 SUPPORT DATA:
   D03, Guide, Support Id= D05  1, Connected to H04, Tag No.= INT, Comp.Wt = 0.000 lb, Stiffness= RIGID

 ---------------------------------------------------------------------------
 From D04 to D05, DZ= -0.38 ft                                          Bend

 COMPONENT DATA (Bend, TIP= D04, Near= D04 N, Mid= D04 M, Far= D04 F):
    , Radius= 4.53 inch, Bend angle= 45.00 deg, Mid point at 50.00 percent, End flanges= 0, Flex= Auto,
   SIFI Circ= 2.50, SIFO Circ= 2.50, SIFI Long= 1.64, SIFO Long= 1.21

 POINT DATA:
   D04, Coordinates, X= -2.00 ft, Y= -0.28 ft, Z= 33.62 ft
   D04 N, Coordinates, X= -1.89 ft, Y= -0.28 ft, Z= 33.73 ft
   D04 M, Coordinates, X= -1.97 ft, Y= -0.28 ft, Z= 33.61 ft
   D04 F, Coordinates, X= -2.00 ft, Y= -0.28 ft, Z= 33.47 ft
```

```
-----------------------------------------------------------------------------------------------------------------
LERF_FRP_3m
04/24/2020                                                          BENTLEY
12:36 PM                                                            AutoPIPE Advanced 11.01.00.24  MODEL  PAGE   9
-----------------------------------------------------------------------------------------------------------------

                 C O M P O N E N T   D A T A   L I S T I N G

 ---------------------------------------------------------------------------
 From D05 to D06, DZ= -6.94 ft                                        Run

 PIPE DATA:
   Pipe Id= 4CON40, Material= NS, OD= 4.440 inch, Wall Thk= 0.160 inch, Mill= 0.020 inch,
   Pipe Density= 115.80 lb/cu.ft, Pipe Unit Wgt= 1.73 lb/ft, Content Sp Gr= 1.500, Content Unit Wgt= 8.67 lb/ft,
   Insul Density= 6.00 lb/cu.ft, Insul Unit Wgt= 1.69 lb/ft, Syc= 0.0 psi

 POINT DATA:
   D05, Coordinates, X= -2.00 ft, Y= -0.28 ft, Z= 33.24 ft

 SUPPORT DATA:
   D05, Guide, Support Id= D06  1, Connected to H06, Tag No.= INT, Comp.Wt = 0.000 lb, Stiffness= RIGID

 ---------------------------------------------------------------------------
 From D06 to D07, DZ= -10.00 ft                                       Run

 POINT DATA:
   D06, Coordinates, X= -2.00 ft, Y= -0.28 ft, Z= 26.30 ft

 SUPPORT DATA:
   D06, Guide, Support Id= D10  2, Connected to H09, Tag No.= INT, Comp.Wt = 0.000 lb, Stiffness= RIGID

 ---------------------------------------------------------------------------
 From D07 to D08, DZ= -6.53 ft                                        Run

 OPERATING DATA:
   T1= 120.00 deg F, T2= 32.00 deg F, Exp1= 0.68400 in/100ft, Exp2= -0.54700 in/100ft, E1= 1.63000 E6 psi,
   E2= 1.86000 E6 psi

 POINT DATA:
   D07, Coordinates, X= -2.00 ft, Y= -0.28 ft, Z= 16.30 ft

 SUPPORT DATA:
   D07, Guide, Support Id= D09  2, Connected to H10, Tag No.= INT, Comp.Wt = 0.000 lb, Stiffness= RIGID

 ---------------------------------------------------------------------------
 From D08 to D09, DZ= -0.38 ft                                        Run

 PIPE DATA:
   Pipe Id= FITT4, Material= NS, OD= 4.710 inch, Wall Thk= 0.295 inch, Mill= 0.037 inch,
   Pipe Density= 115.80 lb/cu.ft, Pipe Unit Wgt= 3.29 lb/ft, Content Sp Gr= 1.500, Content Unit Wgt= 8.67 lb/ft,
   Insul Density= 6.00 lb/cu.ft, Insul Unit Wgt= 1.76 lb/ft, Syc= 0.0 psi

 POINT DATA:
   D08, Coordinates, X= -2.00 ft, Y= -0.28 ft, Z= 9.76 ft

 SUPPORT DATA:
   D08, Guide, Support Id= D09  1, Connected to H12, Tag No.= INT, Comp.Wt = 0.000 lb, Stiffness= RIGID

 ---------------------------------------------------------------------------
 From D09 to D10, DY= 0.27 ft, DZ= -0.27 ft, L= 0.38 ft               Bend

 COMPONENT DATA (Bend, TIP= D09, Near= D09 N, Mid= D09 M, Far= D09 F):
    , Radius= 4.53 inch, Bend angle= 45.00 deg, Mid point at 50.00 percent, End flanges= 0, Flex= Auto,
```

BREAK IN DATA

CALCULATION SHEET

Project No. S54413.024	**Calculation No.** S54413.024-M-001	**Rev.** 0	**Page No.** 80 of 192
Title: LERF Basin 41 Buried Piping Analysis			
Prepared By: JD Williams	**Date:** 5/13/20	**Checked By:** JS Huisingh	**Date:** 5/13/20

```
-----------------------------------------------------------------------------------------------------------
LERF_FRP_3m
04/24/2020                                                          BENTLEY
12:36 PM                                                            AutoPIPE Advanced 11.01.00.24  MODEL  PAGE  86
-----------------------------------------------------------------------------------------------------------

                C O M P O N E N T   D A T A   L I S T I N G

 ---------------------------------------------------------------------------
 From AD08 to AD09, DX= 0.35 ft, DZ= 0.35 ft, L= 0.49 ft                    Flex

 COMPONENT DATA (Flex Jt):
   Length= 0.49 ft, Weight= 0 lb, Area= 0.0 sq.in, Kax= 300.0 lb/in, Kylat= 300.0 lb/in, Kzlat= 300.0 lb/in,
   Ktor= 300.0 ft-lb/deg, Kybend= 300.0 ft-lb/deg, Kzbend= 300.0 ft-lb/deg

 POINT DATA:
   AD08, Coordinates, X= 368.59 ft, Y= -1.53 ft, Z= 65.03 ft
   AD09, Coordinates, X= 368.94 ft, Y= -1.53 ft, Z= 65.38 ft

 SUPPORT DATA:
   AD09, Anchor, KTX= Rigid, KTY= Rigid, KTZ= Rigid, KRX= Rigid, KRY= Rigid, KRZ= Rigid

 ---------------------------------------------------------------------------


 Number of points in the system (Pipe + Frame + Soil): 577 + 118 + 848 = 1543


 Weight of Empty Pipes + Weight of Contents = Total Weight of System
        11794.9 lb     +     45249.0 lb     =       57043.9 lb
```

CALCULATION SHEET

Project No. S54413.024	**Calculation No.** S54413.024-M-001	**Rev.** 0	**Page No.** 81 of 192
Title: LERF Basin 41 Buried Piping Analysis			
Prepared By: JD Williams	**Date:** 5/13/20	**Checked By:** JS Huisingh	**Date:** 5/13/20

```
-----------------------------------------------------------------------------------------------------------
LERF_FRP_3m
04/24/2020                                                          BENTLEY
12:36 PM                                                            AutoPIPE Advanced 11.01.00.24  MODEL  PAGE  87
-----------------------------------------------------------------------------------------------------------
```

C O O R D I N A T E S D A T A L I S T I N G

POINT NAME	COORDINATE (ft) X	Y	Z
*** SEGMENT A			
A00	-45.07	-0.28	-0.01
A01	-35.07	-0.28	-0.01
A02	-25.07	-0.28	-0.01
A03	-15.07	-0.28	-0.01
A04	-5.07	-0.28	-0.01
A05	-0.41	-0.28	-0.01
A06	-0.07	-0.28	-0.01
A07	0.27	-0.28	-0.01
A08	4.93	-0.28	-0.01
A09	14.93	-0.28	-0.01
A10	24.93	-0.28	-0.01
A11	34.93	-0.28	-0.01
A12	44.93	-0.28	-0.01
*** SEGMENT B			
Q13	7.88	-0.28	39.56
B01	7.55	-0.28	39.23
B02	3.77	-0.28	35.44
B03	0.14	-0.28	31.81
B04 N	0.03	-0.28	31.70
B04	-0.07	-0.28	31.60
B04 M	-0.04	-0.28	31.59
B04 F	-0.07	-0.28	31.47
B05	-0.07	-0.28	31.30
B06	-0.07	-0.28	24.99
B07	-0.07	-0.28	14.99
B08	-0.07	-0.28	4.99
B09	-0.07	-0.28	0.33
A06	-0.07	-0.28	-0.01
*** SEGMENT C			
C00	-47.00	6.00	3.10
C01	-37.00	6.00	3.10
C02	-27.00	6.00	3.10
C03	-17.00	6.00	3.10
C04	-7.00	6.00	3.10
C05	-2.34	6.00	3.10
C06	-2.00	6.00	3.10
C07	-1.66	6.00	3.10
C08	3.00	6.00	3.10
C09	13.00	6.00	3.10
C10	23.00	6.00	3.10
C11	33.00	6.00	3.10
C12	43.00	6.00	3.10
*** SEGMENT D			
D00	6.01	-0.28	41.63
D01	5.17	-0.28	40.79
D02	1.77	-0.28	37.39
D03	-1.73	-0.28	33.89
D04 N	-1.89	-0.28	33.73

CALCULATION SHEET

Project No. S54413.024	**Calculation No.** S54413.024-M-001	**Rev.** 0	**Page No.** 82 of 192
Title: LERF Basin 41 Buried Piping Analysis			
Prepared By: JD Williams	**Date:** 5/13/20	**Checked By:** JS Huisingh	**Date:** 5/13/20

```
-----------------------------------------------------------------------------------------------------------
LERF_FRP_3m
04/24/2020                                                    BENTLEY
12:36 PM                                                      AutoPIPE Advanced 11.01.00.24  MODEL  PAGE  88
-----------------------------------------------------------------------------------------------------------
```

C O O R D I N A T E S D A T A L I S T I N G

POINT NAME	COORDINATE (ft) X	Y	Z
D04	-2.00	-0.28	33.62
D04 M	-1.97	-0.28	33.61
D04 F	-2.00	-0.28	33.47
D05	-2.00	-0.28	33.24
D06	-2.00	-0.28	26.30
D07	-2.00	-0.28	16.30
D08	-2.00	-0.28	9.76
D09 N	-2.00	-0.28	9.54
D09	-2.00	-0.28	9.38
D09 M	-2.00	-0.25	9.40
D09 F	-2.00	-0.17	9.27
D10	-2.00	-0.01	9.11
D11	-2.00	5.76	3.34
C06	-2.00	6.00	3.10
*** SEGMENT E			
E00	-45.07	-0.28	-0.01
E01	-35.07	-0.28	-0.01
E02	-25.07	-0.28	-0.01
E03	-15.07	-0.28	-0.01
E04	-5.07	-0.28	-0.01
E05	-0.69	-0.28	-0.01
E06	-0.41	-0.28	-0.01
E07	-0.07	-0.28	-0.01
E08	0.27	-0.28	-0.01
E09	0.55	-0.28	-0.01
E10	4.93	-0.28	-0.01
E11	14.93	-0.28	-0.01
E12	24.93	-0.28	-0.01
E13	34.93	-0.28	-0.01
E14	44.93	-0.28	-0.01
*** SEGMENT F			
E07	-0.07	-0.28	-0.01
F01	-0.07	-0.28	0.33
F02	-0.07	-0.28	0.61
F03	-0.07	-0.28	4.99
F10	-0.07	-0.28	14.99
F11	-0.07	-0.28	24.99
F13	-0.07	-0.28	30.14
F04	-0.07	-0.28	31.14
F05	-0.07	-0.28	31.30
F06 N	-0.07	-0.28	31.40
F06	-0.07	-0.28	31.60
F06 M	-0.03	-0.28	31.59
F06 F	0.08	-0.28	31.75
F07	0.14	-0.28	31.81
F08	0.25	-0.28	31.92
F14	3.77	-0.28	35.44
F12	5.73	-0.28	37.40
F09	7.49	-0.28	39.17

```
-----------------------------------------------------------------------------------------------------------
LERF_FRP_3m
04/24/2020                                                          BENTLEY
12:36 PM                                                            AutoPIPE Advanced 11.01.00.24  MODEL  PAGE  89
-----------------------------------------------------------------------------------------------------------
```

C O O R D I N A T E S D A T A L I S T I N G

POINT NAME	COORDINATE (ft) X	Y	Z
*** SEGMENT G			
G00	-47.00	6.00	3.10
G01	-37.00	6.00	3.10
G02	-27.00	6.00	3.10
G03	-17.00	6.00	3.10
G04	-7.00	6.00	3.10
G05	-2.62	6.00	3.10
G06	-2.34	6.00	3.10
G07	-2.00	6.00	3.10
G08	-1.66	6.00	3.10
G09	-1.38	6.00	3.10
G10	3.00	6.00	3.10
G11	13.00	6.00	3.10
G12	23.00	6.00	3.10
G13	33.00	6.00	3.10
G14	43.00	6.00	3.10
*** SEGMENT H			
H00	5.16	-0.28	40.77
H01	3.79	-0.28	39.41
H02	1.77	-0.28	37.38
H03	-1.62	-0.28	33.99
H04	-1.73	-0.28	33.88
H05 N	-1.81	-0.28	33.80
H05	-2.00	-0.28	33.61
H05 M	-1.95	-0.28	33.59
H05 F	-2.00	-0.28	33.35
H06	-2.00	-0.28	33.23
H07	-2.00	-0.28	33.07
H08	-2.00	-0.28	32.07
H09	-2.00	-0.28	26.30
H10	-2.00	-0.28	16.30
H11	-2.00	-0.28	9.92
H12	-2.00	-0.28	9.76
H13 N	-2.00	-0.28	9.65
H13	-2.00	-0.28	9.38
H13 M	-2.00	-0.23	9.41
H13 F	-2.00	-0.09	9.20
H14	-2.00	-0.01	9.11
H15	-2.00	0.10	9.00
H16	-2.00	5.56	3.54
H17	-2.00	5.76	3.34
G07	-2.00	6.00	3.10
*** SEGMENT P			
P00	34.17	-0.75	69.79
P01 N	32.93	-0.29	68.55
P01	32.90	-0.28	68.52
P01 F	32.87	-0.28	68.49
P03	32.32	-0.28	67.94
P04	31.69	-0.28	67.31
P05	30.75	-0.28	66.38

CALCULATION SHEET

Project No. S54413.024	**Calculation No.** S54413.024-M-001	**Rev.** 0	**Page No.** 84 of 192
Title: LERF Basin 41 Buried Piping Analysis			
Prepared By: JD Williams	**Date:** 5/13/20	**Checked By:** JS Huisingh	**Date:** 5/13/20

```
LERF_FRP_3m
04/24/2020                                                    BENTLEY
12:36 PM                                                      AutoPIPE Advanced 11.01.00.24  MODEL  PAGE  90
```

C O O R D I N A T E S D A T A L I S T I N G

POINT NAME	COORDINATE (ft) X	Y	Z
P06	27.45	-0.28	63.08
P07	17.81	-0.28	53.43
P08	7.90	-0.28	43.52
P09	7.63	-0.28	43.25
P10	7.05	-0.28	42.67
P11	6.57	-0.28	42.19
P11 M	6.31	-0.28	41.93
P12	6.04	-0.28	41.66
D00	6.01	-0.28	41.63
*** SEGMENT Q			
Q00	36.05	-0.74	67.72
Q01 N	34.84	-0.29	66.51
Q01	34.82	-0.28	66.49
Q01 F	34.79	-0.28	66.47
Q03	34.26	-0.28	65.94
Q04	33.73	-0.28	65.41
Q05	33.09	-0.28	64.77
Q06	30.62	-0.28	62.29
Q07	20.31	-0.28	51.98
Q08	9.67	-0.28	41.35
Q09	9.42	-0.28	41.09
Q10	8.95	-0.28	40.62
Q11	8.39	-0.28	40.06
Q11 M	8.15	-0.28	39.82
Q12	7.91	-0.28	39.59
Q13	7.88	-0.28	39.56
*** SEGMENT R			
R00	38.94	-1.02	65.05
R01 N	37.00	-0.29	63.10
R01	36.97	-0.28	63.07
R01 F	36.93	-0.28	63.04
R03	36.39	-0.28	62.49
R04	35.76	-0.28	61.86
R05	34.82	-0.28	60.92
R06	31.52	-0.28	57.62
R07	22.56	-0.28	48.67
R08	16.02	-0.28	42.12
R08 M	15.75	-0.28	41.86
R10	15.49	-0.28	41.59
R11	13.01	-0.28	39.12
R12	12.74	-0.28	38.85
R13	12.13	-0.28	38.23
R14	11.68	-0.28	37.79
R14 M	11.47	-0.28	37.58
R15	11.26	-0.28	37.37
R16	11.26	-0.28	37.36
R17	11.25	-0.28	37.36
R17 M	11.01	-0.28	37.11
R18	10.77	-0.28	

BREAK IN DATA

CALCULATION SHEET

Project No. S54413.024	**Calculation No.** S54413.024-M-001	**Rev.** 0	**Page No.** 85 of 192
Title: LERF Basin 41 Buried Piping Analysis			
Prepared By: JD Williams	**Date:** 5/13/20	**Checked By:** JS Huisingh	**Date:** 5/13/20

```
LERF_FRP_3m
04/24/2020                                                    BENTLEY
12:36 PM                                                      AutoPIPE Advanced 11.01.00.24  MODEL  PAGE 100
-------------------------------------------------------------------------------------------------------------

                    P I P E   D A T A   L I S T I N G

 Pipe ID/     Nom/ I.D.  -----Thickness(inch)----- Spec  InsuDen/   Weight(lb/ft )    ZL/ Composition/
 Material     Sch  inch  W.Th. Corr Mill Insu Ling Grav/ LingDen/  Pipe/ Ling/ Total  ZC
 CladMaterial            Clad                      InsMt CladDen   Cont  Insu/
 ---Line Class---                                        lb/cu.ft        Clad
 ------------ ---- ----- ----- ---- ---- ---- ---- ----- --------  ----- ----- ----- ---- --------------------

 Tag No. : <None>
 3CON40      3.000 3.120 0.135    0      2.00    0  1.50    6.000   1.11     0  7.49 1.00
 NS           NS                                   Other    0.000   4.97  1.41       1.00
                             0                              0.000            0


 Tag No. : <None>
 4CON40          4  4.120 0.160    0      2.00    0  1.50    6.000   1.73     0 12.08 1.00
 NS           NS                                   Other    0.000   8.67  1.69       1.00
                             0                              0.000            0


 Tag No. : <None>
 6CON30          6  6.120 0.110    0      2.00    0  1.50    6.000   1.73     0 23.04 1.00
 NS           NS                                   Other    0.000  19.12  2.18       1.00
                             0                              0.000            0


 Tag No. : <None>
 8CON30          8  8.120 0.110    0      2.00    0  1.50    6.000   2.29     0 38.65 1.00
 NS           NS                                   Other    0.000  33.66  2.71       1.00
                             0                              0.000            0


 Tag No. : <None>
 FITT3       3.000 3.120 0.295    0      2.00    0  1.50    6.000   2.55     0  9.01 1.00
 NS           NS                                   Other    0.000   4.97  1.49       1.00
                             0                              0.000            0


 Tag No. : <None>
 FITT6           6  6.120 0.410    0      2.00    0  1.50    6.000   6.76     0 28.23 1.00
 NS           NS                                   Other    0.000  19.12  2.34       1.00
                             0                              0.000            0


 Tag No. : <None>
 FITT8           8  8.120 0.410    0      2.00    0  1.50    6.000   8.84     0 45.36 1.00
 NS           NS                                   Other    0.000  33.66  2.86       1.00
                             0                              0.000            0
```

CALCULATION SHEET

Project No. S54413.024	**Calculation No.** S54413.024-M-001	**Rev.** 0	**Page No.** 86 of 192
Title: LERF Basin 41 Buried Piping Analysis			
Prepared By: JD Williams	**Date:** 5/13/20	**Checked By:** JS Huisingh	**Date:** 5/13/20

```
-----------------------------------------------------------------------------------------------------------------
LERF_FRP_3m
04/24/2020                                                                BENTLEY
12:36 PM                                                                  AutoPIPE Advanced 11.01.00.24  MODEL  PAGE 101
-----------------------------------------------------------------------------------------------------------------

                    P I P E   D A T A   L I S T I N G

 Pipe ID/     Nom/ I.D.  -----Thickness(inch)----- Spec  InsuDen/   Weight(lb/ft )    ZL/ Composition/
 Material     Sch  inch  W.Th. Corr Mill Insu Ling Grav/ LingDen/  Pipe/ Ling/ Total  ZC
 CladMaterial            Clad                        InsMt CladDen   Cont  Insu/
 ---Line Class---                                        lb/cu.ft        Clad
 ------------ ---- ----- ----- ---- ---- ---- ---- ----- --------  ----- ----- ----- ---- --------------------
 Tag No. : <None>
 FITT4          4  4.120 0.295    0      2.00    0  1.50    6.000   3.29     0 13.71 1.00
 NS           NS                                   Other    0.000   8.67  1.76       1.00
                             0                              0.000            0


 Tag No. : <None>
 3INSCH40     3.000 3.068 0.208 0.01      1.00    0  1.50    3.500   7.75     0 12.90 1.00
 NS           NS                                   Other    0.000   4.81  0.34       1.00
                             0                              0.000            0


 Tag No. : <None>
 4INSCH40       4  4.026 0.229 0.01      1.00    0  1.50    3.500  11.04     0 19.74 1.00
 NS           NS                                   Other    0.000   8.27  0.42       1.00
                             0                              0.000            0


 Tag No. : <None>
 8INSCH40       8  7.981 0.322 0.01      1.00    0  1.50    3.500  29.98     0 63.23 1.00
 NS           NS                                   Other    0.000  32.52  0.74       1.00
                             0                              0.000            0


 Tag No. : <None>
 12BOND        12 12.450 0.179    0      2.00    0  1.50    6.000   5.71     0 88.72 1.00
 NS           NS                                   Other    0.000  79.13  3.88       1.00
                             0                              0.000            0
```

CALCULATION SHEET

Project No. S54413.024	**Calculation No.** S54413.024-M-001	**Rev.** 0	**Page No.** 87 of 192
Title: LERF Basin 41 Buried Piping Analysis			
Prepared By: JD Williams	**Date:** 5/13/20	**Checked By:** JS Huisingh	**Date:** 5/13/20

```
-----------------------------------------------------------------------------------------------------------------
LERF_FRP_3m
04/24/2020                                                          BENTLEY
12:36 PM                                                            AutoPIPE Advanced 11.01.00.24  MODEL  PAGE 102
-----------------------------------------------------------------------------------------------------------------
```

M A T E R I A L D A T A L I S T I N G

Material Name	Pipe ID	Density lb/cu.ft	A2. fac	A3. fac	Temp. deg F	Expans. in/100ft	Long. Mod. E6 psi	Temp. A1-fac	K-fac	Poisson Ea/Eh*Vh/a
NS	3CON40	115.800	1.0	1.0	60.0	0.0	1.7500			0.23
					120.0	0.7	1.6300	1.00	0.85	0.23
					32.0	-0.5	1.8600	1.00	0.85	0.23
					150.0	1.0	1.5600	1.00	0.85	0.23
					-25.0	-1.2	2.0100	1.00	0.85	0.23
NS	FITT3	115.800	1.0	1.0	60.0	0.0	1.7500			0.23
					120.0	0.7	1.6300	1.00	0.85	0.23
					32.0	-0.5	1.8600	1.00	0.85	0.23
					150.0	1.0	1.5600	1.00	0.85	0.23
					-25.0	-1.2	2.0100	1.00	0.85	0.23
NS	4CON40	115.800	1.0	1.0	60.0	0.0	1.7500			0.23
					120.0	0.7	1.6300	1.00	0.85	0.23
					32.0	-0.5	1.8600	1.00	0.85	0.23
					150.0	1.0	1.5600	1.00	0.85	0.23
					-25.0	-1.2	2.0100	1.00	0.85	0.23
NS	FITT4	115.800	1.0	1.0	60.0	0.0	1.7500			0.23
					120.0	0.7	1.6300	1.00	0.85	0.23
					32.0	-0.5	1.8600	1.00	0.85	0.23
					150.0	1.0	1.5600	1.00	0.85	0.23
					-25.0	-1.2	2.0100	1.00	0.85	0.23
NS	6CON30	115.800	1.0	1.0	60.0	0.0	1.7500			0.23
					100.0	0.5	1.6900	1.00	0.85	0.23
					32.0	-0.5	1.8600	1.00	0.85	0.23
					150.0	1.0	1.5600	1.00	0.85	0.23
					-25.0	-1.2	2.0100	1.00	0.85	0.23
					120.0	0.7	1.6300	1.00	0.85	0.23
NS	FITT6	115.800	1.0	1.0	60.0	0.0	1.7500			0.23
					100.0	0.5	1.6900	1.00	0.85	0.23
					32.0	-0.5	1.8600	1.00	0.85	0.23
					150.0	1.0	1.5600	1.00	0.85	0.23
					-25.0	-1.2	2.0100	1.00	0.85	0.23
NS	8CON30	115.800	1.0	1.0	60.0	0.0	1.7500			0.23
					100.0	0.5	1.6900	1.00	0.85	0.23
					32.0	-0.5	1.8600	1.00	0.85	0.23
					150.0	1.0	1.5600	1.00	0.85	0.23
					-25.0	-1.2	2.0100	1.00	0.85	0.23
					120.0	0.7	1.6300	1.00	0.85	0.23
NS	FITT8	115.800	1.0	1.0	60.0	0.0	1.7500			0.23
					100.0	0.5	1.6900	1.00	0.85	0.23
					32.0	-0.5	1.8600	1.00	0.85	0.23
					150.0	1.0	1.5600	1.00	0.85	0.23
					-25.0	-1.2	2.0100	1.00	0.85	0.23
					120.0	0.7	1.6300	1.00	0.85	0.23

CALCULATION SHEET

Project No. S54413.024	**Calculation No.** S54413.024-M-001	**Rev.** 0	**Page No.** 88 of 192
Title: LERF Basin 41 Buried Piping Analysis			
Prepared By: JD Williams	**Date:** 5/13/20	**Checked By:** JS Huisingh	**Date:** 5/13/20

```
-----------------------------------------------------------------------------------------------------------------
LERF_FRP_3m
04/24/2020                                                          BENTLEY
12:36 PM                                                            AutoPIPE Advanced 11.01.00.24  MODEL  PAGE 103
-----------------------------------------------------------------------------------------------------------------
```

M A T E R I A L D A T A L I S T I N G

Material Name	Pipe ID	Density lb/cu.ft	A2. fac	A3. fac	Temp. deg F	Expans. in/100ft	Long. Mod. E6 psi	Temp. A1-fac	K-fac	Poisson Ea/Eh*Vh/a
NS	4INSCH40	501.000	1.0	1.0	60.0	0.0	28.3408			0.30
					150.0	1.0	27.8700	16.70	0.85	0.30
					-25.0	-1.1	28.6900	16.70	0.85	0.30
					120.0	0.6	28.0300	1.00	0.85	0.30
NS	3INSCH40	501.000	1.0	1.0	60.0	0.0	28.3408			0.30
					150.0	1.0	27.8700	16.70	0.85	0.30
					-25.0	-1.1	28.6900	16.70	0.85	0.30
					120.0	0.6	28.0300	1.00	0.85	0.30
NS	12BOND	115.800	1.0	1.0	60.0	0.0	1.7500			0.23
					150.0	1.0	1.5600	1.00	0.85	0.23
					-25.0	-1.2	2.0100	1.00	0.85	0.23
					120.0	0.7	1.6300	1.00	0.85	0.23

CALCULATION SHEET

Project No. S54413.024	**Calculation No.** S54413.024-M-001	**Rev.** 0	**Page No.** 89 of 192
Title: LERF Basin 41 Buried Piping Analysis			
Prepared By: JD Williams	**Date:** 5/13/20	**Checked By:** JS Huisingh	**Date:** 5/13/20

```
-----------------------------------------------------------------------------------------------------------------
LERF_FRP_3m
04/24/2020                                                                  BENTLEY
12:36 PM                                                                    AutoPIPE Advanced 11.01.00.24  MODEL  PAGE 104
-----------------------------------------------------------------------------------------------------------------

        M A T E R I A L   A L L O W A B L E   D A T A   L I S T I N G

  Material            Temper.  al(0:1)  al(2:1)  hl(2:1)=Qs  al(1:1)  hl(1:1)
    Name     Pipe ID   deg F    psi      psi      psi         psi      psi
 ----------- -------- -------  -------  -------  ----------  -------  -------
 NS          3CON40      60.0   6454.0   7272.0     12571.0      0.0      0.0
                        120.0
                         32.0
                        150.0
                        -25.0

 NS          FITT3       60.0   6454.0   7272.0     12571.0      0.0      0.0
                        120.0
                         32.0
                        150.0
                        -25.0

 NS          4CON40      60.0   6454.0   7272.0     12571.0      0.0      0.0
                        120.0
                         32.0
                        150.0
                        -25.0

 NS          FITT4       60.0   6454.0   7272.0     12571.0      0.0      0.0
                        120.0
                         32.0
                        150.0
                        -25.0

 NS          6CON30      60.0   6454.0   7272.0     12571.0      0.0      0.0
                        100.0
                         32.0
                        150.0
                        -25.0
                        120.0

 NS          FITT6       60.0   6454.0   7272.0     12571.0      0.0      0.0
                        100.0
                         32.0
                        150.0
                        -25.0

 NS          8CON30      60.0   6454.0   7272.0     12571.0      0.0      0.0
                        100.0
                         32.0
                        150.0
                        -25.0
                        120.0

 NS          FITT8       60.0   6454.0   7272.0     12571.0      0.0      0.0
                        100.0
                         32.0
                        150.0
                        -25.0
                        120.0
```

CALCULATION SHEET

Project No. S54413.024	**Calculation No.** S54413.024-M-001	**Rev.** 0	**Page No.** 90 of 192
Title: LERF Basin 41 Buried Piping Analysis			
Prepared By: JD Williams	**Date:** 5/13/20	**Checked By:** JS Huisingh	**Date:** 5/13/20

```
-----------------------------------------------------------------------------------------------------------------
LERF_FRP_3m
04/24/2020                                                                BENTLEY
12:36 PM                                                                  AutoPIPE Advanced 11.01.00.24  MODEL  PAGE 105
-----------------------------------------------------------------------------------------------------------------

        M A T E R I A L   A L L O W A B L E   D A T A   L I S T I N G

  Material            Temper.  al(0:1)  al(2:1)  hl(2:1)=Qs  al(1:1)  hl(1:1)
    Name     Pipe ID   deg F    psi      psi      psi         psi      psi
 ----------- -------- -------  -------  -------  ----------  -------  -------
 NS          4INSCH40    60.0  16700.0  16700.0     16700.0      0.0      0.0
                        150.0
                        -25.0
                        120.0

 NS          3INSCH40    60.0  16700.0  16700.0     16700.0      0.0      0.0
                        150.0
                        -25.0
                        120.0

 NS          12BOND      60.0   6454.0   7272.0     12571.0      0.0      0.0
                        150.0
                        -25.0
                        120.0
```

```
-----------------------------------------------------------------------------------------------------------
LERF_FRP_3m
04/24/2020                                                          BENTLEY
12:36 PM                                                            AutoPIPE Advanced 11.01.00.24  MODEL  PAGE 106
-----------------------------------------------------------------------------------------------------------

        OPERATING TEMPERATURE AND PRESSURE DATA
                    STRESSES IN psi

 POINT       PRESS. TEMPER  EXPAN.      MODULUS                          HOT
 NAME  CASE  psi    deg F   in/100ft    E6 psi     A1-FAC     K-FAC     Va/h
 ----  ----  ------ ------  --------    -------    ------     -----     -----

 *** SEGMENT A
 A00   T1       150    120     0.684*     1.630*     1.00      0.85      0.23*
                               0.420p
       T2         0  32.00    -0.547*     1.860*     1.00      0.85      0.23*
                               0.000p
       T3       150    120     0.684*     1.630*     1.00      0.85      0.23*
                               0.420p
 A05   T1       150    120     0.684*     1.630*     1.00      0.85      0.23*
                               0.202p
       T2         0  32.00    -0.547*     1.860*     1.00      0.85      0.23*
                               0.000p
       T3       150    120     0.684*     1.630*     1.00      0.85      0.23*
                               0.202p
 A07   T1       150    120     0.684*     1.630*     1.00      0.85      0.23*
                               0.420p
       T2         0  32.00    -0.547*     1.860*     1.00      0.85      0.23*
                               0.000p
       T3       150    120     0.684*     1.630*     1.00      0.85      0.23*
                               0.420p
 A12    Same as previous point.

 *** SEGMENT B
 Q13   T1       150    150     1.026*     1.560*     1.00      0.85      0.23*
                               0.420p
       T2         0 -25.00    -1.197*     2.010*     1.00      0.85      0.23*
                               0.000p
       T3       150    120     0.684*     1.630*     1.00      0.85      0.23*
                               0.420p
 B03   T1       150    150     1.026*     1.560*     1.00      0.85      0.23*
                               0.202p
       T2         0 -25.00    -1.197*     2.010*     1.00      0.85      0.23*
                               0.000p
       T3       150    120     0.684*     1.630*     1.00      0.85      0.23*
                               0.202p
 B05   T1       150    150     1.026*     1.560*     1.00      0.85      0.23*
                               0.420p
       T2         0 -25.00    -1.197*     2.010*     1.00      0.85      0.23*
                               0.000p
       T3       150    120     0.684*     1.630*     1.00      0.85      0.23*
                               0.420p
 B07   T1       150    120     0.684*     1.630*     1.00      0.85      0.23*
                               0.420p
       T2         0  32.00    -0.547*     1.860*     1.00      0.85      0.23*
                               0.000p
       T3       150    120     0.684*     1.630*     1.00      0.85      0.23*
                               0.420p
 B09   T1       150    120     0.684*     1.630*     1.00      0.85      0.23*
                               0.202p
       T2         0  32.00    -0.547*     1.860*     1.00      0.85      0.23*
                               0.000p
       T3       150    120     0.684*     1.630*     1.00      0.85      0.23*
```

CALCULATION SHEET

Project No. S54413.024	**Calculation No.** S54413.024-M-001	**Rev.** 0	**Page No.** 92 of 192
Title: LERF Basin 41 Buried Piping Analysis			
Prepared By: JD Williams	**Date:** 5/13/20	**Checked By:** JS Huisingh	**Date:** 5/13/20

```
LERF_FRP_3m
04/24/2020                                                    BENTLEY
12:36 PM                                                      AutoPIPE Advanced 11.01.00.24  MODEL  PAGE 107

        OPERATING TEMPERATURE AND PRESSURE DATA
                    STRESSES IN psi

 POINT       PRESS. TEMPER  EXPAN.      MODULUS                          HOT
 NAME  CASE  psi    deg F   in/100ft    E6 psi     A1-FAC     K-FAC     Va/h
 ----  ----  ------ ------  --------    -------    ------     -----     -----
                                0.202p
 A06    Same as previous point.

 *** SEGMENT C
 C00   T1       150    120     0.684*     1.630*     1.00      0.85      0.23*
                                0.466p
       T2         0  32.00    -0.547*     1.860*     1.00      0.85      0.23*
                                0.000p
       T3       150    120     0.684*     1.630*     1.00      0.85      0.23*
                                0.466p
 C05   T1       150    120     0.684*     1.630*     1.00      0.85      0.23*
                                0.261p
       T2         0  32.00    -0.547*     1.860*     1.00      0.85      0.23*
                                0.000p
       T3       150    120     0.684*     1.630*     1.00      0.85      0.23*
                                0.261p
 C07   T1       150    120     0.684*     1.630*     1.00      0.85      0.23*
                                0.466p
       T2         0  32.00    -0.547*     1.860*     1.00      0.85      0.23*
                                0.000p
       T3       150    120     0.684*     1.630*     1.00      0.85      0.23*
                                0.466p
 C12    Same as previous point.

 *** SEGMENT D
 D00   T1       150    150     1.026*     1.560*     1.00      0.85      0.23*
                                0.466p
       T2         0 -25.00    -1.197*     2.010*     1.00      0.85      0.23*
                                0.000p
       T3       150    120     0.684*     1.630*     1.00      0.85      0.23*
                                0.466p
 D03   T1       150    150     1.026*     1.560*     1.00      0.85      0.23*
                                0.261p
       T2         0 -25.00    -1.197*     2.010*     1.00      0.85      0.23*
                                0.000p
       T3       150    120     0.684*     1.630*     1.00      0.85      0.23*
                                0.261p
 D05   T1       150    150     1.026*     1.560*     1.00      0.85      0.23*
                                0.466p
       T2         0 -25.00    -1.197*     2.010*     1.00      0.85      0.23*
                                0.000p
       T3       150    120     0.684*     1.630*     1.00      0.85      0.23*
                                0.466p
 D07   T1       150    120     0.684*     1.630*     1.00      0.85      0.23*
                                0.466p
       T2         0  32.00    -0.547*     1.860*     1.00      0.85      0.23*
                                0.000p
       T3       150    120     0.684*     1.630*     1.00      0.85      0.23*
                                0.466p
 D08   T1       150    120     0.684*     1.630*     1.00      0.85      0.23*
                                0.2
       T2         0  32.00    -0.5
                                0.000p
```

BREAK IN DATA

CALCULATION SHEET

Project No. S54413.024	**Calculation No.** S54413.024-M-001	**Rev.** 0	**Page No.** 93 of 192
Title: LERF Basin 41 Buried Piping Analysis			
Prepared By: JD Williams	**Date:** 5/13/20	**Checked By:** JS Huisingh	**Date:** 5/13/20

```
LERF_FRP_3m
04/24/2020                                                    BENTLEY
12:36 PM                                                      AutoPIPE Advanced 11.01.00.24  MODEL  PAGE 120
-------------------------------------------------------------------------------------------------------------


                          SOIL DATA LISTING
                          -----------------


                     SOIL STIFFNESS PROPERTIES (6"SOIL)

                   Initial K         Yield P     Final K    Yield disp
     Dirn    Auto  (lb/in/ft) Auto  (lb/ft  )   (lb/in/ft)   (in    )
     ------- ----  ---------- ----  ----------  ----------  ----------

  Low Stiffness
     Horiz.   N      3116.494  N      2917.039       0.100      0.9360
     Long.    N      1363.759  N       272.752       0.100      0.2000
     Vert. Up N      2731.644  N      1704.545       0.100      0.6240
     Vert. Dn N      8060.909  N      5030.007       0.100      0.6240


  High Stiffness
     Horiz.   N      3116.494  N      2917.039       0.100      0.9360
     Long.    N      1363.759  N       272.752       0.100      0.2000
     Vert. Up N      2731.644  N      1704.545       0.100      0.6240
     Vert. Dn N      8060.909  N      5030.007       0.100      0.6240


  Average Stiffness
     Horiz.   N     12540.000  N     10001.000       0.100      0.7975
     Long.    N      4901.000  N       490.000       0.100      0.1000
     Vert. Up N     12216.000  N      7794.000       0.100      0.6380
     Vert. Dn N     27315.000  N     34854.000       0.100      1.2760
```

CALCULATION SHEET

Project No. S54413.024	**Calculation No.** S54413.024-M-001	**Rev.** 0	**Page No.** 94 of 192
Title: LERF Basin 41 Buried Piping Analysis			
Prepared By: JD Williams	**Date:** 5/13/20	**Checked By:** JS Huisingh	**Date:** 5/13/20

```
-----------------------------------------------------------------------------------------------------------
LERF_FRP_3m
04/24/2020                                                    BENTLEY
12:36 PM                                                      AutoPIPE Advanced 11.01.00.24  MODEL  PAGE 121
-----------------------------------------------------------------------------------------------------------


                              SOIL PARAMETERS (6"SOIL)
                              ------------------------

  Calculation Method :  User

  Parameters                                          Low          High       Average
  ----------------------------------------------    ----------   ----------   ----------
  Outside Diameter, D [in]                               6.57
  Depth to Centerline, H [inch]                        105.94
```

CALCULATION SHEET

Project No. S54413.024	**Calculation No.** S54413.024-M-001	**Rev.** 0	**Page No.** 95 of 192
Title: LERF Basin 41 Buried Piping Analysis			
Prepared By: JD Williams	**Date:** 5/13/20	**Checked By:** JS Huisingh	**Date:** 5/13/20

```
-----------------------------------------------------------------------------------------------------------
LERF_FRP_3m
04/24/2020                                                          BENTLEY
12:36 PM                                                            AutoPIPE Advanced 11.01.00.24  MODEL  PAGE 122
-----------------------------------------------------------------------------------------------------------


                                VIRTUAL ANCHOR DATA (6"SOIL)
                                ----------------------------

  Pipe Identifier            :   6CON30
  Point name for temp. data  :   A03
  Operating Case             :   OP1
  Thermal Expansion          :       0.684 in/100ft
  Temperature Change         :      60.000 deg F
  Operating Pressure         :     150.000 psi
  Virtual Anchor lengths  Lm :      22.624 ft
                          La :      45.248 ft
                          Lb :       5.220 ft
```

CALCULATION SHEET

Project No. S54413.024	**Calculation No.** S54413.024-M-001	**Rev.** 0	**Page No.** 96 of 192
Title: LERF Basin 41 Buried Piping Analysis			
Prepared By: JD Williams	**Date:** 5/13/20	**Checked By:** JS Huisingh	**Date:** 5/13/20

```
-----------------------------------------------------------------------------------------------------------
LERF_FRP_3m
04/24/2020                                                          BENTLEY
12:36 PM                                                            AutoPIPE Advanced 11.01.00.24  MODEL  PAGE 123
-----------------------------------------------------------------------------------------------------------
```

SOIL STIFFNESS PROPERTIES (8USOIL)

Dirn	Auto	Initial K (lb/in/ft)	Auto	Yield P (lb/ft)	Final K (lb/in/ft)	Yield disp (in)
Low Stiffness						
Horiz.	N	5770.000	N	6044.000	0.100	1.0475
Long.	N	2742.000	N	274.000	0.100	0.0999
Vert. Up	N	2089.000	N	1414.000	0.100	0.6769
Vert. Dn	N	12825.000	N	21495.000	0.100	1.6760
High Stiffness						
Horiz.	N	3502.522	N	1702.226	0.100	0.4860
Long.	N	708.106	N	141.621	0.100	0.2000
Vert. Up	N	5260.942	N	1704.545	0.100	0.3240
Vert. Dn	N	7871.595	N	2550.397	0.100	0.3240
Average Stiffness						
Horiz.	N	3502.522	N	1702.226	0.100	0.4860
Long.	N	708.106	N	141.621	0.100	0.2000
Vert. Up	N	5260.942	N	1704.545	0.100	0.3240
Vert. Dn	N	7871.595	N	2550.397	0.100	0.3240

CALCULATION SHEET

Project No. S54413.024	**Calculation No.** S54413.024-M-001	**Rev.** 0	**Page No.** 97 of 192
Title: LERF Basin 41 Buried Piping Analysis			
Prepared By: JD Williams	**Date:** 5/13/20	**Checked By:** JS Huisingh	**Date:** 5/13/20

```
-----------------------------------------------------------------------------------------------------------
LERF_FRP_3m
04/24/2020                                                          BENTLEY
12:36 PM                                                            AutoPIPE Advanced 11.01.00.24  MODEL  PAGE 124
-----------------------------------------------------------------------------------------------------------


                                SOIL PARAMETERS (8USOIL)
                                ------------------------

  Calculation Method :  User

  Parameters                                          Low          High       Average
  ----------------------------------------------    ----------   ----------   ----------
  Outside Diameter, D [in]                               8.60
  Depth to Centerline, H [inch]                        105.94
```

CALCULATION SHEET

Project No. S54413.024	**Calculation No.** S54413.024-M-001	**Rev.** 0	**Page No.** 98 of 192
Title: LERF Basin 41 Buried Piping Analysis			
Prepared By: JD Williams	**Date:** 5/13/20	**Checked By:** JS Huisingh	**Date:** 5/13/20

```
-----------------------------------------------------------------------------------------------------------
LERF_FRP_3m
04/24/2020                                                          BENTLEY
12:36 PM                                                            AutoPIPE Advanced 11.01.00.24  MODEL  PAGE 125
-----------------------------------------------------------------------------------------------------------


                                VIRTUAL ANCHOR DATA (8USOIL)
                                ----------------------------

  Pipe Identifier            :   3CON40
  Point name for temp. data  :   A06
  Operating Case             :   OP1
  Thermal Expansion          :       0.684 in/100ft
  Temperature Change         :      60.000 deg F
  Operating Pressure         :     150.000 psi
  Virtual Anchor lengths  Lm :      11.010 ft
                          La :      22.019 ft
                          Lb :       3.060 ft
```

CALCULATION SHEET

Project No. S54413.024	**Calculation No.** S54413.024-M-001	**Rev.** 0	**Page No.** 99 of 192
Title: LERF Basin 41 Buried Piping Analysis			
Prepared By: JD Williams	**Date:** 5/13/20	**Checked By:** JS Huisingh	**Date:** 5/13/20

```
-----------------------------------------------------------------------------------------------------------
LERF_FRP_3m
04/24/2020                                                          BENTLEY
12:36 PM                                                            AutoPIPE Advanced 11.01.00.24  MODEL  PAGE 126
-----------------------------------------------------------------------------------------------------------
```

SOIL STIFFNESS PROPERTIES (8LSOIL)

Dirn	Auto	Initial K (lb/in/ft)	Auto	Yield P (lb/ft)	Final K (lb/in/ft)	Yield disp (in)
Low Stiffness						
Horiz.	N	17341.000	N	18165.000	0.100	1.0475
Long.	N	6437.000	N	644.000	0.100	0.1000
Vert. Up	N	9301.000	N	7794.000	0.100	0.8380
Vert. Dn	N	27735.000	N	46484.000	0.100	1.6760
High Stiffness						
Horiz.	N	3502.522	N	1702.226	0.100	0.4860
Long.	N	708.106	N	141.621	0.100	0.2000
Vert. Up	N	5260.942	N	1704.545	0.100	0.3240
Vert. Dn	N	7871.595	N	2550.397	0.100	0.3240
Average Stiffness						
Horiz.	N	3502.522	N	1702.226	0.100	0.4860
Long.	N	708.106	N	141.621	0.100	0.2000
Vert. Up	N	5260.942	N	1704.545	0.100	0.3240
Vert. Dn	N	7871.595	N	2550.397	0.100	0.3240

CALCULATION SHEET

Project No. S54413.024	**Calculation No.** S54413.024-M-001	**Rev.** 0	**Page No.** 100 of 192
Title: LERF Basin 41 Buried Piping Analysis			
Prepared By: JD Williams	**Date:** 5/13/20	**Checked By:** JS Huisingh	**Date:** 5/13/20

```
-----------------------------------------------------------------------------------------------------------
LERF_FRP_3m
04/24/2020                                                          BENTLEY
12:36 PM                                                            AutoPIPE Advanced 11.01.00.24  MODEL  PAGE 127
-----------------------------------------------------------------------------------------------------------


                                SOIL PARAMETERS (8LSOIL)
                                ------------------------

  Calculation Method :  User

  Parameters                                          Low          High       Average
  ---------------------------------------------    ----------   ----------   ----------
  Outside Diameter, D [in]                              8.60
  Depth to Centerline, H [inch]                        45.13
```

CALCULATION SHEET

Project No. S54413.024	**Calculation No.** S54413.024-M-001	**Rev.** 0	**Page No.** 101 of 192
Title: LERF Basin 41 Buried Piping Analysis			
Prepared By: JD Williams	**Date:** 5/13/20	**Checked By:** JS Huisingh	**Date:** 5/13/20

```
-----------------------------------------------------------------------------------------------------------
LERF_FRP_3m
04/24/2020                                                          BENTLEY
12:36 PM                                                            AutoPIPE Advanced 11.01.00.24  MODEL  PAGE 128
-----------------------------------------------------------------------------------------------------------


                                VIRTUAL ANCHOR DATA (8LSOIL)
                                ----------------------------

  Pipe Identifier            :   3CON40
  Point name for temp. data  :   A06
  Operating Case             :   OP1
  Thermal Expansion          :       0.684 in/100ft
  Temperature Change         :      60.000 deg F
  Operating Pressure         :     150.000 psi
  Virtual Anchor lengths  Lm :      11.010 ft
                          La :      22.019 ft
                          Lb :       3.060 ft
```

CALCULATION SHEET

Project No. S54413.024	**Calculation No.** S54413.024-M-001	**Rev.** 0	**Page No.** 102 of 192
Title: LERF Basin 41 Buried Piping Analysis			
Prepared By: JD Williams	**Date:** 5/13/20	**Checked By:** JS Huisingh	**Date:** 5/13/20

```
-----------------------------------------------------------------------------------------------------------
LERF_FRP_3m
04/24/2020                                                    BENTLEY
12:36 PM                                                      AutoPIPE Advanced 11.01.00.24  MODEL  PAGE 129
-----------------------------------------------------------------------------------------------------------

            L O A D S   S U M M A R Y   D A T A   L I S T I N G

     EARTHQUAKE LOAD CASES :
     -----------------------

     Number of load cases :  8

     Load case 1  -  E1

          Seismic Code :  User-defined

          X-Resultant =        0.123    Y-Resultant =        0.082    Z-Resultant =        0.123

     Load case 2  -  E2

          Seismic Code :  User-defined

          X-Resultant =        0.123    Y-Resultant =        0.082    Z-Resultant =       -0.123

     Load case 3  -  E3

          Seismic Code :  User-defined

          X-Resultant =        0.123    Y-Resultant =       -0.082    Z-Resultant =        0.123

     Load case 4  -  E4

          Seismic Code :  User-defined

          X-Resultant =        0.123    Y-Resultant =       -0.082    Z-Resultant =       -0.123

     Load case 5  -  E5

          Seismic Code :  User-defined

          X-Resultant =       -0.123    Y-Resultant =        0.082    Z-Resultant =        0.123

     Load case 6  -  E6

          Seismic Code :  User-defined

          X-Resultant =       -0.123    Y-Resultant =        0.082    Z-Resultant =       -0.123

     Load case 7  -  E7

          Seismic Code :  User-defined

          X-Resultant =       -0.123    Y-Resultant =       -0.082    Z-Resultant =        0.123

     Load case 8  -  E8

          Seismic Code :  User-defined

          X-Resultant =       -0.123    Y-Resultant =       -0.082    Z-Resultant =       -0.123
```

CALCULATION SHEET

Project No. S54413.024	**Calculation No.** S54413.024-M-001	**Rev.** 0	**Page No.** 103 of 192
Title: LERF Basin 41 Buried Piping Analysis			
Prepared By: JD Williams	**Date:** 5/13/20	**Checked By:** JS Huisingh	**Date:** 5/13/20

```
-----------------------------------------------------------------------------------------------------------
LERF_FRP_3m
04/24/2020                                                          BENTLEY
12:36 PM                                                            AutoPIPE Advanced 11.01.00.24  MODEL  PAGE 130
-----------------------------------------------------------------------------------------------------------

            L O A D S   S U M M A R Y   D A T A   L I S T I N G

     WIND LOAD CASES :
     -----------------

     Number of load cases :  4

     Ground elevation for wind :      -3.50 ft

     Wind shape factor multiplier for piping:  1.000

     Wind shape factor multiplier for beams:   1.000

     Exposure factor for buried pipes :  0.000

     Exposure factor for submerged pipes :  0.000

     Exposed Segments -

     Wind application method : Projected
```

CALCULATION SHEET

Project No. S54413.024	**Calculation No.** S54413.024-M-001	**Rev.** 0	**Page No.** 104 of 192
Title: LERF Basin 41 Buried Piping Analysis			
Prepared By: JD Williams	**Date:** 5/13/20	**Checked By:** JS Huisingh	**Date:** 5/13/20

```
-----------------------------------------------------------------------------------------------------------------
LERF_FRP_3m
04/24/2020                                                                BENTLEY
12:36 PM                                                                  AutoPIPE Advanced 11.01.00.24  MODEL  PAGE 131
-----------------------------------------------------------------------------------------------------------------

            L O A D S   S U M M A R Y   D A T A   L I S T I N G

     Load case 1  -  W1

     Direction  -      X=   0.707     Y=   0.000     Z=   0.707

     ASCE 7-2010

     Basic wind speed at 33 ft (10m): 110.00 mph

     Exposure category : C

     Gust effect factor (G) :   0.85

     Force coefficient (Cf), Figure 29.5-1 : Automatic

     ASCE 7-10 PARAMETERS AS A FUNCTION OF HEIGHT

         HEIGHT       Kz          Cf          Qz       Pressure
         (ft  )                            (psf   )    (psf   )
       ----------  ----------  ----------  ----------  --------

            0.0       0.849       0.700      26.295      15.646
           10.0       0.849       0.700      26.295      15.646
           20.0       0.902       0.700      27.937      16.622
           33.0       1.002       0.700      31.043      18.471
           50.0       1.094       0.700      33.881      20.159
           75.0       1.191       0.700      36.900      21.955
          100.0       1.266       0.700      39.204      23.326
          200.0       1.464       0.700      45.363      26.991
          500.0       1.776       0.700      55.015      32.734
         1000.0       2.010       0.700      62.262      37.046

     Kz = Velocity pressure exposure coefficient
     Cf = Force coefficient or wind shape factor
     Qz = Velocity pressure = 0.00256*Kz*Kzt*V^2  (Eq. 27.3-1)
     Pressure               = Qz*G*Cf                (Eq. 23)

     Per ASCE Figure 29.5-1, wind appl. method should be "Projected"
     Default Gust Factor G assumes pipe frequency > 1 Hz.
     Piping is assumed not to be on an isolated hill (Kzt=1).
     Automatic Cf reported in chart above is calculated
     assuming D=1 ft. Program uses actual Pipe OD to
     calculate Cf at height during analysis.
```

CALCULATION SHEET

Project No. S54413.024	**Calculation No.** S54413.024-M-001	**Rev.** 0	**Page No.** 105 of 192
Title: LERF Basin 41 Buried Piping Analysis			
Prepared By: JD Williams	**Date:** 5/13/20	**Checked By:** JS Huisingh	**Date:** 5/13/20

```
-----------------------------------------------------------------------------------------------------------
LERF_FRP_3m
04/24/2020                                                          BENTLEY
12:36 PM                                                            AutoPIPE Advanced 11.01.00.24  MODEL  PAGE 132
-----------------------------------------------------------------------------------------------------------

            L O A D S   S U M M A R Y   D A T A   L I S T I N G

     Load case 1  -  W1

     Structural members wind load application data

     Structural members wind facing width:    Wind facing

     Gust effect factor (G) for structures (manual):     0.85

     Force coefficient (Cf) for structures (manual):    2.000

     ASCE 7-10 PARAMETERS AS A FUNCTION OF HEIGHT

         HEIGHT       Kz          Cf          Qz       Pressure
         (ft  )                            (psf   )    (psf   )
       ----------  ----------  ----------  ----------  --------

           0.0       0.849       2.000      26.295      44.702
          10.0       0.849       2.000      26.295      44.702
          20.0       0.902       2.000      27.937      47.493
          33.0       1.002       2.000      31.043      52.773
          50.0       1.094       2.000      33.881      57.597
          75.0       1.191       2.000      36.900      62.730
         100.0       1.266       2.000      39.204      66.646
         200.0       1.464       2.000      45.363      77.117
         500.0       1.776       2.000      55.015      93.525
        1000.0       2.010       2.000      62.262     105.845

     Kz = Velocity pressure exposure coefficient
     Cf = Force coefficient or wind shape factor
     Qz = Velocity pressure = 0.00256*Kz*Kzt*V^2  (Eq. 27.3-1)
     Pressure               = Qz*G*Cf                (Eq. 23)
```

CALCULATION SHEET

Project No. S54413.024	**Calculation No.** S54413.024-M-001	**Rev.** 0	**Page No.** 106 of 192
Title: LERF Basin 41 Buried Piping Analysis			
Prepared By: JD Williams	**Date:** 5/13/20	**Checked By:** JS Huisingh	**Date:** 5/13/20

```
-----------------------------------------------------------------------------------------------------------
LERF_FRP_3m
04/24/2020                                                          BENTLEY
12:36 PM                                                            AutoPIPE Advanced 11.01.00.24  MODEL  PAGE 133
-----------------------------------------------------------------------------------------------------------

            L O A D S   S U M M A R Y   D A T A   L I S T I N G

     Load case 2  -  W2

     Direction  -      X=  -0.707     Y=   0.000     Z=  -0.707

     ASCE 7-2010

     Basic wind speed at 33 ft (10m): 110.00 mph

     Exposure category : C

     Gust effect factor (G) :   0.85

     Force coefficient (Cf), Figure 29.5-1 : Automatic

     ASCE 7-10 PARAMETERS AS A FUNCTION OF HEIGHT

         HEIGHT       Kz          Cf          Qz       Pressure
         (ft  )                            (psf   )    (psf   )
       ----------  ----------  ----------  ----------  --------

            0.0       0.849       0.700      26.295      15.646
           10.0       0.849       0.700      26.295      15.646
           20.0       0.902       0.700      27.937      16.622
           33.0       1.002       0.700      31.043      18.471
           50.0       1.094       0.700      33.881      20.159
           75.0       1.191       0.700      36.900      21.955
          100.0       1.266       0.700      39.204      23.326
          200.0       1.464       0.700      45.363      26.991
          500.0       1.776       0.700      55.015      32.734
         1000.0       2.010       0.700      62.262      37.046

     Kz = Velocity pressure exposure coefficient
     Cf = Force coefficient or wind shape factor
     Qz = Velocity pressure = 0.00256*Kz*Kzt*V^2  (Eq. 27.3-1)
     Pressure               = Qz*G*Cf               (Eq. 23)

     Per ASCE Figure 29.5-1, wind appl. method should be "Projected"
     Default Gust Factor G assumes pipe frequency > 1 Hz.
     Piping is assumed not to be on an isolated hill (Kzt=1).
     Automatic Cf reported in chart above is calculated
     assuming D=1 ft. Program uses actual Pipe OD to
     calculate Cf at height during analysis.
```

CALCULATION SHEET

Project No. S54413.024	**Calculation No.** S54413.024-M-001	**Rev.** 0	**Page No.** 107 of 192
Title: LERF Basin 41 Buried Piping Analysis			
Prepared By: JD Williams	**Date:** 5/13/20	**Checked By:** JS Huisingh	**Date:** 5/13/20

```
-----------------------------------------------------------------------------------------------------------------
LERF_FRP_3m
04/24/2020                                                                  BENTLEY
12:36 PM                                                                    AutoPIPE Advanced 11.01.00.24  MODEL  PAGE 134
-----------------------------------------------------------------------------------------------------------------

            L O A D S   S U M M A R Y   D A T A   L I S T I N G

     Load case 2  -  W2

     Structural members wind load application data

     Structural members wind facing width:    Wind facing

     Gust effect factor (G) for structures (manual):     0.85

     Force coefficient (Cf) for structures (manual):    2.000

     ASCE 7-10 PARAMETERS AS A FUNCTION OF HEIGHT

         HEIGHT       Kz          Cf          Qz       Pressure
         (ft  )                            (psf   )    (psf   )
       ----------  ----------  ----------  ----------  --------

           0.0       0.849       2.000      26.295      44.702
          10.0       0.849       2.000      26.295      44.702
          20.0       0.902       2.000      27.937      47.493
          33.0       1.002       2.000      31.043      52.773
          50.0       1.094       2.000      33.881      57.597
          75.0       1.191       2.000      36.900      62.730
         100.0       1.266       2.000      39.204      66.646
         200.0       1.464       2.000      45.363      77.117
         500.0       1.776       2.000      55.015      93.525
        1000.0       2.010       2.000      62.262     105.845

     Kz = Velocity pressure exposure coefficient
     Cf = Force coefficient or wind shape factor
     Qz = Velocity pressure = 0.00256*Kz*Kzt*V^2  (Eq. 27.3-1)
     Pressure               = Qz*G*Cf                (Eq. 23)
```

CALCULATION SHEET

Project No. S54413.024	**Calculation No.** S54413.024-M-001	**Rev.** 0	**Page No.** 108 of 192
Title: LERF Basin 41 Buried Piping Analysis			
Prepared By: JD Williams	**Date:** 5/13/20	**Checked By:** JS Huisingh	**Date:** 5/13/20

```
-----------------------------------------------------------------------------------------------------------
LERF_FRP_3m
04/24/2020                                                          BENTLEY
12:36 PM                                                            AutoPIPE Advanced 11.01.00.24  MODEL  PAGE 135
-----------------------------------------------------------------------------------------------------------

            L O A D S   S U M M A R Y   D A T A   L I S T I N G

     Load case 3  -  W3

     Direction  -      X=  -0.707     Y=   0.000     Z=   0.707

     ASCE 7-2010

     Basic wind speed at 33 ft (10m): 110.00 mph

     Exposure category : C

     Gust effect factor (G) :   0.85

     Force coefficient (Cf), Figure 29.5-1 : Automatic

     ASCE 7-10 PARAMETERS AS A FUNCTION OF HEIGHT

         HEIGHT       Kz          Cf          Qz       Pressure
         (ft  )                            (psf   )    (psf   )
       ----------  ----------  ----------  ----------  --------

            0.0       0.849       0.700      26.295      15.646
           10.0       0.849       0.700      26.295      15.646
           20.0       0.902       0.700      27.937      16.622
           33.0       1.002       0.700      31.043      18.471
           50.0       1.094       0.700      33.881      20.159
           75.0       1.191       0.700      36.900      21.955
          100.0       1.266       0.700      39.204      23.326
          200.0       1.464       0.700      45.363      26.991
          500.0       1.776       0.700      55.015      32.734
         1000.0       2.010       0.700      62.262      37.046

     Kz = Velocity pressure exposure coefficient
     Cf = Force coefficient or wind shape factor
     Qz = Velocity pressure = 0.00256*Kz*Kzt*V^2  (Eq. 27.3-1)
     Pressure               = Qz*G*Cf               (Eq. 23)

     Per ASCE Figure 29.5-1, wind appl. method should be "Projected"
     Default Gust Factor G assumes pipe frequency > 1 Hz.
     Piping is assumed not to be on an isolated hill (Kzt=1).
     Automatic Cf reported in chart above is calculated
     assuming D=1 ft. Program uses actual Pipe OD to
     calculate Cf at height during analysis.
```

CALCULATION SHEET

Project No. S54413.024	**Calculation No.** S54413.024-M-001	**Rev.** 0	**Page No.** 109 of 192
Title: LERF Basin 41 Buried Piping Analysis			
Prepared By: JD Williams	**Date:** 5/13/20	**Checked By:** JS Huisingh	**Date:** 5/13/20

```
-----------------------------------------------------------------------------------------------------------
LERF_FRP_3m
04/24/2020                                                          BENTLEY
12:36 PM                                                            AutoPIPE Advanced 11.01.00.24  MODEL  PAGE 136
-----------------------------------------------------------------------------------------------------------

            L O A D S   S U M M A R Y   D A T A   L I S T I N G

     Load case 3  -  W3

     Structural members wind load application data

     Structural members wind facing width:    Wind facing

     Gust effect factor (G) for structures (manual):     0.85

     Force coefficient (Cf) for structures (manual):    2.000

     ASCE 7-10 PARAMETERS AS A FUNCTION OF HEIGHT

         HEIGHT       Kz          Cf          Qz       Pressure
         (ft  )                            (psf   )    (psf   )
       ----------  ----------  ----------  ----------  --------

            0.0       0.849       2.000      26.295      44.702
           10.0       0.849       2.000      26.295      44.702
           20.0       0.902       2.000      27.937      47.493
           33.0       1.002       2.000      31.043      52.773
           50.0       1.094       2.000      33.881      57.597
           75.0       1.191       2.000      36.900      62.730
          100.0       1.266       2.000      39.204      66.646
          200.0       1.464       2.000      45.363      77.117
          500.0       1.776       2.000      55.015      93.525
         1000.0       2.010       2.000      62.262     105.845

     Kz = Velocity pressure exposure coefficient
     Cf = Force coefficient or wind shape factor
     Qz = Velocity pressure = 0.00256*Kz*Kzt*V^2  (Eq. 27.3-1)
     Pressure               = Qz*G*Cf                (Eq. 23)
```

CALCULATION SHEET

Project No. S54413.024	**Calculation No.** S54413.024-M-001	**Rev.** 0	**Page No.** 110 of 192
Title: LERF Basin 41 Buried Piping Analysis			
Prepared By: JD Williams	**Date:** 5/13/20	**Checked By:** JS Huisingh	**Date:** 5/13/20

```
-----------------------------------------------------------------------------------------------------------
LERF_FRP_3m
04/24/2020                                                          BENTLEY
12:36 PM                                                            AutoPIPE Advanced 11.01.00.24  MODEL  PAGE 137
-----------------------------------------------------------------------------------------------------------

            L O A D S   S U M M A R Y   D A T A   L I S T I N G

     Load case 4  -  W4

     Direction  -      X=   0.707     Y=   0.000     Z=  -0.707

     ASCE 7-2010

     Basic wind speed at 33 ft (10m): 110.00 mph

     Exposure category : C

     Gust effect factor (G) :   0.85

     Force coefficient (Cf), Figure 29.5-1 : Automatic

     ASCE 7-10 PARAMETERS AS A FUNCTION OF HEIGHT

         HEIGHT       Kz          Cf          Qz       Pressure
         (ft  )                            (psf   )    (psf   )
       ----------  ----------  ----------  ----------  --------

            0.0       0.849       0.700      26.295      15.646
           10.0       0.849       0.700      26.295      15.646
           20.0       0.902       0.700      27.937      16.622
           33.0       1.002       0.700      31.043      18.471
           50.0       1.094       0.700      33.881      20.159
           75.0       1.191       0.700      36.900      21.955
          100.0       1.266       0.700      39.204      23.326
          200.0       1.464       0.700      45.363      26.991
          500.0       1.776       0.700      55.015      32.734
         1000.0       2.010       0.700      62.262      37.046

     Kz = Velocity pressure exposure coefficient
     Cf = Force coefficient or wind shape factor
     Qz = Velocity pressure = 0.00256*Kz*Kzt*V^2  (Eq. 27.3-1)
     Pressure               = Qz*G*Cf                (Eq. 23)

     Per ASCE Figure 29.5-1, wind appl. method should be "Projected"
     Default Gust Factor G assumes pipe frequency > 1 Hz.
     Piping is assumed not to be on an isolated hill (Kzt=1).
     Automatic Cf reported in chart above is calculated
     assuming D=1 ft. Program uses actual Pipe OD to
     calculate Cf at height during analysis.
```

CALCULATION SHEET

Project No. S54413.024	**Calculation No.** S54413.024-M-001	**Rev.** 0	**Page No.** 111 of 192
Title: LERF Basin 41 Buried Piping Analysis			
Prepared By: JD Williams	**Date:** 5/13/20	**Checked By:** JS Huisingh	**Date:** 5/13/20

```
-----------------------------------------------------------------------------------------------------------
LERF_FRP_3m
04/24/2020                                                          BENTLEY
12:36 PM                                                            AutoPIPE Advanced 11.01.00.24  MODEL  PAGE 138
-----------------------------------------------------------------------------------------------------------

            L O A D S   S U M M A R Y   D A T A   L I S T I N G

     Load case 4  -  W4

     Structural members wind load application data

     Structural members wind facing width:    Wind facing

     Gust effect factor (G) for structures (manual):     0.85

     Force coefficient (Cf) for structures (manual):    2.000

     ASCE 7-10 PARAMETERS AS A FUNCTION OF HEIGHT

         HEIGHT       Kz          Cf          Qz       Pressure
         (ft  )                            (psf   )    (psf   )
       ----------  ----------  ----------  ----------  --------

            0.0       0.849       2.000      26.295      44.702
           10.0       0.849       2.000      26.295      44.702
           20.0       0.902       2.000      27.937      47.493
           33.0       1.002       2.000      31.043      52.773
           50.0       1.094       2.000      33.881      57.597
           75.0       1.191       2.000      36.900      62.730
          100.0       1.266       2.000      39.204      66.646
          200.0       1.464       2.000      45.363      77.117
          500.0       1.776       2.000      55.015      93.525
         1000.0       2.010       2.000      62.262     105.845

     Kz = Velocity pressure exposure coefficient
     Cf = Force coefficient or wind shape factor
     Qz = Velocity pressure = 0.00256*Kz*Kzt*V^2  (Eq. 27.3-1)
     Pressure               = Qz*G*Cf                (Eq. 23)
```

CALCULATION SHEET

Project No. S54413.024	**Calculation No.** S54413.024-M-001	**Rev.** 0	**Page No.** 112 of 192
Title: LERF Basin 41 Buried Piping Analysis			
Prepared By: JD Williams	**Date:** 5/13/20	**Checked By:** JS Huisingh	**Date:** 5/13/20

```
-----------------------------------------------------------------------------------------------------------------
LERF_FRP_3m
04/24/2020                                                                BENTLEY
12:36 PM                                                                  AutoPIPE Advanced 11.01.00.24  MODEL  PAGE 139
-----------------------------------------------------------------------------------------------------------------

                              S U P P O R T   D A T A   L I S T I N G

 Point Support  Support Conn.to Comp.Wt  Stiff.     Gap 1   Gap 2  Fric. GapSet Preload Ld.Var Size    Figure
 Name   Type      ID     /Dir    (lb)               (in)    (in)   Fact. /#hgr   (lbf)
 ----- -------- ------- ------- ------- ---------- ------- ------- ----- ------ ------- ------ ---- ------------

 Tag No.: INT                                     Attachment ID: <None>
 A01   Guide-V  A03  1  E01       0.000 Rigid        0.000   0.000  0.00
       Guide-H  A03  1  E01       0.000 Rigid        0.000   0.000  0.00

 Tag No.: INT                                     Attachment ID: <None>
 A02   Guide-V  A04  1  E02       0.000 Rigid        0.000   0.000  0.00
       Guide-H  A04  1  E02       0.000 Rigid        0.000   0.000  0.00

 Tag No.: INT                                     Attachment ID: <None>
 A03   Guide-V  A05  1  E03       0.000 Rigid        0.000   0.000  0.00
       Guide-H  A05  1  E03       0.000 Rigid        0.000   0.000  0.00

 Tag No.: INT                                     Attachment ID: <None>
 A04   Guide-V  A06  1  E04       0.000 Rigid        0.000   0.000  0.00
       Guide-H  A06  1  E04       0.000 Rigid        0.000   0.000  0.00

 Tag No.: INT                                     Attachment ID: <None>
 A05   Guide-V  A12  1  E06       0.000 Rigid        0.000   0.000  0.00
       Guide-H  A12  1  E06       0.000 Rigid        0.000   0.000  0.00

 Tag No.: INT                                     Attachment ID: <None>
 A07   Guide-V  A11  1  E08       0.000 Rigid        0.000   0.000  0.00
       Guide-H  A11  1  E08       0.000 Rigid        0.000   0.000  0.00

 Tag No.: INT                                     Attachment ID: <None>
 A08   Guide-V  A07  1  E10       0.000 Rigid        0.000   0.000  0.00
       Guide-H  A07  1  E10       0.000 Rigid        0.000   0.000  0.00

 Tag No.: INT                                     Attachment ID: <None>
 A09   Guide-V  A08  1  E11       0.000 Rigid        0.000   0.000  0.00
       Guide-H  A08  1  E11       0.000 Rigid        0.000   0.000  0.00

 Tag No.: INT                                     Attachment ID: <None>
 A10   Guide-V  A09  1  E12       0.000 Rigid        0.000   0.000  0.00
       Guide-H  A09  1  E12       0.000 Rigid        0.000   0.000  0.00

 Tag No.: INT                                     Attachment ID: <None>
 A11   Guide-V  A10  1  E13       0.000 Rigid        0.000   0.000  0.00
       Guide-H  A10  1  E13       0.000 Rigid        0.000   0.000  0.00

 Tag No.: INT                                     Attachment ID: <None>
 B02   Guide-V  B11  1  F14       0.000 Rigid        0.000   0.000  0.00
       Guide-H  B11  1  F14       0.000 Rigid        0.000   0.000  0.00

 Tag No.: INT                                     Attachment ID: <None>
 B03   Guide-V  B05  1  F07       0.000 Rigid        0.000   0.000  0.00
       Guide-H  B05  1  F07       0.000 Rigid        0.000   0.000  0.00

 Tag No.: INT                                     Attachment ID: <None>
 B05   Guide-V  B06  1  F05       0.000 Rigid        0.000   0.000  0.00
       Guide-H  B06  1  F05       0.000 Rigid        0.000   0.000  0.00
```

CALCULATION SHEET

Project No. S54413.024	**Calculation No.** S54413.024-M-001	**Rev.** 0	**Page No.** 113 of 192
Title: LERF Basin 41 Buried Piping Analysis			
Prepared By: JD Williams	**Date:** 5/13/20	**Checked By:** JS Huisingh	**Date:** 5/13/20

```
-----------------------------------------------------------------------------------------------------------------
LERF_FRP_3m
04/24/2020                                                                  BENTLEY
12:36 PM                                                                    AutoPIPE Advanced 11.01.00.24  MODEL  PAGE 140
-----------------------------------------------------------------------------------------------------------------

                              S U P P O R T   D A T A   L I S T I N G

 Point Support  Support Conn.to Comp.Wt  Stiff.     Gap 1   Gap 2  Fric. GapSet Preload Ld.Var Size    Figure
 Name   Type      ID     /Dir    (lb)               (in)    (in)   Fact. /#hgr   (lbf)
 ----- -------- ------- ------- ------- ---------- ------- ------- ----- ------ ------- ------ ---- ------------
 Tag No.: INT                                     Attachment ID: <None>
 B06   Guide-V  B08  1  F11       0.000 Rigid        0.000   0.000  0.00
       Guide-H  B08  1  F11       0.000 Rigid        0.000   0.000  0.00

 Tag No.: INT                                     Attachment ID: <None>
 B07   Guide-V  B07  2  F10       0.000 Rigid        0.000   0.000  0.00
       Guide-H  B07  2  F10       0.000 Rigid        0.000   0.000  0.00

 Tag No.: INT                                     Attachment ID: <None>
 B08   Guide-V  B03  1  F03       0.000 Rigid        0.000   0.000  0.00
       Guide-H  B03  1  F03       0.000 Rigid        0.000   0.000  0.00

 Tag No.: INT                                     Attachment ID: <None>
 B09   Guide-V  B07  1  F01       0.000 Rigid        0.000   0.000  0.00
       Guide-H  B07  1  F01       0.000 Rigid        0.000   0.000  0.00

 Tag No.: INT                                     Attachment ID: <None>
 C01   Guide-V  C03  1  G01       0.000 Rigid        0.000   0.000  0.00
       Guide-H  C03  1  G01       0.000 Rigid        0.000   0.000  0.00

 Tag No.: INT                                     Attachment ID: <None>
 C02   Guide-V  C04  1  G02       0.000 Rigid        0.000   0.000  0.00
       Guide-H  C04  1  G02       0.000 Rigid        0.000   0.000  0.00

 Tag No.: INT                                     Attachment ID: <None>
 C03   Guide-V  C05  1  G03       0.000 Rigid        0.000   0.000  0.00
       Guide-H  C05  1  G03       0.000 Rigid        0.000   0.000  0.00

 Tag No.: INT                                     Attachment ID: <None>
 C04   Guide-V  C06  1  G04       0.000 Rigid        0.000   0.000  0.00
       Guide-H  C06  1  G04       0.000 Rigid        0.000   0.000  0.00

 Tag No.: INT                                     Attachment ID: <None>
 C05   Guide-V  C13  1  G06       0.000 Rigid        0.000   0.000  0.00
       Guide-H  C13  1  G06       0.000 Rigid        0.000   0.000  0.00

 Tag No.: INT                                     Attachment ID: <None>
 C07   Guide-V  C12  1  G08       0.000 Rigid        0.000   0.000  0.00
       Guide-H  C12  1  G08       0.000 Rigid        0.000   0.000  0.00

 Tag No.: INT                                     Attachment ID: <None>
 C08   Guide-V  C07  1  G10       0.000 Rigid        0.000   0.000  0.00
       Guide-H  C07  1  G10       0.000 Rigid        0.000   0.000  0.00

 Tag No.: INT                                     Attachment ID: <None>
 C09   Guide-V  C08  1  G11       0.000 Rigid        0.000   0.000  0.00
       Guide-H  C08  1  G11       0.000 Rigid        0.000   0.000  0.00

 Tag No.: INT                                     Attachment ID: <None>
 C10   Guide-V  C09  1  G12       0.000 Rigid        0.000   0.000  0.00
       Guide-H  C09  1  G12       0.000 Rigid        0.000   0.000  0.00
```

CALCULATION SHEET

Project No. S54413.024	**Calculation No.** S54413.024-M-001	**Rev.** 0	**Page No.** 114 of 192
Title: LERF Basin 41 Buried Piping Analysis			
Prepared By: JD Williams	**Date:** 5/13/20	**Checked By:** JS Huisingh	**Date:** 5/13/20

```
-----------------------------------------------------------------------------------------------------------------
LERF_FRP_3m
04/24/2020                                                                BENTLEY
12:36 PM                                                                  AutoPIPE Advanced 11.01.00.24  MODEL  PAGE 141
-----------------------------------------------------------------------------------------------------------------

                              S U P P O R T   D A T A   L I S T I N G

 Point Support  Support Conn.to Comp.Wt  Stiff.     Gap 1   Gap 2  Fric. GapSet Preload Ld.Var Size    Figure
 Name   Type      ID     /Dir    (lb)               (in)    (in)   Fact. /#hgr   (lbf)
 ----- -------- ------- ------- ------- ---------- ------- ------- ----- ------ ------- ------ ---- ------------
 Tag No.: INT                                     Attachment ID: <None>
 C11   Guide-V  C10  1  G13       0.000 Rigid        0.000   0.000  0.00
       Guide-H  C10  1  G13       0.000 Rigid        0.000   0.000  0.00

 Tag No.: INT                                     Attachment ID: <None>
 D02   Guide-V  D13  1  H02       0.000 Rigid        0.000   0.000  0.00
       Guide-H  D13  1  H02       0.000 Rigid        0.000   0.000  0.00

 Tag No.: INT                                     Attachment ID: <None>
 D03   Guide-V  D05  1  H04       0.000 Rigid        0.000   0.000  0.00
       Guide-H  D05  1  H04       0.000 Rigid        0.000   0.000  0.00

 Tag No.: INT                                     Attachment ID: <None>
 D05   Guide-V  D06  1  H06       0.000 Rigid        0.000   0.000  0.00
       Guide-H  D06  1  H06       0.000 Rigid        0.000   0.000  0.00

 Tag No.: INT                                     Attachment ID: <None>
 D06   Guide-V  D10  2  H09       0.000 Rigid        0.000   0.000  0.00
       Guide-H  D10  2  H09       0.000 Rigid        0.000   0.000  0.00

 Tag No.: INT                                     Attachment ID: <None>
 D07   Guide-V  D09  2  H10       0.000 Rigid        0.000   0.000  0.00
       Guide-H  D09  2  H10       0.000 Rigid        0.000   0.000  0.00

 Tag No.: INT                                     Attachment ID: <None>
 D08   Guide-V  D09  1  H12       0.000 Rigid        0.000   0.000  0.00
       Guide-H  D09  1  H12       0.000 Rigid        0.000   0.000  0.00

 Tag No.: INT                                     Attachment ID: <None>
 D10   Guide-V  D10  1  H14       0.000 Rigid        0.000   0.000  0.00
       Guide-H  D10  1  H14       0.000 Rigid        0.000   0.000  0.00

 Tag No.: INT                                     Attachment ID: <None>
 D11   Guide-V  D07  1  H17       0.000 Rigid        0.000   0.000  0.00
       Guide-H  D07  1  H17       0.000 Rigid        0.000   0.000  0.00

 Tag No.: NEW OFF BASIN 41                        Attachment ID: <None>
 F13   Guide-V  F13  1  5263      0.000 Rigid        0.000   0.040  0.00  Weightless
       Guide-H  F13  1  5263      0.000 Rigid        0.063   0.063  0.00  Weightless

 Tag No.: NEW-ON BASIN 41                         Attachment ID: <None>
 F12   Guide-V  F12  1  5169      0.000 Rigid        0.000   0.125  0.00  Weightless
       Guide-H  F12  1  5169      0.000 Rigid        0.062   0.062  0.00  Weightless

 Tag No.: NEW-ON BASIN 41                         Attachment ID: <None>
 H01   Guide-V  H16  1  5197      0.000 Rigid        0.000   0.125  0.00  Weightless
       Guide-H  H16  1  5197      0.000 Rigid        0.062   0.062  0.00  Weightless

 Tag No.: NEW OFF BASIN 41                        Attachment ID: <None>
 H08   Guide-V  H08  1  5401      0.000 Rigid        0.000   0.040  0.00  Weightless
       Guide-H  H08  1  5401      0.000 Rigid        0.063   0.063  0.00  Weightless
```

CALCULATION SHEET

Project No. S54413.024	**Calculation No.** S54413.024-M-001	**Rev.** 0	**Page No.** 115 of 192
Title: LERF Basin 41 Buried Piping Analysis			
Prepared By: JD Williams	**Date:** 5/13/20	**Checked By:** JS Huisingh	**Date:** 5/13/20

```
-----------------------------------------------------------------------------------------------------------------
LERF_FRP_3m
04/24/2020                                                                BENTLEY
12:36 PM                                                                  AutoPIPE Advanced 11.01.00.24  MODEL  PAGE 142
-----------------------------------------------------------------------------------------------------------------

                              S U P P O R T   D A T A   L I S T I N G

 Point Support  Support Conn.to Comp.Wt  Stiff.     Gap 1   Gap 2  Fric. GapSet Preload Ld.Var Size    Figure
 Name   Type      ID     /Dir    (lb)               (in)    (in)   Fact. /#hgr   (lbf)
 ----- -------- ------- ------- ------- ---------- ------- ------- ----- ------ ------- ------ ---- ------------
 Tag No.: F07                                     Attachment ID: <None>
 P05   Guide-V  P05  2  5105      0.000 Rigid        0.000   0.000  0.00
       Guide-H  P05  2  5105      0.000 Rigid        0.000   0.000  0.00

 Tag No.: F12                                     Attachment ID: <None>
 P06   Guide-V  P06  2  5138      0.000 Rigid        0.000   0.000  0.00
       Guide-H  P06  2  5138      0.000 Rigid        0.000   0.000  0.00

 Tag No.: F08                                     Attachment ID: <None>
 P07   Guide-V  P07  2  5107      0.000 Rigid        0.000   0.000  0.00
       Guide-H  P07  2  5107      0.000 Rigid        0.000   0.000  0.00

 Tag No.: F09                                     Attachment ID: <None>
 P10   Guide-V  P10  2  5127      0.000 Rigid        0.000   0.000  0.00
       Guide-H  P10  2  5127      0.000 Rigid        0.000   0.000  0.00

 Tag No.: Valve Support                           Attachment ID: <None>
 P11 M Shoe     P11 M1  Ground    0.000 Rigid        0.000 100.000  0.00  Weightless

 Tag No.: G07                                     Attachment ID: <None>
 Q05   Guide-V  Q05  2  5101      0.000 Rigid        0.000   0.000  0.00
       Guide-H  Q05  2  5101      0.000 Rigid        0.000   0.000  0.00

 Tag No.: G12                                     Attachment ID: <None>
 Q06   Guide-V  Q06  2  5144      0.000 Rigid        0.000   0.000  0.00
       Guide-H  Q06  2  5144      0.000 Rigid        0.000   0.000  0.00

 Tag No.: G08                                     Attachment ID: <None>
 Q07   Guide-V  Q07  2  5103      0.000 Rigid        0.000   0.000  0.00
       Guide-H  Q07  2  5103      0.000 Rigid        0.000   0.000  0.00

 Tag No.: G10                                     Attachment ID: <None>
 Q10   Guide-V  Q10  2  5125      0.000 Rigid        0.000   0.000  0.00
       Guide-H  Q10  2  5125      0.000 Rigid        0.000   0.000  0.00

 Tag No.: Valve Support                           Attachment ID: <None>
 Q11 M Shoe     Q11 M1  Ground    0.000 Rigid        0.000 100.000  0.00  Weightless

 Tag No.: H13                                     Attachment ID: <None>
 R05   Guide-V  R05  2  5097      0.000 Rigid        0.000   0.000  0.00
       Guide-H  R05  2  5097      0.000 Rigid        0.000   0.000  0.00

 Tag No.: H17                                     Attachment ID: <None>
 R06   Guide-V  R06  2  5140      0.000 Rigid        0.000   0.000  0.00
       Guide-H  R06  2  5140      0.000 Rigid        0.000   0.000  0.00

 Tag No.: H14                                     Attachment ID: <None>
 R07   Guide-V  R07  2  5099      0.000 Rigid        0.000   0.000  0.00
       Guide-H  R07  2  5099      0.000 Rigid        0.000   0.000  0.00

 Tag No.: H15                                     Attachment ID: <None>
 R13   Guide-V  R13  2  5119      0.000 Rigid        0.000   0.000  0.00
```

BREAK IN DATA

CALCULATION SHEET

Project No. S54413.024	**Calculation No.** S54413.024-M-001	**Rev.** 0	**Page No.** 116 of 192
Title: LERF Basin 41 Buried Piping Analysis			
Prepared By: JD Williams	**Date:** 5/13/20	**Checked By:** JS Huisingh	**Date:** 5/13/20

```
-----------------------------------------------------------------------------------------------------------
LERF_FRP_3m
04/24/2020                                                          BENTLEY
12:36 PM                                                            AutoPIPE Advanced 11.01.00.24  RESULT PAGE 159
-----------------------------------------------------------------------------------------------------------


                    A N A L Y S I S   S U M M A R Y


   Current model revision number : 173

     Constant values used
              Acceleration due to gravity................  386.40000 in/s/s
              Density of water for specific gravity Cal..     62.400 lb/cu.ft
              Density of sea water.......................     62.400 lb/cu.ft
              Density of ground water ...................     62.400 lb/cu.ft

     Static - Analysis set number ................... 1
              Date and Time of analysis ............. Apr 23, 2020   2:15 PM
              Model Revision Number ................. 173
              Number of load cases .................. 15
              Load cases analyzed ................... GR T1 E1 E2 E3 E4 E5 E6 E7 E8 W1 W2 W3 W4 P1
              Description ........................... Analysis Set No.1
              Gaps/Friction/Soil considered ......... Yes
              Tolerance - Force, Displacement ....... 10.00 lbf  0.0010 in
              Friction - Scale Factor, Tolerance .... 1.00   0.10
              Ignore friction for cases E1,E2,E3 .... Yes
              Ignore friction for gravity case ...... Yes
              Hanger design run ..................... No
              Cut short included .................... No
              Thermal bowing included ............... No
              Include Bourdon rotational effect ..... No
              Pipe radius for Bourdon calculation ... Mean
              Occasional load analysis type ......... Nonlinear
              Non-linear analysis summary file ...... LERF_FRP_3m.LOG
              Use default load sequence ............. Yes
              Base load cases for nonlinear analysis
                                                        GR   = None
                                                        T1   = P1
                                                        E1   = T1
                                                        E2   = T1
                                                        E3   = T1
                                                        E4   = T1
                                                        E5   = T1
                                                        E6   = T1
                                                        E7   = T1
                                                        E8   = T1
                                                        W1   = T1
                                                        W2   = T1
                                                        W3   = T1
                                                        W4   = T1
                                                        P1   = GR
              Weight of contents included ........... Yes
              Fluid density factor for contents ..... 1.00
              Pressure stiffening case .............. None
              Hot modulus case ...................... None
              Pressure Extension..................... Yes
              Soil Stiffness ........................ Low
              Water elevation for buoyancy loads .... Not considered
              Wind analysis method .................. Projected
              Use corroded thickness in analysis .... No
              Rigid stiffness factor ................ 1000.0
```

CALCULATION SHEET

Project No. S54413.024	**Calculation No.** S54413.024-M-001	**Rev.** 0	**Page No.** 117 of 192
Title: LERF Basin 41 Buried Piping Analysis			
Prepared By: JD Williams	**Date:** 5/13/20	**Checked By:** JS Huisingh	**Date:** 5/13/20

```
-----------------------------------------------------------------------------------------------------------
LERF_FRP_3m
04/24/2020                                                          BENTLEY
12:36 PM                                                            AutoPIPE Advanced 11.01.00.24  RESULT PAGE 160
-----------------------------------------------------------------------------------------------------------

              Support rigid stiffness (translation) . 0.100000E+11 lb/in
              Support rigid stiffness (rotation) .... 0.100000E+11 ft-lb/deg
              Anchor rigid stiffness (translation) .. 0.100000E+11 lb/in
              Anchor rigid stiffness (rotation) ..... 0.100000E+11 ft-lb/deg
              Remove Lift-Off Supports ............. No

     Static - Analysis set number ................... 2
              Date and Time of analysis ............ Apr 23, 2020   2:18 PM
              Model Revision Number ................ 173
              Number of load cases ................. 15
              Load cases analyzed ................... GR T2 E1 E2 E3 E4 E5 E6 E7 E8 W1 W2 W3 W4 P2
              Description ........................
              Gaps/Friction/Soil considered ......... Yes
              Tolerance - Force, Displacement ....... 10.00 lbf  0.0010 in
              Friction - Scale Factor, Tolerance .... 1.00   0.10
              Ignore friction for cases E1,E2,E3 .... Yes
              Ignore friction for gravity case ...... Yes
              Hanger design run ..................... No
              Cut short included .................... No
              Thermal bowing included ............... No
              Include Bourdon rotational effect ..... No
              Pipe radius for Bourdon calculation ... Mean
              Occasional load analysis type ......... Nonlinear
              Non-linear analysis summary file ...... LERF_FRP_3m.LOG
              Use default load sequence ............. Yes
              Base load cases for nonlinear analysis
                                                         GR   = None
                                                         T2   = GR
                                                         E1   = P2
                                                         E2   = P2
                                                         E3   = P2
                                                         E4   = P2
                                                         E5   = P2
                                                         E6   = P2
                                                         E7   = P2
                                                         E8   = P2
                                                         W1   = P2
                                                         W2   = P2
                                                         W3   = P2
                                                         W4   = P2
                                                         P2   = T2
              Weight of contents included ........... Yes
              Fluid density factor for contents ..... 1.00
              Pressure stiffening case .............. None
              Hot modulus case ...................... None
              Pressure Extension..................... Yes
              Soil Stiffness ........................ Low
              Water elevation for buoyancy loads .... Not considered
              Wind analysis method .................. Projected
              Use corroded thickness in analysis .... No
              Rigid stiffness factor ................ 1000.0
              Support rigid stiffness (translation) . 0.100000E+11 lb/in
              Support rigid stiffness (rotation) .... 0.100000E+11 ft-lb/deg
              Anchor rigid stiffness (translation) .. 0.100000E+11 lb/in
              Anchor rigid stiffness (rotation) ..... 0.100000E+11 ft-lb/deg
              Remove Lift-Off Supports ............. No
```

CALCULATION SHEET

Project No. S54413.024	**Calculation No.** S54413.024-M-001	**Rev.** 0	**Page No.** 118 of 192
Title: LERF Basin 41 Buried Piping Analysis			
Prepared By: JD Williams	**Date:** 5/13/20	**Checked By:** JS Huisingh	**Date:** 5/13/20

```
-----------------------------------------------------------------------------------------------------------
LERF_FRP_3m
04/24/2020                                                    BENTLEY
12:36 PM                                                      AutoPIPE Advanced 11.01.00.24  RESULT PAGE 161
-----------------------------------------------------------------------------------------------------------

     Static - Analysis set number ................... 3
              Date and Time of analysis ............. Apr 23, 2020   2:20 PM
              Model Revision Number ................. 173
              Number of load cases .................. 15
              Load cases analyzed ................... GR T3 E1 E2 E3 E4 E5 E6 E7 E8 W1 W2 W3 W4 P3
              Description ........................
              Gaps/Friction/Soil considered ......... Yes
              Tolerance - Force, Displacement ....... 10.00 lbf  0.0010 in
              Friction - Scale Factor, Tolerance .... 1.00   0.10
              Ignore friction for cases E1,E2,E3 .... Yes
              Ignore friction for gravity case ...... Yes
              Hanger design run ..................... No
              Cut short included .................... No
              Thermal bowing included ............... No
              Include Bourdon rotational effect ..... No
              Pipe radius for Bourdon calculation ... Mean
              Occasional load analysis type ......... Nonlinear
              Non-linear analysis summary file ...... LERF_FRP_3m.LOG
              Use default load sequence ............. Yes
              Base load cases for nonlinear analysis
                                                        GR   = None
                                                        T3   = GR
                                                        E1   = P3
                                                        E2   = P3
                                                        E3   = P3
                                                        E4   = P3
                                                        E5   = P3
                                                        E6   = P3
                                                        E7   = P3
                                                        E8   = P3
                                                        W1   = P3
                                                        W2   = P3
                                                        W3   = P3
                                                        W4   = P3
                                                        P3   = T3
              Weight of contents included ........... Yes
              Fluid density factor for contents ..... 1.00
              Pressure stiffening case .............. None
              Hot modulus case ...................... None
              Pressure Extension..................... Yes
              Soil Stiffness ........................ Low
              Water elevation for buoyancy loads .... Not considered
              Wind analysis method .................. Projected
              Use corroded thickness in analysis .... No
              Rigid stiffness factor ................ 1000.0
              Support rigid stiffness (translation) . 0.100000E+11 lb/in
              Support rigid stiffness (rotation) .... 0.100000E+11 ft-lb/deg
              Anchor rigid stiffness (translation) .. 0.100000E+11 lb/in
              Anchor rigid stiffness (rotation) ..... 0.100000E+11 ft-lb/deg
              Remove Lift-Off Supports .............. No
```

CALCULATION SHEET

Project No. S54413.024	**Calculation No.** S54413.024-M-001	**Rev.** 0	**Page No.** 119 of 192
Title: LERF Basin 41 Buried Piping Analysis			
Prepared By: JD Williams	**Date:** 5/13/20	**Checked By:** JS Huisingh	**Date:** 5/13/20

```
-----------------------------------------------------------------------------------------------------------
LERF_FRP_3m
04/24/2020                                                    BENTLEY
12:36 PM                                                      AutoPIPE Advanced 11.01.00.24  RESULT PAGE 162
-----------------------------------------------------------------------------------------------------------

                                    CODE COMPLIANCE COMBINATIONS

  <Description>                                                                    f2     Allowable
  Combination              Category    Method       Case/Combination     Factor M/S  Factor     (psi)    D/A/P/C
  ------------------------ ----------- -------- ------------------------ ------ --- -------- ----------- -------
  GR{1}                    Sustain     Sum      GR[1]                      1.00        0.670 C Automatic Y Y Y Y

  GR+P1{1}                 Sustain     Sum      Max Long                   1.00        0.670 C Automatic Y Y Y Y
                                                Max Hoop                   1.00              L Automatic
                                                GR[1]                      1.00
                                                P1[1]                      1.00

  T1+P1{1}                 Expansion   Sum      T1[1]                      1.00              C Automatic Y Y Y N
                                                Max Long                   1.00              L Automatic
                                                Max Hoop                   1.00
                                                P1[1]                      1.00

  GR+E1{1}                 Occasion    Sum      GR[1]                      1.00        0.890 C Automatic Y Y Y N
                                                E1[1]                      1.00              L Automatic

  GR+P1+E1{1}              Occasion    Sum      Max Long                   1.00        0.890 C Automatic Y Y Y N
                                                Max Hoop                   1.00              L Automatic
                                                GR[1]                      1.00
                                                P1[1]                      1.00
                                                E1[1]                      1.00

  GR+E2{1}                 Occasion    Sum      GR[1]                      1.00        0.890 C Automatic Y Y Y N
                                                E2[1]                      1.00              L Automatic

  GR+P1+E2{1}              Occasion    Sum      Max Long                   1.00        0.890 C Automatic Y Y Y N
                                                Max Hoop                   1.00              L Automatic
                                                GR[1]                      1.00
                                                P1[1]                      1.00
                                                E2[1]                      1.00

  GR+E3{1}                 Occasion    Sum      GR[1]                      1.00        0.890 C Automatic Y Y Y N
                                                E3[1]                      1.00              L Automatic

  GR+P1+E3{1}              Occasion    Sum      Max Long                   1.00        0.890 C Automatic Y Y Y N
                                                Max Hoop                   1.00              L Automatic
                                                GR[1]                      1.00
                                                P1[1]                      1.00
                                                E3[1]                      1.00

  GR+E4{1}                 Occasion    Sum      GR[1]                      1.00        0.890 C Automatic Y Y Y N
                                                E4[1]                      1.00              L Automatic

  GR+P1+E4{1}              Occasion    Sum      Max Long                   1.00        0.890 C Automatic Y Y Y N
                                                Max Hoop                   1.00              L Automatic
                                                GR[1]                      1.00
                                                P1[1]                      1.00
                                                E4[1]                      1.00

  GR+E5{1}                 Occasion    Sum      GR[1]                      1.00        0.890 C Automatic Y Y Y N
                                                E5[1]                      1.00              L Automatic
```

CALCULATION SHEET

Project No. S54413.024	**Calculation No.** S54413.024-M-001	**Rev.** 0	**Page No.** 120 of 192
Title: LERF Basin 41 Buried Piping Analysis			
Prepared By: JD Williams	**Date:** 5/13/20	**Checked By:** JS Huisingh	**Date:** 5/13/20

```
LERF_FRP_3m
04/24/2020                                                    BENTLEY
12:36 PM                                                      AutoPIPE Advanced 11.01.00.24  RESULT PAGE 163
```

CODE COMPLIANCE COMBINATIONS

<Description> Combination	Category	Method	Case/Combination	Factor	M/S	f2 Factor	Allowable (psi)	D/A/P/C
GR+P1+E5{1}	Occasion	Sum	Max Long	1.00		0.890	C Automatic	Y Y Y N
			Max Hoop	1.00			L Automatic	
			GR[1]	1.00				
			P1[1]	1.00				
			E5[1]	1.00				
GR+E6{1}	Occasion	Sum	GR[1]	1.00		0.890	C Automatic	Y Y Y N
			E6[1]	1.00			L Automatic	
GR+P1+E6{1}	Occasion	Sum	Max Long	1.00		0.890	C Automatic	Y Y Y N
			Max Hoop	1.00			L Automatic	
			GR[1]	1.00				
			P1[1]	1.00				
			E6[1]	1.00				
GR+E7{1}	Occasion	Sum	GR[1]	1.00		0.890	C Automatic	Y Y Y N
			E7[1]	1.00			L Automatic	
GR+P1+E7{1}	Occasion	Sum	Max Long	1.00		0.890	C Automatic	Y Y Y N
			Max Hoop	1.00			L Automatic	
			GR[1]	1.00				
			P1[1]	1.00				
			E7[1]	1.00				
GR+E8{1}	Occasion	Sum	GR[1]	1.00		0.890	C Automatic	Y Y Y N
			E8[1]	1.00			L Automatic	
GR+P1+E8{1}	Occasion	Sum	Max Long	1.00		0.890	C Automatic	Y Y Y N
			Max Hoop	1.00			L Automatic	
			GR[1]	1.00				
			P1[1]	1.00				
			E8[1]	1.00				
GR+W1{1}	Occasion	Sum	GR[1]	1.00		0.890	C Automatic	Y Y Y N
			W1[1]	1.00			L Automatic	
GR+P1+W1{1}	Occasion	Sum	Max Long	1.00		0.890	C Automatic	Y Y Y N
			Max Hoop	1.00			L Automatic	
			GR[1]	1.00				
			P1[1]	1.00				
			W1[1]	1.00				
GR+W2{1}	Occasion	Sum	GR[1]	1.00		0.890	C Automatic	Y Y Y N
			W2[1]	1.00			L Automatic	
GR+P1+W2{1}	Occasion	Sum	Max Long	1.00		0.890	C Automatic	Y Y Y N
			Max Hoop	1.00			L Automatic	
			GR[1]	1.00				
			P1[1]	1.00				
			W2[1]	1.00				

CALCULATION SHEET

Project No. S54413.024	**Calculation No.** S54413.024-M-001	**Rev.** 0	**Page No.** 121 of 192
Title: LERF Basin 41 Buried Piping Analysis			
Prepared By: JD Williams	**Date:** 5/13/20	**Checked By:** JS Huisingh	**Date:** 5/13/20

```
-----------------------------------------------------------------------------------------------------------
LERF_FRP_3m
04/24/2020                                                    BENTLEY
12:36 PM                                                      AutoPIPE Advanced 11.01.00.24  RESULT PAGE 164
-----------------------------------------------------------------------------------------------------------

                                    CODE COMPLIANCE COMBINATIONS

  <Description>                                                                    f2     Allowable
  Combination              Category    Method      Case/Combination      Factor M/S  Factor     (psi)    D/A/P/C
  ------------------------ ----------- -------- ------------------------ ------ --- -------- ----------- -------
  GR+W3{1}                 Occasion    Sum      GR[1]                      1.00        0.890 C Automatic Y Y Y N
                                                W3[1]                      1.00              L Automatic

  GR+P1+W3{1}              Occasion    Sum      Max Long                   1.00        0.890 C Automatic Y Y Y N
                                                Max Hoop                   1.00              L Automatic
                                                GR[1]                      1.00
                                                P1[1]                      1.00
                                                W3[1]                      1.00

  GR+W4{1}                 Occasion    Sum      GR[1]                      1.00        0.890 C Automatic Y Y Y N
                                                W4[1]                      1.00              L Automatic

  GR+P1+W4{1}              Occasion    Sum      Max Long                   1.00        0.890 C Automatic Y Y Y N
                                                Max Hoop                   1.00              L Automatic
                                                GR[1]                      1.00
                                                P1[1]                      1.00
                                                W4[1]                      1.00

  GR+T1+P1{1}              Combined    Sum      GR[1]                      1.00        0.830 C Automatic Y Y Y Y
                                                T1[1]                      1.00              L Automatic
                                                Max Long                   1.00
                                                Max Hoop                   1.00
                                                P1[1]                      1.00

  GR{2}                    Sustain     Sum      GR[2]                      1.00        0.670 C Automatic Y Y Y Y

  GR+P2{2}                 Sustain     Sum      Max Long                   1.00        0.670 C Automatic Y Y Y N
                                                Max Hoop                   1.00              L Automatic
                                                GR[2]                      1.00
                                                P2[2]                      1.00

  T2+P2{2}                 Expansion   Sum      T2[2]                      1.00              C Automatic Y Y Y N
                                                Max Long                   1.00              L Automatic
                                                Max Hoop                   1.00
                                                P2[2]                      1.00

  GR+E1{2}                 Occasion    Sum      GR[2]                      1.00        0.890 C Automatic Y Y Y N
                                                E1[2]                      1.00              L Automatic

  GR+P2+E1{2}              Occasion    Sum      Max Long                   1.00        0.890 C Automatic Y Y Y N
                                                Max Hoop                   1.00              L Automatic
                                                GR[2]                      1.00
                                                P2[2]                      1.00
                                                E1[2]                      1.00

  GR+E2{2}                 Occasion    Sum      GR[2]                      1.00        0.890 C Automatic Y Y Y N
                                                E2[2]                      1.00              L Automatic
```

CALCULATION SHEET

Project No. S54413.024	**Calculation No.** S54413.024-M-001	**Rev.** 0	**Page No.** 122 of 192
Title: LERF Basin 41 Buried Piping Analysis			
Prepared By: JD Williams	**Date:** 5/13/20	**Checked By:** JS Huisingh	**Date:** 5/13/20

```
-----------------------------------------------------------------------------------------------------------
LERF_FRP_3m
04/24/2020                                                    BENTLEY
12:36 PM                                                      AutoPIPE Advanced 11.01.00.24  RESULT PAGE 165
-----------------------------------------------------------------------------------------------------------
```

CODE COMPLIANCE COMBINATIONS

<Description> Combination	Category	Method	Case/Combination	Factor	M/S	f2 Factor	Allowable (psi)	D/A/P/C
GR+P2+E2{2}	Occasion	Sum	Max Long	1.00		0.890	C Automatic	Y Y Y N
			Max Hoop	1.00			L Automatic	
			GR[2]	1.00				
			P2[2]	1.00				
			E2[2]	1.00				
GR+E3{2}	Occasion	Sum	GR[2]	1.00		0.890	C Automatic	Y Y Y N
			E3[2]	1.00			L Automatic	
GR+P2+E3{2}	Occasion	Sum	Max Long	1.00		0.890	C Automatic	Y Y Y N
			Max Hoop	1.00			L Automatic	
			GR[2]	1.00				
			P2[2]	1.00				
			E3[2]	1.00				
GR+E4{2}	Occasion	Sum	GR[2]	1.00		0.890	C Automatic	Y Y Y N
			E4[2]	1.00			L Automatic	
GR+P2+E4{2}	Occasion	Sum	Max Long	1.00		0.890	C Automatic	Y Y Y N
			Max Hoop	1.00			L Automatic	
			GR[2]	1.00				
			P2[2]	1.00				
			E4[2]	1.00				
GR+E5{2}	Occasion	Sum	GR[2]	1.00		0.890	C Automatic	Y Y Y N
			E5[2]	1.00			L Automatic	
GR+P2+E5{2}	Occasion	Sum	Max Long	1.00		0.890	C Automatic	Y Y Y N
			Max Hoop	1.00			L Automatic	
			GR[2]	1.00				
			P2[2]	1.00				
			E5[2]	1.00				
GR+E6{2}	Occasion	Sum	GR[2]	1.00		0.890	C Automatic	Y Y Y N
			E6[2]	1.00			L Automatic	
GR+P2+E6{2}	Occasion	Sum	Max Long	1.00		0.890	C Automatic	Y Y Y N
			Max Hoop	1.00			L Automatic	
			GR[2]	1.00				
			P2[2]	1.00				
			E6[2]	1.00				
GR+E7{2}	Occasion	Sum	GR[2]	1.00		0.890	C Automatic	Y Y Y N
			E7[2]	1.00			L Automatic	
GR+P2+E7{2}	Occasion	Sum	Max Long	1.00		0.890	C Automatic	Y Y Y N
			Max Hoop	1.00			L Automatic	
			GR[2]	1.00				
			P2[2]	1.00				
			E7[2]	1.00				

CALCULATION SHEET

Project No. S54413.024	**Calculation No.** S54413.024-M-001	**Rev.** 0	**Page No.** 123 of 192
Title: LERF Basin 41 Buried Piping Analysis			
Prepared By: JD Williams	**Date:** 5/13/20	**Checked By:** JS Huisingh	**Date:** 5/13/20

```
-----------------------------------------------------------------------------------------------------------
LERF_FRP_3m
04/24/2020                                                    BENTLEY
12:36 PM                                                      AutoPIPE Advanced 11.01.00.24  RESULT PAGE 166
-----------------------------------------------------------------------------------------------------------

                                    CODE COMPLIANCE COMBINATIONS

  <Description>                                                                    f2     Allowable
  Combination              Category    Method      Case/Combination      Factor M/S  Factor     (psi)    D/A/P/C
  ------------------------ ----------- -------- ------------------------ ------ --- -------- ----------- -------
  GR+E8{2}                 Occasion    Sum      GR[2]                      1.00        0.890 C Automatic Y Y Y N
                                                E8[2]                      1.00              L Automatic

  GR+P2+E8{2}              Occasion    Sum      Max Long                   1.00        0.890 C Automatic Y Y Y N
                                                Max Hoop                   1.00              L Automatic
                                                GR[2]                      1.00
                                                P2[2]                      1.00
                                                E8[2]                      1.00

  GR+W1{2}                 Occasion    Sum      GR[2]                      1.00        0.890 C Automatic Y Y Y N
                                                W1[2]                      1.00              L Automatic

  GR+P2+W1{2}              Occasion    Sum      Max Long                   1.00        0.890 C Automatic Y Y Y N
                                                Max Hoop                   1.00              L Automatic
                                                GR[2]                      1.00
                                                P2[2]                      1.00
                                                W1[2]                      1.00

  GR+W2{2}                 Occasion    Sum      GR[2]                      1.00        0.890 C Automatic Y Y Y N
                                                W2[2]                      1.00              L Automatic

  GR+P2+W2{2}              Occasion    Sum      Max Long                   1.00        0.890 C Automatic Y Y Y N
                                                Max Hoop                   1.00              L Automatic
                                                GR[2]                      1.00
                                                P2[2]                      1.00
                                                W2[2]                      1.00

  GR+W3{2}                 Occasion    Sum      GR[2]                      1.00        0.890 C Automatic Y Y Y N
                                                W3[2]                      1.00              L Automatic

  GR+P2+W3{2}              Occasion    Sum      Max Long                   1.00        0.890 C Automatic Y Y Y N
                                                Max Hoop                   1.00              L Automatic
                                                GR[2]                      1.00
                                                P2[2]                      1.00
                                                W3[2]                      1.00

  GR+W4{2}                 Occasion    Sum      GR[2]                      1.00        0.890 C Automatic Y Y Y N
                                                W4[2]                      1.00              L Automatic

  GR+P2+W4{2}              Occasion    Sum      Max Long                   1.00        0.890 C Automatic Y Y Y N
                                                Max Hoop                   1.00              L Automatic
                                                GR[2]                      1.00
                                                P2[2]                      1.00
                                                W4[2]                      1.00

  GR+T2+P2{2}              Combined    Sum      GR[2]                      1.00        0.830 C Automatic Y Y Y Y
                                                T2[2]                      1.00              L Automatic
                                                Max Long                   1.00
                                                Max Hoop                   1.00
                                                P2[2]                      1.00
```

CALCULATION SHEET

Project No. S54413.024	**Calculation No.** S54413.024-M-001	**Rev.** 0	**Page No.** 124 of 192
Title: LERF Basin 41 Buried Piping Analysis			
Prepared By: JD Williams	**Date:** 5/13/20	**Checked By:** JS Huisingh	**Date:** 5/13/20

```
-----------------------------------------------------------------------------------------------------------
LERF_FRP_3m
04/24/2020                                                    BENTLEY
12:36 PM                                                      AutoPIPE Advanced 11.01.00.24  RESULT PAGE 167
-----------------------------------------------------------------------------------------------------------

                                    CODE COMPLIANCE COMBINATIONS

  <Description>                                                                    f2     Allowable
  Combination              Category    Method       Case/Combination     Factor M/S  Factor     (psi)    D/A/P/C
  ------------------------ ----------- -------- ------------------------ ------ --- -------- ----------- -------
  GR{3}                    Sustain     Sum      GR[3]                      1.00        0.670 C Automatic Y Y Y Y

  GR+P3{3}                 Sustain     Sum      Max Long                   1.00        0.670 C Automatic Y Y Y N
                                                Max Hoop                   1.00              L Automatic
                                                GR[3]                      1.00
                                                P3[3]                      1.00

  T3+P3{3}                 Expansion   Sum      T3[3]                      1.00              C Automatic Y Y Y N
                                                Max Long                   1.00              L Automatic
                                                Max Hoop                   1.00
                                                P3[3]                      1.00

  GR+E1{3}                 Occasion    Sum      GR[3]                      1.00        0.890 C Automatic Y Y Y N
                                                E1[3]                      1.00              L Automatic

  GR+P3+E1{3}              Occasion    Sum      Max Long                   1.00        0.890 C Automatic Y Y Y N
                                                Max Hoop                   1.00              L Automatic
                                                GR[3]                      1.00
                                                P3[3]                      1.00
                                                E1[3]                      1.00

  GR+E2{3}                 Occasion    Sum      GR[3]                      1.00        0.890 C Automatic Y Y Y N
                                                E2[3]                      1.00              L Automatic

  GR+P3+E2{3}              Occasion    Sum      Max Long                   1.00        0.890 C Automatic Y Y Y N
                                                Max Hoop                   1.00              L Automatic
                                                GR[3]                      1.00
                                                P3[3]                      1.00
                                                E2[3]                      1.00

  GR+E3{3}                 Occasion    Sum      GR[3]                      1.00        0.890 C Automatic Y Y Y N
                                                E3[3]                      1.00              L Automatic

  GR+P3+E3{3}              Occasion    Sum      Max Long                   1.00        0.890 C Automatic Y Y Y N
                                                Max Hoop                   1.00              L Automatic
                                                GR[3]                      1.00
                                                P3[3]                      1.00
                                                E3[3]                      1.00

  GR+E4{3}                 Occasion    Sum      GR[3]                      1.00        0.890 C Automatic Y Y Y N
                                                E4[3]                      1.00              L Automatic

  GR+P3+E4{3}              Occasion    Sum      Max Long                   1.00        0.890 C Automatic Y Y Y N
                                                Max Hoop                   1.00              L Automatic
                                                GR[3]                      1.00
                                                P3[3]                      1.00
                                                E4[3]                      1.00

  GR+E5{3}                 Occasion    Sum      GR[3]                      1.00        0.890 C Automatic Y Y Y N
                                                E5[3]                      1.00              L Automatic
```

CALCULATION SHEET

Project No. S54413.024	**Calculation No.** S54413.024-M-001	**Rev.** 0	**Page No.** 125 of 192
Title: LERF Basin 41 Buried Piping Analysis			
Prepared By: JD Williams	**Date:** 5/13/20	**Checked By:** JS Huisingh	**Date:** 5/13/20

```
-----------------------------------------------------------------------------------------------------------
LERF_FRP_3m
04/24/2020                                                    BENTLEY
12:36 PM                                                      AutoPIPE Advanced 11.01.00.24  RESULT PAGE 168
-----------------------------------------------------------------------------------------------------------
```

CODE COMPLIANCE COMBINATIONS

<Description> Combination	Category	Method	Case/Combination	Factor	M/S	f2 Factor	Allowable (psi)	D/A/P/C
GR+P3+E5{3}	Occasion	Sum	Max Long	1.00		0.890	C Automatic	Y Y Y N
			Max Hoop	1.00			L Automatic	
			GR[3]	1.00				
			P3[3]	1.00				
			E5[3]	1.00				
GR+E6{3}	Occasion	Sum	GR[3]	1.00		0.890	C Automatic	Y Y Y N
			E6[3]	1.00			L Automatic	
GR+P3+E6{3}	Occasion	Sum	Max Long	1.00		0.890	C Automatic	Y Y Y N
			Max Hoop	1.00			L Automatic	
			GR[3]	1.00				
			P3[3]	1.00				
			E6[3]	1.00				
GR+E7{3}	Occasion	Sum	GR[3]	1.00		0.890	C Automatic	Y Y Y N
			E7[3]	1.00			L Automatic	
GR+P3+E7{3}	Occasion	Sum	Max Long	1.00		0.890	C Automatic	Y Y Y N
			Max Hoop	1.00			L Automatic	
			GR[3]	1.00				
			P3[3]	1.00				
			E7[3]	1.00				
GR+E8{3}	Occasion	Sum	GR[3]	1.00		0.890	C Automatic	Y Y Y N
			E8[3]	1.00			L Automatic	
GR+P3+E8{3}	Occasion	Sum	Max Long	1.00		0.890	C Automatic	Y Y Y N
			Max Hoop	1.00			L Automatic	
			GR[3]	1.00				
			P3[3]	1.00				
			E8[3]	1.00				
GR+W1{3}	Occasion	Sum	GR[3]	1.00		0.890	C Automatic	Y Y Y N
			W1[3]	1.00			L Automatic	
GR+P3+W1{3}	Occasion	Sum	Max Long	1.00		0.890	C Automatic	Y Y Y N
			Max Hoop	1.00			L Automatic	
			GR[3]	1.00				
			P3[3]	1.00				
			W1[3]	1.00				
GR+W2{3}	Occasion	Sum	GR[3]	1.00		0.890	C Automatic	Y Y Y N
			W2[3]	1.00			L Automatic	
GR+P3+W2{3}	Occasion	Sum	Max Long	1.00		0.890	C Automatic	Y Y Y N
			Max Hoop	1.00			L Automatic	
			GR[3]	1.00				
			P3[3]	1.00				
			W2[3]	1.00				

CALCULATION SHEET

Project No. S54413.024	**Calculation No.** S54413.024-M-001	**Rev.** 0	**Page No.** 126 of 192
Title: LERF Basin 41 Buried Piping Analysis			
Prepared By: JD Williams	**Date:** 5/13/20	**Checked By:** JS Huisingh	**Date:** 5/13/20

```
-----------------------------------------------------------------------------------------------------------
LERF_FRP_3m
04/24/2020                                                    BENTLEY
12:36 PM                                                      AutoPIPE Advanced 11.01.00.24  RESULT PAGE 169
-----------------------------------------------------------------------------------------------------------

                                    CODE COMPLIANCE COMBINATIONS

  <Description>                                                                    f2     Allowable
  Combination              Category    Method       Case/Combination     Factor M/S  Factor     (psi)    D/A/P/C
  ------------------------ ----------- -------- ------------------------ ------ --- -------- ----------- -------
  GR+W3{3}                 Occasion    Sum      GR[3]                      1.00        0.890 C Automatic Y Y Y N
                                                W3[3]                      1.00              L Automatic

  GR+P3+W3{3}              Occasion    Sum      Max Long                   1.00        0.890 C Automatic Y Y Y N
                                                Max Hoop                   1.00              L Automatic
                                                GR[3]                      1.00
                                                P3[3]                      1.00
                                                W3[3]                      1.00

  GR+W4{3}                 Occasion    Sum      GR[3]                      1.00        0.890 C Automatic Y Y Y N
                                                W4[3]                      1.00              L Automatic

  GR+P3+W4{3}              Occasion    Sum      Max Long                   1.00        0.890 C Automatic Y Y Y N
                                                Max Hoop                   1.00              L Automatic
                                                GR[3]                      1.00
                                                P3[3]                      1.00
                                                W4[3]                      1.00

  GR+T3+P3{3}              Combined    Sum      GR[3]                      1.00        0.830 C Automatic Y Y Y Y
                                                T3[3]                      1.00              L Automatic
                                                Max Long                   1.00
                                                Max Hoop                   1.00
                                                P3[3]                      1.00


  Notes:

  Allowable: C=Circumferential or Hoop, L=Longitudinal

  D/A/P/C: [D]efault/[A]uto-Update/[P]rint options/[C]Consistent (Y=Yes, N=No)
```

CALCULATION SHEET

Project No. S54413.024	**Calculation No.** S54413.024-M-001	**Rev.** 0	**Page No.** 127 of 192
Title: LERF Basin 41 Buried Piping Analysis			
Prepared By: JD Williams	**Date:** 5/13/20	**Checked By:** JS Huisingh	**Date:** 5/13/20

```
-----------------------------------------------------------------------------------------------------------------
LERF_FRP_3m
04/24/2020                                                          BENTLEY
12:36 PM                                                            AutoPIPE Advanced 11.01.00.24  RESULT PAGE 170
-----------------------------------------------------------------------------------------------------------------

                              NON-CODE COMBINATIONS

  <Description>
  Combination                 Method       Case/Combination      Factor  D/A/P/C
  -----------------------     -------- ------------------------ ------  -------
  Gravity{1}                  Sum      GR[1]                      1.00  Y N N Y

  Thermal 1{1}                Sum      T1[1]                      1.00  Y N N N

  Static Seismic 1{1}         Sum      E1[1]                      1.00  Y N N N

  Static Seismic 2{1}         Sum      E2[1]                      1.00  Y N N N

  Static Seismic 3{1}         Sum      E3[1]                      1.00  Y N N N

  Static Seismic 4{1}         Sum      E4[1]                      1.00  Y N N N

  Static Seismic 5{1}         Sum      E5[1]                      1.00  Y N N N

  Static Seismic 6{1}         Sum      E6[1]                      1.00  Y N N N

  Static Seismic 7{1}         Sum      E7[1]                      1.00  Y N N N

  Static Seismic 8{1}         Sum      E8[1]                      1.00  Y N N N

  Wind 1{1}                   Sum      W1[1]                      1.00  Y N N N

  Wind 2{1}                   Sum      W2[1]                      1.00  Y N N N

  Wind 3{1}                   Sum      W3[1]                      1.00  Y N N N

  Wind 4{1}                   Sum      W4[1]                      1.00  Y N N N

  Pressure 1{1}               Sum      P1[1]                      1.00  Y N N N

  GP1{1}                      Sum      GR[1]                      1.00  Y N N Y
                                       P1[1]                      1.00

  GP1T1{1}                    Sum      GR[1]                      1.00  Y Y Y Y
                                       P1[1]                      1.00
                                       T1[1]                      1.00

  GP1T1E1{1}                  Sum      GR[1]                      1.00  Y Y Y Y
                                       P1[1]                      1.00
                                       T1[1]                      1.00
                                       E1[1]                      1.00

  GP1T1E2{1}                  Sum      GR[1]                      1.00  Y Y Y Y
                                       P1[1]                      1.00
                                       T1[1]                      1.00
                                       E2[1]                      1.00

  GP1T1E3{1}                  Sum      GR[1]                      1.00  Y Y Y Y
                                       P1[1]                      1.00
                                       T1[1]                      1.00
                                       E3[1]                      1.00
```

CALCULATION SHEET

Project No. S54413.024	**Calculation No.** S54413.024-M-001	**Rev.** 0	**Page No.** 128 of 192
Title: LERF Basin 41 Buried Piping Analysis			
Prepared By: JD Williams	**Date:** 5/13/20	**Checked By:** JS Huisingh	**Date:** 5/13/20

```
-----------------------------------------------------------------------------------------------------------
LERF_FRP_3m
04/24/2020                                                    BENTLEY
12:36 PM                                                      AutoPIPE Advanced 11.01.00.24  RESULT PAGE 171
-----------------------------------------------------------------------------------------------------------

                              NON-CODE COMBINATIONS

  <Description>
  Combination                 Method      Case/Combination      Factor  D/A/P/C
  ------------------------    -------- ------------------------ ------  -------
  GP1T1E4{1}                  Sum      GR[1]                      1.00  Y Y Y Y
                                       P1[1]                      1.00
                                       T1[1]                      1.00
                                       E4[1]                      1.00

  GP1T1E5{1}                  Sum      GR[1]                      1.00  Y Y Y Y
                                       P1[1]                      1.00
                                       T1[1]                      1.00
                                       E5[1]                      1.00

  GP1T1E6{1}                  Sum      GR[1]                      1.00  Y Y Y Y
                                       P1[1]                      1.00
                                       T1[1]                      1.00
                                       E6[1]                      1.00

  GP1T1E7{1}                  Sum      GR[1]                      1.00  Y Y Y Y
                                       P1[1]                      1.00
                                       T1[1]                      1.00
                                       E7[1]                      1.00

  GP1T1E8{1}                  Sum      GR[1]                      1.00  Y Y Y Y
                                       P1[1]                      1.00
                                       T1[1]                      1.00
                                       E8[1]                      1.00

  GP1T1W1{1}                  Sum      GR[1]                      1.00  Y Y Y Y
                                       P1[1]                      1.00
                                       T1[1]                      1.00
                                       W1[1]                      1.00

  GP1T1W2{1}                  Sum      GR[1]                      1.00  Y Y Y Y
                                       P1[1]                      1.00
                                       T1[1]                      1.00
                                       W2[1]                      1.00

  GP1T1W3{1}                  Sum      GR[1]                      1.00  Y Y Y Y
                                       P1[1]                      1.00
                                       T1[1]                      1.00
                                       W3[1]                      1.00

  GP1T1W4{1}                  Sum      GR[1]                      1.00  Y Y Y Y
                                       P1[1]                      1.00
                                       T1[1]                      1.00
                                       W4[1]                      1.00

  Gravity{2}                  Sum      GR[2]                      1.00  Y N N Y

  Thermal 2{2}                Sum      T2[2]                      1.00  Y N N N

  Static Seismic 1{2}         Sum      E1[2]                      1.00  Y N N N
```

CALCULATION SHEET

Project No. S54413.024	**Calculation No.** S54413.024-M-001	**Rev.** 0	**Page No.** 129 of 192
Title: LERF Basin 41 Buried Piping Analysis			
Prepared By: JD Williams	**Date:** 5/13/20	**Checked By:** JS Huisingh	**Date:** 5/13/20

```
-----------------------------------------------------------------------------------------------------------
LERF_FRP_3m
04/24/2020                                                    BENTLEY
12:36 PM                                                      AutoPIPE Advanced 11.01.00.24  RESULT PAGE 172
-----------------------------------------------------------------------------------------------------------

                              NON-CODE COMBINATIONS

  <Description>
  Combination                 Method       Case/Combination     Factor  D/A/P/C
  ------------------------    -------- ------------------------ ------  -------
  Static Seismic 2{2}         Sum      E2[2]                      1.00  Y N N N

  Static Seismic 3{2}         Sum      E3[2]                      1.00  Y N N N

  Static Seismic 4{2}         Sum      E4[2]                      1.00  Y N N N

  Static Seismic 5{2}         Sum      E5[2]                      1.00  Y N N N

  Static Seismic 6{2}         Sum      E6[2]                      1.00  Y N N N

  Static Seismic 7{2}         Sum      E7[2]                      1.00  Y N N N

  Static Seismic 8{2}         Sum      E8[2]                      1.00  Y N N N

  Wind 1{2}                   Sum      W1[2]                      1.00  Y N N N

  Wind 2{2}                   Sum      W2[2]                      1.00  Y N N N

  Wind 3{2}                   Sum      W3[2]                      1.00  Y N N N

  Wind 4{2}                   Sum      W4[2]                      1.00  Y N N N

  Pressure 2{2}               Sum      P2[2]                      1.00  Y N N N

  GT2{2}                      Sum      GR[2]                      1.00  Y N N Y
                                       T2[2]                      1.00

  GT2P2{2}                    Sum      GR[2]                      1.00  Y Y Y Y
                                       T2[2]                      1.00
                                       P2[2]                      1.00

  GT2P2E1{2}                  Sum      GR[2]                      1.00  Y Y Y Y
                                       T2[2]                      1.00
                                       P2[2]                      1.00
                                       E1[2]                      1.00

  GT2P2E2{2}                  Sum      GR[2]                      1.00  Y Y Y Y
                                       T2[2]                      1.00
                                       P2[2]                      1.00
                                       E2[2]                      1.00

  GT2P2E3{2}                  Sum      GR[2]                      1.00  Y Y Y Y
                                       T2[2]                      1.00
                                       P2[2]                      1.00
                                       E3[2]                      1.00

  GT2P2E4{2}                  Sum      GR[2]                      1.00  Y Y Y Y
                                       T2[2]                      1.00
                                       P2[2]                      1.00
                                       E4[2]                      1.00
```

CALCULATION SHEET

Project No. S54413.024	**Calculation No.** S54413.024-M-001	**Rev.** 0	**Page No.** 130 of 192
Title: LERF Basin 41 Buried Piping Analysis			
Prepared By: JD Williams	**Date:** 5/13/20	**Checked By:** JS Huisingh	**Date:** 5/13/20

```
-----------------------------------------------------------------------------------------------------------
LERF_FRP_3m
04/24/2020                                                    BENTLEY
12:36 PM                                                      AutoPIPE Advanced 11.01.00.24  RESULT PAGE 173
-----------------------------------------------------------------------------------------------------------

                              NON-CODE COMBINATIONS

  <Description>
  Combination                 Method       Case/Combination     Factor  D/A/P/C
  ------------------------    -------- ------------------------ ------  -------
  GT2P2E5{2}                  Sum      GR[2]                      1.00  Y Y Y Y
                                       T2[2]                      1.00
                                       P2[2]                      1.00
                                       E5[2]                      1.00

  GT2P2E6{2}                  Sum      GR[2]                      1.00  Y Y Y Y
                                       T2[2]                      1.00
                                       P2[2]                      1.00
                                       E6[2]                      1.00

  GT2P2E7{2}                  Sum      GR[2]                      1.00  Y Y Y Y
                                       T2[2]                      1.00
                                       P2[2]                      1.00
                                       E7[2]                      1.00

  GT2P2E8{2}                  Sum      GR[2]                      1.00  Y Y Y Y
                                       T2[2]                      1.00
                                       P2[2]                      1.00
                                       E8[2]                      1.00

  GT2P2W1{2}                  Sum      GR[2]                      1.00  Y Y Y Y
                                       T2[2]                      1.00
                                       P2[2]                      1.00
                                       W1[2]                      1.00

  GT2P2W2{2}                  Sum      GR[2]                      1.00  Y Y Y Y
                                       T2[2]                      1.00
                                       P2[2]                      1.00
                                       W2[2]                      1.00

  GT2P2W3{2}                  Sum      GR[2]                      1.00  Y Y Y Y
                                       T2[2]                      1.00
                                       P2[2]                      1.00
                                       W3[2]                      1.00

  GT2P2W4{2}                  Sum      GR[2]                      1.00  Y Y Y Y
                                       T2[2]                      1.00
                                       P2[2]                      1.00
                                       W4[2]                      1.00

  Gravity{3}                  Sum      GR[3]                      1.00  Y N N Y

  Thermal 3{3}                Sum      T3[3]                      1.00  Y N N N

  Static Seismic 1{3}         Sum      E1[3]                      1.00  Y N N N

  Static Seismic 2{3}         Sum      E2[3]                      1.00  Y N N N

  Static Seismic 3{3}         Sum      E3[3]                      1.00  Y N N N

  Static Seismic 4{3}         Sum      E4[3]                      1.00  Y N N N
```

CALCULATION SHEET

Project No. S54413.024	**Calculation No.** S54413.024-M-001	**Rev.** 0	**Page No.** 131 of 192
Title: LERF Basin 41 Buried Piping Analysis			
Prepared By: JD Williams	**Date:** 5/13/20	**Checked By:** JS Huisingh	**Date:** 5/13/20

```
-----------------------------------------------------------------------------------------------------------
LERF_FRP_3m
04/24/2020                                                    BENTLEY
12:36 PM                                                      AutoPIPE Advanced 11.01.00.24  RESULT PAGE 174
-----------------------------------------------------------------------------------------------------------

                              NON-CODE COMBINATIONS

  <Description>
  Combination                 Method       Case/Combination     Factor  D/A/P/C
  ------------------------    -------- ------------------------ ------  -------
  Static Seismic 5{3}         Sum      E5[3]                      1.00  Y N N N

  Static Seismic 6{3}         Sum      E6[3]                      1.00  Y N N N

  Static Seismic 7{3}         Sum      E7[3]                      1.00  Y N N N

  Static Seismic 8{3}         Sum      E8[3]                      1.00  Y N N N

    < 0.71, 0.00, 0.71>
  Wind 1{3}                   Sum      W1[3]                      1.00  Y N N N

    < -0.71, 0.00, -0.71>
  Wind 2{3}                   Sum      W2[3]                      1.00  Y N N N

    < -0.71, 0.00, 0.71>
  Wind 3{3}                   Sum      W3[3]                      1.00  Y N N N

    < 0.71, 0.00, -0.71>
  Wind 4{3}                   Sum      W4[3]                      1.00  Y N N N

  Pressure 3{3}               Sum      P3[3]                      1.00  Y N N N

  GT3{3}                      Sum      GR[3]                      1.00  Y N N Y
                                       T3[3]                      1.00

  GT3P3{3}                    Sum      GR[3]                      1.00  Y Y Y Y
                                       T3[3]                      1.00
                                       P3[3]                      1.00

  GT3P3E1{3}                  Sum      GR[3]                      1.00  Y Y Y Y
                                       T3[3]                      1.00
                                       P3[3]                      1.00
                                       E1[3]                      1.00

  GT3P3E2{3}                  Sum      GR[3]                      1.00  Y Y Y Y
                                       T3[3]                      1.00
                                       P3[3]                      1.00
                                       E2[3]                      1.00

  GT3P3E3{3}                  Sum      GR[3]                      1.00  Y Y Y Y
                                       T3[3]                      1.00
                                       P3[3]                      1.00
                                       E3[3]                      1.00

  GT3P3E4{3}                  Sum      GR[3]                      1.00  Y Y Y Y
                                       T3[3]                      1.00
                                       P3[3]                      1.00
                                       E4[3]                      1.00
```

CALCULATION SHEET

Project No. S54413.024	**Calculation No.** S54413.024-M-001	**Rev.** 0	**Page No.** 132 of 192
Title: LERF Basin 41 Buried Piping Analysis			
Prepared By: JD Williams	**Date:** 5/13/20	**Checked By:** JS Huisingh	**Date:** 5/13/20

```
-----------------------------------------------------------------------------------------------------------
LERF_FRP_3m
04/24/2020                                                    BENTLEY
12:36 PM                                                      AutoPIPE Advanced 11.01.00.24  RESULT PAGE 175
-----------------------------------------------------------------------------------------------------------

                              NON-CODE COMBINATIONS

  <Description>
  Combination                 Method       Case/Combination      Factor  D/A/P/C
  -----------------------     -------- ------------------------ ------  -------
  GT3P3E5{3}                  Sum      GR[3]                      1.00  Y Y Y Y
                                       T3[3]                      1.00
                                       P3[3]                      1.00
                                       E5[3]                      1.00

  GT3P3E6{3}                  Sum      GR[3]                      1.00  Y Y Y Y
                                       T3[3]                      1.00
                                       P3[3]                      1.00
                                       E6[3]                      1.00

  GT3P3E7{3}                  Sum      GR[3]                      1.00  Y Y Y Y
                                       T3[3]                      1.00
                                       P3[3]                      1.00
                                       E7[3]                      1.00

  GT3P3E8{3}                  Sum      GR[3]                      1.00  Y Y Y Y
                                       T3[3]                      1.00
                                       P3[3]                      1.00
                                       E8[3]                      1.00

  GT3P3W1{3}                  Sum      GR[3]                      1.00  Y Y Y Y
                                       T3[3]                      1.00
                                       P3[3]                      1.00
                                       W1[3]                      1.00

  GT3P3W2{3}                  Sum      GR[3]                      1.00  Y Y Y Y
                                       T3[3]                      1.00
                                       P3[3]                      1.00
                                       W2[3]                      1.00

  GT3P3W3{3}                  Sum      GR[3]                      1.00  Y Y Y Y
                                       T3[3]                      1.00
                                       P3[3]                      1.00
                                       W3[3]                      1.00

  GT3P3W4{3}                  Sum      GR[3]                      1.00  Y Y Y Y
                                       T3[3]                      1.00
                                       P3[3]                      1.00
                                       W4[3]                      1.00

    <OMEGA FACTOR OF 2.5 ON SEISMIC>
  GT1P1E4{1}+Omega            Sum      GR[1]                      1.00  N N Y Y
                                       P1[1]                      1.00
                                       T1[1]                      1.00
                                       E4[1]                      2.50


  Notes:

  D/A/P/C: [D]efault/[A]uto-Update/[P]rint options/[C]Consistent (Y=Yes, N=No)
```

CALCULATION SHEET

Project No. S54413.024	**Calculation No.** S54413.024-M-001	**Rev.** 0	**Page No.** 133 of 192
Title: LERF Basin 41 Buried Piping Analysis			
Prepared By: JD Williams	**Date:** 5/13/20	**Checked By:** JS Huisingh	**Date:** 5/13/20

```
-----------------------------------------------------------------------------------------------------------
LERF_FRP_3m
04/24/2020                                                          BENTLEY
12:36 PM                                                            AutoPIPE Advanced 11.01.00.24  RESULT PAGE 176
-----------------------------------------------------------------------------------------------------------


   CODE COMPLIANCE

   Sustained factor      - f2............. 0.67
   Sus. + thermal factor - f2............. 0.83
   Occasional factor     - f2............. 0.89
   Minimum stress ratio used in reports... 0.00
   Number of stress points per span ...... 0
   Include corrosion in stress calcs. .... Y
   Include torsion in code stress ........ Y
   Include axial force in code stress .... Y
   Set Hoop SIF=1 (Bends) ................ N
   Set sustained/occasional SIF = 1 ...... N
   Set sustained/occasional SIF = 0.75i .. N
   Disable auto code combinations ........ N
   Disable auto non-code combinations .... N
   No. of thermal ranges to report ....... 0
   Include Max Range combination ......... N
   Total stress .......................... Octahedral
   Direct shear .......................... None
   Longitudinal pressure calculation ..... PD/4t
```

CALCULATION SHEET

Project No. S54413.024	**Calculation No.** S54413.024-M-001	**Rev.** 0	**Page No.** 134 of 192
Title: LERF Basin 41 Buried Piping Analysis			
Prepared By: JD Williams	**Date:** 5/13/20	**Checked By:** JS Huisingh	**Date:** 5/13/20

```
-----------------------------------------------------------------------------------------------------------------
LERF_FRP_3m
04/24/2020                                                          BENTLEY
12:36 PM                                                            AutoPIPE Advanced 11.01.00.24  RESULT PAGE 177
-----------------------------------------------------------------------------------------------------------------
```

R E S T R A I N T R E A C T I O N S

Point name	Load combination	FORCES (lbf) X	Y	Z	Result	MOMENTS (ft-lb) X	Y	Z	Result
A00	Anchor Tag No.: <None>								
	GP1T1{1}	-2160	-37	0	2161	0	0	-63	63
	GP1T1E1{1}	-2129	-34	5	2129	0	-8	-58	58
	GP1T1E2{1}	-2129	-34	-5	2129	0	8	-58	58
	GP1T1E3{1}	-2129	-41	5	2130	0	-8	-68	68
	GP1T1E4{1}	-2129	-41	-5	2130	0	8	-68	68
	GP1T1E5{1}	-2192	-34	5	2192	0	-8	-58	58
	GP1T1E6{1}	-2192	-34	-5	2192	0	8	-58	58
	GP1T1E7{1}	-2192	-41	5	2192	0	-8	-68	68
	GP1T1E8{1}	-2192	-41	-5	2192	0	8	-68	68
	GP1T1W1{1}	-2161	-37	0	2161	0	0	-63	63
	GP1T1W2{1}	-2160	-37	0	2161	0	0	-63	63
	GP1T1W3{1}	-2160	-37	0	2161	0	0	-63	63
	GP1T1W4{1}	-2160	-37	0	2161	0	0	-63	63
	GT2P2{2}	1106	-37	0	1107	0	0	-63	63
	GT2P2E1{2}	1137	-34	5	1138	0	-8	-58	58
	GT2P2E2{2}	1137	-34	-5	1138	0	8	-58	58
	GT2P2E3{2}	1137	-41	5	1138	0	-8	-68	68
	GT2P2E4{2}	1137	-41	-5	1138	0	8	-68	68
	GT2P2E5{2}	1075	-34	5	1075	0	-8	-58	58
	GT2P2E6{2}	1075	-34	-5	1075	0	8	-58	58
	GT2P2E7{2}	1075	-41	5	1075	0	-8	-68	68
	GT2P2E8{2}	1075	-41	-5	1075	0	8	-68	68
	GT2P2W1{2}	1106	-37	0	1107	0	0	-63	63
	GT2P2W2{2}	1106	-37	0	1107	0	0	-63	63
	GT2P2W3{2}	1106	-37	0	1107	0	0	-63	63
	GT2P2W4{2}	1106	-37	0	1107	0	0	-63	63
	GT3P3{3}	-2160	-37	0	2161	0	0	-63	63
	GT3P3E1{3}	-2129	-34	5	2129	0	-8	-58	58
	GT3P3E2{3}	-2129	-34	-5	2129	0	8	-58	58
	GT3P3E3{3}	-2129	-41	5	2130	0	-8	-68	68
	GT3P3E4{3}	-2129	-41	-5	2130	0	8	-68	68
	GT3P3E5{3}	-2192	-34	5	2192	0	-8	-58	58
	GT3P3E6{3}	-2192	-34	-5	2192	0	8	-58	58
	GT3P3E7{3}	-2192	-41	5	2192	0	-8	-68	68
	GT3P3E8{3}	-2192	-41	-5	2192	0	8	-68	68
	GT3P3W1{3}	-2160	-37	0	2161	0	0	-63	63
	GT3P3W2{3}	-2160	-37	0	2161	0	0	-63	63
	GT3P3W3{3}	-2160	-37	0	2161	0	0	-63	63
	GT3P3W4{3}	-2160	-37	0	2161	0	0	-63	63
	GT1P1E4{1}+Omega	-2082	-45	-12	2083	0	20	-76	78

CALCULATION SHEET

Project No. S54413.024	**Calculation No.** S54413.024-M-001	**Rev.** 0	**Page No.** 135 of 192
Title: LERF Basin 41 Buried Piping Analysis			
Prepared By: JD Williams	**Date:** 5/13/20	**Checked By:** JS Huisingh	**Date:** 5/13/20

```
-----------------------------------------------------------------------------------------------------------------
LERF_FRP_3m
04/24/2020                                                          BENTLEY
12:36 PM                                                            AutoPIPE Advanced 11.01.00.24  RESULT PAGE 178
-----------------------------------------------------------------------------------------------------------------
```

R E S T R A I N T R E A C T I O N S

Point name	Load combination	FORCES (lbf) X	Y	Z	Result	MOMENTS (ft-lb) X	Y	Z	Result
A01	Guide Tag No.: INT [ID: A03 1]								
	GP1T1{1}	0	-75	0	75	0	0	0	0
	GP1T1E1{1}	0	-69	9	69	0	0	0	0
	GP1T1E2{1}	0	-69	-9	69	0	0	0	0
	GP1T1E3{1}	0	-81	9	82	0	0	0	0
	GP1T1E4{1}	0	-81	-9	82	0	0	0	0
	GP1T1E5{1}	0	-69	9	69	0	0	0	0
	GP1T1E6{1}	0	-69	-9	69	0	0	0	0
	GP1T1E7{1}	0	-81	9	82	0	0	0	0
	GP1T1E8{1}	0	-81	-9	82	0	0	0	0
	GP1T1W1{1}	0	-75	0	75	0	0	0	0
	GP1T1W2{1}	0	-75	0	75	0	0	0	0
	GP1T1W3{1}	0	-75	0	75	0	0	0	0
	GP1T1W4{1}	0	-75	0	75	0	0	0	0
	GT2P2{2}	0	-75	0	75	0	0	0	0
	GT2P2E1{2}	0	-69	9	69	0	0	0	0
	GT2P2E2{2}	0	-69	-9	69	0	0	0	0
	GT2P2E3{2}	0	-81	9	82	0	0	0	0
	GT2P2E4{2}	0	-81	-9	82	0	0	0	0
	GT2P2E5{2}	0	-69	9	69	0	0	0	0
	GT2P2E6{2}	0	-69	-9	69	0	0	0	0
	GT2P2E7{2}	0	-81	9	82	0	0	0	0
	GT2P2E8{2}	0	-81	-9	82	0	0	0	0
	GT2P2W1{2}	0	-75	0	75	0	0	0	0
	GT2P2W2{2}	0	-75	0	75	0	0	0	0
	GT2P2W3{2}	0	-75	0	75	0	0	0	0
	GT2P2W4{2}	0	-75	0	75	0	0	0	0
	GT3P3{3}	0	-75	0	75	0	0	0	0
	GT3P3E1{3}	0	-69	9	69	0	0	0	0
	GT3P3E2{3}	0	-69	-9	69	0	0	0	0
	GT3P3E3{3}	0	-81	9	82	0	0	0	0
	GT3P3E4{3}	0	-81	-9	82	0	0	0	0
	GT3P3E5{3}	0	-69	9	69	0	0	0	0
	GT3P3E6{3}	0	-69	-9	69	0	0	0	0
	GT3P3E7{3}	0	-81	9	82	0	0	0	0
	GT3P3E8{3}	0	-81	-9	82	0	0	0	0
	GT3P3W1{3}	0	-75	0	75	0	0	0	0
	GT3P3W2{3}	0	-75	0	75	0	0	0	0
	GT3P3W3{3}	0	-75	0	75	0	0	0	0
	GT3P3W4{3}	0	-75	0	75	0	0	0	0
	GT1P1E4{1}+Omega	0	-90	-23	93	0	0	0	0

BREAK IN DATA

CALCULATION SHEET

Project No. S54413.024	**Calculation No.** S54413.024-M-001	**Rev.** 0	**Page No.** 136 of 192
Title: LERF Basin 41 Buried Piping Analysis			
Prepared By: JD Williams	**Date:** 5/13/20	**Checked By:** JS Huisingh	**Date:** 5/13/20

```
-----------------------------------------------------------------------------------------------------------------------
LERF_FRP_3m
04/24/2020                                                                BENTLEY
12:36 PM                                                                  AutoPIPE Advanced 11.01.00.24  RESULT PAGE 414
-----------------------------------------------------------------------------------------------------------------------

                       ISO 14692 (2002 + 2005 addenda)  CODE COMPLIANCE
                        (Moments in ft-lb  )             (Stress in psi     )
 Point  Load comb.                          Str.    S.I.F   Bend.  Press. Tors.   Code   Code   Stress
 name   /Category                  Moments  Type   In  Out  stress stress stress stress Allow.   Ratio
 ------ ---------------------    --------- ----- ---- ---- ------ ------ ------ ------ ------  ------

 *** Segment A  begin ***

 A00    GR{1}                     I      63  Hoop 1.00 1.00             0      0      0   8423   0.00
        SUST                      O       0 Axial 1.00 1.00    697      0      0    697   4324   0.16^
                                  T       0           mps =  1.00    r =  1.03    qs =  12571

        GR+P1{1}                  I      63  Hoop 1.00 1.00          1808      0   1808   8423   0.21
        SUST                      O       0 Axial 1.00 1.00    697    904      0   1601   4442   0.36^
                                  T       0           mps =  1.00    r =  1.03    qs =  12571

        GR{2}                     I      63  Hoop 1.00 1.00             0      0      0   8423   0.00
        SUST                      O       0 Axial 1.00 1.00    697      0      0    697   4324   0.16^
                                  T       0           mps =  1.00    r =  1.03    qs =  12571

        GR+P2{2}                  I      63  Hoop 1.00 1.00             0      0      0   8423   0.00
        SUST                      O       0 Axial 1.00 1.00    697      0      0    697   4324   0.16^
                                  T       0           mps =  1.00    r =  1.03    qs =  12571

        GR{3}                     I      63  Hoop 1.00 1.00             0      0      0   8423   0.00
        SUST                      O       0 Axial 1.00 1.00    697      0      0    697   4324   0.16^
                                  T       0           mps =  1.00    r =  1.03    qs =  12571

        GR+P3{3}                  I      63  Hoop 1.00 1.00          1808      0   1808   8423   0.21
        SUST                      O       0 Axial 1.00 1.00    697    904      0   1601   4442   0.36^
                                  T       0           mps =  1.00    r =  1.03    qs =  12571

        T1+P1{1}                  I       0  Hoop 1.00 1.00          1808      0   1808
        DISP                      O       0 Axial 1.00 1.00      0    904      0    905
                                  T       0           mps =  1.00    r =  1.03    qs =  12571

        T2+P2{2}                  I       0  Hoop 1.00 1.00             0      0      0
        DISP                      O       0 Axial 1.00 1.00      0      0      0      0
                                  T       0           mps =  1.00    r =  1.03    qs =  12571

        T3+P3{3}                  I       0  Hoop 1.00 1.00          1808      0   1808
        DISP                      O       0 Axial 1.00 1.00      0    904      0    904
                                  T       0           mps =  1.00    r =  1.03    qs =  12571

        GR+E1{1}                  I      58  Hoop 1.00 1.00             0      0      0  11188   0.00
         OCC                      O       8 Axial 1.00 1.00    646      0      0    646   5744   0.11^
                                  T       0           mps =  1.00    r =  1.03    qs =  12571

        GR+P1+E1{1}               I      58  Hoop 1.00 1.00          1808      0   1808  11188   0.16
         OCC                      O       8 Axial 1.00 1.00    646    904      0   1550   5862   0.26^
                                  T       0           mps =  1.00    r =  1.03    qs =  12571

        GR+E2{1}                  I      58  Hoop 1.00 1.00             0      0      0  11188   0.00
         OCC                      O       8 Axial 1.00 1.00    646      0      0    646   5744   0.11^
                                  T       0           mps =  1.00    r =  1.03    qs =  12571
```

CALCULATION SHEET

Project No. S54413.024	**Calculation No.** S54413.024-M-001	**Rev.** 0	**Page No.** 137 of 192
Title: LERF Basin 41 Buried Piping Analysis			
Prepared By: JD Williams	**Date:** 5/13/20	**Checked By:** JS Huisingh	**Date:** 5/13/20

```
-----------------------------------------------------------------------------------------------------------------
LERF_FRP_3m
04/24/2020                                                          BENTLEY
12:36 PM                                                            AutoPIPE Advanced 11.01.00.24  RESULT PAGE 415
-----------------------------------------------------------------------------------------------------------------

                      ISO 14692 (2002 + 2005 addenda)  CODE COMPLIANCE
                       (Moments in ft-lb  )             (Stress in psi     )
 Point  Load comb.                          Str.    S.I.F   Bend.  Press. Tors.   Code   Code   Stress
 name   /Category                  Moments  Type   In  Out  stress stress stress stress Allow.   Ratio
 ------ ---------------------    --------- ----- ---- ---- ------ ------ ------ ------ ------  ------

        GR+P1+E2{1}               I      58  Hoop 1.00 1.00          1808      0   1808  11188   0.16
         OCC                      O       8 Axial 1.00 1.00    646    904      0   1550   5862   0.26^
                                  T       0           mps =  1.00    r =  1.03    qs =  12571

        GR+E3{1}                  I      68  Hoop 1.00 1.00             0      0      0  11188   0.00
         OCC                      O       8 Axial 1.00 1.00    759      0      0    759   5744   0.13^
                                  T       0           mps =  1.00    r =  1.03    qs =  12571

        GR+P1+E3{1}               I      68  Hoop 1.00 1.00          1808      0   1808  11188   0.16
         OCC                      O       8 Axial 1.00 1.00    759    904      0   1663   5862   0.28^
                                  T       0           mps =  1.00    r =  1.03    qs =  12571

        GR+E4{1}                  I      68  Hoop 1.00 1.00             0      0      0  11188   0.00
         OCC                      O       8 Axial 1.00 1.00    759      0      0    759   5744   0.13^
                                  T       0           mps =  1.00    r =  1.03    qs =  12571

        GR+P1+E4{1}               I      68  Hoop 1.00 1.00          1808      0   1808  11188   0.16
         OCC                      O       8 Axial 1.00 1.00    759    904      0   1663   5862   0.28^
                                  T       0           mps =  1.00    r =  1.03    qs =  12571

        GR+E5{1}                  I      58  Hoop 1.00 1.00             0      0      0  11188   0.00
         OCC                      O       8 Axial 1.00 1.00    646      0      0    646   5744   0.11^
                                  T       0           mps =  1.00    r =  1.03    qs =  12571

        GR+P1+E5{1}               I      58  Hoop 1.00 1.00          1808      0   1808  11188   0.16
         OCC                      O       8 Axial 1.00 1.00    646    904      0   1550   5862   0.26^
                                  T       0           mps =  1.00    r =  1.03    qs =  12571

        GR+E6{1}                  I      58  Hoop 1.00 1.00             0      0      0  11188   0.00
         OCC                      O       8 Axial 1.00 1.00    646      0      0    646   5744   0.11^
                                  T       0           mps =  1.00    r =  1.03    qs =  12571

        GR+P1+E6{1}               I      58  Hoop 1.00 1.00          1808      0   1808  11188   0.16
         OCC                      O       8 Axial 1.00 1.00    646    904      0   1550   5862   0.26^
                                  T       0           mps =  1.00    r =  1.03    qs =  12571

        GR+E7{1}                  I      68  Hoop 1.00 1.00             0      0      0  11188   0.00
         OCC                      O       8 Axial 1.00 1.00    759      0      0    759   5744   0.13^
                                  T       0           mps =  1.00    r =  1.03    qs =  12571

        GR+P1+E7{1}               I      68  Hoop 1.00 1.00          1808      0   1808  11188   0.16
         OCC                      O       8 Axial 1.00 1.00    759    904      0   1663   5862   0.28^
                                  T       0           mps =  1.00    r =  1.03    qs =  12571

        GR+E8{1}                  I      68  Hoop 1.00 1.00             0      0      0  11188   0.00
         OCC                      O       8 Axial 1.00 1.00    759      0      0    759   5744   0.13^
                                  T       0           mps =  1.00    r =  1.03    qs =  12571
```

BREAK IN DATA

CALCULATION SHEET

Project No. S54413.024	**Calculation No.** S54413.024-M-001	**Rev.** 0	**Page No.** 138 of 192
Title: LERF Basin 41 Buried Piping Analysis			
Prepared By: JD Williams	**Date:** 5/13/20	**Checked By:** JS Huisingh	**Date:** 5/13/20

```
-----------------------------------------------------------------------------------------------------------------
LERF_FRP_3m
04/24/2020                                                    BENTLEY
12:36 PM                                                      AutoPIPE Advanced 11.01.00.24  RESULT PAGE****
-----------------------------------------------------------------------------------------------------------------

                      ISO 14692 (2002 + 2005 addenda)  CODE COMPLIANCE
                       (Moments in ft-lb  )             (Stress in psi     )
 Point  Load comb.                          Str.    S.I.F   Bend.  Press. Tors.   Code   Code   Stress
 name   /Category                  Moments  Type   In  Out  stress stress stress stress Allow.   Ratio
 ------ ---------------------    --------- ----- ---- ---- ------ ------ ------ ------ ------  ------

        GR+P1+E8{1}               I      17  Hoop 1.00 1.00      0   1416     26   1417  11188   0.13
         OCC                      O       1 Axial 1.00 1.00     60    708     26    770   5836   0.13^
                                  T      10           mps =  1.00    r =  1.03    qs =  12571

        GR+W1{1}                  I      15  Hoop 1.00 1.00      0      0     29     59  11188   0.01
         OCC                      O       0 Axial 1.00 1.00     55      0     29     81   5748   0.01^
                                  T      11           mps =  1.00    r =  1.03    qs =  12571

        GR+P1+W1{1}               I      15  Hoop 1.00 1.00      0   1416     28   1417  11188   0.13
         OCC                      O       2 Axial 1.00 1.00     56    708     28    766   5836   0.13^
                                  T      10           mps =  1.00    r =  1.03    qs =  12571

        GR+W2{1}                  I      15  Hoop 1.00 1.00      0      0     25     50  11188   0.00
         OCC                      O       0 Axial 1.00 1.00     56      0     25     75   5747   0.01^
                                  T       9           mps =  1.00    r =  1.03    qs =  12571

        GR+P1+W2{1}               I      15  Hoop 1.00 1.00      0   1416     24   1417  11188   0.13
         OCC                      O       2 Axial 1.00 1.00     56    708     24    766   5836   0.13^
                                  T       9           mps =  1.00    r =  1.03    qs =  12571

        GR+W3{1}                  I      15  Hoop 1.00 1.00      0      0     42     83  11188   0.01
         OCC                      O      17 Axial 1.00 1.00     83      0     42    118   5749   0.02^
                                  T      15           mps =  1.00    r =  1.03    qs =  12571

        GR+P1+W3{1}               I      15  Hoop 1.00 1.00      0   1416     40   1418  11188   0.13
         OCC                      O      15 Axial 1.00 1.00     78    708     40    790   5836   0.14^
                                  T      15           mps =  1.00    r =  1.03    qs =  12571

        GR+W4{1}                  I      16  Hoop 1.00 1.00      0      0     11     22  11188   0.00
         OCC                      O       4 Axial 1.00 1.00     59      0     11     63   5745   0.01^
                                  T       4           mps =  1.00    r =  1.03    qs =  12571

        GR+P1+W4{1}               I      16  Hoop 1.00 1.00      0   1416     10   1416  11188   0.13
         OCC                      O       2 Axial 1.00 1.00     57    708     10    766   5836   0.13^
                                  T       4           mps =  1.00    r =  1.03    qs =  12571

        GR+E1{2}                  I      14  Hoop 1.00 1.00      0      0     27     55  11188   0.00
         OCC                      O       1 Axial 1.00 1.00     51      0     27     75   5748   0.01^
                                  T      10           mps =  1.00    r =  1.03    qs =  12571

        GR+P2+E1{2}               I      14  Hoop 1.00 1.00      0      0     27     55  11188   0.00
         OCC                      O       1 Axial 1.00 1.00     51      0     27     75   5748   0.01^
                                  T      10           mps =  1.00    r =  1.03    qs =  12571

        GR+E2{2}                  I      15  Hoop 1.00 1.00      0      0      4      8  11188   0.00
         OCC                      O       7 Axial 1.00 1.00     59      0      4     60   5745   0.01^
                                  T       2           mps =  1.00    r =  1.03    qs =  12571
```

CALCULATION SHEET

Project No. S54413.024	**Calculation No.** S54413.024-M-001	**Rev.** 0	**Page No.** 139 of 192
Title: LERF Basin 41 Buried Piping Analysis			
Prepared By: JD Williams	**Date:** 5/13/20	**Checked By:** JS Huisingh	**Date:** 5/13/20

```
-----------------------------------------------------------------------------------------------------------------
LERF_FRP_3m
04/24/2020                                                          BENTLEY
12:36 PM                                                            AutoPIPE Advanced 11.01.00.24  RESULT PAGE****
-----------------------------------------------------------------------------------------------------------------

                       ISO 14692 (2002 + 2005 addenda)  CODE COMPLIANCE
                        (Moments in ft-lb  )             (Stress in psi     )
 Point  Load comb.                          Str.    S.I.F   Bend.  Press. Tors.   Code   Code   Stress
 name   /Category                  Moments  Type   In  Out  stress stress stress stress Allow.   Ratio
 ------ ---------------------    --------- ----- ---- ---- ------ ------ ------ ------ ------  ------

        GR+P2+E2{2}               I      15  Hoop 1.00 1.00      0      0      4      8  11188   0.00
         OCC                      O       7 Axial 1.00 1.00     59      0      4     60   5745   0.01^
                                  T       2           mps =  1.00    r =  1.03    qs =  12571

        GR+E3{2}                  I      16  Hoop 1.00 1.00      0      0     32     64  11188   0.01
         OCC                      O       1 Axial 1.00 1.00     60      0     32     88   5748   0.02^
                                  T      12           mps =  1.00    r =  1.03    qs =  12571

        GR+P2+E3{2}               I      16  Hoop 1.00 1.00      0      0     32     64  11188   0.01
         OCC                      O       1 Axial 1.00 1.00     60      0     32     88   5748   0.02^
                                  T      12           mps =  1.00    r =  1.03    qs =  12571

        GR+E4{2}                  I      17  Hoop 1.00 1.00      0      0      0      1  11188   0.00
         OCC                      O       7 Axial 1.00 1.00     67      0      0     67   5744   0.01^
                                  T       0           mps =  1.00    r =  1.03    qs =  12571

        GR+P2+E4{2}               I      17  Hoop 1.00 1.00      0      0      0      1  11188   0.00
         OCC                      O       7 Axial 1.00 1.00     67      0      0     67   5744   0.01^
                                  T       0           mps =  1.00    r =  1.03    qs =  12571

        GR+E5{2}                  I      13  Hoop 1.00 1.00      0      0     54    108  11188   0.01
         OCC                      O      16 Axial 1.00 1.00     76      0     54    132   5751   0.02^
                                  T      20           mps =  1.00    r =  1.03    qs =  12571

        GR+P2+E5{2}               I      13  Hoop 1.00 1.00      0      0     54    108  11188   0.01
         OCC                      O      16 Axial 1.00 1.00     76      0     54    132   5751   0.02^
                                  T      20           mps =  1.00    r =  1.03    qs =  12571

        GR+E6{2}                  I      14  Hoop 1.00 1.00      0      0     23     47  11188   0.00
         OCC                      O       1 Axial 1.00 1.00     51      0     23     69   5747   0.01^
                                  T       9           mps =  1.00    r =  1.03    qs =  12571

        GR+P2+E6{2}               I      14  Hoop 1.00 1.00      0      0     23     47  11188   0.00
         OCC                      O       1 Axial 1.00 1.00     51      0     23     69   5747   0.01^
                                  T       9           mps =  1.00    r =  1.03    qs =  12571

        GR+E7{2}                  I      16  Hoop 1.00 1.00      0      0     59    117  11188   0.01
         OCC                      O      16 Axial 1.00 1.00     82      0     59    143   5752   0.02^
                                  T      21           mps =  1.00    r =  1.03    qs =  12571

        GR+P2+E7{2}               I      16  Hoop 1.00 1.00      0      0     59    117  11188   0.01
         OCC                      O      16 Axial 1.00 1.00     82      0     59    143   5752   0.02^
                                  T      21           mps =  1.00    r =  1.03    qs =  12571

        GR+E8{2}                  I      17  Hoop 1.00 1.00      0      0     28     56  11188   0.00
         OCC                      O       1 Axial 1.00 1.00     60      0     28     82   5748   0.01^
                                  T      10           mps =  1.00    r =  1.03    qs =  12571
```

CALCULATION SHEET

Project No. S54413.024	**Calculation No.** S54413.024-M-001	**Rev.** 0	**Page No.** 140 of 192
Title: LERF Basin 41 Buried Piping Analysis			
Prepared By: JD Williams	**Date:** 5/13/20	**Checked By:** JS Huisingh	**Date:** 5/13/20

```
-----------------------------------------------------------------------------------------------------------------
LERF_FRP_3m
04/24/2020                                                          BENTLEY
12:36 PM                                                            AutoPIPE Advanced 11.01.00.24  RESULT PAGE****
-----------------------------------------------------------------------------------------------------------------

                       ISO 14692 (2002 + 2005 addenda)  CODE COMPLIANCE
                        (Moments in ft-lb  )             (Stress in psi     )
 Point  Load comb.                          Str.    S.I.F   Bend.  Press. Tors.   Code   Code   Stress
 name   /Category                  Moments  Type   In  Out  stress stress stress stress Allow.   Ratio
 ------ ---------------------    --------- ----- ---- ---- ------ ------ ------ ------ ------  ------

        GR+P2+E8{2}               I      17  Hoop 1.00 1.00      0      0     28     56  11188   0.00
         OCC                      O       1 Axial 1.00 1.00     60      0     28     82   5748   0.01^
                                  T      10           mps =  1.00    r =  1.03    qs =  12571

        GR+W1{2}                  I      15  Hoop 1.00 1.00      0      0     29     58  11188   0.01
         OCC                      O       0 Axial 1.00 1.00     55      0     29     81   5748   0.01^
                                  T      11           mps =  1.00    r =  1.03    qs =  12571

        GR+P2+W1{2}               I      15  Hoop 1.00 1.00      0      0     29     58  11188   0.01
         OCC                      O       0 Axial 1.00 1.00     55      0     29     81   5748   0.01^
                                  T      11           mps =  1.00    r =  1.03    qs =  12571

        GR+W2{2}                  I      15  Hoop 1.00 1.00      0      0     26     51  11188   0.00
         OCC                      O       1 Axial 1.00 1.00     56      0     26     76   5747   0.01^
                                  T       9           mps =  1.00    r =  1.03    qs =  12571

        GR+P2+W2{2}               I      15  Hoop 1.00 1.00      0      0     26     51  11188   0.00
         OCC                      O       1 Axial 1.00 1.00     56      0     26     76   5747   0.01^
                                  T       9           mps =  1.00    r =  1.03    qs =  12571

        GR+W3{2}                  I      15  Hoop 1.00 1.00      0      0     44     87  11188   0.01
         OCC                      O       4 Axial 1.00 1.00     56      0     44    103   5750   0.02^
                                  T      16           mps =  1.00    r =  1.03    qs =  12571

        GR+P2+W3{2}               I      15  Hoop 1.00 1.00      0      0     44     87  11188   0.01
         OCC                      O       4 Axial 1.00 1.00     56      0     44    103   5750   0.02^
                                  T      16           mps =  1.00    r =  1.03    qs =  12571

        GR+W4{2}                  I      16  Hoop 1.00 1.00      0      0     13     25  11188   0.00
         OCC                      O      18 Axial 1.00 1.00     86      0     13     89   5746   0.02^
                                  T       5           mps =  1.00    r =  1.03    qs =  12571

        GR+P2+W4{2}               I      16  Hoop 1.00 1.00      0      0     13     25  11188   0.00
         OCC                      O      18 Axial 1.00 1.00     86      0     13     89   5746   0.02^
                                  T       5           mps =  1.00    r =  1.03    qs =  12571

        GR+E1{3}                  I      14  Hoop 1.00 1.00      0      0     26     53  11188   0.00
         OCC                      O       1 Axial 1.00 1.00     51      0     26     73   5747   0.01^
                                  T      10           mps =  1.00    r =  1.03    qs =  12571

        GR+P3+E1{3}               I      14  Hoop 1.00 1.00      0   4248     24   4248  11188   0.38^
         OCC                      O       5 Axial 1.00 1.00     54   2124     24   2179   6020   0.36
                                  T       9           mps =  1.00    r =  1.03    qs =  12571

        GR+E2{3}                  I      15  Hoop 1.00 1.00      0      0      4      9  11188   0.00
         OCC                      O      16 Axial 1.00 1.00     80      0      4     81   5745   0.01^
                                  T       2           mps =  1.00    r =  1.03    qs =  12571
```

CALCULATION SHEET

Project No. S54413.024	**Calculation No.** S54413.024-M-001	**Rev.** 0	**Page No.** 141 of 192
Title: LERF Basin 41 Buried Piping Analysis			
Prepared By: JD Williams	**Date:** 5/13/20	**Checked By:** JS Huisingh	**Date:** 5/13/20

```
-----------------------------------------------------------------------------------------------------------------
LERF_FRP_3m
04/24/2020                                                          BENTLEY
12:36 PM                                                            AutoPIPE Advanced 11.01.00.24  RESULT PAGE****
-----------------------------------------------------------------------------------------------------------------

                       ISO 14692 (2002 + 2005 addenda)  CODE COMPLIANCE
                        (Moments in ft-lb  )             (Stress in psi     )
 Point  Load comb.                          Str.    S.I.F   Bend.  Press. Tors.   Code   Code   Stress
 name   /Category                  Moments  Type   In  Out  stress stress stress stress Allow.   Ratio
 ------ ---------------------    --------- ----- ---- ---- ------ ------ ------ ------ ------  ------

        GR+P3+E2{3}               I      15  Hoop 1.00 1.00      0   4248      6   4248  11188   0.38^
         OCC                      O      10 Axial 1.00 1.00     65   2124      6   2189   6020   0.36
                                  T       2           mps =  1.00    r =  1.03    qs =  12571

        GR+E3{3}                  I      16  Hoop 1.00 1.00      0      0     31     62  11188   0.01
         OCC                      O       1 Axial 1.00 1.00     60      0     31     86   5748   0.01^
                                  T      11           mps =  1.00    r =  1.03    qs =  12571

        GR+P3+E3{3}               I      17  Hoop 1.00 1.00      0   4248     29   4248  11188   0.38^
         OCC                      O       5 Axial 1.00 1.00     63   2124     29   2188   6020   0.36
                                  T      11           mps =  1.00    r =  1.03    qs =  12571

        GR+E4{3}                  I      17  Hoop 1.00 1.00      0      0      0      0  11188   0.00
         OCC                      O      16 Axial 1.00 1.00     87      0      0     87   5744   0.02^
                                  T       0           mps =  1.00    r =  1.03    qs =  12571

        GR+P3+E4{3}               I      17  Hoop 1.00 1.00      0   4248      2   4248  11188   0.38^
         OCC                      O      10 Axial 1.00 1.00     73   2124      2   2196   6020   0.36
                                  T       1           mps =  1.00    r =  1.03    qs =  12571

        GR+E5{3}                  I      13  Hoop 1.00 1.00      0      0     54    108  11188   0.01
         OCC                      O       7 Axial 1.00 1.00     56      0     54    121   5751   0.02^
                                  T      20           mps =  1.00    r =  1.03    qs =  12571

        GR+P3+E5{3}               I      13  Hoop 1.00 1.00      0   4248     52   4249  11188   0.38^
         OCC                      O       1 Axial 1.00 1.00     49   2124     52   2175   6021   0.36
                                  T      19           mps =  1.00    r =  1.03    qs =  12571

        GR+E6{3}                  I      14  Hoop 1.00 1.00      0      0     22     44  11188   0.00
         OCC                      O       1 Axial 1.00 1.00     51      0     22     68   5747   0.01^
                                  T       8           mps =  1.00    r =  1.03    qs =  12571

        GR+P3+E6{3}               I      14  Hoop 1.00 1.00      0   4248     20   4248  11188   0.38^
         OCC                      O       5 Axial 1.00 1.00     55   2124     20   2179   6020   0.36
                                  T       7           mps =  1.00    r =  1.03    qs =  12571

        GR+E7{3}                  I      16  Hoop 1.00 1.00      0      0     58    116  11188   0.01
         OCC                      O       7 Axial 1.00 1.00     64      0     58    133   5752   0.02^
                                  T      21           mps =  1.00    r =  1.03    qs =  12571

        GR+P3+E7{3}               I      16  Hoop 1.00 1.00      0   4248     56   4249  11188   0.38^
         OCC                      O       1 Axial 1.00 1.00     58   2124     56   2185   6021   0.36
                                  T      21           mps =  1.00    r =  1.03    qs =  12571

        GR+E8{3}                  I      17  Hoop 1.00 1.00      0      0     27     53  11188   0.00
         OCC                      O       1 Axial 1.00 1.00     60      0     27     81   5748   0.01^
                                  T      10           mps =  1.00    r =  1.03    qs =  12571
```

CALCULATION SHEET

Project No. S54413.024	**Calculation No.** S54413.024-M-001	**Rev.** 0	**Page No.** 142 of 192
Title: LERF Basin 41 Buried Piping Analysis			
Prepared By: JD Williams	**Date:** 5/13/20	**Checked By:** JS Huisingh	**Date:** 5/13/20

```
-----------------------------------------------------------------------------------------------------------------
LERF_FRP_3m
04/24/2020                                                          BENTLEY
12:36 PM                                                            AutoPIPE Advanced 11.01.00.24  RESULT PAGE****
-----------------------------------------------------------------------------------------------------------------

                       ISO 14692 (2002 + 2005 addenda)  CODE COMPLIANCE
                        (Moments in ft-lb  )             (Stress in psi     )
 Point  Load comb.                          Str.    S.I.F   Bend.  Press. Tors.   Code   Code   Stress
 name   /Category                  Moments  Type   In  Out  stress stress stress stress Allow.   Ratio
 ------ ---------------------    --------- ----- ---- ---- ------ ------ ------ ------ ------  ------

        GR+P3+E8{3}               I      17  Hoop 1.00 1.00      0   4248     25   4248  11188   0.38^
         OCC                      O       5 Axial 1.00 1.00     63   2124     25   2188   6020   0.36
                                  T       9           mps =  1.00    r =  1.03    qs =  12571

        GR+W1{3}                  I      15  Hoop 1.00 1.00      0      0     29     57  11188   0.01
         OCC                      O       2 Axial 1.00 1.00     56      0     29     80   5748   0.01^
                                  T      11           mps =  1.00    r =  1.03    qs =  12571

        GR+P3+W1{3}               I      15  Hoop 1.00 1.00      0   4248     27   4248  11188   0.38^
         OCC                      O       5 Axial 1.00 1.00     58   2124     27   2183   6020   0.36
                                  T      10           mps =  1.00    r =  1.03    qs =  12571

        GR+W2{3}                  I      15  Hoop 1.00 1.00      0      0     25     50  11188   0.00
         OCC                      O       0 Axial 1.00 1.00     56      0     25     75   5747   0.01^
                                  T       9           mps =  1.00    r =  1.03    qs =  12571

        GR+P3+W2{3}               I      15  Hoop 1.00 1.00      0   4248     23   4248  11188   0.38^
         OCC                      O       6 Axial 1.00 1.00     60   2124     23   2185   6020   0.36
                                  T       8           mps =  1.00    r =  1.03    qs =  12571

        GR+W3{3}                  I      15  Hoop 1.00 1.00      0      0     42     83  11188   0.01
         OCC                      O      18 Axial 1.00 1.00     85      0     42    119   5749   0.02^
                                  T      15           mps =  1.00    r =  1.03    qs =  12571

        GR+P3+W3{3}               I      15  Hoop 1.00 1.00      0   4248     40   4248  11188   0.38^
         OCC                      O      12 Axial 1.00 1.00     69   2124     40   2194   6021   0.36
                                  T      15           mps =  1.00    r =  1.03    qs =  12571

        GR+W4{3}                  I      16  Hoop 1.00 1.00      0      0     11     22  11188   0.00
         OCC                      O       4 Axial 1.00 1.00     59      0     11     63   5745   0.01^
                                  T       4           mps =  1.00    r =  1.03    qs =  12571

        GR+P3+W4{3}               I      16  Hoop 1.00 1.00      0   4248      9   4248  11188   0.38^
         OCC                      O       2 Axial 1.00 1.00     57   2124      9   2181   6020   0.36
                                  T       3           mps =  1.00    r =  1.03    qs =  12571

        GR+T1+P1{1}               I      15  Hoop 1.00 1.00      0   1416     23   1417  10434   0.14
        COMB                      O       9 Axial 1.00 1.00     64    708     23    773   5449   0.14^
                                  T       8           mps =  1.00    r =  1.03    qs =  12571

        GR+T2+P2{2}               I      15  Hoop 1.00 1.00      0      0     30     61  10434   0.01
        COMB                      O       9 Axial 1.00 1.00     65      0     30     89   5361   0.02^
                                  T      11           mps =  1.00    r =  1.03    qs =  12571

        GR+T3+P3{3}               I      15  Hoop 1.00 1.00      0   4248     24   4248  10434   0.41^
        COMB                      O       9 Axial 1.00 1.00     65   2124     24   2190   5633   0.39
                                  T       9           mps =  1.00    r =  1.03    qs =  12571

 *** Segment AD end   ***
```

CALCULATION SHEET

Project No. S54413.024	**Calculation No.** S54413.024-M-001	**Rev.** 0	**Page No.** 143 of 192
Title: LERF Basin 41 Buried Piping Analysis			
Prepared By: JD Williams	**Date:** 5/13/20	**Checked By:** JS Huisingh	**Date:** 5/13/20

```
-----------------------------------------------------------------------------------------------------------
LERF_FRP_3m
04/24/2020                                                    BENTLEY
12:36 PM                                                      AutoPIPE Advanced 11.01.00.24  RESULT PAGE****
-----------------------------------------------------------------------------------------------------------


                         R E S U L T   S U M M A R Y
                         ---------------------------




 Maximum restraint forces (lb)
 -----------------------------

          Maximum X :     -3846      Point : W07        Load Comb.: GT3P3W2{3}
          Maximum Y :     -1594      Point : 5222       Load Comb.: GT1P1E4{1}+Omega
          Maximum Z :     -3339      Point : W09        Load Comb.: GT3P3W2{3}
          Max. total:      3847      Point : W07        Load Comb.: GT3P3W2{3}

 Maximum restraint moments (ft-lb)
 ---------------------------------

          Maximum X :      1651      Point : 5300       Load Comb.: GT2P2W3{2}
          Maximum Y :      -722      Point : W73        Load Comb.: GT1P1E4{1}+Omega
          Maximum Z :     -1677      Point : 5300       Load Comb.: GP1T1W4{1}
          Max. total:      2304      Point : 5300       Load Comb.: GP1T1W4{1}
```

CALCULATION SHEET

Project No. S54413.024	**Calculation No.** S54413.024-M-001	**Rev.** 0	**Page No.** 144 of 192
Title: LERF Basin 41 Buried Piping Analysis			
Prepared By: JD Williams	**Date:** 5/13/20	**Checked By:** JS Huisingh	**Date:** 5/13/20

```
-----------------------------------------------------------------------------------------------------------
LERF_FRP_3m
04/24/2020                                                    BENTLEY
12:36 PM                                                      AutoPIPE Advanced 11.01.00.24  RESULT PAGE****
-----------------------------------------------------------------------------------------------------------


                         R E S U L T    S U M M A R Y
                         ----------------------------



     Maximum sustained stress

                           Point            : R16
                           Stress    psi    : 14684
                           Allowable psi    : 186856
                           Ratio            : 0.08
                           Load combination : GR+P1{1}

     Maximum displacement stress

                           Point            : R16
                           Stress    psi    : 14678
                           Allowable psi    : 0
                           Ratio            : 0.00
                           Load combination : T1+P1{1}

     Maximum occasional stress

                           Point            : R16
                           Stress    psi    : 14685
                           Allowable psi    : 248212
                           Ratio            : 0.06
                           Load combination : GR+P1+E3{1}

     Maximum combined stress

                           Point            : R16
                           Stress    psi    : 14684
                           Allowable psi    : 231479
                           Ratio            : 0.06
                           Load combination : GR+T1+P1{1}
```

CALCULATION SHEET

Project No. S54413.024	**Calculation No.** S54413.024-M-001	**Rev.** 0	**Page No.** 145 of 192
Title: LERF Basin 41 Buried Piping Analysis			
Prepared By: JD Williams	**Date:** 5/13/20	**Checked By:** JS Huisingh	**Date:** 5/13/20

```
-----------------------------------------------------------------------------------------------------------
LERF_FRP_3m
04/24/2020                                                    BENTLEY
12:36 PM                                                      AutoPIPE Advanced 11.01.00.24  RESULT PAGE****
-----------------------------------------------------------------------------------------------------------


                         R E S U L T    S U M M A R Y
                         ----------------------------



     Maximum sustained stress ratio

                           Point            : AC05
                           Stress    psi    : 3868
                           Allowable psi    : 4689
                           Ratio            : 0.82
                           Load combination : GR+P3{3}

     Maximum displacement stress ratio

                           Point            : A00
                           Stress    psi    : 1808
                           Allowable psi    : 0
                           Ratio            : 0.00
                           Load combination : T1+P1{1}

     Maximum occasional stress ratio

                           Point            : W58
                           Stress    psi    : 5059
                           Allowable psi    : 6111
                           Ratio            : 0.83
                           Load combination : GR+P3+E4{3}

     Maximum combined stress ratio

                           Point            : X40
                           Stress    psi    : 4396
                           Allowable psi    : 5487
                           Ratio            : 0.80
                           Load combination : GR+T1+P1{1}



     * * * The system satisfies ISO 14692 (2002 + 2005 addenda) code requirements * * *
     * * * for the selected options                                               * * *

           Warnings:
           (1) Maximum displacement stress ratio is zero
```

CALCULATION SHEET

Project No. S54413.024	**Calculation No.** S54413.024-M-001	**Rev.** 0	**Page No.** 146 of 192
Title: LERF Basin 41 Buried Piping Analysis			
Prepared By: JD Williams	**Date:** 5/13/20	**Checked By:** JS Huisingh	**Date:** 5/13/20

ATTACHMENT 1

AUTOPIPE SOIL MODELING INFORMATION

Sargent & Lundy Engineering Services, Inc.

CALCULATION SHEET

Project No. S54413.024	**Calculation No.** S54413.024-M-001	**Rev.** 0	**Page No.** 147 of 192
Title: LERF Basin 41 Buried Piping Analysis			
Prepared By: JD Williams	**Date:** 5/13/20	**Checked By:** JS Huisingh	**Date:** 5/13/20

TABLE D-2
Unified Soil Classification System (ASTM D-2487)

Major Divisions		Grp Sym	Soil Description	Lab Classification Criteria: General	Lab Classification Criteria: % Finer than #200 Sieve (Note 2)
Coarse-Grained Soils (over 50% by weight retained on No. 200 sieve)	Gravelly Soils (over 50% of coarse fraction retained on No. 4 sieve)	GW	Well graded gravels, gravel-sand mixtures, little or no fines	$C_u > 4$ and $1 < C_z < 3$	Less than 5
		GP	Poorly graded gravels, gravel-sand mixtures, little or no fines	not meeting both criteria for GW	Less than 5
		GM	Silty gravels, gravel-sand-silt mixtures	Atterberg limits plot below "A-line", or $I_p < 4$ (see Note 1)	More than 12
		GC	Clayey gravels, gravel-sand-clay mixtures	Atterberg limits plot above "A-line" and $I_p > 7$ (see Note 1)	More than 12
	Sandy Soils (over 50% of coarse fraction passes thru No. 4 sieve)	SW	Well graded sands, gravelly sands, little or no fines	$C_u > 6$ and $1 < C_z < 3$	Less than 5
		SP	Poorly graded sands, gravelly sands, little or no fines	not meeting both criteria for SW	Less than 5
		SM	Silty sands, sand-silt mixtures	Atterberg limits plot below "A-line", or $I_p < 4$ (see Note 1)	More than 12
		SC	Clayey sands, sand-clay mixtures	Atterberg limits plot above "A-line" and $I_p > 7$ (see Note 1)	More than 12
Fine-Grained Soils (over 50% by weight passes thru No 200 sieve)	Silts & Clays (W_L <50%)	ML	Inorganic silts & very fine sands, rock flour, silty or clayey fine sands, or clayey silts with slight plasticity	Use the Plasticity chart (Figure D-9) for classification of fine-grained soils and fine fraction of coarse-grained soils. (see Note 1)	
		CL	Inorganic clays of low to medium plasticity, gravelly clays, sandy clays, silty clays, lean clays		
		OL	Organic silts and organic silty clays of low plasticity		
	Silts & Clays (W_L >50%)	MH	Inorganic silts, micaceous or diatomaceous fine sandy or silty soils, elastic silts		
		CH	Inorganic clays of high plasticity, fat clays		
		OH	Organic clays of medium to high plasticity, organic silts		
	Highly Organic Soils	Pt	Peat, muck and other highly organic soils	Visual-manual identification	

NOTES

1. Atterberg limits plotting in the hatched area (see Figure D-9) are borderline classifications requiring use of dual Group Symbols. The equation of the "A-line" is as follows: $I_P = 0.73(W_L - 20)$
2. For soils having 5 to 12% of fines passing through a No. 200 sieve, use dual Group Symbols (e.g. GW-GC).
3. Variable Definitions:

C_u = uniformity coefficient

I_p = plasticity index (%)

= coefficient of curvature

CALCULATION SHEET

Project No. S54413.024	**Calculation No.** S54413.024-M-001	**Rev.** 0	**Page No.** 148 of 192
Title: LERF Basin 41 Buried Piping Analysis			
Prepared By: JD Williams	**Date:** 5/13/20	**Checked By:** JS Huisingh	**Date:** 5/13/20

C_z

w_L = liquid limit (%)

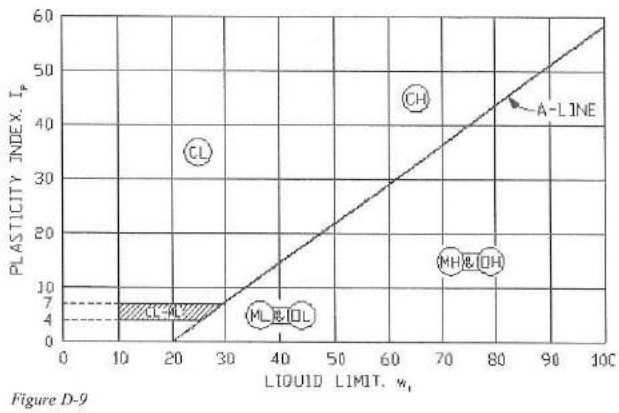

Figure D-9

TABLE D-3
Summary of Estimated Soil Properties

Group Symbol	Coarse Material Content	at 100 % comp	at ≈ 94% compaction					at ≈ 80 % compaction				
			Assumed					Assumed				
		γ_{dry} (lb/ft3)	γ_{dry} (lb/ft3)	H_2O Content (%)	γ_{Tot} (lb/ft^3)	ϕ (°)	C (lb/ft^2)	γ_{dry} (lb/ft3)	H_2O Content (%)	γ_{Tot} (lb/ft^3)	ϕ (°)	C (lb/ft^2)
ML	< 5%	105	99	18	117	32	1000	85	25	106	30	190
CL	< 5%	105	99	18	117	30	800	85	25	106	28	270
ML	5-25%	120	113	13	128	34	1000	95	20	114	30	190
CL	5-25%	120	113	13	128	30	800	95	20	114	28	270
ML	25-50%	130	122	9	133	34	1000	105	15	121	30	190
CL	25-50%	130	122	9	133	30	800	105	15	121	28	270
MH	< 5%	105	99	21	120	30	1000	85	30	111	28	400
CH	< 5%	105	99	21	120	21	900	85	30	111	19	300
MH	5-25%	120	113	16	131	32	1000	95	25	119	30	400
CH	5-25%	120	113	16	131	21	900	95	25	119	19	300
MH	25-50%	130	122	13	138	32	1000	105	20	126	28	400
CH	25-50%	130	122	13	138	21	900	105	20	126	19	300
SM		122	115	12	129	34	450	105	15	121	32	400
SC		122	115	12	129	32	300	105	15	121	29	230
SW		132	124	9	135	39		115	10	127	38	
SP		115	108	9	118	38		105	10	116	37	
GM		140	132	8	142	40		120	10	132	35	
GC		140	132	7	141	40		120	10	132	33	
GW		140	132	4	137	42		125	5	131	39	
GP		125	118	4	122	42		110	5	116	38	

$c = 0$
$\phi = 40$
$\gamma = 125$

The properties for soil backfill around a buried pipe can vary greatly depending on the type of soil, and the degree of backfill compaction. General guidelines for estimating soil properties based on these factors are summarized in Table D-4.

CALCULATION SHEET

Project No. S54413.024	**Calculation No.** S54413.024-M-001	**Rev.** 0	**Page No.** 149 of 192
Title: LERF Basin 41 Buried Piping Analysis			
Prepared By: JD Williams	**Date:** 5/13/20	**Checked By:** JS Huisingh	**Date:** 5/13/20

ATTACHMENT 2

NEW FRP PIPE DATA (CONLEY COMPOSITES)

- Series 40 Pipe Data
- Series 30 Pipe Data
- Double Containment Pipe Properties
- Buried Pipe Data
- Fitting-in-Fitting Dimensions
- Fitting Thicknesses (Email from Conley Rep.)
- ISO 14692 Code Explanation (Email from Conley Rep.)
- ASTM D2992-01 Calculation, Regression, & Test Data
- ISO 14692 Design Envelope
- Connecting to Existing FRP Pipe (Email from Conley Rep.)

CALCULATION SHEET

Project No. S54413.024	**Calculation No.** S54413.024-M-001	**Rev.** 0	**Page No.** 150 of 192
Title: LERF Basin 41 Buried Piping Analysis			
Prepared By: JD Williams	**Date:** 5/13/20	**Checked By:** JS Huisingh	**Date:** 5/13/20

Conley Composites
an ANDRONACO INDUSTRIES company

EPOXY SCHEDULE 40
EXTRA HEAVY DUTY PIPING

ASTM DESIGNATION CODE RTRP-11FW1-2113

Conley Product Data

RUGGED TOP OF THE LINE PERFORMANCE ~ AFFORDABLE COST

Description

- Extra heavy wall filament wound piping for service up to 300 psi
- 60 mil double Nexus® reinforced corrosion barrier (inner liner)
- Premium aromatic amine cured product for operating temperatures up to 275°F
- Sizes available from 1" through 30"
- Complete line of filament wound fittings available
- In house fabrication facilities "From your blueprints to pipe assemblies"
- Color coding available
- Conductive systems available
- Fire-resistant systems available
- See Sch 40 Piping Specification

Typical Applications

- Waste water treatment
- Steel pickling
- Solvents
- Petrochemical
- Pharmaceutical
- Chemical processing
- Brine (salts) and brackish water
- Jet fuel
- Gasoline – Diesel – Fuel Oil
- Cooling water
- Odor control
- Industrial waste
- Food and beverages
- Bridge, roof and floor drains

Performance

- Excellent chemical resistance inside and outside to a variety of caustics, acids, brines, and petroleum products ~ See the chemical resistance chart for fluid services
- External UV/Corrosion barrier minimum 20 mil on all pipe and fittings
- 25 year guarantee against *'fiber blooming'* on all pipe and fittings
- Straight socket joining system (No expensive tapering tools required)

Specifications

- ASTM D2996 Filament-Wound "Fiberglass" Pipe
- ASTM D2310 Classification for Machine-Made "Fiberglass" Pipe
- ASTM D3567 Determining Dimensions of "Fiberglass" Pipe and Fittings
- ASTM D4024 Machine Made "Fiberglass" Flanges
- ASTM D5685 "Fiberglass" Pressure Pipe Fittings

Codes & Standards

- AWWA C950 Fiberglass Pressure Pipe Standards
- ASME B31.1 Power Piping Code
- ASME B31.3 Process Piping Code

Listings

- U.S. Federal Regulations FDA 21 CFR 175.300
- API 15LR Specification for Low Pressure Fiberglass Line Pipe and Fittings

PDS40E (12/14) 1

CALCULATION SHEET

Project No. S54413.024	**Calculation No.** S54413.024-M-001	**Rev.** 0	**Page No.** 151 of 192
Title: LERF Basin 41 Buried Piping Analysis			
Prepared By: JD Williams	**Date:** 5/13/20	**Checked By:** JS Huisingh	**Date:** 5/13/20

Schedule 40
Pipe Dimensional Data* and Pressure Ratings[1] from –50° to 275°F

[1]Static pressure rating; steady (stationary) pressure is created when using a gear pump, turbine pump, centrifugal pump, etc.
[2]Vacuum Service: A full vacuum within the pipe is equivalent to 14.7 psi external pressure at sea level. Contact Conley for higher external pressure ratings.

NOM PIPE DIA	PIPE I.D.	PIPE O.D.	NOM LINER THK (IN)	NOM REINF THK (IN)	NOM UV THK (IN)	TOT THK (IN)	INT PRESS (PSI)	VAC PRESS (PSI)[2]
1"	0.88	1.32	0.060	0.120	0.040	0.220	300	2026
1 ½"	1.38	1.88	0.060	0.150	0.040	0.250	300	1370
2"	1.88	2.38	0.060	0.150	0.040	0.250	300	675
2 ½"	2.38	2.88	0.060	0.150	0.040	0.250	300	380
3"	3.00	3.47	0.060	0.135	0.040	0.235	300	160
4"	4.00	4.48	0.060	0.160	0.020	0.240	300	123
6"	6.00	6.57	0.060	0.205	0.020	0.285	250	82
8"	8.00	8.60	0.060	0.220	0.020	0.300	250	45
10"	10.00	10.68	0.060	0.220	0.060	0.340	200	22.9
12"	12.25	13.00	0.060	0.275	0.040	0.375	200	24.8
14"	14.25	15.00	0.060	0.275	0.040	0.375	175	16.1
16"	16.25	17.00	0.060	0.275	0.040	0.375	150	11.1
18"	18.25	19.00	0.060	0.275	0.040	0.375	125	7.9
20"	20.25	20.96	0.060	0.275	0.020	0.355	125	5.9
24"	24.25	25.11	0.060	0.330	0.040	0.430	125	5.9
30"	30.50	31.43	0.060	.0385	0.020	0.465	100	4.8

*All values are nominal. Minimum wall thickness shall not be less than 87.5% of nominal wall thickness in accordance with ASTM D2996.

Support Spans* and Capacities at 75°F

NOM PIPE DIA	TYPE I SIMPLE SPAN (FT)	TYPE II MAX CONT SPAN (FT)	TYPE IV FIXED END SPAN (FT)	MIN BEND RADIUS (FT)	WT/FT (LBS)	CAP (GAL/FT)
1"	7.6	9.0	11.4	20	0.61	0.03
1 ½"	9.1	10.7	13.7	32	1.03	0.08
2"	10.1	11.8	15.1	44	1.35	0.14
2 ½"	10.9	12.8	16.3	55	1.66	0.23
3"	11.5	13.5	17.2	69	1.92	0.37
4"	13.0	15.2	19.4	93	2.57	0.65
6"	15.3	18.0	22.9	139	4.52	1.47
8"	16.9	19.8	25.3	185	6.29	2.61
10"	18.1	21.2	27.0	231	8.88	4.08
12"	20.0	23.5	30.0	284	11.96	6.12
14"	20.9	24.5	31.3	330	13.85	8.28
16"	21.7	25.5	32.5	376	15.75	10.77
18"	22.5	26.3	33.6	422	17.64	13.59
20"	23.1	27.1	34.6	469	18.48	16.73
24"	25.3	29.6	37.7	561	26.81	23.99
30"	27.8	32.6	41.6	706	36.37	37.95

***NOTE:** Span deflection = ½" with fluid of 1.0 specific gravity

2 PDS40E (12/14)

CALCULATION SHEET

Project No. S54413.024	**Calculation No.** S54413.024-M-001	**Rev.** 0	**Page No.** 152 of 192
Title: LERF Basin 41 Buried Piping Analysis			
Prepared By: JD Williams	**Date:** 5/13/20	**Checked By:** JS Huisingh	**Date:** 5/13/20

Conley Composites
an ANDRONACO INDUSTRIES company

EPOXY SCHEDULE 30
HEAVY DUTY PIPING

ASTM DESIGNATION CODE RTRP-11FW1-2113

Conley Product Data

OUTSTANDING BENEFITS AND COST SAVINGS

Description

- Heavy duty filament wound piping for service up to 250 psi
- 60 mil double Nexus® reinforced corrosion barrier (inner liner)
- Premium aromatic amine cured product for operating temperatures up to 275°F
- Sizes available from 2" through 30"
- Complete line of filament wound fittings available
- In house fabrication facilities "From your blueprints to pipe assemblies"
- Color coding available
- Conductive systems available
- Fire-resistant systems available
- See Sch 30 Piping Specification

Typical Applications

- Waste water treatment
- Steel pickling
- Solvents
- Petrochemical
- Pharmaceutical
- Chemical processing
- Brine (salts) and brackish water
- Jet fuel
- Gasoline – Diesel – Fuel Oil
- Cooling water
- Odor control
- Industrial waste
- Food and beverages
- Bridge, roof and floor drains

Performance

- Excellent chemical resistance inside and outside to a variety of caustics and acids ~ See the chemical resistance chart for fluid services
- External UV/Corrosion barrier minimum 10 mil on all pipe and fittings
- 25 year guarantee against *'fiber blooming'* on all pipe and fittings
- Straight socket joining system (No expensive tapering tools required)

Specifications

- ASTM D2996 Filament-Wound "Fiberglass" Pipe
- ASTM D2310 Classification for Machine-Made "Fiberglass" Pipe
- ASTM D3567 Determining Dimensions of "Fiberglass" Pipe and Fittings
- ASTM D4024 Machine Made "Fiberglass" Flanges
- ASTM D5685 "Fiberglass" Pressure Pipe Fittings

Codes & Standards

- AWWA C950 Fiberglass Pressure Pipe Standards
- ASME B31.1 Power Piping Code
- ASME B31.3 Process Piping Code

Listings

- U.S. Federal Regulations FDA 21 CFR 175.300
- CRN:0A10216.5 Category A - Pipe Fittings
- CRN:0B10216.5 Category B - Pipe Flanges

PDS30E (12/14) 1

CALCULATION SHEET

Project No. S54413.024	**Calculation No.** S54413.024-M-001	**Rev.** 0	**Page No.** 153 of 192
Title: LERF Basin 41 Buried Piping Analysis			
Prepared By: JD Williams	**Date:** 5/13/20	**Checked By:** JS Huisingh	**Date:** 5/13/20

Schedule 30 Pipe Dimensional Data* and Pressure Ratings[1] from –50° to 275°F

[1]Static pressure rating; steady (stationary) pressure is created when using a gear pump, turbine pump, centrifugal pump, etc.
[2]Vacuum Service: A full vacuum within the pipe is equivalent to 14.7 psi external pressure at sea level. Contact Conley for higher external pressure ratings.

NOM PIPE DIA	PIPE I.D.	PIPE O.D.	NOM LINER THK (IN)	NOM REINF THK (IN)	NOM UV THK (IN)	TOT THK (IN)	INT PRESS (PSI)	VAC PRESS (PSI)[2]
2"	1.88	2.17	0.060	0.075	0.010	0.145	250	111.4
3"	3.00	3.34	0.060	0.090	0.020	0.170	250	52.8
4"	4.00	4.34	0.060	0.090	0.020	0.170	250	24.1
6"	6.00	6.38	0.060	0.110	0.020	0.190	175	13.8
8"	8.00	8.38	0.060	0.110	0.020	0.190	150	6.1
10"	10.00	10.49	0.060	0.165	0.020	0.245	150	10.2
12"	12.25	12.74	0.060	0.165	0.020	0.245	125	5.7
14"	14.25	14.78	0.060	0.165	0.040	0.265	100	3.6
16"	16.25	16.78	0.060	0.165	0.040	0.265	100	2.5
18"	18.25	18.85	0.060	0.220	0.020	0.300	100	4.2
20"	20.25	20.85	0.060	0.220	0.020	0.300	100	3.1
24"	24.25	24.96	0.060	0.275	0.020	0.355	100	3.5
30"	30.50	31.32	0.060	0.330	0.020	0.410	100	3.1

*All values are nominal. Minimum wall thickness shall not be less than 87.5% of nominal wall thickness in accordance with ASTM D2996.

Support Spans* and Capacities at 75°F

NOM PIPE DIA	TYPE I SIMPLE SPAN (FT)	TYPE II MAX CONT SPAN (FT)	TYPE IV FIXED END SPAN (FT)	MIN BEND RADIUS (FT)	WT/FT (LBS)	CAP (GAL/FT)
2"	8.6	10.1	12.9	44	0.74	0.14
3"	10.3	12.0	15.3	69	1.36	0.37
4"	11.4	13.3	17.0	93	1.79	0.65
6"	13.1	15.3	19.5	139	2.97	1.47
8"	14.4	16.9	21.5	185	3.93	2.61
10"	16.3	19.1	24.4	231	6.34	4.08
12"	17.3	20.3	25.8	284	7.73	6.12
14"	18.0	21.1	27.0	330	9.72	8.28
16"	18.7	21.9	27.9	376	11.05	10.77
18"	20.5	24.0	30.6	422	14.06	13.59
20"	21.1	24.7	31.5	469	15.57	16.73
24"	23.2	27.2	34.7	561	22.06	23.99
30"	25.7	30.1	38.4	706	32.01	37.95

***NOTE:** Span deflection = ½" with fluid of 1.0 specific gravity

Span multipliers for fluids of different specific gravities

FLUID SPECIFIC GRAVITY							
AIR	0.75	0.9	1.0	1.1	1.25	1.5	2.0
1.40	1.07	1.02	1.0	0.98	0.95	0.90	0.84
(MULTIPLIER FOR CORRECTED SPAN LENGTHS)							

Span multipliers for fluids at different temperatures

FLUID TEMPERATURE						
75°F	100°F	150°F	200°F	225°F	250°F	275°F
1.0	0.98	0.93	0.88	0.84	0.80	0.75
(MULTIPLIER FOR CORRECTED SPAN LENGTHS)						

2 PD530E (12/14)

CALCULATION SHEET

Project No. S54413.024	**Calculation No.** S54413.024-M-001	**Rev.** 0	**Page No.** 154 of 192
Title: LERF Basin 41 Buried Piping Analysis			
Prepared By: JD Williams	**Date:** 5/13/20	**Checked By:** JS Huisingh	**Date:** 5/13/20

Conley Composites
an ANDRONACO INDUSTRIES company

EPOXY SCHEDULE 40/30 DOUBLE CONTAINED PIPING

ASTM DESIGNATION CODE RTRP-11FW1-2113

Conley Product Data

RUGGED TOP OF THE LINE PERFORMANCE ~ AFFORDABLE COST

Description

- Extra heavy duty filament wound piping for service up to 150 psi
- 60 mil double Nexus® reinforced corrosion barrier (inner liner)
- Premium aromatic amine cured product for operating temperatures up to 275°F
- Sizes available from 2" through 30"
- Complete line of filament wound fittings available
- In house fabrication facilities "From your blueprints to pipe assemblies"
- Color coding available
- Patented interlocking union for thermal expansion (US Patent #5449204 & 5368338)
- See Sch 40/30 Specification
- See Sch 40 Product Data
- See Sch 30 Product Data

Typical Applications

- Waste water treatment
- Steel pickling
- Automotive
- Petrochemical
- Pharmaceutical
- Chemical processing
- Brine and brackish water
- Jet fuel
- Gasoline – Diesel – Fuel Oil
- Cooling water
- Odor control
- Industrial waste
- Food and beverages
- Bridge, roof and floor drains

Performance

- Excellent chemical resistance inside and outside to a variety of caustics, acids, brines and petroleum products ~ See the chemical resistance chart for fluid services
- External UV/Corrosion barrier minimum 10/20 mil on all pipe and fittings
- 25 year guarantee against *'fiber blooming'* on all pipe and fittings
- Straight socket joining system (No expensive tapering tools required)

Specifications

- ASTM D2996 Filament-Wound "Fiberglass" Pipe
- ASTM D2310 Classification for Machine-Made "Fiberglass" Pipe
- ASTM D3567 Determining Dimensions of "Fiberglass" Pipe and Fittings
- ASTM D4024 Machine Made "Fiberglass" Flanges
- ASTM D5685 "Fiberglass" Pressure Pipe Fittings

Codes & Standards

- AWWA C950 Fiberglass Pressure Pipe Standards
- ASME B31.1 Power Piping Code
- ASME B31.3 Process Piping Code

Listings

- U.S. Federal Regulations FDA 21 CFR 175.300

Application Legislation

- 40 CFR 280. RCRA, Subtitle 1
- 40 CFR 264/5
- CERCLA "Superfund Act"

PDS4030E (12/14) 1

Sargent & Lundy Engineering Services, Inc.

CALCULATION SHEET

Project No. S54413.024	**Calculation No.** S54413.024-M-001	**Rev.** 0	**Page No.** 155 of 192
Title: LERF Basin 41 Buried Piping Analysis			
Prepared By: JD Williams	**Date:** 5/13/20	**Checked By:** JS Huisingh	**Date:** 5/13/20

Typical Properties

TEMPERATURE	75°F	250°F	
PROPERTY	VALUE	VALUE	METHOD
AXIAL TENSILE STRENGTH	14,200 psi	10,650 psi	ASTM D2105
AXIAL TENSILE DESIGN STRENGTH	3,550 psi	2,660 psi	ASTM D2105
AXIAL MODULUS OF ELASTICITY	1.75×10^6 psi	1.30×10^6 psi	ASTM D2105
COMPRESSIVE STRENGTH	22,750 psi	17,000 psi	ASTM D695
COMPRESSIVE DESIGN STRENGTH	5,685 psi	4,250 psi	ASTM D695
COMPRESSION MODULUS	2.80×10^6 psi	2.10×10^6 psi	ASTM D695
POISSON'S RATIO $V_{a/h}$ ($V_{h/a}$)	0.33 (0.23)		*CONLEY METHOD #20
BEAM BENDING, ULTIMATE STRESS	30,000 psi	22,500 psi	CONLEY METHOD 8
BEAM BENDING, DESIGN STRESS[1]	3,750 psi	2,810 psi	CONLEY METHOD 8
SHEAR MODULUS	1.30×10^6 psi	1.00×10^6 psi	*CONLEY METHOD #9
HYDROSTATIC DESIGN BASIS	16,000 psi	8,000 psi	ASTM D2992 PROCEDURE B
HYDROSTATIC BURST (WALL STRESS @ 72°F)	32,000 psi	24,000 psi	ASTM D1599
CIRCUMFERENTIAL MODULUS OF ELASTICITY	2.50×10^6 psi	1.87×10^6 psi	ASTM D1599
FLEXURAL MODULUS OF ELASTICITY	1.75×10^6 psi	1.30×10^6 psi	ASTM 2790
COEFFICIENT OF LINEAR THERMAL EXPANSION	9.5×10^{-6} IN / IN- °F		CONLEY METHOD 3
COEFFICIENT OF THERMAL CONDUCTIVITY	2.9 BTU/HR-IN / FT^2 - °F		CONLEY METHOD 16
SPECIFIC GRAVITY	1.85		
DENSITY	0.067 LB/CU IN		
DIELECTRIC STRENGTH	535 VOLTS / MIL		ASTM D149
DEGREE OF CURE	175°C (347°F) Tg		DMA
HEAT DEFLECTION TEMPERATURE	150°C (302°F)		ISO 75-3
FLOW FACTOR (HAZEN-WILLIAMS)	150		
SURFACE ROUGHNESS	1.7×10^{-5} FEET		
MANNING'S "n"	0.009 INCH		

[1] Beam bending design stress is 1/8 of ultimate to allow for combined stress (bending and pressure)

PDS4030E (12/14) 5

Sargent & Lundy Engineering Services, Inc.

CALCULATION SHEET

Project No. S54413.024	**Calculation No.** S54413.024-M-001	**Rev.** 0	**Page No.** 156 of 192
Title: LERF Basin 41 Buried Piping Analysis			
Prepared By: JD Williams	**Date:** 5/13/20	**Checked By:** JS Huisingh	**Date:** 5/13/20

(Conley Literature)

Buried Pipe

A successful buried Conley Piping System requires proper fabrication, curing and handling. Equally important is trench design, bedding, backfill, and soil coverage of the pipe system.

Fiberglass pipe and fittings are sensitive to impact loads and must be handled accordingly. Refer to the Conley Installation and Fabrication Manual for shipping, handling, storage and inspection of Conley Fiberglass Pipe page 1. For dimensional data and tables of pipe weights refer to the Conley Products section.

Conley Piping Systems use a straight socket adhesive joining system that is totally restrained. Except in cases of very high pressure and/or temperature, thrust blocks at changes in direction are not required.

For burial applications, Conley Fiberglass pipe is considered to be a *"flexible conduit"*. Buried piping is considered to be "continuously anchored" and therefore very stable. Conley piping requires typical burial requirements for fiberglass pipe, i.e., shaped trench bottom, select granular bedding and backfill compacted to 90% Proctor Density and pavement or sleeves to provide load distribution for live loads.

In double containment piping systems, the containment pipe will remain at essentially ground temperature so thrust blocks are not normally required. Trench, bedding, and backfill materials are all specified and controlled to provide the required support for the pipe under the burial loads.

A. Trench Design and Burial Depths

One purpose of the trench is to provide working space while installing the pipe. Nominal trench widths are listed in the table below.

Table 1 Nominal Trench Widths

Pipe Size (in)	Minimum (in)	Maximum (in)
1	18	26
1 1/2	18	26
2	18	26
2 1/2	18	27
3	18	27
4	18	28
6	20	30
8	23	32
10	25	34
12	28	36
14	31	38
16	33	40
18	36	42
20	39	44
24	44	48
30	52	56

The maximum and minimum burial depths vary with diameter, soil conditions, loading conditions and pipe schedule. On the conservative side of planning and with a backfill modulus or shear strength of 1,500 lbs/ft^2, the minimum burial depth of pipe under unpaved areas is two feet.

This depth of cover assumes a tandem axle wheel load of 34,000 pounds.

For soils that do not meet the shear strength of 1,500 lbs/ft^2 or if the axial load is higher than the standard the minimum pipe burial depth will be greater than 3 feet.

The minimum burial depth may be reduced if the pipe is buried under concrete or asphalt. Maximum burial depths are usually limited to 20-ft, but may be greater if the trench and bedding are designed for greater depth.

- 1 -

CALCULATION SHEET

Project No. S54413.024	**Calculation No.** S54413.024-M-001	**Rev.** 0	**Page No.** 157 of 192
Title: LERF Basin 41 Buried Piping Analysis			
Prepared By: JD Williams	**Date:** 5/13/20	**Checked By:** JS Huisingh	**Date:** 5/13/20

(Caley Literature)

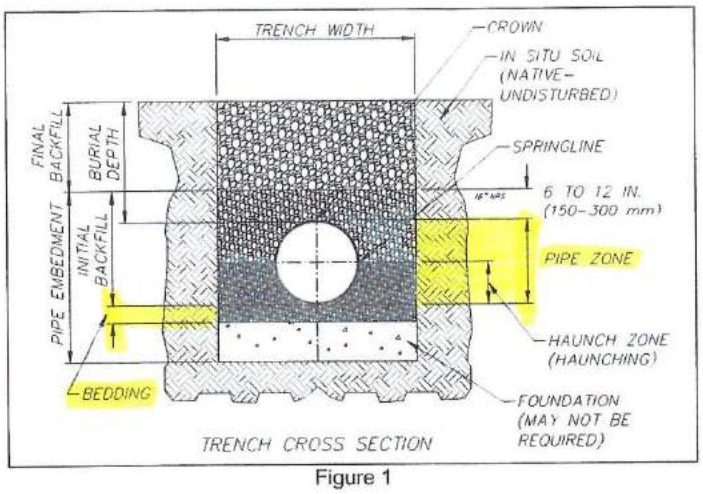

Figure 1

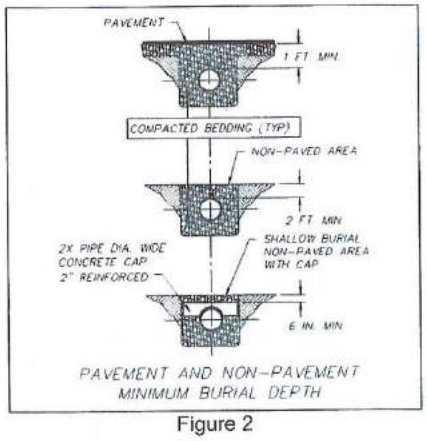

Figure 2

Table 2 Bedding and Backfill Materials Recommendation

Stiffness category (Reference for AWWA M45)	Backfill Material	Compaction (%) necessary
SC1	Crushed rock 15% or less sand, maximum 25% (passing 3/8inch sieve and maximum 5%)	No compaction required
SC2	Clean coarse-grained soils (12% or less)	75-85
SC3	Coarse-grained soils (more than 12%)	85-95
SC4	Fine-grained soils (30% or less)	More than 95

B. Bedding & Backfill

Typical burial requirements for fiberglass pipe require a fully supported and uniform trench bottom, avoiding sharp angular rocks and or voids in the bedding material. Full longitudinal support must be met.

If more than one pipe is to be laid in a trench at least six inches of properly supported backfill should separate the two pipe lines.

Generally, the most successful bedding and pipe zone embedment material is crushed rock or pea gravel under the SC1 Stiffness Category per ASTM D2487 Standard Classification of soils for Engineering Purposes. S1 material will provide good support for the pipeline even if it is only dumped rather than compacted. Still it is better to work the bedding material into the critical zone of the trench as shown below in Figure 3.

- 2 -

RPP-CALC-63780, Rev. 0

CALCULATION SHEET

Project No. S54413.024	**Calculation No.** S54413.024-M-001	**Rev.** 0	**Page No.** 158 of 192
Title: LERF Basin 41 Buried Piping Analysis			
Prepared By: JD Williams	**Date:** 5/13/20	**Checked By:** JS Huisingh	**Date:** 5/13/20

CR DIA	CT DIA	CR = CARRIER Ai	Ao	Bi	CT = CONTAINMENT Bo	Ci	Co
1 1/2	3	2 9/16	4 1/16	1 5/16	1 1/2	1 1/4	2 9/16
2	4	3 3/16	5 3/8	1 1/2	2 1/8	1 11/16	3 1/4
3	6	4 1/4	7 1/4	2	3	2 1/4	4 1/4
4	8	5 5/8	8 5/8	2 5/8	3 1/4	3	5 3/8
6	10	7 5/8	10 3/8	3 1/2	3 1/2	4 1/8	6 7/8
8	12	8 5/8	12 3/4	3 3/4	4	4 7/8	8 3/4
10	14	10 3/8	14 5/8	4	4 1/4	6 3/8	10 3/8
12	16	12 3/4	17 5/8	4 1/2	4 7/8	8 1/4	12 3/4
14	18	15 1/8	20	4 3/4	4 7/8	10 3/8	15 1/8
16	20	15 1/2	20 3/8	5 3/8	4 7/8	10 1/8	15 1/2

* * *

CONTACT CONLEY FOR INFORMATION ON NON-STANDARD SIZES

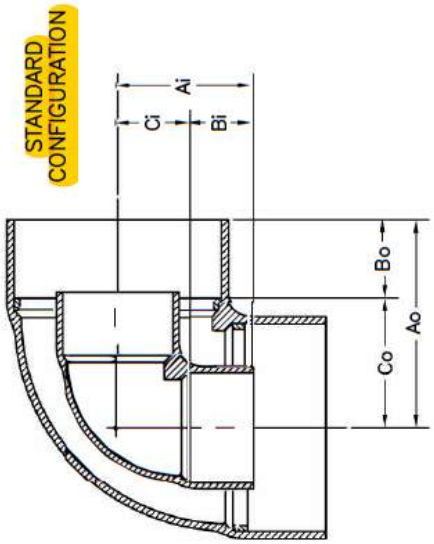

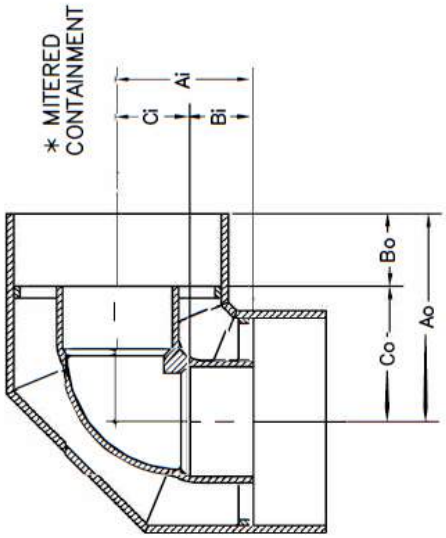

THIS FITTING IS PROTECTED UNDER U.S. PATENT NO. 5,449,204

Conley Composites
an ANDRONACO INDUSTRIES company

#200 DOUBLE CONTAINMENT 90° ELBOW

R5

200

RPP-CALC-63780, Rev. 0

CALCULATION SHEET

Project No. S54413.024	**Calculation No.** S54413.024-M-001	**Rev.** 0	**Page No.** 159 of 192
Title: LERF Basin 41 Buried Piping Analysis			
Prepared By: JD Williams	**Date:** 5/13/20	**Checked By:** JS Huisingh	**Date:** 5/13/20

	CR = CARRIER			CT = CONTAINMENT			
CR DIA	CT DIA	Ai	Ao	Bi	Bo	Ci	Co
1 1/2	3	2 5/16	3 1/8	1 5/16	1 1/2	1	1 5/8
2	4	2 9/16	4 1/2	1 1/2	2 1/8	1 1/16	2 3/8
3	6	3 5/8	5 1/2	2	3	1 5/8	2 1/2
4	8	4 1/2	6 7/16	2 5/8	3 1/4	1 7/8	3 3/16
6	10	5 1/2	7 9/16	3 1/2	3 1/2	2	4 1/16
8	12	6 7/16	8 7/8	3 3/4	4	2 11/16	4 7/8
10	14	7 9/16	9 3/4	4	4 1/4	3 9/16	5 1/2
12	16	8 7/8	11 1/4	4 1/2	4 7/8	4 3/8	6 3/8
14	18	9 3/4	11 7/8	4 3/4	4 7/8	5	7
16	20	11 1/4	12 1/4	5 3/8	4 7/8	5 7/8	7 3/8

CONTACT CONLEY FOR INFORMATION ON NON-STANDARD SIZES

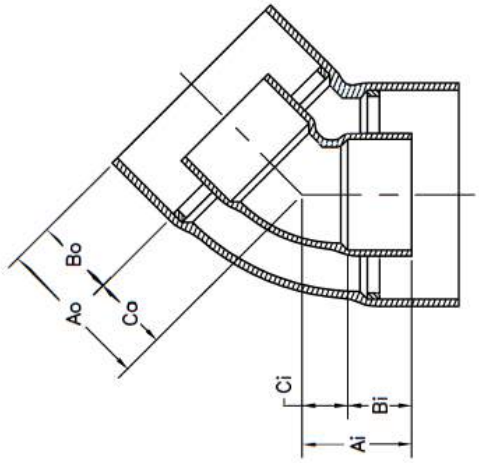

THIS FITTING IS PROTECTED UNDER U.S. PATENT NO. 5,449,204

Conley Composites
an ANDRONACO INDUSTRIES company

#202 DOUBLE CONTAINMENT 45° ELBOW

R2

CALCULATION SHEET

Project No. S54413.024	**Calculation No.** S54413.024-M-001	**Rev.** 0	**Page No.** 160 of 192
Title: LERF Basin 41 Buried Piping Analysis			
Prepared By: JD Williams	**Date:** 5/13/20	**Checked By:** JS Huisingh	**Date:** 5/13/20

From: David Chaney <dchaney@andronaco.com>
Sent: Wednesday, January 22, 2020 11:52 AM
To: WILLIAMS, JACOB D <jacob.d.williams@sargentlundy.com>
Cc: Matt Burdick <mburdick@andronaco.com>; Niki Reyff <nreyff@andronaco.com>
Subject: Re: Tensile Strength Questions

Jacob,

The reinforcement thickness of Conley fittings is greater than their piping counter parts. Conley 4" series 40 pipe has a reinforcement thickness of .160" Conley 4" fittings have a reinforcement thickness .295".

Size.	Pipe reinforcement	Fitting reinforcement
3"	.135"	.295"
4"	.160"	.295"
6"	.205"	.410"
8"	.220"	.410"

Conley fittings from series 30, & 4 0 are wound with the same reinforcement thickness; the series 50 fittings have the inner liner thickness increased from .060" to 100" with the same reinforcement thickness. Conley series 90-150 over 14" have a heavier reinforcement thickness. Series 90-250 fittings over 10" have a heavier reinforcement thickness.

The fundamentals of anchoring, guiding, and supporting the FRP piping systems apply to both the carrier and the containment. Conley places 3 spiders on each 20' section of pipe placed at 5', 10', and 15' measured from the same end. This placement of spiders makes for a span of no more than 10' when piping sections are connected. Fittings are supplied fitting in fitting with spiders on each side of the fitting. These spiders serve as anchor the carrier and containment together ant each fitting. The containment will still require anchors at every change in direction, change in pipe size, change of material and or manufacturer, and every 300' on any straight of pipe.

Thank You,

David Chaney

CALCULATION SHEET

Project No. S54413.024	**Calculation No.** S54413.024-M-001	**Rev.** 0	**Page No.** 161 of 192
Title: LERF Basin 41 Buried Piping Analysis			
Prepared By: JD Williams	**Date:** 5/13/20	**Checked By:** JS Huisingh	**Date:** 5/13/20

Explanation of Hydrostatic Design Basis & Qualified Stress Using ASTM D2992 & ISO 14692

From: Matt Burdick <mburdick@andronaco.com>
Sent: Thursday, February 6, 2020 1:46 PM
To: WILLIAMS, JACOB D <jacob.d.williams@sargentlundy.com>
Cc: Niki Reyff <nreyff@andronaco.com>; David Chaney <dchaney@andronaco.com>
Subject: RE: Hydrostatic Design Basis & Qualified Stress

Jacob,

As we discussed before, the difference in our published HDB and the ISO-14692 qualified stress are the differences between the ISO mythology and the ASTM methodology for these established ratings or allowable / design stresses. The main difference is the duration and if it is based on the mean data or the lower confidence level of the established data. The qualified stresses per ISO 14692 result in slightly more conservative numbers than directly following the ASTM methods.

ASTM D2992 has the manufacturer calculate the Long Term Hydrostatic Strength (LTHS) at 100,000 hrs (~11.5 yrs) and 438,000 hrs (50 yrs) and establishes the Hydrostatic Design Basis (HDB) or allowable hoop stress σ(2:1) based on the range these values fall in. Our calculated values for the LTHS at 100,000 and 438,000 hrs are 17802psi and 16719 psi respectively. Following Table 1 of ASTM D2992 our established and published HDB is therefore 16,000 psi with this method as ASTM D2992 correlates an HDB per a given range of calculated LTHS.

From ASTM D2992:

TABLE 1 Hydrostatic Design Basis Categories by Procedure A or Procedure B

Hydrostatic Design Basis Category		Range of Calculated Values	
psi[A]	(kPa)	psi	(kPa)
2 500	(17 200)	2 400 to 3 010	(16 500 to 20 700)
3 150	(21 700)	3 020 to 3 820	(20 800 to 26 300)
4 000	(27 600)	3 830 to 4 790	(26 400 to 33 000)
5 000	(34 500)	4 800 to 5 990	(33 100 to 40 900)
6 300	(43 400)	6 000 to 7 590	(41 000 to 52 900)
8 000	(55 200)	7 600 to 9 590	(53 000 to 65 900)
10 000	(68 900)	9 600 to 11 990	(66 000 to 82 900)
12 500	(86 200)	12 000 to 15 290	(83 000 to 105 900)
16 000	(110 000)	15 300 to 19 990	(106 000 to 130 900)
20 000	(138 000)	19 000 to 23 990	(131 000 to 169 900)
25 000	(172 000)	24 000 to 29 990	(170 000 to 209 900)
31 500	(217 000)	30 000 to 37 990	(210 000 to 259 900)
40 000	(276 000)	38 000 to 47 000	(260 000 to 320 000)

[A] Standard stress levels chosen in accordance with ISO 3, Series R10

As we discussed, the ISO-14692 allows the use of ASTM D2992 to establish the qualified pressure as called out in ISO 14692-2 Table 1 and 6.2.3.1. The difference is that when establishing the qualified stress or pressure, which are relatable through product geometry (diameter and wall thickness), the time interval that is considered is 20 years or 175,200 hrs. ISO 14692 also takes the lower confidence level at this time instead of the mean value or the value established by the regression line. Since ASTM D2992 is establishing a hoop stress and our testing methodology was per ASTM D2992 Procedure B (static pressure) with unrestrained ends, the stress we are evaluating is σ(2:1) for the Lower confidence level at a 20 year time. So when considering ISO 14692 the 20 year lower confidence level hoop stress or $\sigma(2:1)_{20yrLCL}$ is σ_{qs}. This is the IS 14692 version of HDB, evaluated at the 20 year time with the conservancy that the lower confidence level brings. The other stresses in the envelope are relatable to the short term failure stresses or ultimate stresses in the different orientations through the F_{scale} factor.

I did have a typo in the design envelope that was originally sent, as you pointed out the qualified stress should have been 14,546 psi, not 14,544 psi, but this should be negligible in your analysis.

ISO 14692-3 Figure 2 shows the design envelope as shown below and describes the relationships between short term and qualified stresses rather well. Please note that σ_{qs} is a the hoop stress shown on the x-axis and that boundary of the long term design envelope.

CALCULATION SHEET

Project No. S54413.024	**Calculation No.** S54413.024-M-001	**Rev.** 0	**Page No.** 162 of 192
Title: LERF Basin 41 Buried Piping Analysis			
Prepared By: JD Williams	**Date:** 5/13/20	**Checked By:** JS Huisingh	**Date:** 5/13/20

From: WILLIAMS, JACOB D [mailto:jacob.d.williams@sargentlundy.com]
Sent: Thursday, February 6, 2020 3:06 PM
To: Matt Burdick
Cc: Niki Reyff; David Chaney
Subject: Hydrostatic Design Basis & Qualified Stress

Matt,

Thank you for the information you provided to me on the phone on Tuesday. I could still use your help in correlating what I understand to be the Conley-published design data we are to use in our design and analysis (hydrostatic design basis [HDB], etc.) with some of the numbers presented in the ISO-14692 design envelope data you provided. You told me that the hydrostatic design basis value that was determined by following Procedure B of ASTM D2992 is the same thing as the qualified stress, which I understand is the long-term hoop stress at 2:1 stress ratio, $\sigma_{hl}(2:1)$.

The $\sigma_{hl}(2:1)$ value shown on the design envelope is 14,544 psi. Was the idealized long-term envelope based on the 20-year testing? When I see the ASTM D2992-01 calculations you sent me, the lower confidence limit stress (LCL) for 20 years is 14,546 psi (nearly identical to 14,544 psi). Does this value represent the $\sigma_{hl}(2:1)$, which is (as I understand it) the qualified stress? If so, should the value that is reported in the published pipe typical properties data sheet for the HDB at 75° F be something less than 16,000 psi? Or are we to rely on the published data for these values (for reasons you can help me understand)?

I welcome your insight to help reconcile the published Conley HDB data with the test data, so I can ensure I am using the appropriate data in our design and analysis.

Thank you,

Jacob Williams, P.E.
Senior Mechanical/Structural Engineer
Sargent & Lundy
1-509-946-3300
Licensed in WA
www.sargentlundy.com

CALCULATION SHEET

Project No. S54413.024	**Calculation No.** S54413.024-M-001	**Rev.** 0	**Page No.** 163 of 192
Title: LERF Basin 41 Buried Piping Analysis			
Prepared By: JD Williams	**Date:** 5/13/20	**Checked By:** JS Huisingh	**Date:** 5/13/20

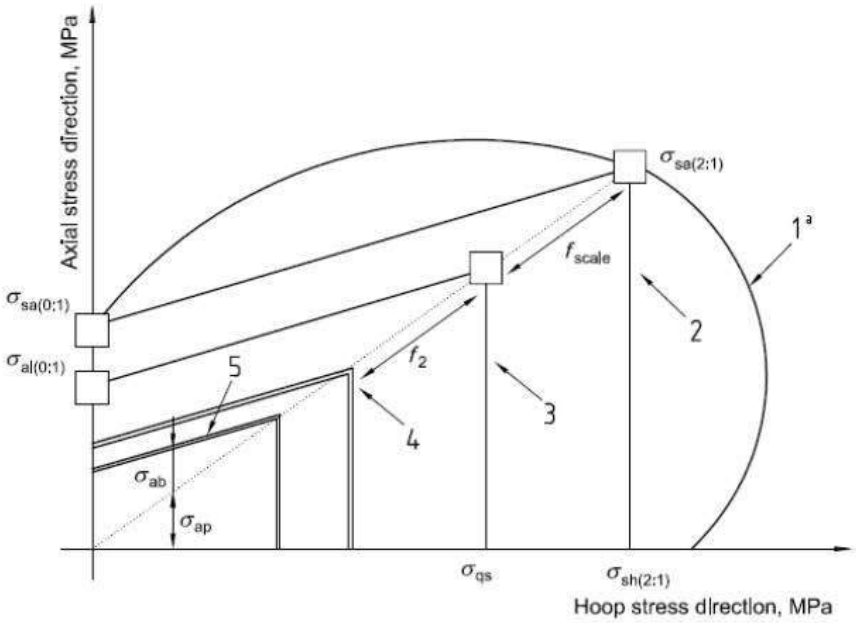

σ_{qs} is the qualified stress, in megapascals;

$\sigma_{al(0:1)}$ is the long-term axial (longitudinal) strength at 0:1 stress ratio, in megapascals;

$\sigma_{sa(0:1)}$ is the short-term axial strength at 0:1 stress ratio, in megapascals;

$\sigma_{sh(2:1)}$ is the short-term hoop strength at 2:1 stress ratio, in megapascals;

r is derived according to Equation (12).

$$f_{scale} = \frac{\sigma_{qs}}{\sigma_{sh(2:1)}} \qquad \sigma_{al(0:1)} = r \times \frac{\sigma_{qs}}{2} \qquad \text{and} \qquad r = 2 \cdot \frac{\sigma_{sa(0:1)}}{\sigma_{sh(2:1)}}$$

Per ISO 14692 the qualified pressure is basically the calculated $\sigma_{hl}(2:1)$ at a 20 year time considering the established statistical lower confidence level from logarithmic regression testing data, which capture various failure pressures at various time intervals.

$\sigma_{hl}(2:1)$

Thank you,
Matt Burdick
Senior Mechanical and Piping Engineer | Andronaco Industries
PureFlex | Nil-Cor | Ethylene | Hills-McCanna | RamParts Pumps | Polyvalve | Conley Composites
4855 Broadmoor Ave. SE | Kentwood, MI 49512
P: (616)554-4600 x174 | F: (616)554-9889
E: mburdick@andronaco.com

CALCULATION SHEET

Project No. S54413.024	**Calculation No.** S54413.024-M-001	**Rev.** 0	**Page No.** 164 of 192
Title: LERF Basin 41 Buried Piping Analysis			
Prepared By: JD Williams	**Date:** 5/13/20	**Checked By:** JS Huisingh	**Date:** 5/13/20

Conley Composites
an ANDRONACO INDUSTRIES company

ASTM D2992-01 Calculations

01/17/20
Calculations by MJB

Specimen Identification

Material Type: Glass Fiber Reinforced Epoxy Resin Pipe with liner
Manufacturer: Conley Corporation, Kentwood, MI
Manufacturer's Code: Schedule 40
Nominal Size Tested: 2"

Test Conditions

Test Method: ASTM D2992-01 Procedure B per ASTM D1598-97
End Closure: Free-End, 4-Bolt Steel Flange w/ Backer Rings
Test Temperature: 75°F
Environment: Interior-Water; Exterior-Air
Test Dates: 10/03/2001 to 07/14/2004

Long Term Hydrostatic Strength (100,000 hr Stress and 150,000 hr Stress)

$LTHS_{100k}$: 17,802 psi *122.7 Mpa* $LTHS_{150k}$: 17,498 psi *120.6 Mpa*

20 Year Stress (175,200 hrs)

20yr: 17,383 psi *119.8 Mpa*

50 Year Stress (438,000 hrs)

50yr: 16718.8 psi *115.3 Mpa*

Lower Confidence Limits

LCL_{100k}: 15,118 psi *104.2 Mpa* LCL_{150k}: 14,703 psi *101.4 Mpa* LCL_{20yr}: 14,546 psi *100.3 Mpa* LCL_{50yr}: 13,653 psi *94.1 Mpa*

Lower Prediction Limits

LPL_{100k}: 13,100 psi *90.3 Mpa* LPL_{150k}: 12,802 psi *88.3 Mpa* LPL_{20yr}: 12,688 psi *87.5 Mpa* LPL_{50yr}: 12,029 psi *82.9 Mpa*

Coefficient of Correlation

r: 0.6186

Hydrostatic Design Basis

$HDB_{100k\ (ASTM\ D2992\ Table\ 1)}$: **16000** psi *110.3 Mpa*

Regression Equation

log(stress)= 4.4631 -0.0425 * log(time)

CALCULATION SHEET

Project No. S54413.024	**Calculation No.** S54413.024-M-001	**Rev.** 0	**Page No.** 165 of 192
Title: LERF Basin 41 Buried Piping Analysis			
Prepared By: JD Williams	**Date:** 5/13/20	**Checked By:** JS Huisingh	**Date:** 5/13/20

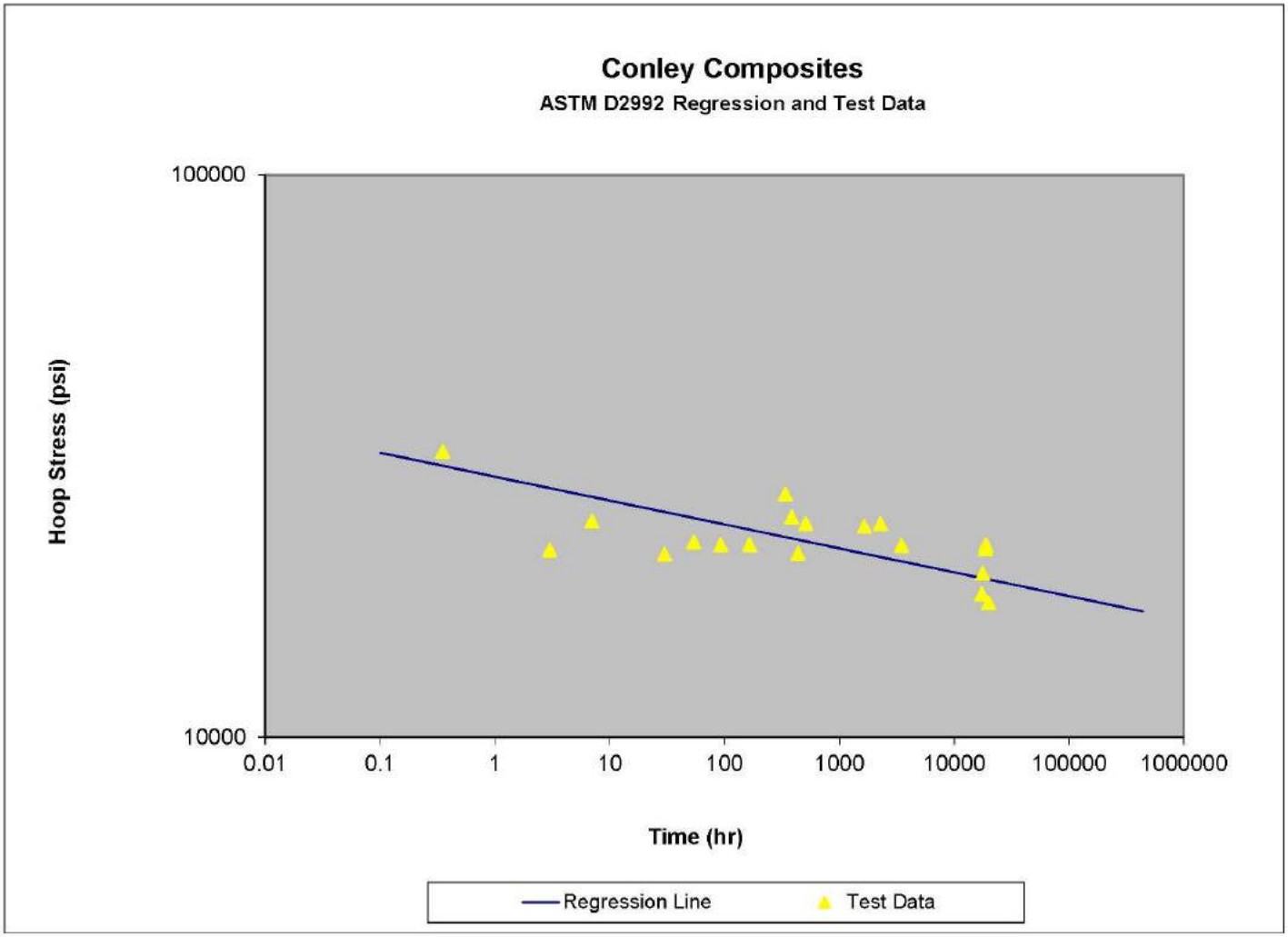

CALCULATION SHEET

Project No. S54413.024	**Calculation No.** S54413.024-M-001	**Rev.** 0	**Page No.** 166 of 192
Title: LERF Basin 41 Buried Piping Analysis			
Prepared By: JD Williams	**Date:** 5/13/20	**Checked By:** JS Huisingh	**Date:** 5/13/20

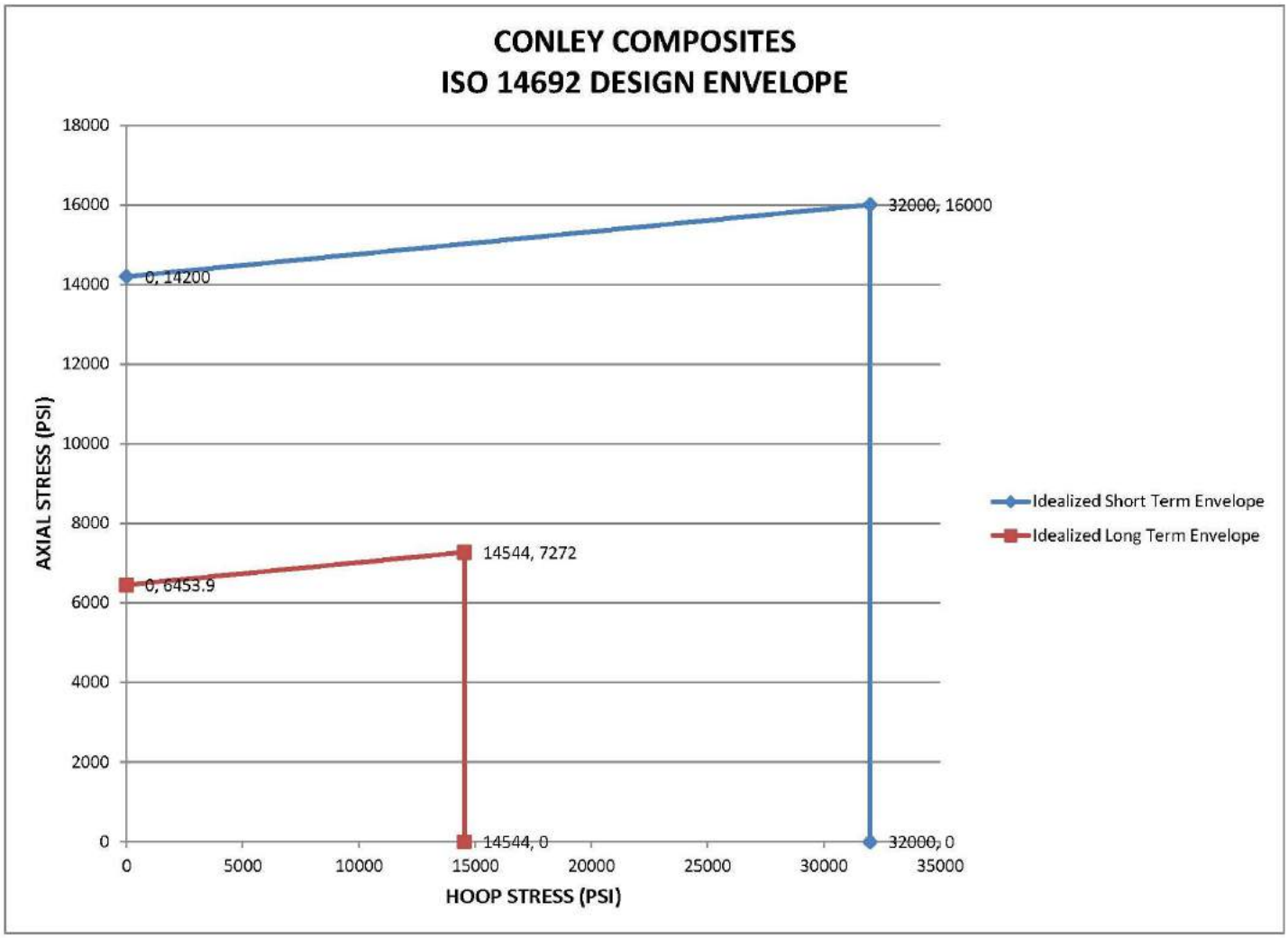

CALCULATION SHEET

Project No. S54413.024	**Calculation No.** S54413.024-M-001	**Rev.** 0	**Page No.** 167 of 192
Title: LERF Basin 41 Buried Piping Analysis			
Prepared By: JD Williams	**Date:** 5/13/20	**Checked By:** JS Huisingh	**Date:** 5/13/20

From: David Chaney <dchaney@andronaco.com>
Sent: Thursday, February 6, 2020 4:51 AM
To: WILLIAMS, JACOB D <jacob.d.williams@sargentlundy.com>; Niki Reyff <nreyff@andronaco.com>
Subject: Re: Connecting to Existing Pipe

Jacob,

(1.) When connecting Conley FRP pipe with FRP pipe from a different manufacture Conley will manufacture an adapter fitting to make the connection if difference in diameter greater than 0.040".

(2.) Bonding of FRP pipe is a mechanical bond that relies on good preparation and cleanliness. Epoxy will bond to Epoxy as well as Vinyl FRP pipe.

(3.) Generally, it is recommended that an anchor be installed when mating to piping from a different manufacture. In this case the anchor will not be required. As stated, the buried pipe will see low temperature fluctuations.

Thank You,
David Chaney

On Wed, Feb 5, 2020 at 4:23 PM WILLIAMS, JACOB D <jacob.d.williams@sargentlundy.com> wrote:

Dave,

I just wanted to have you confirm some of the details that we discussed on our phone call this morning. Please let me know if you agree with the following; or if you do not, or if something needs clarification, can you please change it to read differently as you deem appropriate:

1. Mating up with the same nominally-sized pipe (e.g. 4") is achieved using repair couplings even if the actual ODs of the existing and new pipes differ slightly (~1/16" difference in *OD* is acceptable). If the discrepancy between ODs is much larger than that, Conley Composites will simply fabricate custom couplings that match the ODs of the existing and new pipe.
2. Since the existing and new pipes are made with epoxy-type resins, there will not be any adhesion issues between the glue and the pipes for both the existing and new pipes.
3. The difference in pipe strengths and flexibility between the existing and new pipes will not pose a large issue since the system is double-contained, buried, and the 3" or 4" carrier pipe is internally guided at lengths not to exceed 10'. Also, the buried pipe will not see large ambient fluctuations in temperature.

Thank you,

Jacob Williams, P.E.
Senior Mechanical/Structural Engineer
Sargent & Lundy
1-509-946-3300
Licensed in WA
www.sargentlundy.com

ATTACHMENT 3

EXISTING FRP PIPE DATA

- Fibercast FRP Pipe Data
- Bondstrand FRP Pipe Data

Sargent & Lundy Engineering Services, Inc.

CALCULATION SHEET

Project No. S54413.024	**Calculation No.** S54413.024-M-001	**Rev.** 0	**Page No.** 169 of 192
Title: LERF Basin 41 Buried Piping Analysis			
Prepared By: JD Williams	**Date:** 5/13/20	**Checked By:** JS Huisingh	**Date:** 5/13/20

Fibercast®
World Leader In Composite Piping Systems

CENTRICAST III™ EP

Third Generation Composites

CENTRICAST III EP offers the benefits and advantages of our heavy-duty centrifugally cast pipe grades with the economics of less expensive filament wound epoxy piping. CENTRICAST III EP is manufactured from high-strength glass fabrics and our highly resilient formulation of epoxy resin. This pipe grade is available either plain end x plain end or bell x plain end.

Fluid Temperatures up to 225° F.

CENTRICAST III EP is manufactured in standard iron pipe sizes 1½"–14" in nominal 20-foot lengths. This quality piping system is rated at 150 psi up to 225° F. Higher pressures with special fittings are available on request. It is lightweight, easy to fabricate and has excellent flow capabilities. Also, CENTRICAST III EP has excellent corrosion and abrasion resistance, making it ideal for many industrial applications.

Superior to Filament Wound Pipe

CENTRICAST III EP is stronger and more corrosion resistant than filament wound pipe. Our unique glass reinforcements have continuous glass fibers oriented in both hoop and axial directions for maximum resistance to piping stresses. The hoop fibers provide excellent internal pressure capabilities, while the axial fibers provide much higher axial tensile and beam bending strength capabilities for unsupported span situations.

100% Pure Resin Corrosion Barrier

CENTRICAST III EP has a corrosion barrier of 50 mils of 100% pure resin. This 100% pure resin barrier provides much better corrosion and abrasion resistance than common glass-filled liners in filament wound pipe. Also, CENTRICAST III EP is easier and less expensive to fabricate than competitive filament wound piping and welded metallic systems.

RPP-CALC-63780, Rev. 0

Sargent & Lundy Engineering Services, Inc.

CALCULATION SHEET

Project No. S54413.024	**Calculation No.** S54413.024-M-001	**Rev.** 0	**Page No.** 170 of 192
Title: LERF Basin 41 Buried Piping Analysis			
Prepared By: JD Williams	**Date:** 5/13/20	**Checked By:** JS Huisingh	**Date:** 5/13/20

Pipe Classification

For general industrial corrosive applications of pipe sizes 1½" – 14", the pipe shall be manufactured by the centrifugal casting process in accordance with ASTM D 2997 classification of RTRP, Type II, Grade 1, Class C, and have a nominal 50 mil pure resin corrosion barrier and a constant smooth IPS OD. The pipe, fittings and adhesive shall be made using the same type epoxy resin and be suitable for at least 150 psi at 225°F. using adhesive socket joints made in accordance with the manufacturer's recommendations. Higher pressures with special fittings are available on request. Field tapering or machining of pipe ends for joining with adhesive socket joints shall not be allowed.

Joining Systems

FIBERCAST®adhesive joints are assembled with our patented, high-strength adhesives. Our fittings are equipped with consistent, predetermined socket dimensions and positive landing areas for the mating pipe ends. Thorough sanding of the pipe OD and the mating fitting's socket is required prior to applying the adhesive for assembly.

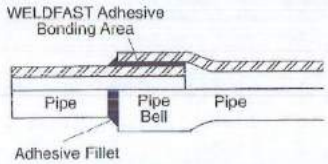

High-strength fabrications to close tolerances are easily accomplished with a minimum amount of time and tools. Order WELDFAST®440 epoxy adhesive for joining CENTRICAST III EP epoxy piping.

CENTRICAST III™EP Pipe

3"/6" (Evap.)

	Nominal Dimensions					Recommended Operating Data			
I.D.	Nominal Pipe Size (Inches)	OD	Total Wall Thickness (Inches)	Reinforcement Thickness (Inches)	Weight Per Foot (lbs.)	Internal Pressure at 225° F. (psi)	External Pressure at 75° F. (psi)	Axial Load at 75° F. (lbs.)	Capacity Gallons Per Foot
	1½	1.900	.140	.090	.45	1,045	865	4,008	.107
	2	2.375	.120	.070	.49	640	265	3,830	.186
3.26	3	3.500	.120	0.03" .070	.73	430	120	5,695	.434
	4	4.500	.120	.070	.95	330	43	7,355	.740
6.345	6	6.625	.140	0.055" .090	1.64	290	21	14,455	1.643
	8	8.625	.170	.120	2.60	295	14	23,540	2.801
	10	10.750	.190	.140	3.63	275	11	29,415	4.387
	12	12.750	.190	.140	4.32	235	7	41,860	6.243
	14	14.000	.220	.170	5.49	255	7	59,090	7.502

Unsupported Span (Feet) at Various Temperatures

Nominal Pipe Size (Inches)	75° F.	150° F.	175° F.	200° F.	225° F.
1½	11.8	11.2	11.0	10.7	10.4
2	12.0	11.3	11.1	10.8	10.6
3	13.4	12.7	12.4	12.1	11.8
4	14.3	13.5	13.3	12.9	12.6
6	16.9	15.9	15.6	15.2	14.8
8	19.4	18.3	17.9	17.5	17.0
10	20.0	20.0	19.7	19.2	18.7
12	20.0	20.0	20.0	20.0	19.6
14	20.0	20.0	20.0	20.0	20.0

The above spans are based on a 3-span continuous beam with maximum rated internal pressure and deflection considerations with pipe full of fluid, specific gravity 1.00 and 1/2" maximum deflection. For specific gravities other than 1, the following multipliers may be used:

Specific Gravity	Multipliers
1.25	.95
1.50	.90
2.00	.84
3.00	.76
Air	1.40

Values shown are based on long-term, elevated temperature test data.

Operating External Pressure at Various Temperatures (psi)

Nominal Pipe Size (Inches)	75° F.	150° F.	175° F.	200° F.	225° F.
1½	865	753	718	692	649
2	265	231	220	212	199
3	120	104	100	96	90
4	43	37	35	34	32
6	21	18	17	17	18
8	14	12	12	11	11
10	11	10	9	9	8
12	7	6	6	6	5
14	7	6	6	6	5

Ratings shown are 50% of ultimate.

14.7 psi external pressure is equal to full vacuum.

2

CALCULATION SHEET

Project No. S54413.024	**Calculation No.** S54413.024-M-001	**Rev.** 0	**Page No.** 171 of 192
Title: LERF Basin 41 Buried Piping Analysis			
Prepared By: JD Williams	**Date:** 5/13/20	**Checked By:** JS Huisingh	**Date:** 5/13/20

AMERON

Bondstrand Product Data

Series 4000 Fiberglass Pipe and Fittings

4"/8" WTP

for corrosive industrial service

Uses and applications	Acid drains Chemical process piping Corrosive slurries Food processing Geothermal Nonoxidizing acids
Listings	Meets USDA requirements for food processing piping under Federal Regulations 21CFR 175.105 and 21CFR 177.2420.
Performance	Working pressure from 150 to 450 psig (1 to 3.1 MPa) depending on pipe size. Withstands full vacuum in most sizes when properly bedded and backfilled. Operating temperatures to 300°F (150°C) and continuous service to 250°F (121°C) based on media. Subzero temperatures will not adversely affect mechanical properties. For temperatures above 250 to 300°F contact your Ameron representative. Excellent corrosion resistance over a wide temperature range. See Bondstrand Corrosion Guide FP132 for specific applications. Does, not require thrust blocks at ambient temperatures when properly installed in most soils. Smooth inner liner provides Hazen-Williams coefficient of 150 for lower friction losses and reduced pumping costs.
Joining systems	Quick-Lock® straight/taper adhesive-bonded joint featuring integral pipe stop in bell for predictable, precise laying lengths. Flanges and flanged fittings. Mechanical couplings (temperature and chemical resistance properties of system may be reduced).

© Ameron 1986 FP215 0 04/94 Printed in Holland

CALCULATION SHEET

Project No. S54413.024	**Calculation No.** S54413.024-M-001	**Rev.** 0	**Page No.** 172 of 192
Title: LERF Basin 41 Buried Piping Analysis			
Prepared By: JD Williams	**Date:** 5/13/20	**Checked By:** JS Huisingh	**Date:** 5/13/20

Composition

Pipe
Filament-wound fiberglass reinforced epoxy resin pipe with integral 0.050-inch (1.3 mm) resin-rich reinforced liner.

Nominal Pipe Size (in)	(mm)	ASTM Designation (D2996)
1	25	RTRP-11FE-1112
1½	40	RTRP-11FE-1114
2-6	50-150	RTRP-11FE-1112
8-16	200-400	RTRP-11FE-1113

Epoxy fittings
Filament-wound fittings furnished with reinforced liner using same materials as pipe.
Tees
90° and 45° elbows
Crosses
45° laterals
Nipples and couplings
Tapered body reducers
Molded
Reducing flanges
Plugs and end caps
Epoxy flanges
Filament-wound 1 - 16 inches (25 - 400 mm)
Compression molded 2 - 12 inches (50 - 300 mm)
Blind flanges
Compression molded 2 - 12 inches (50 - 300 mm)
Reducer bushings and plugs
Compression molded 2 - 12 inches (50 - 300 mm)
Metallic saddle reductions
316SS - ¼ - 1½ inches (6 - 40 mm)
Thermosetting adhesives
RP-34 two-part epoxy for field fabrication

Fittings

In all sizes
Elbows
Tees
Flanges and blind flanges Reducers
Nipples and couplings

In 2- to 12-inch (50-300 mm) sizes Compression-molded plugs, reducers and reducing flanges End caps
Crosses
Laterals
Laying lengths of fittings with Quick-Lock ends in 2-to 12-inch sizes match those of ANSI B16.9 steel buttwelding fittings.
Flanged ends match ANSI B16.1 and B16.5 bolt hole pattern and face-to-face dimensions for 150-lb flanges.

2

RPP-CALC-63780, Rev. 0

CALCULATION SHEET

Project No. S54413.024	**Calculation No.** S54413.024-M-001	**Rev.** 0	**Page No.** 173 of 192
Title: LERF Basin 41 Buried Piping Analysis			
Prepared By: JD Williams	**Date:** 5/13/20	**Checked By:** JS Huisingh	**Date:** 5/13/20

Bondstrand 4"/8" (WTP)

Pipe length

Nominal Pipe Size (in)	(mm)	Random Length (ft)	(m)
1-11/2	25-40	10	3
2-8	50-200	20,30,40	6,9,12
10-16	250-400	20,40	6,12

Typical pipe dimensions and weights

Nominal Pipe Size (in)	(mm)	Pipe ID (in)	(mm)	Nominal Wall Thickness* (in)	(mm)	Average** Sectional Area (in)	(mm)	Pipe Wt (lb/ft)	(kg/m)
1	25	.98	25	.169	4.3	.60	390	.4	.6
11/2	40	1.50	38	.214	5.4	1.11	730	.8	1.2
2	50	2.10	53	.160	4.1	1.13	730	.8	1.2
3	80	3.22	82	.160	4.1	1.70	1100	1.1	1.7
4	100	4.14	105	.206	5.2	2.73	1760	1.9	2.8
6	150	6.20	159	.206	5.2	4.06	2620	2.8	4.2
8	200	8.22	209	.229	5.8	5.83	3760	4.1	6.1
10	250	10.35	263	.229	5.8	7.31	4710	5.1	7.7
12	300	12.35	314	.229	5.8	8.69	5610	6.1	9.1
14	350	13.56	344	.250	6.3	10.40	6680	7.4	11.0
16	400	15.50	394	.286	7.3	13.40	8630	9.6	14.0

Conley OD	Δ	OD (in)
4.48"	0.072	4.552
8.60"	0.078	8.678

* Minimum wall thickness shall be not less than 87.5% of nominal wall thickness in accordance with ASTM D2996.
** Use these values for calculating longitudinal thrust.

Typical pipe performance

Nominal Pipe Size (in)	(mm)	Internal Pressure Rating (psig)	(MPa)	Ultimate Collapse Pressure * (psig)	(MPa)
1	25	600	4.12	7612	52.5
11/2	40	550	3.79	6103	42.1
2	50	450	3.10	635	4.38
3	80	320	2.21	174	1.20
4	100	350	2.41	246	1.70
6	150	250	1.72	71	0.49
8	200	220	1.52	48	0.33
10	250	175	1.21	24	0.17
12	300	150	1.03	14	0.10
14	350	150	1.03	15	0.10
16	400	150	1.03	17	0.12

* At 200°F (93°C) using RP-34 epoxy adhesive. For sustained service above 200°F reduce ratings linearly to 50% of values shown at 250°(121 °C). Above 250°F reduce linearly to 0 at 300°F (149°C).
* At 70°F (21°c) Reduce linearly to 90% at 150°F (66°C) and 85% at 250°F (121°c).

3

CALCULATION SHEET

Project No. S54413.024	**Calculation No.** S54413.024-M-001	**Rev.** 0	**Page No.** 174 of 192
Title: LERF Basin 41 Buried Piping Analysis			
Prepared By: JD Williams	**Date:** 5/13/20	**Checked By:** JS Huisingh	**Date:** 5/13/20

ATTACHMENT 4

AWWA M54 FIBERGLASS PIPE DESIGN DATA

Sargent & Lundy Engineering Services, Inc.	CALCULATION SHEET		
Project No. S54413.024	**Calculation No.** S54413.024-M-001	**Rev.** 0	**Page No.** 175 of 192
Title: LERF Basin 41 Buried Piping Analysis			
Prepared By: JD Williams	**Date:** 5/13/20	**Checked By:** JS Huisingh	**Date:** 5/13/20

Manual of Water Supply Practices

M45

Fiberglass Pipe Design

Third Edition

American Water Works Association

Copyright American Water Works Association
Provided by IHS Markit under license with AWWA
No reproduction or networking permitted without license from IHS

Copyright © 2014 American Water Works Association. All Rights Reserved.

Not for Resale, 01/22/2028 12:28:21 MST

Manual of Water Supply Practices—M45, Third Edition

Fiberglass Pipe Design

Copyright © 1996, 2005, 2014 American Water Works Association

All rights reserved. No part of this publication may be reproduced or transmitted in any form or by any means, electronic or mechanical, including photocopy, recording, or any information or retrieval system, except in the form of brief excerpts or quotations for review purposes, without the written permission of the publisher.

Disclaimer
The authors, contributors, editors, and publisher do not assume responsibility for the validity of the content or any consequences of their use. In no event will AWWA be liable for direct, indirect, special, incidental, or consequential damages arising out of the use of information presented in this book. In particular, AWWA will not be responsible for any costs, including, but not limited to, those incurred as a result of lost revenue. In no event shall AWWA's liability exceed the amount paid for the purchase of this book.

Project Manager/Senior Technical Editor: Melissa Valentine
Manuals Specialist: Molly Beach
Production Editor: Cheryl Armstrong

Library of Congress Cataloging-in-Publication Data

Fiberglass pipe design manual.
Fiberglass pipe design. -- Third edition / Richard C. Turkopp, Phillip Sharff.
pages cm -- (Manual of water supply practices ; M45)
Developed by the American Water Works Association, Fiberglass Pipe Design Manual Subcommittee chaired by Richard C. Turkopp and the Standards Committee on Thermosetting Fiberglass Reinforced Plastic Pipe chaired by Phillip Sharff.
Originally edition published as: Fiberglass pipe design manual. 1996.
Includes bibliographical references and index.
ISBN 978-1-58123-967-6 -- ISBN 978-1-61300-246-9 (eISBN) 1. Fiberglass pipe--Design and construction. 2. Water-pipes--Design and construction. I. Turkopp, Richard C. II. Sharff, Phillip. III. American Water Works Association. IV. Title.
TA448.F53 2013
628.1'5--dc23
2013028156

ISBN: 978-1-58321-967-6
eISBN: 978-1-61300-246-9

Printed in the United States of America

American Water Works Association
6666 West Quincy Avenue
Denver, CO 80235-3098
awwa.org

Printed on recycled paper

Copyright American Water Works Association
Provided by IHS Markit under license with AWWA
No reproduction or networking permitted without license from IHS

Copyright © 2014 American Water Works Association. All Rights Reserved.

Not for Resale, 01/22/2020 12:28:21 MST

CALCULATION SHEET

Project No. S54413.024	**Calculation No.** S54413.024-M-001	**Rev.** 0	**Page No.** 177 of 192
Title: LERF Basin 41 Buried Piping Analysis			
Prepared By: JD Williams	**Date:** 5/13/20	**Checked By:** JS Huisingh	**Date:** 5/13/20

6.4 IN SITU SOILS

Content Hidden for Copyright Purposes

6.5 EMBEDMENT MATERIALS

Content Hidden for Copyright Purposes

6.5.1 Soil Stiffness Classes

Class I. Use of Class I materials provides maximum pipe support for a given percent compaction due to low content of sand and fines. With minimum effort these materials

Content Hidden for Copyright Purposes

AWWA Manual M45
Copyright American Water Works Association
Provided by IHS Markit under license with AWWA
No reproduction or networking permitted without license from IHS
Copyright © 2014 American Water Works Association. All Rights Reserved.
Not for Resale, 01/22/2020 12:28:21 MST

CALCULATION SHEET

Project No. S54413.024	**Calculation No.** S54413.024-M-001	**Rev.** 0	**Page No.** 178 of 192
Title: LERF Basin 41 Buried Piping Analysis			
Prepared By: JD Williams	**Date:** 5/13/20	**Checked By:** JS Huisingh	**Date:** 5/13/20

Table 6-1 Soil classes

Soil Classes	Unified Soil Classification System Soil Groups*	American Association of State Highway and Transportation Officials (AASHTO) Soil Groups†
Class I	Crushed rock: ≤ 15% sand, maximum 25% passing the ⅜-in. sieve and maximum 5% passing No. 200 sieve‡	

Content Hidden for Copyright Purposes

NOTES:

* ASTM D2487, Standard Classification of Soils for Engineering Purposes (Unified Soil Classification System).

† AASHTO M145, Classification of Soils and Soil Aggregate Mixtures.

‡ Class I soils have higher stiffness than Class II soils, but data on specific soil stiffness values are not available at the current time. Until such data are available, the soil stiffness of placed, uncompacted Class I soils can be taken to be equivalent to Class II soils compacted to 95% of maximum Standard Proctor Density (SPD 95), and the soil stiffness of compacted Class I soils can be taken to be equivalent to Class II soils compacted to 100% of maximum Standard Proctor Density (SPD 100). Even if placed, uncompacted (i.e., dumped), Class I materials should always be worked into the haunch zone to assure complete placement, see Sec. 6.7.3.

Crushed rock is defined as angular and subangular per ASTM D2488 and D5821.

Content Hidden for Copyright Purposes

Copyright American Water Works Association
Provided by IHS Markit under license with AWWA
No reproduction or networking permitted without license from IHS

Copyright © 2014 American Water Works Association. All Rights Reserved.
Not for Resale, 01/22/2020 12:28:21 MST

CALCULATION SHEET

Project No. S54413.024	**Calculation No.** S54413.024-M-001	**Rev.** 0	**Page No.** 179 of 192
Title: LERF Basin 41 Buried Piping Analysis			
Prepared By: JD Williams	**Date:** 5/13/20	**Checked By:** JS Huisingh	**Date:** 5/13/20

ATTACHMENT 5

67246-024-RFI-002 – FLUID SPECIFIC GRAVITY

Sargent & Lundy Engineering Services, Inc.

CALCULATION SHEET

Project No. S54413.024	**Calculation No.** S54413.024-M-001	**Rev.** 0	**Page No.** 180 of 192
Title: LERF Basin 41 Buried Piping Analysis			
Prepared By: JD Williams	**Date:** 5/13/20	**Checked By:** JS Huisingh	**Date:** 5/13/20

REQUEST FOR INFORMATION

Section 1 ***(Subcontractor)***

Subcontract No.: 67246 Rel No.: 024 RFI No. *(Subcontract No.-Rel. No.-RFI-Seq. No.-Rev. No.)*: 67246-024-RFI-002-R0

Subcontract Title: LERF Basin 41 Engineering Design

Project Title: LERF Basin 41 Design Project No.: T1P226

RFI Title/Description: Basin 41 pump design criteria

RFI Initiated By: Paul Dorsh Phone: 946-3300 Date of Request: 12/2/2019

E-Mailed To: Phone: Response Requested By: 12/9/2019

Section 2 ***(Subcontractor)***

Reference Drawing or Document:

N/A

Proposed Change to Document(s)? ☐ Yes ☒ No

Description of Request/Recommendation:

The currently installed LERF Basin pumps consist of a Berkeley submersible pump mounted a 6" Franklin submersible motor. The design requires the motor to be mounted below the pump to ensure proper motor cooling has occurred. This inherently locates the pump suction approximately 31" above the basin floor. To perform a full basin pump down this configuration requires Operations to remove the pump assembly and replace with a temporary pump that has a lower suction elevation.

As a part of the Basin 41 design, a new pump assembly will be designed to facilitate a full basin pump down. To aid in the pump selection a few pump design requirements need to be determined:

1. What is the target flow rate of the new pump?
2. What is the maximum operating design temperature?
3. What is the orifice size of FO-60A-001 on H-2-88974? Where is this located on H-2-89183?
4. What is the maximum and minimum differential pressure of Influent Filter(s) 60B-FL-1A? Where are they located on H-2-89183?
5. What is the fluid density to be used in the flow calculation?
6. What is the fluid viscosity to be used in the flow calculation?

Recommendation:

It appears that previous LERF pump designs target flow rates were nominally 140gpm. Industry standard process fluid temperatures are nominally 100F. Flow rates and temperatures above these values are achievable but will reduce the pump options available.

For the 30% submittal 40psid, 1SpG, and 1cP was used for questions #4, #5, and #6 respectively. All values need to be confirmed and/or updated for the 60% design submittal.

Requestor: Paul Dorsh Date: 12/2/2019

Page 1 of 2 A-6003-417 (REV 10)

Sargent & Lundy Engineering Services, Inc.

CALCULATION SHEET

Project No. S54413.024	**Calculation No.** S54413.024-M-001	**Rev.** 0	**Page No.** 181 of 192
Title: LERF Basin 41 Buried Piping Analysis			
Prepared By: JD Williams	**Date:** 5/13/20	**Checked By:** JS Huisingh	**Date:** 5/13/20

REQUEST FOR INFORMATION (Continued)

Page 2 of 2

Section 1 *(Subcontractor)*

Subcontract No.: 67246 Rel No.: 024 RFI No. *(Subcontract No.-Rel. No.-RFI-Seq. No.-Rev. No.)*: 67246-024-RFI-002-R0

Subcontract Title: LERF Basin 41 Engineering Design

Project Title: LERF Basin 41 Design Project No.: T1P226

RFI Title/Description: Basin 41 pump design criteria

Section 3 (WRPS)

Response to Request:

Basin pump design criteria is as follows:

1. Target flow rate for basin pump is 75 gpm (normal) and 150 gpm (max).

2. Nominal process liquid temperature at the LERF basins is 60 deg. F.

3. Orifice size of FO-60A-001 is 1.361" (ref. FO-60A-001 tag details in SmartPlant Foundation (SPF), ECN-642756, and H-2-88974, Sheet 1, Rev 19, Zone F6; see attached). This flow-restricting orifice is located on H-2-89183, Sheet 1, Rev 7 in Zone C3 and on Sheet 2, Rev 1 in Zone C4 (see attached).

4. Maximum differential pressure across influent filters is 60 psid, but filters are normally changed when they reach 40 psid. Assume a differential pressure across clean filters of 2 psid.

5. Use 1.0 specific gravity for fluid density.

6. Use 1.0 cP for fluid viscosity.

Engineer/Position *(if applicable)*: Nathaniel Wilson (PRJ DA) Date:

Contract Change Required?	☐ Yes ☒ No	Contract Change Request/CAL No.:	
Engineering Review Necessary?	☒ Yes ☐ No	Date Sent to Engineering:	12/6/2019
DCN/ECN/EDT Required?	☐ Yes ☒ No	DCN/ECN/EDT No.:	
Applicable TOC-MT Required?	☒ Yes ☐ No	TOC-MT No.:	MT-50497
Clarification Only?	☒ Yes ☐ No		

Responder:

Nathaniel Wilson (PRJ DA) — *Print First and Last Name* — *Signature* — 12/16/19 *Date*

Buyer's Technical Representative (BTR):

Steven Shepherd — *Print First and Last Name* — *Signature* — 12/16/19 *Date*

Page 2 of 2 A-6003-417 (REV 10)

CALCULATION SHEET

Project No. S54413.024	**Calculation No.** S54413.024-M-001	**Rev.** 0	**Page No.** 182 of 192
Title: LERF Basin 41 Buried Piping Analysis			
Prepared By: JD Williams	**Date:** 5/13/20	**Checked By:** JS Huisingh	**Date:** 5/13/20

ATTACHMENT 6

PIPE INSULATION DATA

CALCULATION SHEET

Project No. S54413.024	**Calculation No.** S54413.024-M-001	**Rev.** 0	**Page No.** 183 of 192
Title: LERF Basin 41 Buried Piping Analysis			
Prepared By: JD Williams	**Date:** 5/13/20	**Checked By:** JS Huisingh	**Date:** 5/13/20

PHYSICAL AND THERMAL PROPERTIES OF FOAMGLAS® ONE™ INSULATION

PHYSICAL PROPERTIES	ASTM			EN ISO
	SI	ENGLISH	Method	Method
Absorption of Moisture (Water % by Volume)	0.2%	0.2%	C 240	EN 1609 EN 12087
	Only moisture retained is that adhering to surface cells after immersion			
Water-Vapor Permeability	0.00 perm-cm	0.00 perm-in	E96 Water Method Procedure B	EN 12086 EN ISO 10456
Acid Resistance	Impervious to common acids and their fumes except hydrofluoric acid			
Capillarity	None			
Combustibility & Reaction to Fire	Noncombustible - will not burn Flame Spread 0 Smoke Development 0		E 136 E84	EN ISO 1182 (Class A1)
Composition	Soda-lime silicate glass – inorganic with no fibers or binders			
Compressive Strength, Block	620 kPa	90 psi	C 165 C 240 C 552	EN 826 Method A
	Strength for flat surfaces capped with hot asphalt			
Density	120 kg/m^3	7.5 lb/ft^3	C 303	EN 1602
Dimensional Stability	Excellent—does not shrink, swell or warp			EN 1604 (DS 70/90)
Flexural Strength, Block	480 kPa	70 psi	C 203 C 240	EN 12089 (BS450)
Hygroscopicity	No increase in weight at 90% relative humidity			
Coefficient of Linear Thermal Expansion	9.0 x 10^{-6}/K 25°C to 300°C	5.0 x 10^{-6}/°F 75°F to 575°F	E 228	EN 13471
Maximum Service Temperature	482° C	900° F		
Modulus of Elasticity, Approx.	900 MPa	1.3 x 10^5 psi	C 623	EN 826 Method A1
Thermal Conductivity	W/mK 0.040 @ 10°C 0.042 @ 24°C	Btu-in/hr.ft^2.°F 0.28 @ 50°F 0.29 @ 75°F	C 177 C 518	EN 12667 EN 12939 ($\lambda_{D\ (90/90)}$ ≤ 0.041 W/mK @ 10° C)
Specific Heat	0.84 kJ/kg.K	0.18 Btu/lb.°F		
Thermal Diffusivity	4.2 x 10^{-7} m^2/sec	0.016 ft^2/hr		

Note: FOAMGLAS® ONE™ is manufactured to meet or exceed the minimum requirements of *ASTM C552 Standard Specification for Cellular Glass Insulation* (or most recent revision). Unless otherwise specified, measurements were collected using ASTM guidelines at 24°C (75°F) and are average or typical values recommended for design purposes and not intended as specification or limit values. Values under EN ISO are declared as limit values under the specific set of standard test conditions. Properties may vary with temperature. Where testing method or reporting values differ between ASTM and EN ISO methodologies, values are denoted within parentheses in the EN ISO column.

CALCULATION SHEET

Project No. S54413.024	**Calculation No.** S54413.024-M-001	**Rev.** 0	**Page No.** 184 of 192
Title: LERF Basin 41 Buried Piping Analysis			
Prepared By: JD Williams	**Date:** 5/13/20	**Checked By:** JS Huisingh	**Date:** 5/13/20

ATTACHMENT 7

CONLEY COMPOSITES AWWA M45 EXTERNAL LOADING CALCULATIONS

RPP-CALC-63780, Rev. 0

CALCULATION SHEET

Project No. S54413.024	**Calculation No.** S54413.024-M-001	**Rev.** 0	**Page No.** 185 of 192
Title: LERF Basin 41 Buried Piping Analysis			
Prepared By: JD Williams	**Date:** 5/13/20	**Checked By:** JS Huisingh	**Date:** 5/13/20

```
AWWA Manual M45              Project: 6" series 30                                  <INPUT
Pipe Burial Design          Customer: Sargent & Lundy                               <INPUT
Date:    05/12/20            Contact: Jacob Williams                                <INPUT
       Nominal Pipe Diameter,                          D =      6  in
                                                REINF WALL =   0.11  in
Step 1 - DESIGN CONDITIONS                     Total Wall =  0.190  in
       Nominal Pipe Diameter,                          D =      6  in        <INPUT
       Working Pressure,                              Pw =      0  psi       <INPUT
       Surge Pressure, (Est per Sec. 5.7.1.3)         Ps =      0  psi       <INPUT
       Internal Vacuum Pressure,                      Pv =      0  psi       <INPUT
       Minimum Burial Depth,                       H min =      2  ft        <INPUT
       Maximum Burial Depth,                       H max =     12  ft        <INPUT
       Wheel Load, (AASHTO HS-20, Page 55)             P =      0  lb        <INPUT
       Overburden Spec. Wght (at 95% Pr. Dens)        Gs =    120  lb/cu ft
       Average Service Temp =                             80  deg F       <INPUT
       Soil Conditions at Depth =
       Hgt of water table above top of pipe @ H Min      0  ft        <INPUT
       Hgt of water table above top of pipe @ H Max      0  ft        <INPUT
       Service Type:      NUCLEAR WASTE WATER DUAL CONTAINMENT HOUSING PIPE      <INPUT

Step 2 - PIPE PROPERTIES
       Pressure Class                                 Pc =    247  psi
       Cover Thickness                                tc =   0.04  in
       Reinf. Wall Thick.                             tr =   0.11  in
       Liner Thickness                                tl =   0.06  in
       Stiffness Factor                               EI =   1429  lb-in
       Pipe Stiffness                              F/Dy =  323.00  lb/in^2
       HDB (Stress Basis)                                  14000  psi
       HDB (Strain Basis)                                  0.003  in/in
       Sb (Strain Basis)                              Sb =  0.003  in/in
       Hoop Tensile Modulus                           Eh = 2500000  psi
       Hoop Circumferential Modulus                    E = 2500000  psi
       Diameter, mean reinforcement,                   D =   6.23  in
Step 3 - INSTALLATION PARAMETERS
       Modulus of soil reaction, Table A.5            E' =   1500  psi
       Deflection coefficient, Table A.2              Kx =  0.103
       From Table A.1                                 Kb =  0.189
       Deflection lag factor, (Sec A.3.4.2.1)         D1 =    1.5
****** ********** ******** ******** ******** ** **** ******** ******** *******
Pw   Design Check OK                 Pw+Ps   Design Check OK
Str bnd @ Max Defl Design Check OK   Min Cmb Str @ Max Defl Design Check OK

                                 --- @ 2.0 ft --          -- @ 12.0 ft ---
Deflection:                      0.0%  Design Check OK     0.0%  Design Check OK
BUCKLING - WITHOUT Vacuum,       Design Check OK           Design Check OK
Ground Water, WITH Live Loads
BUCKLING - WITH Vacuum,          Design Check OK           Design Check OK
Ground Water, NO Live Loads

5/12/2020                                                                  p. 1
```

CALCULATION SHEET

Project No. S54413.024	**Calculation No.** S54413.024-M-001	**Rev.** 0	**Page No.** 186 of 192
Title: LERF Basin 41 Buried Piping Analysis			
Prepared By: JD Williams	**Date:** 5/13/20	**Checked By:** JS Huisingh	**Date:** 5/13/20

AWWA Manual M45 **Project:** 6" Series 30 <INPUT
Pipe Burial Design **Customer:** Sargent & Lundy <INPUT
Date: 05/12/20 **Contact:** Jacob Williams <INPUT
Nominal Pipe Diameter, D = 6 in

Step 4 CHECK DESIGN REQUIREMENTS

1. **Calculate Pressure Class, Pc:** Where Pc <= (HDB/2)(2t/d)

   Pc = 247 (HDB/FS)(2t/d) = 247.2 psi (Eq 5-2)

   Design Check OK

   Note: Pressure is calculated on a stress basis only, since calculations based on strain give equal results.

2. **Check Working Pressure:** Pw<=Pc is the requirement

   Pw =0 <= Pc = 247.2 (Eq 5-3)
   Design Check OK

3. **Check Surge Pressure:** Pw+Ps<=Pc is the requirement

   Pw+Ps = 0 <= Pc = 247.2 (Eq 5-4)
   Design Check OK

4. **Calculate External Loads:** Wc, Wl, If, and Cl

   Wc = (Gs)(H)(D+t)/144 If = 0.766-0.133(H) (Eq 5-9 and 5-11)

   Wc = 10.6 Lb/in at 2.0 ft If = 0.500 at 2.0 ft

   Wc = 63.4 Lb/in at 12.0 ft If = 0.000 at 12.0 ft

   Wl = Cl(P)(1+If)/12 Cl is from ***Table A.3*** (Eq 5-10)

   Wl = 0.00 lb/in at 2.0 ft Cl = 0.056 at 2.0 ft

   Wl = 0.00 lb/in at 12.0 ft Cl = 0.003 at 12.0 ft

5/12/2020 p. 2

CALCULATION SHEET

Project No. S54413.024	**Calculation No.** S54413.024-M-001	**Rev.** 0	**Page No.** 187 of 192
Title: LERF Basin 41 Buried Piping Analysis			
Prepared By: JD Williams	**Date:** 5/13/20	**Checked By:** JS Huisingh	**Date:** 5/13/20

```
AWWA Manual M45            Project: 6" Series 30                <INPUT
Pipe Burial Design        Customer: Sargent & Lundy             <INPUT
Date:   05/12/20           Contact: Jacob Williams              <INPUT
      Nominal Pipe Diameter,                  D =      6  in

   5. Check Deflection, Dy <= .05D is the requirement.

      Dy=(D1)(Wc+W1)(Kx)(R^3)/EI+0.061(Ka)(E')(R^3)+Da              (Eq 5-8)

      Using procedure A of Sec A3.4.2.6 Ka =0.75 and Da = 0.00

      Dy at 2.0 ft = 0.000 in      0.000 <= 0.312

                  Design Check OK

      Dy at 12.0 ft = 0.000 in     0.000 <= 0.312

                  Design Check OK

   6. Check Ring Bending Strain at maximum Deflection, Dy.

      Strain ben 6(Dy/D)(t/D)      Str Bnd <= Sb/1.5 is the requireme (Eq 5-6)

      Str Bnd = 0.000002 at 12.0 ft        0.000002 <= 0.002000
                                           Design Check OK

   7. Check Combined Load Strain, Str Comb <= Sb/1.5 is the requirement

      Str Comb = (Pw+Ps)(D)/2(Eh)(t) + Str Bnd                      (Eq 5-22)

      Str Comb = 0.000002 at 12.0 ft       Design Check OK

OR  Str Comb = (Pw+Ps)(D)/2(Eh)(t)+3(Kb)(D)(t)/3(Kx)(Pw+Ps)(D^3+(E)(t^3)

      Str Comb = 0.000117 at 12.0 ft       Design Check OK

      0.000002 is the lower of the two values and < 0.002000
                                           Design Check OK

5/12/2020                                                          p. 3
```

CALCULATION SHEET

Project No. S54413.024	**Calculation No.** S54413.024-M-001	**Rev.** 0	**Page No.** 188 of 192
Title: LERF Basin 41 Buried Piping Analysis			
Prepared By: JD Williams	**Date:** 5/13/20	**Checked By:** JS Huisingh	**Date:** 5/13/20

```
AWWA Manual M45            Project: 6" Series 30                <INPUT
Pipe Burial Design        Customer: Sargent & Lundy             <INPUT
Date:   05/12/20           Contact: Jacob Williams              <INPUT
      Nominal Pipe Diameter,                    D =      6  in

   8. Check Buckling  (Wc+Wl)/D<=qa is the requirement

      NOTE: Without Ground Water or Vacuum


      qa = 1/FS((32)(Rw)(B')(E')(EI/D^3))^.5                    (Eq 5-24b)

      FS =2.0 at 2.0 ft   Rw = 1.000 at 2.0 ft     B' = 0.222 at 2.0 ft
      FS =2.0 at 12.0 ft  Rw = 1.000 at 12.0 ft    B' = 0.353 at 12.0 ft

      Wc+Wl/D = 1.70 psi at 2.0 ft      qa = 125.36 psi at 2.0 ft
      Wc+Wl/D = 10.18 psi at 12.0       qa = 158.20 psi at 12.0 ft

                Buckling  Design Check OK    2.0 ft
                Buckling  Design Check OK    12.0 ft



   8a. Check Buckling With Ground Water and with Vacuum

          (Gw)(hw)+Rw(Wc/D)+Pv <= qa is the requirement            (Eq 5-25)

      NOTE:  Without Live Loads

      (Gw)(hw)+Rw(Wc/D)+Pv = 1.696 at 2.0 ft       qa = 125.36 at 2.0 ft
      (Gw)(hw)+Rw(Wc/D)+Pv = 10.177 at 12.0 ft     qa = 158.20 at 12.0 ft

      Buckling    Design Check OK                  2.0 ft
      Buckling    Design Check OK                  12.0 ft


5/12/2020                                                        p. 4
```

CALCULATION SHEET

Project No. S54413.024	**Calculation No.** S54413.024-M-001	**Rev.** 0	**Page No.** 189 of 192
Title: LERF Basin 41 Buried Piping Analysis			
Prepared By: JD Williams	**Date:** 5/13/20	**Checked By:** JS Huisingh	**Date:** 5/13/20

```
AWWA Manual M45              Project: 8" Series 30 Dual Containment Housing   <INPUT
Pipe Burial Design          Customer: Sargent & Lundy                         <INPUT
Date:    05/07/20            Contact: Jacob Williams                          <INPUT
      Nominal Pipe Diameter,                      D =      8  in
                                        REINF WALL =   0.11  in
Step 1 - DESIGN CONDITIONS              Total Wall =  0.190  in
      Nominal Pipe Diameter,                      D =      8  in        <INPUT
      Working Pressure,                          Pw =      0  psi       <INPUT
      Surge Pressure, (Est per Sec. 5.7.1.3)     Ps =      0  psi       <INPUT
      Internal Vacuum Pressure,                  Pv =      0  psi       <INPUT
      Minimum Burial Depth,                   H min =      2  ft        <INPUT
      Maximum Burial Depth,                   H max =     12  ft        <INPUT
      Wheel Load, (AASHTO HS-20, Page 55)         P =      0  lb        <INPUT
      Overburden Spec. Wght (at 95% Pr. Dens)    Gs =    120  lb/cu ft
      Average Service Temp =                            80  deg F     <INPUT
      Soil Conditions at Depth =
      Hgt of water table above top of pipe @ H Min      0  ft        <INPUT
      Hgt of water table above top of pipe @ H Max      0  ft        <INPUT
      Service Type:      NUCLEAR WASTE WATER DUAL CONTAINMENT HOUSING PIPE  <INPUT

Step 2 - PIPE PROPERTIES
      Pressure Class                             Pc =    187  psi
      Cover Thickness                            tc =   0.04  in
      Reinf. Wall Thick.                         tr =   0.11  in
      Liner Thickness                            tl =   0.06  in
      Stiffness Factor                           EI =   1429  lb-in
      Pipe Stiffness                          F/Dy =  137.63  lb/in^2
      HDB (Stress Basis)                             14000  psi
      HDB (Strain Basis)                             0.003  in/in
      Sb (Strain Basis)                          Sb =  0.003  in/in
      Hoop Tensile Modulus                       Eh = 2500000  psi
      Hoop Circumferential Modulus                E = 2500000  psi
      Diameter, mean reinforcement,               D =   8.23  in
Step 3 - INSTALLATION PARAMETERS
      Modulus of soil reaction, Table A.5        E' =   1500  psi
      Deflection coefficient, Table A.2         Kx =  0.103
      From Table A.1                            Kb =  0.189
      Deflection lag factor, (Sec A.3.4.2.1)    D1 =    1.5
****** ********** ******** ******** ******** ** **** ******** ********  *******
Pw   Design Check OK          Pw+Ps   Design Check OK
Str bnd @ Max Defl Design Check OK  Min Cmb Str @ Max Defl Design Check OK

                          --- @ 2.0 ft --        -- @ 12.0 ft ---
Deflection:               0.0%  Design Check OK   0.0%  Design Check OK
BUCKLING - WITHOUT Vacuum, Design Check OK        Design Check OK
Ground Water, WITH Live Loads
BUCKLING - WITH Vacuum,    Design Check OK        Design Check OK
Ground Water, NO Live Loads
```

5/7/2020 p. 1

CALCULATION SHEET

Project No. S54413.024	**Calculation No.** S54413.024-M-001	**Rev.** 0	**Page No.** 190 of 192
Title: LERF Basin 41 Buried Piping Analysis			
Prepared By: JD Williams	**Date:** 5/13/20	**Checked By:** JS Huisingh	**Date:** 5/13/20

AWWA Manual M45 **Project:** 8" Series 30 Dual Containment Housing <INPUT
Pipe Burial Design **Customer:** Sargent & Lundy <INPUT
Date: 05/07/20 **Contact:** Jacob Williams <INPUT
Nominal Pipe Diameter, D = 8 in

Step 4 CHECK DESIGN REQUIREMENTS

1. **Calculate Pressure Class, Pc:** Where Pc <= (HDB/2)(2t/d)

   Pc = 187 (HDB/FS)(2t/d) = 187.1 psi (Eq 5-2)

   Design Check OK

   Note: Pressure is calculated on a stress basis only, since calculations based on strain give equal results.

2. **Check Working Pressure:** Pw<=Pc is the requirement

   Pw =0 <= Pc = 187.1 (Eq 5-3)
   Design Check OK

3. **Check Surge Pressure:** Pw+Ps<=Pc is the requirement

   Pw+Ps = 0 <= Pc = 187.1 (Eq 5-4)
   Design Check OK

4. **Calculate External Loads:** Wc, Wl, If, and Cl

   Wc = (Gs)(H)(D+t)/144 If = 0.766-0.133(H) (Eq 5-9 and 5-11)

   Wc = 13.9 Lb/in at 2.0 ft If = 0.500 at 2.0 ft

   Wc = 83.4 Lb/in at 12.0 ft If = 0.000 at 12.0 ft

   Wl = Cl(P)(1+If)/12 Cl is from ***Table A.3*** (Eq 5-10)

   Wl = 0.00 lb/in at 2.0 ft Cl = 0.056 at 2.0 ft

   Wl = 0.00 lb/in at 12.0 ft Cl = 0.003 at 12.0 ft

5/7/2020 p. 2

CALCULATION SHEET

Project No. S54413.024	**Calculation No.** S54413.024-M-001	**Rev.** 0	**Page No.** 191 of 192
Title: LERF Basin 41 Buried Piping Analysis			
Prepared By: JD Williams	**Date:** 5/13/20	**Checked By:** JS Huisingh	**Date:** 5/13/20

```
AWWA Manual M45            Project: 8" Series 30 Dual Containment Housing  <INPUT
Pipe Burial Design        Customer: Sargent & Lundy                        <INPUT
Date:   05/07/20           Contact: Jacob Williams                         <INPUT
      Nominal Pipe Diameter,                    D =      8  in

    5. Check Deflection, Dy <= .05D is the requirement.

       Dy=(D1)(Wc+W1)(Kx)(R^3)/EI+0.061(Ka)(E')(R^3)+Da              (Eq 5-8)

       Using procedure A of Sec A3.4.2.6 Ka =0.75 and Da = 0.00

       Dy at 2.0 ft = 0.000 in      0.000 <= 0.412

                   Design Check OK

       Dy at 12.0 ft = 0.000 in     0.000 <= 0.412

                   Design Check OK

    6. Check Ring Bending Strain at maximum Deflection, Dy.

       Strain ben 6(Dy/D)(t/D)      Str Bnd <= Sb/1.5 is the requireme (Eq 5-6)

       Str Bnd = 0.000004 at 12.0 ft        0.000004 <= 0.002000
                                            Design Check OK

    7. Check Combined Load Strain, Str Comb <= Sb/1.5 is the requirement

       Str Comb = (Pw+Ps)(D)/2(Eh)(t) + Str Bnd                     (Eq 5-22)

       Str Comb = 0.000004 at 12.0 ft       Design Check OK

OR  Str Comb = (Pw+Ps)(D)/2(Eh)(t)+3(Kb)(D)(t)/3(Kx)(Pw+Ps)(D^3+(E)(t^3)

       Str Comb = 0.000154 at 12.0 ft       Design Check OK

       0.000004 is the lower of the two values and < 0.002000
                                            Design Check OK

5/7/2020                                                          p. 3
```

CALCULATION SHEET

Project No. S54413.024	**Calculation No.** S54413.024-M-001	**Rev.** 0	**Page No.** 192 of 192
Title: LERF Basin 41 Buried Piping Analysis			
Prepared By: JD Williams	**Date:** 5/13/20	**Checked By:** JS Huisingh	**Date:** 5/13/20

```
AWWA Manual M45            Project: 8" Series 30 Dual Containment Housing  <INPUT
Pipe Burial Design        Customer: Sargent & Lundy                        <INPUT
Date:   05/07/20           Contact: Jacob Williams                         <INPUT
      Nominal Pipe Diameter,                    D =      8  in

   8. Check Buckling  (Wc+Wl)/D<=qa is the requirement

      NOTE: Without Ground Water or Vacuum


      qa = 1/FS((32)(Rw)(B')(E')(EI/D^3))^.5                        (Eq 5-24b)

      FS =2.0 at 2.0 ft   Rw = 1.000 at 2.0 ft     B' = 0.222 at 2.0 ft
      FS =2.0 at 12.0 ft  Rw = 1.000 at 12.0 ft    B' = 0.353 at 12.0 ft

      Wc+Wl/D = 1.69 psi at 2.0 ft      qa = 82.57 psi at 2.0 ft
      Wc+Wl/D = 10.13 psi at 12.0       qa = 104.19 psi at 12.0 ft

                Buckling  Design Check OK    2.0 ft
                Buckling  Design Check OK    12.0 ft



   8a. Check Buckling With Ground Water and with Vacuum

          (Gw)(hw)+Rw(Wc/D)+Pv <= qa is the requirement            (Eq 5-25)

      NOTE:  Without Live Loads

      (Gw)(hw)+Rw(Wc/D)+Pv = 1.689 at 2.0 ft       qa = 82.57 at 2.0 ft
      (Gw)(hw)+Rw(Wc/D)+Pv = 10.134 at 12.0 ft     qa = 104.19 at 12.0 ft

      Buckling    Design Check OK                  2.0 ft
      Buckling    Design Check OK                  12.0 ft


5/7/2020                                                          p. 4
```

DOCUMENT RELEASE AND CHANGE FORM

Prepared For the U.S. Department of Energy, Assistant Secretary for Environmental Management
By Washington River Protection Solutions, LLC., PO Box 850, Richland, WA 99352
Contractor For U.S. Department of Energy, Office of River Protection, under Contract DE-AC27-08RV14800

TRADEMARK DISCLAIMER: Reference herein to any specific commercial product, process, or service by trade name, trademark, manufacturer, or otherwise, does not necessarily constitute or imply its endorsement, recommendation, or favoring by the United States government or any agency thereof or its contractors or subcontractors. Printed in the United States of America.

Release Stamp

DATE:
May 26,2020
HANFORD RELEASE

1. **Doc No:** RPP-CALC-63782 **Rev.** 00

2. **Title:**
LERF Basin 41 Sample Port Riser Anchor Wall design

3. **Project Number:** ☐N/A
T1P226

4. **Design Verification Required:**
☐Yes ☒No

5. **USQ Number:** ☒ N/A
RPP-27195

6. **PrHA Number** **Rev.** ☒ N/A

Clearance Review Restriction Type:
public

7. **Approvals**

Title	Name	Signature	Date
Clearance Review	Harrison, Sarah E	*Harrison, Sarah E*	05/26/2020
Design Authority	Wilson, Nathaniel W	*Wilson, Nathaniel W*	04/24/2020
Checker	Santos, Peter P	*Davidson, Ronald W for Santos, Peter P per email*	04/08/2020
Document Control Approval	Meinecke, Kathryn R	*Meinecke, Kathryn R*	05/26/2020
Environmental Protection	Wall, Jeremy M	*Wall, Jeremy M*	04/30/2020
Originator	Davidson, Ronald W	*Davidson, Ronald W*	04/08/2020
Other Approver	McShane, Michael P	*McShane, Michael P*	04/28/2020
Responsible Engineering Manager	Huntington, Matthew R	*Huntington, Matthew R*	05/04/2020

8. **Description of Change and Justification**

Initial Release.

9. **TBDs or Holds** ☒N/A

10. **Related Structures, Systems, and Components**

a. **Related Building/Facilities** ☐N/A	b. **Related Systems** ☐N/A	c. **Related Equipment ID Nos. (EIN)** ☒N/A
ETF FACILITIES LERF FACILITIES	ETF LERF	

11. **Impacted Documents – Engineering** ☒N/A

Document Number	Rev.	Title

12. **Impacted Documents (Outside SPF):**

N/A

13. **Related Documents** ☐N/A

Document Number	Rev.	Title
MT-50497	00	Liquid Effluent Retention Facility (LERF) Basin 41

14. **Distribution**

Name	Organization
Angevine, Brennan T	MISSION ANALYSIS ENGINEERING
Blaak, Whitney S	COGNIZANT SYSTEM ENGINEERING
Demiter, Scott M	ETF OPERATIONS
Foster, Jim	242-A/AW/ETF OPERATIONS
Goessmann, Glen E	ENGINEERING PROGRAMS
Greenhalgh, Aaron M	TANK FARM PROJECTS ENGINEERING
Halgren, Dale L	ETF ENGINEERING
Harris, John W	SAFETY PROGRAM SERVICES RC/P
Joslyn, Cameron C	ETF ENGINEERING
McFerran, Brandon E	242-A/AW/ETF OPERATIONS
McShane, Michael P	ENGINEERING PROGRAMS
Nelson, Richard L	
Omberg Carro, Susan K	NUCLEAR SAFETY
Powers, Daniel J	ETF ENGINEERING
Roosendaal, Gene D	TFP PROJECT MANAGEMENT
Rutherford, Wally	ETF ENGINEERING
Sackett, Tom E	TANK FARM PROJECTS
Samoska, Jerry A	INSTRUMENT & CNTRL ENGINEERING
Shultz, Milton V	NUCLEAR SAFETY
Smith, Gregory E	TANK FARM PROJECTS ENGINEERING

DOCUMENT RELEASE AND CHANGE FORM	**Doc No:** RPP-CALC-63782 **Rev.** 00

14. **Distribution**

Name	**Organization**
Smoot, Bill R	TFP RADCON
Swanson, Brad L	242-A/AW/ETF OPERATIONS
Wall, Jeremy M	RETRVL & CLOSURE/PROJ ENV CMPL
Wilson, Nathaniel W	ETF PROJECTS ENGINEERING

RPP-CALC-63782
Revision 0

LERF Basin 41 Sample Port Riser Anchor Wall Design

Prepared by

RW Davidson
Sargent & Lundy for Washington River Protection Solutions, LLC

Date Published
April 2020

5/19/2020

Prepared for the U.S. Department of Energy
Office of River Protection

Contract No. DE-AC27-08RV14800

Approved for Public Release;
Further Dissemination Unlimited

Sargent & Lundy Engineering Services, Inc.	**RPP-CALC-63782, Rev. 0** **CALCULATION COVER SHEET**	**Page No.** 1 of 29 **Date** 4/5/2020 **Rev. No.** 0 **Calculation No:** S54413.024-S-004

Project No.	**Project Title:**	**Client:**
S54413.024	LERF Basin 41 Design	Washington River Protection Solutions, LLC

Title:

LERF Basin 41 Sample Port Riser Anchor Wall Design

Purpose and Objective:

The purpose of this calculation is to analyze the concrete anchor wall for the LERF Basin 41 Sample Port Riser.

Rev. No.	**Total Pages**		**Prepared By**	**Checked By**	**PM/TL**
0	29	**Print Name/ Sign:**	RW Davidson, P.E.	PP Santos, P.E.	PM Dorsh, P.E.
		Date:	4/5/2020	4/7/2020	4/7/2020

Revision Description (Revision Description/Affected Pages):

Initial Release.

		Print Name/ Sign:			
		Date:			

Revision Description (Revision Description/Affected Pages):

Sargent & Lundy Engineering Services, Inc.

RPP-CALC-63782, Rev. 0

CALCULATION REVIEW CHECKLIST

Project No.	Calculation No.	Rev.	Page No.
S54413.024	S54413.024-S-004	0	2 of 29

Items Checked	Accept Y	Accept N	Accept N/A	Description of Resolution for Unacceptable Items
1. Cover sheets properly completed.	√			
2. Calculation sheet headers complete with calculation number, revision number, etc.	√			
3. Calculation sheet contents are legible, accurate, and complete per format.	√			
4. Listed attachments included.	√			
5. Calculation objective clearly described.	√			
6. Criteria are suitable and properly referenced to task specific documents.	√			
7. Assumptions and input data selected, described, reasonable, and attached or referenced to task documents.	√			
8. Calculation method identified and appropriate for the design activity.	√			
9. Calculation results reasonable and correctly described in results and conclusions.	√			
10. Physical property calculations generated by CAD software verified via hand calculations.			√	
11. Computer program identified with version and revision.			√	
12. Computer input/output provided or referenced and reasonable.			√	
13. Computer run traceable to calculation (file #, etc.).			√	
14. Computer input/output data and problem type within validation/verification range of use.			√	
15. Computer program validation/verification addressed.			√	
16. Computer operating system in use for calculation preparation is the same as when the software was verified on machine.			√	

Calculation Checking Method	√	Applicable Pages
1. Direct Step-by-Step Check	√	All Pages
2. Reference Chart(s) or Book(s) Comparison (Append Documentation)		
3. Alternate Calculation (Append Documentation)		

Comments:

Preparer (Print Name and Sign):	Date:
RW Davidson, P.E.	4/5/2020
Checker (Print Name and Sign):	**Date:**
PP Santos, P.E.	4/7/2020

Signatures obtained only after discrepancies are corrected and comments are resolved.

Sargent & Lundy Engineering Services, Inc.	RPP-CALC-63782, Rev. 0 **CALCULATION SHEET**		
Project No. S54413.024	**Calculation No.** S54413.024-S-004	**Rev.** 0	**Page No.** 3 of 29
Title: LERF Basin 41 Sample Port Riser Anchor Wall Design			
Prepared By: RW Davidson	**Date:** 4/5/2020	**Checked By:** PP Santos	**Date:** 4/5/2020

TABLE OF CONTENTS

1.0 PURPOSE 4
2.0 METHODOLOGY 4
3.0 DESIGN INPUTS 4
4.0 ASSUMPTIONS 4
5.0 COMPUTER SOFTWARE 4
6.0 RESULTS 4
7.0 REFERENCES 5
8.0 CALCULATIONS 6

Attachments

Attachment 1- HDPE Pipe Data Sheet

Acronyms

ACI	American Concrete Institute
ADH	Adhesive Anchor
AHR	Anchor
ASCE	American Society of Civil Engineers
DCR	Demand-to-Capacity Ratio
HDPE	High-Density Polyethylene
IBC	International Building Code
NDC	Natural Phenomena Design Category
SDR	Standard Dimension Ratio
SPR	Sample Port Riser
WDC	Wind Design Category

1.0 PURPOSE

The purpose of this calculation is to analyze the concrete anchor wall for the LERF Basin 41 Sample Port Riser (SPR).

2.0 METHODOLOGY

Wind, seismic and live loads on the SPR anchor wall are calculated using ASCE 7-10, *Minimum Design Loads on Buildings and Other Structures* and TFC-ENG-STD-06, *Design Loads for Tank Farm Facilities*.

The concrete adhesive eye anchors are analyzed using Chapter 17 of ACI 318, *Building Code Requirements for Structural Concrete and Commentary* and ESR-3187 for Hilti *HIT-HY 200 Adhesive Anchors and Post Installed Reinforcing Bar Connections in Concrete*.

3.0 DESIGN INPUTS

1. The SPR anchor wall is General Service per MT-50497.
2. The minimum concrete compressive strength is 4500 psi, per RPP-SPEC-63632, Section 03 30 00.
3. The anchor eyes are based on fractional stainless steel threaded rods using ASTM F593 material per ESR-3187, Table 3 & 11 and RPP-SPEC-63632, Section 05 0538.
4. Dimension for the SPR anchor wall are based on Drawings H-2-838753 and H-2-838750.
5. The HDPE piping weight and dimensions are based on SDR 11 (160 psi) pipe pressure rating per RPP-SPEC-63632, Section 31 9052 Table 1.

4.0 ASSUMPTIONS

None.

5.0 COMPUTER SOFTWARE

No unverified computer software was used in this analysis. Mathcad®[1] 15.0 was used for the hand calculations. Calculations are checked using a handheld calculator.

6.0 RESULTS

The Hilti®[2] HIT-HY 200 adhesive anchors are adequate using a 5/8” stainless steel anchor eye threaded rods with a 3 1/8” minimum effective embedment depth and maximum embedment of 3 7/8”. The SPR anchor wall is adequate with one layer of #4 rebar spaced 10” on-center horizontally and 6” on-center vertically.

1 Mathcad is a registered trademark of PTC, Inc., Needham, Massachusetts.
2 Hilti and HIT-HY are registered trademarks of Hilti Aktiengesellschaft, Schaan, Liechtenstein

TABLE: Results Summary	
Anchor Wall	**DCR**
DCR flexure	0.1
DCR shear	0.05
Eye Bolt Adhesive Anchors	**DCR**
DCR tension	0.03
DCR shear	0.01
DCR per ACI 318, Equation 17.6.3	0.01

7.0 REFERENCES

ACI 318-14, *Building Code Requirements for Structural Concrete and Commentary*, 2014, American Concrete Institute, Farmington Hills, MI.

ACI SP-17 (14), "*The Reinforced Concrete Design Handbook, A Companion to ACI 318-14"* , Volume 1, American Concrete Institute, Farmington Hills, MI.

ASCE 7-2010, *Minimum Design Loads for Buildings and Other Structures*, 2010, American Society of Civil Engineers, Reston, VA.

ESR-3187, Hilti *HIT-HY 200 Adhesive Anchors and Post Installed Reinforcing Bar Connections in Concrete*, (Tables 3, 11, 12 & 14), Issued March 2018, Revised April 2019, ICC Evaluation Services, Whittier, CA.

H-2-838750, SH. 1-2, Rev. 0, *LERF Basin 41 Civil Top Liner, Details*, U.S. Department of Energy, Richland, WA.

H-2-838753, Rev. 0, *LERF Basin 41 Civil Sample Port Riser Details*, U.S. Department of Energy, Richland, WA.

IBC 2015, *International Building Code*, International Code Council, 2015, Country Club Hills, IL.

MT-50497, Rev. 00, Liquid Effluent Retention Facility (LERF) Basin 41, U.S. Department of Energy, Richland, WA.

RPP-SPEC-63632, Rev. 0, *Construction Specification For: LERF Basin 41 Design*, U.S. Department of Energy, Richland, WA.

TFC-ENG-STD-06, Rev. D-2, *Design Loads for Tank Farm Facilities*, U.S. Department of Energy, Richland, WA.

8.0 CALCULATIONS

8.1 Determine Wind Loads

$V := 110mph$ — Wind Speed (TFC-ENG-STD-06, Table 3, WDC-1/NDC-1).

$K_d := 0.90$ — Wind Direction factor (ASCE 7-10, Section 26.6 and Table 26.6-1 for Chimneys, Tanks and Similar Structures).

$K_z := 0.85$ — Velocity Pressure coefficient for Design Exposure C. (ASCE 7-10, Table 29.3-1 for 0-15 ft)

$K_{zt} := 1.0$ — Topographic factor. (ASCE 7-10, Section 26.8.2)

$G := 0.85$ — Gust Effect factor. (ASCE 7-10, Section 26.9.1)

$h := 2 \cdot ft + 11 \cdot in = 2.9\,ft$ $\quad s := h$ — Height of the SPR anchor wall.

$B_{top} := 1 \cdot ft$ — Width at top of the SPR anchor wall.

$B_{bot} := B_{top} + 2(2 \cdot ft + 10 \cdot in) = 6.7\,ft$ — Width at bottom of the SPR anchor wall.

$B_{mean} := \frac{B_{top} + B_{bot}}{2} = 3.8\,ft$ — Mean width of wall.

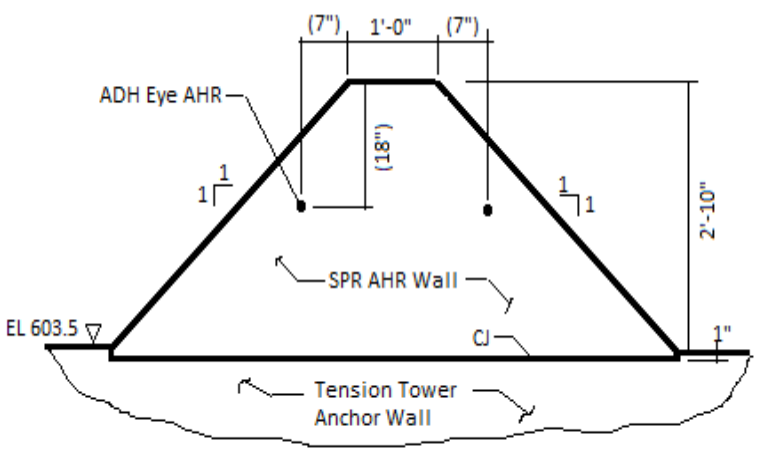

SPR AHR Wall-Inside Face Elevation

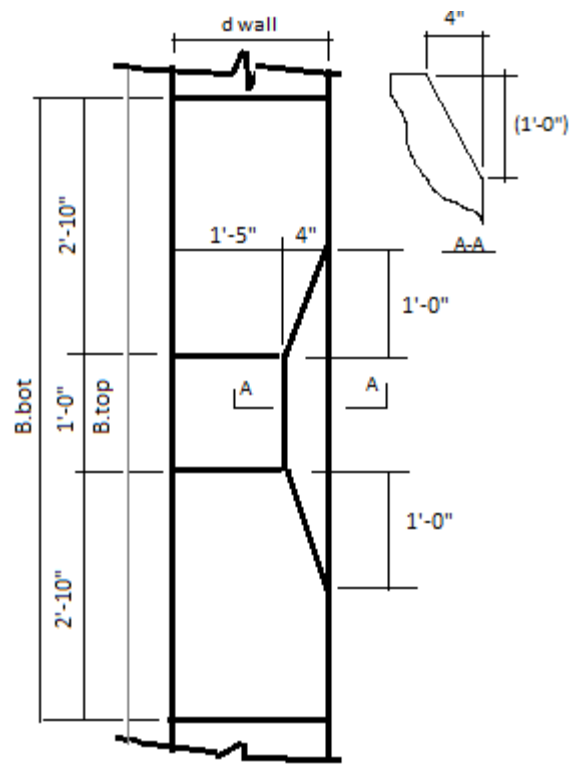

SPR AHR Wall - Plan

$q_z := 0.00256 \cdot K_z \cdot K_{zt} \cdot K_d \cdot \left(\frac{V}{mph}\right)^2 \cdot psf = 23.7 \cdot psf$ — Velocity pressure calculated at mean height h. (ASCE 7-10, Equation 29.3-1)

$Aspect_{ratio} := \frac{B_{mean}}{s} = 1.3$ — Aspect ratio of the SPR anchor wall.

$C_f := 1.45 - 0.3 \cdot 0.05 = 1.44$ — Net force coefficient (interpolated) for case A, wind normal to face, (ASCE 7-10, Figure 29.4-1)

$A_f := B_{mean} \cdot s = 11.2 \cdot ft^2$ — Projected area normal to the wind.

$F_w := q_z \cdot G \cdot C_f \cdot A_f = 323.2\ lbf$ — Design wind load on freestanding wall. (ASCE 7-10, Equation 29.4-1 acting at 0.05*h above geometric center of wall)

8.2 Determine Seismic Loads

$d_{wall} := 1 \cdot ft + 9 \cdot in = 1.8\ ft$ — Thickness of the SPR anchor wall.

$Wt_{wall} := \left[\left[B_{bot} \cdot h - \left(2.75 \cdot ft^2\right)\right] \cdot d_{wall} - \left[\left(\frac{4 \cdot in}{2} \cdot 1 \cdot ft\right) \cdot 1 \cdot ft\right] \cdot 2\right] \cdot 150 \cdot \frac{lbf}{ft^3} = 4.3 \cdot kip$ — Weight of the SPR anchor wall reduced by sloped face area.

$S_{DS} := 0.588$ — Horizontal five-percent damped design spectral response acceleration at short periods. (TFC-ENG-STD-06)

$z_h := 0.0$ — Ratio of the height in structure of point of attachment of component to the average roof height of structure.

$I_p := 1.0$ — Component importance factor for SDC-1 loading. (TFC-ENG-STD-06)

$a_p := 1.0$ — Component amplification factor for other rigid components, limited deformability. (ASCE 7-10, Table 13.5-1)

$R_p := 2.5$ — Component response modification factor for other rigid components, limited deformability.. (ASCE 7-10, Table 13.5-1)

$F_{pnom} := \frac{0.4 \cdot a_p \cdot S_{DS} \cdot \left(Wt_{wall}\right)}{\frac{R_p}{I_p}} [1 + 2(z_h)] = 407.6 \cdot lbf$ — The horizontal seismic force. (ASCE 7-10, Equation 13.3-1)

$F_{pmax} := 1.6 S_{DS} \cdot I_p \cdot \left(Wt_{wall}\right) = 4075.8\ lbf$ — The maximum lateral seismic force. (ASCE 7-10, Equation 13.3-2)

$F_{pmin} := 0.3 S_{DS} \cdot I_p \cdot \left(Wt_{wall}\right) = 764.2\ lbf$ — The minimum lateral seismic force. (ASCE 7-10, Equation 13.3-3)

$F_p := \begin{cases} F_{pmin} & \text{if } F_{pnom} < F_{pmin} \\ F_{pmax} & \text{if } F_{pnom} > F_{pmax} \\ F_{pnom} & \text{otherwise} \end{cases}$ — The minimum lateral force to use for design purposes.

$F_p = 764.2\ lbf$

$F_v := 0.2 S_{DS} \cdot Wt_{wall} = 509.5\ lbf$ — The design vertical seismic force. (ASCE 7-10, Section 13.3.1)

8.3 Determine Flexural Moment on SPR Anchor Wall

The following section determines the flexural moment to withstand the worst case loading.

$ID_{3_pipe} := 2.826 \cdot in$ $\quad Wt_{3_pipe} := 1.39 \cdot plf$ — Weight and dimensions of 3" HDPE pipe based on SDR 11 (160 psi) pressure rating, (See Attachment 1).

$ID_{6_pipe} := 5.349 \cdot in$ $\quad Wt_{6_pipe} := 4.97 \cdot plf$ — Weight and dimensions of 6" HDPE pipe based on SDR 11 (160 psi) pressure rating, (See Attachment 1).

$Wt_{filled} := \frac{\pi \cdot ID_{3_pipe}^2}{4} \cdot 150 \cdot \frac{lbf}{ft^3} + Wt_{3_pipe} = 7.9 \cdot plf$ — Weight of 3" grout filled pipe per foot length.

$Invert_{top} := 603.5 \cdot ft + \frac{(2 \cdot ft + 10 \cdot in)}{2} = 604.9\ ft$ — Estimated invert elevation of sample port riser at inside face of anchor wall.

$Invert_{bot} := 580 \cdot ft$ — Invert elevation of sample port riser at bottom of liner, (See H-2-838750, Section B).

$L_{riser} := (Invert_{top} - Invert_{bot}) \cdot 3 = 74.7\ ft$ — Based on 3:1 slope of top liner.

$Wt_{tot_3} := (L_{riser} \cdot Wt_{filled} \cdot 2 \cdot pipes) = 1184.6\ lbf$ — Total weight of 3" HDPE grout filled pipes.

$Wt_{tot_6} := L_{riser} \cdot Wt_{6_pipe} = 371.5\ lbf$ — Weight of 6" HDPE pipe without weight deduction for slots, conservative.

$angle := \tanh\left(\frac{1}{3}\right) = 18.4 \cdot deg$ — Sample port riser slope angle with respect to horizontal plane.

$F_{h_3pipes} := Wt_{tot_3} \cdot \sin(angle) = 374.3\ lbf$ — Down drag component along length of the 3" HDPE grout filled pipes. Neglect friction between pipes and liner bed, conservative.

$F_{h_6pipe} := Wt_{tot_6} \cdot \sin(angle) = 117.4\ lbf$ — Down drag component along length of the 6" HDPE pipe. Neglect friction between pipe and liner bed, conservative.

$F_{h_pipes} := F_{h_3pipes} + F_{h_6pipe} = 491.7\ lbf$ — Total down drag component.

$F_h := \max(1.6F_{h_pipes}, 1.0F_w + 1.0 \cdot F_{h_pipes}, 1.0 \cdot F_p + 1.0 \cdot F_{h_pipes}) = 1256.0 \cdot lbf$ — LRFD horizontal load combinations per ASCE 7-10, Section 2.3.2.

$F_{v_comb} := \max(1.4 \cdot Wt_{wall}, 1.2 \cdot Wt_{wall} + 1.0 \cdot F_v) = 6065.2\ lbf$ — LRFD vertical load combinations per ASCE 7-10, Section 2.3.2.

$M_{max_wall} := 1.0 \cdot F_p \cdot \frac{2}{3} \cdot h + 1.0 \cdot F_{h_pipes} \cdot \frac{h}{2} = 26437.1 \cdot in \cdot lbf$ — Use LRFD seismic horizontal load combination, previously defined.

NOTE: Per ACI 318, Section 14.4.2.1, walls shall be designed for an eccentricity corresponding to the maximum moment that can accompany the axial load but not less than 0.10 h, where h is the wall thickness. Hence, the moment due to axial load eccentricity is added to the required moment.

$M_{u_wall} := M_{max_wall} + F_{v_comb} \cdot 0.1 \cdot d_{wall} = 3.3 \cdot ft \cdot kip$

8.4 Determine Required Flexural Reinforcement for the SPR Anchor Wall

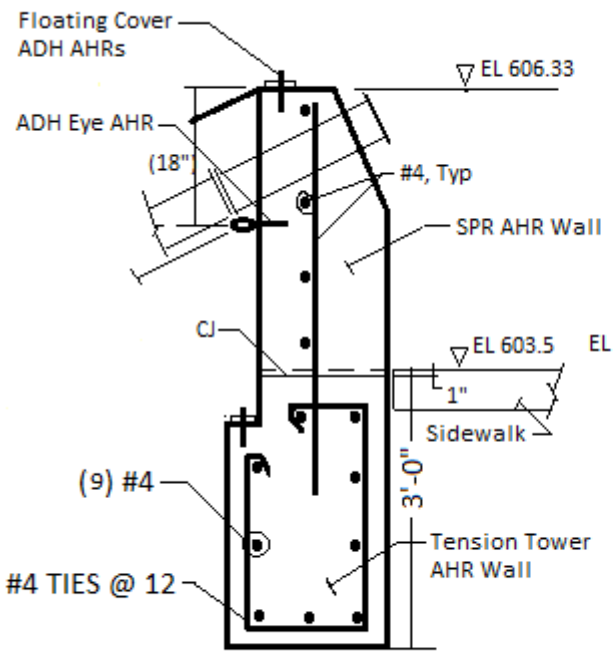

SPR AHR Wall Rebar Section

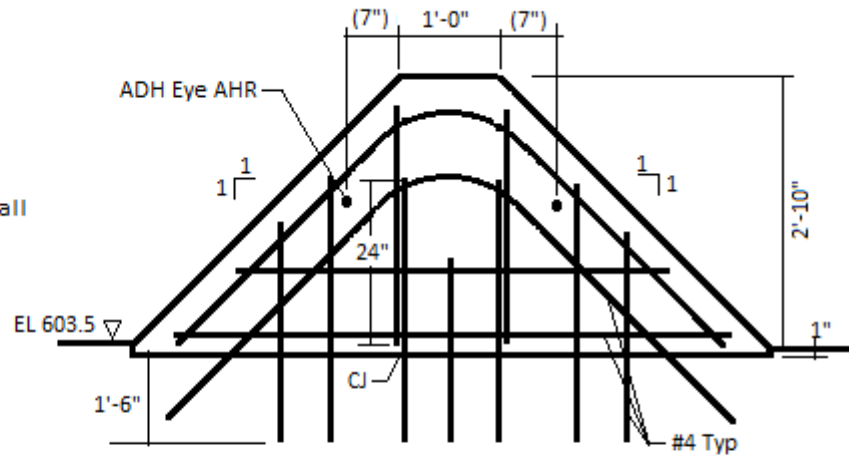

SPR AHR Wall Rebar Elevation

4-#4 @ 10" spg, Horiz
7-#4 @ 6" spg, Vert

$f_c := 4500 \cdot psi$ $f_y := 60000 \cdot psi$ $E_s := 29000 \cdot ksi$ SPR anchor wall material properties.

$h := d_{wall} = 21.0 \cdot in$ Width of the SRP AHR wall.

$d := \frac{h}{3} = 7.0 \cdot in$ Distance from extreme compression fiber to centroid of vertical reinforcing bars, assuming vertical bars are located 1/3 from compression fiber (conservative).

$No := (1\ \ 2\ \ 3\ \ 4\ \ 5\ \ 6\ \ 7\ \ 8\ \ 9\ \ 10\ \ 11\ \ 12\ \ 13\ \ 14\ \ 15\ \ 16\ \ 17\ \ 18)^T$

$d'_{bar} := (0\ \ 0\ \ 0.375\ \ 0.5\ \ 0.625\ \ 0.75\ \ 0.875\ \ 1\ \ 1.128\ \ 1.27\ \ 1.41\ \ 0\ \ 0\ \ 1.693\ \ 0\ \ 0\ \ 0\ \ 2.257)^T \cdot in$

$A'_{bar} := (0\ \ 0\ \ 0.11\ \ 0.20\ \ 0.31\ \ 0.44\ \ 0.6\ \ 0.79\ \ 1\ \ 1.27\ \ 1.56\ \ 0\ \ 0\ \ 2.25\ \ 0\ \ 0\ \ 0\ \ 4)^T \cdot in^2$

Bar size number (bar number, BarNo):

$BarNo := 4$

$x := BarNo$

$A'_{bar_x} = 0.2 \cdot in^2$ $A_{bar} := A'_{bar_x} = 0.2 \cdot in^2$ $d'_{bar_x} = 0.5 \cdot in$

ACI 318-14, 9.6.1.2 A_s minimum shall be the greater of (a) and (b), except as provided in 9.6.1.3.

$$\rho_{min} := \max\left(\frac{3\cdot\sqrt{\frac{f_c}{psi}}\cdot psi}{f_y}, \frac{200\cdot psi}{f_y}\right) = 0.0034$$

ACI 318-14, 9.6.1.3 If A_s provided at every section is at least one-third greater than A_s required by analysis, 9.6.1.1 and 9.6.1.2 need not be satisfied.

Try #4 bar @ 6 in $\quad spa := 6\cdot in$ $\quad$ #4 bars at 6" spacing, in vertical direction.

$b_w := 36\cdot in$ $\quad$ width of wall section considered.

$A_s := \frac{A_{bar}\cdot b_w}{spa} + A_{bar} = 1.4\cdot in^2$ $\quad$ Area of rebar provided at minimum cross section of the wall considered.

$C = 0.85\cdot f_c\cdot b_w\cdot a \qquad 0.85\cdot f_c\cdot b_w = 137.70\cdot\frac{kip}{in}$

$T := A_s\cdot f_y \qquad T = 84\cdot kip$

From the equilibrium equation:

$T = C \qquad T = 0.85\cdot f_c\cdot b_u\cdot a \quad$ or $\quad a := \frac{T}{0.85\cdot f_c\cdot b_w} \qquad a = 0.6\cdot in$

$M_n := T\cdot\left(d - \frac{a}{2}\right) \qquad M_n = 46.9\cdot ft\cdot kip$

$\phi := 0.9$ - for flexure $\qquad \phi M_n := \phi\cdot M_n$

$\phi M_n = 42\cdot ft\cdot kip$ $\quad$ Flexural strength of the wall in vertical direction.

$DCR := \frac{M_{u_wall}}{\phi M_n} = 0.1$ $\quad$ The Demand to Capacity Ratio for the flexural strength of the wall. The DCR is less than 1.0; therefore, **OK**.

<u>Use - (7) #4 @ 6" vertically</u>

$A_{min} := \rho_{min}\cdot h\cdot b_w \qquad A_{min} = 2.5\cdot in^2 \quad > \quad A_s = 1.4\cdot in^2$ $\quad$ The minimum area of steel required for flexure. (ACI 318-14, Section 9.6.1.2)

From the proportion of the factored moment to the nominal strength of the section it can be concluded, that the nominal strength is more than one-third above factored moment, thus the alternative minimum reinforcement requirement is satisfied per ACI 318-14 Section 9.6.1.3

$\frac{4}{3}\cdot M_{u_wall} = 4.4\cdot ft\cdot kip \quad < \quad \phi\cdot M_n = 42.2\cdot ft\cdot kip$ $\quad$ OK

8.5 Development Length of Reinforcement

$\lambda := 1.0$ — Lightweight modification factor for normal weight concrete. (ACI 318-14, Table 25.4.2.4)

$\psi_t := 1.0$ — Casting position modification factor for other. (ACI 318-14, Table 25.4.2.4)

$\psi_e := 1.0$ — Epoxy modification factor. (Lindeburg, pg 55-5 and ACI 318-14, Table 25.4.2.4)

$no_{bar_wall} := 4$ — For development of #4 rebar for SPR AHR wall.

$dia_{bar} := \frac{no_{bar_wall}}{8} in = 0.5 \cdot in$ — Diameter of #4 rebar.

$spa = 6.0 \cdot in \quad > \quad 2 \cdot dia_{bar} = 1.0 \cdot in$ — Clear spacing of bars being developed.

$clr_{cover} := \frac{2}{3} d_{wall} - \frac{dia_{bar}}{2} = 13.7 \cdot in \quad > \quad dia_{bar} = 0.5 \cdot in$ — Clear cover of bars being developed.

$$l_d := \max\left(\frac{\frac{f_y}{psi} \cdot \psi_t \cdot \psi_e}{25 \cdot \lambda \sqrt{\frac{f_c}{psi}}} dia_{bar}, 12in\right) = 17.9 \cdot in$$

Development length of the reinforcement is based on a clear spacing of bars being developed that is greater than 2*dia.bar and a clear cover that is greater than dia.bar, per (ACI-318, Table 25.4.2.2).

NOTE: Round up development length to be a minimum of 18 inches for design

Table 25.5.2.1—Lap splice lengths of deformed bars and deformed wires in tension

$A_{s,provided}/A_{s,required}$[1] over length of splice	Maximum percent of A_s spliced within required lap length	Splice type	ℓ_{st}	
≥ 2.0	50	Class A	Greater of:	$1.0\ell_d$ and 12 in.
	100	Class B	Greater of:	$1.3\ell_d$ and 12 in.
< 2.0	All cases	Class B		

[1]Ratio of area of reinforcement provided to area of reinforcement required by analysis at splice location.

$l_{st} := 1.3 \cdot l_d = 23.3 \cdot in$ — Lap splice length for walls. (ACI 318-14, Section 25.5.2.1)

NOTE: Round up splice length to be a minimum of 24 inches for design.

8.6 Check Temperature and Shrinkage Reinforcement (based on ACI 318-14, Section 24.4.3.2)

Table 24.4.3.2—Minimum ratios of deformed shrinkage and temperature reinforcement area to gross concrete area

Reinforcement type	f_y, psi	Minimum reinforcement ratio	
Deformed bars	< 60,000	0.0020	
Deformed bars or welded wire reinforcement	≥ 60,000	Greater of:	$\frac{0.0018 \times 60,000}{f_y}$
			0.0014

$h_c := \frac{h}{2} = 10.5 \cdot in$ Mean height of the anchor wall.

$b := d_{wall} = 21.0 \cdot in$ Thickness of the anchor wall for rebar design.

$A_{steel} := 0.0018 \cdot b \cdot h_c = 0.40 \cdot in^2$ Area of steel required by temperature and shrinkage. (ACI 318-14, Table 7.6.1.1)

$A_4 := 0.20 in^2$ $n := 4$ Area and number of horizontal #4 bars. (ACI 318-14, Appendix A)

$A_{s_provided} := A_4 \cdot n = 0.8 \cdot in^2 > A_{steel} = 0.40 \cdot in^2$ The current design is adequate as designed with 4-#4 bars horiz & 7-#4 bars vert.

24.4.3.3 The spacing of deformed shrinkage and temperature reinforcement shall not exceed the lesser of ***5h*** and 18 in.

$s_{long} := 10 \cdot in$ < $18 \cdot in$ OK

$s_{trans} := 6 \cdot in$ < $18 \cdot in$ OK

8.7 Check Out-of-Plane Shear Capacity of SPR Anchor Wall

Per ACI-318-14, Section 11.5.5;

11.5.5 *Out-of-plane shear*

11.5.5.1 V_n shall be calculated in accordance with 22.5.

$d = 7.0 \cdot in$

Previously defined distance from extreme compression fiber to centroid of vertical reinforcing bars, assuming vertical bars are located 1/3 from compression fiber (conservative).

$b_w = 36.0 \cdot in$

Previously defined width of wall considered.

$\phi_{shear} := 0.75$

Shear reduction factor. (ACI 318-14, Table 21.2.1)

$\lambda = 1.0$

Modification factor for normalweight concrete. (ACI 318-14, Section 19.2.4.2)

$\phi V_c := \phi_{shear} \cdot 2\lambda \cdot psi \cdot \sqrt{\frac{f_c}{psi}} \cdot b_w \cdot d = 25 \cdot kip$

Out-of-plane concrete shear strength of the evaluated wall section. (per ACI 318-14, Section 22.5.5.1)

$V_u := F_h = 1256.0\ lbf$

Out-of-plane shear demand on SPR AHR wall.

$DCR_{shear} := \frac{V_u}{\phi V_c} = 0.05$

The Demand to Capacity Ratio for the out-of-plane shear strength of the wall. The DCR is less than 1.0; therefore, **OK**.

8.8 Check Anchor Eye Bolts in Accordance with ACI 318-14, Chapter 17

$T_{eye_bolt} := \frac{F_{h_3pipes}}{2 \cdot pipes} \cdot \cos(angle) = 177.6\ lbf$ Tension load on SPR anchor wall eye bolt.

$V_{eye_bolt} := \frac{F_{h_3pipes}}{2 \cdot pipes} \cdot \sin(angle) = 59.1\ lbf$ Shear load on SPR anchor wall eye bolt.

Define Constants

Based on 5/8" diameter ASTM F593 stainless steel threaded rods with 3 7/8" maximum embedment depth

$n_a := 2$ The number of eye bolts per anchor wall.

$s_a := 26 \cdot in$ Minimum spacing of the eye bolts.

$h_{ef} := 3.125 in$ The effective minimum embedment. (ESR-3187, Table 12 & 14)

$n_{a_t} := 2$ Number of eye bolts resisting tension.

$n_{a_v} := 2$ Number of eye bolts resisting shear.

$f'_c := 4500 psi$ Compressive strength of concrete. (See Inputs)

$k_c := 17$ Effectiveness factor for cracked concrete. (ESR-3187, Table 12)

$\psi_{c_N} := 1.0$ Cracked concrete factor for post-installed anchor in cracked concrete. (ACI 318-14, Section 17.4.2.6)

$\phi_{t_s} := 0.65$ Strength reduction factor for steel failure in tension. (ESR-3187, Table 11)

$\phi_{t_c} := 0.65$ Strength reduction factor for concrete breakout failure in tension. (ESR-3187, Table 12)

$\phi_{v_s} := 0.60$ Strength reduction factor for steel failure in shear. (ESR-3187, Table 11).

$\phi_{v_c} := 0.70$ Strength reduction factor for concrete breakout failure in shear. (ESR-3187, Table 12)

$\phi_e := 0.75$ Tensile strength reduction factor for anchors in moderate or high seismic risk zones. (ACI 318-14 Section 17.2.3.4.4)

$\alpha_{v_seis} := 0.70$ Seismic shear reduction factor, (ESR-3187, Table 11).

$\phi_d := 0.65$ Bond strength reduction factor, (ESR-3187, Table 14 for dry & water saturated concrete installation conditions).

$c_{ac} := 2 \cdot h_{ef} = 6.3 \cdot in$ Critical edge distance for adhesive anchors. (ACI 318-14, Section 17.7.6)

$c_{a1} := c_{ac} = 6.3 \cdot in$ Limiting distance from center of anchor to edge of concrete in the direction of applied load. (See ACI 318-14, Figures R17.4.2.1 and R17.5.2.1 for illustration)

$c_{a2} := c_{a1} = 6.3 \cdot in$ Limiting distance from center of anchor to edge of concrete in the direction perpendicular to applied load. (See ACI 318-14, Figures R17.4.2.1 and R17.5.2.1 for illustration)

$c_{a_min} := \min(c_{a1}, c_{a2}) = 6.3 \cdot in$ — The minimum edge distance between the edge of the concrete and the nearest anchor. (Note: Envelopes actual edges distance)

$h_{min} := h_{ef} + 1.25 \cdot in = 4.4 \cdot in$ — The minimum member thickness. (ESR-3187, Table 12)

$h_a := 21 in$ — Actual concrete thickness. (H-2-838753)

$d := 0.625 in$ — The anchor diameter. (ESR-3187, Table 11)

Determine Steel Strength of Anchor in Tension

$$Individual_Group := \begin{cases} \text{"Analyze anchors individually according to ACI 318-14, Chapter 17"} & \text{if } 3 \cdot h_{ef} \le s_a \\ \text{"Analyze anchors as a group according to ACI 318-14, Section 17.2.1.1"} & \text{otherwise} \end{cases}$$

Individual_Group = "Analyze anchors individually according to ACI 318-14, Chapter 17"

$N_{sa} := 22600 lbf$ — The tensile capacity of the anchor is based on ICC-ES Evaluation Report ESR-3187, Table 11, for ASTM F593, stainless steel threaded eye anchor rods.

$\phi N_{sa} := \phi_{t_s} \cdot N_{sa} = 14690.0\ lbf$ — Tensile steel strength incorporating strength reduction factors.

Determine Concrete Breakout Strength of Anchorage in Tension

$$\psi_{ed_N} := \begin{cases} 1 & \text{if } c_{a_min} \ge 1.5 \cdot h_{ef} \\ 0.7 + 0.3 \cdot \dfrac{c_{a_min}}{1.5 \cdot h_{ef}} & \text{otherwise} \end{cases} = 1.0$$

The modification factor for edge effects. (ACI 318-14, Section 17.4.2.5)

$$\psi_{cp_N} := \begin{cases} 1 & \text{if } c_{a_min} \ge c_{ac} \\ \dfrac{\max(c_{a_min}, 1.5 \cdot h_{ef})}{c_{ac}} & \text{otherwise} \end{cases} = 1.0$$

Uncracked concrete pullout factor for post-installed anchors. (ACI 318-14, Section 17.4.2.7)

$\lambda := 1.0$ — Modification factor for normalweight concrete. (ACI 318-14, Section 19.2.4.2)

$N_b := k_c \cdot \lambda \cdot \sqrt{\dfrac{f'_c}{psi}} \cdot \left(\dfrac{h_{ef}}{in}\right)^{1.5} lbf = 6299.9\ lbf$ — Basic concrete breakout strength of a single anchor in tension in cracked concrete. (ACI 318-14, Equation 17.4.2.2a)

$A_{Nco} := 9 \cdot h_{ef}^2 = 87.9 \cdot in^2$ — Projected concrete failure area of a single anchor with an edge distance equal to or greater than 1.5 x h_{ef}. (ACI 318-14, Equation 17.4.2.1c)

$A_{Nc} := (\min(1.5 \cdot h_{ef}, c_{a1}) + s_a + 1.5 \cdot h_{ef}) \cdot (\min(1.5 \cdot h_{ef}, c_{a2}) + 1.5 \cdot h_{ef}) = 331.6 \cdot in^2$

$A_{Nc} := \min(n_a \cdot A_{Nco}, A_{Nc}) = 175.8 \cdot in^2$

Projected concrete failure area of the anchorage group. (ACI 318-14, Section 17.4.2.1 and Figure R17.4.2.1(b))

$e'_N := 0 \cdot in$ — No eccentricity of the anchors in tension. (See ACI 318-14, Fig R17.4.2.4 for illustration)

$\psi_{ec_N} := \dfrac{1}{\left(1 + \dfrac{2 \cdot e'_N}{3 \cdot h_{ef}}\right)} = 1.0$

Modification factor for anchor groups loaded eccentrically in tension. (ACI 318-14, Section 17.4.2.4, Equation 17.4.2.4)

$N_{cbg} := \dfrac{A_{Nc}}{A_{Nco}} \cdot \psi_{ec_N} \cdot \psi_{ed_N} \cdot \psi_{c_N} \cdot \psi_{cp_N} \cdot N_b = 12599.7 \cdot lbf$

Concrete breakout strength of the anchorage in tension. (ACI 318-14, Equation 17.4.2.1b)

$\phi N_{cb} := \phi_e \cdot \phi_{t_c} \cdot N_{cbg} = 6142.4\ lbf$

Tensile breakout strength incorporating strength reduction factors.

Determine Bond Strength of Adhesive Anchors in Tension

$\lambda_a := \lambda = 1.0$

ACI 318-14, Section 17.2.6 and modification factor for normalweight concrete. (ACI 318-14, Section 19.2.4.2)

$\tau_{cr} := 1170 \cdot psi$

Characteristic bond stress in cracked concrete, temperature range A, (ESR-3187, Table 14).

$\tau_{uncr} := 2220 \cdot psi$

Characteristic bond stress in uncracked concrete, temperature range A, (ESR-3187, Table 14).

$d_a := d = 0.6 \cdot in$

Anchor diameter, previously defined.

$N_{ba} := \lambda_a \cdot \tau_{cr} \cdot \pi \cdot d_a \cdot h_{ef} = 7179.0\ lbf$

Basic bond strength of adhesive anchor, (ACI 318-14, Section 17.4.5.2)

$c_{Na} := 10 \cdot d_a \cdot \sqrt{\dfrac{\tau_{uncr}}{1100 \cdot psi}} = 8.9 \cdot in$

Critical edge distance, (ACI 318-14, Equation 17.4.5.1d).

$A_{Nao} := \left(2 \cdot c_{Na}\right)^2 = 315.3 \cdot in^2$

Projected influence area for a single anchor, (ACI 318-14, Equation 17.4.5.1c).

$A_{Na} := \left(2 \cdot c_{Na}\right) \cdot \left(c_{Na} + c_{a_min} + s_a\right) = 730.4 \cdot in^2$

Projected influence area for a group of anchors, (ACI 318-14, Figure R17.4.5.1).

$A_{Na} := n_a \cdot A_{Nao} = 630.7 \cdot in^2$

Limiting value of A.Na per ACI 318-14, Section 17.4.5.1).

$\psi_{ed_Na} := 1.0 \qquad c_{a_min} = 6.3 \cdot in \quad > \quad c_{Na} = 8.9 \cdot in$

Modification factor for edge effects, (ACI 318-14, Equation 17.4.5.4a).

$\psi_{cp_Na} := \dfrac{c_{a_min}}{c_{ac}} \qquad c_{a_min} = 6.3 \cdot in \quad < \quad c_{ac} = 6.3 \cdot in$

Modification factor for adhesive anchors designed for uncracked concrete, (ACI 318-14, Equation 17.4.5.5a).

$e'_N := 0 \cdot in$

Previously defined.

$\psi_{ec_Na} := \dfrac{1}{\left(1 + \dfrac{e'_N}{c_{Na}}\right)} = 1.0$

Modification factor for adhesive anchor group loaded eccentrically in tension. (ACI 318-14, Equation 17.4.5.3)

$N_{ag} := \dfrac{A_{Na}}{A_{Nao}} \cdot \psi_{ec_Na} \cdot \psi_{ed_Na} \cdot \psi_{cp_Na} \cdot N_{ba} = 14358.1\ lbf$

Nominal bond strength of group of adhesive anchors in tension, (ACI 318-14, Equation 17.4.5.1b).

$\phi N_{ag} := \phi_e \cdot \phi_d \cdot N_{ag} = 6999.6\ lbf$

Nominal bond strength in tension for a group of adhesive anchors in tension incorporating strength reduction factors, (ACI 318-14, Equation 17.4.5.1b).

Determine Steel Strength of the Anchorage in Shear

$$\text{Individual_Group} := \begin{cases} \text{"Analyze anchors individually in shear according to ACI 318-14, Chapter 17"} & \text{if } 3\cdot c_{a1} \le s_a \\ \text{"Analyze anchors as a group in shear according to ACI 318-14, Section 17.2.1.1"} & \text{otherwise} \end{cases}$$

Individual_Group = "Analyze anchors individually in shear according to ACI 318-14, Chapter 17"

$V_{sa} := 13560\cdot lbf$ — The steel strength in shear. (ESR-3187, Table 11, ASTM F593)

$\phi V_{sa} := \alpha_{v_seis}\cdot\phi_{v_s}\cdot V_{sa} = 5695.2\ lbf$ — Steel shear strength incorporating strength reduction factors.

Determine Concrete Breakout Strength of the Anchorage in Shear

$$\psi_{ed_V} := \begin{cases} 1.0 & \text{if } c_{a2} \ge 1.5\cdot c_{a1} \\ 0.7 + 0.3\cdot\dfrac{c_{a2}}{1.5\cdot c_{a1}} & \text{otherwise} \end{cases} = 0.9$$

Edge distance factor (Anchors not on a corner). (ACI 318-14, Section 17.5.2.6)

$\psi_{c_V} := 1.0$ — Cracked concrete factor without supplementary reinforcement, (ACI 318-14, Section 17.5.2.7)

$$\psi_{h_V} := \begin{cases} \sqrt{\dfrac{1.5\cdot c_{a1}}{h_a}} & \text{if } h_a < 1.5\cdot c_{a1} \\ 1 & \text{otherwise} \end{cases} = 1.00$$

Thickness modification factor. (ACI 318-14, Section 17.5.2.8)

$d_a := d = 0.6\cdot in$ — The outside diameter of the anchor.

$l_e := \min(8\cdot d_a, h_{ef}) = 3.1\cdot in$ — The load bearing length of anchor for shear. (ACI 318-14, Section 17.5.2.2)

$$V_b := \min\left[7\cdot\left(\frac{l_e}{d_a}\right)^{0.2}\cdot\sqrt{\frac{d_a}{in}}\cdot\lambda\cdot\sqrt{\frac{f'_c}{psi}}\cdot\left(\frac{c_{a1}}{in}\right)^{1.5}\cdot lbf,\ 9\cdot\lambda\cdot\sqrt{\frac{f'_c}{psi}}\cdot\left(\frac{c_{a1}}{in}\right)^{1.5}\cdot lbf\right] = 8003.1\cdot lbf$$

Basic concrete breakout strength of a single anchor in shear in cracked concrete. (ACI 318-14, Section 17.5.2.2)

$A_{Vco} := 4.5\cdot c_{a1}^2 = 175.8\cdot in^2$ — The projected area for a single anchor in a deep member with a distance from edges equal or greater than 1.5 x c_{a1}. (ACI 318-14, Equation 17.5.2.1c)

$A_{Vc} := [(2\cdot 1.5\cdot c_{a1}) + s_a]\cdot\min(1.5\cdot c_{a1}, h_a) = 419.5\cdot in^2$ — Projected concrete failure area of the anchorage. (ACI 318-14, Section 17.5.2.1 and Figure R17.5.2.1b)

$e'_V := 0\cdot in$ — No eccentricity of anchor group in shear.

$$\psi_{ec_V} := \frac{1}{\left(1 + \dfrac{2\cdot e'_V}{3\cdot c_{a1}}\right)} = 1.0$$

Modification factor for anchor group loaded eccentrically in shear. (ACI 318-14, Equation 17.5.2.5)

$$V_{cbg} := \frac{A_{Vc}}{A_{Vco}}\cdot\psi_{ec_V}\cdot\psi_{ed_V}\cdot\psi_{c_V}\cdot\psi_{h_V}\cdot V_b = 17190.7\cdot lbf$$

Nominal concrete breakout strength of anchorage in shear. (ACI 318-14, Equation 17.5.2.1a)

$\phi V_{cb} := \phi_{v_c}\cdot V_{cbg} = 12033.5\ lbf$ — Shear breakout strength incorporating strength reduction factors.

Determine Pryout Strength of the Anchorage in Shear

$k_{cp} := \begin{cases} 1 & \text{if } h_{ef} < 2.5\text{in} \\ 2 & \text{otherwise} \end{cases} = 2.0$

Coefficient for pryout strength. (ACI 318-14, Section 17.5.3.1)

$N_{cbg} = 12599.7\ \text{lbf}$ $N_{ag} = 14358.1\ \text{lbf}$

Use the lesser of N.cbg from Equation 17.4.2.1b or Nag from 17.4.5.1b per ACI 318-14, Section 17.5.3.1).

$V_{cp} := k_{cp} \cdot N_{cbg} = 25199.4\ \text{lbf}$

The nominal pryout strength of the anchorage in shear per ACI 318-14, Equation 17.5.3.1a.

$\phi V_{cp} := \phi_{v_c} \cdot V_{cp} = 17639.6\ \text{lbf}$

Shear pryout strength incorporating strength reduction factors.

Determine Governing Failure Strength

$\text{Govern}_t := \begin{cases} \text{"Steel failure governs (Ductile Failure)."} & \text{if } \phi N_{sa} \le \min(\phi N_{cb}, \phi N_{ag}) \\ \text{"Concrete breakout governs (Brittle Failure)."} & \text{if } \phi N_{cb} \le \min(\phi N_{sa}, \phi N_{ag}) \\ \text{"Bond strength governs (Brittle Failure)."} & \text{otherwise} \end{cases}$

$\text{Govern}_t = \text{"Concrete breakout governs (Brittle Failure)."}$

$\text{Tensile}_{govern} := \begin{cases} \phi N_{sa} & \text{if } \phi N_{sa} \le \min(\phi N_{cb}, \phi N_{ag}) \\ \phi N_{cb} & \text{if } \phi N_{cb} \le \min(\phi N_{sa}, \phi N_{ag}) \\ \phi N_{ag} & \text{otherwise} \end{cases}$

The governing allowable tensile capacity of the anchorage.

$\text{Tensile}_{govern} = 6142\ \text{lbf}$

$T_{eye_bolt} = 177.6\ \text{lbf}$

$\text{Tension_Check} := \begin{cases} \text{"Anchor capacity in tension is OK."} & \text{if } \text{Tensile}_{govern} > T_{eye_bolt} \\ \text{"Anchor capacity in tension is NOT OK"} & \text{otherwise} \end{cases}$

$\text{Tension_Check} = \text{"Anchor capacity in tension is OK."}$

Check to determine the adequacy of the anchors in tension.

$$DCR_{tens} := \frac{T_{eye_bolt}}{\text{Tensile}_{govern}} = 0.03$$

$$Govern_v := \begin{cases} \text{"Steel failure governs (Ductile Failure)."} & \text{if } \phi V_{sa} \le \min(\phi V_{cb}, \phi V_{cp}) \\ \text{"Concrete breakout governs (Brittle Failure)."} & \text{if } \phi V_{cb} < \min(\phi V_{sa}, \phi V_{cp}) \\ \text{"Concrete pryout governs (Brittle Failure)."} & \text{otherwise} \end{cases}$$

$Govern_v$ = "Steel failure governs (Ductile Failure)."

$$Shear_{govern} := \begin{cases} \phi V_{sa} & \text{if } \phi V_{sa} \le \min(\phi V_{cb}, \phi V_{cp}) \\ \phi V_{cb} & \text{if } \phi V_{cb} < \min(\phi V_{sa}, \phi V_{cp}) \\ \phi V_{cp} & \text{otherwise} \end{cases}$$

The governing allowable shear capacity of the anchorage.

$Shear_{govern} = 5695\,lbf$

$V_{eye_bolt} = 59.1\,lbf$

$$Shear_Check := \begin{cases} \text{"Anchor capacity in shear is OK."} & \text{if } Shear_{govern} > V_{eye_bolt} \\ \text{"Anchor capacity in shear is NOT OK"} & \text{otherwise} \end{cases}$$

Shear_Check = "Anchor capacity in shear is OK."

Check to determine the adequacy of the anchors in shear.

$$DCR_{shear} := \frac{V_{eye_bolt}}{Shear_{govern}} = 0.01$$

$$DCR := \begin{cases} DCR_{tens} & \text{if } DCR_{shear} \le 0.2 \\ DCR_{shear} & \text{if } DCR_{tens} \le 0.2 \\ \frac{1}{1.2} \cdot (DCR_{tens} + DCR_{shear}) & \text{otherwise} \end{cases} = 0.01$$

The DCR ratio is less than 1.0; Therefore, **OK** ACI 318-14, Section 17.6.

ATTACHMENT 1

HDPE PIPE DATA SHEET

Sargent & Lundy Engineering Services, Inc.	RPP-CALC-63782, Rev. 0 CALCULATION SHEET		
Project No. S54413.024	**Calculation No.** S54413.024-S-004	**Rev.** 0	**Page No.** 21 of 29
Title: LERF Basin 41 Sample Port Riser Anchor Wall Design			
Prepared By: RW Davidson	**Date:** 4/5/2020	**Checked By:** PP Santos	**Date:** 4/5/2020

PE 3408 Industrial Piping System
Pipe Data and Pressure Ratings

PRESSURE RATING		255 PSI SDR 7.3		200 PSI SDR 9		160 PSI SDR 11		130 PSI SDR 13.5		100 PSI SDR 17		50 PSI SDR 32.5	
IPS PIPE SIZE	O.D. SIZE (IN.)	MIN. WALL (in) AVG. ID (in)	WEIGHT LB/FT	MIN. WALL (in) AVG. ID (in)	WEIGHT LB/FT	MIN. WALL (in) AVG. ID (in)	WEIGHT LB/FT	MIN. WALL (in) AVG. ID (in)	WEIGHT LB/FT	MIN. WALL (in) AVG. ID (in)	WEIGHT LB/FT	MIN. WALL (in) AVG. ID (in)	WEIGHT LB/FT
2"	2.375	.325 1.686	.91	.264 1.815	.76	.216 1.917	.64	—	—	—	—	—	—
3"	3.500	.479 2.485	1.98	.389 2.675	1.65	.318 2.826	1.39	.259 2.951	1.15	.206 3.063	.93	—	—
4"	4.500	.616 3.194	3.27	.500 3.440	2.74	.409 3.633	2.30	.333 3.794	1.90	.265 3.938	1.54	—	—
†5"	5.563	.762 3.948	5.00	.618 4.253	4.18	.506 4.490	3.50	.412 4.690	2.91	.327 4.870	2.35	—	—
6"	6.625	.908 4.700	7.09	.736 5.065	59.3	.602 5.349	4.97	.491 5.584	4.13	.390 5.798	3.34	.204 6.193	1.80
7"	7.125	—	—	—	—	—	—	—	—	.420 6.237	3.87	.220 6.661	2.09
8"	8.625	1.182 6.119	12.01	.958)6.594	10.05	.785 6.963	8.43	.639 7.270	7.00	.508 7.550	5.66	.265 8.063	3.05
10"	10.75	1.473 7.627	18.66	1.194 8.219	15.62	.978 8.679	13.10	.797 9.062	10.89	.633 9.410	8.80	.331 10.048	4.75
12"	12.75	1.747 9.046	26.25	1.417 9.746	21.97	1.160 10.293	18.43	.945 10.749	15.31	.750 11.160	12.36	.392 11.919	6.67
14"	14.00	1.918 9.046	31.64	1.556 10.701	26.49	1.273 11.301	22.20	1.037 11.802	18.44	.824 12.253	14.91	.431 13.086	8.05
16"	16.00	2.192 11.353	41.34	1.778 12.231	34.61	1.455 12.915	29.00	1.185 13.488	24.09	.941 14.005	19.46	.492 14.957	10.51
18"	18.00	2.466 12.772	52.31	2.000 13.760	43.79	1.636 14.532	36.69	1.333 15.174	30.48	1.059 15.755	24.65	.554 16.826	13.29
20"	20.00	2.740 14.191	64.57	2.222 15.289	54.05	1.818 16.146	45.30	1.481 16.860	37.64	1.176 17.507	30.42	.615 18.696	16.41
22"	22.00	—	—	2.444 16.819	65.41	2.000 17.760	54.82	1.630 18.544	45.56	1.294 19.257	36.81	.677 20.565	19.87
24"	24.00	—	—	2.667 18.346	77.85	2.182 19.374	65.24	1.778 20.231	54.22	1.412 21.007	43.82	.738 22.435	23.62
†26"	26.00	—	—	2.889 19.875	—	2.364 20.988	76.58	1.926 21.917	63.63	1.529 22.759	51.40	.800 24.304	27.74
†28"	28.00	—	—	—	—	2.545 22.605	88.79	2.074 23.603	73.76	1.647 25.508	59.62	.862 26.173	32.20
†30"	30.00	—	—	—	—	2.727 24.219	101.94	2.222 25.289	84.68	1.765 26.528	68.45	.923 28.043	36.92
†32"	32.00	—	—	—	—	2.909 25.833	115.99	2.370 26.976	96.35	1.882 28.010	77.86	.985 29.912	42.04
†34"	34.00	—	—	—	—	3.090 27.450	130.92	2.519 28.660	108.80	2.000 29.760	87.91	1.046 31.782	47.44
†36"	36.00	—	—	—	—	—	—	—	—	2.118 31.510	98.56	1.108 33.651	53.18

NOTES:

- Additional SDR's and pressure ratings available, including sizes through 54".
- See Section B for Polyethylene Pipe Fittings.
- Industrial PE (polyethylene) pipe sizes are identified by IPS (steel pipe size) diameters which designate the nominal inside diameter for 12" IPS AND SMALLER PIPE, AND O.D. (outside diameter) for 14" IPS and larger pipe.
- The ID on IPS PE 3408 can be significantly smaller than the nominal pipe size.
- Coefficient of thermal expansion is over 10 times that of DI and steel and 3 times that of PVC. In practical terms, this means HDPE pipe shrinks 10 times as much as DI and 3 times as much as PVC when it gets cold. This can loosen any fittings installed on it. Also, it's length shrinks 1 inch per 100 feet of pipe length with a 10° F temperature drop, making it likely to pull out of unrestrained couplings.

†Subject to minimum order quantities and availability of tooling.

www.ejprescott.com A-27

ATTACHMENT 2

ICC-ES EVALUATION REPORT

ESR -3187

HILTI HIT-HY 200 ADHESIVE ANCHORS AND POST INSTALLED REINFORCING BAR CONNECTIONS IN CONCRETE

(EXCERPT)

Sargent & Lundy Engineering Services, Inc.	RPP-CALC-63782, Rev. 0 **CALCULATION SHEET**		
Project No. S54413.024	**Calculation No.** S54413.024-S-004	**Rev.** 0	**Page No.** 23 of 29
Title: LERF Basin 41 Sample Port Riser Anchor Wall Design			
Prepared By: RW Davidson	**Date:** 4/5/2020	**Checked By:** PP Santos	**Date:** 4/5/2020

ICC EVALUATION SERVICE

In Cooperation with Innovation RESEARCH LABS

Most Widely Accepted and Trusted

ICC-ES Evaluation Report

ICC-ES | (800) 423-6587 | (562) 699-0543 | www.icc-es.org

ESR-3187

Issued 03/2018
Revised 04/2019
This report is subject to renewal 03/2020.

DIVISION: 03 00 00—CONCRETE
SECTION: 03 16 00—CONCRETE ANCHORS
DIVISION: 05 00 00—METALS
SECTION: 05 05 19—POST-INSTALLED CONCRETE ANCHORS

REPORT HOLDER:

HILTI, INC.

EVALUATION SUBJECT:

HILTI HIT-HY 200 ADHESIVE ANCHORS AND POST INSTALLED REINFORCING BAR CONNECTIONS IN CONCRETE

ICC ES ICC ES PMG ICC ES LISTED

"2014 Recipient of Prestigious Western States Seismic Policy Council (WSSPC) Award in Excellence"

A Subsidiary of ICC INTERNATIONAL CODE COUNCIL

ICC-ES Evaluation Reports are not to be construed as representing aesthetics or any other attributes not specifically addressed, nor are they to be construed as an endorsement of the subject of the report or a recommendation for its use. There is no warranty by ICC Evaluation Service, LLC, express or implied, as to any finding or other matter in this report, or as to any product covered by the report.

ANSI ACCREDITED ISO/IEC 17065 Product Certification Body #1000

Copyright © 2019 ICC Evaluation Service, LLC. All rights reserved.

Sargent & Lundy Engineering Services, Inc.	RPP-CALC-63782, Rev. 0 CALCULATION SHEET		
Project No. S54413.024	**Calculation No.** S54413.024-S-004	**Rev.** 0	**Page No.** 24 of 29
Title: LERF Basin 41 Sample Port Riser Anchor Wall Design			
Prepared By: RW Davidson	**Date:** 4/5/2020	**Checked By:** PP Santos	**Date:** 4/5/2020

ICC EVALUATION SERVICE — Most Widely Accepted and Trusted

ICC-ES Evaluation Report

ESR-3187

Reissued March 2018
Revised April 2019
This report is subject to renewal March 2020.

www.icc-es.org | (800) 423-6587 | (562) 699-0543 — *A Subsidiary of the International Code Council®*

DIVISION: 03 00 00—CONCRETE
Section: 03 16 00—Concrete Anchors

DIVISION: 05 00 00—METALS
Section: 05 05 19—Post-installed Concrete Anchors

REPORT HOLDER:

HILTI, INC.

EVALUATION SUBJECT:

HILTI HIT-HY 200 ADHESIVE ANCHORS AND POST INSTALLED REINFORCING BAR CONNECTIONS IN CONCRETE

1.0 EVALUATION SCOPE

Compliance with the following codes:

- 2018, 2015, 2012, and 2009 *International Building Code®* (IBC)
- 2018, 2015, 2012, and 2009 *International Residential Code®* (IRC)
- 2013 *Abu Dhabi International Building Code* (ADIBC)†

†The ADIBC is based on the 2009 IBC. 2009 IBC code sections referenced in this report are the same sections in the ADIBC.

For evaluation for compliance with codes adopted by the Los Angeles Department of Building and Safety (LADBS), see ESR-3187 LABC and LARC Supplement.

For evaluation for compliance with the *National Building Code of Canada®* (NBCC), see listing report ELC-3187.

Property evaluated:

Structural

2.0 USES

Adhesive anchors and reinforcing bars installed using the Hilti HIT-HY 200 Adhesive Anchoring System and Post-Installed Reinforcing Bar System are used to resist static, wind and earthquake (Seismic Design Categories A through F) tension and shear loads in cracked and uncracked normal-weight concrete having a specified compressive strength, f'_c, of 2,500 psi to 8,500 psi (17.2 MPa to 58.6 MPa) [minimum of 24 MPa is required under ADIBC Appendix L, Section 5.1.1].

The anchor system complies with anchors as described in Section 1901.3 of the 2018 and 2015 IBC, Section 1909 of the 2012 IBC and is an alternative to cast-in-place anchors described in Section 1908 of the 2012 IBC, and Sections 1911 and 1912 of the 2009 IBC. The anchor systems may also be used where an engineered design is submitted in accordance with Section R301.1.3 of the IRC.

The post-installed reinforcing bar system is an alternative to cast-in-place reinforcing bars governed by ACI 318 and IBC Chapter 19.

3.0 DESCRIPTION

3.1 General:

The Hilti HIT-HY 200 Adhesive Anchoring System and Post-Installed Reinforcing Bar System are comprised of the following components:

- Hilti HIT-HY 200 adhesive packaged in foil packs (either Hilti HIT-HY 200-A or Hilti HIT-HY 200-R)
- Adhesive mixing and dispensing equipment
- Equipment for hole cleaning and adhesive injection

The Hilti HIT-HY 200 Adhesive Anchoring System may be used with continuously threaded rod, Hilti HIT-Z(-R) anchor rods, Hilti HIS-(R)N internally threaded inserts or deformed steel reinforcing bars as depicted in Figure 1. The Hilti HIT-HY 200 Post-Installed Reinforcing Bar System may only be used with deformed steel reinforcing bars as depicted in Figure 2. The primary components of the Hilti Adhesive Anchoring and Post-Installed Reinforcing Bar Systems, including the Hilti HIT-HY 200 Adhesive, HIT-RE-M static mixing nozzle and steel anchoring elements, are shown in Figure 6 of this report.

The manufacturer's printed Installation instructions (MPII), as included with each adhesive unit package, are replicated as Figure 9.

3.2 Materials:

3.2.1 Hilti HIT-HY 200 Adhesive: Hilti HIT-HY 200 Adhesive is an injectable, two-component hybrid adhesive. The two components are separated by means of a dual-cylinder foil pack attached to a manifold. The two components combine and react when dispensed through a static mixing nozzle attached to the manifold. Hilti HIT-HY 200 is available in 11.1-ounce (330 mL) and 16.9-ounce (500 mL) foil packs. The manifold attached to each foil pack is stamped with the adhesive expiration date. The shelf life, as indicated by the expiration date, applies to an unopened foil pack stored in a dry, dark environment and in accordance with Figure 9.

Hilti HIT-HY 200 Adhesive is available in two options, Hilti HIT-HY 200-A and Hilti HIT-HY 200-R. Both options are subject to the same technical data as set forth in this report. Hilti HIT-HY 200-A will have shorter working times

ICC-ES Evaluation Reports are not to be construed as representing aesthetics or any other attributes not specifically addressed, nor are they to be construed as an endorsement of the subject of the report or a recommendation for its use. There is no warranty by ICC Evaluation Service, LLC, express or implied, as to any finding or other matter in this report, or as to any product covered by the report.

Copyright © 2019 ICC Evaluation Service, LLC. All rights reserved.

and curing times than Hilti HIT-HY 200-R. The packaging for each option employs a different color, which helps the user distinguish between the two adhesives.

3.2.2 Hole Cleaning Equipment:

3.2.2.1 Standard Equipment: Standard hole cleaning equipment, comprised of steel wire brushes and air nozzles, is described in Figure 9 of this report.

3.2.2.2 Hilti Safe-Set™ System: The Hilti Safe-Set™ with Hilti HIT-HY 200 consists of one of the following:

- For the Hilti HIT-Z and HIT-Z-R anchor rods, hole cleaning is not required after drilling the hole, except if the hole is drilled with a diamond core drill bit.
- For the elements described in Sections 3.2.4.2 through 3.2.4.4 and Section 3.2.5, the Hilti TE-CD or TE-YD hollow carbide drill bit with a carbide drilling head conforming to ANSI B212.15. Used in conjunction with a Hilti vacuum with a minimum value for the maximum volumetric flow rate of 129 CFM (61 ℓ/s), the Hilti TE-CD or TE-YD drill bit will remove the drilling dust, automatically cleaning the hole.

3.2.3 Hole Preparation Equipment:

3.2.3.1 Hilti Safe-Set™ System: TE-YRT Roughening Tool: For the elements described in Sections 3.2.5.2 through 3.2.5.4 and Tables 12, 13, 16, 17, 21, and 23, the Hilti TE-YRT roughening tool with a carbide roughening head is used for hole preparation in conjunction with holes core drilled with a diamond core bit as illustrated in Figure 4.

3.2.4 Dispensers: Hilti HIT-HY 200 must be dispensed with manual or electric dispensers provided by Hilti.

3.2.5 Anchor Elements:

3.2.5.1 Hilti HIT-Z and HIT-Z-R Anchor Rods: Hilti HIT-Z and HIT-Z-R anchor rods have a conical shape on the embedded section and a threaded section above the concrete surface. Mechanical properties for the Hilti HIT-Z and HIT-Z-R anchor rods are provided in Table 2. The rods are available in diameters as shown in Table 7 and Figure 1. Hilti HIT-Z anchor rods are produced from carbon steel and furnished with a 0.005-millimeter-thick (5 μm) zinc electroplated coating. Hilti HIT-Z-R anchor rods are fabricated from grade 316 stainless steel.

3.2.5.2 Threaded Steel Rods: Threaded steel rods must be clean, continuously threaded rods (all-thread) in diameters as described in Tables 11 and 15 and Figure 1 of this report. Steel design information for common grades of threaded rods is provided in Table 3. Carbon steel threaded rods must be furnished with a 0.0002-inch-thick (0.005 mm) zinc electroplated coating complying with ASTM B633 SC 1 or must be hot-dipped galvanized complying with ASTM A153, Class C or D. Stainless steel threaded rods must comply with ASTM F593 or ISO 3506 A4. Threaded steel rods must be straight and free of indentations or other defects along their length. The ends may be stamped with identifying marks and the embedded end may be blunt cut or cut on the bias to a chisel point.

3.2.5.3 Steel Reinforcing Bars for use in Post-Installed Anchor Applications: Steel reinforcing bars are deformed bars as described in Table 4 of this report. Tables 11, 15, and 19 and Figure 1 summarize reinforcing bar size ranges. The embedded portions of reinforcing bars must be straight, and free of mill scale, rust, mud, oil and other coatings (other than zinc) that may impair the bond with the adhesive. Reinforcing bars must not be bent after installation except as set forth in ACI 318-14 26.6.3.1(b) or ACI 318-11 7.3.2, as applicable, with the additional condition that the bars must be bent cold, and heating of reinforcing bars to facilitate field bending is not permitted.

3.2.5.4 Hilti HIS-N and HIS-RN Inserts: Hilti HIS-N and HIS-RN inserts have a profile on the external surface and are internally threaded. Mechanical properties for Hilti HIS-N and HIS-RN inserts are provided in Table 5. The inserts are available in diameters and lengths as shown in Table 22 and Figure 1. Hilti HIS-N inserts are produced from carbon steel and furnished with a 0.005-millimeter-thick (5 μm) zinc electroplated coating complying with ASTM B633 SC 1. The stainless steel Hilti HIS-RN inserts are fabricated from X5CrNiMo17122 K700 steel conforming to DIN 17440. Specifications for common bolt types that may be used in conjunction with Hilti HIS-N and HIS-RN inserts are provided in Table 6. Bolt grade and material type (carbon, stainless) must be matched to the insert. Strength reduction factors, ϕ, corresponding to brittle steel elements must be used for Hilti HIS-N and HIS-RN inserts.

3.2.5.5 Ductility: In accordance with ACI 318-14 2.3 or ACI 318-11 D.1, as applicable, in order for a steel element to be considered ductile, the tested elongation must be at least 14 percent and reduction of area must be at least 30 percent. Steel elements with a tested elongation of less than 14 percent or a reduction of area of less than 30 percent, or both, are considered brittle. Values for various steel materials are provided in Tables 2, 3, and 6 of this report. Where values are nonconforming or unstated, the steel must be considered brittle.

3.2.6 Steel Reinforcing Bars for Use in Post-Installed Reinforcing Bar Connections: Steel reinforcing bars used in post-installed reinforcing bar connections are deformed bars (rebar) as depicted in Figures 2 and 3. Tables 25, 26, 27, and Figure 9 summarize reinforcing bar size ranges. The embedded portions of reinforcing bars must be straight, and free of mill scale, rust and other coatings that may impair the bond with the adhesive. Reinforcing bars must not be bent after installation, except as set forth in Section 26.6.3.1(a) of ACI 318-14 or Section 7.3.2 of ACI 318-11, as applicable, with the additional condition that the bars must be bent cold, and heating of reinforcing bars to facilitate field bending is not permitted.

3.3 Concrete:

Normal-weight concrete must comply with Sections 1903 and 1905 of the IBC, as applicable. The specified compressive strength of the concrete must be from 2,500 psi to 8,500 psi (17.2 MPa to 58.6 MPa) [minimum of 24 MPa is required under ADIBC Appendix L, Section 5.1.1].

4.0 DESIGN AND INSTALLATION

4.1 Strength Design of Post-Installed Anchors:

Refer to Table 1 for the design parameters for specific installed elements, and refer to Figure 4 and Section 4.1.4 for a flowchart to determine the applicable design bond strength or pullout strength.

4.1.1 General: The design strength of anchors under the 2018 and 2015 IBC and 2018 and 2015 IRC must be determined in accordance with ACI 318-14 and this report. The design strength of anchors under the 2012 and 2009 IBC, as well as the 2012 and 2009 IRC must be determined in accordance with ACI 318-11 and this report.

A design example according to the 2012 and 2009 IBC based on ACI 318-11 is given in Figure 7 of this report.

Design parameters are based on ACI 318-14 for use with the 2018 and 2015 IBC, and ACI 318-11 for use with the 2012 and 2009 IBC unless noted otherwise in Sections 4.1.1 through 4.1.11 of this report.

Sargent & Lundy Engineering Services, Inc.	**RPP-CALC-63782, Rev. 0** **CALCULATION SHEET**		
Project No. S54413.024	**Calculation No.** S54413.024-S-004	**Rev.** 0	**Page No.** 26 of 29
Title: LERF Basin 41 Sample Port Riser Anchor Wall Design			
Prepared By: RW Davidson	**Date:** 4/5/2020	**Checked By:** PP Santos	**Date:** 4/5/2020

TABLE 1—DESIGN TABLE INDEX

Design Table		Fractional		Metric	
		Table	Page	Table	Page
Hilti HIT-Z and HIT-Z-R Anchor Rod	Steel Strength - N_{sa}, V_{sa}	7	14	7	14
	Concrete Breakout - N_{cb}, N_{cbg}, V_{cb}, V_{cbg}, V_{cp}, V_{cpg}	8	15	8	15
	Pullout Strength – N_p	10	19	10	19
Standard Threaded Rod	Steel Strength - N_{sa}, V_{sa}	11	20	15	25
	Concrete Breakout - N_{cb}, N_{cbg}, V_{cb}, V_{cbg}, V_{cp}, V_{cpg}	12	22	16	26
	Bond Strength - N_a, N_{ag}	14	24	18	28
Hilti HIS-N and HIS-RN Internally Threaded Insert	Steel Strength - N_{sa}, V_{sa}	22	32	22	32
	Concrete Breakout - N_{cb}, N_{cbg}, V_{cb}, V_{cbg}, V_{cp}, V_{cpg}	23	33	23	33
	Bond Strength - N_a, N_{ag}	24	34	24	34

Design Table		Fractional		EU Metric		Canadian	
		Table	Page	Table	Page	Table	Page
Steel Reinforcing Bars	Steel Strength - N_{sa}, V_{sa}	11A	21	15	25	19	29
	Concrete Breakout - N_{cb}, N_{cbg}, V_{cb}, V_{cbg}, V_{cp}, V_{cpg}	12	22	16	26	20	30
	Bond Strength - N_a, N_{ag}	13	23	17	27	21	31
	Determination of development length for post-installed reinforcing bar connections	25	35	26	36	27	36

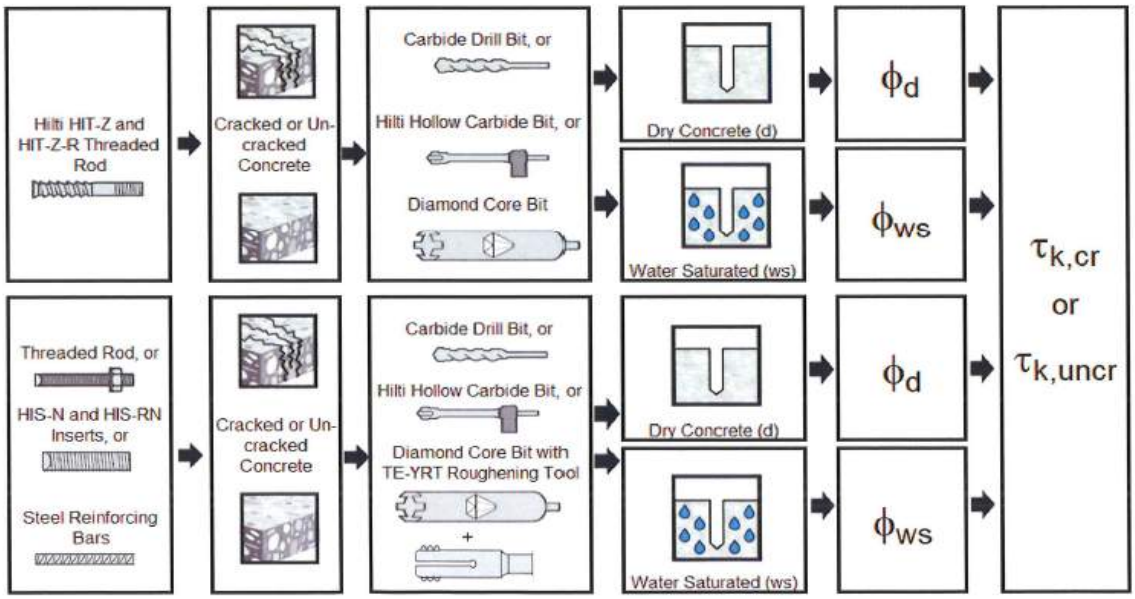

FIGURE 4—FLOWCHART FOR THE ESTABLISHMENT OF DESIGN BOND OR PULLOUT STRENGTH FOR POST-INSTALLED ADHESIVE ANCHORS

Sargent & Lundy Engineering Services, Inc.	RPP-CALC-63782, Rev. 0 **CALCULATION SHEET**		
Project No. S54413.024	**Calculation No.** S54413.024-S-004	**Rev.** 0	**Page No.** 27 of 29
Title: LERF Basin 41 Sample Port Riser Anchor Wall Design			
Prepared By: RW Davidson	**Date:** 4/5/2020	**Checked By:** PP Santos	**Date:** 4/5/2020

Fractional Threaded Rod

Steel Strength

TABLE 11—STEEL DESIGN INFORMATION FOR FRACTIONAL THREADED ROD

DESIGN INFORMATION		Symbol	Units	Nominal rod diameter (in.)[1]						
				3/8	1/2	5/8	3/4	7/8	1	1 1/4
Rod O.D.		d	in. (mm)	0.375 (9.5)	0.5 (12.7)	0.625 (15.9)	0.75 (19.1)	0.875 (22.2)	1 (25.4)	1.25 (31.8)
Rod effective cross-sectional area		A_{se}	in.^{2} (mm^2)	0.0775 (50)	0.1419 (92)	0.2260 (146)	0.3345 (216)	0.4617 (298)	0.6057 (391)	0.9691 (625)
ISO 898-1 Class 5.8	Nominal strength as governed by steel strength	N_{sa}	lb (kN)	5,620 (25.0)	10,290 (45.8)	16,385 (72.9)	24,250 (107.9)	33,470 (148.9)	43,910 (195.3)	70,260 (312.5)
		V_{sa}	lb (kN)	3,370 (15.0)	6,175 (27.5)	9,830 (43.7)	14,550 (64.7)	20,085 (89.3)	26,345 (117.2)	42,155 (187.5)
	Reduction for seismic shear	$\alpha_{V,seis}$	-	0.70						
	Strength reduction factor ϕ for tension[2]	ϕ	-	0.65						
	Strength reduction factor ϕ for shear[2]	ϕ	-	0.60						
ASTM A193 B7	Nominal strength as governed by steel strength	N_{sa}	lb (kN)	9,685 (43.1)	17,735 (78.9)	28,250 (125.7)	41,810 (186.0)	57,710 (256.7)	75,710 (336.8)	121,135 (538.8)
		V_{sa}	lb (kN)	5,810 (25.9)	10,640 (47.3)	16,950 (75.4)	25,085 (111.6)	34,625 (154.0)	45,425 (202.1)	72,680 (323.3)
	Reduction for seismic shear	$\alpha_{V,seis}$	-	0.70						
	Strength reduction factor ϕ for tension[3]	ϕ	-	0.75						
	Strength reduction factor ϕ for shear[3]	ϕ	-	0.65						
ASTM F1554 Gr. 36	Nominal strength as governed by steel strength	N_{sa}	lb (kN)	- -	8,230 (36.6)	13,110 (58.3)	19,400 (86.3)	26,780 (119.1)	35,130 (156.3)	56,210 (250.0)
		V_{sa}	lb (kN)	- -	4,940 (22.0)	7,865 (35.0)	11,640 (51.8)	16,070 (71.5)	21,080 (93.8)	33,725 (150.0)
	Reduction factor, seismic shear	$\alpha_{V,seis}$	-	0.6						
	Strength reduction factor ϕ for tension[3]	ϕ	-	0.75						
	Strength reduction factor ϕ for shear[3]	ϕ	-	0.65						
ASTM F1554 Gr. 55	Nominal strength as governed by steel strength	N_{sa}	lb (kN)	- -	10,645 (47.4)	16,950 (75.4)	25,090 (111.6)	34,630 (154.0)	45,430 (202.1)	72,685 (323.3)
		V_{sa}	lb (kN)	- -	6,385 (28.4)	10,170 (45.2)	15,055 (67.0)	20,780 (92.4)	27,260 (121.3)	43,610 (194.0)
	Reduction factor, seismic shear	$\alpha_{V,seis}$	-	0.7						
	Strength reduction factor ϕ for tension[3]	ϕ	-	0.75						
	Strength reduction factor ϕ for shear[3]	ϕ	-	0.65						
ASTM F1554 Gr. 105	Nominal strength as governed by steel strength	N_{sa}	lb (kN)	- -	17,740 (78.9)	28,250 (125.7)	41,815 (186.0)	57,715 (256.7)	75,715 (336.8)	121,135 (538.8)
		V_{sa}	lb (kN)	- -	10,645 (47.4)	16,950 (75.4)	25,090 (111.6)	34,630 (154.0)	45,430 (202.1)	72,680 (323.3)
	Reduction factor, seismic shear	$\alpha_{V,seis}$	-	0.7						
	Strength reduction factor ϕ for tension[3]	ϕ	-	0.75						
	Strength reduction factor ϕ for shear[3]	ϕ	-	0.65						
ASTM F593, CW Stainless	Nominal strength as governed by steel strength	N_{sa}	lb (kN)	7,750 (34.5)	14,190 (63.1)	22,600 (100.5)	28,435 (126.5)	39,245 (174.6)	51,485 (229.0)	- -
		V_{sa}	lb (kN)	4,650 (20.7)	8,515 (37.9)	13,560 (60.3)	17,060 (75.9)	23,545 (104.7)	30,890 (137.4)	- -
	Reduction factor, seismic shear	$\alpha_{V,seis}$	-	0.7						-
	Strength reduction factor ϕ for tension[2]	ϕ	-	0.65						-
	Strength reduction factor ϕ for shear[2]	ϕ	-	0.60						-
ASTM A193, Gr. 8(M), Class 1 Stainless	Nominal strength as governed by steel strength	N_{sa}	lb (kN)	-						55,240 (245.7)
		V_{sa}	lb (kN)	-						33,145 (147.4)
	Reduction factor, seismic shear	$\alpha_{V,seis}$	-	-						0.6
	Strength reduction factor ϕ for tension[2]	ϕ	-	-						0.75
	Strength reduction factor ϕ for shear[2]	ϕ	-	-						0.65

For **SI**: 1 inch = 25.4 mm, 1 lbf = 4.448 N. For **pound-inch** units: 1 mm = 0.03937 inches, 1 N = 0.2248 lbf

[1] Values provided for common rod material types are based on specified strengths and calculated in accordance with ACI 318-14 Eq. (17.4.1.2) and Eq (17.5.1.2b) or ACI 318-11 Eq. (D-2) and Eq. (D-29). Nuts and washers must be appropriate for the rod.

[2] For use with the load combinations of IBC Section 1605.2, ACI 318-14 5.3 or ACI 318-11 9.2, as set forth in ACI 318-14 17.3.3 or ACI 318-11 D.4.3. If the load combinations of ACI 318-11 Appendix C are used, the appropriate value of ϕ must be determined in accordance with ACI 318-11 D.4.4. Values correspond to a brittle steel element.

[3] For use with the load combinations of IBC Section 1605.2, ACI 318-14 5.3 or ACI 318-11 9.2, as set forth in ACI 318-14 17.3.3 or ACI 318-11 D.4.3. If the load combinations of ACI 318-11 Appendix C are used, the appropriate value of ϕ must be determined in accordance with ACI 318-11 D.4.4. Values correspond to a ductile steel element.

Sargent & Lundy Engineering Services, Inc.	RPP-CALC-63782, Rev. 0 **CALCULATION SHEET**		
Project No. S54413.024	**Calculation No.** S54413.024-S-004	**Rev.** 0	**Page No.** 28 of 29
Title: LERF Basin 41 Sample Port Riser Anchor Wall Design			
Prepared By: RW Davidson	**Date:** 4/5/2020	**Checked By:** PP Santos	**Date:** 4/5/2020

Fractional Threaded Rod and Reinforcing Bars

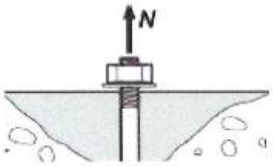

Concrete Breakout Strength

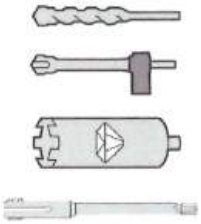

Carbide Bit or Hilti Hollow Carbide Bit or Diamond Core Bit + Roughening Tool

TABLE 12—CONCRETE BREAKOUT DESIGN INFORMATION FOR FRACTIONAL THREADED ROD AND REINFORCING BARS IN HOLES DRILLED WITH A HAMMER DRILL AND CARBIDE BIT (OR HILTI HOLLOW CARBIDE DRILL BIT) OR CORE DRILLED WITH A DIAMOND CORE BIT AND ROUGHENED WITH A HILTI ROUGHENING TOOL[1]

DESIGN INFORMATION	Symbol	Units	Nominal rod diameter (in.) / Reinforcing bar size							
			3/8 or #3	1/2 or #4	5/8 or #5	3/4 or #6	7/8 or #7	1 or #8	#9	1 1/4 or #10
Effectiveness factor for cracked concrete	$k_{c,cr}$	in-lb (SI)	17 (7.1)							
Effectiveness factor for uncracked concrete	$k_{c,uncr}$	in-lb (SI)	24 (10)							
Minimum Embedment	$h_{ef,min}$	in. (mm)	2 3/8 (60)	2 3/4 (70)	3 1/8 (79)	3 1/2 (89)	3 1/2 (89)	4 (102)	4 1/2 (114)	5 (127)
Maximum Embedment	$h_{ef,max}$	in. (mm)	7 1/2 (191)	10 (254)	12 1/2 (318)	15 (381)	17 1/2 (445)	20 (508)	22 1/2 (572)	25 (635)
Min. anchor spacing[3]	s_{min}	in. (mm)	1 7/8 (48)	2 1/2 (64)	3 1/8 (79)	3 3/4 (95)	4 3/8 (111)	5 (127)	5 5/8 (143)	6 1/4 (159)
Min. edge distance (Threaded rods)	c_{min}	in. (mm)	1¾ (45)	1¾ (45)	2 (3) (50) (3)	2 1/8 (3) (55) (3)	2¼ (3) (60) (3)	2¾ (3) (70) (3)	n/a	3 1/8 (3) (80) (3)
Min. edge distance (Reinforcing bars)[3]	c_{min}	-	5d; or see Section 4.1.9.2 of this report for design with reduced minimum edge distances							
Minimum concrete thickness	h_{min}	in. (mm)	h_{ef} + 1 1/4 (h_{ef} + 30)		$h_{ef} + 2d_0$ (4)					
Critical edge distance – splitting (for uncracked concrete)	c_{ac}	-	See Section 4.1.10.2 of this report.							
Strength reduction factor for tension, concrete failure modes, Condition B[2]	ϕ	-	0.65							
Strength reduction factor for shear, concrete failure modes, Condition B[2]	ϕ	-	0.70							

For **SI**: 1 inch ≡ 25.4 mm, 1 lbf = 4.448 N, 1 psi = 0.006897 MPa.
For pound-inch units: 1 mm = 0.03937 inches, 1 N = 0.2248 lbf, 1 MPa = 145.0 psi

[1] Additional setting information is described in Figure 9, Manufacturers Printed Installation Instructions (MPII).
[2] Values provided for post-installed anchors under Condition B without supplementary reinforcement as defined in ACI 318-14 17.3.3 or ACI 318-11 D.4.3.
[3] For installations with 1 3/4-inch edge distance, refer to Section 4.1.9.2 for spacing and maximum torque requirements.
[4] d_0 = hole diameter.

Sargent & Lundy Engineering Services, Inc.	**RPP-CALC-63782, Rev. 0** **CALCULATION SHEET**		
Project No. S54413.024	**Calculation No.** S54413.024-S-004	**Rev.** 0	**Page No.** 29 of 29
Title: LERF Basin 41 Sample Port Riser Anchor Wall Design			
Prepared By: RW Davidson	**Date:** 4/5/2020	**Checked By:** PP Santos	**Date:** 4/5/2020

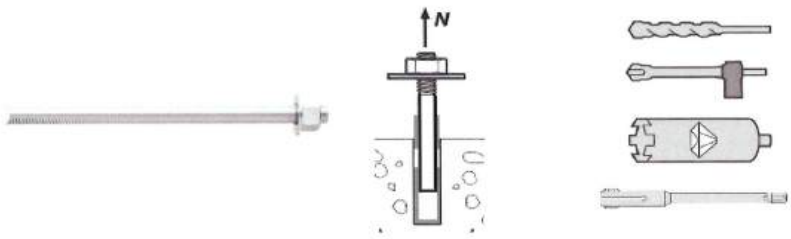

Fractional Threaded Rod | Bond Strength | Carbide Bit or Hilti Hollow Carbide Bit or Diamond Core Bit + Roughening Tool

TABLE 14—BOND STRENGTH DESIGN INFORMATION FOR FRACTIONAL THREADED ROD IN HOLES DRILLED WITH A HAMMER DRILL AND CARBIDE BIT (OR HILTI HOLLOW CARBIDE DRILL BIT) OR CORE DRILLED WITH A DIAMOND CORE BIT AND ROUGHENED WITH A HILTI ROUGHENING TOOL[1]

DESIGN INFORMATION		Symbol	Units	Nominal rod diameter (in.)						
				3/8	1/2	5/8	3/4	7/8	1	1 1/4
Minimum Embedment		$h_{ef,min}$	in. (mm)	2 3/8 (60)	2 3/4 (70)	3 1/8 (79)	3 1/2 (89)	3 1/2 (89)	4 (102)	5 (127)
Maximum Embedment		$h_{ef,max}$	in. (mm)	7 1/2 (191)	10 (254)	12 1/2 (318)	15 (381)	17 1/2 (445)	20 (508)	25 (635)
Temperature range A[2]	Characteristic bond strength in cracked concrete	$\tau_{k,cr}$	psi (MPa)	1,045 (7.2)	1,135 (7.8)	1,170 (8.1)	1,260 (8.7)	1,290 (8.9)	1,325 (9.1)	1,380 (9.5)
	Characteristic bond strength in uncracked concrete	$\tau_{k,uncr}$	psi (MPa)	2,220 (15.3)	2,220 (15.3)	2,220 (15.3)	2,220 (15.3)	2,220 (15.3)	2,220 (15.3)	2,220 (15.3)
Temperature range B[2]	Characteristic bond strength in cracked concrete	$\tau_{k,cr}$	psi (MPa)	1,045 (7.2)	1,135 (7.8)	1,170 (8.1)	1,260 (8.7)	1,290 (8.9)	1,325 (9.1)	1,380 (9.5)
	Characteristic bond strength in uncracked concrete	$\tau_{k,uncr}$	psi (MPa)	2,220 (15.3)	2,220 (15.3)	2,220 (15.3)	2,220 (15.3)	2,220 (15.3)	2,220 (15.3)	2,220 (15.3)
Temperature range C[2]	Characteristic bond strength in cracked concrete	$\tau_{k,cr}$	psi (MPa)	855 (5.9)	930 (6.4)	960 (6.6)	1,035 (7.1)	1,055 (7.3)	1,085 (7.5)	1,130 (7.8)
	Characteristic bond strength in uncracked concrete	$\tau_{k,uncr}$	psi (MPa)	1,820 (12.6)	1,820 (12.6)	1,820 (12.6)	1,820 (12.6)	1,820 (12.6)	1,820 (12.6)	1,820 (12.6)
Permissible installation conditions	Dry and water saturated concrete	Anchor Category	-	1						
		ϕ_d, ϕ_{ws}	-	0.65						
Reduction for seismic tension	Hammer drilled	$\alpha_{N,seis}$	-	0.88	0.99	0.99	1.0	1.0	0.95	0.99
	Core drilled + roughening	$\alpha_{N,seis}$	-	N/A		0.88	0.96	0.96	1.0	0.82

For **SI**: 1 inch ≡ 25.4 mm, 1 lbf = 4.448 N, 1 psi = 0.006897 MPa.
For pound-inch units: 1 mm = 0.03937 inches, 1 N = 0.2248 lbf, 1 MPa = 145.0 psi

[1] Bond strength values correspond to concrete compressive strength f'_c = 2,500 psi (17.2 MPa). For concrete compressive strength, f'_c, between 2,500 psi (17.2 MPa) and 8,000 psi (55.2 MPa) [minimum of 24 MPa is required under ADIBC Appendix L, Section 5.1.1], the tabulated characteristic bond strength may be increased by a factor of $(f'_c / 2{,}500)^{0.1}$ [For SI: $(f'_c / 17.2)^{0.1}$]. See Section 4.1.4 of this report for bond strength determination.
[2] Temperature range A: Maximum short term temperature = 130°F (55°C), Maximum long term temperature = 110°F (43°C).
Temperature range B: Maximum short term temperature = 176°F (80°C), Maximum long term temperature = 110°F (43°C).
Temperature range C: Maximum short term temperature = 248°F (120°C), Maximum long term temperature = 162°F (72°C).
Short term elevated concrete temperatures are those that occur over brief intervals, e.g., as a result of diurnal cycling. Long term concrete temperatures are roughly constant over significant periods of time.

DOCUMENT RELEASE AND CHANGE FORM

Prepared For the U.S. Department of Energy, Assistant Secretary for Environmental Management
By Washington River Protection Solutions, LLC., PO Box 850, Richland, WA 99352
Contractor For U.S. Department of Energy, Office of River Protection, under Contract DE-AC27-08RV14800

TRADEMARK DISCLAIMER: Reference herein to any specific commercial product, process, or service by trade name, trademark, manufacturer, or otherwise, does not necessarily constitute or imply its endorsement, recommendation, or favoring by the United States government or any agency thereof or its contractors or subcontractors. Printed in the United States of America.

Release Stamp

DATE:
May 26,2020
HANFORD RELEASE

1. **Doc No:** RPP-RPT-62003 **Rev.** 00

2. **Title:**
Control System Strategy for Liquid Effluent Retention Facility Basin 41

3. **Project Number:** ☐N/A
T1P226

4. **Design Verification Required:**
☐Yes ☒No

5. **USQ Number:** ☒ N/A
RPP-27195

6. **PrHA Number** **Rev.** ☒ N/A

Clearance Review Restriction Type:
public

7. **Approvals**

Title	Name	Signature	Date
Checker	Garcia, Michael F	*Garcia, Michael F*	05/04/2020
Clearance Review	Ayers, Lynn M	*Ayers, Lynn M*	05/26/2020
Design Authority	Wilson, Nathaniel W	*Wilson, Nathaniel W*	05/04/2020
Document Control Approval	Meinecke, Kathryn R	*Meinecke, Kathryn R*	05/26/2020
Environmental Protection	Wall, Jeremy M	*Wall, Jeremy M*	05/12/2020
Originator	Veach, Kc J	*Veach, Kc J*	04/30/2020
Other Approver	Joslyn, Cameron C	*Joslyn, Cameron C*	05/19/2020
Other Approver	Samoska, Jerry A	*Samoska, Jerry A*	05/19/2020
Responsible Manager	Huntington, Matthew R	*Huntington, Matthew R*	05/19/2020

8. **Description of Change and Justification**

Incorporating new Basin 41 into Liquid effluent retention Facility Control System.

9. **TBDs or Holds** ☒N/A

10. **Related Structures, Systems, and Components**

a. **Related Building/Facilities** ☐N/A	b. **Related Systems** ☐N/A	c. **Related Equipment ID Nos. (EIN)** ☒N/A
ETF FACILITIES LERF FACILITIES	ETF LERF	

11. **Impacted Documents – Engineering** ☒N/A

Document Number	Rev.	Title

12. **Impacted Documents (Outside SPF):**

N/A

13. **Related Documents** ☐N/A

Document Number	Rev.	Title
MT-50497	00	Liquid Effluent Retention Facility (LERF) Basin 41

14. **Distribution**

Name	Organization
Angevine, Brennan T	MISSION ANALYSIS ENGINEERING
Blaak, Whitney S	COGNIZANT SYSTEM ENGINEERING
Demiter, Scott M	ETF OPERATIONS
Foster, Jim	242-A/AW/ETF OPERATIONS
Goessmann, Glen E	ENGINEERING PROGRAMS
Greenhalgh, Aaron M	TANK FARM PROJECTS ENGINEERING
Halgren, Dale L	ETF ENGINEERING
Harris, John W	SAFETY PROGRAM SERVICES RC/P
Joslyn, Cameron C	ETF ENGINEERING
McFerran, Brandon E	242-A/AW/ETF OPERATIONS
McShane, Michael P	ENGINEERING PROGRAMS
Nelson, Richard L	
Omberg Carro, Susan K	NUCLEAR SAFETY
O'Meara, Sean P	ETF ENGINEERING
Ozbas, Murat	PROC SYS & ENGINEERING SUPPORT
Powers, Daniel J	ETF ENGINEERING
Roosendaal, Gene D	TFP PROJECT MANAGEMENT
Rutherford, Wally	ETF ENGINEERING
Sackett, Tom E	TANK FARM PROJECTS
Samoska, Jerry A	INSTRUMENT & CNTRL ENGINEERING

DOCUMENT RELEASE AND CHANGE FORM	**Doc No:** RPP-RPT-62003 **Rev.** 00

14. **Distribution**

Name	**Organization**
Shultz, Milton V	NUCLEAR SAFETY
Smith, Gregory E	TANK FARM PROJECTS ENGINEERING
Smoot, Bill R	TFP RADCON
Swanson, Brad L	242-A/AW/ETF OPERATIONS
Wall, Jeremy M	RETRVL & CLOSURE/PROJ ENV CMPL
Wilson, Nathaniel W	ETF PROJECTS ENGINEERING

RPP-RPT-62003
Revision 0

Control System Strategy for Liquid Effluent Retention Facility Basin 41

Prepared by

K. J. Veach
Sargent & Lundy for Washington River Protection Solutions, LLC

Date Published
April 2020

washington river protection solutions

MICHAEL FREDERICK GARCIA II
STATE OF WASHINGTON
33963
REGISTERED
PROFESSIONAL ENGINEER
5/27/20

Prepared for the U.S. Department of Energy
Office of River Protection

Project No. T1P226

Approved for Public Release;
Further Dissemination Unlimited

CONTROL SYSTEM STRATEGY FOR LIQUID EFFLUENT RETENTION FACILITY BASIN 41

April 2020

prepared by

Sargent & Lundy
1100 Jadwin Avenue, Suite 400
Richland, Washington 99352
(509) 946-3300

prepared for

Washington River Protection Solutions, LLC

TABLE OF CONTENTS

1.0 INTRODUCTION 1
1.1 Background and Purpose 1
1.2 Project Scope 1

2.0 OVERALL DESCRIPTION 2
2.1 Receive Effluent 2
2.1.1 Waste Treatment and Immobilization Plant 2
2.1.2 242-A Evaporator 2
2.1.3 Liquid Effluent Retention Facility Basins 2
2.1.4 Tanker Truck/Purge Water 3
2.2 Transfer Effluent 3
2.2.1 Effluent Treatment Facility 3
2.2.2 Liquid Effluent Retention Facility Basins 3
2.3 Recirculation 3
2.3.1 Recirculation 3

3.0 PROCESS CONTROL NARRATIVE 4
3.1 Basin Pump P-41-4 4
3.1.1 Local Control 4
3.1.2 Remote Mode 4
3.1.3 Level Indicating Controller LIC-P41-4-1 (Auto Mode) 4
3.1.4 Stop Pump Interlock I-P41-4 4
3.2 Leachate Pump P-41 5
3.2.1 Local Control 5
3.2.2 Auto Mode 5
3.2.3 Remote Mode 5
3.3 Basin 41 Monitoring 6
3.3.1 Main Basin Level 6
3.3.2 Catch Basin Level Detector 6
3.3.3 Leak Detection 6

4.0 SOFTWARE AND INTEGRATION 6
4.1 Interface to Other Systems 6
4.2 Programming and Software Development 6

5.0 REFERENCES 7

LIST OF APPENDICES

Appendix A – Input/Output List

Appendix B – Catch Basins 242AL-41, 242AL-42, 242AL-43, and 242AL-44 Piping and Equipment Layout Diagram

LIST OF TERMS

Abbreviations, Initialisms, and Acronyms

ABB	Asea Brown Boveri
ECN	Engineering Change Notice
EMF	Effluent Management Facility
ETF	Effluent Treatment Facility
I&C	Instrumentation and Control
I/O	Input/Output
LERF	Liquid Effluent Retention Facility
MCS	Monitor Control System
P&ID	Piping and Instrumentation Drawing
WTP	Waste Treatment and Immobilization Plant
RTRP	Reinforced Thermosetting Resin Pipe

Units

%	Percent
in.	inch
gpm	gallon per minute

1.0 INTRODUCTION

1.1 BACKGROUND AND PURPOSE

The Liquid Effluent Retention Facility (LERF) stores wastewater from several Hanford sources for eventual processing through the Effluent Treatment Facility (ETF). The original excavation of the LERF included four basins: 242AL-41 (Basin 41); 242AL-42 (Basin 42); 242AL-43 (Basin 43); and 242AL-44 (Basin 44). However, only Basins 42, 43, and 44 were designed and completed. Therefore, there are currently only three operating LERF basins. The operating basins are located just north of the 200 East Area tank farms and adjacent to the ETF. The basins store waste water from several Hanford Site sources, including condensate from the 242-A Evaporator, dilute waste streams from solid waste disposal facilities, and site cleanup activities.

Once the Waste Treatment and Immobilization Plant (WTP) begins processing waste, it will send wastewater from the WTP Effluent Management Facility (EMF) to the LERF. Due to the additional future planned wastewater sources, a fourth basin is needed to ensure sufficient storage capacity. Basin 41 is allocated for development and use for the additional wastewater capacity requirement.

This report provides the overall description for LERF Basin 41 and its integration with existing LERF Basins 42, 43, and 44. An Input/Output (I/O) list is included in Appendix A and a Catch Basin Equipment Layout Diagram is included in Appendix B. For a list of all project documents and drawings, see Drawing H-2-838745, *LERF Basin 41 Drawing List/Title sheet.*

1.2 PROJECT SCOPE

The scope of this project includes installation of field instrumentation and control (I&C) equipment and termination of field wiring at LCU55M17 (LCU-17). LCU-17 is located in instrumentation building 242AL71. The design scope does not include modification of LCU-17 hardware, or software development. The design to upgrade LCU-17 to an Asea Brown Boveri (ABB) 800xA platform is currently in scope for the ETF Monitor and Control System (MCS) upgrade project. These upgrades will include adequate spare capacity for future LERF Basin 41 inputs and outputs. See engineering change notice (ECN) ECN-715497, *ABB MCS Upgrade, LCU55M17 Modification*, and Drawing set H-2-838830, *ETF MCS ABB Upgrade Instrumentation LCU55M17 Wiring*, for details.

2.0 OVERALL DESCRIPTION

Project T1P226, "ETF Basin 41 Installation," includes the scope associated with the LERF Basin 41 activities. The LERF Basin 41 activities consist of design for the installation of a basin liner, cover, piping, and equipment including:

- a LERF basin;
- a catch basin;
- a basin pump;
- a leachate pump;
- piping between basins and the ETF;
- electrical modifications;
- lighting; and
- instrumentation and controls.

The key content of this document includes an overall description of LERF Basin 41 from an I&C field instrumentation perspective. For Basins 41, 42, 43, and 44 Piping and Instrumentation Diagram (P&ID), see Drawing H-2-88766, *P&ID LERF Basin & ETF Influent Evaporator*. For I/O List, see Appendix A. For Equipment Layout Diagram, see Appendix B.

2.1 RECEIVE EFFLUENT

Effluent is received into Basin 41 from multiple sources, but only from one source at a time. The source of the effluent is determined by the lineup of catch basin manual valves located at the northwest corner of each LERF basin.

2.1.1 Waste Treatment and Immobilization Plant

Basin 41 will be configured to receive effluent from WTP. The effluent from WTP is received through Riser RB-R-41-8. The scope of the ETF MCS upgrade project includes design and implementation for a new communications interface between the LCU-17 and the WTP MCS.

2.1.2 242-A Evaporator

Basin 41 will be configured to receive effluent from the 242-A Evaporator. The effluent from the 242-A Evaporator is received through Riser RB-R-41-7. The scope of the ETF MCS upgrade project includes design and implementation for a new interface between the LCU-17 and the 242-A Evaporator.

2.1.3 Liquid Effluent Retention Facility Basins

Basin 41 will be configured to receive effluent from Basins 42, 43, or 44. Received effluent is through Riser RB-R-41-4.

2.1.4 Tanker Truck/Purge Water

The LERF has the capability to receive tanker truck leachate shipments at the ETF Surge Tank sump piping area that can then be transferred to any of the basins. Basin 41 effluent is received through Riser RB-R-41-4 or Riser RB-R-41-8. When receiving effluent from ETF, valves AOV-60A056 and AOV-60A055 must be open, see Drawing H-2-88974, *Piping and Inst Diag Influent Reception System*. Following an ETF campaign, the processing equipment is purged and flushed to ensure proper cleanliness and to mitigate cross-contamination between waste streams. The flush water (verification water) is discharged back to LERF.

2.2 TRANSFER EFFLUENT

All effluent being transferred out of Basin 41 is accomplished via Pump P-41-4 through Riser RB-R-41-5. The route and final destination of the effluent is determined by the manual arrangement of catch basin valves located on the northwest corner of each LERF Basin. Valve LV-P41-4-1 is adjusted to control flow and does not determine the path of the effluent. When the logic status is in auto mode, the valve is modulated to control level. (**Note**: the existing level valves in Basins 42, 43, and 44 are positioned manually at the catch basins and auto mode, although available, are not used.)

2.2.1 Effluent Treatment Facility

The primary purpose of the LERF system is to store effluent that will eventually be transferred and processed by the ETF.

2.2.2 Liquid Effluent Retention Facility Basins

Basin 41 system can be configured to transfer effluent to Basin 42, Basin 43, or Basin 44.

2.3 RECIRCULATION

2.3.1 Recirculation

Basin Pump P-41-4 can be configured to recirculate Basin 41 contents by pumping effluent out of Riser RB-R-41-5 and routing the effluent back down riser RB-R-41-4. During recirculation, Valve LV-P41-4-1 must be kept between 31% and 61% open to prevent pump cavitation and pump run-out.

3.0 PROCESS CONTROL NARRATIVE

3.1 BASIN PUMP P-41-4

3.1.1 Local Control

When the ABB Control System Permissive/stop Contact 55M17-D-12 is closed, Basin Pump P-41-4 can be operated locally from Motor Starter DS-P41-4 (see Drawing H-2-79668, *Electrical Elementary Diagram Basin 41 Pumps*). The motor control panel provides indication of Pump Status ON (YL-P41-4-3), or Pump Status OFF (YL-P41-4-5).

3.1.2 Remote Mode

Basin Pump P-41-4 can be monitored and controlled remotely from the ETF MCS. With the ABB Control System permissive/stop contact 55M17-D-12 closed, the pump can be started from hand switch HS-P-41-3 (ABB Control System output 55M17-D-13). The pump is shut down remotely by opening the ABB Control System permissive/stop contact 55M17-D-12. YS-P41-4-1, provides indication of pump status.

3.1.3 Level Indicating Controller LIC-P41-4-1 (Auto Mode)

When transferring to the ETF Surge Tank Basin, Pump P-41-4 can be controlled automatically through Loop P41-4-1 and Loop 60A012 (see Drawings H-2-89337, *Piping and Inst Diagram Surge Tank System,* and H-2-88974). Level Transmitter LT-60A012 measures the surge tank level. The level information is used by Level Indication Controller LIC-P41-4-1 to adjust valve position (see Drawing H-2-88766, Sheet 6). Valve position is monitored by ZT-P41-4-1. As the level of the surge tank rises, the valve is slowly closed by Electric Actuator LV-P41-4-1. Process flow is monitored by FIT-P41-4-1 and pump current is monitored by II-P41-4-2.

3.1.4 Stop Pump Interlock I-P41-4

The following logic conditions will result in a Pump P-41-4 shut down.

- Any Catch Basin Leak Detector that detects a leak or high-level condition (LDS-41-8, LDE-42-1, LDE-43-1, LDE-44-1).
- The LERF Condensate Line leak detector detects a leak or high-level condition (LDS-60M01A, LDS-60M01B, LDS-60M01C, LDS-60M01D).
- Leak Detector LDS-42-3 detects a leak or high-level condition when transferring effluent to Basin 42.

- Surge tank level alarm High is energized (LAH-60A013, LAHL-60A012). The high-level condition results in a pump shut down and an alarm.
- Flow to the surge tank is less than 55 gpm (FI-P41-4-1) for longer than 40 seconds.
- Emergency Stops are activated by HS-ESTOP4 or ETF ESTOP VD-315143.
- Remote stop from the ETF MCS.

The ETF MCS upgrade project software requirement specification is replacing logic diagrams and will include the logic for Basin 41. For existing Basin Programmable Logic Controller logic, see Drawing H-2-88815, *Instrumentation Sequential Logic Diagram LERF Basin*, for details.

3.2 LEACHATE PUMP P-41

3.2.1 Local Control

Leachate Pump P-41 can be controlled locally from Motor Starter DS-P-41 (see Drawing H-2-79668). Manual, Off, or Auto mode is selected using local Hand Switch HS-P41-2. If switched to the manual position, Pump P-41 will start. Pump P-41 is shut down by moving Hand Switch HS-P41-2 into the OFF position. The motor control panel provides indication of Pump Status ON (YL-P41-1) or Pump Status OFF (YL-P41-3).

3.2.2 Auto Mode

The pump can be run two ways in auto mode. Hand switch HS-P41-2 needs to be in the auto position for either auto mode to work. The first option is Pump P-41 is controlled by the ETF MCS. The pump will turn on when LIT-41-1 detects a high-level condition of approximately 9 in. and turn off when a leachate low-level condition of approximately 6 in. is detected. With option two, the pump can be set to turn on when LSH-41-3 detects a high-level condition of approximately 9 in. and will turn off when the water level has been pumped down to approximately 6 in. Pump current is monitored by II-P-41-4.

3.2.3 Remote Mode

Leachate Pump P-41 can be controlled remotely through the ETF MCS. Hand Switch HS-P-41 starts and stops the pump. YS-P-41 provides indication of pump status.

3.3 BASIN 41 MONITORING

3.3.1 Main Basin Level

The Main Basin Level LI-BSN41 is displayed at the ETF MCS.

3.3.2 Catch Basin Level Detector

If Level Detector Switch LDS 41-8 detects a high-level condition, it will result in an alarm in the ETF MCS (LDA-41-8).

3.3.3 Leak Detection

Outside the catch basin, the primary and secondary pipes are Reinforced Thermosetting Resin Pipe (RTRP) (see RPP-SPEC-63632, *LERF Basin 41 Construction Specification*). The secondary RTRP has leak detectors LDS-41-4, LDS-41-5, LDS-41-6, and LDS-41-7. Leak Detector LD-42-3 was added to the Basin 42 catch basin to detect leaks during basin to basin transfers. Upon effluent detection, each leak detector will cause an alarm in the ETF MCS.

4.0 SOFTWARE AND INTEGRATION

4.1 INTERFACE TO OTHER SYSTEMS

Instrumentation and controls will be terminated at LCU-17, including field wiring. Integration into the ETF MCS will be implemented by the ETF MCS upgrade project. LDA-41-5, LDA-41-8, LI-LCH41, LI-BSN41 and YS-P-41 shall be shared with the 242-A control room. This allows the evaporator to detect leaks at Basin 41 during transfers (see the basin/leachate level) and know when the leachate pump is running. See ECN-715586, title, and Drawing H-2-88766, sheet 1, for details.

4.2 PROGRAMMING AND SOFTWARE DEVELOPMENT

Programing and software development is out of the scope of this project. It will be completed by the ETF MCS upgrade project.

5.0 REFERENCES

ECN-715497, 2020, *ABB MCS Upgrade, LCU55M17 Modification,* Revision 0, Washington River Protection Solution, LLC, Richland, Washington.

ECN-715586, 2020, *LERF Basin 41 - I&C Installation,* Revision 0, Washington River Protection Solution, LLC, Richland, Washington.

H-2-79668, Sheet 6, 2020, *Electrical Elementary Diagram Basin 41 Pumps*, Revision 0, Washington River Protection Solution, LLC, Richland, Washington.

H-2-838745, Sheet 1, 2020, *LERF Basin 41 Drawing List/Title Sheet,* Revision 0, Washington River Protection Solution, LLC, Richland, Washington.

H-2-838830, 2020, *ETF MCS ABB Upgrade Instrumentation LCU55M17 Wiring,* Revision 0, Washington River Protection Solution, LLC, Richland, Washington.

H-2-88766, Sheet 2, 2018, *P&ID LERF Basin & ETF Influent Evaporator*, Revision 16, Washington River Protection Solution, LLC, Richland, Washington.

H-2-88766, Sheet 3, 2018, *P&ID LERF Basin & ETF Influent Evaporator*, Revision 20, Washington River Protection Solution, LLC, Richland, Washington.

H-2-88766, Sheet 4, 2018, *P&ID LERF Basin & ETF Influent Evaporator*, Revision 22, Washington River Protection Solution, LLC, Richland, Washington.

H-2-88766, Sheet 6, 2020, *P&ID LERF Basin & ETF Influent Evaporator*, Revision 0, Washington River Protection Solution, LLC, Richland, Washington.

H-2-88815, 2008, *Instrumentation Sequential Logic Diagram LERF Basin*, Revision 7, Washington River Protection Solution, LLC, Richland, Washington.

H-2-88974, Sheet 1, 2018, *Piping & Inst Diag Influent Reception System*, Revision 19, Washington River Protection Solution, LLC, Richland, Washington.

H-2-89337, Sheet 1, 2019, *Piping and Inst Diagram Surge Tank System*, Revision 1, Washington River Protection Solution, LLC, Richland, Washington.

RPP-SPEC-63632, 2020, *LERF Basin 41 Construction Specification,* Revision 0, Washington River Protection Solution, LLC, Richland, Washington.

APPENDIX A

INPUT/OUTPUT LIST

LERF Basin 41 I/O list- 100%

Instrument Designator	Loop Numb	Inst Type	SERVICE	Description	Software tag only	I/O Conn.	Signal Type	Process Range min/max	Manufacturer	Model	Range	Calibrated @	HI HI ALM	HI ALM	LO ALM	LO LO ALM	LCU	Cluster	Slot	Channel	Data Sheet#	P&ID Dwg	Loop / Elementary Dwg #	Detail Dwg	Notes
LDS-41-4	41-4	LDS	Water	Encasement Leak Detection		DI	24 VDC	N/A	FCI	see data sheet	N/A	N/A	N/A	5/16 inch	N/A	N/A	17	C2	7	12	LD-101	H-2-88766 SH 6	H-2-88818-001	H-2-88813-004	
LDS-41-5	41-5	LDS	Water	Encasement Leak Detection		DI	24 VDC	N/A	FCI	see data sheet	N/A	N/A	N/A	5/16 inch	N/A	N/A	17	C2	7	13	LD-101	H-2-88766 SH 6	H-2-88818-001	H-2-88813-004	
LDS-41-6	41-6	LDS	Water	Encasement Leak Detection		DI	24 VDC	N/A	FCI	see data sheet	N/A	N/A	N/A	5/16 inch	N/A	N/A	17	C2	7	14	LD-101	H-2-88766 SH 6	H-2-88818-001	H-2-88813-004	
LDS-41-7	41-7	LDS	Water	Encasement Leak Detection		DI	24 VDC	N/A	FCI	see data sheet	N/A	N/A	N/A	5/16 inch	N/A	N/A	17	C2	7	15	LD-101	H-2-88766 SH 6	H-2-88818-001	H-2-88813-004	
LDS-41-8	41-8	LDS	Water	Catch Basin Leak Detection		DI	24 VDC	N/A	FCI	see data sheet	N/A	N/A	N/A	9 inch	N/A	N/A	17	C2	7	16	LD-101	H-2-88766 SH 6	H-2-88818-001	H-2-88813-004	
LDS-42-3	42-3	LDS	Water	Encasement Leak Detection		DI	24 VDC	N/A	FCI	see data sheet	N/A	N/A	N/A	5/16 inch	N/A	N/A	17	C2	7	11	LD-101	H-2-88766 SH 2	H-2-88818-001	H-2-88813-004	
LY-41-3	41-3	LSH	Water	Leachate Switch High Level Point Detection		DI	24 VDC	N/A	B/W controls	see data sheet	N/A	N/A	N/A	10.5 inch	2 inch	N/A	17	C2	7	10	L-103	H-2-88766 SH 6	H-2-88818-001	H-2-88813-004	
YS-P41-4-1	P41-4-1	YS	Water	Basin Pump P-41-4 On/Off Status		DI	24 VDC	N/A	N/A	N/A	N/A	N/A	N/A	N/A	N/A	N/A	17	C2	7	8	N/A	H-2-88766 SH 6	H-2-88818-001	N/A	
YS-P-41	P-41	YS	Water	Leachate Pump P-41 On/Off status		DI	24 VDC	N/A	N/A	N/A	N/A	N/A	N/A	N/A	N/A	N/A	17	C2	7	9	N/A	H-2-88766 SH 6	H-2-88818-001	N/A	
HS-P41-4-3	P41-4-3	HS	Water	Basin Pump P-41-4 start Command		DO	120 VAC	N/A	N/A	N/A	N/A	N/A	N/A	N/A	N/A	N/A	17	C3	6	3	N/A	H-2-88766 SH 6	H-2-79668-006	N/A	
HS-P41-4-3	P41-4-3	HS	Water	Basin Pump P-41-4 Stop Command		DO	120 VAC	N/A	N/A	N/A	N/A	N/A	N/A	N/A	N/A	N/A	17	C3	6	2	N/A	H-2-88766 SH 6	H-2-79668-006	N/A	
HS-P-41	P-41	HS	Water	Leachate Pump P-41 Start/Stop Command		DO	120 VAC	N/A	N/A	N/A	N/A	N/A	N/A	N/A	N/A	N/A	17	C3	6	4	N/A	H-2-88766 SH 6	H-2-79668-006	N/A	
LIT-41-1	41-1	LIT	Water	Leachate Level Transmitter		AI	4-20 mA	0-27 inch	Viatran	see data sheet	0-27 inch	0-13 inch	N/A	N/A	N/A	N/A	17	C2	3	2	L-102	H-2-88766 SH 6	H-2-88813-001	H-2-88813-001	
FIT-41-1	41-1	FIT	Water	Leachate Pump P-41 supply Flow Transmitter		AI	4-20 mA	3.7-10.0 gpm	Rosemount	see data sheet	0.038-37 gpm	NA	N/A	N/A	N/A	N/A	17	C2	3	4	F-101	H-2-88766 SH 6	H-2-88813-001	H-2-88813-001	
IT-P41-4-2	P41-4-2	IT	Water	Pump P-41-4 Current Transmitter		AI	4-20 mA	0-20 amp	CR Magnetics	see data sheet	0-20 Amp	N/A	N/A	N/A	N/A	N/A	17	C2	3	8	N/A	H-2-88766 SH 6	H-2-88813-001	H-2-88813-001	
IT-P41-4	P41-4	IT	Water	Pump P-41 Current Transmitter		AI	4-20 mA	0-20 amp	CR Magnetics	see data sheet	0-20 Amp	N/A	N/A	N/A	N/A	N/A	17	C2	3	7	N/A	H-2-88766 SH 6	H-2-88813-001	H-2-88813-001	
LT-P41-4-1	P41-4-1	LIT	Water	Basin 41 Level Transmitter		AI	4-20 mA	0-27 ft	DrexelBrook	see data sheet	0-27 ft	0-27 ft	N/A	N/A	N/A	N/A	17	C2	3	3	L-102	H-2-88766 SH 6	H-2-88813-001	H-2-88813-001	
ZT-P41-4-1	P41-4-1	ZT	Water	Valve LV-P41-4-1 Position Transmitter		AI	4-20 mA	0-90 °	Bray	see data sheet	0-90 °	0-90 °	N/A	N/A	N/A	N/A	17	C2	3	6	LV-101	H-2-88766 SH 6	H-2-88813-001	H-2-88813-001	
FIT-P41-4-1	P41-4-1	FIT	Water	Basin Pump P-41-4 supply Flow Transmitter		AI	4-20 mA	75-150 gpm	Rosemount	see data sheet	0.418-408 gpm	0-180 gpm	N/A	N/A	N/A	N/A	17	C2	3	5	F-102	H-2-88766 SH 6	H-2-88813-001	H-2-88813-001	
LV-P41-4-1	P41-4-1	LV	Water	Level Valve Command		AO	4-20 mA	0-90 °	Bray	see data sheet	0-90 °	0-90 °	N/A	N/A	N/A	N/A	17	C2	5	4	LV-101	H-2-88766 SH 6	H-2-88813-001	H-2-88813-001	

APPENDIX B

CATCH BASINS 242AL-41, 242AL-42, 242AL-43, AND 242AL-44 PIPING AND EQUIPMENT LAYOUT DIAGRAM

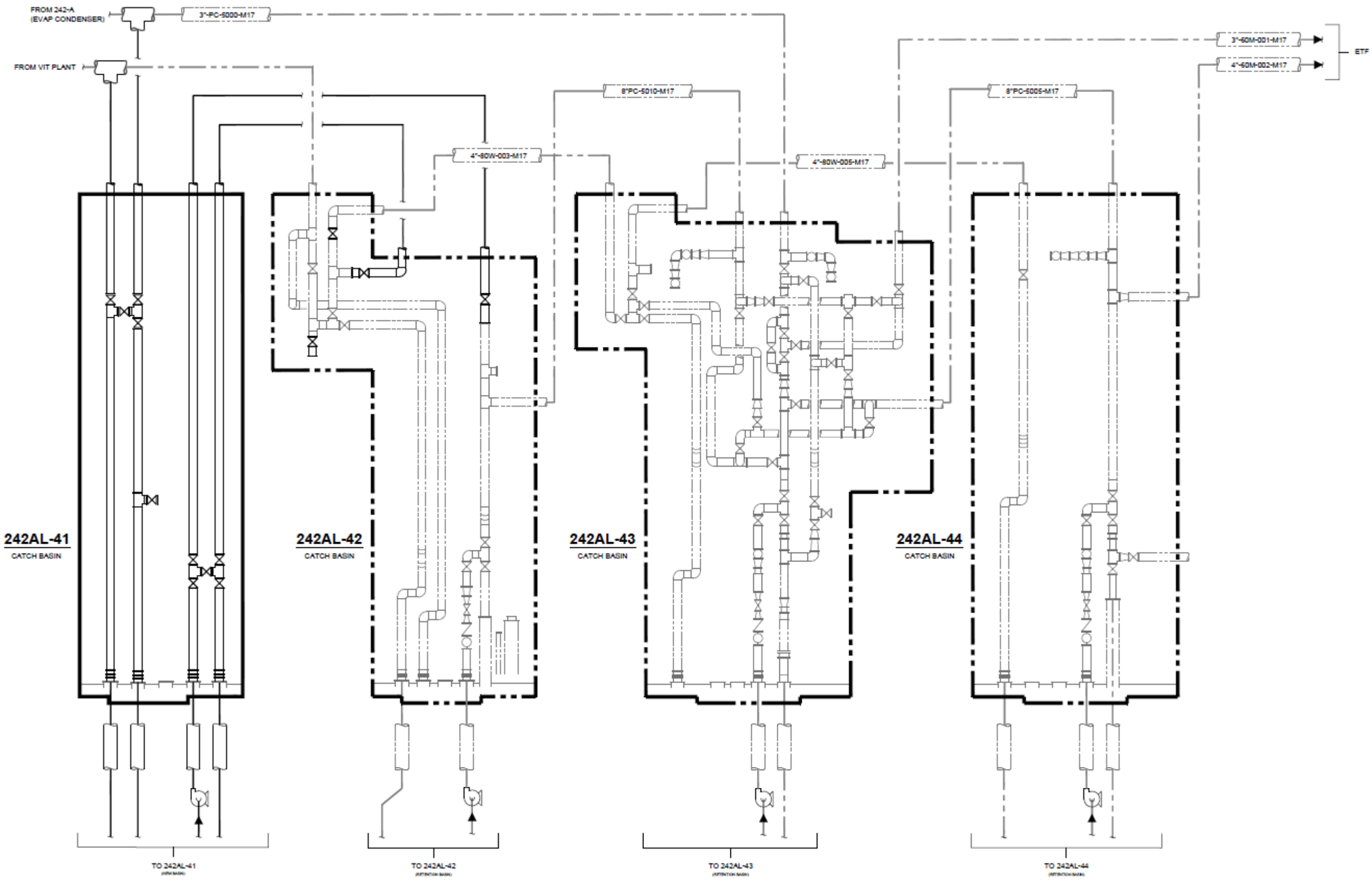
FROM 242-A
(EVAP CONDENSER)
3"-PC-5000-M17
FROM VIT PLANT
3"-60M-001-M17
4"-60M-002-M17
ETF
8"PC-5010-M17
8"PC-5005-M17
4"-80W-003-M17
4"-80W-005-M17
242AL-41
CATCH BASIN
242AL-42
CATCH BASIN
242AL-43
CATCH BASIN
242AL-44
CATCH BASIN
TO 242AL-41
TO 242AL-42
TO 242AL-43
TO 242AL-44

DOCUMENT RELEASE AND CHANGE FORM

Prepared For the U.S. Department of Energy, Assistant Secretary for Environmental Management
By Washington River Protection Solutions, LLC., PO Box 850, Richland, WA 99352
Contractor For U.S. Department of Energy, Office of River Protection, under Contract DE-AC27-08RV14800

TRADEMARK DISCLAIMER: Reference herein to any specific commercial product, process, or service by trade name, trademark, manufacturer, or otherwise, does not necessarily constitute or imply its endorsement, recommendation, or favoring by the United States government or any agency thereof or its contractors or subcontractors. Printed in the United States of America.

Release Stamp

DATE:
May 26,2020
HANFORD RELEASE

1. **Doc No:** RPP-RPT-62215 **Rev.** 00

2. **Title:**
LERF Basin 41 Material Compatibility with Wastewater

3. **Project Number:** ☐N/A
T1P226

4. **Design Verification Required:**
☐Yes ☒No

5. **USQ Number:** ☒ N/A
RPP-27195

6. **PrHA Number** **Rev.** ☒ N/A

Clearance Review Restriction Type:
public

7. **Approvals**

Title	Name	Signature	Date
Checker	Anda, Vanessa S	*Anda, Vanessa S*	05/13/2020
Clearance Review	Aardal, Janis D	*Aardal, Janis D*	05/26/2020
Design Authority	Wilson, Nathaniel W	*Wilson, Nathaniel W*	05/14/2020
Document Control Approval	Meinecke, Kathryn R	*Meinecke, Kathryn R*	05/26/2020
Environmental Protection	Wall, Jeremy M	*Wall, Jeremy M*	05/18/2020
Originator	Dahl, Megan M	*Dahl, Megan M*	05/13/2020
Other Approver	Joslyn, Cameron C	*Joslyn, Cameron C*	05/13/2020
Other Approver	Greenhalgh, Aaron M	*Greenhalgh, Aaron M*	05/14/2020
Other Approver	Rice, Joseph P	*Rice, Joseph P*	05/18/2020
Other Approver	Roosendaal, Gene D	*Roosendaal, Gene D*	05/14/2020
Responsible Manager	Huntington, Matthew R	*Huntington, Matthew R*	05/19/2020

8. **Description of Change and Justification**

Once the Waste Treatment and Immobilization Plant (WTP) begins processing waste, it will send wastewater from the Effluent Management Facility (EMF) to the LERF, prompting the need for a fourth basin, 242AL-41, (Basin 41). This material compatibility assessment is necessary to demonstrate that the basin will be able to perform its function of retaining the wastewater.

Note, Section 5.0, Page A-7: MicroShield is a registered trademark of Grove Engineering, Inc., Lynchburg, Virginia.

9. **TBDs or Holds** ☒N/A

10. **Related Structures, Systems, and Components**

a. **Related Building/Facilities** ☐N/A	b. **Related Systems** ☐N/A	c. **Related Equipment ID Nos. (EIN)** ☒N/A
ETF FACILITIES LERF FACILITIES	ETF LERF	

11. **Impacted Documents – Engineering** ☒N/A

Document Number	Rev.	Title

12. **Impacted Documents (Outside SPF):**

N/A

13. **Related Documents** ☐N/A

Document Number	Rev.	Title
HNF-3172	09	Liquid Waste Processing Facilities Waste Acceptance Criteria
WHC-SD-W105-TD-001	00	9090 TEST RESULTS

14. **Distribution**

Name	Organization
Blaak, Whitney S	COGNIZANT SYSTEM ENGINEERING
Demiter, Scott M	ETF OPERATIONS
Dorsh, Paul M	
Greenhalgh, Aaron M	TANK FARM PROJECTS ENGINEERING
Halgren, Dale L	ETF ENGINEERING
Huntington, Matthew R	TANK FARM PROJECTS ENGINEERING
Joslyn, Cameron C	ETF ENGINEERING
Laurenz, Julian E	TANK FARM PROJECTS ENGINEERING
Rice, Joseph P	TANK & PIPELINE INTEGRITY
Roosendaal, Gene D	TFP PROJECT MANAGEMENT
Rutherford, Wally	ETF ENGINEERING
Wall, Jeremy M	RETRVL & CLOSURE/PROJ ENV CMPL
White, Michael A	

DOCUMENT RELEASE AND CHANGE FORM	**Doc No:** RPP-RPT-62215 **Rev.** 00

14. **Distribution**

Name	**Organization**
Wilson, Nathaniel W	ETF PROJECTS ENGINEERING

RPP-RPT-62215
Revision 0

LERF Basin 41 Material Compatibility with Wastewater

Prepared by

M.M. Dahl
Sargent & Lundy for Washington River Protection Solutions, LLC

Date Published
May 2020

Prepared for the U.S. Department of Energy
Office of River Protection

Contract No. DE-AC27-08RV14800

Approved for Public Release;
Further Dissemination Unlimited

RPP-RPT-62215, Rev. 0

LERF BASIN 41 MATERIAL COMPATIBILITY WITH WASTEWATER

May 2020

prepared by

Sargent & Lundy
1100 Jadwin Avenue, Suite 400
Richland, Washington 99352-3425
(509) 946-3300

prepared for

Washington River Protection Solutions, LLC

TABLE OF CONTENTS

1.0 INTRODUCTION 1
2.0 BACKGROUND 1
2.1 Requirement Flowdown 2
3.0 SCOPE AND METHODOLOGY 4
3.1 Assessment Methodology 4
3.2 Inputs 5
3.3 Assessment Limitations 7
3.3.1 Radiation Resistance 7
3.3.2 Chemical Compatibility 9
4.0 EVALUATION 10
4.1 Radiation Resistance 10
4.2 Chemical Resistance 13
5.0 RECOMMENDATIONS 15
6.0 SUMMARY AND CONCLUSIONS 15
7.0 REFERENCES 15

LIST OF APPENDICES

Appendix A – S&L Calculation S54413.024-P-001, *LERF Basin 41 Radiological Dose Rate and Exposure*

LIST OF FIGURES

Figure 2-1. Basin 41 Liner System Schematic 3
Figure 2-2. Basin 41 Piping Regulation Interface View. 3

LIST OF TABLES

Table 2-1. Wastewater Compatibility Requirement Flowdown. 2
Table 3-1. Basin 41 Component for Evaluation List. 5
Table 3-2. Basin 41 Component Drawing List. 5
Table 3-3. LERF Liner Compatibility Limits. 6
Table 3-4. LERF Wastewater Estimated Bounding Dose Rates and Total Dose. 7
Table 4-1. Radiation Resistance of LERF Basin Wastewater Components. 11
Table 4-2. EPDM, CSPE, and Siloxane Compatibility with Liner Chemical Families. 13

LIST OF TERMS

Acronyms

CSPE	Chlorosulfonate polyethylene
EMF	Effluent Management Facility
EPDM	Ethylene Propylene Diene Monomer Rubber
EPRI	Electric Power Research Institute
ETF	Effluent Treatment Facility
FRP	Fiberglass-Reinforced Plastic
HDPE	High Density Polyethylene
LERF	Liquid Effluent Retention Facility
RCRA	Resource Conservation and Recovery Act
WAC	Washington Administrative Code
WTP	Waste Treatment and Immobilization Plant

Units

C	°degrees Celsius
in.	inch(es)
ft	Foot/feet
mil	1/1000 inch
lb	pound

1.0 INTRODUCTION

The Liquid Effluent Retention Facility (LERF) currently operates three basins adjacent to the Effluent Treatment Facility (ETF), located just north of the 200 East tank farms. The basins store wastewater from several Hanford sources, including condensate from the 242-A Evaporator, and dilute waste streams from solid waste disposal facilities, and site cleanup activities. The wastewater is eventually processed through ETF.

Once the Waste Treatment and Immobilization Plant (WTP) begins processing waste, it will send wastewater from the Effluent Management Facility (EMF) to the LERF, prompting the need for a fourth basin, 242AL-41, (Basin 41) to ensure sufficient storage capacity from the new source. Basin 41 will be sized the same as the other three basins, and will be able to hold approximately 7.8 million gallons of wastewater. Basin 41 was roughly dug out at the same time (1990) as the other active basins (242AL-42, 242AL-43, and 242AL-44), but further work has not been performed to complete the basin.

An assessment of certain materials of construction for Basin 41 and its ancillary equipment is necessary to demonstrate that the basin will be able to perform its function of retaining the wastewater. The materials will need to be compatible with all sources of wastewater - currently 242-A Evaporator condensate, dilute waste streams, groundwater, and EMF wastewater.

2.0 BACKGROUND

The construction of Basin 41 includes the construction of the following basin and ancillary equipment per the construction specification, RPP-SPEC-63632, *LERF Basin 41 Construction Specification*:

1. Basin 41 multipart liner system (Figure 2-1).
2. Basin 41 floating cover system.
3. Concrete catch basin including:
    a. Chemical resistant coatings
    b. Metallic and non-metallic piping and manifold systems, and
    c. Anchors for in-basin equipment.
4. The double containment reinforced thermosetting resin pipe (also known as Fiberglass reinforced pipe [FRP[1]]) extending into the catch basin.
    a. Two pipelines will be tied into existing lines, EVAP COND-PC5000 and WTP-001.
    b. Two additional intra-basin lines, 60M-010 and 60M-011.

[1] The manufacturer of the selected pipe refers to the product as FRP (Conley Composites). As a result, the pipe will be referred to as FRP for the remainder of this report.

5. Basin 41 equipment such as piping, risers, pumps, etc.

It is expected that Basin 41 will be a recipient of wastewater from several origins, including the new EMF wastewater stream. Prior to waste acceptance, the New Waste Stream Acceptance Checklist (HNF-3172, *Liquid Waste Processing Facilities Waste Acceptance Criteria*) must be completed and approved. Among other items, the checklist ensures that the constituents of the wastewater stream do not exceed the liner compatibility limits.

2.1 REQUIREMENT FLOWDOWN

The materials of construction are being evaluated to ensure that they are compatible with the wastewater in accordance with two Washington Administrative Codes (WACs). Waste transfer piping, up to the first valve in the catch basin, is regulated under WAC 173-303-640, *Tank Systems.* The basin liner is regulated under WAC 173-303-650, *Surface Impoundments.* The requirements from the WAC standards as they pertain to this material compatibility assessment are as described in Table 2-1. The WAC 173-303-640 regulation applicability is depicted in Figure 2-2.

Table 2-1. Wastewater Compatibility Requirement Flowdown.

Location	WAC Requirement	Part	Requirement (paraphrased for clarity)
Basin primary liner	173-303-650	(2)(a)(i)(A)	The impoundment liner will have the appropriate chemical properties to prevent failure due to physical contact with the wastewater to which they are exposed, climatic conditions, the stress of installation, and the stress of daily operation.
Up to first valve in manifold	173-303-640	(3)(a)	Owners or operators of new tank systems or components must obtain a written assessment, reviewed and certified by an independent, qualified registered professional engineer, attesting that the tank system has sufficient structural integrity and is acceptable for the storing and treating of dangerous waste. The assessment must show the tank system has sufficient structural strength, compatibility with the waste(s) to be stored or treated, and corrosion protection to ensure that it will not collapse, rupture, or fail.
		(3)(a)(iii)(A)(VIII)(B)(I)	The type and degree of external corrosion protection that are needed to ensure the integrity of the tank system during the use of the tank system or component, consisting of: Corrosion-resistant materials of construction such as special alloys, fiberglass reinforced plastic, etc.

Figure 2-1. Basin 41 Liner System Schematic.

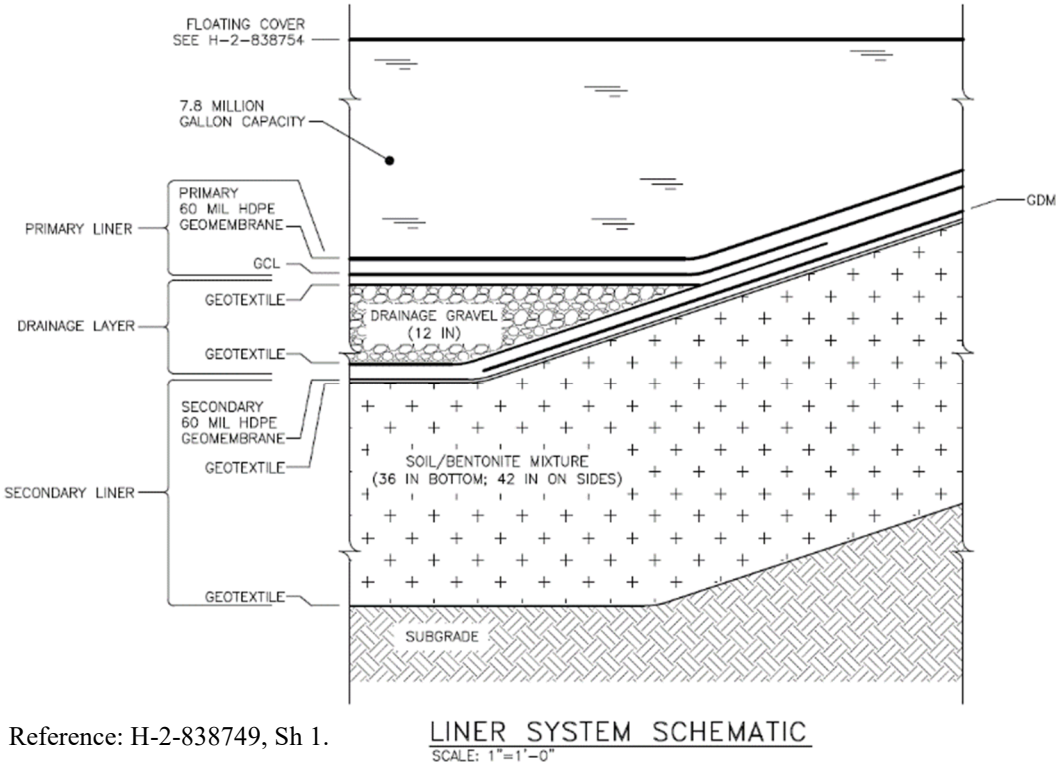

Reference: H-2-838749, Sh 1.

Figure 2-2. Basin 41 Piping Regulation Interface View.

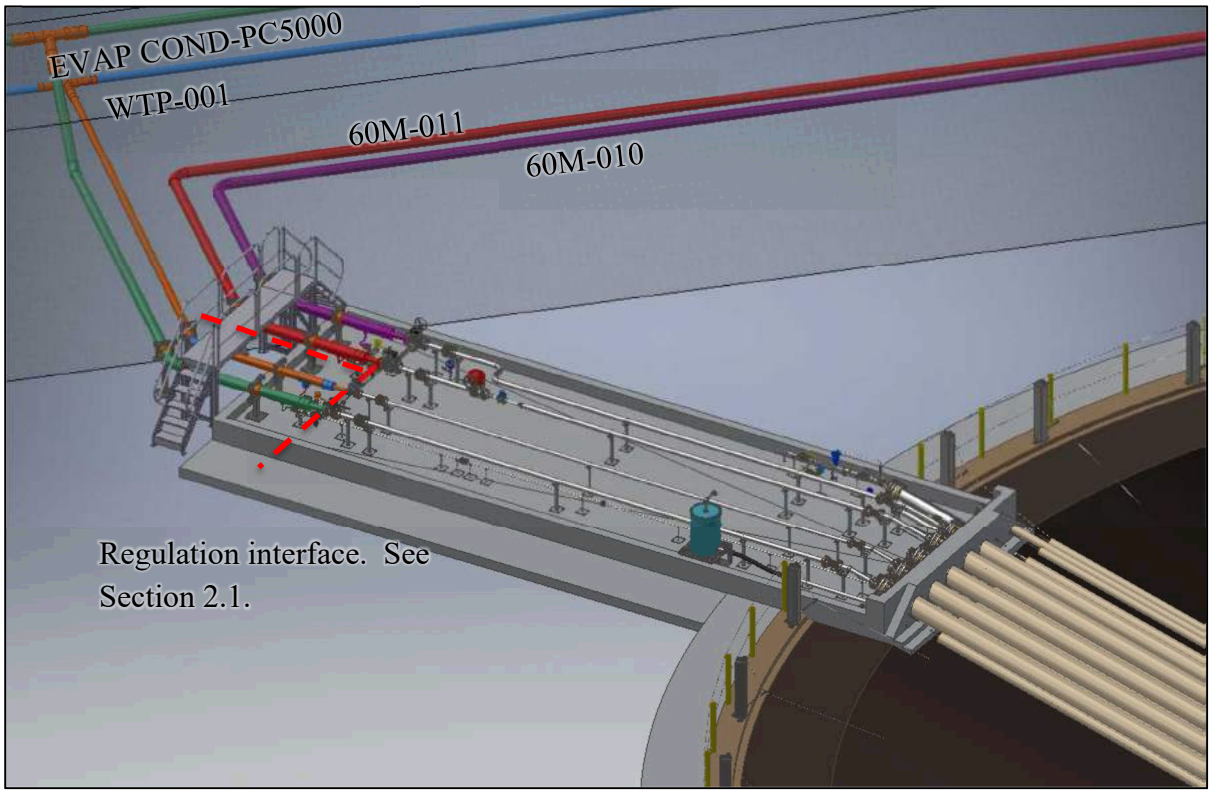

3.0 SCOPE AND METHODOLOGY

3.1 ASSESSMENT METHODOLOGY

This assessment evaluates the compatibility of applicable Basin 41 and ancillary equipment materials with the anticipated wastewater. Guidance contained in standard TFC-ENG-STD-34, *Standard for the Selection of Non-Metallic Materials in Contact with Tank Waste*, has been applied for this assessment. Based on the guidance in TFC-ENG-STD-34 and the WAC requirements, only the components listed below need to be assessed in this evaluation.

- Materials under WAC 173-303-640:
    1. FRP inner liner,
    2. Full Face gaskets, and
    3. Catch basin coating (secondary containment).
- Materials under WAC 173-303-650:
    1. Geomembrane liner, and
    2. Floating cover[2].

Radiation resistance, chemical resistance, temperature constraints, and application constraints will be considered in this evaluation. Materials used to construct the three operating basins were evaluated in WHC-SD-W105-TD-001, *9090 Test Results*. A follow-up compatibility assessment was performed by ETF personnel to expand on the wastewater simulant results to include the current chemical families and constituents now identified in HNF-3172. Where the materials used to construct Basin 41 are the same or similar to the original materials, operational experience in conjunction with previously documented evaluations will be used as input for this evaluation.

The following methodology was used to determine if the components are appropriate for use in Basin 41.

1. Calculate the expected dose rate and final dose of the LERF Basin wastewater sources (Appendix A) using The LERF Safety Basis Limits identified in Appendix D of HNF-3172.
2. Develop a component list (Table 3-1) derived from applicable drawings (Table 3-2).

[2] The floating cover is only mentioned as a part of the system to be inspected for integrity during and following installation. The requirement does not mandate that it be made out of a material that must be chemically resistant; however, since it is in direct contact with wastewater, it will be included to support discussion on maintenance.

3. Provide an evaluation of each material in the expected environment (Section 4.0).

4. Provide recommendations to facilitate component life (Section 5.0).

Table 3-1. Basin 41 Component for Evaluation List.

Component	Part	Material	Assembly and Environment
Basin Primary Liner	Geomembrane	HDPE	Basin 41
Full Face Gasket	Gasket	EPDM	FRP Pipe
Double Containment Primary (Inner) Piping and Fittings	Inner Liner	FRP - Liner Nexus (polyester veil with Epoxy resin)	FRP Buried and Above Grade Pipe
Basin Floating Cover	Bottom Layer Geomembrane	CSPE	Basin 41
Catch Basin Coating	Coating	Siloxane	Catch Basin

CSPE – Chlorosulfanated Polyethylene

Table 3-2. Basin 41 Component Drawing List.

Drawing and Sheet No	Title
H-2-838765, Sh 3-7	LERF Basin 41 Mechanical Sections
H-2-838767, Sh 1-2	LERF Basin 41 Catch Basin Isometric and Parts List

3.2 INPUTS

1. A design life for Basin 41 and ancillary equipment has not been established. For the purposes of this material evaluation, a design life of 30 years has been used to provide clarification and recommendations.

2. The LERF Liner Compatibility Limit table has been generated in HNF-3172. The table has been provided in Table 3-3.

Table 3-3. LERF Liner Compatibility Limits.

Chemical family	Constituent(s) or parameter(s)	Limit[1] (mg/L)
Alcohol/glycol	1-butanol	500,000
Alkanone[2]	acetone	200,000
Alkenone[3]	none targeted	N/A
Aromatic/cyclic hydrocarbon	acetophenone, benzene, carbozole, chrysene, cresol, di-n-octyl phthalate, diphenylamine, isophorone, pyridine, tetrahydrofuran	2,000
Halogenated hydrocarbon	Aroclors, carbon tetrachloride, chloroform, hexachlorobenzene, lindane (gamma-BHC), hexachlorocyclopentadiene, methylene chloride, p-chloroaniline, tetrachloroethylene, 2,4,6-trichlorophenol	2,000
Aliphatic hydrocarbon	none targeted	N/A
Ether	dichloroisopropyl ether	2,000
Other hydrocarbons	acetontrile, carbon disulfide, nnitrosodimethylamine, tributyl phosphate	2,000
Oxidizers	none targeted	N/A
Acids, bases, salts	ammonia, cyanide, anions, cations	100,000
pH	PH	0.5 < pH < 13.0

[1] Analytical data for a chemical family (as indicated) are summed using the following sum-of-fractions technique. The individual constituent concentrations, sum concentrations (for families), and pH values for a wastewater are then evaluated against the compatibility limit.

$$\sum_{n=1}^{i}\left(\frac{conc_n}{Limit_n}\right) \leq 1$$

where 'i' is the number of constituents in the chemical family that were detected.

[2] Ketone containing saturated alkyl group(s).

[3] Ketone containing unsaturated alkyl group(s).

Table Reference: HNF-3172

3. Dose rates were determined for the basin cover, liner, piping, and catch basin in Appendix A. The highest estimated dose rates for each system location were used for conservatism. Note that due to the configuration, the dose rate calculated for the basin wall is less than the dose rate calculated for the bottom of the liner. The wall dose rate will be neglected, and the bottom of the liner dose rate will be used for all of the liner. The dose rate and dose at 30 years for each component is presented in Table 3-4.

Table 3-4. LERF Wastewater Estimated Bounding Dose Rates and Total Dose.

Wastewater Dose Location	Dose Rate [rad/hr]	Total Exposure at 30 Years [rad]
Basin 41 Cover	2.84E-02	7,457
Basin 41 Liner		
Transfer Piping	8.58E-03	2,254
Catch Basin	3.43E-02	9,016

Reference: Appendix A

Note: The Basin 41 wall dose rate and total dose is less than the bottom of the basin, and will not be used in this evaluation.

4. Most literature data on the degradation of non-metallic materials, exposed to ionizing radiation, come from accelerated tests using high gamma radiation dose rates on free form specimens in air. Errors can arise in applying short-term, high-dose-rate test data to predict the effects of radiation on materials exposed to lower dose rates over long periods of time in liquid. For the purposes of this evaluation, it has been assumed that short-term, high-dose-rate test data can be reasonably applied to predict the performance of the basin non-metallic materials.

3.3 ASSESSMENT LIMITATIONS

3.3.1 Radiation Resistance

Radiation effects on materials are assumed to be the result of gamma radiation in this analysis. Beta radiation has been shown to affect waste transfer components over long periods of exposure in similar ways to gamma radiation (Wright 2006, Clegg 1991); however, due to beta's decreased ability to penetrate material, it is deemed conservative to consider the total dose delivered by the media in each stream to consist entirely of gamma. Gamma radiation, while less ionizing than beta, can better penetrate most substances and is therefore considered to have a much greater effect on the properties of polymeric materials (Wright 2006, Clegg 1991). It is for this reason that the overwhelming majority of data available for the effects of radiation on non-metallic materials pertains to the effects of gamma only; data related to the effects of beta on these compounds is limited. Any damage induced by beta radiation is likely to be conservatively bounded by the anticipated effects of gamma radiation.

Under irradiation, polymers generally undergo two types of reaction: cross-linking and/or chain scission. The cross-linking process increases the rigidity and hardness. Chain scission decreases the modulus of elasticity, reduces yield stress, increases elongation, and decreases hardness. Chain scission may also cause embrittlement or affect the release of hydrogen gas. Both cross-linking and chain scission can significantly alter the properties of a polymer; however, not all polymers are affected equally.

Radiation data for polymeric materials in the literature are difficult to apply directly to LERF Basin conditions. Nearly all radiation resistance data for polymers have been generated in short-term tests using high gamma radiation dose rates where the material under test is in air and not under tensile stress. Several important factors listed below must be considered when reviewing radiation test data generated in this manner.

1. Materials exposed to high dose rates will absorb more radiation dose before exhibiting a given loss in mechanical properties than materials irradiated at lower dose rates (Wright 2006). Thus, data generated with high dose rates and short exposure times cannot be reliably used to predict the service life of similar materials exposed to much lower dose rates for a longer period of time given the same total dose exposure. Dose rates for the evaluated components are much lower than typical dose rates used in accelerated materials testing.

2. Many radiation degradation products produced in polymers require oxygen to form (Wright 2006). Thus, the rate of radiation-induced degradation is often faster for materials irradiated in oxygen-containing environments than for materials irradiated in deoxygenated environments. Results from tests on materials irradiated in oxygenated environments cannot be reliably used to predict the service life of similar materials used in deoxygenated or reduced-oxygen environments.

3. Degradation rates also increase with temperature, largely due to the increase in oxygen permeability with temperatures (Wright 2006, Clegg 1991). Depending on test temperature, test data may not accurately reflect field conditions.

4. Degradation of materials due to irradiation continues after removal from the radiation source (Wright 2006). Thus, test data may not reflect service conditions, depending on how soon mechanical testing is performed following irradiation.

5. The rate of degradation increases when stress and radiation are concurrently applied (Wright 2006). Because almost no testing is performed with the polymer under stress, test results tend to overestimate the useful life of an irradiated polymer in service.

6. Radiation testing is most often performed on thin samples of materials (Wright 2006). Thin samples degrade more rapidly than thick samples. Depending on how close test specimen thicknesses are to installed material thicknesses, data may again be skewed.

7. The performance of gaskets is strongly dependent on the compressive properties of the elastomer (Wright 2006). Under irradiation, radiation-induced cross-linking may increase the modulus of elasticity of the material only slightly, but if this occurs while the material is in compression, there will be a significant loss of “elastic memory” and an associated loss in sealing capability (Wright 2006). Tests performed on relaxed elastomers, not under compression, will not likely be representative of materials to be used in service under compression to prevent leakage.

These traits of polymer irradiation data must be considered in the material analysis (as applicable) for the LERF Basin components. Unless test conditions match service conditions,

the estimated useful life analyses for polymers presented herein can only be considered a rough estimate of expected field performance.

It should be noted that these results are based only on a literature review of compatibility data and do not take into account possible synergistic effects of radiation plus chemical exposure, process upsets creating environments outside the bounds of this assessment, temperature differences, or other errors associated with applying short-term test data prediction of long-term performance.

3.3.2 Chemical Compatibility

The LERF can accept Hanford Site generated mixed, low-level, dangerous, or non-regulated wastewater, provided the wastewater meets the facilities' waste acceptance criteria as described in HNF-3172. Laboratory testing was performed on the initial wastewater simulant for compatibility with the High Density Polyethylene (HDPE) geomembrane liner and FRP prior to the construction of the original three basins (WHC-SD-W105-TD-001). As discussed in Design Input 2, the constituents in the original simulant were expanded in HNF-3172 to encompass chemical families, based on the testing and vendor compatibility data, to ensure the integrity of the basin liner and piping materials. These established threshold values are listed in HNF-3172 (and also presented in Table 3-3 in this document).

Although threshold values in HNF-3172 are already established for two of the materials in the Basin 41 system, the following information should be taken into consideration when understanding how laboratory test results apply to operational environments.

The predicted LERF Basin wastewater streams are, in effect, a dilute solution of many chemical constituents of varying concentrations. The material/chemical compatibility data generated from the original testing and the supplemental vendor data were generated from relatively short-term tests performed on material coupons subjected to solutions that do not fully represent the current wastewater composition(s). In the case of the original test data documented in WHC-SD-W105-TD-001, the recipe for the simulant no longer reflects the current wastewater water composition. The formulation for the simulant originally tested was limited to 22 constituents and as previously noted, was later expanded to encompass the chemical families in HNF-3172.

As described in TFC-ENG-STD-34, the geometry of the materials in this assessment contributes to how the material behaves in response to chemical exposure and changes in temperature. In general, “free-form” or unconstrained, unstressed specimens tend to suffer greater impacts from chemical exposure than do materials that are constrained during use (e.g., gaskets, seals, etc.). Since most chemical testing is performed on unstressed, free-form specimens of materials, test results are likely conservative as applied to constrained materials such as the gasket.

The limitations of applying laboratory test data, as described above, to predict actual operating behavior must be considered in the material analysis for the Basin 41 materials. The prediction of material behavior as presented herein can only be considered a rough estimate of expected field performance.

This evaluation may not account for all possible chemical interactions, synergistic effects (with radiation), or errors associated with applying short-term test data to long-term applications.

4.0 EVALUATION

4.1 RADIATION RESISTANCE

Radiation contribution to the degradation of Basin 41 materials is expected to be low in comparison to radiological thresholds used to evaluate materials. However, the overall impact of radiation on the integrity of the materials, including the synergistic effects of radiation with chemical attacks, cannot be ignored in this assessment. As previously stated, without test data that includes both radiation and chemical attack, the actual synergistic effects cannot be known; however, this assessment discusses the impact of both influences to help determine the expected impact on the materials.

Assuming continuous exposure to the LERF Basin wastewater bounding conditions, the maximum radiation doses over a 30 year life (Design Input 1), 7,457 rad, 2,254 rad, and 9,016 rad (0.007 Mrad, 0.002 Mrad, and 0.009 Mrad) for the basin cover and liner, transfer piping, and catch basin respectively (Design Input 3). The anticipated doses are well under the maximum material threshold values presented in Table 4-1.

Table 4-1 summarizes the results of the literature review on radiation resistance for the materials listed in Table 3-1. See below for a radiation resistance discussion of each material used in the basin.

Table 4-1. Radiation Resistance of LERF Basin Wastewater Components.

Material	Reference Name	Signs of Degradation at Radiation Exposure (Mrad) at 70°F		Notes
		Initial	Severe	
Polyester (FRP veil) [(1)]	**Polyester**	0.1	1.0	
Aromatic Amine Cured Bisphenol A Epoxy (FRP resin) [(1),(2)]	**Epoxy**	100	200	
Ethylene Propylene Diene Monomer Rubber [(1),(2)]	**EPDM**	40	200	Other sources cite initial degradation at 100 Mrad[4]
Siloxane[(3)]		0.5	N/A	Compression set highly sensitive, oxidation sensitive, peroxide cures leave residues that may oxidize radiation-cure better.
High Density Polyethlyene [(3)]	**HDPE**	0.38	10	Elongation increase at lowest reported threshold.
Chlorosulfonated Polyethelene [(1)]	**CSPE**	10	100	

[(1)] Wright 2006
[(2)] Clegg 1991
[(3)] Electric Power Research Institute (EPRI) NP-2129, *Radiation Effects on Organic Materials in Nuclear Plants*

FRP (veil and resin)

The direct buried pipes used to convey wastewater from outside of the LERF into the basins are composed of FRP. FRP is a composite material made from a polymer matrix (epoxy) reinforced with fibers (polyester veil and wound filaments). The wastewater is expected to only come into contact with and influence the inner liner. The inner liner is comprised of 60 mil composite corrosion barrier, comprised of Bisphenol A epoxy and a polyester veil. Though composite materials behave differently than their individual constituents, the resin in carbon filament epoxy composites has been shown to have the greatest effect on the outcome of mechanical properties following exposure to radiation (Clegg).

Detrimental effects posed to the polyester veil, which is more susceptible to failure, can influence the adhesion between the matrix and the fibers. However, the expected dose is low, and not expected to exceed the threshold of polyester fibers even without the barrier of an epoxy matrix.

FRP has been used to convey wastewater to the current basins since installation in the 1990s. There have been no reports of failures since installation. The ETF (including the LERF basins) was inspected in 2019 and an integrity assessment report was documented in RPP-IQRPE-50043, *FY19 Effluent Treatment Facility IQRPE Integrity Assessment*. The assessment concluded that the ETF tank system, including the FRP, is fit for use. In conjunction with the passed assessment, it was recommended that the facility and its equipment be reassessed within another ten years.

Radiation is not expected to have a great impact on the integrity of the FRP pipe used to convey wastewater to Basin 41 in a 30 year life, thus the FRP pipe is acceptable for continued use.

Ethylene Propylene Diene Monomer Rubber (EPDM)

EPDM is used as gasket material between the FRP pipe spools. EPDM is traditionally used as gasket material in other parts of Tank Farms due to its exceptional mechanical properties and radiation resistance.

Due to the high thresholds, and low expected dose, radiation is not expected to have a great impact on the integrity of the EPDM gaskets in the Basin 41 wastewater system in a 30 year life, thus the EPDM gaskets are acceptable for use.

Siloxane

Siloxane is a high performance engineered silicone-epoxy coating system intended for use as the top coat in the catch basin. The top coat is the material expected to provide secondary containment for piping in the catch basin. Additional coating details are located in RPP-SPEC-63632. The coating is expected to receive dose from wastewater in the transfer piping, and should not see any wastewater on the coating unless the piping has leaked during an upset condition. Siloxane coating systems are typically used for their broad chemical resistance, ultra-violet light resistance, flexibility, and hydrophobic nature. Traditional Siloxane resistance to ionizing radiation is not great due to crosslinking, particularly at elevated temperatures (EPRI). Little literature information could be gathered for the hybrid coating system recommended in the construction specification, so conservatively, the lower threshold will be assumed.

Due to the low expected dose, radiation is not expected to have a great impact on the integrity of the Siloxane coating on the catch basin in the Basin 41 wastewater system in a 30 year life, thus the Siloxane coating is acceptable for use.

HDPE

HDPE is used as the basin primary liner geomembrane. This material has an ionizing radiation threshold value much higher than the expected total dose for 30 years. Additionally, HDPE is used in the construction of the current basins, and has not had any reported integrity issues. As with the FRP, RPP-IQRPE-50043 concluded that the HDPE liner is fit for continued use.

Radiation is not expected to have a great impact on the integrity of the HDPE liner in the Basin 41 wastewater system in a 30 year life, thus the HDPE liner is acceptable for use.

Chlorosulfonated Polyethylene (CSPE)

A form of CSPE, Hypalon, was used in the original basin construction as the floating cover liner. Failure of a basin floating cover has been reported; however, the puncturing of the cover has been primarily attributed to mechanical means.

With respect to the radiation resistance reported for CSPE, radiation is not expected to have a great impact on the integrity of the CPSE floating cover in the Basin 41 wastewater system in a 30 year life, thus the CSPE floating cover is acceptable for use.

4.2 CHEMICAL RESISTANCE

The chemical resistance of the HDPE liner and FRP transfer piping with LERF wastewater is currently assessed using the process described in HNF-3172. Three additional materials, EPDM, CSPE, and Siloxane, require assessment per WAC regulations to ensure compatibility. These materials are compared to the chemical families listed in Table 3-3 in Table 4-2 to determine compatibility. See the evaluations for each material below.

HDPE and FRP

As previously discussed, two of the materials used in the current basin design, HDPE and FRP, were successfully tested using wastewater simulant in 1991. Both of these materials were used in the construction of the original three basins. Testing concluded that the materials did not suffer appreciable damage during waste exposure, and were fit for use. Subsequent evaluations following decades of operation have concluded the same. To ensure compliance with Resource Conservation and Recovery Act (RCRA) requirements, all wastewater streams are evaluated using the New Waste Stream Acceptance Checklist. This ensures that the components of the wastewater streams do not exceed the liner compatibility limits established to maintain integrity. As a result, these two materials are acceptable for use in the Basin 41 wastewater system for a 30 year life.

Table 4-2. EPDM, CSPE, and Siloxane Compatibility with Liner Chemical Families.

Chemical Family	Limit (mg/L)	Compatible		
		EPDM[1]	CSPE[1]	Siloxane[4,5,6]
Alcohol/glycol	500,000	Yes	Yes	Yes
Alkanone	200,000	Yes	Yes	Yes
Aromatic/cyclic hydrocarbon	2,000	No	No[2]	No
Halogenated hydrocarbon	2,000	No	No[2,3]	No
Ether	2,000	No	Yes	No
Other hydrocarbons	2,000	No	Yes	No
Acids, bases, salts	100,000	Yes	Yes	Yes
pH	0.5 < pH < 13.0	Yes	Yes	Yes

Note: See Table 3-3 for constituents.
Reference:
[1] Pruett, 2005
[2] Kelco
[3] Graco
[4] Ameron
[5] Warco Biltrite
[6] PPG

EPDM

EPDM is used for FRP piping gaskets. EPDM was compared to the listed chemical family and listed constituents (as available in literature) to determine if the material is acceptable for use (Table 4-2).

EPDM is considered broadly resistant to most acids at the expected ambient temperatures. EPDM is used in gaskets, seats, seals, and hoses in tank farm applications, and has excellent performance history when exposed to a broad range of chemicals in various wastes. EPDM is not considered resistant to hydrocarbons and ether. However, EPDM gaskets are currently installed between the FRP spools in existing basin infrastructure. Gasket leaking or other integrity issues have not been reported during regular inspections. As such, EPDM is acceptable for use in the Basin 41 system.

CSPE

CSPE is used for the Basin 41 floating cover. CSPE was compared to the listed chemical family and listed constituents (as available in literature) to determine if the material is acceptable for use (Table 4-2). An evaluation of the CSPE cover is not explicitly required to meet WAC 173-303-650; however, it has been included due to LERF history of cover failures, and in support of the maintenance and inspection requirements listed in the WAC.

CSPE is resistant to ultra-violet light and many chemicals, including acids and bases. CSPE is commonly used as geomembrane covers in potable water storage facilities. According to several manufacturers, CSPE is not generally considered compatible with aromatic or halogenated hydrocarbons; however, limited data could be compiled for compatibility with these chemicals. An instance of cover failure has been noted for Basin 42, however interviews with ETF personnel indicate that failure was likely due to excessive mechanical force on the liner during regular maintenance on the liner nearing the end of its design life. CSPE geomembrane manufacturer literature indicates an expected design life of 20-30 years for the cover materials (Raven). Embrittlement due to chemical exposure and long-term ultra-violet light exposure is not uncommon for polymers.

Due to regular cover inspection, wastewater stream review, limited mechanical interaction, and relatively low wastewater limits for aromatic and halogenated hydrocarbons, CSPE is acceptable for use in the Basin 41 system for a 30 year design life.

Siloxane

The selected Siloxane system is a silicone-epoxy hybrid coating system. According to the manufacturer, this system is generally considered for splash and spill resistance, and is broadly resistant to dilute and concentrated organic and inorganic acids, alkali, solvents and oxidizing chemicals (PPG). Its primary use is secondary containment applications in chemical process industries. The coating system is generally recognized to not be resistant to hydrocarbons. It is not expected to come into contact with the wastewater unless there is a leak in the FRP, limiting direct exposure. .

Based on limited exposure to the wastewater constituents, Siloxane is considered appropriate as a secondary containment coating for use for the life of the Basin 41 wastewater system.

5.0 RECOMMENDATIONS

Not all materials used to construct Basin 41 were evaluated in this report due to WAC regulations. Evaluation of radiation shows that bounding total doses are a factor of 50 to ~10^5 less than the dose at which respective materials experience initial degradation. However, a general recommendation for all non-metallic materials exposed to even low doses of radiation is to drain and flush (if possible) to reduce unnecessary exposure.

6.0 SUMMARY AND CONCLUSIONS

An assessment of the materials intended to complete the construction of Basin 41 was required to demonstrate that the basin would be able to perform its function of retaining the wastewater until further processing can be performed. The basin will need to be compatible with all sources of wastewater: 242-A Evaporator condensate, dilute waste streams, groundwater, and EMF wastewater. Prior to acceptance of each wastewater, the New Waste Stream Acceptance Checklist (HNF-3172) must be completed and approved. Among other items, the checklist ensures that the constituents of the wastewater stream do not exceed the constituents listed in the liner compatibility limits. The limits established for the liner were applied to this evaluation to determine the acceptability of materials for the new basin.

Based on the evaluation performed for each material in each environment in Section 4.0, including the assessment of historical use, all materials are fit for use for the Basin 41 wastewater system for the estimated 30 year design life assumed in this report.

The WAC requires that the liner not suffer damage a result of chemical incompatibility. The permit that the facility currently operates under accepts the initial testing and expansion of the chemical compatibility information. This assessment meets the material compatibility evaluation requirements established in WAC 173-303-640 and WAC 173-303-650.

Though the basin cover is not explicitly called out for a material evaluation prior to its use, the CSPE cover has been evaluated to support maintenance and inspection requirements listed in WAC 173-303-650. CSPE is not generally recommended for use with hydrocarbons, however, the relatively low hydrocarbon exposure and regular inspection and maintenance should ensure the life integrity of the material for 30 years.

7.0 REFERENCES

Clegg, D.W. and A.A. Collyer, 1991, “Irradiation Effects on Polymers,” Elsevier Science Publishing, Co. Inc., New York, New York.

Conley Composites, Queried 04/22/2020, [Epoxy Schedule 40/30 Double Contained Piping, PDS4030E (12/14) 1, 2020] https://www.conleyfrp.com/chemguide.php.

EPRI NP-2129, 1981, *Radiation Effects on Organic Materials in Nuclear Plants*, Electric Power Research Institute, Palo Alta, California.

Graco, Queried 05/04/2020, *[Chemical Compatibility*, 2013] https://www.graco.com/content/dam/graco/ipd/literature/misc/chemical-compatibility-guide/Graco_ChemCompGuideEN-B.pdf, accessed 5/4/2020.

H-2-838749, Sheet 1, 2020, *LERF Basin 41 Civil Bottom Liner*, Revision 1, Washington River Protection Solutions, LLC, Richland, Washington.

H-2-838765, Sheets 3-7, (2020), *LERF Basin 41 Mechanical Sections*, Revision 0, Washington River Protection Solutions, LLC, Richland, Washington.

H-2-838767, Sheets 1-2, (2020), *LERF Basin 41 Catch Basin Isometric and Parts List*, Revision 0, Washington River Protection Solutions, LLC, Richland, Washington.

HNF-3172, 2019, *Liquid Waste Processing Facilities Waste Acceptance Criteria*, Revision 9, Washington River Protection Solutions, LLC, Richland, Washington.

Kelco, Queried 05/04/2020, [*Chemical Compatibility Chart Hypalon*, 2008] http://www.kelco.com.au/wp-content/uploads/2009/02/hypalon-chemical-compatibility-guide.pdf, accessed 5/4/2020.

Ameron International, Queried 05/05/2020, [Mower, *Polysiloxanes*, 2003] http://extra.ivf.se/kemi/common/downloads/Kunskapsarkiv/Polysiloxaner/presentation_polysiloxanes.pdf.

PPG, 2017, *PPG PSX®[3] 700*, PPG Industries Ohio, Inc., Pittsburgh, PA.

Pruett, K. M., 2005, "Chemical Resistance Guide for Elastomers III Compass Publications," La Jolla, California.

Raven, Queried 05/05/2020 [*CSPE (Hypalon)-Chlorosulfonated Polyethelyne*] https://www.coloradolining.com/products/geomembranes/cspe-liner.html.

RPP-IQRPE-50043, 2019, *FY19 Effluent Treatment Facility IQRPE Integrity Assessment*, Revision 0, Washington River Protection Solutions, LLC, Richland, Washington.

RPP-SPEC-63632, 2020, *LERF Basin 41 Construction Specification*, Revision 0, Washington River Protection Solutions, LLC, Richland, Washington.

[3] *PSX* is registered trademark of PPG Industries Ohio, Inc., Pittsburgh, PA

TFC-ENG-STD-34, 2017, *Standard for the Selection of Non-Metallic Materials in Contact with Tank Waste*, Rev. A-1, Washington River Protection Solutions, LLC, Richland, Washington.

Warco Biltrite, Queried 05/04/2020 [*Chemical Resistance of Various Elastomers*] http://www.warco.com/pdf/Rubber-Elastomer-Chemical-Resistance-Guide-by-TLARGI-and-WARCO-BILTRITE.pdf.

Washington Administrative Code (WAC) 173-303-640, "Tank Systems," *Washington Administrative Code*, as amended.

Washington Administrative Code (WAC) 173-303-650, "Surface Impoundments," *Washington Administrative Code*, as amended.

WHC-SD-W105-TD-001, 1991, *9090 Test Results,* Revision 0, Washington River Protection Solutions, LLC, Richland, Washington.

Wright, D., 2006, "Failure of Plastics and Rubber Products: Causes, Effects, and Case Studies Involving Degradation, Rapra Technology Limited," Shropshire, United Kingdom.

APPENDIX A

S&L CALCULATION S54413.024-P-001, *LERF BASIN 41 RADIOLOGICAL DOSE RATE AND EXPOSURE*

Sargent & Lundy	CALCULATION COVER SHEET	Page No. 1 of 34	
		Date 5/12/2020	Rev. No. 0
		Calculation No: S54413.024-P-001	

Project No.	Project Title:	Client:
S551413.024	LERF Basin 41 Design	Washington River Protection Services, LLC

Title:
LERF Basin 41 Radiological Dose Rate and Exposure

Purpose and Objective:

The purpose of this calculation is to determine a conservative total radiological dose and expected total dose exposure at 30 years for LERF Basin 41. The results of this calculation will be used in the material compatibility evaluation, RPP-RPT-62215, *LERF Basin 41 Material Compatibility with Liquid Effluent*.

Rev. No.	Total Pages		Prepared By	Checked By	PM/TL
0	34	Print Name/ Sign:	MJ Feldmann	BD Groth	BD Groth
		Date:	5/12/2020	5/12/2020	5/12/2020

Revision Description (Revision Description/Affected Pages):
Initial Issue.

		Print Name/ Sign:			
		Date:			

Revision Description (Revision Description/Affected Pages):

Quality Assurance Procedure 3.1 Calculation Cover Sheet (01-19)

Sargent & Lundy

CALCULATION REVIEW CHECKLIST

Project No.	Calculation No.	Rev.	Page No.
S551413.024	S54413.024-P-001	0	2 of 35

Items Checked	Accept Y	Accept N	Accept N/A	Description of Resolution for Unacceptable Items
1. Cover sheets properly completed.	√			
2. Calculation sheet headers complete with calculation number, revision number, etc.	√			
3. Calculation sheet contents are legible, accurate, and complete per format.	√			
4. Listed attachments included.	√			
5. Calculation objective clearly described.	√			
6. Criteria are suitable and properly referenced to task specific documents.	√			
7. Assumptions and input data selected, described, reasonable, and attached or referenced to task documents.	√			
8. Calculation method identified and appropriate for the design activity.	√			
9. Calculation results reasonable and correctly described in results and conclusions.	√			
10. Physical property calculations generated by CAD software verified via hand calculations.			√	
11. Computer program identified with version and revision.	√			
12. Computer input/output provided or referenced and reasonable.	√			
13. Computer run traceable to calculation (file #, etc.).	√			
14. Computer input/output data and problem type within validation/verification range of use.	√			
15. Computer program validation/verification addressed.	√			
16. Computer operating system in use for calculation preparation is the same as when the software was verified on machine.	√			

Calculation Checking Method	√	Applicable Pages
1. Direct Step-by-Step Check	√	
2. Reference Chart(s) or Book(s) Comparison (Append Documentation)		
3. Alternate Calculation (Append Documentation)		

Comments:

Preparer (Print Name and Sign):	Date:
MJ Feldmann Monte Feldmann	5/12/2020
Checker (Print Name and Sign):	**Date:**
BD Groth Bruce D. Groth	5/12/2020

Signatures obtained only after discrepancies are corrected and comments are resolved.

Quality Assurance Procedure 3.1 Calculation Review Checklist (01-19)

Sargent & Lundy

CALCULATION SHEET

Project No. S551413.024	**Calculation No.** S54413.024-P-001	**Rev.** 0	**Page No.** 3 of 34
Title: LERF Basin 41 Radiological Dose Rate and Exposure			
Prepared By: MJ Feldmann	**Date:** 5/12/2020	**Checked By:** BD Groth	**Date:** 5/12/2020

TABLE OF CONTENTS

1.0 PURPOSE 5
2.0 METHODOLOGY 5
3.0 DESIGN INPUTS 5
4.0 ASSUMPTIONS 6
5.0 COMPUTER SOFTWARE 6
6.0 CALCULATION 6
6.1 Dose Evaluation for Basin Liner and Cover 6
6.1.1 Average LERF Basin 41 Dimensions 6
6.1.2 Dose Rate for LERF Basin Liner and Cover 6
6.1.3 Estimated Exposure for LERF Basin Liner and Cover 7
6.2 Dose Evaluation for FRP Pipe 8
6.2.1 FRP Pipe Dimensions 8
6.2.2 Dose Rate for FRP 8
6.2.3 Estimated Exposure for FRP 9
6.2.4 Estimated Exposure for FRP in Catch Basin 9
7.0 RESULTS AND CONCLUSIONS 9
8.0 REFERENCES 10

Appendices

Appendix A
LERF Safety Basis Limits

Appendix B
MicroShield Output Files

Appendix C
LERF Basin 41 Sketches

Appendix D
FRP Data Sheet

Quality Assurance Procedure 3.1 Calculation Sheet (01-19)

Sargent & Lundy	CALCULATION SHEET		
Project No. S551413.024	**Calculation No.** S54413.024-P-001	**Rev.** 0	**Page No.** 4 of 34
Title: LERF Basin 41 Radiological Dose Rate and Exposure			
Prepared By: MJ Feldmann	**Date:** 5/12/2020	**Checked By:** BD Groth	**Date:** 5/12/2020

Tables

Table 6-1. Dose Rates Determined in MicroShield for Basin Liner. 7
Table 6-2. Total Dose Exposure for Basin Liner. 8
Table 6-3. Dose Rates Determined in MicroShield for FRP. 8
Table 6-4. Total Dose Exposure for FRP. 9
Table 6-5. Total Dose Exposure for Catch Basin. 9

Acronyms

LERF	Liquid Effluent Retention Facility
ETF	Effluent Treatment Facilty
FRP	Fiberglass reinforced pip

Quality Assurance Procedure 3.1 Calculation Sheet (01-19)

Sargent & Lundy

CALCULATION SHEET

Project No. S551413.024	**Calculation No.** S54413.024-P-001	**Rev.** 0	**Page No.** 5 of 34
Title: LERF Basin 41 Radiological Dose Rate and Exposure			
Prepared By: MJ Feldmann	**Date:** 5/12/2020	**Checked By:** BD Groth	**Date:** 5/12/2020

1.0 PURPOSE

The purpose of this calculation is to determine a conservative total radiological dose and expected total dose exposure at 30 years for LERF Basin 41. The results of this calculation will be used in the material compatibility evaluation, RPP-RPT-62215, *LERF Basin 41 Material Compatibility with Liquid Effluent*.

2.0 METHODOLOGY

This analysis uses MicroShield and hand calculations to determine:

1. The dose rate for the wastewater using the LERF Safety Basis Limits, and
2. The expected radiological exposure at 30 years using the calculated dose rates.

3.0 DESIGN INPUTS

1. The LERF Safety Basis Limits from HNF-3172, *Liquid Waste Processing Facilities Waste Acceptance Criteria*, are presented in Appendix A. The LERF Safety Basis Limits were utilized in the MicroShield computer code (see Section 5.0) to determine the dose rate for the wastewater stored in LERF Basin 41 and in associated fiberglass reinforced piping (FRP).
2. LERF Basin 41 Dimensions are provided in Appendix C and are used to determine the dimensions of a representative rectangular volume for input into the MicroShield model. MicroShield uses simple geometric volumes in its analysis.
3. LERF Basin 41 is designed to be the same as the other three LERF basins and has a nominal capacity of approximately 7.8Mgal, Modification Traveler MT-50497, *Liquid Effluent Retention Facility (LERF) Basin 41* and HNF-3172, *Liquid Waste Processing Facilities Waste Acceptance Criteria*.
4. The waste specific gravity is 1.0. From a shielding perspective, the lower density is the conservative case, 67246-024-RFI-002, *Basin 41 Pump Design Criteria*.
5. FPR pipe used in the Basin 41 design is comprised of 3"/6" pipe-in-pipe and 4"/8" pipe-in-pipe (H-2-838765, *LERF Basin 41 Mechanical General Arrangement*). The 4"/8" pipe is used in this evaluation and will provide a more conservative dose rate. The nominal inside diameter of the inner 4"/8" pipe is 4". The FPR data sheet is provided in Appendix D.
6. The standard MicroShield densities were used for air and water were used.
7. The specific gravity of the FRP 1.85, Appendix D.
8. A 30ft section of FRP is evaluated.

Quality Assurance Procedure 3.1 Calculation Sheet (01-19)

Sargent & Lundy	CALCULATION SHEET		
Project No. S551413.024	**Calculation No.** S54413.024-P-001	**Rev.** 0	**Page No.** 6 of 34
Title: LERF Basin 41 Radiological Dose Rate and Exposure			
Prepared By: MJ Feldmann	**Date:** 5/12/2020	**Checked By:** BD Groth	**Date:** 5/12/2020

4.0 ASSUMPTIONS

No unverified assumptions are used in this calculation.

5.0 COMPUTER SOFTWARE

MicroShield Version 12.03 was used to model simple geometries and determine dose rate at a distance of interest. MicroShield utilizes a point kernel (discrete ordinate) algorithm, and contains built-in libraries of radionuclide decay constants, photon energies, and element- and energy-specific attenuation and build-up factors. The installation of MicroShield, Version 12.03, was verified and validated as documented in VV-19-06-006, *MicroShield Software Validation and Verification Report*. This software is installed on Sargent & Lundy Engineering Services, Inc., Computer No. RL_C0341, running on Windows 7 Version 6.1 (Build 7601: Service Pack 1).

6.0 CALCULATION

6.1 Dose Evaluation for Basin Liner and Cover

6.1.1 Average LERF Basin 41 Dimensions

At an elevation of 603.50 feet, the length of Basin 41 inside the anchor wall is 337.53 feet, the width of the basin inside the anchor wall is 277.53 feet. At an elevation of 579 feet, the length of the basin floor on the East side is 184.19 feet (34.4 feet +115.36 feet + 34.4 feet). The length of the basin floor on the south side is 124.69 feet (34.4 feet + 55.89 feet + 34.4 feet).

The average length of the basin of the basin is determined to be 260.86 feet. The average width of the basin is determined to be 201.11 feet. These dimensions are used to determine the height of the rectangle that represents the basin using a volume of 7.8Mgal. The corresponding height of the waste is determined as follows:

$$Depth = \frac{7{,}800{,}000\,gal\left(\frac{1\,ft^3}{7.481\,gal}\right)}{260.86\,ft\,x\,201.11\,ft} = 19.87\,ft$$

The dimensions for the rectangular volume used in the MicroShield model used are 260.86 feet x 201.11 feet x 19.87 feet, corresponding to a basin volume of 7.8 Mgal.

6.1.2 Dose Rate for LERF Basin Liner and Cover

The dose rate for the wastewater contained in Basin 41 is determined using the LERF Safety Basis Limits. The LERF and ETF are classified as below hazard Category 3 facilities. Wastewater accepted at the LERF will be controlled so that the wastewater dose consequence does not exceed that of the maximum bounding radiological source term evaluated in the 242A Liquid Effluent Retention Facility Auditable Safety Analysis (HNF-SD-LEF-ASA-002). This maximum bounding radiological source term is provided in Appendix A. The 200 Area Effluent Treatment Facility Auditable Safety Analysis Report (HNF-SD-ETF-ASA-001) requires that the ETF radiological inventory never exceed the Hazard Category 3 sum-of-fractions threshold of 1.0 (DOE-STD-1027-

CALCULATION SHEET

Project No. S551413.024	**Calculation No.** S54413.024-P-001	**Rev.** 0	**Page No.** 7 of 34
Title: LERF Basin 41 Radiological Dose Rate and Exposure			
Prepared By: MJ Feldmann	**Date:** 5/12/2020	**Checked By:** BD Groth	**Date:** 5/12/2020

92). Thus, the LERF Safety Basis Limits in Appendix A are used in the MicroShield model using the dimensions for a rectangular volume determined Section 6.1.1. The MicroShield output files are included in appendix B.

The dose rates are evaluated at 1 cm, 30 cm and 100 cm from the side of the basin and from the center of the largest face of the rectangular volume, for evaluating the cover. The dose rate estimated in MicroShield for the Basin Cover and Liner Floor model provide the most conservative dose rate at 30-cm. The dose rate in mR/hr is converted to Rad/hr by the following equation and the results are shown in Table 6-1:

$$1\,Rad \times \frac{100\ ergs/g}{Rad} \times \frac{1\,R}{86.9 ergs/g} = 1.15\ R$$

Table 6-1. Dose Rates Determined in MicroShield for Basin Liner.

Location	Distance from Location	Dose Rate [mR/hr]	Dose Rate [Rad/hr]
Basin Side Wall	At 1 cm from side	1.598e+00	1.39E-03
	At 30 cm from side	1.824e+00	1.59E-03
	At 100 cm from side	1.639e+00	1.43E-03
Basin Cover and Liner Floor	At 1 cm from cover	8.27E+00	7.19E-03
	At 30 cm from cover	3.26E+01	2.84E-02
	At 100 cm from cover	2.98E+01	2.59E-02

6.1.3 Estimated Exposure for LERF Basin Liner and Cover

The expected total radiological exposure for the basin liner and cover are calculated using the dose rates determined in Section 6.1.2. The total radiological exposures for 30 year period are presented in Table 6-2. The total exposure estimated for the Basin Cover and Liner Floor at 30-com provide the most conservative estimate of exposure to the liner.

For the Basin Side Wall:

$$Total\ Dose\ Exposure = 1.39E-03\frac{Rad}{hr}\ x\ 24\frac{hr}{day}\ x\ 365\frac{days}{year}\ x\ 30\ years = 365\ Rad$$

Quality Assurance Procedure 3.1 Calculation Sheet (01-19)

Sargent & Lundy

CALCULATION SHEET

Project No. S551413.024	**Calculation No.** S54413.024-P-001	**Rev.** 0	**Page No.** 8 of 34
Title: LERF Basin 41 Radiological Dose Rate and Exposure			
Prepared By: MJ Feldmann	**Date:** 5/12/2020	**Checked By:** BD Groth	**Date:** 5/12/2020

Table 6-2. Total Dose Exposure for Basin Liner.

Location	Distance from Location	Dose Rate [Rad/hr]	Total Exposure at 30 Years [Rad]
Basin Side Wall	At 1 cm from side	1.39E-03	365
	At 30 cm from side	1.59E-03	417
	At 100 cm from side	1.43E-03	375
Basin Cover and Liner Floor	At 1 cm from cover	7.19E-03	1,889
	At 30 cm from cover	2.84E-02	7,457
	At 100 cm from cover	2.59E-02	6,819

6.2 Dose Evaluation for FRP Pipe

6.2.1 FRP Pipe Dimensions

The dimensions for the FRP evaluated use a nominal 4-in inner diameter, a wall thickness of 0.48-in, and a length of 30 feet. Experience with analyzing line sources shows that dose rates go up very little for line lengths longer than 10 feet, using a 30 feet length of pipe is bounding.

6.2.2 Dose Rate for FRP

The dose rate for the wastewater contained in the FRP is determined using the LERF Safety Basis Limits in Appendix A. The 200 Area Effluent Treatment Facility Auditable Safety Analysis Report (HNF-SD-ETF-ASA-001) requires that the ETF radiological inventory never exceed the Hazard Category 3 sum-of-fractions threshold of 1.0 (DOE-STD-1027-92). Thus, the LERF Safety Basis Limits in Appendix A are used in the MicroShield model using the dimensions for a rectangular volume determined Section 6.1. The MicroShield output files are included in appendix B.

The dose rate was evaluated in MicroShield at 1 cm, 30 cm and 100 cm. The results are shown in Table 6-3. The dose rate is presented in mR/hr and Rad/hr.

Table 6-3. Dose Rates Determined in MicroShield for FRP.

Location	Dose Rate [mR/hr]	Dose Rate [Rad/hr]
At 1 cm	9.86E+00	8.58E-03
At 30 cm	1.32E+00	1.14E-03
At 100 cm	4.82E-01	4.19E-04

Quality Assurance Procedure 3.1 Calculation Sheet (01-19)

CALCULATION SHEET

Project No. S551413.024	**Calculation No.** S54413.024-P-001	**Rev.** 0	**Page No.** 9 of 34
Title: LERF Basin 41 Radiological Dose Rate and Exposure			
Prepared By: MJ Feldmann	**Date:** 5/12/2020	**Checked By:** BD Groth	**Date:** 5/12/2020

6.2.3 Estimated Exposure for FRP

The expected total radiological exposure is calculated using the dose rate determined in Section 6.2.2. The total radiological exposure for a 30 year period is presented in Table 6-4.

$$Total\ Dose\ Exposure = 8.58E-03\frac{Rad}{hr}\ x\ 24\frac{hr}{day}\ x\ 365\ \frac{days}{year}\ x\ 30\ years = 2{,}254\ Rad$$

Table 6-4. Total Dose Exposure for FRP.

Location	Dose Rate [Rad/hr]	Total Exposure at 30 Years [Rad]
At 1 cm	8.58E-03	**2,254**
At 30 cm	1.14E-03	301
At 100 cm	4.19E-04	110

6.2.4 Estimated Exposure for FRP in Catch Basin

The expected total radiological exposure for the catch basin is calculated using the dose rate and total dose determined in Section 6.2.3. There are four pipes in the catch basin. The total dose is conservatively multiplied by four to estimate the total exposure to the catch basin. The total radiological exposure for a 30 year period is presented in Table 6-5.

Table 6-5. Total Dose Exposure for Catch Basin.

Location	Dose Rate [Rad/hr]	Total Exposure at 30 Years [Rad]
At 1 cm	3.43-02	**9,016**
At 30 cm	4.56E-03	1,204
At 100 cm	1.68E-03	440

7.0 RESULTS AND CONCLUSIONS

Radiation resistance is evaluated at various exposure thresholds for the LERF within the operational environment. Radiological thresholds evaluated for non-metallic components typically include 5 Mrad, 10 Mrad, 40 Mrad, and 100 Mrad. The total expected dose determined for 30 years for LERF Basin 41 liner, cover and associated FRP are all less than 10,000 Rad (0.01 Mrad).

Quality Assurance Procedure 3.1 Calculation Sheet (01-19)

Sargent & Lundy	CALCULATION SHEET		
Project No. S551413.024	**Calculation No.** S54413.024-P-001	**Rev.** 0	**Page No.** 10 of 34
Title: LERF Basin 41 Radiological Dose Rate and Exposure			
Prepared By: MJ Feldmann	**Date:** 5/12/2020	**Checked By:** BD Groth	**Date:** 5/12/2020

8.0 REFERENCES

67246-024-RFI-002, *Request for Information: Basin 41 Pump Design Criteria, U.S.* Rev. 0, Department of Energy, Richland, Washington

DOE-STD-1027-92, *Hazard Categorization and Accident Analysis Techniques for Compliance with DOE Order 5480.23*, Nuclear Safety Analysis Reports, U.S. Department of Energy, Washington, D.C.

H-2-838749 SH 1, *LERF Basin 41 Civil Bottom Liner,* U.S. Department of Energy, Richland, Washington.

H-2-838765, SH 1-11, *LERF Basin 41 Mechanical General Arrangement*, U.S. Department of Energy, Richland, Washington.

HNF-3172, *Liquid Waste Processing Facilities Waste Acceptance Criteria*, Rev. 9, Washington River Protection Solutions, LLC, Richland, Washington.

HNF-SD-ETF-ASA-001, 200 Area Effluent Treatment Facility Auditable Safety Analysis Report, Fluor Hanford Inc., Richland, Washington.

HNF-SD-LEF-ASA-002, 242AL Liquid Effluent Retention Facility Auditable Safety Analysis, Fluor Hanford Inc., Richland, Washington

MT-50497, *2019, Liquid Effluent Retention Facility (LERF) Basin 41 Modification Traveler*, Rev. 0,

RPP-RPT-62215, LERF Basin 41 Material Compatibility with Liquid Effluent.

VV-19-06-006, MicroShield Software Validation and Verification Report, Sargent & Lundy, Richland, Washington.

Quality Assurance Procedure 3.1 Calculation Sheet (01-19)

Sargent & Lundy	CALCULATION SHEET		
Project No. S551413.024	**Calculation No.** S54413.024-P-001	**Rev.** 0	**Page No.** 11 of 34
Title: LERF Basin 41 Radiological Dose Rate and Exposure			
Prepared By: MJ Feldmann	**Date:** 5/12/2020	**Checked By:** BD Groth	**Date:** 5/12/2020

APPENDIX A

LERF SAFETY BASIS LIMITS

Quality Assurance Procedure 3.1 Calculation Sheet (01-19)

Sargent & Lundy

CALCULATION SHEET

Project No. S551413.024	**Calculation No.** S54413.024-P-001	**Rev.** 0	**Page No.** 12 of 34
Title: LERF Basin 41 Radiological Dose Rate and Exposure			
Prepared By: MJ Feldmann	**Date:** 5/12/2020	**Checked By:** BD Groth	**Date:** 5/12/2020

Table A-1. LERF Safety Basis Limits from HNF-3172, *Table D-1. Target Para LERF Maximum Bounding Radiological Source Term*,

Table D-1. Target Para LERF Maximum Bounding Radiological Source Term.

Radionuclide	Maximum Bounding Concentration (Ci/L)[1,2]
Tritium	2.4 E-04
Carbon-14	1.6 E-06
Cobalt-60	2.4 E-06
Selenium-79	1.5 E-07
Strontium-90	4.2 E-05
Niobium-94	2.6 E-07
Technetium-99	1.8 E-05
Ruthenium-106	6.5 E-07
Iodine-129	1.8 E-06
Cesium-134	4.1 E-07
Cesium-137	1.0E-05
Cerium-144	2.0E-05
Europium-154	9.8 E-06
Europium-155	6.3 E-05
Radium-226	6.4 E-08
Uranium (gross)[3]	2.1 E-10
Neptunium-237	2.1 E-09
Plutonium-238	2.8 E-09
Plutonium-239/240	1.8E-08
Plutonium-241	2.6 E-08
Americium-241	1.4 E-09
Curium-244	2.5 E-08

[1] HNF SD WM-SAD-040, *Liquid Effluent Retention Facility Final Hazard Category Determination*, Fluor Hanford Inc., Richland, Washington.

[2] Individual radionuclide concentrations in the incoming wastewater may exceed the defined maximum bounding concentration provided the dose consequence associated with the wastewater is less than or equal to the dose consequence limits defined by the LERF Hazard Category Determination.

[3] As Uranium-234

Quality Assurance Procedure 3.1 Calculation Sheet (01-19)

Sargent & Lundy

CALCULATION SHEET

Project No. S551413.024	**Calculation No.** S54413.024-P-001	**Rev.** 0	**Page No.** 13 of 34
Title: LERF Basin 41 Radiological Dose Rate and Exposure			
Prepared By: MJ Feldmann	**Date:** 5/12/2020	**Checked By:** BD Groth	**Date:** 5/12/2020

Table A-2. LERF Liner Compatibility Limits from HNF-3172, *Table E-1. Liquid Waste Processing Facility Waste Acceptance Criteria*,

Chemical family	Constituent(s) or parameter(s)	Limit[1] (mg/L)
Alcohol/glycol	1-butanol	500,000
Alkanone[2]	acetone	200,000
Alkenone[3]	none targeted	NA
Aromatic/cyclic hydrocarbon	acetophenone, benzene, carbozole, chrysene, cresol, di-n-octyl phthalate, diphenylamine, isophorone, pyridine, tetrahydrofuran	2,000
Halogenated hydrocarbon	Aroclors, carbon tetrachloride, chloroform, hexachlorobenzene, lindane (gamma-BHC), hexachlorocyclopentadiene, methylene chloride, p-chloroaniline, tetrachloroethylene, 2,4,6-trichlorophenol	2,000
Aliphatic hydrocarbon	none targeted	NA
Ether	dichloroisopropyl ether	2,000
Other hydrocarbons	acetontrile, carbon disulfide, n-nitrosodimethylamine, tributyl phosphate	2,000
Oxidizers	none targeted	NA
Acids, bases, salts	ammonia, cyanide, anions, cations	100,000
pH	PH	0.5 < pH < 13.0

[1] Analytical data for a chemical family (as indicated) are summed using the following sum-of-fractions technique. The individual constituent concentrations, sum concentrations (for families), and pH values for a wastewater are then evaluated against the compatibility limit.

$$\sum_{n=1}^{i}\left(\frac{conc_n}{Limit_n}\right) \le 1$$

where 'i' is the number of constituents in the chemical family that were detected.

[2] Ketone containing saturated alkyl group(s).

[3] Ketone containing unsaturated alkyl group(s).

mg/L = milligrams per liter
NA = not applicable

Quality Assurance Procedure 3.1 Calculation Sheet (01-19)

Sargent & Lundy	CALCULATION SHEET		
Project No. S551413.024	**Calculation No.** S54413.024-P-001	**Rev.** 0	**Page No.** 14 of 34
Title: LERF Basin 41 Radiological Dose Rate and Exposure			
Prepared By: MJ Feldmann	**Date:** 5/12/2020	**Checked By:** BD Groth	**Date:** 5/12/2020

APPENDIX B

MICROSHIELD OUTPUT FILES

Quality Assurance Procedure 3.1 Calculation Sheet (01-19)

Sargent & Lundy

CALCULATION SHEET

Project No. S551413.024	Calculation No. S54413.024-P-001	Rev. 0	Page No. 15 of 34
Title: LERF Basin 41 Radiological Dose Rate and Exposure			
Prepared By: MJ Feldmann	Date: 5/12/2020	Checked By: BD Groth	Date: 5/12/2020

B1.0 LERF Basin Liner

Case Summary of LERF Basin 41 — Page 1 of 4

MicroShield 12.03
Sargent & Lundy

Date	Preparer	Reviewer

File Name	Run Date	Run Time	Duration
C:\Users\mfeldmann\Desktop\LERF Dose\lerf basin.msd	May 4, 2020	6:36:15 AM	00:00:04

Project Info	
Case Title	LERF Basin 41
Description	Basin, 1 cm, 30 cm and 100 cm
Geometry	13 - Rectangular Volume

Source Dimensions	
Length	6.130e+03 cm (201 ft 1.320 in)
Width	7.951e+03 cm (260 ft 10.320 in)
Height	605.638 cm (19 ft 10.440 in)

Dose Points			
No.	X	Y	Z
#1	6.131e+03 cm (201 ft 1.780 in)	304.608 cm (9 ft 11.924 in)	3.976e+03 cm (130 ft 5.160 in)
#2	6.161e+03 cm (202 ft 1.591 in)	304.6 cm (9 ft 11.921 in)	3.976e+03 cm (130 ft 5.354 in)
#3	6.231e+03 cm (204 ft 5.150 in)	304.6 cm (9 ft 11.921 in)	3.976e+03 cm (130 ft 5.354 in)

Shields			
Shield N	Dimension	Material	Density (g/cm³)
Source	1.04e+06 ft³	Water	1
Air Gap		Air	0.00122

Source Input: Grouping Method - Standard Indices
Number of Groups: 25
Lower Energy Cutoff: 0.015
Photons< 0.015: Incluced
Library: Grove

Nuclide	Ci	Bq	µCi/cm³	Bq/cm³
Am-241	4.1325e-002	1.5290e+009	1.4000e-006	5.1800e-002
Ba-137m	2.7924e+002	1.0332e+013	9.4600e-003	3.5002e+002
C-14	4.7228e+001	1.7475e+012	1.6000e-003	5.9200e+001
Ce-144	5.9036e+002	2.1843e+013	2.0000e-002	7.4000e+002
Cm-244	7.3794e-001	2.7304e+010	2.5000e-005	9.2500e-001
Co-60	7.0843e+001	2.6212e+012	2.4000e-003	8.8800e+001

file:///C:/Users/mfeldmann/Grove%20Engineering/MicroShield%2012/html/lerf%20basin-5_4_2020-6_36_19%20AM.html — 5/4/2020

Quality Assurance Procedure 3.1 — Calculation Sheet (01-19)

Sargent & Lundy Engineering Services, Inc.

CALCULATION SHEET

Project No. S551413.024	**Calculation No.** S54413.024-P-001	**Rev.** 0	**Page No.** 16 of 34
Title: LERF Basin 41 Radiological Dose Rate and Exposure			
Prepared By: MJ Feldmann	**Date:** 5/12/2020	**Checked By:** BD Groth	**Date:** 5/12/2020

Case Summary of LERF Basin 41 Page 2 of 4

Cs-134	1.2102e+001	4.4778e+011	4.1000e-004	1.5170e+001
Cs-137	2.9518e+002	1.0922e+013	1.0000e-002	3.7000e+002
Eu-154	2.8927e+002	1.0703e+013	9.8000e-003	3.6260e+002
Eu-155	1.8596e+003	6.8806e+013	6.3000e-002	2.3310e+003
H-3	7.0843e+003	2.6212e+014	2.4000e-001	8.8800e+003
I-129	5.3132e+001	1.9659e+012	1.8000e-003	6.6600e+001
Nb-94	7.6746e+000	2.8396e+011	2.6000e-004	9.6200e+000
Np-237	6.1987e-002	2.2935e+009	2.1000e-006	7.7700e-002
Pr-144	5.8191e+002	2.1531e+013	1.9714e-002	7.2942e+002
Pu-238	8.2650e-002	3.0580e+009	2.8000e-006	1.0360e-001
Pu-239	5.3132e-001	1.9659e+010	1.8000e-005	6.6600e-001
Pu-241	7.6746e-001	2.8396e+010	2.6000e-005	9.6200e-001
Ra-226	1.8891e+000	6.9898e+010	6.4000e-005	2.3680e+000
Rh-106	1.9187e+001	7.0990e+011	6.5000e-004	2.4050e+001
Ru-106	1.9187e+001	7.0990e+011	6.5000e-004	2.4050e+001
Se-79	4.4277e+000	1.6382e+011	1.5000e-004	5.5500e+000
Sr-90	1.2397e+003	4.5871e+013	4.2000e-002	1.5540e+003
Tc-99	5.3132e+002	1.9659e+013	1.8000e-002	6.6600e+002
U-234	6.1987e-003	2.2935e+008	2.1000e-007	7.7700e-003
Y-90	1.2397e+003	4.5871e+013	4.2000e-002	1.5540e+003

Buildup

Buildup: The material reference is Source.

Integration Parameters

X Direction	10
Y Direction	20
Z Direction	20

Results With Buildup: Dose Point No. 1 - (X = 2.01e+02, Y = 9.9937, Z = 130.43) ft

Energy (MeV)	Activity (Photons/sec)	Energy Flux (MeV/cm²/sec)	Photon Flux (Photons/cm²/sec)	Exposure Rate (mR/hr)	Absorbed Dose Rate (mrad/hr)	Absorbed Dose Rate (mGy/hr)
1.500e-02	6.949e+12	3.447e-23	2.298e-21	2.956e-24	2.581e-24	2.581e-26
2.000e-02	5.651e+07	8.491e-28	4.245e-26	2.941e-29	2.568e-29	2.568e-31
3.000e-02	2.271e+12	7.371e-12	2.457e-10	7.305e-14	6.377e-14	6.377e-16
4.000e-02	1.690e+13	2.931e-06	7.327e-05	1.296e-08	1.132e-08	1.132e-10
5.000e-02	4.610e+12	9.196e-05	1.839e-03	2.450e-07	2.139e-07	2.139e-09

file:///C:/Users/mfeldmann/Greye%20Engineering/MicroShield%2012/html/lerf%20basin-5_4_2020-4_36_19%20AM.html 5/4/2020

Quality Assurance Procedure 3.1 Calculation Sheet (01-19)

Sargent & Lundy Engineering Services, Inc.

CALCULATION SHEET

Project No. S551413.024	**Calculation No.** S54413.024-P-001	**Rev.** 0	**Page No.** 17 of 34
Title: LERF Basin 41 Radiological Dose Rate and Exposure			
Prepared By: MJ Feldmann	**Date:** 5/12/2020	**Checked By:** BD Groth	**Date:** 5/12/2020

Case Summary of LERF Basin 41 Page 3 of 4

6.000e-02	9.219e+11	2.363e-04	3.939e-03	4.694e-07	4.098e-07	4.098e-09
8.000e-02	2.172e+13	7.648e-02	9.561e-01	1.210e-04	1.057e-04	1.057e-06
1.000e-01	1.855e+13	2.583e-01	2.583e+00	3.952e-04	3.450e-04	3.450e-06
1.500e-01	2.359e+12	1.926e-01	1.284e+00	3.171e-04	2.769e-04	2.769e-06
2.000e-01	7.332e+11	1.614e-01	8.070e-01	2.849e-04	2.487e-04	2.487e-06
3.000e-01	1.632e+08	1.272e-04	4.239e-04	2.412e-07	2.106e-07	2.106e-09
4.000e-01	7.636e+10	1.411e-01	3.527e-01	2.749e-04	2.400e-04	2.400e-06
5.000e-01	1.760e+11	6.315e-01	1.263e+00	1.240e-03	1.082e-03	1.082e-05
6.000e-01	1.110e+13	6.811e+01	1.135e+02	1.329e-01	1.161e-01	1.161e-03
8.000e-01	5.166e+12	7.348e+01	9.186e+01	1.398e-01	1.220e-01	1.220e-03
1.000e+00	5.946e+12	1.608e+02	1.608e+02	2.963e-01	2.587e-01	2.587e-03
1.500e+00	6.881e+12	5.817e+02	3.878e+02	9.788e-01	8.545e-01	8.545e-03
2.000e+00	1.667e+11	3.053e+01	1.526e+01	4.720e-02	4.121e-02	4.121e-04
Total	**1.045e+14**	**9.161e+02**	**7.765e+02**	**1.598e+00**	**1.395e+00**	**1.395e-02**

Results With Buildup: Dose Point No. 2 - (X = 2.02e+02, Y = 9.99e+00, Z = 1.30e+02) ft

Energy (MeV)	Activity (Photons/sec)	Energy Flux (MeV/cm²/sec)	Photon Flux (Photons/cm²/sec)	Exposure Rate (mR/hr)	Absorbed Dose Rate (mrad/hr)	Absorbed Dose Rate (mGy/hr)
1.500e-02	6.949e+12	3.160e-23	2.106e-21	2.710e-24	2.366e-24	2.366e-26
2.000e-02	5.651e+07	7.784e-28	3.892e-26	2.696e-29	2.354e-29	2.354e-31
3.000e-02	2.271e+12	5.430e-11	1.810e-09	5.381e-13	4.698e-13	4.698e-15
4.000e-02	1.690e+13	1.123e-05	2.808e-04	4.968e-08	4.337e-08	4.337e-10
5.000e-02	4.610e+12	2.691e-04	5.382e-03	7.168e-07	6.258e-07	6.258e-09
6.000e-02	9.219e+11	6.006e-04	1.001e-02	1.193e-06	1.041e-06	1.041e-08
8.000e-02	2.172e+13	1.680e-01	2.100e+00	2.659e-04	2.321e-04	2.321e-06
1.000e-01	1.855e+13	5.211e-01	5.211e+00	7.972e-04	6.960e-04	6.960e-06
1.500e-01	2.359e+12	3.450e-01	2.300e+00	5.682e-04	4.960e-04	4.960e-06
2.000e-01	7.332e+11	2.685e-01	1.342e+00	4.738e-04	4.136e-04	4.136e-06
3.000e-01	1.632e+08	1.923e-04	6.411e-04	3.648e-07	3.185e-07	3.185e-09
4.000e-01	7.636e+10	2.002e-01	5.005e-01	3.901e-04	3.405e-04	3.405e-06
5.000e-01	1.760e+11	8.535e-01	1.707e+00	1.675e-03	1.463e-03	1.463e-05
6.000e-01	1.110e+13	8.867e+01	1.478e+02	1.731e-01	1.511e-01	1.511e-03
8.000e-01	5.166e+12	9.039e+01	1.130e+02	1.719e-01	1.501e-01	1.501e-03
1.000e+00	5.946e+12	1.893e+02	1.893e+02	3.490e-01	3.047e-01	3.047e-03
1.500e+00	6.881e+12	6.397e+02	4.265e+02	1.076e+00	9.396e-01	9.396e-03
2.000e+00	1.667e+11	3.218e+01	1.609e+01	4.976e-02	4.344e-02	4.344e-04
Total	**1.045e+14**	**1.043e+03**	**1.682e+03**	**1.824e+00**	**1.593e+00**	**1.593e-02**

file:///C:/Users/mfeldmann/Greye%20Engineering/MicroShield%2012/html/lerf%20basin-5_4_2020-4_36_19%20AM.html 5/4/2020

Quality Assurance Procedure 3.1 Calculation Sheet (01-19)

Sargent & Lundy Engineering Services, Inc.

CALCULATION SHEET

Project No. S551413.024	**Calculation No.** S54413.024-P-001	**Rev.** 0	**Page No.** 18 of 34
Title: LERF Basin 41 Radiological Dose Rate and Exposure			
Prepared By: MJ Feldmann	**Date:** 5/12/2020	**Checked By:** BD Groth	**Date:** 5/12/2020

Case Summary of LERF Basin 41 Page 4 of 4

Results With Buildup: Dose Point No. 3 - (X = 2.04e+02, Y = 9.99e+00, Z = 1.30e+02) ft

Energy (MeV)	Activity (Photons/sec)	Energy Flux (MeV/cm²/sec)	Photon Flux (Photons/cm²/sec)	Exposure Rate (mR/hr)	Absorbed Dose Rate (mrad/hr)	Absorbed Dose Rate (mGy/hr)
1.500e-02	6.949e+12	2.701e-23	1.801e-21	2.317e-24	2.023e-24	2.023e-26
2.000e-02	5.651e+07	6.655e-28	3.327e-26	2.305e-29	2.012e-29	2.012e-31
3.000e-02	2.271e+12	1.909e-10	6.364e-09	1.892e-12	1.652e-12	1.652e-14
4.000e-02	1.690e+13	2.408e-05	6.019e-04	1.065e-07	9.296e-08	9.296e-10
5.000e-02	4.610e+12	4.698e-04	9.396e-03	1.251e-06	1.093e-06	1.093e-08
6.000e-02	9.219e+11	9.428e-04	1.571e-02	1.873e-06	1.635e-06	1.635e-08
8.000e-02	2.172e+13	2.361e-01	2.951e+00	3.736e-04	3.262e-04	3.262e-06
1.000e-01	1.855e+13	6.867e-01	6.867e+00	1.051e-03	9.171e-04	9.171e-06
1.500e-01	2.359e+12	4.157e-01	2.771e+00	6.846e-04	5.976e-04	5.976e-06
2.000e-01	7.332e+11	3.061e-01	1.531e+00	5.403e-04	4.717e-04	4.717e-06
3.000e-01	1.632e+08	2.046e-04	6.821e-04	3.882e-07	3.389e-07	3.389e-09
4.000e-01	7.636e+10	2.037e-01	5.093e-01	3.969e-04	3.465e-04	3.465e-06
5.000e-01	1.760e+11	8.402e-01	1.680e+00	1.649e-03	1.440e-03	1.440e-05
6.000e-01	1.110e+13	8.510e+01	1.418e+02	1.661e-01	1.450e-01	1.450e-03
8.000e-01	5.166e+12	8.389e+01	1.049e+02	1.596e-01	1.393e-01	1.393e-03
1.000e+00	5.946e+12	1.716e+02	1.716e+02	3.164e-01	2.762e-01	2.762e-03
1.500e+00	6.881e+12	5.642e+02	3.761e+02	9.493e-01	8.287e-01	8.287e-03
2.000e+00	1.667e+11	2.812e+01	1.406e+01	4.348e-02	3.796e-02	3.796e-04
Total	**1.045e+14**	**9.356e+02**	**2.507e+03**	**1.639e+00**	**1.431e+00**	**1.431e-02**

file:///C:/Users/mfeldmann/Greye%20Engineering/MicroShield%2012/html/lerf%20basin-5_4_2020-4_36_19%20AM.html 5/4/2020

Quality Assurance Procedure 3.1 Calculation Sheet (01-19)

Sargent & Lundy

CALCULATION SHEET

Project No. S551413.024	**Calculation No.** S54413.024-P-001	**Rev.** 0	**Page No.** 19 of 34
Title: LERF Basin 41 Radiological Dose Rate and Exposure			
Prepared By: MJ Feldmann	**Date:** 5/12/2020	**Checked By:** BD Groth	**Date:** 5/12/2020

B2.0 LERF Basin Cover

Case Summary of LERF Basin 41 Page 1 of 4

MicroShield 12.03
Sargent & Lundy

Date	Preparer	Reviewer

File Name	Run Date	Run Time	Duration
C:\Users\mfeldmann\Desktop\LERF Dose\cover.msd	May 4, 2020	1:02:54 PM	00:00:04

Project Info	
Case Title	LERF Basin 41
Description	Basin Cover, 1 cm, 30 cm and 100 cm
Geometry	13 - Rectangular Volume

Source Dimensions	
Length	605.638 cm (19 ft 10.440 in)
Width	7.951e+03 cm (260 ft 10.320 in)
Height	6.130e+03 cm (201 ft 1.200 in)

Dose Points			
No.	X	Y	Z
#1	607.0 cm (19 ft 10.976 in)	3.066e+03 cm (100 ft 7.200 in)	3.976e+03 cm (130 ft 5.160 in)
#2	636.0 cm (20 ft 10.394 in)	3.066e+03 cm (100 ft 7.200 in)	3.975e+03 cm (130 ft 4.800 in)
#3	706.0 cm (23 ft 1.953 in)	3.066e+03 cm (100 ft 7.200 in)	3.975e+03 cm (130 ft 4.800 in)

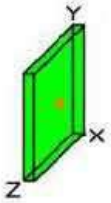

Shields			
Shield N	Dimension	Material	Density (g/cm³)
Source	2.95e+10 cm³	Water	1
Air Gap		Air	0.00122

Source Input: Grouping Method - Standard Indices
Number of Groups: 25
Lower Energy Cutoff: 0.015
Photons< 0.015: Incluced
Library: Grove

Nuclide	Ci	Bq	µCi/cm³	Bq/cm³
Am-241	4.1323e-002	1.5289e+009	1.4000e-006	5.1800e-002
Ba-137m	2.7922e+002	1.0331e+013	9.4600e-003	3.5002e+002
C-14	4.7226e+001	1.7474e+012	1.6000e-003	5.9200e+001
Ce-144	5.9033e+002	2.1842e+013	2.0000e-002	7.4000e+002
Cm-244	7.3791e-001	2.7303e+010	2.5000e-005	9.2500e-001
Co-60	7.0839e+001	2.6210e+012	2.4000e-003	8.8800e+001

file:///C:/Users/mfeldmann/Grove%20Engineering/MicroShield%2012/html/cover-5_4_2020-1_02_59%20PM.html 5/4/2020

Quality Assurance Procedure 3.1 Calculation Sheet (01-19)

Sargent & Lundy

CALCULATION SHEET

Project No. S551413.024	**Calculation No.** S54413.024-P-001	**Rev.** 0	**Page No.** 20 of 34
Title: LERF Basin 41 Radiological Dose Rate and Exposure			
Prepared By: MJ Feldmann	**Date:** 5/12/2020	**Checked By:** BD Groth	**Date:** 5/12/2020

Case Summary of LERF Basin 41 Page 2 of 4

Cs-134	1.2102e+001	4.4776e+011	4.1000e-004	1.5170e+001
Cs-137	2.9516e+002	1.0921e+013	1.0000e-002	3.7000e+002
Eu-154	2.8926e+002	1.0703e+013	9.8000e-003	3.6260e+002
Eu-155	1.8595e+003	6.8803e+013	6.3000e-002	2.3310e+003
H-3	7.0839e+003	2.6210e+014	2.4000e-001	8.8800e+003
I-129	5.3129e+001	1.9658e+012	1.8000e-003	6.6600e+001
Nb-94	7.6742e+000	2.8395e+011	2.6000e-004	9.6200e+000
Np-237	6.1984e-002	2.2934e+009	2.1000e-006	7.7700e-002
Pr-144	5.8188e+002	2.1530e+013	1.9714e-002	7.2942e+002
Pu-238	8.2646e-002	3.0579e+009	2.8000e-006	1.0360e-001
Pu-239	5.3129e-001	1.9658e+010	1.8000e-005	6.6600e-001
Pu-241	7.6742e-001	2.8395e+010	2.6000e-005	9.6200e-001
Ra-226	1.8890e+000	6.9895e+010	6.4000e-005	2.3680e+000
Rh-106	1.9186e+001	7.0987e+011	6.5000e-004	2.4050e+001
Ru-106	1.9186e+001	7.0987e+011	6.5000e-004	2.4050e+001
Se-79	4.4274e+000	1.6382e+011	1.5000e-004	5.5500e+000
Sr-90	1.2397e+003	4.5868e+013	4.2000e-002	1.5540e+003
Tc-99	5.3129e+002	1.9658e+013	1.8000e-002	6.6600e+002
U-234	6.1984e-003	2.2934e+008	2.1000e-007	7.7700e-003
Y-90	1.2397e+003	4.5868e+013	4.2000e-002	1.5540e+003

Buildup

Buildup: The material reference is Source.

Integration Parameters

X Direction	10
Y Direction	20
Z Direction	20

Results With Buildup: Dose Point No. 1 - (X = 607, Y = 3066.288, Z = 3.98e+03) cm

Energy (MeV)	Activity (Photons/sec)	Energy Flux (MeV/cm²/sec)	Photon Flux (Photons/cm²/sec)	Exposure Rate (mR/hr)	Absorbed Dose Rate (mrad/hr)	Absorbed Dose Rate (mGy/hr)
1.500e-02	6.948e+12	5.158e-23	3.439e-21	4.424e-24	3.862e-24	3.862e-26
2.000e-02	5.650e+07	1.366e-21	6.830e-20	4.732e-23	4.131e-23	4.131e-25
3.000e-02	2.271e+12	2.645e-06	8.816e-05	2.621e-08	2.288e-08	2.288e-10
4.000e-02	1.690e+13	1.876e-02	4.689e-01	8.296e-05	7.242e-05	7.242e-07
5.000e-02	4.610e+12	1.113e-01	2.225e+00	2.964e-04	2.587e-04	2.587e-06

file:///C:/Users/mfeldmann/Greve%20Engineering/MicroShield%2012/html/cover-5-4-2020-1-02-36%20PM.html 5/4/2020

Quality Assurance Procedure 3.1 Calculation Sheet (01-19)

Sargent & Lundy Engineering Services, Inc.

CALCULATION SHEET

Project No. S551413.024	Calculation No. S54413.024-P-001	Rev. 0	Page No. 21 of 34
Title: LERF Basin 41 Radiological Dose Rate and Exposure			
Prepared By: MJ Feldmann	Date: 5/12/2020	Checked By: BD Groth	Date: 5/12/2020

Case Summary of LERF Basin 41 Page 3 of 4

6.000e-02	9.218e+11	1.197e-01	1.996e+00	2.379e-04	2.076e-04	2.076e-06
8.000e-02	2.171e+13	1.562e+01	1.952e+02	2.472e-02	2.158e-02	2.158e-04
1.000e-01	1.855e+13	3.145e+01	3.145e+02	4.811e-02	4.200e-02	4.200e-04
1.500e-01	2.359e+12	1.141e+01	7.609e+01	1.879e-02	1.641e-02	1.641e-04
2.000e-01	7.332e+11	6.261e+00	3.131e+01	1.105e-02	9.647e-03	9.647e-05
3.000e-01	1.632e+08	2.882e-03	9.606e-03	5.467e-06	4.772e-06	4.772e-08
4.000e-01	7.636e+10	2.253e+00	5.633e+00	4.390e-03	3.833e-03	3.833e-05
5.000e-01	1.759e+11	7.751e+00	1.550e+01	1.521e-02	1.328e-02	1.328e-04
6.000e-01	1.110e+13	6.783e+02	1.131e+03	1.324e+00	1.156e+00	1.156e-02
8.000e-01	5.166e+12	5.374e+02	6.717e+02	1.022e+00	8.923e-01	8.923e-03
1.000e+00	5.946e+12	9.361e+02	9.361e+02	1.726e+00	1.506e+00	1.506e-02
1.500e+00	6.881e+12	2.332e+03	1.554e+03	3.923e+00	3.425e+00	3.425e-02
2.000e+00	1.666e+11	9.701e+01	4.850e+01	1.500e-01	1.310e-01	1.310e-03
Total	**1.045e+14**	**4.656e+03**	**4.984e+03**	**8.268e+00**	**7.218e+00**	**7.218e-02**

Results With Buildup: Dose Point No. 2 - (X = 636, Y = 3066.288, Z = 3974.592) cm

Energy (MeV)	Activity (Photons/sec)	Energy Flux (MeV/cm²/sec)	Photon Flux (Photons/cm²/sec)	Exposure Rate (mR/hr)	Absorbed Dose Rate (mrad/hr)	Absorbed Dose Rate (mGy/hr)
1.500e-02	6.948e+12	1.576e-09	1.051e-07	1.352e-10	1.180e-10	1.180e-12
2.000e-02	5.650e+07	1.219e-08	6.096e-07	4.223e-10	3.687e-10	3.687e-12
3.000e-02	2.271e+12	9.493e-01	3.164e+01	9.408e-03	8.213e-03	8.213e-05
4.000e-02	1.690e+13	8.184e+01	2.046e+03	3.620e-01	3.160e-01	3.160e-03
5.000e-02	4.610e+12	7.246e+01	1.449e+03	1.930e-01	1.685e-01	1.685e-03
6.000e-02	9.218e+11	2.763e+01	4.605e+02	5.488e-02	4.791e-02	4.791e-04
8.000e-02	2.171e+13	1.205e+03	1.506e+04	1.907e+00	1.664e+00	1.664e-02
1.000e-01	1.855e+13	1.341e+03	1.341e+04	2.051e+00	1.791e+00	1.791e-02
1.500e-01	2.359e+12	2.313e+02	1.542e+03	3.808e-01	3.325e-01	3.325e-03
2.000e-01	7.332e+11	9.092e+01	4.546e+02	1.605e-01	1.401e-01	1.401e-03
3.000e-01	1.632e+08	2.629e-02	8.762e-02	4.986e-05	4.353e-05	4.353e-07
4.000e-01	7.636e+10	1.580e+01	3.950e+01	3.078e-02	2.687e-02	2.687e-04
5.000e-01	1.759e+11	4.486e+01	8.972e+01	8.805e-02	7.687e-02	7.687e-04
6.000e-01	1.110e+13	3.404e+03	5.673e+03	6.644e+00	5.800e+00	5.800e-02
8.000e-01	5.166e+12	2.159e+03	2.698e+03	4.106e+00	3.584e+00	3.584e-02
1.000e+00	5.946e+12	3.227e+03	3.227e+03	5.949e+00	5.193e+00	5.193e-02
1.500e+00	6.881e+12	6.158e+03	4.105e+03	1.036e+01	9.045e+00	9.045e-02
2.000e+00	1.666e+11	2.175e+02	1.088e+02	3.364e-01	2.937e-01	2.937e-03
Total	**1.045e+14**	**1.828e+04**	**5.538e+04**	**3.263e+01**	**2.849e+01**	**2.849e-01**

file:///C:/Users/mfeldmann/Greye%20Engineering/MicroShield%2012/html/cover-5-4-2020-1-02-36%20PM.html 5/4/2020

Quality Assurance Procedure 3.1 Calculation Sheet (01-19)

Sargent & Lundy

CALCULATION SHEET

Project No. S551413.024	**Calculation No.** S54413.024-P-001	**Rev.** 0	**Page No.** 22 of 34
Title: LERF Basin 41 Radiological Dose Rate and Exposure			
Prepared By: MJ Feldmann	**Date:** 5/12/2020	**Checked By:** BD Groth	**Date:** 5/12/2020

Case Summary of LERF Basin 41 Page 4 of 4

Results With Buildup: Dose Point No. 3 - (X = 706, Y = 3066.288, Z = 3974.592) cm

Energy (MeV)	Activity (Photons/sec)	Energy Flux (MeV/cm²/sec)	Photon Flux (Photons/cm²/sec)	Exposure Rate (mR/hr)	Absorbed Dose Rate (mrad/hr)	Absorbed Dose Rate (mGy/hr)
1.500e-02	6.948e+12	1.202e-05	8.015e-04	1.031e-06	9.002e-07	9.002e-09
2.000e-02	5.650e+07	4.397e-07	2.199e-05	1.523e-08	1.330e-08	1.330e-10
3.000e-02	2.271e+12	2.327e+00	7.756e+01	2.306e-02	2.013e-02	2.013e-04
4.000e-02	1.690e+13	1.048e+02	2.620e+03	4.635e-01	4.046e-01	4.046e-03
5.000e-02	4.610e+12	7.435e+01	1.487e+03	1.981e-01	1.729e-01	1.729e-03
6.000e-02	9.218e+11	2.599e+01	4.331e+02	5.162e-02	4.506e-02	4.506e-04
8.000e-02	2.171e+13	1.075e+03	1.343e+04	1.701e+00	1.485e+00	1.485e-02
1.000e-01	1.855e+13	1.189e+03	1.189e+04	1.819e+00	1.588e+00	1.588e-02
1.500e-01	2.359e+12	2.107e+02	1.404e+03	3.469e-01	3.029e-01	3.029e-03
2.000e-01	7.332e+11	8.151e+01	4.076e+02	1.439e-01	1.256e-01	1.256e-03
3.000e-01	1.632e+08	2.400e-02	7.999e-02	4.552e-05	3.974e-05	3.974e-07
4.000e-01	7.636e+10	1.445e+01	3.612e+01	2.815e-02	2.458e-02	2.458e-04
5.000e-01	1.759e+11	4.104e+01	8.208e+01	8.056e-02	7.033e-02	7.033e-04
6.000e-01	1.110e+13	3.114e+03	5.191e+03	6.079e+00	5.307e+00	5.307e-02
8.000e-01	5.166e+12	1.972e+03	2.465e+03	3.751e+00	3.274e+00	3.274e-02
1.000e+00	5.946e+12	2.941e+03	2.941e+03	5.422e+00	4.733e+00	4.733e-02
1.500e+00	6.881e+12	5.603e+03	3.735e+03	9.427e+00	8.230e+00	8.230e-02
2.000e+00	1.666e+11	1.978e+02	9.891e+01	3.059e-01	2.671e-01	2.671e-03
Total	**1.045e+14**	**1.665e+04**	**1.017e+05**	**2.984e+01**	**2.605e+01**	**2.605e-01**

file:///C:/Users/mfeldmann/Greye%20Engineering/MicroShield%2012/html/cover-5-4-2020-1-02-56%20PM.html 5/4/2020

Quality Assurance Procedure 3.1 Calculation Sheet (01-19)

Sargent & Lundy

CALCULATION SHEET

Project No. S551413.024	Calculation No. S54413.024-P-001	Rev. 0	Page No. 23 of 34
Title: LERF Basin 41 Radiological Dose Rate and Exposure			
Prepared By: MJ Feldmann	Date: 5/12/2020	Checked By: BD Groth	Date: 5/12/2020

B3.0 FRP Section

Case Summary of Basin 41 Page 1 of 4

MicroShield 12.03
Sargent & Lundy

Date	Preparer	Reviewer

File Name	Run Date	Run Time	Duration
Case2	May 4, 2020	12:00:10 PM	00:00:02

Project Info	
Case Title	Basin 41
Description	FRP Pipe - 30 ft section
Geometry	7 - Cylinder Volume - Side Shields

Source Dimensions	
Height	914.4 cm (30 ft)
Radius	10.16 cm (4.000 in)

Dose Points

No.	X	Y	Z
#1	12.4 cm (4.882 in)	457.2 cm (15 ft)	0.0 cm (0 in)
#2	41.4 cm (1 ft 4.299 in)	0.0 cm (0 in)	0.0 cm (0 in)
#3	111.4 cm (3 ft 7.858 in)	0.0 cm (0 in)	0.0 cm (0 in)

Shields

Shield N	Dimension	Material	Density (g/cm³)
Source	2.97e+05 cm³	Water	1
Transition		Air	0.00122
Air Gap		Air	0.00122
Wall Clad	1.219 cm	Carbon	1.85

Source Input: Grouping Method - Standard Indices
Number of Groups: 25
Lower Energy Cutoff: 0.015
Photons< 0.015: Inclueed
Library: Grove

Nuclide	Ci	Bq	µCi/cm³	Bq/cm³
Am-241	4.1515e-007	1.5360e+004	1.4000e-006	5.1800e-002
Ba-137m	2.8052e-003	1.0379e+008	9.4600e-003	3.5002e+002
C-14	4.7445e-004	1.7555e+007	1.6000e-003	5.9200e+001
Ce-144	5.9337e-003	2.1943e+008	2.0000e-002	7.4000e+002
Cm-244	7.4133e-006	2.7429e+005	2.5000e-005	9.2500e-001
Co-60	7.1158e-004	2.6332e+007	2.4000e-003	8.8800e+001
Cs-134	1.2158e-004	4.4984e+006	4.1000e-004	1.5170e+001

file:///C:/Users/mfeldmann/Grove%20Engineering/MicroShield%2012.3/temp/Case2-5-4-2020-12-00-13%20PM.html 5/4/2020

Quality Assurance Procedure 3.1 Calculation Sheet (01-19)

Sargent & Lundy Engineering Services, Inc.

CALCULATION SHEET

Project No. S551413.024	**Calculation No.** S54413.024-P-001	**Rev.** 0	**Page No.** 24 of 34
Title: LERF Basin 41 Radiological Dose Rate and Exposure			
Prepared By: MJ Feldmann	**Date:** 5/12/2020	**Checked By:** BD Groth	**Date:** 5/12/2020

Case Summary of Basin 41 Page 2 of 4

Cs-137	2.9653e-003	1.0972e+008	1.0000e-002	3.7000e+002
Eu-154	2.9060e-003	1.0752e+008	9.8000e-003	3.6260e+002
Eu-155	1.8682e-002	6.9122e+008	6.3000e-002	2.3310e+003
H-3	7.1168e-002	2.6332e+009	2.4000e-001	8.8800e+003
I-129	5.3376e-004	1.9749e+007	1.8000e-003	6.6600e+001
Nb-94	7.7099e-005	2.8527e+006	2.6000e-004	9.6200e+000
Np-237	6.2272e-007	2.3041e+004	2.1000e-006	7.7700e-002
Pr-144	5.8459e-003	2.1630e+008	1.9714e-002	7.2942e+002
Pu-238	8.3029e-007	3.0721e+004	2.8000e-006	1.0360e-001
Pu-239	5.3376e-006	1.9749e+005	1.8000e-005	6.6600e-001
Pu-241	7.7099e-006	2.8527e+005	2.6000e-005	9.6200e-001
Ra-226	1.8978e-005	7.0219e+005	6.4000e-005	2.3680e+000
Rh-106	1.9275e-004	7.1316e+006	6.5000e-004	2.4050e+001
Ru-106	1.9275e-004	7.1316e+006	6.5000e-004	2.4050e+001
Se-79	4.4480e-005	1.6458e+006	1.5000e-004	5.5500e+000
Sr-90	1.2454e-002	4.6081e+008	4.2000e-002	1.5540e+003
Tc-99	5.3376e-003	1.9749e+008	1.8000e-002	6.6600e+002
U-234	6.2272e-008	2.3041e+003	2.1000e-007	7.7700e-003
Y-90	1.2454e-002	4.6081e+008	4.2000e-002	1.5540e+003

Buildup

Buildup: The material reference is Source.

Integration Parameters

Radial	10
Circumferential	10
Y Direction (axial)	20

Results With Buildup: Dose Point No. 1 - (X = 12.4, Y = 457.2, Z = 0) cm

Energy (MeV)	Activity (Photons/sec)	Energy Flux (MeV/cm²/sec)	Photon Flux (Photons/cm²/sec)	Exposure Rate (mR/hr)	Absorbed Dose Rate (mrad/hr)	Absorbed Dose Rate (mGy/hr)
1.500e-02	6.980e+07	4.961e-03	3.308e-01	4.256e-04	3.715e-04	3.715e-06
2.000e-02	5.676e+02	2.102e-06	1.051e-04	7.280e-08	6.355e-08	6.355e-10
3.000e-02	2.282e+07	1.994e+00	6.647e+01	1.976e-02	1.725e-02	1.725e-04
4.000e-02	1.697e+08	6.391e+01	1.598e+03	2.826e-01	2.467e-01	2.467e-03
5.000e-02	4.631e+07	3.937e+01	7.875e+02	1.049e-01	9.157e-02	9.157e-04
6.000e-02	9.261e+06	1.266e+01	2.109e+02	2.514e-02	2.194e-02	2.194e-04

file:///C:/Users/mfeldmann/Greye%20Engineering/MicroShield%2012/html/Case2-5_4_2020-12_00_13%20PM.html 5/4/2020

Quality Assurance Procedure 3.1 Calculation Sheet (01-19)

Sargent & Lundy Engineering Services, Inc.

CALCULATION SHEET

Project No. S551413.024	**Calculation No.** S54413.024-P-001	**Rev.** 0	**Page No.** 25 of 34
Title: LERF Basin 41 Radiological Dose Rate and Exposure			
Prepared By: MJ Feldmann	**Date:** 5/12/2020	**Checked By:** BD Groth	**Date:** 5/12/2020

Case Summary of Basin 41 Page 3 of 4

8.000e-02	2.181e+08	4.751e+02	5.938e+03	7.518e-01	6.563e-01	6.563e-03
1.000e-01	1.864e+08	4.966e+02	4.966e+03	7.597e-01	6.632e-01	6.632e-03
1.500e-01	2.370e+07	8.265e+01	5.510e+02	1.361e-01	1.188e-01	1.188e-03
2.000e-01	7.366e+06	3.095e+01	1.548e+02	5.463e-02	4.769e-02	4.769e-04
3.000e-01	1.639e+03	8.697e-03	2.899e-02	1.650e-05	1.440e-05	1.440e-07
4.000e-01	7.671e+05	5.083e+00	1.271e+01	9.904e-03	8.646e-03	8.646e-05
5.000e-01	1.768e+06	1.406e+01	2.811e+01	2.759e-02	2.409e-02	2.409e-04
6.000e-01	1.115e+08	1.042e+03	1.737e+03	2.034e+00	1.776e+00	1.776e-02
8.000e-01	5.190e+07	6.329e+02	7.912e+02	1.204e+00	1.051e+00	1.051e-02
1.000e+00	5.973e+07	9.111e+02	9.111e+02	1.679e+00	1.466e+00	1.466e-02
1.500e+00	6.913e+07	1.600e+03	1.066e+03	2.691e+00	2.349e+00	2.349e-02
2.000e+00	1.674e+06	5.280e+01	2.640e+01	8.165e-02	7.128e-02	7.128e-04
Total	**1.050e+09**	**5.461e+03**	**1.885e+04**	**9.863e+00**	**8.610e+00**	**8.610e-02**

Results With Buildup: Dose Point No. 2 - (X = 41.4, Y = 0, Z = 0) cm

Energy (MeV)	Activity (Photons/sec)	Energy Flux (MeV/cm^2/sec)	Photon Flux (Photons/cm^2/sec)	Exposure Rate (mR/hr)	Absorbed Dose Rate (mrad/hr)	Absorbed Dose Rate (mGy/hr)
1.500e-02	6.980e+07	9.035e-03	6.023e-01	7.749e-04	6.765e-04	6.765e-06
2.000e-02	5.676e+02	7.816e-07	3.908e-05	2.707e-08	2.364e-08	2.364e-10
3.000e-02	2.282e+07	3.245e-01	1.082e+01	3.216e-03	2.808e-03	2.808e-05
4.000e-02	1.697e+08	8.627e+00	2.157e+02	3.816e-02	3.331e-02	3.331e-04
5.000e-02	4.631e+07	5.083e+00	1.017e+02	1.354e-02	1.182e-02	1.182e-04
6.000e-02	9.261e+06	1.619e+00	2.698e+01	3.215e-03	2.807e-03	2.807e-05
8.000e-02	2.181e+08	6.111e+01	7.639e+02	9.670e-02	8.442e-02	8.442e-04
1.000e-01	1.864e+08	6.447e+01	6.447e+02	9.863e-02	8.610e-02	8.610e-04
1.500e-01	2.370e+07	1.080e+01	7.200e+01	1.778e-02	1.553e-02	1.553e-04
2.000e-01	7.366e+06	4.079e+00	2.040e+01	7.200e-03	6.285e-03	6.285e-05
3.000e-01	1.639e+03	1.157e-03	3.857e-03	2.195e-06	1.916e-06	1.916e-08
4.000e-01	7.671e+05	6.782e-01	1.695e+00	1.321e-03	1.154e-03	1.154e-05
5.000e-01	1.768e+06	1.880e+00	3.760e+00	3.691e-03	3.222e-03	3.222e-05
6.000e-01	1.115e+08	1.395e+02	2.326e+02	2.724e-01	2.378e-01	2.378e-03
8.000e-01	5.190e+07	8.489e+01	1.061e+02	1.615e-01	1.410e-01	1.410e-03
1.000e+00	5.973e+07	1.223e+02	1.223e+02	2.254e-01	1.968e-01	1.968e-03
1.500e+00	6.913e+07	2.149e+02	1.433e+02	3.615e-01	3.156e-01	3.156e-03
2.000e+00	1.674e+06	7.095e+00	3.547e+00	1.097e-02	9.578e-03	9.578e-05
Total	**1.050e+09**	**7.274e+02**	**2.131e+04**	**1.316e+00**	**1.149e+00**	**1.149e-02**

file:///C:/Users/mfeldmann/Greye%20Engineering/MicroShield%2012/html/Case2-5_4_2020-12_00_13%20PM.html 5/4/2020

Quality Assurance Procedure 3.1 Calculation Sheet (01-19)

Sargent & Lundy Engineering Services, Inc.

CALCULATION SHEET

Project No. S551413.024	**Calculation No.** S54413.024-P-001	**Rev.** 0	**Page No.** 26 of 34
Title: LERF Basin 41 Radiological Dose Rate and Exposure			
Prepared By: MJ Feldmann	**Date:** 5/12/2020	**Checked By:** BD Groth	**Date:** 5/12/2020

Case Summary of Basin 41 Page 4 of 4

Results With Buildup: Dose Point No. 3 - (X = 111.4, Y = 0, Z = 0) cm

Energy (MeV)	Activity (Photons/sec)	Energy Flux (MeV/cm²/sec)	Photon Flux (Photons/cm²/sec)	Exposure Rate (mR/hr)	Absorbed Dose Rate (mrad/hr)	Absorbed Dose Rate (mGy/hr)
1.500e-02	6.980e+07	2.906e-03	1.937e-01	2.493e-04	2.176e-04	2.176e-06
2.000e-02	5.676e+02	2.718e-07	1.359e-05	9.416e-09	8.220e-09	8.220e-11
3.000e-02	2.282e+07	1.167e-01	3.889e+00	1.156e-03	1.009e-03	1.009e-05
4.000e-02	1.697e+08	3.137e+00	7.843e+01	1.388e-02	1.211e-02	1.211e-04
5.000e-02	4.631e+07	1.857e+00	3.714e+01	4.947e-03	4.319e-03	4.319e-05
6.000e-02	9.261e+06	5.928e-01	9.880e+00	1.177e-03	1.028e-03	1.028e-05
8.000e-02	2.181e+08	2.242e+01	2.803e+02	3.548e-02	3.098e-02	3.098e-04
1.000e-01	1.864e+08	2.367e+01	2.367e+02	3.622e-02	3.162e-02	3.162e-04
1.500e-01	2.370e+07	3.966e+00	2.644e+01	6.532e-03	5.702e-03	5.702e-05
2.000e-01	7.366e+06	1.498e+00	7.492e+00	2.644e-03	2.309e-03	2.309e-05
3.000e-01	1.639e+03	4.248e-04	1.416e-03	8.058e-07	7.035e-07	7.035e-09
4.000e-01	7.671e+05	2.489e-01	6.222e-01	4.849e-04	4.233e-04	4.233e-06
5.000e-01	1.768e+06	6.898e-01	1.380e+00	1.354e-03	1.182e-03	1.182e-05
6.000e-01	1.115e+08	5.118e+01	8.530e+01	9.990e-02	8.721e-02	8.721e-04
8.000e-01	5.190e+07	3.112e+01	3.890e+01	5.920e-02	5.168e-02	5.168e-04
1.000e+00	5.973e+07	4.482e+01	4.482e+01	8.261e-02	7.212e-02	7.212e-04
1.500e+00	6.913e+07	7.871e+01	5.247e+01	1.324e-01	1.156e-01	1.156e-03
2.000e+00	1.674e+06	2.597e+00	1.299e+00	4.016e-03	3.506e-03	3.506e-05
Total	**1.050e+09**	**2.666e+02**	**2.222e+04**	**4.823e-01**	**4.210e-01**	**4.210e-03**

file:///C:/Users/mfeldmann/Greye%20Engineering/MicroShield%2012/html/Case2-5_4_2020-12_00_13%20PM.html 5/4/2020

Quality Assurance Procedure 3.1 Calculation Sheet (01-19)

Sargent & Lundy	CALCULATION SHEET		
Project No. S551413.024	**Calculation No.** S54413.024-P-001	**Rev.** 0	**Page No.** 27 of 34
Title: LERF Basin 41 Radiological Dose Rate and Exposure			
Prepared By: MJ Feldmann	**Date:** 5/12/2020	**Checked By:** BD Groth	**Date:** 5/12/2020

APPENDIX C

LERF BASIN 41 SKETCHES

Quality Assurance Procedure 3.1 Calculation Sheet (01-19)

Sargent & Lundy Engineering Services, Inc.

CALCULATION SHEET

Project No. S551413.024	**Calculation No.** S54413.024-P-001	**Rev.** 0	**Page No.** 28 of 34
Title: LERF Basin 41 Radiological Dose Rate and Exposure			
Prepared By: MJ Feldmann	**Date:** 5/12/2020	**Checked By:** BD Groth	**Date:** 5/12/2020

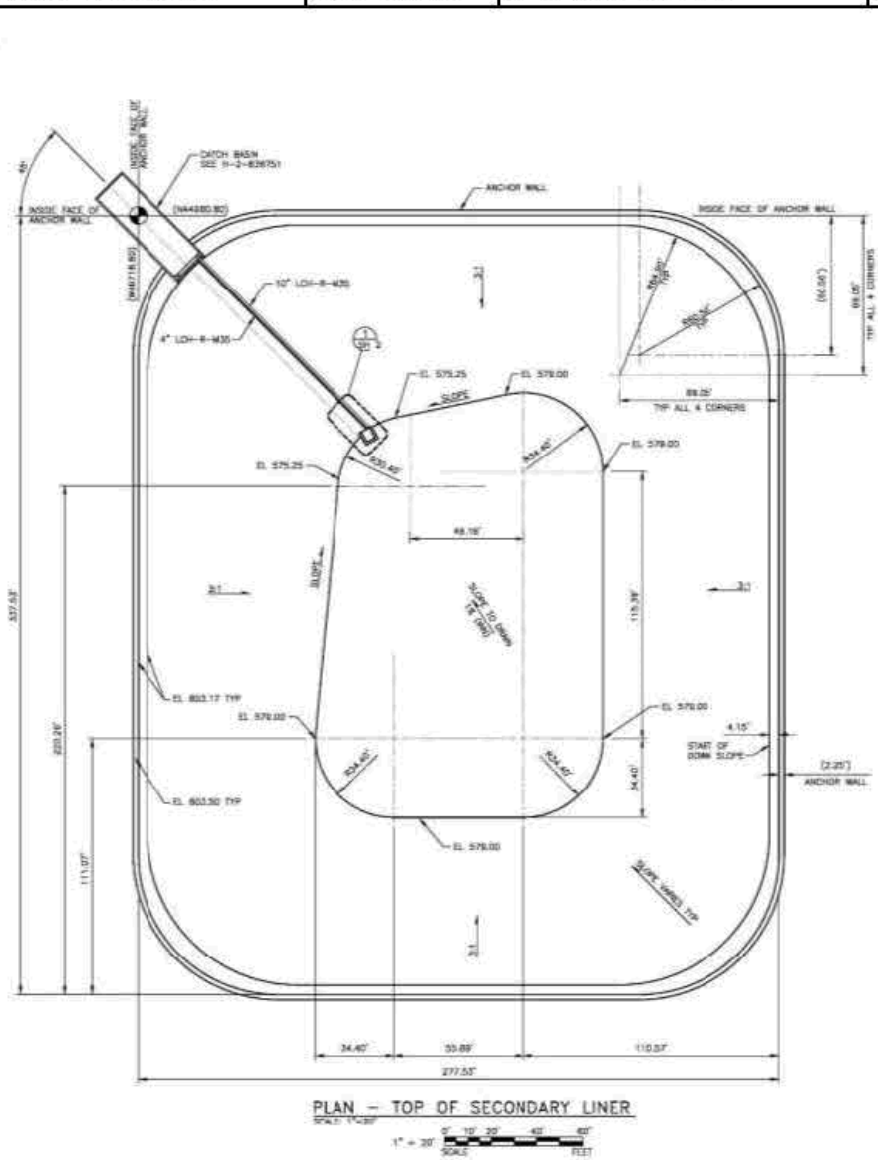

Sargent & Lundy	CALCULATION SHEET		
Project No. S551413.024	**Calculation No.** S54413.024-P-001	**Rev.** 0	**Page No.** 29 of 34
Title: LERF Basin 41 Radiological Dose Rate and Exposure			
Prepared By: MJ Feldmann	**Date:** 5/12/2020	**Checked By:** BD Groth	**Date:** 5/12/2020

APPENDIX D

FRP DATA SHEET

Quality Assurance Procedure 3.1 Calculation Sheet (01-19)

Sargent & Lundy

CALCULATION SHEET

Project No. S551413.024	**Calculation No.** S54413.024-P-001	**Rev.** 0	**Page No.** 30 of 34
Title: LERF Basin 41 Radiological Dose Rate and Exposure			
Prepared By: MJ Feldmann	**Date:** 5/12/2020	**Checked By:** BD Groth	**Date:** 5/12/2020

Conley Composites
an ANDRONACO INDUSTRIES company

EPOXY SCHEDULE 40/30
DOUBLE CONTAINED PIPING

ASTM DESIGNATION CODE RTRP-11FW1-2113

Conley Product Data

RUGGED TOP OF THE LINE PERFORMANCE ~ AFFORDABLE COST

Description

- Extra heavy duty filament wound piping for service up to 150 psi
- 63 mil double Nexus® reinforced corrosion barrier (inner liner)
- Premium aromatic amine cured product for operating temperatures up to 275°F
- Sizes available from 2" through 30"
- Complete line of filament wound fittings available
- In house fabrication facilities "From your blueprints to pipe assemblies"
- Color coding available
- Patented interlocking union for thermal expansion (US Patent #5449204 & 5368336)
- See Sch 40/30 Specification
- See Sch 40 Product Data
- See Sch 30 Product Data

Typical Applications

- Waste water treatment
- Steel pickling
- Automotive
- Petrochemical
- Pharmaceutical
- Chemical processing
- Brine and brackish water
- Jet fuel
- Gasoline – Diesel – Fuel Oil
- Cooling water
- Odor control
- Industrial waste
- Food and beverages
- Bridge, roof and floor drains

Performance

- Excellent chemical resistance inside and outside to a variety of caustics, acids, brines and petroleum products – See the chemical resistance chart for fluid services
- External UV/Corrosion barrier minimum 10/20 mil on all pipe and fittings
- 25 year guarantee against *'fiber blooming'* on all pipe and fittings
- Straight socket joining system (No expensive tapering tools required)

Specifications

- ASTM D2996 Filament-Wound "Fiberglass" Pipe
- ASTM D2310 Classification for Machine-Made "Fiberglass" Pipe
- ASTM D3567 Determining Dimensions of "Fiberglass" Pipe and Fittings
- ASTM D4024 Machine Made "Fiberglass" Flanges
- ASTM D5685 "Fiberglass" Pressure Pipe Fittings

Codes & Standards

- AWWA C950 Fiberglass Pressure Pipe Standards
- ASME B31.1 Power Piping Code
- ASME B31.3 Process Piping Code

Listings

- U.S. Federal Regulations FDA 21 CFR 175.300

Application Legislation

- 40 CFR 280, RCRA, Subtitle 1
- 40 CFR 264/S
- CERCLA "Superfund Act"

PDS-0306 (12-14) 1

Quality Assurance Procedure 3.1 Calculation Sheet (01-19)

Sargent & Lundy Engineering Services, Inc.

CALCULATION SHEET

Project No. S551413.024	**Calculation No.** S54413.024-P-001	**Rev.** 0	**Page No.** 31 of 34
Title: LERF Basin 41 Radiological Dose Rate and Exposure			
Prepared By: MJ Feldmann	**Date:** 5/12/2020	**Checked By:** BD Groth	**Date:** 5/12/2020

Schedule 40/30
Pipe Dimensional Data* and Pressure Ratings[1] from –50° to 275°F

[1]Static pressure rating; steady (stationary) pressure is created when using a gear pump, turbine pump, centrifugal pump, etc.
[2]Vacuum Service: A full vacuum within the pipe is equivalent to 14.7 psi external pressure at sea level. Contact Conley for higher external pressure ratings.

NOM SIZE	ANNULUS CLEAR (IN)	SPIDER MIN OPENING (IN)	ANNULUS VOLUME (GAL/FT)	COMBINED WEIGHT (LB/FT)	ANNULUS PRESS (PSI)	ANNULUS VAC PRESS (PSI)[2]
2"/4"	0.81	0.6	0.51	3.14	150	24.1
2"/6"	1.81	1.6	1.32	4.32	150	13.8
3"/6"	1.27	1.0	1.10	4.89	150	13.8
3"/8"	2.27	2.0	2.24	5.85	150	6.1
4"/6"	0.76	0.5	0.82	5.54	150	13.8
4"/8"	1.76	1.5	1.96	6.50	150	6.1
6"/8"	0.72	0.5	1.14	8.45	150	6.1
6"/10"	1.72	1.5	2.61	10.86	150	10.2
8"/10"	0.70	0.5	1.47	12.63	150	10.2
8"/12"	1.83	1.6	3.51	14.02	100	5.7
10"/12"	0.79	0.5	2.04	16.61	100	5.7
10"/14"	1.79	1.5	4.20	18.60	100	3.6
12"/14"	0.63	0.4	2.16	21.67	100	3.6
12"/16"	1.63	1.4	4.65	23.01	100	2.5
14"/16"	0.63	0.4	2.49	24.91	100	2.5
14"/18"	1.63	1.4	5.30	27.91	100	4.2
16"/18"	0.63	0.4	2.82	29.80	100	4.2
16"/20"	1.63	1.4	5.96	31.32	100	3.1
18"/20"	0.63	0.4	3.14	33.21	100	3.1
18"/24"	2.63	2.0	10.40	39.70	100	3.5
20"/24"	1.65	1.4	7.75	40.54	100	3.6
20"/30"	4.77	2.0	21.22	50.49	100	3.1
24"/30"	2.70	2.0	13.96	58.82	100	3.1

*All values are nominal. Minimum wall thickness shall not be less than 87.5% of nominal wall thickness in accordance with ASTM D2996.
NOTES:
For carrier pipe dimensions, see Schedule 40 Pipe Dimensional Data Table
For containment pipe dimensions, see Schedule 30 Pipe Dimensional Data Table

Z PDS 10306 (12-14)

Quality Assurance Procedure 3.1 Calculation Sheet (01-19)

Sargent & Lundy Engineering Services, Inc.

CALCULATION SHEET

Project No. S551413.024	**Calculation No.** S54413.024-P-001	**Rev.** 0	**Page No.** 32 of 34
Title: LERF Basin 41 Radiological Dose Rate and Exposure			
Prepared By: MJ Feldmann	**Date:** 5/12/2020	**Checked By:** BD Groth	**Date:** 5/12/2020

Support Spans (FT)

NOM SIZE	CARRIER PIPE TEMPERATURE							
	75	100	125	150	175	200	225	250
2"/4"	15.3	15.3	15.3	15.3	15.2	15.2	15.1	15.1
2"/6"	19.6	19.6	19.6	19.6	19.5	19.5	19.5	19.5
3"/6"	18.3	18.3	18.3	18.3	18.3	18.2	18.2	18.1
3"/8"	21.5	21.5	21.5	21.5	21.4	21.4	21.4	21.4
4"/6"	17.9	17.9	17.9	17.9	17.8	17.7	17.5	17.5
4"/8"	20.5	20.5	20.5	20.5	20.5	20.4	20.3	20.3
6"/8"	19.9	19.9	19.9	19.9	19.8	19.6	19.3	19.3
6"/10"	23.1	23.1	23.1	23.1	23.1	22.9	22.8	22.8
6"/10"	22.5	22.5	22.5	22.5	22.4	22.1	21.9	21.8
8"/12"	24.5	24.5	24.5	24.5	24.4	24.3	24.1	24.1
10"/12"	23.8	23.8	23.8	23.8	23.7	23.4	23.2	23.1
10"/14"	25.3	25.3	25.3	25.3	25.2	25.0	24.8	24.7
12"/14"	25.4	25.4	25.4	25.4	25.2	24.9	24.6	24.5
12"/16"	26.6	26.6	26.6	26.6	26.5	26.2	25.9	25.9
14"/16"	26.4	26.4	26.4	26.4	26.3	25.9	25.6	25.5
14"/18"	28.6	28.6	28.6	28.6	28.5	28.2	28.0	27.9
16"/18"	28.3	28.3	28.3	28.3	28.1	27.8	27.5	27.4
16"/20"	29.4	29.4	29.4	29.4	29.3	29.0	28.7	28.7
18"/20"	29.1	29.1	29.1	29.1	29.0	28.6	28.3	28.2
18"/24"	32.4	32.4	32.4	32.4	32.3	32.0	31.8	31.7
20"/24"	31.9	31.9	31.9	31.9	31.7	31.5	31.2	31.1
20"/30"	36.8	36.8	36.8	36.8	36.7	36.5	36.4	36.3
24"/30"	35.7	35.7	35.7	35.7	35.6	35.3	35.0	34.9

NOTE: These spans are valid for the containment pipe operating at ambient temperatures.

Span multipliers for fluids of different specific gravities

FLUID SPECIFIC GRAVITY							
AIR	0.75	0.9	1.0	1.1	1.25	1.5	2.0
1.40	1.07	1.02	1.0	0.96	0.95	0.90	0.84
(MULTIPLIER FOR CORRECTED SPAN LENGTHS)							

Span multipliers for fluids at different temperatures

FLUID TEMPERATURE						
75°F	100°F	150°F	200°F	225°F	250°F	275°F
1.0	0.98	0.93	0.88	0.84	0.80	0.75
(MULTIPLIER FOR CORRECTED SPAN LENGTHS)						

PDS-0330K (12-14) 3

Quality Assurance Procedure 3.1 Calculation Sheet (01-19)

Sargent & Lundy Engineering Services, Inc.

CALCULATION SHEET

Project No. S551413.024	**Calculation No.** S54413.024-P-001	**Rev.** 0	**Page No.** 33 of 34
Title: LERF Basin 41 Radiological Dose Rate and Exposure			
Prepared By: MJ Feldmann	**Date:** 5/12/2020	**Checked By:** BD Groth	**Date:** 5/12/2020

Anchor Loads Due to Restrained Thermal Expansion (LBS)

NOM SIZE	TEMPERATURE CHANGE IN CONTAINMENT PIPE			
	1°F	25°F	50°F	75°F
2"/4"	519	1,535	2,592	3,650
2"/6"	547	2,232	3,987	5,742
3"/6"	751	2,436	4,191	5,946
3"/8"	774	3,003	5,325	7,647
4"/6"	981	2,666	4,421	6,176
4"/8"	1,004	3,233	5,555	7,877
6"/8"	1,697	3,926	6,248	8,570
6"/10"	1,754	5,349	9,095	12,841
8"/10"	2,379	5,975	9,721	13,466
8"/12"	2,412	6,798	11,366	15,934
10"/12"	3,330	7,716	12,284	16,852
10"/14"	3,377	8,888	14,628	20,367
12"/14"	4,469	9,979	15,719	21,459
12"/16"	4,500	10,770	17,301	23,831
14"/16"	5,172	11,441	17,972	24,503
14"/18"	5,243	13,215	21,519	29,824
16"/18"	5,914	13,886	22,191	30,495
16"/20"	5,950	14,782	23,981	33,181
18"/20"	6,621	15,453	24,653	33,853
18"/24"	6,775	19,286	32,323	45,357
20"/24"	7,071	19,584	32,619	45,653
20"/30"	7,306	25,461	44,372	63,284
24"/30"	10,258	28,413	47,325	66,236

NOTE: Thermal end loads on anchors are independent of the carrier pipe temperature. The loads are based on the change in temperature of the containment pipe plus 10% or the maximum load from the carrier pipe at 150°F with uninsulated containment pipe.

PDS 10306 (12-14)

Quality Assurance Procedure 3.1 Calculation Sheet (01-19)

Sargent & Lundy Engineers Services, Inc.

CALCULATION SHEET

Project No. S551413.024	**Calculation No.** S54413.024-P-001	**Rev.** 0	**Page No.** 34 of 34
Title: LERF Basin 41 Radiological Dose Rate and Exposure			
Prepared By: MJ Feldmann	**Date:** 5/12/2020	**Checked By:** BD Groth	**Date:** 5/12/2020

Typical Properties

TEMPERATURE	75°F	250°F	
PROPERTY	VALUE	VALUE	METHOD
AXIAL TENSILE STRENGTH	14,200 psi	10,650 psi	ASTM D2105
AXIAL TENSILE DESIGN STRENGTH	3,550 psi	2,660 psi	ASTM D2105
AXIAL MODULUS OF ELASTICITY	1.75×10^6 psi	1.30×10^6 psi	ASTM D2105
COMPRESSIVE STRENGTH	22,750 psi	17,000 psi	ASTM D695
COMPRESSIVE DESIGN STRENGTH	5,685 psi	4,250 psi	ASTM D695
COMPRESSION MODULUS	2.80×10^6 psi	2.10×10^6 psi	ASTM D695
POISSON'S RATIO V_{ph} (V_{hp})	0.33 (0.23)		*CONLEY METHOD #20
BEAM BENDING, ULTIMATE STRESS	30,000 psi	22,500 psi	CONLEY METHOD 8
BEAM BENDING, DESIGN STRESS[1]	3,750 psi	2,810 psi	CONLEY METHOD 8
SHEAR MODULUS	1.30×10^6 psi	1.00×10^6 psi	*CONLEY METHOD #9
HYDROSTATIC DESIGN BASIS	16,000 psi	8,000 psi	ASTM D2992 PROCEDURE B
HYDROSTATIC BURST (WALL STRESS @ 72°F)	32,000 psi	24,000 psi	ASTM D1599
CIRCUMFERENTIAL MODULUS OF ELASTICITY	2.50×10^6 psi	1.87×10^6 psi	ASTM D1599
FLEXURAL MODULUS OF ELASTICITY	1.75×10^6 psi	1.30×10^6 psi	ASTM 2790
COEFFICIENT OF LINEAR THERMAL EXPANSION	9.5×10^{-6} IN / IN-°F		CONLEY METHOD 3
COEFFICIENT OF THERMAL CONDUCTIVITY	2.9 BTU/HR-IN / FT²-°F		CONLEY METHOD 16
SPECIFIC GRAVITY	1.85		
DENSITY	0.067 LB/CU IN		
DIELECTRIC STRENGTH	535 VOLTS / MIL		ASTM D149
DEGREE OF CURE	175°C (347°F) Tg		DMA
HEAT DEFLECTION TEMPERATURE	150°C (302°F)		ISO 75-3
FLOW FACTOR (HAZEN-WILLIAMS)	150		
SURFACE ROUGHNESS	1.7×10^{-5} FEET		
MANNING'S "n"	0.009 INCH		

[1] Beam bending design stress is 1/8 of ultimate to allow for combined stress (bending and pressure)

PDS10/30L (12/11) 5

Quality Assurance Procedure 3.1 Calculation Sheet (01-19)

Sargent & Lundy Engineering Services, Inc.

CALCULATION SHEET

Project No. S551413.024	**Calculation No.** S54413.024-P-001	**Rev.** 0	**Page No.** 35 of 34
Title: LERF Basin 41 Radiological Dose Rate and Exposure			
Prepared By: MJ Feldmann	**Date:** 5/12/2020	**Checked By:** BD Groth	**Date:** 5/12/2020

ISO 9001:2008
CERTIFIED
Conley
Composites
Kentwood, MI

This product data sheet and recommendations it contains are based on data reasonably believed to be reliable. It is intended that this data be used by competent personnel having acceptable training in accordance with current industry practice and operating conditions. Variation in environment, application or installation, changes in operating procedures, or extrapolation of data may cause unsatisfactory results. Conley Composites makes no representation or warranty, express or implied, including warranties of merchantability or fitness for purpose, as to accuracy, adequacy or completeness of the recommendations or information contained herein. Conley Composites assumes no liability whatsoever in connection with this literature or the information or recommendations it contains.

Conley Composites

4544 Broadmoor Ave. SE,
Kentwood, MI 49512 USA
Phone: 616.512.8000
Fax: 616.512.8001
www.conleyfrp.com
E-Mail: sales@conleyfrp.com

6 PDS4030E (12/14)

Quality Assurance Procedure 3.1 Calculation Sheet (01-19)

DOCUMENT RELEASE AND CHANGE FORM

Prepared For the U.S. Department of Energy, Assistant Secretary for Environmental Management
By Washington River Protection Solutions, LLC., PO Box 850, Richland, WA 99352
Contractor For U.S. Department of Energy, Office of River Protection, under Contract DE-AC27-08RV14800

TRADEMARK DISCLAIMER: Reference herein to any specific commercial product, process, or service by trade name, trademark, manufacturer, or otherwise, does not necessarily constitute or imply its endorsement, recommendation, or favoring by the United States government or any agency thereof or its contractors or subcontractors. Printed in the United States of America.

Release Stamp

DATE:
May 26,2020
HANFORD RELEASE

1. **Doc No:** RPP-SPEC-63632 **Rev.** 00

2. **Title:**
LERF Basin 41 Construction Specification

3. **Project Number:** ☐N/A
T1P226

4. **Design Verification Required:**
☐Yes ☒No

5. **USQ Number:** ☒ N/A
RPP-27195

6. **PrHA Number** **Rev.** ☒ N/A

Clearance Review Restriction Type:
public

7. **Approvals**

Title	Name	Signature	Date
Clearance Review	Ayers, Lynn M	*Ayers, Lynn M*	05/26/2020
Design Authority	Wilson, Nathaniel W	*Wilson, Nathaniel W*	05/14/2020
Checker	Dorsh, Paul M	*Dorsh, Paul M*	05/05/2020
Document Control Approval	Alvarez, Efren	*Alvarez, Efren*	05/26/2020
Environmental Protection	Wall, Jeremy M	*Wall, Jeremy M*	05/18/2020
Originator	Hillebrant, Thomas A	*Hillebrant, Thomas A*	05/05/2020
Other Approver	Joslyn, Cameron C	*Joslyn, Cameron C*	05/19/2020
Responsible Engineering Manager	Huntington, Matthew R	*Huntington, Matthew R*	05/20/2020

8. **Description of Change and Justification**

Initial Release.

Design checks were performed in accordance with Sargent & Lundy ESD Quality Assurance Procedure (QAP). Because of the General Service status of the equipment, a graded approach was applied and design verification was not performed as allowed by QAP 3.5, Design Verification.

9. **TBDs or Holds** ☒N/A

10. **Related Structures, Systems, and Components**

a. **Related Building/Facilities** ☐N/A	b. **Related Systems** ☐N/A	c. **Related Equipment ID Nos. (EIN)** ☒N/A
LERF FACILITIES	LERF	

11. **Impacted Documents – Engineering** ☒N/A

Document Number	Rev.	Title

12. **Impacted Documents (Outside SPF):**

N/A

13. **Related Documents** ☐N/A

Document Number	Rev.	Title
MT-50497	00	Liquid Effluent Retention Facility (LERF) Basin 41

14. **Distribution**

Name	Organization
Angevine, Brennan T	MISSION ANALYSIS ENGINEERING
Blaak, Whitney S	COGNIZANT SYSTEM ENGINEERING
Demiter, Scott M	ETF OPERATIONS
Goessmann, Glen E	ENGINEERING PROGRAMS
Greenhalgh, Aaron M	TANK FARM PROJECTS ENGINEERING
Halgren, Dale L	ETF ENGINEERING
Harris, John W	SAFETY PROGRAM SERVICES RC/P
Joslyn, Cameron C	ETF ENGINEERING
McFerran, Brandon E	242-A/AW/ETF OPERATIONS
McShane, Michael P	ENGINEERING PROGRAMS
Nixie, Dennis A	CONSTRUCTION
Omberg Carro, Susan K	NUCLEAR SAFETY
Powers, Daniel J	ETF ENGINEERING
Roosendaal, Gene D	TFP PROJECT MANAGEMENT
Rutherford, Wally	ETF ENGINEERING
Sackett, Tom E	TANK FARM PROJECTS
Samoska, Jerry A	INSTRUMENT & CNTRL ENGINEERING
Shultz, Milton V	NUCLEAR SAFETY
Smith, Gregory E	TANK FARM PROJECTS ENGINEERING

DOCUMENT RELEASE AND CHANGE FORM	**Doc No:** RPP-SPEC-63632 **Rev.** 00

14. **Distribution**

Name	**Organization**
Smoot, Bill R	TFP RADCON
Swanson, Brad L	242-A/AW/ETF OPERATIONS
Wall, Jeremy M	RETRVL & CLOSURE/PROJ ENV CMPL
Wilson, Nathaniel W	ETF PROJECTS ENGINEERING

RPP-SPEC-63632
Revision 0

LERF BASIN 41 DESIGN CONSTRUCTION SPECIFICATION

Prepared by

TA Hillebrant
Sargent & Lundy for Washington River Protection Solutions, LLC

Date Published
April 2020

washington river protection solutions

Prepared for the U.S. Department of Energy
Office of River Protection

Contract No. DE-AC27-08RV14800

Approved for Public Release;
Further Dissemination Unlimited

RPP-SPEC-63632, Rev. 0

LERF BASIN 41 DESIGN CONSTRUCTION SPECIFICATION

May 2020

prepared for

WASHINGTON RIVER PROTECTION SOLUTIONS, LLC

prepared by

SARGENT & LUNDY
1100 Jadwin Avenue, Suite 400
Richland, Washington 99352-3425
(509) 946-3300

TABLE OF CONTENTS

		Total Pages
DIVISION 1 – GENERAL REQUIREMENTS		
Division 01 Sections are under separate cover.		
DIVISION 3 – CONCRETE		
03 30 00	Cast-in-Place Concrete (Non-Safety Related)	10
DIVISION 5 – METALS		
05 05 38	Concrete Anchors	8
05 50 00	Metal Fabrication	5
DIVISION 7 – THERMAL AND MOISTURE PROTECTION		
07 92 00	Joint Sealants	3
DIVISION 9 – FINISHES		
09 85 50	Chemical Resistant Decontaminable Coatings	7
09 91 00	Painting	4
DIVISION 22 – PLUMBING		
22 08 13	Testing for Piping	5
DIVISION 26 – ELECTRICAL		
26 05 02	Basic Electrical Requirements	6
26 05 19	Low Voltage Electrical Power Conductors and Cables	12
26 05 26	Grounding and Bonding for Electrical Systems	8
26 05 29	Hangers and Supports for Electrical Systems	4
26 05 33	Raceways and Boxes for Electrical Systems	12
26 05 53	Identification for Electrical Systems	8
26 22 13	Low Voltage Distribution Transformers	4
26 24 16	Panelboards	5
26 27 26	Wiring Devices	4
26 28 16	Enclosed Switches and Circuit Breakers	4
26 29 13	Enclosed Controllers	7
26 56 00	Exterior Lighting	5
DIVISION 31 – EARTHWORK		
31 15 21	Geotextile	8
31 23 33	Trenching and Backfilling	13
31 90 05	Earthwork and Soil-Bentonite Mixture	19
31 90 20	Geosynthetic Drainage Material	9
31 90 22	High-Density Polyethylene Geomembrane Liner	23
31 90 25	Geosynthetic Clay Liner (GCL)	11
31 90 52	Leachate Collection and Removal System for a Lined Pond	11
31 90 99	Construction Quality Assurance	32

DIVISION 33 – UTILITIES

33 47 16.13	Mechanically Tensioned Floating Basin Cover System	33

DIVISION 40 – PROCESS INTEGRATION

40 05 10	Erection of Piping	14
40 40 00	Process Piping	18
40 41 00	Heat Tracing for Process Piping and Equipment	4
40 42 13	Thermal Insulation for Piping and Equipment	5
40 70 00	Instrumentation and Controls	24

SECTION 03 30 00

CAST-IN-PLACE CONCRETE (NON-SAFETY RELATED)

PART 1 GENERAL

1.1 SUMMARY OF WORK

A. Formwork

B. Reinforcement

C. Cast-In-Place Items

D. Concrete

E. Non-Shrink Grout

1.2 RELATED DOCUMENTS / CODES AND STANDARDS

Drawings and general provisions of the Contract Statement of Work, including Division 01 Specification Sections, apply to this Section.

The following documents and others referenced therein, form part of the Contract to the extent designated in this Section. Referenced documents are those current as of the date of this Section unless otherwise indicated.

A. American Association of State Highway and Transportation Officials (AASHTO)

AASHTO M 254	Standard Specification for Corrosion-Resistant Coated Dowel Bars

B. American Concrete Institute (ACI)

ACI 117	Tolerances for Concrete Construction and Materials
ACI 301, 2010	Specification for Structural Concrete
ACI 305.1	Standard Specification for Hot Weather Concreting
ACI 306.1	Standard Specification for Cold Weather Concreting
ACI 308.1	Specification for Curing Concrete
ACI 318, 2014	Building Code Requirements for Structural Concrete and Commentary
ACI CP-1	Technical Workbook for ACI Certification of Concrete Field Testing Technician-Grade 1

C. ASTM International (ASTM)

ASTM A615	Standard Specification for Deformed and Plain Billet-Steel Bars for Concrete Reinforcement
ASTM A706	Standard Specification for Deformed and Plain Low-Alloy Steel Bars for Concrete Reinforcement
ASTM A853	Standard Specification for Steel Wire, Carbon, for General Use
ASTM C31	Standard Practice for Making and Curing Concrete Test Specimens in the Field.
ASTM C33	Standard Specification for Concrete Aggregates
ASTM C39	Standard Test Method for Compressive Strength of Cylindrical Concrete Specimens.
ASTM C94	Standard Specification for Ready-Mixed Concrete
ASTM C143	Standard Test Method for Slump of Hydraulic Cement Concrete
ASTM C150	Standard Specification for Portland Cement
ASTM C172	Standard Practice for Sampling Freshly Mixed Concrete
ASTM C231	Standard Test Method for Air Content of Freshly Mixed Concrete by the Pressure Method
ASTM C260	Standard Specification for Air-Entraining Admixtures for Concrete
ASTM C511	Standard Specification for Mixing Rooms, Moist Cabinets, Moist Rooms and Water Storage Tanks Used in the Testing of Hydraulic Cements and Concretes
ASTM C881	Standard Specification for Epoxy Resin Based Bonding Systems for Concrete
ASTM C1077	Standard Practice for Agencies Testing Concrete and Concrete Aggregates for Use in Construction and Criteria for Testing Agency Evaluation
ASTM C1107	Standard Specification for Packaged Dry, Hydraulic-Cement Grout (Non-shrink)
ASTM D1752	Standard Specification for Preformed Sponge Rubber Cork and Recycled PVC Expansion Joint Fillers for Concrete Paving and Structural Construction

D. National Ready Mixed Concrete Association (NRMCA)

Quality Control Manual	Certification of Ready Mixed Concrete Production – Section 3 Facilities

E. Washington Administrative Code (WAC)

WAC 173-303-640	Dangerous Waste Regulations Washington State
WAC 173-303-650	Surface Impoundments

1.3 SUBMITTALS

A. See Contract Statement of Work for submittal procedures.

B. Approval Required.

1. Concrete Data: Before mixing, submit concrete materials, mix design, and mix proportions, in accordance with ACI 301, Section 4.1.2. Identify each material to be used in concrete, including amount, by weight, to be utilized in each cubic yard of plastic mix.

2. Product Data: Admixtures, bonding agent, bond breaker, expansion joint material, grout, and patching materials.

3. Reinforcement Shop Drawings: Prior to fabrication of reinforcement, submit placement Drawings that detail fabrication, bending, and placement. Include bars sizes, lengths, material, grade, bar schedules, stirrup spacing, bent bar diagrams, bar arrangement, splices and laps, mechanical connections, tie spacing, hoop spacing, and supports for concrete reinforcement.

4. Setting Drawings, diagrams, templates, and instructions: Prior to fabrication, submit information for installation of anchorages, such as concrete inserts, anchor bolts, and miscellaneous items having integral anchors, to be embedded in concrete.

5. Detailed plan for cold weather placements including curing and protection of concrete placed and cured in ambient temperature below 40°F.

6. Detailed plan for hot weather placements including curing and protection for concrete placed in ambient temperatures over 80°F.

7. Concrete Placement Drawings: Prior to setting of forms, submit placement Drawings indicating planned pouring sequence and locations of any planned joints, including those not shown on the Contract Drawings.

8. Concrete repair methods and materials.

9. Submittals shall include the documentation listed in Paragraph 1.4.

1.4 QUALITY ASSURANCE

The Seller shall comply with the following Quality Assurance requirements in addition to those of the Contract Statement of Work.

A. The concrete supplier shall be currently certified by the NRMCA "Certification of Ready Mixed Concrete Production Facilities" with compliance to ASTM C94 requirements for production facilities and equipment.

B. Qualification of Concrete Inspection/Testing Laboratory: The laboratory including equipment, personnel, and procedures shall meet the requirements of ASTM C1077 and shall be currently accredited by an independently recognized authority.

C. Deliverable Documentation: The following documents and records, required by this Section, shall be delivered to the WRPS Construction Representative in accordance with Contract Documents.

Document	Paragraph
Supplier Certification	1.4.A
Laboratory Qualifications	1.4.B
Inspection Personnel Qualification Records	1.6.A & 1.6.B
Pre-Pour Inspection Checklist and Trip Tickets	3.2.C.1.b, 3.2.C.1.c, and 3.4.B
Concrete Test Results	3.4.C

D. Perform work in accordance with the applicable sections of ACI 117, ACI 301, and ACI 318.

E. Suspect and Misrepresented Products: See Contract Statement of Work for required measures to prevent use of misrepresented products.

1.5 DELIVERY, STORAGE, AND HANDLING

A. See the Contract Statement of Work for general requirements.

1.6 QUALIFICATION OF CONCRETE INSPECTORS

A. Personnel performing field-testing of concrete shall be ACI Concrete Field Testing Technicians, Grade I, who have received formal certification in accordance with ACI CP-1 or equivalent. Equivalent certification programs shall include requirements for written and performance examination as stipulated in ACI 301, Section 1.6.2.

B. Personnel performing laboratory testing shall be certified as an ACI Concrete Laboratory Technician—Grade 1.

PART 2 PRODUCTS

2.1 SUBSTITUTION

A. See the Contract Statement of Work for substitution approvals.

2.2 MATERIALS

A. Concrete

1. Cement: ASTM C150, Type II (low alkali).

2. Aggregates: ASTM C33, 3/4 in. maximum size. Fine aggregate: free of materials with deleterious reactivity to alkali in cement.

3. Air entraining admixture: ASTM C260, Sika Chemical Company "SIKA AER," Chem Masters Corporation "Adz Air," or Protex Industries "AES."

4. Properties (if not specified on Drawings):

a. Minimum allowable compressive strength: 4,500 lb/in2 at 28 days, or as required by design documents.

b. Slump: 4 in. in accordance with ACI 301, Section 4.2.2.2.

c. Air content: In accordance with ACI 301, Table 4.2.2.4.

d. Proportions: In accordance with ACI 301, Section 4.2.3, and ASTM C94.

e. Time of discharge: In accordance with ASTM C94, Section 12 and ACI 301, Section 4.3.2.2.

B. Measuring, Mixing, and Delivery: In accordance with ASTM C94.

C. Controlled Density Fill: Portland cement based, minimum compressive strength of 100 psi at 28 days, maximum compressive strength of 300 psi at 28 days.

D. Reinforcing Steel

1. Steel bars: ASTM A615 or ASTM A706, deformed, Grade 60.

2. Tie wire: ASTM A853 carbon steel, 16-gage minimum, annealed.

E. Post-Installed Anchors: See Section 05 05 38, "Concrete Anchors."

F. Expansion joint filler: ASTM D1752, Type II, flexible foam, Ceramar®[1] by W.R. Meadows, 1/2 in. thick.

[1] Ceramar is a registered trademark of W. R. Meadows, Inc., Hampshire, Illinois.

G. Expansion joint filler (between asphalt and concrete): ASTM D1752, asphalt impregnated fiberboard or felt, 1/2 in. thick.

H. Joint sealants: See Section 07 92 00, "Joint Sealants."

I. Forms: Wood, steel, plywood, or Masonite Corporation "Concrete Form Presswood," as required for various specified finishes.

J. Bonding Agent: Epoxy resin emulsion appropriate for bonding fresh concrete to existing set concrete, ASTM C881, Type IV.

K. Non-Shrink Grout:

1. In accordance with ASTM C1107

2. Minimum strength of fluid grout, 2,000 psi at 1 day, 4,000 psi at 3 days, and 7,500 psi at 28 days.

L. Joint Dowel Bars: ASTM A615, Grade 60, plain-steel bars, cut true to length with ends square and free of burrs. Install with grease/epoxy or a sleeve.

1. Paint with one coat of paint conforming to AASHTO M 254 and coat one-half of the bar with grease.

2. Plastic or gage metal (26 gage minimum) sleeves with an inside diameter of 1/16-in. greater than the dowel bar that it encases, that have the strength, durability, and design to provide free movement of the dowel relative to the concrete slab and that are specifically manufactured for this purpose.

PART 3 EXECUTION

3.1 PREPARATION

A. Form Construction

1. Install formwork in accordance with ACI 301, Section 2.3. Interior shape and rigidity shall be such that finished concrete will meet requirements of Drawings and approved shop Drawings within tolerances specified in ACI 117, Section 4.

2. Prepare form surfaces in accordance with ACI 301, Section 2, using specified form coating materials, or as described below.

3. Forms for surfaces, which will be permanently concealed from view, may be saturated with water, before placing concrete, instead of other treatment. In freezing weather, forms shall be treated with oil or stearate.

4. Clean forms of foreign material before placing concrete.

B. Prepare setting Drawings, diagrams, templates, and instructions for installation of anchorages, such as concrete inserts, anchor bolts, embedded plates, and miscellaneous items having integral anchors, to be embedded in concrete.

3.2 INSTALLATION

A. Reinforcing Steel

1. Fabricate and place bars to dimensions shown on Contract Drawings, within tolerances shown in ACI 117, Sections 2.1 and 2.2.

2. Tie to prevent displacement during placement of concrete.

3. Do not force into concrete after initial set has started.

4. Provide concrete cover for reinforcement protection per dimensions given in ACI 301, Section 3.3, except where shown otherwise on Contract Drawings or approved shop Drawings.

5. Reinforcement shall be supported and fastened together to prevent displacement by construction loads, or placement of concrete beyond specified tolerances. Reinforcement supported from ground shall rest on precast, square concrete blocks, with a minimum surface area of 4-in^2 and having a compressive strength equal to specified compressive strength of concrete being placed. Other means of support require prior approval.

B. Verify that reinforcement and other items to be cast into concrete are accurately placed, positioned securely, and will not cause hardship in placing concrete. Document inspection on the Pre-Pour Inspection Checklist.

C. Concrete

1. Before placing:

a. Notify WRPS Construction Representative prior to placement of concrete components for witnessing of activities by an Independent Qualified Installation Inspector, or an Independent Qualified Registered Professional Engineer (IQRPE), as required by WAC 173-303-640.

b. Approve "Pre-Pour Inspection Checklist," including identification of sections of structure to be placed, maximum size of coarse aggregate, and design strength.

c. For each truckload, collect "Trip Ticket." Trip Tickets shall contain information listed in ASTM C94, paragraphs 14.1.1 through 14.1.10, and water to cementitious material ratio. Before test sampling and placing concrete, Trip Ticket shall be reviewed by the field inspector of the Testing Agency. After depositing concrete, Trip Ticket shall be completed and submitted.

d. Discharge concrete rinsate at Company-approved location.

e. Place in accordance with ACI 301, Section 5.3. Do not drop more than 5 ft.

f. Slump field adjustment only as permitted in ACI 301, Section 4.3.

2. Placing concrete against subgrade/base material: Place on or against firm, damp surfaces free of frost, ice, and free water. Dampen earth surfaces to receive fresh concrete.

3. Consolidation: Consolidate concrete in accordance with ACI 301, Section 5.3.2.5. Avoid contact between vibrator head and forms, reinforcement, or embedded items.

4. Construction joints: Make in accordance with ACI 301, Section 5.3.2.6. Coat joints with epoxy resin, in accordance with manufacturer recommendations.

5. Expansion and Contraction Joints:

   a. Make in accordance with ACI 301, Section 2.2.2.5.

   b. Saw cuts are used to create control joints in concrete. The cuts should be made at a predetermined spacing and only after the concrete has obtained sufficient strength to prevent raveling, but before internal cracking begins. Typically, these cuts are made the morning following the pour.

   c. Install control joint filler in accordance with manufacturer instructions.

   d. Install joint filler 1/2 in. (6 mm) below concrete finish level.

   e. Prior to sealing, slide expansion joint cap over the expansion joint.

   f. After concrete is placed and cured, install screwdriver through the top of expansion joint cap, pull free, and discard.

   g. Seal with suitable joint sealant as specified in Section 07 92 00, “Joint Sealants.”

6. Form Removal and Concrete Repair:

   a. Form removal: Remove in accordance with ACI 301, Section 2.3.2.

   b. Cut back form ties and examine concrete surfaces for defects. Repair only after permission for patching is given by the WRPS Construction Representative.

   c. Place concrete repair mortar within one hour after mixing. Do not re-temper mortar.

   d. Repair surface defects in accordance with ACI 301, Section 5.3.7. Cure concrete repairs same as new concrete. Repair and patch defective areas when approved by the WRPS Construction Representative. Remove and replace concrete that cannot be repaired and patched to the approval of the WRPS Construction Representative. Complete all concrete repairs prior to final acceptance.

7. Concrete Finishes and Tolerances:

   a. Measuring for tolerances shall be performed in accordance with ACI 301, Section 5.3.4.2.

   b. Formed surfaces: Start finishing following concrete repair and complete within 96 hours after forms have been removed. Finish in accordance with ACI 301 Section 5.3.3.

      i. Surfaces exposed to earth backfill: Rough form finish.

      ii. Exterior surfaces exposed to view and/or weather: Smooth form finish.

   c. Unformed surfaces: Finish in accordance with ACI 301, Section 5.3.4.

      i. Exterior slabs: Broom finish. Surface shall be flat per ACI 117, Section 4.8.

D. Place non-shrink grout where shown on Contract Drawings, in accordance with manufacturer recommendations.

3.3 CONCRETE PROTECTION AND CURING

A. Weather conditions: Protect concrete in accordance with ACI 301, ACI 308.1, and ACI 305.1 or ACI 306.1, if weather conditions so dictate.

B. Cure concrete in accordance with ACI 301, Section 5.3.6. Clear curing compounds shall be tinted or applied to surfaces marked to show extent of spraying.

C. Protect concrete during adverse weather conditions in accordance with ACI 301.

D. Protect concrete from mechanical damage in accordance with ACI 301, Section 1.8.

3.4 FIELD INSPECTIONS AND TESTS

A. Engage a qualified special inspector and qualified testing and inspecting agency to perform field tests and inspections, and prepare test reports.

B. Personnel performing field testing of concrete shall be ACI Concrete Field Testing Technicians, Grade I, and personnel performing laboratory testing shall be certified as an ACI Concrete Laboratory Technician, Grade 1 (or higher).

C. Pre-Pour Inspection: A concrete Pre-Pour Inspection Checklist shall be prepared and signed off prior to any concrete pouring. The inspection checklist shall include inspection of the following items prior to pouring concrete: forms, reinforcement, design mix, chamfer of exposed concrete edges, subgrade, embedments, and other items that may need inspection.

   Ensure rebar is correctly located, supported, and tied. Document on Pre-Pour Inspection Checklist along with other required attributes.

D. Concrete samples shall be obtained in accordance with ASTM C172 for each 50 cubic yards or fraction thereof of concrete placed in any given day. Each concrete test sample shall be tested as follows.

1. Air content per ASTM C231.

2. Slump per ASTM C143.

3. Concrete temperature and surrounding air temperature shall also be measured at point of discharge each time a set of compressive strength test specimens is made and hourly when ambient temperature is below 40°F or when above 80°F.

4. Mold, transport, cure, and test concrete strength test specimen per ASTM C31, ASTM C511, and ASTM C39. The required number and frequency of test specimens shall be in accordance with the following table.

PART 4 SCHEDULE OF CONCRETE TEST CYLINDERS

Table 4-1. Cylinders to be Tested.

	Number of Cylinders to be Tested at Various Ages for Each 50 Cubic Yards of Concrete or Faction Thereof		
Cylinder Size	7 Days	28 Days	Spare
6” x 12”	2 cylinders	2 cylinders	2 cylinders
4” x 8”	3 cylinders	3 cylinders	3 cylinders

Notes:

1. One set of two 6” x 12” (150 mm x 300 mm) cylinders or one set of three 4” x 8” (100 mm x 200 mm) cylinders comprises a strength test.

2. If any cylinder in the 28-day strength test shows evidence of improper sampling, molding, or testing, discard the specimen and use one of the spare cylinders to determine the strength. Other spare cylinders may be used only when authorized by the purchaser. The Contractor shall not use these cylinders for any other purpose and shall make additional cylinders if additional strength tests are desired such as 3-day test.

END OF SECTION 03 30 00

SECTION 05 05 38

CONCRETE ANCHORS

PART 1 GENERAL

1.1 SUMMARY OF WORK

A. Material and installation for post-installed concrete anchors shall conform to the requirements of this Section.

1.2 RELATED DOCUMENTS / CODES AND STANDARDS

Drawings and general provisions of the Contract Statement of Work, including Division 01 Specification Sections, apply to this Section.

The following documents and others referenced therein, form part of the Contract to the extent designated in this Section. Referenced documents are those current as of the date of this Section unless otherwise indicated.

A. ASTM International (ASTM)

ASTM C881/C881M	Epoxy-Resin-Based Bonding Systems for Concrete
ASTM E488/E488M	Strength of Anchors in Concrete and Masonry Elements
ASTM E1512	Testing Bond Performance of Adhesive-Bonded Anchors
ASTM F593	Stainless Steel Bolts, Hex Cap Screws and Studs

B. American Concrete Institute (ACI)

ACI 318	Building Code Requirements for Structural Concrete
ACI 349-06	Code Requirements for Nuclear Safety-Related Concrete Structures
ACI 355.2	Standard for Evaluating the Performance of Post-Installed Mechanical Anchors in Concrete
ACI 355.4	Qualification of Post-Installed Adhesive Anchors in Concrete

C. International Code Council (ICC)

ICC-ES AC01	Acceptance Criteria for Expansion Anchors in Masonry Elements
ICC-ES AC58	Acceptance Criteria for Adhesive Anchors in Masonry Elements

ICC-ES AC308 Acceptance Criteria for Post-Installed Adhesive Anchors in Concrete Elements

D. U.S. Federal Government Specifications

A-A-1922A, A-A01923A and A-A-55614 for Expansion and Shield-Type Anchors

1.3 SUBMITTALS

A. Submit product data and manufacturer installation instructions to Owner for record. All documents shall be submitted in accordance with the requirements.

B. Test Reports: ICC-ES Code approvals and performance data that includes recommended loading for each application.

C. Only manufacturers with an ICC-ES Report will be considered for substitution requests. Contractor shall submit, for Engineer review, calculations that are prepared and sealed by a registered Professional Engineer showing substituted product can achieve an equivalent holding capacity using the appropriate design procedure as required by the Building Code. The calculations should indicate diameter and embedment—with consideration of all applicable reduction and modification factors—for substituted product to achieve equivalent performance of that illustrated on the Design Drawings. Any increase in material costs for such submittal shall be the responsibility of the Contractor.

1.4 QUALITY ASSURANCE

A. Post-installed anchors and related materials shall be listed by one or more of the following agencies, as applicable:

1. ICC-ES

2. UL and/or FM

B. Post-installed anchors shall be qualified as Anchor Category I anchors (low sensitivity to installation and high reliability) in accordance with ACI 355.2 Chapter 10 and ACI 349-06 Commentary Section RD.3.3.

C. Post-installed anchors shall also be qualified for use in cracked concrete and shall have passed the Simulated Seismic Tests in accordance with ACI 355.2. Pullout strength, Np, and steel strength of the anchor in shear, V_{sa}, shall be based on the results of ACI 355.2 Simulated Seismic Tests.

D. Anchors qualified for use only in uncracked concrete are not permitted.

E. Anchors qualified for use only in redundant applications are not permitted.

1.5 DELIVERY, STORAGE, AND HANDLING

A. Deliver products to job site in manufacturer or distributor packaging undamaged, complete with installation instructions.

B. Protect and handle materials in accordance with manufacturer recommendations to prevent damage or deterioration.

PART 2 PRODUCTS

2.1 MANUFACTURERS

A. Drillco National Group, Astoria, NY 11103

B. Hilti Corp., Plano, TX 75024

C. ITW Ramset/Red Head, Glendale Heights, IL 60137

D. Powers Fasteners, Inc., Brewster, NY 10509

E. Simpson Strong-Tie Co., Pleasanton, CA 94588

2.2 EXPANSION ANCHORS

A. Concrete expansion anchors shall be used where specifically stated on the Drawings.

B. Expansion anchors are used for the installation of comparatively light metal accessories that are not required to be installed before the concrete is placed. Expansion anchors will not be permitted in applications that will be subjected to vibrations or impact loads.

C. Expansion anchor body, nut, washer, and expansion sleeve shall be Type 316 stainless steel. All threaded portions of stainless steel anchors shall be coated with an approved thread lubricant (anti-seize).

D. Acceptable Products:

1. Hilti, Inc., Kwik Bolt®[2] TZ SS 316,

2. ITW Ramset/Red Head, Trubolt®[3] Wedge,

3. Simpson Strong-Tie Company, Inc., Strong-Bolt®[4] 2 Wedge Anchor,

4. Or approved equal.

[2] Kwik Bolt is a registered trademark of Hilti Aktiengesellschaft Corporation, Liechtenstein.
[3] Trubolt is a registered trademark of Illinois Tool Works, Inc., Glenview, Illinois.
[4] Strong-Bolt is a registered trademark of Simpson Strong-Tie Company, Inc., Pleasanton, California.

2.3 ADHESIVE ANCHORS

A. Concrete Adhesive Anchors: Anchors shall be Type 316 stainless steel studs, bolts, nuts, and washers. After anchor stud installation, and prior to assembly, all threaded portions of stainless steel bolts, studs, and cap screws shall be coated with an approved thread lubricant (anti-sieze).

B. Two-Part Chemical Adhesives: Adhesives shall be a cartridge-type, two-component, solid epoxy-based system dispensed and mixed through a static mixing nozzle supplied by the manufacturer. It shall be insensitive to moisture, and be designed for installation in adverse environments. The cure temperature, pot life, and workability of adhesive shall be compatible for intended use and anticipated environmental conditions.

C. Manufacturers and Products for Two-Part Adhesives for use with solid base concrete:

1. Hilti Corp., Plano, TX:

   a. HIT-HY 200

   b. HIT-RE 500 v3

2. ITW Ramset/Red Head, Glendale Heights, IL:

   a. C6 Epoxy

   b. G5 Epoxy

   c. A7 Acrylic

3. Powers Fasteners, Brewster, NY:

   a. Pure110+

   b. AC100+Gold®[5]

4. Simpson Strong-Tie Co., Pleasanton, CA:

   a. AT

   b. SET-XP

   c. SET

D. Adhesive Limitations:

1. Installation Temperature: When the base material temperature drops below 40°F (5°C), only Acrylic Adhesives shall be used for adhesive installations. See manufacturer instructions for additional minimum temperature requirements.

[5] AC100+Gold is a registered trademark of Powers Fasteners, Inc., Brewster, New York.

2. Moisture: Refer to manufacturer information when moisture is present in or around hole.

3. Oversized Holes: Refer to manufacturer information if drilled hole size is larger than what is recommended.

4. Core-drilled Holes: Refer to manufacturer information if holes are drilled with a core-drill bit.

2.4 ANCHOR SIZES

A. Anchor size (nominal diameter and embedment as appropriate) shall be as indicated on the Design Drawings. If not indicated on these Drawings, sizes shall be provided as required to maintain not less than the appropriate Code safety factors over manufacturer performance load tables. If the actual concrete compressive strength is not known, the compressive strength shall be determined through testing.

PART 3 EXECUTION

3.1 GENERAL

A. Drilled-in concrete anchors shall be installed in accordance with the manufacturer printed instruction/specifications and to the requirements specified herein. In case of conflict, the requirements specified herein shall govern. The locations where anchors will be installed, and the sizes and types of anchors, shall be as indicated on the Design Drawings.

B. Where manufacturer recommends use of special tools for installation of anchors, such tools shall be used unless otherwise permitted specifically by the Owner.

C. The minimum projection of the threaded part of a bolt, beyond the nut. Shall be 1/4 in. (6 mm), after anchor installation is completed. The projection over 1/4 in. (6 mm) shall not be removed without Owner approval.

D. The overall anchor length and hole depth that is required shall be determined by the Contractor, such that the specified minimum effective embedded length and bolt projection can be obtained.

E. Holes for the anchors may be drilled through hardened grout, finished concrete, or surface repaired concrete, but the effective embedded length shall be determined from the surface of the rough concrete. Holes shall not be drilled through grout or concrete that has not completely hardened, nor shall grout or concrete be placed around untightened anchors.

F. Reuse of anchors **WILL NOT BE PERMITTED**.

G. Anchors that are 1/4 in. (6mm) diameter are allowed in all locations as indicated on the Design Drawings, provided the required hole depth is less than the depth of the concrete covering the main reinforcement.

H. Welding of/to anchors **WILL NOT BE PERMITTED**.

I. Expansion anchors shall not be used for equipment subjected to vibration (i.e., rotating machinery) or to support piping subjected to flow induced vibrations.

J. Minimum effective embedded lengths (Le), spacings (S), edge distance (ED), and distance to embedded steel (ES) shall be adjusted as follows under certain conditions:

1. When two anchors of different diameters are installed adjacent to each other, the dimension "S" shall be the average of the two "S" dimensions for these diameters, respectively.

2. If dimensions ED, ES, and S cannot be maintained between two anchor assemblies, the allowable erection tolerance indicated on the Design Drawings shall be used to resolve the problem. If the problem involves anchors installed by two different Contractors, their erection tolerances shall be used, or Owner shall be notified for a resolution.

3. Distance from the centerline of an anchor to the edge of an embedded steel plate shall be equal to or less than S.

K. Anchor relocation tolerances may be provided by the Engineer of Record to avoid cutting of reinforcing steel.

3.2 DRILLING OF HOLES

A. For all anchors, holes in concrete shall be drilled with quality carbide tipped solid bits, using a rotary, or percussion-type power drill.

B. Embedded Items: Identify position of reinforcing steel and other embedded items prior to drilling holes for anchors. Exercise care in coring or drilling to avoid damaging existing reinforcing or embedded items. Notify the Engineer if reinforcing steel or other embedded items are encountered during drilling. Take precautions, as necessary, to avoid damaging electrical and telecommunications conduit.

C. Each hole shall be drilled precisely in order to maintain the anchor pullout value. The tolerances on the bit shall be as specified by the anchor manufacturer for each anchor size. The anchor shall be no more than 6° out of plumb after installation of undercut anchors or 10° out of plumb after installation of other anchors. Holes shall be cleaned in accordance with the manufacturer recommendations. Square or rectangular beveled washers shall be used to maintain full bearing of the nut.

D. The maximum depth of the hole shall not be greater than the thickness of the concrete, minus 2 1/2 in. (65 mm).

E. Holes for the anchors shall not be drilled until the concrete has been cured for a minimum of 28 days.

F. If drilled holes are not used, they shall be filled with dry-pack grout.

3.3 TIGHTENING OF ANCHORS

A. After the anchors are driven into the holes, they shall be brought to a "hand-tight" condition so that all parts of the connection are in good contact with one another.

B. Anchors shall be tightened to the torque values recommended by the manufacturer. Contractor shall exercise caution not to over-torque the anchor, causing damage to the concrete or anchor. Tightening shall proceed systematically from the most rigid or inner part of the connection to its free edges. During this operation, there shall be no rotating of the parts, except the nuts and washers.

C. A calibrated torque wrench shall be used for tightening anchors. Calibration and recalibration shall be performed on the following frequency:

1. For a direct reading torque wrench, on a monthly basis.

2. For a snap-type torque wrench, on a monthly basis.

3. For an air-driven impact wrench, on a daily basis.

3.4 REPAIR OF FAILURES

A. Failures shall be rectified as follows:

1. Concrete Failure (this includes all cracking or spalling of the concrete in the vicinity of an installed anchor):

a. Concrete shall be repaired in accordance with the project concrete repairing procedure.

b. After the concrete has been repaired, the anchor hole may be redrilled, in accordance with Article 301.2 of this Section.

2. Anchor Failure (this includes anchor breakage, slippage or loosening to the extent that the anchor cannot be tightened to the installation torque):

a. If the unacceptable anchor can be removed without damaging the surrounding concrete, the hole may be redrilled and the anchor replaced with the next larger size anchor. The effective embedded length shall conform to the requirements of the manufacturer.

b. If the unacceptable anchor cannot be removed without damaging the surrounding concrete, the anchor location shall be moved within the tolerance given for the connection by the Engineer of Record. The minimum center-to-center distance from the unacceptable anchor to the replacement hole shall be two times the nominal bolt diameter. If this distance exceeds the given tolerance on the placement of the anchors, Owner shall be notified before proceeding.

3.5 INSPECTION AND TESTING

A. Special inspection, periodic or continuous, of post-installed anchors shall be provided as required by ICC Reports and/or as specified by the Engineer of Record. This service shall be performed by an independent testing/inspection agency hired by the Contractor.

B. The Engineer of Record may require pullout or shear tests, in addition to Special Inspection to determine the adequacy of the anchors. A field-testing program shall be established by the independent test laboratory and/or the Engineer of Record and performed in accordance with appropriate ASTM test standards. Field tests shall be non-destructive when at all possible.

C. During the course of the work, Owner may inspect the various phases of the work at the Project Site, for full compliance with the requirements specified herein and to the requirements indicated on the Design Drawings. Any work failing to meet the specified requirements shall be rectified or replaced by Contractor at its expense.

END OF SECTION 05 05 38

SECTION 05 50 00

METAL FABRICATION

PART 1 GENERAL

1.1 SUMMARY OF WORK

A. Fabrication of steel or other metal structures and equipment shown on Design Drawings.

1.2 RELATED DOCUMENTS / CODES AND STANDARDS

Drawings and general provisions of the Contract Statement of Work, including Division 01 Specification Sections, apply to this Section.

The following documents and others referenced therein, form part of the Contract to the extent designated in this Section. Referenced documents are those current as of the date of this Section unless otherwise indicated.

A. American Society of Mechanical Engineers (ASME)

ASME B&PVC, 2017	Boiler and Pressure Vessel Code
Section IX	Qualification Standard for Welding and Brazing Procedures, Welders, Brazers, and Welding and Brazing Operations

B. American Society for Nondestructive Testing (ASNT)

ASNT SNT-TC-1A, 2016	Personnel Qualifications and Certification in Nondestructive Testing

C. ASTM International (ASTM)

ASTM A36	Standard Specification for Carbon Structural Steel
ASTM A240/A240M	Standard Specification for Chromium and Chromium-Nickel Stainless Steel Plate, Sheet, and Strip for Pressure Vessels and for General Applications
ASTM A500	Standard Specification for Cold-Formed Welded and Seamless Carbon Steel Structural Tubing in Rounds and Shapes
ASTM A992	Standard Specification for Structural Steel Shapes

D. American Welding Society (AWS)

AWS D1.1/D1.1M, 2015	Structural Welding Code – Steel
AWS D1.6/D1.6M, 2017	Structural Welding Code – Stainless Steel

AWS QC1 Certification of Welding Inspectors

1.3 SUBMITTALS

A. See the Contract Statement of Work for submittal procedures.

B. Approval Required:

1. Welding personnel qualifications: Five days minimum before start of fabrication, submit Welder Performance Qualification Records and Welder Continuity Logs, as required by Paragraph 1.4.B.1.

2. Welding procedure qualifications: Five days minimum before first use, submit Weld Procedure Specifications and Procedure Qualification Records, as required by Paragraph 1.4.B.1.

3. Examination personnel certifications and qualifications: Five days minimum before first use, submit examination personnel qualification, as required by Paragraph 1.4.B.2.

4. Examination procedures: Five days minimum before start of fabrication, submit examination procedures, as required by Paragraph 1.4.B.3.a.

5. Carbon Steel Weld Examination, as required by Paragraph 3.5.A.1.

6. Shop Drawings and production travelers.

C. Approval Not Required: None.

1.4 QUALITY ASSURANCE

The Seller shall comply with the following Quality Assurance requirements in addition to those of the Contract Statement of Work:

A. Misrepresented Products: See the Contract Statement of Work for required measures to prevent use of misrepresented products.

B. Qualifications of Welding Personnel and Procedures:

1. Personnel and procedures for welding structural carbon steel shall be qualified in accordance with AWS D1.1/D1.1M for steel structure before welding. Qualification of welding personnel and procedures in accordance with ASME B&PVC, Section IX, may be substituted for components welded in accordance with AWS D1.1/D1.1M. Maintain copy of welding procedure Specifications, procedure qualification records, and welder performance qualification test results and renewal of qualification documentation. Where stainless steel materials are welded to carbon steel, (or stainless to stainless), AWS D1.6/D1.6M procedures shall govern, unless ASME B&PVC, Section IX, was substituted.

2. Qualification of examination personnel: Maintain copies of examination personnel certifications and written examination performance procedures.

a. Personnel performing visual examinations shall be Certified Welding Inspectors who have received certification in accordance with AWS QC1.

b. Personnel performing other nondestructive examinations (NDEs) shall be certified in accordance with approved procedure, which shall meet the requirements of ASNT SNT-TC-1A. Use Level II or III personnel to interpret results.

3. Qualification and certification of NDE personnel shall be in accordance with the written practice of the vendor, based on the Recommended Practice ASNT SNT-TC-1A.

a. Examination procedures: Examination procedures shall be in accordance with AWS D1.1/D1.1M or AWS D1.6/D1.6M as applicable, and this Specification. Examination shall use statically loaded criteria for both codes. Maintain copies of examination procedures.

1.5 DELIVERY, STORAGE, AND HANDLING

A. See the Contract Statement of Work for general requirements.

1.6 PROJECT CONDITIONS

A. General: Every item shipped is to arrive at the job site in the same condition as when it passed all quality control inspections and tests.

B. Preservation and Packaging: All items shall be dried and cleaned to protect against rust and corrosion. Do not wrap the assemblies in shrink-wrap or other substances that can cause condensation to collect inside the wrapper. All items shall be protected from dirt, soil, and moisture and packaged for long-term storage in an unprotected exterior environment. All items shall be boxed, crated, or otherwise packaged to eliminate damage during shipping, handling, and storage.

C. Marking: Packages shall be suitably marked on the outside to facilitate identification of the purchase order, the procurement Specification, the package contents, and any special handling instructions.

1.7 PERMITS

A. Obtain and conspicuously post the following permits before starting work under this Section.

1. Hot Work Permit: See the Contract Statement of Work.

PART 2 PRODUCTS

2.1 SUBSTITUTES

A. See the Contract Statement of Work for substitution approvals.

2.2 MATERIALS

Use the following materials, unless otherwise shown on Contract Drawings:

A. Rolled Steel Shapes, Plates, and Bars: ASTM A36, ASTM A992 Grade 50, or ASTM A240/A240M Grade 304L.

B. Hollow Structural Sections (i.e., Steel Tubing): ASTM A500, Grade B

C. Fasteners

1. Weld studs: Nelson Stud Welding Co., Type H4L or approved substitute.

D. Welding Electrodes/Filler Metal:

1. Carbon steel – Matching filler metal with F_u = 70,000 psi (minimum).

E. Coating: See Section 09 91 00, "Painting."

2.3 FABRICATION

A. General

1. Verify measurements, including field measurements, before fabrication. Provide miscellaneous bolts and anchors, supports, braces, and connections necessary for completion of metal fabrications. Cut, reinforce, drill, and tap metal fabrications shown to receive finish hardware and similar items. Weld or bolt connections as shown on the Drawings.

2. Perform welding of steel connections in accordance with AWS D1.1/D1.1M or AWS D1.6/D1.6M, as applicable.

B. Miscellaneous Steel Items: Supply required clips, frames, equipment supports, and other fabrications not shown on the Drawings. Fabricate parts from standard structural sections or shapes, to sizes required. Wherever miscellaneous parts are exposed, grind edges, corners, and rough cuts smooth and free of snags. Shop paint parts except those to be embedded in concrete or those that require other specific finishes.

C. Finishes

1. Prime and paint ferrous metal in accordance with Section 09 91 00, "Painting." Do not coat members to be embedded in concrete, surfaces and edges to be field welded, or items to be galvanized. Shop paint may extend into embedded areas where impractical to remove.

2. Touch up damaged zinc surfaces with zinc-rich coating. Apply in accordance with manufacturer instructions.

PART 3 EXECUTION

3.1 EXAMINATION

A. Examine areas where metal fabrications are to be installed and notify the WRPS Construction Representative, in writing, of conditions detrimental to proper and timely

completion of work. Do not proceed with work until detrimental conditions have been corrected.

3.2 PREPARATION

A. Prepare setting Drawings, diagrams, templates, and instructions for installation of anchorages, such as concrete inserts and miscellaneous items having integral anchors to be embedded in concrete. Coordinate with WRPS Construction Representative for delivery of items to Site.

3.3 INSTALLATION

A. Install metal fabrications plumb, level, or as shown on the Drawings.

B. Make field connections as neatly as possible, with joints flush and smooth. Grind smooth exposed field welds before field painting. Repair welds in galvanized work with two coats of zinc-rich coating.

C. Weld Studs: Installation, testing and welder qualification shall be in accordance with the manufacturer written instructions and AWS D1.1/D1.1M, Section 7 for carbon steel, or AWS D1.6/D1.6M, Section 9, for stainless steel.

3.4 APPLICATION

A. After installation has been completed, clean and paint connections with primer. Touch-up shop prime coat, wherever damaged. Repair breaks in galvanized coating with zinc-rich coating.

3.5 FIELD INSPECTIONS AND TESTS

A. Weld Examination

1. Perform visual examination of steel welds in accordance with AWS D1.1/D1.1M and AWS D1.6/D1.6M, Sections 6.5 and 6.9 (statically loaded structures). Record examination results.

END OF SECTION 05 50 00

SECTION 07 92 00

JOINT SEALANTS

PART 1 GENERAL

1.1 SUMMARY OF WORK

A. Clean and prepare joint surfaces.

B. Apply sealant and backing materials.

1.2 RELATED DOCUMENTS / CODES AND STANDARDS

Drawings and general provisions of the Contract Statement of Work, including Division 01 Specification Sections, apply to this Section.

The following documents and others referenced therein, form part of the Contract to the extent designated in this Section. Referenced documents are those current as of the date of this Section unless otherwise indicated.

A. Code of Federal Regulations (CFR)

40 CFR 59	National Volatile Organic Compound Emission Standards for Consumer and Commercial Products

B. ASTM International (ASTM)

ASTM C920	Elastomeric Joint Sealants

1.3 SUBMITTALS

A. Submit the following in accordance with the Contract Statement of Work.

1. Catalog Data: Manufacturer data sheets on each product to be used, including preparation instructions and recommendations, storage and handling requirements and recommendations, and installation methods. Additional information to include Material Safety Data Sheet, shelf life, and temperature range of storage and application.

1.4 QUALITY ASSURANCE

The Seller shall comply with the following Quality Assurance requirements in addition to those of the Contract Statement of Work:

A. Installer qualifications: Trained and/or experienced in the application of sealants to be used.

B. Source limitations: Obtain each type of joint sealant through one source from a single manufacturer.

1.5 DELIVERY, STORAGE, AND HANDLING

A. Comply with the Contract Statement of Work.

B. Store products in manufacturer unopened packaging, with labels intact, until ready for installation.

C. Store products off ground.

D. Store materials at minimum of 68°F for at least 24 hours prior to installation, regardless of temperature at location.

E. Do not allow materials to freeze prior to application.

PART 2 PRODUCTS

2.1 PRODUCT OPTIONS AND SUBSTITUTIONS

A. See the Contract Statement of Work for substitution approvals.

2.2 MATERIALS

A. General: Provide exterior sealants that comply with the following limits for volatile organic compound content when calculated according to 40 CFR 59, Subpart D (EPA Method 24) or approved equal:

1. Sealants for Nonporous Substrates: 250 g/L.

2. Sealants for Porous Substrates: 775 g/L.

B. Sealant: Single component, traffic-grade, neutral-curing silicone joint sealant - ASTM C920, Type S, Grade NS or P, Class 100/50 or approved equal.

2.3 ACCESSORIES

A. Joint Cleaner: Noncorrosive and nonstaining type, recommended by sealant manufacturer, compatible with joint-forming materials.

B. Joint Sealant Backing: Provide sealant backings of material that are nonstaining; are compatible with joint substrates, sealants, primers, and other joint fillers; and are approved for applications indicated by sealant manufacturer based on field experience and laboratory testing.

C. Bond Breaker: Pressure-sensitive tape recommended by sealant manufacturer to suit application.

2.4 MISCELLANEOUS MATERIALS

A. Primer: Material recommended by joint-sealant manufacturer where required for adhesion of sealant to joint substrates indicated, as determined from preconstruction joint-sealant-substrate tests and field tests.

B. Cleaners for Nonporous Surfaces: Chemical cleaners acceptable to manufacturers of sealants and sealant backing materials, free of oily residues or other substances capable of staining or harming joint substrates and adjacent nonporous surfaces in any way, and formulated to promote optimum adhesion of sealants to joint substrates.

C. Masking Tape: Nonstaining, nonabsorbent material compatible with joint sealants and surfaces adjacent to joints.

PART 3 EXECUTION

3.1 EXAMINATION

A. Prior to installation, ensure that joint dimensions and physical and environmental conditions are suitable for application of joint sealers.

B. By beginning work of this Section, subcontractor warrants it has examined and verified that existing conditions are in accordance with provisions of Paragraph 3.1.A.

3.2 PREPARATION

A. Clean, prepare, and size joints in accordance with manufacturer instructions. Remove any loose materials and other foreign matter that might impair adhesion of sealant.

B. Verify that joint-shaping materials and release tapes are compatible with sealant.

C. Examine joint dimensions and size materials to achieve required width/depth ratios.

D. To allow sealants to perform properly, use joint filler to achieve required joint depths.

E. Use bond breaker where required.

3.3 INSTALLATION

A. Install sealant per manufacturer instructions.

B. Apply sealant within recommended temperature ranges. Consult manufacturer when sealant cannot be applied within recommended temperature ranges.

C. Tool joints as indicated on Drawings.

D. Joints: Free of air pockets, foreign embedded matter, ridges, and sags.

E. Coverage: Replace sealants that fail because of loss of cohesion or adhesion onto surfaces applied, or that does not cure. If the sealant can be detached from a surface by rubbing the surface contact point with a finger, then the surface adhesion is inadequate.

F. Follow manufacturer recommended cure time before painting or over coating.

END OF SECTION 07 92 00

SECTION 09 85 50

CHEMICAL RESISTANT DECONTAMINABLE COATINGS

PART 1 GENERAL

1.1 SUMMARY OF WORK

A. This applies to the special protective coatings applied to the finished concrete catch basin.

1.2 RELATED DOCUMENTS / CODES AND STANDARDS

Drawings and general provisions of the Contract Statement of Work, including Division 01 Specification Sections, apply to this Section.

The following documents and others referenced therein, form part of the Contract to the extent designated in this Section. Referenced documents are those current as of the date of this Section unless otherwise indicated.

A. American National Standards Institute (ANSI)

ASNI N512	Protective Coatings (Paints) for the Nuclear Industry

B. ASTM International (ASTM)

ASTM D412	Test Methods for Vulcanized Rubber and Thermoplastic Rubbers and Thermoplastic Elastomers – Tension
ASTM D570	Test Method for Water Absorption of Plastics
ASTM D638	Test Method for Tensile Properties of Plastics
ASTM D714	Test Method for Evaluating Degree of Blistering of Paints
ASTM D772	Test Method for Evaluating Degree of Flaking (Scaling) of Exterior Paints
ASTM D1653	Test Methods for Water Vapor Transmission of Organic Coating Films
ASTM D3912	Test Method for Chemical Resistance of Coatings Used in Light – Water Nuclear Power Plants
ASTM D4060	Test Method for Abrasion Resistance of Organic Coatings by the Taber Abraser
ASTM D4082	Test Method for Effects of Gamma Radiation on Coatings for Use in Light – Water Nuclear Power Plants

ASTM D4256	Test Method for Determination of the Decontaminability of Coatings Used in Light – Water Nuclear Power Plants
ASTM D4529	Standard Practice for Abrading Concrete
ASTM D4263	Test Method for Indicating Moisture Content in Concrete by the Plastic Sheet Method
ASTM D4541	Test Method for Pull-Off Strength of Coatings Using Portable Adhesion Testers
ASTM D5139	Sample Preparation for Qualification Testing of Coatings to be Used in Nuclear Power Plants
ASTM D5144	Guide for Use of Protective Coating Standards in Nuclear Power Plants
ASTM E84	Test Method for Surface Burning Characteristics of Building Materials

D. National Fire Protection Association®[6] (NFPA®)[6]

NFPA 255	Method of Test of Surface Burning Characteristics of Building Materials

C. Steel Structures Painting Council (SSPC)

SSPC SP 3	Power Tool Cleaning
SSPC SP 6	Commercial Blast Cleaning

D. U.S. Department of Energy

Waste Isolation Pilot Plant Industrial Safety and Health (IS&H) Manual

1.3 SUBMITTALS

A. See the Contract Statement of Work for submittal procedures.

B. Approval Required

1. List of materials: Unless specified on the design media, before delivery, submit colors and location to be used, and manufacturer catalog data sheets and charts showing adequate information to substantiate compliance to the requirements of this Section. Submittal shall also enumerate percentage of volatile and nonvolatile materials, percentage of component parts of each type of material,

[6] National Fire Protection Association, NFPA, NFPA 70, and NEC are registered trademark of National Fire Protection Association, Quincy, Massachusetts.

and the conversion factors to determine dry-film thickness from applied wet-film thickness. Also, submit Material Safety Data Sheets for materials proposed to be used.

2. Installers certificate (decontaminable coatings only): Before application, submit documentation that the application crew has been certified by the coating system manufacturer, as qualified to apply the selected coating system. As an alternative to crew certification, a submittal documenting onsite training by a technical representative from the coating manufacturer would be acceptable.

C. Approval Not Required: None.

1.4 QUALITY ASSURANCE

See Division 01 – General Requirements (under separate cover).

1.5 DELIVERY, STORAGE, AND HANDLING

A. See the Contract Statement of Work for general requirements. Store materials indoors.

1.6 PROJECT CONDITIONS

A. Environment for Coating: Coat exterior surfaces only when ambient and surface temperatures are within the range recommended by the coating manufacturer for the respective coating, which is within 40°F to 120°F, and ambient temperature is 5°F above the dew point.

B. General: Ensure that surfaces are dry and have attained required temperatures and conditions before starting work or continuing previously started work.

C. Weather: No exterior work shall be performed on unprotected surfaces if rain or moisture from other sources is present or expected before applied finishes can dry or attain proper cure.

D. Dust: No finishes shall be applied if dust is being generated at worksite.

PART 2 PRODUCTS

2.1 SUBSTITUTIONS

A. See the Contract Statement of Work for substitution approvals.

2.2 MATERIALS

A. Coating is limited to coat/repair/recoat of the catch basin surfaces and coating of newly installed plain carbon steel material located on the catch basin surface.

B. Primer for carbon steel assemblies: Inorganic zinc primer – "Dimetcote®[7] Steel Primer 21-5" by the Protective Coatings Division of Ameron.

C. Coating are to follow:

Manufacturer: Ameron, or Approved Substitute	
Use	**Product**
Field Primer	Amerlock®[8] 2/400
Concrete Surfacer	Nu-Klad 114A
Primer & Base Coating	Amerlock 400
Intermediate & Finish Coating	PSX 700 Siloxane

D. Filler and joint sealant as follows: "Nu-Klad 750A/760A" by Ameron Protective Coating Group, "Sikaflex – 1A" by Sika Corporation, or "COR-SEAL PS" by General Polymers.

PART 3 EXECUTION

3.1 EXAMINATION

A. Examine surfaces scheduled to receive coatings for conditions that will adversely affect execution, permanence, and quality of work, and which cannot be corrected through specified preparation.

B. Report, in writing to WRPS Construction Representative, conditions that may affect proper application of finish. Correct unsuitable conditions before beginning surface preparation or coating application.

3.2 PREPARATION

A. Ferrous Metal and Carbon Steel:

1. Prepare shop assemblies in accordance with SSPC SP 6. Remove abrasive residue and dust, and prime within four hours after preparation. Apply minimum of 0.5 mil of shop primer in accordance with manufacturer recommendations.

2. Prepare field erections in accordance with SSPC SP 3 and SSPC SP 6. Remove abrasive residue and dust, and prime within four hours after preparation.

B. Preparing a previously coated surface to be recoated:

1. Edges of tightly adherent coating remaining around the area to be recoated must be feathered so that the re-coating surface has a smooth finish.

[7] Dimetcote is a registered trademark of Amercoat Corporation, South Gate, California.
[8] Amerlock is a registered trademark of PPG Industries Ohio, Inc., Cleveland, Ohio.

C. Prepare of repair construction joints, shrinkage cracks, and other non-expanding cracks, gaps, or crevices in the surface to be coated, in accordance with coating manufacturer recommendations. Scratches, cracks, holes, entrapped air pockets, and abrasions shall be cut back to proper key and filled with surfacer, specified in Paragraph 2.2.C.

D. Post-priming:

1. Feather abrasions, chips, skips, and holidays occurring in prime coat by sanding, and recoat with material and color to minimum dry film thickness specified.

2. Previously coated surfaces shall be re-coated only after existing film is completely dry. Some coating systems require application of succeeding coats within a set time frame in order to properly adhere to the previous coat. Should the time frame recommended by the coating manufacturer be exceeded, prepare the base coat as recommended by the coating manufacturer.

3.3 APPLICATION

A. Apply coating materials and cure in accordance with manufacturer recommendations.

B. Apply with equipment recommended by coating manufacturer.

C. Coatings for new concrete shall be in accordance with coating schedule in Paragraph 3.6. Runs, drips, and other finish discontinuities shall be removed and surface repaired, to ensure smooth decontaminable surfaces.

3.4 PROTECTION

A. Provide and install drop cloths, shields, and other protective devices required to protect surfaces adjacent to areas being coated. Keep spatter, smears, droppings, and over-run of coating materials to a minimum and remove as coating work progresses.

B. Protect coating from rain until dry to the touch.

A. Upon completion of each coating application, protect coated surfaces from physical damage. Provide temporary stanchions, ropes, barricades, signs, etc., as required, to prevent foot or vehicular traffic (excepting application crew) on polyurethane-coated surfaces, for a minimum duration noted in the following chart:

Daily Mean Temperature	Minimum Duration of Protection	
	With Accelerator	Without Accelerator
Above 70°F	2 Days	5 Days
Between 55°F and 69°F	5 Days	10 Days
Between 45°F and 54°F	7 Days	14 Days

3.5 CLEANING

A. Collect and dispose of materials spotted or soaked with paint, oil, or solvents, and other flammable waste materials, daily, in accordance with the IS&H Program Manual. Minimize volume of potentially contaminated solids and liquids that must be disposed.

B. Salvageable brushes, rollers, spatulas, and spray equipment shall be thoroughly cleaned after use and shall contain no oils, thinners, or other residue.

C. Dispose of empty cans at the end of each shift, in accordance with the Statement of Work.

D. At completion of coating work, remove and dispose of materials, containers, rags, cloths, brushes, equipment, and miscellaneous other debris, in accordance with the Statement of Work. Clean up spills and report, if required, in accordance with the Statement of Work.

3.6 COAT SCHEDULE

Coat	Description	Color (*see note)	Minimum Dry Film µm (mils)
Concrete			
Base	Prime and base coats may be applied in a single 180 µm coat, if base coat is self-priming.	*	100 (4.0)
Intermediate	Intermediate and finish coats may be applied in a single 200 µm dry film coat.	*	100 (4.0)
Finish	Intermediate and finish coats may be applied in a single 200 µm dry film coat.	*	100 (4.0)
Carbon Steel			
Primer	Inorganic Zinc.	*	13 (0.5)
Field Primer	Prime and base coats may be applied in a single 180 µm coat.	*	75 (3.0)
Base	Prime and base coats may be applied in a single 180 µm coat.	*	100 (4.0)
Intermediate	Intermediate and finish coats may be applied in a single 200 µm dry film coat.	*	100 (4.0)
Finish	Intermediate and finish coats may be applied in a single 200 µm dry film coat.	*	100 (4.0)

NOTE: Contrast each coat from primer-darker to finish-lighter. Finish coat to be off-white to white.

3.7 FIELD INSPECTIONS AND TESTS

A. Measure the Wet Film Thickness (WFT) of each coat of material with a notched WFT gage (Nordson 790-015) at a minimum of five evenly spaced points for each 100 ft^2 of surface area or portion thereof to verify the application will provide the specified minimum dry film thickness. Document results in work package or fabrication documentation.

B. Verify and document that the coating material is within its specified shelf life.

C. Document results to verify coating materials are applied as specified in this Section.

END OF SECTION 09 85 50

SECTION 09 91 00

PAINTING

PART 1 GENERAL

1.1 SUMMARY OF WORK

A. This section includes materials, surface preparation and application of coatings for steel structures where specified per the Design Drawings.

1.2 RELATED DOCUMENTS / CODES AND STANDARDS

Drawings and general provisions of the Contract Statement of Work, including Division 01 Specification Sections, apply to this Section.

The following documents and others referenced therein, form part of the Contract to the extent designated in this Section. Referenced documents are those current as of the date of this Section unless otherwise indicated.

A. Society for Protective Coatings (SSPC)

SSPC-SP 3	Power Tool Cleaning
SSPC-SP 7/NACE No. 4	Brush-Off Blast Off Cleaning
SSPC-SP 10/NACE No. 2	Near White Blast Cleaning

1.3 SUBMITTALS

A. See the Contract Statement of Work for submittal procedures.

B. Approval Required

1. List of materials: Unless specified on the design media, before delivery, submit complete list of materials, colors, and location to be used. List shall enumerate percentage of volatile and nonvolatile materials and percentage of component parts of each type of material and the conversion factors to determine dry film thickness from applied wet film thickness.

2. Dry film thickness test results as required by Paragraph 3.6.A.

C. Approval Not Required: None.

1.4 QUALITY ASSURANCE

See Division 01 – General Requirements (under separate cover).

1.5 DELIVERY, STORAGE, AND HANDLING

A. See the Contract Statement of Work for general requirements. Store materials indoors.

1.6 PROJECT CONDITIONS

A. General: Ensure that surfaces are dry and have attained required temperatures and conditions before starting work or continuing previously started work.

B. Weather: No exterior work shall be performed on unprotected surfaces if rain or moisture from other sources is present or expected before applied finishes can dry or attain proper cure.

C. Dust: No finishes shall be applied if dust is being generated at worksite.

D. Temperature

1. Unless recommended otherwise by paint manufacturer, apply coatings when the following temperatures exist.

   a. Coating: Epoxy.

   b. Ambient Temperature: As recommended by manufacturer.

   c. Surface Temperature: As recommended by manufacturer.

2. If necessary, provide temporary heat until specified temperatures exist for required time period. Maintain temporary heat for 24 hours after paint application.

E. Humidity: Follow manufacturer directions for extremes.

F. Ventilation: Provide ventilation recommended for extremes.

PART 2 PRODUCTS

2.1 SUBSTITUTIONS

A. See the Contract Statement of Work for substitution approvals.

2.2 MATERIALS

A. Furnish Sherwin-Williams MACROPOXY®[9] 646 Fast Cure Epoxy, Part A (B58-600) and Part B (B58V600).

B. Furnish Sherwin-Williams Zinc Clad IV Coating, Part U (B69A8) and Part V (B69V8).

C. Furnish Sherwin-Williams SEAGUARD®[9] MP Multi-Purpose Epoxy Primer, Part A (N12Y200) and Part B (N12V200).

D. Furnish PPG Amercoat/Amerlock 400, Low VOC/ High-solids epoxy coating.

E. Furnish PPG PSX 700, Engineered Siloxane Coating.

[9] MACROPOXY and SEAGUARD are registered trademarks of SWIMC LLC, Cleveland, Ohio.

F. Furnish appropriate applicators per manufacturer recommendations.

PART 3 EXECUTION

3.1 EXAMINATION

A. Examine surfaces scheduled to receive coatings for conditions that will adversely affect execution, permanence, and quality of work, and which cannot be corrected through specified preparation.

B. Report, in writing to WRPS Construction Representative, conditions that may affect proper application of finish. Correct unsuitable conditions before beginning surface preparation or coating application.

3.2 PREPARATION

A. Protection

1. Provide and install drop cloths, shields, and other protective devices to protect surfaces adjacent to areas being painted. Keep spatter, smears, droppings, and over-run of paint materials to a minimum and remove as painting work progresses.

2. Promptly remove spills, splashes, and splatter. Use removal methods that do not damage surfaces being cleaned/painted.

3. Repair or replace surfaces damaged by painting work as directed by TOC Construction Representative.

4. Remove electrical outlet and switch plates, mechanical diffusers, escutcheons, registers, surface hardware, fittings, fastening, and similar items before starting work.

B. New Surface Preparation

1. Carbon Steel:

a. Prepare surfaces for scheduled finish systems in accordance with SSPC-SP 10/NACE No. 2.

2. Obtain written approval from WRPS Construction Representative before using dry or liquid abrasive blasting.

C. Old Surface Preparation

1. Prepare touch up area for scheduled touch-up system in accordance with SSPC-SP 3.

3.3 APPLICATION

A. Perform work in accordance with manufacturer instructions and this Section.

3.4 CLEANING

A. Furnish and maintain at Site, closed metal containers for disposal of waste materials. Collect materials spotted or soaked with paint, oil, or solvents and place in containers.

B. At completion of coating work, remove materials, containers, rags, cloths, brushes, tools, and equipment from site.

3.5 SCHEDULES

A. Paint and Finish

1. Carbon Steel: Light and ordinary exposures (not galvanized).

   a. Primer: Sherwin-Williams Zinc Clad. Shop apply one coat. Coat should be 3 mils in thickness. Apply per manufacturer instructions.

   b. Top Coat: Sherwin-Williams MACROPOXY 646. Field apply two coats. Coats should be 5-6 mils in thickness. Apply per manufacturer instructions.

2. Touch-Up

   a. Sherwin-Williams MACROPOXY 646. Field apply two coats. Coats should be 5-6 mils in thickness. Apply per manufacturer instructions.

3.6 FIELD INSPECTIONS AND TESTS

A. Measure the Wet Film Thickness (WFT) of each coat of material with a notched WFT gage (Nordson 790-015) at a minimum of five evenly spaced points for each 100 ft^2 of surface area or portion thereof to verify the application will provide the specified minimum dry film thickness. Document results in work package or fabrication documentation.

B. Inspection and testing will be performed by Quality Control Inspector.

END OF SECTION 09 91 00

SECTION 22 08 13

TESTING FOR PIPING

PART 1 GENERAL

1.1 SUMMARY OF WORK

A. Pressure testing of the following systems:

1. Process Piping (ASME B31.3)

2. Pressure testing shall be completed for the stainless steel piping (M-10) and the RTRP piping (M18). Pressure testing shall not be completed on the HDPE piping (M36).

1.2 RELATED DOCUMENTS / CODES AND STANDARDS

Drawing and general provisions of the Contract Statement of Work, including Division 01 Specification Sections, apply to this Section.

The following documents and others referenced therein, form part of the Contract to the extent designated in this Section. Referenced documents are those current as of the date of this Section unless otherwise indicated.

A. American Society of Mechanical Engineers (ASME)

ASME B31.3, 2016	Process Piping

B. ASTM International (ASTM)

ASTM E515-11	Standard Practice for Leaks Using Bubble Emission Techniques
ASTM E1003-13	Standard Practice for Hydrostatic Leak Testing

C. International Association of Plumbing and Mechanical Officials (IAPMO)

IAPMO UPC-2012	Uniform Plumbing Code

D. Underwriters Laboratories (UL)

UL 404	Standard for Gauges, Indicating Pressure, for Compressed Gas Service

E. Washington Administrative Code

WAC 173-303-640	Dangerous Waste Regulations Washington State
WAC 173-303-650	Surface Impoundments

1.3 SUBMITTALS

A. Action Submittals

1. Test plan for approval that includes:

a. Material of construction.

b. Design pressures.

c. Test pressures and duration of tests.

d. Test medium and method of achieving the test pressure.

e. Certification on calibration of pressure gauges.

f. Method to exclude personnel from the area containing the system to be tested.

g. Over-pressurization protection/prevention: Device make/model number, certification, pressure relief set point, point of installation in system.

B. Informational Submittals

1. Test Reports: Submit within 10 working days of successful test.

1.4 QUALITY ASSURANCE

See Division 01, General Requirements (under separate cover).

1.5 DELIVERY, STORAGE, AND HANDLING

A. See the Contract Statement of Work for general requirements.

1.6 SUBCONTRACTOR REQUIREMENTS

A. Notify WRPS Subcontract Technical Representative at least 24 hours (1 working day) in advance, to arrange for onsite witnessing by WRPS inspector of the piping test (a hold/witness point).

B. Notify WRPS, immediately, in the event of any accidental discharge.

C. Notify WRPS Construction Representative at least 24 hours (1 working day) in advance, to arrange for onsite witnessing of the above described testing (a hold/witness point) by an Independent Qualified Installation Inspector, or an Independent Qualified Registered Professional Engineer (IQRPE), as required by WAC 173-303-640.

1. IQRPE witnessing is limited to the work scope associated with the tie-in to the EMF and the 242-A condensate transfer lines, and ending at the new isolation valves installed within Basin 41 Catch Basin. Contract WRPS for further clarification.

PART 2 PRODUCTS

2.1 MATERIALS

A. Furnish instruments, equipment, material, and labor necessary to conduct tests.

B. Calibrate testing equipment, at reasonable intervals, with devices of accuracy traceable to National Institute of Standards and Technology (NIST). Test pressure shall be within the calibration range.

C. Test gauges used, shall be in accordance with IAPMO UPC-2012, Section 318.

1. Pressure gauges meeting Underwriters Laboratories (UL) in accordance with UL 404, Standard for Safety.

2. Gauges shall be protected by tempered safety glass, or plastic face or shield, and blowout back or plug.

PART 3 EXECUTION

3.1 GENERAL

A. After completion of NDE, perform leak/pressure testing of new piping in accordance with ASME B31.3 for normal service, this Section, and manufacturer recommendations.

B. Tie-In Joints:

1. Where leak/pressure testing of tie-in joints cannot be performed due to impracticability of leak/pressure test application, perform an initial service leak test in accordance with ASME B31.3, Paragraph 345.7. These joints may include tie-in flange connection to existing carrier pipe, bonds made to existing carrier pipe, or tee joints connecting new and existing piping.

2. Joints impracticable to leak/pressure test are where an existing expansion joint cannot be isolated from the leak test pressure, or where new piping cannot be isolated and leak tested without pressurizing long sections of existing piping. Tie-in joints that are impracticable to hydrostatically leak pressure test shall be identified by Contractor and approved by WRPS.

3.2 FIELD QUALITY CONTROL

A. Perform piping pressure test, before cleaning or flushing, to avoid possible discharge of chemicals due to pipe or joint failure during a pressure test.

B. All examination records and pressure test plans must be complete and submitted prior to testing.

C. Piping being tested shall remain exposed until WRPS has approved the test results.

D. Document testing of each piping system. Delineate, describe, and record each piping system. Within the description of each pressure test, include enough detail for correlation to weld/bond identification Drawings, shop fabrication Drawings, and/or project Design Drawing as applicable. For systems tested segmentally, provide references from various pressure tests to ensure entire systems have been tested.

E. Trenches may be backfilled between joints before testing, to prevent movement of pipe during testing. Ensure that thrust blocks are sufficiently hardened before testing.

F. Piping being tested shall not leak nor show any change in test pressure for duration specified, unless otherwise noted.

G. Where portion of piping system is to be concealed before completion, the portion shall be tested separately, as specified for the entire system.

H. Ensure piping supports are in place.

I. Isolate system gages, sensors, etc., from pressure tests, so instruments and devices are not damaged. Test pressure shall not exceed the maximum allowable test pressure for any vessel, pump, valves, or other component in the system.

J. Hydrostatic (Water) Testing:

1. Use potable water as test medium. Do not fill system until WRPS has approved the source of water supply.

2. Provide vents at high points to release trapped air while filling system.

3. Provide drains at low points for complete removal of test liquid.

4. Follow ASTM E1003 for detecting leaks, or use other enhanced detection methods, like pressure decay or vacuum decay techniques.

5. After the test duration, reduce pressure to design pressure and visually examine the system for leaks.

6. Drain system if there is a potential for freezing, e.g., no heat in building, coil in outside air stream, or other similar situations.

K. Pneumatic (Air) Testing – ASME B31.3 345.1(c), pneumatic testing is only allowed with Owner approval and is currently set at a maximum of 2 cubic feet (ft^3).

1. Use clean dry air (excluded from use with natural gas pipe testing) or inert gas as the test medium.

2. Barricade the area around the system to be tested.

3. Prior to application of full air test pressure, apply a preliminary test of not more than 10 psig to reveal possible major leaks.

4. After preliminary test, raise pressure in stages not more than 25% up to full test pressure, allowing at least 10 minutes for equalization of strain and detection of major leaks at each intermediate stage. Hold final test pressure for time specified.

   a. If test pressure is 25 psig or less, pressure can be raised in a single increment.

5. Use ASTM E515 for detecting leaks, or use other enhanced detection methods, like pressure decay or vacuum decay techniques.

6. After the test duration, reduce pressure to design pressure and visually examine the system for leaks.

L. If leaks are found, eliminate them by tightening, repair, or replacement, as appropriate, and repeat test until no leakage is found.

M. Where repairs or additions are made to piping system following the pressure test, test the affected piping. Testing is not required in cases where it does not include addition to, replacement, alteration or relocation of, any piping or in any cases where piping is set up temporarily for exhibition purposes.

3.3 RETESTING

A. If piping does not pass test, locate leak, safely vent pressure repair leaks, and repeat testing procedure until satisfactory results are obtained.

B. Make repairs to piping with new materials. Caulking on screwed joints, cracks, or holes is not acceptable.

C. Notify WRPS Construction Representative at least 24 hours (1 working day) in advance to arrange for onsite witnessing of the piping retesting (a hold/witness point) by an Independent Qualified Installation Inspector, or an Independent Qualified Registered Professional Engineer (IQRPE), as required by WAC 173-303-640.

1. IQRPE witnessing is limited to the work scope associated with the tie-in to EMF and 242-A condensate transfer lines and ending at the new isolation valves installed within Basin 41 Catch Basin. Contract WRPS Construction Representative for further clarification.

END OF SECTION 22 08 13

SECTION 26 05 02

BASIC ELECTRICAL REQUIREMENTS

PART 1 GENERAL

1.1 SUMMARY OF WORK

A. This section covers the work required in conjunction with other Division 26 Specifications necessary to procure, detail, manufacture, deliver to the jobsite, and install the electrical systems.

1.2 RELATED DOCUMENTS / CODES AND STANDARDS

Drawings and general provisions of the Contract Statement of Work, including Division 01 Specification Sections, apply to this Section.

The following documents and others referenced therein, form part of the Contract to the extent designated in this Section. Referenced documents are those current as of the date of this Section unless otherwise indicated.

A. National Electrical Contractors Association (NECA)

National Electrical Installation Standards

B. National Electrical Manufacturers Association (NEMA)

NEMA Z535.4 Product Safety Signs and Labels

C. National Fire Protection Association (NFPA)

D. NFPA 70, 2017 National Electrical Code (NEC

E. Underwriters Laboratories (UL)

Electrical Appliance and Utilization Equipment Directory

1.3 SUBMITTALS

A. See Contract Statement of Work for submittal procedures.

1.4 QUALITY ASSURANCE

The Seller shall comply with the following Quality Assurance requirements in addition to those of the Contract Statement of Work:

A. Provide the work in accordance with the NEC. Electrical material and equipment shall be accepted, certified, listed, labeled, or otherwise determined safe by a Nationally Recognized Testing Laboratory (NRTL) and indicated by an NRTL label applied by the

manufacturer or labeled by an NRTL representative following an NRTL field evaluation to provide basis for approval under NEC.

B. Materials and equipment, manufactured within the scope of standards published by UL, shall conform to those standards and shall have an applied UL listing mark or label.

C. Provide materials and equipment acceptable to the Authority Having Jurisdiction for Class, Division, and Group of hazardous area indicated.

D. Electrical inspection shall be performed by personnel that are certified to perform NEC inspections.

1.5 DELIVERY, STORAGE, AND HANDLING

A. See Statement of Work.

B. All components, unless specified otherwise in this Section or related sections, shall be compatible with being transported by public roadway to contract specified destination. Items shall either be self-supporting or provided with packing and dunnage to ensure their stability and protection from damage.

PART 2 PRODUCTS

2.1 GENERAL

A. Where two or more units of the same class of material or equipment are required, provide products of a single manufacturer. Component parts of materials or equipment need not be products of the same manufacturer.

B. Material and equipment installed in heated and air-conditioned areas shall be capable of continuous operation at their specified ratings within an ambient temperature range of 40°F to 104°F.

C. Materials and equipment installed outdoors shall be capable of continuous operation at their specified rating within the ambient temperature range of -25°F to 115°F, unless otherwise specified on Drawings.

D. Electrical ratings of materials and equipment that are reduced by increased elevation shall be derated as required for Site elevation.

2.2 EQUIPMENT FINISH

A. Manufacturer standard finish color, except where specific color is indicated. If manufacturer has no standard color, finish equipment in accordance with light gray color finish as approved by the WRPS Construction Representative.

2.3 SIGNS AND LABELS

A. Sign size, lettering, and color shall be in accordance with NEMA Z535.4.

PART 3 EXECUTION

3.1 GENERAL

A. Electrical Drawings show general locations of equipment, devices, and raceway, unless specifically dimensioned. Contractor shall be responsible for actual location of equipment and devices and for proper routing and support of raceways, subject to approval of WRPS Construction Representative.

B. Check approximate locations of light fixtures, switches, electrical outlets, equipment, and other electrical system components shown on Drawings for conflicts with openings, structural members, and components of other systems and equipment having fixed locations. In the event of conflicts, notify WRPS Construction Representative in writing.

C. Install work in accordance with NECA National Electrical Installation Standards, unless otherwise specified.

D. Keep openings in boxes and equipment closed during construction.

E. Lay out work carefully in advance. Do not cut or notch any structural member or building surface without specific approval of WRPS Construction Representative. Carefully perform cutting, channeling, chasing, or drilling of floors, walls, partitions, ceilings, paving, or other surfaces required for the installation, support, or anchorage of conduit, raceways, or other electrical materials and equipment. Following such work, restore surfaces to original condition.

3.2 COMBINING CIRCUITS INTO COMMON RACEWAY

A. Do not combine raceways where conduit numbers or wire run numbers are shown on the Drawings.

B. Homerun circuits shown on Drawings indicate functional wiring requirements for power and control circuits. Circuits may be combined into common raceways in accordance with the following requirements:

1. Analog control circuits from devices in same general area to same destination.

    a. No power circuits shall be combined in same conduit with analog circuits.

    b. No Class 2 or Class 3 circuits shall be combined with power or Class 1 circuits.

    c. Analog circuits shall be continuous from source to destination. Do not splice or combine into a multi-pair cable without authorization of WRPS Construction Representative.

    d. Raceways shall be sized per General Circuit and Raceway Schedule and shall not exceed values specified in the NEC.

e. Changes shall be documented on record Drawings.

2. Discrete control circuits from devices in the same general area to the same destination.

a. No power circuits shall be combined in same conduit with discrete circuits.

b. No Class 2 or Class 3 circuits including, but not limited to, HVAC control circuits, fire alarm circuits, and paging system circuits shall be combined with power or Class 1 circuits.

c. Raceways shall be sized per the General Circuit and Raceway Schedule and shall not exceed values specified in the NEC.

d. Changes shall be documented on record Drawings.

3. Power circuits from loads in same general area to same source location.

a. Lighting Circuits: Combine no more than three circuits to a single raceway. Provide a separate, identified neutral conductor for each 120-volt and 277-volt circuit. Contractor shall be responsible for increasing conduit and conductor size, if derating is required by NEC.

b. Receptacle Circuits, 120-Volt Only: Combine no more than three circuits to a single raceway. Provide a separate identified neutral conductor for each circuit. Contractor shall be responsible for increasing conduit and conductor size, if derating is required by NEC.

c. All Other Power Circuits: Do not combine power circuits without authorization of WRPS Construction Representative.

3.3 NAMEPLATES, SIGNS, AND LABELS

A. Arc Flash Protection Warning Signs:

1. Field mark switchboards and panelboards to warn qualified persons of potential arc-flash hazards. Locate marking so to be clearly visible to persons before working on energized equipment.

2. Use arc flash hazard boundary, energy level, shock hazard, bolted fault current, and equipment name from WRPS Construction Representative, as basis for warning signs.

B. Equipment Nameplates:

1. Provide a nameplate to label electrical equipment including tap cabinets, switchboards, panelboards, motor starters, adjustable speed drives, transformers, terminal junction boxes, disconnect switches, light switches, control stations, receptacles, and lights.

2. Switchboards, panelboards, and motor control centers shall include equipment designation, service voltage, phases, power source, and circuit number.

3. Transformer and disconnect switch shall include equipment designation, power source, and circuit number.

4. Motor starter and adjustable speed drive shall include equipment designation and power source. Include circuit number when power source is a switchboard or panelboard.

5. Lighting switch and receptacles shall include power source and circuit number.

6. Control station shall include controlled equipment designation.

7. Pad mount utility transformer shall include equipment designation, primary and secondary voltages, and power source.

8. Tap cabinet shall include equipment designation, service voltage, phases, and power source.

9. Provide a nameplate to label HVAC and plumbing equipment including electric heaters, heat pumps, air handling and makeup units, water heaters, exhaust fans, supply fans, and freeze-proof safety showers. Include equipment designation, power source, and circuit number.

3.4 LOAD BALANCE

A. Drawings and Specifications indicate circuiting to electrical loads and distribution equipment.

B. Balance electrical load between phases as nearly as possible on switchboards, panelboards, and other equipment where balancing is required.

C. When loads must be reconnected to different circuits to balance phase loads, maintain accurate record of changes made, and provide circuit directory that lists final circuit arrangement. Obtain WRPS Construction Representative approval, prior to relocating or reconnecting loads.

3.5 CLEANING AND TOUCH-UP PAINTING

A. Cleaning: Throughout the work, clean interior and exterior of devices and equipment by removing debris and vacuuming.

B. Touch-Up Paint:

1. Touch up scratches, scrapes, and chips on exterior and interior surfaces of devices and equipment with finish matching type, color, and consistency and type of surface of original finish.

2. If extensive damage is done to equipment paint surfaces, refinish entire equipment in a manner that provides a finish equal to or better than factory

finish, that meets requirements of Specification, and is acceptable to WRPS Construction Representative.

3.6 PROTECTION FOLLOWING INSTALLATION

A. Protect materials and equipment from corrosion, physical damage, and effects of moisture on insulation and contact surfaces.

B. When equipment intended for indoor installation is installed at Contractor convenience in areas where subject to dampness, moisture, dirt or other adverse atmosphere until completion of construction, ensure adequate protection from these atmospheres is provided and acceptable to WRPS Construction Representative.

END OF SECTION 26 05 02

SECTION 26 05 19

LOW VOLTAGE ELECTRICAL POWER CONDUCTORS AND CABLES

PART 1 GENERAL

1.1 SUMMARY OF WORK

A. Building wire (600V)

B. TC cable (2000V and 600V)

C. Wire and cable connectors

D. Insulating tape and tubing

E. Wire pulling lubricant

1.2 RELATED DOCUMENTS / CODES AND STANDARDS

Drawings and general provisions of the Contract Statement of Work, including Division 01 Specification Sections, apply to this Section.

The following documents and others referenced therein, form part of the Contract to the extent designated in this Section. Referenced documents are those current as of the date of this Section unless otherwise indicated.

A. ASTM International (ASTM)

ASTM B3	Standard Specification for Soft or Annealed Copper Wire
ASTM D3005	Standard Specification for Low-Temperature Resistant Vinyl Chloride Plastic Pressure-Sensitive Electrical Insulating Tape

B. National Electrical Contractors Association (NECA)

NECA 1	Standard for Good Workmanship in Electrical Contracting

C. National Fire Protection Association (NFPA)

NFPA 70, 2017	National Electrical Code (NEC)

D. Underwriters Laboratories (UL)

UL 44	Thermoset-Insulated Wires and Cables
UL 83	Thermoplastic-Insulated Wires and Cables

UL 486A-486B	Wire Connectors
UL 486C	Splicing Wire Connectors
UL 486D	Sealed Wire Connector Systems
UL 510	Standard for Polyvinyl Chloride Polyethylene and Rubber Insulating Tape
UL 1277	Standard for Electrical Power and Control Tray Cables with Optional Optical-Fiber Members

1.3 SUBMITTALS

A. See the Contract Statement of Work for the submittal process.

B. Approval Required

1. Project Record Documents: Submit project record documents including specified certifications and all field test reports.

C. Approval Not Required

1. Catalog Data: Conductors/cables; compression connectors; indicate compression tools and dies that will be used.

1.4 QUALITY ASSURANCE

A. Comply with the NEC for components and installation.

B. Provide products that are listed and labeled by a Nationally Recognized Testing Laboratory (NRTL) for the application and environment in which installed.

1.5 DELIVERY, STORAGE AND HANDLING

A. Deliver, store, protect, and handle products according to manufacturer instructions and NECA 1.

PART 2 PRODUCTS

2.1 PRODUCT OPTIONS AND SUBSTITUTIONS

A. Refer to the Contract Statement of Work.

2.2 CONDUCTORS 600 VOLTS AND BELOW

A. General:

1. Description: Single conductor 600 V, 90°C insulated wire.

2. Conductor:

   a. 98% conductivity, annealed, uncoated copper (per ASTM B3) solid or stranded as specified in Part 3 of this Section.

   b. 120 V circuits, 10 AWG and smaller: Solid Copper.

   c. All other circuits: Stranded Copper.

3. Insulation: The following types, unless otherwise indicated on the Drawings.

   a. 1 AWG and smaller, Type THHN/THWN-2 per UL 83.

   b. 1/0 AWG and larger, Type XHHW per UL 44 or Type THHN/THWN-2 per UL 83.

B. Color-Code Conductors as Follows:

1. Use colored insulation for color-coding conductors 6 AWG and smaller.

2. Use water and oil resistant colored plastic adhesive tape, 3/4 in. minimum width, for color-coding conductor 4 AWG and larger. Manufacturer: 3M "Scotch 35."

3. Provide black conductor insulation where colored tape is used for color-coding.

4. Use the following color codes for AC power system conductors:

Conductor Color Codes			
System Voltage: **Conductor:**	**480Y/277V**	**120/240V**	**208Y/120V**
Phase A:	Red	Black	Black
Phase B:	Yellow	Brown	Purple
Phase C:	Blue	---	Brown
Grounded (Neutral):	White/Gray	White/Gray	White/Gray
Equipment Grounding:	Green	Green	Green
Isolated Ground:	---	---	---
Switched:	Purple	Blue	Black

5. Use the following color codes for DC power system conductors:

   Positive: Red
   Negative: Black

6. Provide color code for control conductors as indicated on equipment or control system manufacturer Drawings.

2.3 TC-ER CABLE

A. Provide tray cable (Type TC-ER) that complies with UL 1277, the NEC, and this Section.

B. TC-ER cable shall be rated 90°C, minimum of 600V insulation rating, UL listed, sunlight and weather-resistant, rated for direct burial and rated for variable frequency drive (VFD) use where specified on the Drawings. TC cable rated for VFD use shall have a 2,000V insulation rating.

C. Provide TC-ER cables with quantities and sizes (minimum 12 AWG for power) of conductors as indicated on the Drawings.

D. TC-ER cable manufacturer: General Cable or equal.

2.4 CABLE PROTECTORS

A. Cable Protectors: Where cables require protection from vehicle or pedestrian traffic, use a cable protector such as Yellow Jacket, Bumblebee, or Cable Guard. Cable Guard or other engineering approved protection shall be used at vehicle and crane crossings.

2.5 WIRING CONNECTORS

A. For splices and taps on copper wire, sizes 8 AWG and smaller, use pressure type, or spring type rated for use with copper conductors with insulating caps or covers rated for 600V and 105°C that are NRTL-listed to UL 486C. Thomas and Betts Corporation "Sta-Kon®[10]," 3M Company "Scotchlok®[11]," or approved substitute, where required by the NEC.

B. For splices and taps on copper wire, sizes 6 AWG through 1 AWG, use the following materials:

1. Tin-plated copper split-bolt connectors that meet the requirements in UL 486A-486B; provide with matching 600V snap-on insulating cover. Manufacturer: FCI Burndy "Type KSA" with "Type SC" insulating cover.

2. Multi-tap connectors that meet the requirements of UL 486A-486B that have two or more range-taking mechanical lugs and matching 600V insulated cover. Manufacturers: Burndy "POLYTAP" or "UNITAP®[12]," Ilsco "Type PCT," Blackburn®[10] "AMT."

C. For copper wire, sizes 1/0 AWG and larger, use UL 486A-486B listed circumferential or hexagonal crimp compression terminals, splices, or adapters.

---

[10] Sta-Kon and Blackburn are registered trademarks of Thomas & Betts International, Inc., Wilmington, Delaware.
[11] Scotchlock is a registered trademark of 3M Company, St. Paul, Minnesota.
[12] UNITAP is a registered trademark of ITW New Zealand Company, Auckland, New Zealand.

1. Provide compression terminals and splices made from electro-tin plated seamless copper tubing and marked with wire size, die index/color code, and number/locations of crimps. Manufacturers: FCI Burndy Types "YA," "YA-L," "YA-L-NT," "YS," and "YC-C." Thomas & Betts "Color-Keyed."

2. Provide straight and offset compression adapters made from electro-tin plated aluminum, NRTL-listed for use on copper conductors, and marked with wire size, die index/color code, and number/locations of crimps. Each adapter shall include a 600V, 90°C rated insulating cover. Manufacturer: FCI Burndy Types "AYP" and "AYPO."

3. Range-taking, die-less, or indenter-applied terminals are not acceptable for control wiring. Use nylon insulated crimp-on terminals with insulation grip that meet the requirements of UL 486A-486B. Manufacturer: 3M "Scotchlok MNG," Thomas & Betts "Sta-Kon."

4. Use ring tongue terminals for nutted studs.

5. Use flanged fork terminals for barrier terminal blocks.

D. Insulation-piercing type connectors are not acceptable for power or control wiring.

2.6 INSULATING TAPE AND TUBING

A. For making re-enterable tape-insulated splices and connections, provide varnished cambric electrical insulating tape made of cotton cambric fabric that is oil primed and coated with electrical insulating varnish. Manufacturer: 3M "Scotch 2510" (no adhesive) and "Scotch 2520" (pressure-sensitive adhesive).

B. Insulate taped splices and connections using ethylene propylene rubber tape that meets the requirements of UL 510 and is rated for 90°C continuous operation and 130°C short-term overload service. Manufacturer: 3M "Scotch 130C."

C. For the outer covering of tape-insulated splices and connections, use vinyl plastic tape that meets the requirements of UL 510 and has the following listed characteristics.

1. 8.5 mil minimum thickness.

2. ASTM D3005, Rated 600V and 105°C, suitable for indoor and outdoor applications.

3. Retains flexibility, adhesion, and applicable at temperature ranges from 0 through 100°F without loss of physical or electrical properties.

4. Resistant to abrasion, moisture, alkalis, acid, corrosion, and sunlight.

5. Manufacturer: 3M "Scotch Super 88."

D. Provide heat shrinkable tubing that meets the requirements of UL 486D and has the following listed characteristics.

1. Rated 600V.

2. Factory applied adhesive/sealant.

3. Split resistant.

4. Manufacturer: 3M "ITCSN."

E. Use motor lead splicing kits to insulate and seal connections to leads for motors rated 480V and less. Manufacturer: 3M "5300 Series."

2.7 WIRE PULLING LUBRICANT

A. Provide NRTL-listed wire pulling lubricant that is compatible with the conductor insulation or jacket, has a maximum coefficient of dynamic friction of 0.25, and leaves no flammable residue. For cold weather installations, provide wire-pulling lubricant suitable for conduit temperature.

B. Manufacturer:

1. For conduit temperature above freezing: American Polywater Corporation, "Polywater" "Lubricant J."

2. For conduit temperature below freezing: American Polywater Corporation, "Polywater" "Lubricant WJ."

PART 3 EXECUTION

3.1 EXAMINATION

A. Verify that work of other trades has not damaged wires and cables.

B. Verify raceway/conduit installation is complete and supported.

C. Verify that field measurements are as shown on Drawings.

D. Wire and cable routing shown on Drawings is approximate unless dimensioned.

1. Route wire and cable, as required, meeting project conditions.

2. Where cable routing is not shown, and destination only is indicated, determine exact routing and lengths required to meet field conditions.

3.2 PREPARATION

A. Do not handle or pull cables that are colder than +15°F. Store cold cables for at least 24 hours in a heated building prior to installation.

3.3 TYPE TC CABLE INSTALLATION

A. Install TC cables according to the NEC and requirements in this Section.

B. Install and support Type TC cables as required in Article 336 of the NEC.

3.4 CONNECTOR INSTALLATION

A. Install conductors in terminals, splices, adapters, and connectors in accordance with the manufacturer instructions. Have the manufacturer installation instructions available at the construction site.

B. Make splices, taps, and terminations to carry full ampacity of conductors with no perceptible temperature rise above the conductor temperature.

C. Do not nick conductors when removing insulation.

D. Do not cut conductor strands to fit into connectors, splices, adapters, or terminals.

E. Make connections using clean connection surfaces. Wire brush conductors immediately before installing lugs, terminals, splices, or adapters.

F. Connect conductors 1/0 AWG and larger using compression terminals at the locations described below. Compression terminals shall be installed where there is adequate wire bending space to accommodate compression terminals. Select compression terminals suitable for the conductor sizes, materials, and termination point configurations. Install compression terminals using the manufacturer recommended dies and minimum 12-ton force compression tools.

1. Circuit breakers with frame size greater than 100 amperes that are NRTL-listed for use with compression terminals.

2. Safety switches and fused switches rated more than 100 amperes.

3. Transformers; refer to Section 26 22 13, “Low Voltage Distribution Transformers.”

4. Switchboards, panelboards, motor control centers, and similar service and distribution equipment.

5. Utilization equipment connections that are NRTL-listed for use with compression terminals.

G. For conductors sized 1/0 AWG and larger, and where compression lugs cannot be installed, connect using mechanical lugs, in the locations or conditions described below.

1. Connection points not NRTL-listed for either compression terminals or compression adapters.

2. Where there is insufficient wire bending space to accommodate either compression terminals or compression adapters.

H. Connect outlets and components to wiring and to ground, as indicated and instructed by manufacturer. Tighten connectors and terminals, including screws and bolts, according to equipment manufacturer published torque-tightening values for equipment connectors.

3.5 INSULATING TAPE AND TUBING INSTALLATION

A. Install insulating tape and tubing, in accordance with the manufacturer instructions. Have the manufacturer installation instructions available at the construction site.

B. Insulate splices and taps of irregular shapes with manufactured insulating covers or insulating tape built up to not less than 150% of insulation rating of conductor.

1. Apply varnished cambric tape over connections where re-entry is likely, such as motor lead connections.

2. Use rubber-insulating tape in half-lapped layers to develop the basic insulation over splices and taps.

3. Use vinyl plastic tape in half-lapped layers to provide the outer protective covering over splices and taps.

C. Insulate cylinder-shaped splices and taps, connector barrels, and adapter barrels using heat shrinkable insulating tubing, insulating covers manufactured for the connector, or tape insulation as described above.

3.6 IDENTIFICATION

A. Identify wire and cable under provisions of Section 26 05 53, “Identification for Electrical Systems.”

B. Identify each conductor with its circuit number or other designation indicated on Drawings.

C. Apply color-coding tape on conductors at each termination, splice, junction, and pull box.

3.7 FIELD QUALITY CONTROL

A. Observe conductors and cables during the installation process.

1. Reject and replace entire reels, rolls, or boxes containing conductors or cables with material or manufacturing defects.

2. Reject and replace cable or conductor segments that have been kinked, dented, or otherwise damaged during handling or installation.

B. Perform the following inspections:

1. Inspect exposed conductors and cables for:

   a. Material defect and physical damage.

   b. Correct conductor size, material, and insulation type.

   c. Correct color-coding and identification.

   d. Proper connections in accordance with the Drawings.

2. Inspect connections for:

   a. Correct connector size and type according to the Specifications and Drawings.

   b. The use of the correct compression dies and the correct number of crimps on compression connectors in accordance with the connector manufacturer instructions.

C. Perform the following tests:

1. Before connecting conductors to equipment, use a megohmmeter in a 1-minute test to verify the insulation integrity of each service conductor and feeder conductor, and all conductors in 480V circuits, with respect to ground and other conductors in the same raceway.

   a. Use 1000VDC to test conductors rated 600V and 2000V and 500VDC for conductors rated 300V or less.

   b. Insulation test values shall be in accordance with the following:

      i. Conductors with 300V insulation rating and insulation resistances over 25 megohms are acceptable.

      ii. Conductors with 600V insulation rating and insulation resistances over 100 megohms are acceptable.

      iii. Conductors with 2000V insulation rating and insulation resistances over 500 megohms are acceptable.

   c. Conductors with insulation resistances less than indicated above shall be investigated.

2. Prior to connecting conductors to equipment, test continuity to ensure proper circuit is identified to facilitate correct connection of each power circuit conductor and each control circuit conductor.

3. Test the equipment and wiring for continuity and unintentional grounds, and verify proper phase sequence and voltage at equipment served before attempt is made to operate equipment.

4. Perform insulation resistance testing on electric heat trace cable at installation, before and after insulation is installed, in accordance with manufacturer instructions.

5. Measure and record the tightness of not less than 10% of each size and type of mechanical or bolted connection using a calibrated torque wrench or torque screwdriver. Additionally, verify proper crimping method, as applicable.

   a. Compare measured torque with torque recommended by the connector manufacturer or as shown in Attachment 1, "Recommended Tightening Torque per UL 486A-486B."

   b. If any connection is found to be less than 90% of the recommended torque, notify the Buyer Technical Representative and re-torque all bolted connections on the Project.

D. Remove and replace defective, incorrect, or improperly installed conductors and connectors. Re-inspect and re-test replacement conductors and connectors.

E. Submit test and inspection records to the Buyer Technical Representative.

F. Verify inspections and tests required by other sections are completed before conductors may be energized.

SECTION 26 05 19 – ATTACHMENT 1

RECOMMENDED TIGHTENING TORQUE PER UL 486A-486B

Table 21 - Tightening torque for screws

Conductor Size installed in Connector		Tightening Torque, N•m (lbf-in)			
		Slotted Head No. 10 and Larger*		Hexagonal Head – External Drive Socket Wrench	
AWG or kcmil	mm^2	Slot Width – 1.2mm (.047 in) or Less and Slot Length – 6.4mm (1/4 in.) or less	Slot Width – Over 1.2mm (.047 in) or Slot Length – Over 6.4mm (1/4 in.) or less	Split-Bolt Connectors	Other Connectors
30 - 10	.05 - 5.3	2.3 (20)	4.0 (35)	9.0 (80)	8.5 (75)
8	8.4	2.8 (25)	4.5 (40)	9.0 (80)	8.5 (75)
6 - 4	13.2 - 21.2	4.0 (35)	5.1 (45)	18.6 (165)	12.4 (110)
3	26.7	4.0 (35)	5.6 (50)	31.1 (275)	16.9 (150)
2	33.6	4.5 (40)	5.6 (50)	31.1 (275)	16.9 (150)
1	42.4	-	5.6 (50)	31.1 (275)	16.9 (150)
1/0 - 2/0	53.5 - 67.4	-	5.6 (50)	43.5 (385)	20.3 (180)
3/0 - 4/0	85.0 - 107.2	-	5.6 (50)	56.5 (500)	28.2 (250)
250 - 350	127 - 177	-	5.6 (50)	73.4 (650)	36.7 (325)
400	203	-	5.6 (50)	93.2 (825)	36.7 (325)
500	253	-	5.6 (50)	93.2 (825)	42.4 (375)
600 - 750	304 - 380	-	5.6 (50)	113.0 (1000)	42.4 (375)
800 - 1000	406 - 508	-	5.6 (50)	124.3 (1100)	56.5 (500)
1250 - 2000	635 - 1000	-	-	124.3 (1100)	67.8 (600)

* For values of slot width or length not corresponding to those specified, select the largest torque value associated with the conductor size. Slot width is the nominal design value. Slot length shall be measured at the bottom of the slot.

Table 22 - Tightening torque for slotted head screws smaller than No. 10 intended for use with 8 AWG (8.4 mm2) or smaller conductors

Slot Length of Screw*		Tightening Torque, N•m (lbf-in)	
mm	inch	Slot Width of Screw Smaller than 1.2mm (.047 in.)	Slot Width of Screw 1.2mm (.047 in.) and larger**
Less than 4	Less than 5/32	0.79 (7)	1.0 (9)
4	5/32	0.79 (7)	1.4 (12)
4.8	3/16	0.79 (7)	1.4 (12)
5.6	7/32	0.79 (7)	1.4 (12)
6.4	1/4	1.0 (9)	1.4 (12)
7.1	9/32	-	1.7 (15)
Above 7.1	Above 9/32	-	2.3 (20)

* For slot lengths of intermediate values, select torques pertaining to next shorter slot length. Also, see Table 21 for screws with multiple tightening means. Slot length shall be measured at the bottom of the slot.

** Slot width is the nominal design value

Table 23 - Tightening torque for screws with recessed Allen or Square drives

Socket Width Across Flats*		Tightening Torque, N•m (lbf-in)
mm	inch	
3.2	1/8	5.1 (45)
4.0	5/32	11.3 (100)
4.8	3/16	13.6 (120)
5.6	7/32	16.9 (150)
6.4	1/4	25.4 (225)
7.9	5/16	33.9 (300)
9.5	3/8	45.2 (400)
12.7	1/2	56.6 (500)
14.3	9/16	67.8 (600)

* See Table 21 for screws with multiple tightening means

END OF SECTION 26 05 19

SECTION 26 05 26

GROUNDING AND BONDING FOR ELECTRICAL SYSTEMS

PART 1 GENERAL

1.1 SUMMARY OF WORK

A. Connection to Grounding Electrode System.

B. Circuit and System Grounding.

C. Enclosure and Equipment Grounding System.

1.2 RELATED DOCUMENTS / CODES AND STANDARDS

Drawings and general provisions of the Contract Statement of Work, including Division 01 Specification Sections, apply to this Section.

The following documents and others referenced therein, form part of the Contract to the extent designated in this Section. Referenced documents are those current as of the date of this Section unless otherwise indicated.

A. ASTM International (ASTM)

ASTM B8	Standard Specification for Concentric-Lay Stranded Copper Conductors

B. Institute of Electrical and Electronics Engineers (IEEE)

IEEE 81	Guide for Measuring Earth Resistivity, Ground Impedance and Earth Surface Potentials of a Grounding System
IEEE 837	IEEE Standard for Qualifying Permanent Connections used in Substation Grounding

C. National Fire Protection Association (NFPA)

NFPA 70, 2017	National Electrical Code (NEC)

D. Underwriters Laboratories (UL)

UL 486A-486B	Wire Connectors and Soldering Lugs for Use with Copper Conductors
UL 486C	Splicing Wire Connectors

1.3 SUBMITTALS

A. See the Contract Statement of Work for the submittal process.

B. Approval Required

1. None.

C. Approval Not Required

1. Test Reports.

1.4 QUALITY ASSURANCE

A. Comply with the NEC for components and installation.

B. Provide products that are listed and labeled by a Nationally Recognized Testing Laboratory (NRTL) for the application and environment in which installed.

1.5 DELIVERY, STORAGE, AND HANDLING

A. Receive, store, protect, and handle products according to manufacturer instructions.

PART 2 PRODUCTS

2.1 PRODUCT OPTIONS AND SUBSTITUTIONS

A. Alternate products may be accepted in accordance with the requirements of the Contract Statement of Work.

2.2 GROUNDING ELECTRODE CONDUCTOR

A. Provide bare stranded, soft temper copper cable that conforms to ASTM B8.

2.3 EQUIPMENT GROUNDING CONDUCTORS

A. Provide NRTL-listed THHN/THWN insulated copper wire.

B. Use solid grounding conductors 12 AWG and smaller where not subject to vibration or repeated flexing.

C. Use stranded grounding conductors for 10 AWG and larger.

D. Use stranded grounding conductors where subject to vibration or repeated flexing.

E. Color-code grounding conductors as follows:

1. Equipment ground:

a. Conductors 6 AWG and smaller: Green colored insulation.

b. Conductors 4 AWG and larger: Green colored insulation or black colored insulation with 3/4 in. wide band of water and oil-resistant green plastic adhesive tape.

2.4 GROUND PLATES

A. Provide ground plates designed for flush mounting in concrete.

B. Furnish copper alloy castings with four 1/2 in. x 13 in. threaded holes at 1.75 in. x 1.75 in. NEMA spacing and a welding stud or compression connection suitable for 2 AWG to 250 kcmil copper conductor.

C. Manufacturer: Burndy "YGF."

2.5 CONDUIT GROUNDING BUSHINGS

A. Provide NRTL-listed, galvanized malleable iron, 150°C rated insulated throat grounding bushings with lay-in type ground cable lugs.

B. Manufacturers: O-Z/Gedney Type "BLG."

2.6 COMPRESSION GROUNDING CONNECTIONS

A. Provide wrought copper connectors, terminals, taps, and splices for making irreversible compression grounding connections.

B. Furnish NRTL-listed grounding connectors that are suitable for direct burial and have been tested successfully according to the requirements of IEEE 837.

C. Provide connector manufacturer hydraulic compression tools and dies that match the connectors.

D. Match connector and die size to material shapes and conductor sizes to be joined.

E. Use two-hole heavy-duty compression lugs for bolted connections to ground bars, ground plates, and equipment ground pads.

F. Manufacturer: Burndy "Hyground®[13]."

[13] Hyground is a registered trademark of Hubbell Incorporated Corporation, Shelton, Connecticut.

PART 3 EXECUTION

3.1 EXAMINATION

A. Verify that work of other trades has not damaged grounding or bonding connections.

B. Verify that field measurements are as shown on Drawings.

C. Grounding cable routing shown on Drawings is approximate, unless dimensioned.

1. Install and route cable, as required meeting project conditions.

2. Where cable routing is not shown and destination only is indicated, determine exact locations, routing, and lengths required to meet project conditions.

3.2 PREPARATION

A. Examine equipment that is to receive grounding and bonding material for compliance with installation tolerances and other conditions. Do not proceed with installation until unsatisfactory conditions have been corrected.

3.3 GENERAL

A. Comply with the requirements of the NEC, this Section, and the Drawings.

B. Install grounding and bonding material according to manufacturer instructions. Have the manufacturer installation instructions available at the construction site.

C. Use the following connection methods, unless otherwise specified or indicated on the Drawings. Use compression or bolted grounding connection methods.

1. Make bolted connections using bolts, nuts, flat washers, and toothed lock washers suitable for the connector and the installation environment; acceptable materials include high strength silicon bronze and 18-8 alloy stainless steel.

2. Make irreversible bolted connections using 18-8 alloy stainless steel tamper-resistant bolts and tamper-resistant nuts, along with flat washers and toothed lock washers. Tamper-resistant nuts and bolts must resist loosening with common tools; acceptable tamper-resistant fasteners include penta-head, breakaway, and oval designs.

D. Tighten grounding and bonding connectors and terminals, including screws and bolts, in accordance with manufacturer published torque-tightening values for connectors and bolts. Where manufacturer torquing requirements are not indicated, tighten connections to comply with torque tightening values specified in Section 26 05 19, “Low Voltage Electrical Power Conductors and Cables, “Attachment 1, “Recommended Tightening Torque per UL 486A-486B.” Use a calibrated torque wrench.

E. Use hydraulic compression tools to provide the correct circumferential pressure for compression connectors. Follow connector manufacturer installation instructions and

use tools and dies recommended by the manufacturer of the connectors. Provide embossing die code or other standard method to make a visible indication that a connector has been adequately compressed.

F. Make connections in such a manner as to minimize possibility of galvanic action or electrolysis. Select connectors, connection hardware, conductors, and connection methods so metals in direct contact will be galvanically compatible.

1. Use electroplated or hot-tin-coated materials to assure high conductivity and make contact points closer in order of galvanic series.

2. Make connections with clean bare metal at points of contact.

3. Make aluminum to steel connections with stainless steel separators and mechanical clamps.

4. Make aluminum to galvanized steel connections with tin-plated copper jumpers and mechanical clamps.

5. Coat and seal connections involving dissimilar metals with inert material to prevent future penetration of moisture to contact surfaces.

3.4 GROUNDING ELECTRODE SYSTEM

A. Install in accordance with the NEC and the Drawing.

B. Concrete-Encased Grounding Electrodes.

1. Install a concrete-encased grounding electrode in lower part of perimeter footing or grade beam to form a complete and continuous loop around the structure. Encase electrode with at least 2 in. of concrete from the bottom of foundation or footing. Use one of the following materials for the electrode:

a. Bare or zinc galvanized or other electrically conductive-coated steel reinforcing bars, minimum 1/2-in. diameter. Bond reinforcing rods together using steel wire ties or other effective means.

b. Bare 4/0 copper conductor, unless otherwise shown on the Drawings. Space cable from the bottom and sides of the grade beam so it has at least 2 in. of concrete coverage. Bond to rebar in one place.

c. Perform NEC inspection of grounding electrode prior to concrete placement.

C. Install ground plates flush with top of concrete. Locate ground plates adjacent to electrical equipment as shown on the Drawings. Bond grounding electrode to ground plates with UL-listed compression fittings.

3.5 CIRCUIT AND SYSTEM GROUNDING

A. Bond service entrance equipment ground bus to grounding electrode system; use ground cable as indicated on the Drawings, or not smaller than the grounding electrode conductor required by the NEC and not smaller than 4 AWG.

B. In the service entrance equipment, connect the neutral bus to the ground bus using a bonding jumper not smaller than the grounding electrode conductor required by the NEC; do not use a bonding screw for this purpose. Make no other neutral-to-ground connections on the load side of the service entrance disconnect.

C. Separately Derived Systems:

1. Connect ground bus of first disconnecting means for separately derived systems (e.g., dry type transformers) to the nearest ground plate (preferred) or building structural steel column; use grounding conductor sized as shown on the Drawings or as required by the NEC.

2. At the first system overcurrent device or disconnecting means, connect the neutral bus to the ground bus using a bonding jumper sized as required by the NEC. Size grounding electrode conductor in accordance with the NEC and use UL-Listed pipe grounding clamp or to an existing ground tap on riser with the approval of the WRPS Construction Representative.

3.6 ENCLOSURE AND EQUIPMENT GROUNDING

A. Provide permanent and effective equipment, enclosure, and raceway grounding in accordance with NEC requirements, and as further specified or shown on the Drawings.

B. Provide an equipment ground bar, separate from any neutral bar, in all switchgear, switchboards, panelboards, transformers, motor control centers, starters, disconnect switches, cabinets, etc., for grounding the enclosure and for connecting other equipment and raceway ground conductors. Make connections to the ground bar using mechanical lugs or compression lugs.

C. Make connections and couplings on metallic conduit systems wrench tight.

D. Grounding Bushings:

1. Install grounding bushings on metallic conduit containing circuits rated 480 VAC or 100 amperes and higher.

2. Install grounding bushings on metallic conduits entering enclosures through concentric, eccentric, or oversize knockouts.

3. Install grounding bushings on metallic conduits that terminate to a metallic enclosure without effective electrical connection such as locknuts or threaded bushings.

4. Bond conduit grounding bushing lug to the equipment ground bar or ground lug in switchboard, panelboards, transformers, starters, disconnect switches, cabinets, etc. Size bonding jumpers in accordance with the NEC.

E. Provide an insulated equipment grounding conductor for each feeder and branch circuit.

1. Install the grounding conductor within the common conduit or raceway with the related phase and neutral conductors, and connect to the grounding terminal or grounding bus in each box or cabinet.

2. Size equipment ground conductor in accordance with the NEC or as shown on the Drawings.

F. In each 15 or 20 ampere branch circuit outlet box and junction box, install a green colored washer head grounding screw with a 12 AWG equipment grounding conductor pigtail.

G. Connect receptacle grounding terminals to the equipment ground system using minimum 12 AWG equipment grounding conductor. Do not use a "self-grounding" receptacle strap as the only equipment grounding path.

3.7 FIELD QUALITY CONTROL

A. General: Perform on-site verification and acceptance testing of the grounding installation during construction.

B. Notify the WRPS Construction Representative ten working days in advance of the expected completion of a concrete-encased grounding electrode system installation. Verification and testing can be scheduled in parts or by area, depending on the system and construction schedule.

C. Before work is concealed, verify and certify that the following grounding installations have been made correctly:

1. Grounding electrode system;

2. Ground plates and grounding bars; and

3. All other underground grounding installations.

D. Acceptance Testing: Perform acceptance testing for grounding electrode system and submit written reports to the WRPS Construction Representative.

1. Measure resistance between grounding electrode and each ground plate, prior to concrete placement. Use the "Two-Point Direct Method" of IEEE 81. Investigate and correct equipment ground resistances that exceed 0.5 ohm.

2. Prepare test reports of the ground resistance at each test location. Include observations of weather and other phenomena that may affect test results. Describe any measures taken to improve test results.

E. Perform the following inspections and tests of grounding systems.

1. Visual and Mechanical Inspection:

   a. Equipment and circuit grounds in panelboard for proper connection and tightness.

   b. Ground bus connections in panelboard for proper termination and tightness.

   c. Effective dry-type transformer equipment grounding.

   d. Accessible connections to grounding electrodes for proper fit and tightness.

   e. Accessible compression connections grounding connections to verify that proper bonding was obtained.

2. Electrical Tests:

   a. Measure resistance between equipment ground system, equipment frames, and system neutral and derived neutral points. Use the "Two-Point Direct Method of IEEE 81.

   b. Equipment ground resistance shall not exceed main ground system resistance by 0.5 ohm.

3. Neutral Bus Isolation:

   a. Test each neutral bus, individually, with neutral bonding jumper removed at separately derived system.

   b. Evaluate ohmic values by measuring resistance between ground bus and neutral bus.

   c. Investigate values less than 50 megohms.

END OF SECTION 26 05 26

SECTION 26 05 29

HANGERS AND SUPPORTS FOR ELECTRICAL SYSTEMS

PART 1 GENERAL

1.1 SUMMARY OF WORK

A. Furnish and install, hangers, supports, anchors, concrete bases, and other positive fastenings for non-structural electrical components such that gravity loads are safely transferred to the structure.

1.2 RELATED DOCUMENTS / CODES AND STANDARDS

Drawings and general provisions of the Contract Statement of Work, including Division 01 Specification Sections, apply to this Section.

The following documents and others referenced therein, form part of the Contract to the extent designated in this Section. Referenced documents are those current as of the date of this Section unless otherwise indicated.

A. Code of Federal Regulations (CFR)

29 CFR 1910	Occupational Safety and Health Standards (OSHA)

B. International Code Council (ICC)

IBC, 2015	International Building Code

C. Metal Framing Manufacturers Association (MFMA)

MFMA-4	Metal Framing Standards Publication
MFMA-103	Guidelines for the Use of Metal Framing

D. National Fire Protection Association (NFPA)

NFPA 70, 2017	National Electrical Code (NEC)

1.3 SUBMITTALS

A. See the Contract Statement of Work for the submittal process.

B. Approval Required: None.

1.4 QUALITY ASSURANCE

A. Furnish and install hangers and supports that conform to the Drawings and requirements of the following codes and standards:

1. NEC,
2. IBC, 2015,
3. MFMA-4, and
4. MFMA-103.

B. Where a Nationally Recognized Testing Laboratory (NRTL) has requirements for such products, provide products that are NRTL-listed and labeled for the application, installation condition, and the environment in which installed.

C. Suspect and Misrepresented Products: See Contract Statement of Work for required measures to prevent use of misrepresented products.

1.5 DELIVERY, STORAGE, AND HANDLING

A. Receive, store, protect, and handle products according to manufacturer instructions.

PART 2 PRODUCTS

2.1 SUBSTITUTIONS

A. Alternate products may be accepted in accordance with the requirements of the Contract Statement of Work. Any substitution must be submitted to the WRPS Construction Representative for approval before procurement of alternate products.

2.2 COATINGS AND MATERIALS

A. Furnish products for use indoors protected with zinc coating or with treatment of equivalent corrosion resistance using approved alternative treatment, finish, or inherent material characteristic.

B. Furnish products for use outdoors or in damp or corrosive indoor locations with hot-dip-galvanized coating or with treatment of equivalent corrosion resistance using approved alternative treatment, finish, or material such as stainless steel with inherent corrosion resistant characteristics.

2.3 RACEWAY SUPPORTING DEVICES

A. Furnish supports, as described below, for the installation of raceway systems.

B. Use pressed steel, hot-dipped galvanized, single bolt hangers to support individual conduits from threaded rods or beam clamps. Manufacturer: Steel City “6H Series.”

2.4 FASTENERS

A. Concrete Anchors:

1. Furnish concrete anchors per Section 05 05 38, "Concrete Anchors," and as shown on the Drawings.

2. Each anchor shall have an ICC-ES evaluation report stating that the product is compliant with the current edition of the IBC, and the intended conditions of use.

3. For applications in outdoor, damp, or corrosive locations, furnish stainless steel post-installed anchors.

4. Furnish expansion, adhesive, and undercut anchors specified on the Drawings.

2.5 FRAMING CHANNEL SYSTEMS

A. Furnish U-channel framing systems that conform to MFMA-4 and are fabricated using minimum 12-gage steel.

B. Furnish fittings and accessories that mate and match with U-channel and are of the same manufacturer.

C. Manufacturers: B-Line or Unistrut.

2.6 FABRICATED SUPPORTING DEVICES

A. Furnish shop or field-fabricated supports, or manufactured supports assembled from U-channel components.

B. Furnish steel brackets fabricated from angles, channels, and other standard structural shapes. Connect with welds and machine bolts to form rigid supports.

PART 3 EXECUTION

3.1 GENERAL

A. Install hangers and supports according to the NEC, the requirements in this Section, and specific supporting requirements in other sections and Drawings.

B. Conform to manufacturer instructions and recommendations for selection and installation of hangers and supports.

C. Do not use wire or perforated strap for permanent supports.

D. Use appropriate, calibrated, special tools when installing devices for which special installation tools are recommended by the manufacturer.

3.2 EXAMINATION

A. Examine surfaces to receive supports for compliance with installation tolerances and other conditions affecting performance of the system. Do not proceed with installation until unsatisfactory conditions have been corrected.

3.3 FASTENERS

A. Concrete expansion anchors: Install in accordance with Section 05 05 38, "Concrete Anchors," and the product ICC-ES report conditions of use.

B. Use machine bolts, nuts, and washers for fastening to metal.

C. Fasten equipment to concrete or masonry with expansion anchors.

D. The use of lead-cinch drop-in anchors is not allowed.

E. Torque threaded fasteners as recommended by the manufacturer instructions.

3.4 RACEWAY SUPPORTS

A. Support individual horizontal raceways by separate pipe hangers.

3.5 BOXES AND CABINETS

A. Support sheet metal boxes by approved brackets or bar hangers, as shown on the Drawings or as required. Where bar hangers are used, attach the bar to structure on opposite sides of the box.

B. In open overhead spaces, cast boxes threaded to raceways need not be supported separately, except where used for fixture support.

C. Install surface-mounted cabinets and panelboards, as shown on the Drawings or as required.

3.6 FRAMING CHANNEL SYSTEMS

A. Select and install framing channel systems in accordance with MFMA-103.

B. Use framing channel to support electrical equipment that is mounted free of walls.

END OF SECTION 26 05 29

SECTION 26 05 33

RACEWAYS AND BOXES FOR ELECTRICAL SYSTEMS

PART 1 GENERAL

1.1 SUMMARY OF WORK

A. Conduits and fittings.

B. Outlet boxes and handholes.

C. Pull and junction boxes.

D. Wireway.

E. Handholes.

1.2 RELATED DOCUMENTS / CODES AND STANDARDS

Drawings and general provisions of the Contract Statement of Work, including Division 01 Specification Sections, apply to this Section.

The following documents and others referenced therein, form part of the Contract to the extent designated in this Section. Referenced documents are those current as of the date of this Section unless otherwise indicated.

A. National Electrical Contractors Association (NECA)

NECA 1	Standard for Good Workmanship in Electrical Construction

B. National Electrical Manufacturers Association (NEMA)

NEMA 250	Enclosures for Electrical Equipment (1000 Volts Maximum)
NEMA C80.1	Electrical Rigid Steel Conduit (ERSC)
NEMA FB1	Fittings, Cast Metal Boxes, and Conduit Bodies for Conduit, Electrical Metallic Tubing (EMT) and Cable
NEMA ICS 6, R2011	Industrial Control and Systems: Enclosures
NEMA RN 1	Polyvinyl Chloride (PVC) Externally Coated Galvanized Rigid Steel Conduit and Intermediate Metal Conduit
NEMA OS 1	Sheet-Steel Outlet Boxes, Device Boxes, Covers and Box Supports

NEMA OS 3	Selection and Installation Guidelines for Electrical Outlet Boxes
NEMA TC 2	Electrical Polyvinyl Chloride (PVC) Tubing and Conduit
NEMA TC 3	Polyvinyl Chloride (PVC) Fittings for Use with Rigid PVC Conduit and Tubing
NEMA TC 6 and 8	Polyvinyl Chloride (PVC) Plastic Utilities Duct for Underground Installations
NEMA TC 7	Smooth Wall Coilable Electrical Polyethylene Conduit
NEMA TC 9	Fitting for Polyvinyl Chloride (PVC) Plastic Utilities Duct for Underground Installation

C. National Fire Protection Association (NFPA)

NFPA 70, 2017	National Electrical Code (NEC)

D. Society of Cable Telecommunications Engineers (SCTE)

SCTE 77	Specification for Underground Enclosure Integrity

E. Underwriters Laboratories (UL)

	Electrical Appliance and Utilization Equipment Directory
	Electrical Construction Materials Directory
UL 1	Standard for Flexible Metal Electrical Conduit
UL 6	Electrical Rigid Metal Conduit-Steel
UL 50	Enclosures for Electrical Equipment, Non-Environmental Considerations
UL 360	Standard for Liquid-Tight Flexible Metal Conduit
UL 467	Grounding and Bonding Equipment
UL 498	Standard for Attachment Plugs and Receptacles
UL 508A, 2013	Standard for Industrial Control Panels
UL 510	Standard for Polyvinyl Chloride, Polyethylene and Rubber Insulating Tape
UL 514A	Metallic Outlet Boxes
UL 514B	Conduit, Tubing, and Cable Fittings

UL 514C	Standard for Nonmetallic Outlet Boxes, Flush-Device Boxes, and Covers
UL 651	Standard for Schedule 40, 80, Type EB and A Rigid PVC Conduit and Fittings
UL 651A	Schedule 40 & 80 High Density Polyethylene (HDPE) Conduit

1.3 SUBMITTALS

A. See the Contract Statement of Work for the submittal process.

B. Approval Required.

1. Handholes.

1.4 QUALITY ASSURANCE

A. The Seller shall comply with the following Quality Assurance requirements, in addition to those of the Contract Statement of Work.

B. Comply with the NEC for components and installation.

C. Rigid steel conduit. Verify the following:

1. Each length is marked with manufacturer name, UL label, and “Rigid Metal Conduit” or “Rigid Steel Conduit.”

D. Conduit fittings/metallic outlet boxes/terminal boxes (rigid, stainless steel). Verify the following:

1. Check one lot or container and verify each item has, at a minimum, the UL symbol and that the shipping label or the container for which the items are shipped contains the manufacturers name, the UL listing, and the type of items shipped. If the item is not marked with the UL symbol or manufacturer name, visually inspect the shipping carton of the item to ensure it is in accordance with the UL and manufacturer published data.

2. Check one lot or container and verify item size is in accordance with product description.

3. Verify external coating for each item is uniform (rigid steel only) and no damage exists.

4. Verify material used is ferrous metal (rigid or malleable iron only) by performing magnetic test.

E. Provide products that are listed and labeled by a Nationally Recognized Testing Laboratory (NRTL) for the application, installation condition, and the environment in which installed.

F. Cabinets containing assembled control systems shall be designed, constructed, and listed or labeled to the UL 508A Standard, as applicable.

1.5 DELIVERY, STORAGE, AND HANDLING

A. Receive, store, protect, and handle products according to manufacturer instructions and NECA 1.

PART 2 PRODUCTS

2.1 SUBSTITUTIONS

A. Alternate products may be accepted, in accordance with the requirements of the Contract Statement of Work.

2.2 COATINGS

A. Provide products with zinc coating or with treatment of equivalent corrosion resistance using approved alternative treatment, finish, or inherent material characteristic that is suitable for the environment in which the product will be installed and used.

2.3 RIGID METAL CONDUIT AND FITTINGS

A. Furnish Rigid Metal Conduit (RMC) that meets the requirements of UL 6 and NEMA C80.1.

B. Material: Hot-dip galvanized, with chromated protective layer.

C. Furnish zinc-plated, threaded, malleable iron fittings and conduit bodies that meet the requirements of UL 514B and NEMA FB1.

2.4 PLASTIC-COATED STEEL CONDUIT AND FITTINGS

A. Furnish polyvinyl chloride (PVC) exterior coated, urethane interior coated, RMC that meets the requirements of NEMA RN 1.

B. Use factory-fabricated elbows.

C. Furnish 40 mils PVC exterior coated, urethane interior coated, zinc-plated, threaded, malleable iron fittings and conduit bodies meeting the requirements of UL 514B.

D. Interior finish: Urethane coating, 2 mils nominal thickness.

E. Threads: Hot-dipped galvanized and factory coated with urethane.

F. Bendable without damage to either interior or exterior coating.

2.5 RIGID NON-METALLIC CONDUIT AND FITTINGS

A. Furnish RNC that conforms to UL 651, UL 651A, NEMA TC2, NEMA TC 3, NEMA TC 6 and 8, and NEMA TC 7.

B. Furnish non-metallic, solvent-welded socket fittings that meet the requirements of UL 651, NEMA TC 3, and NEMA TC 9.

2.6 FLEXIBLE METAL CONDUIT AND FITTINGS

A. Furnish galvanized steel flexible metal conduit that meets the requirements of UL 1 and UL 360 for 105°C insulated conductors.

B. Material: Galvanized steel, with an extruded PVC jacket.

C. Furnish zinc-plated malleable iron fittings that meet the requirements of UL 514B and NEMA FB1. Furnish insulated throat connectors.

2.7 LIQUID-TIGHT FLEXIBLE METAL CONDUIT AND FITTINGS

A. Furnish liquid-tight flexible metal conduit that meets the requirements of UL 360.

B. Furnish zinc-plated malleable iron or zinc-plated steel liquid-tight fittings that meet the requirements of UL 514B and NEMA FB1. Furnish insulated throat connectors.

C. Furnish galvanized steel flexible metal conduit that meets the requirements of UL 1 and the NEC.

2.8 INSULATING BUSHINGS

A. Provide NRTL-listed insulating bushings with 105°C rated insulation.

B. Manufacturer: O-Z/Gedney, Type B or SB.

2.9 GROUNDING BUSHINGS

A. Provide NRTL-listed, galvanized malleable iron, 150°C rated insulated throat grounding bushings with lay-in type ground cable lugs.

B. Manufacturer: O-Z/Gedney, Type BLG.

2.10 EXPANSION FITTINGS

A. Furnish NRTL-listed expansion fittings with hot dipped galvanized malleable iron body, factory-installed packing, and a bonding jumper.

B. Manufacturer: O-Z/Gedney, Type AX, TX, or EXE with Type BJ bonding jumper.

C. Lubricant and Sealant.

1. Lubricant and Sealant for Conduit Thread: Conductive compound providing anti-seize and corrosion protection. Thomas and Betts Corporation "KOPR-SHIELD®[14]," or approved substitute.

2.11 PROTECTION TAPE AND CONDUIT SEALANT

A. Furnish pressure-sensitive, 10 mil thick, PVC-based tape for corrosion protection of metal conduit and fittings. Manufacturer: 3M, Type 50.

B. Furnish plastic insulating tape that complies with UL 510.

C. Furnish electrical color-coding tape that complies with UL 510.

D. Furnish sealing compound for conduit: "Sealex" by Porcelain Products Company or "Duct Seal" by Gardner-Bender.

2.12 RACEWAY MEASURING TAPE

A. Furnish raceway measuring tape with permanently printed measurements in 1-ft increments and minimum 1,200 lb average breaking strength.

2.13 WIREWAY

A. Provide NRTL-listed, wireway with covers, elbows, tees, hangers, and fittings required for a complete system. Wireway shall be rated for environment to be installed.

2.14 OUTLET BOXES

A. Provide outlet boxes selected for specific installations using the guidance in NEMA OS 3 and the requirements of this Section.

B. Exterior mounted enclosures (terminal boxes) shall be NEMA ICS 6, NEMA Type 4, unless shown otherwise on the Drawings.

C. For dry locations, provide galvanized steel outlet boxes that comply with UL 514A.

1. For luminaire outlets use 4-in. x 1 1/2-in. deep (minimum) boxes with fixture stud attachment as required to support luminaires.

2. For surface outlet boxes in EMT raceway systems, use 4-in. x 2 1/8-in. deep square boxes. Provide deeper boxes or multiple gang boxes as required to fit devices. Provide square surface covers that match the installed device and have not less than two holes for securing the device to the cover.

[14] KOPR-SHIELD is a registered trademark of Jet-Lube, Inc., Houston, Texas.

D. For damp or wet locations and for surface-mounted RMC or IMC raceway systems, provide outlet boxes that comply with UL 498, UL 514A, UL 514B, UL 514C, and NEMA FB1.

1. For lighting fixture outlets use 4-in. x 2 1/16-in. deep (minimum) round cast malleable iron boxes with threaded hubs.

2. For surface wall-mounted outlets, use 4 11/16 square, 2 11/16-in. deep cast malleable iron boxes with threaded hubs. Provide multiple gang boxes as required to fit devices. Provide gasketed cast malleable iron or cast copper-free aluminum covers that match the installed device and have not less than two holes for securing the device to the cover.

E. For all entries into NEMA ICS 6, Type 4 enclosures: Type CGB for exposed cable, and Myers type watertight fittings or sealing-type locknuts for conduits.

2.15 PULL AND JUNCTION BOXES

A. Metallic boxes (terminal boxes) shall be NEMA 250 or UL 50, Type 4, 16 or 14 gage steel.

B. For dry locations in clean, non-contamination environments, use galvanized sheet steel pull and junction boxes that comply with UL 50, Type 1 and the NEC as to size and construction. Use boxes not less than 4-in. square x 1 1/2-in. deep with screw-secured covers. Provide larger boxes as required by the number and size of conduits and conductors.

C. For dry locations in dusty environments, use galvanized steel pull and junction boxes that comply with UL 50, Type 12 and the NEC as to size and construction. Use boxes not less than 6-in. square x 4-in. deep with gasketed covers. Provide larger boxes as required by the number and size of conduits and conductors.

D. For damp or wet, non-corrosive locations, in conduit runs up to 3/4-in. trade size, provide 4 11/16-in. square, 2 11/16-in. deep (min.) cast malleable iron pull and junction boxes with threaded hubs and gasketed cast malleable iron or cast copper-free aluminum covers.

E. For damp or wet, non-corrosive locations, in conduit runs 1-in. trade size and larger, provide galvanized sheet-steel pull and junction boxes and covers that comply with UL 50, Type 4.

F. For damp or wet, non-corrosive locations that are subject to hose-directed water, provide pull and junction boxes and covers that comply with UL 50, Type 4.

G. For in-ground, non-metallic handholes, provide products that are NRTL-listed to SCTE 77.

1. Material: Polymer concrete.

2. Minimum SCTE 77 load rating:

   a. Located in sidewalks: Tier 8.

   b. Located in driveways, parking lots, and off-roadway locations: Tier 22.

3. Size: As shown on Drawings.

4. Cover: Non-skid cover with stainless steel cover bolts.

5. Identification: Permanent mark or logo on cover prominently identifying the function of the enclosure in accordance with NEC requirements.

6. Manufacturer: Quazite®[15] "Style PC, PG, or PT." or as shown on Drawings.

H. Provide connection points for equipment grounding conductors in each box.

I. For all entries into NEMA ICS 6, Type 4 enclosures: Type CGB for exposed cable, and Myers type watertight fittings or sealing-type locknuts for conduits.

PART 3 EXECUTION

3.1 EXAMINATION

A. Examine surfaces to receive raceways and boxes for compliance with installation tolerances and other conditions affecting performance of the raceway system. Do not proceed with installation until unsatisfactory conditions have been corrected.

3.2 PREPARATION

A. Scaled dimensions on the Drawings show desired and approximate locations of equipment. Actual locations, distances, and levels shall be governed by field conditions.

3.3 GENERAL

A. Perform work in accordance with NFPA 70, the Specifications, and the Drawings. Fasten equipment to structural members or metal supports attached to structure or to concrete surfaces

B. Install complete systems of raceways and boxes for wiring systems.

C. Install raceways and boxes according to the NEC, the manufacturer instructions, and requirements in this Section.

D. Raceway termination points and box locations shown on the Drawings are in approximate locations, unless dimensioned.

[15] Quazite is a registered trademark of Hubbell Incorporated, Shelton, Connecticut.

E. Raceway routing is shown on the Drawings in approximate locations, unless dimensioned. Coordinate routing with structure and with work of other trades. Route as required for a complete wiring system.

F. Ground and bond raceways and boxes as required in Section 26 05 26, "Grounding and Bonding for Electrical Systems," and UL 467.

G. Support raceways and boxes in accordance with the requirements of the NEC, Section 26 05 29, "Hangers and Supports for Electrical Systems," and NEMA OS 1.

H. Identify raceways and boxes as required in Section 26 05 53, "Identification for Electrical Systems."

I. Arrange raceway and boxes to maintain headroom and present neat appearance.

J. Install knockout closures in unused openings in boxes or raceways.

3.4 CONDUIT INSTALLATION

A. For low-voltage wiring systems (less than 1000 volts) use conduit materials according to the NEC and the following:

1. Outdoors

a. Direct buried: Use plastic-coated RMC, minimum 1-in. diameter.

b. Outdoors - exposed: Use RMC or liquid-tight flexible metal conduit where subject to vibration or flexibility is required.

c. Outdoors - concealed: Use RMC for concealed outdoor work. Do not use bare RMC or IMC in direct contact with earth.

2. Connection to vibrating equipment (including hydraulic, pneumatic, or electric solenoid or motor-driven equipment) - Use a minimum of 24-in.; maximum length as determined by the NEC:

a. Outdoors: Use liquid tight flexible metal conduit.

B. Use 3/4-in. above ground or larger conduit to enclose multiple conductors larger than 12 AWG.

C. Install conduits with a minimum of bends in the shortest practical distance, considering the type of building construction and obstructions.

D. Use specified fitting for conduit, except that threaded hubs and sealing type locknuts shall be used outdoors and locations where moisture is present. Use couplings where required. Do not use running threads.

E. Use conduit hubs to fasten conduit to boxes in damp and wet locations.

F. Use galvanized steel locknuts and insulated bushings for attachment to enclosures, except threaded hubs or sealing type locknuts shall be used outdoors or where moisture is present. Use watertight fittings for entries into NEMA 4 enclosures. Use sealing locknuts into bottoms of NEMA 4 enclosures.

G. Install insulating bushings or connectors with an insulated throat to protect conductors or cables at conduit terminations.

H. Join nonmetallic conduit using cement, as recommended by manufacturer. Wipe nonmetallic conduits dry and clean before joining. Apply full even coat of cement to entire area inserted in fitting. Allow joint to cure for 20 minutes, minimum.

I. Install plastic-coated RMC and fittings according to the NEC and manufacturer instructions. Use only fittings approved for use with that material. Patch all nicks and scrapes in PVC coating after installing conduits.

J. Make elbows, offsets, and bends uniform and symmetrical. Bend conduit with approved bending devices.

K. Do not use RNC 90 degree elbows larger than 2-in. trade size; use plastic-coated RMC, tape-wrapped RMC.

L. Maintain the following minimum clearances between conduit and surfaces with temperatures exceeding 104°F (40°C):

1. 6 in. at perpendicular crossings.

2. 12 in. between parallel runs.

M. Cut ends square, ream, and remove burrs. Conduit shall be clean, dry, and free of debris. Immediately after installation, plug or cap exposed ends with standard accessories until wires are installed.

N. Avoid moisture traps in conduit system; provide junction boxes with drain fitting at low points in conduit system.

O. Install corrosion protection tape on metal conduits and fittings in contact with soil using half-lapped wrappings.

P. Install grounding bushings at the following locations:

1. At every entry to enclosures on metallic conduits containing circuits rated 100 amperes and higher.

2. On metallic conduits entering enclosures through concentric, eccentric, or oversize knockouts.

3. On metallic conduits that terminate to a metallic enclosure without effective electrical connection, such as locknuts or threaded bushings.

Q. Install conduit-measuring tape in empty raceways. Leave not less than 12 in. of slack at each end of the tape. Secure each end of tape.

3.5 FIRESTOPPING

A. Install an NRTL approved firestop system at each electrical penetration in a fire-rated wall, floor, or partition.

B. At least two days prior to firestopping installation, notify WRPS Construction Representative so that arrangements can be made for inspection during installation.

3.6 PULL AND JUNCTION BOX INSTALLATION

A. Install pull and junction boxes as shown on the Drawings and as required for splices, taps, wire pulling, and compliance with regulatory requirements.

B. Install pull boxes as required to comply with limits on conduit bends and distance between pull points in Paragraph 3.4, "Conduit Installation."

C. Install bedding material for in-ground handholes in accordance with manufacturer installation instructions. Place top of handholes flush with top of finished grade.

3.7 WIREWAY INSTALLATION

A. Install wireways at locations indicated on the Drawings.

B. Mount plumb and level.

3.8 CLEANING

A. Clean interior of boxes to remove dust, debris, and other material.

B. Repair damage to galvanized finishes with zinc-rich paint, recommended by manufacturer.

C. Repair damage to paint finishes with matching touch-up coating recommended by the manufacturer.

3.9 FIELD QUALITY CONTROL

A. For conduits, junction boxes, associated fittings and supports, verify appropriate torque values are in accordance with manufacturer recommendations.

B. Provide final protection and maintain conditions to ensure that coatings and finishes are without damage or deterioration at final inspection.

END OF SECTION 26 05 33

SECTION 26 05 53

IDENTIFICATION FOR ELECTRICAL SYSTEMS

PART 1 GENERAL

1.1 SUMMARY OF WORK

A. Component identification tags.

B. Equipment nameplates.

C. Wire markers.

D. Voltage markers.

E. Warning signs.

F. Working space labels.

G. Underground warning tape.

H. Arc Flash labels.

I. Conduit labels.

1.2 RELATED DOCUMENTS / CODES AND STANDARDS

Drawings and general provisions of the Contract Statement of Work, including Division 01 Specification Sections, apply to this Section.

The following documents and others referenced therein, form part of the Contract to the extent designated in this Section. Referenced documents are those current as of the date of this Section unless otherwise indicated.

A. American National Standards Institute (ANSI)

ANSI Z535.1	Safety Colors
ANSI Z535.2	Environmental and Facility Safety Signs
ANSI Z535.3	Criteria for Safety Symbols
ANSI Z535.4	Product Safety Signs and Labels
ANSI Z535.5	Safety Tags and Barricade Tapes (for Temporary Hazards)

B. Code of Federal Regulations (CFR)

29 CFR 1910.145	Danger and Caution Specifications

C. Hanford Documents

TFC-ENG-STD-12, E-2	Tank Farm Equipment Identification Numbering and Labeling Standard

D. International Standards Organization (ISO)

ISO 3864	Graphical Symbols Package

E. National Fire Protection Association (NFPA)

NFPA 70, 2017	National Electrical Code (NEC)
NFPA 70E	Standard for Electrical Safety in the Workplace

F. Underwriters Laboratories (UL)

UL 969	Standard for Marking and Labeling Systems

1.3 SUBMITTALS

A. See the Contract Statement of Work for the submittal process.

B. Approval Required

1. Catalog Data: Submit manufacturer catalog literature for each product.

2. Submit electrical identification schedule including list of wording, symbols, letter size, color-coding, tag number, location, and function.

3. Samples:

   a. Submit two samples of each type of printed identification products applicable to project.

   b. Submit two nameplates illustrating materials and engraving quality.

4. Manufacturer Installation Instructions: Submit installation instructions, indicating special procedures and installation requirements.

1.4 QUALITY ASSURANCE

A. Conform to requirements of the NEC, NFPA 70E, and 29 CFR 1910.145.

B. Conform to applicable requirements of ANSI Z535.1, Z535.2, Z535.3, Z535.4, and Z535.5.

1.5 DELIVERY, STORAGE, AND HANDLING

A. Coordinate identification names, abbreviations, colors, and other features with requirements in the Subcontract Documents, Shop Drawings, and manufacturer wiring diagrams, with those required by codes, standards, and 29 CFR 1910.145. Use consistent designations throughout Project.

PART 2 PRODUCTS

2.1 SUBSTITUTIONS

A. Alternate products may be accepted in accordance with the requirements of the Contract Statement of Work.

2.2 COMPONENT IDENTIFICATION TAGS

A. Furnish component identification tags as specified and scheduled on the Drawings and consistent with the labeling format in TFC-ENG-STD-12.

B. Provide tags made of materials shown on the Drawings, and consistent with the requirements in TFC-ENG-STD-12.

2.3 EQUIPMENT NAMEPLATES

A. Furnish equipment nameplates at each switchboard; disconnect switches, distribution panel, and transformers as specified on the Drawings.

B. Equipment nameplates: Laminated plastic, as shown on Drawings. Engraved nomenclature sharp and clear. Engraved manufacturer standard nameplates may be used if equal in quality and legibility.

C. Attachment:

1. NEMA 4 and 4X Enclosures: One-part clear room temperature vulcanizing adhesive.

2. All Other Enclosures: Stainless steel screws, unless otherwise noted on Drawings.

D. Post conductor color code on each panelboard, switchboard, switchgear assembly, motor control center (MCC). Use typewritten, adhesive-backed labels.

E. Coordinate equipment nameplate schedule with equipment numbering scheme provided by WRPS Construction Representative.

2.4 WIRE MARKERS

A. Provide wire markers for power circuit wires.

B. Furnish split sleeve or heat-shrinkable sleeve, wire markers.

C. Locate a wire marker on each conductor at each switchboard, disconnect switches, terminal box, distribution panel, transformer, pull boxes, junction boxes, and each load connection.

D. Provide typewritten lettering on wire markers for as-built branch circuit or feeder circuit number.

E. Manufacturer: LEM Products, Inc., Brady, Panduit.

2.5 VOLTAGE MARKERS

A. Furnish voltage markers for each switchboard; disconnect switches, terminal box, distribution panel, transformer, and cabinets.

B. Provide flexible pressure sensitive vinyl markers with minimum 1-in. x 4-in. orange background and black letters.

C. Provide voltage markers with lettering indicating the highest voltage present:

1. 480Y/277 and 480 V system: 480 V.

2. 120/240V and 240V systems: 240V.

D. Manufacturer: Electromark, LEM Products, Inc.

2.6 WARNING SIGNS

A. Furnish warning signs for each switchboard, disconnect switches, terminal box, distribution panel, transformer, pull boxes, and cabinets.

B. Use warning signs that conform to ANSI Z535.2, Z535.4 and 29 CFR 1910.145.

C. Provide minimum 2-in. x 4-in. warning signs.

D. Provide warning signs with format and lettering as follows:

1. Signal word: DANGER

2. Signal word panel color: Red with safety alert symbol.

3. Word message:
   Keep Out!
   Hazardous voltage inside.
   Will shock, burn, or cause death.

4. Safety symbol: ISO 3864 “lightning bolt” in yellow triangle.

E. Materials:

1. Use flexible, pressure sensitive, polyester base with polyester overlaminate.

F. Manufacturer: Seton Name Plate Co., Safety Label Solutions, Hazard Communication Systems, Electromark.

2.7 WORKING SPACE LABELS

A. Provide labels indicating required working clearance at electrical equipment that is likely to require examination, adjustment, servicing, or maintenance while energized.

B. Material:

1. Use polyester label stock that is NRTL-recognized to UL 969 and has a high-adhesion adhesive back.

2. Use printing ribbon recommended by the label stock manufacturer.

3. Use a suitable thermal transfer process label-printing machine to generate labels and enter the application-specific information.

4. Outdoor labels shall be suitable for a high-UV environment.

C. Minimum dimensions: 3 1/2-in. x 1 1/4-in.

D. Use the following label design:

NOTICE
Keep area in front of this electrical equipment clear for #-#/# feet. OSHA-NEC regulations.

1. Signal word: "NOTICE" in 24-point minimum white italic letters on safety blue panel.

2. Word message: 16-point minimum black or safety blue letters on white background.

a. Word message for 151 to 600 Volt equipment with exposed live parts on one side of the working space and no live or grounded parts on the other side of the working space: "Keep area in front of this electrical equipment clear for 3 feet OSHA-NEC regulations."

b. Word message for 151 to 600 Volt equipment with exposed live parts on one side of the working space and grounded parts on the other side of the working space: "Keep area in front of this electrical equipment clear for 3 1/2 feet OSHA-NEC regulations."

c. Word message for 151 to 600 Volt equipment with exposed live parts on both sides of the working space: "Keep area in front of this electrical equipment clear for 4 feet OSHA-NEC regulations."

d. Word message for 0 to 150 Volt equipment with exposed live parts on one side of the working space and live or grounded parts on the other side of the working space: "Keep area in front of this electrical equipment clear for 3 feet OSHA-NEC regulations."

E. Manufacturer: Brother, Seton, Brady

2.8 UNDERGROUND WARNING TAPE

A. Furnish underground warning tape for underground cables, conduits and duct banks.

B. Use 6-in. wide, 0.004-in. thick, polyethylene detectable underground warning tape black lettering and the following background colors:

1. Electric: Red

C. Provide lettering that indicates the type service buried below.

1. Electric: "CAUTION ELECTRIC LINE BURIED BELOW"

D. Manufacturer: Utility Safeguard, LLC, Detectable Terra Tape, Reef Industries, Inc.

2.9 ARC FLASH LABELS

A. Install arc flash labels on electrical equipment as required by NEC.

2.10 CONDUIT LABELING

A. Conduit metal tags shall be affixed to all numbered conduit. Conduit numbers are shown on Drawings.

PART 3 EXECUTION

3.1 EXAMINATION

A. Examine surfaces to receive identification products for compliance with installation tolerances and other conditions affecting performance of the identification products. Do not proceed with installation until unsatisfactory conditions have been corrected.

3.2 INSTALLATION - GENERAL

A. Where identification is to be applied to surfaces that require finish, install identification after completion of finish work.

B. Install labels where indicated and at locations for best convenience of viewing without interference with operation and maintenance of equipment.

C. Coordinate installation of identifying devices with location of access panels and doors.

D. Install electrical identification products only when ambient temperature and humidity conditions for adhesive are within range recommended by manufacturer.

E. Clean surface where electrical identification product is to be placed.

F. Use manufacturer recommended adhesive for engraved tags and nameplates.

G. Place electrical identification products centered and parallel to equipment lines.

3.3 COMPONENT IDENTIFICATION TAGS

A. Install component identification tag, as indicated on the Drawings, on the front of each piece of electrical equipment including switchboards, MCCs, distribution panels, transformers, and variable frequency drives.

B. Position tags so they can be read from floor or ground.

3.4 EQUIPMENT NAMEPLATES

A. Install equipment nameplate or nameplates, as indicated on the Drawings, on the front of each piece of electrical equipment including switchboards, MCCs, distribution panels, and transformers.

B. Position nameplates so they can be read from floor or ground.

3.5 WIRE MARKERS

A. Install wire markers on power conductors at each appearance in locations such as pull boxes, junction boxes, switchboards, MCCs, distribution panels, transformers, and load connections.

B. Position markers so they can be read from the front of the enclosure.

3.6 VOLTAGE MARKERS

A. Install voltage markers at the following locations and position markers so they can be read from floor or ground:

1. Front of each freestanding low-voltage switchboard section.

2. Front of each switchboard, MCC, distribution panel, and transformers.

3. Cover of each pull box containing low-voltage conductors.

3.7 WARNING SIGNS

A. Install warning signs at the following locations and position signs so they can be read from floor or ground:

1. Front of each switchboard disconnect switches, terminal box, distribution panel, transformer, pull boxes, and cabinets.

3.8 WORKING SPACE LABELS

A. Install working space labels in front of switchboards, MCCs, distribution panels, and transformers.

B. Any other equipment likely to require examination, adjustment, servicing, or maintenance while energized.

3.9 UNDERGROUND WARNING TAPE

A. For trenches 12-in. or less from top of conduit to top of finished grade, install underground warning tape in trench, 6-in. above conduit.

B. For trenches greater than 12-in. from top of conduit to top of finished grade, install underground warning tape in trench, 12-in. minimum above conduit.

C. Where conduits are 6-in. or less below grade, warning tape is not required.

END OF SECTION 26 05 53

SECTION 26 22 13

LOW VOLTAGE DISTRIBUTION TRANSFORMERS

PART 1 GENERAL

1.1 SUMMARY OF WORK

A. General-purpose dry-type low-voltage transformers

1.2 RELATED DOCUMENTS / CODES AND STANDARDS

Drawings and general provisions of the Contract Statement of Work, including Division 01 Specification Sections, apply to this Section.

The following documents and others referenced therein, form part of the Contract to the extent designated in this Section. Referenced documents are those current as of the date of this Section unless otherwise indicated.

A. American National Standards Institute

ANSI C84.1-2016	Electric Power Systems and Equipment – Voltage Ratings

B. National Electrical Manufacturers Association (NEMA)

NEMA TP 1	Guide for Determining Energy Efficiency for Distribution Transformers
NEMA TP 2	Standard Test Method for Measuring the Energy Consumption of Distribution Transformers
NEMA TP 3	Standard for the Labeling of Distribution Transformer Efficiency

C. National Fire Protection Association (NFPA)

NFPA 70, 2017	National Electrical Code (NEC)

D. Underwriters Laboratories (UL)

	Electrical Appliance and Utilization Equipment Directory
UL 486A-486B	Wire Connectors
UL 1561	Dry-Type General Purpose and Power Transformers

1.3 SUBMITTALS

A. See the Contract Statement of Work for the submittal process.

B. Approval Required: None

1.4 QUALITY ASSURANCE

A. Comply with the NEC for components and installation.

B. Provide products that are listed and labeled by a Nationally Recognized Testing Laboratory (NRTL) for the application, installation condition, and the environment in which installed.

C. Provide products that comply with the following industry standards:

1. NEMA TP 1
2. NEMA TP 2
3. NEMA TP 3
4. UL 1561

1.5 DELIVERY, STORAGE, AND HANDLING

A. Receive, store, protect, and handle products according to manufacturer instructions.

PART 2 PRODUCTS

2.1 PRODUCT OPTIONS AND SUBSTITUTIONS

A. Alternate products may be accepted in accordance with the requirements of the Contract Statement of Work.

2.2 GENERAL

A. Transformers shall be NRTL-listed to UL 1561 and shall be tested and labeled according to NEMA TP 1, NEMA TP 2, and NEMA TP 3.

B. The efficiency of each transformer shall be NEMA TP 1, Class I when tested in accordance with NEMA TP 2. Transformer efficiency shall be indicated on a label that conforms to NEMA TP 3.

C. Transformer coils may be aluminum or copper with continuous wound construction and shall be impregnated with non-hygroscopic, thermosetting varnish. Terminations shall be brazed or welded to the coil conductor.

D. Transformer cores shall be constructed of a high grade, non-aging silicon steel with high magnetic permeability and low hysteresis and eddy current losses. Magnetic flux densities shall be kept well below the saturation point.

E. The core and coil shall be bolted to the base of the enclosure, isolated by means of rubber vibration-absorbing mounts. There shall be no metal-to-metal contact between

the core and the enclosure. Sound isolation systems requiring the complete removal of all fastening devices will not be acceptable.

F. The core of the transformer shall be visibly grounded to the enclosure by a flexible grounding conductor sized following applicable UL and NEC Standards.

G. The transformer enclosure shall be ventilated and shall be fabricated of a heavy gauge, sheet steel construction. The entire enclosure shall be finished using a process consisting of degreasing, cleaning and phosphatizing followed by electrostatic deposition of polymer polyester powder and baking cycle to provide a uniform coating of all edges and surfaces. The coating shall be UL recognized for outdoor use. The coating color shall be light or medium grey.

H. Transformers shall be suitable for rack or floor mounting. Provide mounting accessories required for installation.

I. Provide weather shields for transformers installed outdoors.

J. Provide transformer manufacturer transformer lug kits with compression type equipment lugs and hardware for connecting conductors to transformer terminals.

K. Provide factory assembled and tested, energy-efficient, general-purpose, air-cooled, two-winding, dry-type transformers with voltage and kVA ratings, as indicated on the Drawings.

L. General-purpose transformers 15 kVA and larger shall be 150°C temperature rise above 40°C ambient. The maximum temperature of the top of the enclosure shall not exceed 50°C rise above a 40°C ambient.

M. Transformers 15 kVA and larger shall have a minimum of two 2.5% full capacity above normal and four 2.5% full capacity below normal primary taps.

N. Manufacturers:

1. Square D Class 7400 Type “EE.”

2. Eaton/Cutler-Hammer “DS-3” and “DT-3.”

PART 3 EXECUTION

3.1 EXAMINATION

A. Examine surfaces to receive transformers for compliance with installation tolerances and other conditions affecting performance of the control system. Do not proceed with installation until unsatisfactory conditions have been corrected.

3.2 INSTALLATION

A. Install dry-type transformers where indicated on the Drawings and according to manufacturer instructions. Manufacturer installation instructions shall be available at the construction site.

B. Arrange equipment to provide adequate spacing for access, replacement, and for cooling air circulation. Locate the front and rear of each ventilated transformer at least 6-in. from the wall or any obstruction to allow proper air circulation.

C. Make conduit connections to transformer enclosure, only at locations designated by the manufacturer installation instructions.

D. Connect conductors to transformer terminals using transformer manufacturer lug kits. Tighten electrical connectors and terminals according to manufacturer published torque-tightening values. Where manufacturer torque values are not furnished, use those specified Section 26 05 19, "Low Voltage Electrical Power Conductors and Cables, "Attachment 1, "Recommended Tightening Torque per UL 486A-486B."

E. Bond transformers and ground systems served by transformers according to Section 26 05 26, "Grounding and Bonding for Electrical Systems."

F. Identify transformers and install warning signs according to Section 26 05 53, "Identification for Electrical Systems."

3.3 FIELD QUALITY CONTROL

A. Clean, inspect, test, adjust, and energize transformers in accordance with manufacturer instructions.

1. Inspect each transformer for physical damage, proper connection and grounding, and proper anchorage.

2. Keep records of inspections, tests, and adjustments in the work package or fabrication document.

B. Coordinate inspections and tests with those required by other sections.

C. After completing installation, cleaning, and testing, touch-up scratches and mars on finish to match original finish.

D. Measure primary and secondary voltages and phase rotation, and make preliminary tap adjustments. The system nominal, minimum, and maximum are per ANSI C84.1-2016. After normal operating loads have been energized, adjust taps to provide the following voltage at points of use; record voltages and tap settings.

System Nominal Voltage	Minimum Load Voltage	Maximum Load Voltage
480Y/277	456Y/263	504Y/291
120/240	114/228	126/252

END OF SECTION 26 22 13

SECTION 26 24 16

PANELBOARDS

PART 1 GENERAL

1.1 SUMMARY OF WORK

A. Panelboards for feeder and branch circuit loads.

1.2 RELATED DOCUMENTS / CODES AND STANDARDS

Drawings and general provisions of the Contract Statement of Work, including Division 01 Specification Sections, apply to this Section.

The following documents and others referenced therein, form part of the Contract to the extent designated in this Section. Referenced documents are those current as of the date of this Section unless otherwise indicated.

A. National Electrical Manufacturer's Association (NEMA)

NEMA AB 3	Molded Case Circuit Breakers and their Application
NEMA PB 1	Panelboards
NEMA PB 1.1	General Instructions for Proper Installation, Operation, and Maintenance of Panelboards Rated 600 volts or less

B. National Fire Protection Association (NFPA)

NFPA 70, 2017	National electrical Code (NEC)

C. NSF International/American National Standards Institute (ANSI)

NSF/ANSI 49	Biosafety Cabinetry: Design, Construction, Performance, and Field Certification

D. Underwriters Laboratories (UL)

UL 50	Enclosures for Electrical Equipment, Non-Environmental Considerations
UL 67	Panelboards
UL 486A-486B	Wire Connectors
UL 489	Molded Case Circuit Breakers

1.3 SUBMITTALS

A. See the Contract Statement of Work for the submittal process.

B. Approval Required: None.

1.4 QUALITY ASSURANCE

A. Comply with the NEC for components and installation.

B. Furnish products that are listed and labeled by a Nationally Recognized Testing Laboratory (NRTL) for the application, installation condition, and the environment in which installed.

C. Comply with NEMA PB 1, NEMA PB 1.1, and NEMA AB 3.

D. Comply with UL 67, UL 50, and UL 489.

1.5 DELIVERY, STORAGE, AND HANDLING

A. Receive, inspect, handle, and store panelboards according to manufacturer instructions.

1.6 EXTRA MATERIALS

A. Furnish spare keys of each type for panelboard cabinet locks.

PART 2 PRODUCTS

2.1 SUBSTITUTIONS

A. Alternate products may be accepted in accordance with the requirements of the Contract Statement of Work.

2.2 DISTRIBUTION PANELBOARDS

A. Furnish panelboards as indicated on the Drawings and specified in this Section.

B. Panelboards shall be UL 67 listed and shall conform to NEMA PB1.

C. Furnish panelboard cabinets for surface mounting as indicted on the Drawings.

1. Furnish outdoor enclosures as indicated below:

   a. NEMA 4/4X or 3R: rated rain tight minimum.

2. Cabinets shall be not less than 20-in. wide.

3. Furnish steel cabinets constructed according to UL 50 requirements.

4. NEMA 12 and NEMA 4 boxes shall have end walls welded and sealed.

D. Furnish trim fronts that meet the strength and rigidity requirements of UL 50.

1. Each panelboard trim front shall include a door.

2. Fronts shall have NSF/ANSI 49 medium gray enamel electro-deposited over cleaned, phosphatized steel.

3. Furnish a panelboard circuit directory card in a metal frame mounted inside the panelboard door. The directory card shall include spaces for circuit numbers and sufficient spaces to allow each circuit to be described in sufficient detail to be distinguished from all others.

a. Furnish cylindrical tumbler-type locks for doors. Furnish sliding vault locks with 3-point latching for enclosures more than 48-in. high. Key all lock assemblies alike. Furnish two keys with each lock, plus spares as required in Paragraph 1.6.

E. Equip panelboards with mounting brackets, bus connections, and necessary appurtenances, for the future installation of circuit breakers as scheduled on the Drawings.

F. Furnish panelboards having NRTL-listed short circuit current ratings, not less than the available fault current indicated on the Drawings.

G. Furnish thermal-magnetic circuit breakers that meet the requirements of UL 489 and NEMA AB 3.

1. Furnish circuit breakers of the type, rating, and features as indicated on the Drawings.

2. Do not use tandem circuit breakers.

3. Furnish multi-pole breakers with a common trip.

4. Furnish bolt-on type circuit breakers or circuit breakers that connect to the panel bus through positive gripping connector jaws, and are secured by an independent mechanical locking device.

5. Furnish UL Class A ground fault interrupter circuit breakers or UL Class B equipment protection circuit breakers where scheduled on Drawings.

6. Furnish circuit breakers with provisions for connecting the size and number of conductors indicated on the Drawings. Refer to Section 26 05 19, “Low Voltage Electrical Power Conductors and Cables,” for conductor connection requirements.

H. Furnish a permanently-installed handle lock-off device for each circuit breaker.

1. Furnish handle lock-off device that will accept a 1/4-in. padlock shackle.

2. Securely attach the device to the circuit breaker case; the attachment shall not depend on a friction fit or the presence of the panelboard front for the handle lock-off device to remain in place and be functional.

I. Manufacturers:

1. Eaton:

a. 480Y/277 V: "PRL3a" and "PRL4"

b. 120/240 V: "PRL1a" and "PRL2a"

2. Square D:

a. 480Y/277 V: "NF" and "I-LINE"

b. 120/240 V: "NQ" and "I-Line"

PART 3 EXECUTION

3.1 EXAMINATION

A. Examine surfaces to receive panelboards for compliance with installation tolerances and other conditions affecting performance. Do not proceed with installation until unsatisfactory conditions have been corrected.

3.2 INSTALLATION

A. Install panelboards where indicated on the Drawings and according to manufacturer instructions, NEMA PB 1.1, and the NEC. Have the manufacturer installation instructions available at the construction site.

B. Furnish supports in accordance with the requirements of Section 26 05 29, "Hangers and Supports for Electrical Systems."

C. Position panelboards so the top circuit breaker handle is not more than 6 feet – 7 in. above the surface of the working space in front of the panelboard.

D. Ground and bond panelboards as required in Section 26 05 26, "Grounding and Bonding for Electrical Systems."

3.3 IDENTIFICATION

A. Furnish typed circuit directories for each branch circuit panelboard.

1. Install a plastic-laminated copy of the panel schedule Drawings on the inner side of the panelboard door.

B. Identify panelboards and install warning signs and arc-flash warning labels, as required in Section 26 05 53, "Identification for Electrical Systems."

3.4 FIELD QUALITY CONTROL

A. Clean, inspect, test, and energize panelboards in accordance with manufacturer instructions. Exercise each circuit breaker three times to verify smooth mechanical operation.

B. Coordinate inspections and tests with those required by other sections.

C. Visual and Mechanical Inspection: Include the following listed inspections and related work.

1. Inspect for defects and physical damage, labeling, and nameplate compliance with requirements of the Drawings and panelboard schedules.

2. Exercise and perform operational tests of mechanical components and other operable devices, in accordance with manufacturer instruction manual.

3. Check panelboard mounting, area clearances, and alignment and fit of components.

4. Check tightness of bolted electrical connections with calibrated torque wrench. Refer to manufacturer instructions for torque values and Section 26 05 19, “Low Voltage Electrical Power Conductors and Cables, “Attachment 1, “Recommended Tightening Torque per UL 486A-486B.”

5. Perform visual and mechanical inspection for overcurrent protective devices.

D. Electrical Tests: Include the following listed items performed in accordance with manufacturer instruction.

1. Ground continuity test ground bus to system ground.

E. After completing installation, cleaning, and testing, touch-up scratches and mars on finish to match original finish.

END OF SECTION 26 24 16

SECTION 26 27 26

WIRING DEVICES

PART 1 GENERAL

1.1 SUMMARY OF WORK

A. Receptacles.

B. Snap switches.

C. Wall plates.

1.2 RELATED DOCUMENTS / CODES AND STANDARDS

Drawings and general provisions of the Contract Statement of Work, including Division 01 Specification Sections, apply to this Section.

The following documents and others referenced therein, form part of the Contract to the extent designated in this Section. Referenced documents are those current as of the date of this Section unless otherwise indicated.

A. Federal Specifications (FS)

B. National Electrical Contractors Association (NECA)

NECA 1	Standard for Good Workmanship in Electrical Contracting

C. National Electrical Manufacturers Association (NEMA)

NEMA ICS 4	Application Guideline for Terminal Blocks
NEMA WD 1	General Requirements for Wiring Devices
NEMA WD 6	Wiring Devices—Dimensional Specifications

D. National Fire Protection Association (NFPA)

NFPA 70, 2017	National Electrical Code (NEC)

E. Underwriters Laboratories (UL)

UL 20	General Use Snap Switches
UL 498	Electrical Attachment Plugs and Receptacles
UL 508A, 2013	Standard for Safety for Industrial Control Equipment

UL 943	Ground Fault Circuit Interrupters
UL 1059	Standard for Terminal Blocks
UL 1449	Standard for Transient Voltage Surge Suppressors

1.3 SUBMITTALS

A. See the Contract Statement of Work for the submittal process.

B. Approval Required

1. Not Used.

1.4 QUALITY ASSURANCE

A. The Seller shall comply with the following Quality Assurance requirements in addition to those of the Contract Statement of Work.

B. Comply with the NEC.

C. Furnish products listed and labeled by a Nationally Recognized Testing Laboratory (NRTL) for the application, installation condition, and the environments in which installed.

1.5 DELIVERY, STORAGE, AND HANDLING

A. Receive, store, protect, and handle products according to manufacturer instructions and NECA 1.

PART 2 PRODUCTS

2.1 SUBSTITUTIONS

A. Alternate products may be accepted in accordance with the requirements of the Contract Statement of Work.

2.2 RECEPTACLES

A. Provide back and side wired, screw pressure terminal, straight-blade, and locking type, receptacles as indicated on the Drawings. Receptacles shall meet the performance and design requirements of UL 498. Receptacle configurations shall be in accordance with NEMA WD 6.

B. For 120-volt receptacles connected to individual branch circuits, provide straight-blade NEMA 5-20R, 20 amperes, 125 volts, grounding duplex receptacles. Receptacle mounting strap, ground terminal, and ground contacts shall be formed from one piece of brass alloy. Manufacturer: Hubbell “HBL5362” or equal.

C. For GFCI receptacles connected to individual branch circuits, provide straight-blade NEMA 5-20R, 20 amperes, 125 volts, grounding, "feed through" type, self-testing GFCI, duplex receptacle that meet the requirements of UL 943. Provide units that can be installed in a 2 3/4-in. deep outlet box without an adapter. Manufacturer: Hubbell "GFR5362ST" or equal.

D. Provide straight-blade and twist lock receptacles for special applications as indicated on the Drawings.

E. Provide 480 VAC, 3 wire, 4 pole, receptacles, amperage as shown on Drawings. Manufacturer: Crouse Hinds.

2.3 SNAP SWITCHES

A. Provide single pole, double pole, three-way, four-way and illuminated handle snap switches as indicated on the Drawings.

B. Switches shall be rated 20 amperes, 120-277 volts AC, back and side wired, screw pressure terminal, quiet type AC switch with yoke grounding screw. Switches shall meet the performance and design requirements of UL 20.

C. Manufacturer: Hubbell "HBL1220" series.

2.4 WALL PLATES

A. For GFCI receptacles in damp or wet locations provide weatherproof, in use covers. Manufacturer: Hubbell "WP26E."

B. Provide single, multi-gang, and combination type wall plates that mate and match with corresponding wiring devices.

C. Use metal plate-securing screws to match plate finish.

D. Terminal Blocks

1. Terminal Blocks shall meet the requirements of UL 1059 or NEMA ICS 4.

PART 3 EXECUTION

3.1 PREPARATION

A. Verify outlet boxes are installed per Drawings.

B. Verify branch circuit wiring installation is completed, tested, and ready for connection to wiring devices.

C. Clean debris from outlet boxes before installing devices.

3.2 INSTALLATION

A. Install products following manufacturer instructions. Have the manufacturer installation instructions available at the construction site.

B. Install devices plumb, level, and secure.

C. Except as otherwise indicated on the Drawings, mount devices with long dimension vertical, and grounding point of receptacles on top. Group adjacent switches and receptacles under single, multi-gang wall plates.

D. Do not use the duplex/split-wire break-off tabs in receptacles as circuit conductors for connecting downstream devices.

E. Install galvanized steel plates on outlet boxes and junction boxes on surface mounted outlets.

3.3 GROUNDING

A. Connect wiring device grounding terminal to branch circuit equipment grounding conductor.

3.4 IDENTIFICATION

A. Identify wiring devices with circuit number as required in Section 26 05 53, “Identification for Electrical Systems.”

3.5 FIELD QUALITY CONTROL

A. Inspect each wiring device for defects before installing.

B. Operate each operable device at least six times with circuit energized; verify proper operation.

C. Test 20-ampere receptacles for proper polarity and ground continuity using an NRTL-listed test device that impresses a momentary current of at least 15 amperes on the branch circuit conductors and equipment grounding path.

D. Test ground-fault circuit interrupter receptacle operation according to manufacturer recommendations.

E. Replace damaged or defective wiring devices.

3.6 CLEANING AND ADJUSTING

A. Clean devices prior to and after installation. Replace stained or damaged wall plates or devices.

B. Adjust devices and wall plates to be flush and level as required.

END OF SECTION 26 27 26

SECTION 26 28 16

ENCLOSED SWITCHES AND CIRCUIT BREAKERS

PART 1 GENERAL

1.1 SUMMARY OF WORK

A. Safety switches.

B. Fuses and circuit breakers.

1.2 RELATED DOCUMENTS / CODES AND STANDARDS

Drawings and general provisions of the Contract Statement of Work, including Division 01 Specification Sections, apply to this Section.

The following documents and others referenced therein, form part of the Contract to the extent designated in this Section. Referenced documents are those current as of the date of this Section unless otherwise indicated.

A. National Electrical Manufacturers Association (NEMA)

NEMA FU 1	Low Voltage Cartridge Fuses
NEMA KS 1	Enclosed and Miscellaneous Distribution Equipment Switches (600 Volts Maximum)

B. National Fire Protection Association (NFPA)

NFPA 70, 2017	National Electrical Code (NEC)

C. Underwriters Laboratories (UL)

UL 50	Enclosures for Electrical Equipment, Non-Environmental Considerations
UL 248	Low-Voltage Fuses

1.3 SUBMITTALS

A. See the Contract Statement of Work for the submittal process.

B. Approval Required.

1. Not Used.

1.4 QUALITY ASSURANCE

A. Comply with the NEC for components and installation.

B. Provide safety switches that are listed and labeled by a Nationally Recognized Testing Laboratory (NRTL) for the application, installation condition, and the environment in which installed.

C. Comply with the following standards as applicable:

1. NEMA KS 1

2. UL 50

3. NEMA FU 1

4. UL 248

1.5 DELIVERY, STORAGE, AND HANDLING

A. Receive, inspect, handle, and store safety switches, enclosed circuit breakers, and fuses according to the manufacturer written instructions.

1.6 EXTRA MATERIALS

A. Provide one spray can of touch-up paint that matches finish of switches.

PART 2 PRODUCTS

2.1 SUBSTITUTIONS

A. Alternate products may be accepted. Follow the guidelines set forth in the Contract Statement of Work.

2.2 SAFETY SWITCHES

A. Provide NRTL-listed, NEMA Type 1, 3R/12 or 4 Heavy Duty safety switches with ratings and number of poles as indicated on the Drawings or as required by the NEC suitable for the environment into which it is being installed.

B. Each safety switch shall have an equipment ground bar.

C. Each safety switch shall have provisions for padlocking in the OFF position.

D. Manufacturer: Square D “Class 3110” or Cutler-Hammer “DH” Series.

2.3 FUSES

A. Provide NEMA FU 1 and UL 248 fuses with type, voltage, and current ratings as indicated on Drawings.

B. Manufacturer as shown on Drawings.

PART 3 EXECUTION

3.1 INSTALLATION

A. Install safety switches and fuses where indicated on the Drawings, according to manufacturer instructions, and the NEC.

B. Ground and bond safety switches as required in Section 26 05 26, "Grounding and Bonding for Electrical Systems."

C. Install conduits as required in Section 26 05 33, "Raceways and Boxes for Electrical Systems."

D. Install conductors as required in Section 26 05 19, "Low Voltage Electrical Power Conductors and Cables."

1. Tighten electrical connectors and terminals to the manufacturer published torque values.

3.2 IDENTIFICATION

A. Identify safety switches and install warning signs and arc-flash warning labels as required in Section 26 05 53, "Identification for Electrical Systems."

B. Mark floor in front of safety switches to show NEC required working space according to Section 26 05 53.

3.3 FIELD QUALITY CONTROL

A. Clean interior and exterior of safety switches.

B. Verify proper torque of accessible bus connections and mechanical fasteners after installing safety switches, document in work package or fabrication document.

C. Safety Switches, 600 Volts Maximum

1. Visual and Mechanical Inspection:

a. Proper blade alignment.

b. Proper operation of switch operating handle.

c. Adequate mechanical support for each fuse.

d. Proper contact-to-contact tightness between fuse clip and fuse.

e. Manufacturer phase barrier material installed and in place.

f. Verify fuse sizes and types correspond to the Drawings.

g. Perform mechanical operational test and verify mechanical interlocking system operation and sequencing.

D. Molded and Insulated Case Circuit Breakers

1. Visual and Mechanical Inspection:

a. Proper mounting.

b. Proper conductor size.

c. Feeder designation according to the Drawings.

d. Cracked casings.

e. Operate breaker to verify smooth operation.

f. Compare frame size and trip setting with panelboard schedules or one-line diagram.

g. Verify that terminals are suitable for 75°C rated insulated conductors.

E. After completing installation, cleaning, and testing, touch-up scratches and mars on finish to match original finish.

END OF SECTION 26 28 16

SECTION 26 29 13

ENCLOSED CONTROLLERS

PART 1 GENERAL

1.1 SUMMARY OF WORK

A. AC motor control devices rated 1000V or less that are not integral parts of equipment or motor control centers.

B. Manual motor controllers for fractional horsepower motors.

C. Magnetic motor controllers, full-voltage, non-reversing.

D. Combination magnetic motor controllers, full-voltage, non-reversing.

1.2 RELATED DOCUMENTS / CODES AND STANDARDS

Drawings and general provisions of the Contract Statement of Work, including Division 01 Specification Sections, apply to this Section.

The following documents and others referenced therein, form part of the Contract to the extent designated in this Section. Referenced documents are those current as of the date of this Section unless otherwise indicated.

A. National Electrical Manufacturers Association (NEMA)

NEMA ICS 2	Controllers, Contactors and Overload Relays Rated 600 V
NEMA ICS 6	Industrial Control and Systems: Enclosures

B. National Fire Protection Association (NFPA)

NFPA 70, 2017	National Electrical Code (NEC)

C. Underwriters Laboratories (UL)

UL 486A-486B	Wire Connectors
UL 489	Molded-Case Circuit Breakers, Molded-Case Switches, Circuit Breaker Enclosures
UL 508	Industrial Control Equipment

1.3 SUBMITTALS

A. See the Contract Statement of Work for the submittal process.

B. Catalog Data: Submit manufacturer technical data for each type of motor controller and starter, including data proving that materials comply with specified requirements. . Provide catalog sheets showing voltage, controller size, ratings and size of switching and overcurrent protective devices, short circuit ratings, dimensions, and enclosure details.

C. Installation Instructions: Indicate application conditions and limitations of use stipulated by Product testing agency specified under Quality Assurance. Include instructions for storage, handling, protection, examination, preparation, installation, and starting of Product.

D. Operation and maintenance instructions.

E. Test and Inspection Records: Submit records of inspections, tests, and adjustments performed under Field Quality Control.

F. Wiring diagrams: Submit the following listed diagrams for each type of enclosed controller supplied.

1. Wiring diagram showing the relative locations of controller components and terminals.

2. Elementary diagram with components arranged in a “ladder” format to show sequence of operation of the devices.

1.4 QUALITY ASSURANCE

A. Comply with the NEC for components and installation.

B. Provide products that are listed and labeled by a Nationally Recognized Testing Laboratory (NRTL) for the application, installation condition, and the environment in which installed.

1.5 DELIVERY, STORAGE, AND HANDLING

A. Receive, store, protect, and handle products according to manufacturer instructions.

1.6 COORDINATION

A. Coordinate the features of each enclosed controller with the ratings and characteristics of the supply circuit, the motor, the required control sequence, the duty cycle of the load, the pilot devices, and control circuit affecting controller functions. Provide controllers that are horsepower-rated to suit the motor controlled.

1.7 SERVICE CONDITIONS

A. Enclosed controllers shall perform satisfactorily in the following service conditions without mechanical or electrical damage or degradation of operating characteristics:

1. Operating ambient temperature of -25°F to 115°F.

PART 2 PRODUCTS

2.1 PRODUCT OPTIONS AND SUBSTITUTIONS

A. Alternate products may be accepted in accordance with the requirements of the Contract Statement of Work.

2.2 GENERAL

A. Provide enclosed controllers that are NRTL-listed to UL 508 and have a short circuit withstand rating that exceeds the fault current available at the controller line terminals.

B. Provide enclosed controllers that conform to the requirements of NEMA ICS 2.

C. Provide enclosures in accordance with NEMA ICS 6 with Type as required to meet conditions of installation.

2.3 FRACTIONAL HORSEPOWER MANUAL MOTOR CONTROLLERS

A. Provide general purpose, Class A, manually-operated, full-voltage controllers for AC fractional horsepower motors.

B. Provide starter with thermal overload unit, red pilot light, and toggle operator.

C. Provide handle guard with provision for locking in the OFF position.

D. Manufacturers:

1. Allen-Bradley “Bulletin 600”

2. Eaton “Type MS”

3. Siemens “Class SMF”

4. Square D “Class 2510 Type F”

2.4 CIRCUIT BREAKER TYPE COMBINATION MAGNETIC MOTOR CONTROLLERS, NON-REVERSING

A. Provide combination magnetic motor controllers with motor circuit protector disconnect and controller in a common enclosure.

B. Motor circuit protector shall conform to UL 489 with an integral instantaneous magnetic trip in each pole.

1. Trip units shall be calibrated to coordinate with the actual locked-rotor current of the connected motor and the controller overload relays.

2. Provide motor circuit protectors that are factory assembled with the controller, interlocked with unit cover or door, and arranged to disconnect the controller.

3. Motor circuit protector shall have a color-coded externally operated handle. Operating handle shall give positive visual indication of ON-OFF with red and black color-coding. Include provisions for padlocking handle in the OFF position.

4. Provide motor circuit protectors rated 600 volts when used on 480-volt systems.

C. Provide general purpose, Class A, magnetic, full-voltage, non-reversing controllers for AC induction motors rated in horsepower.

D. Coil shall be of the encapsulated type. Coil operating voltage shall be 24 volts, 60 Hz.

E. Provide controllers of size and number of poles as indicated on the Drawings.

F. Contacts shall be totally enclosed, double-break, silver-cadmium-oxide power contacts. Contact inspection and replacement shall be possible without disturbing line or load wiring.

G. Wiring shall be straight through with all terminals clearly marked.

H. Provide solid-state overload units with the following listed characteristics for motors rated up to 100 full-load amperes.

1. NEMA Class 30 tripping characteristics.

2. Field selectable motor full load current.

3. Ambient temperature insensitive.

4. Phase loss and phase unbalance protection.

5. Manual reset after time delay.

6. Integral current transformers.

I. Provide two sets of NEMA ICS 2 field convertible auxiliary contacts in addition to the seal-in contact.

J. Provide cover mounted, heavy duty, 22 mm or 30 mm, metal operator, oil tight pilot devices as listed below with NEMA ICS 2, Form Z, A600 rated contacts

1. Selector Switches, Rotary type as scheduled on the Drawings:

a. HAND-OFF-AUTO or ON-OFF-AUTO selector switch, if controller is connected to automatic control system or may be in the future.

b. ON-OFF selector switch, if controller is not connected to automatic control system.

2. Push buttons as scheduled on the Drawings:

   a. Flush, momentary-contact START pushbutton.

   b. Flush, momentary-contact STOP pushbutton.

3. Push-to-test LED-type indicating lights:

   a. Red RUNNING pilot light.

   b. Green STOPPED pilot light.

   c. Additional pilot lights as indicated on the Drawings.

4. Provide legend plates for pushbuttons, pilot lights, and selector switches.

K. Provide externally operable manual reset operator.

L. Provide a control power transformer in each motor starter. The transformer shall have 24-volt secondary and sufficient capacity to operate starter coil and all connected pilot, indicating and control devices, plus 20% spare capacity. Provide fused primary and secondary. Bond un-fused leg of secondary to enclosure. Provide fuses or fuse holders with blown fuse indication.

M. Manufacturer:

1. Allen-Bradley “Bulletin 513”

2. Siemens “Class 18”

3. Square D “Class 8539 Type S”

PART 3 EXECUTION

3.1 EXAMINATION

A. Examine surfaces to receive equipment for compliance with installation tolerances and other conditions affecting performance of the control system. Do not proceed with installation until unsatisfactory conditions have been corrected.

3.2 INSTALLATION

A. Install motor control equipment where indicated on the Drawings and according to manufacturer instructions. Manufacturer installation instructions shall be available at the construction site.

B. Mount with operating mechanism 5 feet above concrete sidewalk or as indicated on the Drawings.

C. Install enclosed controllers plumb.

D. Remove temporary blocking of moving parts from controllers.

E. Set overload relays or install overload heater elements in motor controllers to match installed motor characteristics.

F. Provide neatly typed label inside each motor starter enclosure door identifying motor served, nameplate horsepower, full load amperes, code letter, service factor, and voltage/phase rating. Place label in clear plastic holder.

G. Arrange equipment to provide adequate spacing for access, replacement, and for cooling air circulation.

H. Make conduit connections to enclosure, only at locations designated by the manufacturer installation instructions.

I. Connect conductors to terminals and label field wiring in accordance with the Drawings. Tighten electrical connectors and terminals according to manufacturer published torque-tightening values. Where manufacturer torque values are not furnished, use those specified Section 26 05 19, "Low Voltage Electrical Power Conductors and Cables," Attachment 1, "Recommended Tightening Torque per UL 486A-486B."

J. Bundle and train wiring in enclosures.

K. Bond and ground equipment according to Section 26 05 26, "Grounding and Bonding for Electrical Systems."

L. Identify equipment and install warning signs according to Section 26 05 53, "Identification for Electrical Systems."

3.3 FIELD QUALITY CONTROL

A. Clean, inspect, test, adjust, and energize equipment in accordance with manufacturer instructions.

B. Inspect each controller for physical damage, proper connection and grounding, and proper anchorage to supports.

C. Verify that the proper overloads are installed and set for the motor nameplate full load current and duty.

D. Coordinate inspections and tests with those required by other sections.

E. Perform the following tests.

1. Verify that voltages at controllers are within plus or minus 10% of motor nameplate rated voltages. If outside this range for any motor, notify Construction Manager before starting the motor(s).

2. Verify that correct voltage is present at control transformer primary and secondary.

3. Test insulation resistance for each enclosed controller, component, connecting supply, feeder, and control circuit.

4. Test continuity of each circuit.

5. Test each motor for phase rotation.

6. Test and adjust controls, remote monitoring, and safety interlocks. Replace damaged and malfunctioning controls and equipment.

F. Enclosed controllers will be considered defective if they do not pass tests and inspections.

G. Keep records of inspections, tests, and adjustments. Prepare Test and Inspection Report, and submit in accordance with Submittal requirements.

H. After completing installation, cleaning, and testing, touch-up scratches and mars on finish to match original finish.

END OF SECTION 26 29 13

SECTION 26 56 00

EXTERIOR LIGHTING

PART 1 GENERAL

1.1 SUMMARY OF WORK

A. Exterior luminaires and accessories.

B. Lighting controls.

1.2 RELATED DOCUMENTS / CODES AND STANDARDS

Drawings and general provisions of the Contract Statement of Work, including Division 01 Specification Sections, apply to this Section.

The following documents and others referenced therein, form part of the Contract to the extent designated in this Section. Referenced documents are those current as of the date of this Section unless otherwise indicated.

A. American Society of Civil Engineers (ASCE)

ASCE 7, 2010	Minimum Design Loads for Buildings and Other Structures

B. Architectural Aluminum Manufacturers Association (AAMA)

AAMA 611	Voluntary Specification for Anodized Architectural Aluminum
AAMA 2605	Superior Performing Coatings

C. ASTM International (ASTM)

ASTM A123/A123M	Standard Specification for Zinc (Hot-Dip Galvanized) Coatings on Iron and Steel Products

D. Hanford Documents

TFC-ENG-STD-06, D-2	Design Loads for Tank Farm Facilities

E. Illuminating Engineering Society of North America (IESNA)

Lighting Handbook

F. International Code Council (ICC)

IBC, 2015	International Building Code

G. National Fire Protection Association (NFPA)

NFPA 70, 2017 National Electrical Code (NEC)

H. Underwriters Laboratories (UL)

UL 1598 Luminaires

1.3 SUBMITTALS

A. See the Contract Statement of Work for the submittal process.

B. Approval Required.

1. Catalog Data: Lighting Fixtures.

1.4 QUALITY ASSURANCE

A. Comply with the following codes and standards:

1. NEC for components and installation.

2. International Building Code.

3. ASCE 7.

B. Provide luminaires listed and labeled by a Nationally Recognized Testing Laboratory (NRTL) for the application, installation condition, and the environments in which installed.

C. Use manufacturers that are experienced in manufacturing luminaires and lamps, similar to those indicated for this Project and have a record of successful in-service performance.

1.5 DELIVERY, STORAGE, AND HANDLING

A. Receive, inspect, handle, and store products according to the manufacturer written instructions.

B. Retain factory-applied pole wrappings on metal poles until right before installation.

1.6 SERVICE CONDITIONS

A. International Building Code and ASCE 7 and TFC-ENG-STD-06, Rev. D-2 design wind conditions:

1. Exposure Category: C

2. Basic Wind Speed: 110 mph (3-second gust at 33-feet above ground, mean recurrence interval of 50 years)

3. Importance Factor: 1.0

B. Ambient temperature:

1. -25°F to 115°F

1.7 DEFINITIONS

A. Unless otherwise specified or indicated, terms used in this Section are as defined in the NEC or the IESNA Lighting Handbook.

PART 2 PRODUCTS

2.1 PRODUCT OPTIONS AND SUBSTITUTIONS

A. Alternate products may be accepted in accordance with the requirements of the Contract Statement of Work.

2.2 FINISHES

A. Furnish luminaires and accessories with finishes, as scheduled, that are resistant to fading, chalking, and other changes due to aging and exposure to heat and ultraviolet light. Acceptable finishes for metals are as listed.

1. Hot-dipped galvanized steel: ASTM A123/A123M.

2. Brushed natural aluminum.

3. Anodized aluminum: AAMA 611, Class I.

4. Powder coated aluminum: Fluorocarbon polymer powder coating per AAMA 2605, over chrome phosphate conversion coated aluminum.

5. Powder coated steel: Fluorocarbon polymer powder coating per AAMA 2605 over zinc phosphate conversion coated shot-blasted steel.

B. Reject luminaires and accessories with finish having runs, streaks, stains, and defects.

C. Replace luminaires and accessories showing evidence of yellowing, fading, chalking, and other changes indicating failure during warranty period.

D. Use stainless steel for exposed hardware.

2.3 EXTERIOR LUMINAIRES

A. Furnish exterior luminaires that comply with requirements specified on the Drawings.

B. Luminaires shall be NRTL-listed as conforming to UL 1598.

C. Luminaire photometric characteristics shall be based on IESNA-approved methods for photometric measurements performed by a recognized photometric laboratory.

D. Luminaire housing shall be primarily metal.

1. Metal parts shall be free from burrs and sharp corners and edges.

2. Sheet metal components shall be fabricated from corrosion-resistant aluminum, formed and supported to prevent sagging and warping.

3. Exposed fasteners shall be stainless steel.

E. Provide lenses, fabricated from materials that are UV-stabilized to be resistant to yellowing and other changes due to aging or exposure to heat and ultraviolet radiation.

F. Doors shall have resilient gaskets that are heat-resistant and aging-resistant to seal and cushion lens and refractor.

2.4 LIGHTING CONTROL EQUIPMENT

A. Furnish photoelectric relays or timers to control exterior lighting as indicated on the Drawings.

PART 3 EXECUTION

3.1 EXAMINATION

A. Examine areas, spaces, and surfaces to receive exterior luminaires and poles for compliance with installation tolerances and other conditions affecting performance of the product. Do not proceed with installation until unsatisfactory conditions have been corrected.

3.2 INSTALLATION

A. Install products in accordance with manufacturer instructions and the Drawings.

B. Locations of luminaires and poles shown on the Drawings are diagrammatic unless coordinates, dimensions, or angles are shown. Coordinate luminaire locations with building finishes and building structure. Obtain approval for location changes through WRPS Construction Representative.

C. Set luminaires plumb, square, level and secure.

D. Install surface mounted luminaires directly to exterior wall, building structural steel, or an outlet box that is supported from structure.

E. Install lamps in each luminaire.

F. Fasten luminaire to indicated structural supports.

1. Use fastening methods and materials selected to resist seismic forces defined for the application and approved by manufacturer.

G. Adjust luminaires that require field adjustment or aiming, in accordance with the Drawings.

3.3 LIGHTING CONTROL SYSTEM

A. Install exterior lighting control system components in accordance with manufacturer instructions.

3.4 FIELD QUALITY CONTROL

A. Inspect each installed lighting unit for damage. Replace damaged luminaires and components.

B. Verify proper voltage at equipment served.

C. Test installed luminaires for proper operation.

1. Provide instruments to make and record test results.

2. Replace or repair malfunctioning luminaires and components and then re-test.

3. Repeat procedure until all luminaires operate properly.

D. Replace inoperative luminaires.

E. Lighting Systems Testing

1. Test lighting system after pole-mounted lighting fixtures are installed.

3.5 ADJUSTING AND CLEANING

A. Clean each luminaire inside and out, including plastics and glassware. Use methods and materials recommended by manufacturer.

B. Aim adjustable luminaires, as indicated on the Drawings, to provide required light intensities or as directed by the WRPS Construction Representative.

C. Adjust exterior lighting controls to obtain the following performance, unless otherwise indicated on the Drawings or directed by the WRPS Construction Representative:

1. “ON” at sunset, “OFF” at sunrise.

END OF SECTION 26 56 00

SECTION 31 15 21

GEOTEXTILE

PART 1 GENERAL

1.1 SUMMARY OF WORK

A. This Specification Section defines the minimum requirements for the material, shipping, handling, storage, installation and inspection of non-woven geotextiles in accordance with the Design Drawings and as specified herein for the following listed uses.

1. Geotextile as specified on Design Drawings.

B. The work shall include, but not be limited to, the following listed items.

1. Manufacture, shipping, handling, and storage of geotextile.
2. Inspection and acceptance of surfaces to be lined.
3. Placement and seaming geotextile.
4. Visual inspection of the completed installation.

1.2 RELATED DOCUMENTS / CODES AND STANDARDS

Drawing and general provisions of the Contract Statement of Work, including Division 01 Specification Sections, apply to this Section.

The following documents and others referenced therein, form part of the Contract to the extent designated in this Section. Referenced documents are those current as of the date of this Section unless otherwise indicated.

A. Section 31 90 05 – Earthwork and Soil-Bentonite Mixture.

B. Section 31 90 20 – Geosynthetic Drainage Material.

C. Section 31 90 22 – High Density Polyethylene Geomembrane Liner.

D. Section 31 90 25 – Geosynthetic Clay Liner (GCL)

E. Section 31 90 99 – Construction Quality Assurance

F. ASTM International (ASTM)

ASTM D4632	Standard Test Method for Grab Breaking Load and Elongation of Geotextiles
ASTM D4873	Standard Guide for Identification Storage and Handling of Geosynthetic Rolls and Samples

ASTM D5261	Standard Test Method for Measuring Mass per Unit Area of Geotextiles
ASTM D6241	Standard Test Method for Static Puncture Strength of Geotextiles and Geotextile-Related Products Using a 50-mm Probe

G. Industrial Fabrics Association International (IFAI)

Field Sewing of Geotextiles by V. Diaz and B. Myles, 1989.

H. Washington Administrative Code (WAC)

WAC 173-303-650	Surface Impoundments

1.3 SUBMITTALS

A. See the Contract Statement of Work for submittal procedures.

B. Contractor shall submit the following data:

1. Manufacturer literature providing Specifications on the geotextile(s) that will be supplied.

2. Manufacturer certification that geotextile(s) to be supplied comply with the requirements of this technical Specification.

3. Manufacturer Quality Control (MQC) and Construction Quality Control Plans. The MQC plan shall state the frequency that index tests are performed on the geotextile during manufacturing.

4. Four samples of each geotextile material, each at least 24 in. by 24 in. and three samples of each material seamed in accordance with Manufacturer recommendations (minimum seam length 24 in.) shall be submitted.

1.4 QUALITY ASSURANCE

A. Quality assurance procedures shall be conducted in accordance with this Section and Section 31 90 99. Where conflict between sections exists, the more stringent requirement shall apply.

B. Materials and construction procedures shall be subject to inspection and testing by a Testing Service employed by the Contractor. Such inspections and tests will not relieve the Contractor of responsibility for providing materials and installation in compliance with specified requirements.

C. Contractor shall give Purchaser reasonable notice of starting new work. Work shall not be done outside the agreed regular working hours without prior approval by Purchaser.

D. The Purchaser reserves the right, at any time before final acceptance, to reject materials or workmanship not complying with specified requirements. The Contractor shall correct the deficiencies that the inspections and tests have indicated are not in compliance to the Specifications.

1.5 DELIVERY, STORAGE, AND HANDLING

A. Packaging:

1. Deliver geotextiles to the project site in rolls, each wrapped securely with a protective covering installed at the manufacturing facility. The covering shall prevent the entrance of water, vermin, and dirt, and shall be adequate for protection against ultraviolet exposure.

2. The packaging shall not interfere with handling of the rolls either by slings or by using the central core upon which the geotextile is wound.

B. Labeling: Attach or adhere a tag to the protective cover identifying the listed following.

1. Manufacturer and product name/number.

2. Date of manufacture of geotextile.

3. Roll identification number.

4. Contractor order number (matching Bill of Lading).

5. Mass per unit area of geotextile.

6. Width, length, and square yard area of the roll.

7. Details of labeling rolls shall conform to ASTM D4873.

C. Storage:

1. The material shall be stored off the ground on pallets or in an equivalent manner.

2. Rolls of geotextile shall be stored in such a manner that cores are not crushed, the geotextile not damaged, and as required to provide protection from exposure to ultraviolet light, inundation, mud, dirt, dust, puncture, cutting, or any other damaging or deleterious condition.

PART 2 PRODUCTS

2.1 GEOTEXTILE MATERIALS

A. Geotextiles shall be non-woven, needle punched fabric.

B. The geotextile shall be colored (non-white) or otherwise treated to prevent the occurrence of snow blindness of handling personnel.

Geotextiles used for soil separators, or for protection for a geomembrane, shall meet the requirements as noted in Table 1, at a minimum, as tested by manufacturer.

Table 1. Non-Woven Geotextile Index Test Minimum Requirements for Soil Separator and Protection for Geomembrane.

Property	ASTM Test	Minimum Average Roll Value (MARV)
Mass Per Unit Area – oz/sq. yd. (g/m^2)	D5261	10.0 (339)
Grab Tensile Strength – lbs (kN), min.	D4632	200 (0.890)
Grab Tensile Elongation – %, min.	D4632	50
Static Puncture Strength – lbs (kN), min.	D6241	700(3.115)

PART 3 EXECUTION

3.1 ACCEPTANCE AND STORAGE AT THE PROJECT SITE

A. Handling of Rolls:

1. The method of off-loading the geotextiles at the project site shall not cause any damage to the geotextile, its core, or its protective covering.

2. Any protective covering that is accidentally damaged or stripped off of a roll shall be immediately repaired, or the roll shall be moved to an enclosed facility until the repair can be made.

B. Storage at the Project Site:

1. Purchaser will provide on-site storage space in a location near where the geotextile will be placed, such that on-site transportation and handling are minimized. The Contractor shall be responsible for protecting the stored material from theft and vandalism. The storage location will be outside. Interior storage space will be made available, if possible.

C. Inspection Upon Delivery:

1. Upon delivery of the materials to the project site, the Contractor shall conduct a visual inspection of all rolls of geotextile for damage or defects. This inspection

shall be done without unrolling any rolls unless damage to the inside of a roll is found or suspected.

2. Any damage or defects shall be noted and immediately reported to Purchaser, the Manufacturer, and the carrier that transported the material. Any roll, or portion thereof, which, in the judgment of Purchaser, is seriously damaged, shall be removed from the project site and replaced with complying material at no additional cost to Purchaser.

3.2 GENERAL PLACEMENT REQUIREMENTS

A. The Contractor shall not remove the protective covering from the geotextile rolls to be deployed, until immediately prior to deployment, to ensure that geotextiles are not excessively exposed to ultraviolet degradation. Geotextiles exposed to the elements (without protective covering) for more than 14 days shall be removed from the Project Site.

B. During handling, the geotextiles shall be handled in such a manner that the material is not damaged in any way. Damaged material shall not be used.

C. All necessary precautions shall be taken to prevent damage to the subsoil or underlying layers upon which the geotextile is to be placed. For subsoil layer, construction equipment can be used if excess rutting is not created. The maximum allowable rut depth is 1in.

D. On slopes, the geotextile shall be securely anchored at the top and then rolled down the slope in such a manner as to continually keep the geotextile sheet in tension and keep the geotextile free of wrinkles and folds.

E. All deployed geotextile shall be temporarily weighted with sand bags, old tires, or the equivalent to provide resistance to wind uplift. Such weights shall be installed during deployment and shall remain until replaced with cover material. Grade pins, stakes, or similar methods of temporarily securing the geotextile shall not be used. Uplifted material can be reused only if approved by Purchaser.

F. Geotextiles shall only be cut using an upward cutting hook blade. If geotextiles are cut in place, special care shall be taken to protect other geosynthetics from damage that could be caused by cutting the geotextiles.

G. During placement of geotextiles, care shall be taken not to entrap, in or beneath the geotextile, stones, excessive dust, or moisture that could damage the underlying geomembrane or cause clogging of drains or filters, or hamper subsequent seaming.

H. Unused portions of rolls or cut sections shall be protected from the elements by recovering with the protective covering. Geotextiles exposed to the elements for more than 14 days shall be removed from the Project Site.

3.3 INSTALLATION OF GEOTEXTILES INSIDE THE BASIN

A. Seam Layout:

1. Seaming on the floor: Successive panels of the geotextile shall be continuously sewn (i.e., spot seaming is not allowed) or continuously heat bonded in accordance with manufacturer recommendations on the floor and interior slopes flatter than 10H:1V (10%).

2. Seaming on side slopes: On slopes steeper than 10H:1V (10%), all geotextiles shall be continuously sewn (i.e., spot sewing and heat bonding are not allowed). All seams shall be vertical (parallel with the slope). No horizontal seams (across the slope) shall be permitted on side slopes.

B. Seaming:

1. Splicing by overlapping seams shall not be performed.

2. Sewing shall be done using polyester or heat-set UV stabilized polypropylene sewing thread with chemical and ultraviolet light resistance properties equal to or exceeding the values specified in Table 1. The thread color shall contrast with the color of the geotextile to assist in visual inspection of the seam. Thread size or denier number of the thread shall be determined by the Contractor in accordance with the manufacturer recommendations.

3. Seams shall be “prayer” or “flat” seams. Seams shall be formed by mating the edges of the geotextile panels and sewing the panels together with continuous stitches located a minimum of 6 in. from the mated edges.

4. Sewing procedures shall conform to the latest procedures recommended by the Geotextile Manufacturer.

5. Unless otherwise approved by the Purchaser, stitching shall be one row (SSa 1) of stitching using a Type 401 two-thread locking chain stitch as described in the IFAI with a minimum of 5 stitches per inch, or the seam shall be heat bonded. Thread strength shall be selected by the Contractor, but shall develop at least 100% of the geotextile fabric index properties when sewn in seam.

6. Alternate seaming methods proposed by the Contractor shall be submitted to the Purchaser for approval.

C. Seam Tests:

1. Seam sampling and testing is not required.

D. Repair of Holes or Tears:

1. All holes or tears in a geotextile shall be repaired by patching.

2. The patch material shall be the same geotextile material as the damaged geotextile.

3. Care shall be taken to remove any soil, object, and/or other material that penetrated or tore the geotextile.

E. Patches on Slopes:

1. On slopes, a patch made from the same geotextile shall be sewn into place. Should any tear exceed 10% of the width of the roll, that roll shall be removed from the slope and replaced.

F. Patches on the Floor:

1. On the floor, a patch shall be sewn into place.

G. Requirements for Sewn Patches:

1. The patch shall extend a minimum of 12 in. beyond any portion of the damaged geotextile.

2. The patch shall be sewn by hand or machine so as not to accidentally shift out of position or be moved during any backfilling or covering.

3. The thread shall be the same as specified for sewing seams.

4. The repair shall be made to the satisfaction of the Purchaser.

H. Inspection During Construction and After Installation:

1. Visual examinations shall be conducted to ensure that 100% of the seams are sewn or heat bonded as required.

2. After installation is complete, a visual examination of the geotextile shall be carried out over the entire surface of the geotextile to verify that no potentially harmful foreign objects, such as broken needles, are present. The inspection shall also look for uniformity, damage, and imperfections (e.g., holes, cracks, thin spots, or foreign materials).

3. When sewing seams, the Contractor shall perform continuous inspection during the seaming process using an in-line metal detector with an adequate sweep rate to determine the presence of broken needles. If the presence of broken needles is indicated, a needle removal system, using magnets, shall be implemented.

I. Backfill or Covering:

1. Prior to backfilling or covering, Contractor shall ensure inspection required per this Section has been performed and documented in accordance with quality assurance requirements.

2. Soil backfilling or covering of the geotextile by another geosynthetic material shall be done within a time period that prevents damage to the geotextile material due to environmental exposure.

3. The overlying material shall be deployed in such a manner that excessive tensile stress is not placed on the geotextile.

4. If backfill is to cover the geotextile, the placement of the material shall be done in such a manner that the geotextile is not shifted from its intended position and underlying materials are not exposed or damaged. On side slopes, this requires soil backfill to proceed from the bottom of the slope upward.

5. If a geosynthetic material is to cover the geotextile, both the geotextile and the newly deployed geosynthetic material shall not be damaged in the process.

6. Geotextiles shall be covered and protected from environmental exposure in an expeditious manner which limits the total environmental exposure for the material to no more than 14 days.

END OF SECTION 31 15 21

SECTION 31 23 33

TRENCHING AND BACKFILLING

PART 1 GENERAL

1.1 SUMMARY OF WORK

A. This Specification Section is to define the minimum requirements for trenching and backfilling underground lines, piping, and conduit.

1.2 RELATED DOCUMENTS / CODES AND STANDARDS

Drawings and general provisions of the Contract Statement of Work, including Division 01 Specification Sections, apply to this Section.

The following documents and others referenced therein, form part of the Contract to the extent designated in this Section. Referenced documents are those current as of the date of this Section unless otherwise indicated.

A. ASTM International (ASTM)

ASTM D653	Standard Terminology Relating to Soil, Rock, and Contained Fluids
ASTM D698	Standard Test Methods for Laboratory Compaction Characteristics of Soil Using Standard Effort
ASTM D2487	Standard Test Methods for In-Place Density and Water Content of Soil and Soil-Aggregate by Nuclear Methods (Shallow Depth)
ASTM D6938	Standard Test Method for In-Place Density and Water Content of Soil and Soil-Aggregate by Nuclear Methods (Shallow Depth)

B. Code of Federal Regulations (CFR)

29 CFR 1926	Safety and Health Regulations for Construction

C. Hanford Documents

TFC-ENG-STD-06, D-2	Design Loads for Tank Farm Facilities
TFC-ESHQ-S-STD-30	Implementation of DOE-0344, Rev. 4-3, Excavating, Trenching, and Shoring

D. Section 31 90 99 – Construction Quality Assurance

E. Washington Administrative Code (WAC)

WAC 173-303-650	Surface Impoundments

F. Washington State Department of Transportation (WSDOT)

WSDOT M 41-10	Standard Specifications for Road, Bridge, and Municipal Construction 2020

1.3 SUBMITTALS

A. See the Contract Statement of Work for submittal procedures.

B. Approval Required

1. Qualifications for Testing Agency (field inspector).

2. Shoring Plan (if required): Design of shoring shall be sealed by a professional engineer registered in the State of Washington.

3. Contractor shall submit a list of proposed materials for use as backfill.

C. Approval Not Required

1. Competent person: Before excavation and in writing, submit identity of individual designated Competent Person as defined in 29 CFR 1926.650 and as required by the approved safety and health program.

1.4 QUALITY ASSURANCE

A. Quality assurance procedures shall be conducted in accordance with this Section and Section 31 90 99. Where conflict between sections exists, the more stringent requirement shall apply.

B. Provide survey control to avoid unauthorized over-excavation.

C. Deliverable Documentation: The following documents and records, required by this Section, shall be delivered to Construction Document Control.

1. Backfill Permit

2. Excavation Permit

3. In-Place Density Tests

4. Soil Compaction Test Report

5. Utility Location Marker Verification

1.5 DELIVERY, STORAGE, AND HANDLING

A. See Contract Statement of Work for general requirements.

1.6 DEFINITIONS

A. Backfill: Soil material used to fill an excavation.

1. Initial Backfill: Backfill placed beside and over pipe in a trench, including haunches to support sides of pipe.

2. Final Backfill: Backfill placed over initial backfill to fill a trench.

B. Bedding Course: Aggregate layer placed over the excavated subgrade in a trench before laying pipe.

C. Borrow Material: Material from required excavations or from designated borrow areas on or near site.

D. Completed Course: A course or layer that is ready for next layer or next phase of work.

E. Fill: Soil materials used to raise existing grades.

F. Lift: Loose (un-compacted) layer of material.

G. Prepared Ground Surface (Subgrade): Ground surface after completion of required demolition, clearing and grubbing, scalping of sod, stripping of topsoil, excavation to grade, and subgrade preparation.

H. Selected backfill material: Materials available on-site that WRPS Construction Representative determines to be suitable for specific use.

I. Structures: Buildings, footings, foundations, retaining walls, slabs, curbs, or other man-made stationary features constructed above or below the ground surface.

J. Structural Fill: Fill materials as required under structures, pavements, and other facilities.

K. Utilities: New or existing on-site underground pipes, conduits, ducts, and cables, as well as underground services within buildings.

1.7 PERMITS

A. As required by WRPS work control process.

1.8 SITE CONDITIONS

A. Do not place backfill or fill on frozen ground.

B. Material excavated during inclement weather shall not be used as fill or backfill until after material drains and dries sufficiently for proper compaction.

PART 2 PRODUCTS

2.1 MATERIALS

A. Use materials free of frozen particles, lumps, organic matter, and trash for backfill and fill, bedding, and stabilization.

B. Satisfactory Soils: Soil Classification Groups GW, GP, GM, SW, SP, and SM according to ASTM D2487, or a combination of these groups; free of rock or gravel larger than 3 in. in any dimension, debris, waste, frozen materials, vegetation, and other deleterious matter.

C. Unsatisfactory Soils: Soil Classification Groups GC, SC, CL, ML, OL, CH, MH, OH, and PT according to ASTM D2487, or a combination of these groups.

1. Unsatisfactory soils also include satisfactory soils not maintained within 2% of optimum moisture content at time of compaction. However, the moisture content of granular soil shall not be used as a criterion to deem it unsatisfactory or satisfactory.

D. Base Course: Top course conforming to WSDOT M 41-10, Section 9-03.9(3), "Crushed Surfacing Base Course."

E. Initial and Final Backfill and Fill: Import or obtain and process material as required from excavation or locations designated by the WRPS Construction Representative to provide satisfactory soil meeting the requirements herein.

1. Backfill for Final Backfill using excavation (in-situ) material approved Borrow Material or approved 5/8 minus crushed rock.

2. Use of any other imported material will require WRPS Construction Representative approval.

3. Bedding Course and Initial Backfill (minimum initial backfill height must cover top of pipe): Soil Class 1 crushed rock per ASTM D2487 with ≤ 15% sand, maximum 25% passing the 3/8-in sieve and maximum 5% passing No. 200 sieve.

F. Location Marker: 3-in. wide, detectable plastic tape imprinted with warning such as "CAUTION - BURIED INSTALLATION BELOW" at maximum 4-ft intervals. "Terra Tape Sentry Line 620" with "Terra Clips," both by Reef Industries, or approved substitute.

G. General Stabilization: Crushed rock with maximum fragment size of 3/4 in.

PART 3 EXECUTION

3.1 PREPARATION

A. The Contractor shall prepare a "Backfill Permit" (see Attachment 1), and obtain approval from the WRPS Construction Representative prior to commencing backfill.

B. Protect structures, utilities, sidewalks, and other facilities from damage caused by settlement, lateral movement, undermining, washout, and other hazards created by excavation and trenching.

C. Protect and maintain erosion and sedimentation controls during excavation and trenching operations.

D. Protect subgrades and foundation soils from freezing temperature and frost. Remove temporary protection before placing subsequent materials.

3.2 EXCAVATION/TRENCHING

A. Excavation/Trenching work shall comply with TFC-ESHQ-S-STD-30 and 29 CFR 1926.

B. Excavation/Trenching shall be defined to mean any hand digging or machine digging below original grade. These requirements constitute the need for an excavation permit.

C. Notify WRPS Construction Representative before excavation.

D. Locate and expose underground utilities using subsurface scanning and hand tools, or other methods approved by the WRPS Construction Representative.

E. If cultural properties (e.g., bones and artifacts) are encountered, stop excavation and notify the WRPS Construction Representative. Obtain approval before resuming excavation.

F. If unexpected debris is encountered, stop excavation and notify the WRPS Construction Representative. Obtain approval before resuming excavation.

G. Excavation of contaminated soil will be administered in accordance with Contractor procedures and programs.

H. Excavate and establish protective systems in accordance with the approved safety and health program.

3.3 SECTIONS AND ELEVATIONS

A. Excavate as required to properly install the conduit and piping to the elevations and in accordance with the sections provided on the Drawings.

B. Trench bottoms (Subgrade). Excavate and shape trench bottoms to be uniform and even. Remove projecting stones and sharp objects along trench subgrade. Allow for pipe or conduit bedding as indicated. Over excavation for conduit bedding is not required if soil is free of projecting stones, sharp objects, and unsatisfactory materials.

C. In-Situ Soils

1. Salvage excavated soil for use as backfill and fill material. If salvaged excavated soil is reused as Initial Backfill (Bedding Course), it may require processing to meet the requirements set forth herein.

2. Provide sample of salvaged soil for use as Initial Backfill and Final Backfill to Testing Agency to determine laboratory compaction characteristics in accordance with ASTM D698.

3. Dispose of contaminated and excess soil in accordance with Construction Waste Management Plan.

4. If stabilization of the subgrade is required because of excavation, site conditions or unsatisfactory soil, following over excavation or other attempts to stabilize the soil to the satisfaction of the WRPS Construction Representative, provide a compacted 3-in thick layer of General Stabilization material prior to placing Bedding Course.

D. Shoring

1. If conditions require shoring, a Shoring Plan shall be submitted to WRPS for approval. Reference TFC-ESHQ-S-STD-30 for responsibilities and implementation requirements.

2. Design of shoring shall be in accordance with TFC-ENG-STD-06, Section 3.7.

3.4 SUBGRADE INSPECTION

A. Compact subgrade and visually inspect to identify soft pockets and areas of excess yielding. Subgrade shall be compacted to at least 95% of the maximum dry density and within 2% of the optimum moisture content as determined by the standard Proctor test ASTM D698. Maintaining the optimum moisture criterion is not required for granular materials.

B. Reconstruct subgrades damaged by freezing temperatures, frost, rain, accumulated water, or construction activities, as directed by WRPS Construction Representative.

C. Test and inspect subgrade materials as required for compaction and suitability requirements as applicable.

3.5 STORAGE OF SOIL MATERIALS

A. Stockpile excavated material that is suitable for use as fill or backfill until material is needed.

B. Stockpile borrowed soil materials and excavated soil materials without intermixing. Place, grade, and shape stockpiles to drain surface water.

C. Do not stockpile excavated soil materials adjacent to trenches and other excavations, unless excavation side slopes and excavation support systems are designed, constructed, and maintained for stockpile loads.

D. Do not stockpile excavated materials near or over existing facilities, adjacent property, if weight of stockpiled material could induce excessive settlement.

3.6 BACKFILL AND FILL PREPARATION

A. The Contractor shall prepare a Backfill Permit (see Attachment 1) and obtain approval from the WRPS Construction Representative.

B. Remove debris and organic material from area to be backfilled or filled.

C. Do not backfill by sluicing or flooding.

D. Allow concrete to cure at least seven days before placing backfill against concrete.

E. Keep placement surfaces free of water, debris, and foreign material during placement and compaction of fill and backfill materials.

F. Do not place fill or backfill, if fill, backfill material is frozen or if completed course is frozen.

G. Obtain WRPS Construction Representative approval before proceeding with backfilling and filling. Backfill and fill activities shall be witnessed and tested by a Qualified Installation Inspector (Testing Agency) or a Qualified Registered Professional Engineer (QRPE) hired by the Contractor.

3.7 BACKFILL AND FILL

A. Perform backfilling and filling in accordance with an approved compaction procedure (for example, Attachment 2) prepared by the Contractor.

B. Place material in even, loose layers not more than 8-in. thick when using heavy self-propelled compaction equipment or 3-in. thick when using light walk-behind trench compaction equipment, in a manner that avoids segregation, and compact each lift to specified density prior to placing succeeding lifts.

C. Slope lifts only where necessary to conform to final grades or as necessary to keep placement surfaces drained of water.

D. Perform work in presence of WRPS Construction Representative.

E. Perform in-place testing and adjust compaction method, if required to meet the minimum compaction requirements.

F. Obtain WRPS Construction Representative approval before proceeding with backfilling and filling.

3.8 UTILITY BACKFILL AND FILL - FOUNDATIONS

A. Under Structures: A minimum of 6 in. of Base Course is required immediately below concrete footings, pipe anchors and other concrete structures.

B. Compact each layer uniformly to 98% of maximum density and within 2% of optimum moisture content, as determined by specified compaction tests in Paragraph 3.10. Moisture content of fill and backfill shall not be an acceptance criterion for granular material.

3.9 FINISH GRADING AND STABILIZATION

A. Grade each area disturbed by work to blend into existing contours. Slope area to drain away from structures. Comply with compaction requirements and grade to cross sections, lines, and elevations indicated.

B. Rake each area to remove surface cobbles larger than 3 in. Dispose of excess material and debris as directed.

C. Stabilize (permanent erosion protection) disturbed areas with surface material in accordance with Section 31 90 05, “Earthwork and Soil-Bentonite Mixture.”

D. After finish grading and stabilization, remove surface markers and flags.

3.10 FIELD INSPECTIONS AND TESTS

A. Testing Agency: Contractor shall engage a qualified geotechnical/soils engineering testing agency to perform tests and inspections.

B. Allow testing agency to inspect and test subgrade and each fill or backfill lift. Proceed with subsequent work moving only after test results for previously completed work complies with requirements.

C. Compaction Testing

1. Test compacted backfill and fill at the following intervals.

   a. Backfill and fill: one test per layer every 75 linear feet of trench, each layer shall not exceed 8 in. thickness.

   b. Subgrade: one test per every 75 linear feet.

2. Perform compaction testing in accordance with the following standards. Provide report required by each standard.

   a. Laboratory compaction control test: ASTM D698.

   b. In-place density testing: ASTM D6938.

   c. Fill and Backfill: Each lift shall be compacted uniformly to at least 98% of maximum density as established by the laboratory compaction control tests.

   d. Subgrade: Shall be compacted uniformly to at least 95% of maximum density as established by the laboratory compaction control tests.

   e. Visually inspect material (Subgrade, Fill, and Backfill) for suitability prior to and during placement or compaction.

3. Buried Pipe and Utility Location Marker Verification

   a. Prior to completion of backfill, perform random surveillance to verify buried utility marker tape has been installed and record results.

SECTION 31 23 33 – ATTACHMENT 1

BACKFILL PERMIT FORM

Key to Backfill Permit Form

Item #	Description
1.	Permit No. – Sequential number, developed by the Project; i.e., "5-0001."
2.	Self-explanatory.
3.	Project title.
4.	Example – "22337 Release 5."
5.	Describe location of the backfill; i.e. "W-211 Piping between Route Marker (or location) XX and XX or Conduit run 001, between Handhole-005 and Handhole-006."
6.	Enter the applicable Drawings that show the backfill location.
7.	Enter any other reference documents.
8.	Discipline Foreman signature, signifying that their work in the excavation to be backfilled is complete. "N/A" will be entered if given discipline is not applicable to the specified backfill area.
9.	Quality Signature, signifying that all the quality requirements for the backfill area have been met prior to backfill and backfill may commence.
10.	Field work supervisor signature, signifying that the all contract requirements for the backfill area have been met and backfill may commence.
11.	Enter backfill requirements, typically construction Specification reference.
12.	"Construction Representative," this signature would be from the Construction Group, signifying that they agree that all of the requirements for the backfill area have been met and permission to proceed with backfill is granted.
13.	Date that "Construction Representative" signed off the form.
14.	Initial and date that the applicable discipline foreman, quality and field work supervisor signed the form.

RPP-SPEC-63632, Rev. 0

BACKFILL PERMIT			(1) No.:
(2) Project or Work Package No.:	(3) Title:		(4) Contract No.:
(5) Description of Backfill Work	Approvals		(14) Date
	(8) Electrical		
	(8) Piping		
	(8) Carpentry		
(6) Drawings:	(8) Concrete		
	(8) Layout		
	(8) Other		
(7) Reference	(8) Other		
	(9) Quality		
	(10) FWS		
(11) Backfill Requirements	Authorization to Proceed by		
	(12) WRPS Construction Representative		(13) Date

SECTION 31 23 33 – ATTACHMENT 2

EXAMPLE PROCEDURE FOR BACKFILL AND COMPACTION OF 5/8 MINUS CRUSHED ROCK

PURPOSE

This procedure identifies a process for placement and compaction of 5/8 minus crushed rock backfill by a controlled method. This procedure also defines the degree of compactive effort required to produce acceptable in-place densities as an alternative to performing density tests with a nuclear density gauge.

SCOPE

This procedure defines the requirements for placement and compaction of 5/8 minus crushed rock backfill including inspection methods to verify the acceptability of the compacted backfill within Tank Farm areas defined on project Drawings. The compaction details in this were taken from American Electric test plan 54891-006-TP-001.

In-place testing of compacted backfill by use of the nuclear density gauge is not required for this procedure. Random periodic visual observation and monitoring of the backfill operation and compactive effort shall be the basis for acceptance.

PROCEDURE

Compaction of 5/8 minus crushed rock backfill shall be controlled by adherence to this procedure and defined compactive effort within established variables as defined below.

Keep materials free of frozen particles, lumps, organic matter, and debris. Ensure that the area to be backfilled is not frozen and the backfill material does not contain frozen material.

Backfilling by means of sluicing or flooding with water is not permitted.

Backfill material shall be placed in loose uniform lifts not to exceed 6 in. in depth.

If needed, water shall be added and mixed with the backfill material before it is compacted to achieve optimum moisture content.

Optimum moisture content shall be approximately 9.5% and may vary as much as plus or minus 1.5%. The addition of water shall be such that the material is easily compactable by mechanical manipulation as defined in this procedure.

Backfill shall be brought up in layers. Each layer shall be compacted full width and length by use of a Wacker, model BS 50-2 or model WP 1550 AW manufactured by Wacker Corporation or equivalent. All equipment used shall be in good working order capable of performing to manufacturer standards.

The compactive effort for each layer of backfill shall be as follows:

If a Wacker BS 50-2 or equivalent is used, a minimum of four complete passes shall be made.

If a Wacker WP 1550 or equivalent is used, a minimum of two complete passes shall be made.

One complete pass shall be defined as full rotation over the area being compacted. At a minimum, a rotation shall be once over and once back across the area being compacted. The rate of equipment travel shall be approximately 15 lineal feet per minute.

Water shall be added as necessary between individual passes to maintain the moisture content within the optimum range.

Bring up backfill material evenly on each side of walls, structures, and pipeline in order to avoid damaging or displacing them by unbalanced loading. Obtain written approval from the WRPS Construction Representative for variations from this process that may result in uneven load distribution.

If backfill material is to be placed against or on top of newly poured concrete, ensure that the concrete curing period has been achieved and concrete design strength achieved as required by ACI 301. Backfill material shall not be placed against foundation walls before the curing period is completed, unless written approval from the WRPS Construction Representative is obtained on the Backfill Permit.

INSPECTION

Control of backfill placement, optimum moisture content, and compactive effort shall be accomplished by visual surveillance. Surveillances shall be performed by a trained and qualified soils technician.

Personnel performing oversight and surveillance of the backfill operations shall possess a thorough working knowledge of earthwork and soils relative to material types and classification, excavation methods and procedures, material gradation, fill and backfill operations, compaction equipment and methods, and moisture control. Oversight personnel shall have received training to perform visual surveillances of backfill operations.

Verification that soil moisture content is within the specified range shall be accomplished by visual and physical examination of the wetted material.

The oversight person shall visually observe the backfill and compaction operation to verify adherence to this procedure. Type of compaction equipment, use of equipment, depth of lifts, number of passes, and rate of travel shall be observed. Surveillances shall be documented on surveillance reports.

The frequency of surveillances for backfill operations shall as a minimum be at the beginning of backfilling for a project or job and at least daily thereafter while work is in progress.

END OF SECTION 31 23 33

SECTION 31 90 05

EARTHWORK AND SOIL-BENTONITE MIXTURE

PART 1 GENERAL

1.1 SUMMARY OF WORK

A. This Specification Section defines the material and installation requirements for earthwork and soil-bentonite mixture for basin lining in accordance with the Design Drawings and as specified herein.

B. The work may include, but not be limited to, the following listed items.

1. Supply, install, maintain and removal of sediment and erosion control facilities for construction.
2. Hiring Testing Agency for field and laboratory testing and inspection.
3. Dust Control during the construction period.
4. Earth excavation.
5. Preparation of the subgrade to receive fill, including clearing and grubbing.
6. Placement and compaction of general and structural fills.
7. Inspection and approval of surfaces to be lined.
8. Supply of soil-bentonite liner materials from an offsite or onsite (if available) borrow area.
9. Mixing, placement and compaction of the soil-bentonite liner.
10. Visual inspection of the completed soil-bentonite liner.
11. Construct a test pad at least 20 ft by 40 ft in plan and 1.5 ft thick to validate the materials and construction methods result in a compacted low permeability liner in accordance with this Specification.
12. Preparation of subgrade to be lined.
13. Excavation and backfill for concrete structures.
14. Disposal of excess or unsuitable excavated material, if required.
15. Placement of erosion protection on exterior slopes.
16. Placement and compaction of dike crest (roadway) material.
17. Offsite disposal of debris.

1.2 RELATED DOCUMENTS / CODES AND STANDARDS

A. Drawings and general provisions of the Contract Statement of Work, including Division 01 Specification Sections, apply to this Section.

The following documents and others referenced therein, form part of the Contract to the extent designated in this Section. Referenced documents are those current as of the date of this Section unless otherwise indicated.

B. ASTM International (ASTM)

ASTM D422	Test Method for Particle Size Analysis of Soils.
ASTM D698	Test Method for Laboratory Compaction Characteristics of Soil Using Standard Effort.
ASTM D1140	Test Method for Amount of Material in Soils Finer than the No. 200 Sieve.
ASTM D2487	Standard Classification of Soils for Engineering Purposes (Unified Soil Classification System).
ASTM D4318	Test Method for Liquid Limit, Plastic Limit and Plasticity Index of Soils.
ASTM D5890	Standard Test Method for Swell Index of Clay Mineral Component of Geosynthetic Clay Liners

C. Section 31 90 99 – Construction Quality Assurance

D. Washington State Department of Transportation (WSDOT)

WSDOT M 41-10	Standard Specifications for Road, Bridge, and Municipal Construction 2020.

E. Washington Administrative Code (WAC)

WAC 173-303-650	Surface Impoundments

1.3 SUBMITTALS

A. Contractor shall submit Drawings and data as specified. Contractor Drawings and Data shall be submitted via electronic medium in a format compatible for importing into specified information systems of the Purchaser.

B. The Contractor shall submit, for Purchaser review, catalog data on all compaction equipment and proofrolling equipment planned for use on the project.

C. Contractor shall submit list of all materials planned for use as part of Earthwork and soil-bentonite mixture.

D. Contractor shall submit Safety Data Sheets for all materials to be imported to the site.

1.4 QUALITY ASSURANCE

A. Quality assurance procedures shall be conducted in accordance with this Section and Section 31 90 99. Where conflict between sections exists, the more stringent requirement shall apply.

B. Inspection Before Working: The Contractor shall examine the areas and conditions under which earthwork is to be done and notify the Purchaser in writing of conditions detrimental to the proper and timely completion of the work.

C. Material, placing procedures, and installations are subject to inspection and tests conducted by the Testing Service (Testing Agency) hired by Contractor. Such inspections and tests shall not relieve Contractor of responsibility for providing material and placement in compliance with this Specification. The Purchaser reserves the right, at any time before final acceptance, to reject material not complying with the specified requirements.

D. The Contractor shall correct all deficiencies in earthwork and soil-bentonite liner installation that inspections, laboratory, and field tests have indicated do not comply with the Specifications. The Contractor shall perform additional tests, at his expense, as may be necessary to reconfirm any noncompliance of the original work, and as may be necessary to show compliance of corrected work.

E. The Contractor shall promptly correct errors or flaws in the work or material identified during construction and which prevent proper installation. The Contractor shall make immediate substitution of the noncomplying material or shall make field changes to make the noncomplying material acceptable. The correction or substitution shall be performed at no cost to the Purchaser.

1.5 DELIVERY, STORAGE, AND HANDLING

A. See Contract Statement of Work for general requirements.

1.6 GEOTECHNICAL DATA AND TOPOGRAPHY

A. Geotechnical Data:

1. Geotechnical data is not available at the project location. Nearby geotechnical data (Tank Farm Area) is available from the Purchaser upon request. Purchaser assumes no responsibility for the accuracy of the available upon request for use at the project site.

2. The Contractor may be permitted to make his own soil investigations. If permitted, investigations shall be performed at no cost to the Purchaser.

B. Topography:

1. Topographic data for the existing site condition is provided on the Design Drawings.

2. The Contractor may be permitted to make his own topography assessment or check the existing survey data. Any additional surveying of the project site shall be at no cost to the Purchaser.

1.7 LINE AND GRADES

A. The Contractor shall lay out lines and grades from the existing monuments and benchmarks on the Project Site. Design Drawings show the location of existing monuments, or this information will be provided by the Purchaser.

B. The Purchaser reserves the right to verify correctness of lines and grades during progress of the work. Such verification by Purchaser shall not relieve the Contractor of responsibility as herein specified.

C. The Contractor shall notify the Purchaser of any difference in location of existing construction and conditions from those indicated wherever such difference might affect his work.

D. The Contractor shall preserve and maintain benchmarks and reference points established on the Project site. Should Contractor, during prosecution of the work, destroy or remove any benchmark or reference point established by the Purchaser, the cost of reestablishing the bench mark or reference point shall be borne by the Contractor.

1.8 DUST CONTROL

A. The Contractor shall be responsible for controlling dust caused by the grading and soil-bentonite mixing operation, in compliance with any dust control permit obtained by the Purchaser.

B. Clean water shall be applied uniformly and lightly to prevent muddy, slippery, or other hazardous conditions. Water utilized for dust control shall not compromise the integrity of the prepared surfaces, installed materials, or materials to be used as part of the earthwork. The application shall be frequent enough to adequately control the dust nuisance. However, excessive application that would affect compacting operations shall be avoided.

1.9 TEMPORARY SEDIMENT CONTROL DURING CONSTRUCTION

A. The Contractor shall be responsible for developing, submitting, providing, installing, and removing temporary facilities for the control of sediment in site area runoff during construction in accordance with site, local, state, and federal requirements.

1.10 EROSION CONTROL

A. The Contractor shall be responsible for temporary protection of graded areas against erosion and for correction of erosion, which occurs.

B. Temporary erosion control measures shall be applied to completed slopes, ditches, and other disturbed areas not subject to additional construction activities, within 30 days of completion of the grading activity.

C. Slopes, ditches or other disturbed areas, which will be exposed for more than 30 days without a permanent cover because they will be subject to additional future construction activities, shall be provided with temporary erosion protection. Included are cut and fill slopes, pond dikes, and spoils disposal areas.

PART 2 PRODUCTS

2.1 DESCRIPTION OF EARTHWORK

A. Earthwork includes constructing dikes, excavating the basin area, lining the interior of the dikes and bottom of the basin with soil-bentonite mixture, final grading, and permanent erosion protection.

B. The soil-bentonite liner shall be constructed using suitable onsite material, which will be required to be mixed with imported bentonite material to obtain the requirements set forth herein. Contractor shall notify the Purchaser if the onsite material is not suitable for mixing or if an alternative imported soil material is proposed for use in the soil-bentonite mixture. The soil-bentonite mixture will be covered with a geomembrane after installation and acceptance by the Purchaser.

C. The top of the dikes shall be surfaced with crushed rock as specified herein.

D. The exterior slope of exterior dikes shall be covered with permanent erosion protection as specified herein.

2.2 MATERIAL FOR DIKES, GENERAL AND STRUCTURAL FILLS

A. Definitions:

1. “Dike Fill” is fill for basin dikes.

2. “General Fill” is fill that does not support structures. “General Fill” includes fill around the inlet and discharge structure where it is not part of the dikes.

3. “Structural Fill” is fill placed beneath equipment, walls, retaining walls, inlet and outlet structures, pump stations, and other similar structures sensitive to settlement. “Structural Fill” is also fill placed in the upper 3 ft beneath roads, fill supporting buried structures such as drainage manholes, electrical manholes, and vaults where they are not incorporated in the dikes.

B. Satisfactory Fill Material:

1. Granular Material:

a. Granular material is suitable for use as "Dike Fill," "General Fill," and "Structural Fill" if it contains not more than 1% organic or other deleterious material, is free of excess moisture, and has a maximum particle size of 3 in.

b. Acceptable granular material are soils classified as coarse-grained (granular) soils in the Unified Soil Classification System, ASTM D2487. Classifications are GW, GP, GM, GC, SW, SP, SM or SC, or combinations of these such as SP-SC.

c. Restrictions on the use of poorly graded sand (SP) or silty sand (SM) material are as follows: No material with a silt content of greater than 15% shall be used for "Dike Fill" or "Structural Fill" nor shall it be used for fill behind retaining walls or within 12 in. of the surface of ditches or slopes.

d. Permanent Erosion Protection for Exterior Slopes of Dikes: WSDOT M 41-10, Section 9-03.9(2) Permeable Ballast or an approved equivalent.

e. Dike Crest (Roadway) Material: WSDOT M 41-10, Section 9-03.9(3) Crushed Surfacing Base Course.

2. Cohesive Material:

a. Cohesive material is suitable for use as "Dike Fill," "General Fill," and "Structural Fill" if it contains not more than 1% organic or other deleterious material, has a maximum particle size of 3 in., has a liquid limit of less than 40 and a plasticity index of less than 20.

b. Acceptable cohesive material comes from soils that are classified as fine-grained soils in the Unified Soil Classification System, ASTM D2487. Classification is CL.

C. Unsatisfactory Fill Material:

1. Material unsatisfactory for use as either a "Dike Fill", "General Fill," or a "Structural Fill" is as follows:

a. Soils classified as silt or organic soils in the Unified Soil Classification System, ASTM D2487. Classifications are ML, MH, PT, OL and OH.

b. Clay soils classified as CH with a liquid limit greater than 50.

c. Rock material without a soil matrix in which nesting of rocks could occur.

d. Material classified as CL-ML (Plasticity Index of 4 to 7) shall not be used to construct Pond Dikes. However, limited amounts of that material may be blended with CL material to meet the limits of cohesive material listed above and used for "General Fill."

2.3 MATERIAL FOR SOIL-BENTONITE LINER

A. Suitable onsite material for use in soil-bentonite mixing are granular materials classified in accordance with the Unified Soil Classification System, ASTM D2487 as SW, SP, SM or SC (or combinations of these such as SP-SC) and cohesive material classified as CL. Onsite material mixed with bentonite shall meet the minimum requirements established in this Section. Contractor shall verify any existing material onsite from borrow sources is suitable, if used.

B. Imported Bentonite Material: Bentonite imported to the site for use in mixing to develop the soil-bentonite mixture shall be sodium bentonite with a free swell of at least 22 millimeters as determined by ASTM D5890.

C. Imported materials proposed as an alternative to the soil-bentonite mixture shall be approved by the Purchaser prior to use and shall meet the material requirements established herein.

D. Material Requirements:

1. Contractor shall demonstrate, through test program, that material requirements are met. Contractor shall submit test program for Purchaser acceptance.

2. Materials mixed from onsite and imported bentonite for use as the soil-bentonite liner or any imported material proposed as alternate to the soil-bentonite liner shall meet requirements shown below.

No.	Test	Item	ASTM	Requirement
1	Atterberg Limits	Liquid Limit Plasticity Index	D4318 D4318	40% minimum 15% minimum
2	Gradation	Retained on the 3/8 in. sieve	D422	10% maximum
3	Permeability	Permeability	D5084	$1x10^{-7}$ cm/sec maximum

3. Soil-bentonite shall be free from trash, vegetation, organic matter, hard lumps of earth, and frozen, corrosive, or perishable material.

4. Soil-bentonite shall not contain any earth particles or pieces of rock greater than 3/4-in. in any dimension.

5. Soils amended with additives such as cement or asphalt shall not be used as liner materials.

E. Source of Liner Material:

1. Material shall be obtained from an approved borrow source.

2. Materials shall not be borrowed from any source until it has been qualified for use by the Purchaser.

2.4 RESTRICTIONS ON THE USE OF MATERIAL FOR ANY PURPOSE

A. Any material that is frozen, contains an excessive amount of organic material or trash, or contains large rocks, shall be considered unsatisfactory for use as fill.

B. Material placed by previous construction shall be considered unsatisfactory for use as fill unless they meet the requirements for satisfactory material.

PART 3 EXECUTION

3.1 DEMOLITION AND STRIPPING

A. General:

1. The work required is shown on the design Drawings. No work shall be performed outside of the designated area without prior written approval of the Purchaser.

2. All work incidental to excavation or fill work will not be specifically indicated on the design Drawings but shall be performed as part of the work.

B. Demolition:

1. Demolition and removal of existing rip rap, organics, and minor items that are incidental to the earthwork may be required. The Contractor shall identify any such items during his pre-bid walkdown. The Contractor shall demolish such items as required as part of the performance of the work.

2. All waste resulting from demolition work shall be disposed of by the Contractor in an offsite disposal area.

C. Stripping:

1. All tap roots shall be removed to a depth of at least 3 ft below the prepared subgrade level.

3.2 EXCAVATION

A. Classification of Excavation:

1. Excavation is classified as follows:

   a. Earth excavation.

   b. Rock excavation.

2. Earth excavation shall consist of removal of all material encountered which can be excavated using common earthmoving equipment.

3. Rock excavation shall consist of the excavation of boulders 1/2 cubic yard in volume or greater, all rock in ledges, and bedded and conglomerated deposits so firmly cemented that they cannot be removed by common earthmoving equipment.

B. Earth Excavation:

1. Excavation within the limits of grading shall be performed to the lines and grades indicated on the design Drawings.

2. Excavated material shall be used for fill unless it is classified as unsatisfactory.

3. Excavations shall not be carried below grades indicated on the design Drawings without approval of the Purchaser. Over excavations shall be refilled with compacted satisfactory fill material to the proper grade at Contractor expense.

4. If unsatisfactory material is encountered at the bottom of an excavation (subgrade level), this material shall be removed to a depth as directed by the Testing Agency, following approval from the Purchaser, and backfilled to the proper grade with compacted satisfactory fill material.

5. Excavation shall be performed in a sequence that will provide proper drainage at all times. Excavations shall be kept free of standing water while construction is in progress.

C. Rock Excavation:

1. No rock excavation is anticipated for this project.

D. Stockpile of Material:

1. Stockpile areas shall be properly prepared by clearing, grubbing, and stripping.

2. Stockpile excavated, borrowed, or imported material that is suitable for use until material is needed at a location approved by the Purchaser.

3. Stockpile materials without intermixing. Place, grade, and shape stockpiles to drain surface water.

4. Do not stockpile material adjacent to trenches and other excavations, unless excavation side slopes and excavation support systems are designed, constructed, and maintained for stockpile loads.

5. Do not stockpile material near or over existing facilities or adjacent property, if weight of stockpiled material could induce excessive settlement.

E. Disposal of Excess Soil Material:

1. Excess excavated material shall be placed in a designated onsite stockpile or disposal area as directed by Purchaser.

2. After completion of earthwork operations, all disposal and stockpile areas shall be dressed to drain properly and control erosion.

3.3 PREPARATION OF SUBGRADE TO RECEIVE FILL

A. Removal of Unsatisfactory Material:

1. Any material, which is unsatisfactory for use, shall be removed and placed in a disposal area approved by the Purchaser. The subgrade soils shall be inspected and tested by the Testing Agency and approved by the Purchaser prior to the start of construction.

B. Preparation of Sloping Areas and Hillsides:

1. If fill is to be placed on an original hillside or an existing embankment with a slope of between 5 and 20%, the original ground shall be scarified to provide a bond between the ground and the fill to be placed thereon and the first layer of fill shall be placed, blended, and compacted.

2. If fill is to be placed on an existing hillside or embankment which has a slope of greater than 20%, the fill shall be keyed at the toe of the slopes of the original hillside or existing fill and shall be continuously benched to key the fill to the underlying ground to ensure that new work is constructed on a firm foundation free of loose or disturbed material.

3. Keys at the toe shall be approximately 10 ft wide by 1 ft deep.

4. Benches on the slope shall be a minimum of 1 ft deep normal to the slope and about 10 ft wide. Benches shall slope 2% downhill and shall be horizontal longitudinally following the natural contours. Material excavated from benches may be mixed with new fill and compacted.

C. Compaction and Proofrolling:

1. Extent: The subgrade of areas to receive fill shall be compacted and proofrolled prior to placing the fill. The subgrade shall be compacted to a minimum degree of compaction specified in Table 1. Compaction shall be performed using suitable equipment for the type of soil present. Proofrolling shall consist of furnishing and operating heavy pneumatic tired compaction equipment for testing the stability of subgrade prior to receiving the fill. The intent is to locate any unstable areas. Compaction and proofrolling shall be performed in the presence of the Testing Agency to allow for observation of unstable areas.

2. Proofrolling Equipment: The equipment used for proofrolling shall be equipment such as a fully loaded water wagon having a gross weight of not less than 25 tons, smooth drum vibratory roller with gross weight of at least 20 tons or a pneumatic-tired roller having not less than 4 pneumatic wheels. Under working conditions, the equipment shall deliver a compression of not less than 100 pounds per square inch.

3. Operation: Compact the surface of the subgrade to be proofrolled. Proofroll the surface by making a minimum of two coverages with the compaction equipment at a speed of not greater than 5 mph. Each succeeding trip of the proofroll equipment shall be offset by, not greater than, one half the equipment width. Make additional passes over areas of suspected instability.

4. Failure: The subgrade shall be considered failed if, under the action of proofrolling, the subgrade yields, pumps, or is otherwise unstable. Yielding is defined as rutting of more than 1 in. measured from the top of the construction grade to the bottom of the rut.

5. Remedial Action: Remove all failed areas a minimum depth of 1 ft or deeper, as directed by the Testing Agency and approved by the Purchaser and moisture condition, and replace or replace with satisfactory fill compacted as specified in Table 1 of this Section.

3.4 PLACEMENT OF DIKE, GENERAL AND STRUCTURAL FILLS

A. Moisture Content:

1. If the material is too dry, cut areas shall be pre-wetted to raise the moisture content. If the material is too wet, both cut and fill areas may require wind rowing or blending to dry the material. The moisture content shall be within the range of (-) 2 to (+) 2% of optimum moisture content at the time of compaction. The moisture content of granular material shall not be used as an acceptance criterion for fill or backfill.

2. Fill material, which contains excessive moisture, shall not be compacted unless the material has dried and the moisture content is within the specified limits.

3. Fill material, which is too dry, shall have moisture added and then be blended so that the moisture content is uniform throughout the thickness prior to compaction.

4. Moisture control shall be applied to the upper 6 in. of the undercut subgrade soils.

B. Thickness:

1. Material shall be placed in horizontal layers in thicknesses compatible with the material being placed, equipment being used, and the compaction requirements.

2. Unless otherwise approved by the Purchaser, the loose thickness shall not exceed the following:

a. 8 in. maximum loose lift thickness for compaction by self-propelled equipment.

b. 3 in. maximum loose lift thickness for compaction by hand-operated equipment.

c. These lift thicknesses may be increased if the results of a test section prove that a thicker loose lift can be compacted to the required specified densities. In no case shall the maximum loose lift thickness exceed 12 in.

C. Placement:

1. Each layer of fill shall be evenly spread and moistened or aerated, as required, to achieve the required moisture content.

2. Large continuous areas shall be uniformly filled to cover the entire length and width of the area to be filled before the next higher layer of material is placed.

3. The top surface of each layer shall be approximately level, but shall have sufficient crown or cross fall to provide adequate drainage of water at all times during the construction period. The crown or crossfall shall be at least 1 in 50 (2%) but no greater than 1 in 20 (5%).

4. Fill slopes steeper than 20% (i.e., 5 horizontal to 1 vertical) shall be overfilled a minimum of 6 in. beyond the face of the slope, measured horizontally, and then cut back and trimmed to the required line and grade to expose a smooth surface uniformly compacted to the required density. Installing the fill slope to lines and grades shown on the design Drawings and then running over the surface with compaction equipment is not acceptable.

D. Compacting:

1. Equipment:

a. Each layer of fill shall be compacted by tamping, sheepsfoot roller, pneumatic-tired roller, smooth drum steel-wheeled roller, or other mechanical means acceptable to the Purchaser, that will produce the specified compaction and as appropriate for the material being compacted.

b. At locations where it would be impractical because of inaccessibility to use self-propelled compacting equipment, fill layers shall be compacted using hand directed compaction equipment.

c. When soils are used that develop a densely packed surface as a result of spreading or compacting equipment, the surface of each layer of fill shall be sufficiently roughened after compaction, to ensure bonding of the succeeding layer.

2. Inspection and Testing:

a. All work is subject to inspection and testing by a Testing Service (Testing Agency). The Testing Agency and the Owner shall have access to the work at all times.

b. Each layer of compacted fill shall be tested by the Testing Agency and approved by the Purchaser before proceeding with the next layer.

c. It is the responsibility of the Contractor to request inspection or testing prior to proceeding with further work that would make parts of the work inaccessible for inspection.

d. If the fill material fails to meet the required density, the material shall be removed and replaced or reworked, altering the construction method as necessary to obtain the required density and compaction. Sufficient time shall be allotted between lifts for the necessary testing of the soils.

3. Compaction Densities:

a. The degree of compaction shall be expressed as a percentage of the maximum laboratory dry density obtained at optimum moisture content in accordance with ASTM D698.

b. Compaction requirements are specified in Table 1.

E. Exceptions:

1. Permanent protection for erosion on exterior slopes of dikes does not require density testing, nor is it subject to moisture condition restrictions. Material shall be spread evenly and uniformly on the surface to be protected to the lines and grade indicated on the design Drawings.

3.5 PREPARATION AND PLACEMENT OF SOIL-BENTONITE LINER

A. Blending and Conditioning of Material:

1. Selection and Blending:

   a. Selective use of material or blending of soil-bentonite materials may be required to produce the required quality and uniformity. The soil shall be mixed and blended to produce as homogeneous a soil as possible. Methods such as cutting across zones of stratification and sieving out and crushing large clods shall be followed as necessary.

   b. Material shall not be blended in-place. Material shall be blended at a location onsite approved by the Purchaser and transported to the basin for placement.

2. Conditioning:

   a. If a change in moisture content is required then conditioning shall be as follows:

      i. If a change of less than 2% is required then the change may be accomplished after the mixture is in-place at the site, but before it is compacted.

      ii. If a change of more than 2% is required then conditioning shall be done at the borrow source or blending location. Corrective moisture content of more than 2% is not permitted at the site.

3. If a substantial change in moisture content is required, it shall be done so that moistening or drying occurs uniformly throughout the soil. Materials shall be mixed and blended with appropriate equipment, as necessary, so that the soil is uniform and homogeneous as to material and moisture content and so that clods are thoroughly wetted.

B. Weather Related Restrictions on Placement:

1. Placement and compaction operations during periods of rainfall, snowfall, high winds, or when the air temperature drops below 30°F is not permitted.

2. Material shall not be placed on frozen ground or on surfaces having visual signs of ponded water, frost, or snow.

3. Frozen material shall not be incorporated into the soil-bentonite mixture.

4. Before resuming material placement after freezing weather, the surfaces to receive liner fill shall be verified to be in conformance with the Specification requirements. Previously placed soil-bentonite liner material shall be scarified to a depth of 4 in. and be recompacted to the Specification requirements prior to placement of subsequent lifts. The surfaces to receive fill shall be approved by the Purchaser prior to placement of a new lift.

C. Placement:

1. On the nearly horizontal surfaces (crowned or sloped for drainage), the material shall be placed and compacted in nearly horizontal uniform lifts.

2. On side slopes 2-1/2 horizontal to 1 vertical and flatter, the liner material shall be placed and compacted in uniform lifts parallel to the slope.

3. The maximum size of hard clods prior to compaction shall be 3/4 in. This shall be determined by visual inspection. If the maximum clod size exceeds 3/4 in., additional mixing and blending shall be provided as required to reduce clods to that size or the larger clods shall be sieved out.

4. The maximum loose thickness of a lift shall be 8 in. when heavy self-propelled compaction equipment is used and 3 in. when walk behind hand operated equipment is used.

D. Moisture:

1. Prior to compaction, the moisture content of the soil-bentonite shall be adjusted to between +0% and +4% "wet" of the optimum moisture content determined in accordance with ASTM D698.

2. Changes in moisture content of up to 2% may be accomplished at the compaction location (the basin).

E. Compaction:

1. Equipment:

a. Sheepsfoot roller: The Contractor shall use sheepsfoot rollers of adequate weight to achieve compaction densities specified herein and to achieve the kneading action necessary to break down clods blended in liner materials, and eliminate voids. Sheepsfoot rollers shall conform to the following:

i. Have long thin feet capable of fully penetrating a loose lift and blending and compacting the bottom of the lift directly into the top of the previous lift.

ii. Have a roller weight of not less than 50,000 lb and a minimum weight of 3,000 lb per linear foot of roller. A roller with a weight of 4,000 to 5,000 lb per linear foot is preferred.

iii. The area of each foot shall be such that the foot contact pressure is not less than 300 psi, preferably 400-500 psi.

b. Breakdown roller: The breakdown roller used for fine finishing shall be a heavy wheel roller with 18,000 to 25,000 lb wheel loads and tire inflation pressures in excess of 65 psi.

c. Smooth drum roller: The smooth drum roller used for compaction and fine finishing shall be a 3-axle tandem roller with a minimum weight in the range of 15 to 20 tons. Heavy rollers with a weight over 20 tons are acceptable.

d. Compaction equipment shall pass over the area a sufficient number of times to maximize compaction. Passes shall be made as necessary to blend the soil, break up clods, and obtain the specified degree of compaction.

e. The soil-bentonite shall be compacted to at least the minimum dry density specified in Table 1.

f. If a compacted lift fails to meet the specified density, the soil-bentonite shall either be compacted further or removed and replaced. If a density/moisture content test of the soil-bentonite fails to meet Specifications, the soil-bentonite shall be scarified, the moisture content adjusted, and the material recompacted for an area extending from the failed test to one-half the distance to the nearest passing tests, in all directions. The Contractor shall alter compaction methods of subsequent work as necessary to obtain the specified compaction. The recompacted area shall then be retested for conformance with Specifications.

F. Fine Finishing:

1. After the soil-bentonite liner has been brought to its final thickness and lift compaction is complete, the surface shall be fine finished as follows:

a. The surface shall be smoothed using a rubber-tired breakdown roller or a heavy steel smooth drum roller to provide protection against over moistening during a rainfall and provide a smooth surface so that Construction Quality Control Tests can be made. The last two passes on the surface shall be made using a heavy smooth steel drum roller.

b. Visually inspect the surface, remove clods and stones that would be retained on a 3/4 in. sieve.

c. Irregularities such as desiccation cracks and holes shall be corrected. Soil from irregularities, which cannot be corrected in-place, shall be removed and replaced with acceptable material.

d. Shape the lining and form a flat uniform working surface free of bumps, ridges, gullies, holes, ruts, desiccation cracks, or pockets of non-cohesive material.

2. The finished compacted surface of the soil-bentonite liner shall be placed to the locations and elevations shown on the design Drawings. Tolerances shall be as shown in Table 2 of this Section.

G. Protection and Final Inspection of Liner:

1. Contractor shall provide and document a post-installation inspection to look for imperfections including lenses, cracks, channels, root holes, or other structural nonuniformities that may cause an increase in the permeability of the liner.

2. The Contractor shall make provisions to protect the liner until the geomembrane is in place. Protection shall be provided against over-moistening or erosion during rainfall, or cracking resulting from desiccation or freezing.

3. If soft spots, subsidence, or cracks larger than 1 in. wide or 2 in. deep occur in the soil-bentonite liner prior to placement of the protective cover, the Contractor shall be responsible for blading down the lining material to the unaffected soil and then preparing and recompacting the disturbed soil to meet the requirements specified herein.

3.6 PREPARATION OF SUBGRADE BENEATH GEOMEMBRANE LINER

A. Intersections Between Planes:

1. Intersections between planes shall be rounded as specified below to provide a firm bearing without abrupt change:

	Intersection of Slope	Radius of Rounding
a.	Intersection of Slope	Radius of Rounding
b.	Side slope and bottom plane	3 feet minimum
c.	Side slope and top of dike or grade	6 in. minimum
d.	Intersection of two bottom planes (planes sloped at 10% or less)	Straight line is acceptable

B. Responsibility:

1. The Contractor shall be responsible for preparing the surface of the subgrade beneath a geomembrane liner prior to placement of the liner. The subgrade is subject to inspection and acceptance by the Purchaser.

C. Inspection:

1. The Contractor shall verify and document:

a. Lines, grades, and slopes are in conformance with the design Drawings.

b. Surface has been graded and rolled such that it is free of irregularities, protrusions, loose soil, and abrupt changes in grade.

c. The surface is free of debris, clods, stones, roots, and organic material.

d. No settlement has occurred.

e. There are no side slope failures.

f. There are no moisture seeps, puddling, or ponding.

g. There are no soft spots.

D. Certification:

1. The installer of the geomembrane liner, Geomembrane Installer, and who is a subcontractor to Contactor shall provide written certification that the surface is acceptable. The acceptance shall be recorded and copies of the certification given to both the Contractor and the Purchaser.

2. Only as much surface as will be lined the following day shall be inspected, certified, and documented as acceptable.

3.7 EXCAVATION AND BACKFILLING CONCRETE STRUCTURES

A. Excavation and Shaping:

1. Excavate as required to form, pour, and construct the structure as shown on the design Drawings.

2. Excavations shall be adequately drained to prevent ponding or otherwise softening of the adjacent soils while open.

B. Backfilling:

1. Backfilling shall be performed evenly on both sides of the structure.

2. Backfilling shall not be performed until concrete has reached at least seven days of curing time and achieved 75% of the specified compressive strength.

3. Backfill shall be performed using satisfactory granular “Structural Fill” material and be placed/compacted in accordance with “Structural Fill” requirements.

3.8 GRADING TOLERANCES

A. The acceptable deviation from lines and grades indicated on the design Drawings shall be as shown in Table 2.

B. Slopes shall be finished in conformance with the lines and grades shown on the design Drawings. When completed, the average plane of a slope shall conform to the slope indicated on the design Drawings and no point on the completed slope shall vary from the designated plane by more than 6 in. measured at right angles to the slope.

3.9 CLEAN-UP

A. All waste, excess soil materials shall be disposed of in an onsite disposal area as directed by the Purchaser and stabilized to prevent erosion.

B. Debris generated by the demolition and stripping work shall be hauled off site and disposed of in accordance with local, state and federal regulatory requirements.

Table 1. Medium Degree of Compaction.

MINIMUM DEGREE OF COMPACTION	
AREA	**ASTM D 698 (percent)**
Subgrade	95
Pond Dike	98
Soil-Bentonite Liner	95
General Fill	95
Structural Fills	98
Permanent Erosion Protection for Exterior Dike Slopes	--
Dike Crest (Roadway)	98

Table 2. Acceptable Deviation.

ACCEPTABLE DEVIATION		
Type of Installation Excavation or Fill	**Maximum Acceptable Deviation From Line (ft)**	**Maximum Acceptable Deviation From Grade* (ft)**
Earthwork		
Dike	±0.5	+0.2 to -0.0
Subgrade	±0.3	±0.2
General Fill	±0.5	±0.2
Structural Fill	±0.3	±0.2
Soil-Bentonite Liner	±0.3	+0.2 to -0.0
Surfacing		
Permanent Erosion Protection	±0.3	+0.2 to -0.0
Dike Crest (Roadway)	±0.3	+0.2 to -0.0

* After initial settlement has taken place. Initial settlement is that settlement that will occur up to the time of determination and acceptance of final grade elevation as approved by Purchaser.

END OF SECTION 31 90 05

SECTION 31 90 20

GEOSYNTHETIC DRAINAGE MATERIAL

PART 1 GENERAL

1.1 SUMMARY OF WORK

A. This Specification Section is to define the minimum requirements for material and installation of geosynthetic drainage material to be installed in accordance with the Design Drawings, and as specified herein.

B. The term geosynthetic drainage material is used generically herein to represent geonet core material and geotextiles.

C. The work shall include, but not be limited to, the following items:

1. Manufacture, shipping, handling, and storage of geosynthetic drainage material.

2. Inspection and acceptance of surfaces to be lined.

3. Placement and joining geosynthetic drainage material.

4. Visual inspection of the completed geosynthetic drainage material.

D. Qualifications:

1. Manufacturer:

a. The Manufacturer shall be approved by the Purchaser, unless otherwise stated herein.

2. Contractor:

a. The Contractor shall be approved by the Manufacturer for installation of Manufacturer products.

1.2 RELATED DOCUMENTS / CODES AND STANDARDS

Drawings and general provisions of the Contract Statement of Work, including Division 01 Specification Sections, apply to this Section.

The following documents and others referenced therein, form part of the Contract to the extent designated in this Section. Referenced documents are those current as of the date of this Section unless otherwise indicated.

A. Section 31 15 21 – Geotextile.

B. Section 31 90 05 – Earthwork and Soil-Bentonite Mixture.

C. Section 31 90 99 – Construction Quality Assurance

D. ASTM International (ASTM)

ASTM D1505	Test Method for Density of Plastics by the Density-Gradient Technique
ASTM D4218	Standard Test Method for Determination of Carbon Black Content of Polyethylene Compounds by the Muffle-Furnace Technique
ASTM D4716	Test Method for Determining the (In-Place) Flow Rate Per Unit Width and Hydraulic Transmissivity of a Geosynthetic using Constant Head
ASTM D5199	Test Method for Measuring Normal Thickness of Geotextiles and Geomembranes
ASTM D6364	Standard Test Method for Determining Short-Term Compression Behavior of Geosynthetics
ASTM D7005	Standard Test Method for Determining the Bond Strength (Ply Adhesion) of Geocomposites
ASTM D7179	Standard Test Method for Determining Geonet Breaking Force

E. Washington Administrative Code (WAC)

WAC 173-303-650	Surface Impoundments

1.3 SUBMITTALS

A. Contractor shall submit the following Drawings and data at least 30 days prior to use. Contractor Drawings and data shall be submitted via electronic medium in a format compatible for importing into the Purchaser information systems specified by the Purchaser.

B. Submittals with the Bid Proposal:

1. Geosynthetic drainage material:

a. Certification of Compliance from the Manufacturer, signed by its authorized representative, indicating that the material meets the criteria specified herein.

b. Identification and manufacturer cut sheet for the material selected.

c. Manufacturer Quality Control and Quality Assurance Policies and Procedures.

2. Warranty:

   a. Written warranties from the Manufacturer and the Contractor covering the quality of the material and workmanship as applicable.

   b. The minimum period of warranty for materials shall be 20 years with the first year non-prorated. The minimum period of warranty for installation shall be 5 years with the first year non-prorated.

   c. Warranty conditions proposed, including limits of liability, will be evaluated by the Purchaser in approving the Manufacturer and the Contractor.

3. Contractor or Contractor Subcontracted Installer:

   a. Installer name, address and telephone number.

   b. Installer qualifications.

4. Testing Laboratory:

   a. Name, address, and telephone number of the off-site, testing laboratory that will perform the testing and inspection services specified herein.

   b. Laboratory qualifications.

C. Submittals after Award of the Contract:

1. Geosynthetic drainage material:

   a. Copy of the raw material producer certificates describing the origin and identification of the raw materials.

   b. Copy of the raw material producer Quality Control certificates.

   c. Copy of the Manufacturer Quality Control certificates on tests performed on the material and a summary of results of the tests.

   d. Certification by Manufacturer that the properties of the manufactured material meet Specification requirements and are guaranteed by the Manufacturer.

2. Installation Data:

   a. Proposed layout for each installation.

   b. Manufacturer recommended procedures for joining material if different from this Specification.

c. Manufacturer recommended procedures for repairing damaged geosynthetic drainage material sections and joining material if different from this Specification.

D. Submittals after Construction is Complete:

1. Contractor:

a. As-built panel layout.

b. Drawing showing location of repairs and type of repairs made.

c. Location of tests.

d. Results of tests.

1.4 QUALITY ASSURANCE

A. Quality assurance procedures shall be conducted in accordance with this Section and Section 31 90 99. Where conflict between sections exists, the more stringent requirement shall apply.

B. Materials and construction procedures shall be subject to inspection by the Construction Quality Assurance (CQA) Testing Service employed by the Contractor.

1.5 DELIVERY, STORAGE, AND HANDLING

A. Delivery:

1. Unloading and storage of materials shall be the responsibility of the Contractor.

2. The unloading and other handling of materials shall be performed by the Contractor to ensure that the material is handled with care and not damaged.

B. Packaging:

1. Deliver material to the project site in rolls, each wrapped securely with a protective covering installed at the manufacturing facility. The covering shall prevent the entrance of water, vermin, and dirt, and shall be adequate for protection against ultraviolet exposure.

2. The packaging shall not interfere with handling of the rolls either by slings or by using the central core upon which the material is wound.

C. Labeling: Attach or adhere a tag to the protective cover identifying the listed following.

1. Manufacturer and product name/number.

2. Date of manufacture.

3. Roll identification number.

4. Contractor order number (matching Bill of Lading).

5. Width, length, and square yard area of the roll.

6. Details of labeling rolls shall conform to ASTM D4873.

D. Storage:

1. The material shall be stored off the ground on pallets or in an equivalent manner.

2. Rolls shall be stored in such a manner that cores are not crushed, the material not damaged, and as required to provide protection from exposure to ultraviolet light, inundation, mud, dirt, dust, puncture, cutting, or any other damaging or deleterious condition.

3. The Purchaser shall provide on-site storage space in a location near the area of work such that on-site transportation and handling are minimized. The Contractor shall be responsible for protecting stored material from theft and vandalism.

4. The rolls of the material shall be placed on a smooth surface, free of rocks and standing water.

E. Inspection:

1. Upon delivery of the material to the project site, the Contractor shall conduct a visual inspection of all rolls for damage or defects. This inspection shall be done without unrolling any rolls, unless damage to the inside of a roll is found or suspected.

2. Any damage or defects shall be noted and immediately reported to the Purchaser, the Manufacturer, and to the carrier that transported the material. Any roll or portion thereof, which, in the judgement of the Purchaser, is seriously damaged, shall be removed from the project site and replaced with complying material at no additional cost to the Purchaser.

PART 2 PRODUCTS

2.1 GEOSYNTHETIC DRAINAGE MATERIAL

1. Geosynthetic drainage material composites are acceptable for use provided the material requirements set forth herein are provided.

2. Geosynthetic drainage material “core only” materials (products not including the two-sided geotextile) are acceptable for use following approval by Purchaser. Contractor shall provide and install geotextile meeting the requirements of Section 31 15 21, “Geotextile,” on both sides of the geosynthetic drainage material core. Contractor shall submit Manufacturer and product for Purchaser review.

B. General Requirements:

1. The core shall be profiled to provide planar water flow.

2. The HDPE formulation shall consist of a minimum of 97% of polyethylene resin, with the balance being carbon black and additives. No fillers, extenders, or other materials shall be mixed into the formulation.

3. Reground or reworked polymer, that is previously processed HDPE in chip form, is acceptable if it meets the minimum material requirements of this Specification.

4. No amount of "recycled" or "reworked" material that has seen prior use in another product shall be added to the formulation.

C. Material Requirements:

1. Product shall meet the requirements of Table 1 as tested by manufacturer.

Table 1. Minimum Material Requirements.

Property	Value	Test Method	Minimum Manufacturer Test Frequency
Geosynthetic Drainage Material (HDPE Core)	-----	-----	-----
Density	0.94 g/cm^3 (min.)	ASTM D1505	50,000 ft.^{2}
Carbon Black	2 to 3%	ASTM D4218	50,000 ft.^{2}
Thickness (minimum)	0.200 in. (min.)	ASTM D5199	50,000 ft.^{2}
Tensile Strength - Machine Direction	100 lbs/in	ASTM D7179	50,000 ft.^{2}
Transmissivity	12.5 gal/min/ft	ASTM D4716	100,000 ft.^{2}
Compressive Strength	120 lbs/in^2	ASTM D6364	100,000 ft.^{2}
Geosynthetic Drainage Material (Composite)	----	----	-----
Transmissivity	4.8 gal/min/ft	ASTM D4716	100,000 ft.^{2}
Ply Adhesion	1.0 lb/in	ASTM D7005	50,000 ft.^{2}
Geotextile	----	----	-----
Requirements per Section 31 15 21			

PART 3 EXECUTION

3.1 PREPARATION OF SURFACES TO BE LINED

A. General:

1. The Contractor shall be responsible for preparing and maintaining the surfaces to be lined as specified in Section 31 90 05, "Earthwork and Soil-Bentonite Mixture" prior to placement of the geosynthetic drainage material.

2. The Contractor shall confirm the conditions of the finished surfaces to be lined, prior to placement of the geosynthetic drainage material.

B. Preparation of Concrete Surfaces:

1. All portions of concrete walls, curbs, and foundations that will come in contact with the geosynthetic drainage material shall be free of sharp edges or rough spots that can puncture or abrade the product. Where necessary, the concrete shall be ground smooth by the Contractor.

3.2 INSTALLATION OF GEOSYNTHETIC DRAINAGE MATERIAL

A. General Requirements:

1. In the presence of wind, all geosynthetic drainage material shall be weighted with sand bags or the equivalent. Weights shall be installed during deployment and shall remain in place until deployment of the cover material.

2. The geosynthetic drainage material shall not be welded to geomembrane liners utilized on the project.

3. The geosynthetic drainage material shall only be cut using scissors or other cutting tools approved by the Manufacturer. Cutting, trimming, and other similar activities shall not damage the underlying liner system materials. Contractor shall not leave tools and debris in the geosynthetic drainage material.

4. All necessary precautions shall be taken to prevent damage to underlying liner system materials during placement of the geosynthetic drainage material.

5. During placement of geosynthetic drainage material, care shall be taken not to entrap dirt or excessive dust that could cause clogging of the drainage system, and/or stones that could damage the adjacent installed products. If dirt or excessive dust is entrapped in the geosynthetic drainage material, it shall be cleaned and all dirt removed prior to placement of other products. Care shall be taken in the handling of sand bags, to prevent rupture or damage of the sand bag.

B. Placement of Geosynthetic Drainage Material:

1. On slopes, the geosynthetic drainage material shall be secured at the top and then rolled down the slope in such a manner as to continuously keep the material

in tension. If necessary, the material shall be positioned, by hand, after unrolling to minimize wrinkles, to the extent practical.

2. The geosynthetic drainage material shall be placed on side slopes with no horizontal seams along the slope and so that the long dimension is parallel to the slope.

3. No horizontal seam shall be located within 5 ft of the toe of a slope.

4. The geosynthetic drainage material shall be positioned on the slopes so that adjacent pieces are placed nominally 1/4” apart to allow for expansion.

5. Geosynthetic drainage material placed in the corners of the side slope shall be cut to eliminate excessive overlap of material.

6. When more than one layer of geosynthetic drainage material is installed, the overlaps shall be staggered and the layers tied together.

C. Joining Geosynthetic drainage material:

1. Adjacent panels of geosynthetic drainage material sides and end laps shall be joined using white or yellow self-locking straps or in accordance with manufacturer recommendations. Metal fastening devices are not allowed.

2. Adjacent panels on slopes shall be joined at maximum 5-ft centers.

D. Protection:

1. The Contractor shall be responsible for protection of geosynthetic drainage material layer during installation, and shall be responsible for repair of any damage to the geosynthetic drainage material or other installed material caused during installation.

E. Repair:

1. Where geonet is damaged, remove section the full width of the roll and replace with new material.

3.3 ANCHORING

A. Geosynthetic drainage material shall be anchored at the top of the slope per the Design Drawings.

B. Anchorage during installation shall be the responsibility of the Contractor and shall be done in a manner to prevent damage to the liner system.

END OF SECTION 31 90 20

SECTION 31 90 22

HIGH DENSITY POLYETHYLENE GEOMEMBRANE LINER

PART 1 GENERAL

1.1 SUMMARY OF WORK

A. This Specification Section defines the minimum requirements for material and installation of High Density Polyethylene (HDPE) Non-Textured Geomembrane to be used as the double liner for the bottom and side slopes of the basin in accordance with the Design Drawings, and as specified herein.

B. The work shall include, but not be limited to, the following listed items.

1. Manufacture, shipping, handling, and storage of geomembrane materials.
2. Inspection and acceptance of surfaces to be lined.
3. Placement and field seaming of geomembrane.
4. Crest anchorage and attachment of the geomembrane to structures and penetrations.
5. Non-destructive field testing of geomembrane seams.
6. Removal of samples of geomembrane seams and transportation to a testing laboratory for destructive testing.
7. Repair of defective geomembrane seams.
8. Repair of defects in the geomembrane and locations where samples were taken.
9. Visual inspection of the completed geomembrane liner.

1.2 RELATED DOCUMENTS / CODES AND STANDARDS

Drawings and general provisions of the Contract Statement of Work, including Division 01 Specification Sections, apply to this Section.

The following documents and others referenced therein, form part of the Contract to the extent designated in this Section. Referenced documents are those current as of the date of this Section unless otherwise indicated.

A. Section 31 15 21 – Geotextile.

B. Section 31 90 05 – Earthwork and Soil-Bentonite Mixture.

C. Section 31 90 99 – Construction Quality Assurance

D. ASTM International (ASTM)

ASTM D638	Test Method for Tensile Properties of Plastics
ASTM D792	Test Methods for Density and Specific Gravity (Relative Density) of Plastics by Displacement
ASTM D1004	Test Method for Tear Resistance of Plastic Film and Sheeting
ASTM D1505	Test Method for Density of Plastics by the Density-Gradient Technique
ASTM D1603	Test Method for Carbon Black Content in Olefin Plastics
ASTM D3895	Test Method for Oxidative-Induction Time in Polyolefins by Differential Scanning Calorimetry
ASTM D4218	Test Method for Determination of Carbon Black Content in Polyethylene Compounds by the Muffle-Furnace Technique
ASTM D4833	Test Method for Index Puncture Resistance of Geomembranes and Related Products
ASTM D5199	Test Method for Measuring Nominal Thickness of Geosynthetics
ASTM D5397	Test Method for Evaluation of Stress Crack Resistance of Polyolefin Geomembranes Using Notched Constant Tensile Load Test
ASTM D5596	Test Method for Microscopic Evaluation of the Dispersion of Carbon Black in Polyolefin Geosynthetics
ASTM D5641	Standard Practice for Geomembrane Seam Evaluation by Vacuum Chamber
ASTM D5721	Standard Practice for Air-Oven Aging of Polyolefin Geomembranes
ASTM D5820	Standard Practice for Pressurized Air Channel Evaluation of Dual Seamed Geomembranes
ASTM D5885	Test Method for Oxidative Induction Time of Polyolefin Geosynthetics by High-Pressure Differential Scanning Calorimetry
ASTM D6365	Standard Practice for Nondestructive Testing of Geomembrane Seams Using the Spark Test

ASTM D6392	Test Method for Determining the Integrity of Nonreinforced Geomembrane Seams Produced Using Thermo-Fusion Methods

E. Geosynthetic Research Institute (GRI)

GRI GM6	Pressurized Air Channel Test for Dual Seamed Geomembrane
GRI GM10	The Stress Crack Resistance of HDPE Geomembrane Sheet
GRI GM13	Test Methods, Test Properties and Testing Frequency for High Density Polyethylene (HDPE) Smooth and Textured Geomembranes
GRI GM14	Selecting Variable Intervals for Taking Geomembrane Destructive Seam Samples Using the Method of Attributes

F. Washington Adminstrative Code (WAC)

WAC 173-303-650	Surface Impoundments

G. Hanford Documents

TFC-ENG-STD-06, D-2	Design Loads for Tank Farm Facilities

1.3 SUBMITTALS

A. See Contract Statement of Work for submittal procedures.

B. Submittals with the Bid Proposal:

1. HDPE Geomembrane Material:

   a. Certification of Compliance from the Manufacturer of the HDPE geomembrane sheeting signed by its authorized representative, indicating that the material meets the criteria specified herein.

   b. One representative sample of each type of geosynthetic material.

   c. Manufacturer Quality Control and Quality Assurance Policies and Procedures.

2. Warranty:

   a. Written warranties from the Manufacturer and the Contractor covering the quality of the material and workmanship as specified.

b. The minimum period of warranty for materials shall be 20 years with first year non-prorated. The minimum period of warranty for installation shall be 5 years with the first year non-prorated.

c. Warranty conditions proposed, including limits of liability, will be evaluated by the Purchaser in approving the liner Manufacturer and the Contractor.

3. Geomembrane Installer (as applicable):

a. Name, address and telephone number.

b. Qualifications.

c. Subcontractor or supplier indentification and qualifications.

4. Testing Laboratory:

a. Name, address, and telephone number of the off-site, testing laboratory that will perform destructive testing on cut samples of field seams.

b. Laboratory qualifications.

C. Submittals After Award of the Contract:

1. Geomembrane Resin:

a. Manufacturers signed Certificate that the resin meets Specification requirements.

b. Manufacturers signed Certification of the origin of the resin and that all resin is from the same manufacturer (Contractor name, identification brand name, and number).

c. Copies of Manufacturer and resin supplier QA/QC certificates. Certificates shall include a summary report of test results conducted to verify the quality of the resin used in each batch used to manufacture geomembrane for this project. At a minimum, the report shall include tests on specific gravity, melt flow index, and percent carbon black.

2. Geomembrane Sheeting:

a. Signed certification that the properties of the manufactured sheeting meet Specification requirements and are guaranteed by the Manufacturer.

b. Statement certifying that no post-consumer resin (PCR) has been added to the formulation.

c. Copy of all of the geomembrane Manufacturer Quality Assurance certificates. The certificates shall include documents of test results.

3. Extrudate Resins or Rod for Seaming Geomembranes:

   a. Certification that all extrudate is the same resin type as the geomembrane and was obtained from the same resin supplier as the resin used to manufacture the geomembranes.

4. Installation Data:

   a. Proposed geomembrane panel layout for each installation.

   b. Manufacturer recommended procedures for making and testing seams if different from this Specification.

   c. Manufacturer recommended procedures for repairing damaged geomembrane sections and seams if different from this Specification.

   d. Manufacturer details of geomembrane liner anchorage, and attachment to structures and penetrations if different from this Specification and the details on the Design Drawings.

D. Submittals After Construction is Complete:

1. Contractor:

   a. As-built panel layout.

   b. Drawing showing location of repairs and type of repairs made.

   c. Location of destructive tests.

   d. Results of destructive tests.

   E. Results of non-destructive tests.

1.4 QUALITY ASSURANCE

A. Quality assurance procedures shall be conducted in accordance with this Section and Section 31 90 99. Where conflict between sections exists, the more stringent requirement shall apply.

B. Materials and construction procedures shall be subject to inspection by the CQA Testing Service employed by the Contractor.

1.5 DELIVERY, STORAGE, AND HANDLING

A. Delivery:

1. Unloading and storage of materials shall be the responsibility of the Contractor.

2. The unloading and other handling of materials shall be performed by the Contractor to ensure that the material is handled with care and not damaged.

B. Packaging:

1. Deliver material to the project site in rolls, each wrapped securely with a protective covering installed at the manufacturing facility. The covering shall prevent the entrance of water, vermin, and dirt, and shall be adequate for protection against ultraviolet exposure.

2. The packaging shall not interfere with handling of the rolls either by slings or by using the central core upon which the material is wound.

C. Labeling: Attach or adhere a tag to the protective cover identifying the listed following.

1. Manufacturer and product name/number.

2. Date of manufacture.

3. Roll identification number.

4. Contractor order number (matching Bill of Lading).

5. Width, length, and square yard area of the roll.

6. Details of labeling rolls shall conform to ASTM D4873.

D. Storage:

1. The material shall be stored off the ground on pallets or in an equivalent manner.

2. Rolls shall be stored in such a manner that cores are not crushed, the material not damaged, and as required to provide protection from exposure to ultraviolet light, inundation, mud, dirt, dust, puncture, cutting, or any other damaging or deleterious condition.

3. The Purchaser shall provide on-site storage space in a location near the area of work such that on-site transportation and handling are minimized. The Contractor shall be responsible for protecting stored material from theft and vandalism.

4. The rolls of the material shall be placed on a smooth surface, free of rocks and standing water.

E. Inspection:

1. Upon delivery of the material to the project site, the Contractor shall conduct a visual inspection of all rolls for damage or defects. This inspection shall be done without unrolling any rolls, unless damage to the inside of a roll is found or suspected.

2. Any damage or defects shall be noted and immediately reported to the Purchaser, the Manufacturer, and to the carrier that transported the material.

Any roll or portion thereof, which, in the judgement of the Purchaser, is seriously damaged, shall be removed from the project site and replaced with complying material at no additional cost to the Purchaser.

PART 2 PRODUCTS

2.1 HIGH DENSITY POLYETHYLENE GEOMEMBRANE

A. HDPE Geomembrane - General Requirements:

1. The HDPE geomembrane shall be manufactured from first quality, virgin resin. Blending of resins shall not be allowed. No recycled or reworked geomembrane may be used except edge trim generated during the manufacturing process (no more than 10%). No PCR of any type shall be added to the formulation.

2. The resin used to produce the geomembrane shall include carbon black, antioxidants, and heat stabilizers, and otherwise be formulated to resist chemical and ultraviolet degradation.

3. The geomembrane shall be free of plasticizers.

4. The geomembrane shall be free of leachable additives.

5. During manufacture, each roll of geomembrane shall be continuously monitored across the width to assure uniformity of thickness. Thickness measurements shall meet the requirements for Non-Textured Geomembrane (see Table 1).

6. Supply geomembrane as single-ply continuous sheet with no factory seams and in rolls with minimum 15 ft width. Maximize roll length to provide largest manageable sheet with fewest field seams.

7. The geomembrane shall be free from dirt, oil, foreign matter, scratches, cracks, creases, bubbles, blisters, pits, tears, holes, pores, pinholes, voids, undispersed raw material, any sign of contamination or other defects that may affect serviceability, and shall be uniform in color, thickness, and surface texture.

8. The geomembrane shall be capable of being seamed in the field to yield seams that are as resistant to waste liquids as the sheeting.

9. The geomembrane shall be manufactured in the United States or Canada.

10. Geomembrane shall incorporate a conductive layer designed such that conductive elements do not advesly impact the durability, weldability or water tight nature of the geomembrane.

B. HDPE Non-Textured Geomembrane:

1. HDPE Non-Textured Geomembrane shall meet the requirements of Table 1 as tested by manufacturer.

Table 1. High Density Polyethylene Non-Textured.

GEOMEMBRANE REQUIREMENTS[1]

Property	Test Method	Polyethylene Base Compound	Geomembrane Minimum Average Roll Value	Testing Frequency by Manufacturer
Nominal thickness, mil	--	--	60	---
Resin Properties				
Oxidative Induction Time (OIT), minimum average minutes Standard OIT or	D3895	100	--	200,000 lbs. of Resin
High Pressure OIT	D5885	400		200,000 lbs. of Resin
Oven Aging at 85° C	D5721	--		
Standard OIT (min avg), percent retained after 90 days or	D3895	55		one per formulation
High Pressure OIT (min avg), percent retained after 90 days	D5885	80		one per formulation
High Pressure OIT (min avg), percent retained after 1600 Hrs.	D5885	50		one per formulation
Analytical Properties				
Density of base resin, g/cc minimum	D1505/D792	0.940	--	200,000 lbs. of Resin
Carbon black content, %	D1603 or D4218	2.0-3.0	-- --	20,000 lbs. of Resin
Carbon black dispersion for 10 different views	D5596	All 10 in Categories 1,2 & 3		45,000 lbs. of Resin

Property	Test Method	Polyethylene Base Compound	Geomembrane Minimum Average Roll Value	Testing Frequency by Manufacturer
Mechanical Properties				
Thickness, mils Average Lowest individual of 10 values	D5199	-- -- --		One per roll
Tensile properties, in each direction (minimum):	D638 (Type IV Specimen at 2 ipm)			
Tensile stress at yield, ppi minimum Elongation at yield, % minimum Tensile stress at break, ppi minimum Elongation at break, % minimum 2" gage length		-- -- -- --		20,000 lbs. of Resin 20,000 lbs. of Resin 20,000 lbs. of Resin 20,000 lbs. of Resin
Tear resistance, lb (minimum avg)	D1004	--		45,000 lbs. of Resin
Puncture resistance, lb. (minimum avg)	D4833	--		45,000 lbs. of Resin
Bonded seam strength[2] Shear strength, ppi Peel adhesion (fusion), ppi Peel adhesion (extrusion), ppi	D6392	-- -- -- --		
Environmental and Aging Effect on Properties				
Stress Crack Resistance, hours (min)	D5397	--		per GRI GM10

NOTES: 1) Requirements shown in this table meet the minimum requirements of GRI Standard GM13, April 11, 2011 except for bonded seam strength. 2) Seam requirements.

C. Panel Layout:

1. Prior to manufacture of the geomembrane, a panel layout of the surface to be lined shall be made. Each panel to be used for the installation shall be given a numeric or alphanumeric identification number.

2. The panel identification number shall be related in writing to the manufacturing roll number that identifies the resin type, batch number, and date of manufacturer.

3. The panel layout shall be made considering the following requirements:

   a. Panel lengths shall include slope gain and anchorage.

   b. Perpendicular tie-ins shall be made a minimum of 5 ft beyond the toe of the slope.

   c. A minimum of 6-in. overlap shall be allowed at double fusion welded seams.

   d. All field seams on slopes shall be oriented parallel to the slope (oriented along, not across the slope).

   e. The number of seams in corners or odd shaped geometric locations shall be minimized.

D. Packaging and Shipping:

1. The geomembrane shall be shipped to the project site in rolls. No material shall be folded.

2. A label shall be attached or adhered to each roll of the geomembrane identifying the following:

   a. Manufacturer.

   b. Product Identification, which can be traced back to the origin of the base material (resin supplier name, resin production plant, resin brand name type, resin brand number, and production date of the resin).

   c. Date of manufacture of the geomembrane.

   d. Roll identification number.

   e. Geomembrane thickness and type.

f. Roll dimensions (length and width).

g. Batch number.

h. Order number.

i. Panel number.

E. Packaging and Transportation:

1. Packaging and transportation shall be the responsibility of the manufacturer, who shall retain responsibility until the geomembrane is accepted at the site by the Contractor.

PART 3 EXECUTION

3.1 ONSITE HANDLING AND STORAGE

A. Receipt/Unloading:

1. Unloading and storage of materials shall be the responsibility of the Manufacturer.

2. The unloading and other handling of materials shall be performed by the Manufacturer to ensure that the material is handled with care and not damaged.

B. Storage:

1. The Purchaser shall provide on-site storage space in a location near the area to be lined, such that on-site transportation and handling are minimized. The Manufacturer shall be responsible for protecting stored material from theft and vandalism.

2. The rolls of geomembrane shall be placed on a smooth surface free of rocks and standing water.

C. Inspection:

1. Upon delivery of the material to the project site, the Contractor shall conduct a visual inspection of all rolls of geomembrane for damage or defects. This inspection shall be done without unrolling any rolls unless damage to the inside of a roll is found or suspected.

2. Any damage or defects shall be noted and immediately reported to the Purchaser, the Manufacturer, and to the carrier that transported the material. Any roll or portion thereof, which, in the judgement of the Purchaser, is seriously damaged, shall be removed from the project site and replaced with complying material at no additional cost to the Purchaser.

3.2 PREPARATION OF SURFACES TO BE LINED

A. General:

1. The Contractor shall be responsible for preparing and maintaining the surfaces to be lined as specified in Section 31 90 05, "Earthwork and Soil-Bentonite Mixture" prior to placement of the geomembrane.

2. The Contractor shall confirm the conditions of the finished surfaces to be lined prior to placement of the liner.

B. Grading Requirements:

1. The subgrade surface on which a lining is to be placed shall be graded to elevations shown on the Design Drawings. Tolerances shall be as specified in Section 31 90 05.

C. Preparation of Concrete Surfaces:

1. All portions of concrete walls, curbs, and foundations that will come in contact with a geomembrane shall be free of sharp edges or rough spots that can puncture or abrade the geomembrane. Where necessary, the concrete shall be ground smooth by the Contractor. Where specified on the Design Drawings, one or more layers of geomembrane scuff strips shall be placed between the concrete and the geomembrane to act as a protective layer for the liner.

D. Subgrade Acceptance:

1. Subgrade below base layer (secondary liner) shall be prepared and accepted in accordanc with Section 31 90 05 Article 3.6 of this specificaiton.

2. Prior to place any geomembrane the substrat shall be free of debris, sharp/angular objects, abrubpt transitions, free moisture, or other conditins that could damage the liner material or lead to questionalbe installation and seaming.

E. Geotextile:

1. See Section 31 15 21, "Geotextile" regarding installation, inspection, and acceptance of a geotextile used to protect the geomembrane liner.

F. Geosynthetic Clay Liner:

1. See Section 31 90 25, "Geosynthetic Clay Liner (GCL)" regarding installation, inspection, and acceptance of a GCL prior to installation of an overlying geomembrane liner.

3.3 FIELD PLACEMENT OF THE GEOMEMBRANE LINER

A. General Requirements:

1. Placement Procedure: The placement procedure used for the geomembrane liner shall include the conditions listed below.

2. Weather:

   a. Geomembrane shall not be placed when the air temperature is above 104°F or below 41°F, unless it can be demonstrated to the approval of the Purchaser by trial welds, that acceptable welds can be made at the prevailing temperature. Trial welds shall be as described in Paragraph 3.3.B.3.

   b. Geomembrane shall not be placed when there is any rainfall or snowfall, in the presence of excessive moisture due to fog or dew, in ponded water, on a frozen subgrade, or during high winds.

3. Panel Layout:

   a. The panels shall be placed in accordance with the approved panel layout Drawing prepared by the Contractor to ensure that they are placed in the proper direction for seaming.

   b. If panels are installed in a location other than indicated on the panel layout Drawing, the revised location shall be indicated on an "as-built" layout Drawing. The “as built” record Drawing shall be submitted to the Purchaser at the completion of the project.

4. Panel Deployment:

   a. Only the panels that can be anchored and seamed together in one shift shall be unrolled.

   b. Unroll and layout panels in as close to the final position as possible. Pulling geomembrane panels should be minimized to reduce the chance of permanent tension.

   c. The methods and equipment used to deploy the panels shall not damage the geomembrane or the supporting surface.

   d. Wrinkles shall be minimized. However, enough slack shall be provided in all directions so that there will be no tension (bridging) in the geomembrane at the lowest expected operating temperature. The design minimum operating air temperature is -35° F.

5. Precautions to Prevent Wind Damage:

   a. If possible, work shall be oriented in the direction of the prevailing wind.

   b. Provide adequate temporary loading and/or anchoring of the geomembrane by the use of sandbags, tires or other means that will not damage the geomembrane, to prevent uplift of the geomembrane by wind.

6. Other Precautions to Prevent Damage:

   a. Protection of the geomembrane from damage, due to foot traffic on the slopes, shall be provided.

   b. Provisions of facilities for safe entrance and egress of employees from sloped depressions is required.

   c. Temporary equipment ramps shall not be constructed on the geomembraegeomembrane liner. Equipment shall not operate directly on a geomembrane liner.

7. Replacement of Damaged Geomembrane:

   a. Any area of a panel, which, in the judgement of the Purchaser, becomes seriously damaged (torn, twisted, or crimped permanently), shall be replaced at no additional cost to the Purchaser.

B. Field Seaming:

1. Method of Seaming:

   a. The primary welding procedure for seams shall be double wedge fusion welding.

   b. Extrusion welding shall be used only for repairs, detail work, and for seaming where double wedge fusion welding is not possible.

   c. The rods used for extrusion welding shall be the same type of resin as the geomembrane, unless otherwise approved by the Purchaser.

   d. The use of solvents or adhesives is not permitted.

2. General Requirements for Seaming:

   a. On slopes steeper than ten horizontal to one vertical, seams shall be oriented parallel to the line of maximum slope (oriented up and down, not across the slope). No seams oriented across the slope shall be used unless approved by the Purchaser.

   b. Seams parallel to the toe of the slope shall be located a minimum of 5 ft from the slope.

   c. Seams on the floor of the pond shall be overlapped so that the upslope sheet is positioned above the downslope sheet.

   d. Seams at sheet corners shall be completed with a patch having a minimum dimension of 24 in., and extrusion welded to the parent sheets. Panel seams shall be designed to allow a maximum of 3 panels or layers intersecting within a 2 ft radius of other seams.

e. All cross seams between the two rows of seamed panels shall be welded during the coolest time of the day to allow for contraction of geomembrane.

3. Trial Welds Prior to Beginning Seaming:

a. Trial welds are required for pre-qualification of personnel, equipment and procedures for making seams on identical geomembrane material, under the same climatic conditions as the actual field production seams, will be made.

b. Trial welds shall be made as follows:

i. Prior to each seaming period.

ii. Every 4 to 5 hours (i.e., at the beginning of the work shift and after the lunch break).

iii. Whenever personnel or equipment are changed.

iv. When climatic conditions result in wide changes in geomembrane temperature.

v. When requested by CQA Inspector for any seaming crew or piece of welding equipment, if problems are suspected.

c. Once qualified by passing a trial weld, welding technicians shall not change parameters without performing another trial weld.

d. Trial welds shall be made on both double wedge fusion welds and on extrusion welds.

e. A test strip shall be prepared by joining two pieces of geomembrane; each piece shall be at least 6 in. wide. The length of double wedge fusion-welded seams shall be a minimum of 10 ft long. The length of an extrusion-welded seam shall be a minimum of 4 ft long. The CQA Inspector shall witness the fabrication of each test strip.

f. All test welds shall be tested by destructive testing. Testing can be done as soon as the seam cools.

g. A minimum of six 1-in. wide (or larger as required by applicable ASTM test method) sample strips shall be cut from each test strip, two from each end, and two from the middle. The location of each sample shall be selected by the CQA Inspector. Three test strips shall be tested in peel and three test strips shall be tested in shear at 2 in. per minute using a field tensiometer. The CQA Inspector shall witness all tests.

h. If any of the test specimens fail, a new test strip shall be fabricated and the tests repeated for the new strip. If additional specimens fail, the seaming apparatus and the seamer shall not be accepted and shall not be

used for seaming, until the deficiencies are corrected and successful trial welds have been achieved.

i. The trial weld is considered acceptable if, when tested for peel adhesion and shear strength using the field tensiometer, all six specimens meet the criteria specified in Table 1, respectively, for both the peel and shear under Bonded Seam Strength, or the three specimens exhibit Film Tear Bond (yielding of the parent material before seam failure). In the case of double wedge fusion welded seams, both welds must pass in order to be considered acceptable.

j. If the specimens pass the tests, production-seaming operations can begin.

k. The Contractor shall document all data on each trial weld, including:

   i. Date,

   ii. Time,

   iii. Operator,

   iv. Machine number,

   v. Ambient temperature,

   vi. Operating temperature,

   vii. Speed setting, and

   viii. Pass/Fail designation.

4. Preparation for Seaming:

   a. Prior to seaming, the surface of the geomembrane shall be wiped with a clean cloth to ensure that it is clean and free from moisture, grease, dust, dirt, and debris of any kind before seam welding is started.

   b. The panels shall be adjusted so that the seams are aligned to eliminate wrinkles and fish mouths. Where necessary, fish mouths and wrinkles shall be cut to achieve flat overlap.

5. Seaming:

   a. Seaming shall be performed in accordance with the Manufacturer accepted procedure.

   b. Double Wedge Fusion Welds:

      i. The panels shall be overlapped a minimum of 4 in. prior to welding.

      ii. Vehicle mounted automated hot wedge welding apparatus shall be used to make the seam.

   c. Extrusion Fillet Welding:

      i. Geomembrane overlap shall be a minimum of 3 in. for extrusion welding.

      ii. Geomembrane panels shall be temporarily bonded using a hot air device prior to extrusion welding.

      iii. The edge of the geomembrane to be fillet welded shall be pre-beveled before heat tacking the seam in place.

      iv. The seam overlap shall be ground (abraded) no more than one hour prior to welding.

      v. Grinding shall be performed in accordance with the Manufacturer instructions in a manner that does not damage the geomembrane.

      vi. Grinding shall not extend more than 1/4 in. past the area to be covered with extrudate during welding.

      vii. All grind marks shall be covered with extrudate.

      viii. Geomembrane overlap shall be a minimum of 3 in. for extrusion welding.

C. Non-Destructive Field Testing – Geomembrane:

1. General:

a. All non-destructive field-testing shall be performed and documented by the Contractor.

b. The CQA Inspector shall observe all non-destructive test procedures.

c. 100% of the seam length shall be tested using non-destructive procedures to check the continuity of the field seams. Non-destructive testing is not meant to qualify seam strength.

d. Air pressure testing shall be performed in accordance with ASTM D5820 and GRI GM 6.

e. Vacuum Box testing shall be performed in accordance with ASTM D5641 and as specified herein.

f. Continuity testing shall be performed as seaming progresses or as soon as a suitable length of seam is available, not at the completion of all field seaming.

2. Double Wedge Fusion-Welded Seams:

a. Double fusion-welded seams shall be tested using air pressure testing.

b. The procedure for testing shall be as specified in GRI GM 6 for the type and thickness of geomembrane in use.

c. The following test pressures are applicable to both smooth and textured HDPE. After an initial 2-minute pressure stabilization period, the pressure shall be maintained between 24 and 30 psi for 40 mil HDPE, 27 and 30 psi for 60 mil HDPE, and 30 and 35 psi for 80 and 100 mil HDPE. The pressure shall be sustained for a minimum of 5 minutes. The loss of pressure shall not exceed a maximum of 3 psi in 5 minutes. If the pressure does not stabilize in the first two minutes or the pressure loss exceeds the loss specified, the seam test shall be considered a failure.

d. The leak or suspected leak shall be located and repaired.

e. The repaired seam shall be re-tested, as required, until all leaks are identified, and repaired, and the seam passes a subsequent air pressure test.

f. When the geometry of a double wedge fusion-weld makes air testing impossible or impractical, vacuum testing may be used to test the seam.

3. Extrusion Welded Seams:

   a. Extrusion welded seams shall be tested using vacuum chamber testing in accordance with ASTM D5641.

   b. The completed seam shall exhibit no leakage when tested between 4 and 8 psi minimum vacuum for approximately 10 seconds.

   c. If leaks are discovered during testing, they shall be located, marked, and repaired.

   d. The repaired area shall be re-tested and exhibit no leakage.

4. Inaccessible Seams:

   a. Where extrusion welded seam locations make use of vacuum box testing impractical, then the electric wire method of testing shall be used, or the seam shall be cap stripped as approved by the Purchaser.

   b. If cap stripping is approved by the Purchaser, the seams shall be cap stripped as described in Paragraph 3.4.D, with strips of the same type and thickness of geomembrane being installed. The cap stripping shall be performed in the presence of the Purchaser.

   c. The electric wire test method shall consist of placing a 24 gauge copper wire 1/8 in. beneath the top sheet overlap of the two sheets prior to welding with the extruder. The wire shall be imbedded in the seam. After welding, a holiday spark detector, operating at 20,000 volts, shall be connected to one end of the wire and slowly moved over the length of the seam. A seam defect between the probe and the embedded wire shall result in an audible alarm indicating where the defect is located.

5. Test Reports:

   a. Test reports for all air pressure tests shall contain all data specified in ASTM D5820 and GRI GM 6.

   b. Test reports for vacuum box testing shall contain all the data specified in ASTM D5641.

   c. Test reports for spark testing shall contain all of the data specified in ASTM D6365.

   d. Test reports for other types of non-destructive tests shall contain at a minimum for each test:

      i. Location,

      ii. Type of test,

      iii. Test parameters,

iv. Test data,

v. Test number,

vi. Name of tester, and

vii. Outcome of the test.

D. Destructive Testing – Geomembrane:

1. Testing:

a. Destructive testing shall be performed by a laboratory employed by the Contractor on samples cut from production welds in the field.

b. Samples shall be taken by the Contractor to the laboratory and tested for shear strength and peel adhesion. For double wedge seam samples, both welds shall be tested for peel adhesion.

c. The laboratory that will perform testing shall be identified by the Contractor with the bid proposal and agreed-to in writing by the Purchaser.

2. Location and Frequency:

a. Test locations shall be determined after seaming. The location where the test samples shall be taken shall be marked by the CQA Inspector. Locations may be prompted by the appearance of excessive heating, contaminations, offset welds, or a suspected defect. Destructive test samples for each type of weld shall be taken at a minimum average frequency of one per every 500 linear feet of seam length. At a minimum 1 test sample of each type weld will be taken each morning and each afternoon welding is performed. Additional samples shall be obtained whenever repairs or modifications are made to the welding equipment.

b. The Method of Attributes described in GRI GM 14 may be exercised to minimize the number of test samples taken if more than 100 destructive seam samples will be required based on the sampling strategy given in Paragraph 3.3.D.2.a.

c. Each sample location shall be numbered and marked with permanent identification, and the location of the sample and the locations shall be indicated on a plan Drawing prepared and maintained by the Contractor. The following shall be recorded for each sample:

i. Date and time;

ii. Ambient temperature;

iii. Seam number and location;

iv. Welding apparatus used;

v. Name of master seamer;

vi. Reason for taking the sample;

vii. Size of sample;

viii. Test results; and

ix. Name of tester.

d. Samples shall be cut by the Contractor. The CQA Inspector shall witness test sample cutting.

e. Test samples shall be cut every shift and taken by the Contractor to the laboratory the same day that the sample is prepared. Three samples for shear and peel tests of each tested trial weld shall be collected.

3. Sample Size:

a. The minimum sample size shall be 12 in. wide with a seam 16 in. long centered length-wise in the sample. As agreed to with Purchaser, a sample may be increased in size to accommodate the requirements of the testing laboratory.

4. Field Testing:

a. A 1-in. wide specimen shall be cut from each end of each sample for field-testing.

b. Each 1-in. wide specimen shall be tested with a field tensiometer for peel adhesion or shear strength.

c. The CQA Inspector shall witness each field test.

d. A test is considered acceptable if a specimen meets the criteria for both peel and shear under Bonded Seam Strength or, exhibits Film Tear Bond. For double wedge fusion-welds, both welds must pass the test. If either sample fails the field test, it shall be assumed that the seam will not pass the specified laboratory testing and the sample shall be given a fail designation.

5. Laboratory Testing:

a. Full size (12-in. minimum length) samples shall be taken to a laboratory for testing.

b. Samples shall be tested for shear strength and peel adhesion in accordance with ASTM D6392. Five specimens shall be tested for each test method. Three sample specimens shall be collected for testing of the

trial welds. All samples shall meet minimum requirements for shear strength and peel adhesion

6. Test Results:

   a. Verbal test results shall be given to the Contractor within 24 hours of receipt of the samples. Written results shall follow within one week.

   b. All test locations shall be marked with a pass/fail designation on the liner and on the Drawing maintained by the Contractor for submittal to the Purchaser after construction is complete.

7. Re-Testing if Failure Occurs:

   a. If a seam fails testing, one additional sample shall be taken 10 ft on each side of the location of the failed test. Additional samples shall continue to be taken at 10-ft intervals until tests show that seam strength is adequate and the zone in which the seam requires reconstruction is identified.

   b. All passing seams shall be bounded by two locations from which samples passing laboratory destructive tests have been taken.

   c. The entire seam length failing strength tests shall be reconstructed at no additional cost to the Purchaser.

   d. If the length of reconstructed seam exceeds 150 ft, a sample shall be taken of the reconstructed seam every 150 ft and shall pass destructive testing.

E. Inspection – Geomembrane:

1. After seaming is complete, the Contractor and the CQA Inspector shall conduct a detailed walk-down to visually check all seams and non-seam areas of the geomembrane. The inspection shall look for imperfections including verification of tight seams and joints, defects, holes, blisters, tears, and signs of damage.

2. All defects, holes, blisters, tears, signs of damage during installation, areas of undispersed carbon and holes from destructive or non-destructive testing shall be marked and repaired.

3.4 REPAIR OF DEFECTS AND SEAMS - GEOMEMBRANE

A. Patching:

1. Patching shall be used to repair large holes, tears, and destructive sample locations.

2. All patches shall be round, oval, or shall have rounded corners.

3. All patches shall be made of the base geomembrane material and shall extend a minimum of 3 in beyond the edges of the defect.

4. Patches shall be extrusion-welded to the base sheet.

B. Grinding and Welding:

1. Grinding and welding shall be used to repair sections of extruded fillet seams with small defects.

C. Spot Welding:

1. Spot welding shall be used to repair small tears, pinholes, or other minor localized flaws.

D. Capping:

1. Capping shall be used to repair lengths of extrusion-welded seams with large defects and to repair double wedge fusion-welded seams.

2. Cap strips shall be made with strips of the same type and thickness of geomembrane being installed. Strips shall extend a minimum of 6 in. beyond the weld, and shall have rounded corners.

3. Cap strips shall be extrusion-welded to the base sheet.

E. Cut Out and Replacement:

1. When approved by the Purchaser, a length of defective seam may be cut out and replaced with a strip of new material seamed into place.

F. Verification of Repairs:

1. All repairs shall be non-destructive tested using one of the procedures described in Paragraph 3.3.3.

2. Repairs that pass the non-destructive test shall be deemed acceptable.

3. Repairs of a seam in excess of 150 ft in length shall have one destructive seam test per 150 ft in length.

3.5 CREST ANCHOR

A. Attachment to Concrete

1. Geomembrane shall be attached to concrete ring wall using batten strips and post installed anchorages, in accordance with details on the Design Drawing.

END OF SECTION 31 90 22

SECTION 31 90 25

GEOSYNTHETIC CLAY LINER

PART 1 GENERAL

1.1 SUMMARY OF WORK

A. This Specification Section defines the minimum requirements for material and installation of a Geosynthetic Clay Liner (GCL) in accordance with the Design Drawings and as specified herein.

B. The work shall include, but not be limited to, the following listed items.

1. Manufacturing, shipping, handling, and storage of GCL.
2. Preparation and inspection of surfaces to be lined.
3. Placement and seaming of GCL.
4. Sealing around penetrations.
5. Patching and repairs.
6. Visual inspection of the completed GCL.

1.2 RELATED DOCUMENTS / CODES AND STANDARDS

GeneralDrawings and general provisions of the Contract Statement of Work, including Division 01 Specification Sections, apply to this Section.

The following documents and others referenced therein, form part of the Contract to the extent designated in this Section. Referenced documents are those current as of the date of this Section unless otherwise indicated.

A. ASTM International (ASTM)

ASTM D4643	Standard Test Method for Determination of Water (Moisture) Content of Soil by Microwave Oven Method
ASTM D5261	Standard Test Method for Measuring Mass per Unit Area of Geotextiles
ASTM D5887	Standard Test Method for Measurement of Index Flux through Saturated Geosynthetic Clay Liner Specimens using a Flexible Wall Permeameter
ASTM D5889	Standard Practice for Quality Control of Geosynthetic Clay Liners

ASTM D5890	Standard Test Method for Swell Index of Clay Mineral Component of Geosynthetic Clay Liners
ASTM D5891	Standard Test Method for Fluid Loss of Clay Component of Geosynthetic Clay Liners
ASTM D5993	Standard Test Method for Measuring Mass per Unit of Geosynthetic Clay Liners
ASTM D6243	Standard Test Method for Determining the Internal and Interface Shear Resistance of Geosynthetic Clay Liner by Direct Shear Method
ASTM D6496	Standard Test Method for Determining Average Bonding Peel Strength Between Top and Bottom Layers of Needle-Punched Geosynthetic Clay Liners
ASTM D6768	Standard Test Method for Tensile Strength of Geosynthetic Clay Liners

B. Washington Adminstrative Code (WAC)

WAC 173-303-650	Surface Impoundments

C. Section 31 15 21 – Geotextile.

D. Section 31 90 22 – High Density Polyethylene Geomembrane Liner.

E. Section 31 90 99 – Construction Quality Assurance

1.3 SUBMITTALS

A. See Contract Statement of Work for submittal procedures.

B. Submittals with the Bid Proposal:

1. GCL Material:

   a. Copies of the Manufacturer catalog data describing the GCL material proposed for use on this project.

   b. Copies of Manufacturer QA certificates on tests performed on the material and a summary of results after the tests.

   c. Certification of Compliance from the Manufacturer of the GCL, signed by its authorized representative, stating that the liner material meets the Specification requirements and that those requirements are guaranteed by the Manufacturer.

   d. Manufacturer Quality Control and Quality Assurance Policies and Procedures.

C. Submittals Upon Shipment:

1. Four representative samples of the GCL.

2. Manufacturer QA/QC certificates with each shipment of GCL. The QA/QC certificates shall include:

a. GCL lot and roll numbers with corresponding shipping information.

b. Manufacturer test data for raw materials used in GCL production, including at a minimum, mass per unit area data and tensile test data.

c. Manufacturer test data for the finished GCL product, including at a minimum, clay mass per unit area data and tensile testing data.

d. Certificates of analyses for the bentonite clay used in GCL production.

D. Submittals After Construction is Complete:

1. Contractor:

a. Drawing showing location of repairs and type of repairs made.

b. Drawing showing the layout and seams of the GCL.

1.4 QUALITY ASSURANCE

A. Quality assurance procedures shall be conducted in accordance with this Section and Section 31 90 99. Where conflict between sections exists, the more stringent requirement shall apply.

B. Materials and construction procedures shall be subject to inspection and testing by a Testing Service employed by the Contractor, where specified. Such inspections and tests will not relieve Contractor of the responsibility for providing materials and placing procedures in compliance with the contract requirements.

1.5 DELIVERY, STORAGE, AND HANDLING

A. See Contract Statement of Work for general requirements.

B. Packing and Shipping:

1. The finished GCL shall be completely wrapped and adequately secured with a durable polyethylene protective cover, in order to provide protection from ultraviolet degradation of the Primary Backing Material (PBM) and excessive loss of moisture during shipping and storage.

2. The GCL shall be shipped to the project site in rolls.

3. A label shall be attached or adhered to each roll of the GCL identifying the following:

a. Manufacturer;

b. Product Identification (brand name, product code);

c. Date of Manufacture;

d. Roll Identification Number;

e. Panel Number;

f. GCL Thickness;

g. Roll Dimensions (length, width, and height);

h. Lot Number; and

i. Order Number.

C. The GCL shall be stenciled throughout each roll with the product name and name of the Manufacturer, which can be cross-referenced to the roll number marked on the label and to the production and quality control data sheets.

D. Unloading:

1. Handling and unloading shall be the responsibility of the Contractor

2. Upon arrival at the site, the rolls of the GCL shall be carefully unloaded by the Contractor in accordance with Manufacturer recommendations.

E. Storage:

1. To the extent possible, the Purchaser will provide on-site storage space in a location near the area to be lined such that on-site transportation and handling are minimized.

2. The Contractor shall be responsible for protection of materials from theft and vandalism.

3. The rolls of GCL shall be stored horizontally in their original, unopened, wrapped cover in a clean, dry area. The material shall be stored off the ground on pallets or plywood in small stacks not to exceed five rolls in height. The rolls shall be covered with a heavy, protective tarpaulin or plastic sheeting, or enclosed within a storage facility. Care shall be used to keep the GCL clean and free from debris prior to installation.

4. Rolls shall be stacked in a manner recommended by the Manufacturer that prevents them from sliding or rolling from the stacks.

5. Any rolls that come in contact with moisture, while in storage, shall be set aside by the Contractor and be evaluated by the Testing Agency and Manufacturer for

use. Damaged rolls shall also be set aside and inspected to determine suitability of the material for use.

F. Inspection:

1. Upon delivery of the material to the project site, the Contractor shall conduct a visual inspection of the polyethylene sleeves of all rolls of GCL for damage, rips, or tears. Sleeve damage shall be repaired immediately with tape or additional plastic sheeting.

2. Any damage shall be noted and immediately reported to the Purchaser, the Manufacturer, and to the carrier that transported the material. Any roll or portion thereof, which, in the judgement of the Purchaser, is seriously damaged, shall be removed from the project site and replaced with complying material at no additional cost to the Purchaser.

PART 2 - PRODUCTS

2.1 GEOSYNTHETIC CLAY LINER

A. GCL General Requirements:

1. The GCL shall be a needle-punched GCL. The GCL shall be manufactured by placing a uniform layer of high-swell sodium bentonite encapsulated between two geotextiles and then needle punching through both layers of the geotextile and the bentonite to push fibers from the non-woven geotextile cap through the bentonite layer and embed them in the geotextile scrim on the other side.

2. The upper and lower support materials shall protect the bentonite, but shall be sufficiently porous to allow bentonite flow-through to create a positive bentonite-to-bentonite seal at the seams.

3. The support materials used in the manufacturing shall not interfere with the swelling, self-healing, or low permeability characteristics of the GCL.

4. The GCL shall be fabricated such that bentonite will not be displaced when the liner is cut.

5. 6 in. and 9 or 12 in. overlap marks shall be marked longitudinally on both edges of the geotextile cap, by the Manufacturer, to assist in obtaining the proper overlap. The lines shall be printed in easily visible, non-toxic ink.

B. GCL Material Specifications:

1. The GCL materials shall meet the following listed requirements.

a. Sodium Bentonite: The bentonite utilized in the manufacture of the GCL, as well as any accessory bentonite provided for seaming and detail work, shall be Wyoming-grade sodium bentonite with the properties listed in the following table as tested by manufacturer.

Property (2)	Test Method	Value	Min Testing Frequency (1)
Free Swell	ASTM D5890	24 ml/2g min	1/100,000 lb
Fluid Loss	ASTM D5891	18 ml (max A.R.V.)	1/100,000 lb
Moisture Content	ASTM D4643	12% max	1/100,000 lb

NOTES: (1) In accordance with ASTM D5889. (2) Properties of the base bentonite prior to incorporation into the final GCL product.

b. Geosynthetic Clay Liner: The finished GCL manufactured using a non-woven cap and a woven scrim shall have the following properties as tested by manufacturer:

Property	ASTM Method	Value	Min Testing Frequency (1)
Geotextile Properties			
Non-Woven Cap	D5261	6.0 oz/yd^2	1/200,000 SF
Woven Scrim	D5261	3.1 oz/yd^2	1/200,000 SF
Finished GCL Properties			
Bentonite Mass/Area (psf)	D5993	0.75 lb/ft^2 MARV at 0% moisture	1/40,000 SF
Hydrated Internal Shear Strength	D6243	500 psf typical	Periodic
Tensile Strength	D6768	30 lbs	1/40,000 SF
Peel Strength (2)	D6496	3.5 lb/in	1/40,000 SF
Index Flux at 5 psi maximum effective confining stress and 2 psi head	D5887	1x10^{-8} m^3/m^2/sec maximum	1/week
Hydraulic Conductivity (5 psi effective confining stress and 2 psi head)	D5887	<5x10^{-9} cm/sec maximum	1/week

NOTES: (1) In accordance with ASTM D5889. (2) Machine (warp) direction of primary backing.

2.2 BENTONITE SEALING COMPOUND AND GRANULAR BENTONITE

A. The Bentonite Sealing Compound (BSC) and Granular Bentonite (GB) shall be supplied by the Manufacturer and shall be comprised of the same bentonite used in the manufacturing of the GCL. The BSC shall be a mixture of non-aqueous liquid suspension agents that creates a paste-like texture. The GB shall be furnished in 50 lb bags.

B. The suspension agents used in the manufacture of the BSC shall be non-toxic, water-soluble, and shall not restrict the ability of the bentonite to swell and absorb water upon hydration.

PART 3 - EXECUTION

3.1 PREPARATION OF SURFACES TO BE LINED

A. The Contractor shall be responsible for verifying the line and grade of the surface to be lined, prior to placement of the GCL.

B. The Contractor shall provide written certification to the Purchaser that the surface on which the GCL is to be installed is acceptable.

C. The surface upon which the GCL is to be placed shall be free of standing water and maintained in a firm, clean, and smooth condition during liner installation.

3.2 FIELD PLACEMENT OF THE GCL LINER

A. Weather:

1. A GCL shall not be placed during a rainfall or snowfall, in ponded water, or during high winds.

B. Panel Layout:

1. The panels shall be placed in accordance with the manufacturer recommendations to ensure that they are placed in the proper direction for overlapping.

2. Panels shall be rolled out in continuous sheets from the top of the dike elevation to the bottom of the basin, with no horizontal seam on the slope. Vertical seams shall be parallel to the slope and shall not directly overlap seams of underlaying geosynthetic materials. Seams perpendicular to the slope direction (horizontal seams) shall only be present in the basin floor, where required.

3. An as-built record Drawing of the panel layout shall be submitted to the Purchaser at the completion of the project.

3.3 PANEL DEPLOYMENT

A. The rolls of GCL shall be brought to the area to be lined and set up such that the GCL roll is fully supported across its length. A core bar or spreader bar shall not flex or bend excessively when a full roll is lifted.

B. Deploy only as much GCL as can be covered by the end of the day or in a reasonably short time, in the event of precipitation. Alternatively, protect the GCL from all environmental exposure until the liner is adequately covered.

C. The cap material (non-woven geotextile) shall face upwards. The GCL shall be placed over the prepared surface in such a manner as to assure minimum handling.

D. Installation shall begin at a high elevation and proceed to a low elevation. At the high elevation, the GCL shall be adequately anchored to ensure the material is properly installed and does not cause damage or disturbance to the underlying geosynthetics.

E. Pulling GCL panels shall be minimized to reduce the chance of permanent tension.

F. Wrinkles shall be minimized. However, enough slack shall be provided in all directions so that there will be no tension (bridging) in the geomembrane at the lowest expected operating temperature. The design minimum operating air temperature is -35º F.

3.4 PRECAUTIONS TO PREVENT WIND DAMAGE

A. If possible, work shall be oriented in the direction of the prevailing wind.

B. Provide adequate temporary anchoring of the edges of the exposed sheets using sandbags, tires, or other means that will not damage the GCL, to prevent uplift of the GCL by wind.

3.5 OTHER PRECAUTIONS TO PREVENT DAMAGE

A. Protection of the GCL from damage due to foot traffic on the slopes shall be provided.

B. Provisions of facilities for safe entrance and egress of employees from sloped depressions shall be provided.

C. Equipment shall not be operated on the GCL.

3.6 FIELD SEAMING

A. General Requirements for Seaming:

1. Horizontal seams shall not be located within 5 ft of the slope.

2. On slopes, all runs shall be continuous with the long dimension of all panels oriented parallel to the slope.

3. Panels placed on the bottom require no particular orientation.

4. Once the first run has been laid, adjoining runs shall be laid with a 9-in. minimum overlap on the longitudinal seams and 12-in. overlap on end seams, unless more stringent recommendations are provided by the manufacturer.

5. The edges of GCL panels shall be adjusted to smooth out wrinkles, creases, or “fish mouths” in order to maximize contact with the underlying panel.

6. If the air temperature is higher than 85°F and the humidity is low, contraction may occur soon after placement when no confining stress has been placed over the GCL. To allow for the possibility of contraction under these conditions, the seam overlap shall be increased to a minimum of 12 in. on longitudinal seams and 36 in. on end seams, or to 4% of the distance to the next parallel seams, whichever is greater.

B. Seaming:

1. Seaming shall be performed in accordance with the Manufacturer accepted procedure.

2. All seams shall be formed by executing a bentonite-enhanced overlap to ensure that a continuous seal is achieved.

3. The side of the overlying panel shall be pulled back to expose and examine the overlap areas. Seam overlap areas shall be clean, free from moisture, and free from dust and debris of any kind before seaming is started. Any contamination shall be removed.

4. A fillet of dry granular bentonite shall be poured in a continuous manner along the overlap zone (between the edge of the panel and the 6-in. line) at a rate of at least 1/4 pound per linear foot.

5. Seam overlap on the bottom shall be placed such that the direction of flow is from the top sheet to the bottom sheet to form a shingle effect and prevent flow into the seam.

3.7 INSPECTION

A. After seaming is complete, the Contractor shall conduct a detailed walkdown to visually check all seams and non-seam areas of the GCL. Contractor shall notify the Purchaser of this inspection prior to performing and of results after completion.

B. All defects, holes, blisters, tears, and signs of damage during installation shall be marked for repair.

3.8 PATCHING AND REPAIRS

A. Patching shall be used to repair small defects, blisters, holes, and tears.

B. All dirt and debris present in the patched area shall be removed.

C. All patches shall be round, oval, or shall have rounded corners.

D. All patches shall be made of the base GCL and shall extend a minimum of 12 in. beyond the edges of the defect. Accessory bentonite shall be placed around the perimeter of the affected area at a rate of 1/2 pound per lineal foot prior to placing the patch. Adhesive, such as wood glue, may be used if necessary to secure the patch.

3.9 PROTECTIVE COVER

A. The GCL shall be covered as soon as practical to prevent damage or mechanical or environmental means. Precautions shall be taken to prevent damage to the GCL by preventing heavy equipment traffic.

B. To prevent premature hydration or contraction, only the amount of GCL that can be installed, inspected, repaired, and covered (protected) in the same day shall be installed.

C. Any leading edge or panels of GCL left unprotected shall be covered with a heavy, waterproofing tarp that is adequately secured and protected with sand bags or other ballast.

END OF SECTION 31 90 25

SECTION 31 90 52

LEACHATE COLLECTION AND REMOVAL SYSTEM FOR A LINED POND

PART 1 GENERAL

1.1 SUMMARY OF WORK

A. The components and dimensions in the LCRS is shown on the design Drawings. The work shall include, but not be limited to, the following items.

1. Select bedding material.
2. Granular drainage layer.
3. Coarse aggregate bedding.
4. Perforated leachate collection pipes.
5. Solid cleanout pipes and covers.
6. Solid single wall leachate pipe.

1.2 RELATED DOCUMENTS / CODES AND STANDARDS

Drawing and general provisions of the Contract Statement of Work, including Division 01 Specification Sections, apply to this Section.

The following documents and others referenced therein, form part of the Contract to the extent designated in this Section. Referenced documents are those current as of the date of this Section unless otherwise indicated.

A. American National Standards Institute (ANSI)

ANSI B16.5	Pipe Flanges and Flanged Fittings
ANSI/AWWA C110/A21.10	American National Standard for Ductile-Iron and Gray-Iron Fittings, 3-in. through 48-in., for Water and Other Liquids

B. ASTM International (ASTM)

ASTM C88	Test Method for Soundness of Aggregates by the Use of Sodium Sulfate or Magnesium Sulfate
ASTM C117	Standard Test Method for Materials Finer than 75-µm (No. 200) Sieve in Mineral Aggregates by Washing
ASTM C131	Test Method for Resistance to Degradation of Small-Size Coarse Aggregate by Abrasion and Impact in the Los Angeles Machine

ASTM C136	Test Method for Sieve Analysis of Fine and Coarse Aggregates
ASTM C142	Test Method for Clay Lumps and Friable Particles in Aggregates
ASTM D2434	Standard Test Method for Permeability of Granular Soils (Constant Head)
ASTM D2464	Standard Specification for Threaded Poly (Vinyl Chloride) (PVC) Plastic Pipe Fittings, Schedule 80
ASTM D2487	Standard Practice for Classification of Soils for Engineering Purposes
ASTM D2657	Standard Practice for Heat Fusion Joining of Polyolefin Pipe and Fittings
ASTM D3261	Standard Specification for Butt Heat Fusion Polyethylene (PE) Plastic Fittings for Polyethylene (PE) Plastic Pipe and Tubing
ASTM D3350	Specification for Polyethylene Plastic Pipe and Fittings Material
ASTM F714	Polyethylene (PE) Plastic Pipe (SDR-PR) Based on Outside Diameter

C. Section 31 90 99 – Construction Quality Assurance

D. National Sanitation Foundation International (NSF)

NSF Listings - Plastics and Plumbing System Components

E. Washington Adminstrative Code (WAC)

WAC 173-303-650 Surface Impoundments

F. Washington Department of Transpotation (WSDOT)

Standard Specifications for Road, Bridge and Municipal Construction (2020) M 41-10

1.3 SUBMITTALS

A. See Contract Statement of Work for submittal procedures.

B. HDPE Pipe:

1. Manufacturer literature providing Specifications of the pipes that will be supplied.

2. Manufacturer signed certification that pipe to be supplied complies with the requirements of this Specification.

3. Statement that no reclaimed polymer has been added to the resin.

4. Copies of Pipe Manufacturer Quality Assurance certificates on tests performed during fabrication.

C. Premanufactured Appurtenances:

1. Certification that the manufactured manholes, cleanouts, plugs, or other appurtenances meet the requirements of these Specifications.

2. Copies of the following:

   a. Name of Manufacturer.

   b. Manufacturer catalog or model number.

   c. Physical dimensions.

3. Manufacturers QA certificates on tests performed during fabrication.

D. Coarse Aggregate Bedding:

	Property	ASTM Test	Data Required
1.	Particle Size Analysis	C136 C117	Sieve Analysis Percent Pass No. 200 Seive
2.	Soundness of Aggregate by use of Sodium Sulfate or Magnesium Sulfate	C88	Percent Loss
3.	Percent with One Crushed Face	(1)	Percent with at least one crushed face
4.	Resistance to Degradation in the Los Angeles Machine	C131	Percent Loss
5.	Clay Lumps and Friable Particles in Aggregate	C142	Percent

Notes: (1) Physical count of number of stones in a random 5-lb sample divided by the total number of stones. Percent shall be the average of two samples.

E. Gravel Drainage Layer Material:

1. Contractor shall provide a detailed plan of how the granular drainage layer will be spread and compacted. The plan shall include equipment planed, method of placement, conveyors, etc.

2. The following material data shall be submitted for approval of Gravel Drainage Layer Material.

	Property	ASTM Test (1)	Data Required
1.	Classification of Material	D2487	Classification
2.	Particle Size Analysis	C136 C117	Sieve Analysis Percent Pass No. 200 Seive
3.	Hydraulic Conductivity	D2434	Hydraulic Conductivity
4.	Soundness of Aggregate by use of Sodium Sulfate or Magnesium Sulfate	C88	Percent Loss
5.	Resistance to Degradation in the Los Angeles Machine	C131	Percent Loss
6.	Clay Lumps and Friable Particles in Aggregate	C142	Percent

Notes: (1) Test results shall be provided on two random samples taken from each borrow or stock pile area. If processing of material is required to meet Specifications, the tests shall be performed on processed material.

F. Pipe Inspections:

1. Visual Examination: Logs indicating the location of each joint that did not pass visual examination and the work done to correct improper fusion weld shall be prepared.

1.4 QUALITY ASSURANCE

A. Quality assurance procedures shall be conducted in accordance with this Section and Section 31 90 99. Where conflict between sections exists, the more stringent requirement shall apply.

B. Materials and construction procedures shall be subject to inspection and testing by the CQA Testing Service employed by the Contractor. Activities shall be performed as described in sections referenced in Paragraph 102. Such inspections and tests shall not

relieve the Contractor of the responsibility of providing materials and placement in compliance with this Section.

1.5 DELIVERY, STORAGE, AND HANDLING

A. See Contract Statement of Work for general requirements.

PART 2 MATERIALS

2.1 PIPE

A. Pipe Materials:

1. Leachate Collection and Recovery System (See Table 1).

B. Fittings:

1. All fittings shall be prefabricated and manufactured by the same manufacturer as the pipe.

Table 1. Gravity Leachate System Piping.

Item:	**Gravity Leachate System Piping**
Service:	Underground within a pond.
Location:	Solid Wall and Perforated High Density Polyethylene, Thermal Butt Welded Joints (1)
Material:	NSF listed and approved
Listing:	Maximum Working Temperature – Ambient
Rating:	Maximum Working Pressure – Atmospheric

Item	ASTM	Size	Remarks
Pipe(1)	ASTM F714, Pipe Grade PE 3408 Resin	2” – 24”	SDR 11 (160 psi)
Joints	Not Applicable	All	Thermal Butt Fusion Welded
Fittings (2) (30°, 45°, 60°, and 90° bends)	ASTM D3261	2” – 8” 10” – 24”	SDR 11 (120 psi) (reduced pressure) Injection molded butt fittings from same resins as pipe. SDR 11 (120 psi) Mitered fittings fabricated from angular cut sections of pipe.
Fittings (2) Tees, Wyes and Reducers	Not Applicable	4” - 6” 8” - 24”	SDR 11 (160 psi) SDR 11 (120 psi) Mitered fittings fabricated from angular cut sections of pipe.
Cleanout	Not Applicable	4” – 12”	Lockable Cap

Approved Manufacturers of Pipe and Fittings		
Manufacturer	**Trade Name**	**Size Range, Inches**
Chevron Philips Chemical Company	Performance Pipe	1/2" to 54"
KWH Pipe	Sclairpipe	3" to 154"
Others as Approved by the Purchaser	---	---

Notes: (1) Solid or perforated pipe shall be provided as specified on the Design Drawing. Perforated pipe shall be perforated in accordance with the details shown on the Design Drawing. (2) Fittings are reduced pressure rating fittings.

C. Coarse Aggregate Bedding Material:

1. The bedding material for the leachate collection pipe shall be washed gravel or washed crushed coarse aggregate. Crushed slag or Portland cement concrete shall not be used. The material gradation shall be as follows:

Sieve Size	Percent Passing By Weight
1"	100
3/4"	90 - 100
1/2"	50 - 75
#4	0 - 8

2. The physical requirements of the bedding material shall conform to the following requirements:

Test	ASTM	Requirement
Los Angeles Abrasion	C131	Maximum percent loss:50
Soft Particles	C136	Percent Maximum: 7.0

3. Material specified in the State DOT Standard Specifications, which meets the requirements specified above, may be used if acceptable to the Purchaser.

D. Gravel Drainage Layer:

1. Gravel Drainage Layer Material (Leachate Collection Layer):

a. The gravel drainage layer material shall be washed rounded natural gravel that meet the following listed requirements.

i. The material shall be classified as GP in the Unified Soil Classification System, ASTM D2487 that is rounded natural washed gravel. Crushed products are not allowed.

ii. % in.%Material shall conform to WSDOT M41-10 9-03.12(5) Gravel Backfill for Drywells gradation, or an approved equal.

iii. The material shall have a permeability of greater than 1 x 10^{-1} cm/sec when tested in accordance with ASTM D2434.

iv. The material shall be free from all organic material and deleterious material.

v. Material shall exhibit a maximum loss of 50% per the LA Abrasion Test ASTM C131.

vi. Maximum soft particles of 5% per ASTM C136.

vii. Maximum percent loss of 12% after 5 cycles per ASTM C88.

PART 3 EXECUTION

3.1 INSTALLATION AND TESTING OF HDPE PIPE

A. Joints for High Density Polyethylene (HDPE) Pipe:

1. HDPE pipe shall be joined together by the thermal butt fusion method in accordance with Procedure 2, ASTM D2657. Fittings shall be fabricated to provide a smooth inside surface. The hot plate butt fusion procedure shall be performed using apparatus recommended by the pipe Manufacturer and which complies with ASTM D2657.

3.2 BENT STRAP TEST

A. Test Requirements:

1. A bent strap test shall be made on each diameter of pipe prior to the start of joint welding procedures. A test joint shall be made and a specimen cut from the joint and destructively tested to confirm fusion joint integrity, operator procedure, and fusion machine setup (fusion parameters, including temperature and pressure).

2. Additional bent strap tests may be required by the Purchaser during the joint welding process if it is found that the joints of unacceptable quality are being made. These tests shall be used to adjust fusion machine settings and/or operator procedures as required. Test joints shall be prepared at no additional cost to the Purchaser.

B. Test Procedure:

1. Using waste pieces of pipe, a joint shall be prepared and then butt fusion welded and allowed to cool to ambient temperature.

2. A test strap shall be cut from the specimen:

a. The width of the strap shall be 1 1/2 times the pipe wall thickness, but not less than 1-in.

b. The length of the strap on each side of the fusion weld shall be 15 times the pipe wall thickness, but not less than 6-in.

3. The cut shall be bent so that the ends of the strap touch. If any separation, cracks, or voids are observed, the fusion is unacceptable and indicates poor fusion quality.

4. If failure occurs, fusion procedures or machine set-up shall be changed and a new trial fusion weld and new bent strap specimen prepared and tested.

5. The Testing Service shall witness all bent strap tests.

6. Field fusion of pipe shall not proceed until a test joint has passed the bent strap test and visual inspection indicates that the fusion beads and "V" groove are the correct size.

3.3 HDPE PIPE TESTING

A. Leachate Collection System Pipe:

1. All perforated and solid wall pipe shall be visually inspected during installation to ensure that all joints are made properly. Perforated pipe shall be visually inspected to ensure that the pipe has been placed with the perforations facing down. No pressure or air test is required. Visual inspections shall be as described in Paragraph 304.

3.4 VISUAL INSPECTION OF HDPE PIPE DURING INSTALLATION

A. General:

1. The Contractor shall visually inspect all pipes during installation for surface damage and weld quality.

B. Surface Damage:

1. Surface damage to a pipe that occurs during handling or installation shall be minimized. The maximum acceptable depth of damage is 10% of wall thickness of the pipe. If excessive damage occurs, the damaged portions of pipe shall be cut out and replaced. Deep, sharp notches may be filled with extudite and dressed smooth.

2. Butt fuse on misalignment shall not exceed 10% of the pipe wall thicknesses. Misaligned butt fusions shall be cut out and redone.

C. Butt Fusion Joint Weld Quality:

1. All butt fusion welded joints shall be visually inspected to ensure joint quality. The size and shape of the fusion beads shall be used as an indicator of joint quality. Specifically:

   a. The double bead width shall be 2 to 2 1/2 times the height of the bead measured from the pipe surface.

   b. Both beads shall be uniform in size and shape around the joint.

2. The depth of the "V" between the two beads shall not be more than half the bead height.

3. If the "V" groove is too deep, a "cold" fusion may have occurred (uneven heating or insufficient heating time or excessive pressure during heating or excessive pressure during joining). A non-uniform bead shape around the pipe indicates uneven heating.

4. A joint with cold fusion or a non-uniform bead is a poor quality joint that shall be removed (cut out) and remade.

3.5 LEACHATE COLLECTION AND CLEANOUT PIPE INSTALLATION

A. Perforated leachate collection piping and solid wall cleanout pipes shall be installed according to the elevations and locations indicated on the Design Drawings.

B. The maximum vertical variation from the correct profile and section shall not exceed +0.1 ft. The slope of the pipe shall not vary from the specified slopes by more than +0.1%. The Contractor shall regrade any area that does not meet the specified tolerances.

C. Perforated pipe shall have two rows of 1/2-in. diameter perforations spaced 5 or 6 in. apart along the length of each pipe. The perforations shall face down in the collection and cleanout trenches.

D. The Contractor shall provide hydraulic jet cleaning of all pipelines following installation. The jet cleaning shall verify that the pipe is intact and unobstructed. Defects in the pipeline identified by the cleaning process shall be repaired by the Contractor.

3.6 INSTALLATION OF LEACHATE SYSTEM PIPES OUTSIDE OF THE BASIN

A. Bedding and backfill for gravity pipe, and pressure pipe shall be in accordance with Section 31 23 33, "Trenching and Backfilling."

3.7 INSTALLATION OF GRANULAR MATERIALS

A. Prior to the installation of any granular materials, the underlying liner or leachate collection system components shall be inspected for defects, defective seams/joints, holes, blisters, tears, and signs of damage. Identified areas shall be marked for repair and repaired prior to installation of granular materials.

B. Granular Materials:

1. Granular materials include coarse aggregate leachate pipe bedding and drainage gravel material.

C. Acceptable Placement Methods:

1. Acceptable placement methods include:

a. Using a crane to place material from outside of the basin.

b. Material conveyor (or light weight equipment) moving material into a pond to the point of use.

D. Placement of Materials:

1. Under no circumstances, shall there be direct equipment travel over a geomembrane or other geosynthetic liner components.

2. Temporary ramps for equipment shall not be constructed in the basin after an HDPE liner has been installed.

3. Transport aggregate material to inside of basin by air with crane or other approved low/no contact procedure.

4. Work shall be performed in a manner that avoids pinching or tearing the HDPE geomembrane liners.

5. Compaction is not required.

6. No travel over piping shall be allowed without sufficient protection of the piping.

7. Material placement over the HDPE liners during periods of warm weather can cause wrinkling in the liner. The wrinkling effect can cause damage to the liners. Placement of granular materials shall be halted when the air temperature is greater than 85°F or less than 40°F.

8. When drainage layer material is being placed, remove all rocks, stones, roots, and other debris that remain in the material and that could cause damage to a liner.

E. Placement of Leachate Collection System Coarse Aggregate Pipe Bedding:

1. Pipe bedding shall be placed under and around pipes and in the collection sumps to the thickness shown on the Design Drawings.

2. Piping shall be installed over an initial layer of pipe bedding. After the pipe is installed, pipe bedding shall be hand placed beneath the haunches and above the pipe and compacted to ensure complete and uniform support of the pipe.

F. Placement of Drainage Gravel Material:

1. Each of the materials shall be placed to the thickness shown on the Design Drawings.

2. Installation of the materials shall not begin until installation of the secondary liner system is complete, inspected, and the Contractor is released in writing to proceed.

3. Each of the materials shall be placed and maintained to a uniform thickness, free of ruts and irregularities.

4. The drainage gravel layer shall be fine graded using equipment with low ground pressures.

G. Report Damage:

1. If damage occurs to the geomembrane or portion of the LCRS while placing the soil cover, the Contractor shall report it to the Purchaser immediately so that repairs can be performed without delay.

2. Repairs to an HDPE geomembrane or geocomposite shall be made as specified in the Section 31 90 22, “High-Density Polyethylene Geomembrane Liner.” Repairs to components of the LCRS shall be repaired as specified herein.

3. The Contractor shall perform all repair work at no additional cost to the Purchaser.

END OF SECTION 31 90 52

SECTION 31 90 99

CONSTRUCTION QUALITY ASSURANCE

PART 1 GENERAL

1.1 SUMMARY OF WORK

A. This Section covers the minimum monitoring, sampling, testing, and documenting activities and requirements for the Construction Quality Assurance (CQA) work.

B. The CQA Agency shall be objective, competent and shall disclose possible conflicts of interest so that objectivity can be confirmed.

C. The work may include, but not be limited to, the following items:

1. The CQA Agency shall develop a CQA Plan (CQAP) for review, submittal, and implementation that is in full compliance with applicable state and federal regulations.

    a. At a minimum, the CQAP shall comply with the requirements of the US EPA Technical Guidance Document – Construction Quality Assurance For Hazardous Waste Land Disposal Facilities (EPA/530-SW-86-031 - October 1986) and the WAC 173-303-335 and all other related WAC requirements.

2. Identify and document tests required, test frequency, test methods.

3. Develop test reporting procedures.

4. Develop procedures to address non-compliant test results in a timely manner.

5. The CQA Agency shall perform all tests and inspections required by CQAP and this Specification.

6. CQA Agency inspector(s) shall be on site any time the Contractor is actively performing site work.

7. Prepare and submit a final CQA Report that documents all tests and inspections in a logical format.

8. Prepare and submit certification of compliance per WAC 173-303-335.

9. The CQA Agency shall coordinate with the Contractor and Purchaser to ensure the implementation of the CQAP.

1.2 RELATED DOCUMENTS / CODES AND STANDARDS

A. ASTM International (ASTM)

ASTM C31	Standard Practice for Making and Curing Concrete Test Specimens in the Field
ASTM C39	Standard Test Method for Compressive Strength of Cylindrical Concrete Specimens
ASTM C143	Standard Test Method for Slump of Hydraulic Cement Concrete
ASTM C172	Standard Practice for Sampling Freshly Mixed Concrete
ASTM C231	Standard Test Method for Air Content of Freshly Mixed Concrete by the Pressure Method
ASTM C511	Standard Specification for Mixing Rooms, Moist Cabinets, Moist Rooms and Water Storage Tanks Used in the Testing of Hydraulic Cements and Concretes
ASTM C1077	Standard Practice for Agencies Testing Concrete and Concrete Aggregates for Use in Construction and Criteria for Testing Agency Evaluation
ASTM D422	Standard Test Method for Particle-Size Analysis of Soils (withdrawn)
ASTM D698	Standard Test Method for Laboratory Compaction Characteristics of Soil Using Standard Effort (12400 ft-lbf/ft3)
ASTM D854	Standard Test Methods for Specific Gravity of Soil Solids by Water Pycnometer
ASTM D1556	Standard Test Method for Density and Unit Weight of Soil in Place by the Sand-Cone Method
ASTM D2167	Standard Test Methods for Density and Unit Weight of Soil in Place by the Rubber Balloon Method
ASTM D2216	Standard Test Methods for Laboratory Determination of Water (Moisture) Content of Soil and Rock by Mass
ASTM D2487	Standard Practice for Classification of Soils for Engineering Purposes (Unified Soil Classification System)
ASTM D2488	Standard Practice for Description and Identification of Soils (Visual-Manual Procedure)

ASTM D3740	Minimum Requirements for Agencies Engaged in Testing and/or Inspection of Soil and Rock as Used in Engineering Design and Construction
ASTM D4253	Standard Test Methods for Maximum Index Density and Unit Weight of Soils Using a Vibratory Table
ASTM D4254	Standard Test Methods for Minimum Index Density and Unit Weight of Soils and Calculation of Relative Density
ASTM D4318	Standard Test Methods for Liquid Limit, Plastic Limit, and Plasticity Index of Soils
ASTM D5084	Standard Test Methods for Measurement of Hydraulic Conductivity of Saturated Porous Materials Using a Flexible Wall Permeameter
ASTM D5641	Standard Practice for Geomembrane Seam Evaluation by Vacuum Chamber
ASTM D5820	Standard Practice for Pressurized Air Channel Evaluation of Dual Seamed Geomembranes
ASTM D6392	Standard Test Method for Determining the Integrity of Nonreinforced Geomembrane Seams Produced Using Thermo-Fusion Methods
ASTM D6938	Standard Test Methods for In-Place Density and Water Content of Soil and Soil- Aggregate by Nuclear Methods (Shallow Depth)
ASTM E329	Standard Specification for Agencies Engaged in Construction Inspection, Testing, or Special Inspection

B. Geosynthetic Research Institute (GRI)

GRI GM6	Practice for Pressurized Air Channel Test for Dual Seamed Geomembranes
GRI GM14	Guide for Selecting Variable Intervals for Taking Geomembrane Destructive Seam Samples Using the Method of Attributes

C. USEPA

EPA/530-SW-86-031	Technical Guidance Document – Construction Quality Assurance For Hazardous Waste Land Disposal Facilities

D. Washington Administrative Code (WAC)

WAC 173-303-335	Construction Quality Assurance Program

WAC 173-303-640	Dangerous Waste Regulations Washington State
WAC 173-303-650	Surface Impoundments

1.3 SUBMITTALS

A. CQA Agency shall submit plans, reports, and data via electronic medium in a format compatible for importing into the Purchaser information systems specified by the Purchaser.

B. The CQA Agency shall submit with its bid, at a minimum, the following requested listed information.

1. List of subcontractors.

2. Quality Control Manual.

3. Proposed CQAP and CQA Report template and/or proposed tables of contents. As an alternate, a CQAP and CQA Report from a similar project may be submitted.

4. Company and personnel qualifications.

5. Letter certified by the responsible engineer that the CQA Agency and all applicable subcontractors comply with ASTM C1077, ASTM D3740, and ASTM E329, as applicable to the work that each agency will perform.

C. Contractor shall submit Material Safety Data Sheets for all materials two weeks prior to materials being be transported to the site.

D. The CQA Agency shall prepare and submit, for review, a complete CQAP within four weeks of project award. The CQA Agency shall incorporate Purchasers comments on draft CQAP and resubmit at least three weeks prior to Contractor mobilizing to the site.

E. The CQA Agency shall submit the final report within three weeks of completion of the subject work.

F. The CQA Agency shall submit all interim reports and tests within three working days of completion of test or work to which the inspection pertains.

1.4 QUALITY ASSURANCE

A. The CQA Agency and all applicable subcontractors shall fully comply with the requirements of ASTM C1077, ASTM D3740, and ASTM E329, as applicable to the work that each agency will perform.

B. Each laboratory and field report shall present all data items required by the applicable ASTM standard.

C. The following qualifications are required for the personnel performing quality assurance activities as employees or subcontractors of the CQA Agency. All personnel performing

quality assurance work is referred to throughout this Specification as CQA Agency; the CQA Agency shall verify and document that all individuals performing any CQA activities have the appropriate qualifications. Documentation shall be available to Purchaser and provided in the final CQA report.

1. CQA Certifying Engineer – Shall be a registered professional civil engineer in the State of Washington with at least ten years of experience in design/construction/permitting/licensing (at least five years of which is CQA experience as a certifying engineer on landfill or ponds with compacted clay and/or geomembrane liner systems), a minimum of 10 similar successful projects and certified at least 500,000 sf of installed liner materials.

2. All CQA Inspectors – Shall have adequate formal academic training and sufficient practical and technical experience needed to execute record review and inspection activities conducted at the project site and perform all required laboratory and field-testing. This includes a demonstrated knowledge of the various aspects of the type of work being conducted and the applicable test methods. Different inspectors, each with specialized knowledge and experience, shall be employed for different portions of the work.

D. The Lead CQA Inspector for earthwork shall have at least five years working experience as Earthwork Inspector or testing technician, with at least 5 successful similar projects and at least 100,000 sf of installed liner material where acting as lead CQA Inspector.

E. All CQA Inspectors for earthwork shall be knowledgeable in:

1. Field practices relating to construction techniques used for the type of earthwork being performed.

2. Construction and compaction equipment.

3. Codes and regulations specified herein concerning material installation.

4. Observation procedures for earthwork construction.

5. Sampling and earthwork testing procedures.

6. Testing equipment.

7. Certified in the safe use, transportation, or nuclear density gauges.

8. Trained in emergency procedures if the nuclear density gauges is suspected of damage.

9. Documentation procedures.

10. Site safety.

F. The lead CQA Field Inspector for geosynthetics shall have at least five years CQA experience as a field inspector on projects with a geomembrane lining system including two years as CQA Inspector.

G. All Geosynthetic Liner and Floating Cover Inspectors shall be knowledgeable in:

1. Field practices relating to construction techniques used for the type of material to be used.

2. Construction, deployment, seaming, and testing equipment for materials to be used.

3. All welding equipment and the correct operating procedures for seaming.

4. All codes and regulations concerning material and equipment installation.

5. Observation procedures for installation of all elements of the materials.

6. Non-destructive seam testing procedures and failure criteria.

7. Sampling for destructive testing of samples of seams and laboratory testing procedures.

8. Testing equipment.

9. Documentation procedures for field and laboratory tests.

10. Site safety.

H. The CQA Piping Inspector shall be knowledgeable in:

1. Field practices relating to construction techniques used to install piping that will be used for the Leak/LDRS.

2. Pipe joining equipment and accessories and the correct method for welding pipe.

3. Codes and regulations concerning trench excavations.

4. Trenching, bedding, and backfill procedures.

5. Observation procedures for installation of pipe.

6. Testing procedures and failure criteria for visual inspection of welds.

7. Testing equipment.

8. Documentation procedures.

9. Site safety.

I. The CQA Concrete Inspector shall be appropriately certified by the American Concrete Institute (ACI) and be knowledgeable in:

1. Field practices relating to construction techniques used for the forming, reinforcement, and placement of concrete.

2. Sampling procedures for concrete.

3. Testing procedures for concrete

4. Documentation procedures.

5. Site safety.

J. The CQA Electrical and Mechanical Inspector shall be knowledgeable in:

1. Field practices related to techniques used for installation of electrical and mechanical equipment that will be installed at the site.

2. Equipment and accessories required for the installation of the equipment.

3. All codes and regulations related to electrical equipment installation.

4. All codes and regulations related to installation of pumps and pressure piping systems.

5. Observation procedures.

6. Testing equipment.

7. Testing procedures for pumps.

8. Documentation procedures.

9. Site Safety.

1.5 DELIVERY, STORAGE, AND HANDLING

A. See Contract Statement of Work for general requirements.

PART 2 PRODUCTS

Not Applicable.

PART 3 EXECUTION

3.1 GENERAL

A. The CQA Agency shall provide an onsite representative(s) that will provide input and provide daily field reports, which shall include activities completed and number of personnel onsite.

B. A supervisor vested with authority to make decisions binding on the CQA Agency shall be assigned to the task to resolve problems as they arise so as not to delay completion of the work.

C. The CQA Agency shall maintain the necessary labor force for the work to ensure the on time completion of the work, without significant delays to the Contractor.

D. The CQA Agency shall bear all costs that are incurred in procuring and/or maintaining the necessary labor force for the work, including but not limited to such items as overtime, bonus or premium time, etc.

E. The CQA Agency personnel shall be competent, capable, qualified, and able to perform the duties required to the satisfaction of the Purchaser.

F. The CQA Agency shall perform the work in a safe manner utilizing the Purchaser safety policies and procedures as a minimum in accordance with this Specification and the Design Drawings.

3.2 PREPARATION OF CQA PLAN

A. The CQA Agency shall develop for review, submittal, and implementation a CQAP that is in full compliance with this Specification and state and federal regulations.

B. At a minimum, the CQAP shall comply with the requirements of the US EPA Technical Guidance Document – Construction Quality Assurance For Hazardous Waste Land Disposal Facilities (EPA/530-SW-86-031 - October 1986) and the Washington Administrative code (WAC) 173-303-335 and all other related WAC requirements.

C. The CQAP shall include, but not be limited to:

1. Identify and define the responsibility and authority of plan participants.

2. Identify and provide details for required project meetings.

3. Develop inspection check list forms, test report requirements, and reporting procedures.

4. Identify and document tests required, test frequency, test methods for each of the following construction activities:

a. Preconstruction material certifications, tests, and mix designs.

b. Grading and preparation of subgrade.

c. Procuring, mixing, placing, compacting, and protecting the soil bentonite liner material.

d. Cast-in-place and pre-cast concrete elements associated with anchor ring wall, cover system, and catch basin.

e. Procuring, storying, deploying and seaming (as applicable) geosynthetic products including but not limited to:

i. Geotextiles,

ii. Geosynthetic drainage materials,

iii. Geosynthetic clay liners (GCL), and

iv. Geomembranes.

f. Mechanical and electrical systems associated with Leak Collection and Removal System.

g. Other elements determined critical to the construction of LERF Basin 41 and associated structures.

3.3 EARTHWORK - REQUIREMENTS FOR VISUAL OBSERVATIONS AND TESTING

A. General Visual Observations

1. At a minimum of twice daily, observe and record the weather conditions (i.e., temperature, humidity, precipitation, and wind speed and wind direction) to ensure that they are acceptable for the work being performed.

2. Measure and record the total precipitation received each work day and non-work times (overnight and days off).

3. If the weather becomes unacceptable for work underway, discuss adverse conditions with Contractor. Record conversation and action items to minimize non-compliant work products (stopping the installation until conditions again become favorable, additional sand bags for deployed geosynthetic panels).

4. For earthwork, record type and size of compaction equipment in use:

   a. For sheepsfoot rollers, record the drum diameter and length, empty and ballasted weight, arrangement of feet, length and face area of feet, and the yoking arrangement.

   b. For rubber-tired rollers, record the tire inflation pressure, spacing of tires, and empty and ballasted wheel loads.

   c. For vibratory rollers, record the static weight, imparted dynamic force, operating frequency of vibration, and drum diameter and length.

   d. For hand tampers, record make, model number, size, and compactive effort.

5. For earthwork, observe and record compactive effort, uniformity of compaction, and scarification and connection between compacted lifts. Record number of passes of a roller by type, size, and weight of roller.

6. For proofrolling, record the type, size, and weight of compaction equipment or other vehicles used for proofrolling.

B. Inspection and Testing of the Subgrade

1. Visual observations of subgrade shall include:

   a. Visual Observations as required by Article 3.2 a.

   b. Observe stripping and removal of topsoil and removal of all organic and undesirable material (including CCR in areas where it is being removed down to natural subgrade).

   c. Observe that there are no moisture seeps, puddling, or ponding.

   d. Observe proofrolling to identify yielding areas, and observe removal of material from areas that fail under proofrolling.

   e. Observe compaction of the subgrade prior to placement of fill. Inspect for any settlement due to soft areas in the subgrade.

   f. Verify measurements and determine that the depth and slope of an excavation meets design requirements and that there are no sidewall failures from moisture seeps.

2. Laboratory Tests - As specified in Table 1 of this Section.

3. Field Tests - As specified in Table 2 of this Section.

4. Acceptance Criteria - Acceptance Criteria are specified in the Installation Specification Section 31 90 05, "Earthwork and Soil-Bentonite Mixture."

C. Soil/Bentonite Liner Prequalification Testing

1. Using site soil and bentonite, provided by Contractor from Contractor selected sources, perform mixing studies to develop a curve of hydraulic conductivity to blending ratio. A minimum of 4 blending ratios shall be selected by Contractor and tested CQA Agency. For each blending ratio the following qualification testing is required:

a. Moisture-Density Relationship per ASTM D698 (standard Proctor).

b. Hydraulic conductivity testing per ASTM D5084. Tests shall be performed on mixed samples compacted to 95% of the dry density determined by the standard Proctor. Compaction shall be at the optimum moisture determined by the standard Proctor.

c. Atterberg Limits per ASTM D4318.

d. Gradation with hydrometer per ASTM D422.

2. Soil/Bentonite Liner Test Pad Testing:

a. Testing of a fill pad constructed by the Contractor to verify that the specified density, moisture content, and hydraulic conductivity can be achieved before a full size liner is built. The pad shall be at least 1.5 ft thick, 20 ft wide, and 40 ft long.

b. The mixed soil/bentonite material and construction practice, which is used for construction of the test pad, shall follow the same procedures, as closely as possible, to the full size liner. Hydraulic conductivity testing shall be performed on the test pad to confirm the desired hydraulic conductivity specified in the Specification Section 31 90 05, Earthwork for CCR Impoundment Closure & General Earthwork.

c. Test pad testing activities include visual observations and laboratory, as specified herein.

i. Perform each of the lab tests indicated in Table 1 on 1 sample from each lift of the of the test pad.

ii. Perform each of the field tests indicated in Table 2 once for each lift of the test pad.

D. Inspection and Testing for Soil/Bentonite Liner Placement and Compaction

1. Visual Observations listed in Article 3.2.

2. Observe removal of roots, rocks, rubbish, or out-of-Specification soil.

3. Observe and record changes in soil characteristics necessitating a change in construction procedures.

4. Observe adequate clod size reduction for clay soils prior to mixing.

5. Observe spreading of bentonite for uniformity.

6. Determine the quantity of bentonite placed prior to mixing. Compare paced quantity to target quantity for soil quantity to be mixed.

7. Observe mixing for uniformity and duration.

8. Observe placement procedures for proper liner thickness.

9. Observe procedures to be followed to adjust the soil bentonite mixture moisture content to obtain uniform moisture content.

10. Observe procedures followed to adjust the moisture content in the event of significant moisture variations during construction.

11. Observe and record final finishing procedures and timely placement of protective cover.

12. Observe and record that final grade is consistent with the design grade specified on the Design Drawings.

13. Laboratory Tests as specified in Table 1 of this Specification Section.

14. Field Tests as specified in Table 2 of this Specification Section.

E. Soil Bentonite Liner Post Construction Testing

1. A soil moisture content determination shall be made every seven days until placement of the overlying component. Final moisture tests shall be made within 24 hours of placement of the overlying component. At a minimum, five tests shall be made per lift.

2. At the time of testing, the CQA Agency shall note the presence or absence of desiccation cracks and any remedial measures taken to remove those features.

3.4 GEOSYNTHETICS - REQUIREMENTS FOR VISUAL OBSERVATIONS AND TESTING

A. Provisions included herein are applicable to all geosynthetic materials including geotextiles, geosynthetic drainage materials, liners, GCL, and floating cover. Contractor shall ensure that requirements set forth herein and in respective technical material Specification Section are met and documented accordingly.

B. Visual Observations – the following items shall be observed and documented. Any nonconformances shall be made known to the Contractor, Purchaser, and Engineer as soon as practical.

1. Observe that each roll or panel is marked with the following information:

   a. Name of Manufacturer;

   b. Product identification (brand name, product code);

   c. Identification number;

   d. Product thickness or composition;

   e. Manufacturing batch code or lot code;

   f. Date of manufacture;

   g. Order number;

   h. Physical dimensions (length, width, and total weight); and

   i. Panel/roll number (where applicable).

2. Review and document the Quality Control certificates on each roll or panel to verify that the material received onsite meets the Technical Specifications. Take the identifying labels from each delivered product and save them for future reference.

3. Recommend rejection of products that do not have the required documentation and ensure that the rolls are removed from the site.

4. Observation of Manufactured Rolls or Panels:

   a. Observe all manufactured products upon delivery to the site.

   b. Ensure that packaging is secure and that no damage has occurred.

   c. If damage to packaging has occurred, inspect exposed surfaces and note and identify any damage or repairable flaws. **Note**: This visual observation shall be conducted without unpackaging, unless the extent of surface damage indicates that internal damage may be present.

   d. If damage to packaging only has occurred, document repair of the packaging.

   e. If damage to the product has occurred, document that the damage or flaws are repaired or that the damaged material is wasted and removed from the site.

   f. Report all damage to the Purchaser.

g. Observe the ground surface of the storage area to ensure that it is dry, relatively level, smooth, and free of rocks, holes, and debris.

5. Prior to placement of any geosynthetic layers:

a. Review and verify the appropriate number of tests have been performed, reports received, and that they are compliant with the applicable Specifications.

b. Note that if Contractor chooses to proceed with a subsequent material prior to completion of laboratory tests, they do so at their own risk. Any costs or schedule delays resulting in reworking any lower layers that were not tested or failed to achieve the required criteria shall be borne solely by the Contractor.

c. Review surveyor records to ensure that the elevations of the subgrade are within ± 0.2 ft of the elevations shown on the Design Drawing and that the actual thickness of lower layer is compliant with the design documents.

d. Visually inspect the bedding surface to ensure that it meets the requirements of the Specifications. Confirm and document that it is compacted, free from clods of soil, rocks larger than specified, roots, sudden or sharp changes in grade and standing water.

6. During placement of any geosynthetic layers:

a. Observe that the Contractor geosynthetic placement plan is being followed and unrolling or unpackaging is in accordance with manufacturer recommendations. Note where the plan is not being followed and document the Contractor reasons for not following the plan. As each panel or roll is placed, visually inspect the geosynthetic for tears, punctures, and thin spots. The CQA Inspector shall traverse the material in such a way that the entire surface is inspected. Any defects shall be documented on a Drawing and marked on the geomembrane for repair.

b. Document that the location of the seams meet the Specification and manufacturer requirements for seaming.

c. Document the location of any seams that do not meet the Specification or manufacturer requirements for seaming.

d. At the time of placement, make measurements to confirm that required overlap of adjacent geosynthetic has been achieved, that proper temporary anchorage is being used (e.g., sand bags or tires), and that the geosynthetic is being placed in a relaxed (nonstressed) state.

e. Document any material damage, degradation, or hydration from adverse weather conditions, equipment, inadequate temporary anchoring, or

rough handling. Mark the location of damage on the geomembrane for repair and on a Drawing.

f. Document improper placement (if the placement plan is not followed) and, as a result, inadequate coverage with the available materials or an excess number of field seams.

g. Document inadequate overlap resulting in poor quality seams.

h. Document nonwelded/seamed or cut products.

i. Document repair of damage. Documentation shall include location, type, and method of repair.

7. Trial Welds Prior to Beginning Geomembrane Seaming:

a. Observe that trial welds are being made at the frequency specified.

b. Observe fabrication of test strips and note that test strips are fabricated correctly.

c. Specify where samples are to be cut from the test strips and witness all destructive tests.

d. Observe documentation of results of the destructive tests.

e. Audit documentation of each trial weld received.

8. Geomembrane Seaming and Seam Repair:

a. Observe that the geomembrane is free from dirt, dust, and moisture.

b. Observe that the seaming materials and seam welding equipment are as specified.

c. Observe that a firm foundation is available for seaming.

d. Observe that geomembrane overlap and panel adjustment are correct prior to seaming.

e. For extrusion welding, observe that the geomembrane is pre-beveled, properly abraded, and that the panels are temporarily bonded.

f. Observe that grind marks are covered with extrudite.

g. Observe weather conditions (e.g., temperature, humidity, wind) to ensure that they are acceptable for seaming.

h. Observe temperatures, pressures, and speed of seaming to ensure that they are as specified. Gages and dials on seaming equipment shall be checked and readings recorded.

i. Observe that the geomembrane is not damaged by equipment or personnel during the seaming process.

j. Observe that no solvents or adhesives are used.

9. Mechanical Anchorage System:

a. Special inspection of post-installed anchors shall be provided as required by ICC Reports for product installed. The Engineer of Record may require pullout or shear tests, in addition to Special Inspection to determine the adequacy of the anchors. A field-testing program shall be established and performed in accordance with appropriate ASTM test standards. Field tests shall be non-destructive when at all possible.

b. Verify and document the age and strength tests results of the concrete anchor ring wall.

c. Verify and document that the materials for the mechanical anchorage comply with design documents, including but not limited to:

i. Anchor bolts – material, diameter, and length.

ii. Batten plate – material, width, thickness, and prepunched/drilled holes are smooth edges, properly located, and spaced.

iii. Other hardware – washers and other miscellaneous hardware are compliant with design requirements.

d. Verify and document that the installation of post-installed anchor bolts is in accordance with manufacturer requirements, including but not limited to, depth and diameter of drilled hole, cleanliness of hole, mixing of adhesives or expansion methods.

e. Verify and document the spacing on post-installed anchors for the batten system.

f. Verify and document that no sharp features are present that could damage the liner or cover material.

g. Verify and document the liner/cover is protected from the top of anchor bolts.

h. Verify and document the anchor bolts are properly tightened.

i. Verify and document any supplemental sealing such as caulking or tape closures.

10. Where the Design Drawings specify penetrations (e.g., structures and pipes) in the geomembrane (liner or cover), CQA inspection personnel shall ensure that the seals around such penetrations are of sufficient strength and are

impermeable. Specific inspections that shall be made on all seals and anchors include:

a. Observations and tests to ensure that the sealing systems (i.e., pipe boots) have been installed as specified (are leak free) and in the proper location(s).

b. Observations to ensure that all objects that are placed adjacent to the geomembrane (i.e., batten bars) are smooth and free of objects or conditions that may damage the membrane.

c. Observations to ensure that all seals and anchors are complete.

C. Tests – the tests shall be performed and documented or observed and documented. Any nonconformances shall be made known to the Contractor, Purchaser, and Engineer as soon as practical.

1. All geomembrane laboratory tests shall be performed by laboratories that are appropriately accredited by the Geosynthetic Accreditation Institute-Laboratory Accreditation Program (GAI-LAP).

2. Geomembrane Production Seam Testing: Non-destructive geomembrane production seam testing: Activities to be observed and documented include the following list.

a. Observe that 100% of the seam lengths are tested using non-destructive procedures.

b. Observe that testing is performed as seaming progresses.

c. Observe that the correct procedures are used for testing each type of seam.

d. Observe all non-destructive test procedures.

e. For air pressure testing, observe that the equipment, procedures, and air pressure meet specified requirements. Observe that all testing is properly documented.

f. For vacuum box testing, observe that testing is being performed correctly.

g. For conductive elements testing, observe that the testing is being performed correctly.

h. For inaccessible seams, observe that a procedure acceptable to the Purchaser is used to test the seams.

i. Observe that all leaks are marked, recorded as to location, and repaired.

j. Observe that repairs are made in accordance with approved techniques.

k. Observe that all repairs are re-tested and that no leakage is present.

l. Review leakage data for possible patterns. Make suggestions if data shows a consistent pattern of failure of a particular machine or crew.

m. Audit documentation of testing prepared to make sure that the location of leaks is identified on the Drawings.

3. Destructive:

a. Destructive seam testing shall be performed at the specified frequencies.

b. The CQA Inspector shall specify the location where each sample shall be taken and record data for each sample.

c. The CQA Inspector shall designate any additional test locations that may be necessary. These locations may be based on the suspicion of contamination by dirt or moisture, change in seaming materials, increase in failed nondestructive tests, and other causes that could result in unacceptable seams.

d. Facilitate the required laboratory testing.

e. Audit and document the results of laboratory testing on seam samples. Note any sample that does not pass and identify the location on the geomembrane for repair in the field and on the Drawings.

4. Repair of Failed Seams:

a. For field seams that fail, the seam can either be reconstructed between the failed and any previous passed seam location or the installer can go on either side of the failed seam location (10-ft minimum), take another sample, test it, and if it passes, reconstruct the seam between the two locations. If it fails, the process shall be continued. In all cases, acceptable seams must be bounded by two passed test locations. The CQA Inspector shall document the procedure used and results of tests.

b. Document that repairs are made. Documentation shall include location, type, and method of repair.

c. Air pressure testing shall be performed in accordance with ASTM D5820 and GRI GM6.

d. Vacuum Box testing shall be performed in accordance with ASTM D5641 and as specified herein.

e. Continuity testing shall be performed as seaming progresses or as soon as a suitable length of seam is available, not at the completion of all field seaming.

5. Double Wedge Fusion Welded Seams:

a. Double fusion-welded seams shall be tested using air pressure testing.

b. The procedure for testing shall be as specified in GRI GM6 for the type and thickness of geomembrane in use.

c. The following test pressures are applicable to both smooth and textured HDPE. After an initial 2-minute pressure stabilization period, the pressure shall be maintained between 24 and 30 psi for 40 mil HDPE, 27 and 30 psi for 60 mil HDPE, and 30 and 35 psi for 80 and 100 mil HDPE. The pressure shall be sustained for a minimum of 5 minutes. The loss of pressure shall not exceed a maximum of 3 psi in 5 minutes. If the pressure does not stabilize in the first two minutes or the pressure loss exceeds the loss specified, the seam test shall be considered a failure.

d. The leak or suspected leak shall be located and repaired.

e. The repaired seam shall be re-tested as required until all leaks are identified and repaired, and the seam passes a subsequent air pressure test.

f. When the geometry of a double wedge fusion-weld makes air testing impossible or impractical, vacuum testing may be used to test the seam.

6. Extrusion Welded Seams:

a. Extrusion welded seams shall be tested using vacuum chamber testing in accordance with ASTM D5641.

b. The completed seam shall exhibit no leakage when tested between 4 and 8 psi minimum vacuum for approximately 10 seconds.

c. If leaks are discovered during testing, they shall be located, marked, and repaired.

d. The repaired area shall be re-tested and exhibit no leakage.

7. Inaccessible Seams:

a. Where extrusion welded seam locations make use of vacuum box testing impractical, then the electric wire method of testing shall be used, or the seam shall be cap stripped as approved by the Purchaser.

b. If cap stripping is approved by the Purchaser, the seams shall be cap stripped as described in Paragraph 3.4.D, with strips of the same type and thickness of geomembrane being installed. The cap stripping shall be performed in the presence of the Purchaser.

c. The electric wire test method shall consist of placing a 24 gauge copper wire 1/8 in. beneath the top sheet overlap of the two sheets prior to welding with the extruder. The wire shall be imbedded in the seam.

After welding, a holiday spark detector, operating at 20,000 volts, shall be connected to one end of the wire and slowly moved over the length of the seam. A seam defect between the probe and the embedded wire shall result in an audible alarm indicating where the defect is located.

8. Test Reports:

a. Test reports for all air pressure tests shall contain all data specified in ASTM D5820 and GRI GM6.

b. Test reports for Vacuum Box testing shall contain all the data specified in ASTM D5641.

c. Test reports for other types of non-destructive tests shall contain at a minimum for each test:

i. Location,

ii. Type of test,

iii. Test parameters,

iv. Test data,

v. Test number,

vi. Name of tester, and

vii. Outcome of the test.

D. Destructive Testing – Geomembrane:

1. Testing:

a. Destructive testing shall be performed by a laboratory employed by the Contractor on samples cut from production welds in the field.

b. Samples shall be taken to a laboratory and tested for shear strength and peel adhesion. For double wedge seam samples, both welds shall be tested for peel adhesion.

c. The laboratory that will perform testing shall be identified with the bid proposal and agreed-to in writing by the Purchaser.

2. Location and Frequency:

a. Test locations shall be determined after seaming. The location where the test samples shall be taken shall be marked by the CQA Inspector. Locations may be prompted by the appearance of excessive heating, contaminations, offset welds, or a suspected defect. Destructive test

samples shall be taken at a minimum average frequency of one per every 500 linear ft of seam length.

b. The Method of Attributes described in GRI GM14 may be exercised to minimize the number of test samples taken if more than 100 destructive seam samples will be required based on the sampling strategy given in Paragraph 3.3.D.2a.

c. Each sample location shall be numbered and marked with permanent identification and the location of the sample, and the locations shall be indicated on a plan Drawing prepared and maintained by the Contractor. The following shall be recorded for each sample:

i. Date and time,

ii. Ambient temperature,

iii. Seam number and location,

iv. Welding apparatus used,

v. Name of master seamer,

vi. Reason for taking the sample,

vii. Size of sample,

viii. Test results, and

ix. Name of tester.

d. Samples shall be cut by the installer. The CQA Inspector shall witness test sample cutting.

e. Test samples shall be cut every shift and taken to the approved laboratory the same day that the sample is prepared.

3. Sample Size:

a. The minimum sample size shall be 12 in. wide with a seam 16 in. long centered length-wise in the sample. As agreed to with Purchaser, a sample may be increased in size to accommodate the requirements of the testing laboratory.

4. Field Testing:

a. A 1-in. wide specimen shall be cut from each end of each sample for field-testing.

b. Each 1-in. wide specimen shall be tested with a field tensiometer for peel adhesion or shear strength.

c. The CQA Inspector shall witness each field test.

d. A test is considered acceptable if a specimen meets the criteria for both peel and shear under Bonded Seam Strength or, exhibits Film Tear Bond. For double wedge fusion welds, both welds must pass the test. If either sample fails the field test, it shall be assumed that the seam will not pass the specified laboratory testing and the sample shall be given a fail designation.

5. Laboratory Testing:

a. Full size (12-in. minimum length) samples shall be taken to a laboratory for testing.

b. Samples shall be tested for shear strength and peel adhesion in accordance with ASTM D6392. Five specimens shall be tested for each test method. All samples shall meet minimum requirements for shear strength and peel adhesion

6. Test Results:

a. Verbal test results shall be given to the Contractor within 24 hours of receipt of the samples. Written results shall follow within one week.

b. All test locations shall be marked with a pass/fail designation on the liner and on the Drawing maintained by the Contractor for submittal to the Purchaser after construction is complete.

7. Re-Testing if Failure Occurs:

a. If a seam fails testing, one additional sample shall be taken 10 ft on each side of the location of the failed test. Additional samples shall continue to be taken at 10-ft intervals until tests show that seam strength is adequate and the zone in which the seam requires reconstruction is identified.

b. All passing seams shall be bounded by two locations from which samples passing laboratory destructive tests have been taken.

c. The entire seam length failing strength tests shall be reconstructed at no additional cost to the Purchaser.

d. If the length of reconstructed seam exceeds 150 ft, a sample shall be taken of the reconstructed seam every 150 ft and shall pass destructive testing.

E. Inspection – Geomembrane:

1. After seaming is complete, the Contractor and the CQA Inspector shall conduct a detailed walk-down to visually check all seams and non-seam areas of the geomembrane.

2. All defects, holes, blisters, tears, signs of damage during installation, areas of undispersed carbon, and holes from destructive or non-destructive testing shall be marked and repaired.

3.5 LEAK COLLECTION AND REMOVAL SYSTEM - REQUIREMENTS FOR VISUAL OBSERVATIONS AND TESTING

A. Preconstruction activities shall include inspection and documentation of all materials including the following:

1. Observations for geosynthetic drainage materials and geotextile materials as required in prior section.

2. Observations and auditing of laboratory test results provided by the Contractor to ensure that the coarse aggregate used for the sump, trench, and side slope risers is the specified gradation and quality, is washed, and meets strength requirements.

3. Observations to ensure that the pipes are of the specified size and strength, are constructed of the specified material, and that pipe perforations for perforated pipe are as specified.

4. Observations to ensure that all prefabricated structures (e.g., structures and sumps) are as specified on the Design Drawings.

5. Observations to ensure that the material is not damaged during the installation process and that underlying geomembrane is not damaged.

B. Inspections and tests required during installation of the leak collection and removal system include:

1. Inspect all materials, as they are unrolled to ensure that there are no flaws or damage.

2. Observations to ensure that geosynthetic drainage materials and geotextiles are placed according to the placement plan and that seams are made as specified.

3. Observations that geosynthetic drainage materials and geotextile coverage is specified on the Design Drawings or Specifications and that overlapping or seaming of geosyntheic drainage materials and geotextile is as specified.

4. Measurements to ensure that the specified material overlap is achieved.

5. Observations to ensure that all materials are free from wrinkles and folds.

6. Observations and tests, when required, to ensure that seams are made according to Technical Specifications.

7. Observations to ensure that the material is not damaged during the installation process and that underlying geomembrane is not damaged.

8. Observations and measurements to ensure that the correct size and length of perforated and solid sump collection pipe is used, that perforations for perforated pipe are as specified, that the end of the perforated pipe is sealed, that the specified fittings are being used, that the pipe is jointed as specified, and that the pipe is installed at the location and elevation shown on the Design Drawings.

9. Inspect the coarse aggregate to ensure that it has not been contaminated during transportation and handling. Recommend rejection when contaminated coarse aggregate is received.

10. Make measurements to ensure the correct thickness and extent of coarse aggregate is installed.

11. Observations to ensure that placement of the coarse aggregate did not damage or displace the sump collection pipe.

12. Observations and measurements to ensure that the specified size pipes are placed at the specified locations.

13. Observations to ensure that perforated pipe is placed correctly.

14. Measurements to ensure that the horizontal and vertical position and slope are within tolerances required by the Technical Specifications.

15. Document the as-built location of all pipes.

16. Observations to ensure that the pipe is joined by using the hot plate thermal butt fusion method as required by the Technical Specifications and that the equipment used for welding is as recommended by the Manufacturer.

17. Observation to ensure that the joining method described in the Technical Specifications is followed.

18. Observations and documentation that the test joints required by the Technical Specifications are made and that the joints meet the project requirements.

19. Observations to ensure that cleanouts are installed as specified.

20. Observations to ensure that the placement of drainage layer materials under, around, and over the pipe is as specified on the Design Drawings.

21. Perform compaction tests and observations to ensure that backfilling and compaction are completed as specified on the Design Drawings and in the Technical Specifications, and that in the process, the pipe network is not damaged.

22. Observe that all the pipes are cleaned by jet cleaning after installation is complete and document that all pipes are intact and not obstructed.

23. Document the location of defective or clogged pipe.

24. Document repair by the Contractor and re-cleaning.

3.6 REGULATORY REQUIREMENTS

A. The CQA Agency shall, at all times, be solely responsible for complying with all applicable laws, ordinances, regulations and codes, including those relating to safety.

3.7 PROTECTION OF PROPERTY

A. The CQA Agency shall take adequate precautions to protect the liner system components (installed or stockpiled) existing structures, fences, pavements, above ground utilities and underground utilities and to avoid damage thereto. The CQA Agency shall, at its own expense, repair any damage caused by its operations.

B. The CQA Agency shall conduct safety training of all its personnel (including any subcontractors) in accordance with the Purchaser safety requirements.

3.8 MEETINGS

A. The CQA Agency shall document each meeting and distribute copies of meeting minutes to all responsible parties.

B. A preconstruction meeting will be organized by the Purchaser and attended by the Purchaser, the Contractor (including responsible field supervisors for earthwork, geosynthetics, electrical, and mechanical systems), the CQA Agency, and any other party designated by the Purchaser. At Contractor discretion, separate preconstruction meetings may be held for earthwork, geosynthetics, mechanical, and electrical work.

C. The purpose of the preconstruction meeting(s) will be to review the project schedule, discuss critical work sequencing, designation of critical work sequencing, designation of responsible personnel, project coordination, and any outstanding questions regarding scope of work. Other topics to be covered during the meeting include:

a. Requirements of Design Drawings, Installation Specification, and CQA Specification.

b. The CQAP and the responsibilities of each party.

c. The lines of authority and communication.

d. Procedure for submittal of manufacturer QA documents for CQA Agency review.

e. Procedures for examination of materials delivered to the site.

f. Location of materials storage area(s).

g. Field and laboratory test requirements and sample sizes.

h. Procedures for observance of field tests.

i. Coordination between the Contractor and the CQA Agency to obtain timely field samples and tests.

j. Procedure for handling construction deficiencies, repairs, and retesting.

k. Work area security and safety requirements of the work site.

l. Site visits.

D. Progress meetings shall be scheduled and conducted by the Contractor on a weekly basis (minimum). The meetings shall be attended by the Purchaser, the Contractor, and the CQA Agency. If needed, daily meetings shall be held to review the work schedule, work completed, results of tests, and to discuss potential construction problems.

E. Additional meetings between the Purchaser, the Contractor, and the CQA Agency shall be held immediately after a work deficiency is identified or a problem arises. These meetings shall be used to define and resolve the problem.

1. Possible solutions to the problem shall be discussed, involving, if necessary, the Engineer and Owner for review. Once an acceptable solution has been selected, it shall be implemented, provided it does not conflict with or require a change to the Design Drawings, in which case, the solution shall be submitted to the Owner and Engineer for a more formal review with issuance of updated Drawings as required.

2. The Engineer will resolve unexpected conditions or unanticipated problems during construction, which may require changes to the permitted design. Changes from the permitted design shall require approval of the Owner and Engineer to ensure that the original design objectives are maintained. All changes shall meet the requirements of the permitting agency.

3.9 PERFORMANCE AUDITS AND DOCUMENTATION BY PROFESSIONAL ENGINEER

A. At a minimum, the CQA Certifying Engineer shall conduct the following listed reviews and performance audits.

1. Full review and audit of results of preconstruction testing or Contractor material certificates used to qualify earthwork materials for construction use.

2. Full review and audit of manufacturer certificates that qualify geosynthetic materials for use in the liner and piping systems.

3. Weekly audit of reports and test data sheets during and after construction of the earthwork until completion of work.

4. Weekly audit of reports and test data sheets during and after installation of geosynthetic liners, pipes, etc., until completion of the work.

3.10 CQA OBSERVATIONS AND DOCUMENTATION

A. Daily Records shall include:

1. Inspection data sheets.
2. Data sheets listing the number of types of construction equipment in use by the Contractor and construction equipment data.
3. Problem identification reports.
4. Corrective action reports.
5. Problem identification reports and corrective action reports shall include detailed descriptions of materials and/or workmanship that do not meet a specified design, and shall be cross-referenced to specific inspection data sheets where the problem was identified and corrected.

B. Testing Records shall include:

1. Material shipping and manufacturer Quality Control (QC) data sheets.
2. Data sheets describing field samples taken.
3. Laboratory data sheets.
4. Field test data sheets.
5. Notes, charts, Drawing, or sketches identifying the location and elevation of field tests, location of failures and repairs or retests, and where samples were obtained.
6. Non-destructive test reports including location of failures, records of repairs, and results of retests.

C. Photographic Records shall include:

1. Photographs, each with a unique identifying number.
2. Chart indicating the location from which each photograph was taken.
3. Summary list giving the data and time of each photograph.

D. All records shall, at a minimum, bear the following:

1. Unique identifying sheet number.
2. The date.
3. Project name, project number, and location.
4. Descriptive remarks.
5. Data sheets for tests.
6. Written text descriptions for visual observations
7. Signature of the preparer of designated authority.

3.11 REPORTS

A. An index or summary report shall be prepared listing all records and reports. The index shall be assembled in chronological framework for recording and identifying all reports.

B. Acceptance Report: All reports and data sheets shall be assembled and summarized into an Acceptance Report in order to verify that the materials and construction procedures comply with the specified design. At a minimum, this report shall contain all. The acceptance Report shall be prepared by the CQA Inspector and updated on a daily basis.

C. Draft Construction Documentation Report:

1. All inspection reports, test data sheets, problem identification reports, corrective action reports, material certificates, records and meeting notes, executive summary, index listing, and any other means of documentation used throughout the project shall be assembled and summarized into a Draft Construction Documentation Report in order to verify that the materials and construction procedures comply with the Design Drawings, this Specification Section and the installation Specification, the CQAP, and permit requirements.

2. The Draft Final Construction Documentation Report shall be prepared by the CQA Agency onsite staff, updated on a daily basis, and stored on site for review by the Purchaser or Engineer when required.

3. Within three weeks of completion of the installation work, the CQA Agency shall submit the Draft (unsigned) Final Construction Documentation Report to the Purchaser and Engineer for review and approval. The Purchaser and Engineer shall be given two weeks to provide comments on the Draft Construction Documentation Report for CQA Agency consideration.

D. Final Report: A Final Report shall be prepared by the CQA Engineer. The Final Report shall contain all data sheets, testing records, manufacturer data sheets, reports, and photographs concerning items that were installed and tested. This report shall contain evidence that the CQAP was implemented as proposed and that construction proceeded in accordance with the Design Drawings, Specifications, and permit requirements.

3.12 CERTIFICATION AND SUBMITTAL OF FINAL REPORT

A. The CQA Engineer shall certify the Final Report stating that the pond was constructed in conformance with the permit application approved by the State Permitting Agency and any Design Engineer/Purchaser approved modifications that were also approved by the State Permitting Agency.

B. The original and seven copies of the report shall be submitted to the Purchaser and one copy shall be submitted to each Contractor.

C. The Purchaser shall be responsible for submittal of copies of the Final Report to the State Permitting Agency. The original of the Final Report shall be stored at the plant site in a manner, which will allow easy access while still protecting the report from damage. All documentation shall be maintained throughout the entire active operating life and post closure maintenance period of the pond.

TABLE 1
EARTHWORK LABORATORY TESTS - MINIMUM FREQUENCY OF TEST (1)

No.	Type of Fill or Backfill	Moisture Content	Atterberg Limits LL and PI (2)	Grain Size (3)	Moisture Density Curve	Hydraulic Conductivity
		ASTM D2216	ASTM D4318	ASTM D422	ASTM D698, or ASTM D4253 and D4254 (5)	ASTM D5084 (6)
1	Subgrade to receive fill	---	---	---	1 per acre Minimum 2	---
2	Embankment fill	1 per 500 cubic yards per location.	1 per 500 cubic yards per location.	1 per 500 cubic yards per location.	1 per 500 cubic yards per location.	---
3	Structural bedding beneath structures and structural backfill	1 per 100 cubic yards per location.	1 per 100 cubic yards per location.	1 per 100 cubic yards per location.	1 per 100 cubic yards	---
4	Culvert or pipe trench bedding and backfill	1 per 100 cubic yards	1 per 100 cubic yards	1 per 100 cubic yards	1 per 100 cubic yards	---
5	Crushed rock surfacing	1 per 500 cubic yards per location	---	(4)	1 per 500 cubic yards per location	---
6	Soil bentonite mix - Liner	3 per acre per lift.	3 per acre per lift	3 per lift	2 per lift	2 per lift

Notes:

(1) Multiple requirements are given for some tests, such as number of tests per acre and one test per a given number of cubic yards. The requirement that results in the most Testing shall be used. All tests shall be performed for any change in material.
(2) Liquid Limit and Plasticity Index.
(3) Sieve Analysis on. For soil bentonite mixer – liner, include one hydrometer test for every second sieve analysis.
(4) Not required if certification is received from the Contractor on gradation. If no certification is received, then perform gradation tests at the rate of one per 500 cubic yards.
(5) The effectiveness of the compactive effort as measured by field tests shall be compared to laboratory compaction data and Specification requirements. Forms used to record Data from field tests shall also contain cross-reference to Specification requirements.
(6) The appropriate test shall be selected based on the permeability and/or hydraulic conductivity requirements for the material.

TABLE 2
EARTHWORK FIELD TESTS - MINIMUM FREQUENCY OF TEST

No.	Type of Fill or Backfill	Wet and Dry Density	Moisture Content	Lift Thickness Uncompacted	Lift Thickness Compacted
		ASTM D1556, D2167 or D6938	ASTM D6938 or ASTM D2216		
1	Subgrade to receive fill	5 per acre of prepared subgrade	5 per acre of prepared subgrade	---	---
2	Embankment fill	1 per acre per lift. 1 per 500 cubic yards	1 per acre per lift. 1 per 500 cubic yards	5 per acre per lift	5 per acre per lift
3	Bedding beneath structures and structural backfill	1 per 100 cubic yards / 1 per structure	1 per 100 cubic yards / 1 per structure	1 per structure	1 per structure
4	Culvert or pipe trench bedding and backfill	1 per 150 linear feet per lift 1 per 100 cubic yards	1 per 150 linear feet per lift 1 per 100 cubic yards	1 per 150 linear feet per lift	1 per 150 linear feet per lift
5	Road subgrade (compacted)	1 per 150 feet of road	1 per 150 feet of road	---	1 per 200 feet of road
6	Crushed rock surfacing	1 per 150 feet of road	1 per 150 feet of road	1 per 150 feet of road	1 per 150 feet of road
7	Soil bentonite mix - Liner	4 per acre per lift	4 per acre per lift	4 per acre per lift	4 per acre per lift

Notes:

(1) Multiple requirements are given for some tests. For example, number of tests per acre per lift and one test per a given number of cubic yards. The requirement that results in the most frequent testing shall be used.
(2) See Table 3 for additional requirements for field density tests.
(3) See Table 4 for acceptance criteria.

TABLE 3
EARTHWORK VERIFICATION AND CALIBRATION PARAMETERS

Test Requiring Verification	Frequency of Verification Test
Nuclear In-Place Density and Nuclear In-Place Moisture Content, ASTM D6938.	After meeting ASTM initial calibration test requirements, one rubber balloon (ASTM D2167) or sand cone (ASTM D1556) density and moisture content verification per 10 nuclear density tests.
"Quick" Moisture Content Test using Microwave, gas stove, frying pan, infrared oven, etc.	One standard oven-dry moisture content (ASTM D2216) test per 10 quick tests.
Lift thickness measured using a shaft or shovel to dig hole.	One lift thickness verified by surveying every acre - lifts for general fill areas and 1 per 500 feet of road.

Notes:

(1) A standard block test as required by ASTM D6938 shall be performed at the start of each day on each Nuclear apparatus that will be used that day. At the start of earthwork construction, a series of five Nuclear tests and five sand cone or rubber balloon tests shall be performed on a compacted test strip to calibrate the Nuclear apparatus. During construction, one Nuclear readings performed during each day shall be verified using a sand cone (ASTM D1556) or rubber balloon (ASTM D2167) density and moisture content test for each apparatus used that day. The average wet density and moisture content for each apparatus shall be computed for every ten tests. If variations greater than those permitted by the ASTM occur, corrections shall be applied to all future tests for the apparatus until the next set of 10 tests isperformed.

TABLE 4
EARTHWORK TEST RESULT ACCEPTANCE CRITERIA

Test	Acceptance Criteria
Gradation	Average of results of any ten consecutive grain size tests shall be within the specified limits. A minimum of 90% of all tests shall be within the specified limits for the soil bentonite material. For all other material, not less than 80% shall meet Specification requirements.
Atterberg Limits	Average of results of any ten consecutive liquid limit tests shall be above the minimum specified or below the maximum specified, whichever is required. Average of results of any ten consecutive plasticity index determinations shall be within the range specified. A minimum of 90% of all tests shall be within specified limits for the soil bentonite material. For all other material, not less than 80% of tests shall meet Specification requirements.
Density and Moisture Content	The results of all tests shall meet the minimum requirements. If requirements are not met, the soil shall be recompacted within the required moisture content.
Hydraulic Conductivity	The results of all tests shall indicate a hydraulic conductivity equal to or less than the specified maximum hydraulic conductivity.
Lift Thickness	Uncompacted and compacted thicknesses shall be within tolerances specified.

END OF SECTION 31 90 99

SECTION 33 47 16.13

MECHANICALLY TENSIONED FLOATING BASIN COVER SYSTEM

PART 1 GENERAL

1.1 SUMMARY OF WORK

A. This Section includes designing, fabricating, furnishing, installing, and inspecting a new mechanical tensioned floating cover system and appurtenant work as depicted on the Drawings and specified in this Section.

1.2 RELATED DOCUMENTS / CODES AND STANDARDS

Drawings and general provisions of the Contract Statement of Work, including Division 01 Specification Sections, apply to this Section.

The following documents and others referenced therein, form part of the Contract to the extent designated in this Section. Where a date is given for referenced standards, that edition shall be used. Where no date is given for referenced standards, the latest edition shall be used.

A. ASTM International (ASTM)

ASTM A240/A240M	Standard Specification for Chromium and Chromium-Nickel Stainless Steel Plate, Sheet, and Strip for Pressure Vessels and for General Applications
ASTM D412	Standard Test Methods for Vulcanized Rubber and Thermoplastic Elastomers - Tension
ASTM D413	Standard Test Methods for Rubber Property – Adhesion to Flexible Substrate
ASTM D471	Standard Test Method for Rubber Property – Effect of Liquids
ASTM D746	Standard Test Method for Brittleness Temperature of Plastics and Elastomers by Impact
ASTM D751	Standard Test Methods for Coated Fabrics
ASTM D792	Standard Test Methods for Density and Specific Gravity (Relative Density) of Plastics by Displacement
ASTM D1149	Standard Test Methods for Rubber Deterioration – Cracking in an Ozone Controlled Environment
ASTM D1204	Standard Test Method for Linear Dimensional Changes of Nonrigid Thermoplastic Sheeting or Film at Elevated Temperature

ASTM D1785	Standard Specification for Poly(Vinyl Chloride) (PVC) Plastic Pipe, Schedules 40, 80, and 120
ASTM D2136	Standard Test Method for Coated Fabrics – Low-Temperature Bend Test
ASTM D2240	Standard Test Method for Rubber Property – Durometer Hardness
ASTM D2467	Standard Specification for Poly(Vinyl Chloride) (PVC) Plastic Pipe Fittings, Schedule 80
ASTM E838	Practice for Performing Accelerated Outdoor Weathering Using Concentrated Natural Sunlight

B. Section 31 90 22 – High-Density Polyethylene Geomembrane Liner

C. Section 31 90 99 – Construction Quality Assurance

D. Washington Administrative Code (WAC)

WAC 173-303-650	Surface Impoundments

1.3 SUBMITTALS

A. Submittals shall be made in accordance with the submittals section, and the following special provisions provided herein.

B. The Contractor shall submit the proposed designer names and qualifications with bid.

C. The Contractor shall submit the proposed material supplier names and qualifications with bid.

D. The Contractor shall submit the proposed fabricator names and qualifications with bid.

E. The Contractor shall submit their qualifications with bid.

F. Qualifications for the Contractor, designer, fabricator, and manufacturer shall include the following listed information.

1. Project names, which are the basis of qualification.

2. The project site location.

3. Brief description of each project (size, type of project, completion date, etc.).

4. Type(s) of materials provided, which shall address material thickness, scrim reinforcement, special compounding requirements or deviations from the manufacturer conventional product, colors, etc.

5. The current name, mailing address, and phone number of the Owner.

6. Name of current contact person or Owner representative most knowledgeable of each project.

G. Cover Protection Plan:

1. The Contractor shall submit, for Owner Representative approval, a written plan that addresses Contractor measures to protect the geomembrane liner prior to starting work.

2. The protection plan shall address, at a minimum, Contractor proposed method to protect the geomembrane liner, the stockpile and storage locations of materials within the reservoir, methods for moving and deploying materials, methods of providing ingress and egress, etc.

H. Shop Drawings:

1. The Contractor shall submit, for Owner Representative approval, shop Drawings showing the floating cover panel layout with proposed size, number, position, weight, and sequence of placing all factory fabricated panels; indicating the location and overlap of all field joints and the direction of all factory joints on each panel.

2. The Contractor shall submit, for Owner Representative approval, shop Drawings showing the fabrication of mechanically tensioned towers and accessories, floating cover accessories, sequence of placing all factory-fabricated panels, and indicate the location and overlap of all field joints.

3. If the Contractor proposes alternate design details, seaming procedures, or methods of construction that are different from those shown on the Drawings and stated in the Specifications, complete shop Drawings and other pertinent information shall be submitted for Owner Representative approval. Such proposed alternates shall not be used unless approved in writing by Owner Representative prior to the Contractor starting that portion of work.

4. Approval of any alternate design, method, or procedure proposed by the Contractor may be granted only if, in Owner Representative sole opinion, such proposal will produce an end result equal to or better than the design, method, or procedure shown in the Drawings or Specifications.

5. The Contractor shall provide all additional details required but not provided in the Drawings or Specifications. Those details provided by the Contractor shall be subject to the review and approval of Owner Representative prior to commencement of work.

I. Samples:

1. Prior to ordering floating cover material, four 8-in. by 10-in. samples shall be submitted to the Owner Representative for approval.

J. Material Safety Data Sheets (MSDS):

1. MSDS for all cleaners, solvents, caulks, adhesives, and other chemicals proposed for use shall be submitted to the Owner Representative for review.

2. A copy of all MSDS shall be posted on the Contractor job bulletin board at all times.

K. Certified Testing Laboratories:

1. The name of Contractor proposed certified testing laboratory shall be submitted to the Owner Representative for approval a minimum of ten working days prior to any material testing.

2. The laboratory shall be certified by the Geosynthetic Research Institute (GRI).

L. Manufacturer Quality Assurance Plan:

1. The Contractor shall submit the geomembrane manufacturer Quality Assurance Plan (QAP) for the Owner Representative review and approval.

2. Prior to Contractor submittal to the Owner Representative, the Contractor shall have reviewed and approved the manufacturer QAP.

3. The manufacturer QAP plan shall be approved in writing by the Owner Representative prior to manufacturing floating cover materials.

M. Fabricator Quality Assurance Plan:

1. The Contractor shall submit the geomembrane fabricator QAP for the Owner Representative review and approval.

2. Prior to Contractor submittal to the Owner Representative, the Contractor shall have reviewed and approved the fabricator QAP.

3. The fabricator QAP shall be approved in writing by the Owner Representative prior to fabricating the fabric-reinforced material into panels.

N. Contractor Quality Assurance Plan:

1. Prior to installing floating cover materials, the Contractor shall submit a job-specific QAP covering installation for the Owner Representative review and approval.

2. The Contractor QAP shall be approved in writing by the Owner Representative prior to starting any on-site geomembrane installation work.

O. Contractor final QA report, including material manufacturer and fabricator final QA reports.

1.4 QUALITY ASSURANCE

A. Quality assurance procedures shall be conducted in accordance with this Section and Section 31 90 99. Where conflict between sections exists, the more stringent requirement shall apply.

B. Quality Assurance Plan:

1. The Contractor shall thoroughly review and comprehend the project Drawings and Specifications prior to the development of the job specific QAP. The Contractor QAP shall be in accordance with the project Specifications. Any deviations or conflicts with the project Specifications shall be clearly marked, immediately brought to the Owner Representative attention, and shall not be used without Owner Representative prior written consent.

2. The Contractor QAP shall state how the following items shall be accomplished and shall include sample forms to be used to document each QA activity. The major heading and subheadings list those tasks, at a minimum, which shall be included in the QAP. The Contractor shall include any additional pertinent information and topics.

3. Materials:

   a. Monitor and document the unloading, handling, and on-site storage of fabricated panels and other materials.

   b. Monitor material, process, and equipment certifications required by the Specifications to ensure their adequacy and timely submittal. The Owner Representative shall be notified of any deviations.

   c. Label, package, and ship test samples to a testing laboratory for Specification compliance testing.

4. Deployment/Installation:

   a. Evaluate and document the suitability of weather conditions to insure proper installation.

   b. Monitor and document placement and condition of all panels while being placed.

   c. Monitor and document the proper installation of panels in accordance with approved shop Drawings.

   d. Perform overall visual observations of entire geomembrane surface to locate and document all damage and defects.

   e. Monitor and record the repair of all damage, defects, and all destructive testing.

5. Seaming:

a. Monitor and document trial seaming procedure and test results to evaluate seaming personnel and equipment.

b. Monitor and document seaming procedure.

c. Devise seam identification numbering system unique to each seam such that the seam location, seaming crew, equipment used, date, time, and weather conditions are properly documented.

d. Include a list of all equipment, with pertinent technical information, to be used for seaming.

e. Describe in detail each seaming procedure the Contractor proposes to use in executing the work. Before using, each seaming procedure shall be approved by the Owner Representative. The seaming procedures shall include cleaning of material to be seamed, cleaners/solvents, preheating, adhesives, seaming temperatures, seaming rate, and dwell pressure.

f. Indicate adverse weather or other conditions that could limit or halt seaming operations.

g. Describe measures to account for and compensate for temperature changes in ambient air or material that may affect seam quality.

h. Describe equipment calibration frequency and procedure.

6. Seam Testing Samples:

a. Monitor and document nondestructive testing of seams.

b. Select locations for destructive seam samples, when selection is not made by the Owner Representative.

c. Monitor and document the cutting of seam test samples and patching of test sample holes, if required.

d. Utilizing the test seam identification numbering system, document the location, seaming crew, equipment used, date, time, and weather conditions for each test sample.

e. Label, package, and ship test samples to a testing laboratory for Specification compliance testing.

f. Interpret all laboratory test results on material and seam compliance with Specifications.

g. Distribute five of the certified laboratory test results with interpretation to the Owner Representative.

h. Monitor and document the repair of all rejected seams.

i. Monitor and document destructive and nondestructive testing of repaired seams.

C. Field Seaming Demonstration:

1. Following the submittal of the QAP and prior to Owner Representative approval, the Contractor shall conduct a field demonstration for the Owner Representative, demonstrating the seaming procedures, equipment usage, calibration procedures, and all other aspects of the proposed seaming methods.

2. The Contractor shall conduct on-site seam strength tests in compliance with the requirements stated in this Section.

3. The Contractor shall provide seaming demonstration for each type of seaming method proposed (e.g., hot air, wedge welder, adhesive, etc.).

4. At least four 25-ft long demonstration seams shall be made for each type of panel-to-panel seaming system proposed.

5. Each demonstration seam shall include a tee joint where three layers of material are bonded together.

6. Samples may be taken from the demonstration seams and tested by the Owner Representative.

7. Approval of the QAP will be contingent upon the results of the demonstration test samples.

D. Execution of the Quality Assurance Plan:

1. Upon Owner Representative written approval of the Contractor QAP, the Contractor shall implement and continuously monitor the QAP, as described above, through an active and ongoing QA Program.

2. The Owner Representative will continuously monitor the Contractor approved QA Program for compliance.

3. The Contractor quality assurance manager shall report directly to an off-site senior management employee whom shall have no production responsibilities that could infringe upon the execution of the Contractor QAP.

4. The QA Program shall include, but not necessarily be limited to, the above specified items and the following listed items

a. Review of all contract Drawings and Specifications for clarity, completeness, and to acquire a thorough knowledge of project materials and construction procedure requirements.

b. Review, revise as deemed necessary, and approve the geomembrane manufacturer QAP.

c. Review, revise as deemed necessary, and approve the geomembrane fabricator QAP.

d. Continuous review and revision, as necessary, of the QAP for thoroughness, adequacy, and feasibility.

e. Use special job specific and task specific forms or logs for monitoring all activities involved with the QAP. Job specific forms shall include the project name and minimum test values for each specific test (e.g., shear, peel, breakaway peel, etc.).

f. Maintain logs summarizing all daily activities.

g. Interpret all laboratory test results on materials and seams for compliance with Specifications.

h. Distribute five copies of certified laboratory test results with interpretation to the Owner Representative.

E. Quality Assurance Final Report: At the completion of the installation and prior to final acceptance of all work by the Owner Representative, a final QA report shall be submitted to the Owner Representative. The Owner Representative shall have the opportunity to review and comment on a draft report at the 80% completion prior to the issuance of the final report. The Contractor shall positively address all of the Owner Representative comments prior to the issuance of the final report. The QA report shall include, but not necessarily be limited to, the following listed items.

1. A brief description of the project, including the project name, type of facility, location, design engineer, material supplier(s), shop fabricator(s), subcontractors, and the Contractor superintendent.

2. Detailed description of floating cover system, including, area, and type of materials installed.

3. Copy of floating cover Drawing and Specifications with as-built mark ups.

4. Record of daily activities, including all special problems and associated resolutions encountered during the project.

5. Copies of all field and laboratory, destructive and nondestructive test results, with interpretations.

6. Copies of all standard forms and logs completed as part of the QAP.

7. Copy of approved shop Drawings and Contractor provided details.

8. Copy of QA record Drawings indicating panel numbers, seam identification numbers, seaming dates, location of defects, type of defect, repairs, repair dates, and location of all samples.

9. Statement from the Contractor certifying the floating cover has been installed in accordance with project Drawings and Specifications.

10. The Contractor, fabricators, and manufacturer approved QA plans.

1.5 DELIVERY, STORAGE, AND HANDLING

A. Delivery, storage, and handling shall be in accordance with the following special requirements:

1. Packing and Shipping:

a. Each factory-fabricated panel shall be individually packaged. Floating cover panels shall packaged and shipped in accordance with manufacturer recommendations. Each panel shall be packaged and shipped in a manner to protect and prevent damage during shipment and storage. Each enclosure shall be prominently marked in the same fashion as the panel within.

2. Storage and Protection:

a. Packaged factory-fabricated panels shall be stored in their original unopened condition, on a flat and clean surface, in a dry area, and protected from direct sunlight under an opaque, light colored heat-reflective cover.

b. Sand for sand-filled tubes shall be stored on a clean, paved area or tarpaulin to prevent contamination, and shall be covered with a tarpaulin and maintained in a dry condition until used.

1.6 REGULATORY REQUIREMENTS

A. The Contractor shall obtain permits and comply with all regulations from all regulatory agencies as required for the use of solvents, adhesives, and other chemicals.

B. The Contractor shall ensure that their employees, subcontractors, and others exposed to solvents, adhesives, and other chemicals comply with limitations for exposure and handling in accordance with OSHA, and other regulatory agency regulations.

1.7 QUALIFICATIONS

A. Specialty Contractor:

1. The work shall be performed by a specialty Contractor who shall have been regularly engaged in the design and installation of flexible fabric-reinforced geomembrane floating covers for a minimum period of five years immediately prior to the bid opening date, and shall have installed not less than ten million square feet of flexible fabric-reinforced geomembrane material. Specialty Contractor shall have at least three installations of mechanically tensioned floating covers within the past five years.

B. Project Manager:

1. The Contractor shall assign to the project, a project manager who shall have been regularly engaged in the installation of flexible fabric-reinforced geomembrane floating covers for a minimum period of four years, immediately prior to the bid opening date, and shall have installed not less than one million square feet of flexible fabric-reinforced geomembrane material.

C. Superintendent:

1. The Contractor shall assign, exclusively to the project, a superintendent who shall have served in a similar capacity for not less than four years and not less than one million square feet of experience in the installation of flexible fabric-reinforced geomembrane floating covers. Superintendent shall have at least two installations of mechanically tensioned floating covers within the past four years.

2. The only experience of the superintendent that will be considered as qualifying is on projects where the superintendent was full time at the point of installation directly overseeing and supervising the labor and the work. Time spent in a field office does not qualify.

3. If the superintendent is deemed not qualified by the Owner Representative, the Contractor shall not employ such superintendent on this project. Any superintendent employed by the Contractor shall be discharged if their performance on the work is determined by the Owner Representative to be unsatisfactory.

4. Any superintendent substituted for a superintendent originally assigned by the Contractor shall meet the same minimum requirements specified herein.

D. Quality Assurance Manager

1. The Contractor shall assign, exclusively to the project, a quality assurance manager who shall have served in a similar capacity on at least three prior fabric- reinforced geomembrane installations involving a total of not less than 1 million square feet.

1.8 PROJECT/SITE CONDITIONS

A. Safety Requirements:

1. Construction personnel shall be trained in and be instructed on the use of barrier creams or gloves, as necessary, for working with the solvents and cleaning agents. All used cloths impregnated with solvent shall be kept separately in metal containers with close-fitting lids suitable for use, as necessary, and in compliance with the requirements of the International Fire Code (IFC), local Fire Marshal, and Hanford site-specific safety requirements. No personnel from either the Contractor or Hanford will be permitted to smoke or have open flames without a hot work permit anywhere within the work zone. Any personnel

within 50 ft of an open solvent container will be required to be trained in the use of appropriate approved breathing apparatus and wear appropriate breathing apparatus when necessary.

B. No equipment or material will be permitted to leave the site until inspected and certified by WRPS for safe removal.

1.9 GUARANTEE AND WARRANTY

A. Prior to manufacturing the floating cover material, the Contractor shall submit a written material warranty from the manufacturer for WRPS review and approval.

B. The material shall be warranted in writing by the manufacturer against manufacturing defects or workmanship and against deterioration due to ozone, ultraviolet rays, or other than normal weather aging. Vandalism, acts of animals, and acts of God are excluded. The warranty shall be limited to the replacement of material only. Installation labor is not included in the material warranty.

C. The material warranty shall be prorated for 20 years.

D. The material warranty period shall not commence until the material has been installed by the Contractor and accepted by WRPS.

E. The material manufacturer shall perform site inspections during the floating cover fabrication and on-site installation to verify the material has not been damaged because of the fabrication or installation, and no part of the material warranty has been voided.

F. The Contractor shall warrant and guarantee that all work shall be free of deficiencies and defects for a period of one year after the date of final acceptance of the work by WRPS.

G. The warranties and guarantees specified herein are not the only ones involved in the Contract, and are in addition to those specified elsewhere in the project Specifications.

PART 2 PRODUCTS

2.1 MATERIALS

A. Floating Cover Composition:

1. The membrane material shall be manufactured from a composition of high quality ingredients, suitably compounded, Chlorosulfonated Polyethelene (CSPE). Zinc compounds of all kinds, including zinc oxide, and zinc stearate, are prohibited. Dusting agents of all kinds are prohibited on the finished product. Fillers and necessary processing aids can be whatever material is deemed proper to facilitate processing the compound, but the finished compound shall be certified in writing by the manufacturer to have the following property values listed in the following table as tested by manufacturer:

Property	Test Method	Test Value
Specific Gravity	ASTM D792	1.45 ± 0.03
Tensile Strength	ASTM D412	1,000 psi min.
Elongation @ Break	ASTM D412	250% min.
Water Absorption	ASTM D471 (7 days @ 70°F)	5% max.
Temperature Brittleness	ASTM D746 (30-mil unreinforced)	-40°F no failures
Ozone Resistance	ASTM D1149 (3ppm @ 30% strain @ 104°F, 72 hrs.)	No effect
Heat Age Tensile Strength	ASTM D412 (14 days @ 212°F)	1,000 psi min.

2. The Owner Representative, at their discretion, may have a representative at the manufacturer facility during the production of the geomembrane for the project. The Contractor shall notify the Owner Representative no less than two weeks in advance of starting manufacturing so that shop inspection may be arranged. Verification shall consist of witnessing the mixing and weighing operations and quantifying the portion of banbury charge weight is CSPE polymer. The Owner Representative will not require any information regarding the chemical constituents comprising the remaining compound or other information considered proprietary by the manufacturer.

3. The fabric reinforcing scrim shall be 10 by 10 plain weave, 1000 warp/1000 fill denier polyester with yarn strands having a twist of 2 to 2 1/2 turns per inch in the fill direction. The reinforcing scrim shall create an open-type weave that permits strike-through of the CSPE. A 9 by 9, 1000 denier polyester weft-insertion scrim is considered an equal.

4. The floating cover composite geomembrane material shall consist of thoroughly bonded, fabric-reinforced CSPE synthetic rubber sheeting with an overall nominal thickness of 60-mils. All composite geomembrane materials shall be manufactured by the calendaring process, and shall be uniform in color, thickness, size, and surface texture. The fabric shall be totally encapsulated between the three plies of CSPE as follows:

   a. Top Layer (geomembrane) – CSPE Top Layer shall be 15-mil minimum thickness and black color.

   b. Scrim Layer – Scrim Layer shall be located between geomembrane Top Layer and Middle Layer. Scrim compositions shall be as described below.

   c. Middle Layer (geomembrane) - CSPE Middle Layer shall be 15-mil minimum thickness and black color.

d. Bottom Layer (geomembrane) – Bottom Layer shall be 15-mil minimum thickness and blue color.

5. The edge of the fabric shall be between 1/8 in. and 1/2 in. from the edge of the CPSE encapsulation on either side. Exposed fabric along longitudinal edges of roll stock, or indications of delamination will not be permitted. The composite membrane material shall be a flexible, durable, watertight product free of pinholes, blisters, and contaminates, and shall not delaminate in a water-based environment.

6. The selection of stocked raw materials and the adjustment of manufacturing parameters within tolerances shall be performed accordingly to minimize the quantity of extractables that may leach from the completed, installed, and in- service geomembrane reservoir floating cover.

7. All floating cover material and floating cover accessories shall be provided from a single supplier.

8. The finished color of the fabric-reinforced sheet shall be black top side/ blue bottom side. The color shall not vary between sheets.

9. The material manufacturer shall certify in writing prior to manufacturing material that the fabric-reinforced CSPE has the following material property values as tested by manufacturer:

Property	Test Method	Floating Cover	Floating Cover Accessories
Total Plies		4	3
Thickness Total Overall Over Scrim (top/bottom)	ASTM D751 Optical Method	 60 mils (nom.) 55 mils (min.) 15 / 30	 45 mils (nom.) 41 mils (min.) 15 / 15
Plies - Reinforcing		1	1
Scrim (threads/inch, denier)		10x10, 1000d	10x10, 1000d
Breaking Strength (minimum)	ASTM D751 Grab Method	250 lbs.	250 lbs
Elongation at Break (% min.) fabric membrane	ASTM D751 Grab Method	 15% 30%	 15% 30%
Tear Strength (min.)	ASTM D751 Tongue Tear	90 lbs.	80 lbs
Hydrostatic Resistance (minimum)	ASTM D751 Method A Procedure 1	375 psi.	375 psi
Puncture Resistance (minimum)	FTMS 101B, Method 2031	250 lbs.	225 lbs.
Ply Adhesion (minimum)	ASTM D413 Machine Method, Type A	10 lbs./in.	10 lbs/in

Property	Test Method	Floating Cover	Floating Cover Accessories
Ozone Resistance	ASTM D1149 1/8" bent loop, 100 pphm, 104°F, 7 days, 7x magnification	No cracks	No cracks
Low Temperature Flexibility	ASTM D2136 1/8" mandrel, 4 hrs., -40° F	No cracks	No cracks
Dimensional Stability (maximum)	ASTM D1204 (1 hr. @ 212°F)	2%	2%
EMMAQUA Weathering Resistance	ASTM E838 (un-backed) 5 million langleys (5751 MJ/m^2)	No cracks	No cracks

10. During manufacturing, the material manufacturer shall test the fabric-reinforced CSPE material at a frequency of not less than every 50,000 sf of membrane produced. The manufacturer shall certify that the physical properties of the finished sheet meet or exceed the Specifications and submit certified test reports to validate conformance.

11. CSPE roll goods shall be inspected by the manufacturer for pinholes, undispersed solids, voids in coverage commonly referred to as fish eyes, scrim displacement, and other non-standard conditions.

12. All floating cover material and floating cover accessories shall be provided from a single supplier.

B. Use of CSPE: Unless otherwise indicated, all CSPE material used in the floating cover appurtenances shall be the same type of fabric-reinforced CSPE as that used for the floating cover membrane.

C. Floating Cover Membrane Accessories:

1. Sand-filled tubes, float wraps, doublers, tabs, and other membrane applications shall be nominal 45-mil thick, 3-ply membrane consisting of 2 plies of CSPE and 1 ply of scrim, as specified above.

2. Floating cover membrane accessory materials shall be the same color as the floating cover membrane.

3. Nonstructural patches, doublers, and other unreinforced material applications, where noted, shall be 40-mil thick, unreinforced CSPE membrane material.

D. Floats:

1. Floats shall be rigid, extruded, closed-cell, polyethylene foam planks weighing 2.3 pounds per cubic foot ±10%. The floats shall be:

a. Ethafoam 220 by Dow Chemical Company,

b. Polyplank PLK (2.2 pcf) by Pactiv Corp.,

c. Or approved equal.

2. Individual float dimensions from the factory shall be minimum 2-in. thickness by the full width specified for the application shown on the Drawings by maximum length commercially available.

3. Built-up floats for the total finished thickness specified on the Drawings shall be achieved by laminating individual float layers. Vertical joints in individual float layers shall be staggered a minimum 12 in. Each layer shall be fully heat-bonded to the adjacent layers.

4. Polyethylene foam floats shall be fully encased in the same fabric-reinforced material as that used for the floating cover membrane, unless noted otherwise.

E. Access Hatches:

1. Access hatch frames and covers shall be fabricated from stainless steel in accordance with the requirements of ASTM A240/A240M, Type 304L, or approved equivalent.

F. Sand-Filled Tubes:

1. Sand-filled tubes shall be fabricated from floating cover membrane accessory CSPE material.

2. Sand-filled tubes shall be of sufficient length and lay-flat width to produce the finished length and diameter shown on the Drawings. The overall tube length shall include extra material required to seal the ends of the tube.

3. Sand-filled tubes shall be filled with pea gravel and sand mixture.

a. Pea gravel shall be washed, clean, rounded, and dry with 100% passing 1/2 in. sieve and 90%-100% passing a 3/8-in. sieve.

b. Sand shall be washed, clean, dry, even graded sand with 100% passing a No. 4 sieve and not more than 30% passing a No. 30 sieve.

c. The percent passing the No. 200 sieve shall be limited to a maximum of 3%.

4. Attachment:

a. Oblong stainless steel grommets shall be installed in the attachment tabs material as shown on the Drawings. Holes in the attachment tabs shall be punched using spur-setting dies with cutter to properly suit the grommet size. The grommets shall be seated so that the entire rim is firmly gripping the membrane material all the way around the grommet. No loose or sharp edges around the grommet shall be permitted. Grommets shall be manufactured by:

i. Stimpson Co.,

ii. Rome Fastener Corp.,

iii. Or approved equal.

b. Attachment straps shall be black, double-face weave, medium weight or heavier, Dacron webbing with black Delrin (Acetal) standard cam buckles as shown on the Drawings. Ends of the Dacron webbing shall be heat seared to prevent raveling.

c. The webbing and cam buckle assembly shall have compatible components and shall be capable of supporting a sustained 100-pound tensile load without the webbing pulling out of the buckle.

d. Dacron webbing shall be sewn to the attachment end of the cam buckle with #207 or stronger, bonded, silicone treated, black, polyester thread.

G. Rainwater Removal Pump Sumps:

1. Rainwater removal sump tank and lid shall be constructed from HDPE UV resistance and rated for outdoor exposure. The size of sump tank and perforations shall be as shown on the Drawings.

2. PVC pipe shall conform to the applicable requirements of ASTM D1785. PVC fittings shall be socket type conforming to the requirements of ASTM D2467 and shall be of the same material as the pipe. PVC pipe and fittings shall be solvent welded unless otherwise noted.

3. Pipe and fittings shall be dimensionally round, true, homogeneous, and free from cracks, defects, blisters, indentations, wrinkles, and foreign inclusions.

4. Pipe and fittings shall have the following information printed indelibly in ink, or molded thereon: Manufacturer lot or control number, manufacturer name or trademark, grade, and size. Printed markings shall be of sufficient permanence to withstand normal handling during installation.

H. Tension Tower System:

1. Structural steel tuing meeting ASTM A500 Grade B requirments and hot dip galvanized in accordance with ASTM A12. Zinc coating shall be at least 2.8 ounces per square foot of surface. Welding and fabrication shall be in accordance with approved submittal.

2. Pulleys and weights: shall utilize cast aluminum tower cap, galvanized wire rope, 3 inch sheaves with bronze bushings and cast iron tension weights.

I. Rope:

1. Rope shall be 100% Dacron or three strand, twisted, polypropylene.

2. Rope shall be suitable for marine use.

3. Rope size shall be as shown on the Drawings.

J. Rubber Gaskets:

1. Rubber gaskets shall have a durometer hardness of 35 ± 5, as tested by the Type A durometer, in accordance with ASTM D2240.

K. Water Elevation Markers:

1. Water elevation grid markers shall be the manufacturer standard nominal 36-mil or 45-mil, 10x10, 1000 denier scrim reinforced potable grade material consisting of 1-ply of scrim and 2 plies of CSPE. Water elevation grid markers shall be a contrasting color as indicated on the Drawings.

L. Accessories:

1. All accessories, hose clamps, and other miscellaneous hardware required for the floating cover shall be stainless steel, Type 316 or Type 316L, if welding is required.

M. Repair Float Logs:

1. The Contractor shall provide (8) 12-in. diameter by 4 1/2-ft long repair float logs. Repair log shall be octagonal in cross section.

2. The repair float logs shall be built up from rigid, closed-cell polyethylene foam and fully encased in fabric-reinforced floating cover CSPE material.

3. Each end of the repair float log shall have a tab of fabric-reinforced floating cover material fully bonded to the float encasement material. The outstanding leg of the tab shall have a 1-in. diameter brass grommet centered in the tab.

4. The repair float logs shall be neatly stored and protected on pallets at the site to the satisfaction of the Owner Representative.

N. Rainwater Enhancement Sand-Filled Tubes:

1. In addition to the permanent sand-filled tubes shown on the Drawings, the Contractor shall furnish 2-in. diameter x 8-ft long sand-filled tubes.

2. Quantity of rainwater enhancement sand-filled tubes supplied by Contractor shall be coordinated with Owner to establish the number required for operation.

3. The rainwater enhancement sand-filled tubes shall not be initially installed on the floating cover, but shall be neatly stored and protected on pallets at the site to the satisfaction of the Owner Representative. The rainwater enhancement sand-filled tubes shall be deployed on the floating cover on an as-needed basis at field-determined locations. These tubes shall be used to direct ponded rainwater to rainwater collection troughs and to remove incidental slack in the floating cover.

O. Sandbags:

1. Sandbags shall contain a minimum of 40 pounds and a maximum of 60 pounds of sand. The sand gradation shall be 100% passing a No. 8 sieve.

2. Double bags shall be utilized. Both bags shall be made of 6-mil minimum solid (non-woven) polyethylene with ultraviolet inhibitors sufficient to guarantee a minimum life of 12 months. Each bag shall be tied off separately. Wire ties will be permitted on the inner bag. Twine or black nylon cable ties with a minimum tensile strength of 30 pounds shall be used on the outer bag.

P. Patches:

1. All patches shall be CSPE materials.

2. Structural patches shall be the same fabric-reinforced floating cover CSPE material.

3. Non-structural patches shall be 40-mil unreinforced CSPE material.

Q. Adhesives:

1. All seaming, sealing, and high-solids adhesives shall be suitable for use in potable water applications, shall satisfy all regulatory requirements, and shall be in accordance with the CSPE manufacturer recommendations.

2. High-solids adhesive shall be black, UV resistant, and shall contain at least 14% CSPE compound by weight.

R. Cleaning Solvents:

1. Solvents for cleaning contact surfaces of factory and field joints and other surfaces shall be suitable for the intended use, subject to the approval of the Owner Representative.

2. Solvents for cleaning contact surfaces of field joints and other surfaces shall satisfy the recommendations of the fabric-reinforced CSPE manufacturer, subject to the approval of the Owner Representative.

2.2 FABRICATION

A. Individual sheets of fabric-reinforced CSPE shall be factory-fabricated into large panels by an experienced fabricator regularly engaged in fabricating fabric-reinforced geomembrane for a minimum period of five years, immediately prior to award of the contract. Such fabricator shall be approved by the geomembrane manufacturer.

B. Other experience relevant to fabrication that does not meet the above requirements may be considered. WRPS opinion, as to the acceptability of all experience, shall be final and conclusive.

C. Machine-made factory seams shall be made with hot air or hot wedge welding techniques and shall be as shown on the Drawing.

D. Factory seams shall develop a minimum of 90% of the specified tensile strength of the parent material, when tested in accordance with ASTM D751. All factory seams shall provide a bond between sheets sufficiently strong so that failure of the seam will not occur in the plane of the bonded surface.

E. Factory seams shall be fully bonded on the top side, including encapsulated edges so that no loose edge is present on the top side of the fabricated panel.

F. All factory-fabricated panels shall be fabricated such that the materials are rolled. Accordion folded panels shall not be permitted. Roll widths shall be not less than 30 ft, nominal. "Wall papering" in the field, meaning the installation with manufacturer roll stock material, shall not be permitted.

G. Factory-fabricated sections or panels shall be given prominent, unique indelible identifying markings in accordance with the approved panel layout Drawings, and shall indicate the proper direction for unrolling to facilitate their layout and positioning in the field.

H. Horizontal factory-made and field-made seams will not be permitted on the reservoir slope, except for factory roll stock splices, which shall be offset by at least 5 ft from such splices in adjacent roll stock in the same panel. Rollstock splices will not be permitted on either outside edge of a panel. Roll stock splices shall only be permitted in the center rolls of fabricated panels.

I. All factory seams shall be staggered as required to ensure that no more than three layers of membrane meet at a joint.

J. Fish mouths, pleats, folds, wrinkles, and similar defects shall not be permitted in any seams.

K. Where fabric-reinforced CSPE has been cut and thus exposes the fabric, the cut edge shall be solvent wiped and sealed with a high-solids adhesive to encapsulate the fabric, as shown on the Drawings. This requirement applies to all cut edges of fabric-reinforced material, including patches for structural repairs on the top side of the floating cover.

L. The Contractor may have portions of the floating cover and appurtenances fabricated in the factory. The factory fabrication may include, but not necessarily be limited to, sand tubes, straps, and float wrap. Factory seams for all such items shall comply with the requirements shown on the Drawings.

M. Equipment Calibration:

1. The seaming equipment shall be calibrated in accordance with the fabricator QAP by testing trial seam samples, but shall not be less than at the beginning of each shift, every four hours, and at any significant environmental changes.

2. Shop seam samples shall be collected and tested in accordance with the Quality Control provisions stated in Part 3 - Execution (peel strength, breakaway peel strength, and tensile strength). The shop seam verification testing shall be performed by in-house personnel or laboratory. The Contractor shall submit the daily calibration test results to the Owner Representative as part of the final QA report. No shop seaming shall be performed until all test samples have been tested and passed.

PART 3 EXECUTION

3.1 PREPARATION

A. Protection:

1. Under no circumstances shall the floating cover or installed HDPE liner be subjected to rough treatment or have sandbags, equipment, or other material dragged across or thrown upon its surface. Neither materials nor workers or others shall slide down slopes on top of the floating cover or the installed HDPE liner.

2. Scuffed surfaces resulting from abuse or inadvertent damage of any kind by the Contractor employees, or inadvertent damage caused by the Owner Representative personnel overseeing the work, shall be repaired in accordance with the Specifications.

3. All persons walking on the floating cover material and the installed HDPE liner shall wear smooth, rubber-soled shoes. Shoes with patterns in relief (like those popularly known as "sneakers") that could pick up rocks and debris will not be permitted.

4. The Contractor shall protect the floating cover and installed HDPE liner by deploying a 22-ounce nonwoven geotextile in all high foot traffic areas. This provision shall be included in the Contractor Protection Plan.

5. No wheeled vehicles will be permitted on the installed HDPE liner or on the floating cover material. Miscellaneous equipment with pneumatic tires may be permitted with prior written approval from the Owner Representative.

6. Scissors and utility knives used in the work shall have blades with rounded points. Marking pens or pencils used for identifying areas requiring work shall not contain wax, oil, or grease.

7. Tarpaulins of reinforced CSPE, about 10 ft by 10 ft in size, shall be spread out on the installed HDPE liner and floating cover material as a work area for storing soiled rags, tools, gasoline-driven equipment, or aggressive chemicals. Under no circumstances shall gasoline-driven engines or cans of gasoline or solvents be placed directly on the installed HDPE liner or floating cover material, or be stored within the reservoir overnight.

8. The Contractor shall take all precautionary measures required to protect the floating cover and installed HDPE liner. This shall include, but not be limited to, the geomembrane material itself, all field and factory seams, attachments at the anchor curb at top of slope, and the underwater seals to structures.

9. The Contractor shall conduct his work to minimize the movement of fugitive dusts from the site boundaries by using suitable Reasonably Available Control Measures.

B. Damage and Repairs to Installed Liner:

1. If damage occurs to the liner while placing the floating cover, the Contractor shall report it to the Purchaser immediately so that repairs can be performed without delay.

2. Repairs to liner components shall be made as specified in this Specification.

3. The Contractor shall perform all repair work at no additional cost to the Purchaser.

4. The Contractor shall coordinate all floating cover panel deployment and other work with WRPS personnel.

3.2 INSTALLATION

A. Panels:

1. The Contractor shall identify and repair any damage or defects to panels that occurred during shipping, unloading, storage, and installation.

2. Panels of floating cover material shall be carefully placed on the bottom and slopes of the reservoir in accordance with approved shop Drawings, and in such a manner as to assure minimum handling.

3. During installation of the floating cover, the Owner Representative shall have complete authority to order an immediate stoppage of the work because of inclement weather, the use of improper installation procedures, or any other reason that may result in a defective floating cover installation.

4. Seaming shall keep pace with the placement and spreading of panels such that panels will not be laid out unless they can be seamed the same day.

5. Floating cover material panels shall be deployed in sufficient time to allow panels to shrink, because of panel stretch during the manufacturing and/or fabrication process, prior to field seaming. The Contractor shall account for the panel stretch during the manufacturing process when ordering panel lengths.

6. Prior to punching holes in an individual floating cover panel to attach it to the anchor studs and prior to seaming it to previously installed adjacent floating cover panels, the Contractor shall straighten and pull taut, in both directions, the panel being installed, in order to remove wrinkles as much as possible. If

seaming equipment lifts the material off the substrate and leaves slack material along the seam, wherever possible the wrinkle so formed shall also be pulled out before the material is punched for anchor studs or seamed to adjacent panels. The Contractor shall continuously make every effort to remove all wrinkles in the floating cover.

B. Temporary Anchorage:

1. Sandbags shall be used as necessary to hold the floating cover material in position during installation, in order to protect it from damage or displacement due to wind.

2. During any discontinuity of the work exceeding 4 hours in length, the leading (unseamed) edges of all panels shall be secured with sandbags at not more than 3 ft on center. The Contractor shall be responsible for maintaining closer spacing as necessary to protect the work during all weather conditions.

3. Sandbags placed on slope shall be tied off at the top of slope to prevent their shifting or sliding down the slope.

4. Bags that are split, torn, or otherwise losing their contents shall immediately be removed from the reservoir area, and any spillage shall immediately be cleaned up.

C. Heat Seaming:

1. Machine-made heat seams shall be used on all field seams wherever practical.

2. Machine-made heat seams shall be made using hot air or hot wedge welding equipment. All machine heat seaming equipment shall be equipped with gauges that monitor voltage and temperature.

3. Hand-held heat seaming equipment may be used where machine-made heat seams are not practical and for miscellaneous seaming as approved by the Owner Representative.

4. All seaming shall comply with these Specifications and the Contractor QAP.

5. Contact surfaces to be seamed shall be cleaned with water and wiped dry with a cloth until all foreign matter, dust, dirt, and water has been removed. Only clean, colorfast, lint-free, cotton cloths shall be used in the work. Solvent wipe may be necessary, based on field conditions. Cleaning of the contact surfaces shall not be completed more than 10 minutes ahead of seaming. When conditions are adverse to proper workmanship such as high winds, or other conditions increase the probability of dirt or other foreign material being deposited on the contact surfaces, the time between cleaning and seaming shall be reduced as necessary to produce acceptable seams.

6. The Contractor shall follow immediately behind the heat seaming equipment, while the material is still hot from the initial seam, bonding the top edge of the

seam. The top edge of the seam shall be "stitched" by manually rolling the seam area with firm pressure with a 2-in. wide roller. Joints where three layers of membrane meet shall also be stitched to seal the potential leak path along the edge of the middle layer.

7. In the event a CSPE panel has been laid out and not seamed for a period of three days or more, the contact surfaces shall be solvent scoured and buffed to ensure a positive bond at the seam. The scouring procedure shall consist of hand buffing the contact surfaces with stainless steel scouring pads soaked in solvent to effectively penetrate and remove the oxidation layer. This scouring procedure shall be applicable to all panel-to-panel seams, patches, and seams for attachment of accessories.

8. Care shall be taken to avoid damaging the cover with the seaming equipment. The Contractor shall take the necessary precautionary measures to ensure the floating cover is not bonded to the underlying composite geomembrane liner during the seaming process.

D. Adhesive Seaming:

1. Adhesive may be used to make seams where heat seaming is impractical and for minor repairs, as approved by the Owner Representative.

2. Adhesive seaming shall comply with the manufacturer recommendations and the Contractor approved QAP.

3. Use of adhesives and solvents shall comply with the applicable regulatory requirements.

4. Contact surfaces of material to be seamed shall be wiped with a cloth until all foreign matter, dust, and dirt has been removed. Contact surfaces shall then be washed with clean cloths soaked with solvent to remove surface cure. Only clean, white, lint-free, cotton cloths shall be used in the work. When a cloth is more colored than white, it shall be removed and replaced. Surface cure is removed when the CSPE cover turns shiny and slick when wet and dull when dry. Removal of surface cure shall not be completed more than ten minutes ahead of seaming. When conditions are adverse to proper workmanship, such as high heat or winds, or when other conditions increase the probability of dirt or other foreign material being deposited on the contact surfaces, the time between washing and seaming may be reduced as necessary to produce acceptable seams.

5. Immediately before seaming, the contact surfaces of the floating cover material shall be heated to a warm (100ºF minimum) and dry condition with an electric heat gun, in accordance with the manufacturersmanufacturers printed recommendations.

6. Adhesive shall be liberally applied, by brush or roller, to one of the contact surfaces over a length of approximately 2 ft and the two contact surfaces shall then be immediately brought together. Adhesive shall be glistening with the appearance of moisture at the time the contact surfaces are brought together,

without any sign of drying (surface skinning). In applying the adhesive, care shall be taken to "tie-in" to the end of the seam previously completed so that leak paths or weak points in the seam do not occur at seam start and stop increments.

7. As soon as the contact surfaces are brought together, the seam shall be “stitched” by manually rolling the seam area with a 2-in. wide roller in a direction perpendicular to the seam, with firm pressure. A small amount of adhesive shall extrude and appear at the top edge of the seam to indicate that a sufficient amount of adhesive has been applied.

8. In the event a CSPE cover panel has been laid out and not seamed for a period of three days or more, the contact surfaces shall be solvent scoured and buffed to ensure a positive bond at the seam. The scouring procedure shall consist of hand buffing the contact surfaces with stainless steel scouring pads soaked in solvent to effectively penetrate and remove the oxidation layer. This scouring procedure shall be applicable to all panel-to-panel seams, patches, and seams for attachment of accessories.

9. Care shall be taken to avoid damaging the composite geomembrane liner with the seaming equipment. The Contractor shall take the necessary precautionary measures to ensure the floating cover is not bonded to the underlying composite geomembrane liner during the seaming process.

E. Joinings:

1. Panels to be joined in the field shall be lapped as shown on the Drawings. After the initial seal of the lap joint has been made, all exposed free edges of the floating cover shall be resealed, using hand-held equipment, to eliminate all free edges. The top edge of all seams shall be fully bonded. Loose edges will not be allowed on the top side of the floating cover.

2. Butt joints shall be used only where lap joints are not possible and as approved by the Owner Representative. Butt joints shall be formed using joint cover strips made from the same fabric-reinforced floating cover material, continuous in length, and as shown on the Drawings. The joint cover strip shall be centered over the butt joint and shall be fully bonded across its entire width. Butt joints shall be installed in accordance with the same procedures for lap joints specified herein.

3. All seams, field and factory, shall be staggered a minimum of 12 in. to ensure that no more than three layers of material meet at a joint.

4. Where three layers of material occur at a "T" joint (field seams, factory seams, and rollstock splices), care shall be taken to seal the small leak path that would otherwise occur along the edge of the middle layer. The upper layer shall be heated and rolled to conform or "step-down" and seal the leak path. In addition, the area shall be solvent wiped and sealed with a high-solids adhesive and then covered with a 4-in. round 40-mil minimum unreinforced CSPE patch. The

center of the patch shall be placed at the intersection of the edges of the top and middle layers of the membrane.

5. Seam preparation shall be in accordance with the requirements stated herein, the manufacturer printed recommendations, and the applicable regulatory requirements.

6. Care shall be taken to avoid fishmouths, wrinkles, pleats, folds, and tucks in seams. Any such defects shall be prevented by tugging on the seam just completed, in the opposite direction from which the seam is progressing, during the seaming process. The Contractor seaming crew shall give continuous attention to the elimination of all such defects to prevent their occurrence. Regardless of the location or cause of such defects, they shall be slit out far enough from the seam to dissipate the defect.

7. The slit edges shall then be lapped and field seamed. Wherever the lap width is less than 2 1/2 in., the defect shall be repaired with a joint cover strip made from the same fabric-reinforced floating cover material.

8. Field seams shall not be made if the ambient temperature or humidity would result in inferior seams.

9. Where fabric-reinforced CSPE material has been cut and thus exposes the fabric, the cut edge, if exposed to view after installation, shall be solvent wiped and sealed with a high-solids adhesive. Specifically, the acceptable treatment options for the cut and exposed fabric at the various locations shall conform to the following table.

Location of Exposed Fabric	**Treatment**		**No Treatment**
	Cap Strip	**High-Solids Adhesive Seal**	
Floating Cover in general		X	
Sand Tubes			X
Tension Attachment Tabs		X	
Field Seams: • Cover in general (with cut scrim)		X	
Hatch: • Float Wrap • Cut Openings • Reinforced Joint Cover Strip			 X X X
Walkways		X	
Structural patches		X	
Nonstructural patches			X
Cut edges along anchor curb at top of slope			X

F. Water Elevation Markers:

1. Water elevation markers shall be installed on top of the floating cover at the locations shown on the Drawings.

2. Location of water elevation markers shall be established by a licensed surveyor. The Contractor shall be responsible for coordination and cost associated with the surveyor services.

3. The water elevation markers shall be fully bonded across the entire contact surface and shall be installed in accordance with the requirements of this Section.

4. After the initial seal has been made, all loose edges of the water elevation marker material shall be resealed, using the same procedure, to eliminate all free edges. The cut edges of the water elevation markers shall be solvent-wiped and sealed with a high-solids adhesive.

5. After the water elevation marker is fully bonded to the floating cover, the top CSPE surface of the water elevation marker shall be solvent wiped to remove all dirt or excess adhesive, which may have been spread on top of the marker during the process, to insure the top surface of the water elevation marker material remains clean and contrasting color.

G. Anchorage and Fastenings:

1. Floating cover material shall be anchored at the concrete anchor curb as shown on the Drawings.

2. The floating cover material at the top of slope anchor curb shall be installed on the anchor studs by either of the following listed methods.

   a. Anchor bolt holes shall be neatly punched using a tool that removes the material to form a neat hole 1/8-in. less in diameter than the penetrating stud diameter. The floating cover material shall be forced over the stud in such a manner to prevent damage to the cover or the stud.

   b. The floating cover material may be forced onto the anchor studs using a pipe section with an inside diameter slightly larger than the anchor stud diameter (1/2-in., schedule 40 pipe for 1/2-in. anchor studs), thus punching the floating cover material around the anchor stud. This method will result in no removal of floating cover material at the anchor bolts.

3. Oversized, cut, or irregular shaped holes will not be allowed.

4. Anchor bolt holes created by any other means shall not be accepted, unless specifically approved by the Owner Representative.

H. Tension System:

1. Install towers and attach tensioning cables to cover and tower in accordance with approved submittals.

I. Rope:

1. The rope shall be installed in the hem at the top of slope cover attachment, as shown on the Drawings, such that the rope hem is installed snug to the attachment bar.

J. Walkway Steps:

1. Walkway steps shall be fully seamed to the top of the floating cover, as shown on the Drawings.

2. Walkway steps shall be laid flat and parallel to the slope. Puckered or skewed walkway steps shall not be acceptable.

K. Sand-Filled Tubes:

1. After installation of sand-filled tubes on floating cover, all sand tubes shall be punctured with an awl on both sides at 12 in. on center to create "dimensionless" holes to allow saturation of the sand when the tubes are submerged in rainwater. The use of a blade for this purpose is not permitted. This work shall be witnessed by the Owner Representative.

3.3 REPAIRS

A. Punctures, cuts, tears, abrasions, and similar damage or abuse to the fabric-reinforced floating cover material shall be repaired to the satisfaction of the Owner Representative.

B. All repairs shall be considered either structural or non-structural.

1. Non-structural repairs shall be defined as pinholes and abrasions, where the scrim is intact and has not been cut or otherwise damaged.

2. Structural repairs shall be defined as all other defects.

C. Non-structural repairs shall be performed using CSPE patches as described in Part 2. Patches shall be cut from flat unwrinkled material. Patches shall be of sufficient size to extend a minimum of 2 in. beyond the limits of any puncture, pinhole, or abrasion.

D. Patches for structural repairs shall be cut from flat, unwrinkled floating cover material, and shall be free of defects, field seams, and factory seams. Patches shall be of sufficient size to extend a minimum of 3 in. in all directions beyond the limits of any puncture, cut, tear, or abrasion.

E. All patches shall be neat in appearance with corners rounded to a minimum 1-in. radius.

F. Patches shall be applied as specified previously for heat seaming or adhesive seaming. The parent material shall be carefully pulled and held flat in the area to be patched as to provide an acceptable surface to receive the patch.

G. All patches shall be fully bonded across their entire width.

3.4 QUALITY ASSURANCE / QUALITY CONTROL

A. The Contractor QA/QC testing shall keep pace with the deployment and seaming operations to identify all problems at the earliest possible point in time and documented daily.

B. Equipment Calibration:

1. The seaming equipment shall be calibrated by testing trial seam samples in accordance with the Contractor QAP, but shall not be less than at the beginning of each shift, every four hours, and any significant environmental changes.

2. Field seam samples shall be collected and tested in accordance with the provisions stated herein (peel strength, breakaway peel strength, and tensile strength). The field seam calibration verification testing may be performed by on-site personnel. The Contractor shall submit the daily calibration test results to the Owner Representative as part of the final QA report.

3. The testing equipment shall be calibrated at least once every 12 months by an agency certified to conduct such calibration, and a label attesting to such calibration shall be affixed to the testing equipment.

4. No daily field seaming shall be performed until all the calibration samples have been tested and passed.

C. Seam Testing:

1. The Contractor shall have tests performed by a third party, at their own expense. All testing shall be performed to ensure that the CSPE shop seams and field seams meet the following listed requirements.

a. Peel Strength Test:

i. Factory and field test samples shall be tested for peel strength in accordance with the requirements of ASTM D413, Machine Method, Type A.

ii. A minimum of five test specimens shall be tested from each test sample.

b. Breakaway Peel Strength Test:

i. The breakaway peel strength of a seam in 180-degree peel is the minimum level at which the seam separation is deemed acceptable and that portion of the seam that separates below the

stated minimum required breakaway peel strength is not considered part of the seam.

ii. Factory and field seams shall be tested in 180-degree peel by static test in which a weight is suspended from a 1-in. wide seam specimen and held for a minimum of 5 seconds.

iii. For heat seams, a 21-pound weight shall be suspended immediately after the seam has been allowed to cool.

iv. For adhesive seams, a 15-pound weight shall be suspended after 12 days.

v. The effective seam width shall be determined by measuring the scrim-to-scrim overlap of the seam following the breakaway peel strength static test.

vi. A minimum of five test specimens shall be tested from each test sample.

c. Tensile Strength Test:

i. Specimens from any given factory or field seam test sample shall be 4 in. wide, with a length equal to the specified seam width plus 9 in.

ii. Factory and field test samples shall be tested in accordance with the requirements of ASTM D751 (modified method).

iii. A minimum of five test specimens shall be tested from each test sample.

2. A seam shall be deemed acceptable if ALL the specimens from each test seam sample location satisfy all of the following listed requirements.

a. The effective seam width is equal to or greater than the minimum width specified on the Drawings, as measured at the conclusion of the breakaway peel strength test.

b. A minimum peel strength equal to or greater than 21 pounds per inch of seam width.

c. Failure by delamination from the scrim rather than in the plane of the seam.

d. A minimum seam tensile strength equal to 90% of the value specified for the parent material.

3. Test results not meeting these requirements shall be cause for rejection of the seam from which the test sample was taken.

D. Test Samples:

1. Samples of factory and field seams shall measure not less than 14 in. wide by 72 in. long with the seam parallel to the 36-in. side, and down the middle of the sample.

2. A minimum of five test specimens for each of the above tests (peel strength, breakaway peel strength, and tensile strength) shall be taken from each test sample.

3. All test samples shall be provided by the Contractor at their expense.

4. Field and factory seam samples shall be numbered, dated, and identified as to the personnel making the seam from which the sample is taken, the seaming method being used, and the temperature and weather conditions at the time of seaming. Each test sample shall be keyed to its general location on the seam from which it is taken by appropriate notes or markings on a Drawing, furnished by the Contractor, for future reference.

E. Testing of Factory Seams During Fabrication:

1. The Contractor shall have the fabricator provide and have tested, by a GRI-accredited laboratory, samples of factory seams taken from the fabricated panels at the factory.

2. One test sample per 5,000 linear feet of rollstock-to-rollstock shop seams, or one test sample per panel, whichever yields the greater number of samples, is required. Each sample shall be tested for all of the above tests (peel strength, breakaway peel strength, and tensile strength).

3. The certified test results of specimens from each sample shall be submitted to the Owner Representative for review and approval prior to installation of panels represented by that sample.

4. Patching of sampled seams may be done in the field after installation of the affected panel, at Contractor option.

F. Testing of Field Seams During Field Installation:

1. The Contractor shall test samples of field seams taken from installed fabricated panels.

2. One test sample per 500 ft of panel-to-panel field seam shall be tested for the above tests (peel strength, breakaway peel strength, and tensile strength).

3. If any test results are not satisfactory, the Owner Representative, at their discretion, may require that additional sampling and testing be done at Contractor expense.

G. In addition to all sampling and testing described above, WRPS may, at their discretion, require the Contractor to provide WRPS with additional samples of any field or factory seam, for testing by WRPS, at WRPS expense.

H. The testing laboratory and the Contractor shall certify all test results. Five copies of the certifications and test results shall be submitted to the Owner Representative.

I. Air-Lance Testing:

1. Prior to performing air lance testing, the Contractor shall check the seams and patches with a metal probe (such as a wire 1/16-in. maximum diameter with the point slightly rounded).

2. All factory seams, field seams, joint cover strips, doublers, and patches shall be air-lance tested. Air-lance tests shall be performed in the field by the Contractor in the presence of the Owner Representative during daylight hours. Leak paths or suspect areas revealed by these inspections shall be marked and repaired.

3. The air-lance shall have a 1/8-in. diameter orifice. Pressure at the orifice shall be between 60 and 80 psi. The jet of air shall be directed at the edge of seams and patches to affect the lifting of unbonded edges. The air-lance testing shall be done in a manner to allow the Contractor QA/QC personnel sufficient time to observe and document any leaks or suspect areas. No defects found during probing shall be repaired until the defect is tested by air-lancing.

4. Field probing and air-lance tests of factory seams shall be required, even if those seams have previously been air-lance tested in the factory.

J. Post-Installation Inspection:

1. After installation is complete, the Contractor and the CQA Inspector (Testing Agency) shall conduct a detailed walk-down to visually check all seams and non-seam areas of the cover. The inspection shall look for imperfections including verification of tight seams and joints, defects, holes, blisters, tears, and signs of damage.

2. All defects, holes, blisters, tears, signs of damage during installation, areas of undispersed carbon, and holes from destructive or non-destructive testing shall be marked and repaired.

3.5 CLEANUP

A. Cleanup within and around the reservoir shall be the ongoing responsibility of the Contractor throughout the course of the work. Particular care shall be taken to ensure that no dirt, scrap material, trash, tools, or other unwanted materials are trapped between the composite geomembrane liner and the floating cover.

3.6 POST-CONSTRUCTION REPAIRS

A. In addition to any other requirement specified in the contract documents, after the 11th month of the 12-month guarantee period, and prior to the end of said guarantee period, the Contractor shall contact WRPS and arrange a joint inspection of the floating cover. The Contractor shall make repairs and adjustments to the floating cover or its appurtenances as required to correct defects or problems that are evident or discovered during said inspection, or are otherwise covered under the guarantee or any warranty, and which have been determined by WRPS to be necessary. The guarantee shall continue in effect until this joint inspection is conducted and all required repairs and adjustments discovered are made, or until the end of the 12th month, whichever is later.

END OF SECTION 33 47 16.13

SECTION 40 05 10

ERECTION OF PIPING

PART 1 GENERAL

1.1 SUMMARY OF WORK

A. Requirements for installing above ground and below ground piping including appurtenances, fittings, thermocouple wells, in line instruments, piping specialty items, valves, pipe supports, auxiliary steel and other accessories specified on project Drawings, design Drawings, data sheets, and/or other documents.

B. For stainless steel piping, work shall include, but not be limited to the following:

1. Receive, unload, store, protect, remove from storage, erect, and install, including pipe supports, fabricated piping, and appurtenances. All erection work shall be performed per the design Drawings and documents.

2. Cut into existing pipe systems, when specified on the design Drawings or documents.

3. Furnish necessary welding rod including rod required for training welders and for field erection of large bore piping and tubing.

4. Select the type and quantity of welding rod required for field erection of all piping.

5. Perform all NDE as required by applicable code.

6. Perform hydrostatic or pneumatic testing as specified or per the applicable code.

7. All temporary piping required for hydrostatic testing shall remain the property of the installation Contractor.

C. For underground buried non-metallic pipe, work shall include, but not be limited to the following:

1. Receive, unload, store, protect, remove from storage, erect and install, underground buried non-metallic pipe and appurtenances. All erection work shall be performed per the design Drawings and documents.

2. Cut into existing pipe systems, when specified on the design Drawings or documents.

3. Perform hydrostatic or pneumatic testing as specified or per the applicable code.

D. The project-specific materials and equipment quantities and attributes are shown on the project Drawings, equipment list, data sheets, valve design tables, piping specialty list,

piping design tables, pipe line list, piping specialty list, valve list, instrument list and/or other documents.

E. Testing of completed piping installations/modifications.

1.2 RELATED DOCUMENTS / CODES AND STANDARDS

Drawings and general provisions of the contract Statement of Work, including Division 01 Specification Sections, apply to this Section.

The following documents and others referenced therein, form part of the contract to the extent designated in this Section. Referenced documents are those current as of the date of this Section unless otherwise indicated.

A. Section 05 50 00, Metal Fabrication

B. Section 09 91 00, Painting

C. Section 22 08 13, Testing for Piping

D. Section 40 41 00, Heat Tracing for Process Piping and Equipment

E. Section 40 42 13, Thermal Insulation for Piping and Equipment

F. American Society of Mechanical Engineers (ASME)

ASME B1.1	Unified Inch Screw Threads, UN and UNR Thread Form
ASME B31.3	Process Piping

G. ASTM International (ASTM)

ASTM A36	Standard Specification For Carbon Structural Steel
ASTM A312/A312M	Standard Specification For Seamless, Welded, And Heavily Cold Worked Austenitic Stainless Steel Pipes

H. American National Standards Institute (ANSI)

ANSI B16.5	Pipe Flanges And Flanged Fittings Nps 1/2 Through Nps 24 Metric/Inch Standard –Revision Of ASME B16.5–1996
ANSI B16.34	Valves – Flanged, Threaded, And Welding End

I. American Welding Society (AWS)

AWS D1.1	Structural Welding – Steel

J. Washington Adminstrative Code (WAC)

WAC 173-303-640	Dangerous Waste Regulations Washington State (NOTE: This requirement only applies to the EMF and 242-A condensate lines into Basin 41. WAC 173-303-640 does not apply to inter-basin transfer piping.)

1.3 SUBMITTALS

A. Submit the following documents and other documents as required, for review in accordance with submittal requirements.

1. Test results,

2. Erection Drawings, and

3. As built Drawings.

1.4 QUALITY ASSURANCE

A. Comply with all requirements of ASME B31.3 or other designated piping code, as applicable.

B. Specified Products and Substitutions:

1. Mention of products or components by name as products of certain manufacturers is made to ensure that the proper quality and/or type are provided. Products of other manufacturers may be offered as substitutes with the bid proposal if the installation Contractor furnishes proof to the engineers that the proposed substitute products are equal to or better than the specified products in quality, performance, design, and suitability for the intended use. Any purchase of proposed substitute products by the installation Contractor prior to acceptance by the engineers, will be at the risk of the installation Contractor.

1.5 DELIVERY, HANDLING, AND STORAGE

A. The installation Contractor shall obtain complete information from the manufacturer regarding the number of pieces and size in which the equipment will be shipped and the date of shipment of each item.

B. The installation Contractor shall be responsible for the equipment and material to be unloaded and/or erected from the time of their arrival at the site, until the work is accepted in its entirety by purchaser, except during such time as said equipment or material are removed from the control of the installation Contractor by specific instructions of purchaser. If said equipment or material arrives at the site after the award of contract, but before the arrival of the installation Contractor on the job site, the installation Contractor shall have complete responsibility for the equipment or material while they are being unloaded and handled for him by others.

C. Upon receipt of equipment shipment, the installation Contractor shall check quantities against invoices for shortages and inspect for visible damage. Before offloading any equipment, the installation Contractor shall immediately notify the purchaser when

material has been lost or damaged during shipment. The installation Contractor shall make the shipment available for inspection by the carrier before moving or unloading. Purchaser reserves the right to inspect materials during and after unloading to verify shop workmanship and determine if any corrective work will be necessary.

D. Upon arrival of the equipment and material at the project site, the installation Contractor shall ensure that each seal on equipment connections and piping ends is intact. If cap, plug, or other type of seal is missing upon arrival of the equipment or material, it shall be cleaned immediately of all foreign material and resealed. The installation Contractor shall maintain seals during the course of the work, except where otherwise necessary.

E. During the storage period, all stored material and equipment shall be periodically inspected for tightness of seals.

F. Equipment and material stored outdoors shall be above grade and protected against dirt, fly ash and inclement weather conditions up to the time of field fabrication or erection; all temporary material for such protection shall be furnished by the installation Contractor.

G. The installation Contractor shall be responsible for paying any demurrage accumulated on cars due to failure to unload equipment from cars. Any handling of such cars on plant property beyond the point of delivery of the cars by the delivering carrier shall be at the expense of the installation Contractor.

H. The installation Contractor shall maintain records, for the control of receipt, protection, and disbursement of purchaser equipment and material. A record shall be made of all equipment and material that is received and accepted or rejected. The record shall be agreed upon with the purchaser.

I. The installation Contractor shall unload and store all spare parts, spare supplies, and maintenance tools furnished with the equipment. Maintenance tools shall not be used for the erection work, unless otherwise permitted by the purchaser.

J. Welding rod shall be packaged in appropriate durable containers to limit exposure to elements known to be detrimental to the life and quality of the product.

K. Buried Pipe:

1. Piping placed in storage shall be stored off the ground using padded bolsters and plain timbers under the uncoated ends. Suitable wedges shall be used to preclude rolling. Pipe shall be stored on flat, well-drained ground whenever possible.

PART 2 PRODUCTS

2.1 COMPONENTS

A. Piping, Appurtenances, and Accessories:

1. Provide all necessary miscellaneous piping, vents, drains, and piping accessories and appurtenances indicated on Design Drawings (except where specifically indicated to the contrary on project Drawings or lists), including, but not limited to, fittings, pipe supporting elements, bypasses for piping and specialties, insulation supports, pipe saddles for insulation protection, unions, couplings, pipe flanges, gaskets, bolting, and nozzles.

2. Provide such other miscellaneous piping, vents and drains, pump gland and packing connections, and appurtenances, which may not be shown on the Design Drawings but which may be required to complete the work and to make the piping system and equipment function properly.

B. Manufacturer: All components shall be of manufacturer and type indicated in this Specification or on the design Drawings, shall be of material suitable for the pressure-temperature conditions in each case, and shall be acceptable to the consulting engineers.

C. Miscellaneous Appurtenances: Install various instruments, controls, and other appurtenances, such as float cages, level-trolls, gauge glasses, remote level indicators, high and low water level alarms, safety valves, relief valves, control valves, etc., furnished by others. Provide all pipe, fittings, and valves required for proper installation of the foregoing appurtenances.

D. Miscellaneous Piping for Appurtenances: Provide all interconnecting piping, unions, and valves required in conjunction with all regulating, flow control, pressure-reducing, and float and pilot valves, whether such valves and accessories are furnished by purchaser or the installation Contractor, except where such piping is specifically noted to be furnished by others.

E. Temporary Strainers: Provide a temporary strainer, including differential pressure gauge, and replacement spool pieces, if required, in the suction line to pumps where called for in this Specification or on the Drawings. Strainer shall be as detailed on the Drawings, and if not detailed on the Drawings, it shall be of design and type acceptable to the consulting engineers. Remove strainers and, if required, replace with spool pieces when so instructed by the consulting engineers.

2.2 FABRICATION REQUIREMENTS

A. Shop Fabricated Piping:

1. It is the responsibility of the shop fabricator to coordinate with the installation Contractor for field specific fit-up requirements.

2. The installation Contractor shall review the pipe spool Drawings. It is the responsibility of the installation Contractor to give feedback to the engineer regarding field fit-up requirements.

3. It is the responsibility of the installation Contractor to review and evaluate the location of the field welds on the Drawings, and to give feedback to the consulting engineers whenever field weld location needs to be relocated.

B. The installation Contractor may set up a temporary piping fabrication shop on the project site for field-routed piping.

C. Protection of Field Fabricated Materials:

1. Materials shall be provided with protection against damage, corrosion, and internal contamination in accordance with the following:

a. All materials and equipment shall be packaged, packed, or prepared in a manner that will ensure arrival at destination in satisfactory condition. Procedure and details shall be submitted to purchaser for review prior to start of shipment.

b. All openings in piping and equipment furnished by the installation Contractor shall be securely plugged, capped, or otherwise blanked off, sealed with tape, and suitably protected against damage and entry of foreign materials and moisture. For shop-fabricated piping, this shall be done as soon as possible after shop cleaning.

c. Weld ends on all valves, fittings, pipes, nozzles, etc., shall be capped and sealed with suitable, firmly attached protectors.

d. Protectors for beveled ends designed for backing ring or consumable insert shall have a plywood or hardboard liner disc held securely against the beveled end. Protectors for other weld ends may be metal caps without liner discs. Protectors shall not be welded to the weld end.

e. All flanged connections and loose flanges shall be provided with suitable full-face flange protectors bolted in place and sealed.

f. All protectors for openings and all braces, brackets, spacers, ties, bindings, and other shipping, packaging, and packing materials and appurtenances used for protection in shipping, storing, and handling of nonferrous piping and materials shall be of such design, type, and/or arrangement as to prohibit contact between ferrous and nonferrous materials.

PART 3 EXECUTION

3.1 GENERAL

A. Completeness of Work: It shall be the responsibility of the installation Contractor to furnish the services of all trades necessary to complete the work covered by this Specification. All systems shall be placed in successful service by the installation Contractor to the satisfaction of the consulting engineers.

3.2 PREPARATION

A. Removal and Relocation of Present Work: Remove, relocate, and modify any present piping requiring such work, as indicated.

B. Connections to Present Work: Remove blind flanges on existing piping to which the work connects, cut or burn openings and weld to present piping, install and remove such temporary and permanent blind flanges, pipe plugs, shutoff valves, etc., as may be necessary during the progress of the work, and do all other similar work as may be reasonably required to complete the work. All cut-ins or connections made to existing systems shall be done only at such times as purchaser may designate. As a safety measure, the installation Contractor shall determine that a system, or portion thereof, is shut down or isolated, and all hold card procedures have been implemented, before cutting in or making connection thereto.

3.3 ERECTION OF PIPING

A. Erection of the piping, including valves, pipe-supporting elements, and appurtenances, shall be done in an orderly and workmanlike manner and shall be scheduled to suit the requirements of the project. In addition to other applicable requirements specified herein, the following specific piping system erection requirements shall apply:

1. Minimum of joints: Throughout the entire system there shall be as few joints as possible.

2. Diagrammatic connections: Any connections that are indicated only diagrammatically on the design Drawings shall be installed in a neat and workmanlike manner, subject to acceptance by purchaser.

B. Alignment and Drainage:

1. Piping shall be erected to preserve accurate alignment. The installation Contractor shall check field measurements and allowance for makeup lengths or “closures” as may be necessary for accurate alignment and assembly, prior to fabrication and installation.

2. Pipe runs in which drainage is required shall be properly pitched to points of drainage.

C. Terminals: Where the work connects to equipment or piping furnished in place by others, such connections shall be made by the installation Contractor, who shall properly complete the connections, in each case.

D. Closure: All piping shall be worked into place and the closing weld made without springing or forcing. It is the responsibility of the installation Contractor to maintain surveillance of the piping system during erection to ensure that no stress from misalignment is imposed, and that dimensional requirements are met. Any discrepancies shall be noted to purchaser representative. This should include a review of the piping supports in the field to ensure that they are properly located and adjusted to the design position. Neutral points shall be maintained.

E. Miscellaneous Small Connections: All openings for vents, drains, instruments, controls, and other similar connections made after the piping system is erected shall be drilled and the internal area cleaned out. No burning will be permitted.

F. Clearance for Insulation: Piping shall be installed with suitable clearance being allowed for insulation where pipes cross or run in parallel, or where pipes run close to equipment or building structures.

G. Attachments for insulation, pipe supporting elements, and handling where attachments to piping furnished by others and erected by the installation Contractor are required, but not furnished and/or installed by others; the installation Contractor shall furnish and/or install such attachments.

H. Cutting, Drilling, etc., of Building Structure:

1. The installation Contractor shall do all necessary cutting or patching of concrete.

2. The installation Contractor shall furnish and/or install anchors and/or anchoring facilities. Where details are not shown on the Drawings, the installation Contractor shall submit details to purchaser for review and acceptance.

3. The installation Contractor shall perform all necessary drilling of building structural steel required to complete the work. Drilling shall be strictly in accordance with the details on the design Drawings. Burning of holes in steel will not be permitted.

I. Temporary Support:

1. The installation Contractor shall furnish and install temporary supports or bracing as required, such as at the following times.

a. During hydrostatic testing or leak testing by the installation Contractor, to prevent undue stress on the permanent piping supports of the system and to withstand the weight of water without excessive deformation.

2. The installation Contractor shall remove any/all temporary supports, anchors, and bracing furnished by others, as well as that furnished by the installation Contractor, from piping erected by the installation Contractor, at the following times.

a. All temporary facilities for aboveground piping, after final and successful field leak testing.

J. Flanged Joints:

1. Contact face finish: Contact faces shall be as set forth in the piping design tables referenced the design Drawings for each particular service. All raised face flanges shall have serrated facing. Contact faces for all male and female, and tongue and groove faced flanges shall have smooth tool finish, unless otherwise indicated.

2. Gaskets:

a. Gaskets for all joints shall be of such inside dimensions that no portions will project into the ports of valves, pipes, or fittings. Gaskets for male

and female joints, and for tongue and groove joints, shall fit into the female or groove facing with approximately 1/32 in. clearance. Gaskets for raised-face joints shall extend to within 1/16 in. of the bolts. Plain-faced flanged joints shall have full-face gaskets with holes for bolts, unless otherwise indicated.

b. Gaskets shall be as set forth in the piping design table for each particular service.

c. Spiral-wound metal gaskets shall be of manufacturer and style set forth in the pipe design tables.

i. When ordering spiral-wound metal gaskets, the installation Contractor shall specify complete joint data for each specific application, including:

- Service (fluid to be handled by piping) and operating pressures and temperatures.
- Flange material and pressure class.
- Type of flange facings.
- Bolting materials.

3. Studs:

a. All alloy steel studs shall have identification marks at one end, covering material, class, etc. Studs for low-temperature and high-temperature work shall not be interchanged when installing.

b. All steel bolts shall have Class 2a fit threads, and all nuts for steel bolts shall have Class 2b fit threads, per ASME B1.1.

4. Thread compound: Threads of all bolts and studs shall be painted with a suitable thread compound before joint is made up. The compound shall be suitable for the operating temperatures involved.

5. Faces of flanges and gaskets shall be wiped clean when making up all flanged joints.

6. Contact faces of all flanged joints shall come squarely together and particular care shall be exercised in pulling up flanged joints to prevent any overstressing of flanges, bolts, or studs.

7. No permanent fillers shall be used between flanges, except where specifically indicated on the Design Drawings.

K. Pipe Supports:

1. Unless otherwise indicated, the installation Contractor shall provide all engineered and standard supports, anchors, guides, braces, and snubbers as required for the entire piping system (including valves, vessels, and other associated piping components) furnished and/or erected by him. This shall include all necessary structural steel (auxiliary steel or supplemental steel) to connect to purchaser steel in place, unless otherwise indicated.

2. Welding of pipe support lugs or supplemental steel to purchaser structural steel in place shall be in accordance with AWS D1.1.

L. Protection:

1. For piping that is field fabricated by the installation Contractor, all openings of the fabricated piping and remaining cut pipe shall be provided with protectors, as soon as possible after cleaning. Protectors shall remain in place until removal is necessary for connection thereto.

2. If connections to piping erected by the installation Contractor are to be made by others, the installation Contractor shall ensure that the associated terminal connections are provided with protectors. Where such terminals are located in an area where they may be subject to damage from other operations at the project site or constitute a hazard, the installation Contractor shall provide barricades and/or warning signs around the terminals.

3. The installation Contractor shall, at the end of each working day, ensure that all remaining openings in piping erected and all new openings made existing piping are provided with temporary protectors.

3.4 FIELD WELDING

A. It is the responsibility of the installation Contractor to review and evaluate the location of the field welds on the Drawings, and to give a feedback to the consulting engineers whenever field weld location needs to be relocated.

B. Field welds in piping systems requiring a high degree of cleanliness and a relatively smooth contour at the inside of the welded joint shall be made using the gas tungsten arc process for the first welding pass. The remaining weld passes shall be made using one of the processes listed previously. All gas tungsten arc welds shall be made with the addition of filler metal.

C. Welding filler metal chemistry shall match that of the base material, unless otherwise specified. Similar metallurgical properties, i.e., yield strength equal to or greater than base metal, equal or better corrosion-erosion resistance, and equal or better thermal properties shall be produced.

D. The application of heat to correct weld distortion and dimensional deviations in austenitic stainless steels is prohibited.

E. Preparation of weld ends and fit-up shall be in accordance with the requirements of ANSI/ASME standards. Base metals for butt weld joints shall be prepared by

machining or mechanized oxygen cutting. In specific instances where the use of the above equipment is impractical, written permission from the Owner must be secured if hand oxygen cutting is to be substituted. All slag, irregularities, and thermally affected areas shall be removed from oxygen cut ends and hand ends shall be ground smooth.

F. Backing rings shall not be used in any piping system without prior written approval of the Owner. Backing rings, where allowed by Owner, shall be of the flat split ring type. The material of the backing rings shall be compatible with the composition of the pipe with which it is used.

G. Welding pre-heat and interpass temperature shall be maintained in accordance with the requirements of the applicable code. Electric or gas heat sources, which provide a uniform application of heat over the weld area, shall be used in accordance with ANSI/ASME B31.3.

H. Stress relieving of all welds shall be performed in accordance with the requirements of the applicable piping code. All welding zones, bends, and hot-formed sections shall be fully stress relieved as required by the applicable code.

I. Wherever possible, stress relieving shall be performed by slowly heating the entire assembly to the specified temperature, holding the temperature for the required length of time, and then allowing the assembly to cool. Where this procedure is impractical, local stress relieving may be employed.

J. Pipe bending shall be used only when specifically required or where the use of elbows is impractical. All bends shall be smooth, without buckles and truly circular. The allowable flattening, as determined by the difference between the minor and major axes, shall not be greater than 5% of the nominal diameter. Allowance shall be made for thinning of the pipe wall in accordance with the requirements of ASME B31.3 to assure that minimum wall thickness after bending is not less than the minimum wall thickness required.

K. All lugs, ears, and other attachments for support of piping shall be welded to the piping. Attachments for piping systems that must be stress relieved shall be welded to the pipe prior to final stress relieving. Attachments on shop fabricated piping which must be stress relieved shall be shop welded to the piping.

L. Field-welding on pressure parts shall be stress relieved as required by applicable codes.

M. The installation Contractor shall submit welding procedures, stress-relieving procedures, and procedure qualification records to the Owner for review and approval prior to performing any welding.

N. Any combustible material or electric cables beneath or adjacent to welding operations shall be protected against sparks, splatter, and molten material. The installation Contractor shall ensure that safe conditions exist prior to and during any welding in areas where coal dust and/or gas may be present. The installation Contractor shall be responsible for supplying any portable ventilation or other equipment necessary to ensure that safe conditions exist and are maintained.

O. All welds that have been made by the installation Contractor for temporary attachment shall be properly removed and the surfaces of the present work shall be finished clean and smooth. Appropriate NDE shall be implemented to verify there are no resultant defects.

P. Fiberglass Joints:

1. Joints in fiberglass reinforced plastic piping shall be as required by the application. All joints shall be made by certified joiners or bonders. Copies of certifications shall be made available to the Owner upon request. Individuals shall be trained and certified by the manufacturer for the specific pipe brand, type of joint, and pipe sizes to be used.

3.5 FIELD QUALITY CONTROL

A. Inspection and Testing:

1. The piping components (including valves), fabricated piping, and the installation of the piping shall be tested and/or inspected in accordance with the applicable requirements of the governing code(s).

2. Components furnished by the installation Contractor: Per the requirements of the applicable ASTM or ASME material and ANSI dimensional Specifications, and the governing code.

3. Leak testing of piping systems: Prior to initial operation, the installation Contractor shall perform a leak test on each part of the system erected at the operating pressure and temperature in accordance with the requirements of the following unless otherwise indicated in this Specification:

   a. Hydrostatic test: The following systems shall be given a hydrostatic test per ASME B31.3.

   b. All outdoor, as well as indoor, piping buried in the earth or encased in concrete, except drains and vents operating at atmospheric conditions.

4. Initial service leak test: All piping not hydrostatically or pneumatically tested, including any portions of piping under the preceding paragraphs having the specified hydrostatic or pneumatic test waived by purchaser representative.

5. Test pressures and temperatures: As set forth in ASME B31.3 or the applicable piping code and as follows:

6. Water used for the hydrostatic tests shall in no case be less than 70°F or greater than 125°F for all systems.

7. The hydrostatic test pressures shall in no case exceed the adjusted pressure-temperature rating for 100°F as given in the ANSI standard for steel pipe flanges and flanged fittings (ANSI B16.5) and the ANSI standard for steel valves (ANSI B16.34) for the material and pressure standard involved.

8. Water used for hydrostatic testing of stainless steel piping shall be potable and not have a chloride content exceeding 100 mg/liter. The minimum temperature of the water used for hydrostatic testing shall be 70°F.

9. Where piping installed by the installation Contractor connects to new piping installed by others, leak testing of the system shall include the testing of such piping installed by others, unless otherwise indicated.

10. Notify WRPS Construction Representative at least 24 hours (1 working day) in advance to arrange for onsite witnessing of the above described testing (a hold/witness point) by an Independent Qualified Installation Inspector (IQII), or an Independent Qualified Registered Professional Engineer (IQRPE), as required by WAC 173-303-640. (**Note**: This requirement only applies to the EMF and 242-A Condensate Lines into Basin 41. WAC 173-303-640 does not apply to inter-basin transfer piping.)

B. Temporary Field Testing Facilities and Services:

1. The installation Contractor shall furnish, install, and remove blind flanges, pipe plugs, caps, spools, etc., and make all temporary connections necessary for field test by the installation Contractor.

2. The installation Contractor shall disconnect and reconnect assemblies where it is necessary for tests by the installation Contractor. Equipment, with pressure limitations lower than the test pressure to be used, and instruments shall be protected by the installation Contractor against any damaging effects of hydrostatic and pneumatic tests.

3. The installation Contractor shall furnish hand or power driven pumps and all other necessary equipment, including heaters and piping connections and valves from the source of test medium, for making field tests by the installation Contractor.

4. The installation Contractor shall provide the necessary temporary piping and connections, with valves and blind flanges, and related parts as may be required for filling and draining the piping systems and equipment that will be tested by the installation Contractor.

5. The installation Contractor shall fill the systems and equipment that are to be hydrotested with water. After testing is completed, the installation Contractor shall drain the water and dispose of it in accordance with all federal, state, and local regulations. The water used for hydrostatic testing shall be demineralized water, condensate, service water, or construction water, as directed by purchaser representative.

6. In conjunction with leak testing of the piping, the installation Contractor shall do all gagging of associated safety and relief valves required for the leak testing and shall remove gagging at the completion of the testing.

C. Documentation and Test Reports: Documentation and test reports shall be in accordance with the governing code and the following list.

1. The installation Contractor shall submit a complete report to purchaser/engineer covering the test results and inspector interpretation of test findings and their disposition.

2. Each test report shall include data identifying each system (or portion thereof), test method, test number, date of test, Contractor name, contract number, purchaser name, and project and unit identification.

D. Performance Test: After the piping system and all equipment installed by the installation Contractor are put in service; purchaser will run a preservice check test to ascertain that the system and all the appurtenances are performing satisfactorily. The installation Contractor shall arrange to have his authorized representative present to assist and witness these tests.

3.6 ADJUSTMENTS AND TIGHTNESS

A. The installation Contractor shall remedy all leaks in the piping system and appurtenances erected by the installation Contractor that may develop during testing and initial operation and shall retain the necessary field crew on the project after the main erection work is completed to perform, at no addition to the contract price, the following work as required to prepare the piping system for continuous operation:

1. Recheck all bolted assemblies where necessary.

2. Readjust tension of bolted assemblies in accordance with temperature rise.

3. Adjust pipe-supporting elements erected by the installation Contractor.

4. Install and remove temporary strainers for cleanout and checking.

5. Perform such additional blowout, cleaning, and flushing of piping as may be required.

6. Exercise all valves to ensure proper operation.

B. All piping installed by the installation Contractor shall be tight at the maximum working pressures and temperatures.

END OF SECTION 40 05 10

SECTION 40 40 00

PROCESS PIPING

PART 1 GENERAL

1.1 SUMMARY OF WORK

A. General requirements for tube, pipe, piping components, materials, fittings, valves, flanges, and installation of process piping systems applicable to ASME B31.3.

B. Testing of completed piping installations/modifications.

C. Normal Fluid Service:

1. Process Liquid (water, leachate, condensate, and caustic.)

2. Leachate.

3. Vent/Drain.

1.2 RELATED DOCUMENTS / CODES AND STANDARDS

Drawings and general provisions of the Contract Statement of Work, including Division 01 Specification Sections, apply to this Section.

The following documents and others referenced therein, form part of the Contract to the extent designated in this Section. Referenced documents are those current as of the date of this Section unless otherwise indicated.

A. American National Standards Institute (ANSI)

ANSI B18.22.1	Flat Washers

B. American Society of Mechanical Engineers (ASME)

ASME B&PVC, 2017	Boiler and Pressure Vessel Code
Section V	Nondestructive Examination
Section IX	Qualification Standard for Welding and Brazing Procedures, Welders, Brazers, and Welding and Brazing Operations
ASME B1.1	Unified Inch Screw Threads (UN and UNR Thread Form)
ASME B1.20.1	Pipe Threads, General Purpose (Inch)
ASME B16.5	Pipe Flanges and Flanged Fittings
ASME B16.9	Factory-Made Wrought Buttwelding Fittings
ASME B16.11	Forged Fittings, Socket-Welding and Threaded

ASME B16.21	Nonmetallic Flat Gaskets for Pipe Flanges
ASME B31.3, 2016	Process Piping

C. American Welding Society (AWS)

AWS D1.1/D1.1M, 2015	Structural Welding Code – Steel

D. ASTM International (ASTM)

ASTM A182	Standard Specification for Forged or Rolled Alloy and Stainless Steel Pipe Flanges, Forged Fittings, and Valves and Parts for High-Temperature Service
ASTM A193	Standard Specification for Alloy-Steel and Stainless Steel Bolting for High Temperature or High Pressure Service and Other Special Purpose Applications
ASTM A194	Standard Specification for Carbon Steel, Alloy Steel, and Stainless Steel Nuts for Bolts for High Pressure or High Temperature Service, or Both
ASTM A312/A312M	Standard Specification for Seamless, Welded, and Heavily Cold Worked Austenitic Stainless Steel Pipes
ASTM D2296	Standard Specification for Continuity of Quality of Electrical Insulating Polybutene Oil for Capacitors
ASTM D2683	Standard Specification for Socket-Type Polyethylene Fittings for Outside Diameter-Controlled Polyethylene Pipe and Tubing
ASTM D2996	Standard Specification for Filamen-Wound “Fiberglass” (Glass-Fiber-Reinforced Thermosetting-Resin) Pipe
ASTM D2997	Standard Specification for Centrifugally Cast “Fiberglass” (Glass-Fiber-Reinforced Thermosetting-Resin) Pipe
ASTM D3261	Standard Specification for Butt heat Fusion Polyethylene (PE) Plastic Fittings for Polyethylene (PE) Plastic Pipe and Tubing
ASTM D3350	Standard Specification for Polyethylene Plastics Pipe and Fittings Materials

E. Hanford Document

HNF-27957	200 Area ETF, Load-In, and LERF Pipe Class Specification

F. Manufacturers Standardization Society (MSS)

MSS SP-97	Integrally Reinforced Forged Branch outlet Fittings – Socket Welding, Threaded, and Buttwelding Ends

G. Washington Adminstrative Code (WAC)

WAC 173-303-640	Dangerous Waste Regulations Washington State (**Note**: This requirement only applies to the EMF and 242-A condensate lines into Basin 41. WAC 173-303-640 does not apply to inter-basin transfer piping.)

1.3 SUBMITTALS

A. See contract Statement of Work for submittal procedures.

B. Action Submittals – Materials:

1. Catalog Data: Include the Manufacturer name, model number, parts list, and brief description of equipment and its basic operational features.

2. Design Data, Evaluations, and Calculations: An item may be considered unlisted due to its component type or its material of construction. Such items shall adhere to the items below, respectively.

   a. Items that are unlisted due to component type shall be in accordance with ASME B31.3, paragraph 326.1.2 for metallic or A326.1 for non-metallic piping components.

   b. Items that are unlisted due to material of construction shall be in accordance with ASME B31.3, paragraph 323.1.2 for metallic or A323.1 for non-metallic piping components.

C. Action Submittals – Fabrication:

1. Qualifications.

   a. Manufacturer Qualifications are required when specified items are not supplied (see Submittals in Paragraph 1.4.B.2).

   b. Installer Qualifications.

   c. Test, Nondestructive Examination (NDE), and Inspection Qualifications Records - subcontractor and supplier inspectors are required to have certifications and experience commensurate with the examinations or inspections.

   d. Examiner Qualifications/Certifications.

2. Welder and Bonding Qualifications.

3. Welder and Bonding Qualification Records.

4. Welding Procedure Specifications (WPS).

5. Bonding Procedure Specifications (BPS).

6. Welding and Bonding Procedure Qualification Record (WPQR).

D. Test and Inspection Plan:

1. The supplier shall provide an Inspection and Test Plan and Procedures for review and approval. All inspections and tests, including inspection and testing forms, logs shall be documented and submitted for review and approval.

2. Subcontractor shall provide a Field Test, Inspection Plan, and Procedures for installed process piping and ancillary equipment.

E. Test Reports:

1. Factory Acceptance Test Report.

2. NDE Test Reports.

3. Field Test and Inspection Report.

F. Certifications:

1. Instrument Calibration Certificates for equipment used during the Factory Acceptance Test.

2. Certified Material Test Reports for metallic and non-metallic piping and components required by the code of record specified below:

a. ASTM A312/A312M.

b. ASTM D2996.

3. Certificate of Compliance to show compliance to the applicable codes and standards as identified in this Specification.

1.4 QUALITY ASSURANCE

A. Material Control Procedure:

1. Work shall be performed in accordance with an approved Material Control Procedure. This procedure shall describe the control methods and documentation used to handle and monitor the use of controlled materials (piping component, fasteners, and welding filler rod and other components).

2. The procedure shall follow manufacturer requirements for receiving, storage, handling, and preservation to minimize deterioration.

3. Segregation of carbon steel and stainless steel material and tools shall be maintained throughout fabrication.

4. The procedure shall also address procurement through processing and final assembly.

5. Subcontractor and suppliers must provide protection against the weather, acceleration forces, airborne contamination, and physical damage for the equipment procured under this Specification.

B. Inspection, Testing, and NDE:

1. The supplier shall perform inspection and testing to verify the conformance of the item to the specified requirements defined in Part 2 of this Section, as well as any supplier requirements as defined as part of the suppliers Quality Assurance (QA)/Quality Control program.

2. The supplier shall provide an Inspection and Test Plan indicating all testing and inspection functions to be performed, including hold points during fabrication and assembly, as well as during the Factory Acceptance Testing.

3. All inspection and testing functions shall be performed by qualified personnel using qualified procedures in accordance with specified requirements.

4. Hold points are required during the fabrication process to allow inspection, verification, or approval by WRPS before the supplier does further work. Hold points shall be identified within the Inspection and Test Plan, with provisions for WRPS review and acceptance. WRPS has the right to waive Hold Points at their discretion.

5. Inspection Records: The supplier shall appropriately record, submit, and maintain records documenting the inspection and/or test, then submit the completed Inspection Record as part of the QA Document Package. The status of all planned and executed inspection and testing activities shall be logged and traceable to ensure that the required inspection and testing have been performed, and any items that have failed inspection or testing are not inadvertently installed or implemented.

C. Qualifications:

1. Welder and Bonder Qualifications Subcontractor shall provide documentation that all personnel have passed relevant qualification tests per ASME B31.3 for joining processes involved, and that welding and bonding certification is current.

a. Metallic Pipe: Welders and brazers shall be qualified in accordance with ASME B31.3 Section 328.2.

b. Non-Metallic Pipe: Bonders shall be qualified in accordance with ASME B31.3 Section A328.2.

c. Steel Support Welding (not touching the pressure boundary): Qualify processes and operators to AWS D1.1/D1.1M.

2. Qualification of Examination Personnel:

a. Personnel performing other examination shall be certified in accordance with Contractor written practice. Personnel performing nondestructive examination to the requirements of ASME B31.3 shall be qualified and certified for the method to be utilized following a procedure as described in ASME B&PVC, Section V, Article 1, T-120 (e) or (f).

b. Certifications of examination personnel shall be maintained for Owners Inspector review.

c. Examination records including examiner qualifications and procedures shall be retained for at least five years per ASME B31.3, Section 346.3.

3. Owner Inspector shall be qualified in accordance with ASME B31.3 Section 340 and Construction Management – Field Engineering. WRPS shall act for DOE to designate Owner Inspectors or Representatives.

4. Manufacturer Qualifications:

a. Must have a minimum of five years of experience.

b. Must have maintenance service based within 200 miles radius of installation.

1.5 DELIVERY, STORAGE, AND HANDLING

1.6 ENVIRONMENTAL REQUIREMENTS

A. All piping shall be designed to operate in the environmental conditions specified in project requirements documents.

PART 2 PRODUCTS

2.1 THREADED JOINTS AND FASTENERS

A. Threaded joints: Unless otherwise noted, all threaded joints shall be NPT (tapered threads) complying with ASME B1.20.1. The threaded joint assembly shall be in accordance with ASME B1.20.1, 3.1.9 “Wrench-Tight Engagement between External and Internal Taper Threads.”

B. Fasteners are to be in accordance with ASME B1.1, UNS Classes 1A (external) and 1B (internal) uncoated, unless otherwise specified.

2.2 PRODUCT OPTIONS AND SUBSTITUTIONS

A. See contract Statement of Work for substitution procedures.

B. Proposal of unlisted components is strongly discouraged and will be evaluated in accordance with the contract Statement of Work. Substitutions will be allowed only if the subcontractor can demonstrate that the product can meet the same code requirements of the item specified in the design. Costs associated with evaluation of unlisted components shall be the responsibility of the subcontractor.

C. If an unlisted component alternate is proposed, the manufacturer must submit Design Data in accordance with Paragraph 1.4.B.2.

2.3 SEISMIC PERFORMANCE REQUIREMENTS

A. The piping and supports shall remain in place without separation of any parts when subjected to the design basis earthquake as represented by the seismic forces derived from the criteria indicated on the Drawings.

2.4 PIPING/TUBING/FITTINGS

A. 150 LB. 304L Stainless Steel Pipeline (ASME B31.3):

1. LERF Pipe Class M-10 (see Attachment 1).

B. 150 LB. Reinforced Thermosetting Resin Pipe (RTRP) (ASME B31.3):

1. LERF Pipe Class M-18 (see Attachment 2).

C. High Density Polyethylene (HDPE) (ASME B31.3):

1. LERF Pipe Class M-36 (see Attachment 3).

PART 3 EXECUTION

3.1 GENERAL

A. Piping Systems: Fabricate, inspect, examine, and test in accordance with ASME B31.3.

B. Piping systems include all piping components (including pressure retaining portions of instruments), pipe fixtures, clamps and supports, instrument, and mounting plates and their attachment to structural framework.

3.2 TAGGING & MARKING

A. To facilitate identification and assembly in the field, each pipe spool shall be conspicuously marked on the outside surface of each end with a spool piece identification number as identified in the isometric Drawing, Drawing, or line list.

B. Permanently attached barcode stickers are an acceptable alternative.

C. For austenitic stainless steel and nonferrous alloys, the marking paint required for piece numbers or color-coding shall contain no harmful metal or metal salts such as zinc, lead, or copper that cause corrosive attack upon heating. Marking materials shall contain no halides. Markings shall not be water-soluble.

D. Bond Identification:

1. Prepare bond identification Drawings, which show relative position of each pressure containing bond and each attachment bond to pressure retaining components.

2. Assign bond number to each pressure containing bond and each attachment bond to pressure retaining components as made. Record bond number on bond identification Drawing as bond is made.

3. Place identification symbol of bonder and bond number adjacent to each bond upon completion.

4. Do not reuse bond numbers. If bond is completely replaced, assign new number.

E. Nameplates shall be attached by seal welding, permanent adhesive, or stainless steel wire. Nameplates shall include:

1. Purchase order number,

2. Manufacturer name and address,

3. Identification number,

4. Size,

5. Pressure class (if applicable),

6. Fluid Service, and

7. System Application(s).

3.3 PREPARATION

A. Pre-Assembly:

1. Verify materials are correct before assembly, in accordance with the accepted Material Control Procedure.

2. Fastener materials shall be free of nicks, burrs, chips, dirt, and damage (inspect threads, shank, and nuts). All damaged fasteners must be replaced.

B. Cleaning:

1. After fabrication and NDE is complete and before connecting piping into existing system, clean piping internal surfaces mechanically or by flushing as follows.

a. Mechanical Cleaning: Clean interior of carrier piping system utilizing a soft bare foam pig (swab), or similar. Do not exceed the maximum operating pressure specified in the pipe codes.

b. Water Flushing:

i. Obtain direction for disposal of flushing water from WRPS prior to proceeding.

ii. Flush piping with water until effluent is clean and contains no visible particulate matter. Duration of flush shall be at least minute. Flushing pressure shall not exceed maximum operating pressure specified in pipe codes. Flushing water supply shall have sufficient capacity to produce flow velocity of 3 ft/sec minimum in largest pipe size. Flow if line shall not exceed 5 ft/sec.

c. Cap lines to maintain cleanliness.

3.4 FABRICATION

A. Piping shall be fabricated in accordance with the provided Drawings.

B. Welded and Bonded Joints:

1. Welding and bonding procedures, pre-weld and pre-bond cleaning, and weld/bond dimensions, shall be per contract Statement of Work.

2. Unless noted otherwise on the isometric Drawing, field fit-up welds/bonds shall include 6 in. of pipe beyond the length required.

3. Weld joints shall meet the approved WPS joint requirements. Bond joints shall meet the approved BPS joint requirements.

3.5 ERECTION

A. Install all piping shown on the construction Drawings per manufacturer recommended procedures and this Section.

B. Deviations from locations identified on the Drawings must be approved by WRPS and documented for incorporation into as-built Drawings.

C. Route piping in an orderly manner and maintain gradient. Route parallel and perpendicular to walls and equipment to allow service and maintenance.

D. Install piping to maintain headroom and ensure that it does not interfere with use of space or take more space than is necessary. Piping shall not block access to manholes, access covers, etc.

E. Group piping whenever practical at common elevations.

F. Wedges shall not be used to laterally contain or position pipe for closure fit-ups.

G. Valves shall be placed to permit easy operation and access and be installed upright where possible. Valve stems shall be upright or horizontal, not inverted.

H. Identification and/or traceability marks of piping components shall not be removed or hidden by surface treatment, coating, or subdividing during installation unless other identification methods are implemented to ensure that all markings are properly transferred and traceability documentation is maintained for the components. Installer must verify that items are correct for the installation and have legible identification markings.

I. Flanged Connections:

1. Contact Face Finish: Contact faces shall be as set forth in the Piping Design Tables referenced on the Design Drawings for each particular service. All raised face flanges shall have serrated facing. Contact faces for all male and female, and tongue and groove faced flanges shall have smooth tool finish, unless otherwise indicated.

J. Gaskets:

1. Gaskets for all joints shall be of such inside dimensions that no portions will project into the ports of valves, pipes, or fittings. Gaskets for male and female joints, and for tongue and groove joints, shall fit into the female or groove facing with approximately 1/32 in. clearance. Gaskets for raised-face joints shall extend to within 1/16 in. of the bolts. Plain-faced flanged joints shall have full-face gaskets with holes for bolts, unless otherwise indicated.

2. Gaskets shall be as set forth in the Piping Design Table for each particular service.

3. Spiral-wound metal gaskets shall be of manufacturer and style set forth in the Pipe Design Tables.

4. When ordering spiral-wound metal gaskets, the Installation Contractor shall specify complete joint data for each specific application, including:

a. Service (fluid to be handled by piping) and operating pressures and temperatures.

b. Flange material and pressure class.

c. Type of flange facings.

d. Bolting materials.

K. Studs:

1. All alloy steel studs shall have identification marks at one end, covering material, class, etc. Studs for low-temperature and high-temperature work shall not be interchanged when installing.

2. All steel bolts shall have Class 2A fit threads, and all nuts for steel bolts shall have Class 2B fit threads, per ASME B1.1.

L. Thread Compound:

1. Threads of all bolts and studs shall be painted with a suitable thread compound before joint is made up. The compound shall be suitable for the operating temperatures involved. For high-temperature service, special high-temperature thread compound must be used.

2. Faces of flanges and gaskets shall be wiped clean when making up all flanged joints.

3. Contact faces of all flanged joints shall come squarely together and particular care shall be exercised in pulling up flanged joints to prevent any overstressing of flanges, bolts, or studs.

4. No permanent fillers shall be used between flanges, except where specifically indicated on the design Drawings.

M. Field Welding/Bonding:

1. Cut pipe using methods that result in clean straight cuts. Cut nonmetallic pipe in accordance with manufacturer recommendations.

2. Keep piping systems clean. Once fabrication has started, plug or cap ends of piping when installation is not in progress to prevent entry of dirt of other foreign material. Cap or plug openings in fabrication pipe section until installation of piping system. Cap ends if work is not to be performed on pipe or spool within 4 hours, or, if due to environmental conditions, debris or water can enter pipe.

3. Protect outdoor welding or bonding operation from rain and wind by using barriers.

4. Complete piping welds or bonds before making tie-in welds or bonds to fixed items.

5. Adhesive minimum cure times and temperatures shall be in accordance with manufacturer recommendations.

6. Prevent movement of adhesive bonded joints until adhesive has hardened.

7. It is the responsibility of the Installation Contractor to review and evaluate the location of the field welds/bonds on the Drawings, and to give a feedback to the Consulting Engineers whenever field weld/bond location needs to be relocated.

8. Welding filler metal chemistry shall match that of the base material, unless otherwise specified. Similar metallurgical properties, i.e., yield strength equal to or greater than base metal, equal or better corrosion-erosion resistance, and equal or better thermal properties shall be produced.

9. The application of heat to correct weld distortion and dimensional deviations in austenitic stainless steels is prohibited.

10. Preparation of weld ends and fit-up shall be in accordance with the requirements of ANSI/ASME standards. Base metals for butt weld joints shall be prepared by machining or mechanized oxygen cutting. In specific instances where the use of the above equipment is impractical, written permission from the Owner must be secured if hand oxygen cutting is to be substituted. All slag, irregularities, and thermally affected areas shall be removed from oxygen cut ends and hand ends shall be ground smooth.

11. Backing rings shall not be used in any piping system without prior written approval of the Owner. Backing rings, where allowed by Owner, shall be of the flat split ring type. The material of the backing rings shall be compatible with the composition of the pipe with which it is used.

12. Welding pre-heat and interpass temperature shall be maintained in accordance with the requirements of the applicable code. Electric or gas heat sources, that provide a uniform application of heat over the weld area, shall be used in accordance with ANSI/ASME B31.1 Section 131.

13. Stress relieving of all welds shall be performed in accordance with the requirements of the applicable piping code. All welding zones, bends, and hot-formed sections shall be fully stress relieved as required by the applicable code.

14. Wherever possible, stress relieving shall be performed by slowly heating the entire assembly to the specified temperature, holding the temperature for the required length of time, and then allowing the assembly to cool. Where this procedure is impractical, local stress relieving may be employed.

15. Pipe bending shall be used only when specifically required or where the use of elbows is impractical. All bends shall be smooth, without buckles, and truly circular. The allowable flattening, as determined by the difference between the minor and major axes, shall not be greater than 5% of the nominal diameter. Allowance shall be made for thinning of the pipe wall in accordance with the requirements of Paragraph 102.4.5 of ASME B31.1 to assure that minimum wall thickness after bending is not less than the minimum wall thickness required.

16. All lugs, ears, and other attachments for support of piping shall be welded to the piping. Attachments for piping systems that must be stress relieved shall be welded to the pipe prior to final stress relieving. Attachments on shop fabricated piping which must be stress relieved shall be shop welded to the piping.

17. Field-welding on pressure parts shall be stress relieved as required by applicable codes.

18. The Installation Contractor shall submit welding procedures, stress-relieving procedures, and procedure qualification records to the Owner for review and approval prior to performing any welding.

19. Any combustible material or electric cables beneath or adjacent to welding operations shall be protected against sparks, splatter, and molten material. The Installation Contractor shall ensure that safe conditions exist prior to and during any welding in areas where coal dust and/or gas may be present. The Installation Contractor shall be responsible for supplying any portable ventilation or other equipment necessary to ensure that safe conditions exist and are maintained.

20. All welds that have been made by the Installation Contractor for temporary attachment shall be properly removed and the surfaces of the present work shall be finished clean and smooth. Appropriate NDE shall be implemented to verify there are no resultant defects.

N. Non-metallic Joints:

1. Joints in RTRP and HDPE piping shall be as required by the application. All joints shall be made by certified joiners or bonders. Copies of certifications shall be made available to the Owner upon request. Individuals shall be trained and certified by the manufacturer for the specific pipe brand, type of joint, and pipe sizes to be used

O. Threaded Joints:

1. Compound or lubricant used on bolt threads shall be suitable for the service conditions and shall not react unfavorably with either the service fluid or the piping material. Reference manufacturer recommendations for suitable compounds and lubricants. Lubricant for stainless steel shall contain no chloride.

P. The threaded joint assembly shall be in accordance with ASME B1.20.1 3.1.9 “Wrench-Tight Engagement between External and Internal Taper Threads.”

Q. Final Assembly Cleaning:

1. Subcontractor shall be responsible for the cleanliness and integrity of the system. Internal and external of pipe, tube, and components shall be free of loose scale, sand, dirt, paint, metal chips, filings, flux, slag, weld spatter, mill scale, rust, grease, oil, waxes, or other contaminants that are easily seen with the unaided eye.

2. Consult manufacturer recommendation for the use of acids and cleaning agents to prevent damage. Cleaning agents used with stainless steel systems shall contain no more than 50 ppm halide content.

3. Ensure safeguards are taken to protect personnel from hazards of cleaning, which may include but not be limited to flying particulates, corrosive chemicals, and harmful vapors.

4. A suitable chemical and/or mechanical cleaning method shall be used, if necessary, to clean all surfaces.

3.6 INSULATION INSTALLATION

A. Follow Section 40 42 13, "Thermal Insulation for Piping and Equipment," as applicable.

3.7 EXAMINATION, TESTING, AND INSPECTION

A. For the purposes of this Section, the subcontractor (constructor) is responsible for all tasks identified as examination and testing. CWI activities are considered examination. Owner Inspector activities are considered inspection.

B. Examination:

1. Pipe examinations shall be performed after fabrication, after required heat treatment, and before leak testing.

2. Both the extent of examination and acceptance criteria shall be in accordance with ASME B31.3, paragraph 341 Examination and Section A341 Examination for non-metallic systems, as applicable.

3. When pneumatic testing is planned 100% of all threaded, bolted, and other mechanical joints shall be examined.

4. Any items rejected because of defects shall be repaired, replaced, and examined per this Section and ASME B31.3.

5. Methods of examination shall be per ASME B31.3 Section 344.

6. In-process examination of welds may replace radiographic or ultrasonic volumetric analysis for all welding per ASME B31.3, Section 344.7.

7. Notify WRPS Construction Representative at least 24 hours (1 working day) in advance to arrange for onsite witnessing of the above described testing (a hold/witness point) by an Independent Qualified Installation Inspector (IQII), or an Independent Qualified Registered Professional Engineer (IQRPE), as required by WAC 173-303-640. (**Note**: This requirement only applies to the EMF and 242-A condensate lines into Basin 41. WAC 173-303-640 does not apply to inter-basin transfer piping.)

C. Testing:

1. Pressure test piping system per Section 22 08 13, "Testing for Piping."

a. Pressure testing is applicable to stainless steel piping (M-10) and the RTRP piping (M-18). No pressure testing shall be conducted on the HDPE piping (M-36)

D. Inspection:

1. Owner Inspector shall have access to any and all design, fabrication, manufacture, heat treatment, assembly, erection, examination, testing, records, documentation or other project information or activities to verify that all required examinations and testing have been completed and to inspect the piping to the extent necessary to be satisfied that it conforms to all applicable examination requirements of the Code and of the engineering design and to perform the role defined in ASME B31.3.

2. Owner Inspector is the final authority on acceptance of the project examination or test.

SECTION 40 40 00 – ATTACHMENT 1

LERF PIPE CLASS M-10

150 LB. 304L Stainless Steel Pipeline (ASME B31.3)

1. **SERVICE**
   Process piping used at the Liquid Effluent Retention Facility (LERF), including the following services:

   LCH (Leachate) PC (Process)
   VE (Vent) DR (Drain)

2. **GENERAL**
3. **MAXIMUM OPERATING CONDITIONS**

Service	PC	LCH	VE/DR
Temperature (°F):	150	150	150
Pressure (PSIG):	150	100	50

4. **PIPE CLASS SPECIFICATION**

Pipe	**1/2" Thru 2"**	**3" Thru 4"**
Construction	Welded or Seamless	
Material	Stainless Steel, ASTM A312, Grade TP 304L	
Schedule	40S	10S/40S (as specified on drawing)
All Fittings	**1/2" Thru 2"**	**3" Thru 4"**
Type:	Socket Welded/Threaded (as specified on drawing)	Butt Welded
Material:	ASTM A182 Gr F 304L	ASTM A403 WP-S 304L
Dimension:	ASME B16.11	ASME B16.9
Branch Connections		
Instrument, Vent, Drain, and Branch:	Use socket welded or threaded tees for pipe sizes 2" and less. For larger pipe sizes, use butt-welded tees for connection of equal size up to two sizes smaller. Otherwise, use Sockolets®[16], Weldolets®[16], or Thredolets®[16] as applicable.	
Dimension:	ASME B16.9 or B16.11 for tees, MSS SP-97 for O-Lets. Weldolets to be ASTM A182 F304L, same schedule as pipe.	
Pipe Runs	**1/2" Thru 2"**	**3" Thru 4"**
Type:	Socket Couplings	Butt Weld
Unions	**2" (DR only)**	**½" Thru 4" (All Other Services)**
Type:	Class 3000 Threaded, 304 Stainless Steel	None
Flanges	**All Sizes**	
Type:	Raised Face Weld Neck	
Material:	Class 150 Forged Stainless Steel, ASTM A182, Grade F 304L	
Dimension:	ASME B16.5	
ASME Rating:	150 LB	
Gaskets	**All Sizes**	
Type:	1/8" Thick Garlock 3700 Compressed Fiber Sheet.	
Dimension:	ASME B16.21	
Bolting	**All Sizes**	
Type:	Continuously Threaded Stud Bolt with two nuts	
Stud:	Stainless Steel, ASTM A193, Grade B8 CL2	
Nut:	Heavy Hex, ASTM A194, Grade 8	
Washer:	Standard Stainless Steel, ANSI B18.22.1	

[16] Sockolet, Weldolet, and Thredolet are registered trademark of Bonney Foreg & Tool Works Corporation, Allentown, Pennsylvania.

SECTION 40 40 00 – ATTACHMENT 2

LERF PIPE CLASS M-18

150 LB. Reinforced Thermosetting Resin Pipe (RTRP) (ASME B31.3)

1. SERVICE

Process piping used at the Liquid Effluent Retention Facility (LERF), including the following services:

PC (Process)
DR (Drain)

2. GENERAL

- Double containment piping is utilized where no secondary containment (such as catch basin) is provided.
- Carrier and containment pipe is Conley Double Containment FRP Pipe utilizing Conley Aromatic amine cured epoxy resin.

3. MAXIMUM OPERATING CONDITIONS

Service	PC	DR
Temperature (°F):	150	150
Carrier pipe pressure (PSIG):	150	50
Containment pipe pressure (PSIG):	50	—

4. PIPE CLASS SPECIFICATION

Pipe			
Construction	Filament Wound Fiberglass-Reinforced Thermosetting Epoxy Resin Pressure Pipe		
Material	ASTM D2996, Type 1, Grade 1, Class F (RTRP-11FW)		
Minimum Reinforced Wall Thickness	**1”**	**3” and 4”**	**6” and 8”**
	0.120”	0.100”	0.110”
ASTM D2996 Designation Codes:	**All Sizes**		
	RTRP-11FW1-2113		
All Fittings	**All Sizes**		
Type:	Filament Wound with Integral Socket. Inner and Outer Carrier/Containment Fittings as a Single Unit When Double Containment is Required		
Material:	Same as Pipe		
Rating:	Same working pressure as pipe		
Dimension:	Non-Standardized		
Flanges	**All Sizes**		
Type:	Flat Face, Filament Wound with Integral Sockets		
Material:	Fiberglass-Reinforced Thermosetting Resign w/pressure rating equal or greater to piping material		
Dimension:	ASME B16.5		
ASME Rating:	150 LB		
Note:	Flanges shall be from same manufacturer and resin system as pipe		
Gaskets	**All Sizes**		
Type:	3/16” Thick Full-Face EPDM Sheet with hardness of 50-70 durometer on Shore A scale.		
Dimension:	ASME B16.21		
Bolting	**All Sizes**		
Type:	Bolts or Studs		
Stud:	Alloy Steel, ASTM A193, Grade B8 CL2		
Nut:	Heavy Hex, ASTM A194, Grade 8		
Washer:	Standard Stainless Steel, ANSI B18.22.1		

SECTION 40 40 00 - ATTACHMENT 3

LERF PIPE CLASS M-36

High Density Polyethylene (HDPE) (ASME B31.3)

1. **SERVICE**

   Process piping used at the Liquid Effluent Retention Facility (LERF), including the following services:

   RB-R (Retention Basin Riser) RB-SR (Retention Basin Sample Riser)
   LCH-R (Leachate Riser) Anchor Pipes

2. **GENERAL**

   - The following information shall be continuously marked on the pipe or spaced at intervals not exceeding 5-ft:

     1. Name and trademark of pipe manufacturer
     2. Nominal pipe size
     3. Standard dimensional ratio (SDR)
     4. PE 340820B
     5. Manufacturer standard reference
     6. A production code from which the date and place of manufacturer can be determined.

3. **MAXIMUM OPERATING CONDITIONS**

Service	
Temperature (°F):	120
Pressure (PSIG):	0

4. **PIPE CLASS SPECIFICATION**

Pipe	**1 ½" Thru 6"**		**10" Thru 14"**
Construction	High-Density Polyethylene Pipe		
Material	ASTM D3350, Material Designation Code PE340820B		
Schedule	SDR 11		SDR 26
All Fittings	**1 ½" Thru 4"**	**6" Thru 10"**	**14"**
Type:	Molded Socket	Molded Butt	Fabricated
Material:	HDPE (same as pipe) per ASTM D3350		
Rating:	160 PSIG	160 PSIG	120 PSIG
Dimension:	ASTM D2683 or ASTM D3261		
Flanges	**All Sizes**		
Type:	Flange Adapter End with Metal Backing Ring, Forged Stainless Steel, ASTM A182 Grade F316. ASTM D2683 or ASTM D3261.		
Material:	HDPE (Same as Pipe) Flange Adapter		
Dimension:	ASME B16.5		
ASME Rating:	150 LB		
Note:	Flanges shall be from same manufacturer and resin system as pipe		
Gaskets	**All Sizes**		
Type:	3/16" Full-Face Teflon-Bonded EPDM w/hardness of 50 to 70 durometer on the Shore A scale		
Dimension:	ASME B16.5		
Bolting	**All Sizes**		
Type:	Bolts or Studs		
Stud:	Alloy Steel, ASTM A193, Grade B8 CL2		
Nut:	Heavy Hex, ASTM A194, Grade 8		
Washer:	Standard Stainless Steel, ANSI B18.22.1		

END OF SECTION 40 40 00

SECTION 40 41 00

HEAT TRACING FOR PROCESS PIPING AND EQUIPMENT

PART 1 GENERAL

1.1 SUMMARY OF WORK

A. Installation and testing of heat tracing for process piping and equipment.

1.2 RELATED DOCUMENTS / CODES AND STANDARDS

Drawings and general provisions of the Contract Statement of Work, including Division 01 Specification Sections, apply to this Section.

The following documents and others referenced therein, form part of the Contract to the extent designated in this Section. Referenced documents are those current as of the date of this Section unless otherwise indicated.

A. American National Standards Institute (ANSI) / American Society of Mechanical Engineers (ASME)

ANSI/ASME A13.1	Scheme for the Identification of Piping Systems

B. National Electrical Contractors Association (NECA)

NECA 1	Standard Practices of Good Workmanship in Electrical Construction
NECA 202	Standard for Installing and Maintaining Industrial Heat Tracing Systems

C. National Fire Protection Association (NFPA)

NFPA 70, 2017	National Electrical Code (NEC)

1.3 SUBMITTALS

A. See the Statement of Work for the submittal process.

B. Approval Required:

1. Submit test procedures to be used with acceptance criteria prior to testing.

2. Submit records of inspections, tests, and adjustments described in 3.3.

C. Approval not required:

1. Catalog Data: Submit manufacturer technical data for each type of heat trace cable, power terminal box, thermostat, temperature sensor, end seal, and

accessories shown on Drawings. Provide catalog sheets showing voltage, current, power ratings, operating characteristics, and enclosure details.

2. Include rated capacities, operating characteristics, specialties, and accessories.

3. Operation and maintenance instructions.

4. Test and Inspection Records: Submit records of inspections, tests, and adjustments performed under Field Quality Control.

1.4 QUALITY ASSURANCE

A. Comply with the NEC for components and installation.

B. Provide products that are listed and labeled by a Nationally Recognized Testing Laboratory for the application, installation condition, and the environment in which installed.

1.5 DELIVERY, STORAGE, AND HANDLING

A. Receive, store, protect, and handle products according to manufacturer instructions.

1.6 SERVICE CONDITIONS

B. Enclosed controllers shall perform satisfactorily in the following service conditions without mechanical or electrical damage or degradation of operating characteristics:

1. Operating ambient temperature of -25 to 115 degrees F.

PART 2 PRODUCTS

2.1 PRODUCT OPTIONS AND SUBSTITUTIONS

A. Alternate products may be accepted in accordance with the requirements of the Contract Statement of Work.

2.2 MATERIALS

A. General:

1. Furnish electric heat tracing system in accordance with the Drawing with all components, controls, and accessories required for a complete and operating system.

B. Self-Regulating, Parallel-Resistance Heating Cable System.

1. 5 W/ft Self-Regulating Heat Trace Cable, 120V. Raychem 5BTV1-CT.

2. 5 W/ft Self-Regulating Heat Trace Cable, 240V. Raychem 5BTV2-CT.

3. End Seal Kit. Raychem E-150.

4. Power Connection box with Red Indicating Light. Raychem JBM-100-L-A.

5. Splice Kit. Raychem S-150.

6. Tee, above grade. Raychem T-100.

7. Glass Tape. Raychem GS-54.

8. Markers: Furnish hose markers with the words "ELECTRIC TRACED" printed with UV-stable black ink on a durable yellow background. Meet the requirements of the ANSI/ASME A13.1. Provide materials and styles that are suitable for outdoor environments.

PART 3 EXECUTION

3.1 PREPARATION AND EXAMINATION

A. Examine surfaces and substrates to receive electric heating cables for compliance with requirements for installation tolerances and other conditions affecting performance.

B. Surfaces to receive heat tracing shall be cleaned of all dirt, oil, scale, rust, and other foreign matter, and shall be dry and free of frost during installation of heat trace cable.

C. Ensure surfaces in contact with electric heating cables are free of burrs and sharp protrusions.

3.2 INSTALLATION

A. Install heating cable according to the manufacturer instructions, and in accordance with NECA 202.

B. Install heating cable across valves, instruments, flexible piping, and pipefittings in a manner to allow for replacement of components and with slack cable to allow for movement without damage to cable.

C. Install heating cables after piping has been tested and before insulation is installed.

D. Waterproof all terminations and electrical connections.

E. Set field adjustable switches and thermostats.

F. Attach heating cable directly to piping using the heating cable manufacturer adhesive backed glass fiber tape.

G. Connect wiring in accordance with Section 26 05 19, "Low Voltage Electrical Power Conductors and Cables."

H. Ground equipment in accordance with Section 26 05 26, "Grounding and Bonding for Electrical Systems."

I. Notify Buyer prior to backfilling or installing insulation on the hose. Obtain approval from Buyer prior to beginning backfill or covering hose.

J. Perform examination on connecting of heating cable before application of insulation and jacketing over joints and other materials and components.

K. Install warning signs along piping system, at intervals not exceeding 20 ft, with the words "ELECTRIC TRACED." Install labels so they will be visible during normal operations. Also install warning signs on or adjacent to equipment in the piping system that requires periodic servicing.

3.3 FIELD QUALITY CONTROL

A. Clean, inspect, test, adjust, and energize equipment in accordance with manufacturer instructions.

B. Inspect each heat trace cable and device for physical damage, proper connection and grounding, and proper anchorage to supports.

C. Coordinate inspections and tests with those required by other sections.

D. Perform tests after heat trace cable installation and before covering.

E. Note ambient temperature at heat trace sensor during tests.

F. Perform the following listed tests.

1. Test cable for continuity and insulation resistance before energizing.

2. Test cables to verify rating and power input. Energize and measure voltage and current simultaneously.

3. Test for continuity, insulation resistance, and input power before backfilling or covering cables.

G. Cables and devices will be considered defective if they do not pass tests and inspections. Remove and replace defective heating cables and devices, and retest.

H. Protect installed heating cables and devices from damage during construction. Remove and replace heating cables or devices damaged during construction, and retest.

I. Keep records of inspections, tests, and adjustments. Prepare Test and Inspection Report, and submit in accordance with Submittal requirements.

END OF SECTION 40 41 00

SECTION 40 42 13

THERMAL INSULATION FOR PIPING AND EQUIPMENT

PART 1 GENERAL

1.1 SUMMARY OF WORK

This section prescribes the minimum requirements for thermal insulation for piping and equipment.

The project specific materials, quantities, and attributes are shown on the Project Drawings, equipment list, data sheets, and/or other documents.

The work shall include, but not be limited to the following:

A. Installation of insulation and blanketing/jacketing on both the double encased FRP piping (unburied and buried), and catch basin stainless steel piping. Heat tracing layout and requirements under insulation is as indicated on the desing Drawings.

1.2 RELATED DOCUMENTS / CODES AND STANDARDS

Drawing and general provisions of the Contract Statement of Work apply to this Section.

The following documents and others referenced therein, form part of the Contract to the extent designated in this Section. Referenced documents are those current as of the date of this Section unless otherwise indicated.

A. American Society of Mechanical Engineers (ASME)

ASME B31.3	Process Piping Code

B. ASTM International (ASTM)

ASTM C552	Standard Specification for Cellular Glass Thermal Insulation
ASTM C1729	Standard Specification for Aluminum Jacketing Insulation

1.3 SUBMITTALS

A. See the Contract Statement of Work for the submittal process.

B. Insulation Samples: A sample of each type of pipe and equipment insulation, together with thermal efficiency tables or curves based on a recognized authority, shall be submitted to the Owner for their information, if requested.

1.4 QUALITY ASSURANCE

It shall be Contractor responsibility to ensure that all insulation and lagging is properly applied and secured, so that it will not come loose or unduly deteriorate under the operating conditions to which it will be subjected.

The workers employed by the Contractor in the application of the materials shall be skilled in their work and under the direction of expert foremen. Workmanship and finish shall be of the highest quality and must be acceptable to the client.

In the event of variance between the general requirements delineated in this Section and the particular requirements set forth in the Specification, the Specification shall take precedence.

Contractor shall be solely responsible for advising the Purchaser to remedy any conflicts between the Specification and Contractor design, including performance and levels of quality. Contractor agrees that its obligations, liabilities, and warranties shall not be diminished or extinguished due to its meeting the requirements of the Specification.

A. Substitutions:

1. Mention of material by name or products of certain manufacturers in the Specification, Design Drawing, etc., is made to ensure that the proper quality and/or type is provided. No substitutions for said items will be permitted unless approval is granted in writing by the Purchaser.

1.5 DELIVERY, STORAGE, AND HANDLING

A. See Contract Statement of Work for general requirements.

1.6 DESIGN REQUIREMENTS:

A. Piping System Drawings:

1. Certain small piping systems (or smaller sized pipe runs) are only shown diagrammatically, or may be called for to terminate at a certain point not shown physically on the Drawings. Contractor shall furnish and install insulation for any such piping in order to complete the system whether shown physically or not.

PART 2 PRODUCTS

2.1 SUBSTITUTES

A. See Contract Statement of Work for substitution approvals.

2.2 MATERIAL REQUIREMENTS

A. Insulating materials shall be as specified for each particular application.

B. The use of asbestos in any insulating materials, cloths, tapes, etc., is prohibited.

C. All insulating materials shall be new and suitable for the purpose intended and shall be of such durability as to be capable of giving effective service for the life of the plant under normal operating conditions.

D. Contractor shall not install any damaged insulation. Insulation that is damaged during its installation shall be removed and replaced by Contractor at their expense.

E. All insulating materials, adhesives, finishes, etc. shall be received in the manufacturer unopened cartons and shall be kept dry and protected against the elements during storage and during all stages of application.

F. All insulating materials shall conform to the respective requirements of the applicable ASTM Specifications. All references to the ASTM Specifications are to the latest issue in each case.

G. Catch basin stainless steel piping insulation:

1. Fiber encased blankets. Ceramic blanket (Cerablanket), 2400 Deg. F classification temperature, covered with white fiberglass fabric impregnated with silicone rubber (Armatex SF17) to a finished weight of approximately 17 ounces per square yard, and fasten in place with Bergen hooks, washers, and stainless-steel wire.

H. Double encased FRP (buried and non-buried) piping insulation:

1. Molded, sectional, cellular glass pipe insulation meeting requirements of ASTM C552, complete with factory applied metal jacketing similar to Pittsburg Corning FOAMGLASS with Pittwrap pre-jacketing. Metal jacketing shall be painted white.

I. Piping insulation thickness:

1. Maximum thickness is 2 in. of insulation with a thermal conductivity of 0.28 Btu-in/(hr-ft^2-R) at 50 °F or less.

2. Minimum thickness of insulation with a thermal conductivity of 0.28 Btu-in/(hr-ft^2-R) at 50 °F is listed below in Table 2-1.

Table 2-1. Minimum Insulation Thickness with Associated Pipe Sizes.

Pipe Size	Minimum Allowed Insulation Thickness
1/2"	¼”
1”	½”
1-1/2"	½”
3"	1”
4"	1”
6"	2”
8”	2”

2.3 SOURCE QUALITY CONTROL

A. Contractor shall prepare and submit an Inspection and Test Plan for review and acceptance by the Purchaser. The plan shall address all examination, testing, and submittal of documentation required by the governing code.

2.4 FINISH REQUIREMENTS

A. All painting and coating of insulation shall be in accordance with Section 09 91 00, “Painting,” or as approved by the Purchaser.

PART 3 EXECUTION

3.1 GENERAL

A. Insulation shall not be applied to piping until all piping tests have been completed, subject to the approval of the Purchaser. Insulation shall not be applied on flanged joints until approval is given by the Purchaser.

3.2 PREPARATION

A. Before insulation is applied on any piping or equipment, the surfaces to be insulated shall be cleaned and wire brushed, if necessary, to remove any accumulation adhering to the surfaces. A stainless steel brush shall be used on any stainless steel piping requiring brushing. Additionally, any surface where adhesion to the surface is used as a means to support the insulation, the surface shall be free of all oil film.

3.3 INSTALLATION

A. Insulation Fastening Wire:

1. Fastening wires for pipe and equipment insulation shall be in accordance with the following:

   a. Single-layer insulation applications shall be fastened with 16 gauge or heavier galvanized steel wire.

B. Joints:

1. All insulation shall be laid with tightly butted joints.

2. All forms of insulation shall present a smooth even surface so that no joints or wire grooves will appear on the finished surface.

C. Fabric Encased Blankets:

1. Blankets shall be tufted on 6-in. centers, starting 3 in. back from the edge. Tufting shall be performed by the following method:

a. No. 16 BWG Type 300 series stainless steel wire shall be looped through two double eyelet washers and the blanket in a sandwich-like manner. The wire shall be of sufficient length so that its free ends can be twisted together and bent down flat against the washer. In addition, blanket fastening devices, consisting of either 1/8 in. 300 series stainless steel closed rings, (lacing eyes), or an extra double eyelet washer shall be secured to the washers and wires located 3 in. back from the blanket edge.

b. All blankets shall have square edges with seams that are fourfold and stapled and/or stitched continuously with a Type 300 series stainless steel wire. Seams sewn with hog rings are not acceptable.

c. Filler material shall consist of blanket insulation.

d. Packing with loose or bulk filler is not acceptable.

D. Removable Covers for Valves and Fittings:

1. Removable, reusable covers for valves, expansion joints, flanges, instruments, etc., shall be provided to accommodate maintenance. Removable covers shall be of the Fabric Encased Blankets type.

END OF SECTION 40 42 13

SECTION 40 70 00

INSTRUMENTATION AND CONTROLS

PART 1 GENERAL

1.1 SUMMARY OF WORK

A. This section covers the work necessary to procure, install, adjust, document, test, and support startup of systems.

B. Instrument Data Sheets are provided in Appendix A of this Section.

1.2 RELATED DOCUMENTS / CODES AND STANDARDS

Drawingss and general provisions of the Contract Statement of Work, including Division 01 Specification Sections, apply to this Section.

The following documents and others referenced therein, form part of the Contract to the extent designated in this Section. Referenced documents are those current as of the date of this Section unless otherwise indicated.

A. Factory Mutual Research (FM Global)

Approval Guide, 2010 Edition

B. Hanford Document

TFC-ENG-STD-12	Tank Farm Equipment Identification Numbering and Labeling Standard

C. National Fire Protection Association (NFPA)

NFPA 70, 2017	National Electrical Code (NEC)

D. Underwriters Laboratories (UL)

UL 508A, 2013	Standard for Industrial Control Panels

1.3 SUBMITTALS

A. Submit the following in accordance with the provisions of the Contract Statement of Work.

1. Catalog Data: All Instrumentation including support equipment. Compression connectors; indicate installation tools and dies that will be used.

2. Manufacturer Installation Instructions: For each instrument, and/or control component, submit detailed installation, operations, and maintenance information.

3. Certifications that items furnished are not counterfeit or misrepresented.

4. Certificates of conformance for supplied items.

5. NIST-traceable Factory Certificate of Calibration for each instrument.

B. In general, partial submittals will not be accepted. Where partial submittals are anticipated, coordinate these requirements with the Buyer Technical Representative (BTR). Prior to submission of any submittals, provide a summary of the anticipated submittals to be provided. Examples of acceptable partial submittals are:

1. Early purchase of long lead items.

2. Components, device data sheets, and catalog cuts.

3. Fabrication Drawings.

C. Project Record Documents: Submit project record documents including specified certifications, calibration reports, and all field test and inspection reports.

1.4 QUALITY ASSURANCE

The Seller shall comply with the following Quality Assurance (QA) requirements in addition to those of the Contract Statement of Work.

A. Comply with the NEC for components and installation.

B. Provide products that are listed and labeled by a Nationally Recognized Testing Laboratory (NRTL) for the application and environment in which installed.

1. If a product is not listed by an NRTL (e.g., UL or FM) and if an NRTL is not available, submit vendor literature to Buyer for approval. Literature shall include product Specification and description of intended application.

C. All control panels/enclosures shall be UL 508A listed, labeled, and fabricated per the Design Drawings.

D. Certificates of Conformance (C of Cs) for all materials and equipment shall:

1. Identify the purchased material or equipment.

2. The quantity of purchased material or equipment.

3. Identify the purchase order number.

4. Identify the specific procurement requirements, such as codes, standards, and other Specifications.

5. Be signed or otherwise authenticated by a person who is responsible for the QA function.

6. Each C of C shall be unique for each shipment.

1.5 DELIVER, STORAGE, AND HANDLING

A. Receive, store, protect, and handle products according to manufacturer instructions.

PART 2 PRODUCTS

2.1 GENERAL

A. Instrumentation and Controls, electrical components, terminals, wires, and enclosures shall be UL recognized or UL listed; or

B. Provide products that are listed and labeled by a NRTL agency for the application and environment in which installed.

2.2 CLEANLINESS AND FOREIGN MATERIAL EXCLUSION

A. The Seller is responsible for ensuring items provided are free from foreign material during manufacturing, shipment, storage, and installation.

B. The Seller shall demonstrate established Cleanliness and Foreign Material Exclusion practices to ensure that new, repaired, or refurbished parts and equipment delivered under this Order are free from oil or grease (not being used as a preservative or protective coating), machine tailings, dirt, mill scale, weld splatter, residue, broken or loose parts, contaminants, or other foreign material that may adversely affect the operation of the item(s) provided or may be introduced into connecting equipment and systems. Other examples of foreign material include loose fasteners, debris resulting from machining or other manufacturing processes, and tags or labels used in the manufacturing process.

C. Seller is responsible for ensuring, via inspection or other means, that no foreign material or contaminants are present, including internal surfaces and cavities of the equipment.

D. Additional measures shall be taken by the Seller to prevent foreign material from entering the equipment, including protective devices such as caps, plugs, or covers. Protective devices shall ensure material compatibility with the protected item (e.g., protective devices containing halogens or heavy metals should not be used on stainless steel items).

E. Protective devices such as caps and plugs shall be clearly visible. Protective devices made of clear materials are prohibited. Protective devices that have been painted over during production processes shall be replaced or otherwise made clearly visible. Seller shall provide any protective devices needed for routine maintenance such as dust covers, end caps, plugs, or blanking flanges.

F. Precautions shall also be taken to ensure foreign material is not introduced during packaging and shipping. If the equipment is shipped with other parts (such as seals, gaskets, lubricants, or mounting hardware), precautions should be taken to ensure smaller items cannot be introduced into openings or cavities of larger parts and

equipment. Where appropriate, every item included with shipment should be identified in the packing list or by other means. If desiccants or other preservatives are used to protect the item(s), the affected part of equipment shall be clearly labeled or tagged with information including the type of preservative, its location, and any special instructions pertaining to its removal prior to installation or other applicable information such as quantity of desiccant packages.

2.3 PRODUCT OPTIONS AND SUBSTITUTES

A. Refer to the Contract Statement of Work.

2.4 ENCLOSURES

A. Connections to enclosures (e.g., conduit) shall maintain the enclosure NEMA rating.

2.5 RACEWAYS

A. Conduit and Boxes per the Drawings and Section 26 05 33, "Raceways and Boxes for Electrical Systems."

2.6 INSTRUMENTATION

A. Instrumentation shall be per the attached Instrument Data sheets.

2.7 INSTRUMENTATION WIRE

A. Provide NRTL-listed instrumentation wiring as shown on the Drawings (Cable Schedule TBD).

2.8 IDENTIFICATION PRODUCTS/LABELING

A. Instruments shall be labeled per the Instrument Data Sheets and the design Drawings.

B. The nominal label size is NH (1.5 x 3 in.). Labels may be larger or smaller when warranted by installation requirements.

1. Tags shall show the following:

a. Equipment Identification Number

2. Tag attachment wire: Tags shall be attached using a 0.063 in. 7 x 7 strand cable or other approved method.

C. For on-site fabricated labels, unless otherwise specified, laser-engraved stainless steel shall be used. See TFC-ENG-STD-12 for additional details.

PART 3 EXECUTION

3.1 GENERAL

A. Ensure installation Lockout/Tagout in place where required prior to installation.

B. Procure and install new instruments, displays, indicators enclosures, and associated components, conduit, cables, and accessories in accordance with the Drawings, Data Sheets, and manufacturer instructions.

C. Install Government Furnished Equipment in accordance with the Drawings.

D. Remove/modify/relocate existing instruments, enclosures, and associated components, conduit, cables, and accessories in accordance with the Drawings.

E. Attach identification tags or nameplates to instruments with wire or as shown on the Drawings. Cable and conductor labels shall be installed per design Drawings.

F. Install labels where indicated and at locations for best convenience of viewing without interference with operation and maintenance of equipment.

G. Install and terminate cables to the instruments, terminal boxes, enclosures, and panels as shown on the Drawings.

H. At the end of each workday, remove materials, scraps, and debris from interior and exterior of equipment, the worksite, and the facility.

3.2 INSTALLATION OF INSTRUMENTS & CONTROLS

A. Install instruments per the Drawing and the manufacturer directions.

B. Instruments shall be grounded in accordance with the NEC and as shown on the Drawings.

C. Tubing shall be supported as shown on the design Drawings.

D. Before formal testing, performs inspections and support informal testing to ensure that items being tested will respond correctly, e.g., valve control switch opens and closes a valve as expected.

3.3 INSTALLATION OF CONDUCTORS AND CABLES

A. Install in accordance with the NEC, the Drawings, this Section, and Division 26.

B. General Requirements for Instrumentation Wiring and Cabling:

1. Terminate all conductors; no cable shall contain un-terminated elements unless shown on the Drawings. Make terminations only at indicated outlets, terminals, and cross-connect and patch panels.

2. Cables/wires may not be spliced.

3. Route and train conductors to terminal points without exceeding manufacturer limitations on bending radii.

4. Do not install bruised, kinked, scored, deformed, or abraded cable. Remove and discard cable if damaged during installation and replace it with new cable.

5. Do not nick conductors when removing insulation.

6. Do not cut conductor strands to fit into connectors, splices, adapters, or terminals.

7. Make connections using clean connection surfaces.

8. Cold-Weather Installation: Install only if temperature is within manufacturer operating temperature range.

9. Pulling Cable: Hand pull all instrumentation cables; or follow manufacturer instructions for allowable cable tension

3.4 INSTALLATION OF TUBING

A. Tubing Support: Support tubing as shown on design Drawings.

B. Install tubing raceways parallel with, or at right angles to, structural members of buildings. Make vertical runs straight and plumb.

C. Tubing and Conduit Bends:

1. Tool-formed without flattening, and of same radius.

2. Bend Radius: Equal to or larger than conduit and tubing manufacturer recommended minimum bend radius.

3. Slope instrument connection tubing in accordance with installation details.

4. Do not run liquid-filled instrument tubing immediately over or within a 3-ft plan view clearance of electrical panels, motor starters, or mechanical mounting panel without additional protection. Where tubing must be located in these zones, shield electrical device to prevent water access to electrical equipment.

5. Straighten coiled tubing by unrolling on flat surface. Do not pull to straighten.

6. Cut tubing square with sharp tubing cutter. Deburr cuts and remove chips. Do not gouge or scratch surface of tubing.

7. Blow debris from inside of tubing.

8. Make up and install fittings in accordance with manufacturer recommendations. Verify make up of tube fittings with manufacturer inspection gauge.

9. Use lubricating compound or TFE tape on stainless steel threads to prevent seizing or galling.

10. Run tubing in a workmanship-like manner to allow but not be limited to clear access to doors, controls and control panels; and to allow for easy removal of equipment.

11. Provide separate support for components in tubing runs.

12. Supply expansion loops and use adapters at pipe, valve, or component connections for proper orientation of fitting.

13. Keep tubing and conduit runs at least 12 in. from hot pipes.

14. Locate and install tubing raceways in accordance with manufacturer recommendations. Locate tubing to prevent spillage, overflow, or dirt from above.

15. Securely attach tubing raceways to building structural members.

3.5 ELECTRICAL

A. For low-voltage wiring and cabling, comply with requirements in Section 26 05 26, "Grounding and Bonding for Electrical Systems."

B. Wiring connected to instrumentation, controls, enclosures and assemblies, including power wiring shall be in accordance with requirements in Section 26 05 19, "Low Voltage Electrical Power Conductors and Cables."

C. Electrical Raceways: As specified in Section 26 05 33, "Raceway and Boxes for Electrical Systems."

3.6 IDENTIFICATION

A. Identify system components, wiring, and cabling according to Section 26 05 19, and per the installation Drawings. Individual wires in paired cables do not need individual labels.

3.7 FIELD QUALITY CONTROL

A. Testing:

1. Perform testing per this Section.

2. Furnish equipment and calibrated instruments required to perform testing.

3. Participate in Construction Acceptance Test and Acceptance Test Procedure performance.

a. BTR may actively participate in many of the tests.

b. BTR reserves right to test or retest specified functions.

c. BTR decision will be final regarding acceptability and completeness of testing.

B. Perform Tests and Inspections.

C. Tests and Inspections:

1. Visually inspect all installed items per Section 26 05 02, “Basic Electrical Requirements.”

2. Observe conductors and cables during the installation process.

a. Reject and replace entire reels, rolls, or boxes containing conductors or cables with material or manufacturing defects.

b. Reject and replace cable or conductor segments that have been kinked, dented, or otherwise damaged during handling or installation.

3. Visually inspect cable placement, cable termination, grounding and bonding, equipment and patch cords, and labeling of all components.

D. After installation of wires and cables and before electrical circuit is energized, show product capability and compliance with requirements and verify by documented inspections and tests.

E. Perform the Following Inspections:

1. Inspect conductors and cables for:

a. Freedom from material defect or physical damage.

b. Correct conductor size, material, and insulation type.

c. Correct color-coding and identification.

2. Inspect connections for:

a. Correct connector size and type according to the Specifications.

b. The use of the correct compression dies and the correct number of crimps on compression connectors in accordance with the connector manufacturer instructions.

3. Inspect Shielded Instrumentation Cables for:

a. Proper shield grounding.

b. Proper terminations.

c. Proper circuit identification.

4. Inspect Control Cables for:

a. Proper termination.

b. Proper circuit identification.

F. Perform the Following Tests:

1. Before connecting instrumentation wiring conductors, use a megohm meter in a 1-minute test to verify the insulation integrity of each conductor with respect to ground and other conductors in the same raceway.

   a. Use 500-volts DC to test instrumentation wiring and conductors.

   b. For shielded cables, leave shields connected to ground, measure, and record resistances between each conductor and its related shield.

   c. Insulation test values shall be in accordance with manufacturer published test data. In absence of such data, insulation resistances over 10 megohms are acceptable.

2. Prior to connecting conductors to equipment, test continuity to ensure proper circuit is identified to facilitate correct connection of each power circuit conductor and each control circuit conductor.

   a. Verify continuity of every wire from end to end; continuity check of vendor-supplied cables is not required if received as pre-wired assembly. Resistance shall be 10 ohms maximum. Document test results.

   b. Verify wires are connected after testing, in accordance with Drawings.

3. Test the equipment and wiring for continuity and unintentional grounds, and verify proper phase sequence and voltage at equipment served before attempt is made to operate equipment.

G. Document data for each measurement. Document tests data indicating wire/cable identity, time/date of test, witness name and test results, at a minimum. Print data for submittals in a summary report that is organized for easy retrieval of data.

H. Remove and replace defective, incorrect, or improperly installed conductors and connectors. Re-inspect and re-test replacement conductors and connectors.

I. Prepare test and inspection reports.

J. Submit test and inspection records to the Buyer Technical Representative.

SECTION 40 70 00 - ATTACHMENT 1

INSTRUMENT DATA SHEETS

Sargent & Lundy

MAGNETIC FLOWMETERS

NO	BY	DATE	REVISION
F-101	KC Veach	4/1/2020	0

SHEET 1 OF 1											
SPEC. NO. RPP-SPEC-63632										REV. 0	
CONTRACT										DATE 4/1/2020	
REQ.		P.O.									
BY KJV		CHK'D MFG								APPR.	

	1	Meter Tag No.			FE-41-1							
	2	Service			Leachate Pump Discharge							
	3	Location			Pump P-41 Discharge							
METERING ELEMENT	4	CONN's.	Line Size, Sched.		1/2 inch Sch 40							
	5		Line Material		316L SS							
	6		Connection Type		Wafer							
	7		Connection Mat'ls.		150lb flange RF, 316L SS							
	8	METER	Tube Material		MFR STD							
	9		Liner Material		ETFE							
	10		Electrode Type		Wafer							
	11		Electrode Matl.		MFR STD							
	12		Meter Casing		316 SS							
	13		Power Supply	Elect. Code	24VDC							
	14		Grounding, Type & Matl.		Chassis, 316L SS							
	15		Enclosure Class		NEMA 4X							
	16											
	17	FLUID	Fluid		LERF Basin Leachate							
	18		Max. Flow, Units		10. 4gpm							
	19		Max. Velocity, Units		11 ft./s							
	20		Norm. Flow	Min. Flow	N/A	3.2 gpm						
	21		Max. Temp.	Min. Temp.	100°F	>32°F						
	22		Max. Press.	Min. Press.	60psig	0psig						
	23		Min. Fluid Conductivity		25 uS/cm							
	24		Vacuum Possibility		none							
	25											
ASSOCIATED INSTRUMENT	26	Instrument Tag Number			FIT-41-1/ FQI-41-1							
	27	Function			Transmitter							
	28	Mounting			Mounted to I/O rack							
	29	Enclosure Class			NEMA 4X							
	30	Length Signal Cable			100 ft. (note 3)							
	31	Type Span Adjustment										
	32	Power Supply			24V DC, 2 Watts							
	33	TRANS.	4-20mA		4-20 mA							
	34				0-15 gpm							
	35	DISPLAY	Scale Size	Range								
	36		Chart Drive	Speed								
	37		Chart Range	Chart No.								
	38		Integrator									
	39	CONTR.	Modes	Output	N/A							
	40		Action	Auto-Man.	N/A							
	41											
	42	ALARM	Contact No.	Form	N/A							
	43		Rating	Elec. Code	N/A							
	44		Action		N/A							
	45	Manufacturer			Rosemount							
	46	Meter Model Number			8711-TSA-005-R-5-N0-DT							
	47	Instrument Model Number			8712E-S-R-2-A-1-N0							

Notes:
1. All level Flow meters shall require stainless steel tags.
2. All electrical equipment shall be NRTL listed.
3. Vendor cable # is 08712-0752-0001
4. Transmitter Features a local display that provides flow or totalizer.
5. All electrical equipment shall be rated NEMA 4X and operate between -25°F-115°F.

F-101.docx

Based on ISA Form S20.23
Last Saved 5/4/2020

Sargent & Lundy

MAGNETIC FLOWMETERS

NO	BY	DATE	REVISION
F-102	KC Veach	4/1/2020	0

SHEET 1 OF 1

SPEC. NO. RPP-SPEC-63632 | REV. 0

CONTRACT | DATE 4/1/2020

REQ. P.O.

BY KJV | CHK'D MFG | APPR.

	1	Meter Tag No.			FE-P41-4-1							
	2	Service			Basin 41 Pump Effluent							
	3	Location			Pump P-41 Discharge							
METERING ELEMENT	4	CONN's.	Line Size, Sched.		2 inch Sch 40							
	5		Line Material		316L SS							
	6		Connection Type		Wafer							
	7		Connection Mat'ls.		150lb flange RF, 316L SS							
	8	METER	Tube Material		MFR STD							
	9		Liner Material		ETFE							
	10		Electrode Type		Wafer							
	11		Electrode Matl.		MFR STD							
	12		Meter Casing		316 SS							
	13		Power Supply	Elect. Code	24 VDC							
	14		Grounding, Type & Matl.		Chassis, 316L SS							
	15		Enclosure Class		NEMA 4X							
	16											
	17	FLUID	Fluid		LERF Basin Effluent							
	18		Max. Flow, Units		175 gpm							
	19		Max. Velocity, Units		16.7 ft./s							
	20		Norm. Flow	Min. Flow	N/A	55 gpm						
	21		Max. Temp.	Min. Temp.	100°F	>32°F						
	22		Max. Press.	Min. Press.	60psig	0psig						
	23		Min. Fluid Conductivity		25 uS/cm							
	24		Vacuum Possibility		none							
	25											
ASSOCIATED INSTRUMENT	26	Instrument Tag Number			FIT-41-2							
	27	Function			Transmitter							
	28	Mounting			Mounted to I/O rack							
	29	Enclosure Class			NEMA 4X							
	30	Length Signal Cable			100 ft. (note 3)							
	31	Type Span Adjustment										
	32	Power Supply			24V DC, 2 Watts							
	33	TRANS.	4-20mA		4-20 mA							
	34				0-180 gpm							
	35	DISPLAY	Scale Size	Range								
	36		Chart Drive	Speed								
	37		Chart Range	Chart No.								
	38		Integrator									
	39	CONTR.	Modes	Output	N/A							
	40		Action	Auto-Man.	N/A							
	41											
	42	ALARM	Contact No.	Form	N/A							
	43		Rating	Elec. Code	N/A							
	44		Action		N/A							
	45	Manufacturer			Rosemount							
	46	Meter Model Number			8711-TSA-020-R-5-N0-DT							
	47	Instrument Model Number			8712E-S-R-2-A-1-N0							

Notes:
1. All level Flow meters shall require stainless steel tags.
2. All electrical equipment shall be NRTL listed.
3. Vendor cable # is 08712-0752-0001
4. Transmitter Features a local display that provides flow or totalizer.
5. All electrical equipment shall be rated NEMA 4X and operate between -25°F-115°F.

Based on ISA Form S20.23
Last Saved 5/4/2020

F-102.docx

Sargent & Lundy

LEACHATE LEVEL (CAPACITANCE TYPE)

NO	BY	DATE	REVISION
L-101	KC Veach	4/1/2020	0

SHEET 1 OF 1

SPEC. NO. RPP-SPEC-63760 REV. 0

CONTRACT DATE 4/1/2020

REQ. P.O.

BY KJV CHK'D MFG APPR.

GENERAL	1.	Tag Number		LIT-41-1/ LE-41-1						
	2.	Service		Water						
	3.	Line No./Vessel No.		LERF Basin 41						
	4.	Application		Leachate Level						
	5.	Function		Continuous level measurement						
	6.	Fail Safe								
PROBE	7.	Model Number		700-0005-036-BA0-35283.9-2743.2-N						
	8.	Tag Number		LE-41-1						
	9.	Orientation		15° off horizontal						
	10.	Style		Flexible cable						
	11.	Material		316L SS						
	12.	Sheath		PFA						
	13.	Insertion Length		120 ft.						
	14.	Active Length		9 ft.						
	15.	Gland Size & Mat'l.		3/4 -inch CGB						
	16.	Process Connection		1-inch NPT						
	17.	Conduit Connection		3/4-inch NPT						
TRANS.	18.	Output		4-20mA						
	19.	Tag Number		LIT-41-1						
	20.	Accuracy		0.25 span						
	21.	Model Number		UP1101-00D0-ZZZ-0						
	22.	Location		4-inch Leachate Riser						
	23.	Power Supply		LOOP,24V DC, 2.3W						
	24.	Conduit Connection		3/4-inch NPT						
	25.	Range		0-25 ft						
	26.	Enclosure Class		NEMA 4X						
OPTIONS	27.	Compensation Cable		N/A						
	28.	Local Indicator		yes						
	29.	I/P Transducer		N/A						
	30.	Cote shield cable		380-0100-012						
	31.	Termination kit		389-0001-006						
SERVICE	32.	Upper Fluid		Water						
	33.	Conductivity range		25-8000 uS/cm						
	34.	Lower Fluid		N/A						
	35.	Dielectric Constant		N/A						
	36.	Pressure Max.	Min	1psig	0psig					
	37.	Temp. Max.	Min	110°F	32°F					
	38.	Moisture		Yes						
	39.	Material Buildup		None						
	40.	Vibration		None						
	41.	Manufacturer		DrexelBrook						

Notes:
1. All level transmitters shall require stainless steel tags.
2. All electrical equipment shall be NRTL listed.
3. Parts numbers are located on lines 7,19,28,29.
4. All equipment shall be able to operate in ambient temperatures of -25°F to 115°F.

Based on ISA Form S20.27

Sargent & Lundy

MAIN BASIN CONT LEVEL MEASUREMENT
(Pressure transducer)

NO	BY	DATE	REVISION
L-102	KC Veach	4/01/2020	0

SHEET 1 OF 1	
SPEC. NO. RPP-SPEC-63760	REV. 0
CONTRACT	DATE 4/1/2020
REQ. P.O.	
BY KJV / CHK'D MFG	APPR.

GENERAL	1.	Tag Number		LT-41-2							
	2.	Service		Water							
	3.	Line No./Vessel No.		LERF Basin 41							
	4.	Application		Main Basin Level							
	5.	Function		Continuous level measurement							
	6.	Fail Safe		None							
PROBE	7.	Model Number		N/A							
	8.	Tag Number		LT-41-2							
	9.	Orientation		15° off horizontal							
	10.	Style		N/A							
	11.	Material		316 SST							
	12.	Sheath		Polyurethane							
	13.	Insertion Length		`90ft							
	14.	Active Length		N/A							
	15.	Gland Size & Mat'l.		N/A							
	16.	Process Connection		N/A							
	17.	Conduit Connection		N/A							
TRANS.	18.	Output		4-20Ma							
	19.	Tag Number		LT-41-2							
	20.	Accuracy		0.15% full scale output							
	21.	Model Number		517ACGTL100DHTG							
	22.	Location		Basin 41 North Sample Riser							
	23.	Power Supply		24V DC							
	24.	Conduit Connection		N/A							
	25.	Range		0-27 ft.							
	26.	Enclosure Class		N/A							
OPTIONS	27.	Compensation Cable		N/A							
	28.	Local Indicator		N/A							
	29.	I/P Transducer		N/A							
	30.	Signal Lights		N/A							
	31.	Field replaceable Breather Tube Filter.		11Z5017681							
SERVICE	32.	Upper Fluid		Water							
	33.	Conductivity range		25-8000 uS/cm							
	34.	Lower Fluid		N/A							
	35.	Dielectric Constant		N/A							
	36.	Pressure Max.	Min	12psig	0psig						
	37.	Temp. Max.	Min	120°F	32°F						
	38.	Moisture		Yes							
	39.	Material Buildup		None							
	40.	Vibration		None							
	41.	Manufacturer		Viatran							
	42.										

Notes:
1. All level transmitters shall require stainless steel tags.
2. All electrical equipment shall be NRTL listed..
3. All equipment shall be able to operate in ambient temperatures of -25°F to 115°F.

Based on ISA Form S20.27

Sargent & Lundy

LEACHATE PUMP LEVEL CONTROL

NO	BY	DATE	REVISION
L-103	KC VEACH	4/01/2020	0

SHEET 1 OF 1

SPEC. NO. RPP-SPEC-63760 REV. 0

CONTRACT DATE 4/1/2020

REQ. P.O.

BY KJV CHK'D MFG APPR.

GENERAL	1.	Tag Number	See lines 8,28.	
	2.	Service	Water	
	3.	Line No./Vessel No.	LERF Basin 41	
	4.	Application	Leachate level High	
	5.	Function	Point Level Detection	
	6.	Fail Safe	None	
PROBE	7.	Model Number	6013-SW-120	
	8.	Tag Number	LEL-41-3, LEH-41-3	
	9.	Orientation	15° off horizontal	
	10.	Style	Flexible Cable	
	11.	Material	303 SS	
	12.	Sheath	vinyl	
	13.	Insertion Length	`110ft	
	14.	Inactive Length	N/A	
	15.	Gland Size & Mat'l.	N/A	
	16.	Process Connection	N/A	
	21.	Conduit Connection	N/A	
SWITCH	22.	Type	SPDT Induction relay	
	23.	Quantity and Form	1	
	24.	Rating: Volts	1hp @ 230 VAC single phase	
	25.	Amps	N/A	
	26.	Load Type	120 VAC	
	27.	Contacts:	2 NO	
	28.	Tag Number	LY-41-3	
	29.	Model Number	1500-C-L1-S9-OC-X	
TRANS.	30.	Output	N/A	
	31.	Tag Number	N/A	
	32.	Conduit Connection	N/A	
	33.	Model Number	N/A	
	34.	Location	N/A	
	35.	Power Supply	N/A	
	36.	Range	N/A	
	37.	Enclosure Class	N/A	
OPTIONS	38.	Compensation Cable	N/A	
	39.	Local Indicator	N/A	
	40.	I/P Transducer	N/A	
	41.	Signal Lights	N/A	
	42.			
SERVICE	43.	Upper Fluid	Water	
	44.	Dielectric Constant	25-8000 uS/cm	
	45.	Lower Fluid	N/A	
	46.	Dielectric Constant	N/A	
	47.	Pressure Max. min	1psig 0psig	
	48.	Temp. Max. **min**	100°F >32°F	
	49.	Moisture	yes	
	50.	Material Buildup	N/A	
	51.	Vibration	Yes	
		Manufacturer	B/W controls	

Notes:
1. All level switches shall require stainless steel tags.
2. All electrical equipment shall be NRTL listed.
3. All electrical equipment shall be rated NEMA 4X and operate between -25°F-115°F.

Based on ISA Form S20.27

Sargent & Lundy

LEVEL SWITCH

NO	BY	DATE	REVISION
LD-101	KC Veach	4/1/2020	0

SHEET 1 OF 1			
SPEC. NO. RPP-SPEC-63760			REV. 0
CONTRACT			DATE 4/1/2020
REQ.	P.O.		
BY KJV	CHK'D MFG		APPR.

1	BODY OR FITTING			47	TRANSMITTER w/wo SWITCHES Continued		
2	Body/Fitting type			48	Integral indicator style	N/A	
3	Process conn nominal size	1"	Rating	49	Readout variables	N/A	
4	Process conn termn type	Male	Style NPT	50	Readout units	N/A	
5	Packing gland nom rating	MFR STD		51	Signal termination type	N/A	
6	Mounting orientation	NPT Pipe thread Mount.		52	Cert/Approval type	FM	
7	Flow Straightener type			53	Mounting location/type	N/A	
8	Body/Fitting material	316L SS		54	Failure/Diagnostic action	None	
9	Flange material	n/a		55	Calibration mode	N/A	
10	Compression ferrule material	n/a		56	Measurement compensation	N/A	
11				57	Enclosure material	316L SS	
12				58	Area Class (Transmitter)	☒ Non-Haz, Class Div Grp	
13	SENSING ELEMENT			59	PERFORMANCE CHARACTERISTICS		
14	Sensor type	Level		60	Max press at design temp	100psig	At 120°F
15	Temperature LRL	>32°F	URL 120°F	61	Min working temperature	32°F	Max 120°F
16	Minimum flow span	N/A	Max N/A	62	Flow rate accuracy	N/A	
17	Qty sensors per element	1		63	Temperature accuracy	N/A	
18	Extension/Support dia	n/a		64	Flow repeatability	± 0.5% rdg	
19	Max/Fixed insertion lg	30mm		65	Max flow response time	3 seconds minimum	
20	Wetted material	316L SS		66	Min ambient working temp	-25°F	Max 115°F
21	Extension/Support material	316L SS		67	Contacts ac rating	115vac	At max 6amp
22	Area Class (Sensor)	☒ Non-Haz, Class Div Grp		68	Contacts dc rating	24vdc	At max 6amp
23				69	Max sensor to receiver lg	N/A	
24	LEAD WIRE AND EXTENSION			70			
25	Extension type	None		71	ACCESSORIES		
26	Cable length	n/a		72	Sensor cleaning system	N/A	
27	Max cable operating temp	n/a		73	Flow straightener	N/A	
28	Signal termination type	n/a		74	Enclosure heating kit	N/A	
29	Cable jacket material	n/a		75	Calibrator/Configurator		
30				76			
31	CONNECTION HEAD			77	SPECIAL REQUIREMENTS		
32	Housing type	316L SS		78	Custom Tag	Yes	
33	Enclosure type no/class	Nema 4x		79	Reference specification		
34	Mounting location/type	NPT Pipe thread Mount.		80	Special preparation		
35	Enclosure material	316L SS		81	Compliance standard		
36				82	Calibration report		
37	TRANSMITTER w/wo SWITCHES			83	Software configuration		
38	Housing type	Explosion proof		84	Hanford Class	☒ GS ☐ SS ☐ SC	
39	Aux input signal type			85	PHYSICAL DATA		
	Output signal type	Analog DC		86	Estimated weight		
41	Enclosure type no/class	NEMA 4x		87	Face-to-face dimension	5.40"	
42	Local operator interface	None		88	Overall height	4.83"	
43	Digital communication std	n/a		89	Removal clearance		
44	Signal power source	LOOP, 24V DC		90	Signal conn nominal size		Style
45	Qty of input sensors	Mfr std		91	Mfr reference dwg		
46	Contacts arrangement	DPDT	Quantity 1	92			

93	CALIBRATION AND TEST		INPUT OR TEST			OUTPUT OR SCALE	
94	TAG NO/FUNCTIONAL IDENT	MEAS/SIGNAL/SCALE	LRV	URV	ACTION	LRV	URV
95	LDS-41-4	Flow setpoint 1-Output					
96	LDS-41-5	Flow setpoint 1-Output					
97	LDS-41-6	Flow setpoint 1-Output					
98	LDS-41-7	Flow setpoint 1-Output					
99	LDS-41-8	Flow setpoint 1-Output					
100	LDS-42-3	Flow setpoint 1-Output					
101							
102							
103		Flow setpoint 1-Output					
104		Flow setpoint 2-Output					
105							

106	COMPONENT IDENTIFICATIONS		
107	COMPONENT TYPE	MANUFACTURER	MODEL NUMBER
108	Level Switch	FCI	FLT93S-1B-1A201E-4CC00-00
109			
110			
111			

Notes:
1. All level switches shall require stainless steel tags.
2. All electrical equipment shall be NRTL listed.
3. All electrical equipment shall be rated NEMA 4X and operate between -25°F-115°F.
4.

Based on 2001 ISA

LVN/A

Sargent & Lundy
Engineering Services, Inc.

CONTROL VALVE DATA SHEET

SHEET 1 OF 2

SPEC. NO. RPP-SPEC-63760 | REV. 0

CONTRACT | DATE 4/1/2020

REQ. | P.O.

BY KJV | CHK'D MFG | APPR.

NO	BY	DATE	REVISION
LV-101	KC Veach	4/1/2020	0

1	Fluid Water	P&ID/ Tag	H-2-88766-6/ LV-P41-4-1	Crit Press PC

SERVICE CONDITIONS

		Units	Max	Norm	Min	Shut-Off
2	Flow Rate	GPM	180	75	0	40
3	Inlet Pressure	Psig	60		2	
4	Outlet Pressure					
5	Inlet Temperature	°F	120	ambient	32	
6	Spec Wt/Spec Grav/Mol Wt					—
7	Viscosity/Spec Heats Ratio					—
8	Vapor Pressure P_V					—
9	* Required C_V					—
10	* Travel	%	90		0	0
11	Allowable/* Predicted SPL	dBA	/	/	/	—
12						

LINE

13 Pipe Line Size — In 4 inch
14 & Schedule — Out 4 inch
15 Pipe Line Insulation Heat Trace

VALVE BODY/BONNET

16 * Type Split-V
17 * Size 4 Inch ANSI Class 150
18 Max Press/Temp 100 psig/ 120°F
19 * Mfr & Model N/A
20 * Body/Bonnet Matl 316 SS
21 * Liner Material/ID MFR STD
22 End — In Flange
23 Connection — Out Flange
24 Flg Face Finish Raised Face
25 End Ext/Matl 316 SS
26 * Flow Direction Bi-Directional
27 * Type of Bonnet MFR STD
28 Lub & Iso Valve N/A Lube N/A
29 * Packing Material MFR STD
30 * Packing Type MFR STD
31

TRIM

32 * Type MFR STD
33 * Size MFR STD Rated Travel MFR STD
34 * Characteristic MFR STD
35 * Balanced/Unbalanced N/A
36 * Rated C_V F_L X_T
37 * Plug/Ball/Disk Material 316 SS
38 * Seat Material Tek-Fill
39 * Cage/Guide Material N/A
40 * Stem Material 316 SS
41
42

SPECIALS/ACCESSORIES

43 NEC Class N/A Group N/A Div N/A
44 NEMA 4x
45
46
47
48
49
50
51

ACTUATOR

53 * Type Electric
54 * Mfr & Model Bray 700501-113GO536/K
55 * Size Eff Area
56 On/Off N/A Modulating 0-90°
57 Spring Action Open/Close None
58 * Max Allowable Pressure 100psig
59 * Min Required Pressure 0psig
60 Available Air Supply Pressure: N/A
61 Max N/A Min N/A
62 * Bench Range N/A / N/A
63 Actuator Orientation horizontal
64 Handwheel Type Manual
65 Air Failure Valve N/A Set at N/A
66

POSITIONER

67 Input Signal 4-20mA
68 * Type Electric
69 * Mfr & Model N/A
70 * On Incr Signal Output Incr/Decr
71 Gauges N/A By-pass N/A
72 * Cam Characteristic Proprietary
73

SWITCHES

74 Type SPDT Quantity 1
75 * Mfr & Model N/A
76 Contacts/Rating None (dry contacts)
77 Actuation Points 3° prior to travel limit switch
78

AIR SET

79 * Mfr & Model N/A
80 * Set Pressure N/A
81 Filter N/A Gage N/A
82

TESTS

83 * Hydro Pressure N/A
84 ANSI/FCI Leakage Class N/A
85
86

Rev	Date	Revision	Orig	App

* Information supplied by manufacturer unless already specified.
LV-101.docx

Based on ISA Form S20.50, Rev. 1
Last Saved 5/4/2020

Sargent & Lundy Engineering Services, Inc.	CONTROL VALVE DATA SHEET (Cont.)	Sheet 2 of 2

Notes:
1. All level switches shall require stainless steel tags.
2. All electrical equipment shall be NRTL listed.
3. All electrical equipment shall be rated NEMA 4X and operate between -20°F-115°F.

* Information supplied by manufacturer unless already specified.
LV-101.docx

Based on ISA Form S20.50, Rev. 1
Last Saved 5/4/2020

Sargent & Lundy

MAIN BASIN PUMP

NO	BY	DATE	REVISION
P-101	KC Veach	04/01/2020	0

SHEET 1 OF 2			
SPEC. NO. RPP-SPRC-63632			REV. 0
CONTRACT			DATE 4/1/2020
REQ.	P.O.		
BY KJV	CHK'D PMD		APPR.

GENERAL	1.	Type of Pump:	Submersible
	2.	Manufacturer:	Gorman-Rupp
	3.	Model No.:	SM4H65-X10
	4.	Equipment No.:	N/A
FLUID DATA	5.	Fluid Pumped:	water
	6.	Specific Gravity:	1 SpG
	7.	Solids (wt%):	N/A
	8.	Pumping Temperature (°F):	60°F
	9.	Viscosity @ Pumping Temperature (cP):	1 cP
	10.	Vapor Pressure @ Pumping Temp. (psia):	N/A
DESIGN DATA	11.	Design Capacity (gpm):	107
	12.	Differential Pressure (psid):	83.0
	13.	Differential Pressure (ft):	191.7
	14.	NPSH Available (ft):	N/A
	15.	Total Discharge Pressure (psig):	80.4
	16.	Pump Speed (rpm):	3450 rpm
	17.	Efficiency (%):	N/A
	18.	Brake Horsepower (bhp):	10
MECHANICAL DATA	19.	Material – Case:	316 SS
	20.	Material – Impeller, Piston, Diaphragm:	CD4Mcu SS
	21.	Seal Type:	CD4Mcu SS
	22.	Suction Nozzle (Size/Rating):	4 inch
	23.	Discharge Nozzle (Size/Rating):	4 inch
DRIVER	24.	Driver Horsepower (hp):	10.0 HP
	25.	Motor Type:	electric
UTILITY	26.	Electric:	460/575 Volt, 60Hz, 17/13.6 Full Load Amps, 13.45 kw (max)
	27.	VFD:	☐ Yes ☒ No
	28.	Area Classification:	
	29.	Code of Regulation:	

Notes:
1.

Sargent & Lundy

PUMPS (Cont.)

Sheet 2 of 2

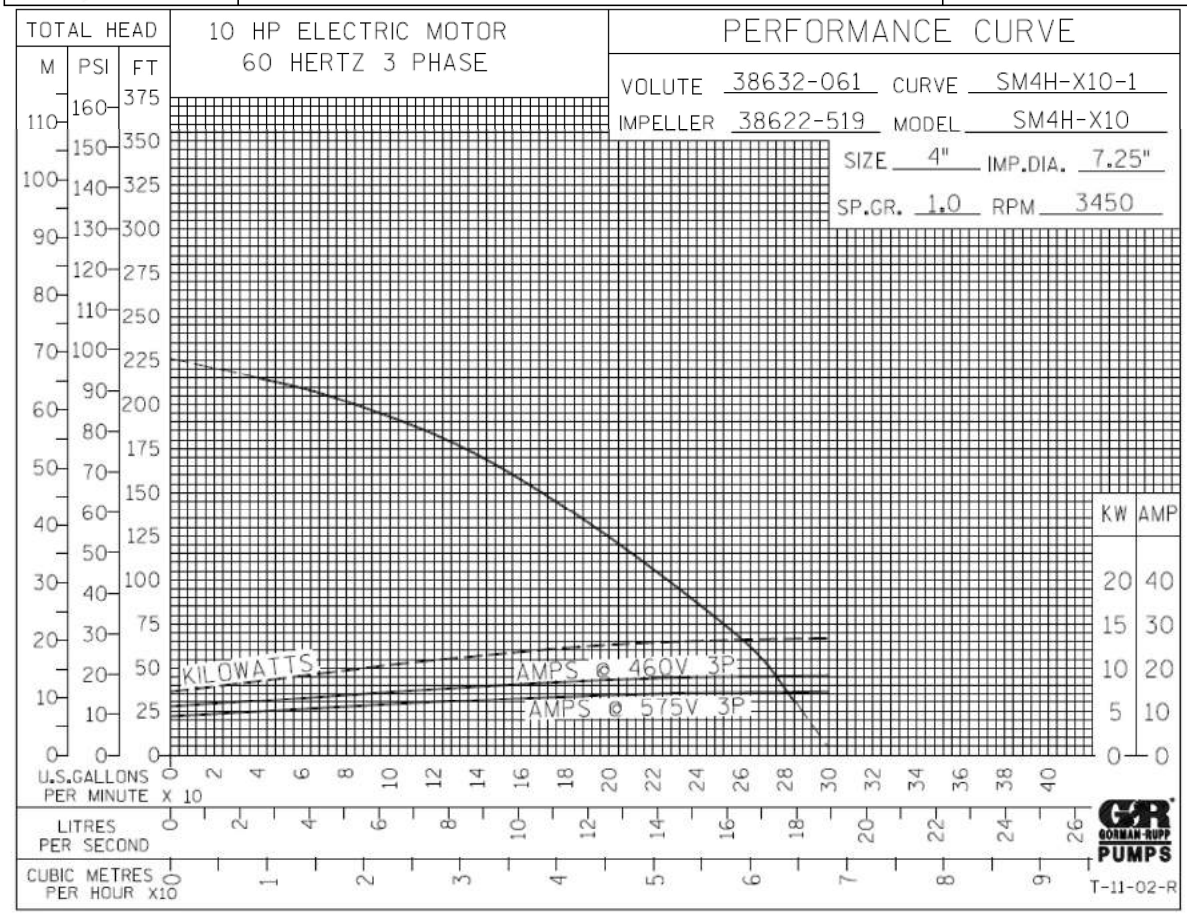

Sargent & Lundy

LEACHATE PUMP

NO	BY	DATE	REVISION
P-101	KC Veach	04/01/2020	0

SHEET 1 OF 2			
SPEC. NO. RPP-SPEC-63632			REV. 0
CONTRACT			DATE 4/1/2020
REQ.	P.O.		
BY KJV	CHK'D PMD		APPR.

GENERAL	1.	Type of Pump:	Close-coupled submersible
	2.	Manufacturer:	Lowara
	3.	Model No.:	1SC3/05/6 C L40
	4.	Equipment No.:	N/A
FLUID DATA	5.	Fluid Pumped:	water
	6.	Specific Gravity:	1 SpG
	7.	Solids (wt%):	N/A
	8.	Pumping Temperature (°F):	60°F
	9.	Viscosity @ Pumping Temperature (cP):	1 cP
	10.	Vapor Pressure @ Pumping Temp. (psia):	N/A
DESIGN DATA	11.	Design Capacity (gpm):	10.4
	12.	Differential Pressure (psid):	0.782
	13.	Differential Pressure (ft):	112.6
	14.	NPSH Available (ft):	N/A
	15.	Total Discharge Pressure (psig):	0.79
	16.	Pump Speed (rpm):	3500
	17.	Efficiency (%):	34
	18.	Brake Horsepower (bhp):	1/2
MECHANICAL DATA	19.	Material – Case:	304 SST
	20.	Material – Impeller, Piston, Diaphragm:	technopolymer
	21.	Seal Type:	
	22.	Suction Nozzle (Size/Rating):	5 inch
	23.	Discharge Nozzle (Size/Rating):	1.25 inch
DRIVER	24.	Driver Horsepower (hp):	0.75
	25.	Motor Type:	
UTILITY	26.	Electric:	50kw, 60hz, single phase,
	27.	VFD:	☐ Yes ☒ No
	28.	Area Classification:	
	29.	Code of Regulation:	

Notes:
1.

Sargent & Lundy	PUMPS (Cont.)	Sheet 2 of 2

1SC SERIES - SINGLE PHASE VERSION
OPERATING CHARACTERISTICS

1SC	~ 3500 [rpm]	ISO 9906:2012 - Grade 3B

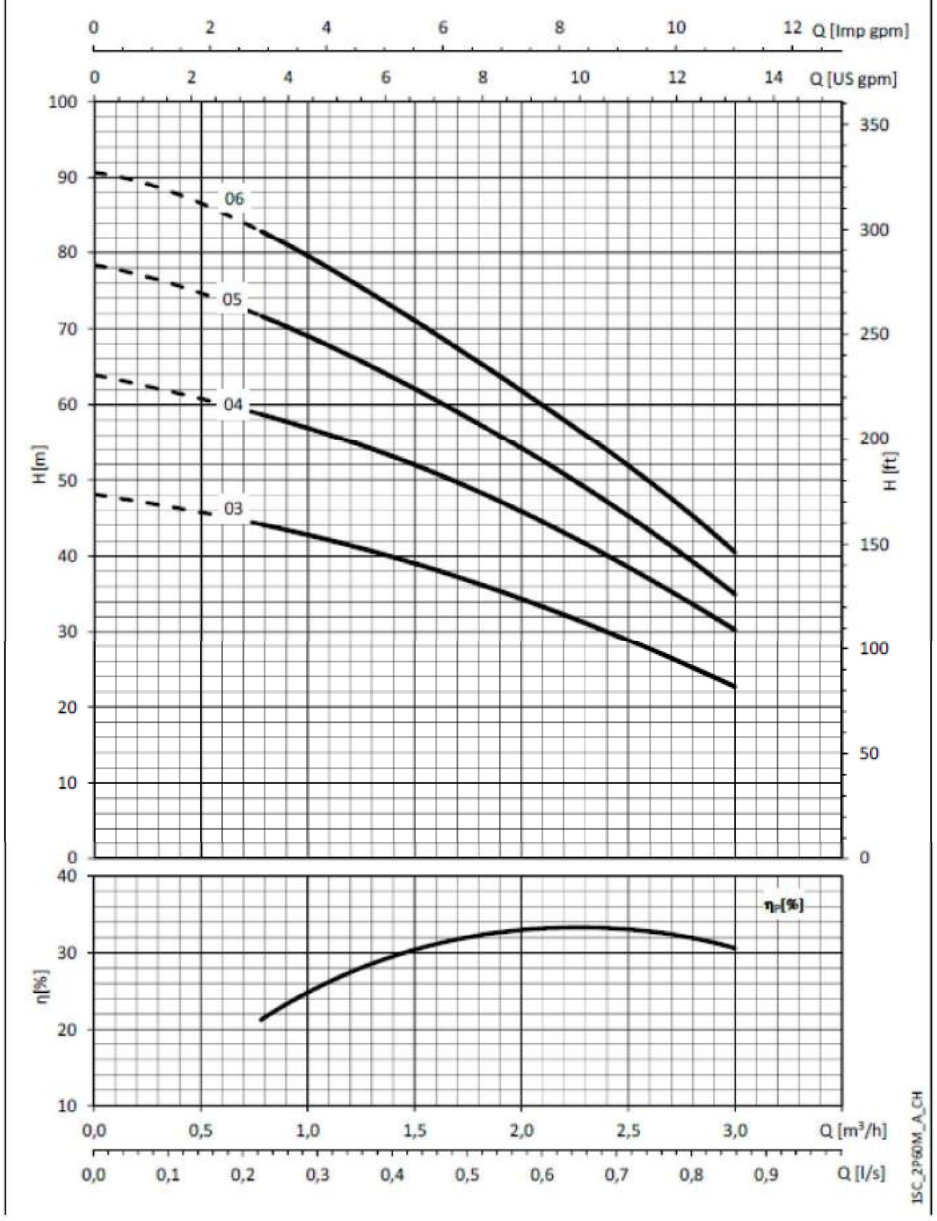

END OF SECTION 40 70 00

END OF SPECIFICATION