0048805

1 of 18

Bechtel

3350 George Washington Way
Richland, WA 99352
Tel: (509) 375-4640
Fax: (509) 375-4644

055321

Job No. 22192
Written Response Required? NO
Closes CCN: N/A
OU: ERDF
TSD: N/A
ERA: N/A
Subject Code: 8280

JAN 16 1998

4 MAR 1998 RECEIVED EDMC

RECEIVED
JAN 16 1998
DOE-RL/DIS

U.S. Department of Energy
Richland Operations Office
O. C. Robertson, Senior Project Manager
Remedial Action and Waste Disposal Project
P.O. Box 550, MSIN H0-12
Richland, Washington 99352

Subject: Contract No. DE-AC06-93RL12367
TRANSMITTAL OF FINAL DESIGN DOCUMENTS FOR ERDF CELLS 3 AND 4, SITE PREPARATION

Dear Mr. Robertson:

Attached are three sets of drawings and specifications, consolidated comments, and Request for Proposal (RFP) Amendments that have been issued to date regarding the Site Preparation portion of the Environmental Restoration Disposal Facility Cells 3 and 4 Construction. One set is for your use and two sets are provided for your transmittal to the U.S. Environmental Protection Agency (EPA).

These documents represent the design evolution beginning with the design media, reviewed earlier by the U.S. Department of Energy, Richland Operations Office, approved by EPA, and ending with the most recent RFP Amendment issued to bidders.

The changes made since EPA review and approval are minor in nature and are transmitted to EPA for information only. For example, to become more compatible with existing Hanford Site electrical utilities, changes were made to a portion of the materials in the electrical system design. Changes to the raw water system design were made to make the interface between the Site Preparation Subcontract and the main subcontract more cost effective and less prone to problems during construction.

As requested, the subject information is being transmitted to the Administrative Record.

Bechtel Hanford, Inc.

055321

JAN 16 1998

Also attached is a draft letter for your use to transmit to EPA. If you have any questions, please contact Mr. G. B. Mitchem at 372-9632.

Sincerely,

V. R. Dronen, Project Manager
Remedial Action and Waste Disposal Project

GBM:tlr

Attachments: (1) Environmental Restoration Disposal Facility Cells 3 and 4 Construction Hanford Site Richland, Washington, Site Preparation Specifications, November 10, 1997

(2) Environmental Restoration Disposal Facility Cells 3 & 4 Construction Hanford Site Richland, Washington, Site Preparation Drawings

(3) Consolidated Comments 100% Design Review of ERDF Cells 3 and 4, Site preparation Drawings and Specifications

(4) Environmental Restoration Disposal Facility Cells 3 & 4 Construction Hanford Site Richland, Washington, Site Preparation Specifications, December 12, 1997

(5) Environmental Restoration Disposal Facility (ERDF) Cells 3 & $ Construction Site Preparation Bechtel Hanford, Inc., Montgomery Wastson

(6) Amendment No. 001, Request for Proposal No. 0600X-SC-G0018 Site Preparation, Environmental Restoration Disposal Facility Cells 3 and 4

(7) Amendment No. 002, Request for Proposal No. 0600X-SC-G-0018 Site Preparation, Environmental Restoration Disposal Facility Cells 3 and 4

(8) Draft Transmittal Letter

cc: D. E. Olson (RL) H0-12, w/a

055321

JAN 1 6 1998

Letter Subject **Transmittal of Final Design Documents for ERDF Cells 3 and 4, Site Preparation** to O. C. Robertson, RL, from V. R. Dronen, BHI.

bcc:

V. R. Dronen H0-17, w/o
M. C. Hughes H0-14, w/o
G. B. Mitchem H0-17, w/a
R. T. Moore H0-17, w/a
Administrative Record
Document and Info Services H0-09, w/a

CONCURRENCES

DATE	1/15/98
INITIAL	GBM

055321

Mr. Doug R. Sherwood
Hanford Project Manager
U.S. Environmental Protection Agency
712 Swift Boulevard, Suite 5
Richland, Washington 99352

Dear Mr. Sherwood:

TRANSMITTAL OF FINAL DESIGN DOCUMENTS FOR ERDF CELLS 3 AND 4, SITE PREPARATION

Attached are two sets of drawings and specifications, consolidated comments, and Request for Proposal (RFP) Amendments that have been issued to date regarding the Site Preparation portion of the Environmental Restoration Disposal Facility Cells 3 and 4 Construction.

These documents represent the design evolution beginning with the design media, reviewed earlier by the U.S. Environmental Protection Agency, and ending with the most recent RFP Amendment issued to bidders.

The changes made since EPA review and approval are minor in nature and are transmitted to EPA for information only. For example, to become more compatible with existing Hanford Site electrical utilities, changes were made to a portion of the materials in the electrical system design. Changes to the raw water system design were made to make the interface between the Site Preparation Subcontract and the main subcontract more cost effective and less prone to problems during construction.

As requested, the subject information is being transmitted to the Administrative Record by Bechtel Hanford, Inc.

If you have any questions, please contact Mr. D. E. Olson at 376-7142.

Sincerely,

O. C. Robertson, Senior Project Manager
Remedial Action and Waste Disposal Project

Attachments:

(1) Environmental Restoration Disposal Facility Cells 3 and 4 Construction Hanford Site Richland, Washington, Site Preparation Specifications, November 10, 1997

(2) Environmental Restoration Disposal Facility Cells 3 & 4 Construction Hanford Site Richland, Washington, Site Preparation Drawings

(3) Consolidated Comments 100% Design Review of ERDF Cells 3 and 4, Site preparation Drawings and Specifications

(4) Environmental Restoration Disposal Facility Cells 3 & 4 Construction Hanford Site Richland, Washington, Site Preparation Specifications, December 12, 1997

(5) Environmental Restoration Disposal Facility (ERDF) Cells 3 & $ Construction Site Preparation Bechtel Hanford, Inc., Montgomery Wastson

(6) Amendment No. 001, Request for Proposal No. 0600X-SC-G0018 Site Preparation, Environmental Restoration Disposal Facility Cells 3 and 4

(7) Amendment No. 002, Request for Proposal No. 0600X-SC-G-0018 Site Preparation, Environmental Restoration Disposal Facility Cells 3 and 4

cc w/attach:
P. S. Innis (EPA) B5-01
D. E. Olson (RL) H0-12

0048805
2/18

ENVIRONMENTAL RESTORATION DISPOSAL FACILITY
CELLS 3 & 4 CONSTRUCTION
HANFORD SITE
RICHLAND, WASHINGTON

SITE PREPARATION SPECIFICATIONS

November 10, 1997

RECEIVED
NOV 14 1997
BY DIS

Bechtel Job No. 22192
DOE Contract No. DE-AC06-93RL12367

Prepared for
Bechtel Hanford, Inc.

Prepared by
Montgomery Watson
Richland, WA 99352

This page intentionally blank.

SECTION C

TABLE OF CONTENTS

TECHNICAL SPECIFICATIONS

DIVISION 1 **GENERAL REQUIREMENTS**

Section	Pages	
01031 Metric Measurements	01031-1	01031-3
01100 Environmental Protection	01100-1	01100-4
01440 Contractor Quality Control	01440-1	01440-10

DIVISION 2 **SITE WORK**

Section	Pages	
02110 Clearing and Grubbing	02110-1	02110-4
02210 Earthwork	02210-1	02210-11
02660 Water Lines	02660-1	02660-15
02831 Chain Link Fence	02831-1	02831-7

DIVISION 16 **ELECTRICAL**

Section	Pages	
16370 Electrical Distribution System, Aerial	16370-1	16370-22

- End of Section -

This page intentionally blank.

TECHNICAL SPECIFICATION
FOR
METRIC MEASUREMENTS
SECTION 01031

SITE PREPARATION

ENVIRONMENTAL RESTORATION DISPOSAL FACILITY (ERDF)
CELLS 3 & 4 CONSTRUCTION

REV	DATE	REASON FOR REVISION	ORIGINATOR	CHECKER	GROUP LEADER	TASK DESIGN LEAD	PROJECT ENGINEER
0		Approved for implementation					

RICHLAND ENVIRONMENTAL RESTORATION PROJECT	JOB NO. 22192
	SPECIFICATION NO. 0600X-SP-G0007
	SHEET 1 of 3

148 bdo 11/26/97

0600X-SC-G0016-5-002-01 pl 2 ~~24~~

This page intentionally blank.

SECTION 01031

METRIC MEASUREMENTS

PART 1 GENERAL

1.1 REFERENCES

The publications listed below form a part of this specification to the extent referenced. The publications are referred to in the text by basic designation only.

AMERICAN SOCIETY FOR TESTING AND MATERIALS (ASTM)

ASTM E 380	(1992) Practice for Use of the International System of Units (SI) (the Modernized Metric System)
ASTM E 621	(1984; R 1991) Practice for the Use of Metric (SI) Units in Building Design and Construction

1.2 GENERAL

This project includes metric units of measurements. The metric units used are the International System of Units (SI) developed and maintained by the General Conference on Weights and Measures (CGPM); the name International System of Units and the international abbreviation SI were adopted by the 11th CGPM in 1960. Both metric SI units and English inch-pound (I-P) units are included in a section of the specifications; the measurements used in any particular case have been determined by the circumstances involved. Specifications requiring metric measurements may contain requirements for equipment (e.g. printers, HVAC systems) described in I-P units; in which case no metric substitution will be allowed. Specifications requiring metric measurements may include references to related non-metric industry and/or Government standards; in which case the requirements of the standard govern.

1.3 USE OF MEASUREMENTS

Measurements shall be either in SI or I-P units as indicated, except for soft metric measurements or as otherwise authorized. The Contractor shall be responsible for all associated labor and materials when authorized to substitute one system of units for another and for the final assembly and performance of the specified work and/or products.

1.3.1 Hard Metric

A hard metric measurement is indicated by an SI value with no expressed correlation to an I-P value (e.g. 38 mm). Hard metric measurements are often used for field data such as distance from one point to another or distance above the floor. Products are considered to be hard metric when they are manufactured to metric dimensions or have an industry recognized metric designation.

1.3.2 Soft Metric

A soft metric measurement is indicated by an SI value which is a mathematical approximation of the I-P value shown in parentheses (e.g. 38.1 mm (1-1/2 inches)). Soft metric measurements are used for measurements pertaining to products, test values, and other situations where the I-P units are the standard for manufacture, verification, or other controlling factor. The I-P value shall govern while the metric measurement is provided for information.

1.3.3 Neutral

A neutral measurement is indicated by an identifier which has no expressed relation to either an SI or an I-P value (e.g. American Wire Gage (AWG) which indicates thickness but in itself is neither SI nor I-P)

1.4 COORDINATION

Discrepancies, such as mismatches or product unavailability, arising from use of both metric and non-metric measurements and discrepancies between the measurements in the specifications and the measurements in the drawings shall be brought to the attention of the Contracting Officer for resolution.

1.5 RELATIONSHIP TO SUBMITTALS

Submittals for Government approval or for information only shall cover the SI or I-P products actually being furnished for the project. The Contractor shall submit the required drawings and calculations in the same units used in the contract documents describing the product or requirement unless otherwise instructed or approved. The Contractor shall use ASTM E 380 and ASTM E 621 as the basis for establishing metric measurements required to be used in submittals.

PART 2 PRODUCTS (Not Applicable)

PART 3 EXECUTION (Not Applicable)

- End of Section -

* * * * *

TECHNICAL SPECIFICATION
FOR
ENVIRONMENTAL PROTECTION
SECTION 01100

SITE PREPARATION

ENVIRONMENTAL RESTORATION DISPOSAL FACILITY (ERDF)
CELLS 3 & 4 CONSTRUCTION

REV	DATE	REASON FOR REVISION	ORIGINATOR	CHECKER	GROUP LEADER	TASK DESIGN LEAD	PROJECT ENGINEER
0		Approved for implementation					

RICHLAND ENVIRONMENTAL RESTORATION PROJECT	JOB NO. 22192
	SPECIFICATION NO. 0600X-SP-G0008
	SHEET 1 of 4

148

0600X-SC-G0016-5-002-01 p 2 of 24 11/26/97

This page intentionally blank.

SECTION 01100

ENVIRONMENTAL PROTECTION

PART 1 GENERAL

1.1 SCOPE

The work covered by this section consists of furnishing all labor, materials and equipment and performing all work required for the protection of the environment during construction operations except for those measures set forth in other sections of the TECHNICAL SPECIFICATIONS.

1.2 GENERAL

For the purpose of this specification, environmental protection is defined as the retention of the environment in its natural state to the greatest possible extent during project operations and to enhance the natural appearance in its final condition. Environment protection requires consideration of air, water, and land, and involves noise and solid-waste management as well as other pollutants. In order to prevent, and to provide for abatement and control of, any environmental pollution arising from the construction activities, the Contractor and his subcontractors in the performance of this contract, shall comply with all applicable Federal, State, and local laws, and regulations concerning environmental pollution control and abatement.

1.3 SUBCONTRACTORS

Compliance with the provisions of this Section 01100, ENVIRONMENTAL PROTECTION by subcontractors will be the responsibility of the Contractor.

1.4 IMPLEMENTATION

Prior to commencement of the work the Contractor shall:

a. Submit in writing plans for implementing this section for environment protection including but not limited to accidental spills, equipment parking, and fuel storage.

b. Meet with representatives of the Contracting Officer to develop mutual understandings relative to compliance with this provision and administration of the environmental protection program. Approval of the Contractor's plan for environmental protection will not relieve the Contractor of his responsibility for adequate and continuing control of pollutants.

1.5 PROTECTION OF LAND RESOURCES

The land resources within the project boundaries and outside the limits of permanent work performed under this contract shall be preserved in their present condition or be restored to a condition after completion of construction that will appear to be natural and not detract from the appearance of the

project. The Contractor shall confine his construction activities to areas defined by the plans or specifications or as approved by the Contracting Officer.

1.6 PROTECTION OF FISH AND WILDLIFE

The Contractor shall at all times perform all work and take such steps required to minimize interference with or disturbance to fish and wildlife. The Contractor will not be permitted to alter waterflows or otherwise disturb native habitat adjacent to the project areas which, in the opinion of the Contracting Officer, are critical to fish or wildlife.

1.7 MAINTENANCE OF POLLUTION CONTROL FACILITIES DURING CONSTRUCTION

During the life of this contract the Contractor shall maintain all facilities constructed for pollution control under this contract as long as the operations creating the particular pollutant are being carried out or until the material concerned has become stabilized to the extent that pollution is no longer being created.

PART 2 PRODUCTS (Not Applicable)

PART 3 EXECUTION (Not Applicable)

PART 4 SUBMITTAL SUMMARY

4.1 SUMMARY OF SUBMITTALS

Submittals to be furnished by the Contractor shall include the following:

Paragraph	Item	SD
01100-1.4	Implementation Plan	08

Code for Type of Submittal (SD)

01 - Data
04 - Drawings
06 - Instructions
07 - Schedules
08 - Statements
09 - Reports
13 - Certificates
14 - Samples
18 - Records
19 - O & M Manuals

- End of Section -

* * * * *

This page intentionally blank.

TECHNICAL SPECIFICATION
FOR
CONTRACTOR QUALITY CONTROL
SECTION 01440

SITE PREPARATION

ENVIRONMENTAL RESTORATION DISPOSAL FACILITY (ERDF)
CELLS 3 & 4 CONSTRUCTION

REV	DATE	REASON FOR REVISION	ORIGINATOR	CHECKER	GROUP LEADER	TASK DESIGN LEAD	PROJECT ENGINEER
0		Approved for implementation					

RICHLAND ENVIRONMENTAL RESTORATION PROJECT	JOB NO. 22192
	SPECIFICATION NO. 0600X-SP-G0009
	SHEET 1 of 10

06000X-SC-G0016-5-002-01 p3 of 148 ~~24~~ bds 11/26/97

This page intentionally blank.

SECTION 01440

CONTRACTOR QUALITY CONTROL

PART 1 GENERAL

1.1 REFERENCES

The publications listed below form a part of this specification to the extent referenced. The publications are referred to in the text by basic designation only.

AMERICAN SOCIETY FOR TESTING AND MATERIALS (ASTM)

ASTM D 3740	(1992) Evaluation of Agencies Engaged in the Testing and/or Inspection of Soil and Rock as Used in Engineering Design and Construction
ASTM E 329	(1993) Use in the Evaluation of Testing and Inspection Agencies as Used in Construction

ENVIRONMENTAL PROTECTION AGENCY (EPA)

EPA/600/R-93/182	EPA, Technical Guidance Document, Quality Assurance and Quality Control for Waste Containment Facilities

1.2 PAYMENT

Separate payment will not be made for providing and maintaining an effective Quality Control program, and all costs associated therewith shall be included in the applicable unit prices or lump-sum prices contained in the Bidding Schedule.

PART 2 PRODUCTS (Not Applicable)

PART 3 EXECUTION

3.1 GENERAL

The Contractor is responsible for quality control and shall establish and maintain an effective quality control system in compliance with the clause entitled INSPECTION OF CONSTRUCTION of the CONTRACT CLAUSES and EPA/600/R-93/182. The quality control system shall consist of plans, procedures, and organization necessary to produce an end product which complies with the contract requirements. The system shall cover all construction operations, both on-site and off-site, and shall be keyed to the proposed construction sequence. The Contractor's Quality Control Program shall be consistent with and address the requirements of the Government's Quality Assurance Plan.

3.2 QUALITY CONTROL PLAN

3.2.1 General

The Contractor shall furnish for review by the Government, not later than 30 days after receipt of notice to proceed, the Contractor Quality Control (CQC) Plan proposed to implement the requirements of the clause entitled INSPECTION OF CONSTRUCTION of the CONTRACT CLAUSES. The plan shall be job order specific and shall include items not covered in the Contractor's pre-approved QA Plan. The plan shall identify personnel, procedures, control, instructions, tests, records, and forms to be used. The Government will consider an interim plan for the first 30 days of operation. Construction will be permitted to begin only after acceptance of the CQC Plan or acceptance of an interim plan applicable to the particular feature of work to be started. Work outside of the features of work included in an accepted interim plan will not be permitted to begin until acceptance of a CQC Plan or another interim plan containing the additional features of work to be started.

3.2.2 Content of the CQC Plan

The CQC plan shall include, as a minimum, the following to cover all construction operations, both on-site and off-site, including work by subcontractors.

a. A description of the quality control organization, including a chart showing lines of authority and acknowledgment that the CQC staff shall implement the three phase control system for all aspects of the work specified. The staff shall include a CQC system manager who shall report to the project manager or someone higher in the Contractor's organization. Project manager in this context shall mean the individual with responsibility for the overall management of the project including quality and production.

b. The name, qualifications (in resume format), duties, responsibilities, and authorities of each person assigned a QC function.

c. A copy of the letter to the CQC System Manager signed by an authorized official of the firm which describes the responsibilities and delegates sufficient authorities to adequately perform the functions of the CQC System Manager including authority to stop work which is not in compliance with the contract. The CQC System Manager shall issue letters of direction to all other various quality control representatives outlining duties, authorities and responsibilities. Copies of these letters shall also be furnished to the Government.

d. Procedures for scheduling, reviewing, certifying, and managing submittals, including those of subcontractors, off-site fabricators, suppliers and purchasing agents. These procedures shall be in accordance with Section 01305: SUBMITTAL PROCEDURES.

e. Control, verification, and acceptance testing procedures for each specific test to include the test name, specification paragraph requiring test, feature of work to be tested, test frequency, and person responsible for each test. (Laboratory facilities will be subject to approval by the Contracting Officer.)

f. Procedures for tracking preparatory, initial, and follow-up control phases and control, verification, and acceptance tests including documentation.

g. Procedures for tracking construction deficiencies from identification through acceptable corrective action. These procedures shall establish verification that identified deficiencies have been corrected.

h. Reporting procedures, including proposed reporting formats.

i. A list of the definable features of work. A definable feature of work is a task which is separate and distinct from other tasks and has separate control requirements. It could be identified by different trades or disciplines, or it could be work by the same trade in a different environment. Although each section of the specifications may generally be considered as a definable feature of work, there are frequently more than one definable feature under a particular section. This list will be agreed upon during the coordination meeting.

3.2.3 Acceptance of Plan

Acceptance of the Contractor's plan is required prior to the start of construction. Acceptance is conditional and will be predicated on satisfactory performance during construction. The Government reserves the right to require the Contractor to make changes in his CQC plan and operations including removal of personnel, as necessary, to obtain the quality specified.

3.2.4 Notification of Changes

After acceptance of the CQC plan, the Contractor shall notify the Contracting Officer in writing a minimum of seven calendar days prior to any proposed change. Proposed changes are subject to acceptance by the Contracting Officer.

3.3 COORDINATION MEETING

After the Preconstruction Conference, before start of construction, and prior to acceptance by the Government of the Quality Control Plan, the Contractor shall meet with the Contracting Officer or Authorized Representative and discuss the Contractor's quality control system. During the meeting, a mutual understanding of the system details shall be developed, including the forms for recording the CQC operations, control activities, testing, administration of the system for both on-site and off-site work, and the interrelationship of Contractor's Management and control with the Government's Quality Assurance inspection. Minutes of the meeting will be prepared by the Government and signed by both the Contractor and the Contracting Officer. The minutes shall become a part of the contract file. There may be occasions when subsequent conferences will be called by either party to reconfirm mutual understandings and/or address deficiencies in the CQC system or procedures which may require corrective action by the Contractor.

3.4 QUALITY CONTROL ORGANIZATION

3.4.1 CQC System Manager

The Contractor shall identify an individual within his organization at the site of the work who shall be responsible for overall management of CQC and have the authority to act in all CQC matters for the Contractor. This CQC System Manager shall be on the site at all times during construction and shall be employed by the Contractor, except as noted in the following. An alternate for the CQC System Manager shall be identified in the plan to serve in the event of the system manager's absence. The requirements for the alternate shall be the same as for the designated CQC System Manager.

3.4.2 CQC Organizational Staffing

A CQC staff shall be maintained under the direction of the CQC System Manager to perform all Quality Control activities. The actual strength of the staff during any specific work period may vary to cover work phase needs, shifts, and rates of placement. The personnel of this staff shall be fully qualified by experience and technical training to perform their assigned responsibilities and shall be directly hired by and work for the prime Contractor.

3.4.3 Organizational Changes

The Contractor shall obtain Contracting Officer's acceptance before replacing any member of the CQC staff. Requests shall include the names, qualifications, duties, and responsibilities of each proposed replacement.

3.5 SUBMITTALS

Submittals shall be as specified in Section 01305: SUBMITTAL PROCEDURES. The CQC organization shall be responsible for certifying that all submittals are in compliance with the contract requirements.

3.6 CONTROL

Contractor Quality Control is the means by which the Contractor ensures that construction, to include that of subcontractors and suppliers, complies with the requirements of the contract. The controls shall be adequate to cover all construction operations, and shall be keyed to the proposed construction sequence. The controls shall include at least three phases of control to be conducted by the CQC system manager for all definable features of work, as follows:

3.6.1 Preparatory Phase

This phase shall be performed prior to beginning work on each definable feature of work and shall include:

a. A review of each paragraph of applicable specifications.

b. A review of the contract plans.

c. A check to assure that all materials and/or equipment have been tested, submitted, and approved.

d. A check to assure that provisions have been made to provide required control inspection and testing.

e. Examination of the work area to assure that all required preliminary work has been completed and is in compliance with the contract.

f. A physical examination of required materials, equipment, and sample work to assure that they are on hand, conform to approved shop drawing or submitted data, and are properly stored.

g. A review of the appropriate activity hazard analysis to assure safety requirements are met.

h. Discussion of procedures for constructing the work including repetitive deficiencies. Document construction tolerances and workmanship standards for that phase of work.

i. A check to ensure that the portion of the plan for the work to be performed has been accepted by the Contracting Officer.

j. The Government shall be notified at least 24 hours in advance of beginning any of the required action of the preparatory phase. This phase shall include a meeting conducted by the CQC system manager and attended by the superintendent, other CQC personnel (as applicable), and the foreman responsible for the definable feature. The results of the preparatory phase actions shall be documented by separate minutes prepared by the CQC system manager and attached to the daily QC report. The Contractor shall instruct applicable workers as to the acceptable level of workmanship required in order to meet contract specifications.

3.6.2 Initial Phase

This phase shall be accomplished at the beginning of a definable feature of work. The following shall be accomplished:

a. A check of preliminary work to ensure that it is in compliance with contract requirements. Review minutes of the preparatory meeting.

b. Verification of full contract compliance. Verify required control inspection and testing.

c. Establish level of workmanship and verify that it meets minimum acceptable workmanship standards. Compare with sample panels is appropriate.

d. Resolve all differences.

e. Check safety to include compliance with and upgrading of the safety plan and activity hazard analysis. Review the activity analysis with each worker.

f. The Government shall be notified at least 24 hours in advance of beginning the initial phase. Separate minutes of this phase shall be prepared by the CQC system manager and attached to the daily QC report. Exact location of initial phase shall be indicated for future reference and comparison with follow-up phases.

g. The initial phase shall be repeated for each new crew to work on-site, or any time acceptable specified quality standards are not being met.

3.6.3 Follow-up Phase

Daily inspections shall be performed to assure continuing compliance with contract requirements, including control testing, until completion of the particular feature of work. The inspections shall be made a matter of record in the CQC documentation. Final follow-up inspections shall be conducted and all deficiencies corrected prior to the start of additional features of work which may be affected by the deficient work. The Contractor shall not build upon or conceal non-conforming work.

3.6.4 Additional Preparatory and Initial Phases

Additional preparatory and initial phases shall be conducted on the same definable features of work as determined by the Government if the quality of on-going work is unacceptable; or if there are changes in the applicable QC staff or in the on-site production supervision or work crew; or if work on a definable feature is resumed after a substantial period of inactivity, or if other problems develop.

3.7 TESTS

3.7.1 Testing Procedure

The Contractor shall perform tests specified or required to verify that control measures are adequate to provide a product which conforms to contract requirements. Testing includes operation and/or acceptance tests when specified. The Contractor shall procure the services of a an Owner approved testing laboratory or established an approved testing laboratory at the project site. A list of tests to be performed shall be furnished as part of the CQC plan. The list shall give the test name, frequency, specification paragraph containing the test requirements. The personnel and laboratory responsible for each type of test and estimate of the number of tests required. The Contractor shall perform the following activities and record and provide the following data:

a. Verify that testing procedures comply with contract requirements

b. Verify that facilities and testing equipment are available and comply with testing standards

c. Check test instrument calibration data against certified standards

d. Verify that recording forms and test identification control number system, including all of the test documentation requirements, have been prepared.

e. Results of all tests taken, both passing and failing tests, shall be recorded on the Quality Control report for the date taken. Specification paragraph reference, location where tests were taken, and the sequential control number identifying the test shall be recorded. Actual test reports may be submitted later, if approved by the Contracting Officer, with a reference to the test number and date taken. An information copy of tests performed by an off-site or commercial test facility shall be provided directly to the Contracting Officer. Failure to submit timely test reports, as stated, may result in nonpayment for related work performed and disapproval of the test facility for this contract.

3.7.2 Testing Laboratories

3.7.2.1 Capability Check

The Government reserves the right to check laboratory equipment in the proposed laboratory for compliance with the standards set forth in the contract specifications and to check the laboratory technician's testing procedures and techniques. Laboratories utilized for testing soils, concrete, asphalt and steel shall meet criteria detailed in ASTM D 3740 and ASTM E 329.

3.7.2.2 Capability Recheck

If the selected laboratory fails the capability check, the Contractor will be assessed a charge of $400.00 to reimburse the Government for each succeeding recheck of the laboratory or the checking of a subsequently selected laboratory. Such costs will be deducted from the contract amount due the Contractor.

3.7.3 On-Site Laboratory

The Government reserves the right to utilize the Contractor's control testing laboratory and equipment to make assurance tests and to check the Contractor's testing procedures, techniques, and test results at no additional cost to the Government.

3.7.4 Furnishing or Transportation of Samples for Testing

Costs incidental to the transportation of samples or materials shall be borne by the Contractor. Samples of materials for test verification and acceptance testing by the Government shall be delivered to the Contracting Officer's Representative.

3.8 COMPLETION INSPECTION

At the completion of all work or any increment thereof established by a completion time stated in clause entitled COMMENCEMENT, PROSECUTION, AND COMPLETION OF WORK in Section F, or stated elsewhere in the specifications, the CQC system manager shall conduct an inspection of the work and develop a "punch list" of items which do not conform to the approved plans and specifications. Such a list of deficiencies shall be included in the CQC documentation, as required by paragraph DOCUMENTATION below, and shall include the estimated date by which the deficiencies will be corrected. The CQC system manager or staff shall make a second inspection to ascertain that all deficiencies have been corrected and so notify the Contracting Officer. These inspections and any deficiency corrections required by this paragraph shall be accomplished within the time stated for completion of the entire work or any particular increment thereof if the project is divided into increments by separate completion dates.

3.9 DOCUMENTATION

The Contractor shall maintain current records of quality control operations, activities, and tests performed, including the work of subcontractors and suppliers. These records shall be on an acceptable form and shall include factual evidence that required quality control activities and/or tests have been performed, including but not limited to the following:

a. Contractor/subcontractor and their area of responsibility.

b. Operating plant/equipment with hours worked, idle, or down for repair.

c. Test and/or control activities performed with results and references to specifications/plan requirements. The control phase should be identified (Preparatory, Initial, Follow-up). List deficiencies noted along with corrective action.

d. Off-site surveillance activities, including actions taken.

e. Job safety evaluations stating what was checked, results, and instructions or corrective actions.

f. List instructions given/received and conflicts in plans and/or specifications.

g. Contractor's verification statement.

h. Work performed today, giving location, description, and by whom. When Network Analysis (NAS) is used, identify each phase of work performed each day by NAS activity number.

i. Material received with statement as to its acceptability and storage.

j. Identify submittals reviewed, with contract reference, by whom, and action taken.

k. These records shall indicate a description of trades working on the project; the number of personnel working; weather conditions encountered; and any delays encountered. These records shall cover both conforming and deficient features and shall include a statement that equipment and materials incorporated in the work and workmanship comply with the contract. The original and one copy of these records in report form shall be furnished to the Government daily within 24 hours after the date(s) covered by the report, except that reports need not be submitted for days on which no work is performed. As a minimum, one report shall be prepared and submitted for every seven days of no work and on the last day of a no work period. All calendar days shall be accounted for throughout the life of the contract. The first report following a day of no work shall be for that day only. Reports shall be signed and dated by the CQC system manager. The report from the CQC system manager shall include copies of test reports and copies of reports prepared by all subordinate quality control personnel.

3.10 NOTIFICATION OF NONCOMPLIANCE

The Contracting Officer will notify the Contractor of any detected noncompliance with the foregoing requirements. The Contractor shall, after receipt of such notice, immediately take corrective action. Such notice, when delivered to the Contractor at the site of the work, shall be deemed sufficient for the purpose of notification. If the Contractor fails or refuses to comply promptly, the Contracting Officer may issue an order stopping all or part of the work until satisfactory corrective action has been taken. No part of the time lost due to such stop orders shall be made the subject of claim for extension of time or for excess costs or damages by the Contractor.

PART 4 SUBMITTAL SUMMARY

4.1 SUMMARY OF SUBMITTALS

Submittals to be furnished by the Contractor shall include the following:

Paragraph	Item	SD
01440-3.2	Contractor Quality Control Plan	09

Code for Type of Submittal (SD)

01 - Data
04 - Drawings
06 - Instructions
07 - Schedules
08 - Statements
09 - Reports
13 - Certificates
14 - Samples
18 - Records
19 - O & M Manuals

- End of Section -

* * * * *

This page intentionally blank.

TECHNICAL SPECIFICATION
FOR
CLEARING AND GRUBBING
SECTION 02110

SITE PREPARATION

ENVIRONMENTAL RESTORATION DISPOSAL FACILITY (ERDF)
CELLS 3 & 4 CONSTRUCTION

REV	DATE	REASON FOR REVISION	ORIGINATOR	CHECKER	GROUP LEADER	TASK DESIGN LEAD	PROJECT ENGINEER
0		Approved for implementation					

RICHLAND ENVIRONMENTAL RESTORATION PROJECT	JOB NO. 22192
	SPECIFICATION NO. 0600X-SP-C0030
	SHEET 1 of 4

0600X-SC-G0016-5-002-01 P4 g 148 11/26/97 bdo

This page intentionally blank.

SECTION 02110

CLEARING AND GRUBBING

PART 1 GENERAL

1.1 DEFINITIONS

1.1.1 Clearing

Clearing shall consist of shredding sagebrush and other vegetation within the limits of construction. It shall also include the satisfactory disposal of the cleared material and other rubbish from areas which are to be grubbed.

1.1.2 Grubbing

Grubbing shall consist of the removal and disposal of stumps, roots larger than 75 mm (3 inches) in diameter, and matted roots from the designated areas.

1.2 SUBMITTALS

Submittals shall be furnished in accordance with Exhibit I.

SD-18 Records

Documentation supporting compliance with Section 3.3 CONTRACTOR QUALITY CONTROL.

PART 2 PRODUCTS (Not Applicable)

PART 3 EXECUTION

3.1 GENERAL

All areas within the limits of construction shall be cleared unless otherwise noted. In addition, the area for the Construction Support Pad, associated Access Road, and Bulk Water Loading Pad shall be grubbed. The Contractor shall survey and locate the limits of clearing and grubbing prior to initiating clearing and grubbing activities.

The Contractor shall protect all existing structures and embankments. Any structure damaged during clearing and grubbing operations shall be reported to the Contracting Officer and shall be replaced or repaired by the Contractor at no additional cost to the Government.

3.2 CLEARING AND GRUBBING

Sagebrush and other vegetation shall be cleared by using a "brush-hog" or similar equipment to cut, chip, and size reduce the vegetation to chips and slash that will be left on the surface. Vegetation shall be cut down to within 152 mm (6 inches) of the ground surface. Clearing shall also include the removal and disposal of structures that obtrude, encroach upon, or otherwise obstruct the work. This includes, but is not limited to, loose rocks, boulders, and rock piles. This material shall be disposed of in Gravel Pit 31 in a location and fashion designated by the Contracting Officer.

In areas to be grubbed, cleared material and other rubbish shall be removed and disposed of in Gravel Pit 31. Material to be grubbed, together with other organic or metallic debris not suitable for foundation purposes, shall be removed to a depth of not less than 0.5 meters (20 inches) below the original ground surface and also disposed of in Gravel Pit 31.

3.3 CONTRACTOR QUALITY CONTROL

The Contractor shall establish and maintain a quality control system to assure compliance with contract requirements and shall maintain records of his quality control for all operations including but not limited to the following:

(1) Clearing and grubbing of areas indicated and as required by the contract specifications.

(2) Finished appearance.

Copies in duplicate of these records and tests, as well as the records of corrective action taken when results are unsatisfactory, shall be furnished to the Contracting Officer within 24 hours following the inspection or test.

PART 4 SUBMITTAL SUMMARY

4.1 SUMMARY OF SUBMITTALS

Submittals to be furnished by the Contractor shall include the following:

Paragraph	Item	SD
02110 - 3.3	Contractor Quality Control	18

Code for Submittal Description (SD)

01 - Data
04 - Drawings
06 - Instructions
07 - Schedules
08 - Statements
09 - Reports
13 - Certificates
14 - Samples
18 - Records
19 - O & M Manuals

- End of Section -

* * * * *

This page intentionally blank.

TECHNICAL SPECIFICATION
FOR
EARTHWORK
SECTION 02210

SITE PREPARATION

ENVIRONMENTAL RESTORATION DISPOSAL FACILITY (ERDF)
CELLS 3 & 4 CONSTRUCTION

REV	DATE	REASON FOR REVISION	ORIGINATOR	CHECKER	GROUP LEADER	TASK DESIGN LEAD	PROJECT ENGINEER
0		Approved for implementation					

RICHLAND ENVIRONMENTAL RESTORATION PROJECT	JOB NO. 22192
	SPECIFICATION NO. 0600X-SP-C0031
	SHEET 1 of 11

0600X-SC-G0016-5-002-01 p5q ~~94~~ 148
bds 11/26/97

This page intentionally blank.

SECTION 02210

EARTHWORK

PART 1 GENERAL

1.1 REFERENCES

The publications listed below form a part of this specification to the extent referenced. The publications are referred to in the text by basic designation only.

AMERICAN SOCIETY FOR TESTING AND MATERIALS (ASTM)

ASTM C 136	(1994a) Sieve Analysis of Fine and Coarse Aggregates
ASTM D 422	(1963; R 1972) Particle size analysis of soils
ASTM D 1140	(1992) Amount of Material in Soils Finer than the No. 200 (75-micrometer) Sieve
ASTM D 1556	(1990) Density and Unit Weight of Soil in Place by the Sand-Cone Method
ASTM D 1557	(1991) Laboratory Compaction Characteristics of Soil Using Modified Effort (56,000 ft-lbf/cu. ft. (2,700 kN-m/cu.m.))
ASTM D 2167	(1984; R 1990) Density and Unit Weight of Soil in Place by the Rubber Balloon Method
ASTM D 2487	(1992) Classification of Soils for Engineering Purposes (Unified Soil Classification System)
ASTM D 2922	(1991) Density of Soil and Soil-Aggregate in Place by Nuclear Methods (Shallow Depth)
ASTM D 3017	(1988) Water Content of Soil and Rock in Place by Nuclear Methods (Shallow Depth)
ASTM D 4318	(1984) Liquid Limit, Plastic Limit, and Plasticity Index of Soils

CODE OF FEDERAL REGULATIONS

29 CFR	Safety and Health Regulations for Construction

1.2 DEFINITIONS

1.2.1 Satisfactory Materials

Materials classified in ASTM D 2487 as GW, GP, GM, GW-GM, SW, SP,SM, SP-SM and SW-SM and free from roots and other organic matter, trash, debris, and frozen materials and stones larger than 150 mm (6 inches) in any dimension will be considered satisfactory material unless specified otherwise.

1.2.2 Unsatisfactory Materials

Materials which do not comply with the requirements for satisfactory materials and materials classified in ASTM D 2487 as Pt, OH, and OL are unsatisfactory. Unsatisfactory materials also include man-made fills, refuse, or backfills from previous construction unless designated otherwise by the specifications and drawings.

1.2.3 Degree of Compaction

Degree of compaction is a percentage of the maximum density obtained by the test procedure presented in ASTM D 1557 abbreviated hereinafter as a percent of maximum density.

1.2.4 Unyielding Material

Unyielding material shall consist of rock and gravelly soils with stones greater than 75 mm (3 inches) in any dimension or as defined by the pipe manufacturer, whichever is smaller.

1.2.5 Unstable Material

Unstable material shall consist of materials too wet to properly support the materials to be placed on or above it.

1.3 SUBMITTALS

Submittals shall be furnished in accordance with Exhibit I.

SD-01 Data

Submittal of manufacturer's data for plastic marking tape.

SD-08 Statements

Field Testing Control;

Qualifications of the commercial testing laboratory who will be performing all testing in accordance with paragraph FIELD TESTING CONTROL.

SD-09 Reports

Satisfactory Materials;

Certified test reports and analysis certifying that the base materials proposed for use at the project site conform to the specified requirements, and for all tests conducted in accordance with paragraph FIELD TESTING CONTROL.

Copies of all laboratory and field test reports within 24 hours of the completion of the test.

Testing;

Within 24 hours of conclusion of physical tests, 6 copies of test results, including calibration curves and results of calibration tests.

SD-13 Certificates

Testing;

Qualifications of the commercial testing laboratory.

SD-18 Records

Documentation supporting compliance with Section 3.10 CONTRACTOR QUALITY CONTROL.

1.4 CLASSIFICATION OF EXCAVATION

No consideration will be given to the nature of the materials, and all excavation will be designated as unclassified excavation.

PART 2 PRODUCTS

2.1 BORROW MATERIAL

Borrow material shall be taken from the Daily Operations Cover Stockpile as directed by the Contracting Officer.

2.1.1 Select Granular Material

Select granular material shall consist of well-graded sand, gravel, crushed gravel, crushed stone or crushed slag composed of hard, tough and durable particles, and shall contain not more than 10 percent by weight of material passing a 0.075 mm (No. 200) mesh sieve and no less than 95 percent by weight passing the 25 mm (1 inch) sieve. For utility trenches the maximum allowable aggregate size shall be not more than 8 mm per 100 mm (1 inch per foot) of pipe diameter or 75 mm (3 inches), or the maximum size recommended by the pipe manufacturer, whichever is smaller.

2.1.2 Bedding and Initial Backfill Material

Bedding and initial backfill for utilities shall consist of select granular material or satisfactory materials free from rocks 25 mm (1 inch) or larger in any dimension or free from rocks of such size as recommended by the pipe manufacturer, whichever is smaller.

2.1.3 Base Material

Base material shall comply with the requirements of WSDOT 9-039(3).

2.1.4 Plastic Marking Tape

Plastic marking tape shall be acid and alkali-resistant polyethylene film, 152 mm (6 inches) wide with minimum thickness of 0.102 mm (0.004 inch). Tape shall have a minimum strength of 12.1 MPa (1750 psi) lengthwise and 10.3 MPa (1500 psi) crosswise. The tape shall be manufactured with integral wires, foil backing or other means to enable detection by a metal detector when the tape is buried up to 1 meter

(3 feet) deep. The tape shall be of a type specifically manufactured for marking and locating underground utilities. The metallic core of the tape shall be encased in a protective jacket or provided with other means to protect it from corrosion. Tape color shall be as specified in TABLE 1 and shall bear a continuous printed inscription describing the specific utility.

TABLE 1. Tape Color

Red: Electric
Blue: Water Systems

PART 3 EXECUTION

3.1 EXCAVATION

3.1.1 General

Excavation of every description, regardless of material encountered shall be performed to the lines, grades, and elevations shown on the drawings and specified herein. Material required for fills in excess of that produced by excavation within the grading limits shall be obtained from the Daily Operations Cover Stockpile as directed by the Contracting Officer. Satisfactory excavation material shall be transported to and placed in fill areas. All unsatisfactory material including any soil which is disturbed by the Contractor's operations or softened due to exposure to the elements and water and surplus material shall be disposed of in Gravel Pit 31 in a location and fashion designated by the Contracting Officer. Excavation below indicated depths shall not be permitted except to remove unsatisfactory material. In the event that unsatisfactory material is encountered below the grades shown or specified, the Contracting Officer shall be notified. Determination of elevations and measurements of approved overdepth excavation of unsatisfactory material and the replacement of such material with satisfactory material shall be done under the direction of the Contracting Officer. Excavations carried below the depths indicated, without specific directions, shall except as otherwise specified, be refilled to the proper grade with satisfactory material at no additional cost to the Government. Excavation and filling shall be performed in a manner and sequence that will provide drainage at all times. Excavations shall be kept free from water while construction therein is in progress. Surface water shall be directed away from excavation and construction sites so as to prevent erosion and undermining of foundations. Diversion ditches, dikes and grading shall be provided and maintained as necessary during construction. Excavated slopes and backfill surfaces shall be protected to prevent erosion and sloughing.

3.1.2 Utilities Systems

During excavation, material satisfactory for backfilling utility systems shall be stockpiled in an orderly manner at a distance from the banks of the trench equal to 1/2 the depth of the excavation, but in no instance closer than 0.61 m (2 feet).

3.1.2.1 Trench Excavation

The trench shall be excavated as recommended by the manufacturer of the pipe to be installed. Trench walls below the top of the pipe shall be vertical and of such width as recommended in the manufacturer's installation manual. Trench walls more than 1.22 meters (4 feet) high shall be shored, cut back to a stable slope, or provided with equivalent means of protection for employees who may be exposed to moving ground or cave in. Trench walls which are cut back shall be excavated to meet the requirements of 29 CFR 1926. Special attention shall be given to slopes which may be adversely affected by weather or moisture content. The trench width below the top of pipe shall not exceed 610 mm (24 inches) plus pipe outside diameter (O.D.). Where recommended trench widths are exceeded during construction, the Contractor shall redesign, install stronger pipe, or utilize special installation procedures to ensure pipe

integrity after backfill and compaction. The cost of redesign, stronger pipe, or special installation procedures shall be borne by the Contractor without any additional cost to the Government.

3.1.2.2 Removal of Unyielding Material

Where unyielding material is encountered in the bottom of the trench, such material shall be removed 100 mm (4 inches) below the required grade and replaced with initial backfill material.

3.1.2.3 Removal of Unstable Material

Where unstable material is encountered in the bottom of the trench, such material shall be removed to the depth directed and replaced to the proper grade with select granular material as provided in paragraph FILLING, BACKFILLING, AND COMPACTION. When removal of unstable material is required due to the fault or neglect of the Contractor in his performance of the work, the resulting material shall be excavated and replaced by the Contractor without additional cost to the Government.

3.2 UTILITY TRENCH BOTTOM PREPARATION

The bottoms of trenches shall be accurately graded to provide uniform bearing and support for the bottom quadrant of each section of the pipe. The trench bottom shall be given a final trim, using a string line for establishing grade, such that each pipe section when first laid will be continually in contact with the ground along the extreme bottom of the pipe. Bell holes shall be excavated to the necessary size at each joint or coupling to eliminate point bearing. Stones of 75 millimeters (3 inches) or greater in any dimension, or as recommended by the pipe manufacturer, whichever is smaller, shall be removed to avoid point bearing.

3.3 SUBGRADE PREPARATION FOR THE CONSTRUCTION SUPPORT PAD AND BULK WATER LOADING PAD

Unsatisfactory material in surfaces to receive fill or in excavated areas shall be removed to a depth of 150 mm (6 inches) and replaced with satisfactory materials. The surface shall be scarified to a depth of 150 mm (6 inches) and compacted to 95 percent of maximum density prior to placing fill or backfill. When subgrades are less than the specified density, the ground surface shall be broken up to a minimum depth of 150 mm (6 inches), pulverized, and compacted to the specified density. When the subgrade is part fill and part excavation or natural ground, the excavated or natural ground portion shall be scarified to a depth of 300 mm (12 inches) and compacted as specified for the adjacent fill. Material shall not be placed on surfaces that are muddy, frozen, or contain frost. Material shall be moistened or aerated as necessary to provide the moisture content that will readily facilitate obtaining the specified compaction with the equipment used. Approved compacted subgrades that are disturbed by the Contractor's operations or adverse weather shall be scarified and compacted as specified herein before to the required density prior to further construction thereon.

3.4 SUBGRADE PREPARATION FOR ROADWAYS

Subgrade for roadways shall be compacted to at least 95% of maximum density to a depth of 300 mm (12 inches) below the surface. This operation shall include plowing, disking, and any moistening or aerating required to obtain the specified compaction.

3.5 FILLING, BACKFILLING, AND COMPACTION

Fill and backfill material shall consist of satisfactory material, select granular material, initial backfill material, or base material as required. Backfill shall be placed in layers not exceeding 150 mm (6 inches) loose thickness for compaction by hand operated machine compactors, and 200 mm (8 inches) loose thickness for other than hand operated machines, unless otherwise specified by the Contracting Officer. Except for material used on roadways, the Construction Support Pad, or the Bulk Water Loading Pad, each layer shall be compacted to at least 90 percent maximum density.

3.5.1 Trench Backfill

Trenches shall be backfilled to the grade shown. The trench shall be backfilled to 600 millimeters (2 feet) above the top of pipe prior to performing the required pressure tests. The joints and couplings shall be left uncovered during the pressure test.

3.5.1.1 Replacement of Unstable Material

Unstable material removed from the bottom of the trench or excavation shall be replaced with select granular material placed in layers not exceeding 150 mm (6 inches) loose thickness.

3.5.1.2 Bedding and Initial Backfill

Bedding and initial backfill material shall be placed and compacted with approved tampers to a height of at least 0.30 meter (one foot) above the top of utility pipe or conduit. The backfill shall be brought up evenly on both sides of the pipe for the full length of the pipe. Care shall be taken to ensure thorough compaction of the fill under the haunches of the pipe.

Unless otherwise specified or shown, pipeline bedding may be omitted if all the following conditions exist.

a. The pipe bears on firm, undisturbed native soil which contains only particles that will pass a 25 mm (one-inch) sieve.

b. The trench excavation is not through rock or stones.

c. The trench subgrade soils are classified as satisfactory material.

d. The trench subgrade soils have, as a maximum, a moisture content that allows compaction.

Where bedding is required, after compacting the bedding the Contractor shall perform a final trim using a stringline for establishing grade, such that each pipe section when first laid shall continually be in contact with the bedding along the extreme bottom of the pipe. Excavation for pipe bells and welding shall be made as required.

3.5.1.3 Base Material

Fill, backfill, and compaction for base materials used in gravel roadways shall be as specified in Paragraph FILL, BACKFILL, AND COMPACTION FOR ROADWAYS.

3.5.2 Fill, Backfill, and Compaction for Roadways

Roadways shall be filled to the grades shown. Fill and backfill material shall be compacted to at least 95 percent maximum density. Stones having a dimension greater than 100 mm (4 inches) shall not be permitted in the upper 150 mm (6 inches) of the roadway.

3.5.3 Fill, Backfill, and Compaction for the Construction Support Pad and the Bulk Water Loading Pad

Fill and backfill for the Construction Support Pad and the Bulk Water Loading Pad shall be constructed to the lines and grades indicated. No frozen material shall be permitted in the fill. Stones having a dimension greater than 100 mm (4 inches) shall not be permitted in the upper 150 mm (6 inches) of the pads. Compaction of fill and backfill material shall be to 95% maximum density.

3.6 FINISHED EXCAVATION, FILLS, AND EMBANKMENTS

All areas covered by the project, including excavated and filled sections and adjacent transition areas, shall be uniformly smooth-graded. The finished surface shall be reasonably smooth, compacted, and free from irregular surface changes. The degree of finish shall be that ordinarily obtainable from blade-grader operations, except for roadways. The degree of finish for roadways shall be 30 mm (0.1 foot) of the grades and elevations indicated. Ditches and gutters shall be finished to permit adequate drainage.

3.7 SHORING

All excavations shall be sloped or otherwise supported in a safe manner in accordance with the requirements of 29 CFR 1926. Shoring, including sheet piling, shall be furnished and installed as necessary to protect workmen, banks, adjacent paving, structures, and utilities. Shoring, bracing, and sheeting shall be removed as excavations are backfilled, in a manner to prevent caving.

3.8 FIELD TESTING CONTROL

Testing shall be the responsibility of the Contractor and shall be performed at no additional cost to the Government. Tests shall be performed by an approved commercial testing laboratory or may be tested by facilities furnished by the Contractor. No work requiring testing shall be permitted until the facilities have been inspected and approved by the Contracting Officer. The laboratory or contractor shall provide copies of nuclear gauge licenses, calibrations, and training certificates for operators. Cost incurred for any subsequent inspection required because of failure of the first inspection shall be borne by the Contractor. Characteristics of base material shall be determined in accordance with particle size analysis of soils ASTM D 422 and moisture density relations of soils ASTM D 1557. Grain size classification of soils shall be performed on every 765 cubic meters (1000 cubic yards) of base material used. Characteristics of materials (other than base material) obtained from on site sources may be obtained from the Contracting Officer. Field in-place density shall be determined in accordance with ASTM D 1556, ASTM D 2167, or ASTM D 2922 and except that ASTM D 2922 shall not be used for soils designated as gravels as defined by ASTM D 2487. The Contracting Officer shall make the Final Determination of soils classified as gravel that may not be tested by methods established in ASTM D 2922.

When ASTM D 2922 is used, the calibration curves shall be checked, and adjusted if necessary, using the sand cone method as described in paragraph Calibration of the ASTM D 1556. ASTM D 2922 results in a wet unit weight of soil and when using this method, ASTM D 3017 shall be used to determine the moisture content of the soil. The calibration curves furnished with the moisture gauges shall be checked along with density calibration checks as described in ASTM D 3017. The calibration checks of both the density and moisture gauges shall be made at the beginning of a job on each different type of material encountered and at intervals as directed by the Contracting Officer.

Copies of calibration curves, results of calibration tests, and field and laboratory density tests shall be furnished to the Contracting Officer. When test results indicate, as determined by the Contracting Officer, that compaction is not as specified, the material shall be removed, replaced and recompacted to meet specification requirements, at no additional expense to the Government. Tests on recompacted areas shall be performed to determine conformance with specification requirements.

3.8.1 In-Place Densities

3.8.1.1 In-Place Density of Trenches

A minimum of one field test per lift of backfill for every 100 m (328 ft) of trench shall be performed.

3.8.1.2 In-Place Density of Roadways

A minimum of one field test at 30 m (100 feet) intervals for each lift of fill or backfill.

3.8.1.3 In-Place Density of the Construction Support Pad and the Bulk Water Loading Pad

A minimum of one field test for every 232 square meters (2500 square feet) or function thereof of each lift of fill or backfill.

3.9 SPECIAL REQUIREMENTS

Special requirements for both excavation and backfill relating to the specific utilities are as follows:

3.9.1 Water Lines

Trenches shall be installed at a depth to provide a minimum cover of 1.1 meters (3.5 feet) from the existing ground surface, or from the indicated finished grade, whichever is lower, to the top of the pipe.

3.9.2 Plastic Marking Tape

Warning tapes shall be installed directly above the pipe, at a depth of 457 mm (18 inches) below finished grade unless otherwise shown.

3.10 CONTRACTOR QUALITY CONTROL

The Contractor shall establish and maintain a quality control system to assure compliance with contract requirements and shall maintain records of his quality control for all operations including but not limited to the following:

(1) Excavation and backfill to lines and grades indicated.

(2) Backfilling and compaction techniques.

(3) Field moisture and density tests.

(4) Finished appearance.

(5) Methods and procedures for providing drainage away from excavations.

(6) Determination of soils characteristics.

Copies in duplicate of these records and tests, as well as records of corrective action taken when results are unsatisfactory, shall be furnished to the Contracting Officer within 24 hours following the inspection or test.

PART 4 SUBMITTAL SUMMARY

4.1 SUMMARY OF SUBMITTALS

Submittals to be furnished by the Contractor shall include the following:

Paragraph	Item	SD
02210-3.8	Qualification of Commercial Testing Laboratory	08,13
02210-3.8	Characteristics of Base Materials	09
02210-3.8	Moisture and Density Tests	09
02210-3.8	Calibration Data	09
02210-3.10	Contractor Quality Control	18

Code for Type of Submittal (SD)

01 - Data
04 - Drawings
06 - Instructions
07 - Schedules
08 - Statements
09 - Reports
13 - Certificates
14 - Samples
18 - Records
19 - O & M Manuals

- End of Section -

* * * * *

TECHNICAL SPECIFICATION
FOR
WATER LINES
SECTION 02660

SITE PREPARATION

ENVIRONMENTAL RESTORATION DISPOSAL FACILITY (ERDF)
CELLS 3 & 4 CONSTRUCTION

REV	DATE	REASON FOR REVISION	ORIGINATOR	CHECKER	GROUP LEADER	TASK DESIGN LEAD	PROJECT ENGINEER
0		Approved for implementation					

RICHLAND ENVIRONMENTAL RESTORATION PROJECT	JOB NO. 22192
	SPECIFICATION NO. 0600X-SP-C0032
	SHEET 1 of 15

0600X-SC-G0016-5-002-01 p 6 of ~~24~~ 148 bas 11/26/97

This page intentionally blank.

SECTION 02660

WATER LINES

PART 1 GENERAL

1.1 REFERENCES

The publications listed below form a part of this specification to the extent referenced. The publications are referred to in the text by basic designation only.

AMERICAN SOCIETY FOR TESTING AND MATERIALS (ASTM)

ASTM A 53	(1990b) Pipe, Steel, Black and Hot-Dipped, Zinc-Coated Welded and Seamless
ASTM B 32	(1991) Solder Metal
ASTM B 43	(1991) Seamless Red Brass Pipe, Standard Sizes
ASTM B 88	(1992) Seamless Copper Water Tube
ASTM D 1784	(1992) Rigid Poly(Vinyl Chloride) (PVC) Compounds and Chlorinated Poly(Vinyl Chloride) (CPVC) Compounds
ASTM D 1785	(1991) Poly(Vinyl Chloride) (PVC) Plastic Pipe, Schedules 40, 80, and 120
ASTM D 2241	(1989) Poly(Vinyl Chloride) (PVC) Pressure-Rated Pipe (SDR Series)
ASTM D 2464	(1991) Threaded Poly(Vinyl Chloride) (PVC) Plastic Pipe Fittings, Schedule 80
ASTM D 2466	(1990a) Poly(Vinyl Chloride) (PVC) Plastic Pipe Fittings, Schedule 40
ASTM D 2467	(1992) Socket-Type Poly(Vinyl Chloride) (PVC) Plastic Pipe Fittings, Schedule 80
ASTM D 2564	(1991a) Solvent Cements for Poly(Vinyl Chloride) (PVC) Plastic Piping Systems
ASTM D 2855	(1990) Making Solvent-Cemented Joints with Poly(Vinyl Chloride) (PVC) Pipe and Fittings

AMERICAN SOCIETY OF MECHANICAL ENGINEERS (ASME)

ASME B1.20.1	(1983) Pipe Threads, General Purpose (Inch)

ASME B16.1	(1989) Cast Iron Pipe Flanges and Flanged Fittings
ASME B16.3	(1985) Malleable Iron Threaded Fittings, Classes 150 and 300
ASME B16.15	(1985) Cast Bronze Threaded Fittings, Classes 125 and 250
ASME B16.18	(1984) Cast Copper Alloy Solder Joint Pressure Fittings
ASME B16.22	(1989) Wrought Copper and Copper Alloy Solder Joint Pressure Fittings
ASME B16.34	(1988) Valves-Flanged, Threaded, and Welding End
ASME B31.1	(1992) Power Piping
ASME B36.10M	(1985) Welded and Seamless Wrought Steel Pipe

AMERICAN WATER WORKS ASSOCIATION (AWWA)

AWWA B300	(1992) Hypochlorites
AWWA B301	(1992) Liquid Chlorine
AWWA C104	(1990) Cement-Mortar Lining for Ductile-Iron Pipe and Fittings for Water
AWWA C105	(1988) Polyethylene Encasement for Ductile-Iron Piping for Water and Other Liquids
AWWA C110	(1987) Ductile-Iron and Gray-Iron Fittings, 3 In. Through 48 In., for Water and Other Liquids
AWWA C153	(1988) Ductile-Iron Compact Fittings, 3 In. Through 16 In., for Water and Other Liquids
AWWA C207	(1986) Steel Pipe Flanges for Waterworks Service - Sizes 4 In. Through 144 In.
AWWA C208	(1983; C208a; R 1989) Dimensions for Fabricated Steel Water Pipe Fittings
AWWA C500	(1986) Gate Valves for Water and Sewerage Systems
AWWA C651	(1986; C651a) Disinfecting Water Mains
AWWA C900	(1989) Polyvinyl Chloride (PVC) Pressure Pipe, 4 In. Through 12 In., for Water Distribution
AWWA M23	(1980) PVC Pipe - Design and Installation

MANUFACTURERS STANDARDIZATION SOCIETY OF THE VALVE AND FITTINGS INDUSTRY (MSS)

MSS SP-80	(1987) Bronze Gate, Globe, Angle and Check Valves

NATIONAL FIRE PROTECTION ASSOCIATION (NFPA)

NFPA 49	(1975) Hazardous Chemicals Data
NFPA 325M	(1991) Fire Hazard Properties of Flammable Liquids, Gases, and Volatile Solids
NFPA 704	(1990) Identification of the Fire Hazards of Materials

NSF INTERNATIONAL (NSF)

NSF Std 14	(1965; Rev Nov 1990) Plastics Piping System Components and Related Materials

1.2 PIPING

This section covers raw and potable water distribution lines. The Contractor shall have a copy of the manufacturer's recommendations for each material or procedure to be utilized available at the construction site at all times.

1.2.1 Distribution Lines 80 mm (3 Inches) or Larger

Piping for water distribution lines 80 mm (3 inches) or larger shall be polyvinyl chloride (PVC) plastic or seamless welded pipe through 300 mm (12-inch) nominal diameter as shown or specified.

1.2.2 Plastic Pipe

All plastic piping system components intended for transportation of potable water shall comply with NSF Std 14 and shall be legibly marked with their symbol.

1.2.3 Excavation, Trenching, and Backfilling

Excavation, trenching, and backfilling shall be in accordance with the applicable provisions of Section 02210 EARTHWORK, except as modified herein.

1.3 SUBMITTALS

Submittals shall be made in accordance with Exhibit I.

SD-01

Polyvinyl Chloride (PVC) pipe;
Galvanized Steel Pipe;
Seamless Steel Pipe;
Copper Tubing;

Red Brass Pipe;
Fitting and Specials;
Joints;
Valves;
Valve Boxes;
Yard Hydrants;
Miscellaneous Items;

Printed copies of the manufacturer's literature stating materials of construction, applicable standards, capacities, rated pressures, and other product information which indicates compliance with the project specifications.

SD-06 Instructions

Installation;

The manufacturer's recommendations for each material or procedure to be utilized.

SD-08 Statements

Waste Water Disposal Method;

The method proposed for disposal of waste water from hydrostatic tests and disinfection, prior to performing hydrostatic tests.

Statement of Satisfactory Installation;

A statement signed by the principal officer of the contracting firm stating that the installation is satisfactory and in accordance with the contract plans and specifications and the manufacturer's prescribed procedures and techniques, upon completion of the project and before final acceptance.

SD-09 Reports

Bacterial Examination;

Test results from commercial laboratory verifying disinfection.

SD-13 Certificates

Pipeline Testing;
Hydrostatic Test Results;
Pressure Relief Valve Test Cert;

SD-18 Records

Documentation supporting compliance with Section 3.5 CONTRACTOR QUALITY CONTROL.

1.4 HANDLING

Pipe and accessories shall be handled so as to insure delivery to the trench in sound, undamaged condition. Particular care shall be taken not to injure the pipe coating or lining. If the coating or lining of any pipe or fitting is damaged, the repair shall be made by the Contractor at his expense in a satisfactory

manner. No other pipe or material of any kind shall be placed inside a pipe or fitting after the coating has been applied. Pipe shall be carried into position and not dragged. Use of pinch bars and tongs for aligning or turning pipe will be permitted only on the bare ends of the pipe. The interior of pipe and accessories shall be thoroughly cleaned of foreign matter before being lowered into the trench and shall be kept clean during laying operations by plugging or other approved method. Before installation, the pipe shall be inspected for defects. Material found to be defective before or after laying shall be replaced with sound material without additional expense to the Government. Rubber gaskets that are not to be installed immediately shall be stored in a cool and dark place.

1.4.1 Miscellaneous Plastic Pipe and Fittings

Polyvinyl Chloride (PVC), pipe and fittings shall be handled and stored in accordance with the manufacturer's recommendations. Storage facilities shall be classified and marked in accordance with NFPA 704, with classification as indicated in NFPA 49 and NFPA 325M.

PART 2 PRODUCTS

2.1 PIPE

Pipe shall conform to the respective specifications and other requirements specified below.

2.1.1 Plastic Pipe

2.1.1.1 Polyvinyl Chloride (PVC) Plastic Pipe

Pipe, couplings and fittings shall be manufactured of material conforming to ASTM D 1784, Class 12454B.

a. Pipe Less Than 100 mm (4-inch) Diameter:

(1) Screw-Joint: Pipe shall conform to dimensional requirements of ASTM D 1785 Schedule 80, with joints meeting requirements of 1.38 MPa (200 psi) working pressure, 1.83 MPa (266 psi) hydrostatic test pressure, unless otherwise shown or specified. Pipe couplings when used, shall be tested as required by ASTM D 2464.

(2) Solvent Cement Joint: Pipe shall conform to dimensional requirements of ASTM D 1785 or ASTM D 2241 with joints meeting the requirements of 1.38 MPa (200 psi) working pressure and 1.83 MPa (266 psi) hydrostatic test pressure.

b. Pipe 100 mm (4-inch) through 300 mm (12-Inch) Diameter: Pipe, couplings and fittings 100 mm (4-inch) through 300 mm (12-inch) diameter shall conform to AWWA C900, Class 200, CIOD pipe dimensions, elastomeric-gasket joint, unless otherwise shown or specified.

2.1.2 Steel Pipe

2.1.2.1 Galvanized-Steel Pipe

Galvanized-steel pipe shall conform to ASTM A 53, standard weight.

2.1.2.2 Seamless Welded Pipe

Seamless welded pipe shall conform to ASTM A 53, black. When installed underground, pipe shall be encased with 0.2 mm (8 mil) thick polyethlene in accordance with AWWA C105.

2.1.3 Copper Tubing

Tubing shall conform to requirements of ASTM B 88, Type K, soft tempered.

2.1.4 Red Brass Pipe

Pipe shall conform to requirements of ASTM B 43, regular.

2.2 FITTINGS AND SPECIALS

2.2.1 Polyvinyl Chloride (PVC) Pipe

a. For pipe less than 100 mm (4 inch) diameter, fittings for threaded pipe shall conform to requirements of ASTM D 2464, threaded to conform to the requirements of ASME B1.20.1 for use with Schedule 80 pipe and fittings, fittings for solvent cement jointing shall conform to ASTM D 2466 or ASTM D 2467.

b. For pipe 100 mm (4 inch) diameter and larger, fittings and specials shall be iron, bell end in accordance with AWWA C110, 2.42 MPa (350 psi) pressure rating unless otherwise shown or specified, except that profile of bell may have special dimensions as required by the pipe manufacturer; or may be fittings and specials of the same material as the pipe with elastomeric gaskets, all in conformance with AWWA C900. Iron fittings and specials shall be cement-mortar lined (standard thickness) in accordance with AWWA C104. Fittings shall be bell and spigot or plain end pipe, or as applicable. Ductile iron compact fittings shall be in accordance with AWWA C153.

2.2.2 Steel Pipe

2.2.2.1 Galvanized-Steel Pipe

Steel fittings shall be galvanized. Screwed fittings shall conform to ASME B16.3. Flanged fittings shall conform to AWWA C207.

2.2.2.2 Seamless Welded Pipe

Welding of seamless pipe shall be performed in accordance with ASME B 31.1.

2.2.2.3 Dielectric Fittings

Dielectric fittings shall be installed between threaded ferrous and nonferrous metallic pipe, fittings and valves, except where corporation stops join mains. Dielectric fittings shall prevent metal-to-metal contact of dissimilar metallic piping elements and shall be suitable for the required working pressure.

2.2.3 Copper Tubing

Fittings shall conform to ASME B16.22 and ASME B16.18, solder joint. Solder shall conform to ASTM B 32 95-5 tin-antimony. Flux shall conform to CID A-A-51145, Type I.

2.2.4 Red Brass Pipe

Fittings shall be Class 250, cast bronze threaded conforming to the requirements of ASME B16.15.

2.3 JOINTS

2.3.1 Plastic Pipe

2.3.1.1 Polyvinyl Chloride Pipe

Joints, fittings, and couplings shall be as specified for PVC pipe. Joints connecting pipe of differing materials shall be made in accordance with the manufacturer's recommendations as approved by the Contracting Officer.

2.4 VALVES

2.4.1 Gate Valves

Gate valves shall be designed for a working pressure of not less than 1.38 MPa (200 psi). Valve connections shall be as required for the piping in which they are installed. Valves shall have a clear waterway equal to the full nominal diameter of the valve, and shall be opened by turning counterclockwise. The operating nut or wheel shall have an arrow, cast in the metal, indicating the direction of opening.

a. Valves smaller than 80 mm (3 inches) shall be all bronze and shall conform to MSS SP-80, Type 1, Class 200.

b. Valves 80 mm (3 inches) and larger shall be iron body, bronze mounted, and shall conform to AWWA C500. Flanges shall not be buried. An approved pit shall be provided for all flanged connections.

2.4.2 Globe Valves

Valves shall conform to ASME B16.34.

2.4.3 Air Release Valves

Air-release valves shall vent accumulating air while system is in service and under pressure. They shall be of the size shown, with flanged or screwed ends to match piping. Bodies shall be of high-strength cast iron. The float, seat, and all moving parts shall be constructed of Type 316 stainless steel. Seat washers and gaskets shall be of a material insuring water tightness with a minimum of maintenance.

Valves shall be designed for minimum 1.38 MPa (200 psi) water-working pressure, unless otherwise shown.

2.4.4 Plug Valves

Eccentric plug valves shall be of the non-lubricated eccentric type with cast iron bodies, resilient faced plugs, or a replaceable, resilient seat in the body. Unless otherwise shown or specified, all valves 76 mm (3 inch) or smaller shall have operating levers, nickel or stainless steel seats, and screwed ends. Resilient facing shall be suitable for the intended service. Valves shall have an unobstructed port area of not less than 80 percent of full pipe area, unless otherwise specified. All eccentric plug valves shall have a pressure rating of not less than 1.38 MPa (200 psi) WOG, for bubble-tight shut-off.

2.4.5 Pressure Relief Valve

Pressure relief valve shall open when the inlet pressure exceeds a set maximum level. It shall maintain that level and gradually close as the inlet pressure drops below the maximum pressure. The valve shall be a hydraulically operated, adjustable, pilot controlled, diaphragm or piston type globe or angle valve as indicated. The valve body shall be cast iron with flanged connections. Minimum pressure rating shall be 1.72 MPa (250 psi). Valve cover shall also be flanged. Valve stems, springs, body seat rings, and all bolts, nuts, and washers shall be stainless steel. Valve stem shall have top and bottom guides. All rubber parts shall be of Buna-N. The valve shall be furnished with a complete, externally mounted control system, including adjustable speed control needle valves, strainer, and all necessary copper or stainless steel connecting tubing and fittings. Valve shall be set for each specific condition as shown on the Drawings. The pressure relief valve shall be factory tested and a test certificate shall be submitted prior to delivery of the valve.

2.5 VALVE BOXES

Valve boxes shall be cast iron or concrete, except that concrete boxes may be installed only in locations not subjected to vehicular traffic. Cast-iron boxes shall be extension type with slide-type adjustment and with flared base. The minimum thickness of metal shall be 4.8 mm (3/16 inch). Concrete boxes shall be the standard product of a manufacturer of precast concrete equipment. The word "WATER" shall be cast in the cover. The box length shall adapt, without full extension, to the depth of cover required over the pipe at the valve location.

2.6 YARD HYDRANTS

Yard hydrants shall be a non-freeze design. The hydrant shall be constructed of galvanized steel, non-freeze sanitary post with galvanized steel casing, plunger, and lock-in lever. The hydrants shall be provided with a 1 inch inlet connection. The hydrant head assembly shall incorporate a vacuum breaker.

2.7 MISCELLANEOUS ITEMS

2.7.1 Service Clamps

Service clamps shall have a pressure rating not less than that of the pipe to be connected and shall be either the single or double flattened strap type. Clamps shall have a galvanized malleable-iron body with cadmium plated straps and nuts. Clamps shall have a rubber gasket cemented to the body.

2.7.2 Corporation Stops

Unless otherwise shown, corporation stops shall be made of solid brass for key operation, with screwed ends with corporation thread or ironpipe thread, as required.

2.7.3 Disinfection

Chlorinating materials shall conform to the following:

Chlorine, Liquid: AWWA B301.

Hypochlorite, Calcium and Sodium: AWWA B300.

PART 3 EXECUTION

3.1 INSTALLATION

3.1.1 Cutting of Pipe

Cutting of pipe shall be done in a neat and workmanlike manner without damage to the pipe. Unless otherwise recommended by the manufacturer and authorized by the Contracting Officer, cutting shall be done with an approved type mechanical cutter. Wheel cutter shall be used when practicable. Squeeze type mechanical cutters shall not be used for ductile iron.

3.1.2 Joint Deflection

3.1.2.1 Flexible Plastic Pipe

Maximum offset in alignment between adjacent pipe joints shall be as recommended by the manufacturer and approved by the Contracting Officer, but in no case shall it exceed 5 degrees.

3.1.3 Placing and Laying

Pipe and accessories shall be carefully lowered into the trench by means of derrick, ropes, belt slings, or other authorized equipment. Under no circumstances shall any of the water-line materials be dropped or dumped into the trench. Care shall be taken to avoid abrasion of the pipe coating. Except where necessary in making connections with other lines or as authorized by the Contracting Officer, pipe shall be laid with the bells facing in the direction of laying. The full length of each section of pipe shall rest solidly upon the pipe bed, with recesses excavated to accommodate bells, couplings, and joints. Pipe that has the grade or joint disturbed after laying shall be taken up and relaid. Pipe shall not be laid in water or when trench conditions are unsuitable for the work. Water shall be kept out of the trench until joints are complete. When work is not in progress, open ends of pipe, fittings, and valves shall be securely closed so that no trench water, earth, or other substance will enter the pipes or fittings. Where any part of the coating or lining is damaged, the repair shall be made by the Contractor at his expense in a satisfactory manner. Pipe ends left for future connections shall be valved, plugged, or capped, and anchored, as shown.

3.1.3.1 Plastic Pipe Installation

PVC shall be installed in accordance with AWWA M23.

3.1.3.2 Connections

Where connections are made between new work and existing mains, the connections shall be made by using specials and fittings to suit the actual conditions. Where made under pressure, these connections shall be installed using standard methods as approved by the Contracting Officer.

3.1.3.3 Penetrations

Pipe passing through walls of valve pits and structures shall be provided with ductile-iron or Schedule 40 steel wall sleeves unless shown otherwise on the drawings. Annular space between walls and sleeves shall be filled with rich cement mortar. Annular space between pipe and sleeves shall be filled with mastic.

3.1.3.4 Flanged Pipe

Flanged pipe shall only be installed above ground or with the flanges in valve pits.

3.1.4 Jointing

3.1.4.1 Polyvinyl Chloride (PVC) Plastic Pipe

a. Pipe less than 100 mm (4 inch) diameter: Threaded joints shall be made by wrapping the male threads with approved thread tape or applying an approved lubricant, then threading the joining members together. The joint shall be tightened using strap wrenches to prevent damage to the pipe and/or fitting. To avoid excessive torque, joints shall be tightened no more than one thread past hand-tight. Solvent cement joints shall use sockets conforming to the requirements of ASTM D 2467. The solvent cement used shall meet the requirements of ASTM D 2564; the joint assembly shall be made in accordance with ASTM D 2855 and the manufacturer's specific recommendations.

b. Pipe 100 mm (4 inch) through 300 mm (12 inch) diameter: Joints shall be elastomeric-gasket as specified in AWWA C900. Jointing procedure shall be as specified for pipe less than 100 mm (4-inch) diameter with configuration using elastomeric ring gasket.

3.1.4.2 Seamless Welded Pipe

Welding of seamless pipe shall be performed in accordance with ASME B31.1

3.1.4.3 Connections

Connections between different types of pipe and accessories shall be made with transition fittings approved by the Contracting Officer.

3.1.5 Setting of Valves and Valve Boxes

After delivery, valves shall be drained to prevent freezing and shall have the interiors cleaned of all foreign matter before installation. Stuffing boxes shall be tightened and valves shall be fully opened and fully closed to ensure that all parts are in working condition. Air relief valves shall be installed in valve pits. Valves and valve boxes shall be installed where shown or specified, and shall be set plumb. Valve boxes shall be centered on the valves. Boxes shall be installed over each outside gate valve unless otherwise shown. Where feasible, valves shall be located outside the area of roads and streets. Earth

fill shall be carefully tamped around each valve box or pit to a distance of 1.2 m (4 feet) on all sides of the box, or the undisturbed trench face if less than 1.2 m (4 feet).

3.1.6 Tapped Tees and Crosses

Tapped tees and crosses for future connections shall be installed where shown.

3.1.7 Thrust Restraint

Plugs, caps, tees and bends deflecting 11-1/4 degrees or more, either vertically or horizontally, on waterlines 100 mm (4 inches) in diameter or larger shall be provided with thrust blocks. Valves shall be securely anchored or shall be provided with thrust blocks to prevent movement.

3.1.7.1 Thrust Blocks

Thrust blocking shall be concrete of a mix not leaner than: 1 cement, 2-1/2 sand, 5 gravel; and having a compressive strength of not less than 14 MPa (2,000 psi) after 28 days. Blocking shall be placed between solid ground and the fitting to be anchored. Unless otherwise indicated or directed, the base and thrust bearing sides of thrust blocks shall be poured directly against undisturbed earth. The sides of thrust blocks not subject to thrust may be poured against forms. The area of bearing shall be as shown or as directed. Blocking shall be placed so that the fitting joints will be accessible for repair. Steel rods and clamps, protected by galvanizing or by coating with bituminous paint, shall be used to anchor vertical down bends into gravity thrust blocks.

3.2 HYDROSTATIC TESTS

Where any section of a water line is provided with concrete thrust blocking, the hydrostatic tests shall not be made until at least 5 days after installation of the concrete thrust blocking, unless otherwise approved.

3.2.1 Pressure Test

After the pipe is laid, the joints completed, and the trench partially backfilled leaving the joints exposed for examination, the newly laid piping or any valved section of piping shall, unless otherwise specified, be subjected for 1 hour to a hydrostatic pressure test of 1.83 MPa (266 psi). Each valve shall be opened and closed several times during the test. Exposed pipe, joints, fittings, and valves shall be carefully examined during the partially open trench test. Joints showing visible leakage shall be replaced or remade as necessary. Cracked or defective pipe, joints, fittings, and valves, discovered in consequence of this pressure test shall be removed and replaced with sound material, and the test shall be repeated until the test results are satisfactory. The requirement for the joints to remain exposed for the hydrostatic tests may be waived by the Contracting Officer when one or more of the following conditions is encountered:

a. Wet or unstable soil conditions in the trench.

b. Compliance would require maintaining barricades and walkways around and across an open trench in a heavily used area that would require continuous surveillance to assure safe conditions.

c. Maintaining the trench in an open condition would delay completion of the contract.

The Contractor may request a waiver, setting forth in writing the reasons for the request and stating the alternative procedure proposed to comply with the required hydrostatic tests. Backfill placed prior to the tests shall be placed in accordance with the requirements of Section 02210 EARTHWORK.

3.2.2 Leakage Test

Leakage test shall be conducted after the pressure tests have been satisfactorily completed. The duration of each leakage test shall be at least 2 hours, and during the test the water line shall be subjected to not less than 1.83 MPa (266 psi). Leakage is defined as the quantity of water to be supplied into the newly laid pipe, or any valved or approved section thereof, necessary to maintain pressure within 34.5 kPa (5 psi) of the specified leakage test pressure after the pipe has been filled with water and the air expelled. No piping installation will be accepted if leakage exceeds the allowable leakage which is determined by the following formula:

L = 0.0001351ND(P raised to 1/2 power)

L = Allowable leakage in gallons per hour
N = Number of joints in the length of pipeline tested
D = Nominal diameter of the pipe in inches
P = Average test pressure during the leakage test, in psi gauge

Should any test of pipe disclose leakage greater than that calculated by the above formula, the defective joints shall be located and repaired until the leakage is within the specified allowance, without additional cost to the Government.

3.2.3 Time for Making Test

Except for joint material setting or where concrete thrust blocks necessitate a 5-day delay, pipelines jointed with rubber gaskets, mechanical or push-on joints, or couplings may be subjected to hydrostatic pressure, inspected, and tested for leakage at any time after partial completion of backfill.

3.2.4 Concurrent Hydrostatic Tests

The Contractor may elect to conduct the hydrostatic tests using either or both of the following procedures. Regardless of the sequence of tests employed, the results of pressure tests, leakage tests, and disinfection shall be satisfactory as specified. All replacement, repair or retesting required shall be accomplished by the Contractor at no additional cost to the Government.

a. Pressure test and leakage test may be conducted concurrently.

b. Hydrostatic tests and disinfection may be conducted concurrently, using the water treated for disinfection to accomplish the hydrostatic tests. If water is lost when treated for disinfection and air is admitted to the unit being tested, or if any repair procedure results in contamination of the unit, disinfection shall be reaccomplished.

3.3 DISINFECTION

Before acceptance of potable water operation, each unit of completed waterline shall be disinfected as prescribed by AWWA C651. From several points in the unit, personnel from the Contractor's commercial laboratory shall take at least 3 water samples from different points, approved by the Contracting Officer, in proper sterilized containers and perform a bacterial examination in accordance

with state approved methods. The commercial laboratory must be certified by the state's approving authority for examination of potable water. The disinfection shall be repeated until tests indicate the absence of pollution for at least 2 full days. The unit will not be accepted until satisfactory bacteriological results have been obtained.

3.4 CLEANUP

Upon completion of the installation of water lines, and appurtenances, all debris and surplus materials resulting from the work shall be removed.

3.5 CONTRACTOR QUALITY CONTROL

The Contractor shall establish and maintain a quality control system to assure compliance with contract requirements and shall maintain records of his quality control for all operations including but not limited to the following:

(1) Inspection of material delivered to project site against approved material data.

(2) Storage and handling materials.

(3) Installation to lines indicated.

(4) Finished appearance.

(5) Completion of required tests.
Pressure test results
Leakage test results
Bacterialogical results (Potable Water only)

Copies in duplicate of these records and tests, as well as records of corrective action taken when results are unsatisfactory, shall be furnished to the Contracting Officer within 24 hours following the inspection or test.

PART 4 SUBMITTAL SUMMARY

4.1 SUMMARY OF SUBMITTALS

Submittals to be furnished by the Contractor shall include the following:

Paragraph	Item	SD
02660-1.3	Installation Instructions	06
02660-1.3	Waste Water Disposal Method	08
02660-1.3	Satisfactory Installation	08
02660-2.1.1	Polyvinyl Chloride (PVC) Pipe	01
02660-2.1.2	Steel Pipe	01
02660-2.1.3	Copper Tubing	01
02660-2.1.4	Red Brass Pipe	01
02660-2.2	Fittings and Specials	01
02660-2.3	Joints	01
02660-2.4.2	Valves	01
02660-2.4.5	Pressure Relief Valve Cert.	13
02660-2.5	Valve Boxes	01
02660-2.6	Yard Hydrants	01
02660-2.7	Miscellaneous Items	01
02660-3.2	Hydrostatic Tests	09, 13
02660-3.3	Disinfection	09
02660-3.5	Contractor Quality Control	18

Code for Type of Submittal (SD)

01 - Data
04 - Drawings
06 - Instructions
07 - Schedules
08 - Statements
09 - Reports
13 - Certificates
14 - Samples
18 - Records
19 - O & M Manuals

- End of Section -

* * * * *

TECHNICAL SPECIFICATION
FOR
CHAIN LINK FENCE
SECTION 02831

SITE PREPARATION

ENVIRONMENTAL RESTORATION DISPOSAL FACILITY (ERDF)
CELLS 3 & 4 CONSTRUCTION

REV	DATE	REASON FOR REVISION	ORIGINATOR	CHECKER	GROUP LEADER	TASK DESIGN LEAD	PROJECT ENGINEER
0		Approved for implementation					

RICHLAND ENVIRONMENTAL RESTORATION PROJECT	JOB NO. 22192
	SPECIFICATION NO. 0600X-SP-C0033
	SHEET 1 of 7

0600X-SC-G0006-5-002-01 p7q ~~24~~ 148 bdo 11/26/97

This page intentionally blank.

SECTION 02831

CHAIN LINK FENCE

PART 1 GENERAL

1.1 REFERENCES

The publications listed below form a part of this specification to the extent referenced. The publications are referred to in the text by basic designation only.

AMERICAN SOCIETY FOR TESTING AND MATERIALS (ASTM)

ASTM C 94	(1992a) Ready-Mixed Concrete
ASTM F 669	(1992) Strength Requirements of Metal Posts and Rails for Industrial Chain Link Fence
ASTM F 883	(1990) Padlocks

AMERICAN WELDING SOCIETY (AWS)

AWS WZC	(1972) Welding Zinc-Coated Steels

FEDERAL SPECIFICATIONS (FS)

FS RR-F-191/GEN	(Rev K) Fencing, Wire and Post Metal (and Gates, Chain-Link Fence Fabric, and Accessories)
FS RR-F-191/1	(Rev D) Fencing, Wire and Post, Metal (Chain-Link Fence Fabric)
FS RR-F-191/2	(Rev D) Fencing, Wire and Post, Metal (Chain-Link Fence Gates)
FS RR-F-191/3	(Rev D) Fencing, Wire and Post, Metal (Chain-Link Fence Posts, Top Rails and Braces)
FS RR-F-191/4	(Rev D) Fencing, Wire and Post, Metal (Chain-Link Fence Accessories)

1.2 SUBMITTALS

Submittals shall be furnished in accordance with Exhibit I.

SD-01 Data

Manufacturer's descriptive data, catalog cuts, literature and other data as necessary to fully describe that those materials proposed for use comply with specified requirements.

SD-18 Records

Documentation supporting compliance of CONTRACTOR QUALITY CONTROL including records documenting completion of post rigidity testing and re-testing results for posts initially failing test, chain link testing and re-test results for sections initially failing test, and grounding tests.

PART 2 PRODUCTS

2.1 MATERIALS

Materials shall conform to the following:

2.1.1 Chain Link Fence

FS RR-F-191/GEN.

2.1.1.1 Fabric

FS RR-F-191/1, Type I, zinc-coated steel wire with minimum coating weight of 370 grams (1.2 ounces) of zinc per square meter (square foot) of coated surface, or Type II, aluminum-coated steel wire. Fabric shall be fabricated of 11-gauge wire woven in 51 mm (2-inch) mesh. Fabric height shall be 1.83 m (6 feet). Fabric shall be twisted and barbed on the top selvage and knuckled on the bottom selvage.

2.1.1.2 Gates

FS RR-F-191/2. Gates shall be the type as shown on contract drawings. Gate frames shall be constructed of Class 1 Grade A or B, steel pipe, size SP2, as specified in FS RR-F-191/3. Gate fabric shall be as specified for chain-link fabric. Gate leaves more than 2.44 m (8 feet) wide shall have either intermediate members and diagonal truss rods or shall have tubular members as necessary to provide rigid construction, free from sag or twist. Gate leaves less than 2.44 m (8 feet) wide shall have truss rods or intermediate braces. Gate fabric shall be attached to the gate frame by method standard with the manufacturer except that welding will not be permitted. Latches, hinges, stops, keepers, rollers, and other hardware items shall be furnished as required for the operation of the gate. Latches shall be arranged for padlocking so that the padlock will be accessible from both sides of the gate. Stops shall be provided for holding the gates in the open position.

2.1.1.3 Posts

FS RR-F-191/3, zinc-coated; Class 1 Grade A or B, steel pipe; Class 3, formed steel sections; Class 6, steel square sections; or DQ-40 galvanized steel pipe meeting ASTM F699. Class 4, steel H-section may be used for line posts in lieu of line post shapes specified for the other classes. Sizes shall be as shown on the drawings. Line posts and terminal (corner, gate, and pull) posts selected shall be of the same class throughout the fence. Gate post shall be either round or square, subject to the limitation specified in FS RR-F-191/3.

2.1.1.4 Braces

FS RR-F-191/3, zinc-coated, Class 1, Grade A or B, steel pipe, size SP1. Class 3, formed steel sections, size FS1, conforming to FS RR-F-191/3, may be used as braces if Class 3 line posts are furnished.

2.1.1.5 Accessories

FS RR-F-191/4. Ferrous accessories shall be zinc or aluminum coated. Truss rods shall be furnished for each terminal post. Truss rods shall be provided with turnbuckles or other equivalent provisions for adjustment. Tie wire for attaching fabric to rails, braces, and posts shall be 9-gauge steel wire.

2.1.2 Concrete

ASTM C 94, using 19 mm (3/4-inch) maximum size aggregate, and having minimum compressive strength of 21 MPa (3000 psi) at 28 days. Grout shall consist of one part portland cement to three parts clean, well-graded sand and the minimum amount of water to produce a workable mix.

2.1.3 Padlocks

ASTM F 883, Type PO1, Grade 2, Size 44 mm (1-3/4 inch). Padlocks shall be keyed alike and each lock shall be furnished with two keys.

PART 3 EXECUTION

3.1 GENERAL

Fence shall be installed to the lines and grades indicated. Line posts shall be spaced equidistant at intervals not exceeding 3.05 m (10 feet). Terminal (corner, gate, and pull) posts shall be set at abrupt changes in vertical and horizontal alignment. Fabric shall be continuous between terminal posts; however, runs between terminal posts shall not exceed 152.4 m (500 feet). Damage to the galvanized surface due to welding shall be repaired with "repair sticks" of zinc-cadmium alloys or zinc-tin-lead alloys per AWS WZC.

3.2 EXCAVATION

Post holes shall be cleared of loose material. Waste material shall be spread where directed by the Contracting Officer. The ground surface irregularities along the fence line shall be eliminated to the extent necessary to maintain a 51 mm (2-inch) clearance between the bottom of the fabric and finish grade.

3.3 POSTS

Posts shall be set plumb and in alignment. Posts shall be set in concrete to the depth indicated on the drawings. Posts set in concrete shall be set in holes not less than the diameter shown on the drawings. Concrete and grout shall be thoroughly consolidated around each post, shall be free of voids and finished to form a dome. Concrete and grout shall be allowed to cure for 72 hours prior to attachment of any item to the posts. Fence post rigidity shall be tested by applying a 222 newtons (50-pound) force on the post, perpendicular to the fabric, at 1.52 m (5 feet) above ground. Post movement measured at the point where the force is applied shall be less than or equal to 19 mm (3/4 inch) from the relaxed position. A random 10% of posts shall be tested for rigidity by the Contractor. When a post fails this test, further tests on the next four posts on either side of the failed post shall be made at no additional cost to the government and will not be considered as part of the 10% to be tested. All failed posts shall be removed, replaced, and retested at the Contractor's expense.

3.4 RAILS

3.4.1 Top Rail

Top rails are not required for this project. Top tension wire will be installed in place of top rails.

3.5 BRACES AND TRUSS RODS

Braces and truss rods shall be installed as indicated and in conformance with the standard practice for the fence furnished. Braces and truss rods shall extend from terminal posts to line posts. Diagonal braces shall form an angle of approximately 40 to 50 degrees with the horizontal.

3.6 TENSION WIRES

Tension wires shall be installed along the top and bottom of the fence line and attached to the terminal posts of each stretch of the fence. Top tension wires shall be installed within the top 102 mm (4 inches) of the installed fabric. Bottom tension wire shall be installed within the bottom 152 mm (6 inches) of the installed fabric. Tension wire shall be pulled taut and shall be free of sag.

3.7 CHAIN LINK FABRIC

Chain link fabric shall be installed on the side of the post indicated. Fabric shall be attached to terminal posts with stretcher bars and tension bands. Bands shall be spaced at approximately 381 mm (15-inch) intervals. The fabric shall be installed and pulled taut to provide a smooth and uniform appearance free from sag, without permanently distorting the fabric diamond or reducing the fabric height. Fabric shall be fastened to line posts at approximately 381 mm (15-inch) intervals and fastened to tension wires at approximately 610 mm (24-inch) intervals. Fabric shall be cut by untwisting and removing pickets. Splicing shall be accomplished by weaving a single picket into the ends of the rolls to be joined. The bottom of the installed fabric shall be 51 mm (2 inches) (plus or minus 13 mm (1/2 inch) above the ground. After the fabric installation is complete, the fabric shall be exercised by applying a 222 newtons (50-pound), push-pull force at the center of the fabric between posts. The use of a 133 newtons (30-pound) pull at the center of the panel shall cause fabric deflection of not more than 64 mm (2.5 inches) when pulling fabric from the post side of the fence. A minimum of 10% of the fence panel shall be tested at random by the Contractor. When a fence panel fails; the panels adjacent to the failed panel shall also be tested at no additional cost to the government and will not be considered as part of the 10% to be tested. All failed panels shall be re-secured and retested at the Contractor's expense.

3.8 GATES

Gates shall be installed at the locations shown. Hinged gates shall be mounted to swing as indicated. Vertical alignment for all gates shall be not greater than 5 mm per meter (1/16 inch per foot) of height of gate. Provisions for padlocks, padlocks, and padlock accessories shall be provided for swing gates. Latches, stops, and keepers shall be installed as required. Padlocks shall be attached to gates or gate posts with chains and hinge pins, and hardware shall be welded or otherwise secured to prevent removal. One padlock and accessories shall be provided for each gate.

3.9 GROUNDING

Fences crossed by powerlines of 600 volts or more shall be grounded at or near the point of crossing and at distances not exceeding 45 m (150 ft) on each side of crossing. Ground conductor shall consist of No. 8 AWG solid copper wire. Grounding electrodes shall be 19 mm (3/4 inch) by 3.05 m (10 ft) long copper clad steel rod. Electrodes shall be driven into the earth so that the top of the electrode is at least 152 mm (6 inches) below the grade. Where driving is impractible, electrodes shall be buried a minimum of 300 mm (12 inches) deep and radially from the fence. The top of the electrode shall be not less than 0.61 m (2 ft) or more than 2.44 m (8 ft) from the fence. Ground conductor shall be clamped to the fence and electrode with bronze grounding elements clamps to create electrical continuity between fence posts, fence fabric, and ground rods. After installation the total resistance of fence to ground shall not be greater than 25 ohms.

3.10 CONTRACTOR QUALITY CONTROL

The Contractor shall establish and maintain a quality control system to assure compliance with contract requirements and shall maintain records of his quality control for all operations including but not limited to the following:

(1) Inspection of material delivered to the project site against approved material data.

(2) Storage and handling of materials.

(3) Installation to lines indicted.

(4) Operational testing of gates.

(5) Rigidity testing for posts.

(6) Deflection testing for chain link fabric.

(7) Grounding.

(8) Finished appearance.

Copies in duplicate of these records and tests, as well as records of corrective action taken when results are unsatisfactory, shall be furnished to the Contracting Officer within 24 hours following the inspection or test.

PART 4 SUBMITTAL SUMMARY

4.1 SUMMARY OF SUBMITTALS

Submittals to be furnished by the Contractor shall include the following:

Paragraph	Item	SD
2.1.1	Chain Link Fence Materials	01
2.1.2	Concrete	01
2.1.3	Padlocks	01
3.10	Contractor Quality Control	18

Code for Type of Submittal (SD)

01 - Data
04 - Drawings
06 - Instructions
07 - Schedules
08 - Statements
09 - Reports
13 - Certificates
14 - Samples
18 - Records
19 - O & M Manuals

- End of Section -

* * * * *

TECHNICAL SPECIFICATION
FOR
ELECTRICAL DISTRIBUTION SYSTEM, AERIAL
SECTION 16370

SITE PREPARATION

ENVIRONMENTAL RESTORATION DISPOSAL FACILITY (ERDF)
CELLS 3 & 4 CONSTRUCTION

REV	DATE	REASON FOR REVISION	ORIGINATOR	CHECKER	GROUP LEADER	TASK DESIGN LEAD	PROJECT ENGINEER
0		Approved for implementation					

RICHLAND ENVIRONMENTAL RESTORATION PROJECT	JOB NO. 22192	
	SPECIFICATION NO. 0600X-SP-E0007	
	SHEET 1 of 22	

06000X-SC-G0016-5-002-01 p 8 of ~~24~~ 148 bdg 11/26/97

This page intentionally blank.

SECTION 16370

ELECTRICAL DISTRIBUTION SYSTEM, AERIAL

PART 1 GENERAL

1.1 REFERENCES

The publications listed below form a part of this specification to the extent referenced. The publications are referred to in the text by basic designation only.

AMERICAN ASSOCIATION OF STATE HIGHWAY AND TRANSPORTATION OFFICIALS (AASHTO)

AASHTO LTS-2	(1985; Rev 1986, 1987, 1988) Standard Specifications for Structural Supports for Highway Signs, Luminaires and Traffic Signals

AMERICAN NATIONAL STANDARDS INSTITUTE (ANSI)

ANSI C2	(1993) National Electrical Safety Code
ANSI C29.1	(1988) Electrical Power Insulators - Test Methods
ANSI C29.2	(1983) Insulators - Wet-Process Porcelain and Toughened Glass - Suspension Type
ANSI C29.3	(1986) Wet Process Porcelain Insulators - Spool Type
ANSI C29.4	(1989) Wet-Process Porcelain Insulators - Strain Type
ANSI C29.5	(1984) Wet-Process Porcelain Insulators - Low- and Medium-Voltage Types
ANSI C29.6	(1984) Wet-Process Porcelain Insulators - High-Voltage Pin Type
ANSI C29.7	(1983; C29.7a) Wet-Process Porcelain Insulators - High-Voltage Line-Post Type
ANSI C29.8	(1985) Wet-Process Porcelain Insulators - Apparatus, Cap and Pin Type
ANSI C29.9	(1983) Wet-Process Porcelain Insulators - Apparatus, Post-Type

ANSI C37.32	(1990) High-Voltage Air Switches, Bus Supports, and Switch Accessories - Schedules of Preferred Ratings, Manufacturing Specifications, and Application Guide
ANSI C57.12.20	(1988) Overhead-Type Distribution Transformers, 500 kVA and Smaller: High Voltage 34 500 Volts and Below; Low Voltage, 7970/13 800Y Volts and Below
ANSI C135.1	(1979) Galvanized Steel Bolts and Nuts for Overhead Line Construction
ANSI C135.2	(1987) Threaded Galvanized Ferrous Strand-Eye Anchor Rods and Nuts for Overhead Line Construction
ANSI C135.4	(1987) Zinc-Coated Ferrous Eyebolts and Nuts for Overhead Line Construction
ANSI C135.14	(1979) Staples with Rolled or Slash Points for Overhead Line Construction
ANSI C135.17	(1988) Galvanized Ferrous Bolt-Type Insulator Pins with Lead Threads for Overhead Line Construction
ANSI C135.22	(1988) Galvanized Ferrous Pole-Top Insulator Pins with Lead Threads for Overhead Line Construction
ANSI C135.30	(1988) Zinc-Coated Ferrous Ground Rods for Overhead or Underground Line Construction
ANSI C135.33	(1988) Galvanized Ferrous Crossarm Gains for Overhead Line Construction
ANSI O5.1	(1992) Specifications and Dimensions for Wood Poles

AMERICAN SOCIETY FOR TESTING AND MATERIALS (ASTM)

ASTM A 36	(1991) Structural Steel
ASTM A 123	(1989a) Zinc (Hot-Dip Galvanized) Coatings on Iron and Steel Products
ASTM A 153	(1982; R 1987) Zinc Coating (Hot-Dip) on Iron and Steel Hardware
ASTM A 475	(1989) Zinc-Coated Steel Wire Strand
ASTM A 575	(1989) Steel Bars, Carbon, Merchant Quality, M-Grades
ASTM A 576	(1990b) Steel Bars, Carbon, Hot-Wrought, Special Quality
ASTM B 1	(1990) Hard-Drawn Copper Wire

ASTM B 8	(1990) Concentric-Lay-Stranded Copper Conductors, Hard, Medium-Hard, or Soft
ASTM B 117	(1990) Salt Spray (Fog) Testing
ASTM B 228	(1988) Concentric-Lay-Stranded Copper- Clad Steel Conductors
ASTM B 230	(1989) Aluminum 1350-H19 Wire for Electrical Purposes
ASTM B 231	(1990) Concentric-Lay-Stranded Aluminum 1350 Conductors
ASTM B 232	(1992) Concentric-Lay-Stranded Aluminum Conductors, Coated-Steel Reinforced (ACSR)
ASTM B 398	(1990) Aluminum-Alloy 6201-T81 Wire for Electrical Purposes
ASTM B 399	(1992) Concentric-Lay-Stranded Aluminum-Alloy 6201-T81 Conductors
ASTM B 416	(1988) Concentric-Lay-Stranded Aluminum- Clad Steel Conductors
ASTM D 923	(1991) Sampling Electrical Insulating Liquids
ASTM D 1654	(1979a; R 1984) Evaluation of Painted or Coated Specimens Subjected to Corrosive Environment
ASTM D 4059	(1991) Analysis of Polychlorinated Biphenyls in Insulating Liquids by Gas Chromatography.
ASTM F 883	(1990) Padlocks

AMERICAN WOOD-PRESERVERS' ASSOCIATION (AWPA)

AWPA C4	(1992) Poles - Preservative Treatment by Pressure Processes
AWPA C25	(1992) Sawn Crossarms - Preservative Treatment by Pressure Processes
AWPA P1/13	(1991) Coal Tar Creosote for Land and Fresh Water and Marine (Coastal Water) Use
AWPA P5	(1992) Waterborne Preservatives
AWPA P8	(1991) Oil-Borne Preservatives
AWPA P9	(1992) Solvents and Formulations for Organic Preservative Systems

INSTITUTE OF ELECTRICAL AND ELECTRONIC ENGINEERS (IEEE)

IEEE C37.34	(1971; R 1987; C37.34a; C37.34b; C37.34d; C37.34e) Test Code for High-Voltage Air Switches
IEEE C37.41	(1988; C37.41c) Design Tests for High-Voltage Fuses, Distribution Enclosed Single-Pole Air Switches, Fuse Disconnecting Switches, and Accessories
IEEE C37.60	(1981; R 1988) IEEE Requirements for Overhead, Pad-Mounted Dry Vault and Submersible Automatic Circuit Reclosers and Fault Interrupters for AC Systems
IEEE C57.19.00	(1991) IEEE Standard General Requirements and Test Procedures for Outdoor Power Apparatus Bushings
IEEE C57.19.01	(1991) IEEE Standard Performance Characteristics and Dimensions for Outdoor Apparatus Bushings
IEEE C57.98	(1986) Guide for Transformer Impulse Tests - Appendix to C57.12.90
IEEE C62.1	(1989) Surge Arresters for ac Power Circuits
IEEE C62.2	(1987) Guide for the Application of Gapped Silicon-Carbide Surge Arresters for Alternating Current Systems
IEEE C62.11	(1987) Metal-Oxide Surge Arresters for AC Power Circuits
IEEE Std 18	(1980) Shunt Power Capacitors
IEEE Std 81	(1983) Guide for Measuring Earth Resistivity, Ground Impedance, and Earth Surface Potentials of a Ground System
IEEE Std 100	(1988) IEEE Standard Dictionary of Electrical and Electronics Terms

INSULATED CABLE ENGINEERING ASSOCIATION (ICEA)

ICEA S-70-547	(1992) Weather Resistant Polyolefin - Covered Wire and Cable

NATIONAL ELECTRICAL MANUFACTURERS ASSOCIATION (NEMA)

NEMA HV 2	(1991) Application Guide for Ceramic Suspension Insulator
NEMA LA 1	(1986) Surge Arresters
NEMA SG 2	(1986) High-Voltage Fuses

NEMA WC 5	(1992) Thermoplastic-Insulated Wire and Cable for the Transmission and Distribution of Electrical Energy
NEMA WC 7	(1988) Cross-Linked-Thermosetting-Polyethylene-Insulated Wire and Cable for the Transmission and Distribution of Electrical Energy
NEMA WC 8	(1988) Ethylene-Propylene-Rubber-Insulated Wire and Cable for the Transmission and Distribution of Electrical Energy

NATIONAL FIRE PROTECTION ASSOCIATION (NFPA)

NFPA 70	(1993) National Electrical Code

RURAL ELECTRIFICATION ADMINISTRATION (REA)

REA DT-5B	(1987) Wood Crossarms (Solid and Laminated), Transmission Timbers and Pole Keys

UNDERWRITERS LABORATORIES (UL)

UL 467	(1984; Rev thru Nov 1986) Grounding and Bonding Equipment
UL 486A	(1991; Rev Oct 1991) Wire Connectors and Soldering Lugs for Use with Copper Conductors
UL 486B	(1991; Rev thru Apr 1992) Wire Connectors for Use with Aluminum Conductors

1.2 GENERAL REQUIREMENTS

1.2.1 Terminology

Terminology used in this specification is as defined in IEEE Std 100.

1.2.2 Service Conditions

Items provided under this section shall be specifically suitable for the following service conditions.

a. Altitude 107 m (350 feet)

b. Ambient Temperature minus 20 degrees C (minus 5 degrees F) to 43 degrees C (110 degrees F)

c. Frequency 60 hz

d. Seismic Zone 2B

1.3 SUBMITTALS

Submittals shall be furnished in accordance with Exhibit I.

SD-01 Data

Manufacturer's Catalog Data;

Submit data composed of catalog cuts, brochures, circulars, specifications, product data, and printed information in sufficient detail and scope to verify compliance with the requirements of the contract documents.

Material, Equipment, and Fixture Lists;

A complete itemized listing of equipment and materials proposed for incorporation into the work shall be submitted. Each entry shall include an item number, the quantity of items proposed, and the name of the manufacturer of each such item.

Installation Procedures;

As a minimum, the Contractor shall submit installation procedures for regulators, transformers and reclosers.

Procedures shall include diagrams, instructions, and precautions required to install, adjust, calibrate, and test the devices and equipment.

SD-04 Drawings

Electrical Distribution System;

Detail drawings consisting of equipment drawings, illustrations, schedules, instructions, diagrams and other information necessary to define the installation and enable the Government to check conformity with the requirements of the contract drawings. Detail drawings shall as a minimum include:

a. Poles.

b. Crossarms.

c. Transformers.

d. Pole top switches.

e. Conductors.

f. Insulators.

g. Surge arresters.

If departures from the contract drawings are deemed necessary by the Contractor, complete details of such departures shall be submitted through a Request for Information (RFI) to the Contracting Officer.

Detail drawings shall show how components are assembled, function together and how they will be installed on the project. Data and drawings for component parts of an item or system shall be

coordinated and submitted as a unit. Data and drawings shall be coordinated and included in a single submission. Multiple submissions for the same equipment or system are not acceptable except where prior approval has been obtained from the Contracting Officer. In such cases, a list of data to be submitted later shall be included with the first submission. Detail drawings shall consist of the following:

a. Detail drawings showing physical arrangement, construction details, connections, finishes, materials used in fabrication, provisions for conduit or busway entrance, access requirements for installation and maintenance, physical size, electrical characteristics, foundation and support details, and equipment weight. Drawings shall be drawn to scale and/or dimensioned. All optional items shall be clearly identified as included or excluded.

b. Internal wiring diagrams of equipment showing wiring as actually provided for this project. External wiring connections shall be clearly identified.

SD-09 Reports

Factory Test;

Certified factory test reports shall be submitted when the manufacturer performs routine factory tests, including tests required by standards listed in paragraph REFERENCES. Results of factory tests performed shall be certified by the manufacturer, or an approved testing laboratory, and submitted within 7 days following successful completion of the tests specified in applicable publications or in these specifications.

Field Testing;

A proposed field test plan 20 days prior to testing the installed system. No field test will be performed until the test plan is approved. The test plan shall consist of complete field test procedures including tests to be performed, test equipment required, and tolerance limits.

Test Reports;

Six copies of the information described below in 8 1/2 by 11 inch binders having a minimum of 5 rings from which material may readily be removed and replaced, including a separate section for each test. Sections shall be separated by heavy plastic dividers with tabs.

a. A list of all equipment used, with calibration certifications.

b. A copy of all measurements taken.

c. The dates of testing.

d. The equipment and values to be verified.

e. The condition specified for the test.

f. The test results, signed and dated.

g. A description of all adjustments made.

SD-13 Certificates

Materials and Equipment;

Where materials or equipment are specified to conform to the standards of the Underwriters Laboratories (UL) or to be constructed or tested, or both, in accordance with the standards of the American National Standards Institute (ANSI), the Institute of Electrical and Electronic Engineers (IEEE), or the National Electrical Manufacturers Association (NEMA), the Contractor shall submit proof that the items provided under this section of the specifications conform to such requirements. The label of, or listing by, UL will be acceptable as evidence that the items conform thereto. Either a certification or a published catalog specification data statement, to the effect that the item is in accordance with the referenced ANSI or IEEE standard, will be acceptable as evidence that the item conforms thereto. A similar certification or published catalog specification data statement to the effect that the item is in accordance with the referenced NEMA standard, by a company listed as a member company of NEMA, will be acceptable as evidence that the item conforms thereto. In lieu of such certification or published data, the Contractor may submit a certificate from a recognized testing agency equipped and competent to perform such services, stating that the items have been tested and that they conform to the requirements listed, including methods of testing of the specified agencies. Compliance with above-named requirements does not relieve the Contractor from compliance with any other requirements of the specifications.

SD-19 Operation and Maintenance Manuals

Electrical Distribution System;

Six copies of Operation and Maintenance manuals, within 7 calendar days following the completion of tests and including assembly, installation, operation and maintenance instructions, spare parts data which provides supplier name, current cost, catalog order number, and a recommended list of spare parts to be stocked. Manuals shall also include data outlining detailed procedures for system startup and operation, and a troubleshooting guide which lists possible operational problems and corrective action to be taken. A brief description of all equipment, basic operating features, and routine maintenance requirements shall also be included. Documents shall be bound in a binder marked or identified on the spine and front cover. A table of contents page shall be included and marked with pertinent contract information and contents of the manual. Tabs shall be provided to separate different types of documents, such as catalog ordering information, drawings, instructions, and spare-parts data. Index sheets shall be provided for each section of the manual when warranted by the quantity of documents included under separate tabs or dividers.

Three additional copies of the instructions manual within 30 calendar days following the approval of the manuals.

1.4 DELIVERY, STORAGE, AND HANDLING

Devices and equipment shall be visually inspected by the Contractor when received and prior to acceptance from conveyance. Stored items shall be protected from the environment in accordance with the manufacturer's published instructions. Damaged items shall be replaced. Oil filled transformers and switches shall be stored in accordance with the manufacturer's requirements. Wood poles held in storage for more than two weeks shall be stored in accordance with ANSI O5.1. Handling of wood poles shall be in accordance with ANSI O5.1, except that pointed tools capable of producing indentations more than 25 mm (1 inch) in depth shall not be used. Metal poles shall be handled and stored in accordance with the manufacturer's instructions.

1.5 EXTRA MATERIALS

One additional spare fuse or fuse element for each furnished fuse or fuse element shall be delivered to the contracting officer when the electrical system is accepted. Two complete sets of all special tools required for maintenance shall be provided, complete with a suitable tool box. Special tools are those that only the manufacturer provides, for special purposes (to access compartments, or operate, adjust, or maintain special parts)

PART 2 PRODUCTS

Products shall conform to the following requirements. Items of the same classification shall be identical including equipment, assemblies, parts, and component.

2.1 STANDARD PRODUCT

Material and equipment shall be the standard product of a manufacturer regularly engaged in the manufacture of the product and shall essentially duplicate items that have been in satisfactory use for at least 2 years prior to bid opening.

2.2 NAMEPLATES

2.2.1 General

Each major component of this specification shall have the manufacturer's name, address, type or style, model or serial number, and catalog number on a nameplate securely attached to the equipment. Equipment containing liquid-dielectrics shall have the type of dielectric on the nameplate. Nameplates shall be made of noncorrosive metal. As a minimum, nameplates shall be provided for transformers, regulators, circuit breakers, capacitors, meters and switches.

2.2.2 Liquid-Filled Transformer Nameplates

Nameplates shall indicate percent impedance, voltage, kVA, frequency, number of phases, cooling class, insulation class, temperature rise, the number of gallons and composition of transformer liquid dielectric, and shall be permanently marked with a statement that the transformer dielectric is non-polychlorinated biphenyl. If transformer nameplate is not so marked, the Contractor shall furnish manufacturer's certification for each transformer that the dielectric is non-PCB classified, with less than 50 ppm PCB content in accordance with paragraph LIQUID DIELECTRICS. Liquid Dielectrics Certifications shall be related to serial numbers on transformer nameplates. Transformer dielectric exceeding the 50 ppm PCB content or transformers without certification will be considered as PCB insulated and will not be accepted.

2.3 CORROSION PROTECTION

2.3.1 Aluminum Materials

Aluminum shall not be used.

2.3.2 Ferrous Metal Materials

2.3.2.1 Hardware

Ferrous metal hardware shall be hot-dip galvanized in accordance with ASTM A 153 and ASTM A 123.

2.3.2.2 Equipment

Equipment and component items, including but not limited to transformers and ferrous metal luminaires not hot-dip galvanized or porcelain enamel finished, shall be provided with corrosion-resistant finishes which shall withstand 120 hours of exposure to the salt spray test specified in ASTM B 117 without loss of paint or release of adhesion of the paint primer coat to the metal surface in excess of 1.6 mm (1/16 inch) from the test mark. The described test mark and test evaluation shall be in accordance with ASTM D 1654 with a rating of not less than 7 in accordance with TABLE 1, (procedure A). Cut edges or otherwise damaged surfaces of hot-dip galvanized sheet steel or mill galvanized sheet steel shall be coated with a zinc rich paint conforming to the manufacturer's standard.

2.4 CONDUCTORS, CONNECTORS, AND SPLICES

2.4.1 Aluminum-Composition Conductors

Aluminum-conductor-steel-reinforced, ACSR, shall comply with ASTM B 232.

2.4.2 Copper Conductors

Hard-drawn-copper conductors shall comply with ASTM B 1 and ASTM B 8 as appropriate for the conductor size.

2.4.3 Connectors and Splices

Connectors and splices shall be of copper alloys for copper conductors, aluminum alloys for aluminum-composition conductors, and a type designed to minimize galvanic corrosion for copper to aluminum-composition conductors. Aluminum-composition and aluminum-composition to copper shall comply with UL 486B, and copper to copper shall comply with UL 486A.

2.5 MEDIUM-VOLTAGE LINES

2.5.1 Bare Medium-Voltage Lines

Bare medium-voltage line conductors shall be aluminum-conductor-steel-reinforced, ACSR. Conductor types shall not be mixed on any project, unless specifically indicated. Conductors larger than No. 2 AWG shall be stranded.

2.6 LOW-VOLTAGE LINES

Low-voltage line conductors shall be service drop type with thermoplastic insulation in accordance with NEMA WC 5. Service drop conductors shall be insulated copper.

2.7 POLES AND HARDWARE

Installation shall comply with the requirements of ANSI C2 for Grade B construction. The loading district will be that applying to the location of the installation. Joint-use electric poles for overhead electric and communication lines shall be wood poles utilizing crossarm construction. Single-phase transformer installations shall be provided. Crossarm construction shall be provided for support of other equipment, except where direct-pole mounting is indicated. Provision for communication services is required on pole-line construction, except where specifically noted otherwise. A vertical pole space of not less than 600 mm (2 feet) shall be reserved at all locations. Poles shall be of lengths and classes indicated.

2.7.1 Wood Poles

Wood poles shall comply with ANSI O5.1, and shall be pressure treated in accordance with AWPA C4, with creosote conforming to AWPA P1/13 or with oil-borne preservatives and petroleum conforming to AWPA P8 and AWPA P9, respectively, and waterborne preservatives conforming to AWPA P5. Waterborne preservatives shall be either chromated or ammoniacal copper arsenate. Any species listed in ANSI O5.1 for which a preservative treatment is not specified in AWPA C4, shall not be used; northern white cedar, if treated as specified for western red cedar, and western fir, if treated as specified for Douglas fir, may be used. Wood poles shall have pole markings located approximately 3 m (10 feet) from pole butts for poles 15.2 m (50 feet) or less in length, and 4 m (14 feet) from the pole butts for poles longer than 16.8 m (55 feet) in length. Poles shall be machine trimmed by turning smooth full length, and shall be roofed, gained, and bored prior to pressure treatment. Where poles are not provided with factory-cut gains, metal gain plates shall be provided.

2.7.2 Pole Line Hardware

Zinc-coated hardware shall comply with ANSI C135.1, ANSI C135.2, ANSI C135.4, ANSI C135.14, ANSI C135.17, ANSI C135.22, and ANSI C135.33. Steel hardware shall comply with ASTM A 575 and ASTM A 576. All hardware shall be hot-dip galvanized in accordance with ASTM A 153. Pole-line hardware shall be hot-dip galvanized steel. Suitable washers shall be installed under boltheads and nuts on wood surfaces and elsewhere as required. Washers used on through-bolts and double-arming bolts shall be approximately 57.2 mm (2-1/4 inches) square and 4.8 mm (3/16-inch) thick. The diameter of holes in washers shall be the correct standard size for the bolt on which a washer is used. Washers for use under heads of carriage-bolts shall be of the proper size to fit over square shanks of bolts. Eye bolts, bolt eyes, eyenuts, strain-load plates, lag screws, guy clamps, fasteners, hooks, shims, and clevises shall be used wherever required to support and to protect poles, brackets, crossarms, guy wires, and insulators.

2.7.3 Guy Assemblies

Guy assemblies shall be aluminum-clad steel in accordance with ASTM B 416 or zinc-coated steel in accordance with ASTM A 475. Guy assemblies, including insulators and attachments, shall provide a strength exceeding the required guy strength. Three-eye thimbles shall be provided on all anchor rods to permit attachment of individual primary, secondary, and communication down guys. Anchors shall provide adequate strength to support all loads. Guy strand shall be 7 strand. Guy material shall be Class A zinc-coated-steel utilities or aluminum-clad-steel-strand, with a minimum breaking strength not less than 26.7 kN (6000 pounds) except where two or more guys are used to provide the required strength. Guy rods shall be not less than 2.1 m (7 feet) in length by 19.1 mm (3/4 inch) in diameter.

2.8 INSULATORS

Insulators shall comply with NEMA HV 2 for general requirements. Suspension insulators shall be used at corners, angles, dead-ends, other areas where line insulators do not provide adequate strength, and as indicated. Mechanical strength of suspension insulators and hardware shall exceed the rated breaking strength of the attached conductors.

2.8.1 Medium-Voltage Line Insulators

Medium-voltage line insulators shall comply with ANSI C29.2, ANSI C29.5, ANSI C29.6, and ANSI C29.7 as applicable. Ratings shall not be lower than the ANSI classes indicated in TABLE I. Where line-post insulators are used for angles greater than 15 degrees, clamp-top fittings shall be provided as well as for other locations shown. Conductor clamps for use with clamp-top, line-post insulators shall be hot-dip galvanized malleable iron for copper conductors and aluminum alloy for aluminum-composition conductors. Either line-post or pin insulators may be used for crossarm construction. Pin insulators for use on voltages in excess of 6 kV phase-to-phase shall be radio-interference-freed or else line-post insulators shall be used.

TABLE I. MINIMUM ANSI RATING OF MEDIUM-VOLTAGE INSULATORS BY CLASS

Voltage Level	Line-Post	Pin	Suspension
Up to 5 kV	57-1 or 11	55-3	One 52-1
	57-1 or 11	55-5	Two 52-1
6 kV to 15 kV	57-1 or 11	55-5	Two 52-2
	57-2 or 12	56-3	Two 52-3 or 4

2.8.2 Strain Insulators for Guy Wires

Strain insulators for use in insulated guy assemblies shall comply with ANSI C29.4 for porcelain or equivalent fiberglass, and shall have a mechanical strength exceeding the rated breaking strength of the attached guy wire. Insulators shall be not smaller than 54-3 for lines of 6 kV to 15 kV.

2.8.3 Apparatus Insulators

Apparatus insulators shall comply with IEEE C57.19.00, IEEE C57.19.01, ANSI C29.8, and ANSI C29.9 as applicable.

2.9 CROSSARM ASSEMBLIES

2.9.1 Crossarms

Crossarms shall comply with REA DT-5B and be solid wood, distribution type, except cross-sectional area with pressure treatment conforming to AWPA C25, and a 6.4 mm (1/4-inch), 45 degree chamfer on all top edges. Cross-sectional area minimum dimensions shall be 117 mm (4-5/8 inches) in height by 92 mm (3-5/8 inches) in depth in accordance with ANSI C2 for Grade B construction. Crossarms shall be 2.44 m (8 feet) in length. Crossarms shall be machined, chamfered, trimmed, and bored for stud and bolt holes before pressure treatment. Factory drilling shall be provided for pole and brace mounting, for four pin or four vertical line-post insulators, and for four suspension insulators, except where otherwise indicated or required. Drilling shall provide required climbing space and wire clearances. Crossarms

shall be straight and free of twists to within 2.5 mm by 305 mm (1/10-inch per foot) of length. Bend or twist shall be in one direction only.

2.9.2 Crossarm Gains

Crossarm gains shall comply with ANSI C135.33.

2.10 FUSES AND SWITCHES, MEDIUM-VOLTAGE

2.10.1 Fused Cutouts

Medium-voltage fuses and cutouts shall comply with NEMA SG 2 and shall be of the loadbreak open type construction rated 15 kV and of the normal duty type. Open-link cut-outs are not acceptable. Fuses shall be either indicating or dropout type. Fuse ratings shall be as indicated. Fuse cutouts shall be equipped with mounting brackets suitable for the indicated installations.

2.11 TRANSFORMERS

Transformers shall comply with IEEE C57.12.00 for general requirements and ANSI C57.12.20 for specific requirements for overhead transformers. Overhead distribution transformers shall be of the outdoor type, less-flammable liquid-insulated with high molecular-weight-hydrocarbon or dimethyle silicone liquid single- phase or three-phase as indicated and have two separate windings per phase. Transformers shall be provided with necessary auxiliary mounting devices suitable for the indicated installation. Transformers shall have four 2-1/2 percent rated kVA high-voltage taps above and below rated primary voltage. Transformer installations shall include one primary fuse cutout and one surge arrester for each ungrounded phase conductor. Self-protected transformers are not acceptable. Transformer tanks shall have a standard gray finish.

2.12 SURGE ARRESTERS

Surge arresters shall comply with NEMA LA 1 and IEEE C62.1, IEEE C62.2, and IEEE C62.11, and shall be provided for protection of aerial-to-underground transitions, automatic circuit reclosers, capacitor equipment, group-operated load-interrupter switches, transformers and other indicated equipment. Arresters shall be distribution class, rated as shown. Arresters shall be equipped with mounting brackets suitable for the indicated installations. Arresters shall be of the combination valve-metal-oxide varistor type suitable for outdoor installations.

2.13 HEAVY DUTY ENCLOSED, HIGH PRESSURE SODIUM FLOODLIGHT

Fixture shall conform to NEMA FA 1, UL 1572, and to other requirements specified and indicated in contract documents. Fixture shall consist of a cast aluminum housing and a cast aluminum door assembly and shall be integrally ballasted unless otherwise shown or approved. The door assembly shall be hinged and gasketed and held in the closed position with screws of finish to match fixture or recessed stainless steel latches. The lens shall be thermal shock and impact resistant tempered glass and shall be held securely in the door frame. Lampholder shall be mogul base glazed porcelain. Reflector shall be aluminum with the manufacturer's standard commercial product finish suitable for light source provided. Ballast shall be of the high power factor type and capable of starting and operating the lamp in an ambient temperature of minus 29 degrees C (minus 20 degrees F) to 41 degrees C (105 degrees F). Ballast shall be the regulated or constant wattage type for high pressure sodium lamps.

Fixture shall be prewired. All exposed metallic parts of the fixture shall receive the manufacturer's standard commercial product finish. Fixture mounting shall be cast aluminum and adjustable.

2.14 GROUNDING AND BONDING

2.14.1 Driven Ground Rods

Ground rods shall be of copper-clad steel conforming to UL 467 not less than 16 mm (5/8 inch) in diameter by 3.1 m (10 feet) in length.

2.14.2 Grounding Conductors

Grounding conductors shall be bare, except where installed in conduit with associated phase conductors. Insulated conductors shall be of the same material as the phase conductors and green color-coded, except that conductors shall be rated no more than 600 volts. Bare conductors shall be ASTM B 8 soft-drawn unless otherwise indicated. Aluminum is not acceptable.

2.15 WARNING SIGNS

Warning signs shall be porcelain enameled steel or approved equal. Voltage warning signs shall comply with ANSI C2.

2.16 LIQUID DIELECTRICS

Liquid dielectrics for transformers, capacitors, reclosers, and other liquid-filled electrical equipment shall be non-polychlorinated biphenyl (PCB) mineral-oil or less-flammable liquid as specified. Nonflammable fluids shall not be used. Tetrachloroethylene (perchloroethylene) and 1, 2, 4 tetrachlorobenzene fluids shall not be used. Liquid dielectrics in retrofitted equipment shall be certified by the manufacturer as having less than 50 parts-per-million (ppm) PCB content. In lieu of the manufacturer's certification, the Contractor may submit a test sample of the dielectric in accordance with ASTM D 923 and have tests performed per ASTM D 4059 at a testing facility approved by the Contracting Officer. Equipment with test results indicating PCB level exceeding 50 ppm shall be replaced.

2.17 FACTORY TESTS

Factory tests shall be performed, as follows, in accordance with the applicable publications and with other requirements of these specifications. The Contracting Officer shall be notified at least 10 days before the equipment is ready for testing.

a. Transformers: Manufacturer's standard tests in accordance with IEEE C57.12.00.

b. High-Voltage Air Switches: Manufacturer's standard tests in accordance with IEEE C37.34 and IEEE C37.41.

c. High-Voltage Fuses: Manufacturer's standard tests in accordance with IEEE C37.41.

PART 3 EXECUTION

3.1 INSTALLATION

Equipment and devices shall be installed and energized in accordance with the manufacturer's published instructions.

3.1.1 Conformance to Codes

The installation shall comply with the requirements and recommendations of NFPA 70 and ANSI C2 for light loading districts, Grade B construction. No reduction in clearance shall be made.

3.1.2 Verification of Dimensions

The Contractor shall become familiar with details of the work, shall verify dimensions in the field, and shall notify the Contracting Officer of any discrepancy before performing any work.

3.2 POLE INSTALLATION

3.2.1 Wood Pole Setting

Wood poles shall be set straight and firm. Pole setting depths shall be as shown. In rocky or swampy ground, pole-setting depths shall be decreased or increased as shown. In swampy or soft ground, a bog shoe shall be used where support for a pole is required. Poles in straight runs shall be in a straight line. Curved poles shall be placed with curvatures in the direction of the pole line. Poles shall be set to maintain as even a grade as practicable. When the average ground run is level, consecutive poles shall not vary more than 1.5 m (5 feet) in height. When the ground is uneven, poles differing in length shall be kept to a minimum by locating poles at points other than the highest and lowest ground points. If it becomes necessary to shorten a pole, a piece shall be sawed off the top end and roofed. If any pole is shortened after treatment, the shortened end of the pole shall be given an application of hot preservative. Where poles are set on hilly terrain, along edges of cuts or embankments, or where soil may be washed out, special precautions shall be taken to ensure durable pole foundations, and the setting depth shall be measured from the lower side of the terrain. Holes shall be dug large enough to permit proper use of tampers to the full depth of a hole. Earth shall be placed into a hole in 152 mm (6-inch) maximum layers, then thoroughly tamped before the next layer is placed. Surplus earth shall be placed around a pole in a conical shape and packed tightly to drain water away from poles.

3.3 CROSSARM MOUNTING

Crossarms shall be bolted to poles with 16 mm (5/8-inch) through-bolts with square washers at each end. Bolts shall extend not less than 3 mm (1/8 inch) nor more than 50 mm (2 inches) beyond nuts. On single crossarm construction, the bolt head shall be installed on the crossarm side of the pole. Metal crossarm braces shall be provided on crossarms. Flat braces shall be 6.4 mm (1/4 inch) by 32 mm (1-1/4 inches), not less than 700 mm (28 inches) in length. Flat braces shall be bolted to arms with 9.5 mm (3/8-inch) carriage bolts with round or square washers between boltheads and crossarms, and secured to poles with 13 mm (1/2-inch) by 102 mm (4-inch) lag screws after crossarms are leveled and aligned. Angle braces shall be 1.52 m (60-inch) span by 457 mm (18-inch) drop formed in one piece from 38 mm (1-1/2 inch) by 38 mm (1-1/2 inch) by 4.8 mm (3/16-inch) angle. Angle braces shall be bolted to crossarms with 13 mm (1/2-inch) bolts with round or square washers between boltheads and crossarms, and secured to poles with 16 mm (5/8-inch) through-bolts. Double crossarms shall be

securely held in position by means of 16 mm (5/8-inch) double-arming bolts. Each double-arming bolt shall be equipped with four nuts and four square washers.

3.3.1 Line Arms and Buck Arms

Line arms and buck arms shall be set at right angles to lines for straight runs and for angles 45 degrees and greater; and line arms shall bisect angles of turns of less than 45 degrees. Dead-end assemblies shall be used for turns where shown. Buckarms shall be installed, as shown, at corners and junction poles. Double crossarms shall be provided at ends of joint use or conflict sections, at dead-ends, and at angles and corners to provide adequate vertical and longitudinal strength. Double crossarms shall be provided at each line-crossing structure and where lines not attached to the same pole cross each other.

3.4 GUY INSTALLATION

Guys shall be provided where shown and wherever conductor tensions are not balanced, such as at angles, corners, and dead-ends. Loads and strengths shall be calculated with the formula shown on the drawings. Where a single guy will not provide the required strength, two or more guys shall be provided. Where guys are wrapped around poles, at least two guy hooks shall be provided and pole shims shall be provided where guy tension exceeds 26.7 kN (6000 pounds). Guy clamps 152 mm (6 inches) in length with three 16 mm (5/8-inch) bolts, or offset-type guy clamps, or approved guy grips shall be provided at each guy terminal. Guy-strain insulators shall be provided in each guy for wood poles. Multiple-helix screw anchors shall be provided in marshy ground; rock anchors shall be installed in rock at right angles to guys, elsewhere anchors shall be of an expanding type, except that power installed screw anchors of equivalent holding power are acceptable. A half-round gray polyvinyl, fiberglass, or other suitable plastic guy marker, not less than 2.44 m (8 feet) in length, shall be provided at the anchor end of each guy shown, securely clamped to the guy or anchor at the bottom and top of the marker. Holding capacities for down guys shall be based on a lead angle of 45 degrees.

3.5 CONDUCTOR INSTALLATION

3.5.1 Line Conductors

Unless otherwise indicated, conductors shall be installed in accordance with manufacturer's approved tables of sags and tensions. Proper care shall be taken in handling and stringing conductors to avoid abrasions, sharp bends, cuts, kinks, or any possibility of damage to insulation or conductors. Conductors shall be paid out with the free end of conductors fixed and cable reels portable, except where terrain or obstructions make this method unfeasible. Bend radius for any insulated conductor shall be at no time less than the applicable NEMA specification recommendation. Conductors shall not be drawn over rough or rocky ground, nor around sharp bends. When installed by machine power, conductors shall be drawn from a mounted reel through stringing sheaves in straight lines clear of obstructions. Initial sag and tension shall be checked by the Contractor, in accordance with the manufacturer's approved sag and tension charts, within an elapsed time after installation, recommended by the manufacturer.

3.5.2 Conductors and Splices

Connectors and splices shall be mechanically and electrically secure under tension and shall be of the nonbolted compression type. The tensile strength of any splice shall be not less than the rated breaking strength of the conductor. Splice materials, sleeves, fittings, and connectors shall be noncorrosive and shall not adversely affect conductors. Aluminum- composition conductors shall be wire brushed and an oxide inhibiter applied before making a compression connection. Connectors which are factory- filled

with an inhibiter are acceptable. Inhibiters and compression tools shall be of types recommended by the connector manufacturer. Primary line apparatus taps shall be by means of hot line clamps attached to compression type bail clamps (stirrups). Low-voltage connectors for copper conductors shall be of the solderless pressure type. Noninsulated connectors shall be smoothly taped to provide a waterproof insulation equivalent to the original insulation, when installed on insulated conductors. On overhead connections of aluminum and copper, the aluminum shall be installed above the copper.

3.5.3 Conductors-To-Insulator Attachments

Conductors shall be properly attached to insulators. For insulators requiring conductor tie-wire attachments, tie-wire sizes shall be as indicated in TABLE II.

TABLE II. TIE-WIRE REQUIREMENT

CONDUCTOR Copper (AWG)	TIE WIRE Soft-Drawn Copper (AWG)
6	8
4 and 2	6
1 through 3/0	4
4/0 and larger	2
AAC, AAAC, or ACSR (AWG)	**AAAC OR AAC (AWG)**
Any size	6 or 4

3.5.4 Armor Rods

Armor rods shall be provided for AAC, AAAC, and ACSR conductors. Armor rods shall be installed at supports, except armor rods will not be required at primary dead-end assemblies if aluminum or aluminum-lined zinc-coated steel clamps are used. Lengths and methods of fastening armor rods shall be in accordance with the manufacturer's recommendations. For span lengths of less than 61 m (200 feet), flat aluminum armor rods may be used. Flat armor rods, not less than 762 micrometers by 6.4 mm (0.03 by 0.25 inch) shall be used on No. 1 AWG AAC and AAAC and smaller conductors and on No. 5 AWG ACSR and smaller conductors. On larger sizes, flat armor rods shall be not less than 1.3 mm by 7.6 mm (0.05 by 0.30 inches). For span lengths of 61 m (200 feet) or more, preformed round armor rods shall be used.

3.6 TRANSFORMER INSTALLATION

Transformers shall be carefully installed so as not to scratch finishes or damage bushings. Transformers shall be installed in accordance with the manufacturer's instructions. After installation, surfaces shall be inspected and scratches shall be touched up with a finish provided by the transformer manufacturer for this purpose.

3.7 CONNECTORS TO UTILITY LINES

The Contractor shall coordinate the work with the Contracting Officer and shall provide for final connections to the installation electric lines.

3.8 GROUNDING

Noncurrent-carrying metal parts of equipment and conductor assemblies, such as operating mechanisms of pole top switches, panel enclosures, transformers, and other noncurrent- carrying metal items shall be grounded. Additional grounding of equipment, neutral, and surge arrester grounding systems shall be installed at poles where indicated.

3.8.1 Grounding Electrodes

Grounding electrodes shall be installed as follows:

a. Driven rod electrodes - Unless otherwise indicated, ground rods shall be located approximately three feet out from base of the pole and shall be driven into the earth until the tops of the rods are approximately one foot below finished grade. Multiple rods shall be evenly spaced at least 3 m (10 feet) apart and connected together 0.61 m (2 feet) below grade with a minimum No. 6 bare copper conductor.

b. Additional electrodes - Whenever the required ground resistance is not met, provide additional electrodes interconnected with grounding conductors, to achieve the specified ground resistance. The additional electrodes will be up to three, 3 m (10 feet) rods spaced a minimum of 3 m (10 feet) apart.

3.8.2 Grounding and Bonding Connections

Connections above grade shall be made by the fusion-welding process or with bolted solderless connectors in compliance with UL 467, and those below grade shall be made by a fusion-welding process. Where grounding conductors are connected to aluminum-composition conductors, specially treated or lined copper-to-aluminum connectors suitable for this purpose shall be used.

3.8.3 Grounding Electrode Conductors

A single continuous vertical grounding electrode conductor shall be installed and connected directly to the grounding electrodes indicated on the drawings or required by these specifications. All equipment, neutrals, surge arresters, and other items required to be grounded shall be connected directly to this vertical conductor. The grounding electrode conductor shall be sized as shown. Secondary system neutral conductors shall be connected directly to the transformer neutral bushings, then connected with a neutral bonding jumper between the transformer neutral bushing and the vertical grounding electrode conductor, as shown. Grounding electrode conductors shall be stapled to wood poles at intervals not exceeding 600 mm (2 feet). Bends greater than 45 degrees in grounding electrode conductor are not permitted.

3.9 FIELD TESTING

3.9.1 General

Field testing shall be performed in the presence of the Contracting Officer. The Contractor shall notify the Contracting Officer 10 days prior to conducting tests. The Contractor shall furnish all materials, labor, and equipment necessary to conduct field tests. The Contractor shall perform all tests and inspections recommended by the manufacturer unless specifically waived by the Contracting Officer. The Contractor shall maintain a written record of all tests which includes date, test performed, personnel involved, devices tested, serial number and name of test equipment, and test results. All field reports will be signed and dated by the Contractor.

3.9.2 Safety

The Contractor shall provide and use safety devices such as rubber gloves, protective barriers, and danger signs to protect and warn personnel in the test vicinity. The Contractor shall replace any devices or equipment which are damaged due to improper test procedures or handling.

3.9.3 Ground-Resistance Tests

The resistance of each grounding electrode system shall be measured using the fall-of-potential method defined in IEEE Std 81. Ground resistance measurements shall be made before the electrical distribution system is energized and shall be made in normally dry conditions not less than 48 hours after the last rainfall. Resistance measurements of separate grounding electrode systems shall be made before the systems are bonded together below grade. The combined resistance of separate systems may be used to meet the required resistance, but the specified number of electrodes must still be provided.

a. Single electrode - 25 ohms

b. Multiple electrodes - 25 ohms

3.9.4 Sag and Tension Test

The Contracting Officer shall be given prior notice of the time schedule for stringing conductors or cables serving overhead medium-voltage circuits and reserves the right to witness the procedures used for ascertaining that initial stringing sags and tensions are in compliance with requirements for the applicable loading district and cable weight.

3.9.5 Low-Voltage Cable Test

Low-voltage cable, complete with splices, shall be tested for insulation resistance after the cables are installed, in their final configuration, ready for connection to the equipment, and prior to energization. The test voltage shall be 500 volts dc, applied for one minute between each conductor and ground and between all possible combinations of conductors in the same trench, duct, or cable, with all other conductors in the same trench, duct, or cable grounded. The Minimum value of insulation shall be:

$$R \text{ in megohms} = \frac{(\text{rated voltage in kV} + 1) \times 1000}{\text{length of cable in feet}}$$

Each cable failing this test shall be repaired or replaced. The repaired cable system shall then be retested until failures have been eliminated.

3.9.6 Liquid-Filled Transformer Tests

The following field tests shall be performed on all liquid-filled transformers 50 kVA and above. Pass-fail criteria shall be in accordance with the transformer manufacturer's specifications.

a. Insulation resistance test phase-to-ground.

b. Turns ratio test.

c. Correct phase sequence.

3.9.7 Pre-Energization Services

The following services shall be performed on the equipment listed below. These services shall be performed subsequent to testing but prior to the initial energization. The equipment shall be inspected to insure that installation is in compliance with the recommendations of the manufacturer and as shown on the detail drawings. Terminations of conductors at major equipment shall be inspected to ensure the adequacy of connections. Bare and insulated conductors between such terminations shall be inspected to detect possible damage during installation. If factory tests were not performed on completed assemblies, tests shall be performed after the installation of completed assemblies. Components shall be inspected for damage caused during installation or shipment and that packaging materials have been removed. Components capable of being both manually and electrically operated shall be operated manually prior to the first electrical operation. Components capable of being calibrated, adjusted, and tested shall be calibrated, adjusted, and tested in accordance with the instructions of the equipment manufacturer. Items for which such services shall be provided, but are not limited to, are the following:

Switches.

Transformers.

3.9.8 Operating Tests

After the installation is completed, and at such time as the Contracting Officer may direct, the Contractor shall conduct operating tests for approval. The equipment shall be demonstrated to operate in accordance with the requirements herein. An operating test report shall be submitted in accordance with paragraph SUBMITTALS.

3.10 ACCEPTANCE

Final acceptance of the facility will not be given until the Contractor has successfully completed all tests and after all defects in installation, material or operation have been corrected.

3.11 CONTRACTOR QUALITY CONTROL

The Contractor shall establish and maintain a quality control system to assure compliance with contract requirements and shall maintain records of his quality control for all operations including but not limited to the following:

(1) Inspection of material delivered to site against approved material data.

(2) Storage and handling of materials.

(3) Methods and procedures for installation.

Copies in duplicate of these records and tests, as well as records of corrective action taken when results are unsatisfactory, shall be furnished to the Contracting Officer within 24 hours following the inspection or test.

PART 4 SUBMITTAL SUMMARY

4.1 SUMMARY OF SUBMITTALS

Submittals to be furnished by the Contractor shall include the following:

Paragraph	Item	SD
16370-2.5	Medium-Voltage Lines	01, 09
16370-2.6	Low-Voltage Lines	01, 09
16370-2.7	Poles and Hardware	01, 09
16370-2.8	Insulators	01, 09
16370-2.9	Crossarm Assemblies	01, 09
16370-2.10	Fuses and Switches, Medium-Voltage	01, 09
16370-2.11	Transformers	01, 09
16370-2.12	Surge Arrestors	01, 09
16370-2.13	HPS Floodlight	01
16370-2.14	Grounding and Bonding	01, 09
16370-3.9	Field Testing	06, 09

Code for Type of Submittal (SD)

01	-	Data
04	-	Drawings
06	-	Instructions
07	-	Schedules
08	-	Statements
09	-	Reports
13	-	Certificates
14	-	Samples
18	-	Records
19	-	O & M Manuals

- End of Section -

* * * * *

This page intentionally blank.

0048805
3/18

ENVIRONMENTAL RESTORATION DISPOSAL FACILITY
CELLS 3 & 4 CONSTRUCTION
HANFORD SITE
RICHLAND, WASHINGTON

SITE PREPARATION DRAWINGS

NOVEMBER 10, 1997

Bechtel Job No. 22192
DOE Contract No. DE-AC06-93RL12367

Prepared for
Bechtel Hanford Inc.

Prepared by
Montgomery Watson
Richland, Washington

DRAWING NO.	REV. NO.
0600X-DD-G0008	0

PROJECT TITLE:

ENVIRONMENTAL RESTORATION DISPOSAL FACILITY (ERDF) CELLS 3 & 4 CONSTRUCTION SITE PREPARATION

FOR:

BECHTEL HANFORD INC.

BY:

MONTGOMERY WATSON

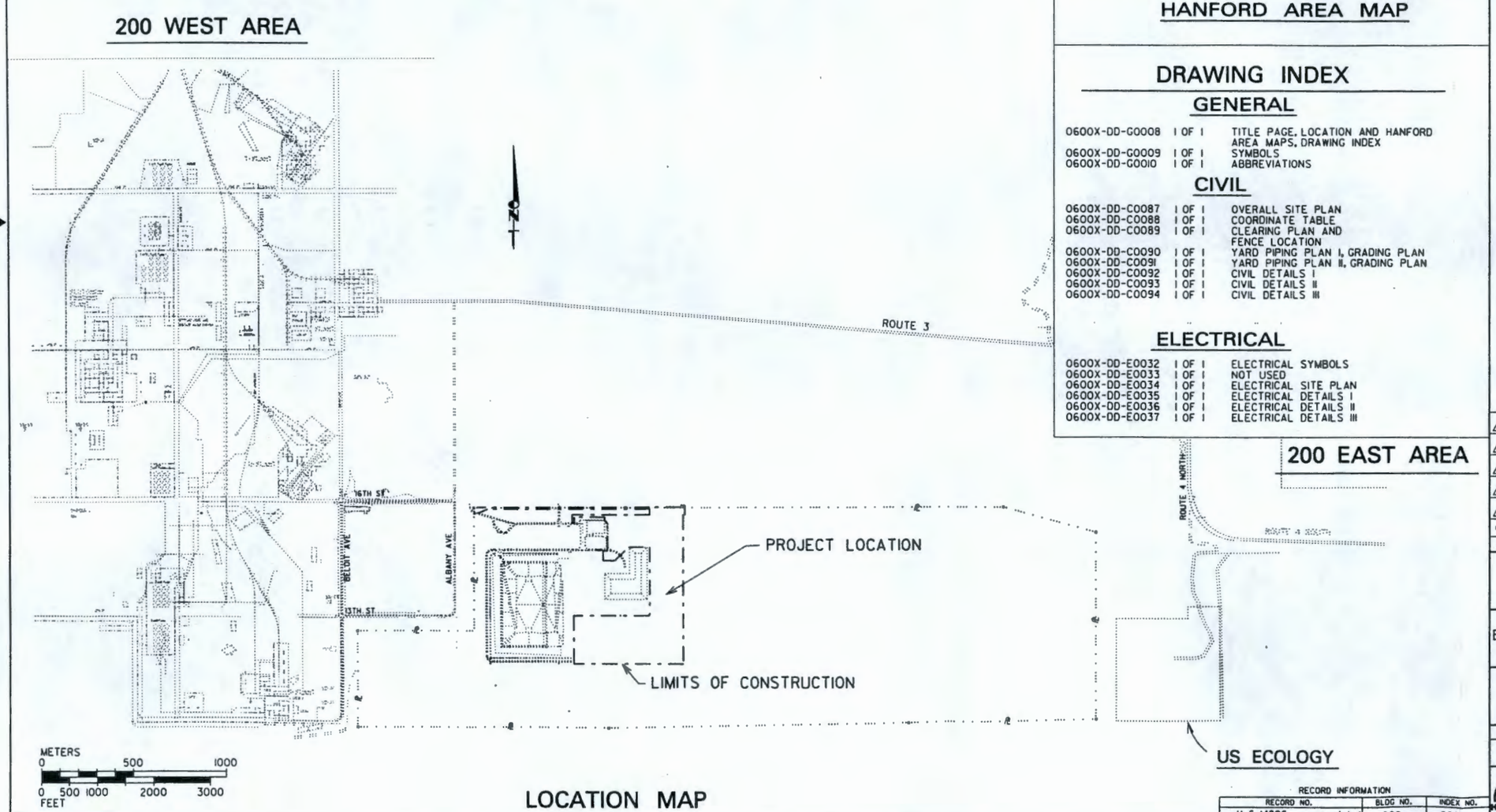

LOCATION MAP

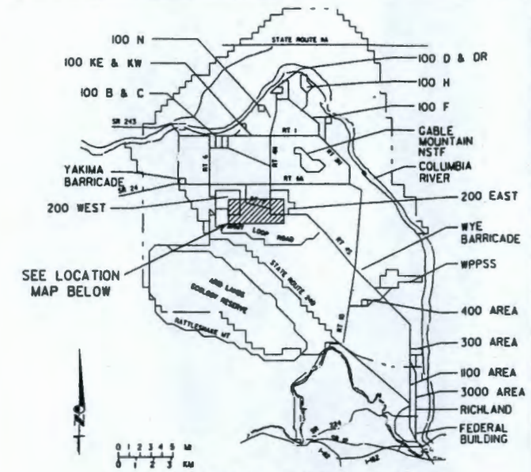

HANFORD AREA MAP

DRAWING INDEX

GENERAL

0600X-DD-G0008	1 OF 1	TITLE PAGE, LOCATION AND HANFORD AREA MAPS, DRAWING INDEX
0600X-DD-G0009	1 OF 1	SYMBOLS
0600X-DD-G0010	1 OF 1	ABBREVIATIONS

CIVIL

0600X-DD-C0087	1 OF 1	OVERALL SITE PLAN
0600X-DD-C0088	1 OF 1	COORDINATE TABLE
0600X-DD-C0089	1 OF 1	CLEARING PLAN AND FENCE LOCATION
0600X-DD-C0090	1 OF 1	YARD PIPING PLAN I, GRADING PLAN
0600X-DD-C0091	1 OF 1	YARD PIPING PLAN II, GRADING PLAN
0600X-DD-C0092	1 OF 1	CIVIL DETAILS I
0600X-DD-C0093	1 OF 1	CIVIL DETAILS II
0600X-DD-C0094	1 OF 1	CIVIL DETAILS III

ELECTRICAL

0600X-DD-E0032	1 OF 1	ELECTRICAL SYMBOLS
0600X-DD-E0033	1 OF 1	NOT USED
0600X-DD-E0034	1 OF 1	ELECTRICAL SITE PLAN
0600X-DD-E0035	1 OF 1	ELECTRICAL DETAILS I
0600X-DD-E0036	1 OF 1	ELECTRICAL DETAILS II
0600X-DD-E0037	1 OF 1	ELECTRICAL DETAILS III

NOTES

1. THE WORK SHALL BE EXECUTED WHILE THE ERDF IS IN OPERATION. OPERATION OF THE ERDF SHALL NOT BE JEOPARDIZED NOR SHALL THE EFFICIENCY BE REDUCED AS A RESULT OF THE EXECUTION OF THE WORK. A PORTION OF THE PROJECT SITE IS SHARED WITH OPERATIONS. THE CONTRACTOR SHALL CONDUCT HIS WORK TO MINIMIZE INTERFERENCE. ACCESS ROADS AND CIRCULATION ROADS SHALL NOT BE CLOSED UNLESS EQUIVALENT ROAD ACCESS IS PROVIDED AND MAINTAINED. UTILITY TIE-INS SHALL BE COORDINATED WITH THE CONTRACTING OFFICER AND SITE UTILITY ORGANIZATIONS.

REV.	DATE	DESCRIPTION	DRAWN BY	DRAFT CK'R	ENG/ ENG'R	ENG'R CK'R	CL/TEL APPROV	BH PROJ ENG'R
0		ISSUED FOR CONSTRUCTION	PDH		MDB			

SCALE:

U.S. DEPARTMENT OF ENERGY
DOE FIELD OFFICE, RICHLAND
HANFORD ENVIRONMENTAL RESTORATION PROGRAM

BECHTEL HANFORD INC. RICHLAND, WASHINGTON | MONTGOMERY WATSON RICHLAND, WASHINGTON

ENVIRONMENTAL RESTORATION DISPOSAL FACILITY
CELLS 3 & 4 CONSTRUCTION, SITE PREPARATION
TITLE PAGE, LOCATION AND
HANFORD AREA MAPS, DRAWING INDEX

BECHTEL JOB NO.	DOE CONTRACT NO.	CADD FILENAME
22192	DE-AC06-93RL12367	6xdg0008.dgn

TASK	DRAWING NO.	REV. NO.
600	0600X-DD-G0008	0

RECORD INFORMATION

RECORD NO.	BLDG NO.	INDEX NO.
H-6-14806 sht 1	600	0000

0600X-SC-G00116-5-002-01 p 9 of 24 148

DRAWING NO.	REV. NO.
0600X-DD-G0009	0

- N400000 — HANFORD COORDINATE GRID LINE
- EXISTING SURFACE FEATURE OR PIPE
- EXISTING UNDERGROUND PIPE
- NEW PIPELINE (CIVIL SHEETS)
- NEW FENCE
- EXISTING FENCE
- EXIST. RAILING
- NEW RAILING
- CENTERLINE
- PROPERTY LINE
- 123 — CONTOUR LINE, FINISHED GRADE
- 123 — CONTOUR LINE, EXISTING GRADE
- 123.20 — FINISHED ELEVATION
- (123.20) — EXISTING ELEVATION
- NEW A.C. PAVING
- EXISTING A.C. PAVING
- NEW RAILROAD
- EXISTING RAILROAD
- SLOPE INDICATION
- LIMITS OF CONSTRUCTION
- FUTURE STRUCTURE OR FACILITY
- EXISTING STRUCTURE OR FACILITY
- EXISTING UNDERGROUND STRUCTURE OR FACILITY
- POTENTIAL FUTURE STRUCTURE OR FACILITY
- GRAVEL
- CONCRETE
- EARTH
- SAND
- GRATING
- CONCRETE BLOCK
- GATE VALVE, BURIED WITH VALVE BOX
- BUTTERFLY VALVE, BURIED WITH VALVE BOX
- ECCENTRIC PLUG VALVE, BURIED WITH VALVE BOX
- FH — FIRE HYDRANT
- MH — MANHOLE
- PCOTG — PRESSURE CLEANOUT TO GRADE
- COTG — CLEANOUT TO GRADE
- CB — CATCH BASIN
- BULK WATER STATION
- BOLLARD
- SOIL TEST PIT
- SURVEY MONUMENTS

- SURVEY CONTROL POINT
- EXISTING WELL
- FUTURE WELL
- SOIL BORING LOCATION
- 3 — COORDINATE POINT
- DOWN GUY
- TELEPHONE/POWER POLE
- CHANGE IN PIPING MATERIAL
- ROUND OR DIAMETER
- SQUARE
- AT
- ANGLE
- 12" RW (PVC) — PIPE CALLOUT
- ME-2 — EQUIPMENT NUMBER (SEE EQUIPMENT SCHEDULE)
- NIC — EQUIPMENT, ITEMS OR DETAILS NOT PRETAINING TO THIS CONTRACT OR PROJECT ARE SHOWN THUS WITH THE NIC = NOT IN CONTRACT
- GATE VALVE
- BUTTERFLY VALVE
- ECCENTRIC PLUG VALVE
- GLOBE VALVE
- BALL VALVE
- DIAPHRAGM VALVE
- CHECK VALVE
- PRESSURE REGULATING VALVE
- BACK-PRESSURE VALVE
- FLOAT OPERATED VALVE
- NEEDLE VALVE
- PRESSURE RELIEF VALVE
- M, P — MOTOR OPERATOR FOR VALVES (M = ELECTRIC, P = PNEUMATIC)
- S — SOLENOID VALVE
- HOSE BIBB (H/B)
- B — BUBBLER LEVEL CONTROL
- CENTRIFUGAL OR TURBINE PUMP OR FAN
- CHEMICAL FEED PUMP
- PROGRESSING CAVITY, POSITIVE DISPLACEMENT PUMP
- BLOWER OR COMPRESSOR
- INJECTOR OR EDUCTOR

- AIR VACUUM AND AIR RELEASE ASSEMBLY
- THERMOMETER
- PIPE ANCHOR
- STOP GATE
- SLIDE GATE
- SLUICE GATE
- INLINE STATIC MIXER
- HUB DRAIN
- FLOOR DRAIN
- DRAIN
- DRAIN TRAP
- CUT PIPE
- FEXT — FIRE EXTINGUISHER
- G — PRESSURE GAUGE
- G — PRESSURE GAUGE WITH DIAPHRAGM SEAL
- S — PRESSURE SWITCH
- S — PRESSURE SWITCH WITH DIAPHRAGM SEAL
- FLANGED FITTING
- WELDED FITTING
- MECHANICAL-TYPE FITTING (GROOVED)
- SCREWED, SOCKET-WELD, BELL AND SPIGOT OR HUBLESS FITTING
- SLEEVE-TYPE COUPLING
- FLANGED ADAPTER COUPLING
- FLANGED ADAPTER - SET SCREW TYPE
- EXPANSION JOINT
- MECHANICAL TYPE COUPLING
- FLEXIBLE COUPLING
- UNION
- QUICK DISCONNECT COUPLER
- CAPPED END OR PLUGGED END
- BLIND FLANGE
- REDUCER OR INCREASER
- STRAINER
- M M — MAGNETIC METER
- D M — DENSITY METER
- ORIFICE PLATE AND FLANGES
- ROTAMETER

- PIPE SUPPORT (IN PLAN ONLY)
- MALE FIRE HOSE CONNECTION WITH CAP
- YARD HYDRANT

SECTION AND DETAIL IDENTIFICATION

SECTION IDENTIFICATION

(1) SECTION CUT SHOWN ON DRAWING AS:

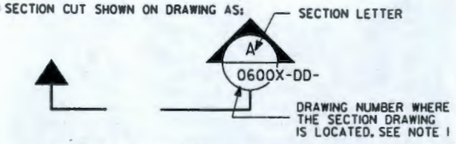

(2) ON DRAWING NUMBER 0600X-DD- THIS SECTION IS IDENTIFIED AS:

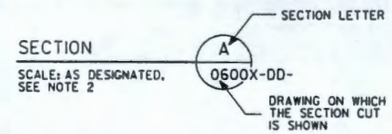

DETAIL IDENTIFICATION

(1) DETAIL IDENTIFICATION SHOWN ON DRAWING AS:

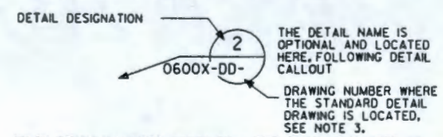

(2) ON DRAWING NUMBER 0600X-DD-- THIS DETAIL IDENTIFIED AS:

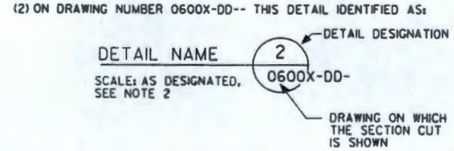

NOTES

1. IF PLAN AND SECTION (OR DETAIL CALL-OUT AND DETAIL) ARE SHOWN ON SAME DRAWING, DRAWING NUMBER IS REPLACED BY A HORIZONTAL LINE.
2. IF SECTION AND/OR DETAILS ARE THE SAME SCALE AND ON THE SAME DRAWING, SEE TITLE BLOCK AT "SCALE:"; THE SCALE TEXT AT CALLOUT SHALL BE OMITTED.
3. FOR DETAILS WHICH ARE LOCATED ON VARIOUS DRAWINGS, DRAWING NUMBER IS REPLACED WITH "VAR" FOR VARIOUS.
4. SOME SYMBOLS SHOWN ON THIS DRAWING MAY NOT BE USED ON OTHER DRAWINGS.

REV.	DATE	DESCRIPTION	DRAWN BY	DRAFT CHK	DRG/ ENG'R	ENG'R CHK	CL/TDL APPROV	BH PROJ CHK'R
0		ISSUED FOR CONSTRUCTION	PDH		MCB			

SCALE:

U.S. DEPARTMENT OF ENERGY
DOE FIELD OFFICE, RICHLAND
HANFORD ENVIRONMENTAL RESTORATION PROGRAM

BECHTEL HANFORD INC. RICHLAND, WASHINGTON | MONTGOMERY WATSON RICHLAND, WASHINGTON

ENVIRONMENTAL RESTORATION DISPOSAL FACILITY
CELLS 3 & 4 CONSTRUCTION, SITE PREPARATION
SYMBOLS

BECHTEL JOB NO.	DOE CONTRACT NO.	CADD FILENAME
22192	DE-AC06-93RL12367	6xdg0009.dgn

TASK	DRAWING NO.	REV. NO.
600	0600X-DD-G0009	0

HANFORD

RECORD INFORMATION

RECORD NO.	BLDG NO.	INDEX NO.
H-6-14807 sht 1	600	0000

0600X-SC-G0016-5-002-01 p 10 of 24 148
Date 11/26/97

DRAWING NO.	REV. NO.
0600X-DD-G0010	0

AB	ANCHOR BOLT
ABAND	ABANDONED
ABBR	ABBREVIATION
AC	ASPHALT CONCRETE
A/C	AIR CONDITIONING
ACFM	ACTUAL CUBIC FEET PER MINUTE
ACOUS	ACOUSTIC OR ACOUSTICAL
ACP	ASPHALTIC CONCRETE PAVEMENT
AER	AERATION
AH	AHEAD
AL	ALUM
ALUM	ALUMINUM
ANSI	AMERICAN NATIONAL STANDARDS INSTITUTE (FORMERLY A.S.A.)
API	AMERICAN PETROLEUM INSTITUTE
APPVD	APPROVED
APPROX	APPROXIMATE
ARCH	ARCHITECTURAL
ASME	AMERICAN SOCIETY OF MECHANICAL ENGINEERS
ASPH	ASPHALT
ASTM	AMERICAN SOCIETY FOR TESTING AND MATERIAL
ASSY	ASSEMBLY
ATM	ATMOSPHERE
AUTO	AUTOMATIC
AVAR	AIR VACUUM AND AIR RELEASE
AWWA	AMERICAN WATER WORKS ASSOCIATION
BC	BEGIN CURVE OR BOLT CIRCLE
BCR	BEGIN CURB RETURN
BD	BOARD
BFP	BACK FLOW PREVENTER
BHP	BRAKE HORSEPOWER
BK	BACK
BLDG	BUILDING
BLD FLG	BLIND FLANGE
BLK	BLACK OR BLOCK
BLKG	BLOCKING
BM	BEAM OR BENCH MARK
BO	BLOW-OFF ASSEMBLY
BOD	BIOCHEMICAL OXYGEN DEMAND
BOT	BOTTOM
BPV	BACK PRESSURE VALVE
B & S	BELL AND SPIGOT
BRG	BEARING
BSMT	BASEMENT
BTU	BRITISH THERMAL UNIT
BTUH	BRITISH THERMAL UNIT PER HOUR
BETW	BETWEEN
BFV	BUTTERFLY VALVE
BVC	BEGIN VERTICAL CURVE
BWV	BACK WATER VALVE
C	CELSIUS
CAP	CAPACITY
CATH	CATHODIC
CB	CATCH BASIN
CC	CENTER TO CENTER
CD	CEILING DIFFUSER
CFH	CUBIC FEET PER HOUR
CFM	CUBIC FEET PER MINUTE
CFS	CUBIC FEET PER SECOND
CHEM	CHEMICAL
CHK V	CHECK VALVE
CHKD PL	CHECKERED PLATE
CHLR	CHLORINATOR
CI	CAST IRON
CKT	CIRCUIT
CL	CHLORINE GAS, CHAIN LINK OR CENTERLINE
CLR	CLEAR OR CLEARANCE
CLG	COOLING
CM	CENTIMETER
CML & C	CEMENT MORTAR LINED AND COATED
CMP	CORRUGATED METAL PIPE
CMU	CONCRETE MASONRY UNITS
CO	CLEANOUT
COL	COLUMN
COMB	COMBINATION
COND	CONDUIT
COORD	COORDINATE
COR	CORNER
CONC	CONCRETE
CONN	CONNECTION
CONSTR	CONSTRUCTION OR CONSTRUCT
CONT	CONTINUED OR CONTINUOUS
CONTR	CONTRACTOR
COMP	COMPRESSOR
COTG	CLEAN-OUT TO GRADE
CPLG	COUPLING
CS	CAUSTIC SODA
CT STL	CAST STEEL
CTSK	COUNTERSUNK
CTR	CENTER
CU	COPPER OR CUBIC
CYL	CYLINDER
CWO	CHAIN WHEEL OPERATOR
DBL	DOUBLE
DET	DETAIL
DF	DRINKING FOUNTAIN
DG	DOOR GRILLE
DI	DUCTILE IRON
DIA	DIAMETER
DIAG	DIAGONAL
DIAPH	DIAPHRAGM
DISCH	DISCHARGE
DISP	DISPENSER
DN	DOWN OR DECANT
DO	DISSOLVED OXYGEN
DOE	DEPARTMENT OF ENERGY
DR	DRAIN
DS	DRENCH SHOWER AND EYE WASH
DWG(S)	DRAWING(S)
DIFF	DIFFUSER
DIFRTL	DIFFERENTIAL
E	EAST
EA	EACH
EC	END CURVE
ECC	ECCENTRIC
ECR	END CURB RETURN
EF	EACH FACE
EFL	EFFLUENT
EG	EXHAUST GRILLE
EL	ELEVATION
ELEC	ELECTRICAL OR ELECTRONIC
EMBED	EMBEDMENT
ENC	ENCASEMENT
ENCL	ENCLOSURE
ENG	ENGINE
EQL	EQUAL
EQUIP	EQUIPMENT
EVAP	EVAPORATION, EVAPORATOR
EVC	END VERTICAL CURVE
EW	EACH WAY
EWH	EYE WASH
EXH	EXHAUST
EXHF	EXHAUST FAN
EX-HY	EXTRA HEAVY
EXST	EXISTING
EXP	EXPANSION
EXP JT	EXPANSION JOINT
EXT	EXTERIOR OR EXTENSION
F	FAHRENHEIT
FABR	FABRICATION, FABRICATE OR FABRICATED
FAI	FRESH AIR INTAKE
FB	FLAT BAR
FCO	FLOOR CLEANOUT
FD	FLOOR DRAIN
FD BK	FIELD BOOK
FDN	FOUNDATION
FDR	FEEDER
FE	FINAL EFFLUENT
FEXT	FIRE EXTINGUISHER
FF	FLAT FACE OR FAR FACE
F TO F	FACE TO FACE
FG	FINISHED GRADE
FH	FIRE HYDRANT
FIG	FIGURE
FIT	FUEL ISLAND TERMINAL
FL	FLOWLINE
FLEX	FLEXIBLE
FLOCC	FLOCCULATOR OR FLOCCULATION
FLG	FLANGE
FLGD	FLANGED
FLR	FLOOR
FLR BM	FLOOR BEAM
FMH	FLEXIBLE METAL HOSE
FNSH	FINISH OR FINISHED
FOC	FACE OF CONCRETE
FOM	FACE OF MASONRY
FOS	FACE OF STUDS
FOW	FACE OF WALL
FPC	FLEXIBLE PIPE COUPLING
FPM	FEET PER MINUTE
FPS	FEET PER SECOND
FRP	FIBERGLASS REINFORCED PLASTIC
FS	FAR SIDE, FLOOR SINK, FINISHED SURFACE, FORGED STEEL OR FROTH SPRAY
FT	FEET OR FOOT
FTG	FOOTING
FUT	FUTURE
FWW	FILTER WASTE WASHWATER
GA	GAGE OR GAUGE
GAL	GALLON
GALV	GALVANIZED
GEN	GENERAL OR GENERATOR
GFA	GROOVED FLANGE ADAPTER
GI	GALVANIZED IRON
GLV	GLOBE VALVE
GND	GROUND
GPD	GALLONS PER DAY
GPH	GALLONS PER HOUR
GPM	GALLONS PER MINUTE
GPR	GROUND PENETRATING RADAR
GRD	GRADE
GR BRK	GRADE BREAK
GV	GATE VALVE
GVL	GRAVEL
GYP	GYPSUM
H	HEIGHT
H/B	HOSE BIBB
HDR	HEADER
HDPE	HIGH DENSITY POLYETHYLENE
HEX	HEXAGONAL
Hg	MERCURY
HORIZ	HORIZONTAL
HP	HORSEPOWER
HPR	HIGH PRESSURE
HPS	HIGH PRESSURE SODIUM
HPT	HIGH POINT
HR	HEATING RETURN OR HOUR
HTG	HEATING
HTR	HEATER
H & V	HEATING AND VENTILATING
HVAC	HEATING, VENTILATING AND AIR CONDITIONING
HWO	HANDWHEEL OPERATED
HYD	HYDRAULIC OR HYDRANT
ICFM	INLET CUBIC FEET PER MINUTE
ID	INSIDE DIAMETER
IF	INSIDE FACE
IF	INCH
INFL	INFLUENT
INST	INSTALL
INSUL	INSULATION OR INSULATED
INSTR	INSTRUMENT OR INSTRUMENTATION
INTFC	INTERFACE
INVT	INVERT ELEVATION
I/O	INPUT/OUTPUT
IP	IRON PIPE
IPS	IRON PIPE STANDARD
IRRG	IRRIGATION
JAN	JANITOR
JT	JOINT
KG	KILOGRAM
KM	KILOMETER
KN	KILONEWTON
KPa	KILOPASCALS
KV	KILOVOLT
KW	KILOWATT
KWH	KILOWATT HOUR
L	LITER OR LENGTH
LAV	LAVATORY
LB	POUND
LCU	LOCAL CONTROL UNIT
LVL	LEVEL
LG	LONG
LO	LEVER OPERATED
LOC	LOCATION
LPT	LIGHT POLE
LP	LOW POINT
LPV	LUBRICATED PLUG VALVE
LT	LEFT
LWR	LOWER
LGTH	LENGTH
M	METER
MAG	MAGNETIC
MAN	MANUAL
MACH	MACHINE
MAX	MAXIMUM
MCC	MOTOR CONTROL CENTER
MECH	MECHANICAL
MFR	MANUFACTURER
MGD	MILLION GALLONS PER DAY
MH	MANHOLE
MI	MALLEABLE IRON
MIN	MINIMUM
MISC	MISCELLANEOUS
MK	MARK
MM	MILLIMETER
MPa	MEGAPASCALS
MO	MOTOR OPERATED OR MASONRY OPENING
MOD	MODEL
MS	MOP SINK
MTC	MECHANICAL-TYPE COUPLING
MT	MOUNT
MATL	MATERIAL
MTR	MOTOR
N	NORTH
NAD	NORTH AMERICAN DATUM
NAVD	NORTH AMERICAN VERTICAL DATUM
NBS	NATIONAL BUREAU OF STANDARDS
NC	NORMALLY CLOSED
NEMA	NATIONAL ELECTRICAL MANUFACTURERS ASSOCIATION
NFPA	NATIONAL FIRE PROTECTION ASSOCIATION
NF	NEAR FACE
NIC	NOT IN CONTRACT
NO	NUMBER OR NORMALLY OPEN
NPS	NOMINAL PIPE SIZE (FORMERLY I.P.S.)
NPT	NATIONAL PIPE THREAD
NRS	NON-RISING STEM
NS	NEAR SIDE
NTS	NOT TO SCALE
OC	ON CENTER
OD	OUTSIDE DIAMETER
OF	OVERFLOW OR OUTSIDE FACE
OPER	OPERATOR OR OPERATING
OPNG	OPENING
OS & Y	OUTSIDE SCREW AND YOKE
OVHD	OVERHEAD
OZ	OUNCE
P	POLE OR PAGE
PAVMT	PAVEMENT
PC	PRIMARY CLARIFIER OR PORTLAND CEMENT
PCOTG	PRESSURE CLEANOUT TO GRADE
PE	POLYELECTROLYTE OR POLYMER
PEF	PLANT EFFLUENT
PEN	PENETRATION
PER	PERIMETER
PG	PRESSURE GAGE
pH	HYDROGEN ION CONCENTRATION
PI	POINT OF INTERSECTION
PIV	POST INDICATOR VALVE
PL	PLACES OR PLATE
PLAS	PLASTER OR PLASTIC
PNEU	PNEUMATIC
POB	POINT OF BEGINING
POE	POINT OF END
PP	POWER POLE
PLT	PLANT
PNLBD	PANELBOARD
PPD	POUNDS PER DAY
PPH	POUNDS PER HOUR
PPM	PARTS PER MILLION
PR	PAIR
PRC	POINT OF REVERSE CURVATURE
PRE	PREVIOUS
PRESS	PRESSURE
PRV	PRESSURE REGULATING, RELIEF OR REDUCING VALVE
PS	PRESSURE SWITCH
PSF	POUNDS PER SQUARE FOOT
PSI	POUNDS PER SQUARE INCH
PSIA	POUNDS PER SQUARE INCH ABSOLUTE
PSIG	POUNDS PER SQUARE INCH GAUGE
PT	POINT OR POINT OF TANGENCY
PV	PLUG VALVE
PVC	POLYVINYL CHLORIDE
PW	POTABLE WATER
PWR	POWER
RAD	RADIUS
RADN	RADIATION
RAG	RETURN AIR GRILLE
RC	REINFORCED CONCRETE
RCA	RADIOLOGICAL CONTROLLED AREA
RCP	REINFORCED CONCRETE PIPE
RD	ROOF DRAIN, ROUND, OR ROAD
RDWD	REDWOOD
RDCR	REDUCER
RECM	RECOMMENDATION
REF	REFERENCE OR REFER
REG	REGULATING
REINF	REINFORCE OR REINFORCED
RE-STL	REINFORCING STEEL
REQD	REQUIRED
RET	RETURN
REV	REVISION
RF	RAISED FACE
RLF	RELIEF
RM	ROOM
ROS	RATE OF SLOPE
RPM	REVOLUTIONS PER MINUTE OR REINFORCED PLASTIC MORTAR
RR	RAILROAD
RT	RIGHT
RW	RAW WATER
R/W	RIGHT OF WAY
RWL	RAINWATER LEADER
S	SOUTH
SA	SAMPLE
SC	SPARE CHEMICAL OR SECONDARY CLARIFIER
SCC	SOLIDS CONTACT CLARIFIER
SCD	SCREWED
SCFM	STANDARD CUBIC FEET PER MINUTE
SCH	SCHEDULE
SCHED	SCHEDULE
SDR	STORM DRAINS
SCA	SOIL CONTAMINATION AREA
SEC	SECONDARY
SECT	SECTION
SER	SERIES
SER SK	SERVICE SINK
SETT	SETTLING
SH	SHOWER
SHT	SHEET
SIM	SIMILAR
SL	SLUDGE
SLP	SLOPE
SLV	SLEEVE
SP	SPACING
SPECS	SPECIFICATIONS
SQ	SQUARE
SQM	SQUARE METER
SS	SANITARY SEWER
SST	STAINLESS STEEL
SSU	SECONDS SAYBOLT UNIVERSAL
STA	STATION
STC	SLEEVE-TYPE COUPLING
STD	STANDARD
STL	STEEL
STM	STEAM
STN	STAINLESS
SST	STAINLESS STEEL
STR TRD	STAIR TREAD
STRUCT	STRUCTURAL OR STRUCTURE
SUBST	SUBSTITUTE
SUCT	SUCTION
SURV	SURVEY
SV	SOLENOID VALVE
SW	SANITARY WATER
SWR	SIDEWALL REGISTER
SYM	SYMMETRICAL OR SYMBOL
SYS	SYSTEM
T	THERMOSTAT OR TANGENT
TB	THRUST BLOCK
T & B	TOP AND BOTTOM
TBC	TOP BACK OF CURB
TBE	THREAD BOTH ENDS
TBM	TEMPORARY BENCH MARK
TC	TOP OF CURB
TDH	TOTAL DYNAMIC HEAD
TELE	TELEPHONE
TEMP	TEMPORARY
TERM	TERMINAL
T & G	TONGUE AND GROOVE
THK	THICK OR THICKNESS
THD	THREADED
THRHLD	THRESHOLD
TK	TANK
TOE	THREAD ONE END
TOG	TOP OF GRATING
TOL	TOLERANCE
TOS	TOP OF STEEL
TOW	TOP OF WALL
TP	TELEPHONE POLE OR TELEGRAPH POLE
TRANS	TRANSITION
TRTMT	TREATMENT
TV	THERMOSTATIC VALVE
TW	THERMOMETER WELL
TYP	TYPICAL
UBC	UNIFORM BUILDING CODE
UC	UNDER-CROSSING
UGND	UNDERGROUND
UGC	UNDERGROUND CONDUIT
UH	UNIT HEATER
UL	UNDERWRITERS LABORATORIES
UNO	UNLESS NOTED OTHERWISE
UP	UTILITY POLE
UR	URINAL
USACE	UNITED STATES ARMY CORP OF ENGINEERS
V	VENT, VOLT
VAC	VACUUM
VAR	VARIES OR VARIABLE
VCP	VITRIFIED CLAY PIPE
VERT	VERTICAL
VLV	VALVE
VOL	VOLUME
VPC	VERT POINT OF CURVATURE
VPI	VERT POINT OF INTERSECTION
VPRC	VERT POINT OF REVERSE CURVE
VPT	VERT POINT OF TANGENCY
VTC	VENT TO CEILING
VTR	VENT THROUGH ROOF
W	WEST OR WIDTH
W/	WITH
WC	WATER COLUMN OR WATER CLOSET
WCO	WALL CLEANOUT
WD	WOOD
WOG	WATER, OIL, GAS
W/O	WITHOUT
WS	WATER SURFACE
WSCOT	WAINSCOT
WSTP	WATER STOP
WT	WEIGHT
WWF	WELDED WIRE FABRIC
WWM	WELDED WIRE MESH
XFR	TRANSFER
XFMR	TRANSFORMER
XING	CROSSING
XMTR	TRANSMITTER
XS	EXTRA STRONG
YD	YARD

NOTES

1. ADDITIONAL ABBREVIATIONS CONFORM TO ANSI STANDARD ABBREVIATIONS Y 1.1.
2. PIPING ABBREVIATIONS SHOWN ON MECHANICAL SHEETS.
3. SOME ABBREVIATIONS SHOWN ON THIS DRAWING MAY NOT BE USED ON OTHER DRAWINGS.

REV.	DATE	DESCRIPTION	DRAWN BY	DRAFT CHK	ORIG/ENGR	ENGR CHK	QL/TBL APPROV	BHI PROJ ENGR
0		ISSUED FOR CONSTRUCTION	PDH		MGB			

SCALE:

U.S. DEPARTMENT OF ENERGY
DOE FIELD OFFICE, RICHLAND
HANFORD ENVIRONMENTAL RESTORATION PROGRAM

BECHTEL HANFORD INC. RICHLAND, WASHINGTON | MONTGOMERY WATSON RICHLAND, WASHINGTON

ENVIRONMENTAL RESTORATION DISPOSAL FACILITY
CELLS 3 & 4 CONSTRUCTION, SITE PREPARATION
ABBREVIATIONS

BECHTEL JOB NO.	DOE CONTRACT NO.	CADD FILENAME
22192	DE-AC06-93RL12367	6xd0010.DWG

RECORD INFORMATION

RECORD NO.	BLDG NO.	INDEX NO.
H-6-14808	600	0000

HANFORD

TASK	DRAWING NO.	REV. NO.
600	0600X-DD-G0010	0

0600X-SC-G0016-5-002-01p 11 g ~~24~~ 148 bdo 11/26/97

0048805
4/18

CONSOLIDATED COMMENTS

100% Design Review of ERDF Cells 3 and 4, Site Preparation Drawings and Specifications.

The following are consolidated comments regarding the 100% Design Package for Site Preparation documents, prepared by Montgomery Watson under contract to Bechtel Hanford Co. Comments included were formally received by close of business, 11/19/97. The comments are organized by drawing and specification number. Specific drawing or specification comments are followed by general comments. Comments regarding the Material Take-off deliverable are included as the last group of entries.

COMMENTS ON DRAWINGS

Drawing No. – Drawing Package Cover Sheet

No comments at this time

Drawing No.- G0008

No comments at this time

Drawing No.- G0009

No comments at this time

Drawing No.- G0010

Scale text "Bechtel Hanford Inc. in title block to fit box

Drawing No.- C0087

Regarding note 1, delete the word "slightly". Add to note text, that contractor is responsible for verification as required.

Drawing No.- C0088

No comments at this time

Drawing No.- C0089

Verify limits of construction, in the local vicinity of the new water fill station

Drawing No.- C0090

Verify limits of construction, in the local vicinity of the new water fill station

Verify the need for a hot tap, regarding the tie-in for potable water. BHI to provide guidance

Drawing No.- C0091

No comments at this time

Drawing No.- C0092

Scale text "Bechtel Hanford Inc. in title block to fit box

Add detail for oriface plate, BHI to provide guidance

Drawing No.- C0093

Scale text "Bechtel Hanford Inc. in title block to fit box

Regarding "Gate and Fence Detail", delete reference to "Padlock" but leave reference to "Padlock Accessories"

Drawing No.- C0094

No comments at this time

Drawing No.- E0032

No comments at this time

Drawing No.- E0033

(Drawing number not used)

Drawing No.- E0034

Add requirement that coordinates for pole locations must be include on as-built drawings

Regarding Insert B, Detail 5, revise transformer structure definition from "High Voltage" to "Medium Voltage" in accordance with IAW IEEE definitions

Drawing No.- E0035

Regarding Detail 3, revise grounding shown to comply with HEU specifications and NESC code.

Regarding Detail 4, Clarify requirement for "main ground loop or ground well"

Drawing No.- E0036

Revise transformer structure terminology, from "high voltage" to "medium voltage" in accordance with IAW IEEE definition

Drawing No.- E0037

No comments at this time

Drawings, General

Verify all drawings are appropriately signed off, Rev. 0 "Issued for Construction"

Verify 600G building number on all drawings

Verify all drawings have "SHT01" shown, after the respective "H" drawing number

COMMENTS ON SPECIFICATIONS

Specification No. 01031

Delete entire specification

Specification No. 01100

Delete entire specification

Specification No. 01440

01440-3, 3.2.1
Reduce the allowable submittal time from 30 days to 10 days.

01440-3, 3.2.2
Delete items a) and b)

01440-3, 3.2.2
Regarding item d), revise wording to reflect submittal process using Exhibit I rather than Section 01305

01440-4, 3.2.2 (i)
All specifications in the design package contain a "Contractor Quality Control" submittal in respective Sections 4.1 – "Summary of Submittals". Remove the submittal requirements from each Specification and consolidate the intent of the removed "Contractor Quality Control" submittals into Specification No. 01440. BHI suggests the information be placed under 3.2.2, as appropriate. The exception is the Electrical Specification, where probable future changes may have global impact, including this area. For this reason, the subject of "Contractor Quality Control" in the Electrical Specification will be dispositioned at a later date.

01440-4, 3.4.1
Delete requirement that CQC System Manager shall be on-site at all times

01440-5, 3.5
Revise wording to reflect submittal process using Exhibit I, rather than Section 01305

01440-7, 3.7.1
Delete items a) and b)

01440-8, 3.7.2.2
Delete this topic and discussion entirely

01440-8, 3.7.3
Delete this topic heading but move the discussion to 3.7.2.1, where it becomes a second paragraph.

Specification No. 02110

02110-3, 3.3
Remove topic and discussion. Incorporate discussion into Specification No. 01440. (See earlier comment under 01440)

02110-4, 4.1
Remove topic and discussion entirely

Specification No. 02210

02210-4, 1.3
Delete last sentence, "Documentation.....Control"

02210-4, 2.1.4
Delete first three sentences.

02210-5, 3.1.1
In the first paragraph, fourth sentence, delete the words "....and fashion....."

02210-7, 3.5
In the last sentence, replace "...90 percent...." With ".....95 percent...."

02210-9, 3.8.1.3
Change "....function..." to "...fraction..."

02210-10, 3.10
Remove topic and discussion. Incorporate discussion into Specification No. 01440. (See earlier comment under 01440)

02210-11, 4.1
Delete requirement for "Contractor Quality Control" submittal

Specification No. 02660

02660-5, 1.3
Regarding Statement of Satisfactory Installation, replace "...principal officer of the contracting firm...." With "....Contractor's principal officer...."

02660-14, 3.5
Remove topic and discussion. Incorporate discussion into Specification No. 01440. (See earlier comment under 01440)

02660-15, 4.1
Delete requirement for "Contractor Quality Control" submittal

Specification No. 02831

02831-4, 2.1.2
Change "...3000 psi...." to "....2500 psi..."

02831-4, 2.1.3
Delete topic and discussion entirely

02831-4, 3.3
Delete second half of paragraph "Fence post rigidity.....at the Contractor's expense."

02831-5, 3.7
Delete second half of paragraph "After the fabric installation is complete.....retested at the Contractor's expense."

02831-5, 3.8
Delete second half of paragraph "Provisions for padlocks.....provided for each gate". Add "Where salvaged gates are utilized, all original operating hardware shall be reinstalled and adjusted to operate in accordance with manufacturers instructions."

02831-6, 3.10
Remove topic and discussion. Incorporate discussion into Specification No. 01440. (See earlier comment under 01440)

02831-7, 4.1
Delete requirements for "Contractor Quality Control" and "Padlocks" submittal

Specification No. 16370

Verify that items under "1.3 Submittals" is consistent with items under "4.1 Summary of submittals"

16370-2, 1.1
Change ANSI C2 reference from "1993" to "1997"

16370-3, 1.1
Add ANSI C57.12.00 (dealing with basic transformer requirements) to reference list.

16370-6, 1.1
Change "NFPA 70 (1993)" reference to "NFPA 70 (1996)" reference.

16370-6, 1.1
Add reference to "WAC 296-45"

16370-10, 2.2.2
Add requirement that liquid dielectrics must be RTEMP or equivalent

16370-10, 2.2.2
Last sentence, change "...50 ppm..." to "....1 ppm...."

16370-10, 2.2.2
Revise description of transformers and nameplate data in accordance with DynCorp comments dated 11/7/97, provided by BHI under separate cover.

16370-13, 2.8.1
Verify need for subject medium voltage insulators

16370-13, 2.8.1
Use 15KV insulators as specified in Hanford Electrical Utilities (HEU) specifications

16370-13, 2.8.2
Verify need for subject medium voltage insulators

16370-13, 2.8.3
Clarify the need for "apparatus" insulators

16370-13, 2.11
Revise text to describe transformer as specified in earlier comment above

16370-15, 2.13
Revise grounding scheme to comply with NESC and HEU specifications, regarding primary/secondary separation and minimum resistance to ground

16370-15, 2.15
Revise text to incorporate use of "RTEMP" or equal dielectric

16370-15, 2.15
Revise PCB content limit, to 1 ppm

16370-17, 3.4
Revise text, to require yellow guy markers

16370-18, 3.5.3
Revise text to list only #4 ACSR tie wire

16370-18, 3.7

Revise text to require contractor to provide all materials for final connection to the existing 13.8 KV line.

16370-19, 3.8.1
(note: no action required)
The 3 ft dimension is acceptable, if the NESC required 20 ft primary/secondary separation is maintained

16370-22, 4.1
Add requirement that information shown in 3.8.1.a needs to be prepared by the Contractor

(note: necessary additional detail regarding the following comments against 16370 can be found in fax to Montgomery Watson, dated 11/20/97, titled "Comments by Ray Peck to Montgomery Watson electrical dwgs and specifications for Site Preparation for Cells 3 and 4 of ERDF. Comments as of 11/19/97"

Require transformer vendor to supply specific data through the Contractor to BHI

Revise transformer specification and reduce size to 3 each, 50 KVA

Revise wood pole/pressure treatment specification

Add pole line profile to drawings

Add sag and tension tables

Add single line drawing

Revise specification for surge arresters

Reconfigure power termination at panels

Verify that pole line can accommodate telecommunications in accordance with ANSI-C2 (NESC) and that design has been coordinated with telephone utility and Hanford Electrical Utilities. BHI to provide guidance

Verify that fence sections near the pole line crossing are appropriately grounded

Require Contractor to provide pole coordinates to BHI prior to planned 13.8 KV energization

Regarding Section 3.7, add wording to inform Contractor of Plant Force Work Review implication on his work. BHI to provide guidance.

Specifications, General

Verify all specifications are appropriately signed off, Rev. 0 "Issued for Construction"

COMMENTS ON MATERIAL TAKEOFF

Regarding organization, place Item 3 (Signs) in Item 2 (Fence). Place "Clearing" as the new item 3

Clarify Quantities in Item 5 (Electrical) as per assembly or for all assemblies

0048805
5/18

ENVIRONMENTAL RESTORATION DISPOSAL FACILITY
CELLS 3 & 4 CONSTRUCTION
HANFORD SITE
RICHLAND, WASHINGTON

SITE PREPARATION SPECIFICATIONS

December 12, 1997

MICHAEL G. MARCHANT
STATE OF WASHINGTON
12-10-97
00030272
REGISTERED
PROFESSIONAL ENGINEER

EXPIRES: 12-07-99

Bechtel Job No. 22192
DOE Contract No. DE-AC06-93RL12367

Prepared for
Bechtel Hanford, Inc.

Prepared by
Montgomery Watson
Richland, WA 99352

This page is intentionally blank.

SECTION C

TABLE OF CONTENTS

TECHNICAL SPECIFICATIONS

DIVISION 1 **GENERAL REQUIREMENTS**

Section	Pages	
01440 Contractor Quality Control	01440-1	01440-10

DIVISION 2 **SITE WORK**

Section	Pages	
02110 Clearing and Grubbing	02110-1	02110-3
02210 Earthwork	02210-1	02210-10
02660 Water Lines	02660-1	02660-14
02831 Chain Link Fence	02831-1	02831-7

DIVISION 16 **ELECTRICAL**

Section	Pages	
16370 Electrical Distribution System, Aerial	16370-1	16370-21

- End of Section -

This page is intentionally blank.

0048805

6/18

TECHNICAL SPECIFICATION
FOR
CONTRACTOR QUALITY CONTROL
SECTION 01440

SITE PREPARATION

ENVIRONMENTAL RESTORATION DISPOSAL FACILITY (ERDF)
CELLS 3 & 4 CONSTRUCTION

MICHAEL G. MARCHAT
STATE OF WASHINGTON
12-12-97
0030272
REGISTERED
PROFESSIONAL ENGINEER

EXPIRES: 12-07-99

FOR INFORMATION ONLY

BHI-DIS 12/18/97 bdw

REV	DATE	REASON FOR REVISION	ORIGINATOR	CHECKER	GROUP LEADER	TASK DESIGN LEAD	PROJECT ENGINEER
0	12-12-97	Issued for Construction	MB	MC	[illegible]	DRM	[illegible]

	RICHLAND ENVIRONMENTAL RESTORATION PROJECT	JOB NO. 22192
		SPECIFICATION NO. 0600X-SP-G0009
		SHEET 1 of 10

This page is intentionally blank.

SECTION 01440

CONTRACTOR QUALITY CONTROL

PART 1 GENERAL

1.1 REFERENCES

The publications listed below form a part of this specification to the extent referenced. The publications are referred to in the text by basic designation only.

AMERICAN SOCIETY FOR TESTING AND MATERIALS (ASTM)

ASTM D 3740	(1992) Evaluation of Agencies Engaged in the Testing and/or Inspection of Soil and Rock as Used in Engineering Design and Construction
ASTM E 329	(1993) Use in the Evaluation of Testing and Inspection Agencies as Used in Construction

ENVIRONMENTAL PROTECTION AGENCY (EPA)

EPA/600/R-93/182	EPA, Technical Guidance Document, Quality Assurance and Quality Control for Waste Containment Facilities

1.2 PAYMENT

Separate payment will not be made for providing and maintaining an effective Quality Control program, and all costs associated therewith shall be included in the applicable unit prices or lump-sum prices contained in the Bidding Schedule.

PART 2 PRODUCTS (Not Applicable)

PART 3 EXECUTION

3.1 GENERAL

The Contractor is responsible for quality control and shall establish and maintain an effective quality control system in compliance with the clause entitled INSPECTION OF CONSTRUCTION of the CONTRACT CLAUSES and EPA/600/R-93/182. The quality control system shall consist of plans, procedures, and organization necessary to produce an end product which complies with the contract requirements. The system shall cover all construction operations, both on-site and off-site, and shall be keyed to the proposed construction sequence. The Contractor's Quality Control Program shall be consistent with and address the requirements of the Government's Quality Assurance Plan.

3.2 QUALITY CONTROL PLAN

3.2.1 General

The Contractor shall furnish for review by the Government, not later than 10 days after receipt of notice to proceed, the Contractor Quality Control (CQC) Plan proposed to implement the requirements of the clause entitled INSPECTION OF CONSTRUCTION of the CONTRACT CLAUSES. The plan shall be job order specific and shall include items not covered in the Contractor's pre-approved QA Plan. The plan shall identify personnel, procedures, control, instructions, tests, records, and forms to be used. The Government will consider an interim plan for the first 30 days of operation. Construction will be permitted to begin only after acceptance of the CQC Plan or acceptance of an interim plan applicable to the particular feature of work to be started. Work outside of the features of work included in an accepted interim plan will not be permitted to begin until acceptance of a CQC Plan or another interim plan containing the additional features of work to be started.

3.2.2 Content of the CQC Plan

The CQC plan shall include, as a minimum, the following to cover all construction operations, both on-site and off-site, including work by subcontractors.

a. A copy of the letter to the CQC System Manager signed by an authorized official of the firm which describes the responsibilities and delegates sufficient authorities to adequately perform the functions of the CQC System Manager including authority to stop work which is not in compliance with the contract. The CQC System Manager shall issue letters of direction to all other various quality control representatives outlining duties, authorities and responsibilities. Copies of these letters shall also be furnished to the Government.

b. Procedures for scheduling, reviewing, certifying, and managing submittals, including those of subcontractors, off-site fabricators, suppliers and purchasing agents. These procedures shall be in accordance with Exhibit I.

c. Control, verification, and acceptance testing procedures for each specific test to include the test name, specification paragraph requiring test, feature of work to be tested, test frequency, and person responsible for each test. (Laboratory facilities will be subject to approval by the Contracting Officer.)

d. Procedures for tracking preparatory, initial, and follow-up control phases and control, verification, and acceptance tests including documentation.

e. Procedures for tracking construction deficiencies from identification through acceptable corrective action. These procedures shall establish verification that identified deficiencies have been corrected.

f. Reporting procedures, including proposed reporting formats.

g. A list of the definable features of work. A definable feature of work is a task which is separate and distinct from other tasks and has separate control requirements. It could be identified by different trades or disciplines, or it could be work by the same trade in a different environment. Although each section of the specifications may generally be considered as a definable feature of work, there are frequently more than one definable feature under a particular section. This list will be agreed upon during the coordination meeting.

3.2.3 Acceptance of Plan

Acceptance of the Contractor's plan is required prior to the start of construction. Acceptance is conditional and will be predicated on satisfactory performance during construction. The Government reserves the right to require the Contractor to make changes in his CQC plan and operations including removal of personnel, as necessary, to obtain the quality specified.

3.2.4 Notification of Changes

After acceptance of the CQC plan, the Contractor shall notify the Contracting Officer in writing a minimum of seven calendar days prior to any proposed change. Proposed changes are subject to acceptance by the Contracting Officer.

3.3 COORDINATION MEETING

After the Preconstruction Conference, before start of construction, and prior to acceptance by the Government of the Quality Control Plan, the Contractor shall meet with the Contracting Officer or Authorized Representative and discuss the Contractor's quality control system. During the meeting, a mutual understanding of the system details shall be developed, including the forms for recording the CQC operations, control activities, testing, administration of the system for both on-site and off-site work, and the interrelationship of Contractor's Management and control with the Government's Quality Assurance inspection. Minutes of the meeting will be prepared by the Government and signed by both the Contractor and the Contracting Officer. The minutes shall become a part of the contract file. There may be occasions when subsequent conferences will be called by either party to reconfirm mutual understandings and/or address deficiencies in the CQC system or procedures which may require corrective action by the Contractor.

3.4 QUALITY CONTROL ORGANIZATION

3.4.1 CQC System Manager

The Contractor shall identify an individual within his organization at the site of the work who shall be responsible for overall management of CQC and have the authority to act in all CQC matters for the Contractor.

3.4.2 CQC Organizational Staffing

A CQC staff shall be maintained under the direction of the CQC System Manager to perform all Quality Control activities. The actual strength of the staff during any specific work period may vary to cover work phase needs, shifts, and rates of placement. The personnel of this staff shall be fully qualified by experience and technical training to perform their assigned responsibilities and shall be directly hired by and work for the prime Contractor.

3.4.3 Organizational Changes

The Contractor shall obtain Contracting Officer's acceptance before replacing any member of the CQC staff. Requests shall include the names, qualifications, duties, and responsibilities of each proposed replacement.

3.5 SUBMITTALS

Submittals shall be as specified in Exhibit I. The CQC organization shall be responsible for certifying that all submittals are in compliance with the contract requirements.

3.6 CONTROL

Contractor Quality Control is the means by which the Contractor ensures that construction, to include that of subcontractors and suppliers, complies with the requirements of the contract. The controls shall be adequate to cover all construction operations, and shall be keyed to the proposed construction sequence. The controls shall include at least three phases of control to be conducted by the CQC system manager for all definable features of work, as follows:

3.6.1 Preparatory Phase

This phase shall be performed prior to beginning work on each definable feature of work and shall include:

a. A review of each paragraph of applicable specifications.

b. A review of the contract plans.

c. A check to assure that all materials and/or equipment have been tested, submitted, and approved.

d. A check to assure that provisions have been made to provide required control inspection and testing.

e. Examination of the work area to assure that all required preliminary work has been completed and is in compliance with the contract.

f. A physical examination of required materials, equipment, and sample work to assure that they are on hand, conform to approved shop drawing or submitted data, and are properly stored.

g. A review of the appropriate activity hazard analysis to assure safety requirements are met.

h. Discussion of procedures for constructing the work including repetitive deficiencies. Document construction tolerances and workmanship standards for that phase of work.

i. A check to ensure that the portion of the plan for the work to be performed has been accepted by the Contracting Officer.

j. The Government shall be notified at least 24 hours in advance of beginning any of the required action of the preparatory phase. This phase shall include a meeting conducted by the CQC system manager and attended by the superintendent, other CQC personnel (as applicable), and the foreman responsible for the definable feature. The results of the preparatory phase actions shall be documented by separate minutes prepared by the CQC system manager and attached to the daily QC report. The Contractor shall instruct applicable workers as to the acceptable level of workmanship required in order to meet contract specifications.

3.6.2 Initial Phase

This phase shall be accomplished at the beginning of a definable feature of work. The following shall be accomplished:

a. A check of preliminary work to ensure that it is in compliance with contract requirements. Review minutes of the preparatory meeting.

b. Verification of full contract compliance. Verify required control inspection and testing.

c. Establish level of workmanship and verify that it meets minimum acceptable workmanship standards. Compare with sample panels is appropriate.

d. Resolve all differences.

e. Check safety to include compliance with and upgrading of the safety plan and activity hazard analysis. Review the activity analysis with each worker.

f. The Government shall be notified at least 24 hours in advance of beginning the initial phase. Separate minutes of this phase shall be prepared by the CQC system manager and attached to the daily QC report. Exact location of initial phase shall be indicated for future reference and comparison with follow-up phases.

g. The initial phase shall be repeated for each new crew to work on-site, or any time acceptable specified quality standards are not being met.

3.6.3 Follow-up Phase

Daily inspections shall be performed to assure continuing compliance with contract requirements, including control testing, until completion of the particular feature of work. The inspections shall be made a matter of record in the CQC documentation. Final follow-up inspections shall be conducted and all deficiencies corrected prior to the start of additional features of work which may be affected by the deficient work. The Contractor shall not build upon or conceal non-conforming work.

3.6.4 Additional Preparatory and Initial Phases

Additional preparatory and initial phases shall be conducted on the same definable features of work as determined by the Government if the quality of on-going work is unacceptable; or if there are changes in the applicable QC staff or in the on-site production supervision or work crew; or if work on a definable feature is resumed after a substantial period of inactivity, or if other problems develop.

3.7 TESTS

3.7.1 Testing Procedure

The Contractor shall perform tests specified or required to verify that control measures are adequate to provide a product which conforms to contract requirements. Testing includes operation and/or acceptance tests when specified. The Contractor shall procure the services of a an Owner approved testing laboratory or established an approved testing laboratory at the project site. A list of tests to be performed shall be furnished as part of the CQC plan. The list shall give the test name, frequency, specification paragraph containing the test requirements. The personnel and laboratory responsible for each type of test and estimate of the number of tests required. The Contractor shall perform the following activities and record and provide the following data:

a. Check test instrument calibration data against certified standards

b. Verify that recording forms and test identification control number system, including all of the test documentation requirements, have been prepared.

c. Results of all tests taken, both passing and failing tests, shall be recorded on the Quality Control report for the date taken. Specification paragraph reference, location where tests were taken, and the sequential control number identifying the test shall be recorded. Actual test reports may be submitted later, if approved by the Contracting Officer, with a reference to the test number and date taken. An information copy of tests performed by an off-site or commercial test facility shall be provided directly to the Contracting Officer. Failure to submit timely test reports, as stated, may result in nonpayment for related work performed and disapproval of the test facility for this contract.

3.7.2 Testing Laboratories

3.7.2.1 Capability Check

The Government reserves the right to check laboratory equipment in the proposed laboratory for compliance with the standards set forth in the contract specifications and to check the laboratory technician's testing procedures and techniques. Laboratories utilized for testing soils, concrete, asphalt and steel shall meet criteria detailed in ASTM D 3740 and ASTM E 329.

The Government reserves the right to utilize the Contractor's control testing laboratory and equipment to make assurance tests and to check the Contractor's testing procedures, techniques, and test results at no additional cost to the Government.

3.7.3 Furnishing or Transportation of Samples for Testing

Costs incidental to the transportation of samples or materials shall be borne by the Contractor. Samples of materials for test verification and acceptance testing by the Government shall be delivered to the Contracting Officer's Representative.

3.8 COMPLETION INSPECTION

At the completion of all work or any increment thereof established by a completion time stated in clause entitled COMMENCEMENT, PROSECUTION, AND COMPLETION OF WORK in Section F, or stated elsewhere in the specifications, the CQC system manager shall conduct an inspection of the work and

develop a "punch list" of items which do not conform to the approved plans and specifications. Such a list of deficiencies shall be included in the CQC documentation, as required by paragraph DOCUMENTATION below, and shall include the estimated date by which the deficiencies will be corrected. The CQC system manager or staff shall make a second inspection to ascertain that all deficiencies have been corrected and so notify the Contracting Officer. These inspections and any deficiency corrections required by this paragraph shall be accomplished within the time stated for completion of the entire work or any particular increment thereof if the project is divided into increments by separate completion dates.

3.9 DOCUMENTATION

The Contractor shall maintain current records of quality control operations, activities, and tests performed, including the work of subcontractors and suppliers. These records shall be on an acceptable form and shall include factual evidence that required quality control activities and/or tests have been performed, including but not limited to the following:

a. Contractor/subcontractor and their area of responsibility.

b. Operating plant/equipment with hours worked, idle, or down for repair.

c. Test and/or control activities performed with results and references to specifications/plan requirements. The control phase should be identified (Preparatory, Initial, Follow-up). List deficiencies noted along with corrective action.

d. Off-site surveillance activities, including actions taken.

e. Job safety evaluations stating what was checked, results, and instructions or corrective actions.

f. List instructions given/received and conflicts in plans and/or specifications.

g. Contractor's verification statement.

h. Work performed today, giving location, description, and by whom. When Network Analysis (NAS) is used, identify each phase of work performed each day by NAS activity number.

i. Material received with statement as to its acceptability and storage.

j. Identify submittals reviewed, with contract reference, by whom, and action taken.

k. These records shall indicate a description of trades working on the project; the number of personnel working; weather conditions encountered; and any delays encountered. These records shall cover both conforming and deficient features and shall include a statement that equipment and materials incorporated in the work and workmanship comply with the contract. The original and one copy of these records in report form shall be furnished to the Government daily within 24 hours after the date(s) covered by the report, except that reports need not be submitted for days on which no work is performed. As a minimum, one report shall be prepared and submitted for every seven days of no work and on the last day of a no work period. All calendar days shall be accounted for throughout the life of the contract. The first report following a day of no work shall be for that day only. Reports shall be signed and dated by the CQC system

manager. The report from the CQC system manager shall include copies of test reports and copies of reports prepared by all subordinate quality control personnel.

3.10 NOTIFICATION OF NONCOMPLIANCE

The Contracting Officer will notify the Contractor of any detected noncompliance with the foregoing requirements. The Contractor shall, after receipt of such notice, immediately take corrective action. Such notice, when delivered to the Contractor at the site of the work, shall be deemed sufficient for the purpose of notification. If the Contractor fails or refuses to comply promptly, the Contracting Officer may issue an order stopping all or part of the work until satisfactory corrective action has been taken. No part of the time lost due to such stop orders shall be made the subject of claim for extension of time or for excess costs or damages by the Contractor.

PART 4 SUBMITTAL SUMMARY

4.1 SUMMARY OF SUBMITTALS

Submittals to be furnished by the Contractor shall include the following:

Paragraph	Item	SD
01440-3.2	Contractor Quality Control Plan	09

Code for Type of Submittal (SD)

01 - Data
04 - Drawings
06 - Instructions
07 - Schedules
08 - Statements
09 - Reports
13 - Certificates
14 - Samples
18 - Records
19 - O & M Manuals

- End of Section -

* * * * *

This page is intentionally blank.

0048805

7/18

TECHNICAL SPECIFICATION
FOR
CLEARING AND GRUBBING
SECTION 02110

SITE PREPARATION

ENVIRONMENTAL RESTORATION DISPOSAL FACILITY (ERDF)
CELLS 3 & 4 CONSTRUCTION

MICHAEL G. MARCHANT
STATE OF WASHINGTON
0030272
REGISTERED
PROFESSIONAL ENGINEER

EXPIRES: 12-07-99

FOR INFORMATION ONLY

BHI-DIS 12/18/97 bdo

REV	DATE	REASON FOR REVISION	ORIGINATOR	CHECKER	GROUP LEADER	TASK DESIGN LEAD	PROJECT ENGINEER
0	12-12-97	Issued for Construction	MB	MC	[illegible]	DRM	[illegible]

	RICHLAND ENVIRONMENTAL RESTORATION PROJECT	JOB NO. 22192
		SPECIFICATION NO. 0600X-SP-C0030
		SHEET 1 of 3

This page is intentionally blank.

SECTION 02110

CLEARING AND GRUBBING

PART 1 GENERAL

1.1 DEFINITIONS

1.1.1 Clearing

Clearing shall consist of shredding sagebrush and other vegetation within the limits of construction. It shall also include the satisfactory disposal of the cleared material and other rubbish from areas which are to be grubbed.

1.1.2 Grubbing

Grubbing shall consist of the removal and disposal of stumps, roots larger than 75 mm (3 inches) in diameter, and matted roots from the designated areas.

1.2 SUBMITTALS (Not Applicable)

PART 2 PRODUCTS (Not Applicable)

PART 3 EXECUTION

3.1 GENERAL

All areas within the limits of construction shall be cleared unless otherwise noted. In addition, the area for the Construction Support Pad, associated Access Road, and Bulk Water Loading Pad shall be grubbed. The Contractor shall survey and locate the limits of clearing and grubbing prior to initiating clearing and grubbing activities.

The Contractor shall protect all existing structures and embankments. Any structure damaged during clearing and grubbing operations shall be reported to the Contracting Officer and shall be replaced or repaired by the Contractor at no additional cost to the Government.

3.2 CLEARING AND GRUBBING

Sagebrush and other vegetation shall be cleared by using a "brush-hog" or similar equipment to cut, chip, and size reduce the vegetation to chips and slash that will be left on the surface. Vegetation shall be cut down to within 152 mm (6 inches) of the ground surface. Clearing shall also include the removal and disposal of structures that obtrude, encroach upon, or otherwise obstruct the work. This includes, but is not limited to, loose rocks, boulders, and rock piles. This material shall be disposed of in Gravel Pit 31 in a location designated by the Contracting Officer.

In areas to be grubbed, cleared material and other rubbish shall be removed and disposed of in Gravel Pit 31. Material to be grubbed, together with other organic or metallic debris not suitable for foundation purposes, shall be removed to a depth of not less than 0.5 meters (20 inches) below the original ground surface and also disposed of in Gravel Pit 31.

PART 4 SUBMITTAL SUMMARY (Not Applicable)

- End of Section -

* * * * *

0048805

8/18

TECHNICAL SPECIFICATION
FOR
EARTHWORK
SECTION 02210

SITE PREPARATION

ENVIRONMENTAL RESTORATION DISPOSAL FACILITY (ERDF)
CELLS 3 & 4 CONSTRUCTION

MICHAEL G. MARCHANT
STATE OF WASHINGTON
0030272
REGISTERED
PROFESSIONAL ENGINEER

EXPIRES: 12-07-99

FOR INFORMATION ONLY

BHI-DIS 12/18/97 bds

REV	DATE	REASON FOR REVISION	ORIGINATOR	CHECKER	GROUP LEADER	TASK DESIGN LEAD	PROJECT ENGINEER
0	12-12-97	Issued for Construction	MB			DRM	

	RICHLAND ENVIRONMENTAL RESTORATION PROJECT	JOB NO. 22192
		SPECIFICATION NO. 0600X-SP-C0031
		SHEET 1 of 10

This page is intentionally blank.

SECTION 02210

EARTHWORK

PART 1 GENERAL

1.1 REFERENCES

The publications listed below form a part of this specification to the extent referenced. The publications are referred to in the text by basic designation only.

AMERICAN SOCIETY FOR TESTING AND MATERIALS (ASTM)

ASTM C 136	(1994a) Sieve Analysis of Fine and Coarse Aggregates
ASTM D 422	(1963; R 1972) Particle size analysis of soils
ASTM D 1140	(1992) Amount of Material in Soils Finer than the No. 200 (75-micrometer) Sieve
ASTM D 1556	(1990) Density and Unit Weight of Soil in Place by the Sand-Cone Method
ASTM D 1557	(1991) Laboratory Compaction Characteristics of Soil Using Modified Effort (56,000 ft-lbf/cu. ft. (2,700 kN-m/cu.m.))
ASTM D 2167	(1984; R 1990) Density and Unit Weight of Soil in Place by the Rubber Balloon Method
ASTM D 2487	(1992) Classification of Soils for Engineering Purposes (Unified Soil Classification System)
ASTM D 2922	(1991) Density of Soil and Soil-Aggregate in Place by Nuclear Methods (Shallow Depth)
ASTM D 3017	(1988) Water Content of Soil and Rock in Place by Nuclear Methods (Shallow Depth)
ASTM D 4318	(1984) Liquid Limit, Plastic Limit, and Plasticity Index of Soils

CODE OF FEDERAL REGULATIONS

29 CFR	Safety and Health Regulations for Construction

1.2 DEFINITIONS

1.2.1 Satisfactory Materials

Materials classified in ASTM D 2487 as GW, GP, GM, GW-GM, SW, SP,SM, SP-SM and SW-SM and free from roots and other organic matter, trash, debris, and frozen materials and stones larger than 150 mm (6 inches) in any dimension will be considered satisfactory material unless specified otherwise.

1.2.2 Unsatisfactory Materials

Materials which do not comply with the requirements for satisfactory materials and materials classified in ASTM D 2487 as Pt, OH, and OL are unsatisfactory. Unsatisfactory materials also include man-made fills, refuse, or backfills from previous construction unless designated otherwise by the specifications and drawings.

1.2.3 Degree of Compaction

Degree of compaction is a percentage of the maximum density obtained by the test procedure presented in ASTM D 1557 abbreviated hereinafter as a percent of maximum density.

1.2.4 Unyielding Material

Unyielding material shall consist of rock and gravelly soils with stones greater than 75 mm (3 inches) in any dimension or as defined by the pipe manufacturer, whichever is smaller.

1.2.5 Unstable Material

Unstable material shall consist of materials too wet to properly support the materials to be placed on or above it.

1.3 SUBMITTALS

Submittals shall be furnished in accordance with Exhibit I.

SD-01 Data

Submittal of manufacturer's data for plastic marking tape.

SD-08 Statements

Field Testing Control;

Qualifications of the commercial testing laboratory who will be performing all testing in accordance with paragraph FIELD TESTING CONTROL.

SD-09 Reports

Satisfactory Materials;

Certified test reports and analysis certifying that the base materials proposed for use at the project site conform to the specified requirements, and for all tests conducted in accordance with paragraph FIELD TESTING CONTROL.

Copies of all laboratory and field test reports within 24 hours of the completion of the test.

Testing;

Within 24 hours of conclusion of physical tests, 6 copies of test results, including calibration curves and results of calibration tests.

SD-13 Certificates

Testing;

Qualifications of the commercial testing laboratory.

1.4 CLASSIFICATION OF EXCAVATION

No consideration will be given to the nature of the materials, and all excavation will be designated as unclassified excavation.

PART 2 PRODUCTS

2.1 BORROW MATERIAL

Borrow material shall be taken from the Daily Operations Cover Stockpile as directed by the Contracting Officer.

2.1.1 Select Granular Material

Select granular material shall consist of well-graded sand, gravel, crushed gravel, crushed stone or crushed slag composed of hard, tough and durable particles, and shall contain not more than 10 percent by weight of material passing a 0.075 mm (No. 200) mesh sieve and no less than 95 percent by weight passing the 25 mm (1 inch) sieve. For utility trenches the maximum allowable aggregate size shall be not more than 8 mm per 100 mm (1 inch per foot) of pipe diameter or 75 mm (3 inches), or the maximum size recommended by the pipe manufacturer, whichever is smaller.

2.1.2 Bedding and Initial Backfill Material

Bedding and initial backfill for utilities shall consist of select granular material or satisfactory materials free from rocks 25 mm (1 inch) or larger in any dimension or free from rocks of such size as recommended by the pipe manufacturer, whichever is smaller.

2.1.3 Base Material

Base material shall comply with the requirements of WSDOT 9-03.9 (3).

2.1.4 Plastic Marking Tape

Plastic marking tape shall be of a type specifically manufactured for marking and locating underground utilities. The metallic core of the tape shall be encased in a protective jacket or provided with other means to protect it from corrosion. Tape color shall be as specified in TABLE 1 and shall bear a continuous printed inscription describing the specific utility.

TABLE 1. Tape Color

Red: Electric
Blue: Water Systems

PART 3 EXECUTION

3.1 EXCAVATION

3.1.1 General

Excavation of every description, regardless of material encountered shall be performed to the lines, grades, and elevations shown on the drawings and specified herein. Material required for fills in excess of that produced by excavation within the grading limits shall be obtained from the Daily Operations Cover Stockpile as directed by the Contracting Officer. Satisfactory excavation material shall be transported to and placed in fill areas. All unsatisfactory material including any soil which is disturbed by the Contractor's operations or softened due to exposure to the elements and water and surplus material shall be disposed of in Gravel Pit 31 in a location designated by the Contracting Officer. Excavation below indicated depths shall not be permitted except to remove unsatisfactory material. In the event that unsatisfactory material is encountered below the grades shown or specified, the Contracting Officer shall be notified. Determination of elevations and measurements of approved overdepth excavation of unsatisfactory material and the replacement of such material with satisfactory material shall be done under the direction of the Contracting Officer. Excavations carried below the depths indicated, without specific directions, shall except as otherwise specified, be refilled to the proper grade with satisfactory material at no additional cost to the Government. Excavation and filling shall be performed in a manner and sequence that will provide drainage at all times. Excavations shall be kept free from water while construction therein is in progress. Surface water shall be directed away from excavation and construction sites so as to prevent erosion and undermining of foundations. Diversion ditches, dikes and grading shall be provided and maintained as necessary during construction. Excavated slopes and backfill surfaces shall be protected to prevent erosion and sloughing.

3.1.2 Utilities Systems

During excavation, material satisfactory for backfilling utility systems shall be stockpiled in an orderly manner at a distance from the banks of the trench equal to 1/2 the depth of the excavation, but in no instance closer than 0.61 m (2 feet).

3.1.2.1 Trench Excavation

The trench shall be excavated as recommended by the manufacturer of the pipe to be installed. Trench walls below the top of the pipe shall be vertical and of such width as recommended in the manufacturer's installation manual. Trench walls more than 1.22 meters (4 feet) high shall be shored, cut back to a stable slope, or provided with equivalent means of protection for employees who may be exposed to moving ground or cave in. Trench walls which are cut back shall be excavated to meet the requirements of 29 CFR 1926. Special attention shall be given to slopes which may be adversely affected by weather or moisture content. The trench width below the top of pipe shall not exceed 610 mm (24 inches) plus pipe outside diameter (O.D.). Where recommended trench widths are exceeded during construction, the Contractor shall redesign, install stronger pipe, or utilize special installation procedures to ensure pipe integrity after backfill and compaction. The cost of redesign, stronger pipe, or special installation procedures shall be borne by the Contractor without any additional cost to the Government.

3.1.2.2 Removal of Unyielding Material

Where unyielding material is encountered in the bottom of the trench, such material shall be removed 100 mm (4 inches) below the required grade and replaced with initial backfill material.

3.1.2.3 Removal of Unstable Material

Where unstable material is encountered in the bottom of the trench, such material shall be removed to the depth directed and replaced to the proper grade with select granular material as provided in paragraph FILLING, BACKFILLING, AND COMPACTION. When removal of unstable material is required due to the fault or neglect of the Contractor in his performance of the work, the resulting material shall be excavated and replaced by the Contractor without additional cost to the Government.

3.2 UTILITY TRENCH BOTTOM PREPARATION

The bottoms of trenches shall be accurately graded to provide uniform bearing and support for the bottom quadrant of each section of the pipe. The trench bottom shall be given a final trim, using a string line for establishing grade, such that each pipe section when first laid will be continually in contact with the ground along the extreme bottom of the pipe. Bell holes shall be excavated to the necessary size at each joint or coupling to eliminate point bearing. Stones of 75 millimeters (3 inches) or greater in any dimension, or as recommended by the pipe manufacturer, whichever is smaller, shall be removed to avoid point bearing.

3.3 SUBGRADE PREPARATION FOR THE CONSTRUCTION SUPPORT PAD AND BULK WATER LOADING PAD

Unsatisfactory material in surfaces to receive fill or in excavated areas shall be removed to a depth of 150 mm (6 inches) and replaced with satisfactory materials. The surface shall be scarified to a depth of 150 mm (6 inches) and compacted to 95 percent of maximum density prior to placing fill or backfill. When subgrades are less than the specified density, the ground surface shall be broken up to a minimum depth of 150 mm (6 inches), pulverized, and compacted to the specified density. When the subgrade is part fill and part excavation or natural ground, the excavated or natural ground portion shall be scarified to a depth of 300 mm (12 inches) and compacted as specified for the adjacent fill. Material shall not be placed on surfaces that are muddy, frozen, or contain frost. Material shall be moistened or aerated as necessary to provide the moisture content that will readily facilitate obtaining the specified compaction with the equipment used. Approved compacted subgrades that are disturbed by the Contractor's operations or adverse weather shall be scarified and compacted as specified herein before to the required density prior to further construction thereon.

3.4 SUBGRADE PREPARATION FOR ROADWAYS

Subgrade for roadways shall be compacted to at least 95% of maximum density to a depth of 300 mm (12 inches) below the surface. This operation shall include plowing, disking, and any moistening or aerating required to obtain the specified compaction.

3.5 FILLING, BACKFILLING, AND COMPACTION

Fill and backfill material shall consist of satisfactory material, select granular material, initial backfill material, or base material as required. Backfill shall be placed in layers not exceeding 150 mm (6 inches) loose thickness for compaction by hand operated machine compactors, and 200 mm (8 inches) loose thickness for other than hand operated machines, unless otherwise specified by the Contracting Officer. Except for material used on roadways, the Construction Support Pad, or the Bulk Water Loading Pad, each layer shall be compacted to at least 95 percent maximum density.

3.5.1 Trench Backfill

Trenches shall be backfilled to the grade shown. The trench shall be backfilled to 600 millimeters (2 feet) above the top of pipe prior to performing the required pressure tests. The joints and couplings shall be left uncovered during the pressure test.

3.5.1.1 Replacement of Unstable Material

Unstable material removed from the bottom of the trench or excavation shall be replaced with select granular material placed in layers not exceeding 150 mm (6 inches) loose thickness.

3.5.1.2 Bedding and Initial Backfill

Bedding and initial backfill material shall be placed and compacted with approved tampers to a height of at least 0.30 meter (one foot) above the top of utility pipe or conduit. The backfill shall be brought up evenly on both sides of the pipe for the full length of the pipe. Care shall be taken to ensure thorough compaction of the fill under the haunches of the pipe.

Unless otherwise specified or shown, pipeline bedding may be omitted if all the following conditions exist.

a. The pipe bears on firm, undisturbed native soil which contains only particles that will pass a 25 mm (one-inch) sieve.

b. The trench excavation is not through rock or stones.

c. The trench subgrade soils are classified as satisfactory material.

d. The trench subgrade soils have, as a maximum, a moisture content that allows compaction.

Where bedding is required, after compacting the bedding the Contractor shall perform a final trim using a stringline for establishing grade, such that each pipe section when first laid shall continually be in contact with the bedding along the extreme bottom of the pipe. Excavation for pipe bells and welding shall be made as required.

3.5.1.3 Base Material

Fill, backfill, and compaction for base materials used in gravel roadways shall be as specified in Paragraph FILL, BACKFILL, AND COMPACTION FOR ROADWAYS.

3.5.2 Fill, Backfill, and Compaction for Roadways

Roadways shall be filled to the grades shown. Fill and backfill material shall be compacted to at least 95 percent maximum density. Stones having a dimension greater than 100 mm (4 inches) shall not be permitted in the upper 150 mm (6 inches) of the roadway.

3.5.3 Fill, Backfill, and Compaction for the Construction Support Pad and the Bulk Water Loading Pad

Fill and backfill for the Construction Support Pad and the Bulk Water Loading Pad shall be constructed to the lines and grades indicated. No frozen material shall be permitted in the fill. Stones having a dimension greater than 100 mm (4 inches) shall not be permitted in the upper 150 mm (6 inches) of the pads. Compaction of fill and backfill material shall be to 95% maximum density.

3.6 FINISHED EXCAVATION, FILLS, AND EMBANKMENTS

All areas covered by the project, including excavated and filled sections and adjacent transition areas, shall be uniformly smooth-graded. The finished surface shall be reasonably smooth, compacted, and free from irregular surface changes. The degree of finish shall be that ordinarily obtainable from blade-grader operations, except for roadways. The degree of finish for roadways shall be 30 mm (0.1 foot) of the grades and elevations indicated. Ditches and gutters shall be finished to permit adequate drainage.

3.7 SHORING

All excavations shall be sloped or otherwise supported in a safe manner in accordance with the requirements of 29 CFR 1926. Shoring, including sheet piling, shall be furnished and installed as necessary to protect workmen, banks, adjacent paving, structures, and utilities. Shoring, bracing, and sheeting shall be removed as excavations are backfilled, in a manner to prevent caving.

3.8 FIELD TESTING CONTROL

Testing shall be the responsibility of the Contractor and shall be performed at no additional cost to the Government. Tests shall be performed by an approved commercial testing laboratory or may be tested by facilities furnished by the Contractor. No work requiring testing shall be permitted until the facilities have been inspected and approved by the Contracting Officer. The laboratory or contractor shall provide copies of nuclear gauge licenses, calibrations, and training certificates for operators. Cost incurred for any subsequent inspection required because of failure of the first inspection shall be borne by the Contractor. Characteristics of base material shall be determined in accordance with particle size analysis of soils ASTM D 422 and moisture density relations of soils ASTM D 1557. Grain size classification of soils shall be performed on every 765 cubic meters (1000 cubic yards) of base material used. Characteristics of materials (other than base material) obtained from on site sources may be obtained from the Contracting Officer. Field in-place density shall be determined in accordance with ASTM D 1556, ASTM D 2167, or ASTM D 2922 and except that ASTM D 2922 shall not be used for soils designated as gravels as defined by ASTM D 2487. The Contracting Officer shall make the Final Determination of soils classified as gravel that may not be tested by methods established in ASTM D 2922.

When ASTM D 2922 is used, the calibration curves shall be checked, and adjusted if necessary, using the sand cone method as described in paragraph Calibration of the ASTM D 1556. ASTM D 2922 results in a wet unit weight of soil and when using this method, ASTM D 3017 shall be used to determine the moisture content of the soil. The calibration curves furnished with the moisture gauges shall be checked along with density calibration checks as described in ASTM D 3017. The calibration checks of both the density and moisture gauges shall be made at the beginning of a job on each different type of material encountered and at intervals as directed by the Contracting Officer.

Copies of calibration curves, results of calibration tests, and field and laboratory density tests shall be furnished to the Contracting Officer. When test results indicate, as determined by the Contracting

Officer, that compaction is not as specified, the material shall be removed, replaced and recompacted to meet specification requirements, at no additional expense to the Government. Tests on recompacted areas shall be performed to determine conformance with specification requirements.

3.8.1 In-Place Densities

3.8.1.1 In-Place Density of Trenches

A minimum of one field test per lift of backfill for every 100 m (328 ft) of trench shall be performed.

3.8.1.2 In-Place Density of Roadways

A minimum of one field test at 30 m (100 feet) intervals for each lift of fill or backfill.

3.8.1.3 In-Place Density of the Construction Support Pad and the Bulk Water Loading Pad

A minimum of one field test for every 232 square meters (2500 square feet) or fraction thereof of each lift of fill or backfill.

3.9 SPECIAL REQUIREMENTS

Special requirements for both excavation and backfill relating to the specific utilities are as follows:

3.9.1 Water Lines

Trenches shall be installed at a depth to provide a minimum cover of 1.1 meters (3.5 feet) from the existing ground surface, or from the indicated finished grade, whichever is lower, to the top of the pipe.

3.9.2 Plastic Marking Tape

Warning tapes shall be installed directly above the pipe, at a depth of 457 mm (18 inches) below finished grade unless otherwise shown.

PART 4 SUBMITTAL SUMMARY

4.1 SUMMARY OF SUBMITTALS

Submittals to be furnished by the Contractor shall include the following:

Paragraph	Item	SD
02210-3.8	Qualification of Commercial Testing Laboratory.	08,13
02210-3.8	Characteristics of Base Materials	09
02210-3.8	Moisture and Density Tests	09
02210-3.8	Calibration Data	09

Code for Type of Submittal (SD)

01 - Data
04 - Drawings
06 - Instructions
07 - Schedules
08 - Statements
09 - Reports
13 - Certificates
14 - Samples
18 - Records
19 - O & M Manuals

- End of Section -

* * * * *

This page is intentionally blank.

0048805

9/18

TECHNICAL SPECIFICATION
FOR
WATER LINES
SECTION 02660

SITE PREPARATION

ENVIRONMENTAL RESTORATION DISPOSAL FACILITY (ERDF)
CELLS 3 & 4 CONSTRUCTION

MICHAEL G. MARCHANT
STATE OF WASHINGTON
12-7-97
0030272
REGISTERED
PROFESSIONAL ENGINEER

EXPIRES: 12-07-99

FOR INFORMATION ONLY

BHI-DIS 12/18/97 bdo

REV	DATE	REASON FOR REVISION	ORIGINATOR	CHECKER	GROUP LEADER	TASK DESIGN LEAD	PROJECT ENGINEER
0	12-12-97	Issued for Construction	MB	[illegible]	[illegible]	DRM	[illegible]

	RICHLAND ENVIRONMENTAL RESTORATION PROJECT	JOB NO. 22192
		SPECIFICATION NO. 0600X-SP-C0032
		SHEET 1 of 14

This page is intentionally blank.

SECTION 02660

WATER LINES

PART 1 GENERAL

1.1 REFERENCES

The publications listed below form a part of this specification to the extent referenced. The publications are referred to in the text by basic designation only.

AMERICAN SOCIETY FOR TESTING AND MATERIALS (ASTM)

ASTM A 53	(1990b) Pipe, Steel, Black and Hot-Dipped, Zinc-Coated Welded and Seamless
ASTM B 32	(1991) Solder Metal
ASTM B 43	(1991) Seamless Red Brass Pipe, Standard Sizes
ASTM B 88	(1992) Seamless Copper Water Tube
ASTM D 1784	(1992) Rigid Poly(Vinyl Chloride) (PVC) Compounds and Chlorinated Poly(Vinyl Chloride) (CPVC) Compounds
ASTM D 1785	(1991) Poly(Vinyl Chloride) (PVC) Plastic Pipe, Schedules 40, 80, and 120
ASTM D 2241	(1989) Poly(Vinyl Chloride) (PVC) Pressure-Rated Pipe (SDR Series)
ASTM D 2464	(1991) Threaded Poly(Vinyl Chloride) (PVC) Plastic Pipe Fittings, Schedule 80
ASTM D 2466	(1990a) Poly(Vinyl Chloride) (PVC) Plastic Pipe Fittings, Schedule 40
ASTM D 2467	(1992) Socket-Type Poly(Vinyl Chloride) (PVC) Plastic Pipe Fittings, Schedule 80
ASTM D 2564	(1991a) Solvent Cements for Poly(Vinyl Chloride) (PVC) Plastic Piping Systems
ASTM D 2855	(1990) Making Solvent-Cemented Joints with Poly(Vinyl Chloride) (PVC) Pipe and Fittings

AMERICAN SOCIETY OF MECHANICAL ENGINEERS (ASME)

ASME B1.20.1	(1983) Pipe Threads, General Purpose (Inch)

ASME B16.1	(1989) Cast Iron Pipe Flanges and Flanged Fittings
ASME B16.3	(1985) Malleable Iron Threaded Fittings, Classes 150 and 300
ASME B16.15	(1985) Cast Bronze Threaded Fittings, Classes 125 and 250
ASME B16.18	(1984) Cast Copper Alloy Solder Joint Pressure Fittings
ASME B16.22	(1989) Wrought Copper and Copper Alloy Solder Joint Pressure Fittings
ASME B16.34	(1988) Valves-Flanged, Threaded, and Welding End
ASME B31.1	(1992) Power Piping
ASME B36.10M	(1985) Welded and Seamless Wrought Steel Pipe

AMERICAN WATER WORKS ASSOCIATION (AWWA)

AWWA B300	(1992) Hypochlorites
AWWA B301	(1992) Liquid Chlorine
AWWA C104	(1990) Cement-Mortar Lining for Ductile-Iron Pipe and Fittings for Water
AWWA C105	(1988) Polyethylene Encasement for Ductile-Iron Piping for Water and Other Liquids
AWWA C110	(1987) Ductile-Iron and Gray-Iron Fittings, 3 In. Through 48 In., for Water and Other Liquids
AWWA C153	(1988) Ductile-Iron Compact Fittings, 3 In. Through 16 In., for Water and Other Liquids
AWWA C207	(1986) Steel Pipe Flanges for Waterworks Service - Sizes 4 In. Through 144 In.
AWWA C208	(1983; C208a; R 1989) Dimensions for Fabricated Steel Water Pipe Fittings
AWWA C500	(1986) Gate Valves for Water and Sewerage Systems
AWWA C651	(1986; C651a) Disinfecting Water Mains
AWWA C900	(1989) Polyvinyl Chloride (PVC) Pressure Pipe, 4 In. Through 12 In., for Water Distribution
AWWA M23	(1980) PVC Pipe - Design and Installation

MANUFACTURERS STANDARDIZATION SOCIETY OF THE VALVE AND FITTINGS INDUSTRY (MSS)

MSS SP-80	(1987) Bronze Gate, Globe, Angle and Check Valves

NATIONAL FIRE PROTECTION ASSOCIATION (NFPA)

NFPA 49	(1975) Hazardous Chemicals Data
NFPA 325M	(1991) Fire Hazard Properties of Flammable Liquids, Gases, and Volatile Solids
NFPA 704	(1990) Identification of the Fire Hazards of Materials

NSF INTERNATIONAL (NSF)

NSF Std 14	(1965; Rev Nov 1990) Plastics Piping System Components and Related Materials

1.2 PIPING

This section covers raw and potable water distribution lines. The Contractor shall have a copy of the manufacturer's recommendations for each material or procedure to be utilized available at the construction site at all times.

1.2.1 Distribution Lines 80 mm (3 Inches) or Larger

Piping for water distribution lines 80 mm (3 inches) or larger shall be polyvinyl chloride (PVC) plastic or seamless welded pipe through 300 mm (12-inch) nominal diameter as shown or specified.

1.2.2 Plastic Pipe

All plastic piping system components intended for transportation of potable water shall comply with NSF Std 14 and shall be legibly marked with their symbol.

1.2.3 Excavation, Trenching, and Backfilling

Excavation, trenching, and backfilling shall be in accordance with the applicable provisions of Section 02210 EARTHWORK, except as modified herein.

1.3 SUBMITTALS

Submittals shall be made in accordance with Exhibit I.

SD-01

Polyvinyl Chloride (PVC) pipe;
Galvanized Steel Pipe;
Seamless Steel Pipe;
Copper Tubing;

Red Brass Pipe;
Fitting and Specials;
Joints;
Valves;
Valve Boxes;
Yard Hydrants;
Miscellaneous Items;

Printed copies of the manufacturer's literature stating materials of construction, applicable standards, capacities, rated pressures, and other product information which indicates compliance with the project specifications.

SD-06 Instructions

Installation;

The manufacturer's recommendations for each material or procedure to be utilized.

SD-08 Statements

Waste Water Disposal Method;

The method proposed for disposal of waste water from hydrostatic tests and disinfection, prior to performing hydrostatic tests.

Statement of Satisfactory Installation;

A statement signed by the Contractor's principal officer stating that the installation is satisfactory and in accordance with the contract plans and specifications and the manufacturer's prescribed procedures and techniques, upon completion of the project and before final acceptance.

SD-09 Reports

Bacterial Examination;

Test results from commercial laboratory verifying disinfection.

SD-13 Certificates

Pipeline Testing;
Hydrostatic Test Results;
Pressure Relief Valve Test Cert;

1.4 HANDLING

Pipe and accessories shall be handled so as to insure delivery to the trench in sound, undamaged condition. Particular care shall be taken not to injure the pipe coating or lining. If the coating or lining of any pipe or fitting is damaged, the repair shall be made by the Contractor at his expense in a satisfactory manner. No other pipe or material of any kind shall be placed inside a pipe or fitting after the coating has been applied. Pipe shall be carried into position and not dragged. Use of pinch bars and tongs for aligning or turning pipe will be permitted only on the bare ends of the pipe. The interior of pipe and accessories shall be thoroughly cleaned of foreign matter before being lowered into the trench and shall

be kept clean during laying operations by plugging or other approved method. Before installation, the pipe shall be inspected for defects. Material found to be defective before or after laying shall be replaced with sound material without additional expense to the Government. Rubber gaskets that are not to be installed immediately shall be stored in a cool and dark place.

1.4.1 Miscellaneous Plastic Pipe and Fittings

Polyvinyl Chloride (PVC), pipe and fittings shall be handled and stored in accordance with the manufacturer's recommendations. Storage facilities shall be classified and marked in accordance with NFPA 704, with classification as indicated in NFPA 49 and NFPA 325M.

PART 2 PRODUCTS

2.1 PIPE

Pipe shall conform to the respective specifications and other requirements specified below.

2.1.1 Plastic Pipe

2.1.1.1 Polyvinyl Chloride (PVC) Plastic Pipe

Pipe, couplings and fittings shall be manufactured of material conforming to ASTM D 1784, Class 12454B.

a. Pipe Less Than 100 mm (4-inch) Diameter:

(1) Screw-Joint: Pipe shall conform to dimensional requirements of ASTM D 1785 Schedule 80, with joints meeting requirements of 1.38 MPa (200 psi) working pressure, 1.83 MPa (266 psi) hydrostatic test pressure, unless otherwise shown or specified. Pipe couplings when used, shall be tested as required by ASTM D 2464.

(2) Solvent Cement Joint: Pipe shall conform to dimensional requirements of ASTM D 1785 or ASTM D 2241 with joints meeting the requirements of 1.38 MPa (200 psi) working pressure and 1.83 MPa (266 psi) hydrostatic test pressure.

b. Pipe 100 mm (4-inch) through 300 mm (12-Inch) Diameter: Pipe, couplings and fittings 100 mm (4-inch) through 300 mm (12-inch) diameter shall conform to AWWA C900, Class 200, CIOD pipe dimensions, elastomeric-gasket joint, unless otherwise shown or specified.

2.1.2 Steel Pipe

2.1.2.1 Galvanized-Steel Pipe

Galvanized-steel pipe shall conform to ASTM A 53, standard weight.

2.1.2.2 Seamless Welded Pipe

Seamless welded pipe shall conform to ASTM A 53, black. When installed underground, pipe shall be encased with 0.2 mm (8 mil) thick polyethlene in accordance with AWWA C105.

2.1.3 Copper Tubing

Tubing shall conform to requirements of ASTM B 88, Type K, soft tempered.

2.1.4 Red Brass Pipe

Pipe shall conform to requirements of ASTM B 43, regular.

2.2 FITTINGS AND SPECIALS

2.2.1 Polyvinyl Chloride (PVC) Pipe

a. For pipe less than 100 mm (4 inch) diameter, fittings for threaded pipe shall conform to requirements of ASTM D 2464, threaded to conform to the requirements of ASME B1.20.1 for use with Schedule 80 pipe and fittings, fittings for solvent cement jointing shall conform to ASTM D 2466 or ASTM D 2467.

b. For pipe 100 mm (4 inch) diameter and larger, fittings and specials shall be iron, bell end in accordance with AWWA C110, 2.42 MPa (350 psi) pressure rating unless otherwise shown or specified, except that profile of bell may have special dimensions as required by the pipe manufacturer; or may be fittings and specials of the same material as the pipe with elastomeric gaskets, all in conformance with AWWA C900. Iron fittings and specials shall be cement-mortar lined (standard thickness) in accordance with AWWA C104. Fittings shall be bell and spigot or plain end pipe, or as applicable. Ductile iron compact fittings shall be in accordance with AWWA C153.

2.2.2 Steel Pipe

2.2.2.1 Galvanized-Steel Pipe

Steel fittings shall be galvanized. Screwed fittings shall conform to ASME B16.3. Flanged fittings shall conform to AWWA C207.

2.2.2.2 Seamless Welded Pipe

Welding of seamless pipe shall be performed in accordance with ASME B 31.1.

2.2.2.3 Dielectric Fittings

Dielectric fittings shall be installed between threaded ferrous and nonferrous metallic pipe, fittings and valves, except where corporation stops join mains. Dielectric fittings shall prevent metal-to-metal contact of dissimilar metallic piping elements and shall be suitable for the required working pressure.

2.2.3 Copper Tubing

Fittings shall conform to ASME B16.22 and ASME B16.18, solder joint. Solder shall conform to ASTM B 32 95-5 tin-antimony. Flux shall conform to CID A-A-51145, Type I.

2.2.4 Red Brass Pipe

Fittings shall be Class 250, cast bronze threaded conforming to the requirements of ASME B16.15.

2.3 JOINTS

2.3.1 Plastic Pipe

2.3.1.1 Polyvinyl Chloride Pipe

Joints, fittings, and couplings shall be as specified for PVC pipe. Joints connecting pipe of differing materials shall be made in accordance with the manufacturer's recommendations as approved by the Contracting Officer.

2.4 VALVES

2.4.1 Gate Valves

Gate valves shall be designed for a working pressure of not less than 1.38 MPa (200 psi). Valve connections shall be as required for the piping in which they are installed. Valves shall have a clear waterway equal to the full nominal diameter of the valve, and shall be opened by turning counterclockwise. The operating nut or wheel shall have an arrow, cast in the metal, indicating the direction of opening.

a. Valves smaller than 80 mm (3 inches) shall be all bronze and shall conform to MSS SP-80, Type 1, Class 200.

b. Valves 80 mm (3 inches) and larger shall be iron body, bronze mounted, and shall conform to AWWA C500. Flanges shall not be buried. An approved pit shall be provided for all flanged connections.

2.4.2 Globe Valves

Valves shall conform to ASME B16.34.

2.4.3 Air Release Valves

Air-release valves shall vent accumulating air while system is in service and under pressure. They shall be of the size shown, with flanged or screwed ends to match piping. Bodies shall be of high-strength cast iron. The float, seat, and all moving parts shall be constructed of Type 316 stainless steel. Seat washers and gaskets shall be of a material insuring water tightness with a minimum of maintenance. Valves shall be designed for minimum 1.38 MPa (200 psi) water-working pressure, unless otherwise shown.

2.4.4 Plug Valves

Eccentric plug valves shall be of the non-lubricated eccentric type with cast iron bodies, resilient faced plugs, or a replaceable, resilient seat in the body. Unless otherwise shown or specified, all valves 76 mm (3 inch) or smaller shall have operating levers, nickel or stainless steel seats, and screwed ends. Resilient facing shall be suitable for the intended service. Valves shall have an unobstructed port area of not less than 80 percent of full pipe area, unless otherwise specified. All eccentric plug valves shall have a pressure rating of not less than 1.38 MPa (200 psi) WOG, for bubble-tight shut-off.

2.4.5 Pressure Relief Valve

Pressure relief valve shall open when the inlet pressure exceeds a set maximum level. It shall maintain that level and gradually close as the inlet pressure drops below the maximum pressure. The valve shall be a hydraulically operated, adjustable, pilot controlled, diaphragm or piston type globe or angle valve as indicated. The valve body shall be cast iron with flanged connections. Minimum pressure rating shall be 1.72 MPa (250 psi). Valve cover shall also be flanged. Valve stems, springs, body seat rings, and all bolts, nuts, and washers shall be stainless steel. Valve stem shall have top and bottom guides. All rubber parts shall be of Buna-N. The valve shall be furnished with a complete, externally mounted control system, including adjustable speed control needle valves, strainer, and all necessary copper or stainless steel connecting tubing and fittings. Valve shall be set for each specific condition as shown on the Drawings. The pressure relief valve shall be factory tested and a test certificate shall be submitted prior to delivery of the valve.

2.5 VALVE BOXES

Valve boxes shall be cast iron or concrete, except that concrete boxes may be installed only in locations not subjected to vehicular traffic. Cast-iron boxes shall be extension type with slide-type adjustment and with flared base. The minimum thickness of metal shall be 4.8 mm (3/16 inch). Concrete boxes shall be the standard product of a manufacturer of precast concrete equipment. The word "WATER" shall be cast in the cover. The box length shall adapt, without full extension, to the depth of cover required over the pipe at the valve location.

2.6 YARD HYDRANTS

Yard hydrants shall be a non-freeze design. The hydrant shall be constructed of galvanized steel, non-freeze sanitary post with galvanized steel casing, plunger, and lock-in lever. The hydrants shall be provided with a 1 inch inlet connection. The hydrant head assembly shall incorporate a vacuum breaker.

2.7 MISCELLANEOUS ITEMS

2.7.1 Service Clamps

Service clamps shall have a pressure rating not less than that of the pipe to be connected and shall be either the single or double flattened strap type. Clamps shall have a galvanized malleable-iron body with cadmium plated straps and nuts. Clamps shall have a rubber gasket cemented to the body.

2.7.2 Corporation Stops

Unless otherwise shown, corporation stops shall be made of solid brass for key operation, with screwed ends with corporation thread or ironpipe thread, as required.

2.7.3 Disinfection

Chlorinating materials shall conform to the following:

Chlorine, Liquid: AWWA B301.

Hypochlorite, Calcium and Sodium: AWWA B300.

PART 3 EXECUTION

3.1 INSTALLATION

3.1.1 Cutting of Pipe

Cutting of pipe shall be done in a neat and workmanlike manner without damage to the pipe. Unless otherwise recommended by the manufacturer and authorized by the Contracting Officer, cutting shall be done with an approved type mechanical cutter. Wheel cutter shall be used when practicable. Squeeze type mechanical cutters shall not be used for ductile iron.

3.1.2 Joint Deflection

3.1.2.1 Flexible Plastic Pipe

Maximum offset in alignment between adjacent pipe joints shall be as recommended by the manufacturer and approved by the Contracting Officer, but in no case shall it exceed 5 degrees.

3.1.3 Placing and Laying

Pipe and accessories shall be carefully lowered into the trench by means of derrick, ropes, belt slings, or other authorized equipment. Under no circumstances shall any of the water-line materials be dropped or dumped into the trench. Care shall be taken to avoid abrasion of the pipe coating. Except where necessary in making connections with other lines or as authorized by the Contracting Officer, pipe shall be laid with the bells facing in the direction of laying. The full length of each section of pipe shall rest solidly upon the pipe bed, with recesses excavated to accommodate bells, couplings, and joints. Pipe that has the grade or joint disturbed after laying shall be taken up and relaid. Pipe shall not be laid in water or when trench conditions are unsuitable for the work. Water shall be kept out of the trench until joints are complete. When work is not in progress, open ends of pipe, fittings, and valves shall be securely closed so that no trench water, earth, or other substance will enter the pipes or fittings. Where any part of the coating or lining is damaged, the repair shall be made by the Contractor at his expense in a satisfactory manner. Pipe ends left for future connections shall be valved, plugged, or capped, and anchored, as shown.

3.1.3.1 Plastic Pipe Installation

PVC shall be installed in accordance with AWWA M23.

3.1.3.2 Connections

Where connections are made between new work and existing mains, the connections shall be made by using specials and fittings to suit the actual conditions. Where made under pressure, these connections shall be installed using standard methods as approved by the Contracting Officer.

3.1.3.3 Penetrations

Pipe passing through walls of valve pits and structures shall be provided with ductile-iron or Schedule 40 steel wall sleeves unless shown otherwise on the drawings. Annular space between walls and sleeves shall be filled with rich cement mortar. Annular space between pipe and sleeves shall be filled with mastic.

3.1.3.4 Flanged Pipe

Flanged pipe shall only be installed above ground or with the flanges in valve pits.

3.1.4 Jointing

3.1.4.1 Polyvinyl Chloride (PVC) Plastic Pipe

a. Pipe less than 100 mm (4 inch) diameter: Threaded joints shall be made by wrapping the male threads with approved thread tape or applying an approved lubricant, then threading the joining members together. The joint shall be tightened using strap wrenches to prevent damage to the pipe and/or fitting. To avoid excessive torque, joints shall be tightened no more than one thread past hand-tight. Solvent cement joints shall use sockets conforming to the requirements of ASTM D 2467. The solvent cement used shall meet the requirements of ASTM D 2564; the joint assembly shall be made in accordance with ASTM D 2855 and the manufacturer's specific recommendations.

b. Pipe 100 mm (4 inch) through 300 mm (12 inch) diameter: Joints shall be elastomeric-gasket as specified in AWWA C900. Jointing procedure shall be as specified for pipe less than 100 mm (4-inch) diameter with configuration using elastomeric ring gasket.

3.1.4.2 Seamless Welded Pipe

Welding of seamless pipe shall be performed in accordance with ASME B31.1

3.1.4.3 Connections

Connections between different types of pipe and accessories shall be made with transition fittings approved by the Contracting Officer.

3.1.5 Setting of Valves and Valve Boxes

After delivery, valves shall be drained to prevent freezing and shall have the interiors cleaned of all foreign matter before installation. Stuffing boxes shall be tightened and valves shall be fully opened and fully closed to ensure that all parts are in working condition. Air relief valves shall be installed in valve pits. Valves and valve boxes shall be installed where shown or specified, and shall be set plumb. Valve boxes shall be centered on the valves. Boxes shall be installed over each outside gate valve unless otherwise shown. Where feasible, valves shall be located outside the area of roads and streets. Earth fill shall be carefully tamped around each valve box or pit to a distance of 1.2 m (4 feet) on all sides of the box, or the undisturbed trench face if less than 1.2 m (4 feet).

3.1.6 Tapped Tees and Crosses

Tapped tees and crosses for future connections shall be installed where shown.

3.1.7 Thrust Restraint

Plugs, caps, tees and bends deflecting 11-1/4 degrees or more, either vertically or horizontally, on waterlines 100 mm (4 inches) in diameter or larger shall be provided with thrust blocks. Valves shall be securely anchored or shall be provided with thrust blocks to prevent movement.

3.1.7.1 Thrust Blocks

Thrust blocking shall be concrete of a mix not leaner than: 1 cement, 2-1/2 sand, 5 gravel; and having a compressive strength of not less than 14 MPa (2,000 psi) after 28 days. Blocking shall be placed between solid ground and the fitting to be anchored. Unless otherwise indicated or directed, the base and thrust bearing sides of thrust blocks shall be poured directly against undisturbed earth. The sides of thrust blocks not subject to thrust may be poured against forms. The area of bearing shall be as shown or as directed. Blocking shall be placed so that the fitting joints will be accessible for repair. Steel rods and clamps, protected by galvanizing or by coating with bituminous paint, shall be used to anchor vertical down bends into gravity thrust blocks.

3.2 HYDROSTATIC TESTS

Where any section of a water line is provided with concrete thrust blocking, the hydrostatic tests shall not be made until at least 5 days after installation of the concrete thrust blocking, unless otherwise approved.

3.2.1 Pressure Test

After the pipe is laid, the joints completed, and the trench partially backfilled leaving the joints exposed for examination, the newly laid piping or any valved section of piping shall, unless otherwise specified, be subjected for 1 hour to a hydrostatic pressure test of 1.83 MPa (266 psi). Each valve shall be opened and closed several times during the test. Exposed pipe, joints, fittings, and valves shall be carefully examined during the partially open trench test. Joints showing visible leakage shall be replaced or remade as necessary. Cracked or defective pipe, joints, fittings, and valves, discovered in consequence of this pressure test shall be removed and replaced with sound material, and the test shall be repeated until the test results are satisfactory. The requirement for the joints to remain exposed for the hydrostatic tests may be waived by the Contracting Officer when one or more of the following conditions is encountered:

a. Wet or unstable soil conditions in the trench.

b. Compliance would require maintaining barricades and walkways around and across an open trench in a heavily used area that would require continuous surveillance to assure safe conditions.

c. Maintaining the trench in an open condition would delay completion of the contract.

The Contractor may request a waiver, setting forth in writing the reasons for the request and stating the alternative procedure proposed to comply with the required hydrostatic tests. Backfill placed prior to the tests shall be placed in accordance with the requirements of Section 02210 EARTHWORK.

3.2.2 Leakage Test

Leakage test shall be conducted after the pressure tests have been satisfactorily completed. The duration of each leakage test shall be at least 2 hours, and during the test the water line shall be subjected to not less than 1.83 MPa (266 psi). Leakage is defined as the quantity of water to be supplied into the newly laid pipe, or any valved or approved section thereof, necessary to maintain pressure within 34.5 kPa (5 psi) of the specified leakage test pressure after the pipe has been filled with water and the air expelled. No piping installation will be accepted if leakage exceeds the allowable leakage which is determined by the following formula:

L = 0.0001351ND(P raised to 1/2 power)

L = Allowable leakage in gallons per hour
N = Number of joints in the length of pipeline tested
D = Nominal diameter of the pipe in inches
P = Average test pressure during the leakage test, in psi gauge

Should any test of pipe disclose leakage greater than that calculated by the above formula, the defective joints shall be located and repaired until the leakage is within the specified allowance, without additional cost to the Government.

3.2.3 Time for Making Test

Except for joint material setting or where concrete thrust blocks necessitate a 5-day delay, pipelines jointed with rubber gaskets, mechanical or push-on joints, or couplings may be subjected to hydrostatic pressure, inspected, and tested for leakage at any time after partial completion of backfill.

3.2.4 Concurrent Hydrostatic Tests

The Contractor may elect to conduct the hydrostatic tests using either or both of the following procedures. Regardless of the sequence of tests employed, the results of pressure tests, leakage tests, and disinfection shall be satisfactory as specified. All replacement, repair or retesting required shall be accomplished by the Contractor at no additional cost to the Government.

a. Pressure test and leakage test may be conducted concurrently.

b. Hydrostatic tests and disinfection may be conducted concurrently, using the water treated for disinfection to accomplish the hydrostatic tests. If water is lost when treated for disinfection and air is admitted to the unit being tested, or if any repair procedure results in contamination of the unit, disinfection shall be reaccomplished.

3.3 DISINFECTION

Before acceptance of potable water operation, each unit of completed waterline shall be disinfected as prescribed by AWWA C651. From several points in the unit, personnel from the Contractor's commercial laboratory shall take at least 3 water samples from different points, approved by the Contracting Officer, in proper sterilized containers and perform a bacterial examination in accordance with state approved methods. The commercial laboratory must be certified by the state's approving authority for examination of potable water. The disinfection shall be repeated until tests indicate the absence of pollution for at least 2 full days. The unit will not be accepted until satisfactory bacteriological results have been obtained.

3.4 CLEANUP

Upon completion of the installation of water lines, and appurtenances, all debris and surplus materials resulting from the work shall be removed.

PART 4 SUBMITTAL SUMMARY

4.1 SUMMARY OF SUBMITTALS

Submittals to be furnished by the Contractor shall include the following:

Paragraph	Item	SD
02660-1.3	Installation Instructions	06
02660-1.3	Waste Water Disposal Method	08
02660-1.3	Satisfactory Installation	08
02660-2.1.1	Polyvinyl Chloride (PVC) Pipe	01
02660-2.1.2	Steel Pipe	01
02660-2.1.3	Copper Tubing	01
02660-2.1.4	Red Brass Pipe	01
02660-2.2	Fittings and Specials	01
02660-2.3	Joints	01
02660-2.4.2	Valves	01
02660-2.4.5	Pressure Relief Valve Cert.	13
02660-2.5	Valve Boxes	01
02660-2.6	Yard Hydrants	01
02660-2.7	Miscellaneous Items	01
02660-3.2	Hydrostatic Tests	09, 13
02660-3.3	Disinfection	09

Code for Type of Submittal (SD)

01	-	Data
04	-	Drawings
06	-	Instructions
07	-	Schedules
08	-	Statements
09	-	Reports
13	-	Certificates
14	-	Samples
18	-	Records
19	-	O & M Manuals

- End of Section -

* * * * *

This page is intentionally blank.

0048805
10/18

TECHNICAL SPECIFICATION
FOR
CHAIN LINK FENCE
SECTION 02831

SITE PREPARATION

ENVIRONMENTAL RESTORATION DISPOSAL FACILITY (ERDF)
CELLS 3 & 4 CONSTRUCTION

MICHAEL G. MARCHAT
STATE OF WASHINGTON
0030272
REGISTERED
PROFESSIONAL ENGINEER

EXPIRES: 12-07-99

FOR INFORMATION ONLY

BHI-DIS 12/18/97 bdo

REV	DATE	REASON FOR REVISION	ORIGINATOR	CHECKER	GROUP LEADER	TASK DESIGN LEAD	PROJECT ENGINEER
0	12-12-97	Issued for Construction	MB			DRM	

RICHLAND ENVIRONMENTAL RESTORATION PROJECT	JOB NO. 22192	
	SPECIFICATION NO. 0600X-SP-C0033	
	SHEET 1 of 7	

This page is intentionally blank.

SECTION 02831

CHAIN LINK FENCE

PART 1 GENERAL

1.1 REFERENCES

The publications listed below form a part of this specification to the extent referenced. The publications are referred to in the text by basic designation only.

AMERICAN SOCIETY FOR TESTING AND MATERIALS (ASTM)

ASTM C 94	(1992a) Ready-Mixed Concrete
ASTM F 669	(1992) Strength Requirements of Metal Posts and Rails for Industrial Chain Link Fence
ASTM F 883	(1990) Padlocks

AMERICAN WELDING SOCIETY (AWS)

AWS WZC	(1972) Welding Zinc-Coated Steels

FEDERAL SPECIFICATIONS (FS)

FS RR-F-191/GEN	(Rev K) Fencing, Wire and Post Metal (and Gates, Chain-Link Fence Fabric, and Accessories)
FS RR-F-191/1	(Rev D) Fencing, Wire and Post, Metal (Chain-Link Fence Fabric)
FS RR-F-191/2	(Rev D) Fencing, Wire and Post, Metal (Chain-Link Fence Gates)
FS RR-F-191/3	(Rev D) Fencing, Wire and Post, Metal (Chain-Link Fence Posts, Top Rails and Braces)
FS RR-F-191/4	(Rev D) Fencing, Wire and Post, Metal (Chain-Link Fence Accessories)

1.2 SUBMITTALS

Submittals shall be furnished in accordance with Exhibit I.

SD-01 Data

Manufacturer's descriptive data, catalog cuts, literature and other data as necessary to fully describe that those materials proposed for use comply with specified requirements.

SD-04 Drawings

Sketch of proposed grounding installation.

SD-18 Records

Records documenting completion of grounding tests.

PART 2 PRODUCTS

2.1 MATERIALS

Materials shall conform to the following:

2.1.1 Chain Link Fence

FS RR-F-191/GEN.

2.1.1.1 Fabric

FS RR-F-191/1, Type I, zinc-coated steel wire with minimum coating weight of 370 grams (1.2 ounces) of zinc per square meter (square foot) of coated surface, or Type II, aluminum-coated steel wire. Fabric shall be fabricated of 11-gauge wire woven in 51 mm (2-inch) mesh. Fabric height shall be 1.83 m (6 feet). Fabric shall be twisted and barbed on the top selvage and knuckled on the bottom selvage.

2.1.1.2 Gates

FS RR-F-191/2. Gates shall be the type as shown on contract drawings. Gate frames shall be constructed of Class 1 Grade A or B, steel pipe, size SP2, as specified in FS RR-F-191/3. Gate fabric shall be as specified for chain-link fabric. Gate leaves more than 2.44 m (8 feet) wide shall have either intermediate members and diagonal truss rods or shall have tubular members as necessary to provide rigid construction, free from sag or twist. Gate leaves less than 2.44 m (8 feet) wide shall have truss rods or intermediate braces. Gate fabric shall be attached to the gate frame by method standard with the manufacturer except that welding will not be permitted. Latches, hinges, stops, keepers, rollers, and other hardware items shall be furnished as required for the operation of the gate. Latches shall be arranged for padlocking so that the padlock will be accessible from both sides of the gate. Stops shall be provided for holding the gates in the open position.

2.1.1.3 Posts

FS RR-F-191/3, zinc-coated; Class 1 Grade A or B, steel pipe; Class 3, formed steel sections; Class 6, steel square sections; or DQ-40 galvanized steel pipe meeting ASTM F699. Class 4, steel H-section may be used for line posts in lieu of line post shapes specified for the other classes. Sizes shall be as shown on the drawings. Line posts and terminal (corner, gate, and pull) posts selected shall be of the same class throughout the fence. Gate post shall be either round or square, subject to the limitation specified in FS RR-F-191/3.

2.1.1.4 Braces

FS RR-F-191/3, zinc-coated, Class 1, Grade A or B, steel pipe, size SP1. Class 3, formed steel sections, size FS1, conforming to FS RR-F-191/3, may be used as braces if Class 3 line posts are furnished.

2.1.1.5 Accessories

FS RR-F-191/4. Ferrous accessories shall be zinc or aluminum coated. Truss rods shall be furnished for each terminal post. Truss rods shall be provided with turnbuckles or other equivalent provisions for adjustment. Tie wire for attaching fabric to rails, braces, and posts shall be 9-gauge steel wire.

2.1.2 Concrete

ASTM C 94, using 19 mm (3/4-inch) maximum size aggregate, and having minimum compressive strength of 18 MPa (2500 psi) at 28 days. Grout shall consist of one part portland cement to three parts clean, well-graded sand and the minimum amount of water to produce a workable mix.

PART 3 EXECUTION

3.1 GENERAL

Fence shall be installed to the lines and grades indicated. Line posts shall be spaced equidistant at intervals not exceeding 3.05 m (10 feet). Terminal (corner, gate, and pull) posts shall be set at abrupt changes in vertical and horizontal alignment. Fabric shall be continuous between terminal posts; however, runs between terminal posts shall not exceed 152.4 m (500 feet). Damage to the galvanized surface due to welding shall be repaired with "repair sticks" of zinc-cadmium alloys or zinc-tin-lead alloys per AWS WZC.

3.2 EXCAVATION

Post holes shall be cleared of loose material. Waste material shall be spread where directed by the Contracting Officer. The ground surface irregularities along the fence line shall be eliminated to the extent necessary to maintain a 51 mm (2-inch) clearance between the bottom of the fabric and finish grade.

3.3 POSTS

Posts shall be set plumb and in alignment. Posts shall be set in concrete to the depth indicated on the drawings. Posts set in concrete shall be set in holes not less than the diameter shown on the drawings. Concrete and grout shall be thoroughly consolidated around each post, shall be free of voids and finished to form a dome. Concrete and grout shall be allowed to cure for 72 hours prior to attachment of any item to the posts. Fence post rigidity shall meet the following requirement. When a 222 newton (50-pound) force is applied on the post, perpendicular to the fabric, at 1.52 m (5 feet) above ground, post movement measured at the point where the force is applied shall be less than or equal to 19 mm (3/4 inch) from the relaxed position.

3.4 RAILS

3.4.1 Top Rail

Top rails are not required for this project. Top tension wire will be installed in place of top rails.

3.5 BRACES AND TRUSS RODS

Braces and truss rods shall be installed as indicated and in conformance with the standard practice for the fence furnished. Braces and truss rods shall extend from terminal posts to line posts. Diagonal braces shall form an angle of approximately 40 to 50 degrees with the horizontal.

3.6 TENSION WIRES

Tension wires shall be installed along the top and bottom of the fence line and attached to the terminal posts of each stretch of the fence. Top tension wires shall be installed within the top 102 mm (4 inches) of the installed fabric. Bottom tension wire shall be installed within the bottom 152 mm (6 inches) of the installed fabric. Tension wire shall be pulled taut and shall be free of sag.

3.7 CHAIN LINK FABRIC

Chain link fabric shall be installed on the side of the post indicated. Fabric shall be attached to terminal posts with stretcher bars and tension bands. Bands shall be spaced at approximately 381 mm (15-inch) intervals. The fabric shall be installed and pulled taut to provide a smooth and uniform appearance free from sag, without permanently distorting the fabric diamond or reducing the fabric height. Fabric shall be fastened to line posts at approximately 381 mm (15-inch) intervals and fastened to tension wires at approximately 610 mm (24-inch) intervals. Fabric shall be cut by untwisting and removing pickets. Splicing shall be accomplished by weaving a single picket into the ends of the rolls to be joined. The bottom of the installed fabric shall be 51 mm (2 inches) (plus or minus 13 mm (1/2 inch)) above the ground. Chain link fabric shall meet the following requirement. After being exercised by applying a 222 newton (50-pound), push-pull force at the center of the fabric between the posts, the use of a 133 newton (30-pound) pull at the center of the panel shall cause fabric deflection of not more than 64 mm (2.5 inches) when pulling fabric from the post side of the fence.

3.8 GATES

Gates shall be installed at the locations shown. Hinged gates shall be mounted to swing as indicated. Vertical alignment for all gates shall be not greater than 5 mm per meter (1/16 inch per foot) of height of gate. Where salvaged gates are utilized, all original operating hardware shall be reinstalled and adjusted to operate in accordance with the manufacturer's instructions. Gate stops and keepers shall be installed as required.

3.9 GROUNDING

Fences crossed by powerlines of 600 volts or more shall be grounded at or near the point of crossing and at distances not exceeding 45 m (150 ft) on each side of crossing. Ground conductor shall consist of No. 8 AWG solid copper wire. Grounding electrodes shall be 19 mm (3/4 inch) by 3.05 m (10 ft) long copper clad steel rod. Electrodes shall be driven into the earth so that the top of the electrode is at least 152 mm (6 inches) below the grade. Where driving is impractible, electrodes shall be buried a minimum of 300 mm (12 inches) deep and radially from the fence. The top of the electrode shall be not less than 0.61 m (2 ft) or more than 2.44 m (8 ft) from the fence. A sketch of the proposed grounding installation shall be submitted for approval prior to commencement of the work. Ground conductor shall be clamped to the fence and electrode with bronze grounding elements clamps to create electrical continuity between fence posts, fence fabric, and ground rods. After installation the total resistance of fence to ground shall not be greater than 25 ohms.

PART 4 SUBMITTAL SUMMARY

4.1 SUMMARY OF SUBMITTALS

Submittals to be furnished by the Contractor shall include the following:

Paragraph	Item	SD
02831-2.1.1	Chain Link Fence Materials	01
02831-2.1.2	Concrete	01
02831-3.9	Proposed Grounding Installation	04
02831-3.9	Grounding Test Results	18

Code for Type of Submittal (SD)

01	-	Data
04	-	Drawings
06	-	Instructions
07	-	Schedules
08	-	Statements
09	-	Reports
13	-	Certificates
14	-	Samples
18	-	Records
19	-	O & M Manuals

- End of Section -

* * * * *

0048805

11/18

TECHNICAL SPECIFICATION
FOR
ELECTRICAL DISTRIBUTION SYSTEM, AERIAL
SECTION 16370

SITE PREPARATION

ENVIRONMENTAL RESTORATION DISPOSAL FACILITY (ERDF)
CELLS 3 & 4 CONSTRUCTION

MICHAEL G. MARCHAT
STATE OF WASHINGTON
0030272
REGISTERED
PROFESSIONAL ENGINEER

EXPIRES: 12-07-99

FOR INFORMATION ONLY

BHI-DIS 12/18/97 bds

REV	DATE	REASON FOR REVISION	ORIGINATOR	CHECKER	GROUP LEADER	TASK DESIGN LEAD	PROJECT ENGINEER
0	12-12-97	Issued for Construction				DRM	

	RICHLAND ENVIRONMENTAL RESTORATION PROJECT	JOB NO. 22192
		SPECIFICATION NO. 0600X-SP-E0007
		SHEET 1 of 21

This page is intentionally blank.

SECTION 16370

ELECTRICAL DISTRIBUTION SYSTEM, AERIAL

PART 1 GENERAL

1.1 REFERENCES

The publications listed below form a part of this specification to the extent referenced. The publications are referred to in the text by basic designation only.

AMERICAN ASSOCIATION OF STATE HIGHWAY AND TRANSPORTATION OFFICIALS (AASHTO)

AASHTO LTS-2	(1985; Rev 1986, 1987, 1988) Standard Specifications for Structural Supports for Highway Signs, Luminaires and Traffic Signals

AMERICAN NATIONAL STANDARDS INSTITUTE (ANSI)

ANSI C2	(1997) National Electrical Safety Code
ANSI C29.1	(1988) Electrical Power Insulators - Test Methods
ANSI C29.4	(1989) Wet-Process Porcelain Insulators - Strain Type
ANSI C29.5	(1984) Wet-Process Porcelain Insulators - Low- and Medium-Voltage Types
ANSI C29.8	(1985) Wet-Process Porcelain Insulators - Apparatus, Cap and Pin Type
ANSI C29.9	(1983) Wet-Process Porcelain Insulators - Apparatus, Post-Type
ANSI C37.32	(1990) High-Voltage Air Switches, Bus Supports, and Switch Accessories - Schedules of Preferred Ratings, Manufacturing Specifications, and Application Guide
ANSI C57.12.00	(1987) Liquid-Immersed Distribution, Power, and Regulating Transformers
ANSI C57.12.20	(1988) Overhead-Type Distribution Transformers, 500 kVA and Smaller: High Voltage 34 500 Volts and Below; Low Voltage, 7970/13 800Y Volts and Below
ANSI C135.1	(1979) Galvanized Steel Bolts and Nuts for Overhead Line Construction

ANSI C135.2	(1987) Threaded Galvanized Ferrous Strand-Eye Anchor Rods and Nuts for Overhead Line Construction
ANSI C135.4	(1987) Zinc-Coated Ferrous Eyebolts and Nuts for Overhead Line Construction
ANSI C135.14	(1979) Staples with Rolled or Slash Points for Overhead Line Construction
ANSI C135.17	(1988) Galvanized Ferrous Bolt-Type Insulator Pins with Lead Threads for Overhead Line Construction
ANSI C135.22	(1988) Galvanized Ferrous Pole-Top Insulator Pins with Lead Threads for Overhead Line Construction
ANSI C135.30	(1988) Zinc-Coated Ferrous Ground Rods for Overhead or Underground Line Construction
ANSI C135.33	(1988) Galvanized Ferrous Crossarm Gains for Overhead Line Construction
ANSI O5.1	(1992) Specifications and Dimensions for Wood Poles

AMERICAN SOCIETY FOR TESTING AND MATERIALS (ASTM)

ASTM A 36	(1991) Structural Steel
ASTM A 123	(1989a) Zinc (Hot-Dip Galvanized) Coatings on Iron and Steel Products
ASTM A 153	(1982; R 1987) Zinc Coating (Hot-Dip) on Iron and Steel Hardware
ASTM A 475	(1989) Zinc-Coated Steel Wire Strand
ASTM A 575	(1989) Steel Bars, Carbon, Merchant Quality, M-Grades
ASTM A 576	(1990b) Steel Bars, Carbon, Hot-Wrought, Special Quality
ASTM B 1	(1990) Hard-Drawn Copper Wire
ASTM B 8	(1990) Concentric-Lay-Stranded Copper Conductors, Hard, Medium-Hard, or Soft
ASTM B 117	(1990) Salt Spray (Fog) Testing
ASTM B 228	(1988) Concentric-Lay-Stranded Copper- Clad Steel Conductors
ASTM B 230	(1989) Aluminum 1350-H19 Wire for Electrical Purposes

ASTM B 231	(1990) Concentric-Lay-Stranded Aluminum 1350 Conductors
ASTM B 232	(1992) Concentric-Lay-Stranded Aluminum Conductors, Coated-Steel Reinforced (ACSR)
ASTM B 398	(1990) Aluminum-Alloy 6201-T81 Wire for Electrical Purposes
ASTM B 399	(1992) Concentric-Lay-Stranded Aluminum-Alloy 6201-T81 Conductors
ASTM D 1272	(1993) Standard Specification for Pentachlorophenol
ASTM D 1654	(1979a; R 1984) Evaluation of Painted or Coated Specimens Subjected to Corrosive Environment
ASTM F 883	(1990) Padlocks

AMERICAN WOOD-PRESERVERS' ASSOCIATION (AWPA)

AWPA C4	(1992) Poles - Preservative Treatment by Pressure Processes
AWPA C25	(1992) Sawn Crossarms - Preservative Treatment by Pressure Processes
AWPA P8	(1991) Oil-Borne Preservatives
AWPA P9	(1992) Solvents and Formulations for Organic Preservative Systems

INSTITUTE OF ELECTRICAL AND ELECTRONIC ENGINEERS (IEEE)

IEEE C37.60	(1981; R 1988) IEEE Requirements for Overhead, Pad-Mounted Dry Vault and Submersible Automatic Circuit Reclosers and Fault Interrupters for AC Systems
IEEE C57.19.00	(1991) IEEE Standard General Requirements and Test Procedures for Outdoor Power Apparatus Bushings
IEEE C57.19.01	(1991) IEEE Standard Performance Characteristics and Dimensions for Outdoor Apparatus Bushings
IEEE C57.98	(1986) Guide for Transformer Impulse Tests - Appendix to C57.12.90
IEEE C62.1	(1989) Surge Arresters for ac Power Circuits
IEEE C62.2	(1987) Guide for the Application of Gapped Silicon-Carbide Surge Arresters for Alternating Current Systems

IEEE C62.11	(1987) Metal-Oxide Surge Arresters for AC Power Circuits
IEEE Std 18	(1980) Shunt Power Capacitors
IEEE Std 81	(1983) Guide for Measuring Earth Resistivity, Ground Impedance, and Earth Surface Potentials of a Ground System
IEEE Std 100	(1988) IEEE Standard Dictionary of Electrical and Electronics Terms

INSULATED CABLE ENGINEERING ASSOCIATION (ICEA)

ICEA S-70-547	(1992) Weather Resistant Polyolefin - Covered Wire and Cable

NATIONAL ELECTRICAL MANUFACTURERS ASSOCIATION (NEMA)

NEMA HV 2	(1991) Application Guide for Ceramic Suspension Insulator
NEMA LA 1	(1986) Surge Arresters
NEMA WC 5	(1992) Thermoplastic-Insulated Wire and Cable for the Transmission and Distribution of Electrical Energy
NEMA WC 7	(1988) Cross-Linked-Thermosetting-Polyethylene-Insulated Wire and Cable for the Transmission and Distribution of Electrical Energy
NEMA WC 8	(1988) Ethylene-Propylene-Rubber-Insulated Wire and Cable for the Transmission and Distribution of Electrical Energy

NATIONAL FIRE PROTECTION ASSOCIATION (NFPA)

NFPA 70	(1996) National Electrical Code

RURAL ELECTRIFICATION ADMINISTRATION (REA)

REA DT-5B	(1987) Wood Crossarms (Solid and Laminated), Transmission Timbers and Pole Keys

UNDERWRITERS LABORATORIES (UL)

UL 467	(1984; Rev thru Nov 1986) Grounding and Bonding Equipment
UL 486A	(1991; Rev Oct 1991) Wire Connectors and Soldering Lugs for Use with Copper Conductors

UL 486B	(1991; Rev thru Apr 1992) Wire Connectors for Use with Aluminum Conductors

WASHINGTON ADMINISTRATIVE CODE (WAC)

WAC 296-45	(1996) Safety Standards - Electrical Workers

1.2 GENERAL REQUIREMENTS

1.2.1 Terminology

Terminology used in this specification is as defined in IEEE Std 100.

1.2.2 Service Conditions

Items provided under this section shall be specifically suitable for the following service conditions.

a. Altitude 213 m (700 feet)

b. Ambient Temperature minus 20 degrees C (minus 5 degrees F) to 43 degrees C (110 degrees F)

c. Frequency 60 hz

d. Seismic Zone 2B

1.2.3 Equipment Inspection and Testing

Two weeks prior to installation, the Contractor shall deliver transformers and watt-hour meters to building 2101M in the 200 East area for inspection and testing by others. Upon notification, the Contractor shall pick up the equipment and deliver it to the project site.

The Contractor shall have all other materials on site two weeks prior to installation. Materials shall be made available to the Contracting Officer or his representative for inspection.

1.3 SUBMITTALS

Submittals shall be furnished in accordance with Exhibit I.

SD-01 Data

Manufacturer's Catalog Data;

Submit data composed of catalog cuts, brochures, circulars, specifications, product data, and printed information in sufficient detail and scope to verify compliance with the requirements of the contract documents.

Material, Equipment, and Fixture Lists;

A complete itemized listing of equipment and materials proposed for incorporation into the work shall be submitted. Each entry shall include an item number, the quantity of items proposed, and the name of the

manufacturer of each such item. Transformer serial numbers shall be submitted when equipment is ordered.

Installation Procedures;

As a minimum, the Contractor shall submit installation procedures for regulators, transformers and reclosers. The Contractor shall also submit sag and tension tables for line conductors.

Procedures shall include diagrams, instructions, and precautions required to install, adjust, calibrate, and test the devices and equipment.

SD-04 Drawings

Electrical Distribution System;

Detail drawings consisting of equipment drawings, illustrations, schedules, instructions, diagrams and other information necessary to define the installation and enable the Government to check conformity with the requirements of the contract drawings. Detail drawings shall as a minimum include:

a. Poles.

b. Crossarms.

c. Transformers.

d. Pole top switches.

e. Conductors.

f. Insulators.

g. Surge arresters.

h. Meters.

I. Grounding Installation.

If departures from the contract drawings are deemed necessary by the Contractor, complete details of such departures shall be submitted through a Request for Information (RFI) to the Contracting Officer.

Detail drawings shall show how components are assembled, function together and how they will be installed on the project. Data and drawings for component parts of an item or system shall be coordinated and submitted as a unit. Data and drawings shall be coordinated and included in a single submission. Multiple submissions for the same equipment or system are not acceptable except where prior approval has been obtained from the Contracting Officer. In such cases, a list of data to be submitted later shall be included with the first submission. Detail drawings shall consist of the following:

a. Detail drawings showing physical arrangement, construction details, connections, finishes, materials used in fabrication, provisions for conduit or busway entrance, access requirements for installation and maintenance, physical size, electrical characteristics, foundation and support details, and equipment weight. Drawings shall be drawn to scale and/or dimensioned. All optional items shall be clearly identified as included or excluded.

b. Internal wiring diagrams of equipment showing wiring as actually provided for this project. External wiring connections shall be clearly identified.

SD-09 Reports

Factory Test;

Certified factory test reports shall be submitted when the manufacturer performs routine factory tests, including tests required by standards listed in paragraph REFERENCES. Results of factory tests performed shall be certified by the manufacturer, or an approved testing laboratory, and submitted within 7 days following successful completion of the tests specified in applicable publications or in these specifications.

Field Testing;

A proposed field test plan 20 days prior to testing the installed system. No field test will be performed until the test plan is approved. The test plan shall consist of complete field test procedures including tests to be performed, test equipment required, and tolerance limits.

Test Reports;

Six copies of the information described below in 8 1/2 by 11 inch binders having a minimum of 5 rings from which material may readily be removed and replaced, including a separate section for each test. Sections shall be separated by heavy plastic dividers with tabs.

a. A list of all equipment used, with calibration certifications.

b. A copy of all measurements taken.

c. The dates of testing.

d. The equipment and values to be verified.

e. The condition specified for the test.

f. The test results, signed and dated.

g. A description of all adjustments made.

SD-13 Certificates

Materials and Equipment;

Where materials or equipment are specified to conform to the standards of the Underwriters Laboratories (UL) or to be constructed or tested, or both, in accordance with the standards of the American National Standards Institute (ANSI), the Institute of Electrical and Electronic Engineers (IEEE), or the National Electrical Manufacturers Association (NEMA), the Contractor shall submit proof that the items provided under this section of the specifications conform to such requirements. The label of, or listing by, UL will be acceptable as evidence that the items conform thereto. Either a certification or a published catalog specification data statement, to the effect that the item is in accordance with the referenced ANSI or IEEE standard, will be acceptable as evidence that the item conforms thereto. A similar certification or published catalog specification data statement to the effect that the item is in accordance with the referenced NEMA standard, by a company listed as a member company of NEMA,

will be acceptable as evidence that the item conforms thereto. In lieu of such certification or published data, the Contractor may submit a certificate from a recognized testing agency equipped and competent to perform such services, stating that the items have been tested and that they conform to the requirements listed, including methods of testing of the specified agencies. Compliance with above-named requirements does not relieve the Contractor from compliance with any other requirements of the specifications.

SD-19 Operation and Maintenance Manuals

Electrical Distribution System;

Six copies of Operation and Maintenance manuals, within 7 calendar days following the completion of tests and including assembly, installation, operation and maintenance instructions, spare parts data which provides supplier name, current cost, catalog order number, and a recommended list of spare parts to be stocked. Manuals shall also include data outlining detailed procedures for system startup and operation, and a troubleshooting guide which lists possible operational problems and corrective action to be taken. A brief description of all equipment, basic operating features, and routine maintenance requirements shall also be included. Documents shall be bound in a binder marked or identified on the spine and front cover. A table of contents page shall be included and marked with pertinent contract information and contents of the manual. Tabs shall be provided to separate different types of documents, such as catalog ordering information, drawings, instructions, and spare-parts data. Index sheets shall be provided for each section of the manual when warranted by the quantity of documents included under separate tabs or dividers.

Three additional copies of the instructions manual within 30 calendar days following the approval of the manuals.

1.4 DELIVERY, STORAGE, AND HANDLING

Devices and equipment shall be visually inspected by the Contractor when received and prior to acceptance from conveyance. Stored items shall be protected from the environment in accordance with the manufacturer's published instructions. Damaged items shall be replaced. Oil filled transformers and switches shall be stored in accordance with the manufacturer's requirements. Wood poles held in storage for more than two weeks shall be stored in accordance with ANSI O5.1. Handling of wood poles shall be in accordance with ANSI O5.1, except that pointed tools capable of producing indentations more than 25 mm (1 inch) in depth shall not be used. Metal poles shall be handled and stored in accordance with the manufacturer's instructions.

1.5 EXTRA MATERIALS

One additional spare fuse or fuse element for each furnished fuse or fuse element shall be delivered to the contracting officer when the electrical system is accepted. Two complete sets of all special tools required for maintenance shall be provided, complete with a suitable tool box. Special tools are those that only the manufacturer provides, for special purposes (to access compartments, or operate, adjust, or maintain special parts)

PART 2 PRODUCTS

Products shall conform to the following requirements. Items of the same classification shall be identical including equipment, assemblies, parts, and component.

2.1 STANDARD PRODUCT

Material and equipment shall be the standard product of a manufacturer regularly engaged in the manufacture of the product and shall essentially duplicate items that have been in satisfactory use for at least 2 years prior to bid opening.

2.2 NAMEPLATES

2.2.1 General

Each major component of this specification shall have the manufacturer's name, address, type or style, model or serial number, and catalog number on a nameplate securely attached to the equipment. Equipment containing liquid-dielectrics shall have the type of dielectric on the nameplate. Nameplates shall be made of noncorrosive metal. As a minimum, nameplates shall be provided for transformers, regulators, circuit breakers, capacitors, meters and switches.

2.2.2 Liquid-Filled Transformer Nameplates

Nameplate data shall comply with ANSI C57.12.00. Nameplates shall indicate percent impedance, voltage, kVA, frequency, number of phases, cooling class, insulation class, temperature rise, the number of gallons and composition of transformer liquid dielectric, and shall be permanently marked with a statement that the transformer dielectric is non-polychlorinated biphenyl. If transformer nameplate is not so marked, the Contractor shall furnish manufacturer's certification for each transformer that the dielectric is non-PCB classified, with less than 1 ppm PCB content in accordance with paragraph LIQUID DIELECTRICS. Liquid Dielectrics Certifications shall be related to serial numbers on transformer nameplates. Transformer dielectric exceeding the 1 ppm PCB content or transformers without certification will be considered as PCB insulated and will not be accepted.

2.3 CORROSION PROTECTION

2.3.1 Aluminum Materials

Aluminum shall not be used.

2.3.2 Ferrous Metal Materials

2.3.2.1 Hardware

Ferrous metal hardware shall be hot-dip galvanized in accordance with ASTM A 153 and ASTM A 123.

2.3.2.2 Equipment

Equipment and component items, including but not limited to transformers and ferrous metal luminaires not hot-dip galvanized or porcelain enamel finished, shall be provided with corrosion-resistant finishes which shall withstand 120 hours of exposure to the salt spray test specified in ASTM B 117 without loss of paint or release of adhesion of the paint primer coat to the metal surface in excess of 1.6 mm (1/16 inch) from the test mark. The described test mark and test evaluation shall be in accordance with ASTM D 1654 with a rating of not less than 7 in accordance with TABLE 1, (procedure A). Cut edges or otherwise damaged surfaces of hot-dip galvanized sheet steel or mill galvanized sheet steel shall be coated with a zinc rich paint conforming to the manufacturer's standard.

2.4 CONDUCTORS, CONNECTORS, AND SPLICES

2.4.1 Aluminum-Composition Conductors

Aluminum-conductor-steel-reinforced, ACSR, shall comply with ASTM B 232.

2.4.2 Copper Conductors

Hard-drawn-copper conductors shall comply with ASTM B 1 and ASTM B 8 as appropriate for the conductor size.

2.4.3 Connectors and Splices

Connectors and splices shall be of copper alloys for copper conductors, aluminum alloys for aluminum-composition conductors, and a type designed to minimize galvanic corrosion for copper to aluminum-composition conductors. Aluminum-composition and aluminum-composition to copper shall comply with UL 486B, and copper to copper shall comply with UL 486A.

2.5 MEDIUM-VOLTAGE LINES

2.5.1 Bare Medium-Voltage Lines

Bare medium-voltage line conductors shall be aluminum-conductor-steel-reinforced, ACSR. Conductor types shall not be mixed on any project, unless specifically indicated. Conductors larger than No. 2 AWG shall be stranded.

2.6 LOW-VOLTAGE LINES

Low-voltage line conductors shall be service drop type with thermoplastic insulation in accordance with NEMA WC 5. Service drop conductors shall be insulated copper.

2.7 POLES AND HARDWARE

Installation shall comply with the requirements of ANSI C2 for Grade B construction. The loading district will be that applying to the location of the installation. Joint-use electric poles for overhead electric and communication lines shall be wood poles utilizing crossarm construction. Single-phase transformer installations shall be provided. Crossarm construction shall be provided for support of other equipment, except where direct-pole mounting is indicated. Provision for communication services is required on pole-line construction, except where specifically noted otherwise. A vertical pole space of not less than 600 mm (2 feet) shall be reserved at all locations. Poles shall be of lengths and classes indicated.

2.7.1 Wood Poles

Wood poles shall comply with ANSI O5.1, and shall be either full treated Western Red Cedar or full pressure treated Douglas Fir. All poles shall be full-length pressure treated in accordance with American Wood-Preservers Association (AWPA) C4. Poles shall be clean and dry after treatment. Bleeders shall be rejected. The preservative used in the treatment of poles shall be Pentachlorophenol-petroleum solution containing not less than five (5) percent, by weight of Pentachlorophenol. The Pentachlorophenol shall meet the requirements of ASTM D1272 and AWPA P8. The petroleum shall be hydrocarbon solvent Type A, meeting the requirements of AWPA, P9. An alternate preservative shall be

COPPER NAPHTHENATE meeting the requirements of AWPA P8. The solvents used to prepare solutions of Copper Naphthenate shall comply with AWPA Standard P9. Wood poles shall have pole markings located approximately 3 m (10 feet) from pole butts for poles 15.2 m (50 feet) or less in length. Poles shall be machine trimmed by turning smooth full length, and shall be roofed, gained, and bored prior to pressure treatment. Where poles are not provided with factory-cut gains, metal gain plates shall be provided.

2.7.2 Pole Line Hardware

Zinc-coated hardware shall comply with ANSI C135.1, ANSI C135.2, ANSI C135.4, ANSI C135.14, ANSI C135.17, ANSI C135.22, and ANSI C135.33. Steel hardware shall comply with ASTM A 575 and ASTM A 576. All hardware shall be hot-dip galvanized in accordance with ASTM A 153. Pole-line hardware shall be hot-dip galvanized steel. Suitable washers shall be installed under boltheads and nuts on wood surfaces and elsewhere as required. Washers used on through-bolts and double-arming bolts shall be approximately 57.2 mm (2-1/4 inches) square and 4.8 mm (3/16-inch) thick. The diameter of holes in washers shall be the correct standard size for the bolt on which a washer is used. Washers for use under heads of carriage-bolts shall be of the proper size to fit over square shanks of bolts. Eye bolts, bolt eyes, eyenuts, strain-load plates, lag screws, guy clamps, fasteners, hooks, shims, and clevises shall be used wherever required to support and to protect poles, brackets, crossarms, guy wires, and insulators.

2.7.3 Guy Assemblies

Guy assemblies shall be zinc-coated steel in accordance with ASTM A 475. Guy assemblies, including insulators and attachments, shall provide a strength exceeding the required guy strength. Double-eye thimbles shall be provided on all anchor rods to permit attachment of individual primary and secondary down guys. Anchors shall provide adequate strength to support all loads. Guy strand shall be 7 strand. Guy material shall be extra high strength Class B zinc-coated-steel. Guy rods shall be not less than 2.4 m (8 feet) in length by 15.9 mm (5/8 inch) in diameter.

2.8 INSULATORS

Insulators shall comply with NEMA HV 2 for general requirements.

2.8.1 Medium-Voltage Line Insulators

Medium-voltage line insulators shall be as shown on the drawings and specified in Appendix A.

2.8.2 Strain Insulators for Guy Wires

Strain insulators for use in insulated guy assemblies shall comply with ANSI C29.4 for porcelain or equivalent fiberglass, and shall have a mechanical strength exceeding the rated breaking strength of the attached guy wire. Insulators shall be not smaller than 54-3.

2.9 CROSSARM ASSEMBLIES

2.9.1 Crossarms

Crossarms shall comply with REA DT-5B, be solid Douglas Fir, have a 6.4 mm (1/4-inch), 45 degree chamfer on all top edges, and be pentachlorophenol-petroleum treated. Cross-sectional area minimum dimensions shall be 117 mm (4-5/8 inches) in height by 92 mm (3-5/8 inches) in depth in accordance

with ANSI C2 for Grade B construction. Crossarms shall be 2.44 m (8 feet), 3.05.m (10 feet), or 6.1 (20 feet) in length as indicated on the drawings. Crossarms shall be machined, chamfered, trimmed, and bored for stud and bolt holes before pressure treatment. Factory drilling shall be provided for pole and brace mounting, and for insulators. Drilling shall provide required climbing space and wire clearances. Crossarms shall be straight and free of twists to within 2.5 mm by 305 mm (1/10-inch per foot) of length. Bend or twist shall be in one direction only.

2.9.2 Crossarm Gains

Crossarm gains shall comply with ANSI C135.33.

2.10 FUSES AND SWITCHES, MEDIUM-VOLTAGE

2.10.1 Fused Cutouts

Medium-voltage fuses and cutouts shall be open fuse type construction rated 15 kV, 95 kV BIL. Fuse ratings shall be as indicated. Fuse cutouts shall be equipped with mounting brackets suitable for the indicated installations.

2.11 TRANSFORMERS

Overhead distribution transformers shall be pole mounted for use on a 13.8 kV delta system and oil filled. Transformers shall be single phase, 50 kVA, 95 kV BIL. Primary voltage shall be 13.8 kV and secondary voltage 240/120 volts. Transformers shall be furnished with two cover mounted high voltage bushings and a tap changer for de-energized operation. Transformers shall have two 2-1/2 percent rated kVA high-voltage taps above and below rated primary voltage. Primary and secondary windings shall be copper. Coolant shall be RTEMP or equal. Transformers shall be in accordance with ANSI C57.12.00, C57.12.20, and NEMA TRI-1980, and certified as having less than 1 parts-per-million (ppm) PCB content. Transformers shall be provided with necessary auxiliary mounting devices suitable for the indicated installation.

2.12 SURGE ARRESTERS

Surge arresters shall comply with NEMA LA 1 and IEEE C62.1, IEEE C62.2, and IEEE C62.11, and shall be provided for protection of transformers and other indicated equipment. Arresters shall be distribution class, rated as shown. Arresters shall be equipped with mounting brackets suitable for the indicated installations.

2.13 WATT-HOUR METER

Watt-hour demand meter shall be socket type, class 20, 480 volt, form 45, with relay option board for KYZ pulse output, for use on a 1-phase, 3-wire 120/240 volt service with 2 current transformers and no voltage transformers. Meter shall be ABB Alpha type A1D or equal. Current transformers shall be window type, 600 volt, 400:5 amp ratio with rating factor of 3 at 30 degrees C (86 degrees F) and 2 at 55 degrees C (131 degrees F). Transformers shall be GE type JCW-O or equal. Meter socket and enclosure shall be current transformer rated with provisions for test switch, 600V, 6 terminal Superior type 11523.

2.14 HEAVY DUTY ENCLOSED, HIGH PRESSURE SODIUM FLOODLIGHT

Fixture shall conform to NEMA FA 1, UL 1572, and to other requirements specified and indicated in contract documents. Fixture shall consist of a cast aluminum housing and a cast aluminum door assembly and shall be integrally ballasted unless otherwise shown or approved. The door assembly shall be hinged and gasketed and held in the closed position with screws of finish to match fixture or recessed stainless steel latches. The lens shall be thermal shock and impact resistant tempered glass and shall be held securely in the door frame. Lampholder shall be mogul base glazed porcelain. Reflector shall be aluminum with the manufacturer's standard commercial product finish suitable for light source provided. Ballast shall be of the high power factor type and capable of starting and operating the lamp in an ambient temperature of minus 29 degrees C (minus 20 degrees F) to 41 degrees C (105 degrees F). Ballast shall be the regulated or constant wattage type for high pressure sodium lamps. Fixture shall be prewired. All exposed metallic parts of the fixture shall receive the manufacturer's standard commercial product finish. Fixture mounting shall be cast aluminum and adjustable.

2.15 GROUNDING AND BONDING

2.15.1 Driven Ground Rods

Ground rods shall be of copper-bonded steel conforming to UL 467 not less than 19 mm (3/4 inch) in diameter by 3.1 m (10 feet) in length.

2.15.2 Grounding Conductors

Grounding conductors shall be bare, except where installed in conduit with associated phase conductors. Insulated conductors shall be of the same material as the phase conductors and green color-coded, except that conductors shall be rated no more than 600 volts. Bare conductors shall be ASTM B 8 soft-drawn unless otherwise indicated. Aluminum is not acceptable.

2.16 WARNING SIGNS

Warning signs shall be porcelain enameled steel or approved equal. Voltage warning signs shall comply with ANSI C2.

2.17 LIQUID DIELECTRICS

Liquid dielectrics for transformers, capacitors, reclosers, and other liquid-filled electrical equipment shall be RTEMP or equal. Liquid dielectrics shall be certified by the manufacturer as having less than 1 parts-per-million (ppm) PCB content.

2.18 FACTORY TESTS

Factory tests shall be performed, as follows, in accordance with the applicable publications and with other requirements of these specifications. The Contracting Officer shall be notified at least 10 days before the equipment is ready for testing.

a. Transformers: Manufacturer's standard tests in accordance with IEEE C57.12.00.

PART 3 EXECUTION

3.1 INSTALLATION

Equipment and devices shall be installed and energized in accordance with the manufacturer's published instructions. Electrical work shall be performed in accordance with WAC 296-45.

3.1.1 Conformance to Codes

The installation shall comply with the requirements and recommendations of NFPA 70 and ANSI C2 for light loading districts, Grade B construction. No reduction in clearance shall be made.

3.1.2 Verification of Dimensions

The Contractor shall become familiar with details of the work, shall verify dimensions in the field, and shall notify the Contracting Officer of any discrepancy before performing any work.

3.2 POLE INSTALLATION

3.2.1 Wood Pole Setting

Wood poles shall be set straight and firm. Pole setting depths shall be a minimum of 1.82 m (6 feet) or as shown. In swampy or soft ground, a bog shoe shall be used where support for a pole is required. Poles in straight runs shall be in a straight line. Curved poles shall be placed with curvatures in the direction of the pole line. Poles shall be set to maintain as even a grade as practicable. If it becomes necessary to shorten a pole, a piece shall be sawed off the top end and roofed. If any pole is shortened after treatment, the shortened end of the pole shall be given an application of hot preservative. Where poles are set on hilly terrain, along edges of cuts or embankments, or where soil may be washed out, special precautions shall be taken to ensure durable pole foundations, and the setting depth shall be measured from the lower side of the terrain. Holes shall be dug large enough to permit proper use of tampers to the full depth of a hole. Earth shall be placed into a hole in 152 mm (6-inch) maximum layers, then thoroughly tamped before the next layer is placed. Surplus earth shall be placed around a pole in a conical shape to a height of 305 mm (1 foot) and packed tightly to drain water away from poles.

Poles shall be set vertical for normal line construction, but at points where excessive horizontal strain exists the pole shall be raked. The amount of rake shall be 406 mm (16 inches) for a 40 foot pole. Use one half the rake value for dead end poles supporting transformers in order to aid the installation.

3.3 CROSSARM MOUNTING

Crossarms shall be bolted to poles with 16 mm (5/8-inch) through-bolts with square washers at each end. Bolts shall extend not less than 3 mm (1/8 inch) nor more than 50 mm (2 inches) beyond nuts. On single crossarm construction, the bolt head shall be installed on the crossarm side of the pole. Braces shall be bolted to arms and secured to poles after crossarms are leveled and aligned. Wood braces shall be 1.52 m (60 - inch) span and shall be bolted to crossarms with 13 mm (1/2-inch) bolts with round or square washers between boltheads and crossarms, and secured to poles with 16 mm (5/8-inch) through-bolts. Double crossarms shall be securely held in position by means of 16 mm (5/8-inch) double-arming bolts. Each double-arming bolt shall be equipped with four nuts and four square washers.

3.3.1 Line Arms and Buck Arms

Line arms and buck arms shall be set at right angles to lines for straight runs and for angles 45 degrees and greater; and line arms shall bisect angles of turns of less than 45 degrees. Dead-end assemblies shall be used for turns where shown. Buckarms shall be installed, as shown, at corners and junction poles. Double crossarms shall be provided at ends of joint use or conflict sections, at dead-ends, and at angles and corners to provide adequate vertical and longitudinal strength. Double crossarms shall be provided at each line-crossing structure and where lines not attached to the same pole cross each other.

3.4 GUY INSTALLATION

Guys shall be provided where shown and wherever conductor tensions are not balanced, such as at angles, corners, and dead-ends. Loads and strengths shall be calculated with the formula shown on the drawings. Where a single guy will not provide the required strength, two or more guys shall be provided. Where guys are wrapped around poles, at least two guy hooks shall be provided and pole shims shall be provided where guy tension exceeds 26.7 kN (6000 pounds). Guy grips shall be provided at each guy terminal. Guy-strain insulators shall be provided in each guy for wood poles. Guy anchors shall be of a size and type shown. A half-round yellow polyethylene plastic guy marker, not less than 2.44 m (8 feet) in length, shall be provided at the anchor end of each guy shown, securely clamped to the guy or anchor at the bottom and top of the marker. Holding capacities for down guys shall be based on a lead angle of 45 degrees.

3.5 CONDUCTOR INSTALLATION

3.5.1 Line Conductors

Unless otherwise indicated, conductors shall be installed in accordance with manufacturer's approved tables of sags and tensions. Proper care shall be taken in handling and stringing conductors to avoid abrasions, sharp bends, cuts, kinks, or any possibility of damage to insulation or conductors. Conductors shall be paid out with the free end of conductors fixed and cable reels portable, except where terrain or obstructions make this method unfeasible. Bend radius for any insulated conductor shall be at no time less than the applicable NEMA specification recommendation. Conductors shall not be drawn over rough or rocky ground, nor around sharp bends. When installed by machine power, conductors shall be drawn from a mounted reel through stringing sheaves in straight lines clear of obstructions. Initial sag and tension shall be checked by the Contractor, in accordance with the manufacturer's approved sag and tension charts, within an elapsed time after installation, recommended by the manufacturer.

3.5.2 Conductors and Splices

Connectors and splices shall be mechanically and electrically secure under tension and shall be of the nonbolted compression type. The tensile strength of any splice shall be not less than the rated breaking strength of the conductor. Splice materials, sleeves, fittings, and connectors shall be noncorrosive and shall not adversely affect conductors. Aluminum- composition conductors shall be wire brushed and an oxide inhibiter applied before making a compression connection. Connectors which are factory- filled with an inhibiter are acceptable. Inhibiters and compression tools shall be of types recommended by the connector manufacturer. Primary line apparatus taps shall be by means of hot line clamps attached to compression type bail clamps (stirrups). Low-voltage connectors for copper conductors shall be of the solderless pressure type. Noninsulated connectors shall be smoothly taped to provide a waterproof insulation equivalent to the original insulation, when installed on insulated conductors. On overhead connections of aluminum and copper, the aluminum shall be installed above the copper.

3.5.3 Conductors-To-Insulator Attachments

Conductors shall be properly attached to insulators. For insulators requiring conductor tie-wire attachments, tie-wire sizes shall be #4 ACSR.

3.5.4 Armor Rods

Armor rods shall be provided for ACSR conductors. Armor rods shall be installed at supports, except armor rods will not be required at primary dead-end assemblies if aluminum or aluminum-lined zinc-coated steel clamps are used. Lengths and methods of fastening armor rods shall be in accordance with the manufacturer's recommendations. For span lengths of less than 61 m (200 feet), flat aluminum armor rods may be used. Flat armor rods shall be not less than 1.3 mm by 7.6 mm (0.05 by 0.30 inches).

3.6 TRANSFORMER INSTALLATION

Transformers shall be carefully installed so as not to scratch finishes or damage bushings. Transformers shall be installed in accordance with the manufacturer's instructions. After installation, surfaces shall be inspected and scratches shall be touched up with a finish provided by the transformer manufacturer for this purpose.

3.7 WATT-HOUR METER INSTALLATION

Meter installation shall be coordinated with the Contracting Officer and will be performed by others.

3.8 CONNECTION TO UTILITY LINES

The Contractor shall coordinate the work with the Contracting Officer and shall provide all materials necessary for final connections to the installation's electric lines. Final connections will be performed by others and is contingent upon review and approval of the new line by Hanford Electric Utility.

3.9 GROUNDING

Noncurrent-carrying metal parts of equipment and conductor assemblies, such as operating mechanisms of pole top switches, panel enclosures, transformers, and other noncurrent- carrying metal items shall be grounded. Additional grounding of equipment, neutral, and surge arrester grounding systems shall be installed at poles where indicated.

3.9.1 Grounding Electrodes

Grounding electrodes shall be installed as follows:

a. Driven rod electrodes - Unless otherwise indicated, ground rods shall be located approximately three feet out from base of the pole and shall be driven into the earth until the tops of the rods are approximately one foot below finished grade. Multiple rods shall be evenly spaced at least 3 m (10 feet) apart and connected together 0.61 m (2 feet) below grade with a minimum No. 6 bare copper conductor.

b. Additional electrodes - Whenever the required ground resistance is not met, provide additional electrodes interconnected with grounding conductors, to achieve the specified ground resistance. The additional electrodes will be up to three, 3 m (10 feet) rods spaced a minimum of 3 m (10 feet) apart.

c. Separate sets of grounding electrodes shall be provided for primary and secondary systems when pole mounted transformers are installed. Primary and secondary system electrodes shall be spaced 6 m (20 feet) apart.

A sketch of the proposed grounding installation shall be submitted for approval prior to commencement of the work.

3.9.2 Grounding and Bonding Connections

Connections above grade shall be made by the fusion-welding process or with bolted solderless connectors in compliance with UL 467, and those below grade shall be made by a fusion-welding process. Where grounding conductors are connected to aluminum-composition conductors, specially treated or lined copper-to-aluminum connectors suitable for this purpose shall be used.

3.9.3 Grounding Electrode Conductors

Continuous vertical grounding electrode conductors shall be installed and connected directly to the grounding electrodes indicated on the drawings or required by these specifications. All equipment, neutrals, surge arresters, and other items required to be grounded shall be connected directly to this vertical conductor. The grounding electrode conductor shall be sized as shown. Where primary and secondary grounding systems are required on the same pole, they shall be routed separately and connected as shown on the drawings. Secondary system neutral conductors shall be connected directly to the transformer neutral bushings, then connected with a neutral bonding jumper between the transformer neutral bushing and the vertical grounding electrode conductor, as shown. Grounding electrode conductors shall be stapled to wood poles at intervals not exceeding 600 mm (2 feet). Bends greater than 45 degrees in grounding electrode conductor are not permitted.

3.10 FIELD TESTING

3.10.1 General

Field testing shall be performed in the presence of the Contracting Officer. The Contractor shall notify the Contracting Officer 10 days prior to conducting tests. The Contractor shall furnish all materials, labor, and equipment necessary to conduct field tests. The Contractor shall perform all tests and inspections recommended by the manufacturer unless specifically waived by the Contracting Officer. The Contractor shall maintain a written record of all tests which includes date, test performed, personnel involved, devices tested, serial number and name of test equipment, and test results. All field reports will be signed and dated by the Contractor.

3.10.2 Safety

The Contractor shall provide and use safety devices such as rubber gloves, protective barriers, and danger signs to protect and warn personnel in the test vicinity. The Contractor shall replace any devices or equipment which are damaged due to improper test procedures or handling.

3.10.3 Ground-Resistance Tests

The resistance of each grounding electrode system shall be measured using the fall-of-potential method defined in IEEE Std 81. Ground resistance measurements shall be made before the electrical distribution system is energized and shall be made in normally dry conditions not less than 48 hours after the last rainfall. Resistance measurements of separate grounding electrode systems shall be made before the systems are bonded together below grade. The combined resistance of separate systems may be used to meet the required resistance, but the specified number of electrodes must still be provided.

a. Single electrode - 25 ohms

b. Multiple electrodes - 25 ohms

3.10.4 Sag and Tension Test

The Contracting Officer shall be given prior notice of the time schedule for stringing conductors or cables serving overhead medium-voltage circuits and reserves the right to witness the procedures used for ascertaining that initial stringing sags and tensions are in compliance with requirements for the applicable loading district and cable weight.

3.10.5 Low-Voltage Cable Test

Low-voltage cable, complete with splices, shall be tested for insulation resistance after the cables are installed, in their final configuration, ready for connection to the equipment, and prior to energization. The test voltage shall be 500 volts dc, applied for one minute between each conductor and ground and between all possible combinations of conductors in the same trench, duct, or cable, with all other conductors in the same trench, duct, or cable grounded. The Minimum value of insulation shall be:

R in megohms = **(rated voltage in kV + 1) x 1000**
length of cable in feet

Each cable failing this test shall be repaired or replaced. The repaired cable system shall then be retested until failures have been eliminated.

3.10.6 Liquid-Filled Transformer Tests

The following field tests shall be performed on all liquid-filled transformers 50 kVA and above. Pass-fail criteria shall be in accordance with the transformer manufacturer's specifications.

a. Insulation resistance test phase-to-ground.

b. Turns ratio test.

c. Correct phase sequence.

3.10.7 Pre-Energization Services

The following services shall be performed on the equipment listed below. These services shall be performed subsequent to testing but prior to the initial energization. The equipment shall be inspected to insure that installation is in compliance with the recommendations of the manufacturer and as shown on the detail drawings. Terminations of conductors at major equipment shall be inspected to ensure the adequacy of connections. Bare and insulated conductors between such terminations shall be inspected

to detect possible damage during installation. If factory tests were not performed on completed assemblies, tests shall be performed after the installation of completed assemblies. Components shall be inspected for damage caused during installation or shipment and that packaging materials have been removed. Components capable of being both manually and electrically operated shall be operated manually prior to the first electrical operation. Components capable of being calibrated, adjusted, and tested shall be calibrated, adjusted, and tested in accordance with the instructions of the equipment manufacturer. Items for which such services shall be provided, but are not limited to, are the following:

Switches.

Transformers.

3.10.8 Operating Tests

After the installation is completed, and at such time as the Contracting Officer may direct, the Contractor shall conduct operating tests for approval. The equipment shall be demonstrated to operate in accordance with the requirements herein. An operating test report shall be submitted in accordance with paragraph SUBMITTALS.

3.11 ACCEPTANCE

Final acceptance of the facility will not be given until the Contractor has successfully completed all tests and after all defects in installation, material or operation have been corrected.

PART 4 SUBMITTAL SUMMARY

4.1 SUMMARY OF SUBMITTALS

Submittals to be furnished by the Contractor shall include the following:

Paragraph	Item	SD
16370-2.5	Medium-Voltage Lines	01, 04, 09
16370-2.6	Low-Voltage Lines	01, 04, 09
16370-2.7	Poles and Hardware	01, 04, 09
16370-2.8	Insulators	01, 04, 09
16370-2.9	Crossarm Assemblies	01, 04, 09
16370-2.10	Fuses and Switches, Medium-Voltage	01, 04, 09
16370-2.11	Transformers	01, 04, 09
16370-2.12	Surge Arrestors	01, 04, 09
16370-2.13	Watt-Hour Meter	01, 04, 09
16370-2.14	HPS Floodlight	01, 04
16370-2.15	Grounding and Bonding	01, 04, 09
16370-3.5.1	Sag and Tension Tables	01
16370-3.9.1	Proposed Grounding Installation	04
16370-3.10	Field Testing	06, 09

Code for Type of Submittal (SD)

01	-	Data
04	-	Drawings
06	-	Instructions
07	-	Schedules
08	-	Statements
09	-	Reports
13	-	Certificates
14	-	Samples
18	-	Records
19	-	O & M Manuals

- End of Section -

* * * * *

ELECTRICAL DISTRIBUTION SYSTEM, AERIAL
SECTION 16370

APPENDIX A
LIST OF MATERIALS

This page is intentionally blank.

MATERIAL INDEX NO.	DESCRIPTION	SPARE PARTS NO.
A1-1	ANCHOR, CONCRETE CONE, Built to Hanford Electrical Utilities Distribution Specifications page 2D-5. Reese Concrete Products, Hanford concrete cone	6115-1500 -0200

HANFORD ELECTRICAL UTILITIES DISTRIBUTION SPECIFICATIONS	MATERIAL INDEX	FEB 2 4 1997
	APPROVED: MF ZAKRAJSEK DATE: 11/95	

MATERIAL INDEX NO.	DESCRIPTION	SPARE PARTS NO.
A2-1	ARRESTER, SURGE, heavy duty distribution class, silicone rubber housed, metal oxide. Duty cycle voltage rating 18kV rms, maximum continuous operating voltage (MCOV) 15.3kV rms. Tested in accordance with ANSI/IEEE standard C62.11. NEMA crossarm bracket included. Cooper Industries cat.#AZLP501B18 Chance/Ohio Brass cat. 213615-7324 Joslyn cat.#8154C0018J001	6115-0180 -0102

HANFORD ELECTRICAL UTILITIES DISTRIBUTION SPECIFICATIONS	MATERIAL INDEX	FEB 2 4 199
	APPROVED: MF ZAKRAJSEK DATE: 11/95	

MATERIAL INDEX NO.	DESCRIPTION	SPARE PARTS NO.
B1-1	BOLT, CARRIAGE, 3/8"-16UNC-2A x 4" Lg w/sq nut. Steel galvanized per ANSI C135.1 & ASTM A153. A.B. Chance cat.#8634 Joslyn cat.#J8634 Cooper Industries cat.#DF1C4	
B1-2	BOLT, CARRIAGE, 3/8"-16UNC-2A x 4 1/2" Lg w/sq nut. Steel galvanized per ANSI C135.1 & ASTM A153. A.B. Chance cat.# 8634 1/2 Joslyn cat.#J8634-1/2 Cooper Industries cat.#DF1C450	6115-1500 -0590
B1-3	BOLT, CARRIAGE, 3/8"-16UNC-2A x 5" Lg w/sq nut. Steel galvanized per ANSI C135.1 & ASTM A153. A.B. Chance cat.# 8635 Joslyn cat.#J8635 Cooper Industries cat.#DF1C5	
B1-4	BOLT, CARRIAGE, 3/8"-16UNC-2A x 6" Lg w/sq nut. Steel galvanized per ANSI C135.1 & ASTM A153. A.B. Chance cat.# 8636 Joslyn cat.#J8636 Cooper Industries cat.#DF1C6	6115-1500 -0592
B1-5	BOLT, CARRIAGE, 1/2"-13UNC-2A x 4 1/2" Lg w/sq nut. Steel galvanized per ANSI C135.1 & ASTM A153. A.B. Chance cat.# 8644 1/2 Joslyn cat.#J8644-1/2 Cooper Industries cat.#DF2C450	
B1-6	BOLT, CARRIAGE, 1/2"-13UNC-2A x 5" Lg w/sq nut. Steel galvanized per ANSI C135.1 & ASTM A153. A.B. Chance cat.# 8645 Joslyn cat.#J8645 Cooper Industries cat.#DF2C5	
B1-7	BOLT, CARRIAGE, 1/2"-13UNC-2A x 6" Lg w/sq nut. Steel galvanized per ANSI C135.1 & ASTM 153. A.B. Chance cat.# 8646 Joslyn cat.#J8646 Cooper Industries cat.#DF2C6	6115-1500 -0594

MATERIAL INDEX NO.	DESCRIPTION	SPARE PARTS NO.
B1-8	BOLT, MACHINE, SQ HD (crossarm), 1/2"-13UNC-2A x 5" Lg w/sq nut. Steel galvanized per ANSI C135.1 & ASTM A153. A.B. Chance cat.#8705 Joslyn cat.#J8705 Cooper Industries cat.#DF25B Hughes cat.#B55-1 3/4	6115-1500 -0628
B1-9	BOLT, MACHINE, SQ HD (crossarm), 1/2"-13UNC-2A x 6" Lg w/sq nut. Steel galvanized per ANSI C135.1 & ASTM A153. A.B. Chance cat.#8706 Joslyn cat.#J8706 Hughes cat.#B56-3 Cooper Industries cat.#DF2B6	6115-1500 -0630
B1-10	BOLT, MACHINE, SQ HD (crossarm), 1/2"-13UNC-2A x 8" Lg w/sq nut. Steel galvanized per ANSI C135.1 & ASTM A153. A.B. Chance cat.#8708 Joslyn cat.#J8708 Hughes cat.#B58-4 Cooper Industries cat.#DF2B8	6115-1500 -0583
B1-11	BOLT, MACHINE, SQ HD (crossarm), 5/8"-11UNC-2A x 8" Lg w/sq nut. Steel galvanized per ANSI C135.1 & ASTM A153. A.B. Chance cat.#8808 Joslyn cat.#J8808 Hughes cat.#B68-4 Cooper Industries cat.#DF3B8	6115-1500 -0584
B1-12	BOLT, MACHINE, SQ HD (crossarm), 5/8"-11UNC-2A x 10" Lg w/sq nut. Steel galvanized per ANSI C135.1 & ASTM A153. A.B. Chance cat.#8810 Joslyn cat.#J8810 Hughes cat.#B610-4 Cooper Industries cat.#DF3B10	6115-1500 -0632
B1-13	BOLT, MACHINE, SQ HD (crossarm), 5/8"-11UNC-2A x 12" Lg w/sq nut. Steel galvanized per ANSI C135.1 & ASTM A153. A.B. Chance cat.#8812 Joslyn cat.#J8812 Cooper Industries cat.#DF3B12 Hughes cat.#B612-4	6115-1500 -0635
B1-14	BOLT, MACHINE, SQ HD (crossarm), 5/8"-11UNC-2A x 14" Lg w/sq nut. Steel galvanized per ANSI C135.1 & ASTM A153. A.B. Chance cat.#8814 Joslyn cat.#J8814 Hughes cat.#B614-6 Cooper Industries cat.#DF3B14	6115-1500 -0634

MATERIAL INDEX NO.	DESCRIPTION	SPARE PARTS NO.
B1-15	BOLT, MACHINE, SQ HD (crossarm), 5/8"-11UNC-2A x 16" Lg w/sq nut. Steel galvanized per ANSI C135.1 & ASTM A153. A.B. Chance cat.#8816 Joslyn cat.#J8816 Cooper Industries cat.#DF3B16 Hughes cat.#B616-6	6115-1500 -0636
B1-16	BOLT, MACHINE, SQ HD (crossarm), 5/8"-11UNC-2A x 18" Lg w/sq nut. Steel galvanized per ANSI C135.1 & ASTM A153. A.B. Chance cat.#8818 Joslyn cat.#J8818 Hughes cat.#B618-6 Cooper Industries cat.#DF3B18	6115-1500 -0638
B1-17	BOLT, MACHINE, SQ HD (crossarm), 5/8"-11UNC-2A x 20" Lg w/sq nut. Steel galvanized per ANSI C135.1 & ASTM A153. A.B. Chance cat.#8820 Joslyn cat.#J8820 Hughes cat.#B620-6 Cooper Industries cat.#DF3B20	6115-1500 -0640
B1-18	BOLT, MACHINE, SQ HD (crossarm), 3/4"-10UNC-2A x 12" Lg w/sq nut. Steel galvanized per ANSI C135.1 & ASTM A153. A.B. Chance cat.#8912 Joslyn cat.#J8912 Hughes cat.#B712-4 Cooper Industries cat.#DF4B12	6115-1500 -0642
B1-19	BOLT, MACHINE, SQ HD (crossarm), 3/4"-10UNC-2A x 14" Lg w/sq nut. Steel galvanized per ANSI C135.1 & ASTM A153. A.B. Chance cat.#8914 Joslyn cat.#J8914 Hughes cat.#B714-6 Cooper Industries cat.#DF4B14	6115-1500 -0644
B1-20	BOLT, MACHINE, SQ HD (crossarm), 3/4"-10UNC-2A x 16" Lg w/sq nut. Steel galvanized per ANSI C135.1 & ASTM A153. A.B. Chance cat.#8916 Joslyn cat.#J8916 Hughes cat.#B716-6 Cooper Industries cat.#DF4B16	6115-1500 -0646
B1-21	BOLT, MACHINE, SQ HD (crossarm), 3/4"-10UNC-2A x 18" Lg w/sq nut. Steel galvanized per ANSI C135.1 & ASTM A153. A.B. Chance cat.#8918 Joslyn cat.#J8918 Hughes cat.#B718-6 Cooper Industries cat.#DF4B18	6115-1500 -0585

MATERIAL INDEX NO.	DESCRIPTION	SPARE PARTS NO.
B1-22	BOLT, DOUBLE-ARMING, 5/8"-11UNC-2A x 14" Lg w/4 sq nuts. Steel galvanized per ANSI C135.1 & ASTM A153. A.B. Chance cat.#8864 Joslyn cat.#J8864 Cooper Industries cat.#DF2D14 Hughes cat.#TR614-F	6115-1500 -0598
B1-23	BOLT, DOUBLE-ARMING, 5/8"-11UNC-2A x 16" Lg w/4 sq nuts. Steel galvanized per ANSI C135.1 & ASTM A153. A.B. Chance cat.#8866 Joslyn cat.#J8866 Hughes cat.#TR616-F Cooper Industries cat.#DF2D16	6115-1500 -0599
B1-24	BOLT, DOUBLE-ARMING, 5/8"-11UNC-2A x 18" Lg w/4 sq nuts. Steel galvanized per ANSI C135.1 & ASTM A153. A.B. Chance cat.#8868 Joslyn cat.#J8868 Hughes cat.#TR618-F Cooper Industries cat.#DF2D18	6115-1500 -0600
B1-25	BOLT, DOUBLE-ARMING, 5/8"-11UNC-2A x 20" Lg w/4 sq nuts. Steel galvanized per ANSI C135.1 & ASTM A153. A.B. Chance cat.#8870 Joslyn cat.#J8870 Hughes cat.#TR620-F Cooper Industries cat.#DF2D20	6115-1500 -0601
B1-26	BOLT, DOUBLE-ARMING, 5/8"-11UNC-2A x 22" Lg w/4 sq nuts. Steel galvanized per ANSI C135.1 & ASTM A153. A.B. Chance cat.#8872 Joslyn cat.#J8872 Hughes cat.#TR622-F Cooper Industries cat.#DF2D22	6115-1500 -0602
B1-27	BOLT, DOUBLE-ARMING, 5/8"-11UNC-2A x 24" Lg w/4 sq nuts. Steel galvanized per ANSI C135.1 & ASTM A153. A.B. Chance cat.#8874 Joslyn cat.#J8874 Hughes cat.#TR624-F Cooper Industries cat.#DF2D24	6115-1500 -0603
B1-28	BOLT, DOUBLE-ARMING, 5/8"-11UNC-2A x 26" Lg w/4 sq nuts. Steel galvanized per ANSI C135.1 & ASTM A153. A.B. Chance cat.#8876 Joslyn cat.#J8876 Cooper Industries cat.#DF2D26	6115-1500 -0604

MATERIAL INDEX NO.	DESCRIPTION	SPARE PARTS NO.
B1-29	BOLT, OVALEYE, 5/8"-11UNC-2A X 12" Lg w/nut Steel galvanized per ANSI C135 & ASTM A153. A. B. Chance cat.#29962 Hughes cat.#2719.612-6 Copper Industries cat.# DF2E12 Joslyn cat.#J9412	6115-1500 -0612
B1-30	BOLT, OVALEYE, 5/8"-11UNC-2A X 14" Lg w/nut Steel galvanized per ANSI C135 & ASTM A153 A. B. Chance cat.#29964 Hughes cat.#2719.614-6 Copper Industries cat.# DF2E14 Joslyn cat.#J9414	6115-1500 -0614
B1-31	BOLT, CARRIAGE, 1/2"-13UNC-2A x 2" Lg with or without sq nut. Steel galvanized per ANSI C135.1 & ASTM 153. Joslyn cat.#J24592.8 Hughes cat.#BC52-F	

HANFORD ELECTRICAL UTILITIES DISTRIBUTION SPECIFICATIONS	MATERIAL INDEX	FEB 2 4 1997
	APPROVED: J.M. HACHE DATE: 11/93	

MATERIAL INDEX NO.	DESCRIPTION	SPARE PARTS NO.
B2-1	BRACE, CROSSARM, FLAT, Galvanized Steel, 30" x 1/4" x 1 1/4" w/ 7/16" & 9/16" mtg holes. Hughes cat.# 2809.6 A.B. Chance cat.# 7130 Joslyn cat.# J7130 Cooper Industries cat.#DB2F6	6115-1500 -0698
B2-2	BRACE(set), CROSSARM, WOOD, 42" span, 21" drop, w/9/16" crossarm mtg hole & 11/16" pole mtg hole, w/galvanized steel end fittings, DOUGLAS FIR, Pentachloraphenol-petroleum treated. Hughes cat.# 2004-B Cascadian cat.# 15221 Brooks cat.# 446-42-21	6115-2475 -0630
B2-3	BRACE(set), CROSSARM, WOOD, 60" span, 30" drop, w/9/16" crossarm mtg hole & 11/16" pole mtg hole, w/galvanized steel end fittings, DOUGLAS FIR, Pentachloraphenol-petroleum treated. Hughes cat.# 2004-D Cascadian cat.# 15030 Brooks cat.# 446-60-30	6115-2475 -0632

HANFORD ELECTRICAL UTILITIES DISTRIBUTION SPECIFICATIONS	MATERIAL INDEX	FEB 2 4 1997
	APPROVED: J.M. HACHE DATE: 11/93	

MATERIAL INDEX NO.	DESCRIPTION	SPARE PARTS NO.
B3-1	BRACKET, TRANSFORMER MOUNTING, CLUSTER MOUNT, Double-band version, for NEMA type A & B lug transformers, Aluminum, w/mounting hardware furnished A.B. Chance cat. #C212-8015 Aluma-Form cat. #15M3-9 (This bracket will accommodate NEMA type C lug transformers by adding Aluma-Form adapter plate cat. #321-A.)	
B3-2	BRACKET, COMBINATION CUTOUT-ARRESTER MOUNTING, Aluminum Aluma-Form cat. #R3CA-2C	
B3-3	BRACKET, CONDUIT STANDOFF, 15" X 1 5/8" X 13/16" 14 Ga back to back rolled galv steel-formed channel strut ASTM A570 GR 33 with 4" x 4" x 1/8" galv steel back plate. Morfab Co. cat.#15SOSM Wesanco Inc. part#W-1010-15 Wilcor Grounding Systems cat.#WA15DB	6115-1500 -0720
B3-4	BRACKET, CROSSARM APPARATUS MOUNTING, hot dip galvanized steel Joslyn cat.#J26639	

HANFORD ELECTRICAL UTILITIES DISTRIBUTION SPECIFICATIONS	MATERIAL INDEX	FEB 2 4 1997
	APPROVED: MF ZAKRAJSEK DATE: 2/96	

MATERIAL INDEX NO.	DESCRIPTION	SPARE PARTS NO.
C1-1	CROSSARM, WOOD(solid), 5'-7" x 4 5/8" x 3 5/8" w/4-11/16" pin holes, DOUGLAS FIR, Pentachlorophenol-petroleum treated. Drilled and manufactured in accordance with REA standard M-19 type 02 & REA specification DT-5B. Cascadian Cat.# CCC-402 Hughes Bros. Cat.# B-2391.1B Brooks Mfg. Cat.# type 02	6115-1500 -0980
C1-2	CROSSARM, WOOD(solid), 8'-0" x 4 5/8" x 3 5/8" w/4-11/16" pin holes, DOUGLAS FIR, Pentachlorophenol-petroleum treated. Drilled and manufactured in accordance with REA standard M-19 type 03 & REA specification DT-5B. Cascadian Cat.# CCC-403 Hughes Bros. Cat.# B-2391.1C Brooks Mfg. Cat.# type 03	6115-1500 -0981
C1-3	CROSSARM, WOOD(solid), 10'-0" x 4 5/8" x 3 5/8" w/6-11/16" pin holes, DOUGLAS FIR, Pentachlorophenol-petroleum treated. Drilled and manufactured in accordance with REA standard M-19 type 05 & REA specification DT-5B. Cascadian Cat.# CCC-405 Hughes Bros. Cat.# B-2391.1E Brooks Mfg. Cat.# type 05	6115-1500 -0983

MATERIAL INDEX NO.	DESCRIPTION	SPARE PARTS NO.
C2-1	CLAMP, AUTOMATIC DEAD-END, Clevis type, for #6 AWG solid copper, wedge cluster design. Reliable Power Products cat. # 61 LD Fargo Mfg. Co. cat. # GD-511	6115-0904 -0870
C2-2	CLAMP, AUTOMATIC DEAD-END, Clevis type, for #4 AWG solid copper, wedge cluster design. Reliable Power Products cat. # 41 LD Fargo Mfg. Co. cat. # GD-512	6115-0904 -0871
C2-3	CLAMP, AUTOMATIC DEAD-END, Clevis type, for #3 AWG solid or #4 AWG stranded copper, wedge cluster design. Reliable Power Products cat. # 47 LD Fargo Mfg. Co. cat. # GD-513	6115-0904 -0872
C2-4	CLAMP, AUTOMATIC DEAD-END, Clevis type, for #2 AWG solid copper, wedge cluster design. Reliable Power Products cat. # 21 LD Fargo Mfg. Co. cat. # GD-514	6115-0904 -0873
C2-5	CLAMP, AUTOMATIC DEAD-END, Clevis type, for #2 AWG stranded copper, wedge cluster design. Reliable Power Products cat. # 27 LD Fargo Mfg. Co. cat. # GD-515	6115-0904 -0874
C2-6	CLAMP, AUTOMATIC DEAD-END, Clevis type, for #1/0 AWG stranded copper, wedge cluster design. Reliable Power Products cat. # 107 LD Fargo Mfg. Co. cat. # GD-517	6115-0904 -0875
C2-7	CLAMP, AUTOMATIC DEAD-END, Clevis type, for #2/0 AWG stranded copper, wedge cluster design. Reliable Power Products cat. # 207 LD Fargo Mfg. Co. cat. # GD-518	6115-0904 -0876

MATERIAL INDEX NO.	DESCRIPTION	SPARE PARTS NO.
C2-8	CLAMP, AUTOMATIC DEAD-END, Clevis type, for #3/0 AWG stranded copper, wedge cluster design. Reliable Power Products cat. # 307 LD Fargo Mfg. Co. cat. # GD-519	6115-0904 -0877
C2-9	CLAMP, AUTOMATIC DEAD-END, Clevis type, for #4/0 AWG stranded copper, wedge cluster design. Reliable Power Products cat. # 407 LD Fargo Mfg. Co. cat. # GD-520	6115-0904 -0878
C2-10	CLAMP, AUTOMATIC DEAD-END, Clevis type, for 336.4 kcmil stranded aluminum, wedge cluster design. Reliable Power Products cat. # AL336.4 SDS Fargo Mfg. Co. cat. # GD-5315A	6115-0904 -0885
C2-11	CLAMP, AUTOMATIC DEAD-END, Clevis type, for 556.5 kcmil stranded aluminum, wedge cluster design. Reliable Power Products cat. # AL477 SDS Fargo Mfg. Co. cat. # GD-5325A	6115-0904 -0890
C2-12	CLAMP, AUTOMATIC DEAD-END, Clevis type, for #4 AWG ACSR aluminum, wedge cluster design. Reliable Power Products cat. # 7651 LD Fargo Mfg. Co. cat. # GD-442	6115-0904 -0860
C2-13	CLAMP, AUTOMATIC DEAD-END, Clevis type, for #2 AWG ACSR aluminum, wedge cluster design. Reliable Power Products cat. # 7652 LD Fargo Mfg. Co. cat. # GD-444	6115-0904 -0861
C2-14	CLAMP, AUTOMATIC DEAD-END, Clevis type, for #1/0 AWG ACSR aluminum, wedge cluster design. Reliable Power Products cat. # 7653 LD Fargo Mfg. Co. cat. # GD-446	6115-0904 -0862

MATERIAL INDEX NO.	DESCRIPTION	SPARE PARTS NO.
C2-15	CLAMP, AUTOMATIC DEAD-END, Clevis type, for #2/0 AWG ACSR aluminum, wedge cluster design. Reliable Power Products cat. # 7654 LD Fargo Mfg. Co. cat. # GD-447	6115-0904 -0863
C2-16	CLAMP, AUTOMATIC DEAD-END, Clevis type, for #3/0 AWG ACSR aluminum, wedge cluster design. Reliable Power Products cat. # 7655 SDS Fargo Mfg. Co. cat. # GD-448	6115-0904 -0864
C2-17	CLAMP, AUTOMATIC DEAD-END, Clevis type, for #4/0 AWG ACSR aluminum, wedge cluster design. Reliable Power Products cat. #7656 SDS Fargo Mfg. Co. cat. # GD-449	6115-0904 -0865
C2-18	CLAMP, GROUND ROD, 3/4", Hex head, Bronze/copper alloy Blackburn Products, cat. #JAB 34H Anderson Products, cat. #GC-103-03 Joslyn, cat. #JA493 Burndy Electrical, cat. #GRC34	17314552
C2-19	CLAMP, HOT LINE, #8 Sol.-2/0 Str., bronze body Blackburn Products cat# HLC2108-9 A.B. Chance cat#P1520cc Fargo cat#GH-100 Anderson Products cat#BC-2/0-XB	6115-0903 -0860
C2-20	CLAMP, BAIL, #6-4/0 Str, aluminum body, w/copper bail (stirrup) for aluminum or ACSR conductor A.B. Chance cat.#BC-823P Fargo cat.#GA-102SL Anderson Products cat#AHLS-024019-E	6115-0903 -0870
C2-21	CLAMP, BAIL, 1/0-397.5 kcmil ACSR, aluminum body w/copper bail(stirrup) for aluminum or ACSR conductor A.B. Chance cat#BC-854P Fargo cat#GA-106SL Anderson Products cat#AHLS-397021-E	6115-0903 -0875

MATERIAL INDEX NO.	DESCRIPTION	SPARE PARTS NO.
C2-22	CLAMP, WEDGE, wire range #2-#6 ACSR, aluminum body, with flexible nylon jacketed galvanized steel aircraft strand bail. Bail length 11" to 14". Blackburn Products cat.#W62-1FC Porcelain Products cat.#1061F Reliable cat.#7195-FL	6115-1500 -0871
C2-23	CLAMP, WEDGE, wire range 1/0-#4 ACSR, aluminum body, with flexible nylon jacketed galvanized steel aircraft strand bail. Bail length 11" to 14". Blackburn Products cat.#W20-1FC Porcelain Products cat.#1062F Reliable cat.#7187-FL	6115-1500 -0872
C2-24	CLAMP, WEDGE, wire range 4/0-2/0 ACSR, aluminum body, with flexible nylon jacketed galvanized steel aircraft strand bail. Bail length 11" to 14". Blackburn Products cat.#W40-1FC Porcelain Products cat.#1063F Reliable cat.#7197-FL	6115-1500 -0870
C2-25	CLAMP, RIGID CONDUIT, for 1" conduit, galv steel. B-LINE Systems cat.#B2210PA Unistrut Products cat.#P1113 Wesanco Inc. cat.#W-6130-A	1731384
C2-26	CLAMP, RIGID CONDUIT, for 2" conduit, galv steel. B-LINE Systems cat.#B2213PA Unistrut Products cat.#P1117 Wesanco Inc. cat.#W-6138-A	1731387
C2-27	CLAMP, RIGID CONDUIT, for 3" conduit, galv steel. B-LINE Systems cat.#B2015PA Unistrut Products cat.#P1119 Wesanco Inc. cat.#W-6146-A	1731389
C2-28	CLAMP, RIGID CONDUIT, for 4" conduit, galv steel. B-LINE Systems cat.#B2017PA Unistrut Products cat.#P1121 Wesanco Inc. cat.#W-6154-A	1731391

MATERIAL INDEX NO.	DESCRIPTION	SPARE PARTS NO.
C3-1	CONNECTOR, VISE TYPE, bronze, #4 AWG, for copper to copper tap connections. Must comply with ANSI specifications Fargo Mfg. Co. #GC-5004 Anderson Products DG-4-C	6115-0930 -0903
C3-2	CONNECTOR, VISE TYPE, bronze, 4/0 AWG, for copper to copper tap connections. Must comply with ANSI specifications Fargo Mfg. Co. #GC-5040 Anderson Products DG-4/0-C	6115-0930 -0902
C3-3	CONNECTOR, VISE TYPE, bronze, 500 kcmil AWG, for copper to copper tap connections. Must comply with ANSI specifications Fargo Mfg. Co. #GC-5050	
C3-4	CONNECTOR, VISE TYPE, spacer type, aluminum, #2-4/0 AWG, single bolt. For copper to aluminum tap connections; w/inhibitor. Must comply with ANSI specifications. Fargo Mfg. Co. #GA-9041L	6115-0930 -0913
C3-5	CONNECTOR, VISE TYPE, spacer type, aluminum, 4/0-600 kcmil AWG, two bolt. For copper to aluminum tap connections; w/inhibitor. Must comply with ANSI specifications. Fargo Mfg. Co. #GA-9520L	6115-0930 -0910
C3-6	CONNECTOR, VISE TYPE, spacer type, aluminum, 4/0-4/0 AWG, single bolt. For copper to aluminum tap connections; w/inhibitor. Must comply with ANSI specifications. Fargo Mfg. Co. #GA-9040L	

MATERIAL INDEX NO.	DESCRIPTION	SPARE PARTS NO.
C4-1	CABLE, THHN, 4/0, 19 STRAND, Annealed copper conductor, insulated with an extruded layer of heat, moisture & flame resistant PVC and a layer of extruded heat & light stabilized nylon PBT. Meets UL83 standard. A minimum rating of 600 volts. General Cable Co. Southwire Essex Wire & Cable American Insulated Wire	1741220
C4-2	CABLE, THHN, 500 kcmil, 37 STRAND, Annealed copper conductor, insulated with an extruded layer of heat, moisture & flame resistant PVC and a layer of extruded heat & light stabilized nylon PBT. Meets UL83 standard. A minimum rating of 600 volts. General Cable Co. Southwire Essex Wire & Cable American Insulated Wire	1741225

HANFORD ELECTRICAL UTILITIES DISTRIBUTION SPECIFICATIONS	MATERIAL INDEX	
	APPROVED: MF ZAKRAJSEK DATE: 2/96	FEB 2 4 1997

MATERIAL INDEX NO.	DESCRIPTION	SPARE PARTS NO.
C5-1	CLEVIS, INSULATED, hot dipped galvanized steel w/ 5/8" cotter bolt, for dead-ending service drops. Porcelain Products Co. cat.#4113 Joslyn cat#J0342 A.B. Chance cat#0340	6115-1500 -0910

HANFORD ELECTRICAL UTILITIES DISTRIBUTION SPECIFICATIONS	MATERIAL INDEX	
	APPROVED: MF ZAKRAJSEK DATE: 2/96	FEB 2 4 1997

MATERIAL INDEX NO.	DESCRIPTION	SPARE PARTS NO.
C6-1	CONDUIT, Rigid non-metallic(PVC), 1", Sch40 X 10'-0" Lg. w/belled end. Per UL 651, NEMA TC2 & Fed. Spec.WC-1094A. PW Pipe Co. cat.#4601 000103 Carlon cat.#49008 Cantex cat.#A52BA12	1741987
C6-2	CONDUIT, Rigid non-metallic(PVC), 2", Sch40 X 10'-0" Lg. w/belled end. Per UL 651, NEMA TC2 & Fed. Spec.WC-1094A. PW Pipe Co. cat.#4602 000103 Carlon cat.#49011 Cantex cat.#A52CA12	1741990
C6-3	CONDUIT, Rigid non-metallic(PVC), 3", Sch40 X 10'-0" Lg. w/belled end. Per UL 651, NEMA TC2 & Fed. Spec.WC-1094A. PW Pipe Co. cat.#4603 000103 Carlon cat.#49013 Cantex cat.#A52DA12	1741992
C6-4	CONDUIT, Rigid non-metallic(PVC), 4", Sch40 X 10'-0" Lg. w/belled end. Per UL 651, NEMA TC2 & Fed. Spec.WC-1094A. PW Pipe Co. cat.#4604 000103 Carlon cat.#49015 Cantex cat.#A52EA12	1741994
C6-5	CONDUIT, Rigid non-metallic(PVC), 1", Sch80 X 10'-0" Lg. w/belled end. Per UL 651, NEMA TC2 & Fed. Spec.WC-1094A. PW Pipe Co. cat.#4701 000102 Carlon cat.#49408 Cantex cat.#A53BA12	1742081
C6-6	CONDUIT, Rigid non-metallic(PVC), 2", Sch80 X 10'-0" Lg. w/belled end. Per UL 651, NEMA TC2 & Fed. Spec.WC-1094A. PW Pipe Co. cat.#4702 000102 Carlon cat.#49411 Cantex cat.#A53CA12	1742084
C6-7	CONDUIT, Rigid non-metallic(PVC), 3", Sch80 X 10'-0" Lg. w/belled end. Per UL 651, NEMA TC2 & Fed. Spec.WC-1094A. PW Pipe Co. cat.#4703 000102 Carlon cat.#49413 Cantex cat.#A53DA12	1742086
C6-8	CONDUIT, Rigid non-metallic(PVC), 4", Sch80 X 10'-0" Lg. w/belled end. Per UL 651, NEMA TC2 & Fed. Spec.WC-1094A. PW Pipe Co. cat.#4704 000102 Carlon cat.#49415 Cantex cat.#A53EA12	1742087

HANFORD ELECTRICAL UTILITIES DISTRIBUTION SPECIFICATIONS	MATERIAL INDEX	
	APPROVED: MF ZAKRAJSEK DATE: 2/96	FEB 2 4 1997

MATERIAL INDEX NO.	DESCRIPTION	SPARE PARTS NO.
C7-1	CUTOUT, OPEN FUSE, 100 amp, 15 KV, 95 kV BIL, 10,000 amps (asym), leakage distance to ground 8.5" min, with bronze eye bolt connecter. Per ANSI C37.41. A.B. Chance cat.#C710-112E Firon Industries cat.#415409 S & C Electric Co. cat.#89021R9-J	6115-0975 -2030
C7-2	CUTOUT, OPEN FUSE, 200 amp, 15 or 27 KV, 125 kV BIL, 10,000 amps (asym), leakage distance to ground 11" min, with bronze eye bolt connecter. Per ANSI C37.41. A.B. Chance cat.#C710-222E Firon Industries cat.#426409 S & C Electric Co. cat.#89072R9-J	6115-0975 -1950

HANFORD ELECTRICAL UTILITIES DISTRIBUTION SPECIFICATIONS	MATERIAL INDEX	
	APPROVED: MF ZAKRAJSEK DATE: 11/95	FEB 2 4 199

MATERIAL INDEX NO.	DESCRIPTION	SPARE PARTS NO.
F1-1	FITTING, END, SIDEWALK GUY, w/clamp, cast or malleable iron, hot dipped galvanized (for 2" pipe) Continental Electric #SWG 20-5 Joslyn #J1502 A.B. Chance #0502 Cooper Industries #DG3D1	6115-1500 -0865
F1-2	FITTING, POLE PLATE, SIDEWALK GUY, cast or malleable iron, hot dipped galvanized (for 2" pipe) Continental Electric #SWGB 20-54 Joslyn #J1501 A.B. Chance #0501 Cooper Industries #DG1D1	6115-1500 -5450
F1-3	FITTING, SERVICE ENTRANCE HEAD, 1", clamp type, aluminum, for rigid conduit, Fed. Spec. W-C-586C Raco Inc. cat.#2404 Regal Mfg. cat.#8663 Blackburn Products cat.#DEH1	1728067
F1-4	FITTING, SERVICE ENTRANCE HEAD, 2", clamp type, aluminum, for rigid conduit, Fed. Spec. W-C-586C Raco Inc. cat.#2408 Regal Mfg. cat.#8666 Blackburn Products cat.#DEH2	1728070
F1-5	FITTING, SERVICE ENTRANCE HEAD, 3", clamp type, aluminum, for rigid conduit, Fed. Spec. W-C-586C Raco Inc. cat.#2412 Regal Mfg. cat.#8668 Blackburn Products cat.#DEH3	1738747
F1-6	FITTING, SERVICE ENTRANCE HEAD, 4", clamp type, aluminum, for rigid conduit, Fed. Spec. W-C-586C Raco Inc. cat.#2416 Regal Mfg. cat.#8670 Blackburn Products cat.#DEH4	1741664

MATERIAL INDEX NO.	DESCRIPTION	SPARE PARTS NO.
G1-1	GRIP, GUY, DEAD-END, 3/8", Class B, left-hand lay, Galvanized steel, color code orange, for use on extra high strength 7-wire strand. A.B. Chance cat. #3/8 CTLG Helical Line Products cat. #HG210 3/8 Preformed Line Products cat.#GDE-1107	6115-1500 -8661

HANFORD ELECTRICAL UTILITIES DISTRIBUTION SPECIFICATIONS	MATERIAL INDEX	
	APPROVED: MF ZAKRAJSEK DATE: 11/95	FEB 2 4 1997

MATERIAL INDEX NO.	DESCRIPTION	SPARE PARTS NO.
G2-1	GUARD, GUY, 8 FT., polyethylene, color yellow. Preformed Line Products cat.#PG-5718 Joslyn cat.#J1493Y A.B. Chance cat.#96FRPE	6115-1500 -5640

HANFORD ELECTRICAL UTILITIES DISTRIBUTION SPECIFICATIONS	MATERIAL INDEX	
	APPROVED: MF ZAKRAJSEK DATE: 11/95	FEB 2 4 1997

MATERIAL INDEX NO.	DESCRIPTION	SPARE PARTS NO.
H1-1	HOOK, GUY, Hot dipped galvanized ductile iron per ASTM A-536 & A-153. Min ultimate strength 12,000# Reliable cat.#AGF-5X A.B. Chance cat.#GH5ILS Continental Electric cat.#G-56X2 Cooper Industries cat.#DG22H1	6115-1500 -2700

HANFORD ELECTRICAL UTILITIES DISTRIBUTION SPECIFICATIONS	MATERIAL INDEX	
	APPROVED: MF ZAKRAJSEK DATE: 11/95	FEB 2 4 1997

MATERIAL INDEX NO.	DESCRIPTION	SPARE PARTS NO.
I1-1	INSULATOR, PIN, TYPE 'F' NECK, 15KV, porcelain, 1" thread, w/radio noise free glaze, per ANSI Class 55-5. Cooper Industries, cat#NP22D8 LAPP cat.#7061R-70 Porcelain Products Co. cat.#380-S	6115-1500 -2976
I1-2	INSULATOR, DEADEND, 15KV, epoxy steel composite, leakage distance 16 IN., 15,000 LB. tensile strength. A.B. Chance cat.#C654-0000 A.B. Chance cat.#C654-3015 OHIO BRASS cat.#401015-0215 Reliable cat.#RPP-15	6115-1500 -3025
I1-3	INSULATOR, GUY-STRAIN, porcelain, 20,000 tensile strength, per ANSI Class 54-3. Joslyn cat.#L-506 LAPP cat.#8506-70 Porcelain Products Co. cat.#506	6115-2950 -2090
I1-4	INSULATOR, SPOOL, wet process porcelain, 3000# ult str, min low-freq flashover 12KV, 3 1/8" O.D. X 3" H X 11/16"Dia bolt hole. Per ANSI Class 53-2 & REA accepted. Joslyn Cat.#J151 Porcelain Products Co. cat#5101	6115-1500 -2990

HANFORD ELECTRICAL UTILITIES DISTRIBUTION SPECIFICATIONS	MATERIAL INDEX	
	APPROVED: J.M. HACHE DATE: 11/93	FEB 2 4 1991

MATERIAL INDEX NO.	DESCRIPTION	SPARE PARTS NO.
M1-1	MOULDING, GROUND WIRE, Douglas fir, 1/2" x 8'-0, pentachlorophenol treated. Hughes Bros. cat. #2501.8 Brooks Mfg. cat. #BR100-08 Cascadian cat. #CCC GWM 500.8 Pennington Crossarm Co.#PCC 810	6115-1500 -4425

HANFORD ELECTRICAL UTILITIES DISTRIBUTION SPECIFICATIONS	MATERIAL INDEX	
	APPROVED: MF ZAKRAJSEK DATE: 2/96	FEB 2 4 199

MATERIAL INDEX NO.	DESCRIPTION	SPARE PARTS NO.
N1-1	NUT, LOCK, SQ HD, TYPE MF, 3/8"-16UNC-2B. Steel Galvanized per ASTM A153. A.B. Chance cat.#3510 Joslyn cat.#J8581 Cooper Industries cat.#DF3N1	
N1-2	NUT, LOCK, SQ HD, TYPE MF, 1/2"-13UNC-2B. Steel Galvanized per ASTM A153. A.B. Chance cat.#3511 Joslyn cat.#J8582 Hughes cat.#MF50 Cooper Industries cat.#DF3N2	6115-1500 -4865
N1-3	NUT, LOCK, SQ HD, TYPE MF, 5/8"-11UNC-2B. Steel Galvanized per ASTM A153. A.B. Chance cat.#3512 Joslyn cat.#J8583 Hughes cat.#MF60 Cooper Industries cat.#DF3N4	6115-1500 -4863
N1-4	NUT, LOCK, SQ HD, TYPE MF, 3/4"-10UNC-2B. Steel Galvanized per ASTM A153. A.B. Chance cat.#3513 Joslyn cat.#J8584 Hughes cat.#MF70 Cooper Industries cat.#DF3N6	6115-1500 -4869
N1-5	NUT, OVAL EYE, 3/4"-10UNC-2B. Steel Galvanized per ASTM A153 A.B. Chance cat.#6503 Joslyn cat.#J1093 Hughes cat.#EN70	6115-1500 -4867
N1-6	NUT, OVAL EYE, 5/8"-11UNC-2B. Steel Galvanized per ASTM A153 A.B. Chance cat.#6502 Joslyn cat.#J1092 Hughes cat.#EN60	6115-1500 -4860

HANFORD ELECTRICAL UTILITIES DISTRIBUTION SPECIFICATIONS	MATERIAL INDEX	
	APPROVED: J.M. HACHE DATE: 11/93	FEB 2 4 199

MATERIAL INDEX NO.	DESCRIPTION	SPARE PARTS NO.
	POLE, POWER, WESTERN RED CEDAR, full length pressure PENTA treated to a final net retention of .80# per cubic foot, w/6 foot incised butt, conforming to ANSI 05.1, ASTM D1272 and AWPA C-1, C-4, P-8 & P-9 (latest editions). Poles shall be framed per attached sketch. Poles shall be inspected by an independent inspector with inspectors documention provided. Poles shall conform to ANSI class #2. MC FARLAND/CASCADE J.H. BAXTER Poles listed below shall conform to the above description.	
P1-30	POLE, POWER 30'	6115-9001 -0302
P1-35	POLE, POWER 35'	6115-9001 -0352
P1-40	POLE, POWER 40'	6115-9001 -0402
P1-45	POLE, POWER 45'	6115-9001 -0452
P1-50	POLE, POWER 50'	6115-9001 -0502
P1-55	POLE, POWER 55'	6115-9001 -0552
P1-60	POLE, POWER 60'	6115-9001 -0602
P1-65	POLE, POWER 65'	6115-9001 -0652
P1-70	POLE, POWER 70'	6115-9001 -0702
P1-75	POLE, POWER 75'	6115-9001 -0752
P1-80	POLE, POWER 80'	6115-9001 -0802

HANFORD ELECTRICAL UTILITIES DISTRIBUTION SPECIFICATIONS	MATERIAL INDEX	
	APPROVED: J.M. HACHE DATE: 11/93	FEB 2 4 1997

MATERIAL INDEX NO.	DESCRIPTION	SPARE PARTS NO.
	POLE, POWER, WESTERN RED CEDAR, full length pressure PENTA treated to a final net retention of .80# per cubic foot, w/6 foot incised butt, conforming to ANSI 05.1, ASTM D1272 and AWPA C-1, C-4, P-8 & P-9 (latest editions). Poles shall be framed per attached sketch. Poles shall be inspected by an independent inspector with inspectors documention provided. Poles shall conform to ANSI class #1. MC FARLAND/CASCADE J.H. BAXTER Poles listed below shall conform to the above description.	
P1-85	POLE, POWER 85'	6115-9001 -0851
P1-90	POLE, POWER 90'	6115-9001 -0901
P1-95	POLE, POWER 95'	6115-9001 -0951

HANFORD ELECTRICAL UTILITIES DISTRIBUTION SPECIFICATIONS	MATERIAL INDEX	
	APPROVED: J.M. HACHE DATE: 11/93	

MATERIAL INDEX NO.	DESCRIPTION	SPARE PARTS NO.
P2-1	PIN, INSULATOR, forged steel, 1" nylon thread, with 5/8" shank x 10 3/4", w/nut, lock nut & flat washer Joslyn cat.#J206Z	6115-1500 -5390
P2-2	PIN, POLE TOP, pressed steel, 1" thread x 20" in length, per ANSI standards. A.B. Chance cat.#2199 Cooper Industries cat.#DP19P6 Joslyn cat.#J740 Hughes cat.#2770-A20-100	6115-1500 -5392
P2-3	PIN, INSULATOR, TRANSFORMER LEAD, 1" lead thread, 5/8" lag screw shank A.B. Chance cat#888 Cooper Industries cat#DP1L1	

HANFORD ELECTRICAL UTILITIES DISTRIBUTION SPECIFICATIONS	MATERIAL INDEX	
	APPROVED: J.M. HACHE DATE: 11/93	FEB 2 4 1997

MATERIAL INDEX NO.	DESCRIPTION	SPARE PARTS NO.
P3-1	PIPE, STANDARD, 2" IPS, Galvanized carbon steel, per ASTM A53 type E or S, or ASTM A106 grade B Wheatland Tube Co. Pioneer Steel & Tube Corp.	45100 214801

HANFORD ELECTRICAL UTILITIES DISTRIBUTION SPECIFICATIONS	MATERIAL INDEX	
	APPROVED: MF ZAKRAJSEK DATE: 11/95	FEB 2 4 1997

MATERIAL INDEX NO.	DESCRIPTION	SPARE PARTS NO.
R1-1	ROD, ANCHOR, Double eye w/nut, 5/8"dia x 8'-0" in length. Hot dipped galvanized drop forged steel, per ANSI C135.2 & A153. The min tensile strength shall be 16000#. A.B. Chance cat.#5348 Utilities Services Co. cat.#5958 Cooper Industries cat.#DA1D8 Joslyn cat.#J7518	
R1-2	ROD, ANCHOR, Double eye w/nut, 5/8"dia x 7'-0" in length. Hot dipped galvanized drop forged steel, per ANSI C135.2 & A153. The min tensile strength shall be 16000#. A.B. Chance cat.#5347 Utilities Services Co. cat.#5957 Cooper Industries cat.#DA1D7 Joslyn cat.#J7517	
R1-3	ROD, GROUND, 3/4" X 10'-0", Copperbonded Steel Blackburn Products, cat. #7510 Joslyn, cat. #J8350 Florida Wire & Cable, cat. #FW 8350 Utilities Service Co., cat. #B7510	17314530

HANFORD ELECTRICAL UTILITIES DISTRIBUTION SPECIFICATIONS	MATERIAL INDEX	
	APPROVED: MF ZAKRAJSEK DATE: 11/95	FEB 2 4 1997

MATERIAL INDEX NO.	DESCRIPTION	SPARE PARTS NO.
S1-1	SCREW, LAG, SQ HD,(gimlet point) 1/4"DIA x 2 1/2" Lg Steel galvanized per ANSI B18.2.2 & ASTM A153. Joslyn cat.# J8722-1/2 Cooper Industries cat.#DF1L250	6115-1500 -6640
S1-2	SCREW, LAG, SQ HD,(fetter drive,pilot point) 3/8"DIA x 4" Lg Steel galvanized per ANSI B18.2.2 & ASTM A153. Joslyn cat.# J8744P Cooper Industries cat.#DF13L4 A.B. Chance cat.#508744	6115-1500 -6641
S1-3	SCREW, LAG, SQ HD,(fetter drive,pilot point) 1/2"DIA x 5" Lg Steel galvanized per ANSI B18.2.2 & ASTM A153. Joslyn cat.#J8755P A.B. Chance cat.#508755	6115-1500 -6642

HANFORD ELECTRICAL UTILITIES DISTRIBUTION SPECIFICATIONS	MATERIAL INDEX	FEB 2 4 1997
	APPROVED: MF ZAKRAJSEK DATE: 11/95	

MATERIAL INDEX NO.	DESCRIPTION	SPARE PARTS NO.
S2-1	STRAND, GUY, 3/8", extra high strength 7-wire strand, left-hand lay, galvanized steel, class B zinc coating, Per ASTM A-475 & A-363. Cal-Wire Stranding Co. Davis Wire Corp. Florida Wire & Cable Co.	

HANFORD ELECTRICAL UTILITIES DISTRIBUTION SPECIFICATIONS	MATERIAL INDEX	
	APPROVED: MF ZAKRAJSEK DATE: 11/95	FEB 2 4 1997

MATERIAL INDEX NO.	DESCRIPTION	SPARE PARTS NO.
S3-1	STAPLE, rolled (diamond) point, 3" x 1 1/16" x 1/4" steel, coppercoated. Chance cat. #9161 Joslyn Mfg. cat. #J6497 Blackburn cat. #CUS22	

HANFORD ELECTRICAL UTILITIES DISTRIBUTION SPECIFICATIONS	MATERIAL INDEX	
	APPROVED: MF ZAKRAJSEK DATE: 2/96	FEB 2 [illegible]

MATERIAL INDEX NO.	DESCRIPTION	SPARE PARTS NO.
S4-1	SWEEP, Long radius 90°, 1", Sch80, 18"r, nonmetallic(PVC) w/plain end. Per UL 651, NEMA TC2 & Fed. Spec. WC-1094A. Carlon cat.#UB9CF Cantex cat.#5121846 PW Pipe Co. cat.#729018 0100	
S4-2	SWEEP, Long radius 90°, 2", Sch80, 24"r, nonmetallic(PVC) w/plain end. Per UL 651, NEMA TC2 & Fed. Spec. WC-1094A. Carlon cat.#UB9DJ Cantex cat.#5121019 PW Pipe Co. cat.#729024 0200	
S4-3	SWEEP, Long radius 90°, 3", Sch80, 36"r, nonmetallic(PVC) w/plain end. Per UL 651, NEMA TC2 & Fed. Spec. WC-1094A. Carlon cat.#UB9FL Cantex cat.#5121081 PW Pipe Co. cat.#729036 0300	
S4-4	SWEEP, Long radius 90°, 4", Sch80, 36"r, nonmetallic(PVC) w/plain end. Per UL 651, NEMA TC2 & Fed. Spec. WC-1094A. Carlon cat.#UB9FN Cantex cat.#5121023 PW Pipe Co. cat.#729036 0400	

HANFORD ELECTRICAL UTILITIES DISTRIBUTION SPECIFICATIONS	MATERIAL INDEX	
	APPROVED: MF ZAKRAJSEK DATE: 2/96	FEB 2 4 1997

MATERIAL INDEX NO.	DESCRIPTION	SPARE PARTS NO.
W1-1	WASHER, SQUARE, 2 1/4"x 2 1/4" x 1/4" thk x 9/16" dia hole. Steel galvanized per ASTM A153. Hughes cat.#SW2 1/4-50	6115-1500 -8444
W1-2	WASHER, SQUARE, 2 1/4"x 2 1/4" x 3/16"thk x 11/16" dia hole. Steel galvanized per ASTM A153. A.B. Chance cat.#6813 Joslyn cat.#J1075 Cooper Industries cat.#DF2W4	6115-1500 -8446
W1-3	WASHER, SQUARE, 4" x 4" x 1/4" thk x 7/8" dia hole. Steel galvanized per ASTM A153. A.B. Chance cat.#6818 1/2 Joslyn cat.#J1082 Cooper Industries cat.#DF2W11	6115-1500 -8440
W1-4	WASHER, SQUARE CURVED, 2 1/4"x 2 1/4"x 3/16"thk x 11/16"dia hole, Steel galvanized per ASTM A153. A.B. Chance cat.#6810 1/2 Joslyn cat.#J6821 Cooper Industries cat.#DF4W1	
W1-5	WASHER, ROUND, 1"O.D. x 14 GA x 7/16" dia hole. Steel galvanized per ASTM A153. A.B. Chance cat.#6801 Joslyn cat.#J1084 Hughes cat.#RW1-30 Cooper Industries cat.#DF1W1	6115-1500 -8450
W1-6	WASHER, SPRING LOCK, 3/8". Steel galvanized per ASTM A153. Joslyn cat.#J134 Cooper Industries cat.#DF7W1	6115-1500 -8430
W1-7	WASHER, SPRING LOCK, 1/2". Steel galvanized per ASTM A153. A.B. Chance cat.#4035 Joslyn cat.#J138 Hughes cat.#SLW-50 Cooper Industries cat.#DF7W3	6115-1500 -8455
W1-8	WASHER, SPRING LOCK, 5/8". Steel galvanized per ASTM A153. A.B. Chance cat.#4036 Joslyn cat.#J139 Hughes cat.#SLW-60 Cooper Industries cat.#DF7W5	6115-1500 -8432

HANFORD ELECTRICAL UTILITIES DISTRIBUTION SPECIFICATIONS	MATERIAL INDEX	
	APPROVED: J.M. HACHE DATE: 11/93	FEB 2 4 199

MATERIAL INDEX NO.	DESCRIPTION	SPARE PARTS NO.
W1-9	WASHER, SPRING LOCK, 3/4", Steel galvanized per ASTM A153. A.B. Chance cat.#4037 Joslyn cat.#J140 Hughes cat.#SLW-70 Cooper Industries cat.#DF7W7	
W1-10	WASHER, DOUBLE COIL SPRING LOCK, 3/8", Steel galvanized per ASTM A153. A.B. Chance cat.#C205-0188 Joslyn cat.#J175	
W1-11	WASHER, DOUBLE COIL SPRING LOCK, 1/2", Steel galvanized per ASTM A153. A.B. Chance cat.#C205-0185 Joslyn cat.#J176 Hughes cat.#SLW2-50	
W1-12	WASHER, DOUBLE COIL SPRING LOCK, 5/8", Steel galvanized per ASTM A153. A.B. Chance cat.#C205-0186 Joslyn cat.#J177 Hughes cat.#SLW2-60	6115-1500 -8427
W1-13	WASHER, DOUBLE COIL SPRING LOCK, 3/4", Steel galvanized per ASTM A153. A.B. Chance cat.#C205-0187 Joslyn cat.#J178 Hughes cat.#SLW-70	
W1-14	WASHER, ROUND, 1 3/8" O.D. x 12GA x 9/16" dia hole, Steel galvanized per ASTM A153 A.B. Chance cat.#6803 Joslyn cat.#J0186 Cooper Industries cat.#DF1W2	

MATERIAL INDEX NO.	DESCRIPTION	SPARE PARTS NO.
W2-1	WIRE, #6 Bare Copper, Soft Drawn, Solid General Cable Co. Southwire Essex Wire & Cable American Insulated Wire	1741046

HANFORD ELECTRICAL UTILITIES DISTRIBUTION SPECIFICATIONS	MATERIAL INDEX	
	APPROVED: MF ZAKRAJSEK DATE: 2/96	FEB 2 4 1997

This page is intentionally blank.

DRAWING NO.	REV. NO.
0600X-DD-C0087	0

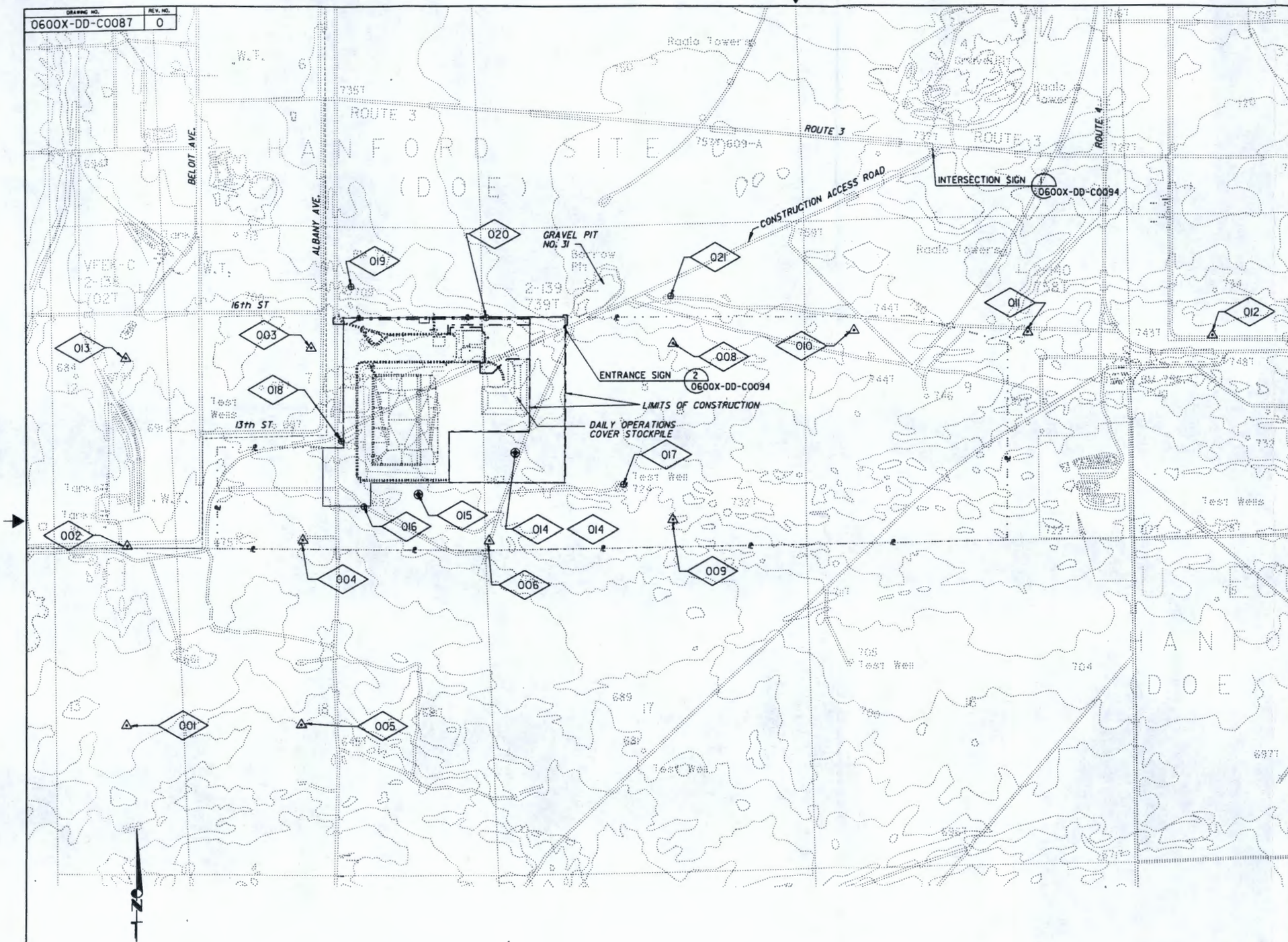

NOTES

1. TOPOGRAPHY SHOWN ON ALL DWGS IS FROM THE ORIGINAL SURVEY FOR THE ERDF SITE AND WAS PERFORMED PRIOR TO CONSTRUCTION OF CELLS 1 AND 2. ACTUAL CONTOURS INSIDE EXISTING FENCE MAY VARY SLIGHTLY FROM THAT SHOWN.
2. TOPOGRAPHY IS SHOWN IN FEET ABOVE SEA LEVEL.
3. COORDINATES FOR THE LIMITS OF CONSTRUCTION ARE SHOWN ON DRAWING 0600X-DD-C0089.

REV.	DATE	DESCRIPTION	DRAWN BY	DRAFT CHK	ORIG/ ENGR	ENGR CHK	SL/TOL APPROV	DW CHECK ENGR
0		ISSUED FOR CONSTRUCTION	PDH		MGB			

SCALE:

U.S. DEPARTMENT OF ENERGY
DOE FIELD OFFICE, RICHLAND
HANFORD ENVIRONMENTAL RESTORATION PROGRAM

BECHTEL HANFORD INC.
RICHLAND, WASHINGTON

MONTGOMERY WATSON
RICHLAND, WASHINGTON

ENVIRONMENTAL RESTORATION DISPOSAL FACILITY
CELLS 3 & 4 CONSTRUCTION, SITE PREPARATION
OVERALL SITE PLAN

BECHTEL JOB NO.	DOE CONTRACT NO.	CADD FILENAME
22192	DE-AC06-93RL12367	6xdc0087.dgn

TASK	DRAWING NO.	REV. NO.
600	0600X-DD-C0087	0

RECORD INFORMATION

RECORD NO.	BLDG NO.	INDEX NO.
H-6-14712 sht 1	600	0110

0600X-SC-G0016-5-002-01-p12 & 04148 Rev 11/26/97

DRAWING NO.	REV. NO.
0600X-DD-C0088	0

COORDINATES

POINT NO.	DESCRIPTION	NORTH	EAST	ELEVATION	REMARKS
	EXISTING & GENERAL SITE FEATURES				
001	SURVEY CONTROL POINT HSM-149	436000.7378	1861560.7550	669.29	
002	SURVEY CONTROL POINT HSM-142	438947.3668	1861429.3610	678.071	
003	SURVEY CONTROL POINT HSM-136	442205.0768	1864490.3260	690.541	
004	SURVEY CONTROL POINT HSM-143	438966.7238	1864376.980	680.440	
005	SURVEY CONTROL POINT HSM-150	436034.9668	1864430.9920	655.77	
006	SURVEY CONTROL POINT HSM-144	438966.618	1867428.5820	704.728	
007	NOT USED				
008	SURVEY CONTROL POINT HSM-138	442270.2478	1870414.8430	733.576	
009	SURVEY CONTROL POINT HSM-145	439312.8478	1870414.9040	722.01	
010	SURVEY CONTROL POINT HSM-139	442458.0198	1873318.5000	745.93	
011	SURVEY CONTROL POINT HSM-140	442510.2408	1876208.310	739.27	
012	SURVEY CONTROL POINT HSM-141	442459.5518	1879193.4860	744.91	
013	SURVEY CONTROL POINT HSM-135	442045.8388	1864410.8770	692.42	
014	BORING 699-35-68B	440475.56	1867862.63	713.9	
015	BORING 699-35-69B	439789.36	1866279.31	701.4	
016	WELL 699-35-70	439591.81	1865375.65	692.1	
017	WELL 696-35-66	439958.15	1869612.46	732.5	
018	WELL 699-36-70A	440666.01	1865009.84	702.74	
019	WELL 6-38-70	443206.08	1865160.94	714.25	
020	WELL 699-38-68A	442688.78	1867389.45	718.17	
021	WELL 6-38-65	443044.13	1870374.64	756.92	
022	LIMIT OF CONSTRUCTION	442705.21	1868092.89	--	
023	LIMIT OF CONSTRUCTION	442735.21	1868700.89	--	
024	LIMIT OF CONSTRUCTION	439982.66	1868670.89	--	
025	LIMIT OF CONSTRUCTION	439982.66	1866787.03	--	
026	LIMIT OF CONSTRUCTION	440823.07	1866787.03	--	
027	LIMIT OF CONSTRUCTION	440823.07	1868086.22	--	
028	LIMIT OF CONSTRUCTION	440854.88	1868092.89	--	
029	LIMIT OF CONSTRUCTION	442009.50	1868092.89	--	
030	LIMIT OF CONSTRUCTION	442009.50	1867728.23	--	
031	LIMIT OF CONSTRUCTION	441772.93	1867496.67	--	
032	LIMIT OF CONSTRUCTION	441772.93	1867293.00	--	
033	LIMIT OF CONSTRUCTION	441947.93	1867293.00	--	
034	LIMIT OF CONSTRUCTION	441947.93	1867365.03	--	
035	LIMIT OF CONSTRUCTION	442423.13	1867365.03	--	
036	LIMIT OF CONSTRUCTION	442463.63	1867324.53	--	
037	LIMIT OF CONSTRUCTION	442530.00	1867324.53	--	
038	LIMIT OF CONSTRUCTION	442530.00	1866802.00	--	
039	LIMIT OF CONSTRUCTION	442429.82	1866802.00	--	
040	LIMIT OF CONSTRUCTION	442429.82	1866762.00	--	
041	LIMIT OF CONSTRUCTION	442570.00	1866762.00	--	
042	LIMIT OF CONSTRUCTION	442570.00	1868092.89	--	
043	LIMIT OF CONSTRUCTION	442675.21	1868092.89	--	
044	LIMIT OF CONSTRUCTION	442667.90	1865272.32	--	
045	LIMIT OF CONSTRUCTION	442588.92	1865136.65	--	
046	LIMIT OF CONSTRUCTION	442588.92	1864868.32	--	
047	LIMIT OF CONSTRUCTION	442697.1	1864868.32	--	
048	LIMIT OF CONSTRUCTION	442705.21	1868630.89	--	
049	LIMIT OF CONSTRUCTION	442735.21	1868630.89	--	
050	LIMIT OF CONSTRUCTION	442570.21	1868700.89	--	
051	LIMIT OF CONSTRUCTION	442570.21	1868670.89	--	
	FENCING				
100	NEW FENCE TIE-IN	442700 +/-	1868098 +/-	--	
101	NEW FENCE CORNER	442700.21	1868665.88	--	
102	NEW FENCE CORNER	439987.66	1868665.89	--	
103	NEW FENCE TIE-IN	439988 +/-	1866792 +/-	--	
	ROADWAY & GRADING				
200	P.O.B. ACCESS ROAD	442506.00	1868605.78	729 +/-	
201	P.I. ACCESS ROAD	442360.40	1868512.89	--	
202	RADIUS POINT ACCESS ROAD	442341.72	1868576.89	--	
203	P.O.E ACCESS ROAD	442258.37	1868512.89	720.00	
204	CORNER SUPPORT PAD	442258.37	1868500.89	720.00	
205	CORNER SUPPORT PAD	442258.37	1868650.89	720.00	
206	CORNER SUPPORT PAD	441958.37	1868650.89	720.00	
207	CORNER SUPPORT PAD	441958.37	1868500.89	720.00	
208	P.O.C ACCESS ROAD	442376.14	1868522.93	--	
209	P.O.T ACCESS ROAD	442341.72	1868512.89	--	
210	CORNER BULK WATER PAD	441877.9	1867323.0	--	
211	CORNER BULK WATER PAD	441877.9	1867397.0	--	

POINT NO.	DESCRIPTION	NORTH	EAST	ELEVATION	REMARKS
	YARD PIPING				
300	YARD HYDRANT	441910.43	1867353.22	--	
301	NOT USED				
302	PT TIE-IN / AIR RELEASE	442399.07	1867370.00	715.0 +/-	CENTERLINE
303	305mm(12") ELBOW (90)	442399.1 +/-	1867373.0 +/-	717.5 +/-	CENTERLINE
304	ELEVATION POINT	442219.07	1867373.00	713.00	CENTERLINE
305	NOT USED				
306	305mm(12")x305mm(12")x305mm(12") TEE	441912.93	1867373.00	712.00	CENTERLINE
307	305mm(12") VALVE	441912.93	1867376.69	712.00	CENTERLINE
308	305mm(12") CAP	441912.93	1867379.72	712.00	CENTERLINE
309	152mm(6") VALVE	441912.93	1867348.01	712.00	CENTERLINE
310	152mm(6") ELBOW (BULK WATER STATION)	441912.93	1867343.00	712.00	CENTERLINE
311	PT TIE-IN 76mm(3")	442437.1 +/-	1866792.0 +/-	714.6 +/-	CENTERLINE
312	76mm(3") VALVE	442444.41	1866792.00	716.00	CENTERLINE
313	PT TIE-IN / AIR RELEASE	442454.90	1866792.00	716.00	CENTERLINE
314	NOT USED				
315	76mm(3") ELBOW (90)	442540.00	1866792.00	700.00	CENTERLINE
316	ELEV. PT.	442540.00	1867032.00	700.00	CENTERLINE
317	ELEV. PT.	442540.00	1867352.00	704.33	CENTERLINE
318	ELEV. PT.	442540.00	1867674.66	704.33	CENTERLINE
319	76mm(3") ELBOW (45)	442540.00	1867927.00	706.33	CENTERLINE
320	76mm(3") ELBOW (11-1/4)	442349.07	1868147.93	706.33	CENTERLINE
321	76mm(3") ELBOW (11-1/4)	442334.92	1868132.08	710.33	CENTERLINE
322	76mm(3") ELBOW (45)	442278.37	1868188.63	712.33	CENTERLINE
323	76mm(3") VALVE	442278.37	1868555.26	716.71	CENTERLINE
324	76mm(3") CAP	442278.37	1868565.26	716.83	CENTERLINE
	POWER LINE				
400	POWER POLE (PP-C507)	442608.5	1864983.3	--	
401	POWER POLE	442608.9	1865133.3	--	
402	POWER POLE	442682.9	1865268.9	--	
403	POWER POLE	442690.2	1868649.9	--	
404	POWER POLE	442283.4	1868649.9	--	
405	POWER POLE	442683.5	1865377.0	--	
406	POWER POLE	442689.9	1868527.0	--	
407	POWER POLE	442583.4	1868649.9	--	
408	GUY POLE	442608.5	1864923.3	--	

NOTES

REV.	DATE	DESCRIPTION	DRAWN BY	DRAFT CHK	ORIG/ ENG'R	ENG'R CHK	CL/TDL APPROV	RE PROJ ENG'R
		ISSUED FOR CONSTRUCTION	PBH		WSB			

SCALE:

U.S. DEPARTMENT OF ENERGY
DOE FIELD OFFICE, RICHLAND
HANFORD ENVIRONMENTAL RESTORATION PROGRAM

BECHTEL HANFORD INC. RICHLAND, WASHINGTON

MONTGOMERY WATSON RICHLAND, WASHINGTON

ENVIRONMENTAL RESTORATION DISPOSAL FACILITY
CELLS 3 & 4 CONSTRUCTION, SITE PREPARATION
COORDINATE TABLE

BECHTEL JOB NO.	DOE CONTRACT NO.	CADD FILENAME
22192	DE-AC06-93RL12367	6xdc0088.dgn

TASK	DRAWING NO.	REV. NO.
600	0600X-DD-C0088	0

RECORD INFORMATION

RECORD NO.	BLDG NO.	INDEX NO.
H-6-14713 sht 1	600	0000

0600X-SC-G0016-5-002-01 p 13 of 24 148
bdo 11/26/97

DRAWING NO.	REV. NO.
0600X-DD-C0089	0

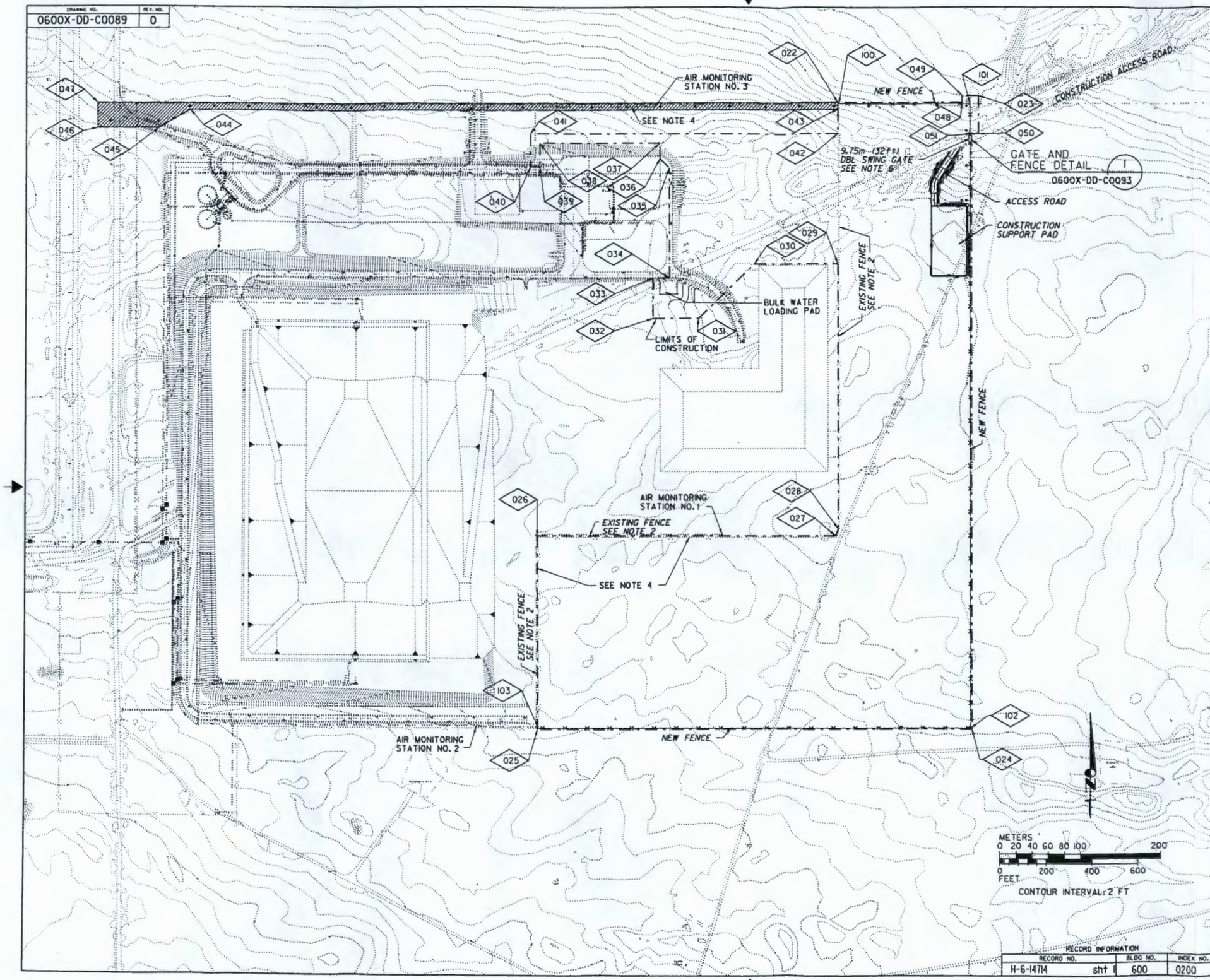

NOTES

1. ALL AREAS WITHIN THE LIMITS OF CONSTRUCTION SHALL BE CLEARED UNLESS OTHERWISE NOTED. ADDITIONALLY, THE CONSTRUCTION SUPPORT PAD, ASSOCIATED ACCESS ROAD AND BULK WATER LOADING PAD SHALL BE GRUBBED. SEE SPEC. SECTION 02110.
2. RELOCATE EXISTING FENCE AND GATE TO NEW FENCE LINE. ADDITIONAL FENCING WILL BE REQUIRED TO COMPLETE THE FENCE. AT ALL TIMES WHEN THE ERDF PERIMETER FENCE IS NOT CONTINUOUS AND SOUND, THE CONTRACTOR SHALL PROVIDE AND MAINTAIN MANNED SECURITY. ONE SECURITY OFFICER SHALL BE PROVIDED AT EACH UNSECURED LOCATION AND FOR EVERY 100m(328 FT) OF UNSECURED FENCE LINE.
3. SURVEY DATUM:
   VERTICAL NAVD 88
   HORIZONTAL NAD 83 (91)
4. LOCATE BURIED UTILITY FOR AIR MONITORING STATIONS AND COORDINATE ANY REQUIRED OUTAGES WITH THE CONTRACTING OFFICER.
5. CONTRACTOR SHALL USE THE CONSTRUCTION SUPPORT PAD AND AREA WEST OF THE PAD FOR STAGING AREA.
6. CONTRACTOR SHALL PROVIDE GATE STOPS WITH KEEPERS ON EACH SIDE OF ROADWAY. SECURE TO POSTS SET IN CONCRETE FILL.

CONTRACTOR IS NOT REQUIRED TO CLEAR THIS AREA UNLESS NECESSARY TO FACILITATE THE WORK.

REV.	DATE	DESCRIPTION	DRAWN BY	DRAFT CK'R	ORIG/ ENG'R	CHK'R CK'R	BL/TR APPROV	RM PROJ CK'R
0		ISSUED FOR CONSTRUCTION	PDH		WGB			

SCALE:

U.S. DEPARTMENT OF ENERGY
DOE FIELD OFFICE, RICHLAND
HANFORD ENVIRONMENTAL RESTORATION PROGRAM

BECHTEL HANFORD INC. RICHLAND, WASHINGTON | MONTGOMERY WATSON RICHLAND, WASHINGTON

ENVIRONMENTAL RESTORATION DISPOSAL FACILITY
CELLS 3 & 4 CONSTRUCTION, SITE PREPARATION
CLEARING PLAN AND FENCE LOCATION

BECHTEL JOB NO.	DOE CONTRACT NO.	CADD FILENAME
22192	DE-AC06-93RL12367	6xdc0089.dgn

TASK	DRAWING NO.	REV. NO.
600	0600X-DD-C0089	0

RECORD INFORMATION

RECORD NO.		BLDG NO.	INDEX NO.
H-6-14714	sht 1	600	0200

0600X-SC-G0016-5-002-01 p 14 of 148
bdo 11/26/97

DRAWING NO.	REV. NO.
0600X-DD-C0090	0

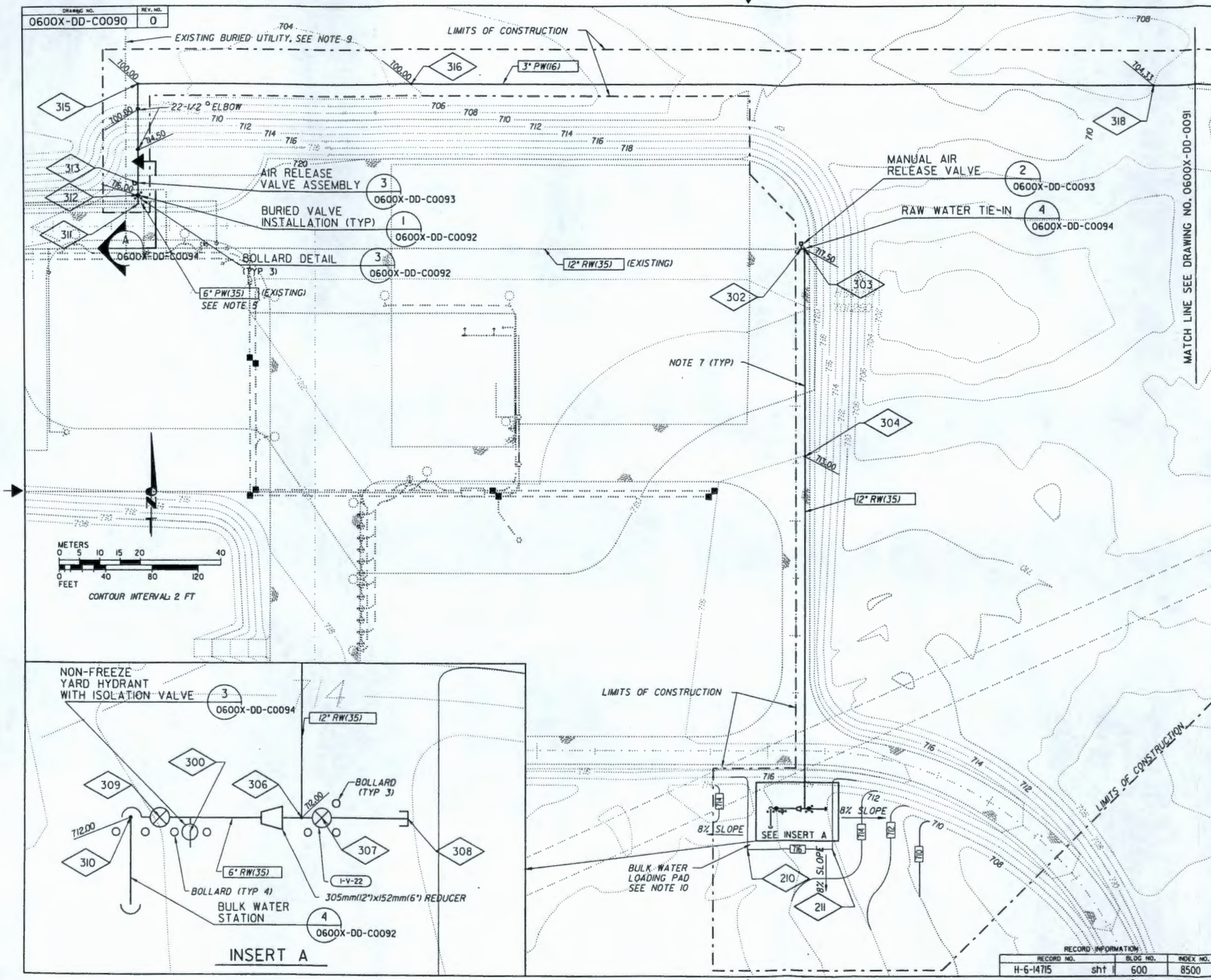

NOTES

1. SURVEY DATUM:
   VERTICAL NAVD 88
   HORIZONTAL NAD 83 (91)
2. MINIMUM BURY FOR ALL PIPES SHALL BE 1.07m (3.50 FT), UNLESS SHOWN OTHERWISE.
3. REFER TO DRAWING 0600X-DD-C0092 FOR PIPE SCHEDULE.
4. CONTRACTOR SHALL PROVIDE ADEQUATE SAMPLE TAPS FOR HYDROSTATIC TESTING AND CHLORINATION.
5. CONTRACTOR SHALL HOT TAP INTO EXISTING POTABLE WATER LINE. TIE-IN LOCATION AND DEPTH IS APPROXIMATE AND SHALL BE FIELD VERIFIED BY THE CONTRACTOR. CONTRACTOR SHALL BE RESPONSIBLE FOR ANY DAMAGE TO EXISTING PIPELINES.
6. PLASTIC MARKING TAPE SHALL BE PLACED OVER ALL NON-METALLIC PIPELINES.
7. WHERE GRAVEL ROADWAYS ARE DISTURBED, CONTRACTOR SHALL PROVIDE 0.51m(20") OF BASE MATERIAL MEETING THE REQUIREMENTS OF WSDOT 9-03.9(3). BASE MATERIAL SHALL BE COMPACTED TO 95% OF MAXIMUM DENSITY.
8. EROSION CONTROL SHALL BE PROVIDED FOR ALL DISTURBED AREAS. SOIL-SEMENT, OR APPROVED EQUAL, SHALL BE USED TO STABILIZE SLOPES GREATER THAN OR EQUAL TO 3H:1V AND THE BULK WATER LOADING PAD. OTHER DISTURBED AREAS SHALL BE COVERED WITH CHIPS AND SLASH LEFT OVER FROM CLEARING OPERATIONS.
9. LOCATE BURIED UTILITY FOR AIR MONITORING STATION AND COORDINATE ANY REQUIRED OUTAGE WITH THE CONTRACTING OFFICER.
10. CONTRACTOR SHALL GRADE BULK WATER LOADING PAD. FILL MATERIAL SHALL BE TAKEN FROM THE DAILY OPERATIONS COVER STOCKPILE AS DIRECTED BY THE CONTRACTING OFFICER.

REV.	DATE	DESCRIPTION	DRAWN BY	DRAFT CHK	DSGN ENGR	ENGR CHK	IN/FTL APPROV	SUP PROJ ENGR
0		ISSUED FOR CONSTRUCTION	PDH		WGB			

SCALE:

U.S. DEPARTMENT OF ENERGY
DOE FIELD OFFICE, RICHLAND
HANFORD ENVIRONMENTAL RESTORATION PROGRAM

BECHTEL HANFORD INC. RICHLAND, WASHINGTON | MONTGOMERY WATSON RICHLAND, WASHINGTON

ENVIRONMENTAL RESTORATION DISPOSAL FACILITY
CELLS 3 & 4 CONSTRUCTION, SITE PREPARATION
YARD PIPING PLAN I, GRADING PLAN

BECHTEL JOB NO.	DOE CONTRACT NO.	CADD FILENAME
22192	DE-AC06-93RL12367	6xdc0090.dgn

TASK	DRAWING NO.	REV. NO.
600	0600X-DD-C0090	0

RECORD INFORMATION

RECORD NO.	BLDG NO.	INDEX NO.
H-6-14715 sht 1	600	8500

0600X-SC-G0016-5-002-01 p15 of 24 148
bdo 11/26/97

DRAWING NO.	REV. NO.
0600X-DD-C0091	0

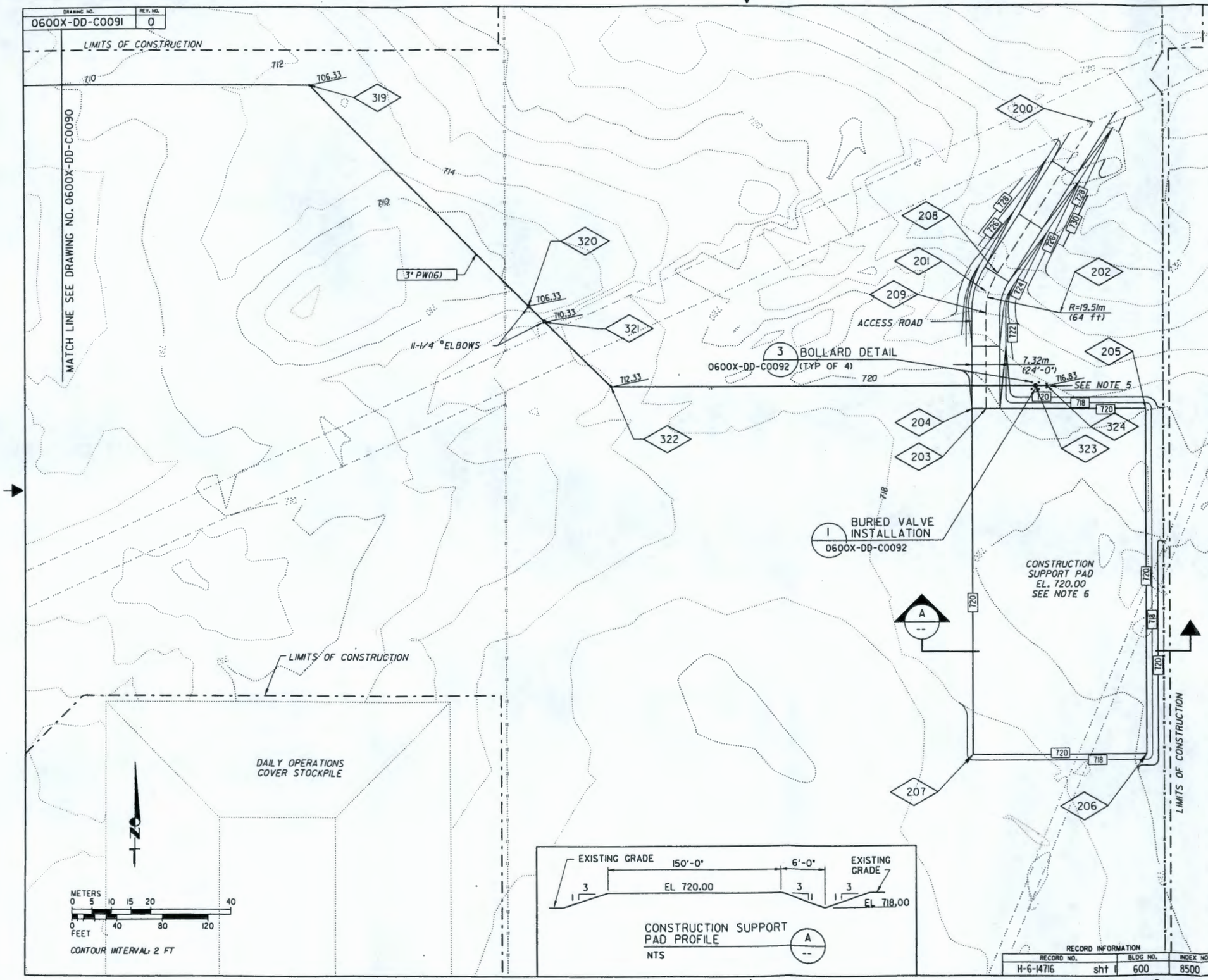

NOTES

1. SURVEY DATUM:
   VERTICAL NAVD 88
   HORIZONTAL NAD 83 (91)
2. MINIMUM BURY FOR ALL PIPES SHALL BE 1.07m (3.50 FT), UNLESS SHOWN OTHERWISE.
3. REFER TO DRAWING 0600X-DD-C0092 FOR PIPE SCHEDULE.
4. CONTRACTOR SHALL PROVIDE ADEQUATE SAMPLE TAPS FOR HYDROSTATIC TESTING AND CHLORINATION.
5. CONTRACTOR SHALL PROVIDE MARKER AT LOCATION OF CAPPED WATER LINE.
6. CONTRACTOR SHALL GRADE CONSTRUCTION SUPPORT PAD AND ASSOCIATED ACCESS ROAD. FILL MATERIAL SHALL BE TAKEN FROM THE DAILY OPERATIONS COVER STOCKPILE AS DIRECTED BY THE CONTRACTING OFFICER. SLOPE EMBANKMENTS 3H:1V UNLESS OTHERWISE SHOWN.
7. PLASTIC MARKING TAPE SHALL BE PLACED OVER ALL NON-METALLIC PIPELINES.
8. EROSION CONTROL SHALL BE PROVIDED FOR ALL DISTURBED AREAS. SOIL-SEMENT, OR APPROVED EQUAL, SHALL BE USED TO STABILIZE SLOPES GREATER THAN OR EQUAL TO 3H:1V, ROADWAYS, AND THE CONSTRUCTION SUPPORT PAD. OTHER DISTURBED AREAS SHALL BE COVERED WITH CHIPS AND SLASH LEFT OVER FROM CLEARING OPERATIONS.

REV.	DATE	DESCRIPTION	DRAWN BY	DRAFT CHK.	DNG/ ENGR	ENGR CHK.	CL/TD. APPROV	BHI PROJ ENGR
0		ISSUED FOR CONSTRUCTION	PDH		MCB			

SCALE:

U.S. DEPARTMENT OF ENERGY
DOE FIELD OFFICE, RICHLAND
HANFORD ENVIRONMENTAL RESTORATION PROGRAM

BECHTEL HANFORD INC. RICHLAND, WASHINGTON | MONTGOMERY WATSON RICHLAND, WASHINGTON

ENVIRONMENTAL RESTORATION DISPOSAL FACILITY
CELLS 3 & 4 CONSTRUCTION, SITE PREPARATION
YARD PIPING PLAN II, GRADING PLAN

BECHTEL JOB NO.	DOE CONTRACT NO.	CADD FILENAME
22192	DE-AC06-93RL12367	6xdc0091.dgn

TASK	DRAWING NO.	REV. NO.
600	0600X-DD-C0091	0

HANFORD

RECORD INFORMATION

RECORD NO.		BLDG NO.	INDEX NO.
H-6-14716	sht 1	600	8500

0600X-SC-G0016-5.002-01 p16 of ~~24~~ 148
11/26/97 bdo

DRAWING NO.	REV. NO.
0600X-DD-C0092	0

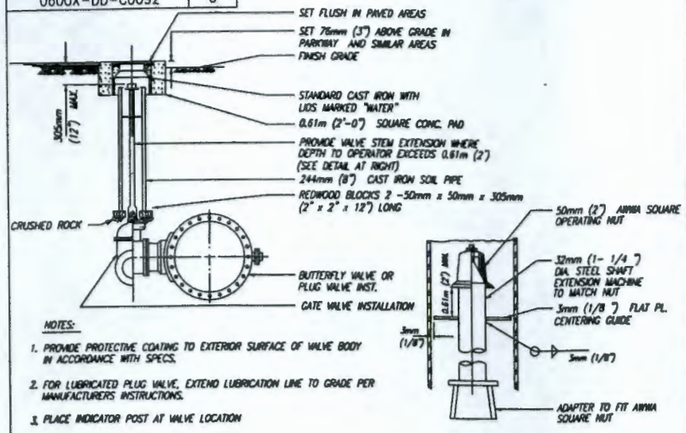

NOTES:

1. PROVIDE PROTECTIVE COATING TO EXTERIOR SURFACE OF VALVE BODY IN ACCORDANCE WITH SPECS.
2. FOR LUBRICATED PLUG VALVE, EXTEND LUBRICATION LINE TO GRADE PER MANUFACTURERS INSTRUCTIONS.
3. PLACE INDICATOR POST AT VALVE LOCATION

BURIED VALVE INSTALLATION — 1 / VAR

NTS

1. ALTERNATIVE TRENCH SECTIONS (A,B, AND C) ARE FOR USE ONLY WHERE STABLE, COMPACT SOIL CONDITIONS EXIST.
   A. VERTICAL TRENCH WALLS - SECTION
      1. THE NEED FOR PROTECTIVE SYSTEMS SHALL BE DETERMINED IN ACCORDANCE WITH THE FEDERAL STANDARDS AND REGULATIONS.
      2. PROTECTIVE SYSTEMS SHALL BE DESIGNED AND BUILT IN ACCORDANCE WITH APPLICABLE FEDERAL STANDARDS AND REGULATIONS.
   B. SLOPING TRENCH WALLS - SECTION
      1. SLOPING TRENCH WALL SECTION SHALL NOT BE USED WITHOUT APPROVAL OF THE CONTRACTING OFFICER, UNLESS SPECIFICALLY DESIGNATED ON PLANS OR SPECIFICATIONS.
      2. UNSUPPORTED SLOPING TRENCH WALLS SHALL NOT BE STEEPER THAN ALLOWED BY APPLICABLE SAFETY STANDARDS AND REGULATIONS.
   C. COMBINATION OF VERTICAL AND SLOPING TRENCH WALLS - SECTION
      1. TRENCH DEPTHS NOT EXCEEDING 1.22m (4 FT) SHALL HAVE VERTICAL WALLS IN PIPE ZONE UNLESS OTHERWISE APPROVED, BY THE CONTRACTING OFFICER, OR WHERE SPECIFIED.
      2. FOR TRENCHES WITH COMBINED WALLS AND ANY DEPTH EXCEEDING 1.22m (4 FT), DESIGN CALCULATIONS BY A REGISTERED CIVIL ENGINEER AND APPROVAL BY GOVERNING AGENCY OF SUPPORTED METHODS ARE REQUIRED.
2. WHERE WET, UNSTABLE OR RUNNING SOIL IS ENCOUNTERED, A SYSTEM SHALL BE DESIGNED AND BUILT IN ACCORDANCE WITH APPLICABLE SAFETY STANDARDS AND REGULATIONS TO PROTECT EMPLOYEES AND PREVENT CAVE INS.
3. WHERE TRENCH SECTIONS CROSS ROADWAYS, THE CONTRACTOR SHALL CUT EXISTING ASPHALT AS NECESSARY FOR TRENCH EXCAVATION. AFTER BACKFILLING THE TRENCH AND PRIOR TO PLACING NEW ASPHALT, THE EDGE OF THE EXISTING ASPHALT SHALL BE CLEANED AND AN APPROVED BINDER SHALL BE APPLIED. THE CONTRACTOR SHALL LAY A MINIMUM OF 152mm (6") NEW ASPHALT WHICH SHALL BE PLACED IN TWO SEPARATE LAYERS OF 76mm (3") EACH. EACH LAYER SHALL BE COMPACTED. TO 96% DENSITY. PRIOR TO PLACING ASPHALT, THE CONTRACTOR SHALL SUBMIT MIX FOR APPROVAL.
4. THE TRENCH WIDTH SHOWN APPLIES ONLY TO PIPE 610mm (24") AND SMALLER. SEE SPECS SECTION 02210 FOR PIPES LARGER THAN 610mm (24").

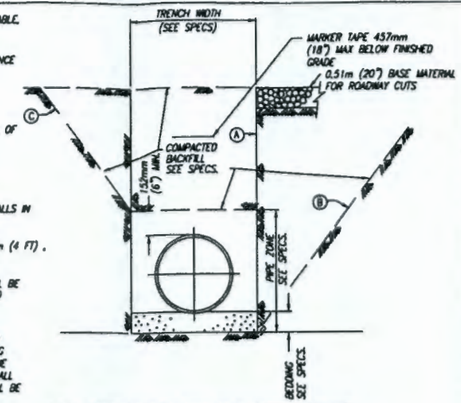

NOTE: TRENCH SECTIONS SHOWN DO NOT DESIGNATE PAY LINES.

TYPICAL TRENCH SECTION — 2 / VAR

NTS

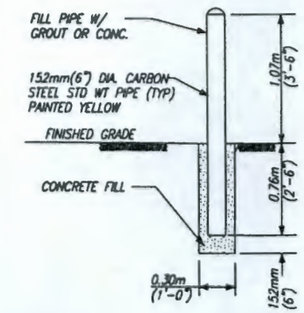

BOLLARD DETAIL — 3 / VAR

NTS

NOTES

1. NOT USED.
2. FOR FIELD TEST PROCEDURES AND ADDITIONAL TEST REQUIREMENTS, SEE PIPING SECTION OF SPECIFICATIONS.
3. ANY ALLOWABLE DEVIATION FROM THE PIPING MATERIALS OR FILED TEST REQUIREMENTS SHOWN WILL BE NOTED IN THE SPECIFICATIONS OR ON THE DRAWINGS.
4. FOR VALVES 203mm (8 INCHES) AND LARGER SEE VALVE SCHEDULE. FOR SPECIAL VALVES SEE SPECIFICATIONS.

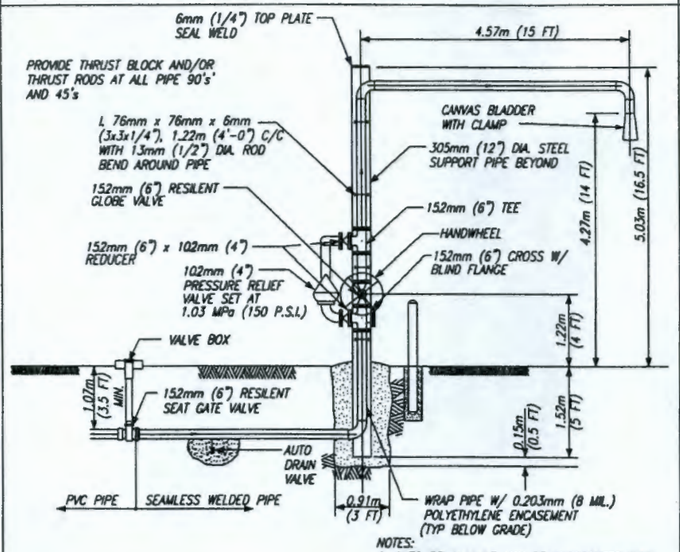

NOTES:

1. AUTO DRAIN VALVE MAY BE SUBSTITUTED WITH MECH. VALVE W/ VALVE BOX AT CONTRACTOR'S OPTION.
2. PAINT PIPES AND SUPPORTS YELLOW. ALKYD ENAMEL PAINT, MIN SOLIDS CONTENT 49%. PRIMER AS RECOMMENDED BY MANUFACTURER.

BULK WATER STATION — 4 / 0600X-DD-C0090

NTS

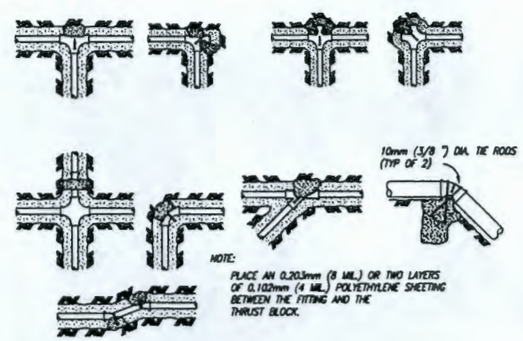

NOTE:

PLACE AN 0.203mm (8 MIL.) OR TWO LAYERS OF 0.102mm (4 MIL.) POLYETHYLENE SHEETING BETWEEN THE FITTING AND THE THRUST BLOCK.

PVC & DUCTILE IRON PIPE 1.03 MPa (150 PSI) TEST PRESSURE

TABLE FOR BEARING AREAS OF THRUST BLOCKS

PIPE SIZE	TEES AND DEAD ENDS *	90 DEGREE BEND *	45 DEGREE BEND *	11-1/4 DEGREE 22-1/2 DEGREE BEND *
102mm (4") & LESS	0.09sqm (0.94)	0.12sqm (1.33)	0.07sqm (0.76)	0.04sqm (0.38)
152mm (6")	0.20sqm (2.12)	0.28sqm (3.01)	0.16sqm (1.71)	0.08sqm (0.86)
203mm (8")	0.36sqm (3.83)	0.50sqm (5.40)	0.29sqm (3.08)	0.15sqm (1.54)
254mm (10")	0.55sqm (5.93)	0.78sqm (8.40)	0.44sqm (4.73)	0.21sqm (2.39)
305mm (12")	0.79sqm (8.48)	1.12sqm (12.0)	0.64sqm (6.83)	0.23sqm (3.46)
356mm (14")	1.07sqm (11.5)	1.52sqm (16.40)	0.87sqm (9.30)	0.44sqm (4.68)
406mm (16")	1.40sqm (15.08)	2.00sqm (21.41)	1.13sqm (12.14)	0.57sqm (6.10)

* ALL BEARING AREAS IN SQUARE METERS (SQUARE FEET).

THRUST BLOCK NOTES:

1. CONCRETE THRUST BLOCKING SHALL BE POURED AGAINST UNDISTURBED EARTH.
2. KEEP CONCRETE CLEAR OF JOINT AND ACCESSORIES.
3. BEARING LOAD IS CALCULATED AT 95 KPa (2,000 LB. PER SQ. FT.)
4. FOR OTHER PRESURES, MULTIPLY TABLE BY RATIO OF NEW PRESSURE TO 1.03MPa (150 psi) (I.E. 250/150 = 1.67)
5. USE MAXIMUM INTERNAL PRESSURE ANTICIPATED (I.e., HYDROSTATIC TEST PRESSURE).
6. ARROW (↓) INDICATES THRUST DIRECTION.
7. CONCRETE FOR THRUST BLOCKS SHALL BE MINIMUM 17.2 MPa (2500 psi) STRENGTH.

CONCRETE THRUST BLOCKS FOR DUCTILE IRON AND P.V.C. PIPE — 5 / VAR

NTS

VALVE SCHEDULE (203mm (8") AND LARGER)

VALVE NO.	LOCATION	SERVICE	TYPE	SIZE	PRESSURE	OPERATOR
1-V-22	RAW WATER LINE	RAW WATER	GATE VALVE, BURIED	305 mm (12 in)	1.38 MPa (200 psi)	51mm (2") SQUARE NUT

FLUID ABBREVIATION	FUNCTION	PIPING MATERIALS (SEE SCHEDULE AT RIGHT)				FIELD TEST REQUIREMENTS (SEE NOTES 2 AND 3 IN NOTES COLUMN)		
		EXPOSED PIPING		BURIED PIPING		MINIMUM TEST PRESSURE MPa (PSI)	TEST MEDIUM	LEAKAGE ALLOWANCE
		51mm (2") DIA. AND SMALLER	64mm (2-1/2") DIA. AND LARGER	51mm (2") DIA. AND SMALLER	64mm (2-1/2") DIA. AND LARGER			
PW	POTABLE WATER	2	--	2	16	1.03 (266)	WATER	SEE SPECS
RW	RAW WATER (NON-POTABLE)	2	6	2	6, 35	1.03 (266)	WATER	SEE SPECS

PIPING MATERIAL SCHEDULE (SEE NOTE 3)

GROUP NO.	PIPE	FITTINGS	VALVES, 152mm (6") AND SMALLER (SEE NOTE 4 IN NOTES COLUMN)
2	STEEL, ASTM A53, SCHEDULE 40 WELDED, GALVANIZED.	MALLEABLE IRON, ANSI B16.3, THREADED, BANDED, GALVANIZED, 300 psi.	SEE SPECS
6	STEEL, ASTM A53, SCHEDULE 40, SEAMLESS, BLACK	STEEL, ANSI B16.9 BUTT-WELDED	SEE SPECS
16	POLYVINYL CHLORIDE, SCHEDULE 80, NORMAL IMPACT, ASTM D1785	POLYVINYL CHLORIDE, SCHEDULE 80, NORMAL IMPACT, SOCKET SOLVENT WELD JOINTS, ASTM D2467.	SEE SPECS
35	POLYVINYL CHLORIDE TYPE 1, GRADE 1, 18 ASTM D-1784 AWWA C-900	SHORT BODY CAST IRON OR DUCTILE IRON AWWA C110	SEE SPECS

TYPICAL PIPE DESIGNATION:

2" UW (24)

MATERIAL GROUP NUMBER — PIPE DIAMETER — FLUID ABBREVIATION

RECORD INFORMATION

RECORD NO.	BLDG NO.	INDEX NO.
H-6-14717 sht 1	600	8500

REV.	DATE	DESCRIPTION	DRAWN BY	DWFT CHK	ENGR/ CHIEF	CHIEF CHK	QL/TSL APPROV	Rel CHIEF
0		ISSUED FOR CONSTRUCTION	PDH		MGB			

SEALS

U.S. DEPARTMENT OF ENERGY
DOE FIELD OFFICE, RICHLAND
HANFORD ENVIRONMENTAL RESTORATION PROGRAM

BECHTEL HANFORD INC. RICHLAND, WASHINGTON | MONTGOMERY WATSON RICHLAND, WASHINGTON

ENVIRONMENTAL RESTORATION DISPOSAL FACILITY
CELLS 3 & 4 CONSTRUCTION, SITE PREPARATION
CIVIL DETAILS I

BECHTEL JOB NO.	DOE CONTRACT NO.	CADD FILENAME
22192	DE-AC06-93RL12367	6xdc0092.DWG

TASK	DRAWING NO.	REV. NO.
600	0600X-DD-C0092	0

HANFORD

0600X-SC-G0016-5-002-01 p 17 g ~~24~~ 148
11/26/97 bds

DRAWING NO.	REV. NO.
0600X-DD-C0093	0

TWISTED AND BARBED SELVAGE

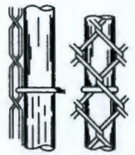

PIPE POST TIE

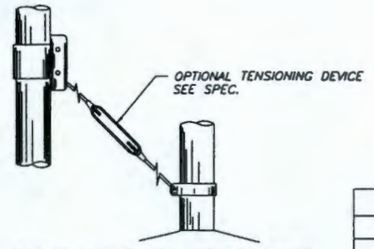

BRACE AND TRUSS CONNECTIONS

HEIGHT OF FABRIC	DEPTH OF POSTS	LENGTH OF END, CORNER OR PULL POSTS	LENGTH OF LINE POSTS	SIZE OF POSTS (O.D.)				
				END, CORNER & PULL		LINE POST (MIN. SIZE)		
				PIPE OPTION	RECTANGULAR OPTION	PIPE OPTION	H POST OPTION	POST OPTION
1.83m (6')	SEE DETAIL	2.74m (9')+	2.64m (8'-8")	76mm (3")	89mm (3 1/2")	64mm (2 1/2")	48mm X 41mm (1 7/8" X 1 5/8")	52mm X 43mm (2 1/16" X 1 11/16")

GATES			
GATE POSTS AND GATE FRAMES			
HEIGHT	GATE OPENING	GATE POST	GATE FRAME
1.83m (6 FT) AND OVER	SINGLE TO 1.83m (6 FT) OR DOUBLE TO 3.66m (12 FT)	64mm (2 1/2")	51mm (2")
	SINGLE OVER 1.83m (6 FT) TO 3.96m (13 FT) OR DOUBLE OVER 3.66m (12 FT) TO 7.32m (24 FT)	102mm (4")	
	SINGLE OVER 3.96m (13 FT) TO 5.49m (18 FT) OR DOUBLE OVER 7.32m (24 FT) TO 10.97m (36 FT)	152mm (6")	
	SINGLE OVER 5.49m (18 FT) OR DOUBLE 10.97m (36 FT)	203mm (8")	

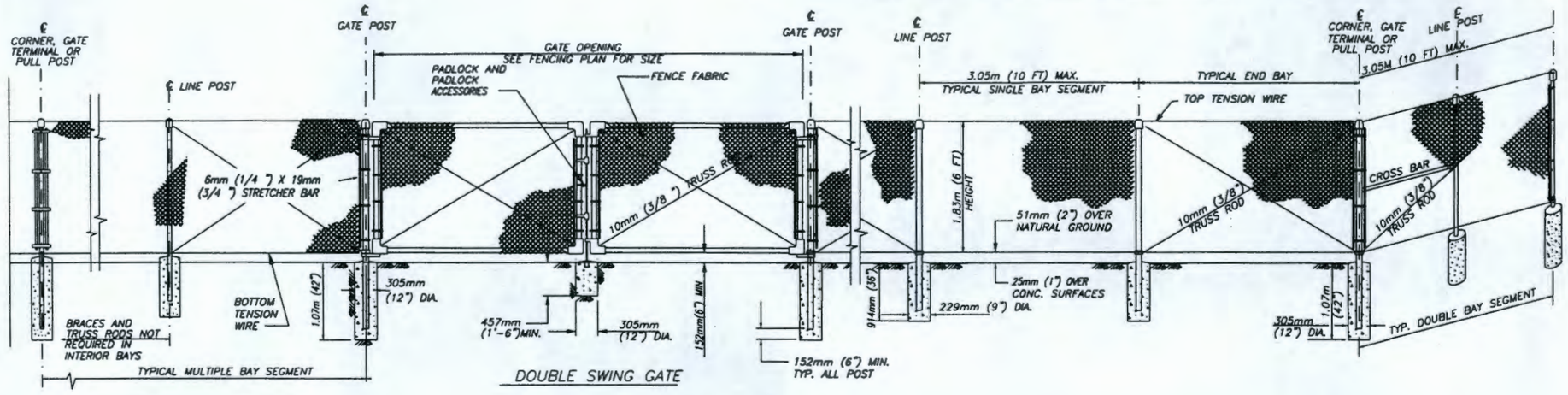

DOUBLE SWING GATE

GATE AND FENCE DETAIL (1) 0600X-DD-C0089
NTS

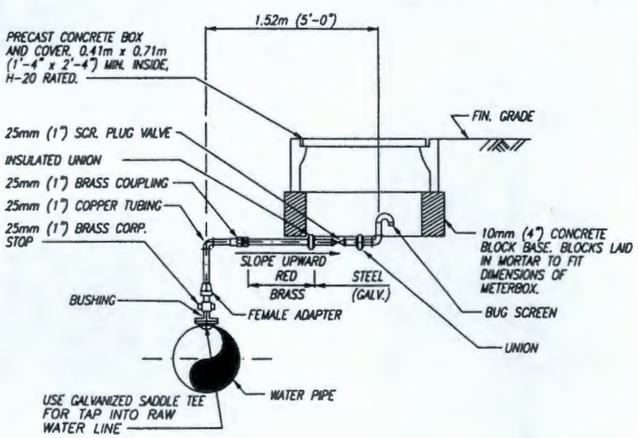

25mm (1") MANUAL AIR RELEASE VALVE (2) 0600X-DD-C0090
NTS

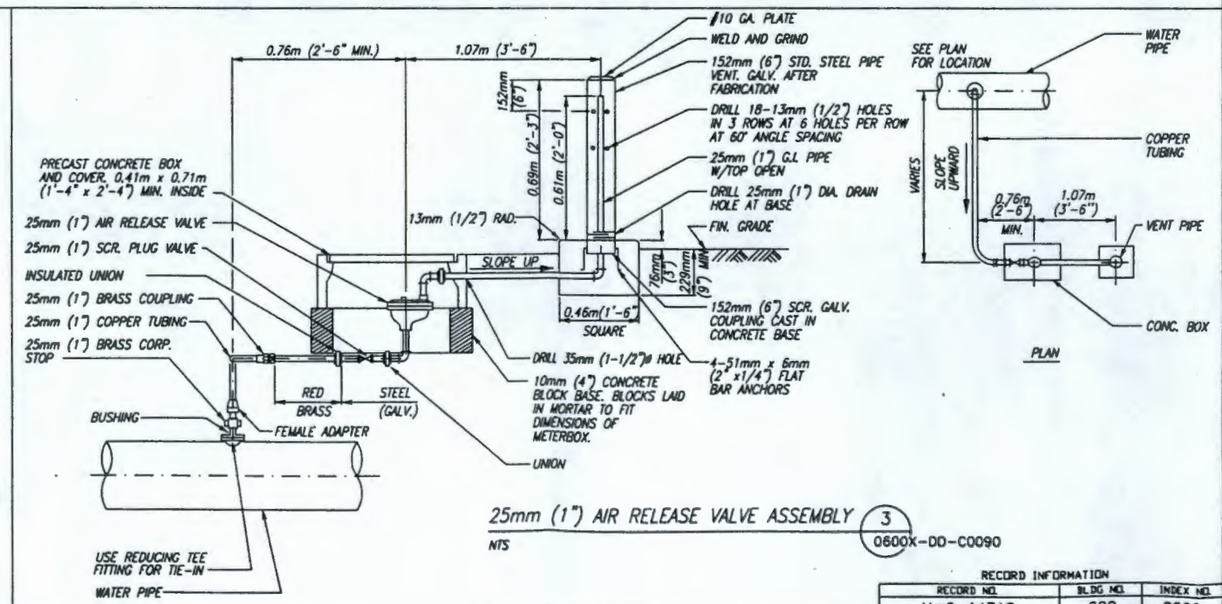

25mm (1") AIR RELEASE VALVE ASSEMBLY (3) 0600X-DD-C0090
NTS

NOTES

REV.	DATE	DESCRIPTION	DRAWN BY	DRAFT CHK	DESIG/ ENG'R	ENG'R CHK	QA/TBL APPROV	DOE PROJ ENG'R
0		ISSUED FOR CONSTRUCTION	PDH		MGB			

SCALE:

U.S. DEPARTMENT OF ENERGY
DOE FIELD OFFICE, RICHLAND
HANFORD ENVIRONMENTAL RESTORATION PROGRAM

BECHTEL HANFORD INC. RICHLAND, WASHINGTON | MONTGOMERY WATSON RICHLAND, WASHINGTON

ENVIRONMENTAL RESTORATION DISPOSAL FACILITY
CELLS 3 & 4 CONSTRUCTION, SITE PREPARATION
CIVIL DETAILS II

BECHTEL JOB NO.	DOE CONTRACT NO.	CADD FILENAME
22192	DE-AC06-93RL12367	6xdc0093.DWG

TASK	DRAWING NO.	REV. NO.
600	0600X-DD-C0093	0

HANFORD

RECORD INFORMATION

RECORD NO.	BLDG NO.	INDEX NO.
H-6-14718	600	0200

0600X-SC-G00116-5.002-01 p 18 of 24 148
bds 11/26/97

DRAWING NO.	REV. NO.
0600X-DD-C0094	0

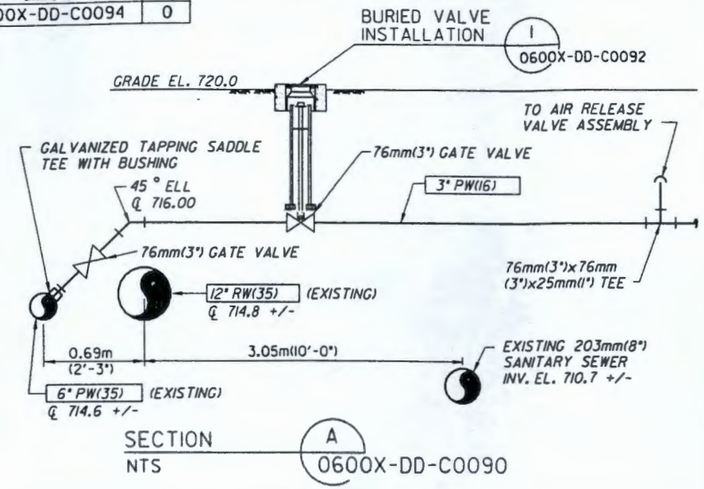

SECTION A
NTS 0600X-DD-C0090

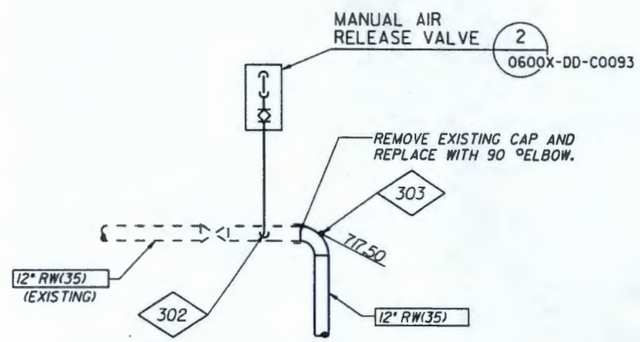

RAW WATER TIE-IN 4
NTS 0600X-DD-C0090

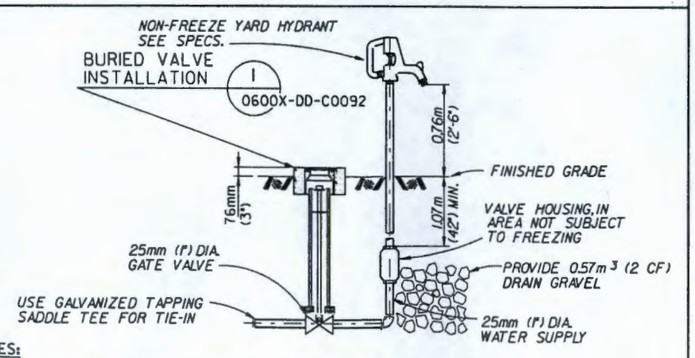

NOTES:

1. PROVIDE WARNING SIGN FOR NON-POTABLE WATER. MATCH EXISTING.

NON-FREEZE YARD HYDRANT WITH ISOLATION VALVE 3
NTS 0600X-DD-C0090

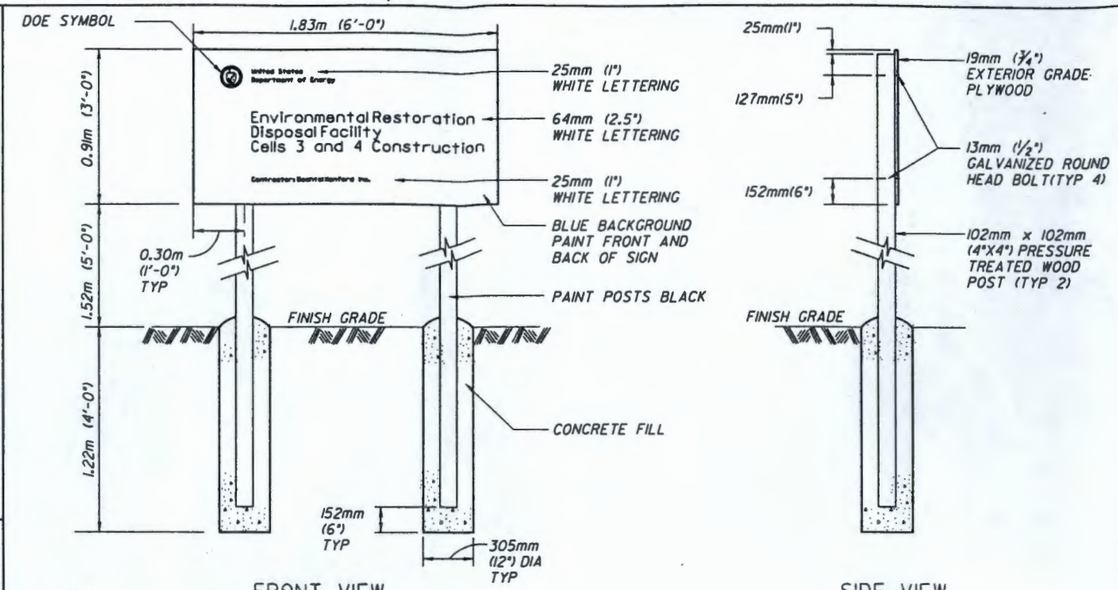

FRONT VIEW

SIDE VIEW

NOTES:

1. TYPEFACE SHALL BE HELVETICA.
2. SIGN LAYOUT AND COLORS SHALL BE IN ACCORDANCE WITH DOE's GRAPHIC DESIGN STANDARD. STANDARD IS AVAIBLE FROM THE CONTRACTING OFFICER.

INTERSECTION SIGN 1
NTS 0600X-DD-C0087

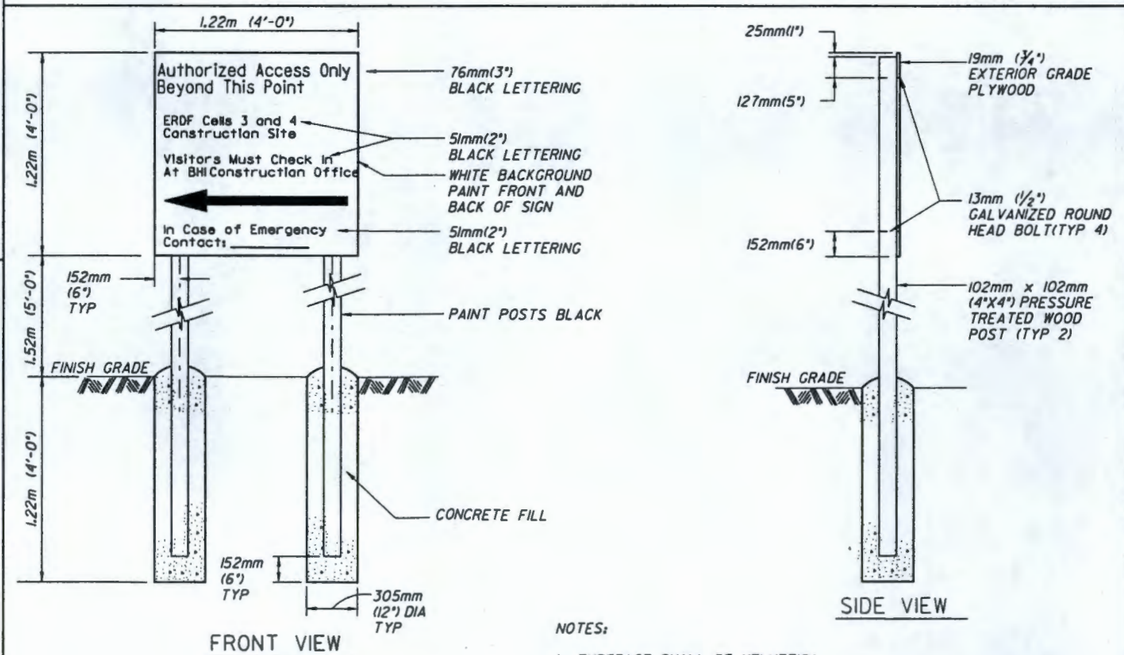

FRONT VIEW

SIDE VIEW

NOTES:

1. TYPEFACE SHALL BE HELVETICA.
2. SIGN LAYOUT AND COLORS SHALL BE IN ACCORDANCE WITH DOE's GRAPHIC DESIGN STANDARD. STANDARD IS AVAIBLE FROM THE CONTRACTING OFFICER.

ENTRANCE SIGN 2
NTS 0600X-DD-C0087

NOTES

REV.	DATE	DESCRIPTION	DRAWN BY	DRAFT CHK	DRG/ ENGR	CHK'R CHK	DL/TDL APPROV	BH PROJ ENGR
0		ISSUED FOR CONSTRUCTION	PDH		MGB			

SCALE:

U.S. DEPARTMENT OF ENERGY
DOE FIELD OFFICE, RICHLAND
HANFORD ENVIRONMENTAL RESTORATION PROGRAM

BECHTEL HANFORD INC. RICHLAND, WASHINGTON | MONTGOMERY WATSON RICHLAND, WASHINGTON

ENVIRONMENTAL RESTORATION DISPOSAL FACILITY
CELLS 3 & 4 CONSTRUCTION, SITE PREPARATION
CIVIL DETAILS III

BECHTEL JOB NO.	DOE CONTRACT NO.	CADD FILENAME
22192	DE-AC06-93RL12367	6xdc0094.dgn

HANFORD	TASK	DRAWING NO.	REV. NO.
	600	0600X-DD-C0094	0

RECORD INFORMATION

RECORD NO.	BLDG NO.	INDEX NO.
H-6-14719 sht 1	600	8500

06DDX-SC-G0016-5-002-01 p18 of 148
11/26/97 bds

DRAWING NO.	REV. NO.
0600X-DD-E0032	0

PLAN

- GROUND BUS
- EXPOSED CONDUIT
- CONDUIT CONCEALED ABOVE FLOOR.
- CONDUIT RUN UNDERGROUND OR IN CONCRETE
- EXPOSED CONDUIT RUN BEHIND OBSTRUCTION
- BARE COPPER GROUND TO GROUND WIRE IN SLAB, OR UNDERGROUND GROUND GRID, SIZE AS NOTED.
- UNDERGROUND TELEMETRY CONDUIT
- LP1-1, 3, 7 — HOME RUN TO PANEL "LP1", CIRCUITS #1, 3, 7. CONDUCTORS SHALL BE NO. 12 UNLESS OTHERWISE NOTED. CONDUIT SHALL BE 3/4", UNLESS OTHERWISE NOTED. CONDUIT SIZES NOT IDENTIFIED SHALL BE 3/4" MINIMUM WITH 2#12. G INDICATES GROUND WIRE.
- T — TELEPHONE CONDUIT ONLY. "UNLESS OTHERWISE NOTED".
- CONDUIT RUN - CHANGE IN ELEVATION
- CONDUIT BENDS TOWARD OBSERVER
- CONDUIT BENDS AWAY FROM OBSERVER
- CONDUIT CAPPED, OR SEALED
- FLEXIBLE LIQUID - TIGHT CONDUIT CONNECTION
- C135 — INDICATES CONDUIT NUMBER
- 2a — CEILING OR PENDANT INCANDESCENT, MERCURY VAPOR, OR SIMILAR LAMP FIXTURE. "2" INDICATES CIRCUIT NUMBER. "a" INDICATES FIXTURE CONTROLLED BY SWITCH "a".
- WALL BRACKET INCANDESCENT, MERCURY VAPOR, OR SIMILAR LAMP FIXTURE WITH EXPOSED BACK BOX AND CONDUIT.
- WALL BRACKET FLOOD OR SPOTLIGHT WITH CONCEALED BACK BOX AND CONDUIT.
- J — POLE MOUNTED FIXTURE DISTRIBUTION TYPE AS INDICATED ON PLAN
- A 2/40 3 — FIXTURE TYPE A. 2-40 WATT LAMPS 3 - NUMBER OF TYPE "A" FIXTURES
- FLUORESCENT LIGHTING FIXTURE, UNSWITCHED (SWITCHED AT LIGHTING PANEL ONLY)
- E — FLUORESCENT LIGHTING FIXTURE ON EMERGENCY CIRCUIT
- FLUORESCENT LIGHTING FIXTURE
- BATTERY EMERGENCY LIGHT FIXTURE
- S_a — SINGLE POLE SWITCH. "a" INDICATES CIRCUIT CONTROLLED
- S_2 — DOUBLE POLE SWITCH
- S_3 — THREE-WAY SWITCH
- S_4 — FOUR-WAY SWITCH
- S_K — KEY-OPERATED SWITCH
- S_P — SWITCH AND PILOT LIGHT
- S_M — MANUAL MOTOR STARTER

WALL	FLOOR	
		120V SINGLE RECEPTACLE, NEMA CONFIGURATION 5-20.
		120V DUPLEX RECEPTACLE, NEMA CONFIGURATION 5-20
		240V DUPLEX RECEPTACLE, NEMA CONFIGURATION 6-20
		SINGLE SPECIAL-PURPOSE RECEPTACLE, ASTERISK INDICATES NUMBER, SUCH AS AMPERAGE, TO DIFFERENTIATE BETWEEN TWO OR MORE DIFFERENT TYPES. 120 OR 240 V.A.C.

- 240V SINGLE RECEPTACLE, NEMA CONFIGURATION 6-20
- WELDING RECEPTACLE, 100A, 2W, 3P MOUNT 42" ABOVE FLOOR
- SINGLE SPECIAL PURPOSE RECEPTACLE 480 VAC
- C — CLOCK HANGER RECEPTACLE
- LIGHTING PANEL
- POWER PANEL
- MOTOR CONTROL CENTER
- FLOOR TYPE TELEPHONE OUTLET
- PUBLIC TELEPHONE SYSTEM DEVICE
- PRIVATE TELEPHONE (ANY TYPE) SYSTEM DEVICE
- DISCONNECT SWITCH
- MOTOR STARTER
- M — MOTOR
- SS — PUSHBUTTON STATION "SS" START-STOP, "LOS" LOCKOUT-STOP, "SLOS" START-LOCKOUT-STOP
- JB — RACEWAY BOX "HH" HANDHOLE "JB" JUNCTION BOX "PB" PULLBOX "TB" TERMINAL BOX
- J — JUNCTION BOX OR FITTING
- PSL-1 — FIELD INSTRUMENT I.E. "PSL" PRESSURE SWITCH "LSH" LEVEL SWITCH "SV" SOLENOID VALVE
- SV — SOLENOID VALVE
- T — THERMOSTAT
- H — HEATER
- HORN
- 1 — DENOTES REFERENCE TO NOTE 1 I.E. - " SEE NOTE 1 "
- GROUND ROD 3/4" x 10" - 0" (UNLESS OTHERWISE NOTED)
- GROUND ROD AND GROUND WELL
- GROUND CONNECTION BOLTED TYPE
- GROUND CONNECTION - EXOTHEMIC TYPE
- M — MOTOR OPERATED VALVE

SINGLE LINE DIAGRAM

- BUS
- 2 — ACROSS-THE-LINE, NON-REVERSING NEMA SIZE 2 MAGNETIC STARTER
- 30A — CONTACTOR, SIZE AS NOTED
- 50A / OR / 225AF 125AT — MOLDED CASE CIRCUIT BREAKER, 3 POLE UNLESS OTHERWISE NOTED: 50A.-TRIP RATING IN AMPERE NA- NON-AUTOMATIC MCP - MOTOR CIRCUIT PROTECTOR AT-TRIP RATING (125 AMPS NOTED)
- 52 — MEDIUM OR HIGH VOLTAGE DRAWOUT BREAKER
- DRAWOUT BREAKER, SIZE AS NOTED EO - DENOTES ELECTRICALLY OPERATED
- MEDIUM OR HIGH VOLTAGE STARTER
- SURGE ARRESTOR
- 10 — MOTOR - 10 HP NOTED

- 480/120V — TRANSFORMER WITH GROUNDED SECONDARY, KVA SIZE & VOLTAGE RATIO AS NOTED.
- PT (2) — POTENTIAL TRANSFORMER, RATIO AND NUMBER OF PT'S AS NOTED
- CT 100/5 (3) — CURRENT TRANSFORMER, RATIO AND NUMBER OF CT'S AS NOTED
- I — ELECTRICAL INTERLOCK
- ELECTRICAL ENCLOSURE OUTLINE
- MOV — ELECTRICAL MOTOR OPERATED VALVE, WITH INTEGRAL REVERSING STARTER
- DISCONNECT SWITCH, SIZE AS NOTED
- FUSED DISCONNECT SWITCH
- 10 KVAR — CAPACITOR, KVAR AS NOTED
- KWH DM — KILOWATTHOUR METER WITH DEMAND REGISTER
- AM — AMMETER
- VM — VOLTMETER
- PF — POWER FACTOR METER
- VAR — VARMETER
- AS — AMMETER SWITCH
- VS — VOLTMETER SWITCH

SCHEMATIC DIAGRAM

- CONTROL RELAY OR COIL
  - EXAMPLE: TD2 TIME DELAY RELAY NO. 2; CR1 CONTROL RELAY; 1M STARTER NO. 1 MAIN COIL
- N.O. CONTACT
- N.C. CONTACT
- TORQUE SWITCH (SPECIFY WHEN OPEN)
- NORMALLY OPEN LIMIT SWITCH
- NORMALLY CLOSED LIMIT SWITCH
- FLOAT TYPE LIQUID LEVEL SWITCH, CLOSING ON RISING LEVEL
- FLOAT TYPE LIQUID LEVEL SWITCH, OPENING ON RISING LEVEL
- VACUUM OR PRESSURE SWITCH, CLOSING ON RISING PRESSURE
- VACUUM OR PRESSURE SWITCH, OPENING ON RISING PRESSURE
- TEMPERATURE ACTUATED SWITCH; CLOSING ON RISING TEMPERATURE
- TEMPERATURE ACTUATED SWITCH; OPENING ON RISING TEMPERATURE
- FLOW SWITCH (AIR, WATER, ETC.); CLOSING ON FLOW INCREASE
- FLOW SWITCH (AIR, WATER, ETC.); OPENING ON FLOW INCREASE
- NORMALLY OPEN PUSHBUTTON, MOMENTARY CLOSE
- NORMALLY CLOSED PUSHBUTTON, MOMENTARY OPEN

- NO/NC MAINTAINED PUSHBUTTON
- ON OFF — TWO-POSITION SELECTOR SWITCH: H-HAND, M-MANUAL, R-REMOTE, L-LOCAL, A-AUTOMATIC, O-OFF
- H O A — THREE-POSITION SELECTOR SWITCH. (SAME AS ABOVE)
- THREE-POSITION SPRING RETURN-TO-CENTER MOMENTARY CONTACT SWITCH ("LATCH-UNLATCH," "ON-OFF," ETC.)
- SINGLE POLE TOGGLE SWITCH ("ON-OFF", ETC.)
- OL — OVERLOAD RELAY CONTACTS (MAGNETIC)

TIMED CONTACTS - CONTACT ACTION DELAYED AFTER COIL IS:

ENERGIZED

- NORMALLY OPEN WITH TIME DELAY CLOSING
- NORMALLY CLOSED WITH TIME DELAY OPENING

DE-ENERGIZED

- NORMALLY OPEN WITH INSTANT CLOSING AND TIME DELAY OPENING
- NORMALLY CLOSED WITH INSTANT OPENING AND TIME DELAY CLOSING
- MANUAL MOTOR STARTER WITH OVERLOAD PROTECTION
- FUSE
- RES — RESISTOR (FIXED) POTENTIOMETER TYPE
- RESISTOR (CONTINUOUSLY ADJUSTABLE)
- R — PUSH-TO-TEST INDICATING LIGHT
- ETM — ELAPSED TIME METER
- HEATER
- CROSSING OF CONDUCTORS-NOT CONNECTED
- CONNECTION OF CONDUCTORS, FITTING AS REQUIRED
- DISCONNECT SWITCH
- GROUND CONNECTION
- SURGE SUPPRESSOR
- ELECTRICAL CORD CONNECTOR
- G — INDICATING LIGHT G - GREEN R - RED A - AMBER
- SIGNAL ISOLATOR
- M — SIGNAL PHASE MOTOR
- GFI — GROUND FAULT

NOTES

REV.	DATE	DESCRIPTION	DRAWN BY	DRAFT DATE	DES/CHK'D	ENG'R DATE	G.I./T.S. APPROV	DOE PROJ CHK'D
0		ISSUED FOR CONSTRUCTION	PDH		SIL			

SCALE:-

U.S. DEPARTMENT OF ENERGY
DOE FIELD OFFICE, RICHLAND
HANFORD ENVIRONMENTAL RESTORATION PROGRAM

BECHTEL HANFORD INC. RICHLAND, WASHINGTON | MONTGOMERY WATSON RICHLAND, WASHINGTON

ENVIRONMENTAL RESTORATION DISPOSAL FACILITY
CELLS 3 & 4 CONSTRUCTION, SITE PREPARATION
ELECTRICAL SYMBOLS

BECHTEL JOB NO.	DOE CONTRACT NO.	CADD FILENAME
22192	DE-AC06-93RL12367	6xde0032.DWG

TASK	DRAWING NO.	REV. NO.
600	0600X-DD-E0032	0

HANFORD

RECORD INFORMATION

RECORD NO.	BLDG NO.	INDEX NO.
H-6-14813	600	8001

0600X-SC-G0016-5-002-01 p20 of 148 bdw 11/26/97

DRAWING NO.	REV. NO.
0600X-DD-E0034	0

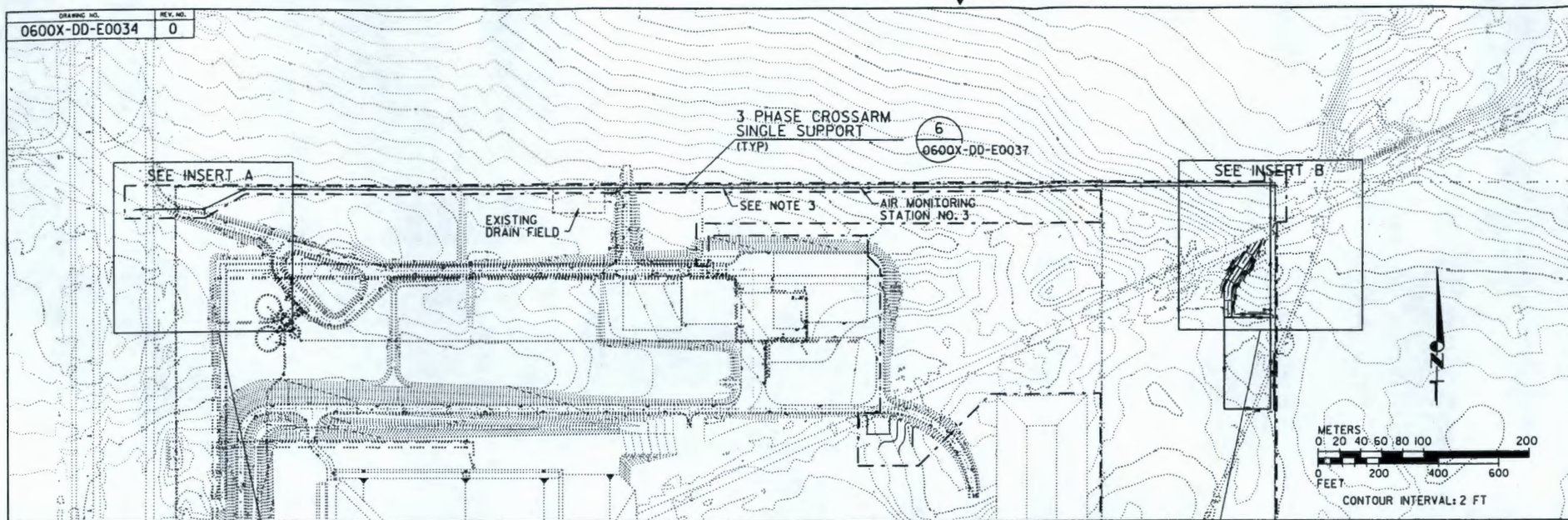

PLAN

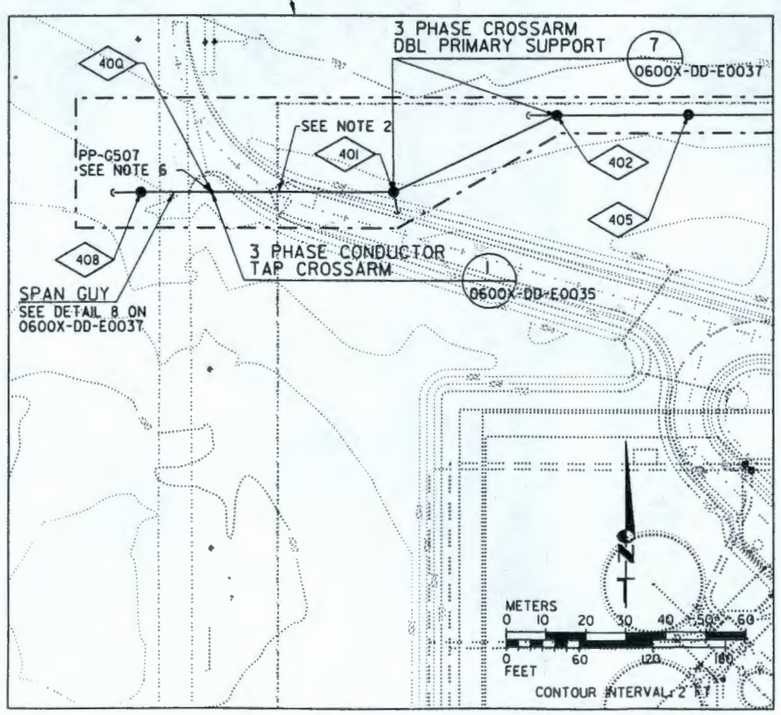

INSERT A

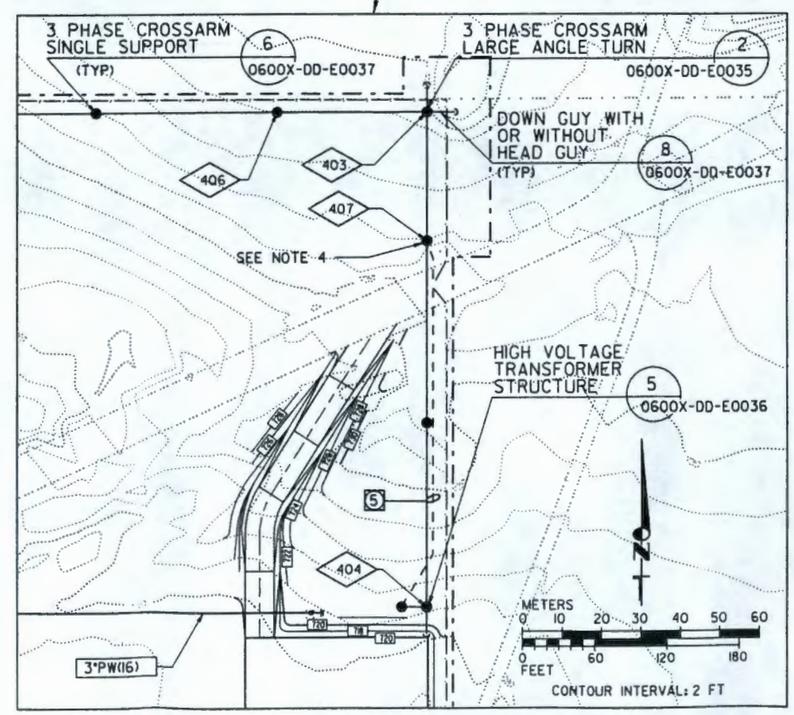

INSERT B

NOTES

1. TYPICAL POLE SPACING IS 45.7m (150 FT) UNLESS OTHERWISE SHOWN.
2. GROUND EACH ENTRANCE GATE FENCE POLE AND FENCE POLES 6.1m (20 FT) ON EACH SIDE OF POWER LINE WHERE POWER LINE CROSSES FENCE. SEE DETAIL 4 ON DRAWING 0600X-DD-E0035.
3. LOCATE BURIED UTILITY FOR AIR MONITORING STATION AND COORDINATE ANY REQUIRED OUTAGE WITH THE CONTRACTING OFFICER. ADJUST POLES AS NECESSARY TO AVOID BURIED LINE.
4. PROVIDE ADJUSTABLE 400W, 240V, HPS FLOODLIGHT FIXTURE ON POLE 20 FEET ABOVE FINISH GRADE. AIM LIGHT TO ILLUMINATE FENCE GATE.
5. 25mm(1") GALVANIZED STEEL CONDUIT, PVC COATED, FROM POWER DISTRIBUTION PANEL BOARD TO LIGHT FIXTURE ON POLE. MINIMUM BEND RADIUS SHALL BE 12 TIMES NOMINAL DIAMETER OF CONDUIT.
6. TIE INTO EXISTING POWER LINE AT POLE PP-G507.

REV.	DATE	DESCRIPTION	DRAWN BY	DRAFT CHK	DNG/ ENG'R	ENG'R CHK	DL/TDL APPROV	RM PROJ ENG'R
A		ISSUED FOR CONSTRUCTION	PDH		DL			

SCALE:

U.S. DEPARTMENT OF ENERGY
DOE FIELD OFFICE, RICHLAND
HANFORD ENVIRONMENTAL RESTORATION PROGRAM

BECHTEL HANFORD INC. RICHLAND, WASHINGTON | MONTGOMERY WATSON RICHLAND, WASHINGTON

ENVIRONMENTAL RESTORATION DISPOSAL FACILITY
CELLS 3 & 4 CONSTRUCTION, SITE PREPARATION

ELECTRICAL SITE PLAN

BECHTEL JOB NO.	DOE CONTRACT NO.	CADD FILENAME
22192	DE-AC06-93RL12367	6xde0034.dgn

TASK	DRAWING NO.	REV. NO.
600	0600X-DD-E0034	0

RECORD INFORMATION

RECORD NO.		BLDG NO.	INDEX NO.
H-6-14815	sht 1	600	0102

0600X-SC-G00016-5-002-01 - P21 of 24/148
bdo 11/26/97

DRAWING NO.	REV. NO.
0600X-DD-E0035	0

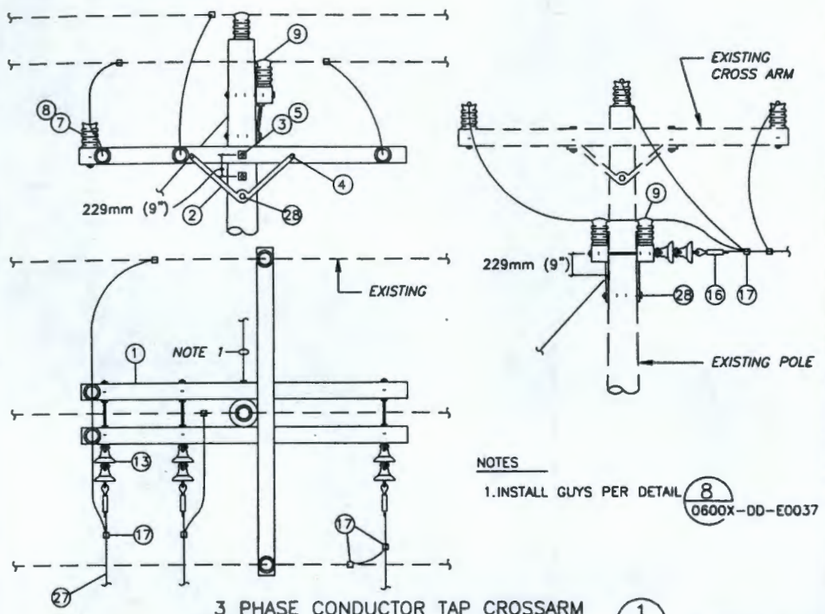

NOTES

1. INSTALL GUYS PER DETAIL 8 / 0600X-DD-E0037

3 PHASE CONDUCTOR TAP CROSSARM (1 / 0600X-DD-E0034)
NTS

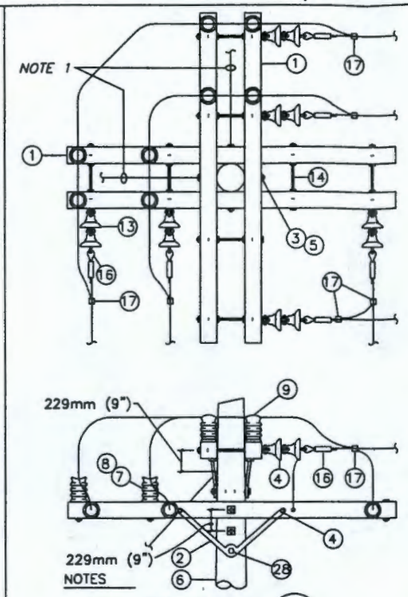

NOTES

1. INSTALL GUYS PER DETAIL 8 / 0600X-DD-E0037
2. PLACE CROSSARM PERPENDICULAR TO LEAD.
3. 2.29m (7'-6") OF POLE BURRIED IN GROUND

3 PHASE CROSSARM LARGE ANGLE TURN (2 / 0600X-DD-E0034)
NTS

LIST OF MATERIAL

ITEM NO.	DESCRIPTION
1	CROSSARM, 117mm(4-5/8") x 92mm(3-5/8") x 2.44m(8'-0")
2	BRACE, CROSSARM, FLAT, 762mm(30") x 6.4mm(1/4") x 32mm(1-1/4")
3	BOLT, 16mm(5/8"), WITH TWO 57mm(2-1/4") x 57mm(2-1/4") x 4.8mm (3/16") FLAT WASHERS
4	BOLT, CARRIAGE, 9.5mm(3/8") x 127mm(5") W/NUT AND 9.5mm(3/8") LOCKNUT
5	WASHER, SQUARE CURVED 57mm(2-1/4") WASHER, DOUBLE COIL SPRING LOCK, 16mm(5/8")
6	POLE, WESTERN RED CEDAR, 12.2m(40') LENGTH OR AS NOTED, CLASS 2
7	INSULATOR, PIN TYPE "F" NECK, 15KV PORCELAIN 25mm(1") THREAD
8	PIN INSULATOR, FORGED STEEL, 25mm(1") THREAD W/ 16mm(5/8") SHANK x 273mm(10-3/4")
9	INSULATOR TIE, PREFORMED, TO SUIT CONDUCTOR
10	PIN, POLE TOP, 25mm(1") THREAD x 508mm(20")
11	JUMPER, BARE STRANDED, AS REQUIRED
12	JUMPER, SECONDARY, INSULATED, 350 KCM
13	INSULATOR, DEADEND, ANSI CLASS 52-1, GRAY,15 KV, 15,000#
14	BOLT, DOUBLE ARMING, 16mm(5/8"), WITH FOUR 57mm(2-1/4") x 57mm (2-1/4") x 4.8mm(3/16") FLAT WASHERS
15	OVAL EYENUT, 16mm(5/8")
16	STRAIGHT LINE CLAMP, MALLEABLE IRON, TO SUIT CONDUCTORS
17	PARALLEL CLAMP, SIZE TO SUIT CONDUCTORS
18	CROSSARM 117mm(4-5/8") x 92mm(3-5/8") x 6.1m(20'-0")
19	LOCKNUTS
20	SURGE ARRESTOR, DISTRIBUTION TYPE, 18KV MOV, GRAY, PORCELAIN, WITH MOUNTING BRACKET
21	FUSE CUTOUT, 100A, 95KV BIL (FUSE SIZE ON ELECTRICAL SYSTEM DRAWINGS) WITH CROSSARM MOUNTING BRACKET
22	INSULATED CONDUCTORS
23	TRANSFORMER 75KVA
24	CONDUIT, RIGID GALVANIZED STEEL, 76mm(3")
25	CONDUIT SUPPORT BRACKET, 3.05m(10 FT) SPACING
26	WEATHERHEAD
27	#4 ACSR LINE WIRE
28	LAG SCREW, 13mm(1/2") x 102mm(4") AS REQUIRED
29	PIPE STRAP, STEEL, GALVANIZED, TWO HOLE WITH 6.4mm(1/4") x 76mm(3") LAG SCREWS
30	TWO BOLT CLAMP TO SUIT CONDUCTOR SIZE AND MATERIAL
31	GROUND ROD, 16mm(5/8") x 3.05m(10'-0"), COPPER CLAD STEEL
32	CLAMP, GROUND ROD
33	WIRE, #2 COPPER, BARE SOLID, SOFT DRAWN
34	STAPLES, 38mm(1-1/2") x 13mm(1/2"), SQUARE SHANK, BARBED, COPPER COATED
35	STAPLES, 51mm(2") x 25mm(1"), SQUARE SHANK, BARBED, COPPER COATED
36	GROUND WIRE MOULDING, 19mm(3/4") x 2.44m(8'-0") PVC
37	ANCHOR (SEE NOTE BELOW)
38	ANCHOR ROD, THREADED, TWINEYE, COPPERWELD
39	AUTOMATIC DEADEND, JOSLYN STRANDVISE OR EQUAL
40	GUY GUARD
41	PREFORMED GUY GRIP
42	INSULATOR, GUY, ANSI CLASS 54-3
43	GUY ATTACHMENT, MALLEABLE, W/LAG SCREW
44	BOLT, 16mm(5/8"), W/NUT & 64mm(2-1/2") x 64mm(2-1/2") x 4.8mm(3/16") CURVED WASHER
45	BOLT, 16mm(5/8"), W/NUT & 89mm(3-1/2") x 89mm(3-1/2") x 4.8mm(3/16") CURVED WASHER
46	GUY STRAND, GALVANIZED STEEL OR ALUMINUM CLAD STEEL

NOTE: SELECT ANCHORS WITH APPROPRIATE HOLDING STRENGTH (WITH NESC SAFETY FACTORS) FOR SOIL CONDITIONS ENCOUNTERED AT EACH ANCHOR SITE.

NOTES

1. PROPRIETARY NAMES HAVE BEEN QUOTED FOR IDENTIFICATION PURPOSES ONLY. SUBSTITUTIONS WILL BE PERMITTED SUBJECT TO PROVISIONS OF THE SPECIFICATIONS.

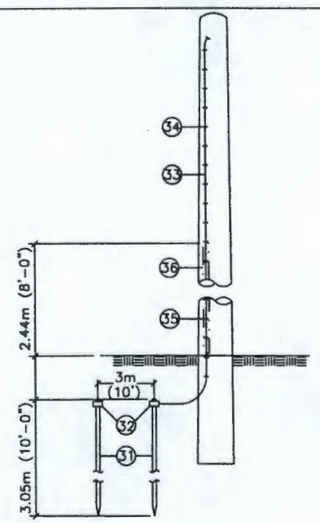

NOTES:

1. INSTALL GROUND WIRE MOLDING TO 2.44m (8'-0") ABOVE GROUND LEVEL.
2. STAPLES ON GROUND WIRE OR MOLDING SHALL BE AT 0.61m (2'-0") INTERVALS EXCEPT FOR A DISTANCE OF 2.44m (8'-0") FROM TOP OF POLE WHERE THEY SHALL BE 305mm (12") APART.
3. GROUND WIRE TO CLEAR ALL HARDWARE BUY 51mm (2") MIN. AND SHALL BE STAPLED TO MAINTAIN THIS POSITION.

EQUIPMENT GROUNDING (3 / 0600X-DD-E0036)
NTS

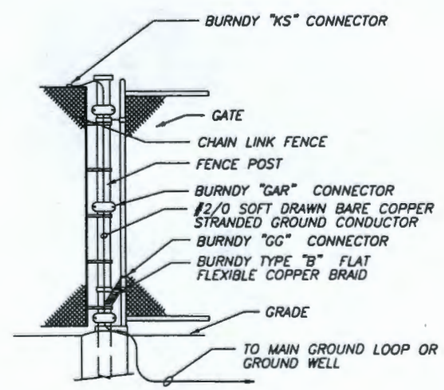

GATE AND FENCE GROUNDING (4 / 0600X-DD-E0034)
NTS, SEE NOTE 1.

REV.	DATE	DESCRIPTION	DRAWN BY	DRAFT CHK	DESIG ENG'R	ENG'R CHK	DL/TR APPROV	DE FIELD ENG'R
0		ISSUED FOR CONSTRUCTION	PDH		SIL			

SCALE:

U.S. DEPARTMENT OF ENERGY
DOE FIELD OFFICE, RICHLAND
HANFORD ENVIRONMENTAL RESTORATION PROGRAM

BECHTEL HANFORD INC. RICHLAND, WASHINGTON | MONTGOMERY WATSON RICHLAND, WASHINGTON

ENVIRONMENTAL RESTORATION DISPOSAL FACILITY
CELLS 3 & 4 CONSTRUCTION, SITE PREPARATION
ELECTRICAL DETAILS I

BECHTEL JOB NO.	DOE CONTRACT NO.	CADD FILENAME
22192	DE-AC06-93RL12367	6xde0035.DWG

TASK	DRAWING NO.	REV. NO.
600	0600X-DD-E0035	0

RECORD INFORMATION

RECORD NO.	BLDG NO.	INDEX NO.
H-6-14816	600	8001

0600X-SC-G0016-5-002-01 - p22 9-24148
bdo 9/26/97

DRAWING NO.	REV. NO.
0600X-DD-E0036	0

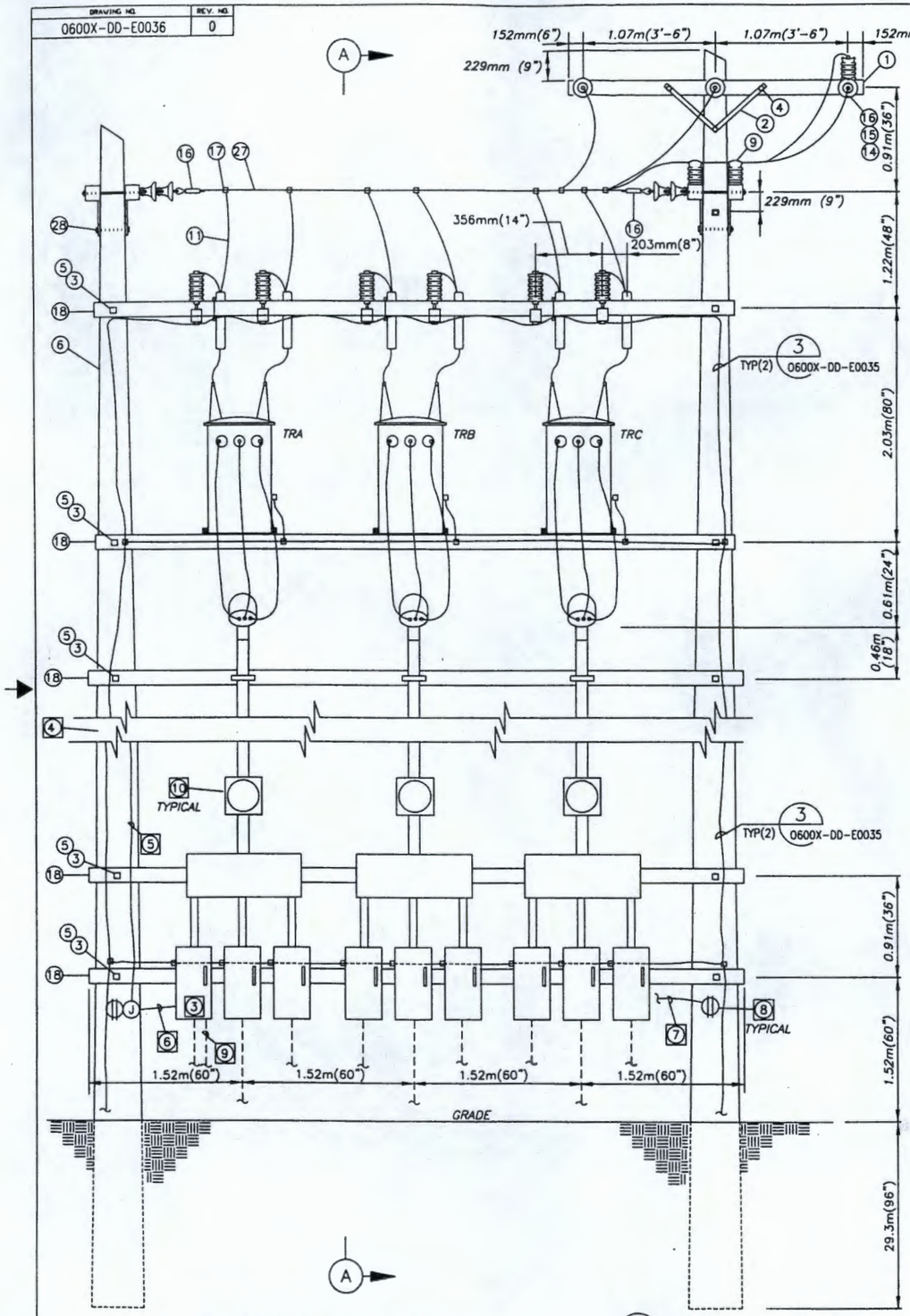

HIGH VOLTAGE TRANSFORMER STRUCTURE 5 0600X-DD-E0034
NTS

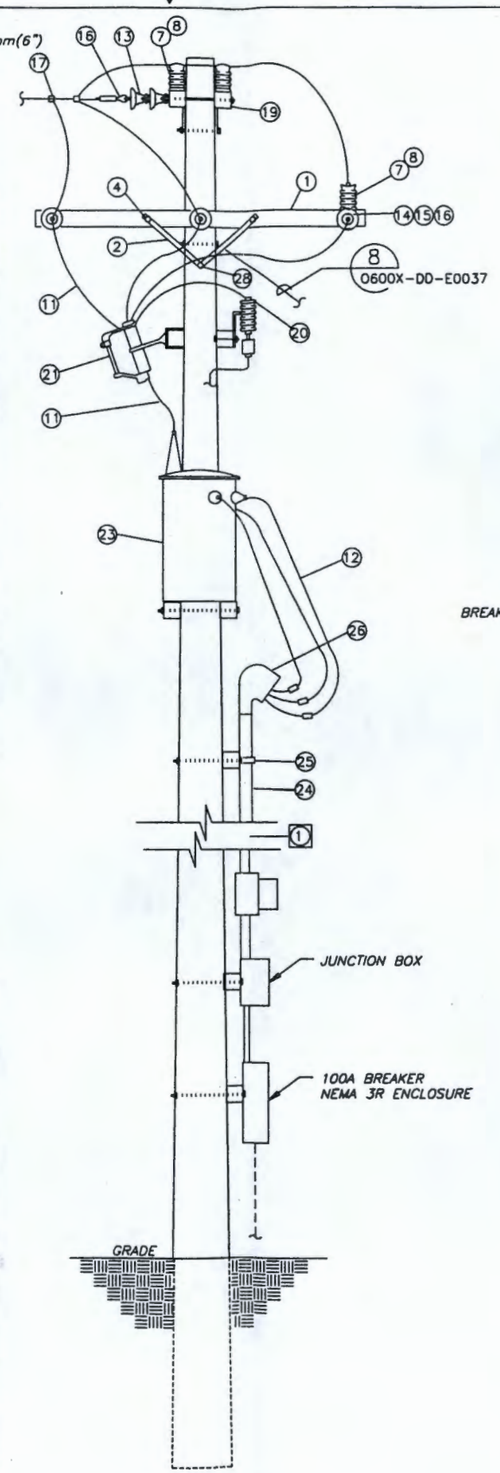

SECTION A
NTS

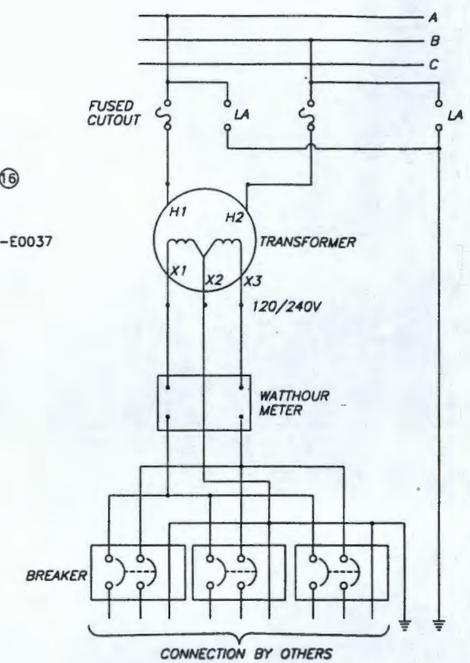

WIRING DIAGRAM
SIMILAR FOR EACH TRANSFORMER

CONNECT TRA PRIMARY TO PHASE A & B.
CONNECT TRB PRIMARY TO PHASE A & C.
CONNECT TRC PRIMARY TO PHASE B & C.

NOTES

1. INTERMEDIATE CONDUIT SUPPORT NOT SHOWN.
2. SEE DRAWING 0600X-DD-E0035 FOR MATERIAL LIST.
3. NEMA 3R POWER DISTRIBUTION PANELBOARD WITH 100A MAIN BREAKER, PROVIDE WITH 2-2 POLE 20A, AND 4-1 POLE 20A BREAKERS WITH SPACE FOR MINIMUM 4 SINGLE POLE BREAKERS.
4. PROVIDE TWIN, ADJUSTABLE, 400W, 240V HPS FLOODLIGHTS MOUNTED ON POLE 20 FT ABOVE FINISH GRADE. AIM LIGHTS TO ILLUMINATE CONSTRUCTION SUPPORT PAD.
5. 19mm(3/4")C, 2#12, 1#12G TO LIGHT FIXTURES.
6. 19mm(3/4")C, 4#12, 1#12G
7. 19mm(3/4")C, 2#12, 1#12G TO PANELBOARD.
8. WEATHERPROOF, GFI DUPLEX RECEPTACLE.
9. 25mm(1")C, 2#12, 1#12G TO LIGHT FIXTURE ON POLE AT COORDINATE NO. 407.
10. METER SOCKET AND WATTHOUR METER.

REV.	DATE	DESCRIPTION	DRAWN BY	DRAFT DATE	DESIG/ ENGR	ENGR DATE	QA/TEL APPROV	DOE APPROV DATE
0		ISSUED FOR CONSTRUCTION	PDH		SIL			

SEALS

U.S. DEPARTMENT OF ENERGY
DOE FIELD OFFICE, RICHLAND
HANFORD ENVIRONMENTAL RESTORATION PROGRAM

BECHTEL HANFORD INC. RICHLAND, WASHINGTON | MONTGOMERY WATSON RICHLAND, WASHINGTON

ENVIRONMENTAL RESTORATION DISPOSAL FACILITY
CELLS 3 & 4 CONSTRUCTION, SITE PREPARATION
ELECTRICAL DETAILS II

BECHTEL JOB NO.	DOE CONTRACT NO.	CADD FILENAME
22192	DE-AC06-93RL12367	6xde0036.DWG

TASK	DRAWING NO.	REV. NO.
600	0600X-DD-E0036	0

RECORD INFORMATION

RECORD NO.	BLDG NO.	INDEX NO.
H-6-14817	600	8001

0600X-SC-G00116-5-002-01 p.239 ~~24~~148
bdo 11/26/97

DRAWING NO.	REV. NO.
0600X-DD-E0037	0

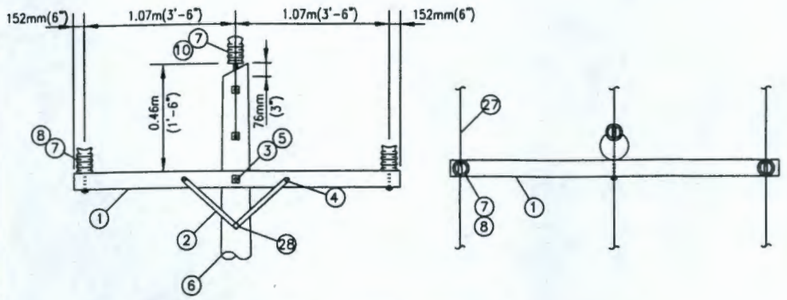

3 PHASE CROSS ARM – SINGLE SUPPORT
0° TO 5° ANGLE

NTS

6
0600X-DD-E0034

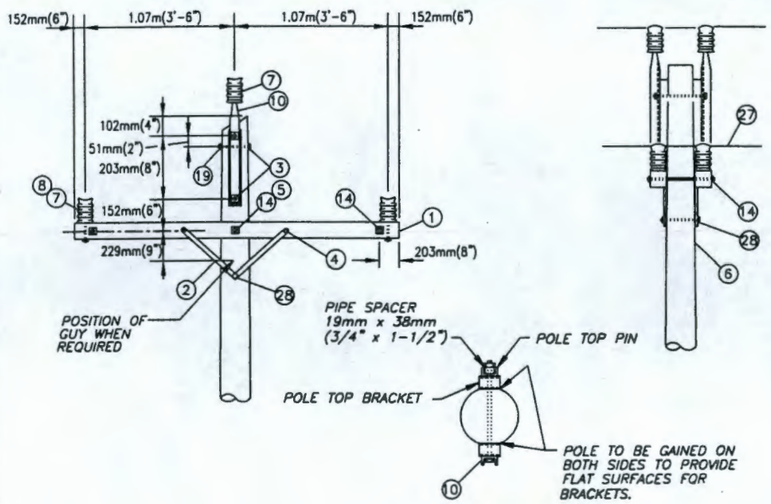

POLE TOP PIN ASSEMBLY

3 PHASE CROSS ARM – DOUBLE PRIMARY SUPPORT
MAX. TRANSVERSE LOADING 2.22KN(500 LBS.)/PIN
5° TO 30° MAX ANGLE

NTS

7
0600X-DD-E0034

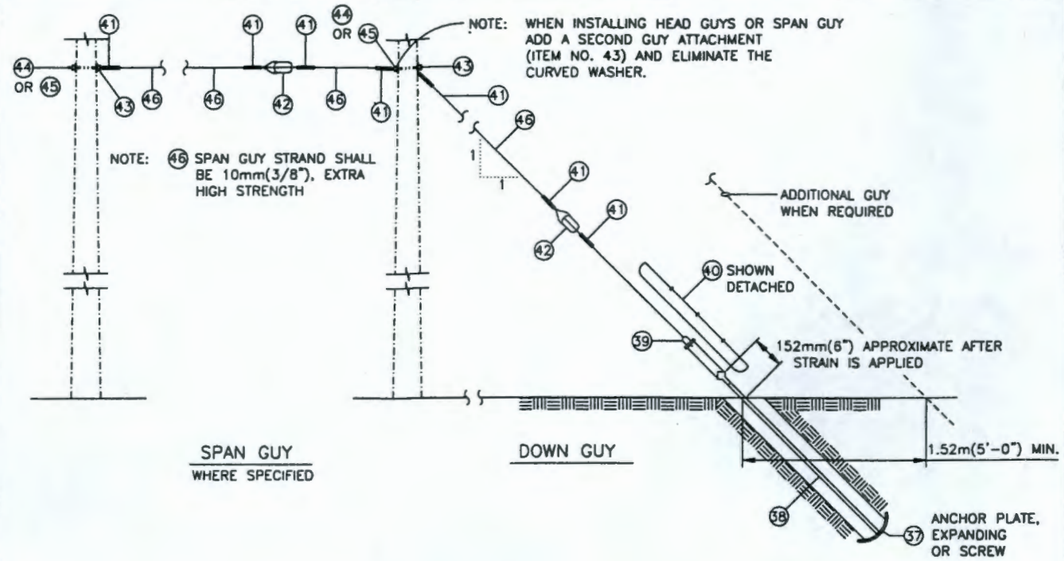

SPAN GUY
WHERE SPECIFIED

DOWN GUY

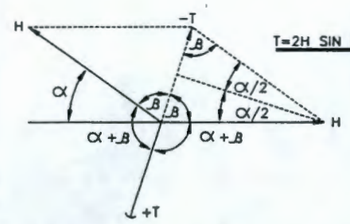

T=2H SIN (α/2)

BISECTOR DOWN GUY REQUIREMENTS

α = LINE TURNING ANGLE
β = 90 – (α/2)
H = HEAD GUY STRENGTH REQUIREMENTS FOR DEADENDS IN GUYING TABLE
T = BISECTOR HORIZONTAL STRENGTH REQUIRED TO HOLD H

NOTE: BISECTOR DOWN GUY REQUIRMENTS FOLLOW SIZE AND L/H RECOMMENDATION FOR HEAD GUY SIZES >T

GUYING TABLE

DEAD END CONDUCTORS		GUY QUANTITY AND SIZE REQUIREMENTS		
		OVERHEAD GUY SIZE	HEAD & BACK DOWN GUYS	
PRIMARY ARM	LOW NEUTRAL		SIZE	MIN. L/H
3–447 AAC	4/0 ACC	1–12M 1–4M	2–10M 1–6M	1
3–2/0 CU 1–2/0 CU		1–11M	1–15M	1
3–1/0 ACSR	1–2 ACSR	1–6M 1–4M	1–10M 1–4M	1
3–2 CU 1–2 CU (N)		1–6M	1–10M	1
3–2 AL 1–2 AL (N)		1–6M	1–10M	1
3–4 CU 1–4 CU (N)		1–6M	1–6M	1
QX SEC. TX SEC.			1–4M	1

NOTES:

1. L/H RATIO OF 1 IS PREFERED
2. L/H RATIOS LESS THAN THOSE INDICATED WILL REQUIRE HEAVIER GUYING TO RESTRAIN HORIZONTAL TENSIONS AS INDICATED FOR HEAD GUYS, TO A MINIMUM OF L/H = 0.30.
3. GUY STRENGTH REQUIREMENTS INDICATED REPRESENT A SAFETY FACTOR OF APPROXIMATELY 2.0.
4. M = 4.45KN(1000 POUNDS)
5. INSTALL ANCHORS IN ACCORDANCE WITH MANUFACTURERS INSTRUCTION AND RECOMMENDATIONS.
6. DETERMINE BISECTOR DOWN GUY REQUIREMENTS FOR EACH APPLICATION USING DIAGRAM AND EQUATION SHOWN ABOVE.

DOWN GUY WITH OR WITHOUT HEAD GUY

NTS

8
VAR

NOTES

REV.	DATE	DESCRIPTION	DRAWN BY	DRAFT CHK	CHKD/ ENGR	ENGR CHK	EL/TR APPROV	PM APPROV
0		ISSUED FOR CONSTRUCTION	PDH		SIL			

SCALE:

U.S. DEPARTMENT OF ENERGY
DOE FIELD OFFICE, RICHLAND
HANFORD ENVIRONMENTAL RESTORATION PROGRAM

BECHTEL HANFORD INC.
RICHLAND, WASHINGTON

MONTGOMERY WATSON
RICHLAND, WASHINGTON

ENVIRONMENTAL RESTORATION DISPOSAL FACILITY
CELLS 3 & 4 CONSTRUCTION, SITE PREPARATION
ELECTRICAL DETAILS III

BECHTEL JOB NO.	DOE CONTRACT NO.	CADD FILENAME
22192	DE-AC06-93RL12367	6xde0037.DWG

TASK	DRAWING NO.	REV. NO.
600	0600X-DD-E0037	0

RECORD INFORMATION

RECORD NO.	BLDG NO.	INDEX NO.
H-6-14818	600	8001

0600X-SC-G006-5-002-01 p 24 of 148
11/26/97 bd

0048805

DRAWING NO.	REV. NO.
0600X-DD-G0008	0

PROJECT TITLE:

ENVIRONMENTAL RESTORATION DISPOSAL FACILITY (ERDF) CELLS 3 & 4 CONSTRUCTION SITE PREPARATION

FOR:

BECHTEL HANFORD INC.

BY:

MONTGOMERY WATSON

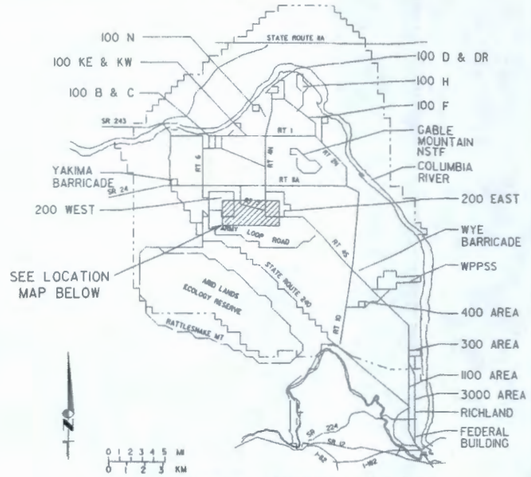

HANFORD AREA MAP

NOTES

1. THE WORK SHALL BE EXECUTED WHILE THE ERDF IS IN OPERATION. OPERATION OF THE ERDF SHALL NOT BE JEOPARDIZED NOR SHALL THE EFFICIENCY BE REDUCED AS A RESULT OF THE EXECUTION OF THE WORK. A PORTION OF THE PROJECT SITE IS SHARED WITH OPERATIONS. THE CONTRACTOR SHALL CONDUCT HIS WORK TO MINIMIZE INTERFERENCE. ACCESS ROADS AND CIRCULATION ROADS SHALL NOT BE CLOSED UNLESS EQUIVALENT ROAD ACCESS IS PROVIDED AND MAINTAINED. UTILITY TIE-INS SHALL BE COORDINATED WITH THE CONTRACTING OFFICER AND SITE UTILITY ORGANIZATIONS.

DRAWING INDEX

GENERAL

0600X-DD-G0008	1 OF 1	TITLE PAGE, LOCATION AND HANFORD AREA MAPS, DRAWING INDEX
0600X-DD-G0009	1 OF 1	SYMBOLS
0600X-DD-G0010	1 OF 1	ABBREVIATIONS

CIVIL

0600X-DD-C0087	1 OF 1	OVERALL SITE PLAN
0600X-DD-C0088	1 OF 1	COORDINATE TABLE
0600X-DD-C0089	1 OF 1	CLEARING PLAN AND FENCE LOCATION
0600X-DD-C0090	1 OF 1	YARD PIPING PLAN I, GRADING PLAN
0600X-DD-C0091	1 OF 1	YARD PIPING PLAN II, GRADING PLAN
0600X-DD-C0092	1 OF 1	CIVIL DETAILS I
0600X-DD-C0093	1 OF 1	CIVIL DETAILS II
0600X-DD-C0094	1 OF 1	CIVIL DETAILS III

ELECTRICAL

0600X-DD-E0032	1 OF 1	ELECTRICAL SYMBOLS
0600X-DD-E0033	1 OF 1	SINGLE LINE, PANEL SCHEDULE & MATERIAL LIST
0600X-DD-E0034	1 OF 1	ELECTRICAL SITE PLAN
0600X-DD-E0035	1 OF 1	ELECTRICAL DETAILS I
0600X-DD-E0036	1 OF 1	ELECTRICAL DETAILS II
0600X-DD-E0037	1 OF 1	ELECTRICAL DETAILS III

200 WEST AREA

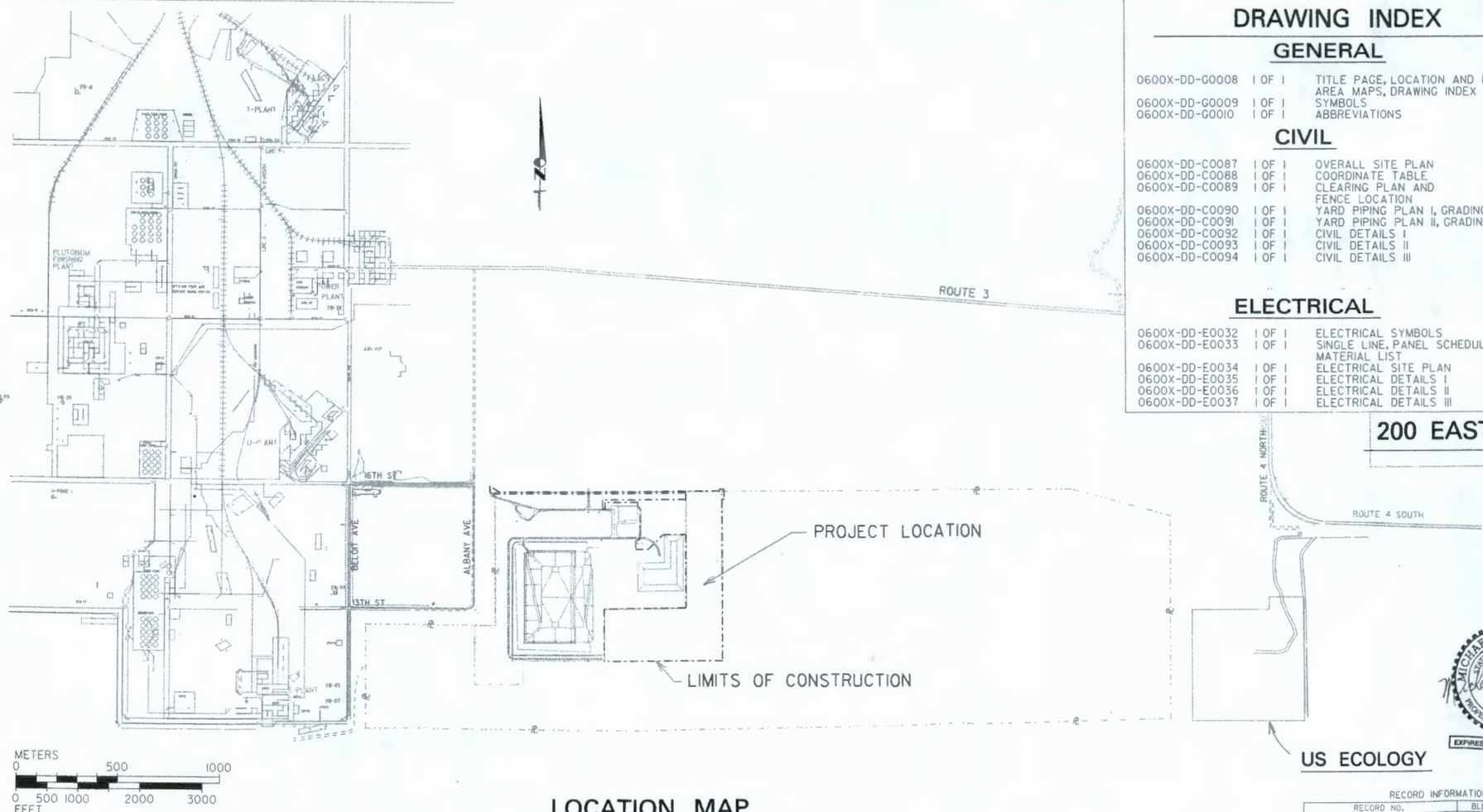

LOCATION MAP

FOR INFORMATION ONLY

BHI-DIS 12/19/97 bdb

REV.	DATE	DESCRIPTION	DRAWN BY	DRAFT CHK	ORIG/ ENG'R	ENG'R CHK	GL/TDL APPROV	BHI PROJ ENG'R
0	12-12-97	ISSUED FOR CONSTRUCTION	FGH	MGM	MCB			

SCALE:

U.S. DEPARTMENT OF ENERGY
DOE FIELD OFFICE, RICHLAND
HANFORD ENVIRONMENTAL RESTORATION PROGRAM

BECHTEL HANFORD INC. RICHLAND, WASHINGTON | MONTGOMERY WATSON RICHLAND, WASHINGTON

ENVIRONMENTAL RESTORATION DISPOSAL FACILITY
CELLS 3 & 4 CONSTRUCTION, SITE PREPARATION
TITLE PAGE, LOCATION AND
HANFORD AREA MAPS, DRAWING INDEX

MICHAEL G. MARCHANT, STATE OF WASHINGTON, 9020272, REGISTERED PROFESSIONAL ENGINEER
EXPIRES: 12-07-99

BECHTEL JOB NO.	DOE CONTRACT NO.	CADD FILENAME
22192	DE-AC06-93RL12367	6xdg0008.dgn

TASK	DRAWING NO.	REV. NO.
600	0600X-DD-G0008	0

HANFORD

RECORD INFORMATION

RECORD NO.	BLDG NO.	INDEX NO.
H-6-14806 sht 1	6000	0000

DRAWING NO.	REV. NO.
0600X-DD-G0009	0

- N400000 — HANFORD COORDINATE GRID LINE
- EXISTING SURFACE FEATURE OR PIPE
- EXISTING UNDERGROUND PIPE
- NEW PIPELINE (CIVIL SHEETS)
- NEW FENCE
- EXISTING FENCE
- EXIST. RAILING
- NEW RAILING
- CENTERLINE
- PROPERTY LINE
- 123 — CONTOUR LINE, FINISHED GRADE
- 123 — CONTOUR LINE, EXISTING GRADE
- 123.20 — FINISHED ELEVATION
- (123.20) — EXISTING ELEVATION
- NEW A.C. PAVING
- EXISTING A.C. PAVING
- NEW RAILROAD
- EXISTING RAILROAD
- SLOPE INDICATION
- LIMITS OF CONSTRUCTION
- FUTURE STRUCTURE OR FACILITY
- EXISTING STRUCTURE OR FACILITY
- EXISTING UNDERGROUND STRUCTURE OR FACILITY
- POTENTIAL FUTURE STRUCTURE OR FACILITY
- GRAVEL
- CONCRETE
- EARTH
- SAND
- GRATING
- CONCRETE BLOCK
- GATE VALVE, BURIED WITH VALVE BOX
- BUTTERFLY VALVE, BURIED WITH VALVE BOX
- ECCENTRIC PLUG VALVE, BURIED WITH VALVE BOX
- FH — FIRE HYDRANT
- MH — MANHOLE
- PCOTG — PRESSURE CLEANOUT TO GRADE
- COTG — CLEANOUT TO GRADE
- CB — CATCH BASIN
- BULK WATER STATION
- BOLLARD
- SOIL TEST PIT
- SURVEY MONUMENTS

- SURVEY CONTROL POINT
- EXISTING WELL
- FUTURE WELL
- SOIL BORING LOCATION
- 3 — COORDINATE POINT
- DOWN GUY
- TELEPHONE/POWER POLE
- CHANGE IN PIPING MATERIAL
- ROUND OR DIAMETER
- SQUARE
- AT
- ANGLE
- 12" RW (PVC) — PIPE CALLOUT
- ME-2 — EQUIPMENT NUMBER (SEE EQUIPMENT SCHEDULE)
- NIC — EQUIPMENT, ITEMS OR DETAILS NOT PRETAINING TO THIS CONTRACT OR PROJECT ARE SHOWN THUS WITH THE NIC = NOT IN CONTRACT
- GATE VALVE
- BUTTERFLY VALVE
- ECCENTRIC PLUG VALVE
- GLOBE VALVE
- BALL VALVE
- DIAPHRAGM VALVE
- CHECK VALVE
- PRESSURE REGULATING VALVE
- BACK-PRESSURE VALVE
- FLOAT OPERATED VALVE
- NEEDLE VALVE
- PRESSURE RELIEF VALVE
- M, P — MOTOR OPERATOR FOR VALVES (M = ELECTRIC, P = PNEUMATIC)
- S — SOLENOID VALVE
- HOSE BIBB (H/B)
- B — BUBBLER LEVEL CONTROL
- CENTRIFUGAL OR TURBINE PUMP OR FAN
- CHEMICAL FEED PUMP
- PROGRESSING CAVITY, POSITIVE DISPLACEMENT PUMP
- BLOWER OR COMPRESSOR
- INJECTOR OR EDUCTOR

- AIR VACUUM AND AIR RELEASE ASSEMBLY
- THERMOMETER
- PIPE ANCHOR
- STOP GATE
- SLIDE GATE
- SLUICE GATE
- INLINE STATIC MIXER
- HUB DRAIN
- FLOOR DRAIN
- DRAIN
- DRAIN TRAP
- CUT PIPE
- FEXT — FIRE EXTINGUISHER
- G — PRESSURE GAUGE
- G — PRESSURE GAUGE WITH DIAPHRAGM SEAL
- S — PRESSURE SWITCH
- S — PRESSURE SWITCH WITH DIAPHRAGM SEAL
- FLANGED FITTING
- WELDED FITTING
- MECHANICAL-TYPE FITTING (GROOVED)
- SCREWED, SOCKET-WELD, BELL AND SPIGOT OR HUBLESS FITTING
- SLEEVE-TYPE COUPLING
- FLANGED ADAPTER COUPLING
- FLANGED ADAPTER - SET SCREW TYPE
- EXPANSION JOINT
- MECHANICAL TYPE COUPLING
- FLEXIBLE COUPLING
- UNION
- QUICK DISCONNECT COUPLER
- CAPPED END OR PLUGGED END
- BLIND FLANGE
- REDUCER OR INCREASER
- STRAINER
- M M — MAGNETIC METER
- D M — DENSITY METER
- ORIFICE PLATE AND FLANGES
- ROTAMETER

- PIPE SUPPORT (IN PLAN ONLY)
- MALE FIRE HOSE CONNECTION WITH CAP
- YARD HYDRANT

SECTION AND DETAIL IDENTIFICATION

SECTION IDENTIFICATION

(1) SECTION CUT SHOWN ON DRAWING AS:

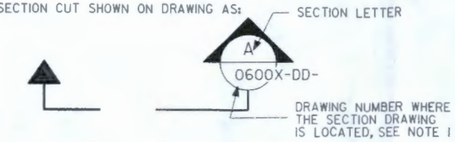

(2) ON DRAWING NUMBER 0600X-DD- THIS SECTION IS IDENTIFIED AS:

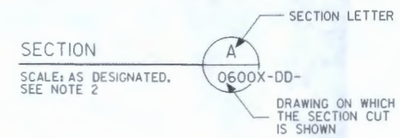

DETAIL IDENTIFICATION

(1) DETAIL IDENTIFICATION SHOWN ON DRAWING AS:

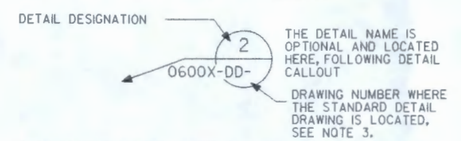

(2) ON DRAWING NUMBER 0600X-DD-- THIS DETAIL IDENTIFIED AS:

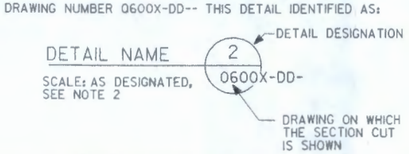

NOTES

1. IF PLAN AND SECTION (OR DETAIL CALL-OUT AND DETAIL) ARE SHOWN ON SAME DRAWING, DRAWING NUMBER IS REPLACED BY A HORIZONTAL LINE.
2. IF SECTION AND/OR DETAILS ARE THE SAME SCALE AND ON THE SAME DRAWING, SEE TITLE BLOCK AT "SCALE:"; THE SCALE TEXT AT CALLOUT SHALL BE OMITTED.
3. FOR DETAILS WHICH ARE LOCATED ON VARIOUS DRAWINGS, DRAWING NUMBER IS REPLACED WITH "VAR" FOR VARIOUS.
4. SOME SYMBOLS SHOWN ON THIS DRAWING MAY NOT BE USED ON OTHER DRAWINGS.

FOR INFORMATION ONLY

BHI-DIS 12/19/97 bdo

REV.	DATE	DESCRIPTION	DRAWN BY	DRAFT CHK	ORIG/ ENG'R	ENG'R CHK	CL/TDL APPROV	BHI PROJ ENG'R
0	12-19-97	ISSUED FOR CONSTRUCTION			MGB			

SCALE:

U.S. DEPARTMENT OF ENERGY
DOE FIELD OFFICE, RICHLAND
HANFORD ENVIRONMENTAL RESTORATION PROGRAM

BECHTEL HANFORD INC. RICHLAND, WASHINGTON | MONTGOMERY WATSON RICHLAND, WASHINGTON

ENVIRONMENTAL RESTORATION DISPOSAL FACILITY
CELLS 3 & 4 CONSTRUCTION, SITE PREPARATION
SYMBOLS

BECHTEL JOB NO.	DOE CONTRACT NO.	CADD FILENAME
22192	DE-AC06-93RL12367	6xdg0009.dgn

TASK	DRAWING NO.	REV. NO.
600	0600X-DD-G0009	0

MICHAEL G. MARKHAM, STATE OF WASHINGTON, 0030273, REGISTERED PROFESSIONAL ENGINEER
EXPIRES 12-07-99

RECORD INFORMATION

RECORD NO.	BLDG NO.	INDEX NO.
H-6-14807 sht 1	600G	0000

DE033A 4/95

DRAWING NO.	REV. NO.
0600X-DD-G0010	0

AB	ANCHOR BOLT
ABAND	ABANDONED
ABBR	ABBREVIATION
AC	ASPHALT CONCRETE
A/C	AIR CONDITIONING
ACFM	ACTUAL CUBIC FEET PER MINUTE
ACOUS	ACOUSTIC OR ACOUSTICAL
ACP	ASPHALTIC CONCRETE PAVEMENT
AER	AERATION
AH	AHEAD
AL	ALUM
ALUM	ALUMINUM
ANSI	AMERICAN NATIONAL STANDARDS INSTITUTE (FORMERLY A.S.A.)
API	AMERICAN PETROLEUM INSTITUTE
APPVD	APPROVED
APPROX	APPROXIMATE
ARCH	ARCHITECTURAL
ASME	AMERICAN SOCIETY OF MECHANICAL ENGINEERS
ASPH	ASPHALT
ASTM	AMERICAN SOCIETY FOR TESTING AND MATERIAL
ASSY	ASSEMBLY
ATM	ATMOSPHERE
AUTO	AUTOMATIC
AVAR	AIR VACUUM AND AIR RELEASE
AWWA	AMERICAN WATER WORKS ASSOCIATION
BC	BEGIN CURVE OR BOLT CIRCLE
BCR	BEGIN CURB RETURN
BD	BOARD
BFP	BACK FLOW PREVENTER
BHP	BRAKE HORSEPOWER
BK	BACK
BLDG	BUILDING
BLD FLG	BLIND FLANGE
BLK	BLACK OR BLOCK
BLKG	BLOCKING
BM	BEAM OR BENCH MARK
BO	BLOW-OFF ASSEMBLY
BOD	BIOCHEMICAL OXYGEN DEMAND
BOT	BOTTOM
BPV	BACK PRESSURE VALVE
B & S	BELL AND SPIGOT
BRG	BEARING
BSMT	BASEMENT
BTU	BRITISH THERMAL UNIT
BTUH	BRITISH THERMAL UNIT PER HOUR
BETW	BETWEEN
BFV	BUTTERFLY VALVE
BVC	BEGIN VERTICAL CURVE
BWV	BACK WATER VALVE
C	CELSIUS
CAP	CAPACITY
CATH	CATHODIC
CB	CATCH BASIN
CC	CENTER TO CENTER
CD	CEILING DIFFUSER
CFH	CUBIC FEET PER HOUR
CFM	CUBIC FEET PER MINUTE
CFS	CUBIC FEET PER SECOND
CHEM	CHEMICAL
CHK V	CHECK VALVE
CHKD PL	CHECKERED PLATE
CHLR	CHLORINATOR
CI	CAST IRON
CKT	CIRCUIT
CL	CHLORINE GAS, CHAIN LINK OR CENTERLINE
CLR	CLEAR OR CLEARANCE
CLG	COOLING
CM	CENTIMETER
CML & C	CEMENT MORTAR LINED AND COATED
CMP	CORRUGATED METAL PIPE
CMU	CONCRETE MASONRY UNITS
CO	CLEANOUT
COL	COLUMN
COMB	COMBINATION
COND	CONDUIT
COORD	COORDINATE
COR	CORNER
CONC	CONCRETE
CONN	CONNECTION
CONSTR	CONSTRUCTION OR CONSTRUCT
CONT	CONTINUED OR CONTINUOUS
CONTR	CONTRACTOR
COMP	COMPRESSOR
COTG	CLEAN-OUT TO GRADE
CPLG	COUPLING
CS	CAUSTIC SODA
CT STL	CAST STEEL
CTSK	COUNTERSUNK
CTR	CENTER
CU	COPPER OR CUBIC
CYL	CYLINDER
CWO	CHAIN WHEEL OPERATOR
DBL	DOUBLE
DET	DETAIL
DF	DRINKING FOUNTAIN
DG	DOOR GRILLE
DI	DUCTILE IRON
DIA	DIAMETER
DIAG	DIAGONAL
DIAPH	DIAPHRAGM
DISCH	DISCHARGE

DISP	DISPENSER
DN	DOWN OR DECANT
DO	DISSOLVED OXYGEN
DOE	DEPARTMENT OF ENERGY
DR	DRAIN
DS	DRENCH SHOWER AND EYE WASH
DWG(S)	DRAWING(S)
DIFF	DIFFUSER
DIFRTL	DIFFERENTIAL
E	EAST
EA	EACH
EC	END CURVE
ECC	ECCENTRIC
ECR	END CURB RETURN
EF	EACH FACE
EFL	EFFLUENT
EG	EXHAUST GRILLE
EL	ELEVATION
ELEC	ELECTRICAL OR ELECTRONIC
EMBED	EMBEDMENT
ENC	ENCASEMENT
ENCL	ENCLOSURE
ENG	ENGINE
EQL	EQUAL
EQUIP	EQUIPMENT
EVAP	EVAPORATION, EVAPORATOR
EVC	END VERTICAL CURVE
EW	EACH WAY
EWH	EYE WASH
EXH	EXHAUST
EXHF	EXHAUST FAN
EX-HY	EXTRA HEAVY
EXST	EXISTING
EXP	EXPANSION
EXP JT	EXPANSION JOINT
EXT	EXTERIOR OR EXTENSION
F	FAHRENHEIT
FABR	FABRICATION, FABRICATE OR FABRICATED
FAI	FRESH AIR INTAKE
FB	FLAT BAR
FCO	FLOOR CLEANOUT
FD	FLOOR DRAIN
FD BK	FIELD BOOK
FDN	FOUNDATION
FDR	FEEDER
FE	FINAL EFFLUENT
FEXT	FIRE EXTINGUISHER
FF	FLAT FACE OR FAR FACE
F TO F	FACE TO FACE
FG	FINISHED GRADE
FH	FIRE HYDRANT
FIG	FIGURE
FIT	FUEL ISLAND TERMINAL
FL	FLOWLINE
FLEX	FLEXIBLE
FLOCC	FLOCCULATOR OR FLOCCULATION
FLG	FLANGE
FLGD	FLANGED
FLR	FLOOR
FLR BM	FLOOR BEAM
FMH	FLEXIBLE METAL HOSE
FNSH	FINISH OR FINISHED
FOC	FACE OF CONCRETE
FOM	FACE OF MASONRY
FOS	FACE OF STUDS
FOW	FACE OF WALL
FPC	FLEXIBLE PIPE COUPLING
FPM	FEET PER MINUTE
FPS	FEET PER SECOND
FRP	FIBERGLASS REINFORCED PLASTIC
FS	FAR SIDE, FLOOR SINK, FINISHED SURFACE, FORGED STEEL OR FROTH SPRAY
FT	FEET OR FOOT
FTG	FOOTING
FUT	FUTURE
FWW	FILTER WASTE WASHWATER
GA	GAGE OR GAUGE
GAL	GALLON
GALV	GALVANIZED
GEN	GENERAL OR GENERATOR
GFA	GROOVED FLANGE ADAPTER
GI	GALVANIZED IRON
GLV	GLOBE VALVE
GND	GROUND
GPD	GALLONS PER DAY
GPH	GALLONS PER HOUR
GPM	GALLONS PER MINUTE
GPR	GROUND PENETRATING RADAR
GRD	GRADE
GR BRK	GRADE BREAK
GV	GATE VALVE
GVL	GRAVEL
GYP	GYPSUM
H	HEIGHT
H/B	HOSE BIBB
HDR	HEADER
HDPE	HIGH DENSITY POLYETHYLENE
HEX	HEXAGONAL
Hg	MERCURY
HORIZ	HORIZONTAL

HP	HORSEPOWER
HPR	HIGH PRESSURE
HPS	HIGH PRESSURE SODIUM
HPT	HIGH POINT
HR	HEATING RETURN OR HOUR
HTG	HEATING
HTR	HEATER
H & V	HEATING AND VENTILATING
HVAC	HEATING, VENTILATING AND AIR CONDITIONING
HWO	HANDWHEEL OPERATED
HYD	HYDRAULIC OR HYDRANT
ICFM	INLET CUBIC FEET PER MINUTE
ID	INSIDE DIAMETER
IF	INSIDE FACE
IF	INCH
INFL	INFLUENT
INST	INSTALL
INSUL	INSULATION OR INSULATED
INSTR	INSTRUMENT OR INSTRUMENTATION
INTFC	INTERFACE
INVT	INVERT ELEVATION
I/O	INPUT/OUTPUT
IP	IRON PIPE
IPS	IRON PIPE STANDARD
IRRG	IRRIGATION
JAN	JANITOR
JT	JOINT
KG	KILOGRAM
KM	KILOMETER
KN	KILONEWTON
KPa	KILOPASCALS
KV	KILOVOLT
KW	KILOWATT
KWH	KILOWATT HOUR
L	LITER OR LENGTH
LAV	LAVATORY
LB	POUND
LCU	LOCAL CONTROL UNIT
LVL	LEVEL
LG	LONG
LO	LEVER OPERATED
LOC	LOCATION
LPT	LIGHT POLE
LP	LOW POINT
LPV	LUBRICATED PLUG VALVE
LT	LEFT
LWR	LOWER
LGTH	LENGTH
M	METER
MAG	MAGNETIC
MAN	MANUAL
MACH	MACHINE
MAX	MAXIMUM
MCC	MOTOR CONTROL CENTER
MECH	MECHANICAL
MFR	MANUFACTURER
MGD	MILLION GALLONS PER DAY
MH	MANHOLE
MI	MALLEABLE IRON
MIN	MINIMUM
MISC	MISCELLANEOUS
MK	MARK
MM	MILLIMETER
MPa	MEGAPASCALS
MO	MOTOR OPERATED OR MASONRY OPENING
MOD	MODEL
MS	MOP SINK
MTC	MECHANICAL-TYPE COUPLING
MT	MOUNT
MATL	MATERIAL
MTR	MOTOR
N	NORTH
NAD	NORTH AMERICAN DATUM
NAVD	NORTH AMERICAN VERTICAL DATUM
NBS	NATIONAL BUREAU OF STANDARDS
NC	NORMALLY CLOSED
NEMA	NATIONAL ELECTRICAL MANUFACTURERS ASSOCIATION
NFPA	NATIONAL FIRE PROTECTION ASSOCIATION
NF	NEAR FACE
NIC	NOT IN CONTRACT
NO	NUMBER OR NORMALLY OPEN
NPS	NOMINAL PIPE SIZE (FORMERLY I.P.S.)
NPT	NATIONAL PIPE THREAD
NRS	NON-RISING STEM
NS	NEAR SIDE
NTS	NOT TO SCALE
OC	ON CENTER
OD	OUTSIDE DIAMETER
OF	OVERFLOW OR OUTSIDE FACE
OPER	OPERATOR OR OPERATING
OPNG	OPENING
OS & Y	OUTSIDE SCREW AND YOKE
OVHD	OVERHEAD
OZ	OUNCE
P	POLE OR PAGE
PAVMT	PAVEMENT
PC	PRIMARY CLARIFIER OR PORTLAND CEMENT
PCOTG	PRESSURE CLEANOUT TO GRADE
PE	POLYELECTROLYTE OR POLYMER
PEF	PLANT EFFLUENT

PEN	PENETRATION
PER	PERIMETER
PG	PRESSURE GAGE
pH	HYDROGEN ION CONCENTRATION
PI	POINT OF INTERSECTION
PIV	POST INDICATOR VALVE
PL	PLACES OR PLATE
PLAS	PLASTER OR PLASTIC
PNEU	PNEUMATIC
POB	POINT OF BEGINING
POE	POINT OF END
PP	POWER POLE
PLT	PLANT
PNLBD	PANELBOARD
PPD	POUNDS PER DAY
PPH	POUNDS PER HOUR
PPM	PARTS PER MILLION
PR	PAIR
PRC	POINT OF REVERSE CURVATURE
PRE	PREVIOUS
PRESS	PRESSURE
PRV	PRESSURE REGULATING, RELIEF OR REDUCING VALVE
PS	PRESSURE SWITCH
PSF	POUNDS PER SQUARE FOOT
PSI	POUNDS PER SQUARE INCH
PSIA	POUNDS PER SQUARE INCH ABSOLUTE
PSIG	POUNDS PER SQUARE INCH GAUGE
PT	POINT OR POINT OF TANGENCY
PV	PLUG VALVE
PVC	POLYVINYL CHLORIDE
PW	POTABLE WATER
PWR	POWER
RAD	RADIUS
RADN	RADIATION
RAG	RETURN AIR GRILLE
RC	REINFORCED CONCRETE
RCA	RADIOLOGICAL CONTROLLED AREA
RCP	REINFORCED CONCRETE PIPE
RD	ROOF DRAIN, ROUND, OR ROAD
RDWD	REDWOOD
RDCR	REDUCER
RECM	RECOMMENDATION
REF	REFERENCE OR REFER
REG	REGULATING
REINF	REINFORCE OR REINFORCED
RE-STL	REINFORCING STEEL
REQD	REQUIRED
RET	RETURN
REV	REVISION
RF	RAISED FACE
RLF	RELIEF
RM	ROOM
ROS	RATE OF SLOPE
RPM	REVOLUTIONS PER MINUTE OR REINFORCED PLASTIC MORTAR
RR	RAILROAD
RT	RIGHT
RW	RAW WATER
R/W	RIGHT OF WAY
RWL	RAINWATER LEADER
S	SOUTH
SA	SAMPLE
SC	SPARE CHEMICAL OR SECONDARY CLARIFIER
SCC	SOLIDS CONTACT CLARIFIER
SCD	SCREWED
SCFM	STANDARD CUBIC FEET PER MINUTE
SCH	SCHEDULE
SCHED	SCHEDULE
SDR	STORM DRAINS
SCA	SOIL CONTAMINATION AREA
SEC	SECONDARY
SECT	SECTION
SER	SERIES
SER SK	SERVICE SINK
SETT	SETTLING
SH	SHOWER
SHT	SHEET
SIM	SIMILAR
SL	SLUDGE
SLP	SLOPE
SLV	SLEEVE
SP	SPACING
SPECS	SPECIFICATIONS
SQ	SQUARE
SQM	SQUARE METER
SS	SANITARY SEWER
SST	STAINLESS STEEL
SSU	SECONDS SAYBOLT UNIVERSAL
STA	STATION
STC	SLEEVE-TYPE COUPLING
STD	STANDARD
STL	STEEL
STM	STEAM
STN	STAINLESS
SST	STAINLESS STEEL
STR TRD	STAIR TREAD
STRUCT	STRUCTURAL OR STRUCTURE
SUBST	SUBSTITUTE
SUCT	SUCTION
SURV	SURVEY
SV	SOLENOID VALVE
SW	SANITARY WATER
SWR	SIDEWALL REGISTER
SYM	SYMMETRICAL OR SYMBOL
SYS	SYSTEM

T	THERMOSTAT OR TANGENT
TB	THRUST BLOCK
T & B	TOP AND BOTTOM
TBC	TOP BACK OF CURB
TBE	THREAD BOTH ENDS
TBM	TEMPORARY BENCH MARK
TC	TOP OF CURB
TDH	TOTAL DYNAMIC HEAD
TELE	TELEPHONE
TEMP	TEMPORARY
TERM	TERMINAL
T & G	TONGUE AND GROOVE
THK	THICK OR THICKNESS
THD	THREADED
THRHLD	THRESHOLD
TK	TANK
TOE	THREAD ONE END
TOG	TOP OF GRATING
TOL	TOLERANCE
TOS	TOP OF STEEL
TOW	TOP OF WALL
TP	TELEPHONE POLE OR TELEGRAPH POLE
TRANS	TRANSITION
TRTMT	TREATMENT
TV	THERMOSTATIC VALVE
TW	THERMOMETER WELL
TYP	TYPICAL
UBC	UNIFORM BUILDING CODE
UC	UNDER-CROSSING
UGND	UNDERGROUND
UGC	UNDERGROUND CONDUIT
UH	UNIT HEATER
UL	UNDERWRITERS LABORATORIES
UNO	UNLESS NOTED OTHERWISE
UP	UTILITY POLE
UR	URINAL
USACE	UNITED STATES ARMY CORP OF ENGINEERS
V	VENT, VOLT
VAC	VACUUM
VAR	VARIES OR VARIABLE
VCP	VITRIFIED CLAY PIPE
VERT	VERTICAL
VLV	VALVE
VOL	VOLUME
VPC	VERT POINT OF CURVATURE
VPI	VERT POINT OF INTERSECTION
VPRC	VERT POINT OF REVERSE CURVE
VPT	VERT POINT OF TANGENCY
VTC	VENT TO CEILING
VTR	VENT THROUGH ROOF
W	WEST OR WIDTH
W/	WITH
WC	WATER COLUMN OR WATER CLOSET
WCO	WALL CLEANOUT
WD	WOOD
WOG	WATER, OIL, GAS
W/O	WITHOUT
WS	WATER SURFACE
WSCOT	WAINSCOT
WSTP	WATER STOP
WT	WEIGHT
WWF	WELDED WIRE FABRIC
WWM	WELDED WIRE MESH
XFR	TRANSFER
XFMR	TRANSFORMER
XING	CROSSING
XMTR	TRANSMITTER
XS	EXTRA STRONG
YD	YARD

NOTES

1. ADDITIONAL ABBREVIATIONS CONFORM TO ANSI STANDARD ABBREVIATIONS Y 1.1.
2. PIPING ABBREVIATIONS SHOWN ON MECHANICAL SHEETS.
3. SOME ABBREVIATIONS SHOWN ON THIS DRAWING MAY NOT BE USED ON OTHER DRAWINGS.

FOR INFORMATION ONLY

12/19/97 bdo

REV.	DATE	DESCRIPTION	DRAWN BY	DRAFT CHK	ORIG/ ENG'R	ENG'R CHK	GL/TDL APPROV	BHI PROJ ENG'R
0	12-12-97	ISSUED FOR CONSTRUCTION	PDH	MGM	MGB	MGM	DRM	

SCALE:

MICHAEL G. MARCHANT
STATE OF WASHINGTON
REGISTERED PROFESSIONAL ENGINEER
12-12-97
EXPIRES 12-07-99

U.S. DEPARTMENT OF ENERGY
DOE FIELD OFFICE, RICHLAND
HANFORD ENVIRONMENTAL RESTORATION PROGRAM

BECHTEL HANFORD INC.
RICHLAND, WASHINGTON

MONTGOMERY WATSON
RICHLAND, WASHINGTON

ENVIRONMENTAL RESTORATION DISPOSAL FACILITY
CELLS 3 & 4 CONSTRUCTION, SITE PREPARATION
ABBREVIATIONS

BECHTEL JOB NO.	DOE CONTRACT NO.	CADD FILENAME
22192	DE-AC06-93RL12367	6xd0010.DWG

	TASK	DRAWING NO.	REV. NO.
HANFORD	600	0600X-DD-G0010	0

RECORD INFORMATION

RECORD NO.	BLDG NO.	INDEX NO.
H-6-14808 sht 1	600G	0000

BD2234 4/1/95

DRAWING NO.	REV. NO.
0600X-DD-C0087	0

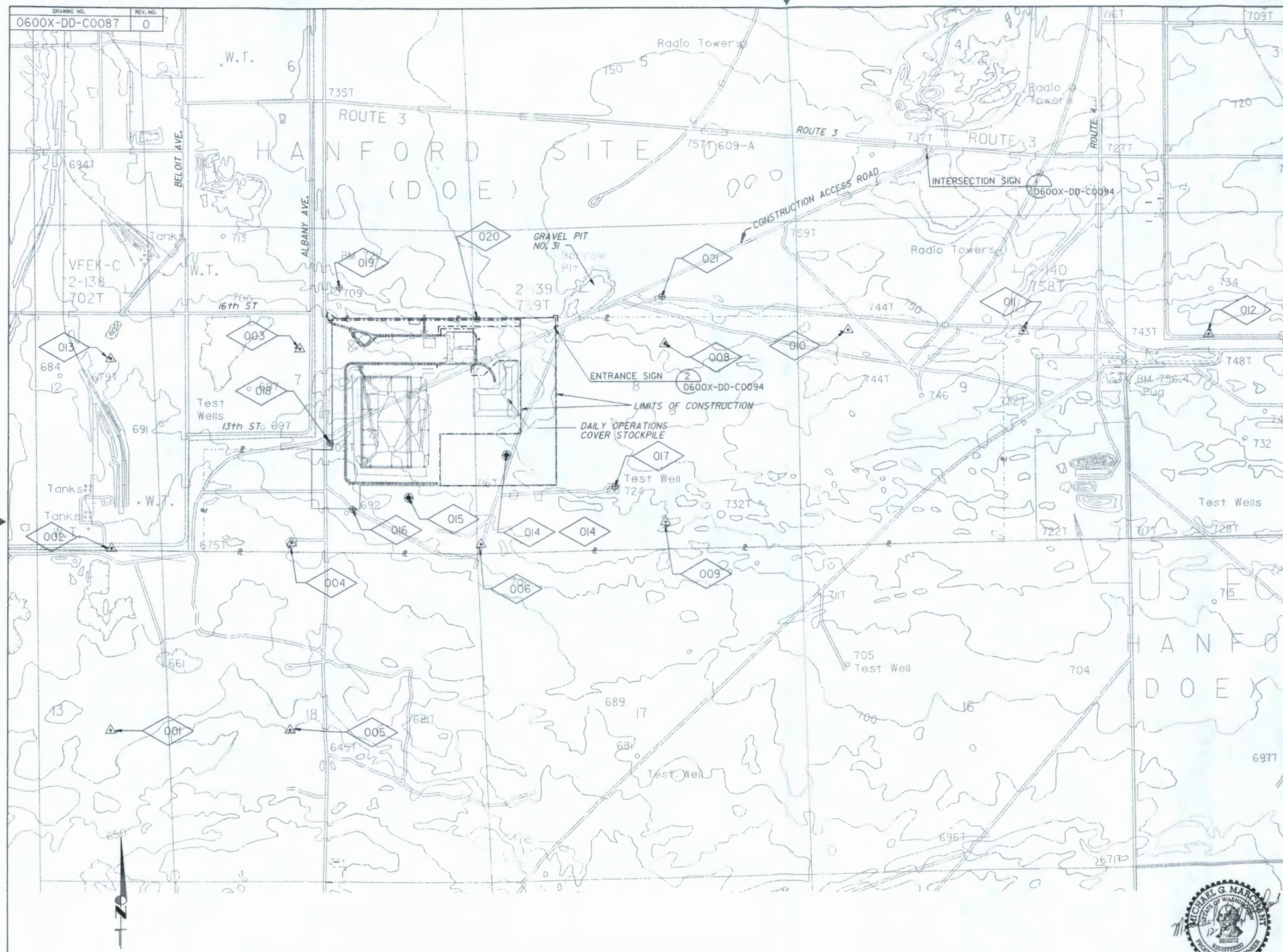

METERS 0 100 200 300 400 800
FEET 0 500 1000 2000

CONTOUR INTERVAL: 2 FT

NOTES

1. TOPOGRAPHY SHOWN ON ALL DWGS IS FROM THE ORIGINAL SURVEY FOR THE ERDF SITE AND WAS PERFORMED PRIOR TO CONSTRUCTION OF CELLS 1 AND 2. ACTUAL CONTOURS INSIDE EXISTING FENCE MAY VARY FROM THAT SHOWN. CONTRACTOR SHALL VERIFY ELEVATIONS AS NECESSARY TO COMPLETE THE WORK.
2. TOPOGRAPHY IS SHOWN IN FEET ABOVE SEA LEVEL.
3. COORDINATES FOR THE LIMITS OF CONSTRUCTION ARE SHOWN ON DRAWING 0600X-DD-C0089.

FOR INFORMATION ONLY

BHI-DIS 12/19/97

REV.	DATE	DESCRIPTION	DRAWN BY	DRAFT CHK	ORIG/ ENG'R	ENG'R CHK'R	GL/TDL APPROV	BHI PROJ ENG'R
0	12-19-97	ISSUED FOR CONSTRUCTION	FCH	MGM	MGS	MGM		

SCALE:

U.S. DEPARTMENT OF ENERGY
DOE FIELD OFFICE, RICHLAND
HANFORD ENVIRONMENTAL RESTORATION PROGRAM

BECHTEL HANFORD INC.
RICHLAND, WASHINGTON

MONTGOMERY WATSON
RICHLAND, WASHINGTON

ENVIRONMENTAL RESTORATION DISPOSAL FACILITY
CELLS 3 & 4 CONSTRUCTION, SITE PREPARATION
OVERALL SITE PLAN

BECHTEL JOB NO.	DOE CONTRACT NO.	CADD FILENAME
22192	DE-AC06-93RL12367	6xdc0087.dgn

TASK	DRAWING NO.	REV. NO.
600	0600X-DD-C0087	0

HANFORD

MICHAEL G. MARCHANT
STATE OF WASHINGTON
00002272
REGISTERED PROFESSIONAL ENGINEER
EXPIRES 12-03-99

RECORD INFORMATION

RECORD NO.	BLDG NO.	INDEX NO.
H-6-14712 sht 1	600G	0110

BRZ22A 4/95

0048805

13/18

Bechtel Hanford, Inc.

3350 George Washington Way
Richland, WA 99352

AMENDMENT NO. 001

REQUEST FOR PROPOSAL NO. 0600X-SC-G0018
SITE PREPARATION, ENVIRONMENTAL RESTORATION DISPOSAL FACILITY
CELLS 3 AND 4

TO:	TELEPHONE:

The below listed changes are issued by Bechtel Hanford, Inc. (BHI), on December 31, 1997 as Amendment No. 001 to Request for Proposal No. 0600X-SC-G0018, Site Preparation, Environmental Restoration Disposal Facility, Cells 3 and 4:

1.0 **Exhibit "F":**

Replace the existing Exhibit "F", Rev 0, with the attached Exhibit "F", Rev 1, Dated 12/31/97.

2.0 **Exhibit "I":**

Replace the existing Exhibit "I", Rev 0, with the attached Exhibit "I", Rev 1, Dated 12/30/97.

3.0 Meeting Minutes from the Pre-proposal Conference are issued with this Amendment No. 001

4.0 Questions received, from Potential Offerors, to date and the answers thereto are issued with this Amendment No. 001.

5.0 **The date and time for receipt of Proposals is hereby changed to 2:00 p.m. local time, Thursday, January 8, 1998.**

6.0 Offerors must acknowledge receipt of this Amendment prior to the hour and date for receipt for Proposals defined herein by <u>one</u> of the following methods:

(a) By signing and returning one copy of this Amendment;
(b) By acknowledging receipt of this Amendment on each copy of the offer submitted; or
(c) By separate letter, telegram, or facsimile which includes a reference to the Request for Proposal and Amendment numbers.

FAILURE OF YOUR ACKNOWLEDGMENT TO BE RECEIVED AT THE ISSUING OFFICE PRIOR TO THE HOUR AND DATE SPECIFIED MAY RESULT IN REJECTION OF YOUR OFFER.

7.0 If by virtue of this Amendment, you desire to change an offer already submitted, such change may be made by telegram, facsimile, or letter, provided such telegram, facsimile, or letter makes reference to the Request for Proposal and this Amendment, and is received prior to the hour and date specified for receipt of Proposals.

8.0 Except as provided herein, all other terms and conditions of this Request for Proposal, as heretofore changed, remain unchanged and in full force and effect.

Issued this thirty-first (31st) day of December, 1997 by:

BECHTEL HANFORD, INC.

Gregg Brower
Subcontracts Specialist

SHOULD YOU CHOOSE TO ACKNOWLEDGE RECEIPT OF THIS AMENDMENT BY SIGNING AND RETURNING THIS PAGE, THE FOLLOWING IS PROVIDED FOR YOUR CONVENIENCE. SEND FACSIMILE TO (509) 372-9049.

RECEIPT ACKNOWLEDGED:

Signature	Print Name
Name of Firm	Date

EXHIBIT "F"

DRAWINGS

1.0 SUBCONTRACTOR shall perform all work of this Subcontract as detailed in the following Exhibit "F" drawings as listed below:

Drawing No. 0600X-DD-	Rev.	Date	Title
G0008	0	12/12/97	Title Page, Location and Hanford Area Maps, Drawing Index
G0009	0	12/12/97	Symbols
G0010	0	12/12/97	Abbreviations
C0087	0	12/12/97	Overall Site Plan
C0088	0	12/12/97	Coordinate Table
C0089	0	12/12/97	Clearing Plan and Fence Location
C0090	0	12/12/97	Yard Piping Plan I
C0091	0	12/12/97	Yard Piping Plan II, Grading Plan
C0092	0	12/12/97	Civil Details I
C0093	0	12/12/97	Civil Details II
C0094	0	12/12/97	Civil Details III
E0032	0	12/12/97	Electrical Symbols
E0034	0	12/12/97	Electrical Site Plan
E0035	0	12/12/97	Electrical Details I
E0036	0	12/12/97	Electrical Details II
E0037	0	12/12/97	Electrical Details III
E0059	0	12/20/97	Pole Line Plan and Profile I
E0060	0	12/20/97	Pole Line Plan and Profile II
E0061	0	12/20/97	Pole Line Plan and Profile III

2.0 DEFINITIONS SPECIFIC TO AFOREMENTIONED DOCUMENTS

2.1 Terms used in the aforementioned documents (only) shall be interpreted as follows:

2.1.1 "Contract" shall mean "Subcontract"
2.1.2 "Contractor" or "Subcontractor" shall mean "SUBCONTRACTOR"
2.1.3 "Contracting Officer" shall mean "Contractor"

EXHIBIT "I"

SUBCONTRACTOR SUBMITTAL REQUIREMENTS SUMMARY

FOR

ENVIRONMENTAL RESTORATION DISPOSAL FACILITY
CELLS 3 AND 4
SITE PREPARATION

AT

HANFORD SITE

The following Subcontractor Submittal Requirements (the full text of which is attached hereto) are made part hereof to Fixed Price Type Subcontracts entered into in the furtherance of the performance of Contract No. DE-AC06-93RL12367 between Bechtel Hanford, Inc. and the U.S. Department of Energy.

Clause Number	Title	Page Number
1	Submittal Requirements	2
2	Submittal Recipients	2
3	Types of Submittals	2
4	Submittal Status and return by Bechtel	4
Attachment A:	Subcontractor Submittal Requirements Summary	5 through 7

EXHIBIT "I"

SUBCONTRACTOR SUBMITTAL REQUIREMENTS SUMMARY

FOR *(INSERT S/C TYPE)*

CLAUSE 1 - SUBMITTAL REQUIREMENTS

Subcontractor shall furnish all submittals (such as drawings, data, catalog cuts, and samples) in accordance with the Subcontractor Submittal Requirements Summary (SSRS) and this clause.

All submittals prepared for this Subcontract shall show the following information in or near the title block:

- Hanford-ERC
- Bechtel Subcontract Number

Submittal of several items together is acceptable. Each submittal shall have a copy of the SSRS form attached and the "Submittal Title" of the item being submitted shall be circled or highlighted.

Bechtel will determine if submittals received are complete and reserves the right to reject and require resubmittal of any submittal(s) that does not meet the requirements.

Bechtel also reserves the right to request any submittal not included on the SSRS form or any new submittal requirement.

CLAUSE 2 - SUBMITTAL RECIPIENTS

Submittals of all documents as identified on the SSRS shall be made directly to the individuals noted below.

a) The Submittal Coordinator's (SC) address is:

Bechtel Hanford, Inc.
3350 George Washington Way
MSIN: H0-09
Richland, WA 99352
Attention: Hanford-ERC/Submittal Coordinator in DIS

b) The Medical Provider's (MP) address is:

Hanford Environmental Health Foundation (HEHF)
3080 George Washington Way
Richland, WA 99352
Attention: Bechtel/Hanford-ERC

c) The Subcontract Administrator's (SA) address is:

Bechtel Hanford, Inc.
3350 George Washington Way
Richland, WA 99352
Attention: Gregg Brower/ Subcontract Specialist
MSIN: H0-04

CLAUSE 3 - TYPES OF SUBMITTALS

Documents

Each submittal shall be an unfolded, direct reading, first-generated copy the same size as the original. The minimum size of submittals shall be 21 cm by 28 cm (8-1/4 inches by 11 inches). Each submittal shall be of a sufficient quality to produce clearly legible/readable third-generation copies using either diazo or electrostatic (Xerox-type) processes and clearly legible/readable microfilm and copies from the microfilm.

Submittals 21.5 cm by 35.5 cm (8-1/2 inches by 14 inches) or smaller shall be black-on-white copies; bond paper is acceptable.

Drawing Requirements

All drawings and diagrams shall be prepared in accordance with the latest applicable American National Standard Institute Drafting Manual, ANSI-Y14.

Please note that the metric system of units is standard. Metric units may be accompanied by English units.

Each drawing submitted shall have a separate drawing number. When a drawing is revised, revision numbers must be clearly legible and easily distinguishable from the drawing number and should be as close as possible to the title block. A short description of the nature of the revision must be included, and revised areas on the drawing shall be circled and identified with the revision number.

"Typical," "standard," or "off-the-shelf" drawings will be acceptable only if they have all non-applicable sections either removed or noted on each drawing.

Magnetic Storage Media

1. Data submitted on magnetic storage media shall be accompanied by a hardcopy list of the media contents and a letter of transmittal including the following:

    - Subcontract number
    - A description of contents per the Subcontract SSRS Form (e.g., 100-Area, CADD Design Files)
    - Number and type of items (floppies, etc.)
    - Note if the submittal is a resubmittal

2. Diskettes shall be 3-1/2" (1.44 MB), DOS 3.3 or higher, with DOS backup for files greater than 1.44 MB.

3. Record documents submitted on magnetic storage media shall be accompanied by a matching hard copy documenting appropriate signatures.

Samples

Submittal of sample materials shall be of the size and type as noted in the technical specifications.

CLAUSE 4 - SUBMITTAL STATUS AND RETURN BY BECHTEL

A copy of submittal(s) requiring review will be returned by Bechtel with status (code) marked as follows using Supplier Document Status Stamp (see sample shown):

1. Work may proceed.
2. Submit final submittal. Work may proceed.
3. Revise and resubmit. Work may proceed subject to resolution of indicated comments.
4. Revise and resubmit. Work may not proceed.
5. Permission to proceed not required.

Permission to proceed does not constitute acceptance or approval of design details, calculations, analyses, test methods, or materials developed or selected by the subcontractor/supplier, and does not relieve subcontractor/supplier from full compliance with contractual obligations or release any "holds" placed on the contract.

Work shall not proceed until submittals requiring prior review (see SSRS) have been returned by Bechtel with a Code 1, 2, 3, or 5 notation. Subcontractor shall incorporate changes as required by comments on submittals and resubmit corrected submittals for review. Submittals that have been given a Code 1 notation by Bechtel shall not be changed without notification to Bechtel. If changes are required, affected submittals shall be resubmitted to Bechtel for review.

BECHTEL HANFORD, INC.	JOB NO. 22192
SUBCONTRACTOR/SUPPLIER DOCUMENT STATUS STAMP	

1 ☐ Work may proceed.
2 ☐ Submit final document. Work may proceed.
3 ☐ Revise and resubmit. Work may proceed subject to resolution of indicated comments.
4 ☐ Revise and resubmit. Work may not proceed.
5 ☐ Permission to proceed not required.

Permission to proceed does not constitute acceptance or approval of design details, calculations, analyses, test methods, or materials developed or selected by the subcontractor/supplier, and does not relieve subcontractor/supplier from full compliance with contractual obligations or release any "holds" placed on the contract.

	DESIGN ENGINEERING								ENV ENGR	SAFETY & HEALTH	FIELD SUPPORT	CADD	QA
	C/S/A	ELE.	MECH	CHEMICAL/ PROCESS	CONTROL SYSTEMS	GEO-TECH	SAFETY ENGR.	NUCLEAR / D&D					
CHECK REVIEW REQUIREMENT													
REVIEWED BY													

BY _____ DATE _____

DOCUMENT ID NUMBER

_____ - _____ - _____
SC/P.O. No SSRS ITEM SUBMITTAL

Exhibit "I" (Attachment A)

Subcontractor Submittal Requirements Summary

Submittal Schedule

F	Prior to Fabrication
S	Prior to Shipment
B	Prior to Balance of Payment
A	Per P. O. Schedule
M	Prior to Mobilization
W	Prior to Commencing Work
U	Prior to Use
X	Prior to Purchase
Y	Prior to Progress Payment for Each Specific Task
Z	As Required
14	Number indicates Calendar Days After Award
A	_____

Submittal Type Required

O	Original
P	Prints/Photocopies
T	Transparencies
M	Microfilm
PH	Photographs
FD	Floppy Disk
S	Sample
Q	_____
(2)	A number indicates quantity of copies

Distribution Designation

SC	Submittal Coordinator
SA	Subcontract Administrator
SS	Site Superintendent
DE	Design Engineering
EE	Env. Engineering
FS	Field Support
SH	Safety & Health
PR	Procurement
EC	Environmental Compliance
DM	Data Management
QA	Quality Assurance
MP	Medical Provider
AA	_____

Notices

1. To each item submitted, attach a copy of this form and circle the title of the item being submitted.
2. Failure to submit required submittals as delineated on this form may result in withholding of payment in accordance with provisions of the subcontract.

Item No./ Submittal Title		Clause, * Specification, or Scope of Work Paragraph	Sub-contractor send Submittal to	Submittal Codes		FOR BECHTEL USE ONLY Send to/for	
				Schedule	(No.) and Type	Review	Info
1-00	FIELD SUPPORT						
1-01	Authorized Representative	Exhibit "A", GC-04	SC	M	O		
2-00	SAFETY						
2-01	Site Specific Safety & Health Program	Exhibit "G", General Requirements	SC	M	(4) P		
3-00	SCHEDULE						
3-01	Job Order Schedule	Exhibit "B", SC-10	SC	Y	(4) P		
4-00	SECTION 01440						
4-01	Subcontractor Quality Control Plan (Job Specific)	Section 01440, Part 4	SC	W	(2) P		
5-00	SECTION 02210						
5-01	Qualification of Commerical Testing Laboratory	Section 02210, Part 4	SC	W	(4) P		
5-02	Characteristics of Base Material	Section 02210, Part 4	SC	W	(4) P		
5-03	Moisture and Density Tests	Section 02210, Part 4	SC	B	(4) P		
5-04	Calibration Data	Section 02210, Part 4	SC	W	(4) P		
6-00	SECTION 02660						
6-01	Installation Instructions	Section 02660, Part 4	SC	F	(4) P		
6-02	Polyvinyl Choride (PVC) Pipe	Section 02660, Part 4	SC	S	(4) P		
6-03	Steel Pipe	Section 02660, Part 4	SC	S	(4) P		
6-04	Copper Tubing	Section 02660, Part 4	SC	S	(4) P		

Exhibit "I" (Attachment A)

Subcontractor Submittal Requirements Summary

Submittal Schedule

F	Prior to Fabrication
S	Prior to Shipment
B	Prior to Balance of Payment
A	Per P. O. Schedule
M	Prior to Mobilization
W	Prior to Commencing Work
U	Prior to Use
X	Prior to Purchase
Y	Prior to Progress Payment for Each Specific Task
Z	As Required
14	Number indicates Calendar Days After Award
A	_____

Submittal Type Required

O	Original
P	Prints/Photocopies
T	Transparencies
M	Microfilm
PH	Photographs
FD	Floppy Disk
S	Sample
Q	_____
(2)	A number indicates quantity of copies

Distribution Designation

SC	Submittal Coordinator
SA	Subcontract Administrator
SS	Site Superintendent
DE	Design Engineering
EE	Env. Engineering
FS	Field Support
SH	Safety & Health
PR	Procurement
EC	Environmental Compliance
DM	Data Management
QA	Quality Assurance
MP	Medical Provider
AA	_____

Notices

1. To each item submitted, attach a copy of this form and circle the title of the item being submitted.
2. Failure to submit required submittals as delineated on this form may result in withholding of payment in accordance with provisions of the subcontract.

Item No./ Submittal Title		Clause, * Specification, or Scope of Work Paragraph	Sub-contractor send Submittal to	Submittal Codes		FOR BECHTEL USE ONLY Send to/for	
				Schedule	(No.) and Type	Review	Info
6-05	Red Brass Pipe	Section 02660, Part 4	SC	S	(4) P		
6-06	Fittings and Specials	Section 02660, Part 4	SC	S	(4) P		
6-07	Joints	Section 02660, Part 4	SC	S	(4) P		
6-08	Valves	Section 02660, Part 4	SC	S	(4) P		
6-09	Pressure Relief Valve Cert.	Section 02660, Part 4	SC	U	(4) P		
6-10	Valve Boxes	Section 02660, Part 4	SC	S	(4) P		
6-11	Yard Hydrant	Section 02660, Part 4	SC	S	(4) P		
6-12	Miscellaneous Items	Section 02660, Part 4	SC	S	(4) P		
6-13	Hydrostatic Tests	Section 02660, Part 4	SC	Y	(4) P		
6-14	Disinfection	Section 02660, Part 4	SC	Y	(4) P		
7-00	SECTION 02831						
7-01	Chain Link Fence Materials	Section 02831, Part 4	SC	U	(4) P		
7-02	Concrete	Section 02831, Part 4	SC	U	(4) P		
8-00	SECTION 16370						
8-01	Medium-Voltage Lines	Section 16370, Part 4	SC	S	(4) P		
8-02	Low-Voltage Lines	Section 16370, Part 4	SC	S	(4) P		
8-03	Poles and Hardware	Section 16370, Part 4	SC	S	(4) P		
8-04	Insulators	Section 16370, Part 4	SC	S	(4) P		
8-05	Crossarm Assemblies	Section 16370, Part 4	SC	S	(4) P		
8-06	Fuses and Switches, Medium-Voltage	Section 16370, Part 4	SC	S	(4) P		

Exhibit "I" (Attachment A)

Subcontractor Submittal Requirements Summary

Submittal Schedule

F	Prior to Fabrication
S	Prior to Shipment
B	Prior to Balance of Payment
A	Per P O Schedule
M	Prior to Mobilization
W	Prior to Commencing Work
U	Prior to Use
X	Prior to Purchase
Y	Prior to Progress Payment for Each Specific Task
Z	As Required
14	Number indicates Calendar Days After Award
A	_____

Submittal Type Required

O	Original
P	Prints/Photocopies
T	Transparencies
M	Microfilm
PH	Photographs
FD	Floppy Disk
S	Sample
Q	_____
(2)	A number indicates quantity of copies

Distribution Designation

SC	Submittal Coordinator
SA	Subcontract Administrator
SS	Site Superintendent
DE	Design Engineering
EE	Env. Engineering
FS	Field Support
SH	Safety & Health
PR	Procurement
EC	Environmental Compliance
DM	Data Management
QA	Quality Assurance
MP	Medical Provider
AA	_____

Notices

1. To each item submitted, attach a copy of this form and circle the title of the item being submitted.
2. Failure to submit required submittals as delineated on this form may result in withholding of payment in accordance with provisions of the subcontract.

Item No./ Submittal Title	Clause, * Specification, or Scope of Work Paragraph	Sub-contractor send Submittal to	Submittal Codes		FOR BECHTEL USE ONLY Send to/for	
			Schedule	(No.) and Type	Review	Info
8-07 Transformers	Section 16370, Part 4	SC	S	(4) P		
8-08 Surge Arrestors	Section 16370, Part 4	SC	S	(4) P		
8-09 HPS Floodlight	Section 16370, Part 4	SC	S	(4) P		
8-10 Grounding and Bonding	Section 16370, Part 4	SC	S	(4) P		
8-11 Field Testing	Section 16370, Part 4	SC	Y	(4) P		

Environmental Restoration Contractor **ERC Team**

Meeting Minutes

Job No. 22192
Written Response Required: NO
Due Date: N/A
Actionee: N/A
Closes CCN: N/A
OU: N/A
TSD: N/A
ERA: N/A
Subject Code: N/A

SUBJECT PRE-PROPOSAL CONFERENCE

TO Distribution

FROM Gregg Brower

DATE Dec. 18, 1997

ATTENDEES
Gregg Brower, BHI
Bob Moore, CHI
Dennis Dallas, Sun River Electric
Vern Chamberlain, Sun River Electric
Pat O' Lynch, Morrison Construction Services
Jim Pardue, Apollo Inc.
Dave Kent, Contractor's Equipment Maintenance
Don Jarrett, Thompson Mechanical Inc.
Doug Gehring, Power City Electric
Ernie Mokuiki, BHI
Greg Mitchem, BHI
Bruce Bennett, BHI
David Leonhardt, BHI

DISTRIBUTION
Attendees

Document and Information Services H0-09

A meeting on the above subject was held on December 18, 1997 at the offices of Bechtel Hanford Inc.

At the beginning of the meeting introductions of Bechtel Hanford, Inc., Procurement, Subcontract Technical Representative, Project Engineering personnel were made.

A general announcement that any questions were to be written and submitted the Subcontract Specialist, Gregg Brower. All questions asked would be answered in written form by BHI and no other answer should be relied upon.

- **SUBCONTRACT EXHIBITS**

  Exhibit A – This Request for Proposal (RFP) makes no changes to the existing master agreements.

  Exhibit B – Any revisions to the exhibit are identified in the packages provided to the potential offerors. The items discussed were as follows:

  Completion date for clearing is February 17, 1998
  Completion date for all remaining work is June 20, 1998.
  An amendment would be issued to add site specific training required for the site.

Exhibit C – The offerors are to provide all information requested in Exhibit C. The items requested are:

RFP response letter,
Bid Bond,
Pricing,
Representations and Certifications.
Subcontractor and Vendor list,
Schedule,
Exceptions/Deviations. offerors were notified they could not take any exceptions to the master agreements.

Exhibit D – Exhibit D is a general scope of work.

Exhibit E – Exhibit E contains the technical specifications for the RFP. The offerors were told to make sure they had received all specifications listed on the cover sheet of Exhibit E.

Exhibit F – Exhibit F contains the drawings for the RFP. The offerors were told to make sure they had received all drawings listed on the cover sheet of Exhibit F.

Exhibit G – This RFP makes no changes to the existing master agreement.

Exhibit H – This RFP makes no changes to the existing master agreement, except the updated Appendix A is included with the RFP.

Exhibit I – Exhibit I contains a list of submittals required and requirements for submittals.

- **SITE TOUR**

The offerors were shown the area east of the existing ERDF site. The approximate corner locations for the fence were shown and the offerors could see the vegetation which was to be cleared. The offerors were told they were responsible for maintaining access control to the ERDF when working on fence.

The offerors were then taken into the ERDF site and had the site specific training that their personnel will be required to take when working inside the ERDF fence. The offerors were told as long as they were working outside the ERDF site fence their personnel were not required to take the site specific training.

The offerors were shown the routing of the water lines and approximately where the bulk water loading area was to be constructed. Offerors were notified the RMA, east of the concrete pad, would be moved to allow the construction of the raw water line, but only enough so that the work could be completed. The offerors were told the work on the raw water line would have to be performed from the slope to the east. The offerors were also informed the area disturbed on the slope and the excavation would have to be replaced in kind, i.e. gravel.

RFP 0600X-SC-G0018
QUESTIONS AND ANSWERS

1. If Subcontractor chooses not to re-use existing chain link fence, after demolition is the fence the property of the Subcontractor?

Answer: Yes

2. During the mowing operation, does a water truck have to follow the mowing machine or can the truck be on standby, unoperated?

Answer: The Subcontractor's responsibilities include, but are not limited to, dust control and fire prevention. The methods/equipment/labor used, to carry out these responsibilities, are at the discretion of the Subcontractor.

3. Are RPTs required when excavating inside fenced area on pipe and pole lines?

Answer: No radiological contamination is expected in these locations however Contractor personnel may elect to randomly check excavations from time to time. These checks will not interfere with work of the Subcontractor.

4. Can grubbed (note: should read "cleared" not "grubbed" - BHI) areas be cut down to less than 6"?

Answer: Yes. The requirement for clearing is intended to remove the existing growth to near the ground, defined as 6" or less above the ground. However, the ground is not to be unreasonably disturbed while clearing the area.

5. We believe that after the initial cutting, mowing and chopping of the sage brush, that there will be a small percentage of already dead sage brush wood and root laying close to the ground that cannot be picked by machinery. This would require hand picking. How stringent will the specs be followed?

Answer: The subcontract does not require the dead sage brush wood and roots close to the ground to be processed by machinery or by hand, unless it protrudes in excess of 6" above the ground.

6. What pit is available for dumping non-organic materials?

Answer: This type of material, termed "construction debris" at Hanford, can be disposed of in Pit 9, approx. 2 miles north of the 300 Area. The disposal is at no cost to the Subcontractor, but must be coordinated with the landlord of Pit 9, DynCorp.

7. Is there an underground scan available for existing utilities?

Answer: An Excavation Permit has been secured for this work, which required limited evaluation of existing utilities. An "underground scan" of specific work areas will be completed by Contractor prior to actual work, but will not be available for bidding.

8. What about access to bedding sand through locked gate on east end of site?

Answer: Contractor will provide access through the east gate. Note: It is the Subcontractors responsibility to ensure the referenced material is acceptable for bedding. Contractor will make reasonable quantities of this material available to the Subcontractor for this Subcontract.

9. What material is the existing 3" potable water pipe made of?

Answer: The existing potable water pipe is 6" gasketed PVC, AWWA C-900.

10. In an effort to even the field, will Bechtel make a task assignment for all underground pressurized pipe to be the work of the pipefitters?

Answer: The Subcontractor is responsible for making the work assignments and complying with the Hanford Site Stabilization Agreement. Offerors should address this issue with the labor unions if they have a concern.

11. Can a 10 KVA transformer be installed on pole 407 to feed the street light in place of underground from pole 404?

Answer: The work is to be installed as shown.

12. Specification 16370-2.9.1 states the crossarms are to be wood. Drawing 0600X-DD-E0033 List of Material, Item #2 is steel. Which type is required?

Answer: Item 2 on drawing 0600X-DD-E0033 is a crossarm brace and is to be metal, the crossarms are to be wood. Note. Some of the cross arm braces are wood.

13. Will 16370 – 3.10.6 be performed by the contractor (BHI understands this to mean "Subcontractor") or by others per 16370 –1.2.3?

Answer: Subcontractor shall complete the field testing.

14. Section A on Drawing 0600X-DD-C0094 shows a gate valve on a 45 degree angle to the pipe. We assume this valve is to accommodate the hot tap and then isolate line. Specifications state all gate valves 3 inches and larger are to be flanged and conform to AWWA – C500. Futhermore all flanged valves will be provided with an approved pit for access. Is access necessary here? Can we change configuration? Use 3 inch screwed gate valve.

Answer: No, access to this particular valve is not necessary. The 3 inch valve will be flanged as required.

15. Drawings 0600X-DD-C0090 and C0091, Note 2. This note requires a minimum cover of 3.5 feet, unless otherwise indicated. Specific locations are given an installed elevation which exceeds a cover depth of 3.5 feet. Which requirement governs the installation of the pipe, the given elevation or the minimum cover?

Answer: The note calls for a ***minimum*** *cover of 3.5 feet unless shown otherwise. The Subcontractor shall meet both requirements. The pipe shall be installed to the elevations given and the minimum cover will be 3.5 feet. The areas that exceed the 3.5 feet are in compliance with the requirements.*

16. Drawings 0600X-DD-C0090 and C0091, Note 8. This note requires "Erosion Control" for all disturbed areas. Please clarify the extent and material requirements for erosion control.

Answer: Disturbed areas are the areas disturbed by the Subcontractor or his personnel. The note clearly identifies what is to be placed in what areas.

17. Drawings 0600X-DD-C0090 and C0091, Note 8. How long is "Soil Sement" required to be effective?

Answer: The Subcontractor will be required to apply the soil treatment in accordance to the manufacturer's requirements one time.

18. Drawings 0600X-DD-C0088. What are the tolerances for the use of coordinates and elevations?

Answer: The tolerance is indicated by the relative accuracy of the values as stated on the drawing. That is if the elevation is 452., then the tolerance of the elevation is plus or minus 1. If the elevation is 452.35, then the tolerance is plus or minus 1/100.

19. Scope of Work, Exhibit D, 4.2. If the area outside the fence is not disturbed during fence installation, is soil treatment required?

Answer: No.

20. Specification 01440, Paragraph 3.1. What are the requirements of the Government's Quality Assurance Plan which must be addressed?

Answers: The requirements are identified in EPA-600-R93-182.

21. Specification 01440, Paragraph 1.1. Is it the intent of BHI to bind the Subcontractor to the requirements of EPA-600-R93-182?

Answer: Yes

22. Specification 01440, Paragraph 3.2.1. Please clarify which contract clause is "Inspection of Construction" as referenced.

Answer: There is no clause titled "Inspection of Construction". References to "Inspection of Construction" will be revised to read "Exhibits A and B"

23. Specification 01440, Paragraph 3.5. Exhibit I references no submittals for 01440. What submittals, if any, are required?

Answer: Exhibit I has been revised to include a submittal for a job specific Quality Plan.

24. Specification 01440, General. This section appears to include many attributes which are covered in other sections or contract requirements (e.g. safety AHA, schedule, etc…) Is it BHI's intent for this section to duplicate these other requirements? How will this section be implemented by BHI? That is, will the BHI Quality representative be the technical lead associated with this section. Or will the Architect/Engineer, or some other Third Party? If other than BHI, what contract relationship will be established with this entity and the Subcontractor?

Answer: It is not the intent of BHI to duplicate requirements found in other locations of the Subcontract. The only contractual relationship will be between BHI (Contractor) and the SUBCONTRACTOR that wins this work.

25. Specification 01440, General. This section is clearly written for a much larger scope of work than is represented in this Job Order. Is it BHI's intent to apply this section to all work associated with this Job Order? It is requested that BHI determine the "definable features of work" to which this section should apply, as it seems not all aspects of this Job Order should receive the same level of quality control.

Answer: Yes, it is the intent of BHI to apply this section to all work associated with this Job Order. EPA-600-R93-182 provides for a graded Quality Assurance approach. The Subcontractor will be required to meet and document the requirements of the specifications.

26. Specifications, general. The specifications make reference to "Government" and "Contractor". Please clarify what relationship the Subcontractor has to these entities.

Answer: The cover sheet of Exhibit E, Specifications identifies that "Government" is to mean "Contractor" and "Contractor" is to mean "Subcontractor". Exhibit B defines "Contractor" to be "Bechtel Hanford, Inc." and "Subcontractor" to be "the company, corporation, partnership, individual or other entity to which this Subcontract is issued".

27. General. Is the work of this Job Order subject to a "Permit" issued by any regulatory agencies? If so, which agencies and what are the permit conditions and requirements as they pertain to this Job Order?

Answer: No.

0048805

14/18

Bechtel Hanford, Inc.

3350 George Washington Way
Richland, WA 99352

AMENDMENT NO. 002

REQUEST FOR PROPOSAL NO. 0600X-SC-G0018
SITE PREPARATION, ENVIRONMENTAL RESTORATION DISPOSAL FACILITY
CELLS 3 AND 4

TO:	TELEPHONE:

The below listed changes are issued by Bechtel Hanford, Inc. (BHI), on January 5, 1998 as Amendment No. 002 to Request for Proposal No. 0600X-SC-G0018, Site Preparation, Environmental Restoration Disposal Facility, Cells 3 and 4:

.0 Exhibit "B" Revisions:

Add the following to: SC-35 CONTRACTOR FURNISHED TRAINING AND PHYSIOLOGICAL EXAMINATIONS:

SUBCONTRACTOR personnel shall take the following training prior to performing work within the ERDF Facility fence:

Site Specific Training, Approximately ½ hour.

2.0 Exhibit "F":

Make the following changes to the drawings as follows:

Drawing 0600X-DD-C0093, Section 2:

1. Delete the precast concrete box and cover above the concrete block base.
2. The elevation of the top of the concrete block base shall be 719.9 ft.
3. Provide and install a 3 inch PVC pipe casing X 12 inches long around the 1 inch pipe running under the concrete block base.
4. Install 12 inches of 1½ (-) drainage rock under the air vent assembly and concrete block base.
5. Slope finish grade from top of concrete block base to existing surrounding grade.
6. The inside dimension between the concrete base blocks shall be 2'-4" (dimension parallel to vent pipe) and 1'-4" (dimension perpendicular to vent pipe).

Drawing 0600X-DD-C0088:

Revise the elevation of point number 302 from "716.0 +/-" to "717.5 +/-".

3.0 **The date and time for receipt of Proposals remains the same 2:00 p.m. local time, Thursday, January 8, 1998.**

4.0 Offerors must acknowledge receipt of this Amendment prior to the hour and date for receipt for Proposals defined herein by one of the following methods:

(a) By signing and returning one copy of this Amendment;
(b) By acknowledging receipt of this Amendment on each copy of the offer submitted; or
(c) By separate letter, telegram, or facsimile which includes a reference to the Request for Proposal and Amendment numbers.

FAILURE OF YOUR ACKNOWLEDGMENT TO BE RECEIVED AT THE ISSUING OFFICE PRIOR TO THE HOUR AND DATE SPECIFIED MAY RESULT IN REJECTION OF YOUR OFFER.

5.0 If by virtue of this Amendment, you desire to change an offer already submitted, such change may be made by telegram, facsimile, or letter, provided such telegram, facsimile, or letter makes reference to the Request for Proposal and this Amendment, and is received prior to the hour and date specified for receipt of Proposals.

6.0 Except as provided herein, all other terms and conditions of this Request for Proposal, as heretofore changed, remain unchanged and in full force and effect.

Issued this fifth (5th) day of January, 1998 by:

BECHTEL HANFORD, INC.

Gregg Brower
Subcontracts Specialist

SHOULD YOU CHOOSE TO ACKNOWLEDGE RECEIPT OF THIS AMENDMENT BY SIGNING AND RETURNING THIS PAGE, THE FOLLOWING IS PROVIDED FOR YOUR CONVENIENCE. SEND FACSIMILE TO (509) 372-9049.

RECEIPT ACKNOWLEDGED:

Signature	Print Name
Name of Firm	Date

0048805

15/18

ENVIRONMENTAL RESTORATION DISPOSAL FACILITY (ERDF)

CELLS 3 AND 4
TRENCH LINER SYSTEM AND SUPPORT FACILITIES

CONSTRUCTION QUALITY ASSURANCE PLAN

REV	DATE	REASON FOR REVISION	ORIGINATOR	CHECKER	GROUP LEADER	TASK DESIGN LEAD	PROJECT ENGINEER
C	1/20/98	100% Design Review	FSS	LHA			
B	11/21/97	60% Design Review	FSS	LHA			

	RICHLAND ENVIRONMENTAL RESTORATION PROJECT	JOB NO. 22192
		DOCUMENT NO. BHI-01143
		SHEET 1 of 83

ENVIRONMENTAL RESTORATION DISPOSAL FACILITY (ERDF)

CELLS 3 AND 4
TRENCH LINER SYSTEM AND SUPPORT FACILITIES

CONSTRUCTION QUALITY ASSURANCE PLAN

REV	DATE	REASON FOR REVISION	ORIGINATOR	CHECKER	GROUP LEADER	TASK DESIGN LEAD	PROJECT ENGINEER
C	1/20/98	100% Design Review	FSS	LHA			
B	11/21/97	60% Design Review	FSS	LHA			

	RICHLAND ENVIRONMENTAL RESTORATION PROJECT	JOB NO. 22192
		DOCUMENT NO. BHI-01143
		SHEET 1 of 83

This page intentionally left blank.

600 AREA
ENVIRONMENTAL RESTORATION DISPOSAL FACILITY
HANFORD SITE
RICHLAND, WASHINGTON

CELLS 3 AND 4
TRENCH LINER SYSTEM AND SUPPORT FACILITIES
CONSTRUCTION QUALITY ASSURANCE PLAN

TABLE OF CONTENTS

Page No.

1. INTRODUCTION 1
   1.1 Purpose 1
   1.2 Scope 1
   1.3 Relationship to QA Program Plan 2
   1.4 Change Control Procedures 2
2. PROJECT ORGANIZATION 3
   2.1 Responsibility and Authority 3
      2.1.1 Owner 3
      2.1.2 Permitting Agency 3
      2.1.3 Facility Operator 3
      2.1.4 Facility Development Project Manager 3
      2.1.5 Construction Manager 3
      2.1.6 Environmental Restoration Contractor QA 4
      2.1.7 Construction Subcontractor 4
      2.1.8 CQA Subcontractor 4
      2.1.9 QA Engineer 4
      2.1.10 Engineering Support 4
      2.1.11 ERDF Designer 4
   2.2 Project Meetings 5
      2.2.1 Pre-Construction Meeting 5
      2.2.2 Daily Progress Meetings 6
      2.2.3 Weekly Progress Meetings 6
      2.2.4 Problem or Work Deficiency Meetings 7
   2.3 Hold Points 7
3. PERSONNEL QUALIFICATIONS AND TRAINING 8
   3.1 QA Engineer 8
   3.2 CQA Personnel 8
   3.3 Consultants 8
4. INSPECTION ACTIVITIES 9
   4.1 Earthworks 9
      4.1.1 Excavation 9
      4.1.2 Fill 9
   4.2 Admix Soil Liner 10
      4.2.1 Pre-Construction 10
      4.2.2 Test Fill 12
      4.2.3 Construction 14
      4.2.4 Post Construction 16
   4.3 Gravel Drainage Layers 16
      4.3.1 Pre-Construction 16
      4.3.2 Construction 17
      4.3.3 Post-Construction 17
   4.4 Operations Layer 17
      4.4.1 Pre-Construction 17

4.4.2 Construction 17
4.4.3 Post-Construction 18
4.5 Anchor Trench / Side Slope Riser Pipe Trench 18
4.5.1 Pre-Construction 18
4.5.2 Construction 18
4.5.3 Post-Construction 19
4.6 HDPE Geomembrane Liner 19
4.6.1 Preconstruction 19
4.6.2 Construction 22
4.6.3 Post-Construction 30
4.7 Leachate Collection System (LCS) 31
4.7.1 Pre-Construction 31
4.7.2 Construction 32
4.7.3 Post-Construction 37

5. DOCUMENTATION 38

5.1 Daily Reports 38
5.2 Inspection Data Sheets 39
5.3 Nonconformance Reporting 40
5.4 Design Changes and Clarifications 40
5.5 Progress Reports 40
5.6 Final Documentation 41
5.7 Storage of Records 41

6. REFERENCES 42

LIST OF FIGURES

2-1 ERDF Quality Assurance Organization

LIST OF TABLES

4-1 Soil Minimum Testing Requirements
4-2 Geosynthetic Materials Minimum Testing Requirements
4-3 ERDF Construction Hold Points

LIST OF APPENDICES

APPENDIX A Acceptance Test Procedures

ACRONYM LIST

ASTM	American Society for Testing and Materials
BHI	Bechtel Hanford, Inc.
CM	Construction Manager
CQA	Construction Quality Assurance
DOE	U.S. Department of Energy
DOE-RL	U.S. Department of Energy - Richland Operations Office
EPA	U.S. Environmental Protection Agency
ERC	Environmental Restoration Contractor
ERDF	Environmental Restoration Disposal Facility
FCN	Field Change Notice
FCR	Field Change Request
FDPM	Facility Development Project Manager
ft	feet
GAI	Golder Associates Inc.
HDPE	High Density Polyethylene
LCS	Leachate Collection System
m	meters
mm	millimeters
MPa	Mega Pascal
MW	Montgomery Watson
NCR	Nonconformance Report
OSHA	Occupational Safety and Health Administration
psi	pounds per square inch
PVC	polyvinyl chloride
QA	Quality Assurance
QAPP	Quality Assurance Program Plan
QC	Quality Control
SDRI	Sealed Double Ring Infiltrometer

This page intentionally left blank.

1. INTRODUCTION

The U.S. Department of Energy (DOE) has tasked Bechtel Hanford, Inc. (BHI) to construct two additional cells (Cells 3 and 4) at the Environmental Restoration Disposal Facility (ERDF), on the Hanford site near Richland, Washington. The initial cells (Cells 1 and 2) and support facilities for the ERDF were constructed during 1995 and 1996. Disposal of remediation waste, primarily contaminated soil, began in July, 1996. Cells 3 and 4 will be constructed adjacent to the existing cells, and the liner systems will be joined to a single uninterrupted liner system. This Construction Quality Assurance (CQA) Plan describes the QA activities required during construction of Cells 3 and 4.

1.1 Purpose

During facility construction, Quality Assurance activities will be required to ensure that:

(1) all components are constructed in accordance with the plans and specifications, and

(2) requirements of regulatory agencies related to documentation are satisfied. The regulatory agencies involved with ERDF Cells 3 and 4 are the U.S. Environmental Protection Agency (EPA) and the Washington State Department of Ecology (Ecology).

This CQA Plan has been prepared to describe the activities that will be performed during construction to satisfy these objectives. Procedures invoked by the CQA Plan are intended to identify problems that may occur during construction and to document that these problems are corrected before construction is complete.

This plan is intended to satisfy the regulatory requirements and guidance established in 40 CFR 264.19 (EPA), WAC 173-303-665 and -810 (Ecology, 1994), and EPA/600/R-93-182 Quality Assurance and Quality Control for Waste Containment Facilities (EPA, 1993).

This CQA Plan is intended to function independently of the construction subcontractor's Quality Control (QC) program, except when nonconformances in the construction subcontractor's program or product are identified. The construction subcontractor's QC activities during construction, including test methods, location, frequency, and similar requirements, are defined in the Technical Specifications for this project and are not modified in any way by this CQA Plan.

1.2 Scope

This plan establishes general administrative and documentation procedures that will be applicable for all aspects of construction. With respect to specific inspection and testing activities, this plan addresses only those activities associated with construction of the disposal trench and the support facilities that will be performed for Cells 3 and 4. Specific work items include:

- Excavation
- Soil classification
- Placement of fill
- Construction of soil liner test fill
- Placement of soil liner
- Construction of anchor trenches and sideslope riser trenches
- Installation of geosynthetics
- Installation of components for leachate collection system
- Placement of gravel drainage layers
- Placement of the operations layer.

1.3 Relationship to QA Program Plan

This CQA Plan is a secondary document, developed under the requirements of the project QA program embodied in the current approved versions of the BHI Quality Management Plan (QMP), Richland, WA. (BHI, 1994) and the Environmental Restoration Disposal Facility Quality Assurance Program Plan (QAPP), Richland, WA. (BHI, 1995). The QMP is the site-wide Environmental Restoration Contractor's quality assurance document. The QAPP is the ERDF project-specific quality assurance document. The CQA Plan draws upon the records management, document control, technical review, and other procedural resources invoked by the QAPP and QMP wherever appropriate.

1.4 Change Control Procedures

The CQA Plan and all implementing procedures are subject to the engineering change control procedures described in subsequent sections of this plan.

2. PROJECT ORGANIZATION

This section describes the project organization for the construction of ERDF Cells 3 and 4. The following sub-sections address the organizations involved in the ERDF construction, their respective roles in construction activities, and methods of interactions between organizations.

2.1 Responsibility and Authority

The quality assurance organization chart for ERDF construction is shown on Figure 2-1. Each major organization is described in the following sections.

2.1.1 Owner

The owner of the ERDF is the U.S. Department of Energy - Richland Operations Office (DOE-RL).

2.1.2 Permitting Agency

Cells 3 and 4 of the ERDF are being constructed to meet regulations established by the U.S. Environmental Protection Agency (EPA). This CQA Plan is specifically designed to support those regulatory needs.

2.1.3 Facility Operator

The ERDF is operated by BHI for the DOE. During construction, operations personnel will be responsible for review and approval of any field changes which would affect facility operations.

2.1.4 Facility Development Project Manager

BHI will function as the Facility Development Project Manager (FDPM), responsible for all aspects of design and construction of the ERDF. The FDPM interfaces with DOE-RL and the regulatory agency, and is responsible for ensuring that the permitting requirements of the regulatory agency are satisfied. The FDPM will also oversee the activities of the Designer, Construction Manager, and CQA Subcontractor. These three activities will be managed by different individuals in order to maintain the required degree of independence. All three individuals will report directly to the FDPM. The FDPM will also be responsible for design drawing and other document control. The FDPM may temporarily suspend project activities if nonconformances are identified.

2.1.5 Construction Manager

BHI will act as Construction Manager (CM) during ERDF construction. The CM will direct the activities of the construction subcontractor and approve payments. The CM will ensure that the QC activities required of the construction contractor are performed satisfactorily. The CM will be responsible for implementing changes as directed by the FDPM that may be required to

correct nonconformances. The CM will have Administrative Contracting Officer authority for all ERDF construction contracts.

2.1.6 Environmental Restoration Contractor QA

The Environmental Restoration Contractor (ERC) QA representative will provide oversight of the CQA subcontractor's activities for BHI. This individual is also referred to as the Quality Services Manager.

2.1.7 Construction Subcontractor The construction subcontractor will perform the work activities associated with actual construction of the ERDF. The construction subcontractor will be responsible for implementing its own internal QC activities as defined in the project specifications, the QAPP, approved submittals, and other supporting documentation. The construction subcontractor will report directly to and receive direction from the CM.

2.1.8 CQA Subcontractor

BHI will have overall responsibility for manufacturing quality assurance and construction quality assurance for the disposal trench and support facilities. However, the third-party CQA subcontractor will actually carry out these QA tasks. The CQA subcontractor will be responsible for reviewing the construction subcontractor's plans and other submittals. The CQA subcontractor will also be responsible for training inspection personnel on requirements, procedures, scheduling, and inspection activities, and ensuring that the CQA testing laboratories and surveyors conform to QA requirements. The CQA subcontractor will ensure that sample custody procedures are followed and that test data are accurately reported and maintained for preparation of periodic reports. The most important duty of the CQA subcontractor is confirming and documenting that the facility was constructed in accordance with plans and specifications approved by the permitting agency.

2.1.9 QA Engineer

The QA Engineer will be provided by the CQA subcontractor and will directly supervise the quality assurance functions on site, direct the location and frequency of QA tests, monitor the results of tests, and verify that deficiencies have been corrected.

2.1.10 Engineering Support

BHI will provide technical and administrative support to the CM including contract modifications, pay requests, safety monitoring, compilation of final quantities, design clarifications and changes, etc.

2.1.11 ERDF Designer

The ERDF has been designed by BHI through their subcontractor, Montgomery Watson/Golder Associates Inc. (MW/Golder). During construction, MW/Golder will be under BHI's direction. The responsibilities of the Designer include clarifying and interpreting the plans and specifications, incorporating new or changed requirements, and reviewing

submittals as directed by the FDPM. The Designer may also assist with document distribution and control if directed by the FDPM.

2.2 Project Meetings

This section includes a discussion of various progress and status meetings to be held throughout construction activities. The intent of the meetings is to ensure communication between all organizations involved in the construction of ERDF Cells 3 and 4.

2.2.1 Pre-Construction Meeting

A meeting will be held to resolve any uncertainties following the award of the construction contract, but prior to the start of construction. At a minimum, the meeting shall be attended by the Facility Development Project Manager, the Construction Manager, the Quality Services Manager, the Designer, the QA Engineer, representatives of the regulatory agency as agreed upon, and the construction subcontractor. Separate pre-construction meetings may be held for different construction subcontractors (e.g., earthworks and utility) if appropriate. The topics of this meeting shall include but not be limited to:

- Reviewing the responsibilities of each organization;
- Reviewing lines of authority and communication for each organization;
- Providing each organization with all relevant CQA documents and supporting information;
- Familiarizing each organization with the CQA Plan and its role relative to the design criteria, plans, and specifications;
- Determining any changes to the CQA Plan that may be needed to document that the facility will be constructed to meet or exceed the specified design requirements;
- Discussing the established procedures or protocol for observations and tests including sampling strategies;
- Discussing the established procedures or protocol for handling construction deficiencies, repairs, and retesting, including "stop work" conditions;
- Reviewing methods for documenting and reporting inspection data;
- Reviewing methods for distributing and storing documents and reports;
- Reviewing work area security and safety protocol;
- Reviewing the proposed project schedule;

- Discussing procedures for the location and protection of construction materials and for the prevention of damage of the materials from inclement weather or other adverse events; and

- Conducting a site walk-around to review construction materials and inspect equipment storage locations.

The meeting will be documented in compliance with the requirements of the QAPP for documentation of all quality-related meetings. Minutes will be transmitted to the required distribution and meeting attendees.

2.2.2 Daily Progress Meetings

An informal progress meeting will be held daily at the work area. At a minimum, these progress meetings will be attended by the Construction Manager or designee, construction subcontractor(s), and QA Engineer. The purpose of such meetings is to:

- Review the previous day's activities and accomplishments;

- Review the work location and activities for the day;

- Discuss the construction subcontractor's personnel and equipment assignments for the day;

- Review any new test data;

- Discuss any potential construction problems; and

- Discuss any health and safety issues.

This meeting will be documented in daily field monitoring reports by a member of the CQA staff in compliance with the QAPP document control requirements.

2.2.3 Weekly Progress Meetings

Weekly progress meetings will be held at the site. At a minimum, weekly progress meetings will be attended by the Construction Manager, the QA Engineer, the construction subcontractor(s), and the Facility Development Project Manager or his representative. The purpose of the meeting is to:

- Review the previous week's activities and accomplishments;

- Review claims, change orders, delays, and similar items;

- Review planned activities for the upcoming week;

- Finalize resolution of problems from the previous week; and

- Discuss the potential problems with the work planned for the upcoming week.

This meeting will be documented in compliance with the QAPP document control requirements. Minutes will be transmitted to the required distribution and meeting attendees.

2.2.4 Problem or Work Deficiency Meetings

Meetings will be convened as necessary to address inspection deficiencies and nonconformances. Deficiencies observed during general earthworks construction will be brought to the attention of the construction subcontractor on a real-time basis. If the requested corrective action is not completed to the QA Engineer's satisfaction, the deficiency shall be considered a nonconformance, documented on a nonconformance report (NCR) form, and submitted to the FDPM for resolution. All receiving inspection discrepancies shall be documented directly on an NCR and submitted to the FDPM for resolution. In addition, all deficiencies requiring an engineering resolution by the Designer shall be documented on an NCR. The QA Engineer and Designer will attend all subsequent nonconformance review meetings as requested by the FDPM.

2.3 Hold Points

Mandatory hold points will be established for certain key activities as identified in Section 4 and listed in Table 4-3. At these points, the construction subcontractor, manufacturer, or shipper shall cease work on the affected activity until it has been reviewed by the appropriate QC personnel and/or QA Engineer. The schedule for hold points will be determined when the construction subcontractor(s) develop their procurement and construction schedule for the project. The schedule will be updated and presented to the CM on a weekly basis.

3. PERSONNEL QUALIFICATIONS AND TRAINING

This section describes the qualifications and training required for CQA personnel during the construction of the ERDF trench.

3.1 QA Engineer

The QA Engineer shall possess, as a minimum, a Bachelor's degree in civil or construction engineering, engineering geology, or a closely related discipline, and shall have sufficient practical, technical, and managerial experience to successfully direct the CQA activities discussed in this plan. The QA Engineer's qualifications shall be documented by training records and professional resume. Qualification documentation shall be reviewed by the FDPM and CQA Manager; if acceptable, a project certification form shall be completed and retained in the project QA records as required by the QAPP. Certifications shall be valid for a period of one year, after which they must be renewed.

The QA Engineer shall receive formal training in the requirements of the QAPP, including but not limited to documentation, receiving inspection, equipment calibration, design control, and personnel training. The QA Engineer shall also have completed any DOE, BHI, or other training required by the project Health and Safety Plan.

3.2 CQA Personnel

As a minimum, CQA personnel will have a high school diploma and at least two years of construction-related experience, including at least one year of experience conducting CQA monitoring for earthworks and geosynthetics installation, or a Bachelor of Science degree from a four year college or university and at least one year of experience conducting CQA monitoring for earthworks and geosynthetics installation. Qualifications of CQA Personnel shall be documented by training records and professional resumes, shall be reviewed by the FDPM and CQA Manager, and, if acceptable, shall be certified in the same manner noted in Section 3.1 above. Certifications shall be valid for a period of one year, after which they must be renewed.

Prior to undertaking project activities, all CQA Personnel shall receive formal training in the requirements of the QAPP, the CQA Plan, and all applicable technical procedures in compliance with the requirements of the QAPP. In addition, CQA Personnel shall be trained in the use of visual-manual soil classification techniques. Project plans and specifications shall be reviewed. The purpose of the training is to provide CQA staff with a clear understanding of expected conditions, methods of construction, and the scope of plans and specifications. Prior to beginning project activities, CQA personnel shall also receive any training required by the project Health and Safety Plan.

3.3 Consultants

All consultants or subcontractors performing CQA inspection activities shall be qualified and certified in the areas pertinent to their activities as required by Section 3.2 above.

4. INSPECTION ACTIVITIES

This section describes the inspection activities (observations and tests) that will be conducted by the CQA Personnel during construction of the ERDF trench and support facilities. The following subsections address each facility component separately and, if appropriate, are further subdivided into sections on pre-construction, construction, and post-construction testing and observation activities unique to each component. Soil testing requirements are summarized in Table 4-1. Geosynthetic testing requirements are summarized in Table 4-2. Hold points during construction are summarized in Table 4-3.

Sampling of soil and geosynthetic materials will be required for testing purposes. Every sample shall be assigned a unique identification number which describes the sample location and type. Sample numbers shall be recorded in the CQA field books.

4.1 Earthworks

Prior to the start of earthworks activities, the construction subcontractor shall submit an earthworks operation plan and a schedule to the CM for approval. This plan shall include a description of the methods to be used for all excavation, backfilling, and grading operations. The QA Engineer will review this plan for conformance with Specification requirements and will advise the CM of its adequacy.

4.1.1 Excavation

Requirements for excavation activities are described in Section 02210, Earthwork, of the Specifications. During excavation, CQA Personnel shall generally observe the excavated material and subgrade conditions and shall perform the following activities:

- Observe stripping and excavation to document that there are no moisture seeps and that all soft, organic, and otherwise undesirable materials are removed.

- Observe soil types during trench excavation, and record depth and location of changes in soil type, as well as any other pertinent geologic information on a geologic map. Notify the FDPM immediately if changed or unexpected geologic conditions are encountered.

- Coordinate with the CQA Surveyor to confirm that the depth and slope of the excavations, sumps, ramps, side slope riser trenches, surface water drainage ditches, roadways, foundations, concrete slab areas, and other pertinent features meet design requirements.

Observations shall be recorded on daily field monitoring report forms, drawings, and geologic maps as appropriate.

4.1.2 Fill

Requirements for fill are described in Section 02210, Earthwork, of the Specifications. CQA Personnel shall perform the following activities:

- Prior to placement of any structural backfill or roadway top course material in the trench or on the embankment, verify that the subgrade has been prepared (scarified, moisture-conditioned, and compacted) in accordance with the requirements of the Specifications. CQA Personnel shall test the prepared subgrade with in-place density methods at the frequency specified in Table 4-1. This shall be done prior to filling and shall constitute a hold point. If nuclear density methods are used (e.g., American Society for Testing and Materials (ASTM) D2922), at least one direct measurement using ASTM D1556, ASTM D2167, or other method approved by the QA Engineer shall be performed each shift for verification purposes.

- During placement of fill and roadway top course in the trench or on the embankment, conduct tests and observations to document that the quality of compacted fill meets project specifications. This will include visual observation, measurement of lift thickness, verifying grain size analysis, determining moisture-compaction characteristics, measuring in-place density and moisture content, and other tests. Field in-place density tests shall be conducted at the frequency listed in Table 4-1. Additional tests may be conducted at the discretion of the QA Engineer. If nuclear density methods are used (e.g., ASTM D2922), at least one direct measurement using ASTM D1556, ASTM D2167, or other method approved by the QA Engineer shall be performed each shift for verification purposes.

- Coordinate with the CQA Surveyor to verify that final lines and grades conform to design requirements.

- Review construction subcontractor's soil testing and field density data to verify that materials satisfy the requirements of the Specifications and that specified compaction has been achieved.

Observations shall be recorded on daily field monitoring report forms, drawings, and test data forms.

4.2 Admix Soil Liner

The requirements for the admix soil liner are described in Section 02224, Admix Liner Production and Placement, of the Specifications. CQA Personnel shall perform the following activities:

4.2.1 Pre-Construction

Preconstruction CQA activities include receiving inspection of soil liner materials and test fill construction. Each is described below:

- All soil liner materials shall be inspected to document that they satisfy the requirements of the specifications. Material inspection shall continue throughout the liner construction period. If liner material is obtained onsite, the inspections can be performed as the material is excavated or as it is placed in the storage pile. Visual observation and classification of the excavated soils will be performed. Unsuitable

material shall be rejected. If liner material is obtained offsite, inspection of the soil shall be conducted as it arrives at the construction site. For borrow areas containing nonuniform materials, unacceptable soil material shall be segregated as it is excavated. CQA Personnel shall observe segregation operations carefully and continuously to document that only suitable material is retained for liner construction. Changes in color or texture may be indicative of a change in soil type or soil moisture content. The soil shall be inspected for roots, stumps, large rocks, and other deleterious materials. No rocks greater than 50 mm (2 inches) dimension will be allowed in the admix liner. This requirement will be satisfied by screening the soil prior to admix preparation.

The construction subcontractor shall submit to the QA Engineer the manufacturer's certificates on the bentonite. The QA Engineer shall review the bentonite certifications to confirm that they meet the requirements of the specifications. During mixing, CQA Personnel shall observe production and shall test the admix to document that the specified amount of bentonite is mixed uniformly with the natural soil, and that water is uniformly added to the admix in the amount necessary to achieve the specified design. The bentonite content of the admix liner material shall be determined by hydrometer and sieve analysis.

A sufficient number of samples of the constituent materials and finished admix, as determined by the QA Engineer, shall be tested to document that material properties are within the ranges stated in the specifications. These tests shall include at least the following:

- Bentonite yield manufacturer's certificates - as indicated in Table 4-1.
- Remolded Permeability (Admix) - as indicated in Table 4-1. Additional permeability testing shall be performed whenever the base soil has < 20% passing the U.S. No. 200 Sieve by dry weight. For this testing, the base soil shall be mixed with 12% bentonite by dry weight and compacted to at least 85% saturation at a moisture content 2% to 4% over optimum. If the permeability results are comparable to those with base soil containing > 20% fines, the base soil may be used. Otherwise, it shall be rejected.
- Soil density/moisture content relationships (Admix) - as indicated in Table 4-1.
- Maximum clod size (Admix) - Periodic visual monitoring.
- Particle size distribution (base soil and admix) (hydrometer and - #200 sieve) - as indicated in Table 4-1.
- Atterberg limits (Admix) - as indicated in Table 4-1.
- Natural water content (Admix) - as indicated in Table 4-1.

Samples will be collected and tested by CQA Personnel. All tests shall be conducted in accordance with the methods and procedures specified in Table 4-1. All testing shall be completed and compliance with the specifications established prior to any placement of admix material. Additional samples totaling at least 100 kg (200 lb) shall be collected by the CQA personnel and archived by the FDPM. If the admix properties change due to changes in the base soil or other factors, the Designer may change the acceptable moisture and density limits as required to achieve at least 85 percent saturation and assure a workable admix.

4.2.2 Test Fill

A test fill shall be constructed to demonstrate the adequacy of the materials, design, equipment, and construction procedures proposed for the admix liner. The primary purpose of the test fill is to document that the specified soil density, moisture content, and permeability values can be achieved consistently in the full-scale facility with the proposed compaction equipment and procedures.

So that the test fill will accurately represent the performance of the full-scale facility, the following guidelines shall be followed:

- Construction of the test fill shall use the same soil material, design specifications, equipment, and procedures as proposed for the full-scale facility.

- The test fill shall be constructed at least four times wider than the widest piece of construction equipment to be used for the full-scale facility. This is done to ensure a sufficient area to conduct all testing after a buffer area has been left along the edges of the test fill.

- The test fill shall be long enough to allow construction equipment to achieve normal operating speed before reaching the area that will be used for testing.

- The test fill shall be constructed with at least six lifts to evaluate the methodology used to tie lifts together.

- The test fill shall be constructed to allow determination of the relationship among density, moisture content, and permeability. Field variables can affect this relationship and must be carefully measured and controlled both in the test fill and during construction of the full-scale liner. As a minimum, the following shall be observed:

  - the compaction equipment type, configuration, and weight

  - the number of passes of the compaction equipment

  - the method used to breakdown clods before compaction and the maximum allowable clod size

  - the method used to control and adjust moisture content, including equilibration time, and the quantity of water to be used in any adjustment

  - the speed of the compaction equipment traveling over the liner

  - the uncompacted and compacted lift thicknesses.

- Relatively undisturbed samples of the test fill shall be collected using Shelby tubes for laboratory permeability tests.

- Following collection of permeability samples, the methodology for repairing holes in the soil liner shall be evaluated. The evaluation of a repaired area shall include all tests previously required for undisturbed portions of the test fill. The methods and materials that will be used in the repair process shall be documented by the QA Engineer. Performance of repaired soil liner sections shall be equal to or exceed the performance of undisturbed liner sections. The resulting procedures shall be followed during repair of testing or sampling holes during full-scale liner construction.

- The test fill construction shall include the removal and replacement of a portion of the soil liner to evaluate the method proposed for repair of defective portions of the full-scale liner.

- A Sealed Double Ring Infiltrometer (SDRI) Test (ASTM D5093) shall be performed on the test fill to evaluate large-scale permeability. CQA Personnel shall direct installation of the equipment, perform the test, and evaluate the data with support from the earthworks construction subcontractor.

- Evaluation of layer bonding shall be determined by CQA Personnel using test pits to make visual observations. A minimum of two test pits shall be excavated in each test fill after test fill construction has been completed. The test pits shall be excavated entirely through the test fill using a backhoe or other approved method. Test pit locations shall be determined by the Construction Manager (BHI) and QA Engineer.

The number and frequency of field and laboratory tests to be conducted during the test fill are listed below:

- Visual observation - continuous.
- Field in-place moisture-density (nuclear) - 3 per lift per each of two passes (minimum) of the compactor for lifts 1 and 2. Continue testing after each two passes until there is no significant change in percent saturation.
- Field in-place moisture-density (nuclear) - 3 per lift (minimum) lifts 3 to 6.
- Field in-place moisture-density (rubber balloon) - 1 for every lift (minimum).
- Laboratory permeability test of in-place admix - 1 for every lift (minimum).
- SDRI test - one per test fill.

Additional tests may be conducted at the direction of the QA Engineer. All tests shall be conducted in accordance with the methods and procedures specified in Table 4-1. The QA Engineer shall compare the results of field and laboratory testing to the required specifications. Any failing tests shall be reported to the FDPM.

Additional test fills shall be constructed for each borrow source and whenever significant changes occur in the liner material, equipment, or procedures used to construct the soil liner.

4.2.3 Construction

Low-permeability admix liner shall be constructed by using the materials equipment and procedures used in the test fill and as documented by CQA Personnel. Criteria to be used for determining the acceptability of the liner shall be as identified in the project specifications.

Subgrade preparation shall be observed for compliance with the specifications. On the floor of the trench, the subgrade shall be compacted to at least 90% of modified Proctor dry density (ASTM D1557), and in-place density shall be measured at the frequency listed in Table 4-1. On the sideslopes of the landfill, the subgrade will be prepared by removing loose material, watering, and track walking. These activities shall be visually observed, but no testing is required.

To document that proper construction practices are followed, CQA Personnel shall continuously observe the liner material placement and compaction process. During material spreading, the following shall be documented:

- Liner material is spread adequately to obtain complete coverage and the specified loose lift thickness;
- Oversize clods in the liner material are discarded or reduced in size;
- Soil moisture content is adjusted appropriately in the event of a significant prolonged rain or drought during construction;
- When required, water is adequately spread and incorporated to obtain full penetration through clods and uniform distribution;
- Significant water loss and desiccation cracking before and after compaction are prevented through the use of water application, covering, or other appropriate methods;
- At tie-in locations, any dry, cracked, or otherwise unsuitable areas of the existing admix is removed.

During the soil liner compaction process, the following shall be documented:

- Compaction equipment is of the same type, configuration, and weight as used in the test fill;
- The equipment speed and number of passes for compaction is the same as used in the test fill;
- Coverage by compaction equipment is uniform, especially at compacted fill edges, in equipment turnaround areas, and at the tops and bottoms of slopes;
- The specified soil density, water content, and permeability throughout each completed lift is achieved. This will be determined by laboratory and field testing;

- Permeability values obtained for undisturbed soil liner samples are consistent with values obtained for undisturbed samples from the test fill. Undisturbed sample locations are staggered from lift to lift so holes do not align vertically;

- Penetrations or holes resulting from the collection of undisturbed soil samples or the use of density or moisture probes are repaired using the same materials and methods used for repairs on the test fill. CQA personnel shall repair all holes resulting from sampling or testing activities;

- Repaired sections are tied-in with undisturbed sections of the liner;

- Compacted lifts are tied together by scarifying the top of each lift, if necessary, with appropriate equipment prior to applying the following lift;

- Newly-placed material is thoroughly kneaded into existing admix at tie-in locations.

- Sufficient liner strength to maintain stable sidewalls and to supply a stable base for supporting overlying materials is maintained while achieving the minimum specified density. This shall be monitored with moisture-density testing in accordance with the procedures listed in Table 4-1. In place field density tests and moisture content tests shall be conducted at a minimum frequency as listed in Table 4-1. Additional tests may be conducted as directed by the QA Engineer. If a nuclear density gauge is used to measure the in-place density of the admix, then at least one rubber balloon or sand cone density test shall be conducted per day to confirm the results of the nuclear gauge. Moisture content measured with the nuclear gauge shall be validated by collecting a minimum of one sample per day for laboratory moisture determination. ASTM D4643 (microwave moisture content) may be used, provided that a reliable correlation between oven dried (ASTM D 2216) and microwave results is established. If ASTM D4643 is used, a minimum of one oven dried test shall be performed daily for verifying the correlation;

- Protective covers to prevent desiccation of liner material after completion of the liner are placed in a timely manner where necessary; and

- Equipment traffic is routed and controlled such that accidental damage of installed portions of the soil liner is prevented.

Climatic conditions shall be considered when construction methods are chosen. Construction methods may be restricted on work performed during and just after a rainfall, during very hot or windy conditions, or during freezing weather. For example, more compactive effort must sometimes be applied to achieve the same density as soil temperature falls. In very dry weather, the surface water content of each compacted fill layer can be altered in a short time by drying, making continuous watering and blending necessary. Atmospheric conditions shall be observed and recorded by CQA Personnel, and appropriate actions shall be taken when unsuitable weather conditions exist.

At locations where the field testing indicates that moisture contents or densities are outside the acceptable limits of the specifications, the failing area shall be reworked or removed and

replaced. These areas shall be retested and the repair process repeated as necessary until passing results are achieved.

Shelby tube samples of the in place soil liner shall be obtained at a minimum frequency as listed in Table 4-1 for material placed. The testing frequency shall be increased if the admix material changes significantly. At any time, additional samples may be obtained at the discretion of the QA Engineer. At least one sample shall be taken from a corner area. Laboratory permeability tests shall be conducted on these samples to document compliance with the specifications.

The QA Engineer shall monitor on a periodic basis the soil liner surface for desiccation and irregularities to document compliance with the specifications. The completed liner shall be protected from desiccation, erosion, and freezing immediately following completion of the uppermost lift.

4.2.4 Post Construction

Immediately before placement of any geomembrane, the soil liner shall be inspected for cracks, holes, defects, or any other features that might increase its permeability. All defective areas shall be repaired. If the underlying foundation is defective (e.g., soft or wet), then this material shall be removed and the resultant volume replaced. Excavated areas of the soil liner shall be repaired by the method demonstrated during test fill construction; inspection shall document that there is continuity between the repaired and undisturbed areas.

Special attention shall be paid to the final inspections of the sump area, sidewall and bottom slopes, liner coverage, and liner thickness. The QA Engineer shall coordinate with the CQA Surveyor to confirm that minimum design thicknesses and grades are achieved prior to placement of any additional material over the soil liner.

4.3 Gravel Drainage Layers

The requirements for the gravel drainage layers are described in Section 02226, Drainage Gravel, of the Specifications. The CQA Personnel shall perform the following activities:

4.3.1 Pre-Construction

Samples of the drainage layer gravel and the sump gravel shall be obtained at the borrow source pit or stockpile. Samples shall be obtained and tested to document compliance with the specifications at the frequency listed in Table 4-1. Tests shall consist of the following:

- Grain size
- Permeability
- Slake durability
- Carbonate Content.

All tests shall be conducted in accordance with the methods and procedures specified in Table 4-1. Slake durability tests shall be conducted in simulated leachate as provided by the FDPM.

4.3.2 Construction

As the drainage material is delivered to the site and placed in the facility, the CQA Personnel shall perform the following activities:

- Visually observe the material for contamination by debris or deleterious material;
- Visually observe the material for uniformity;
- Sample the material for grain size and permeability tests at the frequency listed in Table 4-1 for material delivered to the site;
- Observe the placement of the material to confirm minimum thickness under spreading and hauling equipment to prevent damage to the underlying liner materials and components of the leachate collection system; and
- Observe placement and compaction of the material around piping and risers in the sumps.

All tests shall be conducted in accordance with the methods and procedures specified in Table 4-1.

4.3.3 Post-Construction

The QA Engineer shall coordinate with the CQA Surveyor to document that minimum thicknesses and design grades in the gravel layer have been achieved prior to the placement of any additional materials over the top of the gravel.

4.4 Operations Layer

The requirements for the operations layer are described in Section 02228, Operations Layer, of the Specifications. The CQA Personnel shall perform the following activities:

4.4.1 Pre-Construction

CQA Personnel shall obtain samples of the proposed operations layer material prior to placement in the landfill. Samples shall be obtained at the frequency listed in Table 4-1 and tested to document that the material meets the gradation requirements in the specifications. All tests shall be conducted in accordance with the methods and procedures specified in Table 4-1.

4.4.2 Construction

During placement of the operations layer material, CQA Personnel shall observe the placement operations on a full-time basis and perform the following:

- Visually observe the material for contamination with debris or deleterious material;

- Visually observe the material for particle size;
- Sample the material for grain size tests at the frequency listed in Table 4-1 for material placed in the facility;
- Observe the placement of the material to confirm minimum thickness under equipment to prevent damage to the underlying liner materials;
- Visually observe that the operations layer placement on the slopes is conducted in compliance with the procedures outlined in the specifications;
- Visually observe to detect any damage to the underlying liner materials; and
- Visually observe the moisture conditioning, placement, and compaction of the material placed over the primary slope riser pipes.

All tests shall be conducted in accordance with the methods and procedures specified in Table 4-1.

4.4.3 Post-Construction

The QA Engineer shall coordinate with the CQA Surveyor to confirm that minimum thicknesses and design grades in the operations layer have been achieved prior to the placement of any waste materials.

4.5 Anchor Trench / Side Slope Riser Pipe Trench

The requirements for the anchor trenches and side slope riser pipe trenches are described in Section 02210, Earthwork, of the Specifications. The CQA Personnel shall perform the following activities:

4.5.1 Pre-Construction

CQA Personnel shall obtain samples of the proposed backfill materials for anchor trenches and side slope riser pipe trenches prior to backfilling these trenches. Samples shall be obtained at the frequency listed in Table 4-1 for each material or a minimum of one sample, whichever is greater. Samples shall be tested to confirm that the material meets the gradation requirements in the specifications. All tests shall be conducted in accordance with the methods and procedures specified in Table 4-1.

4.5.2 Construction

During placement of backfill in the anchor trenches and riser pipe trenches, CQA Personnel shall observe the placement operations on a periodic basis and perform the following:

- Visually observe the material for contamination with debris or deleterious material;

- Visually observe the material for particle size;
- Sample the material for grain size tests at the frequency listed in Table 4-1 for material placed;
- Visually observe that the material is moisture conditioned and compacted as specified;
- Visually observe that backfill around riser pipes does not contain voids;
- Observe the placement of the material to document minimum thickness under equipment to prevent damage to the underlying materials; and
- Visually observe to detect any damage to the underlying liner materials.

All tests shall be conducted in accordance with the methods and procedures specified in Table 4-1.

4.5.3 Post-Construction

There are no specific post-construction requirements for anchor trench/side slope riser pipe trench backfill.

4.6 HDPE Geomembrane Liner

The requirements for the HDPE geomembrane liner are described in Section 02275, Geomembranes, of the Specifications. CQA Personnel shall perform the following activities:

4.6.1 Preconstruction

Preconstruction activities for HDPE geomembrane liner include inspection of the raw materials, manufacturing operations, fabrication operations, and final product quality; observations related to transportation, handling, and storage of the membrane; observation of foundation preparation; and review of the personnel and equipment to be used to install the HDPE geomembrane liner. In addition, CQA Personnel shall perform conformance and "fingerprinting" tests on samples of the HDPE liner material submitted by the Geomembrane Installer. These activities are discussed in the following subsections. "Fingerprinting" tests include specific gravity and melt index. Samples of the geomembrane totaling at least 10 m^2 (~100 ft^2) shall be collected by the CQA personnel and archived by the FDPM.

4.6.1.1 HDPE Manufacture

Quality assurance requirements for the Geomembrane Manufacturer initially consist of evaluating the raw polymer materials. The Resin Supplier shall provide documentation with each shipment and/or production lot confirming that the raw materials comply with the Manufacturer's product properties and performance requirements. The Manufacturer shall test each batch of resin to verify that the raw material meets or exceeds the specifications. At

the FDPM's direction, the QA Engineer may inspect the raw polymer materials in the Manufacturer's facilities. Any source inspection activities so required shall be performed in compliance with the surveillance inspection procedures referenced in the QAPP, and all nonconformances shall be documented on NCR forms and submitted to the FDPM for disposition and resolution.

CQA Personnel shall review testing results and other documentation submitted by the Geomembrane Manufacturer for conformance to the specification requirements. Submittals from the Manufacturer include the following:

- the origin (Resin Supplier's name, resin production plant), identification (brand name, number) and production date of the resin;
- a list of quantities and descriptions of materials other than the base polymer which comprise the geomembrane;
- a copy of the quality control certificates issued by the Resin Supplier;
- reports on the tests conducted by the Manufacturer and/or the QA Engineer to confirm that the quality of the resin used to manufacture the geomembrane satisfies the specifications;
- a statement that no recycled polymer is added to the resin or that recycled polymer is clean and does not exceed 2% by weight, and does not include material that has seen previous service life;
- a properties sheet including, as a minimum, all properties listed in the specifications, measured using test methods indicated in the specifications, or equivalent;
- reports on the tests, including sampling procedures, conducted by the Manufacturer and/or the QA Engineer to confirm that the geomembrane meets the project specifications;
- a certification that property values given in the properties sheet are guaranteed by the Geomembrane Manufacturer.

4.6.1.2 Receiving Inspection and Conformance Testing

CQA Personnel shall perform receiving inspection on all geomembrane material in compliance with procedures specified in the QAPP, and all nonconformances shall be documented on NCR forms and submitted to the FDPM for disposition and resolution. CQA Personnel shall also confirm that transportation, handling, and storage of geomembrane are performed in accordance with the specifications, and shall determine the condition of rolls of geomembrane upon delivery to the site.

CQA Personnel shall remove samples to be tested to determine conformance to the design specifications and the manufacturer's specifications. The properties which shall be tested include:

- Specific gravity;
- Melt index;
- Carbon black content and dispersion;
- Thickness;
- Tensile/elongation properties;
- Puncture resistance;
- Friction angle of the textured geomembrane with soil liner material (direct shear methods);
- Seam strength (if applicable).

Prior to shipment or after delivery of the rolls of geomembrane, CQA Personnel shall remove samples and forward them to the geosynthetics testing laboratory. Samples of geomembrane shall be taken across the entire width of the roll and shall not include the first three feet. Unless otherwise specified, samples shall be three feet long by the roll width. Samples shall be taken at a rate of one per lot or one per 5,000 square meters (~50,000 square feet), whichever results in the greater number of tests, except that only two (2) friction angle tests will be performed. All tests shall be completed in accordance with the methods and procedures specified in Table 4-2.

CQA Personnel shall examine all results from laboratory conformance testing, shall document all nonconformances on NCR forms, and shall notify the FDPM of any such nonconformance. Rolls of geomembrane which do not meet or exceed all required specifications shall be rejected and brought to the attention of the FDPM.

4.6.1.3 Factory Fabrication

Sheets of geomembrane may be joined to form larger panels prior to delivery and installation at the trench. CQA Personnel shall document that such fabrication activities are performed in accordance with the specifications, particularly that required materials, methods, and testing procedures are employed. CQA Personnel shall also review documentation submitted by the Fabricator, testing laboratories, and other parties as listed in the specifications. All nonconformances shall be documented on NCR forms. Geomembrane panels which do not meet or exceed all required specifications shall be rejected and brought to the attention of the FDPM. Requirements for fabrication and testing are described in detail in the specifications and are summarized in the following paragraphs.

Unless otherwise approved, the fabrication of rolls of geomembrane into panels shall be performed by the Geomembrane Manufacturer or Fabricator under controlled factory conditions. All seams shall meet or exceed the specifications required for field seams. Fabrication shall be performed by experienced personnel. Approved fabrication seaming processes are extrusion welding and fusion welding. Any proposed alternate processes must be submitted for approval by the FDPM. Details of the specific apparatus and methods to be used for seaming shall be submitted for approval prior to use.

The Geomembrane Manufacturer or Fabricator shall allow the QA Engineer to visit the fabrication plant during the production of panels for this project in order to review the fabrication and quality control procedures.

Prior to shipment of fabricated panels to the site, the Fabricator shall provide written certification that quality control testing has been performed. Quality control certification shall include: panel numbers and complete identification features such as roll numbers, dimensions and fabrication methods, etc.; all sampling and testing procedures including location and results of the testing; and documentation of the temperature and humidity conditions under which fabrication was performed. Quality control certificates shall be signed by an authorized representative of Fabricator.

4.6.1.4 Bedding Surface

CQA Personnel shall confirm that the surface upon which the geomembrane will be installed is suitably prepared and will not damage the geomembrane. Details of required observations are presented in the specifications and are summarized in the following paragraphs.

The geomembrane bedding layer shall be free of clods, rocks, sticks, sharp changes in grade, desiccation cracks, and standing water. Where the bedding surface is the low permeability soil liner, methods shall be taken to prevent the soil liner surface from drying and cracking prior to installing the geomembrane. These methods may include the use of a temporary cover. All desiccation cracks larger than the limits listed in the Specifications shall be repaired using approved methods as described in the Specifications.

The Geomembrane Installer shall inspect and provide written certification to the FDPM and the QA Engineer that the prepared surface under consideration is suitable for installation of the geomembrane.

After acceptance of the prepared surface, it shall be the Installer's responsibility to notify the FDPM and the QA Engineer of any deterioration in the prepared surface resulting from weather or other causes beyond the Installer's control. Repairs required to restore the surface as a result of such causes shall be made as directed by the FDPM. Any damage to the prepared surface caused by installation or other causes relating to performance of the work shall be the responsibility of the Geomembrane Installer.

4.6.2 Construction

Sheets of geomembrane will be welded together after they are placed in the trench to form a continuous moisture barrier. CQA Personnel shall document that the placement and seaming activities are performed in accordance with the Technical Specifications, particularly that required materials, methods, and testing procedures are employed. CQA Personnel shall also review documentation submitted by the Geomembrane Installer, testing laboratories, and other parties as listed in the Specifications. Seams or repaired areas which do not pass the tests shall be repaired and retested as described in the Specifications until a passing result is achieved. Requirements for geomembrane installation and testing are described in detail in the Specifications and are summarized in the following subsections.

4.6.2.1 Placement of Geomembranes

Prior to placing geomembranes in the landfill, the Geomembrane Installer shall provide scale drawings showing the proposed placement pattern and field seam locations (including all

dimensions and details) to the FDPM and the QA Engineer for review. These drawings shall be submitted in a reproducible form.

Each field panel and field seam shall be given an identification code which is consistent with the proposed sequence of installation. A field panel is defined as the area of geomembrane which is to be cut and seamed in the field by the Installer. Unless otherwise directed, the Installer shall place the field panels in the sequence shown on the installation drawings.

On slopes or grades steeper than ten percent, all seams shall be oriented down and not across the slope. No horizontal seam shall be less than 1.5 meters (five feet) from the top of the slope or other area of potential stress concentration. The number of field seams shall be minimized in areas such as corners and odd-shaped geometric locations. In anchor trenches, the geomembrane shall be continuous through the trench, over the crest, and down the slope.

Geomembrane shall not be placed when ambient temperatures are less than 0°C (32°F) or more than 40°C (104°F). Placement shall not be attempted in rain or snow or under conditions of excessive fog or dew. Placement will not be permitted in areas of ponded water or in the presence of excessive winds.

Equipment used for placement shall not damage the geomembrane or the subgrade by handling, trafficking, leakage of hydrocarbons, or in other ways. Personnel working on the geomembrane shall not engage in any activities or wear footwear which could damage the geomembrane. Direct contact of any heavy mechanical equipment with the geomembrane shall not be allowed.

Panels shall be carefully unrolled according to the Manufacturer's and/or Fabricator's instructions, and in a manner that does not scratch or crimp the geomembrane. Panels shall be aligned to minimize wrinkles or "fishmouths", especially along the field seams. Adequate precautions that are not likely to damage the geomembrane (such as placement of sand bags), shall be taken to minimize the likelihood of wind uplift.

Any field panel or part of a field panel which becomes seriously damaged shall be replaced at the direction of the QA Engineer or Construction Manager. Minor damage such as small wrinkles, crimps, etc., shall be repaired using approved procedures as described in the Specifications. Damaged field panels which have been rejected for use shall be removed from the site.

CQA Personnel will measure field panel thickness by obtaining five (5) thickness measurements along the leading edge, five (5) thickness measurements along the trailing edge, and five (5) side thickness measurements spaced along the length of the panel. The panel thickness will be the average of the five (5) measurements at the particular location. Panels which do not meet the specified thickness shall be removed and replaced.

4.6.2.2 Field Seaming of Geomembrane

Personnel

The Geomembrane Installer shall provide the FDPM and QA Engineer with a list of the Installer's proposed seaming personnel and their previous seaming experience. All seaming

personnel shall be required to pass a seaming test prior to commencement of field seaming operations. The superintendent and lead welder foreman shall have experience seaming a minimum of 185,000 square meters (~2,000,000 square feet) of polyethylene geomembrane using the same type of seaming apparatus in use at the site. These individuals shall provide direct supervision, as required, over less experienced seamers. No field seaming shall take place without the superintendent or lead welder foreman being present.

Field Seaming Methods and Equipment

General: Only seaming methods and equipment which have been previously approved by the FDPM shall be used for field seaming of the geomembrane panels. Approved seaming methods are extrusion welding and fusion welding, except only fusion welding shall be allowed for tie-in seams between existing and new geomembrane. Alternate methods may be proposed by the Installer. Seaming shall be a continuous process with a minimum of interruptions along any given seam.. The Installer shall maintain at least one operable spare seaming unit on site at all times.

Where conditions warrant, the Installer may be allowed to use a temporary support surface between the geomembrane and the subgrade to achieve proper support conditions during seaming operations. The use of such support methods shall be subject to the approval of the FDPM who shall also decide whether the support may be left in place or shall be removed on completion of seaming.

Wherever possible, all wrinkles or "fishmouths" shall be pulled out of the overlap area prior to seaming. Where this cannot be done, they shall be cut along the ridge of the wrinkle in order to achieve a flat surface. All such cuts shall be seamed. Where the overlap is inadequate, an oval or round patch of the same geomembrane, extending a minimum of 150 mm (6 inches) beyond the cut in all directions, shall be seamed onto the geomembrane.

Extrusion Welding Process: Extrusion welding apparatus shall be equipped with gauges to measure the temperature at the nozzle or the preheat temperature of the apparatus. The QA Engineer shall monitor the extrudate and ambient temperature at appropriate intervals. The extruder shall be purged of all heat-degraded extrudate at the beginning of each seaming sequence.

Artificially induced cooling of extrudate welds (using water or any other means) shall not be allowed. Sufficient time between welding and non-destructive testing shall be taken so that nondestructive testing procedures do not cause artificial cooling of the extrudate.

Fusion Welding Process: Fusion welding apparatus shall be automated, self-propelled devices which produce either a single seam or a double seam with an enclosed central air space. The apparatus shall be equipped with gauges which indicate the equipment temperatures during welding. For the seaming of cross-seams, the top and bottom edges of the cross-seam shall be ground to a smooth incline prior to seaming.

The QA Engineer shall log ambient and seaming apparatus temperatures, as well as seaming apparatus speed.

Seam Overlap and Preparation: Prior to seaming, geomembrane rolls or panels shall be overlapped by a minimum of 76 mm (three inches) for extrusion welding and 127 mm (five inches) for fusion welding. Procedures used to temporarily bond adjacent rolls together shall not result in damage to the geomembrane. If mechanical devices such as hot air leisters are used for temporary bonding, the air temperature at the nozzle of such equipment shall be controlled so as not to damage the geomembrane. Solvents and/or adhesives shall not be used.

Seams shall be aligned to create as smooth a surface as practicable with a minimum of wrinkles and "fishmouths". The area in the immediate vicinity of the seam shall be free of moisture, dust, dirt, debris, or any other foreign material and, if necessary, sheltered from wind and dust immediately prior to and during the seaming operation. If grinding is required along the seam, this shall be done according to the Manufacturer's recommendations, within one hour of the seaming operation and in a way which does not damage the geomembrane. This process also shall include cleaning the seam area with a brush or forced air immediately prior to seaming. Particular care shall be paid the condition of existing geomembrane prior to tie-in with new geomembrane.

The QA Engineer shall document geomembrane seam overlaps and preparation procedures.

Weather Conditions

In general, seaming shall not be attempted when ambient temperatures are below 0°C (32°F) or above 40°C (104°F). Below 0°C (32°F), seaming may be allowed provided that suitable precautions are taken and the Installer certifies in writing that seaming under these conditions will not cause any chemical or physical alteration to the geomembrane which may deleteriously affect its short- or long-term performance. Such precautions shall be subject to prior approval by the FDPM. Extrusion welding will require the geomembrane to be preheated by either the sun or the use of a hot air device, and the Installer shall take precautions that excessive cooling from wind does not affect the seaming operation. CQA Personnel shall determine when preheating is required and whether wind affects may be deleterious to seaming operations.

Seaming shall not be attempted during wet weather where the geomembrane is exposed to the elements.

Trial Seams

Trial seams shall be made to verify that adequate conditions exist for field seaming to proceed. Each seamer shall produce a trial seam at the beginning of each shift. Additional trial seams shall be made every four hours or, if a breakdown of the seaming equipment occurs, prior to resumption of seaming operations. This frequency may increased at the discretion of the CQA Engineer. The QA Engineer shall monitor and log the trial seam results.

Trial seams shall be made on pieces of geomembrane identical to the installed product measuring at least 0.6 meter (two feet) long by 0.3 meter (one foot) wide (after seaming) with the seam centered lengthwise and overlapped as required for the particular seaming process.

Four samples, each 25 mm (one inch) wide, shall be cut from the test seam and tested, 2 in shear and 2 in peel, using a tensiometer. The samples shall not fail in the seam. If a seam

failure occurs, then a second seam shall be produced and tested. If a second failure results, the apparatus or seamer shall be rejected and shall not be used for field seaming until any deficiencies have been corrected. This shall be verified by the production and successful testing of two consecutive trial seams.

4.6.2.3 Nondestructive Testing of Field Seams

General

All seams shall be nondestructively tested by the Installer over their full length to verify their continuity. It should be noted that this testing does not provide any information regarding seam strength. Nondestructive testing shall be performed concurrently with field seaming using the equipment and procedures described below. Testing equipment and procedures other than those given below shall be subject to approval by the FDPM prior to their use. Any seam which fails the nondestructive test shall be repaired in accordance with approved procedures as described in the Specifications. All repairs shall be retested to determine the success of the repair.

Where CQA Personnel determine that seams cannot be nondestructively tested due to physical constraints, the seams shall be capped with the same geomembrane or double seamed. CQA Personnel shall observe the seaming and capping of such seams to assess their adequacy and determine whether additional action is required. Where such a seam is accessible for testing prior to final geomembrane deployment, testing shall be performed prior to deployment.

The non-destructive testing shall be performed by the Installer and continuously monitored by CQA Personnel.

Vacuum Testing

For extrusion and single wedge fusion welded seams, all seams shall be evaluated using vacuum box testing. The vacuum box shall consist of a rigid housing with a transparent viewing window on top and a soft, flexible gasket attached to the bottom of the housing. A port hole and valve assembly along with a calibrated vacuum gauge shall be provided at one end of the housing. The vacuum gauge shall be calibrated prior to initial use on the project and recalibrated on at least an annual basis or at the discretion of the QA Engineer. The Installer shall supply vacuum gauge calibrations to the QA Engineer for review prior to the start of testing. A steel vacuum tank and pump assembly complete with all the necessary pressure controls, pipe connections, pressure hoses, and fittings shall be provided. A soapy solution and a method of dispensing the solution is also required.

To perform the test, the pressure in the vacuum tank shall be reduced to approximately 127 mm (five inches) of mercury. The soapy solution shall be applied to the test section and the vacuum box placed over the wetted area. The bleed valve shall then be closed and the vacuum valve opened. Once a tight seal has been established, the test section shall be visually examined for a period of not less than 10 seconds to determine whether bubbling of the soapy solution is occurring. The vacuum valve shall then be closed and the bleed valve opened. The vacuum box shall be removed and the process repeated on the next adjacent test section. A minimum 76-mm (three-inch) overlap shall be provided on all test sections. All locations

where bubbling of the soapy solution is observed shall be clearly marked for repairs to be performed in accordance with approved procedures as described in the Specifications.

Air Pressure Testing

This test method shall apply only when the double hot wedge fusion seaming method is used to form the seam. The testing equipment shall consist of an air pump capable of generating and sustaining a constant pressure of between 410 and 450 kPa (60 and 65 psi) complete with a pressure gauge and the necessary pressure hose, fittings, and connections. An approved pressure feed device such as a sharp hollow needle shall be provided to penetrate into the central air channel at one end of the seam. A second pressure gauge shall be provided to detect any pressure loss at the opposite end of the seam from the pressure feed device. The pressure gauges shall be calibrated prior to initial use on the project and recalibrated on at least an annual basis or at the discretion of the QA Engineer. The Installer shall supply pressure gauge calibrations to the QA Engineer for review prior to the start of testing.

To perform the test, a section of the seam shall be sealed off at both ends. The pressure feed device shall be inserted into the air channel at one end of the sealed section, and the second pressure gauge shall be inserted into the opposite end of the air channel. If the seam is 13 mm (1/2 inch) wide, it shall be pressurized to a pressure of between 172 and 207 kPa (25 and 30 psi). If the seam is 25 mm (1 inch) wide, it shall be pressurized to between 380 and 410 kPa (55 and 60 psi). The pressure valve shall be closed and the pressure monitored for a period of not less than 5 minutes. If a pressure loss greater than 14 kPa (2 psi) is observed at either end or if the required pressure cannot be reached, then the seam shall be rejected. If, in the judgment of the CQA Personnel, significant changes in temperature occur during the test (e.g., due to cloud cover), the test shall be repeated after the geomembrane temperature has stabilized. All faulty areas along the seam shall be identified, repaired in accordance with approved procedures, and retested. All holes created during nondestructive testing shall be repaired in accordance with approved procedures as described in the Specifications upon completion of the test.

4.6.2.4 Destructive Testing of Field Seams

Destructive testing of field seams shall be performed at selected locations in order to verify that seams satisfy the strength requirements listed in the specifications. All sampling and testing shall be done concurrently with field seaming operations so that corrective action, if required, may be implemented as the work progresses. Samples shall be taken for testing so as to achieve a minimum average frequency as listed in Table 4-2. Sample locations shall be determined by CQA Personnel based on the required sampling frequency and seaming observations. The Installer shall not be informed in advance of the locations where the seam samples will be taken. Additional test locations may be required during seaming operations, such as along tie-in seams with existing geomembranes. The necessity for such additional sampling and testing shall be determined by CQA Personnel, and extra testing shall be performed when there is cause to suspect the presence of excess crystallinity, contamination, offset welds, or any other potential defect. The Construction Manager or FDPM may increase the minimum frequency of destructive testing as the work progresses based on the results of previous testing.

Samples shall be cut by the Installer under the observation of CQA Personnel. Samples may be cut prior to nondestructive seam testing. Each sample shall be numbered and identified. The sample number and location shall be recorded by CQA Personnel on the layout drawings.

The test sample shall measure approximately 300 mm (12 inches) wide by 1070 mm (42 inches) long with the seam centered lengthwise. Two 25 mm (one inch) wide strips shall then be cut, one from either end of the sample. Both of these strips shall be tested by the Installer in the field using a tensiometer to determine the mode of failure in both peel and shear. The remaining portion of the sample shall be cut into three equal parts having a minimum length of 300 mm (12 inches). One sample shall be taken by CQA Personnel for destructive testing under laboratory conditions. One sample shall be given to the Installer to perform his own laboratory testing if he so chooses. The third sample shall be kept in storage by the FDPM.

The area from which the test sample was cut shall be immediately repaired in accordance with approved procedures described in the Specifications. All seams created for these repairs shall be nondestructively tested in accordance with Section 4.6.2.3.

Neither of the field tests shall fail in the seams. The results of the laboratory testing by CQA Personnel shall in any case determine the acceptability of the field seam. The tests shall be performed in accordance with the methods listed in Table 4-2. The results of the laboratory destructive testing shall be made available to the Installer by the FDPM not more than 24 hours after the samples have been received by the laboratory facility where the testing is to be performed.

A field seam shall only be considered acceptable when it is bounded by two destructive test locations which meet the seam strength requirements listed in the specifications, as well as passing the nondestructive tests described in Section 4.6.2.3. Whenever a sample fails a destructive test, whether that test is conducted by field tensiometer, CQA Laboratory, or the Installer's laboratory, the following procedures shall be employed. The Installer shall have two options at his disposal as follows:

- The Installer may cap the failing seam between any two passed test locations; or

- The Installer may elect to trace the seam to two intermediate locations a minimum of 3 meters (10 feet) in either direction from the point of the failed test and take a small sample for an additional field test at each location. If these additional samples pass the test, then full samples shall be taken for CQA laboratory testing. If these laboratory samples pass the tests, then the seam shall be capped between these locations. If either sample fails, then the sampling and testing process shall be repeated to establish the zone over which the seam shall be capped.

The continuity of all capped seams shall be verified by nondestructive testing in accordance with Section 4.6.2.3. In addition, if the total capped seam length exceeds 46 meters (150 feet), a destructive sample shall be taken for laboratory testing as described above.

The QA Engineer shall document all actions taken in conjunction with destructive test failures.

4.6.2.5 Repairs

The entire geomembrane surface shall be examined by CQA Personnel to confirm that the geomembrane is free of any defects, holes, blisters, undispersed raw materials, or contamination by foreign matter. Particular attention shall be paid to existing geomembrane in tie-in areas. Whenever possible, the examination of the geomembrane surface shall be done prior to any seaming in that area. If necessary, the geomembrane surface shall be cleaned by the Installer so that it is free of dust, mud, or any other materials which may inhibit a thorough examination of the surface. Any suspect areas shall be clearly marked by CQA Personnel and nondestructively tested by the Installer in accordance with Section 4.6.2.3. Any location which fails to pass the nondestructive testing or from where a destructive test sample has been removed shall be repaired using one of the procedures described below.

Small tears, wrinkles, or pinholes shall be repaired by the Installer using spot welding, seaming, or patching, as appropriate. Large holes and tears, undispersed raw materials, and any areas which have been contaminated by foreign matter shall be repaired by the Installer using patches or by capping the area. All patches shall be round or oval in shape, shall consist of the same geomembrane material, and shall extend a minimum of 150 mm (6 inches) beyond the edge of the defect in all directions. Temporary bonding methods used to hold patches in place prior to seaming shall be approved methods only. Geomembrane surfaces to be patched shall be abraded in accordance with the specifications. All surfaces shall be clean and dry at the time the repair work is performed. All repair seaming shall be performed using approved extrusion welding methods and equipment.

All repairs shall be nondestructively tested using the appropriate methods described in Section 4.6.2.3. Unless additional destructive testing is required as described in Section 4.6.2.4, repairs which pass the nondestructive test shall be accepted as being adequate. Any repairs which fail the nondestructive test shall not be accepted, and the Installer shall perform the necessary remedial work and retest the repaired area until it passes the nondestructive testing criteria.

Upon completion of field seaming and testing, and prior to any placement of materials on top of the geomembrane, CQA Personnel shall identify any large wrinkles or "fishmouths" which may have been built into the geomembrane. Any such features shall be cut out, repaired, and tested by the Installer.

In any given area, no work shall proceed with any materials which may cover the geomembrane until all repairs in that area have been successfully made. As the work progresses, CQA Personnel shall document all locations requiring repair work and shall confirm that all repairs have been successfully made.

4.6.2.6 Materials in Contact with Geomembrane

The requirements of this section are intended only to minimize the risk of geomembrane damage during installation on existing surfaces or during placement of overlying materials. The construction and material specifications shall govern the adequacy of construction using these overlying materials.

The installation of geomembrane on rough surfaces such as concrete shall be carefully performed so as to prevent any damage to the geomembrane. The Installer, with prior

approval from the FDPM, may elect to use a remnant piece of geosynthetic material as a temporary "rub-sheet" beneath the geomembrane to act as a cushion. All foreign objects and particles in excess of the maximum size allowed in the material specifications shall be removed from the bedding surface prior to geomembrane placement.

Placement of materials on top of the geomembrane shall not be allowed when the ambient temperature is below 0°C (32°F) or above 40°C (104°F).

Equipment used for placing and compacting overlying soil materials shall not be driven directly onto any geosynthetic material. A minimum thickness of 0.3 meter (one foot) of soil shall be maintained between the geomembrane and the low contact pressure bulldozer or light motor grader used to place granular materials. No sharp turning of the spreading equipment will be allowed on the initial (one-foot) cover. No heavy rubber-tired vehicles shall be allowed in areas underlain by geomembrane until a minimum of 0.9 meter (3 feet) of soil cover material has been placed, with the exception that a light grader may be used on the 0.3 meter (one-foot) cover for fine grading and trimming operations. Earth moving equipment shall be observed during placement to document that no leakage of hydrocarbons occurs, particularly on top of the geomembrane.

Placement of soil materials on top of the geomembrane shall not be allowed within 15 meters (50 feet) of any unseamed edge of geomembrane until field seaming of that edge is complete. This is required to allow sufficient room to work out any large wrinkles or "fishmouths" prior to seaming.

In all cases, the placement of cover materials shall be done with caution and in a manner which is least likely to cause wrinkles in, or damage to, the geomembrane. The QA Engineer shall monitor the placement of cover materials over the geomembrane on a regular basis.

4.6.3 Post-Construction

Surface Clean-up

Upon completion of work in any given area, CQA Personnel shall examine that area to determine whether all waste and extraneous materials have been removed and that the area has been left in a satisfactorily clean condition to allow placement of materials on top of the geomembrane.

Completion of Work

The installation of the geomembrane shall be considered as complete when: (1) all required deployment, field seaming, testing and repairs, and site clean-up have been completed by the Installer; (2) the Installer has submitted all the required quality control certificates to the FDPM; and (3) the FDPM and the QA Engineer are satisfied that the geomembrane has been installed in accordance with the plans and specifications.

4.7 Leachate Collection System (LCS)

The requirements for the leachate collection system (LCS) are described in the following sections of the Specifications (most current revisions):

Section No.	Section Title	Document No.
02276	Geotextiles	0600X-SP-C0045
02277	Geocomposites	0600X-SP-C0046
02725	HDPE Pipe and Flatstock	0600X-SP-C0048
02731	Leachate System	0600X-SP-C0049
11210	Leachate Pumps	0600X-SP-M0016
15060	Crest Pad Piping	0600X-SP-M0020
15100	Crest Pad Valves	0600X-SP-M0021
15150	Meters	0600X-SP-M0022
15183	Gauges	0600X-SP-M0023
16375	Electrical Distribution System, Underground	0600X-SP-E0012
16415	Electrical Work, Interior	0600X-SP-E0013

The CQA Personnel shall perform the following activities:

4.7.1 Pre-Construction

CQA Personnel shall inspect all leachate collection system materials, equipment, and components when they are delivered to the site to confirm that they conform to the design criteria and specifications. Receiving inspection shall be performed in compliance with the procedures specified in the QAPP, with the exception that all nonconformances shall be documented on NCR forms and submitted to the FDPM for disposition and resolution. In general, activities performed by CQA Personnel shall include the following:

- Inspect all materials upon arrival at the site to confirm conformance to the Specifications;

- Inspect all piping components to confirm (from appearance and shipping documents) that they are constructed of materials as listed in the plans, specifications, and procurement documents and that they are not damaged. Take measurements to confirm that pipe is of specified size and wall thickness and that perforations are sized and spaced as specified;

- Observe and test to confirm that sand and gravel materials conform to the specifications, are of the proper size and gradation, and do not contain unacceptable types of materials. Testing requirements for the drainage layers are presented in Section 4.3;

- Inspect to confirm that all prefabricated structures are as specified in the design. Such items include, but are not limited to, non-HDPE piping systems, prefabricated HDPE components, electrical equipment, and monitoring equipment. Inspection shall include visual observation of any corrosion-resistant coatings to document that

they are present and without flaw. The FDPM shall be informed of the acceptance status of all such items prior to installation; and

- Inspect all LCS equipment, system components, and mechanical/electrical equipment identified in the Acceptance Test Procedures (Appendix A) to confirm they meet specification requirements.

4.7.2 Construction

4.7.2.1 Pipe Network Installation

The HDPE pipe network shall be placed according to the design. CQA monitoring activities shall include:

- Review of construction subcontractor's submittals concerning joining methods and type of perforations;
- Review of manufacturer's certification to document that the HDPE pipe meets the specifications;
- Visually observe that the geonet and geotextile layers are placed over the geomembrane prior to pipe installation;
- Observe and measure to confirm that the pipes are placed at specified locations and in specified configurations, and that all pipe grades are as specified;
- Visually observe that all pipes are joined together and perforated in accordance with the approved procedures. Visual inspection of the carrier pipe is not required when double containment pipe is joined using the double butt fusion process (the pipes will be pressure tested);
- Observe that the placement of any filter or backfill materials around the pipe proceeds as shown on the plans;
- Review testing of all HDPE piping prior to being buried or covered with liner;
- Observe that backfilling and compaction are completed as specified and that, in the process, the pipe network is not damaged.

4.7.2.2 Drainage Layer

Inspection of the drainage layer shall include:

- Testing the material to confirm that it has the specified particle size and is free from excessive amounts of fines or organic materials (See Section 4.3);
- Measuring the thickness and observing coverage of each drainage layer as it is placed in the LCS (coordinate with CQA Surveyor); and

- Surveying the completed layer to document that specified slopes and grades are obtained (coordinate with CQA Surveyor).

Placement of the drainage layers shall not damage any component of the underlying composite liner or the piping.

4.7.2.3 Geotextile, Geocomposite, and Geonet

Manufacture

The geotextile, geocomposite, and geonet Manufacturers shall provide a list of guaranteed properties for the type of geotextile, geocomposite, or geonet to be delivered. The Manufacturers shall also provide written certification signed by a responsible party that the materials actually delivered have properties which meet or exceed the guaranteed values.

All rolls of geotextile, geocomposite, and geonet shall be marked or tagged with the following information:

- Manufacturer's name,
- product identification,
- lot number,
- roll number, and
- roll dimensions.

If any special handling of the materials is required, it shall be so marked, e.g., "This Side Up" or "This Side Against Geonet".

Shipment, Handling, and Storage

The geotextile and geocomposite material shall be protected from ultraviolet light exposure, precipitation or inundation by water, mud, dirt, dust, puncture, cutting, and any other damaging or deleterious conditions. Geotextile and geocomposite rolls shall be shipped and stored in relatively opaque and watertight wrappings. Geotextile and geocomposites shall not be exposed to precipitation prior to being installed. Wrappings protecting geotextile and geocomposite rolls shall be removed less than one hour prior to unrolling the material. After the wrapping has been removed, a geotextile shall not be exposed to sunlight for more than 14 days, unless otherwise specified and guaranteed by the geotextile manufacturer.

Geonet rolls shall be covered in polyethylene sheet or otherwise protected against dust and dirt during shipping and storage. The covering shall be removed less than one hour before placement. CQA Personnel shall document that geonets are free of dirt and dust just before installation. If the geonets are judged dirty or dusty, they shall be washed by the Installer prior to installation.

Conformance Testing

Prior to shipment or after delivery of the geotextile, geocomposite, and geonet, CQA Personnel shall remove samples and forward them to an approved geosynthetic laboratory for testing to

document conformance to both the design specifications and the list of guaranteed properties. Unless otherwise specified, samples shall be taken at a rate of one per lot or one per 5,000 square meters (~50,000 square feet), whichever results in the greater number of tests, except that only two (2) friction angle tests on each interface will be performed. Samples shall be taken across the entire width of the roll and shall not include the first 0.9 meter (three feet). Unless otherwise specified, samples shall be 0.9 meter (three feet) long by the roll width. The machine direction shall be marked on the samples with an arrow.

As a minimum, the following tests shall be performed on geotextiles:

- Mass per unit area;
- Grab strength;
- Tear strength;
- Burst strength;
- Puncture strength;
- Thickness;
- Permittivity; and
- Apparent opening size (AOS).

As a minimum, the following tests shall be performed on geonets:

- Polymer specific gravity;
- Thickness;
- Transmissivity; and
- Mass per unit area.

As a minimum, the following tests shall be performed on finished geocomposites:

- Friction angle with operations layer; and
- friction angle with textured geomembrane.

All tests shall be conducted in accordance with the procedures listed in Table 4-2. CQA Personnel shall examine all results from laboratory conformance testing and shall report any nonconformance to the QA Engineer and the FDPM. Testing and acceptance of geotextiles and geonets for geocomposites shall be completed prior to geocomposite fabrication.

Installation

The Geosynthetics Installer shall handle all geotextiles, geocomposites, and geonets in such a manner that they are not damaged. On slopes, the geocomposite material shall be securely anchored in the anchor trench and then rolled down the slope in such a manner as to continually keep the geocomposite sheet in tension. In the presence of wind, all geotextiles, geocomposites, and geonets shall be weighted with sandbags or the equivalent. Such sandbags shall be installed during placement and shall remain until replaced with earth cover material. Geotextiles, geonets, and geocomposites shall be cut using approved cutters only. Special care shall be taken to protect other materials from damage which could be caused by the cutting of the geotextile, geocomposite, and geonet materials. The Installer shall take any necessary precautions to prevent damage to underlying layers during placement of the geotextile, geocomposites, or the geonet. During placement of geotextile and geocomposite

materials, care shall be taken not to entrap stones, sandbags, excessive dust, or moisture that could damage the geosynthetic material, clog drains or filters, or that might hamper subsequent seaming. Geotextiles and geocomposites shall not be dragged across textured geomembranes.

CQA Personnel shall visually examine the entire surface of the geotextile and geocomposite layers after installation to confirm that no potentially harmful foreign objects, such as needles, are present. In addition, the CQA Personnel may undertake a sweep of the entire geotextile surface using a metal detector, to determine the presence of any such items.

During placement of geonets, care shall be taken not to entrap dirt or excessive dust that could cause clogging of the drainage system, and/or stones that could damage the adjacent geomembrane. If dirt or excessive dust is entrapped in the geonet, it shall be hosed clean prior to placement of the next material on top of it. In this regard, care should be taken with the handling of sandbags, to prevent rupture or damage. Care shall be taken not to leave tools in the geonet. CQA personnel shall confirm that all geonet is covered with geotextile on the same day it is deployed.

Seams

All geotextiles shall be continuously sewn (i.e., spot sewing is not allowed) with a chain stitch. Alternatively, single or double wedge fusion welding will be acceptable. Leister welding (spot or continuous) will not be accepted.

Geotextiles shall be overlapped 76 mm (three inches) prior to seaming. No horizontal seams shall be allowed on side slopes (i.e., seams shall be along, not across, the slope), except as part of a patch. On the landfill floor, no horizontal seam shall be less than 0.9 meter (three feet) from the toe of the slope or other area of potential stress concentrations, unless otherwise authorized. When entering and exiting a seam, the stitches shall overlap to prevent unraveling.

Any sewing shall be done using polymeric thread with chemical resistance properties equal to or exceeding those of the geotextile. The Manufacturer shall provide written certification that the thread complies with the specifications.

Adjacent geonets shall be joined according to the specifications. As a minimum, the following requirements shall be met:

- Adjacent rolls shall be overlapped by at least 100 mm (four inches);
- All overlaps shall be secured by spot welding or tying with strings, plastic fasteners, or polymer braid. Tying devices shall be white or yellow for easy inspection. Metallic devices are not allowed;
- Side edges of panels shall be spot welded or tied shall be every 1.5 meters (five feet) along the slope and floor of the landfill, and every 150 mm (six inches) in the anchor trenches;

- End-to-end seams shall be spot welded or tied in two rows. Each row shall be joined at 150 mm (6 inch) intervals. The rows shall be 76 mm (3 inches) apart, with joining locations staggered.

CQA Personnel shall visually examine both the geotextile and geonet seams to document that the above requirements have been met.

Repair

All holes or tears in the geotextile shall be repaired as follows. A patch made from the same geotextile shall be double seamed into place, with each seam 6 to 20 mm (1/4 to 3/4 inch) apart and no closer than 25 mm (1 inch) from any edge. Care shall be taken to remove any soil or other material which may have penetrated the torn geotextile.

Any holes or tears in the geonet shall be repaired by placing a patch extending 0.6 meter (two feet) beyond the edges of the hole or tear. Ribs in the patch shall be parallel to ribs in the existing geonet. The patch shall be secured to the original geonet by spot welding or tying every 150 mm (six inches) using tying devices as indicated above. If the hole or tear width across the roll is more than 50 percent the width of the roll, the damaged area shall be cut out and the two portions of the geonet shall be joined as described in the Specifications.

All holes or tears in geocomposites shall be repaired by first removing the damaged area. A piece of geonet shall then be cut so that the ribs are in the same orientation as the existing geocomposite and the geonet surface is flush with the geocomposite when placed into the repair area. The geonet shall tied every 150 mm (6 inches). A geotextile patch shall be cut to cover the repair area and extend a minimum of 150 mm (6 inches) onto the undamaged geocomposite in all directions. This geotextile patch shall be heat seamed to the geocomposite around its entire perimeter.

CQA Personnel shall visually observe geotextile, geocomposite, and geonet repair procedures.

Soil Placement

Soil shall not be placed in direct contact with geonets.

The Installer shall place all soil materials on top of geotextiles or geocomposites in such a manner that there is:

- no damage to the geotextile, geocomposite, or underlying layers;
- minimal slippage of the geotextile or geocomposite on the underlying layers; and
- no excess tensile stresses in the geotextile or geocomposite.

CQA Personnel shall visually observe that the above conditions are satisfied.

4.7.2.4 LCS System Equipment and Components

Electrical System and Pump Controls

The electrical system which controls the leachate pumps and transfer pumps shall be checked for proper installation and operation. The Construction Subcontractor's QC activities are described in the pertinent sections of the Specifications. CQA Personnel shall perform the following activities:

- Review Construction Subcontractor's submittals and proposed equipment to document compliance with the specifications;
- Perform or review component checks of resistance, grounding, and load prior to complete system check.

Pumps, Piping, Meters, and Valves

The pumps, piping, instruments (such as flow meters), and valves that are included in the leachate collection (removal and transfer) system shall be examined and/or tested at the system level for conformance to the specifications and proper performance. CQA Personnel shall perform the following activities in conjunction with these items:

- Review Construction Subcontractor's submittals and equipment deliveries to the site to verify conformance with the Specifications;
- Review the results of Subcontractor's acceptance testing of the piping system;
- Review system performance checks to confirm operation in accordance with the Specifications;
- Review the complete leachate removal system performance using the installed pumps as described in the Specifications.

Acceptance Test Procedures

CQA Personnel will observe and record the results of the Acceptance Test Procedures (ATPs). The ATPs will be performed by the Construction Subcontractor to demonstrate that the installed pumps, piping, instrumentation, and electrical system components function as intended by the design. The ATPs are included in Appendix A.

4.7.3 Post-Construction

The post-construction inspection of the LCS shall include observations to confirm that all systems and components have been installed in the proper locations and according to the design drawings, Construction Specifications, and Manufacturer's specifications.

5. DOCUMENTATION

This section describes the documentation required during construction of ERDF Cells 3 and 4.

5.1 Daily Reports

Daily reports shall be completed by each of the CQA Personnel when they are on site. CQA Personnel shall be assigned field books which will be labeled with a unique number issued by the QA Engineer. The field CQA Personnel shall record all field observations and the results of field tests either in their assigned field book or on standard field data sheets. After each book is filled (or at the end of the project), the field book shall be returned to the QA Engineer and routed to the project files.

Each page of the field book shall be numbered, dated, and initialed by CQA Personnel. At the start of a new work shift, CQA Personnel shall list the following information at the top of the page:

- Job Name
- Job Number
- Date
- Name
- Weather conditions
- Page number (if pages are not prenumbered)

The remaining individual entries shall be prefaced by an indication of the time at which they occurred. If the results of test data are being recorded on separate sheets, it shall be noted in the field book.

Entries in the field book shall include but not be limited to the following information:

- Reports on any meetings held and their results;
- Equipment and personnel being used in each location, including subcontractors;
- Descriptions of areas being observed and documented;
- Description of materials delivered to the site, including any quality verification (vendor certification) documentation;
- Descriptions of materials incorporated into construction;

- Calibrations, or recalibrations, of test equipment, including actions taken as a result of recalibration;

- Decisions made regarding use of material and/or corrective actions to be taken in instances of substandard quality;

- Unique identifying sheet numbers of inspection data sheets and/or problem reporting and corrective measures reports used to substantiate the decisions described in the preceding item.

At the end of each day, field CQA Personnel shall summarize the day's activities on a daily field monitoring report form. The field report shall include a brief summary of the day's activities and highlight any unresolved issues that must be addressed by the QA Engineer or CQA Personnel the following day. In addition, the summary report shall reference the field book number and page numbers that cover that day's activities. The summary field reports shall be turned into the QA Engineer at the end of each day.

The daily field monitoring report shall be filled out in a triplicate form. The individual initiating the report shall attach three copies of his field book notes for that day. The three copies shall be distributed as follows:

- Original shall be filed in field office.

- One copy transmitted to the ERC Quality Services Manager.

- One copy transmitted to the project quality records in compliance with the documentation requirements of the QAPP.

The QA Engineer shall review and initial each summary field report before distributing to the project quality records and the ERC Quality Services Manager.

5.2 Inspection Data Sheets

All observed field and laboratory test data shall be recorded on an inspection data sheet. At a minimum, each inspection data sheet shall include the following information:

- Unique identifying sheet number for cross-referencing and document control;

- Description of the inspection activity;

- If appropriate, location of the inspection activity or location from which the sample was obtained;

- Type of inspection activity and/or procedure used (reference to standard method when appropriate);

- Any recorded observation or test data, together with all necessary calculations;

- Results of the inspection activity and comparison with specification requirements;
- Identification of any personnel involved in the inspection activity; and
- Signature of the CQA Personnel performing the activity and concurrence by the QA Engineer.

5.3 Nonconformance Reporting

A nonconformance is considered to be a deficiency in characteristics, documentation, or procedures that renders the quality of an item or activity unacceptable or indeterminate. If a deficiency cannot be repaired or replaced to the satisfaction of CQA Personnel within the guidelines established by this CQA Plan, then such a deficiency shall be considered a nonconformance and shall be documented on an NCR form and referred to the FDPM for disposition and initiation of corrective action processes. All nonconforming situations shall be brought to the attention of the QA Engineer, FDPM, and ERC QA Manager for concurrence prior to initiation of the NCR. These individuals and others as directed by the FDPM shall participate in NCR disposition, resolution, and corrective action processes. All documentation relating to NCR situations shall be retained in the project quality records in compliance with the documentation requirements of the QAPP. In the event of a conflict, the nonconformance reporting requirements of this section take precedence over those in the QAPP.

5.4 Design Changes and Clarifications

Requests for changes to the specifications or drawings shall be referred to the FDPM and initiated on BHI Field Change Request (FCR) or Field Change Notice (FCN) forms. FCRs and FCNs shall be completed in accordance with standard BHI procedures as described in the latest version of BHI-DE-01 *Design Engineering Procedures Manual*. All design changes shall be approved by the FDPM prior to implementation.

Requests for modifications to the CQA Plan shall be made by memorandum to the FDPM with copies to the QA Engineer and ERC QA Manager.

If during the course of construction questions arise regarding interpretation of the plans and/or specifications, the FDPM shall be contacted by the QA Engineer. Any clarification of the drawings shall be documented by memorandum or telecon records, and routed to the Construction Subcontractor, FDPM, and CM. The memorandum or telecon shall also be routed to the project files for record.

5.5 Progress Reports

The QA Engineer shall prepare a summary progress report each week, or at time intervals established at the pre-construction meeting. As a minimum, this report shall include the following information:

- A unique identifying sheet number for cross-referencing and document control;

- The date, project name, location, and other information;
- A summary of work activities accomplished during progress reporting period;
- Identification of areas or items inspected and/or tested during the reporting period that are addressed by the report;
- A summary of the quality characteristics being evaluated, with appropriate cross-references to specifications and/or drawings;
- References to the specifications or drawings defining the acceptance criteria for each inspected characteristic;
- A summary of inspection and test results, failures, and retests;
- A summary of construction situations, deficiencies, and/or defects occurring during progress reporting period;
- A summary of other problem resolutions and dispositions; and
- The signature of the QA Engineer.

5.6 Final Documentation

All daily inspection summary reports, inspection sheets, problem identification and corrective measures reports, acceptance reports, deviations from design and material specifications (with justifying documentation), NCRs, FCRs, FCNs, photographic records, progress reports, drawings, drawing revisions, and other pertinent documentation shall be retained as permanent project quality records in compliance with the QAPP. At the completion of the project, a final summary report that incorporates all such information, along with as-built drawings, shall be prepared by the QA Engineer and submitted to the FDPM. The as-built drawings, which will be generated by a land surveyor licensed in the State of Washington and retained by the Construction Subcontractor, shall include scale drawings depicting depths, plan dimensions, elevations, and fill thicknesses. The report shall include documentation of each construction component monitored by CQA Personnel and shall be signed by a professional engineer registered in the State of Washington.

5.7 Storage of Records

During the construction of the ERDF, the QA Engineer shall be responsible for all facility CQA documents. This includes the QA Engineer's copy of the design criteria, plans, procedures, and specifications; the CQA plan; and the originals of all the data sheets and reports. All completed documents shall be routed to the project quality records in compliance with those sections of the QAPP which address project QA records management, including maintenance of a records index, access control, and duplicate records requirements. Working copies shall be retained at the field office to the extent necessary to properly support ongoing activities.

6. REFERENCES

ASTM, 1997, 1997 Annual Book of ASTM Standards, American Society for Testing and Materials, Philadelphia, Pennsylvania.

Volume 4.02: Concrete and Aggregates; Volume 4.08: Soil and Rock (I); Volume 4.08: Soil and Rock (II), Geosynthetics:

C136	Method for Sieve Analysis of Fine and Coarse Aggregates
D422	Method for Particle-Size Analysis of Soils
D638	Standard Test Method for Tensile Properties of Plastics
D698	Test Method for Laboratory Compaction Characteristics of Soil Using Standard Effort (12,400 ft-lbf/ft^3) (600 kN-m/m^3)
D1140	Test Method for Amount of Material in Soils Finer than the No. 200 (0.075 mm) Sieve
D1238	Standard Test Method for Flow Rates of Thermoplastics by Extrusion Plastometer
D1505	Standard Test Method for Density of Plastics by the Density-Gradient Technique
D1556	Density of Soil In Place by the Sand-Cone Method
D1557	Test Method for Laboratory Compaction Characteristics of Soil Using Modified Effort (56,000 ft-lbf/ft^3) (2,700 kN-m/m^3)
D1603	Standard Test Method for Carbon Black in Olefin Plastics
D1777	Standard Test Method for Measuring Thickness of Textile Materials
D2167	Density and Unit Weight of Soil In Place by the Rubber Balloon Method
D2216	Test Method for Laboratory Determination of Water (Moisture) Content of Soil and Rock
D2434	Test Method for Permeability of Granular Soils (Constant Head)
D2663	Standard Test Methods for Carbon Black - Dispersion in Rubber
D2922	Density of Soil and Soil-Aggregate In Place by Nuclear Methods (Shallow Depth)

D3786	Standard Test Method for Hydraulic Bursting Strength of Knitted Goods and Nonwoven Fabrics - Diaphragm Bursting Strength Tester Method
D4218	Determination of Carbon Black Content in Polyethylene Compounds by the Muffle-Furnace Technique
D4318	Test Method for Liquid Limit, Plastic Limit, and Plasticity Index of Soils
D4437	Standard Practice for Determining the Integrity of Field Seams Used in Joining Flexible Polymeric Sheet Geomembranes
D4491	Standard Test Methods for Water Permeability of Geotextiles by Permittivity
D4533	Standard Test Method for Trapezoid Tearing Strength of Geotextiles
D4632	Standard Test Method for Grab Breaking Load and Elongation of Geotextiles
D4643	Standard Test Method for Determination of Water Content of Soil by the Microwave Oven Method
D4644	Test Method for Slake Durability of Shales and Similar Weak Rocks
D4716	Standard Test Method for Constant Head Hydraulic Transmissivity (In-Plane Flow) of Geotextiles and Geotextile Related Products
D4751	Standard Test Method for Determining Apparent Opening Size
D4833	Standard Test Method for Index Puncture Resistance of Geotextiles, Geomembranes, and Related Products
D5084	Test Method for Hydraulic Conductivity of Saturated Porous Materials Using a Flexible Wall Permeameter
D5093	Test Method for Field Measurement of Infiltration Rate Using a Double-Ring Infiltrometer with a Sealed Inner Ring
D5199	Standard Test Method for Measuring Nominal Thickness of Geotextiles and Geomembranes
D5261	Standard Test Method for Measuring Mass per Unit Area of Geotextiles

D5321 Standard Test Method for Determining the Coefficient of Soil and Geosynthetic or Geosynthetic and Geosynthetic Friction by the Direct Shear Method

D5397 Evaluation of Stress Crack Resistance of Polyolefin Geomembrane Using Notched Constant Tension Load Test (Appendix A, Single Point)

D5596 Microscopic Evaluation of the Dispersion of Carbon Black in Polyolefin Geosynthetics

D5994 Test Method for Measuring Core Thickness of Textured Geomembrane

BHI, 1994, BHI Quality Management Plan, Bechtel Hanford, Inc., Richland, Washington.

BHI, 1995, Environmental Restoration Disposal Facility Quality Assurance Program Plan, Bechtel Hanford, Inc., Richland, Washington.

Ecology, 1994, Dangerous Waste Regulations, WAC 173-303, Washington State Department of Ecology, Olympia, Washington.

EPA, 1993, Technical Guidance Document: Quality Assurance and Quality Control for Waste Containment Facilities, EPA/600/R-93-182, U.S. Environmental Protection Agency, Office of Research and Development, Cincinnati, Ohio.

EPA, 1994, Standards for Owners and Operators of Hazardous Waste Treatment, Storage, and Disposal Facilities, 40 CFR 264, U.S. Environmental Protection Agency, Washington, D.C.

FIGURES

This page intentionally left blank.

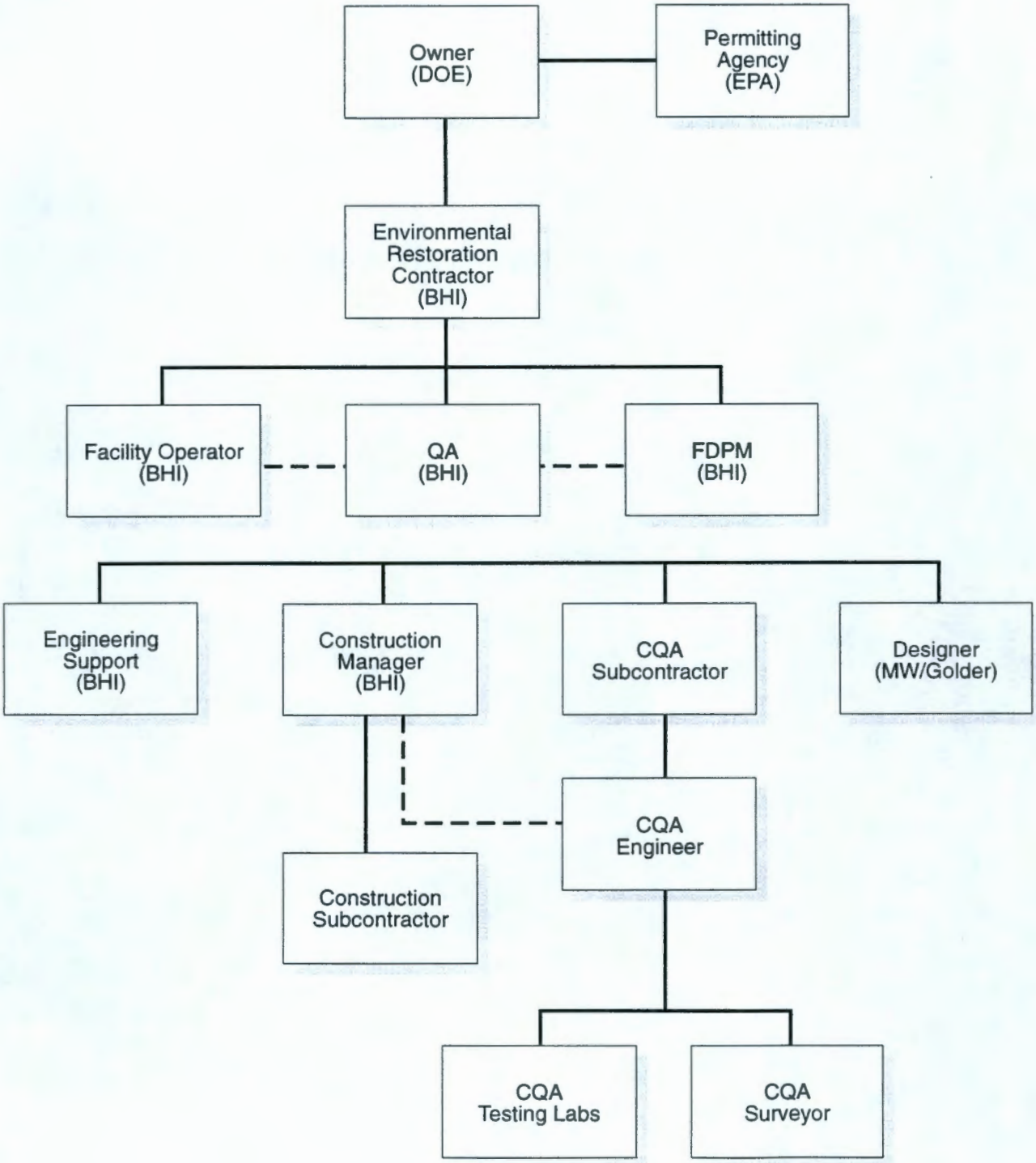

- - - - Line of Communication

——— Line of Authority

FIGURE **2-1**
ERDF QUALITY ASSURANCE ORGANIZATION
ERDF

PROJECT NO. 973 1810.1300 DRAWING NO. 74926 DATE 1/12/98 DRAWN BY TK

This page intentionally left blank.

TABLES

This page intentionally left blank.

TABLE 4-1. SOIL MINIMUM TESTING REQUIREMENTS

4-1.1 Earthworks

Phase	Material	Test and ASTM Number	Frequency
Pre-construction	Backfill	Grain Size Distribution (C136/D422) (Note 1)	1 per 6,000 m^3 (8,000 cy)
		Atterberg Limits (D4318)	1 per 6,000 m^3 (8,000 cy) for soil with > 12% passing the No. 200 sieve
		Modified Proctor Compaction (D1557)	1 per 6,000 m^3 (8,000 cy)
	Subgrade	In-Place Density (D2922)	1 per 900 m^2 (10,000 sf)
Construction	Fill, Roadway Top Course (Note 2)	In-Place Density (D2922)	1 per 4,600 m^2 (50,000 sf) per lift
	Below Crest Pad Bldgs.	In-Place Density (D2922)	2 per lift

Notes:

1. ASTM C136 shall be used when the amount of material passing the No. 200 sieve is less than 12% by weight. ASTM D422 shall be used when the fine soil fraction is greater than this value.
2. Only applies to roadways within trench or passing over trench embankment.

4-1.2 Admix Soil Liner

Phase	Material	Test and ASTM Number	Frequency
Pre-construction	Bentonite	Manufacturer's Certificates	1 per 450 metric tons (500 tons) delivered
	Admix	Recompacted Permeability (D5084)	1 per 15,000 m^3 (20,000 cy)
		Soil Density / Moisture Content Relationship (D698)	1 per 4,000 m^3 (5,000 cy)
		Atterberg Limits (D4318)	1 per 4,000 m^3 (5,000 cy)
		Natural Moisture Content (D2216)	1 per 800 m^3 (1,000 cy)
		Maximum Clod Size	Periodic visual monitoring
		Particle Size Distribution/Hydrometer (D422)	1 per 4,000 m^3 (5,000 cy)
	Base soil	Particle Size Distribution/Hydrometer (D422)	1 per 8,000 m^3 (10,000 cy)
Test Fill	Admix	Visual Observation	Continuous
		In-place Moisture-Density (Nuclear, D2922)	3 per lift
		In-place Moisture-Density (Rubber Balloon, D2167)	1 per lift
		Permeability (D5084)	1 per lift
		SDRI (D5093)	1 per test fill
Construction	Admix	In-place Moisture-Density (Nuclear, D2922)	1 per 200 m^3 (250 cy)
		Rubber Balloon (D2167) or Sand Cone (D1556) Moisture-Density	1 per day, if nuclear gage is used
		Shelby Tube for Permeability (D5084)	1 per 4,000 m^3 (5,000 cy), at least 1 in a corner area
		Moisture Content (D2216 or D4643)	1 per each nuclear moisture test

4-1.3 Gravel Drainage Layers

Phase	Material	Test and ASTM Number	Frequency
Pre-construction	Borrow source	Grain Size Distribution (C136)	1 per 4,000 m^3 (5,000 cy)
		Permeability (D2434)	1 per 4,000 m^3 (5,000 cy)
		Carbonate Content (D4373)	1 per 8,000 m^3 (10,000 cy)
		Slake Durability (D4644)	1 per 8,000 m^3 (10,000 cy)
Construction	Gravel, when delivered	Grain Size Distribution (C136)	1 per 1,500 m^3 (2,000 cy)
		Permeability (D2434)	1 per 1,500 m^3 (2,000 cy)

4-1.4 Operations Layer

Phase	Material	Test and ASTM Number	Frequency
Pre-construction	Proposed Material	Grain Size Distribution (D422)	1 per 1,500 m^3 (2,000 cy)
Construction		Visual Observations	Continuous
		Grain Size Distribution (D422)	1 per 1,500 m^3 (2,000 cy)
		In-Place Density (D2922)	1 per 1,800 m^2 (20,000 sf)

4-1.5 Anchor Trench/Side Slope Riser Pipe Trench

Phase	Material	Test and ASTM Number	Frequency
Pre-construction	Prior to backfilling	Grain Size Distribution (D422)	1 per 1,500 m^3 (2,000 cy)
Construction		Visual Observations	Periodic
		Grain Size Distribution (D422)	1 per 1,500 m^3 (2,000 cy)

TABLE 4-2. GEOSYNTHETIC MATERIALS MINIMUM TESTING REQUIREMENTS

4-2.1 HDPE Geomembrane

Phase	Material	Test and ASTM Number	Frequency
Pre-Shipment (Before Shipping)	Resin	Manufacturer's Documentation, Certification, & QC Test Results	Every Lot
	Geomembrane	Manufacturing Plant Visit	During Production
		Manufacturer's Documentation, Certification, & QC Test Results	Every Roll
Pre-construction (Before Installing) (Note 1)	Geomembrane	Receiving Inspection	Every Roll
		Specific Gravity (D1505) Carbon Black Content (D1603 or D4218) Carbon Black Dispersion (D5596) Thickness (D5199 or D5994) Yield Strength (D638) Elongation at Yield (D638) Break Strength (D638) Elongation at Break (D638) Puncture Resistance (D4833)	Every 5,000 m^2 (50,000 sf) per Lot
		Friction Angle (Direct Shear - D5321) Textured HDPE Liner vs. Soil Liner	2 Tests Total
		Melt Index (D1238)	Every Lot
	Extrudate	Documentation & Certification	Every Resin Lot
	Installation Surface	Installer's Certification of a Suitable Installation Surface	Each Installation Surface
Construction	Geomembrane	Field Panel Thickness (D5199 or D5994), Seam Overlap	Every Panel
		Trial Seams	Every 4 Hours per welder
		Vacuum Test	All Extrusion or Single Wedge Fusion Welds
		Air Pressure Test	All Double Wedge Fusion Welds
		Seam Destructive Test (D4437)	Min. Avg. of 1 per 150 m (500 ft) per Welder

4-2.2 Geotextile

Phase	Material	Test and ASTM Number	Frequency
Pre-Shipment (Before Shipping)	Geotextile and Thread	Manufacturer's Documentation, Certification, & QC Test Results	Every 5,000 m^2 (50,000 sf) per Lot
Pre-Construction (Before Installing) (Note 1)	Geotextile	Receiving Inspection	Every Roll
		Mass per Unit Area (D5261) Grab Strength (D4632) Tear Strength (D4533) Burst Strength (D3786) Puncture Strength (D4833) Thickness (D1777 or D5199) Permittivity (D4491) Apparent Opening Size - AOS (D4751)	Every 5,000 m^2 (50,000 sf) per Lot

4-2.3 Geocomposite

Phase	Material	Test and ASTM Number	Frequency
Pre-Fabrication (Before Bonding Geotextile to Geonet)	Geonet and Geotextile Components	Manufacturer's Documentation, Certification, & QC Tests	Every 5,000 m^2 (50,000 sf) per Lot
		Passing Conformance Test Results for Both the Geonet and Geotextile	
Pre-Shipment (After Bonding, but Before Shipping)	Geocomposite	Manufacturer's Documentation, Certification, & QC Test Results	
Pre-construction (Note 1)	Geocomposite	Receiving Inspection	Every Roll
		Friction Angle (Direct Shear - D5321) Geocomposite vs. Textured HDPE Liner	2 Tests Total
		Friction Angle (Direct Shear - D5321) Geocomposite vs. Operations Layer	2 Tests Total

4-2.4 Geonet

Phase	Material	Test and ASTM Number	Frequency
Pre-Shipment (Before Shipping)	Geonet	Manufacturer's Documentation, Certification, & QC Tests	Every 5,000 m^2 (50,000 sf) per Lot
Pre-construction (Before Installing) (Note 1)	Geonet	Receiving Inspection	Every Roll
		Polymer Specific Gravity (D1505) Thickness (D1777 or D5199) Transmissivity (D4716) Mass per Unit Area (D5261)	Every 5,000 m^2 (50,000 sf) per Lot

Notes:

1. Testing may be performed prior to shipment from factory or after delivery at site.

TABLE 4-3. ERDF CONSTRUCTION HOLD POINTS

Phase	Activity	Hold Point	Proceed to Next Activity
Excavation	Surface	Before Covering Subject Portion with Next Layer	Passing results for density tests
			CQA review of contractor and CQA surveys
Soil Liner	Admix Placement	Before Placing in Cell	Passing test results for test fill and stockpiled admix
	Individual Lift or Final Surface	Before Covering Subject Portion with Next Layer	Passing results for all CQA tests
			CQA review of contractor and CQA surveys
HDPE Liner	Delivery	Before Shipping	Manufacturer's Documentation
			Acceptable Friction Angle test results vs. admix and geocomposite
	Installation	Before Installing	Passing conformance test results
		Before Covering Subject Portion with Next Layer	Installation records (CQA) review
			Visual inspection
			Seam survey data
Geotextile	Delivery	Before Shipping	Manufacturer's Documentation
	Installation	Before Installing	Passing conformance test results
		Before Covering Subject Portion with Next Layer	Visual inspection
Geocomposite	Fabrication	Before Fabrication	Passing conformance test results for geotextile
			Passing conformance test results for geonet
	Delivery	Before Shipping	Manufacturer's Documentation
			Acceptable Friction Angle test results vs. HDPE liner and Operations Layer material
	Installation	Before Installing	Passing conformance test results
		Before Covering Subject Portion with Next Layer	Visual Inspection
Drainage Gravel	Delivery	Before Shipping	Passing Pre-construction test results
	Installation	Before Covering Subject Portion with Next Layer	Passing CQA test results CQA review of contractor and CQA surveys
Operations Layer	Installation	Before Installing	Passing CQA test results
		After Installing	CQA review of contractor and CQA surveys
Piping	Installation	Before Backfilling Trenches	Passing Pressure and Leak Test Results

This page intentionally left blank.

APPENDIX A

ACCEPTANCE TEST PROCEDURES

This page intentionally left blank.

CELLS 3 AND 4
600 AREA ENVIRONMENTAL RESTORATION
DISPOSAL FACILITY

HANFORD SITE
RICHLAND, WASHINGTON

ACCEPTANCE TEST PROCEDURES

This page intentionally left blank.

CONTENTS

1.0 PURPOSE OF THE ACCEPTANCE TEST A-1

2.0 REFERENCE DRAWINGS AND SPECIFICATIONS A-1
2.1 DRAWINGS A-1
2.2 SPECIFICATIONS A-1

3.0 RESPONSIBILITIES A-2
3.1 FACILITY DEVELOPMENT PROJECT MANAGER A-2
3.2 TEST DIRECTOR A-2
3.3 WITNESSES A-3
3.4 RECORDER A-3
3.5 CONSTRUCTION SUBCONTRACTOR A-4
3.6 OCCUPATIONAL SAFETY AND HEALTH A-4

4.0 ACCEPTANCE TEST PROCEDURE CHANGE CONTROL A-4

5.0 RECORDING AND RESOLVING EXCEPTIONS A-4
5.1 GENERAL A-4
5.2 RECORDING A-5

6.0 TEST CONDITIONS AND EQUIPMENT REQUIRED A-5
6.1 GENERAL A-5
6.2 EQUIPMENT REQUIRED A-6

7.0 TRANSDUCERS AND METER/CONTROLLERS IN LANDFILL SUMPS A-6
7.1 PRIMARY AND SECONDARY SUMPS A-6

8.0 SUMP PUMP TESTS A-7
8.1 INITIAL CONDITIONS FOR PUMP TESTS A-7
8.2 PRIMARY SUMP PUMPS A-7
8.3 SECONDARY SUMP PUMP A-8

9.0 LEACHATE STORAGE AND TRANSFER SYSTEM A-9
9.1 MANHOLE FLOOD ALARM SWITCHES A-9
9.2 MOISTURE SENSORS A-9

Figure 1. Water Level Definitions

ACCEPTANCE TEST PROCEDURE

CELLS 3 AND 4
ENVIRONMENTAL RESTORATION DISPOSAL FACILITY

1.0 PURPOSE OF THE ACCEPTANCE TEST

This acceptance test procedure (ATP) has been prepared to establish field testing procedures to demonstrate that the Electrical/Instrumentation and Piping/Mechanical systems for the Cells 3 and 4 and Support Facilities function as intended by the design.

2.0 REFERENCE DRAWINGS AND SPECIFICATIONS

2.1 DRAWINGS

0600X-DD-C0105	Yard Piping Plan - Area 1
0600X-DD-C0106	Yard Piping Plans - Areas 2 & 3
0600X-DD-C0107	Civil Details 1
0600X-DD-C0108	Civil Details 2
0600X-DD-C0109	Civil Details 3
0600X-DD-C0136	Leachate Piping Plan
0600X-DD-C0137	Crest Pad Details - Sheet 1
0600X-DD-C0138	Crest Pad Details - Sheet 2
0600X-DD-C0139	Crest Pad Details - Sheet 3
0600X-DD-C0140	Crest Pad Details - Sheet 4
0600X-DD-M0009	Mechanical Details - 1
0600X-DD-M0010	Mechanical Schedules
0600X-DD-E0042	Electrical Site Plan - 1
0600X-DD-E0043	Electrical Site Plan - 2
0600X-DD-E0044	Electrical Site Plan - 3
0600X-DD-E0045	Electrical Site Plan - 4
0600X-DD-E0046	MCC One Line Diagram - 1
0600X-DD-E0047	Electrical Schedules
0600X-DD-E0048	Control Schematics - 1
0600X-DD-E0049	Control Schematics - 2
0600X-DD-E0050	Control Schematics - 3
0600X-DD-E0051	Control Schematics - 4
0600X-DD-E0052	Crest Pad Bldg Electrical Plans

2.2 SPECIFICATIONS

Technical Specifications for 600 Area Environmental Restoration Disposal Facility at the Hanford Site, Richland, Washington, February 5, 1998.

3.0 RESPONSIBILITIES

Each company or organization participating in the conduct of this ATP will designate personnel to assume the responsibilities and duties as defined herein for their respective roles. The names of these designees shall be provided to the Recorder for listing on the Recorder's copy of the Test Execution Sheet prior to the performance of any part of this ATP.

3.1 FACILITY DEVELOPMENT PROJECT MANAGER (FDPM)

3.1.1 Designate a Test Director.

3.1.2 Act as liaison between the participants in acceptance testing.

3.1.3 Establish and distribute the testing schedule.

3.1.4 Schedule and conduct a pre-ATP meeting with test participants prior to start of testing.

3.1.5 Notify all persons performing and witnessing the test prior to the start of testing.

3.1.6 Notify all concerned parties when a change is made in the testing schedule.

3.1.7 Sign Test Execution Sheet when ATP is approved and accepted.

3.1.8 Take necessary action to clear exceptions to the ATP.

3.1.9 Sign Exception Sheet when exception has been resolved.

3.1.10 Provide a distribution list for the approved and accepted ATP.

3.2 TEST DIRECTOR

3.2.1 Coordinate all acceptance testing.

3.2.2 Distribute all documents including completed ATP, exceptions, resolutions and approvals.

3.2.3 Confirm that field testing and inspection of the system or portion of the system to be tested has been completed.

3.2.4 Stop any test which, in the judgment of the Director, may cause damage to the system until the test procedure has been revised.

3.2.5 Obtain revisions to the ATP, as necessary, to comply with authorized field changes or to accommodate existing field conditions.

3.2.6 Evaluate recorded data, discrepancies, and exceptions.

3.2.7 Obtain from the Designer any information related to this ATP or changes necessary to clear or resolve objections.

3.2.8 Sign Test Execution Sheet when ATP has been completed.

3.2.9 Sign Exception Sheet when retest has been executed and accepted.

3.3 WITNESSES

Witnesses shall be provided as directed by the FDPM.

3.3.1 Witness the tests.

3.3.2 Evaluate results of testing.

3.3.3 Assist the Test Director when requested.

3.3.4 Sign Test Execution Sheet as a Witness.

3.3.5 Sign Exception Sheet as a Witness when retest has been executed and accepted.

3.4 RECORDER

The Recorder will be provided by the BHI's subcontracted Quality Assurance Engineer.

3.4.1 Prepare Test Data Forms to record ATP data and observations.

3.4.2 Record names of all designated personnel on Recorder's copy of ATP prior to start of testing.

3.4.3 Observe tests and record test data.

3.4.4 Sign the Test Execution Sheet as the Recorder.

3.4.5 On the Exception Sheet, record objections or exceptions and test activities which are not performed.

3.4.6 Orally notify the Test Director at the time an objection is made.

3.4.7 Assign page numbers to all test data sheets and Exception Sheets, after ATP is complete. Submit the completed ATP documents to the FDPM.

3.5 CONSTRUCTION SUBCONTRACTOR

3.5.1 Organize and perform this acceptance test under coordination of the Test Director.

3.5.2 Confirm that all equipment required for performing this test will be available at the start of testing.

3.5.3 Provide equipment required for performing this acceptance test, unless designated by these procedures as being supplied by others.

3.5.4 Provide lock and tag materials and personnel to perform ATP.

3.5.5 Request in writing from the FDPM those services, materials, or equipment that have been designated as being supplied by the FDPM or others.

3.5.6 Sign the Test Execution Sheet when the ATP has been completed.

3.5.7 Sign the Exception Sheet when the retest has been completed and accepted.

3.6 OCCUPATIONAL SAFETY AND HEALTH

Individuals shall carry out their assigned work in a safe manner to protect themselves and others from undue hazards and to prevent damage to property and environment. Performance of test activities shall always include safety and health aspects as delineated in the most current version of the Federal Occupational Safety and Health Administration (OSHA) safety health codes and standards.

4.0 ACCEPTANCE TEST PROCEDURE CHANGE CONTROL

Acceptance testing shall be conducted in accordance with the steps and requirements specified in this procedure. Any required changes must be authorized in accordance with approved change control procedures for this project and promptly accomplished. Procedure changes during testing must be approved by the FDPM, BHI Quality Assurance, and the subcontracted Quality Assurance Engineer (via initials). The recorder shall note these changes as exceptions (see Section 5.2), provided that these changes do not affect safety and health. The changes shall be noted in the final acceptance test report.

5.0 RECORDING AND RESOLVING EXCEPTIONS

5.1 GENERAL

Exceptions to the ATP are sequentially numbered and recorded on individual Exception Sheets. This enables case-by-case resolution, recording, approval, and distribution of each exception.

5.2 RECORDING

5.2.1 Number each exception sequentially as it occurs and record it on an Exception Sheet.

5.2.2 Enter name and organization of objecting party for each exception.

5.2.3 Describe the exception.

5.2.4 Record the action taken to resolve each exception. Include test results as applicable. Repeat the process as necessary until exception has been resolved.

5.2.5 When action taken results in an acceptable retest, sign and date the Exception Sheet.

6.0 TEST CONDITIONS AND EQUIPMENT REQUIRED

6.1 GENERAL

The following conditions shall exist at the start of the acceptance testing for that portion of the system being tested.

6.1.1 Systems being tested have been inspected for workmanship and for compliance with design.

6.1.2 Continuity tests have been performed on portions of the electrical system being tested.

6.1.3 Power is available to components of systems being tested.

6.1.4 Continuity tests of instrumentation wiring have been performed in accordance with the latest revision of the construction Specifications.

6.1.5 All test instruments have a valid calibration stamp attached that indicates a calibration traceable to the National Institute of Standards and Technology.

6.1.6 Personnel responsible for directing, witnessing and performing the tests described in this ATP are familiar with the equipment to be tested, have reviewed the vendor information pertaining to the operation of the equipment, and are familiar with the requirements of this acceptance test procedure.

6.1.7 Values used to simulate process inputs (such as water levels D1, D2, D3, D4, DS-1, DS-2, etc. - See Figure 1) and alarm conditions for execution of ATP have been provided.

6.2 EQUIPMENT REQUIRED

The Construction Subcontractor shall supply all test equipment unless otherwise noted. Test equipment shall include electrical equipment, pressure gages, tapes or rods, and other measuring apparatus to perform the acceptance tests. Test equipment shall have suitable range and accuracy for the parameter being measured. All ancillary equipment such as jumpers, valves, piping, and similar items shall also be provided by the Construction Subcontractor. All test equipment shall be approved by the Test Director prior to use.

7.0 TRANSDUCERS AND METER/CONTROLLERS IN LANDFILL SUMPS

This procedure will demonstrate the correct functioning of the level transducers and the associated meter/controllers. See Figure 1 for definitions of water levels and associated pumps and relays. Verify that the level transducers have been calibrated prior to installation.

7.1 PRIMARY AND SECONDARY SUMPS

7.1.1 Pump the primary sump to below the low water level D1, and pump the secondary sump to below the low water level DS-1. Remove power to the pumps in both sumps by opening the associated circuit breakers.

7.1.2 Verify that the relays associated with the high water levels (D2 and D4) in the primary sump are "off" (de-energized) and the relay associated with the low water levels (D1 and D3) in the primary sump are "on" (energized). Verify that the relay associated with the high water level (DS-2) in the secondary sump is "off" (de-energized) and the relay associated with the low water level (DS-1) in the primary sump is "on" (energized).

7.1.3 Add water in increments as directed by the Test Director to secondary sump via the secondary slope riser pipe. Record the volume of water added to the sump. Wait 2 minutes after each increment of water, and record the secondary sump level meter reading. Verify that the secondary sump level meter reading increases as water is added.

7.1.4 Continue adding water in increments and observe that the low water level relay is de-energized when the level is DS-1, and that the high water level relay is energized when the level is DS-2. Stop filling secondary sump.

7.1.5 Repeat step 7.1.3 for the primary sump. Observe that the low water level relays are de-energized when the levels are D1 and D3, and that the high water level relays are energized when the levels are D2 and D4. Stop filling primary sump.

8.0 SUMP PUMP TESTS

This procedure will demonstrate the correct functioning of the high capacity and low capacity sump pumps and associated controls. See Figure 1 for definitions of water levels and associated pumps. For each of the sump pumps, measure the phase currents prior to beginning pumping tests. Record this information on the top of the appropriate test data forms. Verify that motor overload devices are sized correctly.

8.1 INITIAL CONDITIONS FOR PUMP TESTS

Prior to testing pumps, verify that the relay associated with the high water levels for the leachate storage tanks is de-energized, that the valves in the manholes for the leachate piping system are open, and that any water in the manholes is below the flood switches.

8.1.1 Primary Sump

This testing should begin with water in the primary sump above level D4. Verify the following conditions on the control panel:

a. High water level relays are energized.
b. Low water level relays are de-energized.
c. Pump failure lights for the primary low capacity and high capacity submersible pumps are on.
d. The roof alarm light is on.
e. The panel lights associated with the high water relays are on, and the panel lights associated with the low water relays are off.

8.1.2 Secondary Sump

The water level in the secondary sump should be above DS-2. Verify the following conditions on the control panel:

a. High water level relay is energized.
b. Low water level relay is de-energized.
c. Pump failure light for the secondary sump pump is on.
d. The roof alarm light is on.
e. The panel light associated with the high water level relay is on.

8.2 PRIMARY SUMP PUMPS

8.2.1 The switches on the control panel for the pumps should be in the "off" position.

8.2.2 Turn the switch for the low capacity pump to the "hand" position. Verify by observation (sight, sound, pipe vibrations, and/or transducer readings) that water is being pumped from the sump, and verify that the associated "pump run" light is on.

8.2.3 Turn the switch for the high capacity pump to the "hand" position. Verify by observation (sight, sound, pipe vibrations, and/or transducer readings) that water is being pumped from the sump, and verify that the associated "pump run" light is on.

8.2.4 Run the primary sump pumps until the primary sump is drained below high water level D2.

8.2.5 Turn the primary sump pump switches on the motor controller to "automatic" position. Add water to primary sump until the water reaches level D2.

8.2.6 Verify that the low capacity pump starts automatically and that the pump run light is on. Verify by observation that water is being pumped from the sump. Allow the pump to continue running in the "automatic" mode.

8.2.7 Resume or continue adding water to the primary sump until the water reaches the high capacity pump high water level (D4).

8.2.8 Verify that the high capacity pump starts automatically and that the pump run light is on. Verify by observation that water is being pumped from the sump.

8.2.9 Continue pumping both the high capacity and low capacity pumps in the automatic mode.

8.2.10 While the pumps are running, connect across the high-tank switch electrical terminals using a jumper, to simulate high water level in the storage tanks. Verify that the pumps are automatically stopped and that the roof alarm is initiated. Remove the jumper and re-initiate the automatic operation.

8.2.11 Verify that when the water level in the sump reaches low levels (water levels D1 and D3), the appropriate relays are energized, and both primary sump pumps are automatically shut off.

8.3 SECONDARY SUMP PUMP

Repeat steps 8.2.1, 8.2.2, 8.2.4 to 8.2.6, and 8.2.9 to 8.2.11 for the secondary submersible pump (with corresponding level designations of DS-2 for steps 8.2.4 and 8.2.5, and DS-1 for step 8.2.11), adding water to the secondary sump through the secondary riser pipe as required.

9.0 LEACHATE STORAGE AND TRANSFER SYSTEM

9.1 MANHOLE FLOOD ALARM SWITCHES

Demonstrate that when activated, each alarm switch will close the appropriate motor-operated valves in the manholes and will shut-off the pumps in the landfill.

9.2 MOISTURE SENSORS

Demonstrate that when activated, each moisture sensor will close the appropriate motor-operated valve.

This page intentionally left blank.

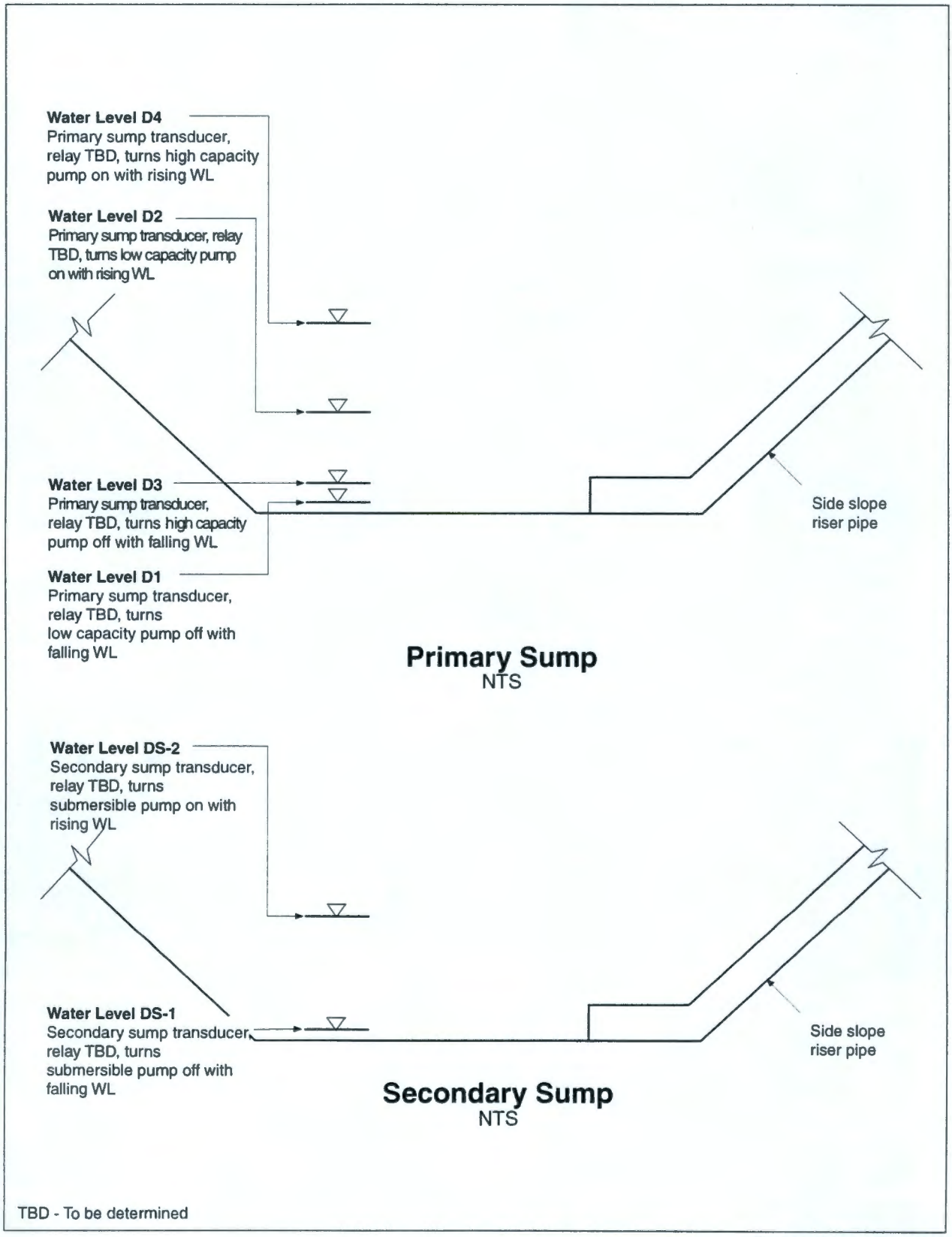

973 1810.1300/74822/1-8-98

Figure 1. Water Level Definitions.

This page intentionally left blank.

TEST EXECUTION SHEET - ERDF CELLS 3 AND 4

TEST NO. _____

ITEM _____

NUMBER OF EXCEPTIONS (ATTACH) _____

SUMMARY OF EXCEPTIONS, ACTIONS TAKEN, AND RESULTS: _____

_____

_____

_____

_____

_____

_____

_____

APPROVED:

FDPM	Date
Test Director	Date
Witness Name / Organization	Date
Witness Name / Organization	Date
Construction Subcontractor / Organization	Date
Other / Organization	Date
Recorder / Organization	Date

This page intentionally left blank.

EXCEPTION SHEET - ERDF CELLS 3 AND 4

EXCEPTION NUMBER _____ SHEET ____ OF ____

DATE _____

EXCEPTION BY: _____
NAME

_____
ORGANIZATION

DESCRIPTION: _____

_____

_____

_____

ACTION TAKEN: _____

_____

_____

_____

APPROVED:

_____ _____
FDPM Date

_____ _____
Test Director Date

_____ _____
Witness Name / Organization Date

_____ _____
Witness Name / Organization Date

_____ _____
Construction Subcontractor / Organization Date

_____ _____
Other / Organization Date

_____ _____
Recorder / Organization Date

This page intentionally left blank.

0048805
16/18

ENVIRONMENTAL RESTORATION DISPOSAL FACILITY

CELLS 3 & 4 CONSTRUCTION

100% DESIGN ANALYSIS

January 20, 1998

Prepared for
Bechtel Hanford, Inc.

Prepared by
Montgomery Watson

ENVIRONMENTAL RESTORATION DISPOSAL FACILITY

CELLS 3 & 4 CONSTRUCTION

100% DESIGN ANALYSIS

January 20, 1998

Prepared for
Bechtel Hanford, Inc.

Prepared by
Montgomery Watson

TABLE OF CONTENTS

ERDF Cells 3 & 4 Design Project Summary

ERDF Cells 3 & 4 Design Criteria

Design Basis

Calculations

- 0600X-CA-C0009 Manhole Sizes (23 & 24)
- 0600X-CA-C0010 Perforations in Sump Pipes
- 0600X-CA-C0011 Volume Estimate - Cells 3 & 4 Excavation
- 0600X-CA-C0012 Transfer Line Headloss
- 0600X-CA-C0013 Pump Selection
- 0600X-CA-C0014 Loading / Unloading Slab
- 0600X-CA-C0015 Crest Pad Building (Struct)
- 0600X-CA-A0001 Crest Pad Building (Arch)
- 0600X-CA-E0006 Voltage Drop

Meeting Minutes

- ERDF Phase II Kick-Off Meeting
- ERDF 30% Progress Meeting
- Progress Meeting
- ERDF 60% Progress Meeting

Correspondence

Schedule

M E M O R A N D U M

MONTGOMERY WATSON

To:	100% Submittal	**Date:**	Jan. 20, 1998
From:	Mike Marchant	**Reference:**	1166095
Subject:	ERDF Cells 3 & 4 Design Project Summary		

The ERDF is a RCRA compliant landfill which began operations during the summer of 1996. Since the completion of Cells 1 & 2, the ERDF has been receiving waste from the remediation sites throughout Hanford. At the present time, the facility has successfully accepted over 500,000 tons of waste. It is projected that by July of 1999 Cells 3 & 4 will be required to continue accepting waste.

The principle source of design criteria is found in "Design Basis For The Environmental Restoration Disposal Facility Phase II. Waste Cells 3 & 4" and supplemented by information established in the kick-off meeting. The design basis for Cells 3 & 4 is the same as Cells 1 & 2. Hence, many of the design calculations used for Cells 1 & 2 are still valid. These calculations will not be regenerated for this design report. The reader is referenced to the *Construction of W-296 Environmental Restoration Disposal Facility At The Hanford Site Richland, Washington Final Design Analysis Volumes 1 and 2* , Dated April 28, 1995. The design of Cells 3 & 4 includes selected features from the design of Cells 1 & 2. Improvements and changes resulting from lessons learned during Cells 1 & 2 design and construction are also being addressed.

Features of the ERDF Cells 3 & 4 design include:

- Earthwork, including cuts, fills, roads, and the admix test pad,
- Admix layer,
- Primary and secondary geomembrane and geosynthetics,
- Primary and secondary leachate collection system,
- Operations layer,
- Crest pad structures,
- Leachate pumps,
- Extension of yard piping and other utilities,
- Leachate transfer capability,
- Electrical, instrumentation, and controls,
- Expansion of the loaded and empty container storage areas,
- Fencing, and
- Final grading and ground cover.

The design and construction of the ERDF Cells 3 & 4 has been divided into two packages. The first package addressed the clearing of vegetation from the site, the construction of the contractor trailer area, fencing, and the installation of utilities associated with construction activities.

By dividing the design into two parts, construction on cells 3 & 4 can begin in the early spring of 1998 and potential environmental concerns can be minimized. The Site Preparation package was finalized and submitted on December 12, 1997.

The second design and construction package addresses the construction of Cells 3 & 4 and other associated features. This package is at the 100% design phase. The added feature of a leachate transfer line for transporting leachate to LERF has been added to the project and additional leachate storage has been deleted.

ERDF CELLS 3 & 4 DESIGN CRITERIA

SITE LAYOUT

- Trucks will be used to transport containers to the ERDF site.
- Elevation of the trench rim for cells 3 & 4 will match that of cells 1 & 2.
- Erosion protection will be provided by the use of native grasses. Native grasses (or Contractor approved alternate means) will be placed on all disturbed areas (except the interior of the trench) and on all stockpiles.
- Cells 3 & 4 will be at same floor elevation and have same configuration as cells 1 & 2.
- New loading/unloading pad will be east of existing pad and consist of concrete and gravel.
- Facility roads are gravel. Contractor access to the site will be from the north-east access road. Contractor will be required to maintain this road and provide traffic control.
- Operations will continue during construction. Design should minimize impact to operation from construction activities.
- New excavated soil stockpile area will be east of the current daily operational soil stockpile and will be positioned such that excavation vehicles will not interfere with operational vehicles.
- Fence boundaries will be revised to 173 m (568 ft) East of the current North East corner.
- Coordinate points for drawings utilize numbers previously unused during construction of cells 1 & 2. Where possible, coordinate points for cells 3 & 4 which detail a point used for cells 1 & 2, utilize the same coordinate numbers as cells 1 & 2
- Drawings will use existing contour mapping information recognizing that there are changes since survey was performed. Record drawings are being utilized for existing contours.

TRENCH

- The liner system shall comply with RCRA Subtitle C regulations as implemented in WAC 173-303, 40 CFR 264 Subpart N and 264.19 guidance documents. The liner system will be the same as that constructed for cells 1 & 2.

- Cells 3 & 4 plus portions of cells 5 & 6 will be excavated to allow for future construction activities. The planned elevation for cells 5 & 6 will be approximately 610 mm (2 ft) higher than the elevation of cells 3 & 4.

- Gas generation is not a concern for ERDF waste and therefore gas collection systems are not required.

- North and South trench sideslopes will be 3H:1V. The temporary excavation slope at the east end of the trench will be 2H:1V.

- The trench floor and side slopes will be covered with a 914 mm (3 foot) thick operations layer of clean native soil.

- The slope of the trench floor will generally be between 1.5% and 3%. Cells will be constructed at the same elevations from west to east.

- The construction access ramp will be no steeper than 8%.

- Under normal operating conditions, the leachate removal systems will be designed to maintain the head on the primary and secondary liners at 305 mm (1 foot) or less. Measurements are taken from the bottom of the sump.

- For the design storm event (25-yr. 24-hr storm), leachate will be removed so that the head on the primary liner system is below 305 mm (1 foot) within 72 hours.

- Riser pipes for sump pumps and transducers will be located in the sideslopes of the trench

- Leachate pumps will discharge into a pipe that flows by gravity to the leachate storage tanks. All sumps will discharge into the same pipe. Leachate flow from each sump will be measured individually.

- Leachate levels in the sumps will be measured with electrical transducers. Readings will be displayed in the crest pad building. Transducer readings will be used to start and stop pumps.

- Leachate collection system pumps and leachate level transducers will be removable for calibration and maintenance. Transducers will have a calibration range of 0.31 to 3.05 m (1 to 10 feet) and be connected to a recorder.

- A special ramp for operational activities is not required as part of the design.

LEACHATE COLLECTION AND TRANSFER

- The maximum flow rate from a trench sump will be 15.8 l/sec (250 gpm). Gravity lines will be sized such that a maximum of four cells could be discharging at this flow rate.

- The leachate gravity-drained pipeline will be sized to handle the expected peak discharges from 4 trench cells (two cells on both the south side and the north side of the trench).

- Leachate collection pipelines will be double contained HDPE with leak detection sensors.

- Leachate piping will be underground, with any exterior exposed piping having heat tracing to prevent freezing.

- Transfer line will be single contained PVC pipe.

- Transfer line pump will be sized for approximately 15.8 l/sec (250 gpm).

- Transfer line will tie into the existing LERF transfer line.

UTILITIES

- Electrical and Communications will be extended to new crest pad area on both North and South sides of the trench.

- Electrical will be extended to the new unloading/loading pad. The new area will include light for night operations.

- Raw water line will be extended to a location determined by BHI. A looped system is not anticipated to be required but will be determined during design and be based on required usage by BHI.

CREST PADS BUILDING

- Electrical and pump collection area will be in a single building.

- Electrical and pump collection rooms will be separated by an interior wall.

- The building will have 1 door entering each room from the outside and 1 overhead door for removing pumps.

- The crest pad buildings will be pre-fabricated buildings with cast in place foundations.

- Heating will be obtained by a unit heater. Air conditioning will not be provided.

CONTRACTOR RESPONSIBILITY DURING CONSTRUCTION

- Location for obtaining water, telephone, electrical will be provided. Contractor will be responsible for making own connections.

- Contractor trailer/office area will be located in Northeast corner of site.

- Contractor entrance will be from the Northeast.

HUMAN FACTORS

Human factors to be considered during design include, but are not limited to:

- Ventilation of Crest Pad Building
- Lighting
- Alarms
- Controls
- Traffic Flow
- Pedestrian Flow

ALARA

ALARA principles will be considered during design, of cells 3 & 4.

DESIGN BASIS

FOR

THE ENVIRONMENTAL RESTORATION DISPOSAL FACILITY PHASE II - WASTE CELLS 3 AND 4

REV.	DATE	REASON FOR REVISION	ORIGINATOR	CHECKER	GROUP LEADER	PROJECT ENGR/DES
1	11/7/97	Issue for implementation.	DRM	RTM	GBM	ARM
0	7/24/97	Issue for implementation.	RTM	DRM	GBM	ARM

HANFORD	RICHLAND ENVIRONMENTAL RESTORATION PROJECT	JOB NO. 22192
		*DESIGN BASIS NO. 0600X-DB-G0004
		SHEET 1 of 7

ERDF PHASE II DESIGN BASIS

1.0 PURPOSE

The Environmental Restoration Disposal Facility (ERDF) Design Basis presents regulatory and design requirements, basic data, Contractor preferences, references, and operating assumptions. The engineering design team shall refer to the design basis in preparing designs, calculations, drawings, and specifications. This information (in general) duplicates the basis and criteria used to design ERDF Phase I. Modifications and additional information were incorporated to reflect lessons learned and any specific new features unique to ERDF Phase II.

2.0 SCOPE

The information contained herein is intended to guide only the Phase II design. The Phase II design will produce all design media necessary to successfully construct ERDF cells 3 and 4, including appurtenances, extension of existing utilities, and provisions for future ERDF expansion.

3.0 APPLICABLE REGULATIONS

The "Risk Prioritization of Prescriptive Requirements in the ERDF Regulatory Compliance Database" (Wastran 1994) shall be used as a listing of applicable regulations to design the ERDF Phase II facilities. The designer must consider any changes to applicable regulations since the initial issue of this document.

4.0 LEVEL OF DETAIL IN SUBCONTRACT DELIVERABLES

The level of detail in subcontract deliverables shall be consistent with that provided in previous design efforts associated with ERDF Phase I design. Thus, the designer shall consider the structure and detail previously used for design media (Golder and Associates 1995, Montgomery Watson 1995a, 1995b, 1995c).

5.0 SITE LAYOUT GUIDANCE

ERDF Phase II will be constructed to the east of cells 1 and 2 and have nominal base dimensions of 152.5 by 152.5 m (500 by 500 ft). Phase II (cells 3 and 4) will share the same base elevation with cells 1 and 2.

The extension of permanent operations support services, including roads, utilities, and leachate piping, will be from the existing Phase I in-place systems. Montgomery Watson (1995c) provides the location and current termination of these existing systems. The extension of utilities for the construction subcontractor shall be from existing utilities (Montgomery Watson 1995c) located along the northern portion of the existing site.

The Overall Site Plan shall show an area reserved for excess materials. Excavated soil will be placed immediately east of the existing daily operating cover (DOC) soil stockpile.

The Overall Site Plan shall show the general area reserved for Contractor and Subcontractor temporary offices and construction support facilities. The area between the new excavation and the existing DOC stockpile is available for this use, as well as the remaining unused areas within the new site perimeter (DOE/RL 1997).

To the extent practical, the new disturbed area shall be kept to a minimum. Fencing shall be installed to enclose the new operating area. To accommodate Phase II, existing fencing shall be removed and reused where possible. The existing eastern fence line shall be relocated approximately 173.2 m (568 ft) further east (DOE/RL 1997).

The loaded and empty container queue area sizes shall be increased by approximately 50%, using space to the east of the existing areas. Existing finish surface grades shall be maintained to the extent practical. The extensions shall include additional reinforced concrete pavement for loaded container areas, asphalt-paved surfaces for vehicle travel areas, and improved gravel surfaces for empty container areas. The configuration of the queue expansions will be determined during the 60% design. These increased areas must be suitable for normal operation of 47,897 kg (105,500 lb) gross vehicle weight over-the-road configured tractor trailers, and roll-on/roll-off containers with a gross loaded weight of 27,211 kg (60,000 lb).

New cell construction activities shall be kept physically separate and minimize interference to existing and ongoing operations to the maximum extent possible.

Outside the cell excavation areas, erosion protection shall be provided by using native grasses (or Contractor approved alternate means) on slopes of 3H:1V or greater.

6.0 TRENCH AND LEACHATE SYSTEM DESIGN

The liner system selected should comply with *Resource Conservation and Recovery Act of 1976* (RCRA) Subtitle C regulations, as implemented in WAC 173-303, 40 CFR 264 Subpart N and 264.19.

Cells 3 and 4 should temporarily terminate along the east side with provisions for expansion to cells 5 and 6 at a later date.

A construction ramp must be constructed along the east side of cells 3 and 4, and should be no steeper than 8%. The ramp should be designed with a continuous grade. The side slopes above and below the ramp should be 2H:1V. The trench floor and side slopes should be covered with a 0.92-m (3-ft)-thick operations layer of clean native soil once the liner and leachate collection system are installed.

Under normal operating conditions, the leachate removal systems should be designed to maintain the head on the primary and secondary liners at 0.305 m (1 ft) or less.

For the design basis storm event, leachate should be removed so that the head on the primary liner is below 0.305 m (1 ft) within 72 hours. The design basis storm event will be defined within the Leachate Production Study.

Riser pipes for sump pumps and transducers should be located in the side slopes of the trench. The remaining features of the leachate collection system should be as employed in cells 1 and 2 (Montgomery Watson 1995a, 1995c). Riser piping should be designed to allow for leachate removal after closure.

The design process shall include an analysis of predicted leachate production within the Leachate Production Study. Further design activities, including the need for additional leachate storage capacity, will be guided by the analysis results. If additional tankage is necessary, the designer shall incorporate lessons learned from existing tanks in the design. Additional design activities will include the analysis results and will be directed at pumping leachate from the ERDF leachate pump station to the Liquid Effluent Retention Facility. The design is expected to include a larger horsepower (250 gpm) pump in the leachate pump station and a 6-in. diameter PVC pipeline, which ties into an existing 6-in. PVC pipeline at UP-1.

7.0 OPERATION AND CLOSURE ASSUMPTIONS FOR DESIGN

Bulk soil and other waste should be placed in the trench in 0.305-m (1-ft) lifts and compacted to 90% of ASTM D1557. The assumed closure cover should be crowned with side grades of 2 to 5%.

Operations will be scheduled such that only one cell will be in operation until approximately 50% of its capacity has been used; this schedule will keep the second cell uncontaminated as long as possible.

Operations waste delivery to the new cells will be primarily from the north. Loaded and empty waste containers will originate and return to the existing and Phase II expansion container queues, located in the northeast portion of the existing operating facility.

The working face of waste in the new cells should have an overall slope no steeper than 3H:1V.

A 0.61-m (2-ft)-thick layer of DOC will be placed over the top surface of the waste. This will occur at elevations 21.3 to 27.4 m (70 to 90 ft) above the trench floor. An interim cover will be placed over the DOC.

The final cover is assumed to be 5 m (16 ft) thick, including the interim cover. The final cover is also assumed to be RCRA Subtitle C compliant.

8.0 SANITARY WASTEWATER SYSTEM

No new facilities or modifications to existing facilities will be made in Phase II.

9.0 HUMAN FACTORS

Human factors considered during design must include, but are not limited to, the following:

- Ventilation
- Lighting
- Alarms
- Controls
- Traffic Flow
- Pedestrian Flow
- Loadings.

10.0 FACILITY CLOSURE ASSUMPTIONS AFFECTING DESIGN

All nonreusable (and/or contaminated beyond economic recovery) facility and trench equipment resulting from operations will be disposed in the trench at closure.

11.0 ALARA PRINCIPLES

Bechtel Hanford, Inc. is committed to incorporate as low as reasonably achievable (ALARA) principles in all of its contact scope activities. Therefore, ALARA principles must be considered during design activities for ERDF Phase II. Project areas include, but are not limited to, the following:

- Trench Design
- Liner and Leachate Collection Design
- Support Facilities Layout and Design.

12.0 REFERENCES

40 CFR 264, "Standards for Owners and Operators of Hazardous Waste Treatment, Storage, and Disposal Facilities" *Code of Federal Regulations*, as amended.

DOE/RL, 1997, *Proposed Amendment to the Environmental Restoration Disposal Facility Record of Decision*, DOE/RL-97-60, U.S. Department of Energy, Richland Operations Office, Richland, Washington.

Golder and Associates, 1995, *Project W-296 Environmental Restoration Disposal Facility, Hanford Site, Richland, Washington, Trench Liner System and Support Facilities Construction Quality Assurance Plan*, prepared for U.S. Department of Energy, Richland Operations Office, Golder and Associates, Richland, Washington.

Montgomery Watson, 1995a, "Construction of W-296, Environmental Restoration Disposal Facility at the Hanford Site, Richland, Washington, Final Construction Specifications - Volumes 1 and 2," prepared for U.S. Department of Energy, Richland Operations Office, Construction Specifications prepared for U.S. Army Corps. of Engineers, Walla Walla District, Montgomery Watson, Richland, Washington.

Montgomery Watson, 1995b, *Design Analysis, Construction of W-296 Environmental Restoration Disposal Facility*, prepared for U.S. Department of Energy, Office of Environmental Restoration and Waste Management, Montgomery Watson, Richland, Washington.

Montgomery Watson, 1995c, "W-296, Environmental Restoration Disposal Facility (ERDF)," prepared for U.S. Army Corps. of Engineers, Walla Walla District Project, Montgomery Watson, Richland, Washington.

WAC 173-303, "Dangerous Waste Regulations," *Washington Administrative Code*, as amended.

Wastran, 1994, *Risk Prioritization of Prescriptive Requirements in the ERDF Regulatory Compliance Database*, prepared for U.S. Army Corps. of Engineers, Walla Walla District, Wastran, Richland, Washington.

CALCULATIONS

CALCULATION COVER SHEET

Project Title ERDF Cells 3 & 4 Construction **Job No.** 22192
Area Leachate Collection
Discipline Civil ***Calc. No.** 0600X-CA-C0009
Subject Manhole Sizes (23 & 24)
Computer Program NA **Program No.** NA

Committed Calculation X **Preliminary** ☐ **Superseded** ☐

Rev.	Sheet Numbers	Originator	Checker	Reviewer	Approval	Date
0	3	M^2	MB			

SUMMARY OF REVISION

Scanned:	Rev.	Date	Bar Code No.	Rev.	Date	Bar Code No.

MONTGOMERY WATSON

BY [illegible] DATE 11-14-97 CLIENT BHI - Cells 3 & 4 SHEET 1 OF 3

CHKD. BY MB 11/14/97 DESCRIPTION Manhole size (23 & 24) JOB NO. 1166095

CALC. 0600X-CA-C0009, Rev. 0

Description

Determine size of manhole diameter required for MH-23 and MH-24

References

ERDF Cells 3 & 4 30% Dwgs

Flexco Piping manual

Given

Calculation

Piping configuration

Horizontal line

inlet
outlet
Tee 10 x 10 x 4
Valve

Vertical line

90° Elbow
Inlet
Drop to 10 x 10 x 4 Tee

MONTGOMERY WATSON

BY M² DATE 11-14-97 CLIENT BHI - Cells 3 & 4 SHEET 2 OF 3

CHKD. BY MB 11/14/97 DESCRIPTION Manhole size (23 + 24) JOB NO. 1166095

CALC. 0600X-CA-C0009, Rev. 0

Horizontal

10 X 10 X 4 Saddle reducing Tee	=	21"
Flange Fitting each side	=	(8.75")(2)
10" Plug valve	=	13"
Total required without inlet and outlet		51.5"
Assume 10" Max penetration for inlet and outlet (ea)		(10")(2)
Total =		71.5" ≈ 6'

Vertical - (horizontal distance required)

Fabricated 90° Elbow

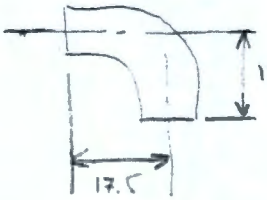

Flange (1)	7.125
inlet Assume 10"	10
Total required	34.625" ≈ (3')

Centerline of Tee on Horizontal

inlet	10"
Flange (1)	8.75"
1/2 Tee	10.5"
location Distance	29.25"

EN 1S (10/78)

MONTGOMERY WATSON

BY M² DATE 11-14-97 CLIENT BHI - Cells 3 & 4 SHEET 3 OF 3

CHKD. BY MB 11/14/97 DESCRIPTION Manhole Size JOB NO. 1166095

CALC. 0600X-CA-C0009, REV. 0

Determine how many inches are lost due to being off center

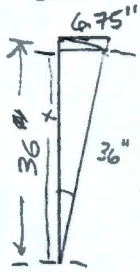

$\tan\theta = \frac{6.75}{36} \Rightarrow \theta = 10.62°$

$\cos 10.62° = \frac{x}{36}$

$x = 35.4"$

Add the lost inches to vertical inlet

$34.625 + 0.6 = 35.2 < 36$ ok

Conclusion: use 6' inner diameter MH for MH-23 + MH-24

CALCULATION COVER SHEET

Project Title ERDF Cells 3 & 4 Construction **Job No.** 22192
Area Trench
Discipline Civil ***Calc. No.** 0600X-CA-C0010
Subject Perforations in Sump Pipes
Computer Program NA **Program No.** NA

Committed Calculation X **Preliminary** **Superseded**

Rev.	Sheet Numbers	Originator	Checker	Reviewer	Approval	Date
0	2	FSS	LHA			

SUMMARY OF REVISION

Scanned:	Rev.	Date	Bar Code No.	Rev.	Date	Bar Code No.

*Obtain Calc. No. from DIS.

Golder Associates	Subject: Perforations in Sump Pipes		
	Job No.: 973-1810	Made by: FSS	Date: 9-16-97
	Ref: Task 1100	Checked: LHA	Sheet: 1 of 2
		Reviewed:	

BHI Job No 22192
CALC No: 0600X-CA-C0076 Rev 0

OBJECTIVE: Determine the number and spacing of perforations required in sump pipes to provide adequate inflow.

METHODOLOGY: Model perforations using orifice flow.

ASSUMPTIONS:

Sump pipe diameter =	18	inches (see Design Drawings)
Length of perforated section =	19	ft (see Design Drawings)
Depth of leachate =	1	foot (provides lowest flow rate)
Perforations below leachate surface =	5	(see sketch)
Diameter of perforation =	0.375	inch
High volume pump capacity =	250	gpm

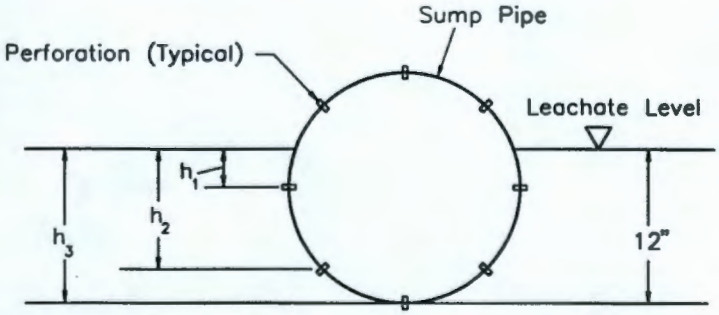

CALCULATIONS:

Flow through orifice: $Q = C_d A_0 (2gh)^{1/2}$

Where: C_d = Orifice discharge coefficient
A_0 = Cross sectional area of perforation
g = acceleration of gravity = 32.2 ft/sec^2
h = head

Assume: C_d = 0.6 (see attached)

A_0 = 0.110 sq in

h	depth, inches	flow, in^3/sec	number of orifices	total flow, in^3/sec
h_1	3	3.19	2	6.38
h_2	6.363	4.65	2	9.29
h_3	9	5.53	1	5.53

CALCULATION COVER SHEET

Project Title ERDF Cells 3 & 4 Construction **Job No.** 22192
Area Trench
Discipline Civil ***Calc. No.** 0600X-CA-C0011
Subject Volume Estimate - Cells 3 & 4 Excavation
Computer Program NA **Program No.** NA

Committed Calculation X **Preliminary** **Superseded**

Rev.	Sheet Numbers	Originator	Checker	Reviewer	Approval	Date
0	3	FSS	LHA			

SUMMARY OF REVISION

Scanned:	Rev.	Date	Bar Code No.	Rev.	Date	Bar Code No.

*Obtain Calc. No. from DIS.

Golder Associates	Subject: Volume Estimate - Cells 3 & 4 Excavation		
	Job No.: 973-1810.1200	Made by: JBF	Date: 10/23/97
	Ref: MW/ERDF/WA	Checked: FSS	Sheet: 1 of 3
		Reviewed:	

BHI Job No: 22192 Calc No: 0600X-CA-C0011 Rev 0

II) FILL

(a) North End

Elevation (ft)	Area (sf)	Volume (cy) Ave. End	Volume (cy) Trunc. Cone
712	3,127		
714	56,499	2,208	1,800
716	86,126	5,282	5,244
720	103,700	14,061	14,041
728	74,462	26,394	26,275
730	31,220	3,914	3,800
731	11,042	783	751
	Subtotal	52,643	51,911

(b) South End

Elevation (ft)	Area (sf)	Volume (cy) Ave. End	Volume (cy) Trunc. Cone
714	21,124		
716	52,800	2,738	2,650
720	97,455	11,130	10,962
724	83,964	13,438	13,426
728	72,077	11,559	11,547
730	33,665	3,916	3,827
731	11,963	845	811
	Subtotal	43,626	43,224
	TOTAL	**96,269**	**95,135**
	Δ =	**1.18%**	

CONCLUSION: The average end and truncated cone methods result in very nearly the same result. Based on the average volume determined by the two methods, the total volumes are:

CUT: **1,454,039 cy**
FILL: **95,702 cy**

Golder Associates	Subject: Volume Estimate - Cells 3 & 4 Excavation		
	Job No.: 973-1810.1200	Made by: JBF	Date: 10/23/97
	Ref: MW/ERDF/WA	Checked: FSS	Sheet: 2 of 3
		Reviewed:	

SHI Job No: 22192 Calc No: 0600X-CA-G0011 Rev 0

OBJECTIVE: Estimate the cut/fill volume resulting from construction of Cell 3 & 4 of the ERDF.

GIVEN: Drawing No. 0600X-DD-C0032 (As-built Cell 1 & 2) and 0600X-DD-C0124 (Cell 3 & 4 Subgrade Contours - 30% Submittal)

METHOD: Determine area of horizontal slices (contours) cut thru the cut/fill areas using AutoCAD as a planimeter.
Volumes determined using two methods: average end and truncated cone.

Average End = 1/2(A1 + A2)H

Truncated Cone = $1/3((A1*A2)^{0.5} + A1 + A2)H$

Where: A1 and A2 = areas of adjacent slices
H = elevation difference between slices

COMMENTS: The existing contours below the north and south perimeter berms are not available. The perimeter berm was assumed to be 117 ft wide with 3H:1V outboard slopes down to intersection with native ground. Note that it appears that the existing perimeter berms were built wider than 117 ft. The fill volume presented below is likely a minimum.

I) CUT

	Elevation (ft)	Area (sf)	Volume (cy) Ave. End	Volume (cy) Trunc. Cone
	718	74,053		
	716	347,559	15,615	14,371
	714	658,195	37,250	36,643
	710	684,425	99,453	99,447
	680	594,500	710,514	709,928
	660	527,609	415,596	415,350
	654	496,118	113,747	113,730
Cell 3	654	114,731		
	650	78,264	14,296	14,210
	646	7,721	6,369	5,460
	639.5	408	978	795
Cell 4	654	130,263		
	650	68,290	14,708	14,463
	646	7,721	5,630	4,888
	639.5	408	978	795
Cell 5	654	113,561		
	650	19,104	9,827	8,851
	648	1,396	759	634
Cell 6	654	123,849		
	650	23,630	10,924	9,954
	648	3,649	1,010	903
		TOTAL	1,457,657	1,450,421
		Δ =	0.50%	

Note: Cut volume below elev. 654 was determined separately for each cell.

Golder Associates	Subject:	Perforations in Sump Pipes		
	Job No.: 973-1810	Made by: FSS	Date: 9-16-97	
	Ref: Task 1100	Checked: LHA	Sheet: 2 of 2	
		Reviewed:		

BHE JOB No: 22192
Calc No: 06008-CA-C0010
Rev 0

Total Flow per Perforated Section = 21.20 in^3/sec
5.51 gpm

Required Number of Perforated Sections = Pump Capacity / Flow per Section

= 45

Spacing = Perforated Length / Number of Sections

= 5.0 inches

Say 3 inches to provide factor of safety.

REFERENCES:

Lindeburg, M.R., 1992, *Civil Engineering Reference Manual*, 6th Edition, Professional Publications, Inc., Belmont, California.

ERDF Cells 3+4
Description: ~~Rev~~ Volume Estimate
by: JBP Date 10/23/97
Checked FSH
~~BHE~~ No: 22192
Calc No: 0600X-CA-C0011 Rev 0

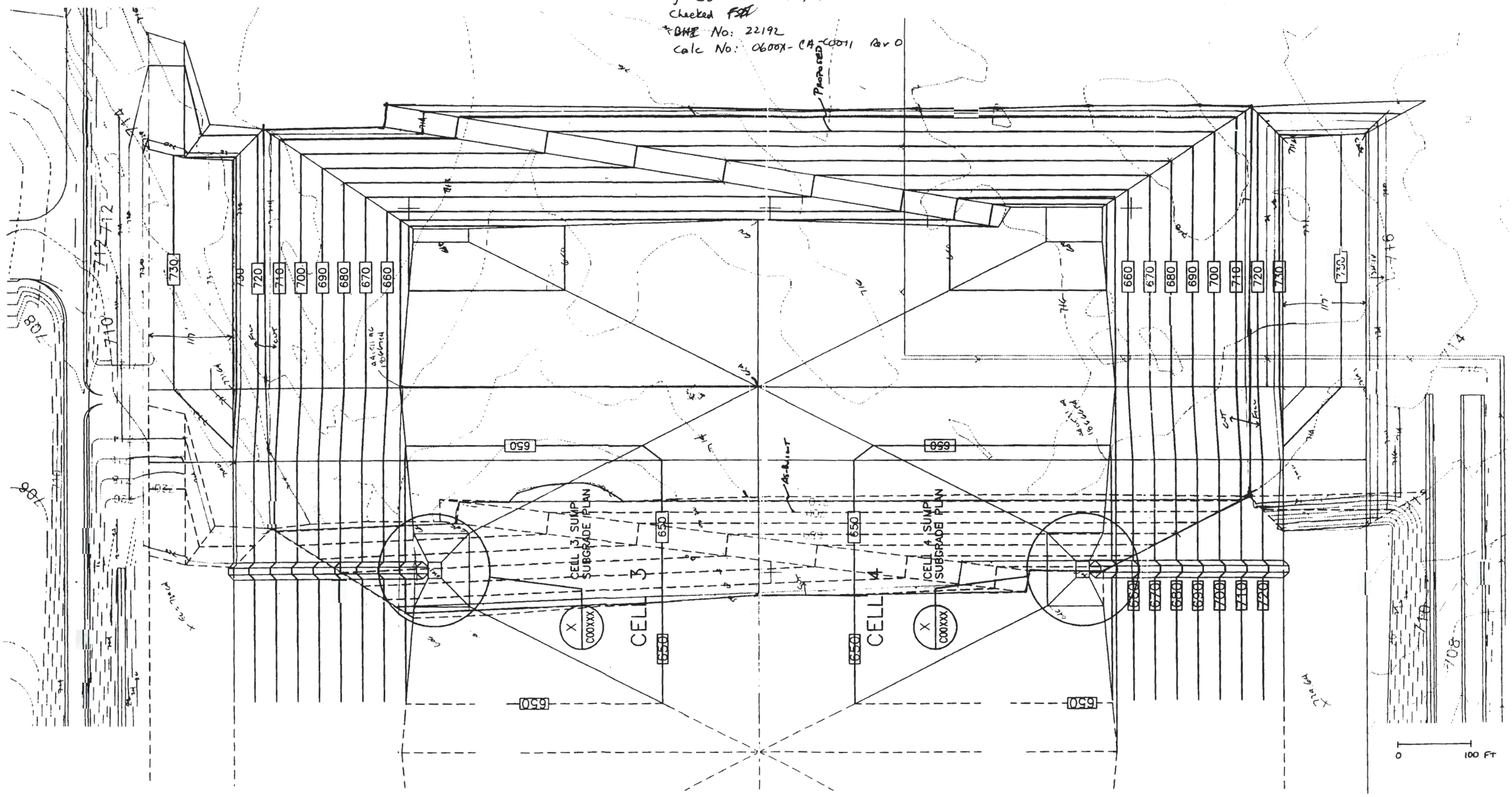

CALCULATION COVER SHEET

Project Title ERDF Cells 3 & 4 Construction **Job No.** 22192
Area Transfer Line
Discipline Civil ***Calc. No.** 0600X-CA-C0012
Subject Transfer Line Headloss
Computer Program MS Excell **Program No.** NA

Committed Calculation X **Preliminary** ☐ **Superseded** ☐

Rev.	Sheet Numbers	Originator	Checker	Reviewer	Approval	Date
0	7	LHA	M^2			

SUMMARY OF REVISION

Scanned:	Rev.	Date	Bar Code No.	Rev.	Date	Bar Code No.

ERDF cells 3+4
Description: Transfer line headloss
Client: BHI
BHI Job No: 22192
MWJ Job No: 1166095.0100102
Calc No: 0600X-CA-C0012 Rev 0

Originator: L. H. Allen
Checker: MP
Check Date: 1/14/98

Date 1/14/98
~~Revision 0~~

		ERDF LEACHATE LINE			
		HEADLOSS CALCULATION			
Description:	Determine the equivalent pipe length for the leachate piping from the pump				
	station to the high point in the Transfer Line where the flow transitions from				
	pressure to gravity.				
Given:	Equivalent pipe lengths from attached literature.				
	Pipe and fittings as shown on the ERDF drawings				
Fitting	**Equivalent Length**		**Location**	**Elevation**	
3" DI Pipe Spool	2		Water Surface Storage	703.00	
3" 90 Ell	7		Transfer Line Highpoint	735.00	
3" DIPipe Spool	1		Transfer Line Discharge	584.00	
3" Check Valve	20				
3" Plug Valve	6				
3" DI Pipe Spool	2		Distance along to Transfer Line to Highpoint		
			is 13,030 ft.		
3" Plug Valve	6		Distance along to Transfer Line beyond Highpoint		
3" DI Pipe Spool	2		was not considered in this calculation because		
3" Meter	2		the elevation drop was much more than the		
3" DI Pipe Spool	2		headloss in the pipe.		
3" Plug Valve	6				
3" 90 Ell	7				
3" DI Pipe Spool	2				
Subtotal 3" DI Pipe	65		3"DIP @ 260 gpm = 30 ft per 100 ft		
			4" PVC @ 260 gpm = 3.8 ft per 100 ft		
4"x4'x3" Tee (side inle	22		6" PVC @ 260 gpm = .52 ft per 100 ft		
4" DI Pipe Spool	5				
4" 90 Ell	12				
4" DI Pipe Spool	4				
4"x 3" Red	9				
4"x4"x3" Tee (side inle	22				
4" Tee (thru)	7				
4" Plug Valve	8				
4" 90 Ell	12				
4" PVC Pipe	4				
Subtotal 4" DI Pipe	105				
6"x4" Red	4		6" PVC Waste Line	2,800	
6" 90 Ell	16		6" Butterfly Valve	1	
6" PVC Pipe	40		Subtotal 6" PVC Pipe	2,801	
6" 90 Ell	16				
6" PVC Pipe	170		6"x6"x6" Tee	35	
6" 22.5 Bend	10		6" PVC Transfer Line	13030	
6" PVC Pipe	392		Subtotal 6" PVC Pipe	13065	
6" 22.5 Bend	10				
6" PVC Pipe	162				
6" 90 Ell	16				
6' PVC Pipe	2,018				
6" Butterfly Valve	1				
6"x6^x6" Tee	35				
Subtotal 6" Leachate L	2,890		Total all 6" pipe	18,756	

ERDF Cells 3&4 Sht 2 of 7
Description: Transfer line headloss
Client: BHI
BHI Job No.: 22192
MW Job No: 1166095.01010102
Calc No: 0600X-CA-C0012 Rev 0

Originator: L. H. Allen LH Allen
Checker: MZ
Check Date: 1/14/98

1/14/98
~~Revision B~~

ERDF LEACHATE LINE
HEADLOSS CALCULATION

Description: Calculate the headloss in the leachate piping.

Given: Equivalent lengths of pipes as shown on Sheet 1.
Headloss rates from attached sheets.

		Headloss
Headloss in 3" DIP		
	65 ft x 30 ft/100 ft =	20
Headloss in 4" PVC		
	105 ft x 3.8 ft/ 100 ft =	4
Headloss in 6" PVC		
	18756 ft x 0.58 ft/ 100 ft =	109
Elevation Difference		
	735.00 - 703.00 =	32
Total Pumping Head		164

Client: BHI
Checked by: MR
Checked Date: 1/14/98

ERDF Cells 3&4
Description: Transfer line headloss
BHI Job No: 22192
MW Job No: 1166095.01010102
Calc No: 0600X-CA-00012 Rev 0
BY: LHA
Date: 12-18-97

Sht 3 of 7

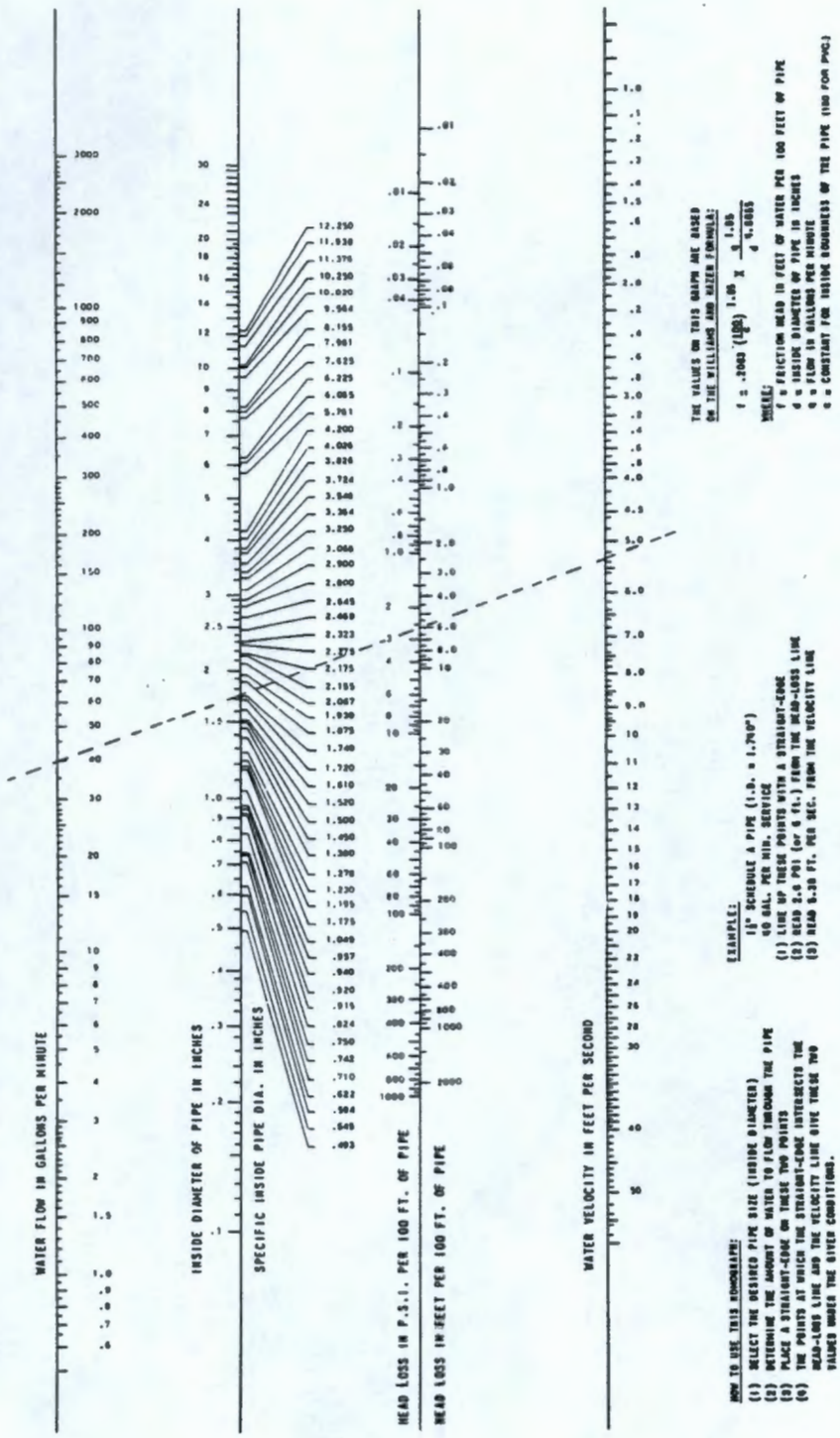

Figure 10. Friction Loss Characteristics of Water Flow Through PVC Pipe

Page 3

Sht 4 of 7

Client: BHI
Checked by: MR
Checked date: 1/14/99

ERDF Cells 3 & 4
Description: Transfer line head loss
BHI Job No: 22192
MW Job No: 1166095.01010102
Calc No: 06000-CA-Q0012 Rev 0

by: LHA
Date: 12-18-97

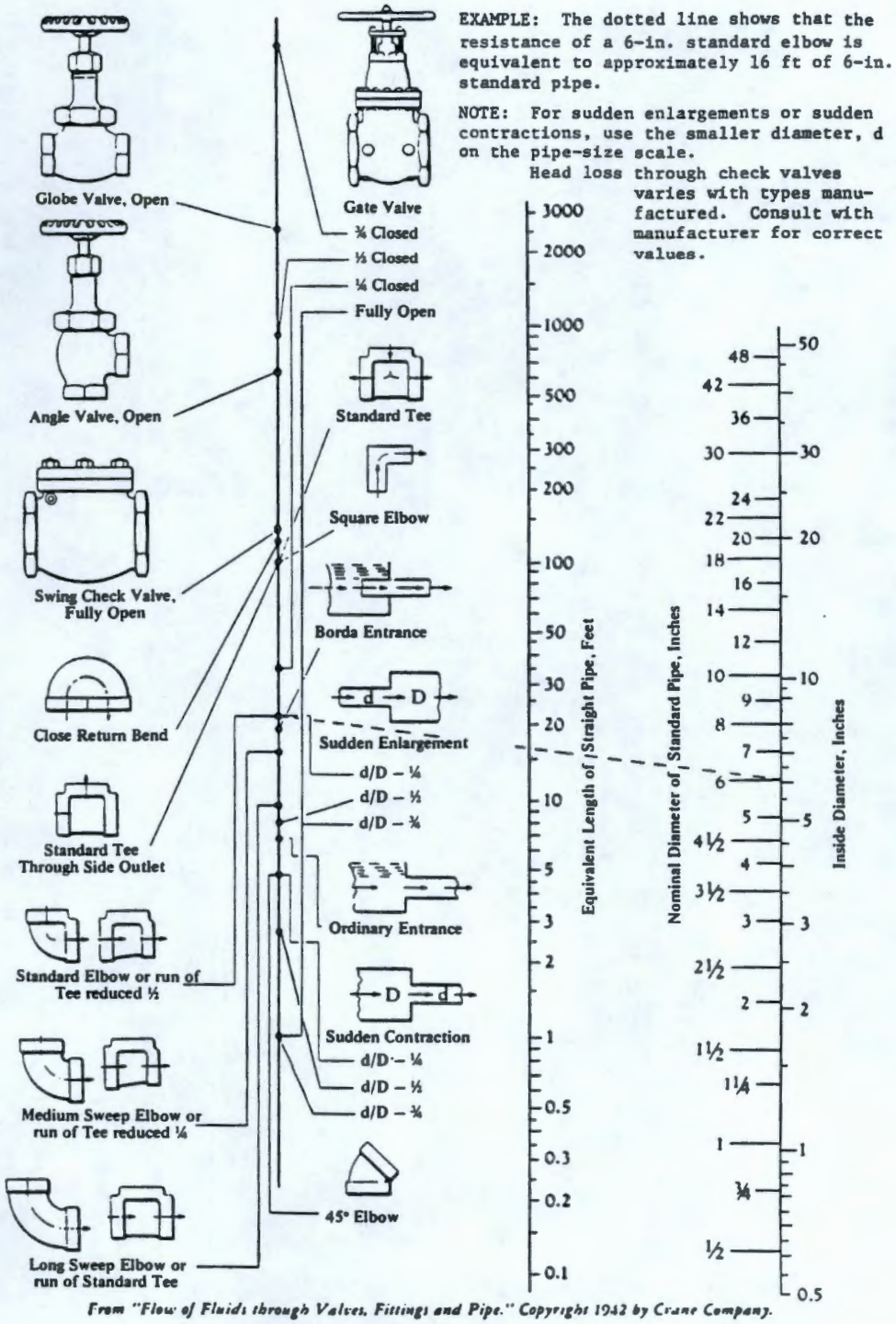

From "Flow of Fluids through Valves, Fittings and Pipe." Copyright 1942 by Crane Company.

Figure 11. Resistance of Valves and Fittings to Flow of fluids

Sht 5 of 7

Client: BHI
Checked by: MR
Chked date: 1/14/98

ERDF Cells 3+4
Description: Transfer line Head loss
BHI Job No: 22192
MW Job No: 116609.5.01010102
Calc No: 0600X-CA-C0012 Rev 0
BY: LHA
Date: 12-18-97

valve sizing and ratings

PLUG VALVE

FLOW CHART
(Full Open)

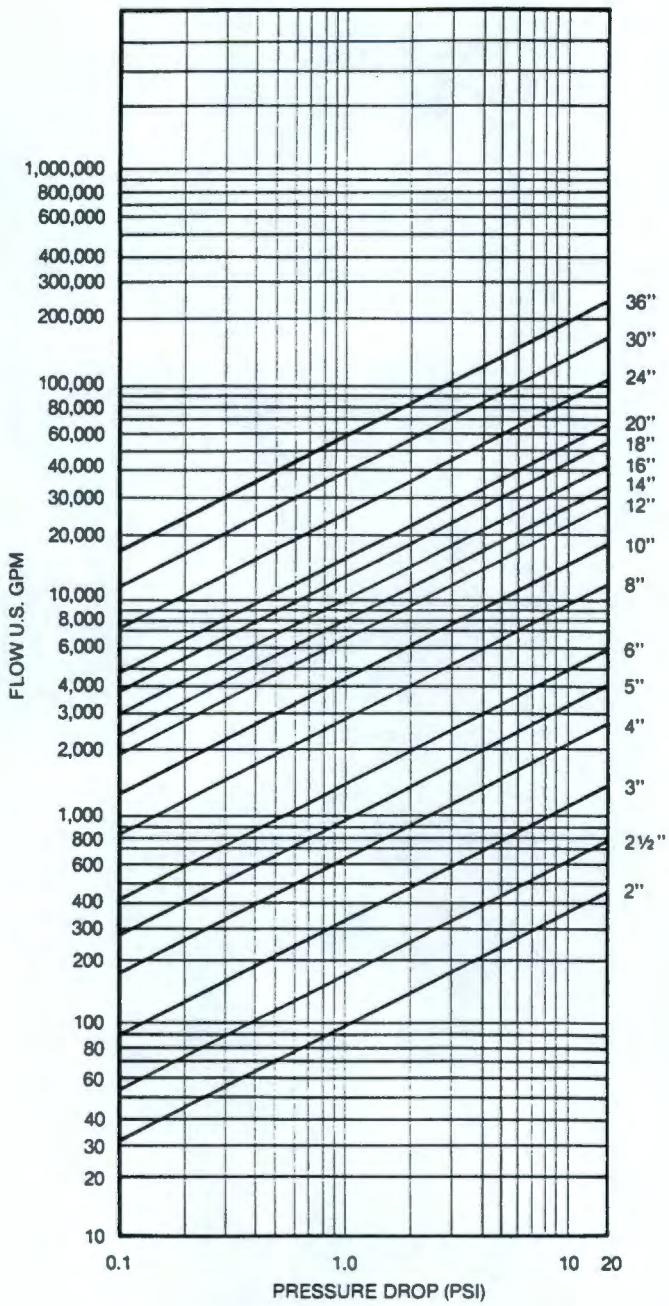

Sht 6 of 7

-Client: BHI
check by: M
chkd Date: 1/14/98

ERDF Cells 3+4
Description: Transfer line headloss
BHI Job No: 22192
MW Job No: 1166085.01010102
Calc No: 0600X-CA-G0012
Rev 0

BY: LHA
Date: 12-18-97

valve selection sizing and pressure ratings

Cv VALUES

Flow in GPM of water at 1 psi pressure drop

Valve Size		Port Area	C_v	Head Loss*	
(in.)	(mm)	%		(Feet of Pipe)	(Cm of Pipe)
½	15	210	10	1.55	47
¾	20	114	20	1.70	52
1	25	71	33	2.20	67
1¼	32	115	74	1.84	56
1½	40	84	74	3.92	119
2	50	94	148	3.68	112
2½	65	100	236	3.69	112
3	80	81	330	5.70	174
4	100	88	560	8.00	244
5&6	125&150	87	1180	14.80	451
8	200	89	2030	20.60	628
10	250	81	3130	28.00	853
12	300	83	4140	40.00	122
14	350	84	5500	38.00	1160
16	400	83	7300	45.00	1370
18	450	82	9600	48.50	1480
20	500	91	13000	47.20	1440
24	600	70	17500	79.00	2410
24 100% area	600	100	28000	50.00	1520
30	750	70	28000	101.00	3080
30 100% area	750	100	40000	70.00	2130
36	900	70	40000	131.00	3990
36 100% area	900	100	58000	64.00	1950
42	1100	70	58000	135.00	4120
42 100% area	1100	100	100000	143.00	4360
48	1200	---	---	---	---
48 100% area	1200	100	100000	255.00	7770
54	1400	70	100000	442.00	13470
54 100% area	1400	100	150000	---	---
60 100% area	1500	100	150000	---	---
66	---	82	150000	---	---
72	1800	70	150000	---	---

* Pressure drop in equivalent length (feet and centimeters) of standard weight steel pipe.
NOTE: C_v Values will be slightly higher for valves with screwed ends and for metal-to-metal seated valves. Sizing data is based on discharge into conduit rather than atmosphere.

client: BHI
chkd by: M²
chkd date: 4/14/98

ERDF Cells 3+4
Description: Transfer line headloss
BHI Job No: 1166095.01010102
Calc No: 0600X-CA-C0012 Rev 0

sht 7 of 7

By: [illegible]
date: 12-18-97

INHERENT FLOW CHARACTERISTIC

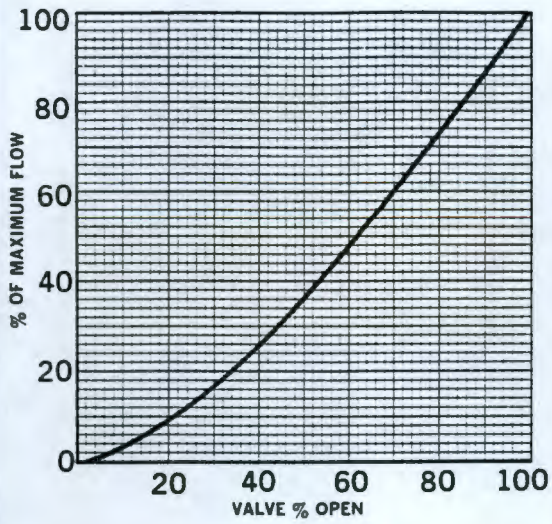

SIZING FORMULAS

Water: $Cv = \frac{Q_L}{\sqrt{\Delta P}}$

Other Liquids:

$$Cv = Q_L \sqrt{\frac{Sg}{\Delta P}}$$

Gases: $Cv = \frac{Q_G}{1360} \sqrt{\frac{Sg\,T}{\Delta P\,P_1}}$

Where:

Q_L = Flow in GPM for liquids

Q_G = Flow in SCFH for gas

ΔP = Pressure drop in PSI

Sg = Specific gravity

T = Temperature-degrees Rankine

P_1 = Upstream pressure—PSIA

NOTE: Gas equations do not apply for pressure drops equal to or greater than critical (.472 P_1).

PRESSURE RATINGS

BASIC VALVE

C.W.P. non-shock working pressure ratings are:

MATERIAL	VALVE SIZE ½"-12"	14"-36"	42"-72"
Cast Iron (ASTM 126-GR.B), plastic coated and Ni-Resist	175 psi	150 psi	150 psi
Bronze and Acid Resisting Bronze	200 psi	150 psi	—
Aluminum	150 psi	125 psi	—
Carbon Steel	285 psi	285 psi	—
Stainless Steel and Other Alloys	275 psi	275 psi	—
Hard and Soft Rubber Lined Cast Iron* Body	175 psi	150 psi	—

*Conform to American National Standards Institute (ANSI) B16.1 Hydrostatic Test.

SHUTOFF — Cast iron, ni-resist, carbon steel and stainless steel valves with resilient faced plugs. Valves in these materials with resilient plug facings provide drip-tight shutoff on wet service applications at pressure differentials up to the full valve rating shown above with pressure in either direction.

GAS SERVICE — If dead-tight shutoff is required: Valve must be installed with seat down stream. Valve must have gear or cylinder actuator. Order must state for gas service to enable factory to perform special adjustment and testing. Contact factory for spring return actuator applications. If a lever operated ½" thru 3" valve is required, use the Series 400 UL listed eccentric.

Aluminum, Bronze and Acid Resisting Bronze Valves With Resilient Faced Plugs

Valves in these materials provide dead-tight shutoff on wet or gas service at pressures up to the full valve rating above with pressure against the back of the plug tending to push the plug into the seat.

Aluminum valves also provide drip-tight shutoff on wet service applications at pressure differentials to 100 psi with pressure in reverse (against plug face). Bronze and Acid Resisting Bronze Valves provide drip-tight shutoff on wet service applications at pressure differentials to 125 psi with pressure in reverse (against plug face).

Soft Rubber Lined Valves

Soft Rubber Lined Valves provide dead-tight shutoff on wet or gas service at pressures up to the full valve rating above, with pressure against the back of the plug tending to push the plug into the seat.

Soft Rubber Lined Valves for reverse drip-tight shutoff on application. Furnish requirements for recommendations.

ACTUATORS

Actuators must be sized for operating conditions as shown in each actuator section. Valves with handwheel, cylinder or electric motor actuators can be used at shutoff pressure differentials up to the full valve rating. Shutoff differentials for lever actuated valves must not exceed the limits shown on page 12.

DeZURIK must be notified if valve is to be used as a block valve in testing the integrity of piping. This will allow the factory to adjust the actuator stops according to the operating conditions of each application. Conditions to be furnished include direction of pressure against the plug and test pressure.

CALCULATION COVER SHEET

Project Title ERDF Cells 3 & 4 Construction **Job No.** 22192
Area Transfer Line
Discipline Civil ***Calc. No.** 0600X-CA-C0013
Subject Leachate Pump Selection
Computer Program NA **Program No.** NA

Committed Calculation X **Preliminary** ☐ **Superseded** ☐

Rev.	Sheet Numbers	Originator	Checker	Reviewer	Approval	Date
0	5	LHA	M^2			

SUMMARY OF REVISION

Scanned:	Rev.	Date	Bar Code No.	Rev.	Date	Bar Code No.

*Obtain Calc. No. from DIS.

Leachate Pump Selection

Goulds Pump Model 3756 Size 2½ x 3-8 20hp
Efficiency @ 265 gpm & 165 TDH = 71%
3500 RPM

Ingersoll Pump Model D-1010 Size: 3x2x6 20hp
Efficiency @ design flow & head = 77%
3530 RPM

Paco Pump Model 2070-7 Size 2x2½x7 20hp
Efficiency @ design flow & head = 73%
3500 RPM (DATA NOT INCLUDED)

dimensions and NPT connections

Client BHI
Checked by: M
Checked Date: 1/2/98

BHI Job # 22192
MW Job # 116609501010102
Calc No: 0600X-CA-C0013 Rev 0
Description: Pump Selection
ERDF Cells 3 & 4

~~Checked~~ BY: LHA
DATE: 12-18-97
Sht 2 of 5

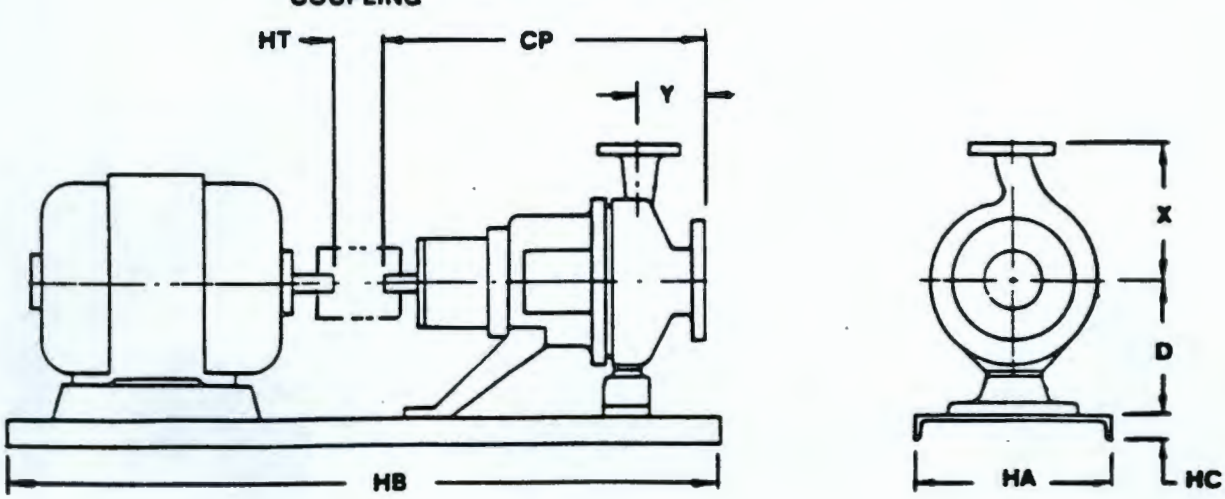

Pump Dimensions - D-1010

Pump Size	ANSI Designation	Frame Size	Suction Size	Discharge Size	Approx. Dimensions in Inches								Approx. Weight IN LBS.
					CP	D	X	Y	HA	HB	HG	HT	
1½x1x6	AA	1	1½	1	17½	5¼	6½	4	10	35	2¾	3½	100
1½x1x8	AA	1	1½	1	17½	5¼	6½	4	12	39	2⅞	3½	114
2x1x10	A05	3	2	1	23½	8¼	8½	4	15	52	3⅜	3½	213
3x½x5	AB	1	3	1½	17½	5¼	6½	4	10	35	2¾	3½	106
3x1½x6	AB	1	3	1½	17½	5¼	6½	4	12	39	2⅞	3½	110
3x1½x8	—	1	3	1½	18	7	8½	4	12	39	2⅞	3½	114
	A50	3	3	1½	23½	8¼	8½	4	15	52	3⅜	3½	192
3x1½x10	A50	3	3	1½	23½	8¼	8½	4	18	58	3⅞	3½	220
3x1½x13	A20	3	3	1½	23½	10	10½	4	18	58	3⅞	3½	307
3x2x5	—	1	3	2	18½	5¼	7	4	12	39	2⅞	3½	170
3x2x6	—	1	3	2	18	7	8¼	4	12	39	2⅞	3½	130
	A10	3	3	2	23½	8¼	8¼	4	15	52	3⅜	3½	177
3x2x8	—	1	3	2	18	7	9½	4	12	39	2⅞	3½	141
	A60	3	3	2	23½	8¼	9½	4	18	58	3⅞	3½	193
3x2x10	A60	3	3	2	23½	8¼	9½	4	18	58	3⅞	3½	230
3x2x13	A30	3	3	2	23½	10	11½	4	18	58	3⅞	3½	318
3x3x4	—	1	3	3	18½	5¼	7	4	10	35	2¾	3½	92
4x3x5	—	1	4	3	18½	7	7⅛	4	12	39	2⅞	3½	103
4x3x6	—	1	4	3	18	7	8½	4	12	39	2⅞	3½	123
	—	3	4	3	23½	8¼	8½	4	18	58	3⅞	3½	183
4x3x8	A70	3	4	3	23½	8¼	11	4	18	58	3⅞	3½	238
4x3x10	A70	3	4	3	23½	8¼	11	4	18	58	3⅞	3½	242
4x3x13	A40	3	4	3	23½	10	12½	4	18	58	3⅞	3½	345
6x4x6	—	3	6	4	23½	8¼	11	4	18	58	3⅞	3½	227
6x4x8	—	3	6	4	23½	8¼	11	4	18	58	3⅞	3½	230
6x4x10	A80	3	6	4	23½	10	13½	4	18	60	3⅞	3½	300
	—	4	6	4	26¼	10	13½	4	18	66	3⅞	5	365
6x4x11	A80	3	6	4	23½	10	13½	4	18	60	3⅞	3½	304
6x4x13	A80	3	6	4	23½	10	13½	4	18	60	3⅞	3½	396
	—	4	6	4	26¼	10	13½	4	18	66	3⅞	5	496
8x6x11	—	4	8	6	29⅞	14½	16	6	22	74	4¾	5	561
8x6x13	—	4	8	6	29⅞	14½	16	6	22	74	4¾	5	643
	A90	5	8	6	33⅞	14½	16	6	26	74	6	5	743
8x6x15	A110	5	8	6	33⅞	14½	18	6	26	74	6	5	836
10x8x13	—	4	10	8	29⅞	14½	18	6	22	74	4¾	7	731
	A100	5	10	8	33⅞	14½	18	6	26	74	6	5	882
10x8x15	A120	5	10	8	33⅞	14½	19	6	26	74	6	5	1000

Sht 3 of 5

Client: BHI
Checked by: MR
Checked Date: 1/2/98

BHI Job No: 22192
MW Job No: 1166095.01010102
Calc No: 0600X-CA-C0013 Rev 0
Description: Pump Selection
ERDF Cells 3&4

BY/DATE LAA 12-18-97

type D-1010/1160 - closed impeller performance curves

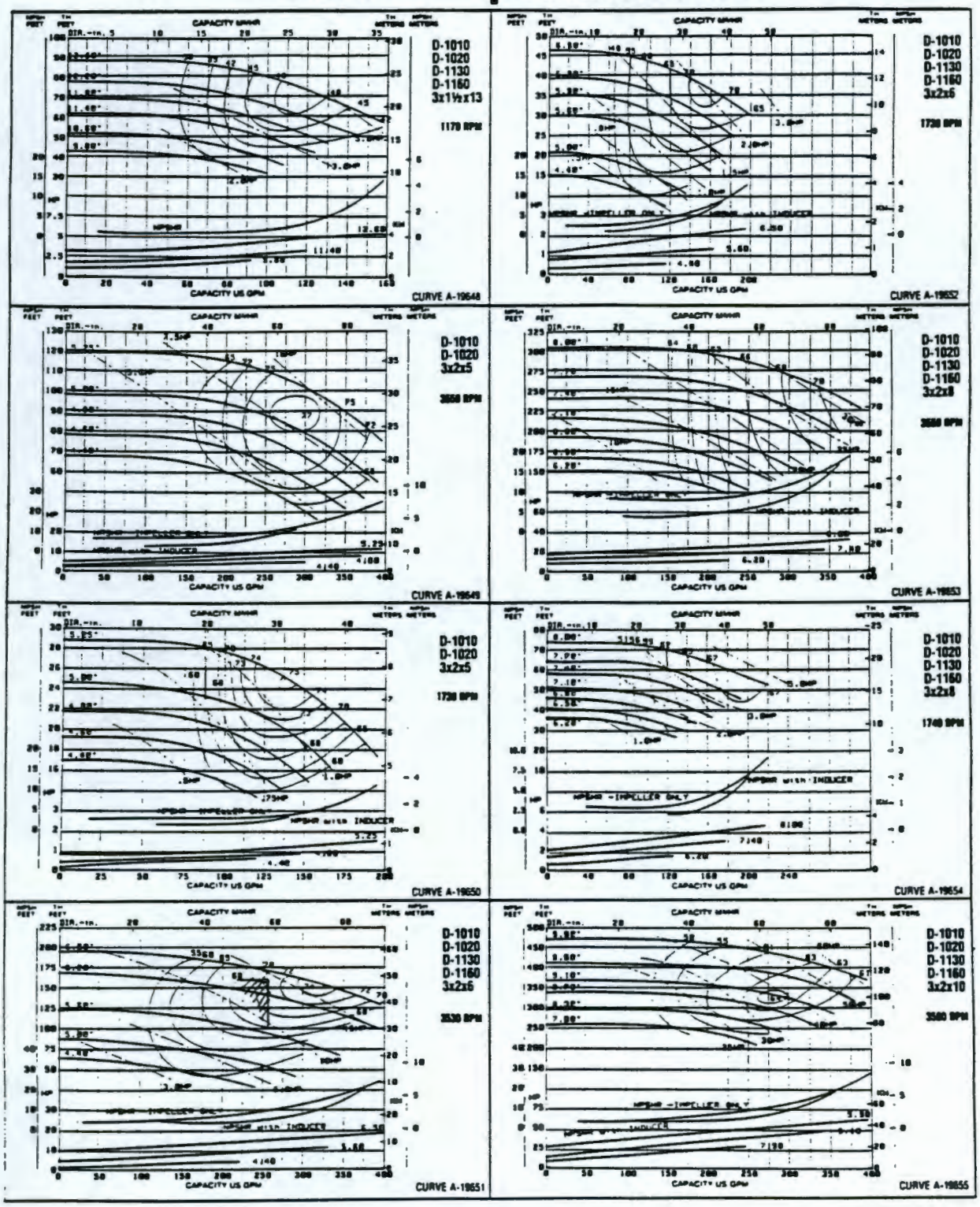

Client: BHI
Checked by: MZ
Checked Date: 1/2/98

BHI Job No: 22192
MW Job # 1166095.01010102
Calc No: 0600X-CA-C0013 Rev 0
Description: Pump Selection
ERDF cells 3+4

Sht 4 of 5

BY: LH Allen
Date: 12-18-97

G&L
A GOULDS PUMPS COMPANY

Dimension Print
SECTION 1

All Iron and Bronze fitted Frame-Mounted Centrifugal Pumps

MODEL 3756 M-Group

Effective April, 1990

ENGINEERING DATA

Channel Steel Bedplate	Installation Drawing No. 276-79 Rev. 0 10/89	Certified for construction purposes ☐ For Approval ☐ For Record
Clockwise Rotation Viewed from Drive End		By

Signature Date

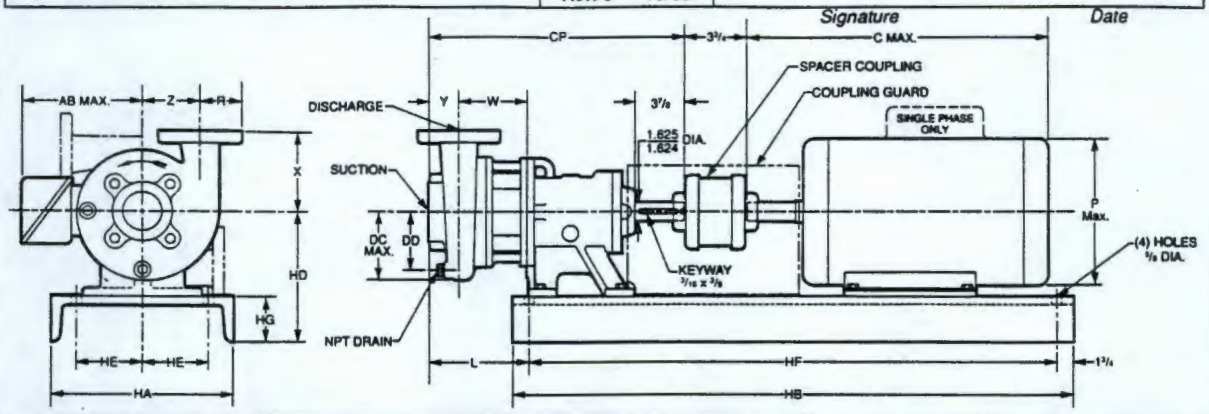

WEIGHTS & DIMENSIONS – DETERMINED BY PUMP

Pump Size	150 lbs. Suction	150 lbs. Discharge	CP	L	R	W	X	Y	Z	DC Max.	DD	NPT Drain	Wt. (lbs.)
1½ x 2-10	2	1½	21⅞	9⅜	1¼	5	6	3	5½	6¾	5⅞	¼	155
2½ x 3-8	3	2½	22⅜	9⅞	1 13/16	5⅛		3⅜	5	6¼	5¼		140
2½ x 3-10			21⅝	9⅛	3½	5	7½	2¾	5½	7⅛	6	⅜	147
2½ x 3-13			21¾	9⅜			9	3	7½	8⅞	7⅝		201
3 x 4-7	4	3	21⅝	9⅛	3¾	5¼	6	2½	4½	6	5⅛	¼	155
3 x 4-10			22	9½		5⅛	7½	3	5½	7⅜	6½	⅜	161
3 x 4-13			21⅞	9⅜		5	9		7½	9½	8⅛		217
4 x 5-8	5	4	22¼	9⅞	4½	5½	8		5	6⅞	5¾		161
4 x 6-13	6		22⅛	9⅝		5¼	9		7½	9¾	8⅛		233

NOTE: All pumps shipped in vertical discharge position. May be rotated in 90° increments. Tighten ⅜-16 casing bolts to 37 ft./lbs. torque. Tighten ½-13 casing bolts to 90 ft./lbs. torque.
NOTE: 1½ x 2-10 and 2½ x 3-8 Models only with NPT threaded pipe connection.

AVAILABLE MOTOR AND BEDPLATE WEIGHTS & DIMENSIONS

Motor Frame	HP @ 3500 RPM 3 Phase ODP	HP @ 3500 RPM 3 Phase TEFC	HP @ 1750 RPM T-Frame Only 3 Phase ODP	HP @ 1750 RPM T-Frame Only 3 Phase TEFC	C Max.	AB	P Max.	Wt. Max.	Bedplate Data HA	HB	HD	HE	HF	HG	Wt. (lbs.)
213T			7½	7½	18	7⅜	9⅝	116	13	42	10¼	5¼	38½	4	111
215T	15		10	10	19⅛			136							
254T	20	15	15	15	21⅝	10⅛	13	266							
256T	25	20	20	20	23⅜			264							
284TS/T	30	25	25	25	24⅞	12⅝	15	392	15	44	10½	5¾	40½	3½	124
286TS/T	40	30	30	30	26⅝			422							
324TS/T	50	40	40	40	28¾	14⅛	17⅜	592	18	48	12	7¼	44½	4	183
326TS/T	60	50	50	50	30¼			634							
364TS/T	75	60	60	60	31⅝	15⅛	18⅞	834			13				
356TS/T	100	75	75	75	32⅝			1000							

NOTE: All 3500 RPM motors 284T Frame and larger use TS shaft extention. Dimensions and weights vary with manufacturers. Dimensions in inches and weights in lbs.

© 1990 G&L
SPECIFICATIONS ARE SUBJECT TO CHANGE WITHOUT NOTICE.
PRINTED IN U.S.A.

DGL37562

Client: BHI
Checked by: m²
Checked Date: 1/2/98

BHI Job No: 22192
MW Job # 1166095.0101010.2
Calc No: 0600X-CA-0013 Rev 0
Description: Pump Selection
ERDF Cells 3+4

Sht 5 of 5

G&L
A GOULDS PUMPS COMPANY

Frame Mounted Units

Performance Curve – SECTION 1
Model 3756 M-Group

L.A. Allen : By
12-18-97 : Date

GOULDS PUMPS, INC.
WATER SYSTEMS DIVISION
Seneca Falls, N.Y. 13148

Model/Size 2½ × 3 - 8
IMP. DWG No. 114-50/59022

RPM 3500
Curve No. CN0208R00

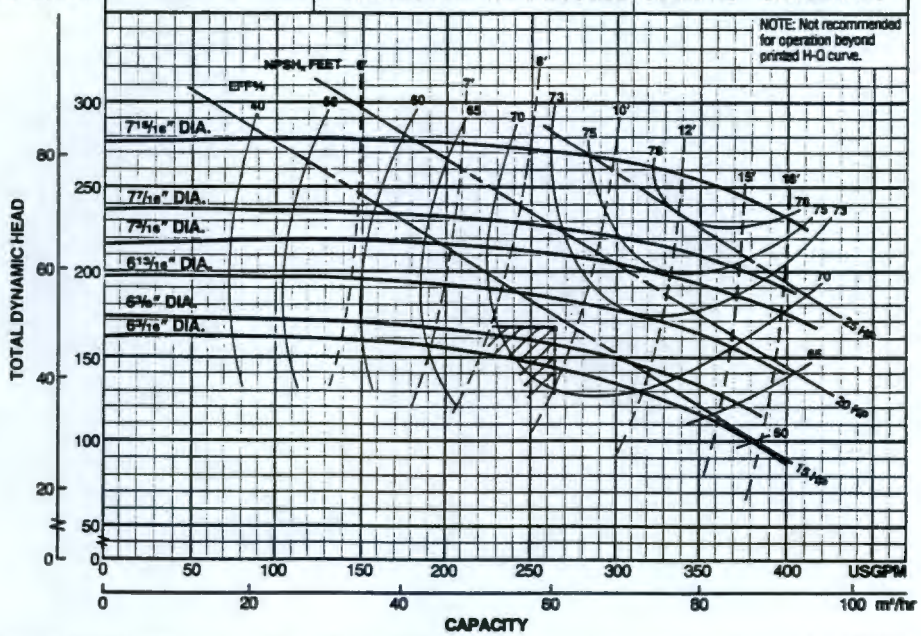

GOULDS PUMPS, INC.
WATER SYSTEMS DIVISION
Seneca Falls, New York 13148

Model/Size 2½ x 3-8
IMP. DWG. 114-50/59022

RPM 1750
Curve No. CN0223R00

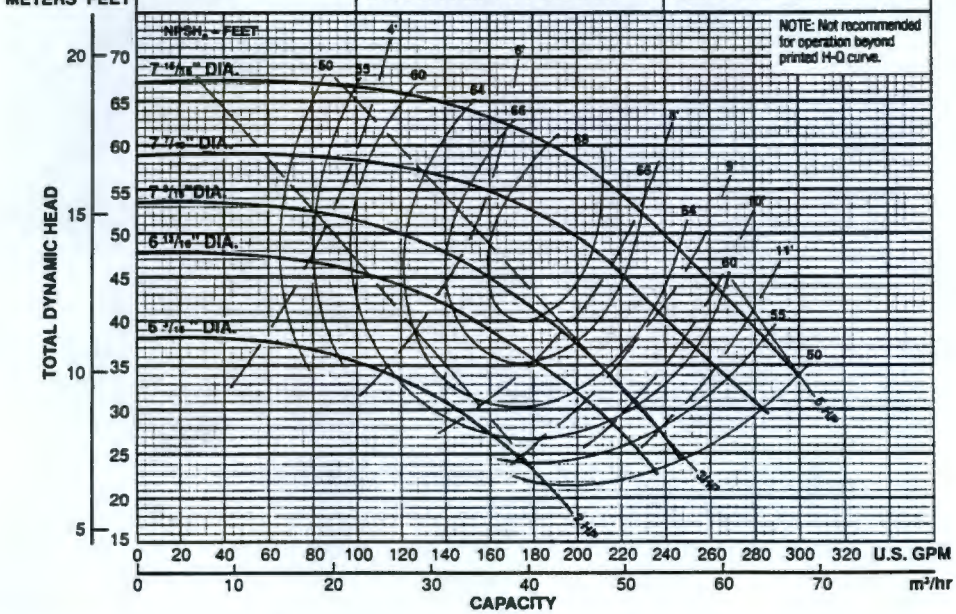

Customer _____ Pump Item _____	Condition of Service Imp. Dia. _____ _____ GPM _____ TDH _____ EFF%	Certified for: Approval ☐ By _____ Date _____ Record ☐

© 1990 G&L

SPECIFICATIONS ARE SUBJECT TO CHANGE WITHOUT NOTICE.

Effective May, 1990
PRINTED IN U.S.A.

CALCULATION COVER SHEET

Project Title ERDF Cells 3 & 4 Construction **Job No.** 22192
Area Loading / Unloading Slab
Discipline Structural ***Calc. No.** 0600X-CA-C0014
Subject Loading / Unloading Slab Design
Computer Program STAAD - III; Research Engineers, Inc. **Program No.** NA

Committed Calculation X **Preliminary** ☐ **Superseded** ☐

Rev.	Sheet Numbers	Originator	Checker	Reviewer	Approval	Date
0	27	DNH	M^2			

SUMMARY OF REVISION

Scanned:	Rev.	Date	Bar Code No.	Rev.	Date	Bar Code No.

*Obtain Calc. No. from DIS.

MONTGOMERY WATSON

BY DMH DATE 12/97 CLIENT DOE SHEET S 1 OF 27
CHKD. BY [illegible] DESCRIPTION ERDF PHASE 2 JOB NO. 1166095.01010102
Chkd Date 1/14/98 BHI Job No: 22192 Calc No: 0600X-CA-C0014 Rev 0

LOADING / UNLOADING SLAB:

DESIGN SLAB AS A MAT ON AN ELASTIC FOUNDATION.

USE SAME SOIL PROPERTIES GIVEN IN THE SOIL REPORT IN ERDF PHASE 1.

USE MODULAS OF SUBGRADE REACTION = $200 \frac{\#}{in^3} = 345.6 \frac{K}{ft^3}$

USE ONE SLAB SECTION OF 25' x 25' FOR ANALYSIS & PLACE 2 WHEEL LOADS NEAR THE EDGE OF THE SLAB FOR THE MAXIMUM CONDITION.

THE MAXIMUM CONDITION WILL BE WHEN A CONTAINER IS TILTED ONTO 2 WHEELS & IS PULLED ONTO OR OFF THE TRUCK.

CONSERVATIVELY, USE THE FULL CONTAINER WEIGHT ON 2 WHEELS.

CONTAINER = 60000#

USE 30000# = 30K PER WHEEL.

By: DH
Date: 12/97
Chkd by: MM
Chkd date: 1/12/97
Client: BHI
BHI Job No. 22192
MW Job No.
1166095.01010102
Desc:
Loading/Unloading Slab
Calc No.:
0600X-CA-C0014
Rev No.: 0

MN/ELEM

STRUCTURE DATA

TYPE = SPACE
NJ = 169
NM = 0
NE = 144
NS = 0
NRJ= 169
NL = 1
XMAX= 25.0
YMAX= .0
ZMAX= 25.0

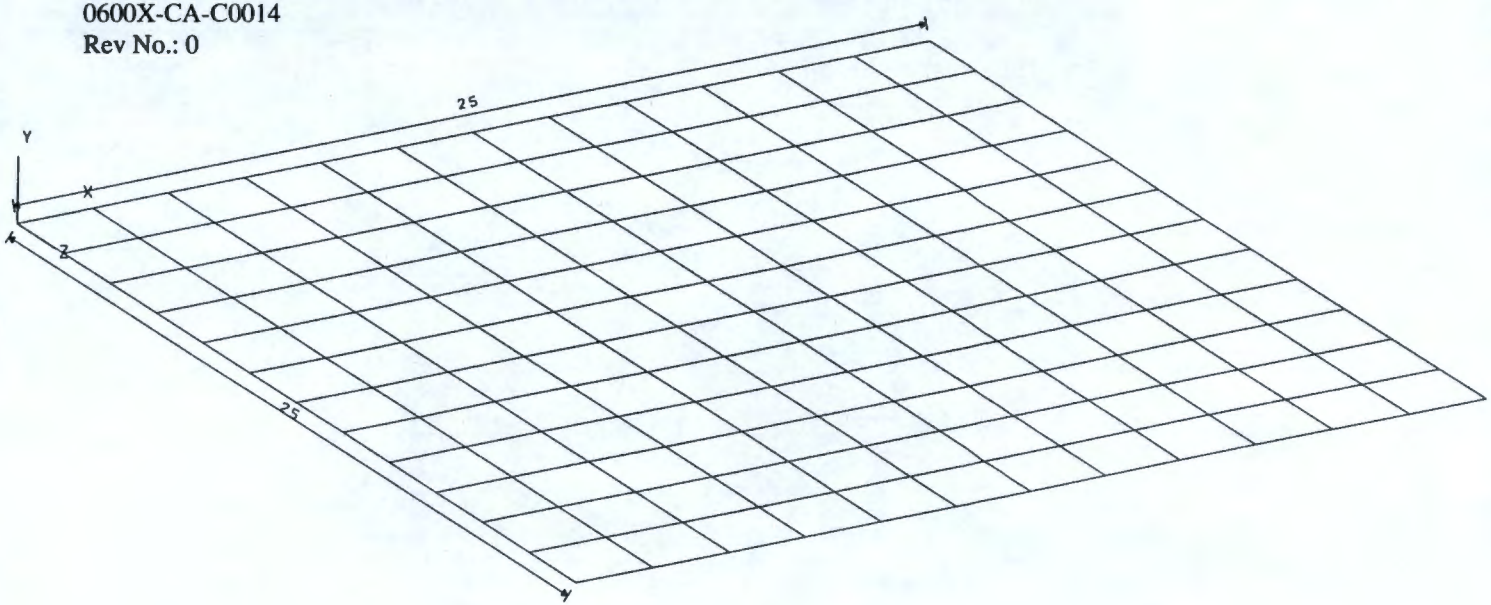

J=169,E=144

UNIT FEE KIP

S T A A D P O S T - P L O T (REV: 22.0W)

DATE: DEC 23, 1997

TITLE: LOADING / UNLOADING SLAB, EDRF PHASE 2

User ID: Montgomery Watson

S2 of 27

By: DH
Date: 12/97
Chkd by: MM
Chkd date: 1/12/97
Client: BHI
BHI Job No. 22192
MW Job No.
1166095.01010102
Desc:
Loading/Unloading Slab
Calc No.:
0600X-CA-C0014
Rev No.: 0

User ID: Montgomery Watson

STRUCTURE DATA

TYPE = SPACE
NJ = 169
NM = 0
NE = 144
NS = 0
NRJ= 169
NL = 1
XMAX= 25.0
YMAX= .0
ZMAX= 25.0

LN= 1 MN/ELEM
SELFWEIGHT Y -1.0

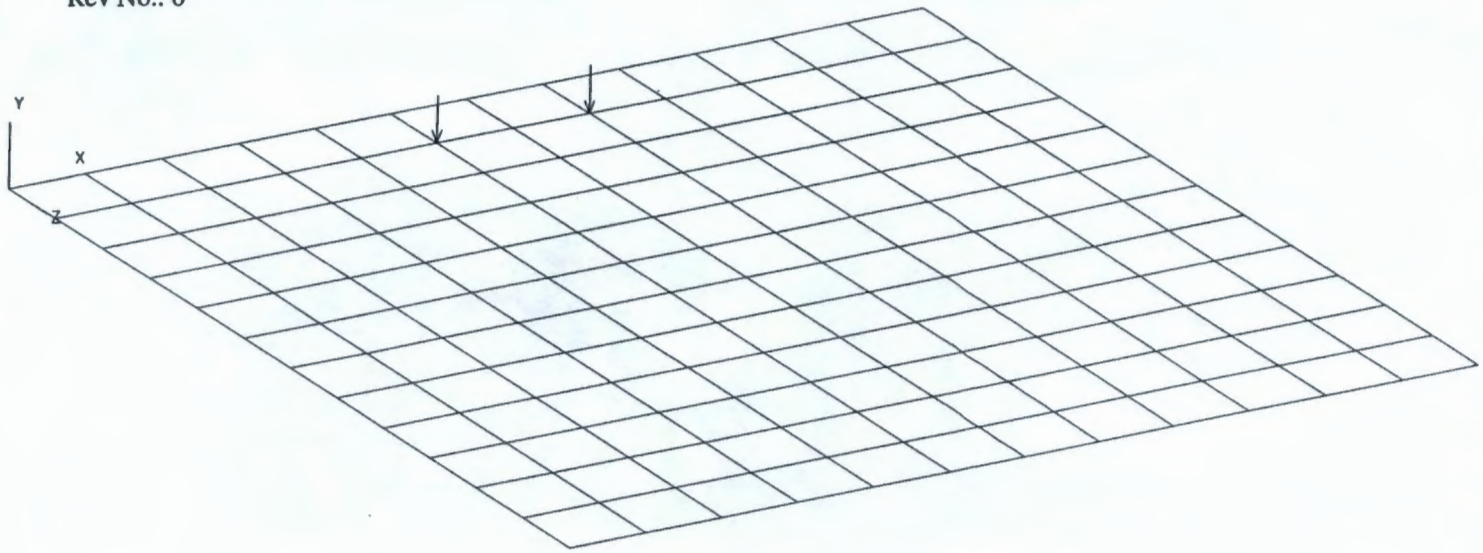

CONTAINER WHEEL LOADS

J=169,E=144

UNIT FEE KIP

S T A A D P O S T - P L O T (REV: 22.0W)

DATE: DEC 24, 1997

TITLE: LOADING / UNLOADING SLAB, EDRF PHASE 2

User ID: Montgomery Watson

STRUCTURE DATA

TYPE = SPACE
NJ = 169
NM = 0
NE = 144
NS = 0
NRJ= 169
NL = 1
XMAX= 25.0
YMAX= .0
ZMAX= 25.0

By: DH
Date: 12/97
Chkd by: MM
Chkd date: 1/12/97
Client: BHI
BHI Job No. 22192
MW Job No.
1166095.01010102
Desc:
Loading/Unloading Slab
Calc No.:
0600X-CA-C0014
Rev No.: 0

MN/ELEM

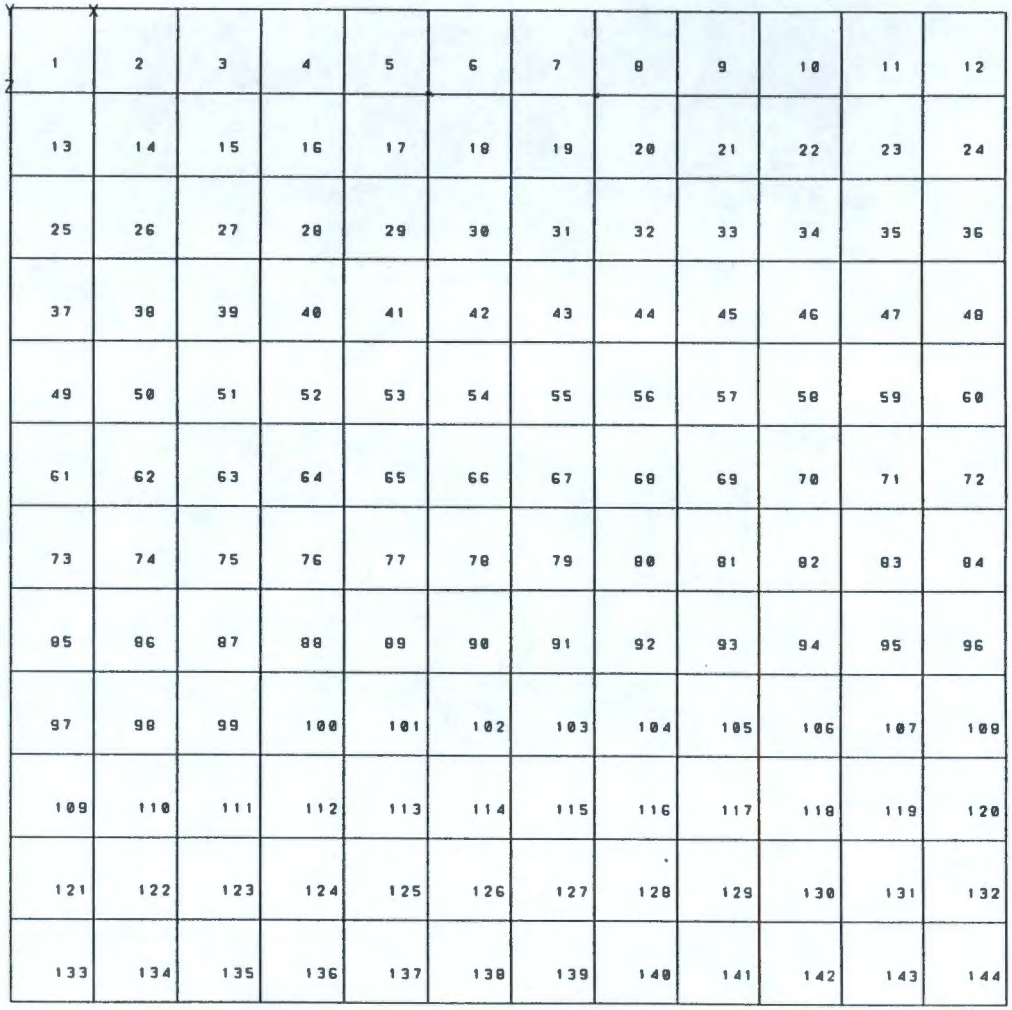

ELEMENT NUMBERING

J=169,E=144

UNIT FEE KIP

S T A A D P O S T - P L O T (REV: 22.0W)

DATE: DEC 23, 1997

TITLE: LOADING / UNLOADING SLAB, EDRF PHASE 2

User ID: Montgomery Watson

STRUCTURE DATA

TYPE = SPACE
NJ = 169
NM = 0
NE = 144
NS = 0
NRJ= 169
NL = 1
XMAX= 25.0
YMAX= .0
ZMAX= 25.0

By: DH
Date: 12/97
Chkd by: MM
Chkd date: 1/12/97
Client: BHI
BHI Job No. 22192
MW Job No.
1166095.01010102
Desc:
Loading/Unloading Slab
Calc No.:
0600X-CA-C0014
Rev No.: 0

MN/ELEM

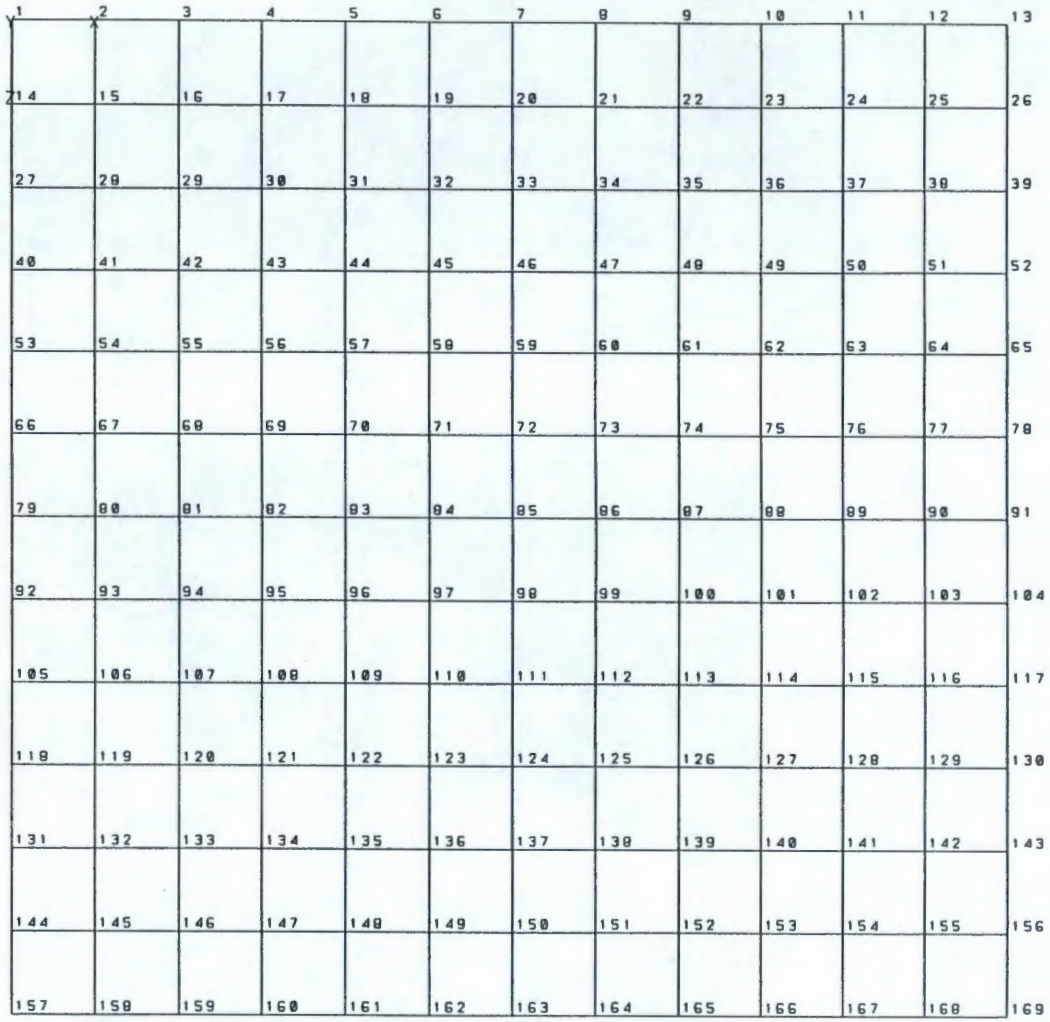

NODE NUMBERING

J=169,E=144

UNIT FEE KIP

S T A A D P O S T - P L O T (REV: 22.0W)

DATE: DEC 23, 1997

TITLE: LOADING / UNLOADING SLAB, EORF PHASE 2

55 of 22

S6 of 27

```
**************************************************
*                                                *
*           S T A A D - III                      *
*           Revision 22.0W                       *
*           Proprietary Program of               *
*           Research Engineers, Inc.             *
*           Date=    DEC 24, 1997                *
*           Time=    10: 5: 35                   *
*                                                *
*      USER ID: Montgomery Watson                *
**************************************************
```

By: DH
Date: 12/97
Chkd by: MM
Chkd date: 1/12/97
Client: BHI
BHI Job No. 22192
MW Job No.
1166095.01010102
Desc:
Loading/Unloading Slab
Calc No.:
0600X-CA-C0014
Rev No.: 0

```
 1. STAAD SPACE LOADING / UNLOADING SLAB,  EDRF PHASE 2
 2. INPUT WIDTH 72
 3. PAGE LENGTH 70
 4. UNIT FEET KIP
 5. JOINT COORDINATES
 6.      1          .000          .000          .000
 7.      2         2.083          .000          .000
 8.      3         4.167          .000          .000
 9.      4         6.250          .000          .000
10.      5         8.333          .000          .000
11.      6        10.417          .000          .000
12.      7        12.500          .000          .000
13.      8        14.583          .000          .000
14.      9        16.667          .000          .000
15.     10        18.750          .000          .000
16.     11        20.833          .000          .000
17.     12        22.917          .000          .000
18.     13        25.000          .000          .000
19.     14          .000          .000         2.083
20.     15         2.083          .000         2.083
21.     16         4.167          .000         2.083
22.     17         6.250          .000         2.083
23.     18         8.333          .000         2.083
24.     19        10.417          .000         2.083
25.     20        12.500          .000         2.083
26.     21        14.583          .000         2.083
27.     22        16.667          .000         2.083
28.     23        18.750          .000         2.083
29.     24        20.833          .000         2.083
30.     25        22.917          .000         2.083
31.     26        25.000          .000         2.083
32.     27          .000          .000         4.167
33.     28         2.083          .000         4.167
34.     29         4.167          .000         4.167
35.     30         6.250          .000         4.167
36.     31         8.333          .000         4.167
37.     32        10.417          .000         4.167
38.     33        12.500          .000         4.167
39.     34        14.583          .000         4.167
40.     35        16.667          .000         4.167
41.     36        18.750          .000         4.167
42.     37        20.833          .000         4.167
43.     38        22.917          .000         4.167
44.     39        25.000          .000         4.167
45.     40          .000          .000         6.250
46.     41         2.083          .000         6.250
47.     42         4.167          .000         6.250
48.     43         6.250          .000         6.250
49.     44         8.333          .000         6.250
50.     45        10.417          .000         6.250
51.     46        12.500          .000         6.250
52.     47        14.583          .000         6.250
53.     48        16.667          .000         6.250
```

S7 of 27

54.	49	18.750	.000	6.250
55.	50	20.833	.000	6.250
56.	51	22.917	.000	6.250
57.	52	25.000	.000	6.250
58.	53	.000	.000	8.333
59.	54	2.083	.000	8.333
60.	55	4.167	.000	8.333
61.	56	6.250	.000	8.333
62.	57	8.333	.000	8.333
63.	58	10.417	.000	8.333
64.	59	12.500	.000	8.333
65.	60	14.583	.000	8.333
66.	61	16.667	.000	8.333
67.	62	18.750	.000	8.333
68.	63	20.833	.000	8.333
69.	64	22.917	.000	8.333
70.	65	25.000	.000	8.333
71.	66	.000	.000	10.417
72.	67	2.083	.000	10.417
73.	68	4.167	.000	10.417
74.	69	6.250	.000	10.417
75.	70	8.333	.000	10.417
76.	71	10.417	.000	10.417
77.	72	12.500	.000	10.417
78.	73	14.583	.000	10.417
79.	74	16.667	.000	10.417
80.	75	18.750	.000	10.417
81.	76	20.833	.000	10.417
82.	77	22.917	.000	10.417
83.	78	25.000	.000	10.417
84.	79	.000	.000	12.500
85.	80	2.083	.000	12.500
86.	81	4.167	.000	12.500
87.	82	6.250	.000	12.500
88.	83	8.333	.000	12.500
89.	84	10.417	.000	12.500
90.	85	12.500	.000	12.500
91.	86	14.583	.000	12.500
92.	87	16.667	.000	12.500
93.	88	18.750	.000	12.500
94.	89	20.833	.000	12.500
95.	90	22.917	.000	12.500
96.	91	25.000	.000	12.500
97.	92	.000	.000	14.583
98.	93	2.083	.000	14.583
99.	94	4.167	.000	14.583
100.	95	6.250	.000	14.583
101.	96	8.333	.000	14.583
102.	97	10.417	.000	14.583
103.	98	12.500	.000	14.583
104.	99	14.583	.000	14.583
105.	100	16.667	.000	14.583
106.	101	18.750	.000	14.583
107.	102	20.833	.000	14.583
108.	103	22.917	.000	14.583
109.	104	25.000	.000	14.583
110.	105	.000	.000	16.667
111.	106	2.083	.000	16.667
112.	107	4.167	.000	16.667
113.	108	6.250	.000	16.667
114.	109	8.333	.000	16.667
115.	110	10.417	.000	16.667
116.	111	12.500	.000	16.667
117.	112	14.583	.000	16.667
118.	113	16.667	.000	16.667
119.	114	18.750	.000	16.667
120.	115	20.833	.000	16.667
121.	116	22.917	.000	16.667

By: DH
Date: 12/97
Chkd by: MM
Chkd date: 1/12/97
Client: BHI
BHI Job No. 22192
MW Job No.
1166095.01010102
Desc:
Loading/Unloading Slab
Calc No.:
0600X-CA-C0014
Rev No.: 0

S8 of 27

122.	117	25.000	.000	16.667
123.	118	.000	.000	18.750
124.	119	2.083	.000	18.750
125.	120	4.167	.000	18.750
126.	121	6.250	.000	18.750
127.	122	8.333	.000	18.750
128.	123	10.417	.000	18.750
129.	124	12.500	.000	18.750
130.	125	14.583	.000	18.750
131.	126	16.667	.000	18.750
132.	127	18.750	.000	18.750
133.	128	20.833	.000	18.750
134.	129	22.917	.000	18.750
135.	130	25.000	.000	18.750
136.	131	.000	.000	20.833
137.	132	2.083	.000	20.833
138.	133	4.167	.000	20.833
139.	134	6.250	.000	20.833
140.	135	8.333	.000	20.833
141.	136	10.417	.000	20.833
142.	137	12.500	.000	20.833
143.	138	14.583	.000	20.833
144.	139	16.667	.000	20.833
145.	140	18.750	.000	20.833
146.	141	20.833	.000	20.833
147.	142	22.917	.000	20.833
148.	143	25.000	.000	20.833
149.	144	.000	.000	22.917
150.	145	2.083	.000	22.917
151.	146	4.167	.000	22.917
152.	147	6.250	.000	22.917
153.	148	8.333	.000	22.917
154.	149	10.417	.000	22.917
155.	150	12.500	.000	22.917
156.	151	14.583	.000	22.917
157.	152	16.667	.000	22.917
158.	153	18.750	.000	22.917
159.	154	20.833	.000	22.917
160.	155	22.917	.000	22.917
161.	156	25.000	.000	22.917
162.	157	.000	.000	25.000
163.	158	2.083	.000	25.000
164.	159	4.167	.000	25.000
165.	160	6.250	.000	25.000
166.	161	8.333	.000	25.000
167.	162	10.417	.000	25.000
168.	163	12.500	.000	25.000
169.	164	14.583	.000	25.000
170.	165	16.667	.000	25.000
171.	166	18.750	.000	25.000
172.	167	20.833	.000	25.000
173.	168	22.917	.000	25.000
174.	169	25.000	.000	25.000

175. ELEMENT INCIDENCES

176.	1	1	14	15	2
177.	2	2	15	16	3
178.	3	3	16	17	4
179.	4	4	17	18	5
180.	5	5	18	19	6
181.	6	6	19	20	7
182.	7	7	20	21	8
183.	8	8	21	22	9
184.	9	9	22	23	10
185.	10	10	23	24	11
186.	11	11	24	25	12
187.	12	12	25	26	13
188.	13	14	27	28	15
189.	14	15	28	29	16

By: DH
Date: 12/97
Chkd by: MM
Chkd date: 1/12/97
Client: BHI
BHI Job No. 22192
MW Job No.
1166095.01010102
Desc:
Loading/Unloading Slab
Calc No.:
0600X-CA-C0014
Rev No.: 0

59 of 27

190.	15	16	29	30	17
191.	16	17	30	31	18
192.	17	18	31	32	19
193.	18	19	32	33	20
194.	19	20	33	34	21
195.	20	21	34	35	22
196.	21	22	35	36	23
197.	22	23	36	37	24
198.	23	24	37	38	25
199.	24	25	38	39	26
200.	25	27	40	41	28
201.	26	28	41	42	29
202.	27	29	42	43	30
203.	28	30	43	44	31
204.	29	31	44	45	32
205.	30	32	45	46	33
206.	31	33	46	47	34
207.	32	34	47	48	35
208.	33	35	48	49	36
209.	34	36	49	50	37
210.	35	37	50	51	38
211.	36	38	51	52	39
212.	37	40	53	54	41
213.	38	41	54	55	42
214.	39	42	55	56	43
215.	40	43	56	57	44
216.	41	44	57	58	45
217.	42	45	58	59	46
218.	43	46	59	60	47
219.	44	47	60	61	48
220.	45	48	61	62	49
221.	46	49	62	63	50
222.	47	50	63	64	51
223.	48	51	64	65	52
224.	49	53	66	67	54
225.	50	54	67	68	55
226.	51	55	68	69	56
227.	52	56	69	70	57
228.	53	57	70	71	58
229.	54	58	71	72	59
230.	55	59	72	73	60
231.	56	60	73	74	61
232.	57	61	74	75	62
233.	58	62	75	76	63
234.	59	63	76	77	64
235.	60	64	77	78	65
236.	61	66	79	80	67
237.	62	67	80	81	68
238.	63	68	81	82	69
239.	64	69	82	83	70
240.	65	70	83	84	71
241.	66	71	84	85	72
242.	67	72	85	86	73
243.	68	73	86	87	74
244.	69	74	87	88	75
245.	70	75	88	89	76
246.	71	76	89	90	77
247.	72	77	90	91	78
248.	73	79	92	93	80
249.	74	80	93	94	81
250.	75	81	94	95	82
251.	76	82	95	96	83
252.	77	83	96	97	84
253.	78	84	97	98	85
254.	79	85	98	99	86
255.	80	86	99	100	87
256.	81	87	100	101	88
257.	82	88	101	102	89

By: DH
Date: 12/97
Chkd by: MM
Chkd date: 1/12/97
Client: BHI
BHI Job No. 22192
MW Job No.
1166095.01010102
Desc:
Loading/Unloading Slab
Calc No.:
0600X-CA-C0014
Rev No.: 0

S10 of 27

258.	83	89	102	103	90
259.	84	90	103	104	91
260.	85	92	105	106	93
261.	86	93	106	107	94
262.	87	94	107	108	95
263.	88	95	108	109	96
264.	89	96	109	110	97
265.	90	97	110	111	98
266.	91	98	111	112	99
267.	92	99	112	113	100
268.	93	100	113	114	101
269.	94	101	114	115	102
270.	95	102	115	116	103
271.	96	103	116	117	104
272.	97	105	118	119	106
273.	98	106	119	120	107
274.	99	107	120	121	108
275.	100	108	121	122	109
276.	101	109	122	123	110
277.	102	110	123	124	111
278.	103	111	124	125	112
279.	104	112	125	126	113
280.	105	113	126	127	114
281.	106	114	127	128	115
282.	107	115	128	129	116
283.	108	116	129	130	117
284.	109	118	131	132	119
285.	110	119	132	133	120
286.	111	120	133	134	121
287.	112	121	134	135	122
288.	113	122	135	136	123
289.	114	123	136	137	124
290.	115	124	137	138	125
291.	116	125	138	139	126
292.	117	126	139	140	127
293.	118	127	140	141	128
294.	119	128	141	142	129
295.	120	129	142	143	130
296.	121	131	144	145	132
297.	122	132	145	146	133
298.	123	133	146	147	134
299.	124	134	147	148	135
300.	125	135	148	149	136
301.	126	136	149	150	137
302.	127	137	150	151	138
303.	128	138	151	152	139
304.	129	139	152	153	140
305.	130	140	153	154	141
306.	131	141	154	155	142
307.	132	142	155	156	143
308.	133	144	157	158	145
309.	134	145	158	159	146
310.	135	146	159	160	147
311.	136	147	160	161	148
312.	137	148	161	162	149
313.	138	149	162	163	150
314.	139	150	163	164	151
315.	140	151	164	165	152
316.	141	152	165	166	153
317.	142	153	166	167	154
318.	143	154	167	168	155
319.	144	155	168	169	156

By: DH
Date: 12/97
Chkd by: MM
Chkd date: 1/12/97
Client: BHI
BHI Job No. 22192
MW Job No.
1166095.01010102
Desc:
Loading/Unloading Slab
Calc No.:
0600X-CA-C0014
Rev No.: 0

```
320. UNIT INCHES KIP
321. ELEMENT PROPERTY
322. 1 TO 144 THICKNESS 12.
323. CONSTANT
324. E 3605. ALL
325. DENSITY CONCRETE ALL
```

S11 of 27

```
326. POISSON CONCRETE ALL
327. UNIT FEET KIP
328. SUPPORT
329. 1 TO 169 ELASTIC MAT Y SUBGRADE 345.6
330. LOAD 1 CONTAINER WHEEL REACTIONS + SLAB DEAD LOAD
331. SELFWEIGHT Y -1.
332. JOINT LOAD
333. 19 21 FY -30.
334. PERFORM ANALYSIS

        P R O B L E M   S T A T I S T I C S
        -----------------------------------

  NUMBER OF JOINTS/MEMBER+ELEMENTS/SUPPORTS =   169/  144/  169
  ORIGINAL/FINAL BAND-WIDTH =   14/   14
  TOTAL PRIMARY LOAD CASES  =    1, TOTAL DEGREES OF FREEDOM =  1014
  SIZE OF STIFFNESS MATRIX =   91260 DOUBLE PREC. WORDS
  REQRD/AVAIL. DISK SPACE =  13.25/  993.2 MB,  EXMEM = 1979.8 MB

++ Processing Element Stiffness Matrix.              10: 5:36
++ Processing Global Stiffness Matrix.               10: 5:36
++ Processing Triangular Factorization.              10: 5:36
++ Calculating Joint Displacements.                  10: 5:38
++ Calculating Member  Forces.                       10: 5:38

335. PRINT ELEMENT FORCES ALL
```

By: DH
Date: 12/97
Chkd by: MM
Chkd date: 1/12/97
Client: BHI
BHI Job No. 22192
MW Job No.
1166095.01010102
Desc:
Loading/Unloading Slab
Calc No.:
0600X-CA-C0014
Rev No.: 0

Sht 12 of 27

By: DH
Date: 12/97
Chkd by: MM
Chkd date: 1/12/97
Client: BHI
BHI Job No. 22192
MW Job No.
1166095.01010102
Desc:
Loading/Unloading Slab
Calc No.:
0600X-CA-C0014
Rev No.: 0

S12

ELEMENT FORCES FORCE,LENGTH UNITS= KIP FEET

FORCE OR STRESS = FORCE/WIDTH/THICK, MOMENT = FORCE-LENGTH/WIDTH

ELEMENT	LOAD	QX / VONT	QY / VONB	MX / FX	MY / FY	MXY / FXY
1	1	-.04	.09	.03	.14	-.08
		1.10	1.10	.00	.00	.00
TOP :	SMAX= 1.06	SMIN= -.08	TMAX= .57	ANGLE= 27.0		
BOTT:	SMAX= .08	SMIN= -1.06	TMAX= .57	ANGLE= 27.0		
2	1	-.01	-.02	-.06	.40	-.12
		2.88	2.88	.00	.00	.00
TOP :	SMAX= 2.57	SMIN= -.54	TMAX= 1.56	ANGLE= 13.9		
BOTT:	SMAX= .54	SMIN= -2.57	TMAX= 1.56	ANGLE= 13.9		
3	1	-.10	-.30	-.20	.22	-.06
		2.28	2.28	.00	.00	.00
TOP :	SMAX= 1.39	SMIN= -1.25	TMAX= 1.32	ANGLE= 8.2		
BOTT:	SMAX= 1.25	SMIN= -1.39	TMAX= 1.32	ANGLE= 8.2		
4	1	-.05	-.73	-.71	-.96	.31
		6.12	6.12	.00	.00	.00
TOP :	SMAX= -2.98	SMIN= -7.04	TMAX= 2.03	ANGLE= 34.4		
BOTT:	SMAX= 7.04	SMIN= 2.98	TMAX= 2.03	ANGLE= 34.4		
5	1	-2.07	-1.36	-1.85	-4.14	1.23
		25.06	25.06	.00	.00	.00
TOP :	SMAX= -7.90	SMIN= -28.06	TMAX= 10.08	ANGLE= 23.5		
BOTT:	SMAX= 28.06	SMIN= 7.90	TMAX= 10.08	ANGLE= 23.5		
6	1	-3.66	5.36	-3.69	-2.39	2.20
		30.02	30.02	.00	.00	.00
TOP :	SMAX= -4.47	SMIN= -32.01	TMAX= 13.77	ANGLE= -36.7		
BOTT:	SMAX= 32.01	SMIN= 4.47	TMAX= 13.77	ANGLE= -36.7		
7	1	-4.69	-1.80	-4.56	-.55	.40
		26.23	26.23	.00	.00	.00
TOP :	SMAX= -3.07	SMIN= -27.63	TMAX= 12.28	ANGLE= -5.7		
BOTT:	SMAX= 27.63	SMIN= 3.07	TMAX= 12.28	ANGLE= -5.7		
8	1	-3.71	1.41	-3.21	-.85	-.59
		18.37	18.37	.00	.00	.00
TOP :	SMAX= -4.25	SMIN= -20.12	TMAX= 7.93	ANGLE= 13.3		
BOTT:	SMAX= 20.12	SMIN= 4.25	TMAX= 7.93	ANGLE= 13.3		
9	1	-.92	-.45	-1.44	1.10	-.82
		15.73	15.73	.00	.00	.00
TOP :	SMAX= 8.04	SMIN= -10.08	TMAX= 9.06	ANGLE= 16.5		
BOTT:	SMAX= 10.08	SMIN= -8.04	TMAX= 9.06	ANGLE= 16.5		
10	1	-.49	-.74	-.54	.87	-.70
		10.34	10.34	.00	.00	.00
TOP :	SMAX= 6.94	SMIN= -4.94	TMAX= 5.94	ANGLE= 22.4		
BOTT:	SMAX= 4.94	SMIN= -6.94	TMAX= 5.94	ANGLE= 22.4		
11	1	-.12	-.55	-.21	.36	-.46
		5.65	5.65	.00	.00	.00
TOP :	SMAX= 3.72	SMIN= -2.78	TMAX= 3.25	ANGLE= 29.2		
BOTT:	SMAX= 2.78	SMIN= -3.72	TMAX= 3.25	ANGLE= 29.2		
12	1	-.02	-.14	-.09	.07	-.16
		1.82	1.82	.00	.00	.00
TOP :	SMAX= .97	SMIN= -1.13	TMAX= 1.05	ANGLE= 31.7		
BOTT:	SMAX= 1.13	SMIN= -.97	TMAX= 1.05	ANGLE= 31.7		

By: DH
Date: 12/97
Chkd by: MM
Chkd date: 1/12/97
Client: BHI
BHI Job No. 22192
MW Job No.
1166095.01010102
Desc:
Loading/Unloading Slab
Calc No.:
0600X-CA-C0014
Rev No.: 0

sht 13 of 27

S13

ELEMENT FORCES FORCE,LENGTH UNITS= KIP FEET

FORCE OR STRESS = FORCE/WIDTH/THICK, MOMENT = FORCE-LENGTH/WIDTH

ELEMENT	LOAD	QX / VONT	QY / VONB	MX / FX	MY / FY	MXY / FXY
13	1	-.13	.08	.05	.12	-.20
		2.17	2.17	.00	.00	.00
TOP :	SMAX= 1.74	SMIN= -.69	TMAX= 1.22	ANGLE= 40.0		
BOTT:	SMAX= .69	SMIN= -1.74	TMAX= 1.22	ANGLE= 40.0		
14	1	.00	-.01	-.07	.36	-.28
		3.79	3.79	.00	.00	.00
TOP :	SMAX= 3.02	SMIN= -1.25	TMAX= 2.13	ANGLE= 26.6		
BOTT:	SMAX= 1.25	SMIN= -3.02	TMAX= 2.13	ANGLE= 26.6		
15	1	.05	-.37	-.38	.28	-.31
		4.72	4.72	.00	.00	.00
TOP :	SMAX= 2.40	SMIN= -3.04	TMAX= 2.72	ANGLE= 21.5		
BOTT:	SMAX= 3.04	SMIN= -2.40	TMAX= 2.72	ANGLE= 21.5		
16	1	.01	-1.26	-1.30	-.63	-.22
		7.12	7.12	.00	.00	.00
TOP :	SMAX= -3.37	SMIN= -8.18	TMAX= 2.41	ANGLE= 16.8		
BOTT:	SMAX= 8.18	SMIN= 3.37	TMAX= 2.41	ANGLE= 16.8		
17	1	2.83	-3.30	-3.10	-3.11	.59
		19.59	19.59	.00	.00	.00
TOP :	SMAX= -15.09	SMIN= -22.13	TMAX= 3.52	ANGLE= 90.0		
BOTT:	SMAX= 22.13	SMIN= 15.09	TMAX= 3.52	ANGLE= 90.0		
18	1	2.36	1.36	-4.49	-2.70	1.10
		26.14	26.14	.00	.00	.00
TOP :	SMAX= -13.05	SMIN= -30.09	TMAX= 8.52	ANGLE= -25.4		
BOTT:	SMAX= 30.09	SMIN= 13.05	TMAX= 8.52	ANGLE= -25.4		
19	1	2.07	-1.75	-4.98	-1.79	.84
		27.65	27.65	.00	.00	.00
TOP :	SMAX= -9.49	SMIN= -31.14	TMAX= 10.83	ANGLE= -13.8		
BOTT:	SMAX= 31.14	SMIN= 9.49	TMAX= 10.83	ANGLE= -13.8		
20	1	2.35	3.12	-4.28	-1.37	.27
		22.87	22.87	.00	.00	.00
TOP :	SMAX= -8.08	SMIN= -25.81	TMAX= 8.86	ANGLE= -5.2		
BOTT:	SMAX= 25.81	SMIN= 8.08	TMAX= 8.86	ANGLE= -5.2		
21	1	-.27	1.21	-2.54	.60	.04
		17.30	17.30	.00	.00	.00
TOP :	SMAX= 3.60	SMIN= -15.22	TMAX= 9.41	ANGLE= -.6		
BOTT:	SMAX= 15.22	SMIN= -3.60	TMAX= 9.41	ANGLE= -.6		
22	1	-.10	.44	-1.27	.75	-.26
		10.96	10.96	.00	.00	.00
TOP :	SMAX= 4.70	SMIN= -7.82	TMAX= 6.26	ANGLE= 7.1		
BOTT:	SMAX= 7.82	SMIN= -4.70	TMAX= 6.26	ANGLE= 7.1		
23	1	.11	.28	-.60	.51	-.23
		6.26	6.26	.00	.00	.00
TOP :	SMAX= 3.32	SMIN= -3.89	TMAX= 3.61	ANGLE= 11.5		
BOTT:	SMAX= 3.89	SMIN= -3.32	TMAX= 3.61	ANGLE= 11.5		
24	1	.14	-.13	-.30	.21	-.11
		2.92	2.92	.00	.00	.00
TOP :	SMAX= 1.42	SMIN= -1.93	TMAX= 1.68	ANGLE= 11.6		
BOTT:	SMAX= 1.93	SMIN= -1.42	TMAX= 1.68	ANGLE= 11.6		

Sht 14 of 27

By: DH
Date: 12/97
Chkd by: MM
Chkd date: 1/12/97
Client: BHI
BHI Job No. 22192
MW Job No.
1166095.01010102
Desc:
Loading/Unloading Slab
Calc No.:
0600X-CA-C0014
Rev No.: 0

S14

ELEMENT FORCES FORCE,LENGTH UNITS= KIP FEET

FORCE OR STRESS = FORCE/WIDTH/THICK, MOMENT = FORCE-LENGTH/WIDTH

ELEMENT	LOAD	QX / VONT	QY / VONB	MX / FX	MY / FY	MXY / FXY
25	1	-.17	.07	.09	.09	-.28
		2.99	2.99	.00	.00	.00
TOP :	SMAX= 2.22	SMIN= -1.18	TMAX= 1.70	ANGLE= 90.0		
BOTT:	SMAX= 1.18	SMIN= -2.22	TMAX= 1.70	ANGLE= 90.0		
26	1	.03	.02	.03	.27	-.43
		4.71	4.71	.00	.00	.00
TOP :	SMAX= 3.57	SMIN= -1.77	TMAX= 2.67	ANGLE= 37.4		
BOTT:	SMAX= 1.77	SMIN= -3.57	TMAX= 2.67	ANGLE= 37.4		
27	1	.10	-.18	-.12	.20	-.57
		6.16	6.16	.00	.00	.00
TOP :	SMAX= 3.80	SMIN= -3.31	TMAX= 3.55	ANGLE= 37.2		
BOTT:	SMAX= 3.31	SMIN= -3.80	TMAX= 3.55	ANGLE= 37.2		
28	1	.35	-.39	-.26	-.33	-.77
		8.19	8.19	.00	.00	.00
TOP :	SMAX= 2.85	SMIN= -6.38	TMAX= 4.62	ANGLE= -43.6		
BOTT:	SMAX= 6.38	SMIN= -2.85	TMAX= 4.62	ANGLE= -43.6		
29	1	1.13	-.17	-.62	-1.58	-.39
		9.22	9.22	.00	.00	.00
TOP :	SMAX= -2.92	SMIN= -10.32	TMAX= 3.70	ANGLE= -19.6		
BOTT:	SMAX= 10.32	SMIN= 2.92	TMAX= 3.70	ANGLE= -19.6		
30	1	1.23	-.20	-1.07	-1.78	.24
		9.62	9.62	.00	.00	.00
TOP :	SMAX= -5.98	SMIN= -11.09	TMAX= 2.56	ANGLE= 16.9		
BOTT:	SMAX= 11.09	SMIN= 5.98	TMAX= 2.56	ANGLE= 16.9		
31	1	1.17	.26	-1.45	-1.46	.65
		11.03	11.03	.00	.00	.00
TOP :	SMAX= -4.86	SMIN= -12.63	TMAX= 3.88	ANGLE= 90.0		
BOTT:	SMAX= 12.63	SMIN= 4.86	TMAX= 3.88	ANGLE= 90.0		
32	1	1.01	.08	-1.57	-.88	.88
		12.24	12.24	.00	.00	.00
TOP :	SMAX= -1.68	SMIN= -12.99	TMAX= 5.66	ANGLE= -34.3		
BOTT:	SMAX= 12.99	SMIN= 1.68	TMAX= 5.66	ANGLE= -34.3		
33	1	.29	.25	-1.35	.31	.82
		12.53	12.53	.00	.00	.00
TOP :	SMAX= 3.87	SMIN= -10.14	TMAX= 7.00	ANGLE= -22.4		
BOTT:	SMAX= 10.14	SMIN= -3.87	TMAX= 7.00	ANGLE= -22.4		
34	1	.10	.13	-1.06	.53	.40
		9.40	9.40	.00	.00	.00
TOP :	SMAX= 3.77	SMIN= -6.93	TMAX= 5.35	ANGLE= -13.4		
BOTT:	SMAX= 6.93	SMIN= -3.77	TMAX= 5.35	ANGLE= -13.4		
35	1	-.17	.19	-.62	.49	.20
		6.13	6.13	.00	.00	.00
TOP :	SMAX= 3.15	SMIN= -3.91	TMAX= 3.53	ANGLE= -9.9		
BOTT:	SMAX= 3.91	SMIN= -3.15	TMAX= 3.53	ANGLE= -9.9		
36	1	-.19	-.18	-.36	.23	.09
		3.23	3.23	.00	.00	.00
TOP :	SMAX= 1.45	SMIN= -2.26	TMAX= 1.85	ANGLE= -8.2		
BOTT:	SMAX= 2.26	SMIN= -1.45	TMAX= 1.85	ANGLE= -8.2		

Sht 15 of 27

By: DH
Date: 12/97
Chkd by: MM
Chkd date: 1/12/97
Client: BHI
BHI Job No. 22192
MW Job No.
1166095.01010102
Desc:
Loading/Unloading Slab
Calc No.:
0600X-CA-C0014
Rev No.: 0

S15

ELEMENT FORCES FORCE,LENGTH UNITS= KIP FEET

FORCE OR STRESS = FORCE/WIDTH/THICK, MOMENT = FORCE-LENGTH/WIDTH

ELEMENT	LOAD	QX / VONT	QY / VONB	MX / FX	MY / FY	MXY / FXY
37	1	-.20	.05	.13	.05	-.31
		3.30	3.30	.00	.00	.00
TOP :	SMAX= 2.43	SMIN= -1.33	TMAX= 1.88	ANGLE= -41.1		
BOTT:	SMAX= 1.33	SMIN= -2.43	TMAX= 1.88	ANGLE= -41.1		
38	1	.03	.05	.17	.13	-.46
		4.84	4.84	.00	.00	.00
TOP :	SMAX= 3.65	SMIN= -1.84	TMAX= 2.75	ANGLE= -43.9		
BOTT:	SMAX= 1.84	SMIN= -3.65	TMAX= 2.75	ANGLE= -43.9		
39	1	.02	-.02	.23	.08	-.58
		6.17	6.17	.00	.00	.00
TOP :	SMAX= 4.45	SMIN= -2.59	TMAX= 3.52	ANGLE= -41.1		
BOTT:	SMAX= 2.59	SMIN= -4.45	TMAX= 3.52	ANGLE= -41.1		
40	1	.20	-.16	.32	-.29	-.62
		7.24	7.24	.00	.00	.00
TOP :	SMAX= 4.27	SMIN= -4.09	TMAX= 4.18	ANGLE= -31.9		
BOTT:	SMAX= 4.09	SMIN= -4.27	TMAX= 4.18	ANGLE= -31.9		
41	1	.41	-.20	.38	-.75	-.42
		7.43	7.43	.00	.00	.00
TOP :	SMAX= 3.14	SMIN= -5.34	TMAX= 4.24	ANGLE= -18.3		
BOTT:	SMAX= 5.34	SMIN= -3.14	TMAX= 4.24	ANGLE= -18.3		
42	1	.55	-.09	.28	-.99	-.01
		6.92	6.92	.00	.00	.00
TOP :	SMAX= 1.65	SMIN= -5.94	TMAX= 3.80	ANGLE= -.6		
BOTT:	SMAX= 5.94	SMIN= -1.65	TMAX= 3.80	ANGLE= -.6		
43	1	.56	-.01	.04	-.83	.35
		6.30	6.30	.00	.00	.00
TOP :	SMAX= .99	SMIN= -5.75	TMAX= 3.37	ANGLE= 19.6		
BOTT:	SMAX= 5.75	SMIN= -.99	TMAX= 3.37	ANGLE= 19.6		
44	1	.46	.13	-.24	-.36	.61
		6.60	6.60	.00	.00	.00
TOP :	SMAX= 1.86	SMIN= -5.47	TMAX= 3.67	ANGLE= 42.3		
BOTT:	SMAX= 5.47	SMIN= -1.86	TMAX= 3.67	ANGLE= 42.3		
45	1	.30	.12	-.51	.13	.66
		7.72	7.72	.00	.00	.00
TOP :	SMAX= 3.28	SMIN= -5.54	TMAX= 4.41	ANGLE= -32.0		
BOTT:	SMAX= 5.54	SMIN= -3.28	TMAX= 4.41	ANGLE= -32.0		
46	1	.14	-.05	-.60	.35	.58
		7.82	7.82	.00	.00	.00
TOP :	SMAX= 3.75	SMIN= -5.24	TMAX= 4.50	ANGLE= -25.2		
BOTT:	SMAX= 5.24	SMIN= -3.75	TMAX= 4.50	ANGLE= -25.2		
47	1	.06	-.01	-.53	.31	.42
		6.21	6.21	.00	.00	.00
TOP :	SMAX= 2.91	SMIN= -4.22	TMAX= 3.56	ANGLE= -22.6		
BOTT:	SMAX= 4.22	SMIN= -2.91	TMAX= 3.56	ANGLE= -22.6		
48	1	-.11	-.03	-.43	.12	.25
		3.92	3.92	.00	.00	.00
TOP :	SMAX= 1.25	SMIN= -3.14	TMAX= 2.20	ANGLE= -21.0		
BOTT:	SMAX= 3.14	SMIN= -1.25	TMAX= 2.20	ANGLE= -21.0		

Sht 16 of 27

By: DH
Date: 12/97
Chkd by: MM
Chkd date: 1/12/97
Client: BHI
BHI Job No. 22192
MW Job No.
1166095.01010102
Desc:
Loading/Unloading Slab
Calc No.:
0600X-CA-C0014
Rev No.: 0

S16

ELEMENT FORCES FORCE,LENGTH UNITS= KIP FEET

FORCE OR STRESS = FORCE/WIDTH/THICK, MOMENT = FORCE-LENGTH/WIDTH

ELEMENT	LOAD	QX / VONT	QY / VONB	MX / FX	MY / FY	MXY / FXY
49	1	-.20	.03	.15	.01	-.28
		3.07	3.07	.00	.00	.00
TOP :	SMAX= 2.25	SMIN= -1.24	TMAX= 1.75	ANGLE= -38.0		
BOTT:	SMAX= 1.24	SMIN= -2.25	TMAX= 1.75	ANGLE= -38.0		
50	1	.01	.06	.23	.03	-.39
		4.27	4.27	.00	.00	.00
TOP :	SMAX= 3.20	SMIN= -1.65	TMAX= 2.42	ANGLE= -37.6		
BOTT:	SMAX= 1.65	SMIN= -3.20	TMAX= 2.42	ANGLE= -37.6		
51	1	-.03	.03	.37	-.01	-.45
		5.19	5.19	.00	.00	.00
TOP :	SMAX= 4.00	SMIN= -1.87	TMAX= 2.93	ANGLE= -33.5		
BOTT:	SMAX= 1.87	SMIN= -4.00	TMAX= 2.93	ANGLE= -33.5		
52	1	.03	-.01	.53	-.18	-.47
		6.18	6.18	.00	.00	.00
TOP :	SMAX= 4.56	SMIN= -2.47	TMAX= 3.51	ANGLE= -26.3		
BOTT:	SMAX= 2.47	SMIN= -4.56	TMAX= 3.51	ANGLE= -26.3		
53	1	.11	-.03	.65	-.41	-.35
		6.62	6.62	.00	.00	.00
TOP :	SMAX= 4.53	SMIN= -3.07	TMAX= 3.80	ANGLE= -16.6		
BOTT:	SMAX= 3.07	SMIN= -4.53	TMAX= 3.80	ANGLE= -16.6		
54	1	.17	-.03	.67	-.52	-.12
		6.33	6.33	.00	.00	.00
TOP :	SMAX= 4.07	SMIN= -3.22	TMAX= 3.65	ANGLE= -5.7		
BOTT:	SMAX= 3.22	SMIN= -4.07	TMAX= 3.65	ANGLE= -5.7		
55	1	.21	.01	.55	-.43	.12
		5.26	5.26	.00	.00	.00
TOP :	SMAX= 3.40	SMIN= -2.66	TMAX= 3.03	ANGLE= 7.1		
BOTT:	SMAX= 2.66	SMIN= -3.40	TMAX= 3.03	ANGLE= 7.1		
56	1	.23	.03	.31	-.12	.28
		3.69	3.69	.00	.00	.00
TOP :	SMAX= 2.68	SMIN= -1.53	TMAX= 2.11	ANGLE= 26.0		
BOTT:	SMAX= 1.53	SMIN= -2.68	TMAX= 2.11	ANGLE= 26.0		
57	1	.30	-.06	.06	.33	.42
		4.69	4.69	.00	.00	.00
TOP :	SMAX= 3.79	SMIN= -1.46	TMAX= 2.63	ANGLE= -36.1		
BOTT:	SMAX= 1.46	SMIN= -3.79	TMAX= 2.63	ANGLE= -36.1		
58	1	.27	-.05	-.12	.41	.53
		6.22	6.22	.00	.00	.00
TOP :	SMAX= 4.41	SMIN= -2.71	TMAX= 3.56	ANGLE= -31.8		
BOTT:	SMAX= 2.71	SMIN= -4.41	TMAX= 3.56	ANGLE= -31.8		
59	1	.16	-.07	-.19	.17	.50
		5.50	5.50	.00	.00	.00
TOP :	SMAX= 3.09	SMIN= -3.26	TMAX= 3.18	ANGLE= -35.1		
BOTT:	SMAX= 3.26	SMIN= -3.09	TMAX= 3.18	ANGLE= -35.1		
60	1	-.08	-.04	-.19	.04	.31
		3.44	3.44	.00	.00	.00
TOP :	SMAX= 1.52	SMIN= -2.42	TMAX= 1.97	ANGLE= -34.4		
BOTT:	SMAX= 2.42	SMIN= -1.52	TMAX= 1.97	ANGLE= -34.4		

Sheet 17 of 27

By: DH
Date: 12/97
Chkd by: MM
Chkd date: 1/12/97
Client: BHI
BHI Job No. 22192
MW Job No.
1166095.01010102
Desc:
Loading/Unloading Slab
Calc No.:
0600X-CA-C0014
Rev No.: 0

S17

ELEMENT FORCES FORCE,LENGTH UNITS= KIP FEET

FORCE OR STRESS = FORCE/WIDTH/THICK, MOMENT = FORCE-LENGTH/WIDTH

ELEMENT	LOAD	QX / VONT	QY / VONB	MX / FX	MY / FY	MXY / FXY
61	1	-.17	.02	.13	-.01	-.23
		2.48	2.48	.00	.00	.00
TOP :	SMAX= 1.79	SMIN= -1.05	TMAX= 1.42	ANGLE= -36.6		
BOTT:	SMAX= 1.05	SMIN= -1.79	TMAX= 1.42	ANGLE= -36.6		
62	1	-.01	.04	.21	-.03	-.29
		3.35	3.35	.00	.00	.00
TOP :	SMAX= 2.45	SMIN= -1.37	TMAX= 1.91	ANGLE= -33.6		
BOTT:	SMAX= 1.37	SMIN= -2.45	TMAX= 1.91	ANGLE= -33.6		
63	1	-.06	.04	.34	-.06	-.31
		3.94	3.94	.00	.00	.00
TOP :	SMAX= 3.05	SMIN= -1.39	TMAX= 2.22	ANGLE= -28.4		
BOTT:	SMAX= 1.39	SMIN= -3.05	TMAX= 2.22	ANGLE= -28.4		
64	1	-.05	.02	.48	-.15	-.31
		4.71	4.71	.00	.00	.00
TOP :	SMAX= 3.66	SMIN= -1.65	TMAX= 2.66	ANGLE= -22.3		
BOTT:	SMAX= 1.65	SMIN= -3.66	TMAX= 2.66	ANGLE= -22.3		
65	1	-.02	.00	.60	-.25	-.25
		5.24	5.24	.00	.00	.00
TOP :	SMAX= 4.01	SMIN= -1.92	TMAX= 2.97	ANGLE= -15.1		
BOTT:	SMAX= 1.92	SMIN= -4.01	TMAX= 2.97	ANGLE= -15.1		
66	1	.00	.01	.66	-.30	-.13
		5.27	5.27	.00	.00	.00
TOP :	SMAX= 4.04	SMIN= -1.92	TMAX= 2.98	ANGLE= -7.7		
BOTT:	SMAX= 1.92	SMIN= -4.04	TMAX= 2.98	ANGLE= -7.7		
67	1	.05	.06	.64	-.21	.01
		4.61	4.61	.00	.00	.00
TOP :	SMAX= 3.85	SMIN= -1.26	TMAX= 2.56	ANGLE= .5		
BOTT:	SMAX= 1.26	SMIN= -3.85	TMAX= 2.56	ANGLE= .5		
68	1	.06	.18	.64	.06	.12
		3.91	3.91	.00	.00	.00
TOP :	SMAX= 4.02	SMIN= .22	TMAX= 1.90	ANGLE= 11.5		
BOTT:	SMAX= -.22	SMIN= -4.02	TMAX= 1.90	ANGLE= 11.5		
69	1	.63	.48	.71	.64	.27
		4.95	4.95	.00	.00	.00
TOP :	SMAX= 5.69	SMIN= 2.39	TMAX= 1.65	ANGLE= 41.1		
BOTT:	SMAX= -2.39	SMIN= -5.69	TMAX= 1.65	ANGLE= 41.1		
70	1	.61	-.60	.58	.62	.39
		5.44	5.44	.00	.00	.00
TOP :	SMAX= 5.96	SMIN= 1.28	TMAX= 2.34	ANGLE= -43.4		
BOTT:	SMAX= -1.28	SMIN= -5.96	TMAX= 2.34	ANGLE= -43.4		
71	1	.06	-.23	.26	.10	.40
		4.33	4.33	.00	.00	.00
TOP :	SMAX= 3.48	SMIN= -1.37	TMAX= 2.42	ANGLE= 39.3		
BOTT:	SMAX= 1.37	SMIN= -3.48	TMAX= 2.42	ANGLE= 39.3		
72	1	-.09	-.04	.06	-.01	.26
		2.69	2.69	.00	.00	.00
TOP :	SMAX= 1.70	SMIN= -1.40	TMAX= 1.55	ANGLE= 41.3		
BOTT:	SMAX= 1.40	SMIN= -1.70	TMAX= 1.55	ANGLE= 41.3		

By: DH
Date: 12/97
Chkd by: MM
Chkd date: 1/12/97
Client: BHI
BHI Job No. 22192
MW Job No.
1166095.01010102
Desc:
Loading/Unloading Slab
Calc No.:
0600X-CA-C0014
Rev No.: 0

S18

ELEMENT FORCES FORCE,LENGTH UNITS= KIP FEET

FORCE OR STRESS = FORCE/WIDTH/THICK, MOMENT = FORCE-LENGTH/WIDTH

ELEMENT	LOAD	QX / VONT	QY / VONB	MX / FX	MY / FY	MXY / FXY
73	1	-.14	.00	.08	-.02	-.17
		1.81	1.81	.00	.00	.00
TOP :	SMAX=	1.23	SMIN= -.85	TMAX=	1.04	ANGLE= -37.2
BOTT:	SMAX=	.85	SMIN= -1.23	TMAX=	1.04	ANGLE= -37.2
74	1	-.02	.02	.14	-.06	-.20
		2.39	2.39	.00	.00	.00
TOP :	SMAX=	1.62	SMIN= -1.13	TMAX=	1.37	ANGLE= -31.6
BOTT:	SMAX=	1.13	SMIN= -1.62	TMAX=	1.37	ANGLE= -31.6
75	1	-.06	.03	.24	-.09	-.20
		2.75	2.75	.00	.00	.00
TOP :	SMAX=	2.00	SMIN= -1.13	TMAX=	1.57	ANGLE= -25.1
BOTT:	SMAX=	1.13	SMIN= -2.00	TMAX=	1.57	ANGLE= -25.1
76	1	-.07	.02	.34	-.15	-.20
		3.30	3.30	.00	.00	.00
TOP :	SMAX=	2.46	SMIN= -1.29	TMAX=	1.87	ANGLE= -19.4
BOTT:	SMAX=	1.29	SMIN= -2.46	TMAX=	1.87	ANGLE= -19.4
77	1	-.07	.01	.43	-.20	-.16
		3.77	3.77	.00	.00	.00
TOP :	SMAX=	2.83	SMIN= -1.45	TMAX=	2.14	ANGLE= -13.7
BOTT:	SMAX=	1.45	SMIN= -2.83	TMAX=	2.14	ANGLE= -13.7
78	1	-.05	.04	.50	-.21	-.10
		3.95	3.95	.00	.00	.00
TOP :	SMAX=	3.11	SMIN= -1.35	TMAX=	2.23	ANGLE= -8.0
BOTT:	SMAX=	1.35	SMIN= -3.11	TMAX=	2.23	ANGLE= -8.0
79	1	-.04	.09	.54	-.10	-.03
		3.55	3.55	.00	.00	.00
TOP :	SMAX=	3.22	SMIN= -.60	TMAX=	1.91	ANGLE= -2.4
BOTT:	SMAX=	.60	SMIN= -3.22	TMAX=	1.91	ANGLE= -2.4
80	1	.07	.17	.62	.25	.14
		3.56	3.56	.00	.00	.00
TOP :	SMAX=	4.00	SMIN= 1.21	TMAX=	1.40	ANGLE= 18.8
BOTT:	SMAX=	-1.21	SMIN= -4.00	TMAX=	1.40	ANGLE= 18.8
81	1	-.47	.53	.76	.78	.27
		5.42	5.42	.00	.00	.00
TOP :	SMAX=	6.25	SMIN= 2.98	TMAX=	1.64	ANGLE= 90.0
BOTT:	SMAX=	-2.98	SMIN= -6.25	TMAX=	1.64	ANGLE= 90.0
82	1	-.55	-.63	.67	.62	.24
		4.60	4.60	.00	.00	.00
TOP :	SMAX=	5.30	SMIN= 2.41	TMAX=	1.45	ANGLE= 41.7
BOTT:	SMAX=	-2.41	SMIN= -5.30	TMAX=	1.45	ANGLE= 41.7
83	1	.01	-.24	.34	.05	.17
		2.58	2.58	.00	.00	.00
TOP :	SMAX=	2.51	SMIN= -.13	TMAX=	1.32	ANGLE= 24.3
BOTT:	SMAX=	.13	SMIN= -2.51	TMAX=	1.32	ANGLE= 24.3
84	1	-.13	-.03	.12	-.03	.14
		1.71	1.71	.00	.00	.00
TOP :	SMAX=	1.26	SMIN= -.69	TMAX=	.97	ANGLE= 31.0
BOTT:	SMAX=	.69	SMIN= -1.26	TMAX=	.97	ANGLE= 31.0

By: DH
Date: 12/97
Chkd by: MM
Chkd date: 1/12/97
Client: BHI
BHI Job No. 22192
MW Job No.
1166095.01010102
Desc:
Loading/Unloading Slab
Calc No.:
0600X-CA-C0014
Rev No.: 0

S19

ELEMENT FORCES FORCE,LENGTH UNITS= KIP FEET

FORCE OR STRESS = FORCE/WIDTH/THICK, MOMENT = FORCE-LENGTH/WIDTH

ELEMENT	LOAD	QX / VONT	QY / VONB	MX / FX	MY / FY	MXY / FXY
85	1	-.10	-.01	.02	-.02	-.12
		1.23	1.23	.00	.00	.00
TOP :	SMAX= .72	SMIN= -.70	TMAX= .71	ANGLE= -40.3		
BOTT:	SMAX= .70	SMIN= -.72	TMAX= .71	ANGLE= -40.3		
86	1	-.02	.01	.07	-.07	-.14
		1.60	1.60	.00	.00	.00
TOP :	SMAX= .90	SMIN= -.95	TMAX= .92	ANGLE= -31.6		
BOTT:	SMAX= .95	SMIN= -.90	TMAX= .92	ANGLE= -31.6		
87	1	-.05	.01	.13	-.11	-.13
		1.81	1.81	.00	.00	.00
TOP :	SMAX= 1.08	SMIN= -1.01	TMAX= 1.04	ANGLE= -23.4		
BOTT:	SMAX= 1.01	SMIN= -1.08	TMAX= 1.04	ANGLE= -23.4		
88	1	-.07	.01	.18	-.16	-.12
		2.17	2.17	.00	.00	.00
TOP :	SMAX= 1.34	SMIN= -1.16	TMAX= 1.25	ANGLE= -17.7		
BOTT:	SMAX= 1.16	SMIN= -1.34	TMAX= 1.25	ANGLE= -17.7		
89	1	-.08	.01	.24	-.19	-.10
		2.47	2.47	.00	.00	.00
TOP :	SMAX= 1.58	SMIN= -1.27	TMAX= 1.42	ANGLE= -12.4		
BOTT:	SMAX= 1.27	SMIN= -1.58	TMAX= 1.42	ANGLE= -12.4		
90	1	-.07	.06	.30	-.17	-.05
		2.54	2.54	.00	.00	.00
TOP :	SMAX= 1.84	SMIN= -1.06	TMAX= 1.45	ANGLE= -6.3		
BOTT:	SMAX= 1.06	SMIN= -1.84	TMAX= 1.45	ANGLE= -6.3		
91	1	-.10	.17	.41	-.01	.02
		2.51	2.51	.00	.00	.00
TOP :	SMAX= 2.48	SMIN= -.07	TMAX= 1.27	ANGLE= 2.1		
BOTT:	SMAX= .07	SMIN= -2.48	TMAX= 1.27	ANGLE= 2.1		
92	1	.27	.42	.53	.47	.17
		3.46	3.46	.00	.00	.00
TOP :	SMAX= 4.00	SMIN= 1.98	TMAX= 1.01	ANGLE= 39.9		
BOTT:	SMAX= -1.98	SMIN= -4.00	TMAX= 1.01	ANGLE= 39.9		
93	1	.13	-.41	.46	.72	.21
		4.39	4.39	.00	.00	.00
TOP :	SMAX= 5.04	SMIN= 2.05	TMAX= 1.50	ANGLE= -29.6		
BOTT:	SMAX= -2.05	SMIN= -5.04	TMAX= 1.50	ANGLE= -29.6		
94	1	-.27	-.17	.23	.36	.09
		2.11	2.11	.00	.00	.00
TOP :	SMAX= 2.43	SMIN= 1.08	TMAX= .67	ANGLE= -27.5		
BOTT:	SMAX= -1.08	SMIN= -2.43	TMAX= .67	ANGLE= -27.5		
95	1	-.10	-.11	.06	.02	.01
		.31	.31	.00	.00	.00
TOP :	SMAX= .35	SMIN= .09	TMAX= .13	ANGLE= 15.7		
BOTT:	SMAX= -.09	SMIN= -.35	TMAX= .13	ANGLE= 15.7		
96	1	-.13	-.01	-.02	-.02	.05
		.49	.49	.00	.00	.00
TOP :	SMAX= .16	SMIN= -.40	TMAX= .28	ANGLE= 90.0		
BOTT:	SMAX= .40	SMIN= -.16	TMAX= .28	ANGLE= 90.0		

By: DH
Date: 12/97
Chkd by: MM
Chkd date: 1/12/97
Client: BHI
BHI Job No. 22192
MW Job No.
1166095.01010102
Desc:
Loading/Unloading Slab
Calc No.:
0600X-CA-C0014
Rev No.: 0

S20

ELEMENT FORCES FORCE,LENGTH UNITS= KIP FEET
FORCE OR STRESS = FORCE/WIDTH/THICK, MOMENT = FORCE-LENGTH/WIDTH

ELEMENT	LOAD	QX / VONT	QY / VONB	MX / FX	MY / FY	MXY / FXY
97	1	-.07	-.01	-.02	-.02	-.08
		.84	.84	.00	.00	.00
TOP :	SMAX= .35	SMIN= -.60	TMAX= .48	ANGLE= 90.0		
BOTT:	SMAX= .60	SMIN= -.35	TMAX= .48	ANGLE= 90.0		
98	1	-.01	-.01	.00	-.08	-.09
		1.07	1.07	.00	.00	.00
TOP :	SMAX= .38	SMIN= -.83	TMAX= .61	ANGLE= -33.5		
BOTT:	SMAX= .83	SMIN= -.38	TMAX= .61	ANGLE= -33.5		
99	1	-.04	-.01	.03	-.12	-.09
		1.23	1.23	.00	.00	.00
TOP :	SMAX= .41	SMIN= -.97	TMAX= .69	ANGLE= -23.8		
BOTT:	SMAX= .97	SMIN= -.41	TMAX= .69	ANGLE= -23.8		
100	1	-.05	-.01	.05	-.17	-.08
		1.47	1.47	.00	.00	.00
TOP :	SMAX= .48	SMIN= -1.17	TMAX= .82	ANGLE= -18.5		
BOTT:	SMAX= 1.17	SMIN= -.48	TMAX= .82	ANGLE= -18.5		
101	1	-.06	.01	.07	-.18	-.07
		1.53	1.53	.00	.00	.00
TOP :	SMAX= .52	SMIN= -1.21	TMAX= .86	ANGLE= -13.9		
BOTT:	SMAX= 1.21	SMIN= -.52	TMAX= .86	ANGLE= -13.9		
102	1	-.08	.05	.08	-.14	-.03
		1.18	1.18	.00	.00	.00
TOP :	SMAX= .52	SMIN= -.83	TMAX= .68	ANGLE= -6.5		
BOTT:	SMAX= .83	SMIN= -.52	TMAX= .68	ANGLE= -6.5		
103	1	-.05	.14	.15	.07	.08
		1.11	1.11	.00	.00	.00
TOP :	SMAX= 1.16	SMIN= .12	TMAX= .52	ANGLE= 31.7		
BOTT:	SMAX= -.12	SMIN= -1.16	TMAX= .52	ANGLE= 31.7		
104	1	-.47	.40	.24	.52	.13
		3.03	3.03	.00	.00	.00
TOP :	SMAX= 3.43	SMIN= 1.12	TMAX= 1.15	ANGLE= -21.8		
BOTT:	SMAX= -1.12	SMIN= -3.43	TMAX= 1.15	ANGLE= -21.8		
105	1	-.53	-.41	.15	.55	.07
		3.01	3.01	.00	.00	.00
TOP :	SMAX= 3.35	SMIN= .85	TMAX= 1.25	ANGLE= -9.2		
BOTT:	SMAX= -.85	SMIN= -3.35	TMAX= 1.25	ANGLE= -9.2		
106	1	-.14	-.18	-.07	.17	-.03
		1.34	1.34	.00	.00	.00
TOP :	SMAX= 1.06	SMIN= -.45	TMAX= .76	ANGLE= 7.9		
BOTT:	SMAX= .45	SMIN= -1.06	TMAX= .76	ANGLE= 7.9		
107	1	-.11	-.07	-.20	.01	-.04
		1.32	1.32	.00	.00	.00
TOP :	SMAX= .10	SMIN= -1.27	TMAX= .68	ANGLE= 9.5		
BOTT:	SMAX= 1.27	SMIN= -.10	TMAX= .68	ANGLE= 9.5		
108	1	-.09	.01	-.25	-.01	-.01
		1.49	1.49	.00	.00	.00
TOP :	SMAX= -.06	SMIN= -1.52	TMAX= .73	ANGLE= 2.0		
BOTT:	SMAX= 1.52	SMIN= .06	TMAX= .73	ANGLE= 2.0		

sht 21 of 27

By: DH
Date: 12/97
Chkd by: MM
Chkd date: 1/12/97
Client: BHI
BHI Job No. 22192
MW Job No.
1166095.01010102
Desc:
Loading/Unloading Slab
Calc No.:
0600X-CA-C0014
Rev No.: 0

S21

ELEMENT FORCES FORCE,LENGTH UNITS= KIP FEET
FORCE OR STRESS = FORCE/WIDTH/THICK, MOMENT = FORCE-LENGTH/WIDTH

ELEMENT	LOAD	QX / VONT	QY / VONB	MX / FX	MY / FY	MXY / FXY
109	1	-.04	-.01	-.04	-.02	-.05
		.61	.61	.00	.00	.00
TOP :	SMAX= .14	SMIN= -.53	TMAX= .34	ANGLE= 38.2		
BOTT:	SMAX= .53	SMIN= -.14	TMAX= .34	ANGLE= 38.2		
110	1	.00	-.02	-.03	-.08	-.07
		.81	.81	.00	.00	.00
TOP :	SMAX= .08	SMIN= -.76	TMAX= .42	ANGLE= -35.5		
BOTT:	SMAX= .76	SMIN= -.08	TMAX= .42	ANGLE= -35.5		
111	1	-.02	-.02	-.03	-.14	-.07
		1.03	1.03	.00	.00	.00
TOP :	SMAX= .03	SMIN= -1.01	TMAX= .52	ANGLE= -25.5		
BOTT:	SMAX= 1.01	SMIN= -.03	TMAX= .52	ANGLE= -25.5		
112	1	-.03	-.02	-.03	-.18	-.08
		1.27	1.27	.00	.00	.00
TOP :	SMAX= -.01	SMIN= -1.28	TMAX= .63	ANGLE= -23.0		
BOTT:	SMAX= 1.28	SMIN= .01	TMAX= .63	ANGLE= -23.0		
113	1	-.04	.00	-.06	-.18	-.07
		1.24	1.24	.00	.00	.00
TOP :	SMAX= -.14	SMIN= -1.30	TMAX= .58	ANGLE= -24.7		
BOTT:	SMAX= 1.30	SMIN= .14	TMAX= .58	ANGLE= -24.7		
114	1	-.05	.06	-.08	-.09	-.04
		.67	.67	.00	.00	.00
TOP :	SMAX= -.25	SMIN= -.76	TMAX= .26	ANGLE= 90.0		
BOTT:	SMAX= .76	SMIN= .25	TMAX= .26	ANGLE= 90.0		
115	1	.03	.15	-.13	.16	.05
		1.57	1.57	.00	.00	.00
TOP :	SMAX= .99	SMIN= -.83	TMAX= .91	ANGLE= -10.0		
BOTT:	SMAX= .83	SMIN= -.99	TMAX= .91	ANGLE= -10.0		
116	1	-.08	-.13	-.22	.39	.07
		3.28	3.28	.00	.00	.00
TOP :	SMAX= 2.37	SMIN= -1.37	TMAX= 1.87	ANGLE= -6.7		
BOTT:	SMAX= 1.37	SMIN= -2.37	TMAX= 1.87	ANGLE= -6.7		
117	1	-.20	-.06	-.33	.31	-.03
		3.34	3.34	.00	.00	.00
TOP :	SMAX= 1.87	SMIN= -1.99	TMAX= 1.93	ANGLE= 2.8		
BOTT:	SMAX= 1.99	SMIN= -1.87	TMAX= 1.93	ANGLE= 2.8		
118	1	-.10	-.06	-.40	.10	-.10
		2.94	2.94	.00	.00	.00
TOP :	SMAX= .72	SMIN= -2.51	TMAX= 1.62	ANGLE= 11.5		
BOTT:	SMAX= 2.51	SMIN= -.72	TMAX= 1.62	ANGLE= 11.5		
119	1	-.06	-.02	-.42	.01	-.07
		2.68	2.68	.00	.00	.00
TOP :	SMAX= .14	SMIN= -2.60	TMAX= .37	ANGLE= 9.3		
BOTT:	SMAX= 2.60	SMIN= -.14	TMAX= .37	ANGLE= 9.3		
120	1	-.04	.00	-.44	.00	-.03
		2.65	2.65	.00	.00	.00
TOP :	SMAX= .02	SMIN= -2.64	TMAX= .33	ANGLE= 3.9		
BOTT:	SMAX= 2.64	SMIN= -.02	TMAX= .33	ANGLE= 3.9		

By: DH
Date: 12/97
Chkd by: MM
Chkd date: 1/12/97
Client: BHI
BHI Job No. 22192
MW Job No.
1166095.01010102
Desc:
Loading/Unloading Slab
Calc No.:
0600X-CA-C0014
Rev No.: 0

S 22

ELEMENT FORCES FORCE,LENGTH UNITS= KIP FEET

FORCE OR STRESS = FORCE/WIDTH/THICK, MOMENT = FORCE-LENGTH/WIDTH

ELEMENT	LOAD	QX / VONT	QY / VONB	MX / FX	MY / FY	MXY / FXY
121	1	-.02	-.02	-.04	-.02	-.04
		.44	.44	.00	.00	.00
TOP :	SMAX= .03	SMIN= -.42	TMAX= .23	ANGLE= 36.8		
BOTT:	SMAX= .42	SMIN= -.03	TMAX= .23	ANGLE= 36.8		
122	1	.01	-.03	-.04	-.09	-.05
		.71	.71	.00	.00	.00
TOP :	SMAX= -.03	SMIN= -.73	TMAX= .35	ANGLE= -32.4		
BOTT:	SMAX= .73	SMIN= .03	TMAX= .35	ANGLE= -32.4		
123	1	-.01	-.04	-.04	-.16	-.07
		1.09	1.09	.00	.00	.00
TOP :	SMAX= -.07	SMIN= -1.12	TMAX= .53	ANGLE= -24.8		
BOTT:	SMAX= 1.12	SMIN= .07	TMAX= .53	ANGLE= -24.8		
124	1	-.01	-.04	-.06	-.21	-.09
		1.48	1.48	.00	.00	.00
TOP :	SMAX= -.09	SMIN= -1.52	TMAX= .72	ANGLE= -25.7		
BOTT:	SMAX= 1.52	SMIN= .09	TMAX= .72	ANGLE= -25.7		
125	1	-.01	-.02	-.10	-.20	-.13
		1.68	1.68	.00	.00	.00
TOP :	SMAX= -.09	SMIN= -1.73	TMAX= .82	ANGLE= -34.3		
BOTT:	SMAX= 1.73	SMIN= .09	TMAX= .82	ANGLE= -34.3		
126	1	.01	.01	-.17	-.06	-.13
		1.65	1.65	.00	.00	.00
TOP :	SMAX= .16	SMIN= -1.56	TMAX= .86	ANGLE= 33.0		
BOTT:	SMAX= 1.56	SMIN= -.16	TMAX= .86	ANGLE= 33.0		
127	1	-.07	.08	-.25	.24	-.08
		2.69	2.69	.00	.00	.00
TOP :	SMAX= 1.53	SMIN= -1.58	TMAX= 1.55	ANGLE= 8.7		
BOTT:	SMAX= 1.58	SMIN= -1.53	TMAX= 1.55	ANGLE= 8.7		
128	1	-.09	-.12	-.35	.33	-.03
		3.57	3.57	.00	.00	.00
TOP :	SMAX= 1.98	SMIN= -2.13	TMAX= 2.06	ANGLE= 2.8		
BOTT:	SMAX= 2.13	SMIN= -1.98	TMAX= 2.06	ANGLE= 2.8		
129	1	.00	-.08	-.44	.17	-.06
		3.33	3.33	.00	.00	.00
TOP :	SMAX= 1.06	SMIN= -2.67	TMAX= 1.87	ANGLE= 5.8		
BOTT:	SMAX= 2.67	SMIN= -1.06	TMAX= 1.87	ANGLE= 5.8		
130	1	.01	-.06	-.47	.08	-.11
		3.32	3.32	.00	.00	.00
TOP :	SMAX= .61	SMIN= -2.97	TMAX= 1.79	ANGLE= 11.1		
BOTT:	SMAX= 2.97	SMIN= -.61	TMAX= 1.79	ANGLE= 11.1		
131	1	.07	-.01	-.48	.07	-.08
		3.20	3.20	.00	.00	.00
TOP :	SMAX= .50	SMIN= -2.92	TMAX= 1.71	ANGLE= 8.1		
BOTT:	SMAX= 2.92	SMIN= -.50	TMAX= 1.71	ANGLE= 8.1		
132	1	.05	.01	-.48	.04	-.03
		3.02	3.02	.00	.00	.00
TOP :	SMAX= .28	SMIN= -2.88	TMAX= 1.58	ANGLE= 2.9		
BOTT:	SMAX= 2.88	SMIN= -.28	TMAX= 1.58	ANGLE= 2.9		

Sht 23 of 27

By: DH
Date: 12/97
Chkd by: MM
Chkd date: 1/12/97
Client: BHI
BHI Job No. 22192
MW Job No.
1166095.01010102
Desc:
Loading/Unloading Slab
Calc No.:
0600X-CA-C0014
Rev No.: 0

S23

ELEMENT FORCES FORCE,LENGTH UNITS= KIP FEET

FORCE OR STRESS = FORCE/WIDTH/THICK, MOMENT = FORCE-LENGTH/WIDTH

ELEMENT	LOAD	QX / VONT	QY / VONB	MX / FX	MY / FY	MXY / FXY
133	1	.00	-.01	-.02	-.03	-.02
		.22	.22	.00	.00	.00
TOP :	SMAX= -.03	SMIN= -.23	TMAX= .10	ANGLE= 90.0		
BOTT:	SMAX= .23	SMIN= .03	TMAX= .10	ANGLE= 90.0		
134	1	.01	-.01	-.01	-.10	-.03
		.65	.65	.00	.00	.00
TOP :	SMAX= -.01	SMIN= -.66	TMAX= .32	ANGLE= -19.1		
BOTT:	SMAX= .66	SMIN= .01	TMAX= .32	ANGLE= -19.1		
135	1	.01	.00	-.01	-.18	-.05
		1.15	1.15	.00	.00	.00
TOP :	SMAX= .02	SMIN= -1.14	TMAX= .58	ANGLE= -16.3		
BOTT:	SMAX= 1.14	SMIN= -.02	TMAX= .58	ANGLE= -16.3		
136	1	.01	.03	-.02	-.24	-.08
		1.63	1.63	.00	.00	.00
TOP :	SMAX= .06	SMIN= -1.59	TMAX= .83	ANGLE= -18.3		
BOTT:	SMAX= 1.59	SMIN= -.06	TMAX= .83	ANGLE= -18.3		
137	1	.01	.12	-.01	-.23	-.13
		1.93	1.93	.00	.00	.00
TOP :	SMAX= .28	SMIN= -1.77	TMAX= 1.03	ANGLE= -25.0		
BOTT:	SMAX= 1.77	SMIN= -.28	TMAX= 1.03	ANGLE= -25.0		
138	1	.07	.30	-.07	-.03	-.20
		2.07	2.07	.00	.00	.00
TOP :	SMAX= .88	SMIN= -1.48	TMAX= 1.18	ANGLE= 42.1		
BOTT:	SMAX= 1.48	SMIN= -.88	TMAX= 1.18	ANGLE= 42.1		
139	1	.23	.27	-.23	.33	-.17
		3.41	3.41	.00	.00	.00
TOP :	SMAX= 2.27	SMIN= -1.66	TMAX= 1.96	ANGLE= 15.4		
BOTT:	SMAX= 1.66	SMIN= -2.27	TMAX= 1.96	ANGLE= 15.4		
140	1	.24	-.10	-.26	.38	-.02
		3.31	3.31	.00	.00	.00
TOP :	SMAX= 2.27	SMIN= -1.54	TMAX= 1.90	ANGLE= 1.6		
BOTT:	SMAX= 1.54	SMIN= -2.27	TMAX= 1.90	ANGLE= 1.6		
141	1	.17	-.04	-.18	.16	-.05
		1.83	1.83	.00	.00	.00
TOP :	SMAX= .99	SMIN= -1.13	TMAX= 1.06	ANGLE= 8.5		
BOTT:	SMAX= 1.13	SMIN= -.99	TMAX= 1.06	ANGLE= 8.5		
142	1	.18	.10	-.19	.10	-.11
		1.91	1.91	.00	.00	.00
TOP :	SMAX= .81	SMIN= -1.37	TMAX= 1.09	ANGLE= 18.6		
BOTT:	SMAX= 1.37	SMIN= -.81	TMAX= 1.09	ANGLE= 18.6		
143	1	.29	.14	-.28	.19	-.10
		2.68	2.68	.00	.00	.00
TOP :	SMAX= 1.27	SMIN= -1.81	TMAX= 1.54	ANGLE= 11.2		
BOTT:	SMAX= 1.81	SMIN= -1.27	TMAX= 1.54	ANGLE= 11.2		
144	1	.21	-.17	-.21	.14	.05
		1.88	1.88	.00	.00	.0

MONTGOMERY WATSON

BY DMH DATE 12/97 CLIENT DOE SHEET S 24 OF 27
CHKD. BY MC DESCRIPTION ERDF PHASE 2 JOB NO. 1166095.01010102
CHKD Date 1/12/98 BHI Job No.: 22192 Calc No: 0600X-CA-C0014 Rev 0

SUMMARY OF MAXIMUM FORCES

1. $M_{x\ max} = -4.98$ 'k/ft @ ELEMENT 19
2. $M_{y\ max} = -4.14$ 'k/ft @ ELEMENT 5
3. $Q_{x\ max} = -4.69$ k/ft @ ELEMENT 7
4. $Q_{y\ max} = 5.36$ k/ft @ ELEMENT 6

USE LOAD FACTORS OF 1.7

$$M_u = 1.7\, M_x = 1.7(4.98\ \text{'k/ft}) = 8.47\ \text{'k/ft}$$

$$V_u = 1.7\, Q_y = 1.7(5.36\ \text{k/ft}) = 9.11\ \text{k/ft}$$

MONTGOMERY WATSON

BY: DNH DATE: Dec-97 CLIENT: DOE SHEET: S25 of 27

CHKD: MJ DESCRIPTION: ERDF phase 2 JOB NO: 1166095.01010102

DESIGN TASK: LOADING / UNLOADING SLAB

CHKD Date 1/14/98 BHI JOB No: 22192 Calc No: 06000X-CA-C0014 Rev 0

Design for ... beam, slab, wall ? **slab**

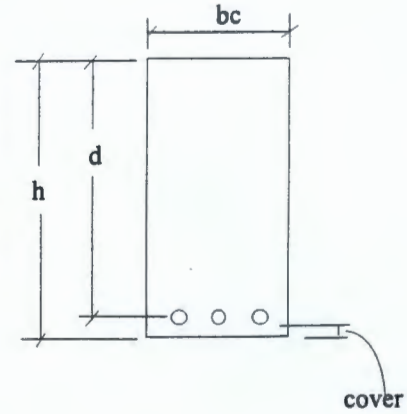

Loads, Properties and Geometry

Service Moment, M (ft-kips) =	**4.98**	f'c (psi) =	**4000**
Bending Moment, Mu (ft-kips) =	**8.47**	fy (psi) =	**60000**
Shear, Vu (kips) =	**9.11**	Es (psi) =	**29000000**
Compression flange width, bc (in) =	**12**	Ec (psi) =	**3604997**
Thickness of wall or slab, h (in) =	**12**	phi, for Bending =	**0.9**
Cover (in) =	**3**	phi, for Shear =	**0.85**
Depth to reinforcing, d (in) =	**8.5**	n = Es/Ec =	8.04
		beta1 =	0.85

Shear Capacity and Reinforcement (Based on ACI 318-11.3.1.1)

Note: For slabs, shear reinforcement is not required as long as Vu < phi*Vc

Concrete Shear Capacity, phi*Vc (kips) =	**10.97**	
Vu / phi Vc =	**0.83**	**Vu < phi*Vc , No Shear Reinforcement is Req'd**
Max spacing of stirrups if in a frame member (in) =	**N/A**	Seismic requirements - See ACI 318-21.3.3.2
Maximum spacing of stirrups (in) =	**N/A**	Non-Seismic loads - ACI 318-11.5.4
Minimum required shear reinforcement, (in^2/ft) =	**N/A**	See ACI 318-11.5.5.3 ; 11.5.6.2
Required U stirrup spacing, (in) =	**N/A**	
Stirrup Bar size =	**0**	

Bending

Ru = Mu/(phi*bc*d^2) =	130.3	
RHO = (.85*f'c/fy)*{1-[1-(2*Ru/(.85*f'c))]^.5} =	0.002214	
Area steel required for bending = RHO*bc*d =	**0.23**	in^2
Bar number size =	**5**	
Spacing of bars (in) =	**12**	
Area steel provided, As =	**0.31**	in^2

rho = As\bd = **0.00304** **... rho Min < As/bd < rho Max - OK**

As Min =	0.30	in^2	rho Min =	0.00295
As Max =	2.18	in^2	rho Max =	0.02138

Cracking

note: adjust the cover to a maximum of 2-inches in computing cracking (per ACI 350).

Number of bars per foot =	1.00	
dc = cover (2 max) + 1/2 Bar Dia =	2.31	in
Cracked section C.G. (from compression fiber) =	1.68	in
fs = Ms / (As*moment arm) =	24.28	ksi
Ae = 2*(h-d-(portion of cover exceeding 2"))*bc =	60.00	
A = Ae / (number of bars) =	60.00	
Z = fs*(dc*A)^(1/3) =	**125.7**	

Z< 95 for extreme exposures
Z< 115 for hydraulic structures
Z< 145 for exterior exposure
Z< 175 interior exposure

MONTGOMERY WATSON

BY DMH DATE 12/97 CLIENT DOE SHEET S 26 OF 27

CHKD. BY AA DESCRIPTION ERDF PHASE 2 JOB NO. 11616095.0101010

CHKD Date 1/14/98 BAI Job No. 22192 Calc No: 0600X-CA-C0014 Rev 0

PLATE COVER OVER MANUAL AIR RELEASE VALVE MANHOLE

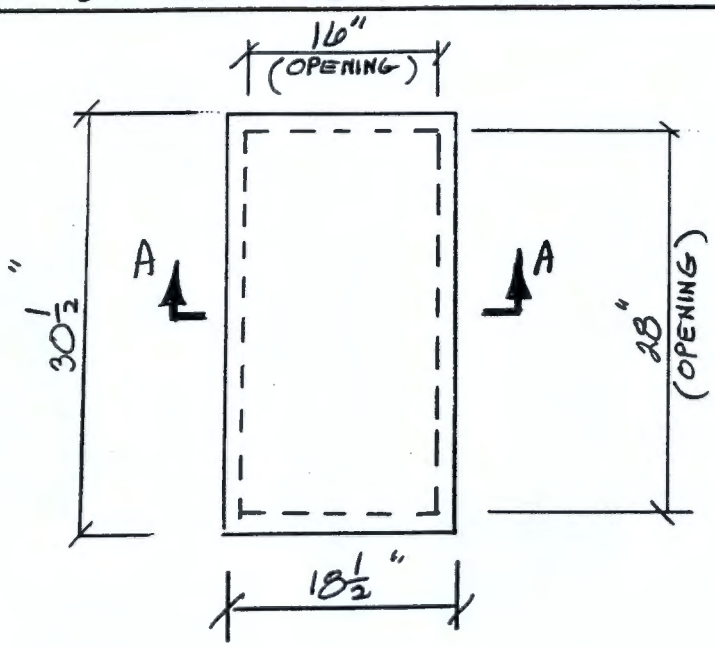

PLAN

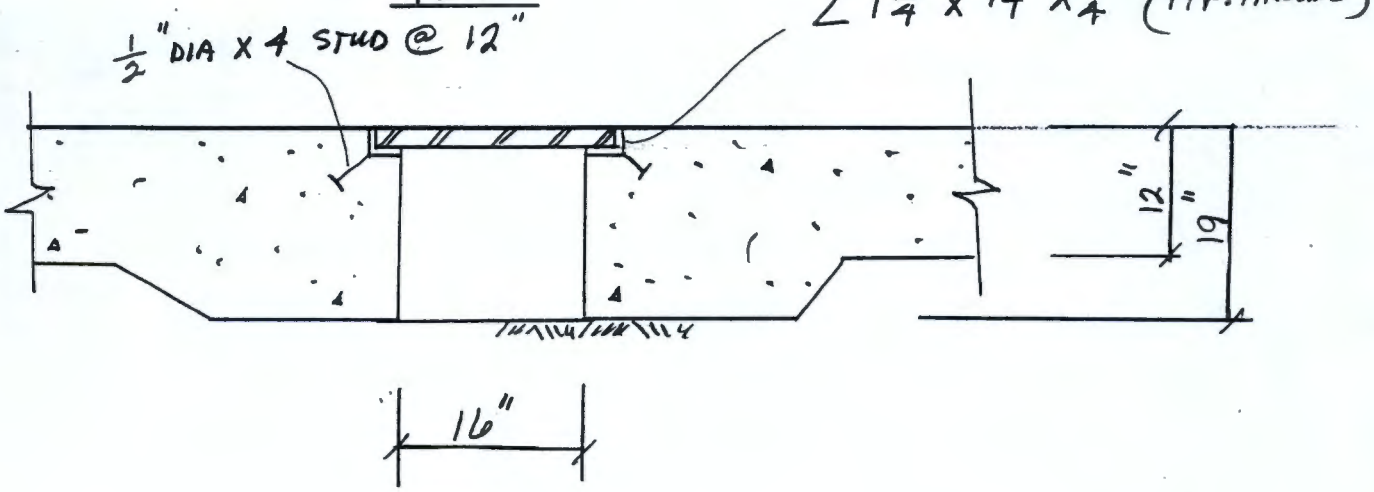

DESIGN PL COVER FOR A 30K WHEEL LOAD FROM THE CONTAINER.

EN 1S (10/78)

MONTGOMERY WATSON

BY DMH DATE 12/97 CLIENT DOE SHEET S27 OF 27

CHKD. BY MV DESCRIPTION ERDF PHASE 2 JOB NO. 1166095.010101C

CHKD DATE: 1/12/98 BHI Job No: 22192 Calc No: 0600X-CA-COMY Rev 0

DESIGN AS A SIMPLE PL WITH THE WHEEL LOAD IN THE CENTER.

USE ROARK 6th ED., TABLE 26, CASE 1c.

TABLE FROM ROARK ...

1c. Uniform over central rectangular area

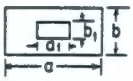

(At center) Max $\sigma = \sigma_b = \frac{\beta W}{t^2}$ where $W = q a_1 b_1$

b_1/b \ a_1/b	$a = b$						$a = 1.4b$						$a = 2b$					
	0	0.2	0.4	0.6	0.8	1.0	0	0.2	0.4	0.8	1.2	1.4	0	0.4	0.8	1.2	1.6	2.0
0		1.82	1.38	1.12	0.93	0.76		2.0	1.55	1.12	0.84	0.75		1.64	1.20	0.97	0.78	0.64
0.2	1.82	1.28	1.08	0.90	0.76	0.63	1.78	1.43	1.23	0.95	0.74	0.64	1.73	1.31	1.03	0.84	0.68	0.57
0.4	1.39	1.07	0.84	0.72	0.62	0.52	1.39	1.13	1.00	0.80	0.62	0.55	1.32	1.08	0.88	0.74	0.60	0.50
0.6	1.12	0.90	0.72	0.60	0.52	0.43	1.10	0.91	0.82	0.68	0.53	0.47	1.04	0.90	0.76	0.64	0.54	0.44
0.8	0.92	0.76	0.62	0.51	0.42	0.36	0.90	0.76	0.68	0.57	0.45	0.40	0.87	0.76	0.63	0.54	0.44	0.38
1.0	0.76	0.63	0.52	0.42	0.35	0.30	0.75	0.62	0.57	0.47	0.38	0.33	0.71	0.61	0.53	0.45	0.38	0.30

(Values from charts of Ref. 8; $\nu = 0.3$.)

$a = 28''$, $b = 16''$, $W = 30^k$

USE A WHEEL CONTACT AREA SUCH THAT $a_1 = 4''$, $b_1 = 4''$

$a/b = 28/16 = 1.75$

$a_1/b = 4/16 = 0.25$

$b_1/b = 4/16 = 0.25$

INTERPOLATE FROM TABLE ... $\beta = 1.428$

ALLOWABLE BENDING $= 0.75 F_y = 0.75(36\text{ksi}) = 27\text{ ksi}$

$t = \sqrt{\beta W / F_b} = \sqrt{1.428(30^k)/27\text{ ksi}} = 1.26''$

USE $1\frac{1}{4}''$ PL (GALVANIZED)

CALCULATION COVER SHEET

Project Title ERDF Cells 3 & 4 Construction **Job No.** 22192
Area Crest Pad Building
Discipline Structural ***Calc. No.** 0600X-CA-C0015
Subject Crest Pad Building (Structural)
Computer Program MS Excell **Program No.** NA

Committed Calculation X **Preliminary** ☐ **Superseded** ☐

Rev.	Sheet Numbers	Originator	Checker	Reviewer	Approval	Date
0	16	DNH	M^2			

SUMMARY OF REVISION

Scanned:	Rev.	Date	Bar Code No.	Rev.	Date	Bar Code No.

*Obtain Calc. No. from DIS.

MONTGOMERY WATSON

BY DNH DATE 11/97 CLIENT DOE SHEET 1 OF 16

CHKD. BY [illegible] DESCRIPTION ERDF PHASE 2 JOB NO. 1161095.01010102

CHKD Date 1/12/98 BHI Job No: 22192 Calc No: 0600X-CA-C0015 Rev 0

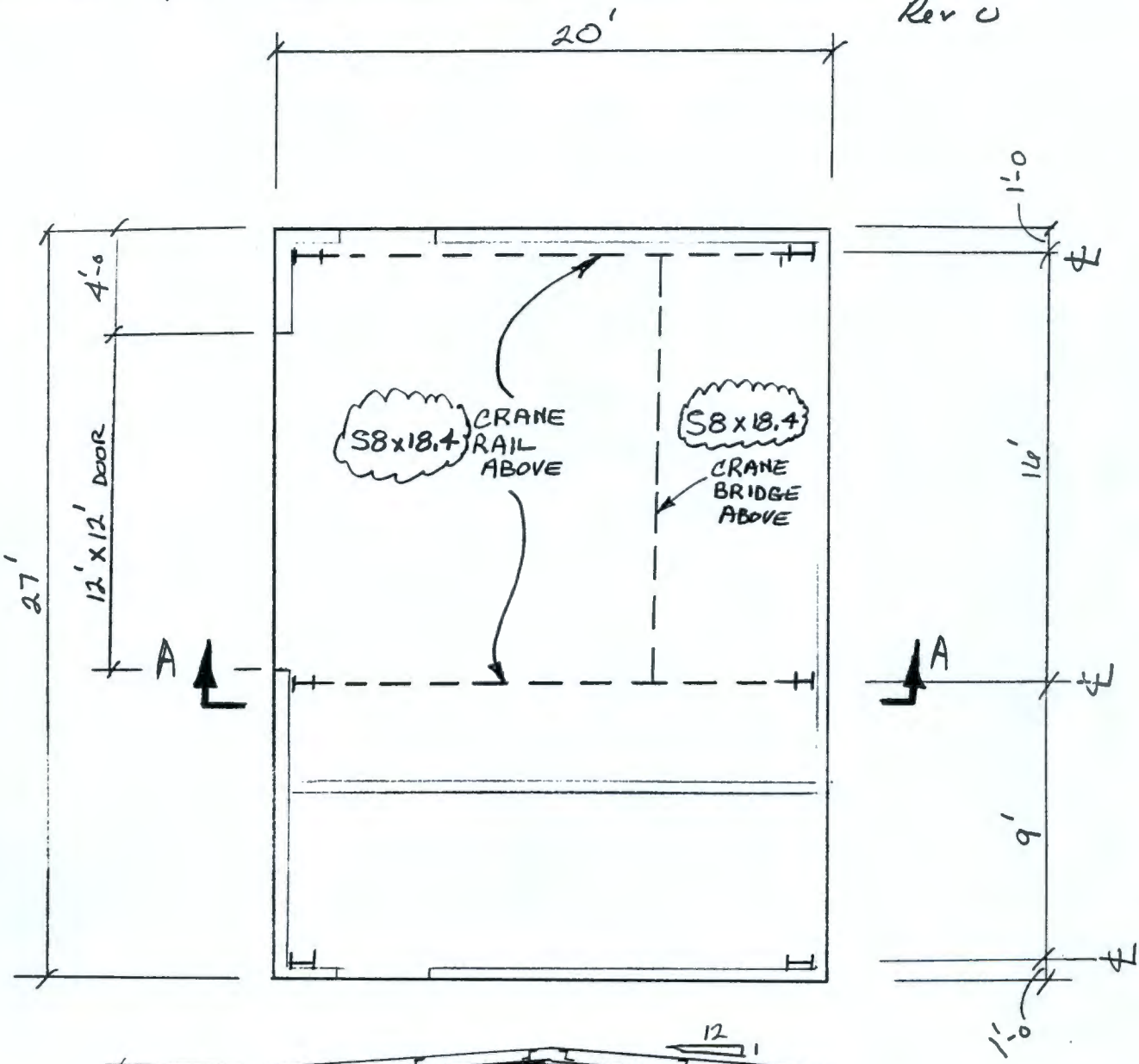

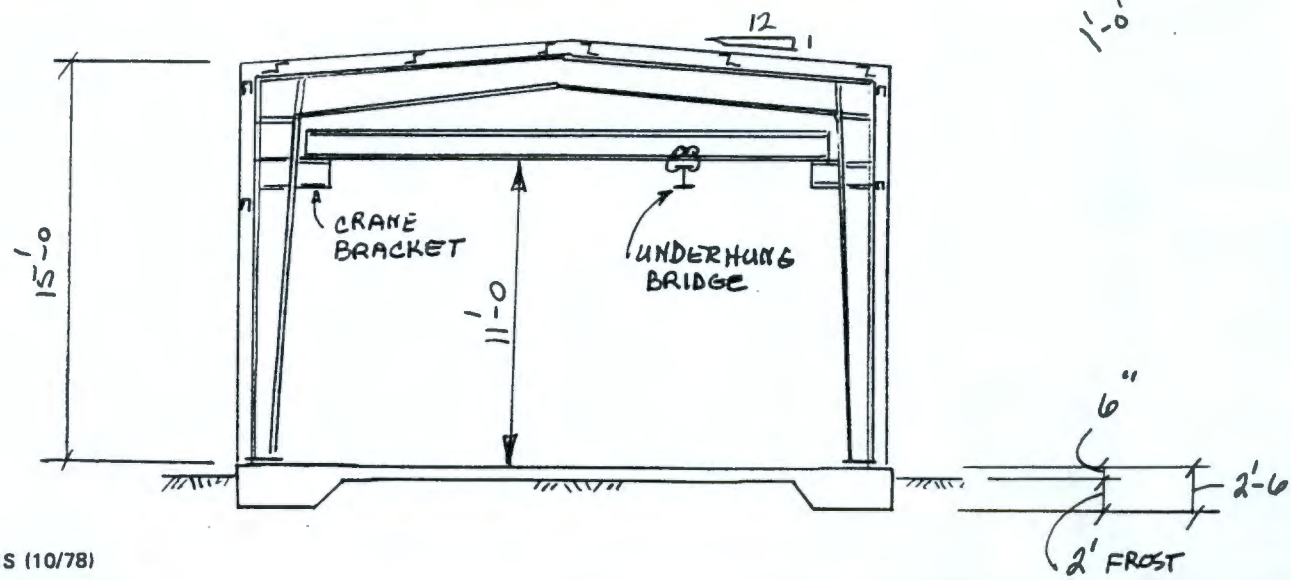

EN 1S (10/78)

MONTGOMERY WATSON

BY DMH DATE 11/97 CLIENT DOE SHEET 2 OF 16

CHKD. BY [illegible] DESCRIPTION ERDF PHASE 2 JOB NO. 1166095.01010102

CHKD Date 1/24/98 BHI Job No: 22192 Calc No: 0600X-CA-C0015 Rev 0

CRANE BRIDGE

USE 1^K LIFTED LOAD

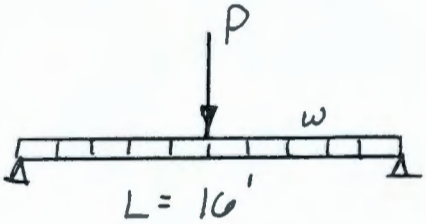

P = LOAD + 10% IMPACT $= 1.1(1^K) = 1.1^K$

w = BM WT $\approx 0.03\ ^K/_{ft}$

$L_u = 16'$

$$M = wL^2/8 + PL/4 = 5.36^{'K}$$

Δ = LIMIT DEFLECTION TO $L/800 = 16' \times 12/800 = 0.24''$

$$I_{REQ'D} = \left[\frac{5wL}{384} + \frac{P}{48}\right]\frac{L^3}{E\Delta}$$

$$I_{REQ'D} = \left[\frac{5(0.03)(16')}{384} + \frac{1^K}{48}\right]\frac{(16')^3\ 1728\ in^3/ft^3}{29000\ ksi\ (0.24'')} = 27.54\ in^4$$

USE S8 x 18.4

SEE NEXT SHT.

MONTGOMERY WATSON

BY:	DNH	**DATE:**	Nov-97	**CLIENT:** DOE	**SHEET:** 3 of 16
CHKD:		**DESCRIPTION:**		ERDF phase 2	**JOB NO:** 1166095.01010102
DESIGN TASK:				crane bridge	

Chkd Date 1/2/98 BHI Job No: 22192 Calc No: 0600X-CA-C0015

Bending + Compression per AISC 9th edition.

Axial load (kip) =		unbraced compression flange length, Lb (ft) =	**16**
Bending about major x-axis, Mx, (ft-k) =	**5.36**	column unbraced length in x-axis, Lx (ft) =	
Bending about minor y-axis, My, (ft-k) =		column unbraced length in y-axis, Ly (ft) =	
		steel yield stress, Fy (ksi) =	**36**

Member : (W, S , HP, or M shapes) **S8x18.4**

A = 5.41	**d** = 8	**tw** = 0.271	**bf** = 4.001
tf = 0.425	r_T = 1.05	**d/Af** = 4.69	**bf/2tf** = 4.7
Ix = 57.6	**Sx** = 14.4	**Iy** = 3.73	**Sy** = 1.86
rx = 3.26	**ry** = 0.831	**h/tw** = 23.7	**d/tw** = 29.5
F'y = 0	**F'''y** = 0		

A). Bending:

1). x-axis: Lc = 4.22 ft Lu = 9.87 ft

a). check compactness: Does the section meet the compactness requirements ? = **NO**

1). flanges are compact.
2). web is compact
3). Lb > Lc , braced length is not compact.

b). allowable stress: Cb = 1

Lb / rT = 182.857

MR = Fbx * Sx = 15.99 ft-k

Fbx = AISC eq. F1-8 = 13.326 ksi

fbx = Mx / Sx = 4.467 ksi

2). y-axis:

Fby = 0.75 * Fy = 27.000 ksi

fby = My / Sy = 0.000 ksi

B). Compression:

Kx = 1 Ky = 1

Kx * Lx / rx = 0.000 Ky * Ly / ry = 0.000

F'ex = ksi F'ey = ksi

controlling KL/r = 0.000

Cc = 126.099

Fa = 21.600 ksi fa = P/A = 0.000 ksi

P(allow) = Fa * A = 116.856 kip

C). Combined Stresses:

Cmx = 1 Cmy = 1

fa / Fa = 0.000 < 0.15

interaction = N/A

MONTGOMERY WATSON

BY DNA DATE 11/97 CLIENT DOE SHEET 4 OF 16

CHKD. BY MZ DESCRIPTION ERDF PHASE 2 JOB NO. 1166095.01010102

Chkd date: 1/12/98 BHI Job No. 22192 Calc No: 06000-CA-0015 Rev 0

CRANE RAIL BEAM

SUPPORTS UNDERHUNG CRANE BRIDGE

P = BRIDGE + LIFTED LOAD (W/ IMPACT) = $0.0184(16'/2) + 1.1(1^K) = 1.247^K$

w = BM WT = $0.02\ ^K/_{ft}$

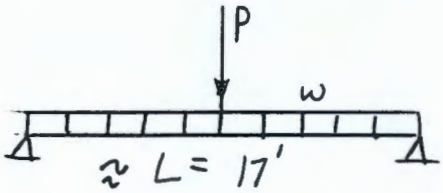

$L_b = 17'$

$$M = wL^2/8 + PL/4 = 6.022^{IK}$$

Δ = LIMIT DEFLECTION TO $\frac{L}{800} = \frac{17' \times 12}{800} = 0.255''$

$$I_{REQ'D} = \left[\frac{5wL}{384} + \frac{P}{48}\right]\frac{L^3}{E\Delta}$$

$$I_{REQ'D} = \left[\frac{5(0.02)17'}{384} + \frac{1.247^K}{48}\right]\frac{(17')^3\ 1728\ in^3/ft^3}{(29000)\ 0.255} = 34.91\ in^4$$

USE S8 x 18.4 SEE NEXT SHT

MAX REACTION FROM CRANE RAIL BEAM

$$V = 0.0184\ (17'/2) + 1.247^K = 1.4^K$$

METAL BLDG SUPPIER TO DESIGN BRACKET.

MONTGOMERY WATSON

BY:	DNH	**DATE:**	Nov-97	**CLIENT:**	DOE	**SHEET:**	5 of 16
CHKD:	MZ	**DESCRIPTION:**		ERDF phase 2		**JOB NO:**	1166095.01010102
DESIGN TASK:				crane rail support beam			

Chkd date: 1/12/98 BHI Job No: 22192 Calc No: 0600X-CA-C0015 Rev 0

Bending + Compression per AISC 9th edition.

Axial load (kip) =		unbraced compression flange length, Lb (ft) =	**17**
Bending about major x-axis, Mx, (ft-k) =	**6.022**	column unbraced length in x-axis, Lx (ft) =	
Bending about minor y-axis, My, (ft-k) =		column unbraced length in y-axis, Ly (ft) =	
		steel yield stress, Fy (ksi) =	**36**

Member : (W, S , HP, or M shapes) **S8x18.4**

A = 5.41	**d** = 8	**tw** = 0.271	**bf** = 4.001
tf = 0.425	r_T = 1.05	**d/Af** = 4.69	**bf/2tf** = 4.7
Ix = 57.6	**Sx** = 14.4	**Iy** = 3.73	**Sy** = 1.86
rx = 3.26	**ry** = 0.831	**h/tw** = 23.7	**d/tw** = 29.5
F'y = 0	**F'''y** = 0		

A). Bending:

1). x-axis: Lc = 4.22 ft Lu = 9.87 ft

a). check compactness: Does the section meet the compactness requirements ? = **NO**

1). flanges are compact.
2). web is compact
3). Lb > Lc , braced length is not compact.

b). allowable stress:

Cb = **1**
Lb / rT = 194.286
MR = Fbx * Sx = 15.05 ft-k
Fbx = AISC eq. F1-8 = 12.542 ksi
fbx = Mx / Sx = 5.018 ksi

2). y-axis:

Fby = 0.75 * Fy = 27.000 ksi
fby = My / Sy = 0.000 ksi

B). Compression:

Kx = **1** Ky = **1**
Kx * Lx / rx = 0.000 Ky * Ly / ry = 0.000
F'ex = ksi F'ey = ksi

controlling KL/r = 0.000
Cc = 126.099
Fa = 21.600 ksi fa = P/A = 0.000 ksi
P(allow) = Fa * A = 116.856 kip

C). Combined Stresses:

Cmx = **1** Cmy = **1**
fa / Fa = 0.000 < 0.15

interaction = N/A

MONTGOMERY WATSON

BY DNH DATE 11/97 CLIENT DOE SHEET 6 OF 16

CHKD. BY [illegible] DESCRIPTION ERDF PHASE 3 JOB NO. 1166095.01010102

Chkd Date: 1/12/98 BHI Job No: 22192 Calc No: 0600X-CA-C0015 Rev 0

APPROXIMATE METAL BLDG FRAME REACTIONS FOR FOUNDATION DESIGN. REACTIONS NEED TO BE CONFIRMED AT SHOP DRAWING TIME & PRIOR TO FOUNDATION CONSTRUCTION.

ROOF LL = 25 PSF

WIND = 70 MPH EXP C

SEISMIC ZONE 2B (DOES NOT CONTROL)

MINIMUM FROST = 24"

SOIL BEARING = 3000 PSF

MONTGOMERY WATSON

BY:	DNH	**DATE:**	Nov-97	**CLIENT:**	DOE	**SHEET:**	7 of 16
CHKD:	MR	**DESCRIPTION:**			ERDF phase 2	**JOB NO:**	1166095.01010102
DESIGN TASK:					approx. metal bldg foundation reactions		

Chkd date: 1/14/98 BHI Job No: 22192 Calc No: 0600X-CA-C0015 Rev 0

Prefabricated Metal Building Foundation Reactions:

Note: Reactions are approximate until the ratio of beam stiffness to column stiffness is known. See "k" page 2.

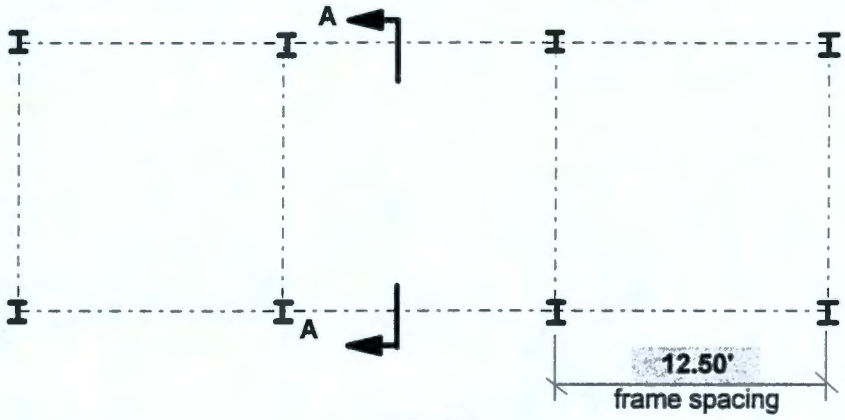

PLAN

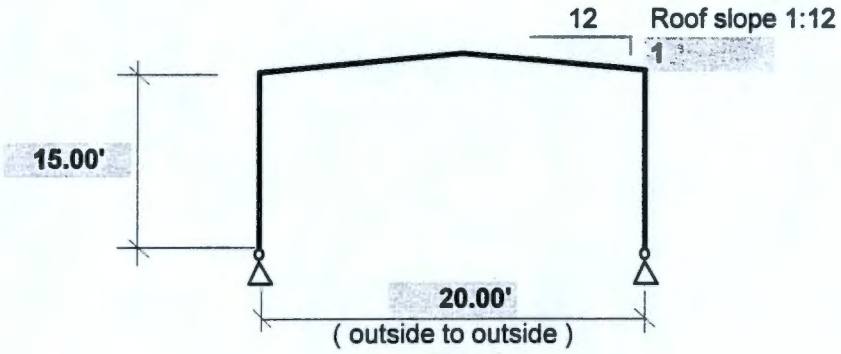

Sec. A-A

1). Vertical loads:

Roof:							
DL	Deck	**1**	psf				
	Purlin etc	**1**	psf				
	Girder	**1**	psf				
		3	psf	x	12.5 ft =	37.5	lb/ft
LL	Snow	**25**	psf				
		25	psf	x	12.5 ft =	312.5	lb/ft
Wall:							
DL	Panel	**1**	psf				
	Girt etc	**0.3**	psf				
	Column	**0.7**	psf				
		2	psf	x	12.5 ft =	25.00	lb/ft

MONTGOMERY WATSON

BY:	DNH	**DATE:**	Nov-97	**CLIENT:**	DOE	**SHEET:**	8 of 16
CHKD:	MZ	**DESCRIPTION:**			ERDF phase 2	**JOB NO:**	1166095.01010102
DESIGN TASK:					approx. metal bldg foundation reactions		

Chkd date: 1/12/98 BHI Job No: 22192 Calc No: 0600X-CA-C0015 Rev 0

Assuming prismatic girder and column and pinned column support, calculate support reaction.

Moment of inertia of girder, Ib =	**0.8**		relative
Moment of inertia of column, Ic =	**1**		values
Height of column, h =	14.5	ft	
Length of girder, s =	9.53	ft	
Centerline span of gable, L =	19.00	ft	
Rise of gable, f =	0.792	ft	
k = Ib / Ic*(h/s) =	1.217		
a = h^2*(k+3) + f(3h+f) =	921.6538		

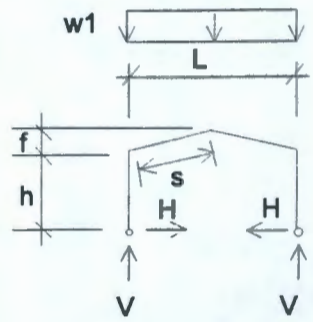

(1-a) Dead load reactions:

roof dead load, w_1 =	37.50	plf
wall dead load, w_2 =	25.00	plf
roof DL reaction, $V_1 = w_1*L / 2$ =	0.356	kips
wall DL reaction, $V_2 = w_2*h$ =	0.363	kips
V =	0.719	kips
$H = w_1*L^2 / 32*(8h + 5f) / a$ =	0.055	kips

(1-b) Live load reactions:

roof live load, w_3 =	312.5	plf
roof LL reaction, $V = w_3*L / 2$ =	2.969	kips
$H = w_3*L^2 / 32*(8h + 5f) / a$ =	0.459	kips

2). Wind load:

use UBC Method 1 $P = C_e * C_q * q_s * I_w$

Basic wind speed =	**70**	mph
Exposure B, C, or D =	**C**	
I_w =	**1**	
C_e (at the mean roof height) =	1.066	
q_s =	12.6	psf

Mean roof height = 15.42 ft

Roof slope 12
1

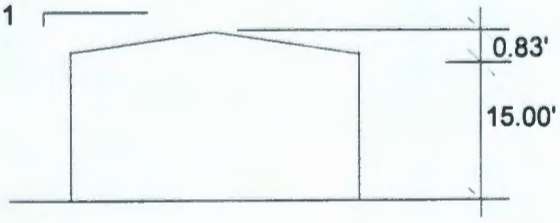

MONTGOMERY WATSON

BY:	DNH	**DATE:**	Nov-97	**CLIENT:**	DOE	**SHEET:**	9 of 16
CHKD:		**DESCRIPTION:**			ERDF phase 2	**JOB NO:**	1166095.01010102
DESIGN TASK:					approx. metal bldg foundation reactions		

Chkd date: 1/12/98 BHI Job No: 22192 Calc No: D6000X-CA-C0015 Rev 0

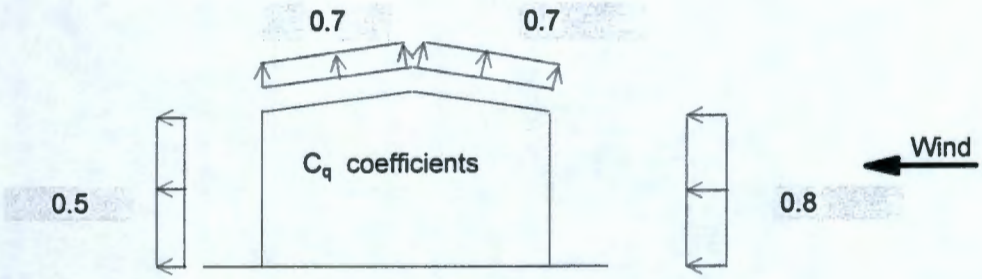

For tributary frame width(TW) = 12.50 ft

$P = C_e * C_q * q_s * I_w * TW$, (lb/ft)

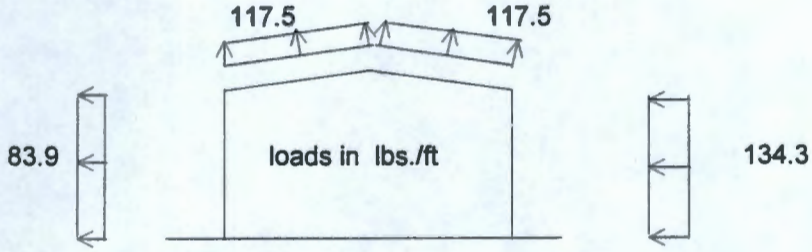

(2-a) wind uplift load on roof:

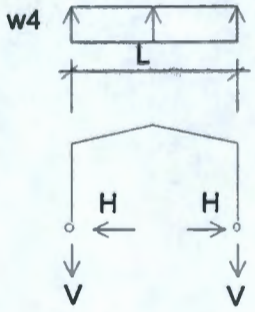

w_4 = (roof normal wind load)*(cosine of roof slope) = 117.12 plf

$V = w_4 * L / 2 =$ 1.113 kips

$H = w_4 * L^2 / 32 * (8h + 5f) / a =$ 0.172 kips

(2-b) wind load on walls:

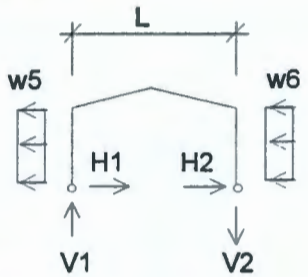

$V1 = -V2 = (w_5 + w_6)*(h^2 / L) =$ 2.415 kips

$H1 = -w_5*h + [5h*k + 6(2h + f)]/(16a)*h^2(w_5 - w_6) =$ 1.409 kips

$H2 = -w_6*h - [5h*k + 6(2h + f)]/(16a)*h^2(w_5 - w_6) =$ 1.756 kips

(2-c) Adding wind loads from the roof and wall:

Vertical reaction(+ sign means upward)

Support 1: 1.303 kips
Support 2: -3.528 kips

Horizontal reaction(+ sign means inward)

Support 1: 1.237 kips
Support 2: -1.928 kips

3). Summary Table:

GABLE FRAME REACTION SUMMARY				
Load Case	Support 1		Support 2	
	horz, H (kip)	vert, V (kip)	horz, H (kip)	vert, V (kip)
DL	0.055	0.719	0.055	0.719
LL	0.459	2.969	0.459	2.969
Wind	1.237	1.303	-1.928	-3.528
DL + LL	0.514	3.688	0.514	3.688
DL + WL	1.292	2.021	-1.873	-2.809
DL + LL + WL/2	1.132	4.339	-0.450	1.924
DL + LL/2 + WL	1.521	3.506	-1.643	-1.325

Horizontal reaction(+ sign means inward)
Vertical reaction(kips, + sign means upward)

4). Seismic Load:

Z = **0.2** I = **1** C = **2.75** Rw = **6**

V=(ZIC/Rw)*W = 0.092 * W By inspection, seismic load does not govern.

MONTGOMERY WATSON

BY DMH DATE 11/97 CLIENT DOE SHEET 11 OF 16

CHKD. BY MV DESCRIPTION ERDF PHASE 2 JOB NO. 1166095.01010102

chkd date: 1/28/98 BHI Job No: 22192 Calc No: 0600X-CA-C0015

FOUNDATIONS :

A) DEAD LOAD + WIND :

REACTIONS $V = -2.809^k$ (UPLIFT)

$H = -1.873^k$

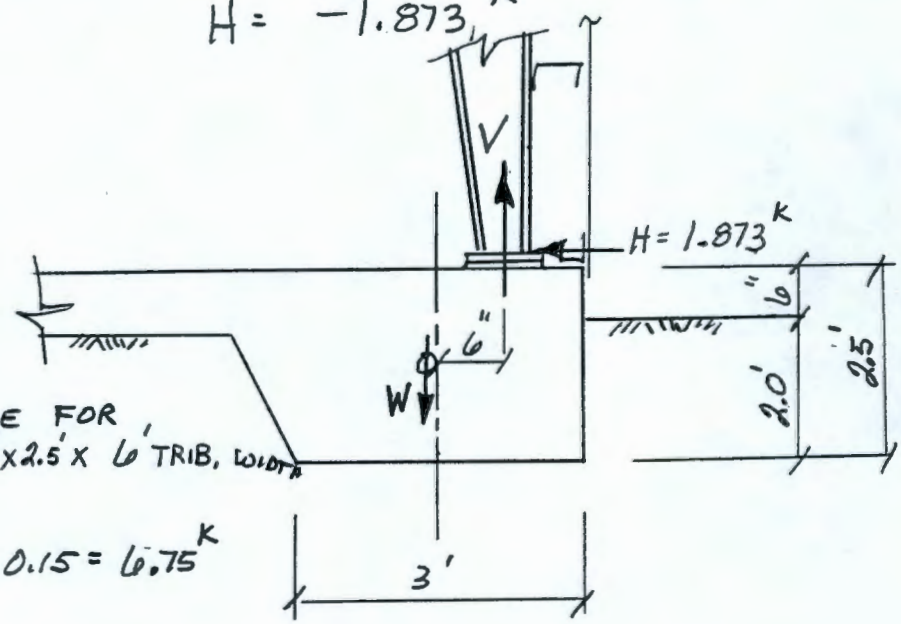

CHECK CASE FOR FOOTING 3' x 2.5' x 6' TRIB. WIDTH

$W = 3' \times 2.5' \times 6' \times 0.15 = 6.75^k$

1) FACTOR SAFETY UPLIFT :

$F.S. = 6.75^k / 2.809^k = 2.40 > 1.5$ OK.

2) FACTOR SAFETY OVERTURNING :

$$F.S. = \frac{1.5'(6.75^k)}{0.5'(2.809) + 2'(1.873)} = 1.966 > 1.5 \text{ OK.}$$

3) FACTOR SAFETY SLIDING : $\mu = 0.45$

SLIDING NOT AN ISSUE SINCE IT IS CONNECTED TO THE FLOOR SLAB.

4) FOOTING TOP MOMENT :

$w = 2.5'(.15) = 0.375$ KSF

$M = 0.375(3')^2/2 = 1.69$ 1K/ft

$V = 0.375(3') = 1.13$ K/ft

$M_u = 1.7M = 2.87$ 1K/ft

$V_u = 1.7V = 1.91$ K/ft

EN 1S (10/78)

B) DEAD LOAD + LIVE LOAD + $\frac{\text{WIND}}{2}$ + CRANE

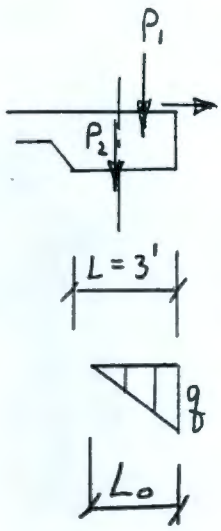

1) FOUNDATION, USE $3' \times 3' \times 2.5' \times .15$ = 3.375^k
VERTICAL FRAME REACTION = 4.339^k
CRANE = 1.4^k

$P = 9.114^k$

2) HORZ FRAME REACTION = 1.521^k

3) FACTOR SAFETY OVERTURNING:

$$F.S. = \frac{1.5'(3.375^k) + 1'(4.339 + 1.4)}{2.5'(1.521)} = 2.84 > 1.5$$

OK.

4) SLIDING: NOT AN ISSUE

5) SOIL BEARING:

M_o = MOMENT @ ℄ = $0.5'(4.339 + 1.4^k) + 2.5'(1.521) = 6.672'$

P_o = AXIAL @ ℄ = 9.114^k

$e = M_o / P_o = 6.672 / 9.114 = 0.732'$

$L/6 = 3'/6 = 0.5' < e$

$\therefore L_o = 3\left(\frac{L}{2} - e\right) = 3\left(\frac{3'}{2} - 0.732'\right) = 2.304'$

$$q = \frac{2P}{L_o B} = \frac{2(9.114^k)}{2.304'(3')} = 2.637 \text{ KSF} < 3.0$$

OK.

6) FOOTING M & V:

USE $M = (2.637\text{KSF} - 2.5'(0.15))(1.5')^2/2 = 2.54 \, {}^{1K}/_{ft}$

$V = (2.637\text{KSF} - 2.5'(.15))\,1.5' = 3.39 \, {}^{K}/_{ft}$

USE $M_u = 1.7\,M = 4.33 \, {}^{1K}/_{ft}$

$V_u = 1.7\,V = 5.76 \, {}^{K}/_{ft}$

MONTGOMERY WATSON

BY:	DNH	DATE:	Dec-97	CLIENT:	DOE	SHEET: 13 of 16
CHKD:		DESCRIPTION:			ERDF phase 2	JOB NO: 1166095.01010102
DESIGN TASK:					metal bldg foundation - bottm steel	

Chkd date: 1/12/98 BFI Job No: 22197 calc No: 06004-CA-C0015 Rev 0

Design for ... beam, slab, wall ? **slab**

Loads, Properties and Geometry

Service Moment, M (ft-kips) =	**2.54**	f'c (psi) =	**4000**
Bending Moment, Mu (ft-kips) =	**4.33**	fy (psi) =	**60000**
Shear, Vu (kips) =	**5.76**	Es (psi) =	**29000000**
Compression flange width, bc (in) =	**12**	Ec (psi) =	**3604997**
Thickness of wall or slab, h (in) =	**30**	phi, for Bending =	**0.9**
Cover (in) =	**3**	phi, for Shear =	**0.85**
Depth to reinforcing, d (in) =	**26.5**	n = Es/Ec =	8.04
		beta1 =	0.85

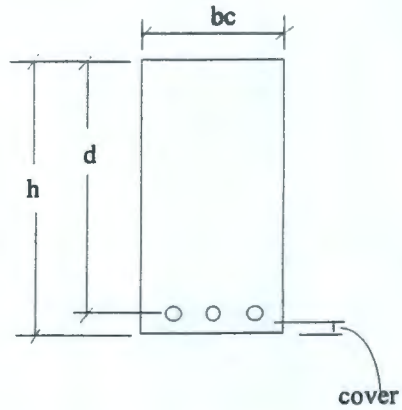

Shear Capacity and Reinforcement (Based on ACI 318-11.3.1.1)

Note: For slabs, shear reinforcement is not required as long as Vu < phi*Vc

Concrete Shear Capacity, phi*Vc (kips) =	**34.19**	
Vu / phi Vc =	**0.17**	**Vu < phi*Vc , No Shear Reinforcement is Req'd**
Max spacing of stirrups if in a frame member (in) =	N/A	Seismic requirements - See ACI 318-21.3.3.2
Maximum spacing of stirrups (in) =	N/A	Non-Seismic loads - ACI 318-11.5.4
Minimum required shear reinforcement, (in^2/ft) =	N/A	See ACI 318-11.5.5.3 ; 11.5.6.2
Required U stirrup spacing, (in) =	N/A	
Stirrup Bar size =	**3**	

Bending

Ru = Mu/(phi*bc*d^2) =	6.9	
RHO = (.85*f'c/fy)*{1-[1-(2*Ru/(.85*f'c))]^.5} =	0.000114	
Area steel required for bending = RHO*bc*d =	**0.04**	in^2
Bar number size =	**7**	
Spacing of bars (in) =	**12**	
Area steel provided, As =	**0.60**	in^2

rho = As\bd = **0.00189** **... rho Min < As/bd < rho Max - OK**

As Min =	0.57	in^2	rho Min =	0.00180
As Max =	6.80	in^2	rho Max =	0.02138

Cracking

note: adjust the cover to a maximum of 2-inches in computing cracking (per ACI 350).

Number of bars per foot =	1.00	
dc = cover (2 max) + 1/2 Bar Dia =	2.44	in
Cracked section C.G. (from compression fiber) =	4.23	in
fs = Ms / (As*moment arm) =	2.02	ksi
Ae = 2*(h-d-(portion of cover exceeding 2"))*bc =	60.00	
A = Ae / (number of bars) =	60.00	
Z = fs*(dc*A)^(1/3) =	**10.7**	

Z< 95 for extreme exposures
Z< 115 for hydraulic structures
Z< 145 for exterior exposure
Z< 175 interior exposure

MONTGOMERY WATSON

BY:	DNH	DATE:	Dec-97	CLIENT:	DOE	SHEET: 14 of 16
CHKD:		DESCRIPTION:		ERDF phase 2	JOB NO: 1166095.01010102
DESIGN TASK:				metal bldg foundation - top steel	

Chkd date: 1/12/98 BHI Job No.: 22192 Calc No: 0800X-CA-C0015 Rev 0

Design for ... beam, slab, wall ? **slab**

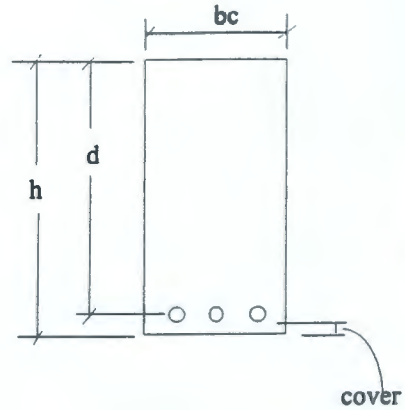

Loads, Properties and Geometry

Service Moment, M (ft-kips) =	**1.69**	f'c (psi) =	**4000**
Bending Moment, Mu (ft-kips) =	**2.87**	fy (psi) =	**60000**
Shear, Vu (kips) =	**1.91**	Es (psi) =	**29000000**
Compression flange width, bc (in) =	**12**	Ec (psi) =	**3604997**
Thickness of wall or slab, h (in) =	**30**	phi, for Bending =	**0.9**
Cover (in) =	**3**	phi, for Shear =	**0.85**
Depth to reinforcing, d (in) =	**26.5**	n = Es/Ec =	8.04
		beta1 =	0.85

Shear Capacity and Reinforcement (Based on ACI 318-11.3.1.1)

Note: For slabs, shear reinforcement is not required as long as Vu < phi*Vc

Concrete Shear Capacity, phi*Vc (kips) =	**34.19**	
Vu / phi Vc =	**0.06**	**Vu < phi*Vc , No Shear Reinforcement is Req'd**
Max spacing of stirrups if in a frame member (in) =	N/A	Seismic requirements - See ACI 318-21.3.3.2
Maximum spacing of stirrups (in) =	N/A	Non-Seismic loads - ACI 318-11.5.4
Minimum required shear reinforcement, (in^2/ft) =	N/A	See ACI 318-11.5.5.3 ; 11.5.6.2
Required U stirrup spacing, (in) =	N/A	
Stirrup Bar size =	**0**	

Bending

Ru = Mu/(phi*bc*d^2) =	4.5	
RHO = (.85*f'c/fy)*{1-[1-(2*Ru/(.85*f'c))]^.5} =	7.57E-05	
Area steel required for bending = RHO*bc*d =	**0.02**	in^2
Bar number size =	**7**	
Spacing of bars (in) =	**12**	
Area steel provided, As =	**0.60**	in^2

rho = As\bd = **0.00189** ... **rho Min < As/bd < rho Max - OK**

As Min =	0.57	in^2	rho Min =	0.00180
As Max =	6.80	in^2	rho Max =	0.02138

Cracking

note: adjust the cover to a maximum of 2-inches in computing cracking (per ACI 350).

Number of bars per foot =	1.00	
dc = cover (2 max) + 1/2 Bar Dia =	2.44	in
Cracked section C.G. (from compression fiber) =	4.23	in
fs = Ms / (As*moment arm) =	1.35	ksi
Ae = 2*(h-d-(portion of cover exceeding 2"))*bc =	60.00	
A = Ae / (number of bars) =	60.00	
Z = fs*(dc*A)^(1/3) =	**7.1**	

Z< 95 for extreme exposures
Z< 115 for hydraulic structures
Z< 145 for exterior exposure
Z< 175 interior exposure

MONTGOMERY WATSON

BY DMH DATE 12/97 CLIENT DOE SHEET 15 OF 16

CHKD. BY [illegible] DESCRIPTION ERDF PHASE 2 JOB NO. 1116095.0101010 2

chkd date: 1/14/98 BHI JOB No: 22192 Calc No: 0600X-CA-C0015 Rev 0

CHECK LOAD TRANSFER OF FRAME REACTIONS TO CONCRETE

WORST ANCHOR BOLT FORCE EXIST WITH DL + WIND.

SEE SHT 10 SUPPORT 2 . . .

SHEAR, $H = -1.873^K$

UPLIFT, $V = -2.809^K$

A COLUMN WILL HAVE A MINIMUM OF 2 BOLTS.

LOADS PER BOLT . . .

$H = 1.873^K/2 = 0.937^K/\text{BOLT}$

$V = 2.809^K/2 = 1.405^K/\text{BOLT}$

USE MINIMUM OF $2 \sim 3/4''\phi$ BOLTS

PER UBC TABLE 19-E WITH $f'_c = 4000$ psi

NOTES: 1. ASSUME BOLT SPACING $= 4\frac{1}{2}''$, ∴ REDUCE TABLE BY 50%.
2. USE 1/3 INCREASE FOR WIND.
3. INCREASE TABLE TENSION BY 100% FOR INSPECTION PROVIDED.
4. EDGE SPACING NOT A PROBLEM.

ALLOWABLE BOLT LOADS:

TENSION $= 3200^{\#}(\text{REDUCTION } 0.5)(100\% \text{ INCREASE } 2.0)(\text{WIND INCREASE } 1.33) = 4250^{\#}$

SHEAR $= 4400^{\#}(0.5)(1)(1.33) = 2920^{\#}$

$2 \sim 3/4\phi$ BOLTS OK.

EN 1S (10/78)

MONTGOMERY WATSON

BY DMH DATE 1/98 CLIENT DOE SHEET 16 OF 16

CHKD. BY MR DESCRIPTION ERDF PHASE 2 JOB NO. 1166095.01010102

Chkd date: 1/12/98 DHI Job No: 22192 Calc No: 0600X-CA-C0015

8" FLOOR SLAB

MINIMUM STEEL WILL CONTROL.

PER ACI 350 FIGURE 2.5 USE $\frac{A_s}{bh} = 0.004$

$$A_s = 0.004(12'')8'' = 0.38 \text{ in}^2/\text{ft}$$

USE #6 @ 12 E.W.

CALCULATION COVER SHEET

Project Title ERDF Cells 3 & 4 Construction **Job No.** 22192
Area Crest Pad Building
Discipline Architectural ***Calc. No.** 0600X-CA-A0001
Subject Crest Pad Building (Architectural)
Computer Program NA **Program No.** NA

Committed Calculation X **Preliminary** ☐ **Superseded** ☐

Rev.	Sheet Numbers	Originator	Checker	Reviewer	Approval	Date
0	2	M^2	MB			

SUMMARY OF REVISION

Scanned:	Rev.	Date	Bar Code No.	Rev.	Date	Bar Code No.

*Obtain Calc. No. from DIS.

MONTGOMERY WATSON

BY M2 DATE 9/23/97 CLIENT BHI - EROF Cells 3 & 4 SHEET 1 OF 2

CHKD. BY MB DESCRIPTION Crest Pad Bldg JOB NO. 1000925

Date Chkd 11/19/97 CALC. NO. 0600X-CA-A0001 Rev # 0

Description

Size the crest pad bldg to accomodate removal of pumps, walking around space and Electrical equipment

Assumptions

References

W296 EROF Dwgs dated 9/3/96

Calculation

Existing Pad size for pump room

16' L X 12' W
Add 3' to each side
Add 4' to one end

Dwg C004P & Dwg C004G

20' L X 18' W Assumes No curb
if curb remains then
add 4' to each side

20' L X 20' W

Height required for over head door

Pump pipe containment slope = 3:1

height to top of 18" Riser pipe = 4'

EN 1S (10/78)

MONTGOMERY WATSON

BY M2 DATE 9/23/99 CLIENT RFI - ERDF Cells 3 & 4 SHEET 2 OF 2

CHKD. BY M2 DESCRIPTION Cross Tad Bldg JOB NO. 11600 05

Date Chkd 11/19/97 CALC. NO. 0600K-CA-A0001 Rev # 0

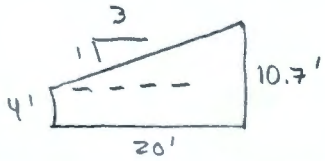

10.7' min required make overhead door clear opening 12'

Electrical Room

12' L x 9' W x 10' H previous

standardize to match piping room

20' x 7'

Required hight for roll up door

3' over roleup door

Conclusion

use 20' by 27' building

DWg C005,

CALCULATION COVER SHEET

Project Title ERDF Cells 3 & 4 Construction **Job No.** 22192
Area Electrical Service
Discipline Electrical ***Calc. No.** 0600X-CA-E0006
Subject Voltage Drop
Computer Program NA **Program No.** NA

Committed Calculation X **Preliminary** ☐ **Superseded** ☐

Rev.	Sheet Numbers	Originator	Checker	Reviewer	Approval	Date
0	4	CAC	M^2			

SUMMARY OF REVISION

Scanned:	Rev.	Date	Bar Code No.	Rev.	Date	Bar Code No.

*Obtain Calc. No. from DIS.

MONTGOMERY WATSON

REVISED 1-14-98 SL

BY S LARSEN DATE 12-23-97 CLIENT DOE HANFORD SHEET 1 OF 4

CHKD. BY CAC DESCRIPTION ERDF CELLS 3 & 4 Voltage Drop JOB NO. 1166095.01358203

1/14/98 Chkd Date: 1/12/98 BHI Job No: 22192 Calc No: 0600X-CA-E0006 Rev 0

REVIEW THE BREAKERS AND FEEDERS TO THE NEW CELLS FOR CORRECT SIZING AND VOLTAGE DROP PROBLEMS.

ELECTRIC LOAD CELLS 3 & 4

Pump 10hp	14A
Pump 3/4 hp	1.4A
Pump 3/4 hp	1.4A
LTG PNL 15KVA WITH 12KVA USE	14.5A
2-SPACE HTRS	6 A
	37.3A

ELECTRIC LOAD CELLS 2 & 4 ARE SIMILAR WITHOUT THE SPACE HEATERS OR 25.4A

37.3A
25.4A
62.7A TOTAL LOAD ON SWGR BREAKERS

EXISTING BREAKERS ARE 50A. CHANGE-OUT BREAKERS TO 80A UNITS

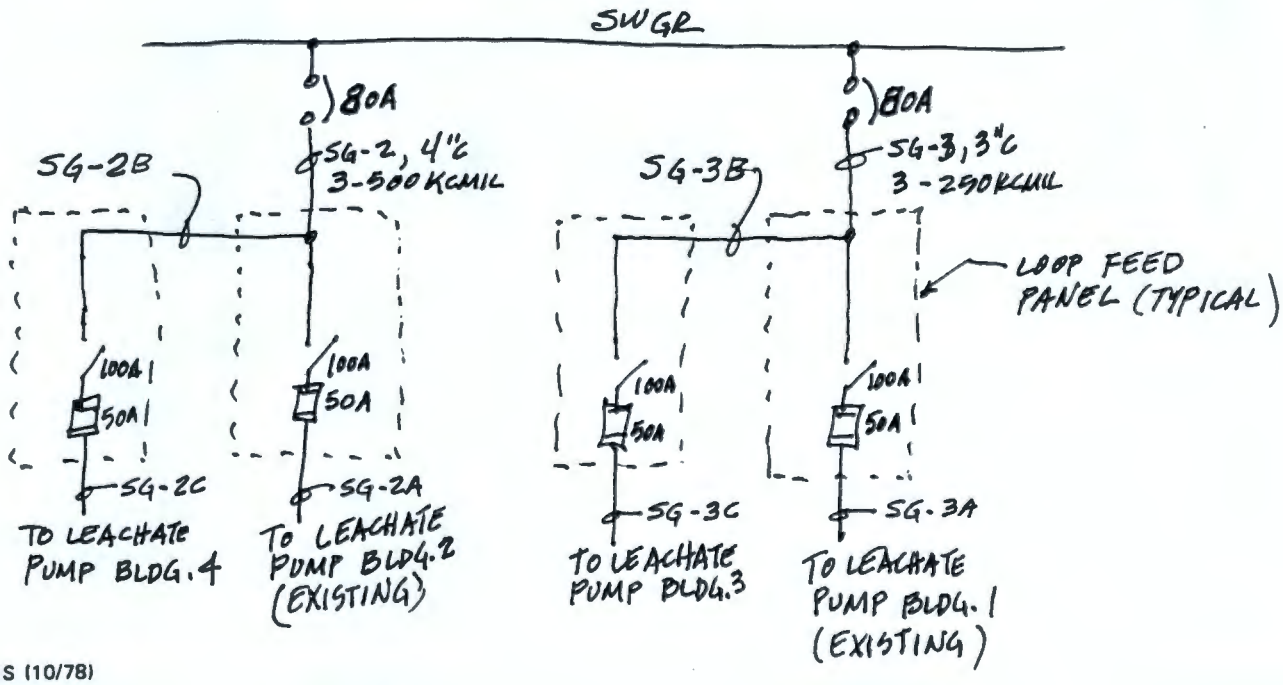

EN 1S (10/78)

MONTGOMERY WATSON

Revised 1-14-98

BY S LARSEN DATE 12-23-97 CLIENT DOE HANFORD SHEET 2 OF 4

CHKD. BY CAC DESCRIPTION ERDF CELLS 3 & 4 Volt. Drop JOB NO. 1166095.01010102

chkd Date 1/5/98 BHI Job No: 22192 Calc No: 0600X-CA-E0006 Rev 0

LOAD	AMPS	FEEDER SWGR TO LFP (EXISTING) NO.	SIZE	Ω/1000'	LENGTH	
Trench 1	25.4	SG-3	250 KCM	0.052 *	1500'	
Trench 3	37.3					
Trench 2	25.4	SG-2	500 KCM	0.027 *	3150'	
Trench 4	37.3					

CONDUIT ARRANGEMENT

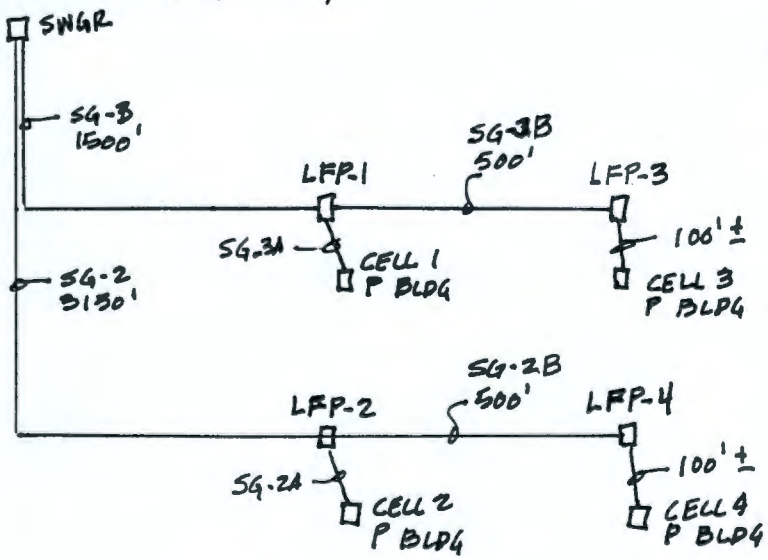

LFP — LOOP FEED PANEL

* VALUES FROM NEC CHAPTER 9 - TABLE 9, CU CONDUCTOR IN PVC CONDUIT

FOR 3φ CIRCUITS —

$$VD = \frac{2 \times L \times I \times R}{1000} \times 0.866$$

VD = VOLTAGE DROP OVER LENGTH OF CONDUCTOR

L = LENGTH OF CKT

R = CONDUCTOR RESISTANCE Ω/1000'

I = CIRCUIT CURRENT

DRAWINGS FOR CELL 1 AND 2 (FIRST PROJECT) INDICATED THAT ONLY ONE CELL WOULD OPERATE AT A TIME FROM THE FEEDER THAT WAS TO EVENTUALLY FEED 3 CELLS.

PRESENT OPERATING METHOD IS TO OPERATE 2 CELLS AT THE SAME TIME. EXAMPLE CELL 1 AND CELL 2.

ARE THE FEEDERS LARGE ENOUGH TO ALLOW THIS?

MONTGOMERY WATSON

Revised 1-14-98

BY S LARSEN DATE 12-23-97 CLIENT DOE HANFORD SHEET 3 OF 4

CHKD. BY CAC DESCRIPTION ERDF CELLS 3 & 4 Voltage Drop JOB NO. 01166095.01010102

1/14/98 chkd Date: 1/15/98 12 BAI Job No: 22192 Calc No: 0600X-CA-E0006 Rev 0

VD_1 = VOLTAGE DROP IN FEEDER SG-3 WHEN BOTH CELL 1 AND CELL 3 ARE OPERATING (I=62.7)

VD_3 = VOLTAGE DROP IN FEEDER SG-3 WHEN CELL 3 IS OPERATING (I = 37.3)

VD_2 = VOLTAGE DROP IN FEEDER SG-2 WHEN BOTH CELL 2 AND CELL 4 ARE OPERATING (I=62.7)

VD_4 = VOLTAGE DROP IN FEEDER SG-2 WHEN CELL 4 IS OPERATING. (I = 37.3)

$$VD_1 = \frac{2 \times 1500 \times 62.7 \times 0.052}{1000} \times 0.866 = 8.47V$$

$$VD_3 = \frac{2 \times 500 \times 37.3 \times 0.052}{1000} \times 0.866 = 1.68V$$

$$VD_2 = \frac{2 \times 3150 \times 62.7 \times 0.027}{1000} \times 0.866 = 9.23V$$

$$VD_4 = \frac{2 \times 500 \times 37.3 \times 0.027}{1000} \times 0.866 = 0.87$$

VD_5 (SWGR TO CELL 3) $= VD_1 + VD_3 = 8.47 + 1.68 = 10.15V$

VD_6 (SWGR TO CELL 4) $= VD_2 + VD_4 = 9.23 + 0.87 = 10.1\ V$

#2 CONDUCTOR

VD_7 (LFD TO P BLDG) $= \frac{2 \times 100 \times 3 \times 0.19}{1000} = 1.19V$

VOLTAGE DROP FROM SWGR TO MCC IN P. BLDG SHOULD BE 3% OF LESS.

$480V \times 3\% = 14.4V$

MONTGOMERY WATSON

Revised 1/14/98

BY S. LARSEN DATE 12-23-97 CLIENT DOE HANFORD SHEET 4 OF 4

CHKD. BY CAC DESCRIPTION ERDF CELLS 3 & 4 JOB NO. 1166095.01080102

1/9/98 chkd date 1/12/98 BHF JOB No. 22192 Calc No: 0600X-CA-E0006 Rev 0

$$VD_{\text{SWGR TO MCC-3}} = VD_5 + VD_7 = 10.15 + 1.19 = 11.34V$$

$$VD_{\text{SWGR TO MCC-4}} = VD_6 + VD_7 = 10.1 + 1.19 = 11.29V$$

EXTENDING THE CONDUCTORS FROM THE EXISTING LOOP FEED PANELS TO THE NEW LOOP FEED PANELS USING SAME SIZE CONDUCTORS WILL PROVIDE POWER SERVICE WITH LESS THAN 3% VOLTAGE DROP

MEETING MINUTES

MONTGOMERY WATSON

To:	Distribution	**Date:**	September 4, 1997
From:	Mike Marchant	**Reference:**	
Subject:	August 26, 1997 ERDF Phase II Kick-off Meeting		

On August 26th, 1997, a kick-off meeting was held for the second phase of the ERDF. The main emphasis of the meeting was on the design requirements. The following individuals were in attendance for all or part of the meeting: Denny Myers (BHI), Philip Griggs (BHI), Bob Moore (CHI), Greg Mitchem (BHI), David Olson (DOE), Leon Allen (MW), Mike Marchant (MW), Matt Bartol (MW), Frank Shuri (Golder), Marc Zocher (Jason Assoc.). The official sign-in sheet is attached. Minutes of the meeting are presented below.

	Item	**Responsible Party/Action**
1.	Phillip Griggs briefly went over the contract and then excused himself from the meeting.	
2.	The Phase II design will re-use as much of the Phase I drawings and specifications as possible. (Denny Myers)	
3.	Ecology and EPA will focus their review on the 60% submittal. (Greg Mitchem) Mike Marchant expressed concern that EPA would provide comments that should have been received at the 30% level and alter design direction already taken.	
4.	Leon Allen presented Montgomery Watson's (MW) understanding of the design criteria. A list was handed out and discussed. *See attachment.* (Amended to represent criteria discussed and agreed to during the meeting.)	
5.	Mike Marchant handed out preliminary site plan drawings. These were discussed along with the design criteria. *See attached.* (Attached as presented in the meeting.)	
6.	Previous conceptual ideas had the ERDF trench rising with the land as it progressed eastward. Cells 1 through 4 are currently designed at the same elevation. MW needs to know the elevation planned for cells 5 and 6. This impacts how the liner will be terminated.	Denny Myers to provide direction.

7.	Native grasses are currently planned for erosion control. BHI indicated that this may be deleted in lieu of soil cement. Subsequent direction from Denny Myers is that native grasses (or Contractor approved alternate means) are to be used on all disturbed areas (except trench) and on all stockpiles.	Denny Myers to provide direction.
8.	A new loading/unloading pad will be located east of the existing one. MW needs to know how many containers to size it for, the maximum weight of each container, container loading pattern, and any traffic pattern on the pad preferred by operations. Mike Marchant asked if runoff needed to be captured from the pad and Denny Myers said no. The profile of the new pad will match the existing one.	Denny Myers to provide info.
9.	Operation of the ERDF will continue through construction. Frank Shuri presented a plan on how to keep the two activities separate. The current plan does not include the contractor constructing a new ramp for operations. Operations could construct a second ramp in cell 1 or 2 while placing waste if they desired. All were in agreement.	
10.	On the Overall Site Plan (see attached), the contractor will have access to the site via the north-east access road. This was confirmed by BHI. Denny Myers asked that MW write the spec such that it is the Contractor's responsibility to maintain this road and provide traffic control.	Mike Marchant to include in specifications.
11.	On the Overall Site Plan (see attached), the limits of construction will be revised around the daily operational cover stockpile to facilitate construction. The construction contractor will have direct access to the north-east corner of the trench.	Mike Marchant to revise drawings.
12.	On the Clearing and Grubbing Plan (see attached), the boundaries will be revised to exclude the 75 ft strip on the south side of the trench.	Mike Marchant to revise drawings.
13.	The temporary excavation slope at the east end of the trench will be 2H:1V both above and below the construction access ramp. This design criteria handout will be revised to reflect this.	Mike Marchant to correct and revise drawings.
14.	Under normal operating conditions, the leachate removal systems will maintain the head in the primary and secondary liners at 1 ft or less. Measurements being taken from the bottom of the sump.	
15.	For the design storm event, leachate will be removed so that the head on the primary liner system is below 1 ft within 72 hours. BHI to provide meteorological data and leachate production records. BHI also to provide other criteria relevant to sizing the leachate storage tanks. For example, the time required to sample the leachate and obtain release permits is relevant.	Denny Myers to provide data and information.

16.	Leachate levels in the sumps will be measured with electrical transducers. BHI requested that these transducers be calibrated for a range of 1 - 10 ft and consider making the transducers removable without removing the pump. BHI also requested the ability to measure and record leachate levels in the sumps be included in the design.	Mike Marchant to revise specifications.
17.	On the design criteria handout, the last six bullets under the heading "Trench" will be deleted.	
18.	Denny Myers indicated that there have been a lot of problems with the existing leachate tanks. Factory seams in the XR-5 material have failed on more than one occasion. Denny requested that MW research these problems and look into other manufactures. Mike Marchant asked if the tanks needed to be heated for winter operation and Denny said no. Also, MW was asked to include a hydro test requirement for the secondary liner system.	Mike Marchant to research leachate tank design and revise specifications.
19.	The number of tie-ins for the new leachate tanks need to be minimized. Mike Marchant proposed tying in only once and routing leachate though the existing tanks for pump out. Denny Myers didn't like this idea because of the reliability problems with the existing tanks. The new tanks will therefore have their own connection to the pump house. Denny also requested that a better/faster means be considered to transfer leachate between tanks.	Mike Marchant to generate design accordingly.
20.	There was a problem in the Phase I specs for the crest pad piping. The spec called out multiple material types. Denny Myers asked that this be reviewed and corrected.	Mike Marchant to revise specifications.
21.	The design criteria handout indicates that lights will be provided on the new loading/unloading pad for nighttime operations. BHI didn't think the Phase I pad had this illumination level and is researching the lighting requirements.	Denny Myers to provide direction on lighting requirements.
22.	Since operations will continue through construction, the construction contractor must be sensitive to operational dust limits. BHI will provide these limits to MW for inclusion in the specs.	Denny Myers to provide dust limits.
23.	Denny Myers requested that fencing (& gates) be part of the clearing and grubbing package.	
24.	Pit 31 is available for reclamation should this be of benefit to the overall design.	
25.	The contractor responsible for clearing and grubbing will need to maintain the site until construction begins. A start date for construction is needed so that the clear and grub contractor can include this in his bid.	Denny Myers to provide date.

26.	Later conversation regarding the extension of the utilities identified that BHI may request their extension to be performed during the clearing and grubbing contract.	Denny Myers to provide direction.

DISTRIBUTION:

Denny Myers (BHI)
Bob Moore (CHI)
Greg Mitchem (BHI)
David Olson (DOE)

Leon Allen (MW)
Mike Marchant (MW)
Matt Bartol (MW)
MW Files

Frank Shuri (Golder)
Marc Zocher (Jason Assoc.)

FILE COPY

PROJECT NO. 1166095
FILE NO. 3.3.3
LOG NO. PHII/130
DATE FILED 10/29/97
MONTGOMERY WATSON

MONTGOMERY WATSON

To: Distribution
From: Mike Marchant
Subject: October 7, 1997
ERDF 30% Progress Meeting

Date: October 10, 1997
Reference: 1166095 / 3.3.3

On October 7, 1997, a progress meeting was held to present the Site Preparation Package and 30% design submittals. A list of individuals in attendance is attached. Minutes of the meeting are presented below.

Item	Responsible Party/Action
1. Denny Myers opened the progress meeting and made introductions. Comments are due to Denny Myers in 5 working days and 60% will be ready on November 21. He then turned the meeting over to Montgomery Watson for presentation of the design.	
2. The Site Preparation Package was presented by Matt Bartol. The presentation covered site clearing, fencing, trailer pad grading, the bulk water station and other site utilities.	
At the raw water line tie-in, there is a local high point in the line which needs to be vented. The design currently calls for an air release valve with vent line. However, the vent line will need be deferred to the main package if the new loading/unloading pad is located over it.	
After the meeting, the decision was made to locate the pad as shown on the 30% drawings. Consequently, the air release vent line will be run as part of the main package.	
3. The 30% design package was presented by Mike Marchant. The presentation covered the site plan and grading, crest pad building, and options for locating and tying in the new leachate tank.	
When discussing site grading, Denny Myers clarified that the existing spoil pile will not be removed. Fill material will be placed on and around it as necessary for site grading.	
When discussing tie-in options for the new leachate tank, Mike indicated that he would like to visit the site to verify piping configuration within the manholes. Denny Myers said that this could be arranged.	Denny Myers to arrange site visit. As required.

4. Montgomery Watson proposed using an Epoxy coating instead of the HDPE liner on the crest pad floor.

Denny Myers to confirm acceptance of concept.

5. Several different options for leachate storage were discussed. Options included surface impoundment's and tanks with various liners. Mike Marchant requested that a meeting be set up with EPA to review the submittal and discuss the various tank options. Montgomery Watson will research different tank designs and liner material.

Mike Marchant to research leachate tank design.
Denny Myers to coordinate resolution of leachate storage options.

6. The trench design was presented by Frank Shuri. The design for cells 3 & 4 is similar to that for cells 1 & 2 with the exception of a few minor details.

   Frank also presented preliminary results from the leachate production study. Due to several unknowns, it is difficult to determine the lag time between precipitation and leachate production. But the HELP model will be programmed with known input and output to try and get a better understanding.

7. Leachate storage capacity is currently being designed for two open cells. Glenn VanSickle expressed a concern that there might be three open cells at one time. However, the design basis is to remain two open cells.

DISTRIBUTION:

Jim Carson (BHI)	HO-15	Leon Allen (MW)	Rick Chow (Jason Assoc.)
John Darby (BHI)	HO-18	Matt Bartol (MW)	Steve Reichect (Jason Assoc.)
Greg Mitchem (BHI)	HO-17	Mike Marchant (MW)	Frank Shuri (Golder)
Bob Moore (CHI)	HO-17	MW Files	Marc Zocher (Jason Assoc.)
Denny Myers (BHI)	HO-17		
David Olson (DOE)	HO-12		
Dawn Perry (BHI)	HO-04		
Fred Roeck (BHI)	HO-17		
Steve Thieme (BHI)	XO-17		
Glenn VanSickle (BHI)	T2-05		

FILE COPY

PROJECT NO. 1166095
FILE NO. 3.3.3
LOG NO. PHII/153
DATE FILED 10/29/97
MONTGOMERY WATSON

MONTGOMERY WATSON

To: Distribution
From: Mike Marchant MV
Subject: October 24, 1997 Progress Meeting

Date: October 28, 1997
Reference: 1166095 / 3.3.3

On October 24, 1997, a progress meeting was held to discuss comments received on the Site Preparation design package. The meeting was called as a result of the letter sent by MW to BHI on October 23 addressing concerns over potential scope crepe. Those involved in the meeting were Mike Marchant, Matt Bartol, Greg Mitchem, and Bob Moore. Resolutions resulting from the meeting are as follows.

	Item	Responsible Party/Action
1.	Montgomery Watson will review the ERDF Cells 1 and 2 drawings to determine if a power meter was shown on the design. If it is shown, then this item will be added to the Site Preparation drawings consistent with the detail shown on the ERDF Cells 1 & 2 drawings. Follow-up review by MW indicates that a power meter was included on the low voltage side of the transformer in the ERDF Cells 1 & 2 design and was only shown on a single line diagram.	
2.	The type of lighting necessary for the construction access gate and contractor trailer area was discussed. MW had interpreted the comment to show a need for having low voltage lighting ran to these areas. BHI was anticipating installing high voltage lighting. MW will determine the impact of using high voltage lighting and include on the drawings if it can be done with a few notes on the drawings and without additional specifications or details.	Matt Bartol
3.	Facility signs will be included in the drawings with sufficient information for the contractor to bid. Reference to the DOE order for signs will be used to minimize the amount of detail necessary on the drawing.	
4.	Electrical comments from Dyncorp will not be received by BHI until the middle of next week at the earliest. MW is to proceed with the design and, if necessary, an addendum will be attached to the final Site Preparation package for bidding. It was understood that by proceeding, MW may have to duplicate work. Implications to design costs will be determined at that time.	

Item	Responsible Party/Action
5. Installation of duplex outlets and breakers at the trailer disconnect area can be installed by BHI after construction.	
6. Montgomery will include the additional water supply apparatus in the design.	
8. MW will proceed with items 2, 3, 5, and 6 provided they can be performed with minimal effort. However, any comments received for these items which add additional work will be subject to additional cost negotiations.	
9. While discussing the comments to the drawings and specifications received on October 22, 1997, Greg Mitchem pointed out that BHI has a very specific language format that BHI has found to be effective during administration of construction contracts. Mike Marchant stated that this format is in conflict with the method that was used by the USACE guide specs for the design of ERDF Cells 1 & 2 and therefore considered out of scope by MW. Greg Mitchem will review the Site Prep specifications and provide a fresh copy of redlines that will allow MW to incorporate comments direct. MW will review the specifications to determine the effort that will be required to change the specifications as requested. This item will be discussed and negotiated after MW has had a chance to determine the required effort.	Greg Mitchem

The results of this meeting addressed the issues identified in the letter from MW dated October 23, 1997. Work is proceeding according to the resolutions identified.

DISTRIBUTION:

Leon Allen (MW)
Matt Bartol (MW)
Philip Griggs (BHI) HO-04
Mike Marchant (MW)
Greg Mitchem (BHI) HO-17
Bob Moore (CHI) HO-17
Denny Myers (BHI) HO-17
MW Files

FILE COPY 3.3.3

PROJECT NO. 1166095
FILE NO. 3.3.3
LOG NO. PHII/241
DATE FILED 12/11/97
MONTGOMERY WATSON

MONTGOMERY WATSON

To: Distribution
From: Mike Marchant
Subject: November 21, 1997
ERDF 60% Progress Meeting

Date: November 25, 1997
Reference: 1166095 / 3.3.3

On November 21, 1997, a progress meeting was held to present the 60% design submittal. A list of individuals in attendance is attached. Minutes of the meeting are presented below.

	Item	Responsible Party/Action
1.	Greg Mitchem and Denny Myers opened the meeting. Introductions were made and a brief overview of the project given. Comments on the 60% submittal are due to Denny within 5 working days. All comments are to be written specific in nature, and organized per each document. The meeting was then turned over to Montgomery Watson for presentation of the design.	
2.	The 60% design package was presented by Mike Marchant. Mike gave an overview of each drawing and answered questions as they were asked.	
3.	Denny Myers gave a brief overview of the existing leachate storage/treatment plan and discussed the need for a direct transfer line to ETF.	
4.	Leon Allen presented Montgomery Watson's design of the leachate transfer line. The design calls for replacing one of the existing leachate pumps. Preliminary calculations sizing this new pump were handed out in the meeting.	
5.	The trench design was presented by Frank Shuri. The design for cells 3 & 4 is similar to that for cells 1 & 2 with the exception of a few minor details.	
6.	Ashur Michael asked where drainage gravel would be obtained. Bob Moore answered that gravel would be obtained from Pit 29.	

7.	Jared Isaacs is concerned that the existing electrical installation won't be able to handle the loads imposed by the sump pumps from two cells operating at the same time. Mike Marchant thought that this had already been looked at by Steve Larsen but will have Steve re-verify.	Mike Marchant to have electrical review and comment.
8.	After the design presentation meeting adjourned, a second meeting was held to go over submittals. Bechtel wants to minimize the number of submittals to cut down on costs. Montgomery Watson and Golder Associates identified those submittals which they considered essential to the documents and those that were being used to aide construction management and post construction operational activities. Denny Myers will take this list to his management for a cost/risk evaluation.	Denny Myers to provide direction on submittals.

DISTRIBUTION:

Mark Buckmaster (BHI)HO-19
Jim Carson (BHI) HO-15
Brian Gifford (BHI) HO-04
Jared Isaacs (BHI) HO-19
Alvin Langstaff (BHI) X3-40
Ashur Michael (BHI) HO-17
Greg Mitchem (BHI) HO-17
Bob Moore (CHI) HO-17
Denny Myers (BHI) HO-17
Raj Rajagopal (BHI) HO-18
Owen Robertson (DOE)HO-12
Claude Stacey (BHI) HO-16

Leon Allen (MW)
Matt Bartol (MW)
Mike Marchant (MW)
Frank Shuri (Golder)
MW Files

CORRESPONDENCE

FILE COPY

3.1.2

PROJECT NO. 1160095
FILE NO. 3.1.2
LOG NO. PH.II / 55
DATE FILED 9/16/97
MONTGOMERY WATSON

From: drmyers@bhi-erc.com@INET1 (9/4/97)
To: fshuri@golder.com@INET1, Mike Marchant,
CC: drmyers@bhi-erc.com@INET1, rtmoore@bhi-erc.com@INET1,
gbmitche@bhi-erc.com@INET1, armichae@bhi-erc.com@INET1
Mail*Link® Raising Cells 5&6

Mike & Frank -

Please raise the planned elevation for ERDF Cells 5&6 approximately 2-ft to minimize the amount of excavation as the expansion of the landfill proceeds to the east. The primary design consideration at this time is the transition from Cells 3&4 to Cells 5&6, which must be worked into the design of Cells 3&4, which we are preparing now. If you have any questions please give me a call on 372-9079.

Denny Myers

==========

FILE COPY

3.1.2

PROJECT NO. 1106095
FILE NO. 3.1.2
LOG NO. PH II/56
DATE FILED 9/11/97
MONTGOMERY WATSON

From: drmyers@bhi-erc.com@INET1 (9/4/97)
To: Mike Marchant,
CC: gevansic@bhi-erc.com@INET1, pjberthe@bhi-erc.com@INET1, bpmoyers@bhi-erc.com@INET1, armichae@bhi-erc.com@INET1, gbmitche@bhi-erc.com@INET1, rtmoore@bhi-erc.com@INET1, drmyers@bhi-erc.com@INET1
Mail*Link® Container Handling Area Expansion

Mike -

The Design Basis for the ERDF Phase II Expansion contains the following direction for the expansion of the container handling area.

"The loaded and empty container queue area sizes shall be increased by approximately 50%, using space to the east of the existing areas. Existing finish surface grades shall be maintained to the extent practical. The extensions shall include additional reinforced concrete pavement for loaded container areas, asphalt-paved surfaces for vehicle travel areas, and improved gravel surfaces for empty container areas. The configuration of the queue expansions will be determined during the 60% design. These increased areas must be suitable for normal operation of 47,897 kg (105,500 lb) gross vehicle weight over-the-road configured tractor trailers, and roll-on/roll-off containers with a gross loaded weight of 27,211 kg (60,000 lb)."

The following direction should clarify the design issues brought up at the Phase II Design Kickoff Meeting.

Size the container handling queues to accommodate a total of 120 full containers and 120 empty containers. Suggest extending the concrete 100-ft to the east to handle approximately eight additional rows of containers, 4 containers deep. The structural fill can extend as far east as possible, but limit the improved concrete and gravel surfaces to this area.

Concrete is required for the loaded container area. The strength of the existing concrete appears to be fine. Modify the structural design of the slab as required to meet the listed loads.

Lighting for the expansion of the container handling areas needs to be upgraded. Illumination levels are required that meet the criteria for operating areas. Several of the fixtures in the original design have been upgraded and are working well.

If you have any questions please give me a call on 372-9079.

==========

FILE COPY

3.1.2

PROJECT NO. 11606095
FILE NO. 3.1.2
LOG NO. PH.II/54
DATE FILED 9/16/97
MONTGOMERY WATSON

From: drmyers@bhi-erc.com@INET1 (9/4/97)
To: fshuri@golder.com@INET1, Mike Marchant,
CC: pjberthe@bhi-erc.com@INET1, gevansic@bhi-erc.com@INET1, armichae@bhi-erc.com@INET1, gbmitche@bhi-erc.com@INET1, rtmoore@bhi-erc.com@INET1, drmyers@bhi-erc.com@INET1
Mail*Link®

Leachate Production Study

Mike & Frank -

The following is the design basis to be used for the Leachate Production Study. This is in response to the request for clarification at the Design Kickoff Meeting for Phase II design. If this is not complete or you have any questions please give me a call on 372-9079.

Under normal operating conditions, the leachate removal systems will be designed to maintain the head on the primary and secondary liners at 1-ft or less, measured at the bottom of each sump.

For the design basis storm event and storms that produce less precipitation, leachate should be removed so that the head on the primary liner is below 1-ft within 72 hours. The design basis storm event will be defined within the Leachate Production Study.

The design basis storm event currently is the 24-hr, 25-yr storm, which is 1.56-in. This will be adjusted as required to reflect recent precipitation experience.

Leachate shipment will begin immediately and will continue at a rate of 30,000 gallons per day until the leachate in the sumps is lowered to the required level and the leachate tanks once again have the required surge capacity to handle the surge from the next precipitation event.

Leachate will be generated in two cells, with one cell filled to the 35-ft level and the second cell starting to receive waste.

The nominal capacity of the existing tanks for short-term storage of leachate is 200,000 gallons per tank.

Leachate production data for Cells 1&2 and climate data have been forwarded separately.

==========

From: drmyers@bhi-erc.com@INET1 (9/18/97)
To: Mike Marchant,
CC: drmyers@bhi-erc.com@INET1, rtmoore@bhi-erc.com@INET1, gbmitche@bhi-erc.com@INET1, gevansic@bhi-erc.com@INET1, armichae@bhi-erc.com@INET1
Mail*Link® Clearing and Grubbing Re-direction

FILE COPY
3.1.2

PROJECT NO. 1106095
FILE NO. 3.1.2
LOG NO. PHII/86
DATE FILED 9/22/97
MONTGOMERY WATSON

Please make the following changes to the Clearing and Grubbing Specifications and Drawings for the Design and Construction of ERDF Cells 3&4.

Vegetated areas that were to be cleared and grubbed will only be cleared, and the vegetation will be cleared by using a "brush-hog" or similar equipment to cut, chip, and size reduce the vegetation to chips and slash that will be left on the surface. This will eliminate burning of the vegetation, help control dust in windy conditions, and will remove revegatation in cleared areas for dust control from the clearing and grubbing contract. The clearing and utility contract will contain a sizable amount of utility construction that may require dust control measures.

The southeast corner of the excavation for cells 3&4 will be part of the area that is cleared. The soil excavated from this area during cell construction which contains roots and organic matter will be placed in Pit 31 as part of the reclamation of the Pit 31 area. Once the soil being excavated is free of roots and organics (expected to be the top two feet) it can be utilized for structural fill, DOC, or admix soil as appropriate.

The areas that are cleared will be available for laydown, equipment maintenance, stockpiles, preparation of admix soil, and other contractor operations. The construction contractor for cells 3&4 may be able to grub these areas, if the contractor desires, with the approval of the Contracting Officer.

If you have any questions please give me a call on 372-9079.

Denny Myers

==========

From: Matt Bartol (11/8/97)
To: Denny Myers,
CC: Mike Marchant
Scope Change

FILE COPY

ERDF 3.1.2

Hi Denny. This memo is just to confirm the verbal direction I've received. Montgomery Watson is to proceed with the design of the leachate transfer line and re-commence work on the leachate storage tanks (which has been on hold since the 30% submittal). BHI will be providing formal direction for this change as well as direction on how to proceed with the leachate tank design. Montgomery Watson will put together a preliminary cost estimate for this change and submit a formal proposal after receiving direction from BHI.

I think that about sums it up. Let me know if I've left something out.

PS - Mike will be calling you on Monday to discuss this.

==========

PROJECT NO. 1166095
FILE NO. 3.1.2
LOG NO. PHII/173
DATE FILED 11/11/97
MONTGOMERY WATSON

Electrical Design Lessons Learned for Cells 3 & 4

During the construction and completion of the initial ERDF facility there were a number of lessons learned in the Electrical and Control Systems area that should be addressed now, before the design of the ERDF expansion progresses to much further.
Below is a summary of the issues that Ray Peck was specifically involved in.
I recommend that we get the right individuals (Montgomery Watson and ERC) together to review these issues as soon as possible.

In addition, it may be prudent to review all design and field changes that were implemented during the construction and startup of ERDF. This review could identify any other possible design or equipment problems that could be avoided in the ERDF expansion.

Per your request, the below listing covers areas I see as cautions in your review of new ERDF design.

*Seismic requirements for mechanical/electrical equipment and mounting requirements.

*Requirements of moisture detectors at base of manholes. Need a simplified approach to these moisture detectors.

*Requirements for 480 volt cable splices. Detail out requirements for subcontractor.

*Control voltage considerations between 24VDC and 120VAC. Previous dwgs had errors.

*Careful consideration on controls for cell sump pumps, and leachate levels. Specify clear options available for subcontractor.

*Proper schematics and ladder diagrams with wire numbers, etc

*Duct bank pull boxes: evaluate drains and water tight covers against what is available from manufacturers.

*In specifications, call out suggested manufacturers of equipment or equal, thus setting the level of quality of equipment.

*If any areas exist where moisture detectors are required, but are not to be continuously monitored, specify the monitoring requirements.

*Specify dynamometer for all cable pulls through duct banks, and log requirements.

*Proper QA/QC requirements to be submitted with proposals

SCHEDULE

ERDF
Phase II Design

TASK	START DATE	END DATE
30% Design	Aug 13	Oct 7
Kick-Off Meeting	Aug 26	
Submit 30% Design Deliverables	Oct 7	
30% Design Review Presentation	Oct 7	
30% Design Review Comments Rtn.	Oct 7	Oct 16
Response to Review 30% Comments	Oct 16	Oct 30
60% Design	Oct 16	Nov 21
Clear and Grub Final	Oct 16	Nov 10
Material Take-off for Clear & Grub	Oct 23	Nov 10
Submit 60% Design Deliverables	Nov 21	
60% Design Review Presentation	Nov 21	
60% Design Review Comments Rtn.	Nov 21	Dec 4
Response to Review 60% Comments	Dec 4	Dec 18
100% Design	Dec 4	Jan 20
Submit 100% Design Deliverables	Jan 20	
100% Design Review Presentation	Jan 20	
Material Take-off	Jan 13	Feb 5
100% Design Review Comments Rtn.	Jan 20	Jan 29
Response to Review 100% Comments	Jan 29	Feb 5
Final Design	Jan 29	Feb 5
Submit Final Design Deliverables	Feb 5	

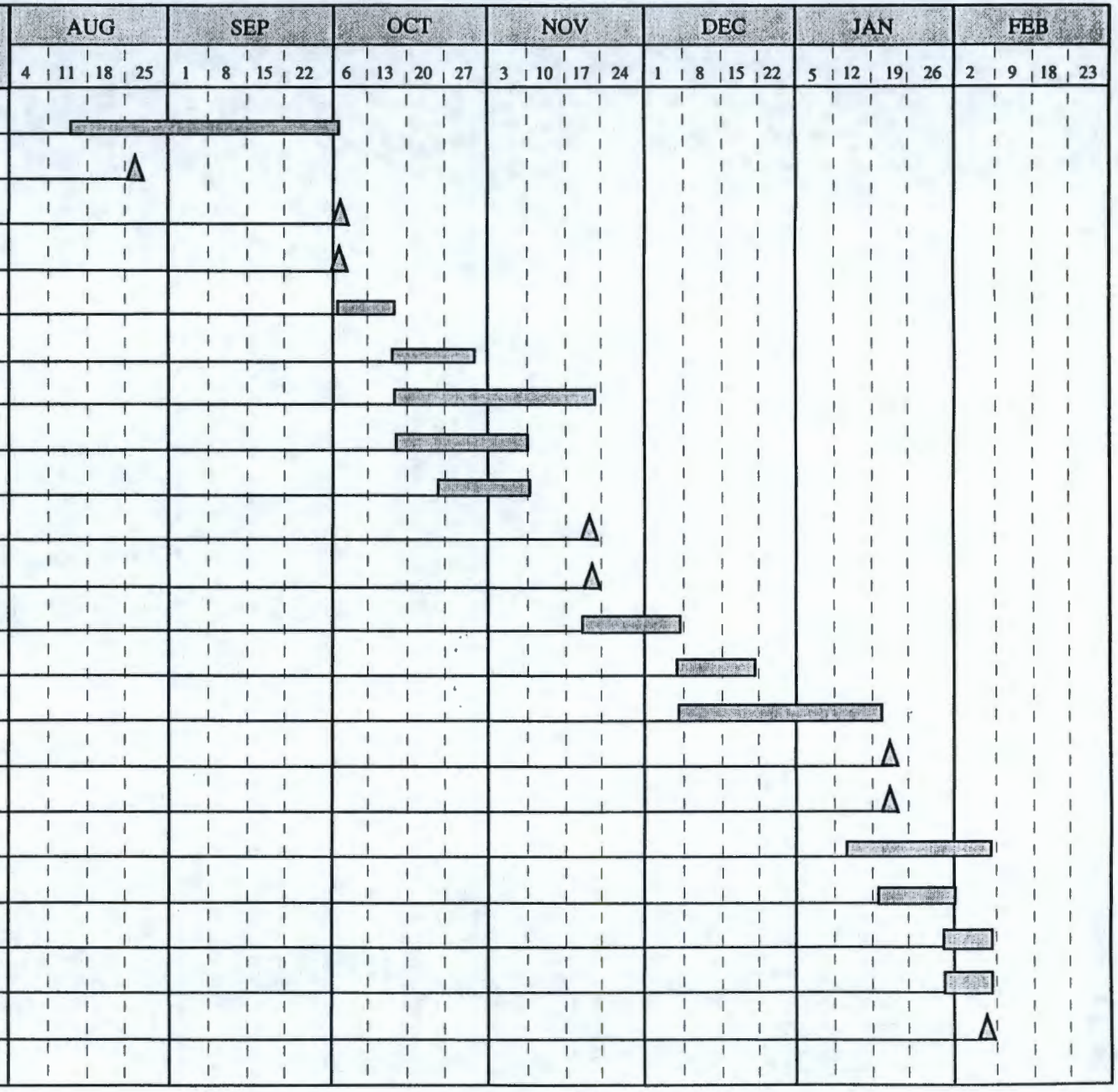

0048805
17/18

ENVIRONMENTAL RESTORATION DISPOSAL FACILITY
CELLS 3 & 4 CONSTRUCTION
HANFORD SITE
RICHLAND, WASHINGTON

100% CONSTRUCTION SPECIFICATIONS

January 20, 1998

Bechtel Job No. 22192

Prepared for
Bechtel Hanford, Inc.

Prepared by
Montgomery Watson
Richland, WA 99352

ENVIRONMENTAL RESTORATION DISPOSAL FACILITY
CELLS 3 & 4 CONSTRUCTION
HANFORD SITE
RICHLAND, WASHINGTON

100% CONSTRUCTION SPECIFICATIONS

January 20, 1998

Bechtel Job No. 22192

Prepared for
Bechtel Hanford, Inc.

Prepared by
Montgomery Watson
Richland, WA 99352

This page is intentionally blank.

INDEX OF SPECIFICATIONS

DIVISION 1	GENERAL REQUIREMENTS	PAGE
Spec No.	Section	
0600X-SP-G0017	01440 Contractor Quality Control	01440-1 - 01440-10
DIVISION 2	**SITE WORK**	**PAGE**
Spec No.	Section	
0600X-SP-C0037	02210 Earthwork	02210-1 - 02210-14
0600X-SP-C0038	02224 Admix Liner Production and Placement	02224-1 - 02224-10
0600X-SP-C0039	02226 Drainage Gravel	02226-1 - 02226-6
0600X-SP-C0040	02228 Operations Layer	02228-1 - 02228-6
0600X-SP-C0041	02230 Base Materials	02230-1 - 02230-7
0600X-SP-C0042	02270 Vegetative Erosion Control	02270-1 - 02270-3
0600X-SP-C0044	02275 Geomembranes	02275-1 - 02275-23
0600X-SP-C0045	02276 Geotextiles	02276-1 - 02276-8
0600X-SP-C0046	02277 Geocomposites	02277-1 - 02277-9
0600X-SP-C0048	02725 HDPE Pipe and Flatstock	02725-1 - 02725-10
0600X-SP-C0049	02731 Leachate System	02731-1 - 02731-10
DIVISION 3	**CONCRETE**	**PAGE**
Spec No.	Section	
0600X-SP-C0051	03100 Structural Concrete Formwork	03100-1 - 03100-5
0600X-SP-C0052	03200 Concrete Reinforcement	03200-1 - 03200-5
0600X-SP-C0054	03300 Concrete for Building Construction	03300-1 - 03300-18
DIVISION 5	**METALS**	**PAGE**
Spec No.	Section	
0600X-SP-C0055	05055 Welding, Structural	05055-1 - 05055-8
0600X-SP-C0056	05120 Structural Steel	05120-1 - 05120-6

DIVISION 6	WOOD AND PLASTICS	PAGE
Spec No.	Section	
0600X-SP-A0012	06100 Rough Carpentry	06100-1 - 06100-4
DIVISION 7	**THERMAL AND MOISTURE PROTECTION**	**PAGE**
	Section	
0600X-SP-A0013	07200 Building Insulation	07200-1 - 07200-4
0600X-SP-A0014	07920 Caulking and Sealants	07920-1 - 07920-5
DIVISION 8	**DOORS AND WINDOWS**	**PAGE**
Spec No.	Section	
0600X-SP-A0015	08110 Steel Doors and Frames	08110-1 - 08110-4
0600X-SP-A0016	08330 Overhead Rolling Doors	08330-1 - 08330-6
0600X-SP-A0017	08700 Builders' Hardware	08700-1 - 08700-6
0600X-SP-A0018	08810 Glass and Glazing	08810-1 - 08810-5
DIVISION 9	**FINISHES**	**PAGE**
Spec No.	Section	
0600X-SP-A0019	09900 Painting, General	09900-1 - 09900-8
DIVISION 11	**EQUIPMENT**	**PAGE**
Spec No.	Section	
0600X-SP-M0016	11210 Leachate Pumps	11210-1 - 11210-5
0600X-SP-M0017	11211 Horizontal End Suction Pumps	11211-1 - 11211-12
DIVISION 13	**SPECIAL CONSTRUCTION**	**PAGE**
Spec No.	Section	
0600X-SP-M0018	13120 Crest Pad Building	13120-1 - 13120-8
DIVISION 14	**CONVEYING SYSTEMS**	**PAGE**
Spec No.	Section	
0600X-SP-M0024	14630 Bridge Crane	14630-1 - 14630-6

DIVISION 15	**MECHANICAL**		**PAGE**
Spec No.	Section		
0600X-SP-M0019	15005	Piping Identification Systems	15005-1 - 15005-5
0600X-SP-M0020	15060	Crest Pad Piping	15060-1 - 15060-7
0600X-SP-M0021	15100	Crest Pad Valves	15100-1 - 15100-5
0600X-SP-M0022	15150	Meters	15150-1 - 15150-5
0600X-SP-M0023	15183	Gauges	15183-1 - 15183-4
DIVISION 16	**ELECTRICAL**		**PAGE**
Spec No.	Section		
0600X-SP-E0012	16375	Electrical Distribution System, Underground	16375-1 - 16375-17
0600X-SP-E0013	16415	Electrical Work	16415-1 - 16415-21
0600X-SP-E0014	16855	Unit Heaters and Exhaust Fans	16855-1 - 16855-6

APPENDICES

Appendix A	Geotechnical Investigation for the Environmental Restoration Disposal Facility

This page is intentionally blank.

TECHNICAL SPECIFICATION
FOR
CONTRACTOR QUALITY CONTROL
SECTION 01440

ENVIRONMENTAL RESTORATION DISPOSAL FACILITY (ERDF)
CELLS 3 & 4 CONSTRUCTION

REV	DATE	REASON FOR REVISION	ORIGINATOR	CHECKER	GROUP LEADER	TASK DESIGN LEAD	PROJECT ENGINEER
C	01/20/98	100% Design Review	MGM	LHA			
B	11/21/97	60% Design Review	MGM	LHA			

	RICHLAND ENVIRONMENTAL RESTORATION PROJECT	JOB NO. 22192
		SPECIFICATION NO. 0600X-SP-G0017
		SHEET 1 of 10

SECTION 01440

CONTRACTOR QUALITY CONTROL

PART 1 GENERAL

1.1 REFERENCES

The publications listed below form a part of this specification to the extent referenced. The publications are referred to in the text by basic designation only.

AMERICAN SOCIETY FOR TESTING AND MATERIALS (ASTM)

ASTM D 3740	(1992) Evaluation of Agencies Engaged in the Testing and/or Inspection of Soil and Rock as Used in Engineering Design and Construction
ASTM E 329	(1993) Use in the Evaluation of Testing and Inspection Agencies as Used in Construction

ENVIRONMENTAL PROTECTION AGENCY (EPA)

EPA/600/R-93/182	EPA, Technical Guidance Document, Quality Assurance and Quality Control for Waste Containment Facilities

1.2 SUBMITTALS

Submittals shall be furnished in accordance with and as specified in Exhibit I. The Contractor's CQC organization shall be responsible for certifying that all submittals are in compliance with the contract requirements.

PART 2 PRODUCTS (Not Applicable)

PART 3 EXECUTION

3.1 GENERAL

The Contractor is responsible for quality control and shall establish and maintain an effective quality control system in compliance with GC-30 INSPECTION, QUALITY SURVEILLANCE, AND REJECTION OF MATERIALS AND WORKMANSHIP and GC-49 QUALITY ASSURANCE PROGRAM of the GENERAL CONDITIONS and EPA/600/R-93/182. The quality control system shall consist of plans, procedures, and organization necessary to produce an end product which complies with the contract requirements. The quality control system shall cover all construction operations, both on-site and off-site, and shall be keyed to the proposed construction sequence. The Contractor's Quality Control Program shall be consistent with and address the requirements of the Government's Quality Assurance Plan.

3.2 QUALITY CONTROL PLAN

3.2.1 General

The Contractor shall furnish for review by the Government, not later than 30 days after award of contract, the Contractor Quality Control (CQC) Plan proposed to implement the requirements of GC-30 INSPECTION, QUALITY SURVEILLANCE, AND REJECTION OF MATERIALS AND WORKMANSHIP and GC-49 QUALITY ASSURANCE PROGRAM of the GENERAL CONDITIONS. The plan shall identify personnel, procedures, control, instructions, tests, records, and forms to be used. The Government will consider an interim plan for the first 30 days of operation. Construction will be permitted to begin only after acceptance of the CQC Plan or acceptance of an interim plan applicable to the particular feature of work to be started. Work outside of the features of work included in an accepted interim plan will not be permitted to begin until acceptance of a CQC Plan or another interim plan containing the additional features of work to be started.

3.2.2 Content of the CQC Plan

The CQC plan shall include, as a minimum, the following to cover all construction operations, both on-site and off-site, including work by subcontractors.

a. A description of the quality control organization, including a chart showing lines of authority and acknowledgment that the CQC staff shall implement the three phase control system for all aspects of the work specified. The staff shall include a CQC system manager who shall report to the project manager or someone higher in the Contractor's organization. Project manager in this context shall mean the individual with responsibility for the overall management of the project including quality and production.

b. The name, qualifications (in resume format), duties, responsibilities, and authorities of each person assigned a QC function.

c. A copy of the letter to the CQC System Manager signed by an authorized official of the firm which describes the responsibilities and delegates sufficient authorities to adequately perform the functions of the CQC System Manager including authority to stop work which is not in compliance with the contract. The CQC System Manager shall issue letters of direction to all other various quality control representatives outlining duties, authorities and responsibilities. Copies of these letters shall also be furnished to the Government.

d. Procedures for scheduling, reviewing, certifying, and managing submittals, including those of subcontractors, off-site fabricators, suppliers and purchasing agents. These procedures shall be in accordance with Exhibit I.

e. Control, verification, and acceptance testing procedures for each specific test to include the test name, specification paragraph requiring test, feature of work to be tested, test frequency, and person responsible for each test. (Laboratory facilities will be subject to approval by the Contracting Officer.)

f. Procedures for tracking preparatory, initial, and follow-up control phases and control, verification, and acceptance tests including documentation.

g. Procedures for tracking construction deficiencies from identification through acceptable corrective action. These procedures shall establish verification that identified deficiencies have been corrected.

h. Reporting procedures, including proposed reporting formats.

i. A list of the definable features of work. A definable feature of work is a task which is separate and distinct from other tasks and has separate control requirements. It could be identified by different trades or disciplines, or it could be work by the same trade in a different environment. Although each section of the specifications may generally be considered as a definable feature of work, there are frequently more than one definable feature under a particular section. This list will be agreed upon during the coordination meeting.

3.2.3 Acceptance of Plan

Acceptance of the Contractor's plan is required prior to the start of construction. Acceptance is conditional and will be predicated on satisfactory performance during construction. The Government reserves the right to require the Contractor to make changes in his CQC plan and operations including removal of personnel, as necessary, to obtain the quality specified.

3.2.4 Notification of Changes

After acceptance of the CQC plan, the Contractor shall notify the Contracting Officer in writing a minimum of seven calendar days prior to any proposed change. Proposed changes are subject to acceptance by the Contracting Officer.

3.3 COORDINATION MEETING

After the Preconstruction Conference, before start of construction, and prior to acceptance by the Government of the Quality Control Plan, the Contractor shall meet with the Contracting Officer or Authorized Representative and discuss the Contractor's quality control system. During the meeting, a mutual understanding of the system details shall be developed, including the forms for recording the CQC operations, control activities, testing, administration of the system for both on-site and off-site work, and the interrelationship of Contractor's Management and control with the Government's Quality Assurance inspection. Minutes of the meeting will be prepared by the Government and signed by both the Contractor and the Contracting Officer. The minutes shall become a part of the contract file. There may be occasions when subsequent conferences will be called by either party to reconfirm mutual understandings and/or address deficiencies in the CQC system or procedures which may require corrective action by the Contractor.

3.4 QUALITY CONTROL ORGANIZATION

3.4.1 CQC System Manager

The Contractor shall identify an individual within his organization at the site of the work who shall be responsible for overall management of CQC and have the authority to act in all CQC matters for the Contractor. This CQC System Manager shall be on the site at all times during construction and shall be employed by the Contractor, except as noted in the following. An alternate for the CQC System Manager shall be identified in the plan to serve in the event of the system manager's absence. The requirements for the alternate shall be the same as for the designated CQC System Manager.

3.4.2 CQC Organizational Staffing

A CQC staff shall be maintained under the direction of the CQC System Manager to perform all Quality Control activities. The actual strength of the staff during any specific work period may vary to cover work phase needs, shifts, and rates of placement. The personnel of this staff shall be fully qualified by experience and technical training to perform their assigned responsibilities and shall be directly hired by and work for the prime Contractor.

3.4.3 Organizational Changes

The Contractor shall obtain Contracting Officer's acceptance before replacing any member of the CQC staff. Requests shall include the names, qualifications, duties, and responsibilities of each proposed replacement.

3.5 CONTROL

Contractor Quality Control is the means by which the Contractor ensures that construction, to include that of subcontractors and suppliers, complies with the requirements of the contract. The controls shall be adequate to cover all construction operations, and shall be keyed to the proposed construction sequence. The controls shall include at least three phases of control to be conducted by the CQC system manager for all definable features of work, as follows:

3.5.1 Preparatory Phase

This phase shall be performed prior to beginning work on each definable feature of work and shall include:

a. A review of each paragraph of applicable specifications.

b. A review of the contract plans.

c. A check to assure that all materials and/or equipment have been tested, submitted, and approved.

d. A check to assure that provisions have been made to provide required control inspection and testing.

e. Examination of the work area to assure that all required preliminary work has been completed and is in compliance with the contract.

f. A physical examination of required materials, equipment, and sample work to assure that they are on hand, conform to approved shop drawing or submitted data, and are properly stored.

g. A review of the appropriate activity hazard analysis to assure safety requirements are met.

h. Discussion of procedures for constructing the work including repetitive deficiencies. Document construction tolerances and workmanship standards for that phase of work.

i. A check to ensure that the portion of the plan for the work to be performed has been accepted by the Contracting Officer.

j. The Government shall be notified at least 24 hours in advance of beginning any of the required action of the preparatory phase. This phase shall include a meeting conducted by the CQC system manager and attended by the superintendent, other CQC personnel (as applicable), and the foreman responsible for the definable feature. The results of the preparatory phase actions shall be documented by separate minutes prepared by the CQC system manager and attached to the daily QC report. The Contractor shall instruct applicable workers as to the acceptable level of workmanship required in order to meet contract specifications.

3.5.2 Initial Phase

This phase shall be accomplished at the beginning of a definable feature of work. The following shall be accomplished:

a. A check of preliminary work to ensure that it is in compliance with contract requirements. Review minutes of the preparatory meeting.

b. Verification of full contract compliance. Verify required control inspection and testing.

c. Establish level of workmanship and verify that it meets minimum acceptable workmanship standards. Compare with sample panels is appropriate.

d. Resolve all differences.

e. Check safety to include compliance with and upgrading of the safety plan and activity hazard analysis. Review the activity analysis with each worker.

f. The Government shall be notified at least 24 hours in advance of beginning the initial phase. Separate minutes of this phase shall be prepared by the CQC system manager and attached to the daily QC report. Exact location of initial phase shall be indicated for future reference and comparison with follow-up phases.

g. The initial phase shall be repeated for each new crew to work on-site, or any time acceptable specified quality standards are not being met.

3.5.3 Follow-up Phase

Daily inspections shall be performed to assure continuing compliance with contract requirements, including control testing, until completion of the particular feature of work. The inspections shall be made a matter of record in the CQC documentation. Final follow-up inspections shall be conducted and all deficiencies corrected prior to the start of additional features of work which may be affected by the deficient work. The Contractor shall not build upon or conceal non-conforming work.

3.5.4 Additional Preparatory and Initial Phases

Additional preparatory and initial phases shall be conducted on the same definable features of work as determined by the Government if the quality of on-going work is unacceptable; or if there are changes in the applicable QC staff or in the on-site production supervision or work crew; or if work on a definable feature is resumed after a substantial period of inactivity, or if other problems develop.

3.6 TESTS

3.6.1 Testing Procedure

The Contractor shall perform tests specified or required to verify that control measures are adequate to provide a product which conforms to contract requirements. Testing includes operation and/or acceptance tests when specified. The Contractor shall procure the services of a Government approved testing laboratory or establish an approved testing laboratory at the project site. A list of tests to be performed shall be furnished as part of the CQC plan. The list shall give the test name, frequency, specification paragraph containing the test requirements. The personnel and laboratory responsible for each type of test and estimate of the number of tests required. The Contractor shall perform the following activities and record and provide the following data:

a. Verify that testing procedures comply with contract requirements

b. Verify that facilities and testing equipment are available and comply with testing standards

c. Check test instrument calibration data against certified standards

d. Verify that recording forms and test identification control number system, including all of the test documentation requirements, have been prepared.

e. Results of all tests taken, both passing and failing tests, shall be recorded on the Quality Control report for the date taken. Specification paragraph reference, location where tests were taken, and the sequential control number identifying the test shall be recorded. Actual test reports may be submitted later, if approved by the Contracting Officer, with a reference to the test number and date taken. An information copy of tests performed by an off-site or commercial test facility shall be provided directly to the Contracting Officer. Failure to submit timely test reports, as stated, may result in nonpayment for related work performed and disapproval of the test facility for this contract.

3.6.2 Testing Laboratories

3.6.2.1 Capability Check

The Government reserves the right to check laboratory equipment in the proposed laboratory for compliance with the standards set forth in the contract specifications and to check the laboratory technician's testing procedures and techniques. Laboratories utilized for testing soils, concrete, asphalt and steel shall meet criteria detailed in ASTM D 3740 and ASTM E 329.

The Government reserves the right to utilize the Contractor's control testing laboratory and equipment to make assurance tests and to check the Contractor's testing procedures, techniques, and test results at no additional cost to the Government.

3.6.3 Furnishing or Transportation of Samples for Testing

Costs incidental to the transportation of samples or materials shall be borne by the Contractor. Samples of materials for test verification and acceptance testing by the Government shall be delivered to the Contracting Officer's Representative.

3.7 COMPLETION INSPECTION

At the completion of all work or any increment thereof established by a completion time stated in clause entitled COMMENCEMENT, PROSECUTION, AND COMPLETION OF WORK in Special Conditions, or stated elsewhere in the specifications, the CQC system manager shall conduct an inspection of the work and develop a "punch list" of items which do not conform to the approved plans and specifications. Such a list of deficiencies shall be included in the CQC documentation, as required by paragraph DOCUMENTATION below, and shall include the estimated date by which the deficiencies will be corrected. The CQC system manager or staff shall make a second inspection to ascertain that all deficiencies have been corrected and so notify the Contracting Officer. These inspections and any deficiency corrections required by this paragraph shall be accomplished within the time stated for completion of the entire work or any particular increment thereof if the project is divided into increments by separate completion dates.

3.8 DOCUMENTATION

The Contractor shall maintain current records of quality control operations, activities, and tests performed, including the work of subcontractors and suppliers. These records shall be on an acceptable form and shall include factual evidence that required quality control activities and/or tests have been performed, including but not limited to the following:

a. Contractor/subcontractor and their area of responsibility.

b. Operating plant/equipment with hours worked, idle, or down for repair.

c. Test and/or control activities performed with results and references to specifications/plan requirements. The control phase should be identified (Preparatory, Initial, Follow-up). List deficiencies noted along with corrective action.

d. Off-site surveillance activities, including actions taken.

e. Job safety evaluations stating what was checked, results, and instructions or corrective actions.

f. List instructions given/received and conflicts in plans and/or specifications.

g. Contractor's verification statement.

h. Work performed today, giving location, description, and by whom. When Network Analysis (NAS) is used, identify each phase of work performed each day by NAS activity number.

i. Material received with statement as to its acceptability and storage.

j. Identify submittals reviewed, with contract reference, by whom, and action taken.

k. These records shall indicate a description of trades working on the project; the number of personnel working; weather conditions encountered; and any delays encountered. These records shall cover both conforming and deficient features and shall include a statement that equipment and materials incorporated in the work and workmanship comply with the contract. The original and one copy of these records in report form shall be furnished to the Government daily within 1 working day after the date(s) covered by

the report, except that reports need not be submitted for days on which no work is performed. As a minimum, one report shall be prepared and submitted for every seven days of no work and on the last day of a no work period. All calendar days shall be accounted for throughout the life of the contract. The first report following a day of no work shall be for that day only. Reports shall be signed and dated by the CQC system manager. The report from the CQC system manager shall include copies of test reports and copies of reports prepared by all subordinate quality control personnel.

3.9 NOTIFICATION OF NONCOMPLIANCE

The Contracting Officer will notify the Contractor of any detected noncompliance with the foregoing requirements. The Contractor shall, after receipt of such notice, immediately take corrective action. Such notice, when delivered to the Contractor at the site of the work, shall be deemed sufficient for the purpose of notification. If the Contractor fails or refuses to comply promptly, the Contracting Officer may issue an order stopping all or part of the work until satisfactory corrective action has been taken. No part of the time lost due to such stop orders shall be made the subject of claim for extension of time or for excess costs or damages by the Contractor.

3.10 CONSTRUCTION QUALITY ASSURANCE PLAN COMPLIANCE

Bechtel Hanford, Inc. BHI-01143 QUALITY ASSURANCE FOR TRENCH LINER SYSTEM AND SUPPORT FACILITIES, CONSTRUCTION QUALITY ASSURANCE PLAN will be utilized by an independent construction quality assurance subcontractor (contracted by BHI) to ensure:

- Facility components are constructed in accordance with the plans and specifications.
- The requirements of regulatory agencies are documented sufficiently to demonstrate compliance with government regulations.

Contractor shall assist the independent construction quality assurance subcontractor by providing material, equipment, and labor as required to demonstrate that the facility construction is acceptable in accordance with specification number 0600X-QA-G0017. When tests or documentation activities are required to be performed by the independent construction quality assurance subcontractor, the Contractor shall stop work on those areas until authorized to proceed. In the event material tests fail, the Contractor shall bring the material into compliance with the plans and specifications and support additional testing as required.

PART 4 SUBMITTAL SUMMARY

4.1 SUMMARY OF SUBMITTALS

Submittals to be furnished by the Contractor shall include the following:

Paragraph	Item	SD
01440-3.2	Contractor Quality Control Plan	09

Code for Type of Submittal (SD)

01 - Data
04 - Drawings
06 - Instructions
07 - Schedules
08 - Statements
09 - Reports
13 - Certificates
14 - Samples
18 - Records
19 - O & M Manuals

- END OF SECTION -

* * * * *

This page is intentionally blank.

TECHNICAL SPECIFICATION
FOR
EARTHWORK
SECTION 02210

ENVIRONMENTAL RESTORATION DISPOSAL FACILITY (ERDF)
CELLS 3 & 4 CONSTRUCTION

C	01/20/98	100% Design Review	MGM	LHA			
B	11/21/97	60% Design Review	MGM	LHA			
REV	DATE	REASON FOR REVISION	ORIGINATOR	CHECKER	GROUP LEADER	TASK DESIGN LEAD	PROJECT ENGINEER

	RICHLAND ENVIRONMENTAL RESTORATION PROJECT	JOB NO. 22192
		SPECIFICATION NO. 0600X-SP-C0037
		SHEET 1 of 14

This page is intentionally blank.

SECTION 02210

EARTHWORK

PART 1 GENERAL

1.1 REFERENCES

The publications listed below form a part of this specification to the extent referenced. The publications are referred to in the text by basic designation only.

AMERICAN SOCIETY FOR TESTING AND MATERIALS (ASTM)

ASTM C 136	(1994a) Sieve Analysis of Fine and Coarse Aggregates
ASTM D 422	(1963; R 1972) Particle size analysis of soils
ASTM D 1140	(1992) Amount of Material in Soils Finer than the No. 200 (75-micrometer) Sieve
ASTM D 1556	(1990) Density and Unit Weight of Soil in Place by the Sand-Cone Method
ASTM D 1557	(1991) Laboratory Compaction Characteristics of Soil Using Modified Effort (56,000 ft-lbf/cu. ft. (2,700 kN-m/cu.m.))
ASTM D 2167	(1984; R 1990) Density and Unit Weight of Soil in Place by the Rubber Balloon Method
ASTM D 2216	(1992) Laboratory Determination of Water (Moisture) Content of Soil, and Rock
ASTM D 2487	(1992) Classification of Soils for Engineering Purposes (Unified Soil Classification System)
ASTM D 2922	(1991) Density of Soil and Soil-Aggregate in Place by Nuclear Methods (Shallow Depth)
ASTM D 3017	(1988) Water Content of Soil and Rock in Place by Nuclear Methods (Shallow Depth)
ASTM D 4318	(1984) Liquid Limit, Plastic Limit, and Plasticity Index of Soils

CODE OF FEDERAL REGULATIONS

29 CFR	Safety and Health Regulations for Construction

1.2 DEFINITIONS

1.2.1 Satisfactory Materials

Materials classified in ASTM D 2487 as GW, GP, GM, GW-GM, SW, SP, SM, SP-SM and SW-SM and free from roots and other organic matter, trash, debris, and frozen materials and stones larger than 150 mm (6 inches) in any dimension will be considered satisfactory material unless specified otherwise. Satisfactory material used as backfill for buildings or concrete slabs shall not be larger than 75 mm (3 inches) in any dimension.

1.2.2 Unsatisfactory Materials

Materials which do not comply with the requirements for satisfactory materials and materials classified in ASTM D 2487 as Pt, OH, and OL are unsatisfactory. Unsatisfactory materials also include man-made fills, refuse, or backfills from previous construction.

1.2.3 Cohesionless and Cohesive Materials

Cohesionless materials include materials classified in ASTM D 2487 as GW, GP, SW, and SP. Cohesive materials include materials classified as GC, SC, ML, CL, MH, and CH. Materials classified as GM and SM will be identified as cohesionless only when the fines are nonplastic. Testing required for classifying materials shall be in accordance with ASTM D 4318 (for admix and excavation fill soils containing >12% fines passing the #200 sieve), ASTM C 136, ASTM D 422, and ASTM D 1140.

1.2.4 Degree of Compaction

Degree of compaction is a percentage of the maximum density obtained by the test procedure presented in ASTM D 1557 abbreviated hereinafter as a percent of maximum density.

1.2.5 Unyielding Material

Unyielding material shall consist of rock and gravelly soils with stones greater than 75 mm (3 inches) in any dimension or as defined by the pipe manufacturer, whichever is smaller.

1.2.6 Unstable Material

Unstable material shall consist of materials too wet to properly support the materials or to be placed on or above it.

1.3 SUBMITTALS

Submittals shall be furnished in accordance with Exhibit I.

SD-08 Statements

Field Testing Control;

Qualifications of the commercial testing laboratory who will be performing all testing in accordance with paragraph FIELD TESTING CONTROL.

Earthwork;

Procedure for stockpiling and maintaining excess gravel material.

SD-09 Reports

Satisfactory Materials;

Certified test reports and analysis certifying that the satisfactory materials proposed for use at the project site conform to the specified requirements, and for all tests conducted in accordance with paragraph FIELD TESTING CONTROL.

Copies of all laboratory and field test reports within 1 working day of the completion of the test.

Calibration Data;
Testing;

Within 1 working day of conclusion of physical tests, 3 copies of test results, including calibration curves and results of calibration tests.

SD-13 Certificates

Testing;

Qualifications of the commercial testing laboratory or Contractor's testing facilities.

1.4 SUBSURFACE DATA

Subsurface soil boring logs are shown on the drawings. The subsoil investigation report is included as an attachment to the specifications. These data represent the best subsurface information available; however, variations may exist in the subsurface between boring locations.

1.5 CLASSIFICATION OF EXCAVATION

No consideration will be given to the nature of the materials, and all excavation will be designated as unclassified excavation.

PART 2 PRODUCTS

2.1 BORROW MATERIAL

Borrow material shall be selected from material excavated under this contract and shall meet the requirements and conditions of the particular fill for which it is to be used.

2.1.1 Select Granular Material

Select granular material shall consist of well-graded sand, gravel, crushed gravel, crushed stone or crushed slag composed of hard, tough and durable particles, and shall contain not more than 10 percent by weight of material passing a 0.075 mm (No. 200) mesh sieve and no less than 95 percent by weight

passing the 25 mm (1 inch) sieve. For utility trenches the maximum allowable aggregate size shall be not more than 8 mm per 100 mm (1 inch per foot) of pipe diameter or 75 mm (3 inches), or the maximum size recommended by the pipe manufacturer, whichever is smaller.

2.1.2 Bedding and Initial Backfill Material

Bedding and initial backfill for utilities shall consist of select granular material or satisfactory materials free from rocks 25 mm (1 inch) or larger in any dimension or free from rocks of such size as recommended by the pipe manufacturer, whichever is smaller.

2.1.3 Structural Fill

Structural Fills shall be constructed of satisfactory materials as defined in paragraph 1.2.1.

2.1.4 General Fill

General Fills shall be constructed of satisfactory materials as defined in paragraph 1.2.1.

2.1.5 Type I Fill

Type I fill shall consist of general fill classified as satisfactory materials with a maximum particle size of 150 mm (6 inches).

2.1.6 Type II Fill

Type II fill shall consist of general fill classified as satisfactory materials with a maximum particle size of 25 mm (1 inch).

2.2 PLASTIC MARKING TAPE

Plastic marking tape shall be of a type specifically manufactured for marking and locating underground utilities. The metallic core of the tape shall be encased in a protective jacket or provided with other means to protect it from corrosion. Tape color shall be as specified in TABLE 1 and shall bear a continuous printed inscription describing the specific utility.

TABLE 1. Tape Color

Red:	Electric
Blue:	Water Systems
Yellow:	Leachate
Yellow:	Transfer Line

PART 3 EXECUTION

3.1 EXCAVATION

3.1.1 General

Excavation of every description, regardless of material encountered shall be performed to the lines, grades, and elevations shown on the drawings and specified herein. Material required for fills in excess of that produced by excavation within the grading limits shall be obtained from Cells 3 and 4 excavation. Satisfactory excavation material shall be transported to and placed in fill areas such as embankment,

subgrades, shoulders, and other similar fills within the limits of the work or disposed of in the excavation soil stockpile area. All unsatisfactory material including any soil which is disturbed by the Contractor's operations or softened due to exposure to the elements and water and surplus material shall be disposed of in gravel pit No. 31. Excavation below indicated depths shall not be permitted except to remove unsatisfactory material. In the event that unsatisfactory material is encountered below the grades shown or specified, the Contracting Officer shall be notified. Determination of elevations and measurements of approved overdepth excavation of unsatisfactory material and the replacement of such material with satisfactory material shall be done under the direction of the Contracting Officer. Excavations carried below the depths indicated, without specific directions, shall, except as otherwise specified, be refilled to the proper grade with satisfactory material at no additional cost to the Government. Excavation and filling shall be performed in a manner and sequence that will provide drainage at all times. Excavations shall be kept free from water while construction therein is in progress. Surface water shall be directed away from excavation and construction sites so as to prevent erosion and undermining of foundations. Diversion ditches, dikes and grading shall be provided and maintained as necessary during construction. Excavated slopes and backfill surfaces shall be protected to prevent erosion and sloughing.

3.1.2 Buildings

Excavation for buildings shall include trenching for utility systems to a point 1.5 m (5 feet) beyond the building line of each building and structure. Excavation shall extend a sufficient distance from walls and footings to allow for placing and removal of forms. Where excavations for footings are carried below the depths indicated without prior approval, the concrete footings shall be increased in thickness to the bottom of the overdepth excavations and additional rebar included therein as determined necessary by the Contracting Officer.

3.1.3 Utilities Systems

During excavation, material satisfactory for backfilling utility systems shall be stockpiled in an orderly manner in accordance with OSHA 29 CFR 1926 trenching and shoring requirement at a distance from the banks of the trench equal to 1/2 the depth of the excavation, but in no instance closer than 600 mm (2 feet).

3.1.3.1 Utility Trench Excavation

The trench shall be excavated as recommended by the manufacturer of the pipe to be installed. Trench walls below the top of the pipe shall be vertical and of such width as recommended in the manufacturer's installation manual. Trench walls more than 1.2 meters (4 feet) high shall be shored, cut back to a stable slope, or provided with equivalent means of protection for employees who may be exposed to moving ground or cave in. Trench walls which are cut back shall be excavated to meet the requirements of 29 CFR 1926. Special attention shall be given to slopes which may be adversely affected by weather or moisture content. The trench width below the top of pipe shall not exceed 600 mm (24 inches) plus pipe outside diameter (O.D.) for pipes of less than 600 mm (24 inches) inside diameter. Where recommended trench widths are exceeded, redesign, stronger pipe, or special installation procedures shall be utilized by the Contractor. The cost of redesign, stronger pipe, or special installation procedures shall be borne by the Contractor without any additional cost to the Government.

3.1.3.2 Removal of Unyielding Material

Where unyielding material is encountered in the bottom of the trench, such material shall be removed 100 mm (4 inches) below the required grade and replaced with select granular material or initial backfill material as provided in paragraph BACKFILLING AND COMPACTION OF UTILITIES SYSTEMS.

3.1.3.3 Removal of Unstable Material

Where unstable material is encountered in the bottom of the trench, such material shall be removed to the depth directed by the Contracting Officer and replaced to the proper grade with select granular material as provided in paragraph BACKFILLING AND COMPACTION OF UTILITIES SYSTEMS. When removal of unstable material is required due to the fault or neglect of the Contractor in his performance of the work, the resulting material shall be excavated and replaced by the Contractor without additional cost to the Government.

3.1.3.4 Excavation for Appurtenances

Excavation for precast manholes or similar structures shall be sufficient to leave at least 300 mm (12 inches) clear between the outer structure surfaces and the face of the excavation or support members.

3.2 PREPARATION OF GROUND SURFACE FOR FILLS AND EMBANKMENTS

3.2.1 Structural Fills and Waste Trench Embankments

Ground surface on which structural fill is to be placed shall be stripped of live, dead, or decayed vegetation, rubbish, debris, and other unsatisfactory material to a depth of 305 mm (12 inches). Ground surface shall be plowed, disked, or otherwise broken up; pulverized; moistened or aerated as necessary; thoroughly mixed; and compacted to not less than 95 percent of maximum density as determined by ASTM D1557. In areas where Eolian Soils are present and when authorized by the Contracting Officer, subgrade shall be scarified and brought to near optimum moisture content and compacted to achieve a minimum of 90% of maximum density as determined by ASTM D1557. The prepared ground surface shall be scarified and moistened or aerated as required just prior to placement of embankment materials to assure adequate bond between embankment material and the prepared ground surface.

3.2.2 General Fill Areas and Excavation Soil Stockpile Area

Ground surface on which general fill and excavation soil stockpile is to be placed need not be stripped of live, dead, or decayed vegetation. Rubbish and debris, however, shall be removed and disposed of.

3.3 SUBGRADE PREPARATION FOR BUILDINGS

The surface shall be scarified to a depth of 150 mm (6 inches) and shall be compacted to not less than 95 percent of maximum dry density as determined by ASTM D1557 prior to placing fill or backfill. Material shall not be placed on surfaces that are muddy, frozen, or contain frost. Material shall be moistened or aerated as necessary to provide the moisture content that will readily facilitate obtaining the specified compaction with the equipment used. Approved compacted subgrades that are disturbed by the Contractor's operations or adverse weather shall be scarified and compacted as specified herein before to the required density prior to further construction thereon. Recompaction over underground utilities shall be by hand tamping.

3.4 UTILITY TRENCH BOTTOM PREPARATION

The bottoms of trenches shall be accurately graded to provide uniform bearing and support for the bottom quadrant of each section of the pipe. The trench bottom shall be given a final trim, using a string line for establishing grade, such that each pipe section when first laid will be continually in contact with the ground along the extreme bottom of the pipe. Bell holes shall be excavated to the necessary size at

each joint or coupling to eliminate point bearing. Stones of 75 millimeters (3 inches) or greater in any dimension, or as recommended by the pipe manufacturer, whichever is smaller, shall be removed to avoid point bearing.

3.5 SUBGRADE PREPARATION FOR ROADWAYS

3.5.1 Construction

Subgrade shall be shaped to line, grade, and cross section, and compacted as specified. This operation shall include plowing, disking, and any moistening or aerating required to obtain specified compaction. Soft or otherwise unsatisfactory material shall be removed and replaced with satisfactory excavated material or other approved material as directed. Low areas resulting from removal of unsatisfactory material shall be brought up to required grade with satisfactory materials, and the entire subgrade shall be shaped to line, grade, and cross section and compacted as specified. The elevation of the finished subgrade shall not vary more than 30 mm (0.1 foot) from the established grade and cross section.

3.5.2 Compaction

Subgrade shall be compacted to at least 95 percentage maximum density for a depth of 305 mm (12 inches).

3.6 FILLING AND BACKFILLING FOR BUILDINGS

Satisfactory materials shall be used in bringing fills and backfills to the lines and grades indicated and for replacing unsatisfactory materials. Satisfactory materials shall be placed in horizontal layers not exceeding 200 mm (8 inches) in loose thickness, or 150 mm (6 inches) when hand-operated compactors are used. After placing, each layer shall be plowed, disked, or otherwise broken up, moistened or aerated as necessary, thoroughly mixed and compacted as specified. Backfilling shall not begin until construction below finish grade has been approved, underground utilities systems have been inspected, tested and approved, forms removed, and the excavation cleaned of trash and debris. Backfill shall be brought to indicated finish grade. Backfill shall not be placed in wet or frozen areas. Heavy equipment for spreading and compacting backfill shall not be operated closer to foundation than a distance equal to the height of backfill above the top of footing. The area remaining shall be compacted in layers not more than 100 mm (4 inches) in compacted thickness with power-driven hand tampers suitable for the material being compacted. Backfill shall not be placed against foundation walls prior to 7 days after completion of the walls. As far as practicable, backfill shall be brought up evenly on each side of the wall and sloped to drain away from the wall. Each layer of fill and backfill shall be compacted to not less than 95 percent of maximum dry density as determined by ASTM D1557.

3.7 BACKFILLING AND COMPACTION OF UTILITIES SYSTEMS

Backfill material shall consist of satisfactory material, select granular material, or initial backfill material as required. Backfill shall be placed in layers not exceeding 150 mm (6 inches) loose thickness for compaction by hand operated machine compactors, and 200 mm (8 inches) loose thickness for other than hand operated machines. Each layer shall be compacted to at least 90 percent maximum density, unless otherwise specified for backfill of roadways and buildings.

3.7.1 Trench Backfill

Trenches shall be backfilled to the grade shown. The trench shall be backfilled to 600 millimeters (2 feet) above the top of pipe prior to performing the required pressure tests. The joints and couplings shall be left uncovered during the pressure test.

3.7.1.1 Replacement of Unyielding Material

Unyielding material removed from the bottom of the trench shall be replaced with select granular material or initial backfill material.

3.7.1.2 Replacement of Unstable Material

Unstable material removed from the bottom of the trench or excavation shall be replaced with select granular material placed in layers not exceeding 150 mm (6 inches) loose thickness.

3.7.1.3 Bedding and Initial Backfill

Bedding and initial backfill material shall be placed and compacted with approved tampers to a height of at least one foot above the top of utility pipe or conduit. The backfill shall be brought up evenly on both sides of the pipe for the full length of the pipe. Care shall be taken to ensure thorough compaction of the fill under the haunches of the pipe.

Bedding shall be provided for all sewers, drainage pipelines, and other gravity flow pipelines. Unless otherwise specified or shown, for other pipelines the bedding may be omitted if all the following conditions exist.

a. The pipe bears on firm, undisturbed native soil which contains only particles that will pass a one-inch sieve.

b. The trench excavation is not through rock or stones.

c. The trench subgrade soils are classified as satisfactory material.

d. The trench subgrade soils have, as a maximum, a moisture content that allows compaction.

Where bedding is required, after compacting the bedding the Contractor shall perform a final trim using a stringline for establishing grade, such that each pipe section when first laid shall continually be in contact with the bedding along the extreme bottom of the pipe. Excavation for pipe bells and welding shall be made as required.

3.7.1.4 Final Backfill

The remainder of the trench, except for special materials for roadways, shall be filled with satisfactory material. Backfill material shall be placed and compacted as required for the general area surrounding the utility trench.

3.8 BACKFILL FOR ROADWAYS

Compaction requirements for backfill materials shall also conform to the applicable portions of paragraphs SUBGRADE PREPARATION FOR ROADWAYS.

3.9 FILLS AND EMBANKMENTS

3.9.1 Structural Fills and Waste Trench Embankments

Fills and embankments shall be constructed at the locations and lines and grades indicated. The completed fill shall conform to the shape of the typical sections indicated or shall meet the requirements of the particular case. Fill shall be satisfactory material. No frozen material shall be permitted in the fill. Stones having a dimension greater than 100 mm (4 inches) shall not be permitted in the upper 150 mm (6 inches) of fills or embankments. The material shall be placed in successive horizontal layers of 200 mm (8 inches) in loose depth for the full width of the cross section and shall be compacted to at least 95 percent maximum density. Each layer shall be compacted before the overlaying lift is placed. Moisture content of the fill or backfill material shall be adjusted by wetting or aerating, as required, to provide the moisture content that will readily facilitate obtaining 95 percent of maximum density as determined by ASTM D1557.

3.9.2 General Fills

General Fill areas are limited to the areas identified on the drawings. Satisfactory materials shall be used to bring the general fill areas to the lines and grades indicated. The material shall be placed in lifts not to exceed 200 mm (8 inches) in loose depth and shall be compacted to 90 percent of maximum density.

3.10 FINISHING FOR ROADWAYS

The surface of all roadways and shoulders shall be finished to a smooth and compact surface in accordance with the lines, grades, and cross sections or elevations shown. The degree of finish shall be within 30 mm (0.1 foot) of the grades and elevations indicated.

3.11 FINISHED EXCAVATION, FILLS, AND EMBANKMENTS OTHER THAN FOR ROADWAYS AND BUILDINGS

All areas covered by the project, including excavated and filled sections and adjacent transition areas, shall be uniformly smooth-graded. The finished surface shall be reasonably smooth, compacted, and free from irregular surface changes. The degree of finish shall be that ordinarily obtainable from blade-grader operations, but not more than 45 mm (0.15 feet) above or below the established grade and approved cross section, except as otherwise specified. Ditches and swales shall be finished in a manner that will result in effective drainage.

3.12 STOCKPILES

Contractor shall submit for approval a procedure for stockpiling and maintaining excavation soil material. Stockpiles shall be kept in a neat and well drained condition, giving due consideration to drainage at all times. The ground surface at stockpile locations shall be sealed by rubber-tired equipment. Stockpile of satisfactory materials shall be protected from contamination which may destroy the quality and fitness of the stockpiled material. If the Contractor fails to protect the stockpile, and any material becomes unsatisfactory, such material shall be removed at no additional cost to the Government. Locations of stockpiles shall be as shown and are identified on the drawings as Excavation Soil Stockpile Area for satisfactory material and Gravel Pit No. 31 for unsatisfactory material.

3.13 DITCHES AND SWALES

Ditches and swales shall be cut accurately to the cross sections and grades indicated. All roots, stumps, rock, and foreign matter in the sides and bottom of ditches and channel changes shall be trimmed and dressed or removed to conform to the slope, grade, and shape of the section indicated. Care shall be taken not to excavate ditches below the grades indicated. Excessive ditch and swale excavation shall be backfilled to grade with satisfactory, thoroughly compacted material. All ditches and swales excavated under this section shall be maintained until final acceptance of the work.

3.14 SHORING

All excavations shall be sloped or otherwise supported in a safe manner in accordance with applicable requirements of 29 CFR 1926. Shoring, including sheet piling, shall be furnished and installed as necessary to protect workmen, banks, adjacent paving, structures, and utilities. Shoring, bracing, and sheeting shall be removed as excavations are backfilled, in a manner to prevent caving.

3.15 FIELD TESTING CONTROL

Testing shall be the responsibility of the Contractor and shall be performed at no additional cost to the Government. Tests shall be performed by an approved commercial testing laboratory or may be tested by facilities furnished by the Contractor. No work requiring testing shall be permitted until the facilities have been inspected and approved by the Contracting Officer. The laboratory or contractor shall provide copies of nuclear gauge licenses, calibrations, and training certificates for operators. Cost incurred for any subsequent inspection required because of failure of the first inspection shall be charged to the Contractor. Characteristics of backfill materials shall be determined in accordance with particle size analysis of soils ASTM D 422 except hydrometer testing shall only be required for soils with > 12% of fines passing the #200 sieve by dry sieving. Moisture density relations of soils shall be verified using ASTM D 1557. Grain size classification of soils shall be performed on every 6000 cubic meters (8000 cubic yards) of excavated soil or when significant changes in soil types occur. Field in-place density shall be determined in accordance with ASTM D 1556, ASTM D 2167, or ASTM D 2922 and except that ASTM D 2922 shall not be used for soils designated as gravels as defined by ASTM D 2487. The Contracting Officer shall make the Final Determination of soils classified as gravel that may not be tested by methods established in ASTM D 2922.

When ASTM D 2922 is used, the calibration curves shall be checked, and adjusted if necessary, using the sand cone method as described in ASTM D 1556. ASTM D 2922 results in a wet unit weight of soil and when using this method, ASTM D 3017 shall be used to determine the moisture content of the soil. The calibration curves furnished with the moisture gauges shall be checked along with density calibration checks as described in ASTM D 3017. The calibration checks of both the density and moisture gauges shall be made at the beginning of a job on each different type of material encountered and at intervals as directed by the Contracting Officer.

Copies of calibration curves, results of calibration tests, and field and laboratory density tests shall be furnished to the Contracting Officer. When test results indicate, as determined by the Contracting Officer, that compaction is not as specified, the material shall be removed, replaced and recompacted to meet specification requirements, at no additional expense to the Government. Tests on recompacted areas shall be performed to determine conformance with specification requirements. Inspections and test results shall be certified by a registered professional civil engineer. These certifications shall state that the tests and observations were performed by or under the direct supervision of the engineer and that the results are representative of the materials or conditions being certified by the tests.

3.15.1 In-Place Densities

3.15.1.1 Fills and Backfills for Buildings and Loading/Unloading Slab

One test per each 10 square meters (100 square feet), or fraction thereof, of each lift for fill or backfill.

3.15.1.2 Fills and Backfills for Utilities Systems

A minimum of one field test per lift of backfill for every 100 m (328 ft) of installation shall be performed.

3.15.1.3 Density of Roadways

Two tests at 60 meters (200 feet) intervals. One test shall be made at the Roadway Centerline. The second test shall be made at the Roadway Shoulder.

3.15.1.4 Structural Fill Areas

Field density tests shall be performed on every 930 square meters (10,000 square feet) of each 200 mm (8 inch) lift placed.

3.15.1.5 General Fill Areas

Field density tests shall be performed on every 1860 square meters (20,000 square feet) of each 200 mm (8 inch) lift placed.

3.16 SUBGRADE AND EMBANKMENT PROTECTION

During construction, embankments and excavations shall be kept shaped and drained. Ditches and drains along subgrade shall be maintained in such a manner as to drain effectively at all times. The finished subgrade shall not be disturbed by traffic or other operation and shall be protected and maintained by the Contractor in a satisfactory condition until pavement is placed. The storage or stockpiling of materials on the finished subgrade shall not be permitted. Areas within 1.5 m (5 feet) outside of each building and structure line shall be constructed true-to-grade, shaped to drain, and shall be maintained free of trash and debris until final inspection has been completed and the work has been accepted.

3.16.1 Tolerance Tests for Roadways

Continuous checks on the degree of finish specified in paragraph SUBGRADE PREPARATION FOR ROADWAYS shall be made during construction of the subgrades and as specified in FINISHING FOR ROADWAYS for placement of base materials on roadway surface.

3.17 SPECIAL REQUIREMENTS

Special requirements for both excavation and backfill relating to the specific utilities are as follows:

3.17.1 Electrical Distribution System

Direct burial cable and conduit or duct line shall have a minimum cover of 600 mm (24 inches) from the finished grade, unless otherwise indicated.

3.17.2 Plastic Marking Tape

Warning tapes shall be installed directly above the pipe, at a depth of 457 mm (18 inches) below finished grade unless otherwise shown.

3.17.3 Road Closures

Trench excavation crossing existing roads, or any other construction activity which may impede vehicle traffic flow, shall be limited to the hours of 8:00 am to 3:00 pm, and 6:00 pm to 6:00 am, Monday through Friday. There are no time restrictions on weekends. The Contractor shall maintain one lane of traffic open at all times during construction activities on or near roadways. Trenches which cross existing roads shall be backfilled prior to rush hour traffic ingress or egress. Cuts through roads shall be asphalted within 48 hours of backfilling.

3.18 CONTRACTOR QUALITY CONTROL

The Contractor shall establish and maintain a quality control system to assure compliance with contract requirements and shall maintain records of his quality control for all operations including but not limited to the following:

(1) Excavation and backfill to lines and grades indicated.

(2) Backfilling and compaction techniques.

(3) Field moisture and density tests.

(4) Finished appearance.

(5) Protection of finished grading, fills and embankment.

(6) Methods and procedures for providing drainage away from excavations.

(7) Determination of soils characteristics.

(8) Maintenance and protection of stockpiles.

(9) Preparation of subgrades to specified tolerances.

Copies in duplicate of these records and tests, as well as records of corrective action taken when results are unsatisfactory, shall be furnished to the Contracting Officer within one working day of the inspection or test.

PART 4 SUBMITTAL SUMMARY

4.1 SUMMARY OF SUBMITTALS

Submittals to be furnished by the Contractor shall include the following:

Paragraph	Item	SD
02210-3.12	Excess Soil Material Stockpile and Maintenance Procedure	08
02210-3.15	Qualification of Commercial or Contractor Testing Laboratory	08, 13
02210-3.15	Calibration Data	09
02210-3.15	Characteristics of Fill or Backfill	09
02210-3.15	Moisture and Density Tests	09

Code for Type of Submittal (SD)

01	-	Data
04	-	Drawings
06	-	Instructions
07	-	Schedules
08	-	Statements
09	-	Reports
13	-	Certificates
14	-	Samples
18	-	Records
19	-	O & M Manuals

- END OF SECTION -

* * * * *

This page is intentionally blank.

TECHNICAL SPECIFICATION
FOR
ADMIX LINER PRODUCTION AND PLACEMENT
SECTION 02224

ENVIRONMENTAL RESTORATION DISPOSAL FACILITY (ERDF)
CELLS 3 & 4 CONSTRUCTION

REV	DATE	REASON FOR REVISION	ORIGINATOR	CHECKER	GROUP LEADER	TASK DESIGN LEAD	PROJECT ENGINEER
C	1/20/98	100% Design Review	FSS	LHA			
B	11/21/97	60% Design Review	FSS	LHA			

	RICHLAND ENVIRONMENTAL RESTORATION PROJECT	JOB NO. 22192
		SPECIFICATION NO. 0600X-SP-C0038
		SHEET 1 of 10

This page is intentionally blank.

SECTION 02224

ADMIX LINER PRODUCTION AND PLACEMENT

PART 1 GENERAL

1.1 REFERENCES

The publications listed below form a part of this specification to the extent referenced. The publications are referred to in the text by basic designation only.

AMERICAN SOCIETY FOR TESTING AND MATERIALS (ASTM)

ASTM D1557	Test Method for Laboratory Compaction Characteristics of Soil Using Modified Effort (56,000 ft-lbf/ft^3 (2,700 kNm/m^3)).

AMERICAN PETROLEUM INSTITUTE (API)

API 13A	API Specification for Oil-Well Drilling-Fluid Materials.

1.2 DESCRIPTION

Admix consists of soil that is mixed with bentonite, moisture conditioned, placed, compacted, and trimmed to form the soil liner for the ERDF.

1.3 SUBMITTALS

Submittals shall be furnished in accordance with Exhibit I.

SD-01 Data

Supplier's descriptive data, specification sheets, literature, and other data as necessary to fully demonstrate that the bentonite proposed for use in the admix complies with the requirements of these specifications.

SD-06 Instructions

Admix preparation and soil liner placement plans.

SD-13 Certificates

Certificates for equipment calibration and bentonite.

SD-18 Records

Records demonstrating personnel qualifications.

1.4 CONSTRUCTION QUALITY ASSURANCE

Testing will be performed by the Construction Quality Assurance (CQA) Engineer in accordance with the CQA Plan. The Contractor shall make allowances for sampling and testing by the CQA Engineer in both his production operations and schedule.

1.5 TOLERANCES

Grading tolerances for the admix liner are shown on design Drawings. The minimum required thickness of the admix layer shall be maintained. The as-built elevations of the underlying subgrade shall be used as the basis for determining the final elevation of the admix layer.

PART 2 PRODUCTS

2.1 BENTONITE

The bentonite to be used in the admix shall consist of a commercially prepared material meeting the requirements of API Specification 13A, Section 4, with a minimum yield of 91 barrels. The bentonite shall have a free swell of 15 ml per 2 gm or greater. Acceptable products shall have been used in similar applications.

The Contractor shall submit manufacturer's information and test data as required to demonstrate that the proposed bentonite conforms to the requirements of Section 2.1 of these specifications. The Manufacturer shall certify that the bentonite furnished complies with these specifications. A certificate shall be submitted to the CQA Engineer for each 450 metric tons (500 tons) of bentonite delivered.

The Contractor shall provide suitable containers on site to store bentonite in a dry condition prior to use.

2.2 BASE SOIL

The base soil for the admix layer shall consist of soil derived from the ERDF excavation (USCS Classification SM, SW, SC, MH, ML, or other soil approved by the Facility Development Project Manager). This material shall be obtained from stockpiles constructed for this purpose at locations shown on the Drawings. Material from other stockpiles shall not be used without approval of the Contracting Officer. The base soil shall be free of roots, woody vegetation, frozen material, rubbish, and other deleterious material. No rocks greater than 50 mm (2 inches) in dimension will be allowed in the admix liner. Base soil shall be screened to meet this requirement.

2.3 ADMIX LAYER MATERIAL

2.3.1 Intent

It is the intent, that when the admix is mixed uniformly and placed according to the specifications, it will have a maximum saturated permeability of 1×10^{-7} cm/sec (3.94×10^{-8} in/sec) and have a USCS classification of ML, CL, CH, or SC.

2.3.2 Composition

The admix shall consist of the base soil mixed with a nominal bentonite content of 12 percent by dry weight. The acceptable range for bentonite content shall be a minimum of 11 percent and maximum of 14 percent of base soil by dry weight. The admix shall be prepared at a moisture content that ranges from

approximately 15 to 20 percent. The moisture content range may change as a result of preconstruction testing performed by the CQA Engineer as described in the CQA Plan, and may be modified by the CQA Engineer at any time during the admix preparation process to reflect changes in the base soil or other components. The moisture content and bentonite dispersion in the admix shall be uniform and homogenous. The finished admix shall be a uniform homogenous material.

2.3.3 Properties

The finished admix shall have the following properties:

Fraction passing the U.S. No. 200 sieve:	> 30 %
Liquid Limit:	> 30
Plasticity Index:	> 15

For evaluating compliance with these requirements, test results shall be considered acceptable when (a) the average value of the data satisfies the particular criterion and (b) no more than 20% of the associated individual data points fall outside of the specified limits.

2.3.4 Testing

The admix shall be prepared by the Contractor and tested by the CQA Engineer in accordance with the CQA Plan. The Contractor shall make the admix stockpiles available to the CQA Engineer at all times for sampling, testing, or visual observation.

PART 3 EXECUTION

3.1 ADMIX PREPARATION

The Contractor shall provide all necessary equipment and labor to operate the pugmill, load material into pugmill, offload admix, and stockpile admix.

3.1.1 Equipment

Admix shall be prepared using a pugmill with the following characteristics and ancillary equipment:

a. Continuous mixing pugmill.

b. Belt scales on base soil, bentonite, and finished product belts.

c. Feed rate meters and totalizers for bentonite, base soil, and water.

d. Production rate meters and totalizers for finished product.

All measuring equipment shall be calibrated and calibration certificates provided to the Contracting Officer prior to starting admix production.

3.1.2 Personnel Qualifications

The pugmill operator shall have completed three similar projects with a minimum of 45,360 metric tons (50,000 tons) of acceptable amended soil on each project. Submit evidence to demonstrate the qualifications of the pugmill operator.

3.1.3 Preparation Requirements

Admix shall be prepared at least 24 hours prior to placement in the landfill. The Contractor shall be responsible for maintaining the moisture content of the admix within the specified limits. Admix that does not meet specifications shall not be reused as feed stock unless approved by the Contracting Officer.

3.1.4 Admix Preparation Plan

The Contractor shall submit a detailed plan for preparation of the admix material, including a description of the equipment and procedures to be used, personnel qualifications, and methods for monitoring bentonite addition and moisture conditioning. This plan shall be approved by the Contracting Officer prior to the start of admix production.

3.2 TESTFILL

A testfill shall be constructed by the Contractor to determine acceptable placement and compaction methods. The testfill shall be constructed in accordance with the requirements listed in the CQA Plan. The location of the testfill will be designated by the Contracting Officer. All testing will be conducted by the CQA Engineer.

No soil liner shall be placed until the testfill has been constructed and the results from all test methods indicate that the admix will satisfy the permeability requirements specified in this section.

After all testing has been completed and approved, the admix can be used by the Contractor for liner construction provided that the material satisfies the requirements of these specifications.

3.3 SUBGRADE PREPARATION

3.3.1 General Requirements

The surface of the subgrade shall be graded to lines, grades, and tolerances shown on the Drawings. The subgrade surface shall be rolled flat and shall be smooth and free of ruts. Admix shall not be placed on frozen subgrade soils. The subgrade will be tested by the CQA Engineer as described in the CQA Plan

3.3.2 Compaction - Trench Floor

On the trench floor, the top 200 mm (8 inches) of the excavated subgrade surface shall be re-compacted to at least of 90 percent of the maximum dry density as determined by the Modified Proctor density test (ASTM D1557).

3.3.3 Compaction - Trench Side Slopes

On the side slopes of the trench, the following procedure may be used to prepare the subgrade for placement of admix, at the direction of the Contracting Officer:

1. All windrows or piles of loose material produced by trimming operations shall be removed.

2. The trimmed surface shall be watered so that water penetrates a minimum of 4 inches into the subgrade. Care shall be exercised during watering so that the subgrade is not disturbed and rills, gullies, and other erosional features are prevented.

3. The trimmed and watered surface shall be track walked by dozer to produce a firm and stable subgrade.

4. Visual monitoring of the subgrade preparation on sideslopes will be performed by the CQA Engineer.

In locations where less than 8 inches of fill is required to reach the design grade, suitable moisture-conditioned fill material shall be placed and compacted as described in this paragraph.

In locations where more than 8 inches of fill is required to reach the design grade, suitable fill shall be placed, compacted, and tested in accordance with the requirements of paragraph 3.9 in Section 02210 of these specifications, except that fill may be placed parallel to the sideslope.

This procedure applies only to the sideslopes and shall not be used on the trench floor.

3.4 PLACEMENT AND COMPACTION

3.4.1 Lift Thickness

The admix material shall be placed in maximum 250 mm (10 inch) thick loose lifts and compacted such that the compacted lift thickness is 150 mm (6 inches) or less. However, the first lift of admix placed over subgrade soils may be placed in a 300 to 400 mm (12 to 16 inch) thick loose lift thickness and compacted to a maximum thickness of 200 mm (8 inches). Placement methods shall prevent excessive mixing of admix with subgrade soil.

3.4.2 Compaction

The admix shall be compacted to a dry density that corresponds to at least 85 percent saturation, assuming a specific gravity of 2.7. The moisture-density range of the compacted admix shall lie within a trapezoidal-shaped field with the following corners:

Moisture Content (%)	Dry Density (pcf)	Dry Density (kg/m^3)
15	115	1,842
15	121	1,938
20	104	1,666
20	110	1,762

The corner values of this acceptable field may be modified by the Designer using the method given in the EPA Technical Guidance Document (EPA/600/R-93/182) based on actual field values developed by the CQA Engineer at any time during admix preparation or placement to reflect changes in the base soil or other components.

3.4.3 Permeability

The in-place compacted admix liner shall achieve a saturated permeability of 1×10^{-7} cm/sec (3.94×10^{-8} in/sec) or less.

3.4.4 Uniformity

The compacted admix distribution and gradation throughout the liner shall be free from lenses, pockets, streaks, layers, or material differing substantially in texture, moisture content, dry density, or gradation from surrounding material. The admix shall be free of organic debris, frozen material, rubbish, construction debris, and other delecterious material. Any admix containing unacceptable material shall be removed and discarded.

3.4.5 Moisture Conditioning

The moisture content of the admix shall be uniform throughout each lift prior to and during compaction of the material. If the moisture content of a lift of compacted admix falls below the acceptable limit during placement operations, the Contractor shall moisture condition the dry soil and re-compact the lift prior to placement of additional lifts. If the moisture content of a lift of compacted admix exceeds the acceptable limit due to precipitation or over watering, the Contractor, before placement of additional lifts, shall either allow the wet soil to dry back or remove the wet soil. If the admix cannot be conditioned to meet the placement specifications, the material shall be removed and replaced with new admix.

3.4.6 Placement Equipment

The Contractor shall place layers of admix to form a continuous monolithic material. All admix shall be placed and compacted with a self-propelled pegfoot or padfoot roller compactor having a minimum operating weight of 18,160 kg (40,000 pounds), such as a Caterpillar 815B Compactor or equal. Hauling and spreading equipment will not be considered as compaction equipment. The compactor feet shall be sufficiently long to knead (bond) new lifts into previously placed lifts. The feet shall be kept free of large amounts of dried admix that might restrict foot penetration or become incorporated into the admix lift. If necessary, the Contracting Officer may direct that the top of each lift be scarified with suitable equipment prior to placing the next lift. The final lift of admix may be compacted with a smooth drum roller provided that all other requirements are met.

3.4.7 Placement Method

Admix may be placed on the side slopes in either horizontal lifts (along the contour) or in lifts parallel to the slope (up and down the slope). If admix is placed parallel to the slope, compaction equipment shall not spin their wheels or in any other way disturb the previously placed lifts. If this occurs, the Contractor shall place all of the admix in horizontal lifts.

3.4.8 Restrictions

Production, mixing, and stockpiling of admix shall be restricted to the area shown on the Drawings and will not be allowed within the landfill footprint.

3.4.9 Tie-in Areas

Where new admix is tied-in to existing admix liner, any areas of the existing admix which are soft, cracked, or otherwise unsuitable shall be removed until acceptable material is exposed to the satisfaction of the Contracting Officer. The edge of the existing admix shall be trimmed to the configuration indicated on the Drawings. Where new admix will be placed, the surface of the existing admix shall be scarified and moisture conditioned as described in this section. New admix shall be placed in accordance with the requirements of this section and shall be thoroughly kneaded into the existing admix to form a monolithic mass free of seams or other discontinuities.

3.4.10 Soil Liner Placement Plan

The Contractor shall submit a soil liner placement plan to specify placement equipment and methods, lift thickness control, admix layer maintenance and repair procedures, and to allow for required testing,

described in the Construction Quality Assurance (CQA) Plan for this project. This plan shall be approved by the Contracting Officer prior to the start of admix placement.

3.5 SURFACE FINISHING

The surface of the admix shall be trimmed to the design grades and tolerances as shown on the Drawings. The surface of the admix shall be rolled with a smooth-drum roller to remove all ridges and surface irregularities. All wheel ruts on the surface of the admix liner that are deeper than 6 mm (0.25 inches) shall be repaired by the Contractor prior to placement of the geomembrane. Acceptable methods for repair of the admix are specified in Paragraph 3.7. The CQA Engineer shall determine if the surface preparation meets the requirements of this section and if it is sufficient to place the geomembrane.

3.6 MAINTENANCE

The Contractor shall maintain the admix liner surface in a condition suitable for geomembrane installation until the surface is covered. This may be accomplished by periodic watering, exclusion of traffic, or other methods. Desiccation cracks larger than 25 mm (1 inch) deep or 6 mm (0.25 inches) wide shall be excavated to the full depth of the crack and repaired.

The Contractor shall take measures to prevent the admix liner from freezing. Lifts of admix shall not be placed on frozen surfaces. In the event that the admix surface freezes before geomembrane is placed, the Contracting Officer may direct additional evaluation of admix properties by the CQA Engineer. Geomembrane shall not be placed on a surface which is frozen or has been frozen and thawed until directed by the Contracting Officer.

3.7 REPAIR OF ADMIX LINER

The Contractor shall repair the surface of any areas identified by the CQA Engineer to be out of tolerance as follows:

a. Remove admix that does not meet specifications.

b. Scarify surface and spray with water.

c. Place additional approved admix.

d. Compact admix with self-propelled pegfoot or padfoot type compactor as described above.

e. Trim and roll the surface as described above to design grades and tolerances.

Alternative methods for repair of the admix liner will be allowed if submitted by the Contractor and approved by the Contracting Officer.

CQA Personnel will repair small holes resulting from sampling and other CQA activities.

3.8 CONTRACTOR QUALITY CONTROL

The Contractor shall establish and maintain a quality control system to assure compliance with contract requirements and shall maintain records of his quality control for all operations including but not limited to the following:

(1) Measurement of weight and/or volume of materials used in admix, from scales, meters, and totalizers as described in paragraph 3.1.1.

(2) Calibration of scales, meters, totalizers, and other equipment used to prepare admix. Calibration shall be at manufacturers' recommended intervals or whenever rough handling, damage, or other factors indicate that accuracy may have been compromised. Methods used for calibration shall conform to manufacturers' recommendations. Secondary standards shall be traceable to national standards.

(3) Control of individual lift thickness during placement and overall admix layer thickness. Subgrade and final admix surface elevations shall be determined by surveying on a 15.24 m (50 ft) grid and at grade breaks over the floor and side slopes of the disposal trench except that detailed surveying will be required in the sump area as directed by the Contracting Officer. Vertical survey accuracy shall be plus or minus 15 mm (0.05 ft) or better. Results shall be provided to the CQA Engineer. No liner system materials shall be installed on the finished surface until satisfactory thickness of the admix layer has been verified.

Copies in duplicate of these records and tests, as well as records of corrective action taken when results are unsatisfactory, shall be furnished to the Contracting Officer within one working day following the inspection or test.

PART 4 SUBMITTAL SUMMARY

4.1 SUMMARY OF SUBMITTALS

Submittals to be furnished by the Contractor shall include the following:

Paragraph	Item	SD
02224-2.1	Bentonite Information	01, 13
02224-3.1.4	Admix Preparation Plan	06
02224-3.4.9	Soil Liner Placement Plan	06
02224-3.1.1	Equipment Calibration Cert.	13
02224-3.1.2	Personnel Qualifications	18

Code for Type of Submittal (SD)

01 - Data
04 - Drawings
06 - Instructions
07 - Schedules
08 - Statements
09 - Reports
13 - Certificates
14 - Samples
18 - Records
19 - O & M Manuals

*****

This page is intentionally blank.

TECHNICAL SPECIFICATION
FOR
DRAINAGE GRAVEL
SECTION 02226

ENVIRONMENTAL RESTORATION DISPOSAL FACILITY (ERDF)
CELLS 3 & 4 CONSTRUCTION

REV	DATE	REASON FOR REVISION	ORIGINATOR	CHECKER	GROUP LEADER	TASK DESIGN LEAD	PROJECT ENGINEER
C	1/20/98	100% Design Review	FSS	LHA			
B	11/21/97	60% Design Review	FSS	LHA			

	RICHLAND ENVIRONMENTAL RESTORATION PROJECT	JOB NO. 22192
		SPECIFICATION NO. 0600X-SP-C0039
		SHEET 1 of 6

This page is intentionally blank.

SECTION 02226

DRAINAGE GRAVEL

PART 1 GENERAL

1.1 REFERENCES

The publications listed below form a part of this specification to the extent referenced. The publications are referred to in the text by basic designation only.

Washington State Department of Transportation, 1994 Standard Specifications for Road, Bridge, and Municipal Construction.

1.2 DESCRIPTION

This section describes the requirements for material and placement of gravel for the drainage layers and sumps in the ERDF trench.

1.3 SUBMITTALS

Submittals shall be furnished in accordance with Exhibit I.

SD-06 Instructions

Earthworks operation plan.

SD-14 Samples

Samples of proposed drainage layer and sump gravel materials.

1.4 QUALITY ASSURANCE

Production and placement of the drainage gravel will be monitored by the Construction Quality Assurance (CQA) Engineer in accordance with the CQA Plan for this project. The Contractor shall make allowances for sampling and testing by the CQA Engineer in both the operations plan and schedule.

1.5 TOLERANCES

a. Grading tolerances for the drainage and sump layers are shown on the design Drawings.

b. Minimum required thicknesses of drainage and sump layers shall be maintained. The as-built elevations of immediately underlying soil layers shall be used as the basis for determining final elevations of drainage and sump layers.

PART 2 PRODUCTS

2.1 GENERAL

2.1.1 Applicability

The following specifications apply to gravel in both the primary and secondary leachate collection systems.

2.1.2 Durability

Gravel shall consist of rounded material that is mechanically stable and chemically inert. In general, hard rock types such as basalt and granite are preferred; siltstones, mudstones, and carbonate rocks are not acceptable. The CQA Engineer will perform slake durability and carbonate content tests on the gravel samples submitted by the Contractor. A loss in weight of less than 1% will be considered acceptable.

2.1.3 Permeability

Gravel shall exhibit a permeability of 1×10^{-2} cm/sec (3.9×10^{-3} in/sec) or greater after placement.

2.1.4 Samples

Submit gravel samples to the CQA Engineer a minimum of two weeks prior to full scale production for testing in accordance with CQA Plan.

2.2 DRAINAGE GRAVEL TYPE A

Type A gravel will be used for drainage layers outside of the sump area. This material shall consist of rounded washed gravel meeting the following gradation requirements:

U.S. Sieve Size	% Passing
1-1/2 in.	100
1 in.	70-100
3/4 in.	60-100
3/8 in.	35-80
No. 4	20-60
No. 40	0-10
No. 100	0-4
No. 200	0-4

2.3 DRAINAGE GRAVEL TYPE B

Type B gravel will be used for drainage inside of the sumps. This material shall meet the gradation requirements of Washington DOT standard specification 9-03.12(4):

U.S. Sieve Size	% Passing
1 in.	100
3/4 in.	80-100
3/8 in.	10-40
No. 4	0-4
No. 200	0-2

PART 3 EXECUTION

3.1 PLAN

Submit an earthwork operations plan describing placement procedures for drainage gravel.

3.2 PLACEMENT OPERATIONS

a. Load, handle, and place all drainage gravel using equipment and methods that will minimize generation of fines.

b. Place gravel over secondary and primary geosynthetic materials across base of landfill and in sumps as shown on Drawings.

c. Spread gravel layers with low ground pressure dozer.

d. Hauling and placing equipment shall operate on a minimum of 3 feet of material above any geosynthetic layer. Grading equipment shall operate on no less than 0.30 m (1 foot) of gravel over any geosynthetic layer.

3.3 COMPACTION

Drainage gravel shall be track walked in 0.30 m (1 foot) thick lifts by placement equipment.

3.4 PROTECTION

a. Protect sump pipes, side slope riser pipes, perforated drain pipes, and other pipes and structures from mechanical damage.

b. Do not use dozer or other vehicle to compact granular material within 0.46 m (1.5 feet) of perforated drain or collector pipes. In these locations, compact with a walk-along vibratory roller or power tamper after full thickness of granular material has been placed.

c. Protect underlying geosynthetics from mechanical damage. Drainage gravel shall be pushed carefully from previously placed material and not dumped directly onto geosynthetics.

d. The Contractor shall take steps to minimize wrinkle generation in underlying geosynthetic materials during placement of the drainage gravel. The measures may include placing gravel in the early morning hours when the geosynthetic materials are cool and monitoring and walking out wrinkles in the geosynthetic materials that appear at the edge of the placement area.

3.5 CONTRACTOR QUALITY CONTROL

The Contractor shall establish and maintain a quality control system to assure compliance with contract requirements and shall maintain records of his quality control for all operations including but not limited to the following:

(1) Control of overall drainage gravel layer thickness. Drainage gravel elevations shall be determined by surveying on a 15.24 m (50 ft) grid and at grade breaks over the floor and side slopes of the disposal trench except that detailed surveying will be required in the sump area as directed by the Contracting Officer. Vertical survey accuracy shall be plus or minus 15 mm (0.05 ft) or better. Results shall be provided to the CQA Engineer. No liner materials shall be installed on the finished surface until satisfactory thickness of the drainage layer has been verified.

Copies in duplicate of these records and tests, as well as records of corrective action taken when results are unsatisfactory, shall be furnished to the Contracting Officer within one working day following the inspection or test.

PART 4 SUBMITTAL SUMMARY

4.1 SUMMARY OF SUBMITTALS

Submittals to be furnished by the Contractor shall include the following:

Paragraph	Item	SD
02226-2.1.4	Gravel Samples	14
02226-3.1	Earthwork Operations Plan	06

Code for Type of Submittal (SD)

01 - Data
04 - Drawings
06 - Instructions
07 - Schedules
08 - Statements
09 - Reports
13 - Certificates
14 - Samples
18 - Records
19 - O & M Manuals

* * * * *

This page is intentionally blank.

TECHNICAL SPECIFICATION
FOR
OPERATIONS LAYER
SECTION 02228

ENVIRONMENTAL RESTORATION DISPOSAL FACILITY (ERDF)
CELLS 3 & 4 CONSTRUCTION

REV	DATE	REASON FOR REVISION	ORIGINATOR	CHECKER	GROUP LEADER	TASK DESIGN LEAD	PROJECT ENGINEER
C	1/20/98	100% Design Review	FSS	LHA			
B	11/21/97	60% Design Review	FSS	LHA			

	RICHLAND ENVIRONMENTAL RESTORATION PROJECT	JOB NO. 22192
		SPECIFICATION NO. 0600X-SP-C0040
		SHEET 1 of 6

This page is intentionally blank.

SECTION 02228

OPERATIONS LAYER

PART 1 GENERAL

1.1 REFERENCES

The publications listed below form a part of this specification to the extent referenced. The publications are referred to in the text by basic designation only.

AMERICAN SOCIETY FOR TESTING AND MATERIALS (ASTM)

ASTM D698	Laboratory Compaction Characteristics of Soil Using Standard Effort (12,400 ft-lbf/ft^3 (600 kN-m/m^3))

1.2 DESCRIPTION

This section describes the requirements for material and placement of the operations layer in the ERDF trench.

1.3 SUBMITTALS

Submittals shall be furnished in accordance with Exhibit I.

SD-06 Instructions

Earthworks operation plan.

SD-14 Samples

Samples of proposed operations layer material.

1.4 QUALITY ASSURANCE

Production and placement of the operations layer will be monitored by the Construction Quality Assurance (CQA) Engineer in accordance with the CQA Plan for this project. The Contractor shall make allowances for sampling and testing by the CQA Engineer in both the operations plan and schedule.

1.5 TOLERANCES

a. Grading tolerances for the operations layer are shown on the design Drawings.

b. Minimum required thickness of operations layer shall be maintained. The as-built elevations of immediately underlying soil layers shall be used as the basis for determining final elevation of the operations layer.

PART 2 PRODUCTS

2.1 CLASSIFICATION

Operations layer material shall consist of native, non-organic, granular soil derived from approved on-site sources with following USCS classifications: GM, GP, SW, SM, and SP, or as approved by the Contracting Officer.

2.2 COMPOSITION

Soils shall be free of roots, wood, peat, cinders, frozen material, rubbish, or other deleterious material.

2.3 PARTICLE SIZE

Soils shall have a maximum particle size of 100 mm (4 inches), provided large particles are in soil matrix.

2.4 COMPACTABILITY

Trench floor soils shall be capable of being moisture conditioned and compacted to at least 90% of the maximum dry density as determined by the standard Proctor test (ASTM D 698).

2.5 SAMPLES

Submit samples a minimum of two weeks prior to full scale production for testing by CQA Engineer in accordance with CQA Plan.

PART 3 EXECUTION

3.1 PLAN

Submit an earthwork operations plan describing production and placement procedures for the operations layer.

3.2 PLACEMENT OPERATIONS

a. Place operations layer over geosynthetic materials on base and side slopes of landfill as shown on Drawings. Place and compact base in one lift to minimize potential damage to the liner.

b. Do not place operations layer until final inspection of geosynthetics by CQA Engineer has been made to verify that conditions stated in CQA Plan are satisfied.

c. Hauling and placing equipment shall operate on a minimum of 0.9 m (3 feet) of material above any geosynthetic layer. Grading equipment shall operate on no less than 0.6 m (2 feet) of operations layer material over any geosynthetic layer.

d. Operations layer material placed on the side slopes shall be pushed up from the bottom of the slope. Alternatively, operations layer material may be placed down the slope using the following procedure:

1. A road shall be placed from the bottom to the top of the slope in a minimum 0.9-m (3-ft) thick lift at least 6.1 m (20 ft) wide.

2. An empty scraper of the same type that will be used for placing the operations layer shall be driven down the road a minimum of 5 times to demonstrate that the scraper can be operated safely and that there is no damage to or movement of the liner system.

3. After step 2 has been successfully completed, a loaded scraper shall be driven down the road a minimum of 5 times to demonstrate that the scraper can be operated safely and that there is no damage to or movement of the liner system.

4. Following successful completion of step 3, the lower portion of the side slope operations layer shall be placed by pushing from the bottom up the slope. This lower portion of the operations layer shall extend up the slope a distance of approximately 30.5 m (100 ft).

5. Following completion of step 4, the scrapers shall place the operations layer soil on the road down the slope. A minimum thickness above the geosynthetic layers of 0.9 m (3 ft) shall be maintained at all times; a thickness of 1.2 m (4 ft) shall be maintained to the extent practical.

6 The soil on the road shall be spread outward onto the underlying material to form the operations layer. The soil shall be spread in an upslope direction at an angle no greater than 30 degrees from vertical. Spreading shall begin from the bottom of the slope working upward and proceeding from operations layer which has been previously placed. Spreading shall be performed using a Caterpillar D6H LGP dozer, John Deere 850 LGP dozer, or equivalent piece of equipment.

7. The scrapers may follow the lateral advancement of the operations layer across the slope as required to minimize the distance that the soil must be pushed, provided that this operation does not cause damage to or movement of the underlying components of the liner system.

8. The CQA Engineer will monitor and observe the liner system for damage and movement and will notify the Contracting Officer of any findings. The Contractor shall support the CQA Engineer by digging down to existing survey points so that movement of the liner can be measured.

9. Operating practices shall be severely restricted at all times while on the liner system. While travelling down slope, scrapers shall proceed slowly, make no turns, not accelerate at the bottom of the slope until the entire scraper is on the bottom of the cell, remain in low gear to control speed, and minimize the use of brakes. Personnel shall be stationed at the top of the slope to spot the scraper. Dozers shall make no sharp or downhill turns and shall operate at slow speeds.

10. Low-ground-pressure dozers as described above may be used to finish grade slopes by blading horizontally across the slope.

11. The CQA Engineer will monitor the liner under the finished slopes to verify that no excessive movement or damage has occurred.

e. In locations where heat seaming has been used to join geotextile sections, the operations layer shall be spread in the same direction as the seam overlap to avoid placing additional stress on the seam.

3.3 COMPACTION

The finished surface of the operations layer on the trench floor shall be compacted to 90% of the maximum dry density as determined by the standard Proctor test (ASTM D698) and shall be suitable to support heavy rubber-tired vehicles without degradation to the working surface.

3.4 PROTECTION

a. Protect underlying geosynthetics from mechanical damage.

b. The Contractor shall take steps to minimize wrinkle generation in underlying geosynthetic materials during placement of the operations layer. The measures may include placing operations layer material in the early morning hours when the geosynthetic materials are cool and monitoring and walking out wrinkles in the geosynthetic materials that appear at the edge of the placement area.

3.5 CONTRACTOR QUALITY CONTROL

The Contractor shall establish and maintain a quality control system to assure compliance with contract requirements and shall maintain records of his quality control for all operations including but not limited to the following:

(1) Control of overall operations layer thickness. Operations layer elevations shall be determined by surveying on a 15.24 m (50 ft) grid and at grade breaks over the floor and side slopes of the disposal trench except that detailed surveying will be required in the sump area as directed by the Contracting Officer. Vertical survey accuracy shall be plus or minus 15 mm (0.05 ft) or better. Results shall be provided to the CQA Engineer.

Copies in duplicate of these records and tests, as well as records of corrective action taken when results are unsatisfactory, shall be furnished to the Contracting Officer within one working day following the inspection or test.

PART 4 SUBMITTAL SUMMARY

4.1 SUMMARY OF SUBMITTALS

Submittals to be furnished by the Contractor shall include the following:

Paragraph	Item	SD
02228-3.1	Earthwork Operations Plan	06
02228-2.5	Soil Samples	14

Code for Type of Submittal (SD)

01 - Data
04 - Drawings
06 - Instructions
07 - Schedules
08 - Statements
09 - Reports
13 - Certificates
14 - Samples
18 - Records
19 - O & M Manuals

* * * * *

This page is intentionally blank.

TECHNICAL SPECIFICATION
FOR
BASE MATERIALS
SECTION 02230

ENVIRONMENTAL RESTORATION DISPOSAL FACILITY (ERDF)
CELLS 3 & 4 CONSTRUCTION

REV	DATE	REASON FOR REVISION	ORIGINATOR	CHECKER	GROUP LEADER	TASK DESIGN LEAD	PROJECT ENGINEER
C	01/20/98	100% Design Review	MGM	LHA			
B	11/21/97	60% Design Review	MGM	LHA			

	RICHLAND ENVIRONMENTAL RESTORATION PROJECT	JOB NO. 22192
		SPECIFICATION NO. 0600X-SP-C0041
		SHEET 1 of 7

This page is intentionally blank.

SECTION 02230

BASE MATERIALS

PART 1 GENERAL

1.1 REFERENCES

The following publications form a part of this specification except as modified by the following paragraphs of this section. The publications are referenced in the text by the basic designation only.

American Society for Testing and Materials (ASTM)

ASTM C 117	(1987) Materials Finer than 200 Sieve in Mineral Aggregates by Washing
ASTM C 131	(1981) Resistance to Degradation of Small Size Coarse Aggregate by Abrasion and Impact in the Los Angeles Machine
ASTM C 136	(1994a) Sieve Analysis of Fine and Coarse Aggregates
ASTM D 75	(1982) Sampling Aggregates
ASTM D 1556	(1990) Density of Soil In-Place by the Sand Cone Method
ASTM D 1557	(1991) Laboratory Compaction Characteristics of Soil Using Modified Effort (56,000 ft-lbf/cu. ft (2,700 kN-m/cu.m))
ASTM D 2419	(1974) Sand Equivalent Value of Soils and Fine Aggregate
ASTM D 2922	(1991) Density of Soil and Soil-Aggregates in Place by Nuclear Methods (Shallow Depth)
ASTM D 3017	(1988) Moisture Content of Soil and Soil-Aggregates in Place by Nuclear Methods (Shallow Depth)

WASHINGTON STATE DEPARTMENT OF TRANSPORTATION (WSDOT)

WSDOT M41-10	(1994) Standard Specifications for Road, Bridge, and Municipal Construction

1.2 QUALITY ASSURANCE

A minimum of 7 days prior to placement of base materials or stockpiling base materials on the jobsite, the Contractor shall deliver the following information and samples of materials proposed for use on the

project to an independent soils lab. Each sample shall be clearly labeled indicating the Contractor, contract number, and what the sample represents:

a. Two 22.7 kg (50 pound) aggregate samples for each specified gradation of base materials representing all the properties of the base materials which are listed under paragraph: MATERIALS of this section and obtained in accordance with ASTM D 75.

1.3 EVALUATION AND ACCEPTANCE

1.3.1 Material Source

The Contractor is responsible for obtaining the Base Materials from a source capable of meeting the specifications for durability, gradation, sand equivalent, and wood waste.

1.3.2 Moisture-Density Data

A minimum of 7 days prior to placement of base materials, the Contractor shall submit test reports showing a moisture-density curve in accordance with ASTM D 1557 for each base material gradation to be used. The moisture-density relationship shall have been completed within the last 14 days and be obtained from materials meeting the requirements of this contract. If in the opinion of the Contracting Officer, the source has changed characteristics from the time when the moisture-density curve was established, the Contracting Officer has the option to request an additional moisture-density curve at no additional expense to the Government.

1.3.3 Construction Tolerances

1.3.3.1 Base Material Surfaces

The completed surface of all base materials shall be of uniform texture, smooth, closely conforming elevation requirements shown on the contract drawings, and free from defects of all kinds. The final constructed elevation of the base materials shall not vary more than 7 mm (1/4 inch) plus-or- minus from the specified elevations of the base materials.

1.3.3.2 Surface Smoothness

For surface smoothness, the finished surface of each course shall not vary more than 7mm (1/4 inch) from the lower edge of a 3 m (10 foot) straightedge.

1.3.3.3 Base Material Depth

The compacted depth of the base material shall not be more than 7 mm (1/4 inch) less than the minimum thickness specified in the drawings.

1.3.4 Nuclear Gauge

The Contractor may use a nuclear gauge to determine the in-place density of the base material for quality control purposes, not acceptance. The Contractor is responsible for all licensing, training, operator certification, and calibration of the nuclear gauge.

1.4 SUBMITTALS

Submittals shall be furnished in accordance with Exhibit I.

SD-09 Reports

Test results, including calibration curves and results of calibration tests; gradation and percent fracture.

SD-14 Samples

Aggregate Samples

SD-18 Records

Survey control notes; and Nuclear Gauge Calibration records

PART 2 PRODUCTS

2.1 MATERIALS

2.1.1 Base Material

Base material shall comply with the requirements of WSDOT 9-03.9(3)

PART 3 EXECUTION

3.1 PREPARATION

The surface on which the base materials shall be placed, shall conform to the contract requirements, and shall be approved by the Contracting Officer before placement of base materials. No base material shall be placed on snow, soft, muddy, or frozen subgrade.

3.2 PRODUCTION

3.2.1 Placement and Shaping

The Contractor shall provide a homogeneous mixture of unsegregated and uniformly dispersed materials in position for compacting in layers not to exceed 200 mm (8 inches) of compacted material. During placement and compaction, the moisture content of the material shall be maintained at the highest level practical for the material without causing free water to drain through the material and build up on lower courses or on the subgrade. The Contractor shall provide the water, equipment, and labor necessary for adequately distributing moisture on the base materials. The Contractor shall apply frequent light applications of water rather than heavy applications of water to provide the necessary moisture.

3.2.2 Compaction

Immediately following spreading and final shaping, the full depth of each layer shall be compacted to a minimum of 95 percent of maximum density as established by ASTM D 1557 before the next succeeding layer shall be placed.

3.2.3 Weather Limitations

No base materials shall be placed when the weather conditions prevent the placement operation from meeting the requirements of the specification.

3.3 PROTECTION

3.3.1 Surface Layer

The surface of each layer of base material shall be maintained true to line, grade and cross section by blading, watering, and rolling until placing the next succeeding course or until final acceptance of the project.

3.3.2 Contamination

Should irregularities or contamination develop in any base material, or in materials supporting the base material, during or after compaction, the Contractor shall correct the defects to meet the requirements of the specifications and to the satisfaction of the Contracting Officer. Any additional materials, labor, or equipment necessary to make the repairs shall be furnished by the Contractor at no expense to the Government.

3.4 SURVEY CONTROL

The Contractor shall be responsible for setting and maintaining all hubs for alignment and grades necessary for the construction of the base materials.

A minimum of three hubs per 100 square meters (1,080-square feet) for each course of base material shall be installed for control. For a roadway, hubs shall be placed at intervals of not less than 15 meters (50ft).

The Contractor shall submit to the Contracting Officer one copy of all survey notes and computations needed for control of the staking as outlined in this section.

3.5 CONTRACTOR QUALITY CONTROL

The Contractor shall establish and maintain a quality control program to show compliance with contract requirements and to maintain records of his quality control operations including, but not limited to, the following tests and submittals. Unless otherwise stated in this Technical Specification, all test results for Contractor Quality Control performed during base material placement or after placement of the base materials shall be reported and delivered within 1 working day to a designated representative of the Contracting Officer.

3.5.1 Aggregate Gradations and Fracture

3.5.1.1 Initial Submittal

A minimum of 7 days prior to placement or stockpiling of base materials, the Contractor shall submit test reports completed within the last 14 days to show compliance to the specifications for gradation and percent fracture.

3.5.1.2 Placement Gradations and Percent Fracture

Samples shall be taken in accordance with ASTM D 75 at the point of placement after compaction or at alternate locations directed by the Contracting Officer. A gradation test and a fracture test shall be performed at a frequency which shall be the greater of one test per continuous placement area or one test per 185 square meters (2,000 square feet) for each aggregate group. If a controlled onsite base material source is used then the frequency of testing for each layer shall be the greater of two tests per continuous placement area or one test per 463 square meters (5,000 square feet) for each aggregate group.

3.5.2 Field Density and Moisture Checks

Field density and moisture checks in accordance with ASTM D 2922 and ASTM D 3017 or in accordance with ASTM D 1556 shall be performed on each layer of base material placed. The frequency of testing for each layer shall be the greater of two tests per continuous placement area or one test per 370 square meters (4,000 square feet) of placed material. At the time of testing, the Contracting Officer may review the test reports at any time. Standardization of the gauge using the reference standard shall be done at the start of each work day and reported in the test reports.

PART 4 SUBMITTALS

4.1 SUMMARY OF SUBMITTALS

Submittals to be furnished by the Contractor shall include the following:

Paragraph	Item	SD
02230-1.3.2	Moisture-Density Curve	09
02230-1.2	Aggregate Samples	14
02230-3.4	Survey Control Notes	18
02230-3.5.1	Gradation and Percent Fracture	09

Code for Type of Submittal (SD)

01	-	Data
04	-	Drawings
06	-	Instructions
07	-	Schedules
08	-	Statements
09	-	Reports
13	-	Certificates
14	-	Samples
18	-	Records
19	-	O & M Manuals

- End of Section -

* * * * *

TECHNICAL SPECIFICATION
FOR
VEGETATIVE EROSION CONTROL
SECTION 02270

ENVIRONMENTAL RESTORATION DISPOSAL FACILITY (ERDF)
CELLS 3 & 4 CONSTRUCTION

REV	DATE	REASON FOR REVISION	ORIGINATOR	CHECKER	GROUP LEADER	TASK DESIGN LEAD	PROJECT ENGINEER
C	1/20/98	100% Design Review	MGM	LHA			
B	11/21/97	60% Design Review	MGM	LHA			

	RICHLAND ENVIRONMENTAL RESTORATION PROJECT	JOB NO. 22192
		SPECIFICATION NO. 0600X-SP-C0042
		SHEET 1 of 3

This page is intentionally blank.

SECTION 02270

VEGETATIVE EROSION CONTROL

PART 1 GENERAL (Not Applicable)

PART 2 PRODUCTS

2.1 MATERIALS

2.1.1 Fertilizer

Fertilizer to be applied shall be a commercial, chemical type, uniform in composition, free-flowing, conforming to State and Federal laws suitable for application with a grain seed drill. Fertilizer shall have a guaranteed analysis showing not less than 16 percent Nitrogen, 16 percent available phosphate, and 16 percent water soluble potash.

2.1.2 Seed

Seed shall be delivered to job site in original unopened packages bearing content tags. Seed shall be guaranteed 95 percent pure with a minimum germination rate of 80 percent. Seed shall be crested wheatgrass, Nordan variety.

2.1.3 Mulch

Mulch shall be applied before seeding or after seeding to control dust within the seedbed. Mulch may be cereal grain straw, alfalfa straw, or orchard grass straw weed free from Noxious weeds. The straw shall be capable of being applied over the seedbed using a mulcher or straw spreader pulled by a tractor.

PART 3 EXECUTION

3.1 GENERAL

The Contractor shall provide erosion protection including fertilizing, seeding, and mulching for all disturbed areas that are disturbed including slopes equal to or greater than 4H:1V and in the bottom of all drainage ditches and swales in accordance with the Contract Documents excluding interior trench walls and as directed by the Contractor's Field Superintendent.

3.1.1 Soil Preparation

The soil to be seeded shall be graded in conformance with the Drawings and shall be loose and reasonably free of large rocks and other material(s) which may interfere with successful seeding.

3.1.2 Method of Application

Fertilizer and seed shall be applied using a range or grain drill. Straw shall be applied by a mulcher designed to apply this material.

3.2 INSTALLATION

3.2.1 Fertilizer Rate

Fertilizer application shall be 135 kg/ha (approximately 120 lb/acre).

3.2.2 Seed Rate

The seed shall be seeded at 17 kg/ha (approximately 15 lb/acre).

3.2.3 Mulch Rate

Mulch shall be applied at rate to cover the soil surface 5 to 10 cm deep (2 to 4 in) or use of a standard up to 4500kg/ha (approximately 4000 lb/acre).

3.2.4 Seed Drill Method

The seed application consists of using a grain or range drill to apply both seed and fertilizer concurrently. The seed drill shall be pulled using a 4-wd tractor to ensure even seeding on steeper slopes. The seed shall be placed between 0.5 to 5.0 cm (0.5 to 2.0 in) deep in the soil by the seed drill.

3.2.5 Time of Seeding

Seeding shall not be started until after application of all earthwork and site grading. Mulching of straw may occur before or after seeding to help minimize soil erosion after completion of construction activities concurrent to seeding period stated in section 3.2.5. Seeding shall be performed in October or November or February through March. The Contractor shall return to the site after completion of the project if the project schedule does not allow for a fall planting prior to the project completion date.

3.3 WATERING

The Contractor shall provide dust control during seeding operations by water truck or irrigation to prevent visible dust. Irrigation of the seedbed after seeding and mulching will only be necessary to control visible dust. Care shall be taken to avoid excessive washing or puddling on the surface and any such damage caused thereby shall be repaired by the Contractor at no additional cost to the Government.

PART 4 SUBMITTAL SUMMARY (Not Applicable)

- END OF SECTION -

* * * * *

TECHNICAL SPECIFICATION
FOR
GEOMEMBRANES
SECTION 02275

ENVIRONMENTAL RESTORATION DISPOSAL FACILITY (ERDF)
CELLS 3 & 4 CONSTRUCTION

REV	DATE	REASON FOR REVISION	ORIGINATOR	CHECKER	GROUP LEADER	TASK DESIGN LEAD	PROJECT ENGINEER
C	1/20/98	100% Design Review	FSS	LHA			
B	11/21/97	60% Design Review	FSS	LHA			

	RICHLAND ENVIRONMENTAL RESTORATION PROJECT	JOB NO. 22192
		SPECIFICATION NO. 0600X-SP-C0044
		SHEET 1 of 23

This page is intentionally blank.

SECTION 02275

GEOMEMBRANES

PART 1 GENERAL

1.1 REFERENCES

The publications listed below form a part of this specification to the extent referenced. The publications are referred to in the text by basic designation only.

AMERICAN SOCIETY FOR TESTING AND MATERIALS (ASTM)

ASTM D638	Standard Test Method for Tensile Properties of Plastics.
ASTM D746	Test Method for Brittleness Temperature of Plastics and Elastomers by Impact.
ASTM D1004	Standard Test Method for Initial Tear Resistance of Plastic Film and Sheeting.
ASTM D1204	Test Method for Linear Dimensional Changes of Nonrigid Thermoplastic Sheeting or Film at Elevated Temperature.
ASTM D1238	Standard Test Method for Flow Rates of Thermoplastics by Extrusion Plastometer.
ASTM D1505	Standard Test Method for Density of Plastics by the Density-Gradient Technique.
ASTM D1603	Standard Test Method for Carbon Black in Olefin Plastics.
ASTM D4218	Determination of Carbon Black Content in Polyethylene Compounds by the Muffle-Furnace Technique.
ASTM D4437	Standard Practice for Determining the Integrity of Field Seams Used in Joining Flexible Polymeric Sheet Geomembranes.
ASTM D4833	Standard Test Method for Index Puncture Resistance of Geotextiles, Geomembranes, and Related Products.
ASTM D5199	Test Method for Measuring Nominal Thickness of Geotextiles and Geomembranes.
ASTM D5321	Standard Test Method for Determining the Coefficient of Soil and Geosynthetic or Geosynthetic and Geosynthetic Friction by the Direct Shear Method.

ASTM D5397	Evaluation of Stress Crack Resistance of Polyolefin Geomembrane Using Notched Constant Tension Load Test (Appendix A, Single Point).
ASTM D5596	Microscopic Evaluation of the Dispersion of Carbon Black in Polyolefin Geosynthetics.
ASTM D5994	Test Method for Measuring Core Thickness of Textured Geomembrane.

1.2 DESCRIPTION

The work includes manufacture, fabrication (if needed), supply, and installation of geomembrane for lining of waste disposal facility and other facilities as shown on the Drawings. Geomembrane is also referred to as High Density Polyethylene (HDPE) liner or flexible membrane liner (FML).

1.3 SUBMITTALS

Submittals shall be furnished in accordance with Exhibit I.

SD-01 Data

Manufacturer's descriptive data, specification sheets, literature, and other data as necessary to fully demonstrate that those materials proposed for use comply with the requirements of these specifications.

SD-06 Instructions

The Contractor shall submit an installation plan describing the proposed methods for geomembrane deployment, panel layout, seaming, repair, and protection. The plan shall include a quality control program for the Contractor's activities related to geomembrane installation.

SD-08 Statements

Manufacturer's statements related to geomembrane composition and properties.

SD-09 Reports

Manufacturer's test results for geomembrane composition and properties.

SD-13 Certificates

Certifications for material composition and properties, Quality Control (QC) tests, admix surface, seam quality, equipment calibration, and other work activities as described in these specifications.

SD-14 Samples

Samples of seams to be used for destructive testing.

SD-18 Records

Records demonstrating material composition and properties, Installer's organizational and personnel qualifications, and other as required to provide the information described in these specifications.

1.4 QUALITY ASSURANCE

Installation of the geomembrane will be monitored by the Construction Quality Assurance (CQA) Engineer. The Contractor shall accommodate all Quality Assurance activities described in this section and in the Construction Quality Assurance Plan (CQA Plan) for this project.

PART 2 PRODUCTS

2.1 GENERAL

2.1.1 Types of Geomembrane

a. Geomembrane for the primary and secondary liner systems within the landfill (disposal trench) shall be un-reinforced HDPE, 1.52 mm (60 mil) thick, textured both sides.

b. Geomembrane for miscellaneous applications including the crest pad, rub sheets in sumps, and other applications as shown on the Drawings shall be un-reinforced HDPE, 2.54 mm (100 mil) thick, smooth.

2.1.2 Manufacturer

The HDPE Geomembrane Manufacturer shall have a minimum of five years of experience as a commercial manufacturer of HDPE geomembranes for landfill applications.

2.2 REQUIRED PROPERTIES

2.2.1 Use of Recycled Polymer

The raw material shall be new polyethylene resin containing no more than 2% clean recycled polymer by weight. Two percent recycled polymer shall not include any finished sheet material that has actually seen some type of service performance. Regrind, reworked or trim materials in the form of chips or edge strips that have not actually seen some type of use may be added, if the material is from the same manufacturer and is the same formulation as the geomembrane being produced.

2.2.2 Resin Properties

The resin shall meet the following specifications:

a. Specific Gravity (ASTM D1505): > 0.930.

b. Melt Index (ASTM D1238 Condition 190/2.16): 0.1 - 1.1 g/10 min.

2.2.3 Finished Sheet Properties

The physical, mechanical, and environmental properties of the finished sheet shall meet or exceed the values specified in the table contained in this part of the Specifications. Where applicable, values in the table are Minimum Average Roll Values (MARVs).

2.2.4 Interface Friction Angle

The residual friction angle between the textured geomembrane and the soil/bentonite admix used in the landfill liner (see Section 02224) shall have a minimum value of 29.5 under a normal load of 19.2 kPa (400 psf) and a displacement of 50 mm (2 inches). Friction angle shall be determined by direct shear

testing (ASTM D5321) at nominal normal loads of 9.6, 19.2 and 28.8 kPa (200, 400, and 600 psf). Other combinations of shear strength parameters which can be shown by standard analytical techniques to provide static and dynamic factors of safety against slope failure that are equivalent or greater than those of the specified material may be acceptable if approved by the Contracting Officer.

2.3 MANUFACTURING QUALITY CONTROL

2.3.1 Quality Control Testing

Quality control testing shall be carried out by the Manufacturer to demonstrate that the geomembrane meets the specifications listed above. Additional testing may be carried out for purposes of determining conformance by the CQA Engineer. If the results of the Manufacturer's and the CQA Engineer's testing differ significantly, the testing shall be repeated by the CQA Engineer, and the Manufacturer shall be allowed to monitor this testing. The results of this latter series of tests will prevail, provided that the applicable test methods have been followed.

2.3.2 Required Information

Prior to the delivery of any geomembrane material, the Manufacturer shall submit the following information:

a. The origin (Resin Supplier's name, resin production plant), identification (brand name, number) and production date of the resin.

b. A list of quantities and descriptions of materials other than the base polymer which comprise the geomembrane.

c. Copies of the quality control certificates issued by the Resin Supplier.

d. Reports on the tests conducted by the Manufacturer to confirm that the quality of the resin used to manufacture the geomembrane satisfies these Specifications.

e. A statement that recycled polymer (if any) is clean and does not exceed 2% by weight.

f. A properties sheet including, at a minimum, all specified properties, measured using test methods indicated in these specifications, or equivalent.

g. Reports on the tests, including sampling procedures, conducted by the Manufacturer to confirm that the geomembrane meets the specifications. Tests shall be conducted on each production lot of geomembrane or every 4,645 m^2 (50,000 square feet), whichever results in the greater number of tests.

h. A certification that property values given in the properties sheet are guaranteed by the Geomembrane Manufacturer.

2.3.3 QC Certification

Prior to shipment, the Geomembrane Manufacturer shall provide a quality control certificate for each roll of geomembrane. The quality control certificate shall be signed by a responsible party employed by the Geomembrane Manufacturer, such as the production manager. The quality control certificate shall include:

a. Roll numbers and identification, resin lot, and batch numbers.

b. Sampling procedures and results of quality control tests.

2.3.4 Manufacturing Plant Visit

The Manufacturer shall allow the Contracting Officer or his designated representative to visit the manufacturing plant, if the Contracting Officer so chooses. If possible, the visit shall be prior to or during the manufacturing of the geomembrane rolls for the specific project. The Contracting Officer or his designated representative shall review the manufacturing process, quality control, laboratory facilities, and testing procedures.

During the visit, visiting personnel will also:

a. Confirm that the measurements of properties by the Manufacturer are properly documented and test methods used are acceptable.

b. Spot inspect the rolls and confirm that they are free of holes, blisters, or any sign of contamination by foreign matter.

c. Review packaging and transportation procedures to confirm that these procedures are not damaging the geomembrane.

d. Confirm that roll packages have a label indicating the name of the manufacturer, type of geomembrane, thickness, and roll number.

e. If applicable, confirm that extrusion rods and/or beads are derived from the same base resin type as the geomembrane.

The Geomembrane Manufacturer shall accommodate these activities.

2.3.5 Conformance Testing

2.3.5.1 Tests

Prior to shipment or after delivery of the rolls of geomembrane, the CQA Engineer will obtain samples at a frequency of one per production lot or one per 4645 square meters (50,000 square feet) of geomembrane, whichever results in the greater number of tests, except that only two (2) friction angle tests will be performed. The CQA Engineer will test the samples to determine conformance to both the design specifications and the list of guaranteed properties.

As a minimum, tests to determine the following characteristics will be performed on geomembranes:

a. Specific gravity (ASTM D1505).

b. Melt index (ASTM D1238)

c. Carbon black content and visual inspection to evaluate carbon black dispersion (ASTM D1603 / D4218 and ASTM D5596).

d. Thickness (ASTM D5199 or D5994 as applicable).

e. Tensile characteristics (yield strength, elongation at yield, break strength, elongation at break; ASTM D638).

f. Puncture Resistance (ASTM D4833).

g. Friction angle of textured geomembrane with soil liner material (see Section 02224; ASTM D5321).

h. Seam Strength, if applicable (ASTM D4437).

Where optional procedures are noted in the test method, the requirements of these Specifications will prevail.

2.3.5.2 Sampling Procedures

Samples will be taken across the entire width of the roll and will not include the first one meter (three feet). Unless otherwise specified, samples will be 1 m (3 ft) long by the roll width. The CQA Engineer will mark the machine direction on the samples with an arrow.

2.3.6 Fabrication Quality Control

Factory panel fabrication, if any, shall be performed in accordance with the pertinent sections of these Specifications for field panel placement and seaming.

2.3.7 Transportation, Handling, and Storage

Transportation of the geomembrane shall be the responsibility of the Geomembrane Manufacturer, Installer, or other party as agreed upon. All handling on site shall be the responsibility of the Geosynthetics Installer.

Upon delivery at the site, the Installer and the CQA Engineer shall observe the surfaces of all rolls or factory panels for defects and for damage. This inspection shall be conducted without unrolling rolls or unfolding factory panels unless defects or damages are found or suspected. The CQA Engineer will determine:

a. Rolls, factory panels, or portions thereof, which should be rejected and removed from the site because they have severe flaws.

b. Rolls or factory panels which include repairable flaws.

c. Rolls or factory panels that are not properly labelled. No unlabelled rolls shall be used for any application. Unlabelled rolls shall be removed from the site and replaced at the Contractor's expense.

The Installer shall be responsible for the storage of the geomembrane on site within the limits of construction. Laydown area(s) shall be protected from theft, vandalism, passage of vehicles, etc.

PART 3 EXECUTION

3.1 GENERAL

3.1.1 Unacceptable Materials and Work

Materials and work which fail to meet the requirements of these specifications shall be removed and disposed of at the Contractor's expense.

3.1.2 Personnel Qualifications

3.1.2.1 Installer Organization

At a minimum, the Geosynthetics Installer Organization shall have successfully completed at least 10 projects consisting of installation of at least 929,000 m^2 (10,000,000 ft^2) (total) of HDPE liner. Projects shall include RCRA landfills and surface impoundments.

3.1.2.2 Seaming Personnel

All personnel performing seaming operations shall be qualified by experience or by successfully passing seaming tests similar to those described in this Section. The superintendent and lead welder foreman shall have experience seaming a minimum of 185,800 m^2 (2,000,000 ft^2) of polyethylene geomembrane using the same type of seaming apparatus proposed for use on this project. These individuals shall provide direct supervision over less experienced seamers. No field seaming shall take place without one of these individuals being present.

Key personnel are defined as the superintendent, foreman, and lead welder. Key personnel shall be full time employees of the Geosynthetics Installer.

3.1.3 Applicability

The primary, secondary, and other geomembrane liners shall be installed at the locations, lines, and grades shown on the drawings. All geomembrane liners shall be installed in accordance with these Specifications.

3.1.4 Installation Plan

Prior to beginning geomembrane installation, the Contractor shall submit a plan describing the proposed methods for geomembrane deployment, panel layout, seaming, repair, and protection. The plan shall include a quality control program for the Contractor's activities related to geomembrane installation.

3.2 ADMIX LINER SURFACE PREPARATION

The Earthwork Contractor shall be responsible for preparing the surface of the admix liner according to the Specifications. Surfaces to be lined shall be smooth and free of all rocks, stones, sticks, roots, sharp objects, or debris of any kind. The surface shall provide a firm, unyielding foundation for the membrane with no sudden, sharp, or abrupt changes at break in grade. No standing water or excessive moisture shall be allowed to accumulate on the subgrade prior to geomembrane installation.

The Geomembrane Installer shall certify in writing that the surface on which the geomembrane will be installed is acceptable. The certificate of acceptance shall be given by the Installer to the Contracting Officer prior to commencement of geomembrane installation in the area under consideration.

After the soil liner surface has been accepted by the Installer, it shall be the Installer's responsibility to indicate to the Contracting Officer any change in the soil liner surface condition that may require repair work. If the CQA Engineer concurs with the Installer, then the Contracting Officer shall ensure that the soil liner surface is repaired.

Special care shall be taken to avoid desiccation cracking of the admix liner. Specifications for allowable desiccation cracking of admix liner and repair measures are contained in Section 02224, ADMIX LINER PRODUCTION AND PLACEMENT. The surface of the admix liner shall be maintained in the required condition throughout the course of geomembrane installation.

3.3 ANCHOR TRENCH EXCAVATION AND BACKFILLING

The anchor trench shall be excavated by the Earthwork Contractor (unless otherwise specified) to the lines and widths shown on the design Drawings, prior to geomembrane placement. The corners of the trench shall be rounded so as to avoid sharp bends in the geomembrane. No loose soil shall be allowed to underlie the geomembrane in the anchor trench.

Each geosynthetic layer shall be anchored with a minimum 150 mm (6 inch) thick lift of compacted soil within the anchor trench. The backfill material shall be as described elsewhere in these Specifications and shall be compacted by rubber tired equipment.

3.4 GEOMEMBRANE PLACEMENT - HDPE GEOMEMBRANE

3.4.1 Field Panel Identification

A field panel is the unit area of geomembrane which is to be seamed in the field. Two cases are defined:

a. If the geomembrane is fabricated into panels in a factory, a field panel is a factory panel or a portion of factory panel cut in the field.

b. If the geomembrane is not fabricated into factory panels, a field panel is a roll or a portion of roll cut in the field.

It will be the responsibility of the CQA Engineer to assign each field panel an "identification code" (number or letter-number) consistent with the layout plan. This identification code shall be agreed upon by the Contracting Officer, Installer, and CQA Engineer. This field panel identification code shall be as simple and logical as possible. (Note that roll numbers assigned in the manufacturing plant are usually cumbersome and are not related to location in the field.)

The CQA Engineer will establish a table or chart showing correspondence between roll numbers, factory panels, and field panel identification codes. The field panel identification code shall be used for all quality assurance records, including Installer's QC testing.

3.4.2 Field Panel Placement

3.4.2.1 Location

Field panels shall be installed at the locations indicated in the Installer's layout plan, as approved or modified.

3.4.2.2 Installation Schedule

Only as many field panels shall be deployed each day as can be continuously welded that same day.

3.4.3 Placement Conditions

Geomembrane placement shall not proceed at an ambient temperature below 0C (32F) or above 40C (104F) unless otherwise authorized. Geomembrane placement shall not be done during any precipitation, in the presence of excessive moisture (e.g., fog, dew), in an area of ponded water, or in the presence of excessive winds. Placement methods shall prevent damage to underlying admix or geosynthetic materials.

3.4.4 Damage

The CQA Engineer will inspect each panel, after placement and prior to seaming, for damage. The CQA Engineer will advise the Contracting Officer which panels, or portions of panels, should be rejected,

repaired, or accepted. Damaged panels or portions of damaged panels which have been rejected shall removed from the work area. Any repairs shall be made according to procedures described this Part of the Specifications.

3.5 FIELD SEAMING

3.5.1 Seaming Equipment and Products

Approved processes for field seaming are extrusion welding and fusion welding, except that only fusion welding shall be used for tie-in to existing liner. Proposed alternate processes shall be documented and submitted to the Contracting Officer for approval. Only equipment which has been specifically approved by make and model shall be used.

3.5.1.1 Extrusion Process

The extrusion-welding machine shall be equipped with gages capable of measuring the temperature at the nozzle or the preheat temperature.

The Installer shall provide documentation regarding the extrudate to the Contracting Officer and the CQA Engineer, and shall certify that the extrudate is compatible with these Specifications and is comprised of the same resin type as the geomembrane sheeting.

The Installer shall comply with the following:

a. The Installer shall maintain on-site a sufficient number of spare operable seaming machines (at least one at all times) to ensure continuous operation.

b. The equipment used for seaming shall not be likely to damage the geomembrane.

c. The extruder shall be purged prior to beginning a seam until all heat-degraded extrudate has been removed from the barrel.

d. The electric generator shall be placed on a smooth base such that no damage occurs to the geomembrane.

e. Grinding shall be completed no more than 1 hour prior to seaming.

f. A smooth insulating plate or fabric shall be placed beneath the hot welding machine after usage.

g. The geomembrane shall be protected from damage in heavily trafficked areas.

3.5.1.2 Fusion Process

The fusion-welding machines shall be automated vehicular-mounted devices. The fusion-welding machines shall be equipped with gages giving the applicable temperatures.

The Installer shall comply with the following:

a. The Installer shall maintain on-site a sufficient number of spare operable seaming machines (at least one at all times) to ensure continuous operations.

b. The equipment used for seaming shall not be likely to damage the geomembrane.

c. For cross seams, the edge of the cross seam shall be ground to a smooth incline (top and bottom) prior to welding.

d. The electric generator shall be placed on a smooth base such that no damage occurs to the geomembrane.

e. A smooth insulating plate or fabric shall be placed beneath the hot welding machine after usage.

f. The geomembrane shall be protected from damage in heavily trafficked areas.

g. A movable protective layer shall be used as directed by the Contracting Officer directly below each overlap of geomembrane to be seamed to prevent buildup of moisture between the sheets.

3.5.2 Seam Layout

The Installer shall provide the Contracting Officer and the CQA Engineer with a seam layout drawing, i.e., a drawing of the facility to be lined showing all expected seams. The CQA Engineer will review the seam layout drawing and confirm that it is consistent with accepted state of practice. No panels shall be seamed in the field without the Contracting Officer's approval. In addition, no panels not specifically shown on the seam layout drawing shall be used without the Contacting Officer's prior approval.

In general, seams shall be oriented parallel to the line of maximum slope, i.e., oriented along, not across, the slope. In corners and odd-shaped geometric locations, the number of seams shall be minimized. On the landfill floor, no horizontal seam shall be less than 1.52 m (5 ft) from the toe of the slope, or other area of potential stress concentrations, unless otherwise authorized.

Seams shall be aligned to produce the fewest possible number of wrinkles and "fishmouths."

A seam numbering system consistent with the panel numbering system shall be agreed upon at the Pre-Construction Meeting.

3.5.3 Weather Conditions for Seaming

The allowable weather conditions for seaming are as follows:

a. Unless authorized in writing by the Contracting Officer, no seaming shall be attempted at ambient temperatures below 0C (32F) or above 40C (104F). The CQA Engineer will confirm that these weather conditions are fulfilled and will advise the Contracting Officer if they are not. The Contracting Officer will then decide if the installation shall be postponed or if modified procedures may be used.

b. The geomembrane shall be dry, protected from wind, and free of dust.

If the Installer wishes to use methods which may allow seaming at ambient temperatures below 0C (32F), the Installer shall certify in writing that the quality of the seams welded at these temperatures is the same as the quality of seams welded at temperatures above 0C (32F). In addition, if the Installer wishes to seam at ambient temperatures below 0C (32F), the following conditions shall be satisfied in addition to the general seaming procedures:

a. For extrusion welding, preheating shall be performed. Preheating may be waived by the Contracting Officer based upon the recommendation of the CQA Engineer, if it is demonstrated to the satisfaction of the CQA Engineer that welds of equivalent quality may be obtained without preheating at the expected temperature of installation.

b. Preheating equipment shall be approved by the Contracting Officer prior to use.

c. Sheet grinding, if required, may be performed before preheating.

d. The CQA Engineer will observe all areas of the geomembrane that have been preheated to determine that they have not been subjected to excessive melting.

e. The CQA Engineer shall confirm that geomembrane surface temperatures have not decreased below the minimum specified for welding, due to wind or other adverse conditions. Wind protection for the seam area may be required.

f. Trial seams, as described in paragraph 3.6.1 of this section, shall be made in the immediate area where seaming will occur, under the same ambient temperature and preheating conditions as the actual seams. New trial seams shall be made if the ambient temperature decreases by more than 3C (5F) from the previous trial seam conditions. Such new trial seams shall be conducted as soon as seams in progress during the temperature drop have been completed.

g. Additional destructive seam tests, as described in paragraph 3.6.3 of this section, shall be performed at intervals of 76 to 152 meters (250 to 500 feet) of seam length, at the CQA Engineer's discretion.

h. The Installer shall provide sample coupons cut from each end of the seam. These coupons will be tested in the field by the CQA Engineer.

i. Other testing normally required by these Specifications or the CQA Plan shall also be performed on seams fabricated at temperatures below 0C (32F).

3.5.4 Seam Preparation

3.5.4.1 Cleaning

Prior to seaming, the seam area shall be clean and free of moisture, dust, dirt, debris of any kind, and foreign material. Special attention shall be paid to cleaning the existing geomembrane at tie-in locations.

3.5.4.2 Overlap

Cross slope seams on both the trench floor and sidewalls shall be overlapped so that liquids are not trapped, i.e., seams shall be shingled downslope.

If seam overlap grinding is required, the process shall be completed according to the Geomembrane Manufacturer's instructions within one hour of the seaming operation, and in a way that does not damage the geomembrane.

Panels of geomembrane shall have a finished overlap of a minimum of 75 mm (3 in) for extrusion welding and 125 mm (5 in) for fusion welding. However, in any event sufficient overlap shall be provided to allow peel and shear tests to be performed on the seam.

3.5.4.3 Use of Solvents

No solvent or adhesive shall be used.

3.5.4.4 Temporary Bonding

The procedure used to temporarily bond adjacent panels together shall not damage the geomembrane; in particular, the temperature of hot air at the nozzle of any spot welding apparatus shall be controlled such that the geomembrane is not damaged.

3.5.5 General Seaming Procedure

The general seaming procedure used by the Installer shall be as follows:

a. Seaming shall extend to the outside edge of panels to be placed in the anchor trench.

b. If required, a firm substrate shall be provided by using a flat board, a conveyor belt, or similar hard surface directly under the seam overlap to achieve proper support.

c. If seaming operations are carried out at night, adequate illumination as determined by the Contracting Officer and CQA Engineer shall be provided.

d. "Fishmouths" or wrinkles at the seam overlaps shall be cut along the ridge of the wrinkle in order to achieve a flat overlap. The cut "fishmouths" or wrinkles shall be seamed, and any portion where the overlap is inadequate shall then be patched with an oval or round patch of the same geomembrane extending a minimum of 150 mm (6 in) beyond the cut in all directions.

e. When seaming of a large area of the geomembrane liner has been completed and prior to placing overlying materials, the CQA Engineer will observe the geomembrane for wrinkles. The CQA Engineer will indicate which wrinkles shall be cut and seamed or otherwise repaired by the Installer. The seam thus produced shall be tested like any other seam.

f. Geomembrane in sump areas shall be installed and tested as described in this Part for other areas of the landfill, as practicable. Extreme care shall be taken while welding around appurtenances since neither nondestructive nor destructive testing may be feasible in these areas. The Installer shall ensure that the geomembrane is not visibly damaged during installation.

3.6 TESTING

3.6.1 Trial Seams

Trial seams shall be made on fragment pieces of geomembrane liner to verify that seaming conditions are adequate. Trial seams shall be made at the beginning of each seaming period, and at least once each four hours, for each seaming machine used that day. Also, each seamer shall make at least one trial seam each day. This frequency may be increased at the direction of the CQA Engineer. Trial seams shall be made under the same conditions as actual seams.

The trial seam sample shall be at least 0.61 m (2 ft) long by 0.30 m (1 ft) wide (after seaming) with the seam centered lengthwise. Seam overlap shall be as indicated in this Part.

Two adjoining specimens, each 25 mm (1 inch) wide, shall be cut from the trial seam sample by the Installer. The specimens shall be tested respectively in shear and peel using a field tensiometer, and they shall not fail in the seam. If a specimen fails, the entire operation shall be repeated. If the additional specimen fails, the seaming apparatus and seamer shall not be accepted and shall not be used for seaming until the deficiencies are corrected and two consecutive successful full trial seams are achieved.

All test equipment shall be in calibration and conform to manufacturer's specifications. The Installer shall provide the Contracting Officer with current calibration certificates.

3.6.2 Nondestructive Seam Continuity Testing

3.6.2.1 General

The Installer shall nondestructively test all field seams over their full length using a vacuum test unit, air pressure test (for double fusion seams only), or other approved method. Vacuum testing and air pressure testing are described below. The purpose of the nondestructive test is to check the continuity of seams. It does not provide any information on seam strength. Continuity testing shall be done as the seaming work progresses. Any seams which fail nondestructive testing shall be repaired in accordance with these Specifications. Seams which cannot be non-destructively tested because of seam geometry shall be double welded or capped.

All test equipment shall be in calibration and conform to manufacturer's specifications. The Installer shall submit current calibration certificates.

3.6.2.2 Vacuum Testing

The equipment shall be comprised of the following:

a. A vacuum box assembly consisting of a rigid housing, a transparent viewing window, a soft neoprene gasket attached to the bottom, port hole or valve assembly, and a vacuum gage.

b. A steel vacuum tank and pump assembly equipped with a pressure controller and connections.

c. A rubber pressure/vacuum hose with fittings and connections.

d. A bucket and wide paint brush.

e. A soapy solution.

The following procedures shall be used:

a. Energize the vacuum pump and reduce the tank pressure to a minimum of 127 mm (5 inches) of mercury.

b. Wet a strip of geomembrane approximately 0.30 m (12 inches) wide by 1.2 m (48 inches) long with the soapy solution.

c. Place the vacuum box over the test area.

d. Close the bleed valve and open the vacuum valve.

e. Ensure that a leak tight seal is created.

f. For a period of not less than 10 seconds, examine the geomembrane through the viewing window for the presence of soap bubbles.

g. If no bubble appears after 10 seconds, close the vacuum valve and open the bleed valve, move the box over the next adjoining area with a minimum 76 mm (3 in) overlap, and repeat the process.

h. All areas where soap bubbles appear shall be marked and repaired in accordance with this Part.

3.6.2.3 Air Pressure Testing

The following procedures are applicable only to those processes which produce a double seam with an enclosed air channel. All double seams with an enclosed air channel shall be air pressure tested.

The equipment shall be comprised of the following:

a. An air pump (manual or motor driven) capable of generating and sustaining a pressure of 414 to 448 kPa (60 to 65 psi).

b. A rubber hose with fittings and connections.

c. A sharp hollow needle, or other approved pressure feed device.

d. A calibrated pressure gage capable of reading pressures up to 65 psi.

The following procedures shall be used:

a. Seal both ends of the seam to be tested.

b. Insert needle with pressure gage, or other approved pressure feed device, into the air channel created by the fusion weld.

c. Energize the air pump and pressurize the channel to between 172 to 207 kPa (25 and 30 psi) for a 13 mm (1/2 inch) wide channel, or 376 and 414 kPa (55 and 60 psi) for a 25 mm (1 inch) wide channel. Close the valve and sustain the pressure for a minimum of 5 minutes.

d. If loss of pressure exceeds 2 psi, or does not stabilize, locate faulty area and repair in accordance with this section. If, in the judgment of the CQA Engineer, significant changes in geomembrane temperature occur during the test (e.g., due to cloud cover), the test shall be repeated after the geomembrane temperature has stabilized.

e. Cut end of seam opposite to the pressure gage and observe that the pressure drops. If the pressure does not drop, locate the obstruction(s) in the seam, repair, and retest seam.

f. Remove needle or other approved pressure feed device and repair seam.

3.6.3 Destructive Seam Strength Testing

3.6.3.1 General

Destructive seam tests shall be performed at selected locations. The purpose of these tests is to evaluate seam strength. Seam strength testing shall be done as the seaming work progresses. The samples shall meet the requirements of the table "Seam Properties".

All test equipment shall be in calibration and conform to manufacturer's specifications. The Installer shall submit current calibration certificates.

3.6.3.2 Location and Frequency

The CQA Engineer will select locations where seam samples will be removed for laboratory testing.

Sampling frequency shall be a minimum of one sample per 152 m (500 ft) of seam length per welding machine (this minimum frequency shall be determined as an average taken from all the panels, including

welds for caps), or a minimum of two samples per factory panel, whichever gives the largest number of samples. This frequency may be increased at the discretion of the CQA Engineer.

3.6.3.3 Sampling Procedures

Samples shall be cut by the Installer as the seaming progresses in order to provide laboratory test results before completion of installation. The Installer shall assign a number to each sample, mark it accordingly, and record the sample location on the layout drawing.

All holes in the geomembrane resulting from destructive seam sampling shall be immediately repaired in accordance with repair procedures. The continuity of the new seams in the repaired area shall be tested as described in this Part.

3.6.3.4 Sample Size

The samples shall be 300 mm (12 inches) wide by 1,060 mm (42 inches) long with the seam centered lengthwise. One 25 mm (1 inch) wide strip shall be cut from each end of the samples, and these shall be tested in the field as described below. The remaining sample shall be cut into three parts and distributed as follows:

a. One portion to the Installer for laboratory testing at his discretion, 300 mm x 300 mm (12 inch x 12 inch).

b. One portion to the Contracting Officer for archive storage, 300 mm x 300 mm (12 inch x 12 inch).

c. One portion to the CQA Engineer for laboratory testing, 300 mm to 400 mm (12 inch x 16 inch).

3.6.3.5 Field Testing

The two 25 mm (1 inch) wide strips described above shall be tested in the field by tensiometer for peel and shear and shall not fail in the seam. If any test sample fails to pass, then the procedures outlined below (Procedures for Destructive Test Failure) shall be followed.

The CQA Engineer will mark all samples and portions with their number. The CQA Engineer will also record the date and time, ambient temperature, number of seaming unit, name of seamer, welding apparatus temperatures and pressures, and pass or fail descriptions, and attach a copy to each sample portion.

3.6.3.6 Procedures for Areas Failing Destructive Tests

The following procedures shall apply whenever a sample fails a destructive test, whether that test is conducted by the CQA Laboratory, the Installer's laboratory, or by field tensiometer. The Installer has two options:

a. The Installer shall cap the seam between any two passing test locations, or

b. The Installer shall trace the seam to two intermediate locations 3.0 m (10 feet) minimum from the point of the failed test in each direction and take a small sample for an additional field test at each location. If these additional samples pass the test, then full samples shall be taken for CQA laboratory testing. If these laboratory samples pass the tests, then the seam shall be capped between these locations. If either sample fails, then the sampling and testing process shall be repeated to establish the zone over which the seam shall be capped.

All acceptable capped seams shall be bounded by two locations from which samples passing CQA laboratory destructive tests have been taken. In cases where the length of the capped seam exceeds 45 m (150 feet), a sample of the capping seam shall be taken and shall pass destructive testing as described in this Part.

3.7 REPAIRS

3.7.1 General

Any portion of the geomembrane exhibiting a flaw or failing a destructive or nondestructive test shall be repaired. All repairs shall be conducted in accordance with this Part. All repairs shall be subjected to the nondestructive seam testing procedures described in this Part.

Each patch or other type of repair will be numbered and recorded by the CQA Engineer. All repair documentation will be prepared by the CQA Engineer.

3.7.2 Repair Procedures

Several procedures exist for repair. The final decision as to the appropriate repair procedure, materials, and equipment shall be agreed upon in advance between the Contracting Officer, Installer, and CQA Engineer. Potentially acceptable procedures include:

a. Patching, used to repair large holes, tears, un-dispersed raw materials, and contamination by foreign matter.

b. Grinding and rewelding, used to repair small sections (typically with a maximum length of no more than several inches) of extruded seams.

c. Spot welding or seaming, used to repair pinholes or other minor, localized flaws.

d. Capping, used to repair large lengths of failed seams.

e. Topping, used to repair areas of inadequate seams, which have an exposed edge.

f. Removing bad seam and replacing with a strip of new material welded into place, used with large lengths of fusion seams.

For all repair methods, the following provisions shall be satisfied as applicable:

a. Surfaces of the geomembrane which are to be repaired shall be abraded no more than one hour prior to the repair.

b. All surfaces shall be clean and dry at the time of the repair.

c. Patches or caps shall extend at least 150 mm (6 inches) beyond the edge of the defect, and all corners of patches shall be rounded with a radius of at least 75 mm (3 inches).

d. The geomembrane below large caps shall be appropriately cut to avoid water or gas collection between the two sheets.

3.7.3 Verification of Repairs

Each repair shall be numbered and recorded. Each repair shall be nondestructively tested using the methods described in this Part. Large caps may be of sufficient extent to require destructive test sampling, at the discretion of the CQA Engineer. Repairs that fail nondestructive or destructive tests shall

be redone and retested until a passing test is obtained. The CQA Engineer will observe all non-destructive testing of repairs and will record the number of each repair, date, and test results.

3.8 MATERIALS IN CONTACT WITH GEOMEMBRANE

The requirements of this Part are intended only to assure that the installation of other materials does not damage the geomembrane. Additional requirements as established in other sections of these specifications are necessary to assure that systems built with these other materials are constructed in such a way as to provide proper performance.

Requirements of this Part apply to geomembranes that are directly in contact with overlying soil or are covered with a layer of geotextile or geocomposite.

3.8.1 Temperature

Do not place granular materials on the geomembrane at ambient temperatures below 0C (32F) or above 40C (104F), unless otherwise specified.

3.8.2 Minimum Thickness

Equipment used for placing granular material shall not be driven directly on the geomembrane. A minimum thickness of 0.30 m (1 foot) of granular material shall be maintained between placement equipment and the geomembrane. A minimum thickness of 0.91 m (3 ft) of granular material shall be maintained between rubber-tired hauling vehicles and the geomembrane.

3.8.3 Spreading Equipment

Equipment used for placing granular material shall be a light dozer (such as a wide pad Caterpillar D6H LGP or lighter), motor grader (Caterpillar 12G or lighter), low ground pressure excavator (Bucyrus-Erie 325H with 0.91-m [36-in] wide treads or lighter), or approved equal.

3.8.4 Spreading Operations

Placement equipment operating on soil materials shall not spin their wheels, make sharp turns, or make sharp, rapid stops. Good operating practice shall be used by all spreading equipment operating on the 0.3-m (12-in) thick drainage gravel surfaces. Specifically, no sharp turns, no fast starting or stopping, and no heavy loads using excavators. Soil materials shall be pushed carefully from previously placed material and not dumped directly onto geosynthetics. Drainage gravel spreading operations will be continuously monitored by the CQA Engineer. Placement of soil materials on the geomembrane will not be allowed within 15 m (50 ft) of any unseamed edge of geomembrane.

3.9 LINING SYSTEM ACCEPTANCE

The Installer shall retain all ownership of and responsibility for the geosynthetics in the lining system until acceptance by the Contracting Officer.

The geosynthetic lining system will be accepted by the Contracting Officer when all three of the following requirements have been satisfied:

a. The installation is finished.

b. Verification of the adequacy of all field seams and repairs, including associated testing, is complete.

c. A written construction report, including "as built" drawings and all other installation documents, has been prepared by the CQA Engineer, sealed by a registered professional engineer, and received by the Contracting Officer.

d. The requirements of the GENERAL CONDITION titled FINAL INSPECTION AND ACCEPTANCE have been satisfied.

3.10 CONTRACTOR QUALITY CONTROL

The Contractor shall establish and maintain a quality control system to assure compliance with contract requirements and shall maintain records of his quality control for all operations including but not limited to the following:

(1) Calibration of seaming and testing equipment. Calibration shall be at manufacturers' recommended intervals or whenever rough handling, damage, or other factors indicate that accuracy may have been compromised. Methods used for calibration shall conform to manufacturers' recommendations. Secondary standards shall be traceable to national standards.

Copies in duplicate of these records and tests, as well as records of corrective action taken when results are unsatisfactory, shall be furnished to the Contracting Officer within one working day following the inspection or test.

PART 4 SUBMITTAL SUMMARY

4.1 SUMMARY OF SUBMITTALS

Submittals to be furnished by the Contractor shall include the following:

Paragraph	Item	SD
02275-2.3.2.f	Properties Sheet	01
02275-3.1.4	Installation Plan	06
02275-2.3.2.e	Recycled Polymer Statement	08
02275-2.3.2.d	Manufacturer's Resin Test Reports	09
02275-2.3.2.g	Test Reports	09
02275-2.3.2.c	Resin QC Certificates	13
02275-2.3.2.h	Property Certification	13
02275-2.3.3	QC Certificates	13
02275-3.2	Surface Acceptance	13
02275-3.5.3	Seam Quality Certification	13
02275-3.6.1	Test Equipment Calibration Certificates	13
02275-3.6.2.1	Test Equipment Calibration Certificates	13
02275-3.6.3.1	Test Equipment Calibration Certificates	13
02275-3.6.3	Samples	14
02275-2.3.2.a	Resin Information	18
02275-2.3.2.b	Polymer Composition	18
02275-3.1.2.1	Organization Qualifications	18
02275-3.1.2.2	Personnel Qualifications	18

Code for Type of Submittal (SD)

01 - Data
04 - Drawings
06 - Instructions
07 - Schedules
08 - Statements
09 - Reports
13 - Certificates
14 - Samples
18 - Records
19 - O & M Manuals

Table 02275-1. REQUIRED GEOMEMBRANE PROPERTIES - 60 mil TEXTURED HDPE

PROPERTY	QUALIFIER	UNIT	SPECIFIED VALUE	TEST METHOD
Physical Properties				
Thickness	MARV	mils	60, -0 +10%	ASTM D5994
Thickness	minimum	mils	57	ASTM D5994
Specific Gravity	minimum	N/A	0.93	ASTM D1505
Melt Index	range	g/10 min	0.1-1.1	ASTM D1238 condition 190/2.16
Mechanical Properties				
Tensile Properties (each direction)				ASTM D638 (Type IV)
1. Strength at yield	MARV	lb/in	100	
2. Strength at break	MARV	lb/in	130	
3. Elongation at yield	MARV	%	12	
4. Elongation at break	MARV	%	90	
Tear Resistance	MARV	lb	40	ASTM D1004 Die C
Puncture Resistance	MARV	lb	80	ASTM D4833
Low Temperature Brittleness	maximum	F	-90	ASTM D746 B
Carbon Black Content	range	%	2-3	ASTM D1603 or D4218
Carbon Black Dispersion	N/A		A1/A2	ASTM D5596
Dimensional Stability (each direction)	max. change	%	±2	ASTM D1204
Environmental Stress Crack	minimum	hrs	200	ASTM D5397 (Appendix A)

Table 02275-2. REQUIRED GEOMEMBRANE PROPERTIES - 100 mil SMOOTH HDPE

PROPERTY	QUALIFIER	UNIT	SPECIFIED VALUE	TEST METHOD
Physical Properties				
Thickness	MARV	mils	100, -0 +10%	ASTM D5199
Thickness	minimum	mils	97	ASTM D5199
Specific Gravity	minimum	N/A	0.93	ASTM D1505
Melt Index	range	g/10 min	0.1-1.1	ASTM D1238 condition 190/2.16
Mechanical Properties				
Tensile Properties (each direction)				ASTM D638 (Type IV)
1. Strength at yield	MARV	lb/in	200	
2. Strength at break	MARV	lb/in	350	
3. Elongation at yield	MARV	%	12	
4. Elongation at break	MARV	%	500	
Tear Resistance	MARV	lb	60	ASTM D1004 Die C
Puncture Resistance	MARV	lb	160	ASTM D4833
Low Temperature Brittleness	maximum	F	-90	ASTM D746 B
Carbon Black Content	range	%	2-3	ASTM D1603 or D4218
Carbon Black Dispersion	N/A		A1/A2	ASTM D5596
Dimensional Stability (each direction)	max. change	%	±2	ASTM D1204
Environmental Stress Crack	minimum	hrs	200	ASTM D5397) (Appendix A)

Table 02275-3. REQUIRED SEAM PROPERTIES

PROPERTY	QUALIFIER	UNIT	SPECIFIED VALUE		TEST METHOD
Thickness	nominal	mils	60	100	
Shear Strength[1] (at yield point)	minimum	lb/in width	90	180	ASTM D4437
Peel Adhesion			FTB[2]	FTB	ASTM D4437

1. Also called "Bonded Seam Strength".
2. FTB = Film Tear Bond (failure occurs through intact geomembrane, not through seam).

* * * * *

TECHNICAL SPECIFICATION
FOR
GEOTEXTILES
SECTION 02276

ENVIRONMENTAL RESTORATION DISPOSAL FACILITY (ERDF)
CELLS 3 & 4 CONSTRUCTION

C	1/20/98	100% Design Review	FSS	LHA			
B	11/21/97	60% Design Review	FSS	LHA			
REV	DATE	REASON FOR REVISION	ORIGINATOR	CHECKER	GROUP LEADER	TASK DESIGN LEAD	PROJECT ENGINEER

	RICHLAND ENVIRONMENTAL RESTORATION PROJECT	JOB NO. 22192
		SPECIFICATION NO. 0600X-SP-C0045
		SHEET 1 of 8

This page is intentionally blank.

SECTION 02276

GEOTEXTILES

PART 1 GENERAL

1.1 REFERENCES

The publications listed below form a part of this specification to the extent referenced. The publications are referred to in the text by basic designation only.

AMERICAN SOCIETY FOR TESTING AND MATERIALS (ASTM)

ASTM D1777	Standard Test Method for Measuring Thickness of Textile Materials.
ASTM D3786	Standard Test Method for Hydraulic Bursting Strength of Knitted Goods and Nonwoven Fabrics - Diaphragm Bursting Strength Tester Method.
ASTM D4355	Deterioration of Geotextiles from Exposure to Ultraviolet Light and Water (Xenon-Arc Type Apparatus)
ASTM D4491	Standard Test Methods for Water Permeability of Geotextiles by Permittivity.
ASTM D4533	Standard Test Method for Trapezoid Tearing Strength of Geotextiles.
ASTM D4632	Standard Test Method for Grab Breaking Load and Elongation of Geotextiles.
ASTM D4751	Standard Test Method for Determining Apparent Opening Size.
ASTM D4833	Standard Test Method for Index Puncture Resistance of Geotextiles, Geomembranes, and Related Products.
ASTM D5199	Standard Test Method for Measuring Nominal Thickness of Geotextiles and Geomembranes.
ASTM D5261	Standard Test Method for Measuring Mass per Unit Area of Geotextiles.

1.2 DESCRIPTION

The work includes manufacture, fabrication (if needed), supply, and installation of geotextiles associated with the lining of waste disposal facility, crest pad, and other facilities as shown on the Drawings. This section also applies to geotextiles used to fabricate geocomposite drainage layers (see Section 2277).

1.3 SUBMITTALS

Submittals shall be furnished in accordance with Exhibit I.

SD-01 Data

Manufacturer's descriptive data, specification sheets, literature, and other data as necessary to fully demonstrate that those materials proposed for use comply with the requirements of these specifications.

SD-06 Instructions

The Contractor shall submit an installation plan describing the proposed methods for geotextile deployment, panel layout, seaming, repair, and protection. The plan shall include a quality assurance program for the Contractor's activities related to geotextile installation.

SD-09 Reports

Manufacturer's test results for geotextile properties.

SD-13 Certificates

Manufacturer's certification that materials meet the requirements of these specifications.

1.4 QUALITY ASSURANCE

Geotextile installation will be monitored by the CQA Engineer. The Contractor shall accommodate all Quality Assurance activities described herein and in the Construction Quality Assurance Plan (CQA Plan) for this project.

PART 2 PRODUCTS

2.1 GENERAL

2.1.1 Types of Geotextiles

a. Type A geotextile shall be 0.27 kg/m^2 (8 oz/yd^2) nominal weight and shall be used for separation of operations and drainage layers in the landfill, in the geocomposite drainage layer, and at other locations as shown on the Drawings.

b. Type B geotextile shall be 0.54 kg/m^2 (16 oz/yd^2) nominal weight and shall be used for cushioning of geomembranes on the landfill floor and at other locations as shown on the Drawings.

All geotextiles, regardless of type, shall be nonwoven, needlepunched polypropylene.

2.1.2 Manufacturer

The Geotextile Manufacturer shall be a commercial entity normally engaged in manufacture of geotextiles for landfill applications.

2.2 REQUIRED PROPERTIES

2.2.1 Property Values

Geotextile properties shall meet or exceed the values specified in Table - 02276-1, Required Geotextile Properties, contained in this section of the Specifications.

The Manufacturer shall provide test results for all properties listed in Table - 02276-1.

The Manufacturer shall certify that the materials supplied meet the requirements of this Part.

2.2.2 Integrity

Geotextiles shall retain their structure during handling, placement, and long-term service.

2.3 CONFORMANCE TESTING

Prior to shipment or after delivery of the rolls of geotextile, the CQA Engineer will obtain samples at a frequency of one per production lot or one per 4645 m^2 (50,000 square feet) of each material type, whichever results in the greater number of tests. The CQA Engineer will test the samples to determine conformance to both the design specifications and the list of certified properties.

As a minimum, the following tests will be performed on geotextiles (each type):

a.	Mass per unit area	(ASTM D5261)
b.	Grab strength	(ASTM D4632)
c.	Tear strength	(ASTM D4533)
d.	Burst strength	(ASTM D3786)
e.	Puncture strength	(ASTM D4833)
f.	Thickness	(ASTM D1777 or D5199)
g.	Permittivity	(ASTM D4491)
h.	AOS	(ASTM D4751)

2.4 TRANSPORTATION, HANDLING, AND STORAGE

Geotextiles shall be supplied in rolls wrapped in protective dust-proof covers and marked or tagged with all of the following information:

a. Manufacturer's name.

b. Product identification.

c. Lot number.

d. Roll number.

e. Roll dimensions.

Transportation of the geotextiles to the site and all handling on site shall be the responsibility of the Contractor.

During shipment and storage, the geotextile shall be protected from mud, dirt, dust, puncture, cutting, or other damaging or deleterious conditions.

The Contractor shall be responsible for the storage of the geotextiles on site within the limits of construction. Storage areas shall be protected from theft, vandalism, passage of vehicles, etc.

PART 3 EXECUTION

3.1 GENERAL

3.1.1 Unacceptable Materials and Work

Materials and work which fail to meet the requirements of these specifications shall be removed and disposed of at the Contractor's expense. This includes geotextile rolls that are not labelled or where the label has deteriorated to the point of being illegible.

3.2 HANDLING AND PLACEMENT

a. The Contractor shall handle all geotextiles in such a manner as to ensure that they are not damaged. Do not drag the geotextile across textured geomembrane. If necessary, use a smooth slip sheet under the textile. Position the geotextile after deployment and remove the slip sheet, if used.

b. Place geotextiles in a manner that prevents folds and wrinkles. Folds or wrinkles shall be pulled smooth prior to seaming.

c. In the presence of wind, all exposed geotextiles shall be weighted with sandbags or equivalent. Sandbags shall be installed during placement and shall remain until replaced with cover material.

d. Geotextiles shall be cut using an approved geotextile cutter only. Special care shall be taken to protect underlying geosynthetic materials from damage during cutting.

e. During geotextile placement, care shall be taken not to entrap stones, excessive dust, or moisture that could damage the geomembrane, clog drains or filters, or hamper subsequent seaming.

f. After installation, the geotextile shall be examined over its entire surface to ensure that no potentially harmful foreign objects, such as needles, are present. Any foreign objects encountered shall be removed, or the geotextile shall be replaced.

g. If light colored geotextile is used, precautions shall be taken against "snowblindness" of personnel.

h. After deployment, all geotextile shall be covered to prevent exposure to ultraviolet (UV) radiation (sunlight) within a maximum period of 2 weeks.

3.3 SEAMING

a. Geotextiles shall be overlapped 75 mm (3 inches) prior to seaming.

b. All geotextiles shall be continuously sewn (i.e., spot sewing is not allowed). Alternatively, single or double wedge fusion welding will be acceptable. The CQA requirements for welding will be the same as for sewing. Leister welding (spot or continuous) will not be accepted as a replacement for sewing.

c. On the landfill floor, no horizontal seam shall be closer than 0.9 m (3 ft) to the toe of the slope or other areas of potential stress concentrations unless otherwise authorized by the Contracting Officer.

d. Areas to be seamed shall be clean and free of foreign material.

e. Sewing shall be done using polymeric thread with chemical resistance properties equal to or exceeding those of the geotextile, or as approved by the Contracting Officer.

f. All sewing shall be done using a sewing machine which creates a chain stitch. When entering and exiting a seam, the stiches shall be overlapped to prevent unraveling.

3.4 REPAIR

Any holes or tears in the geotextile shall be repaired as follows:

a. Remove any soil or other material which may have penetrated the torn geotextile.

b. A patch made from the same geotextile shall be double seamed into place with the seams 6.4 to 19 mm (1/4 inch to 3/4 inch) apart and no closer than 25 mm (1 inch) from any edge. The patch shall extend at least 12 inches beyond the edges of the damaged area. Seaming shall be in accordance with paragraph 3.3 of this section.

3.5 MATERIALS IN CONTACT WITH GEOTEXTILES

The Contractor shall place all soil materials located on top of a geotextile in such a manner as to ensure that the following conditions are satisfied:

a. No damage to the geotextile.

b. Minimal slippage of the geotextile on underlying layers.

c. No excess tensile stresses in the geotextile.

3.6 CONTRACTOR QUALITY CONTROL

The Contractor shall establish and maintain a quality control system to assure compliance with contract requirements and shall maintain records of his quality control for all operations including but not limited to the following:

1) Delivery and Storage of Material.

2) Placement of Materials.

Copies in duplicate of these records and tests, as well as records of corrective action taken when results are unsatisfactory, shall be furnished to the Contracting Officer within one working day following the inspection or test.

PART 4 SUBMITTAL SUMMARY

4.1 SUMMARY OF SUBMITTALS

Submittals to be furnished by the Contractor shall include the following:

Paragraph	Item	SD
02276-2.2.1	Geotextile Properties	01, 09, 13
02276-1.3	Installation Plan	06

Code for Type of Submittal (SD)

01 - Data
04 - Drawings
06 - Instructions
07 - Schedules
08 - Statements
09 - Reports
13 - Certificates
14 - Samples
18 - Records
19 - O & M Manuals

Table 02276-1. REQUIRED GEOTEXTILE PROPERTIES

PROPERTY	UNIT	VALUE (a) TYPE A	VALUE (a) TYPE B	TEST METHOD
Thickness	mils	85	140	ASTM D1777 or D5199
Mass/Unit Area	oz/yd^2	7.3	15.5	ASTM D5261
Apparent Opening Size (b)	U.S. Sieve	60-80	80-120	ASTM D4751
Grab Strength	lb	190	320	ASTM D4632
Trapezoidal Tear Strength	lb	75	110	ASTM D4533
Puncture Strength	lb	95	150	ASTM D4833
Burst Strength	psi	300	475	ASTM D3786
Permittivity	sec^{-1}	0.9	0.4	ASTM D4491
UV Resistance (500 hours)	% strength retained	>70	>70	ASTM D4355

Notes: (a) All values are minimum average roll values.
(b) Out-of-range values will be reviewed and can be approved by the Contracting Officer on a case-by-case basis.

* * * * *

This page is intentionally blank.

TECHNICAL SPECIFICATION
FOR
GEOCOMPOSITES
SECTION 02277

ENVIRONMENTAL RESTORATION DISPOSAL FACILITY (ERDF)
CELLS 3 & 4 CONSTRUCTION

REV	DATE	REASON FOR REVISION	ORIGINATOR	CHECKER	GROUP LEADER	TASK DESIGN LEAD	PROJECT ENGINEER
C	1/20/98	100% Design Review	FSS	LHA			
B	11/21/97	60% Design Review	FSS	LHA			

	RICHLAND ENVIRONMENTAL RESTORATION PROJECT	JOB NO. 22192
		SPECIFICATION NO. 0600X-SP-C0046
		SHEET 1 of 9

This page is intentionally blank.

SECTION 02277

GEOCOMPOSITES

PART 1 GENERAL

1.1 REFERENCES

The publications listed below form a part of this specification to the extent referenced. The publications are referred to in the text by basic designation only.

AMERICAN SOCIETY FOR TESTING AND MATERIALS (ASTM)

ASTM D1238	Standard Test Method for Flow Rates of Thermoplastics by Extrusion Plastometer.
ASTM D1505	Standard Test Method for Density of Plastics by the Density-Gradient Technique.
ASTM D1603	Standard Test Method for Carbon Black in Olefin Plastics.
ASTM D1777	Standard Test Method for Measuring Thickness of Textile Materials.
ASTM D4218	Test Method for Carbon Black Content in Polyethylene Compounds by the Muffle-Furnace Technique.
ASTM D4716	Standard Test Method for Constant Head Hydraulic Transmissivity (In-Plane Flow) of Geotextiles and Geotextile Related Products.
ASTM D4751	Standard Test Method for Determining Apparent Opening Size of a Geotextile.
ASTM D5199	Standard Test Method for Measuring Nominal Thickness of Geotextiles and Geomembranes.
ASTM D5261	Standard Test Method for Measuring Mass per Unit Area of Geotextiles.
ASTM D5321	Standard Test Method for Determining the Coefficient of Soil and Geosynthetic or Geosynthetic and Geosynthetic Friction by the Direct Shear Method.

1.2 DESCRIPTION

The work includes manufacture, fabrication (if needed), supply, and installation of geocomposite drainage layers associated with the lining of waste disposal facility. The geocomposite will consist of a layer of geotextile thermally bonded to each side of a geonet. Requirements for geotextiles are contained in Section 02276, GEOTEXTILES, of these Specifications. Requirements for geonets and the finished geocomposite are contained in this section.

1.3 SUBMITTALS

Submittals shall be furnished in accordance with Exhibit I.

SD-01 Data

Manufacturer's descriptive data, specification sheets, literature, and other data as necessary to fully demonstrate that those materials proposed for use comply with the requirements of these specifications.

SD-06 Instructions

The Contractor shall submit an installation plan describing the proposed methods for geocomposite deployment, panel layout, seaming, repair, and protection. The plan shall include a quality assurance program for the Contractor's activities related to geocomposite installation.

SD-09 Reports

Manufacturer's test results for geocomposite composition and properties.

SD-13 Certificates

Certifications that geocomposites satisfy the requirements of these specifications.

1.4 QUALITY ASSURANCE

Geocomposite installation will be monitored by the CQA Engineer. The Contractor shall accommodate all Quality Assurance activities described herein and in the Construction Quality Assurance Plan (CQA Plan) for this project.

PART 2 PRODUCTS

2.1 GENERAL

2.1.1 Composition

The geonet shall be high density polyethylene (HDPE).

The geocomposite shall consist of Type A geotextile thermally bonded to each side of the HDPE geonet.

2.1.2 Manufacturer

The Geocomposite Manufacturer shall have a minimum of five years experience as a commercial manufacturer of geocomposites for landfill drainage applications.

2.2 REQUIRED PROPERTIES

2.2.1 Property Values

2.2.1.1 Geonet

Geonet properties shall meet or exceed the values specified in the table of required geonet properties contained in this section of the Specifications.

2.2.1.2 Geotextile

Geotextile properties shall meet or exceed the values specified in Section 02276, GEOTEXTILES, of these Specifications.

2.2.1.3 Interface Strength

The residual friction angle between the geocomposite and textured geomembrane and between the geocomposite and operations layer material (see Section 02228, OPERATIONS LAYER), shall have a minimum value of 29.5 degrees under a normal load of 1955 kg/m^2 (400 psf) and a displacement of 50 mm (2 inches). Friction angle shall be determined by direct shear testing under fully saturated conditions (ASTM D5321) at nominal normal loads of 9.6, 19.2, and 28.8 kPa (200, 400, and 600 psf). Other combinations of shear strength parameters which can be shown by standard analytical techniques to provide static and dynamic factors of safety against slope failure that are equivalent or greater than those of the specified material may be acceptable if approved by the Contracting Officer.

2.2.1.4 Manufacturer's Information

The Manufacturer shall provide specification sheets, literature, and test results for all properties listed in these Specifications.

The Manufacturer shall certify that the materials supplied meet the requirements of this Part.

2.2.2 Integrity

Geonets and geocomposites shall retain their structure during handling, placement, and long-term service.

2.3 CONFORMANCE TESTING

Prior to shipment or after delivery of the rolls of geonet and geocomposite, the CQA Engineer will obtain samples at a frequency of one per production lot or one per 4645 m^2 (50,000 square feet) of each material type, whichever results in the greater number of tests, except that only two (2) friction angle tests on each interface will be performed. The CQA Engineer will test the samples to determine conformance to both the design specifications and the list of certified properties.

Tests on geonets and geotextiles to be used for the geocomposite shall be performed prior to geocomposite fabrication. Geocomposite fabricated from non-conforming components shall be rejected at the Contractor's expense.

As a minimum, the following tests will be performed on geonets:

a.	Polymer specific gravity	(ASTM D1505)
b.	Thickness	(ASTM D5199)
c.	Transmissivity	(ASTM D4716)
d.	Mass per unit area	(ASTM D5261)

As a minimum, the following tests will be performed on geocomposites:

a.	Friction Angle with Operations Layer	(ASTM D5321)

b. Friction Angle with Textured Geomembrane (ASTM D5321)

2.4 TRANSPORTATION, HANDLING, AND STORAGE

Geonets and geocomposites shall be supplied in rolls wrapped in protective dust-proof covers and marked or tagged with all of the following information:

a. Manufacturer's name.

b. Product identification.

c. Lot number.

d. Roll number.

e. Toll dimensions.

Transportation of the geonet and geocomposite to the site and all handling on site will be the responsibility of the Contractor.

During shipment and storage, the geonet and geocomposite shall be protected from mud, dirt, dust, puncture, cutting, or other damaging or deleterious conditions.

The Contractor shall be responsible for the storage of the geocomposite on site within the limits of construction. Storage areas shall be protected by the Contractor from theft, vandalism, passage of vehicles, etc.

PART 3 EXECUTION

3.1 GENERAL

3.1.1 Unacceptable Materials and Work

Materials and work which fail to meet the requirements of these specifications shall be removed, disposed of, and replaced at the Contractor's expense.

3.1.2 Installation Plan

The Contractor shall submit a plan describing the proposed methods for geocomposite deployment, panel layout, seaming, repair, and protection. The plan shall include a quality assurance program for the Contractor's activities related to geotextile installation.

3.2 HANDLING AND PLACEMENT

a. The Contractor shall handle all geocomposites in such a manner as to ensure that these materials are not damaged.

b. Clean geomembrane surface prior to placing geocomposite.

c. On slopes, geocomposite may be deployed over slip sheets with the roll at the top of the slope. An alternative method is to secure the geocomposite and then roll it down slope in

a manner to continually keep it in tension. If necessary, position the geocomposite after deployment to minimize wrinkles and remove the slip sheet, if used.

d. Do not drag the geocomposite across textured geomembrane.

e. In the presence of wind, all exposed geocomposites shall be weighted with sandbags or equivalent. Sandbags shall be installed during geocomposite placement and shall remain until replaced with cover material.

f. Unless otherwise specified, geocomposites shall not be welded to geomembranes.

g. Geocomposites shall only be cut using approved cutting tools.

h. The Contractor shall take any necessary precautions to prevent damage to underlying layers during placement of the geocomposite.

i. During placement of geocomposites, care shall be taken not to entrap dirt or excessive dust that could cause clogging of the drainage system, and/or stones that could damage the adjacent geomembrane. If dirt or excessive dust is entrapped in the geocomposite, it shall be cleaned prior to placement of the next material on top of it. In this regard, care shall be taken with the handling of sandbags, to prevent rupture or damage of the sandbag.

j. Tools shall not be left in the geocomposite.

k. In geocomposites, tearing the geotextile away from the geonet shall not be allowed except at seam locations in corners as approved by the CQA Engineer.

l. After deployment, all geocomposite shall be covered to prevent exposure to ultraviolet (UV) radiation (sunlight) within a maximum period of 2 weeks.

3.3 JOINING

a. Adjacent sections of geocomposite shall be overlapped according to manufacturer's directions.

b. Overlaps shall be secured by spot welding or tying. Acceptable tying devices include strings, plastic fasteners, or polymer braid. Tying devices shall be white or yellow for easy observation. Metallic devices are not allowed.

c. Overlaps shall be secured every 1.5 m (5 feet) along slopes and on the floor of the landfill. Overlaps shall be secured every 150 mm (6 inches) in anchor trenches. Along end-to-end seams, spot weld or tie 2 rows 75 mm (3 inches) apart. Spot weld or tie each row at 150 mm (6 inch) intervals; stagger weld or ties between rows.

d. No horizontal seams shall be allowed on side slopes except at roll ends.

e. If more than one layer of geocomposite is installed, joints shall be staggered.

3.4 REPAIR

a. Remove the damaged area of geocomposite.

b. Cut a piece of geonet satisfying the requirements of Part 2 of this Section to fit into the repair area. Geonet shall fit into repair area to form a flush surface with the geocomposite. Cut geonet so that ribs are in the same orientation as existing geocomposite.

c. Remove any dirt or other foreign material which may have entered the geocomposite.

d. Place geonet patch into repair area.

e. Place geotextile satisfying the requirements of Part 2 of this Section over the geonet patch. Cut geotextile to overlap existing geocomposite at least 150 (6 inches) in all directions. Heat seam geotextile to geocomposite around its entire perimeter.

3.5 MATERIALS IN CONTACT WITH GEOCOMPOSITES

The Contractor shall place all soil materials located on top of a geocomposite layer in such a manner as to ensure that the following conditions are satisfied:

a. No damage to the geocomposite.

b. No slippage of the geocomposite on underlying layers.

c. No excess tensile stresses in the geocomposite.

3.6 CONTRACTOR QUALITY CONTROL

The Contractor shall establish and maintain a quality control system to assure compliance with contract requirements and shall maintain records of his quality control for all operations including but not limited to the following:

(1) Delivery, handling, and storage of materials.

(2) Placement, joining and repair.

Copies in duplicate of these records and tests, as well as records of corrective action taken when results are unsatisfactory, shall be furnished to the Contracting Officer within one working day following the inspection or test.

PART 4 SUMMARY SUBMITTAL

4.1 SUMMARY OF SUBMITTALS

Submittals to be furnished by the Contractor shall include the following:

Paragraph	Item	SD
02277-2.2.1.4	Manufacturer's Information	01
02277-3.1.2	Installation Plan	06
02277-2.2.1.4	Manufacturer's Test Results	09
02277-2.2.1.4	Manufacturer's Certifications	13

Code for Type of Submittal (SD)

01 - Data
04 - Drawings
06 - Instructions
07 - Schedules
08 - Statements
09 - Reports
13 - Certificates
14 - Samples
18 - Records
19 - O & M Manuals

Table 02277-1. REQUIRED GEONET PROPERTIES

PROPERTY	QUALIFIER	UNIT	VALUE	TEST
Polymer composition	minimum	% polyethylene	95	—
Mass per Unit Area	MARV (1)	oz/yd^2	24	ASTM D5261
Polymer specific gravity	minimum	N/A	0.93	ASTM D1505
Polymer melt index	range	g/10 min	0.1-1.1	ASTM D1238
Carbon black content	range	%	2 - 3	ASTM D1603 or D4218
Thickness	MARV	mils	200	ASTM D1777 or D5199
Nominal Transmissivity (2)	MARV	m^2/sec	1×10^{-3}	ASTM D4716

Notes:

(1) MARV = Minimum Average Roll Value.

(2) Measured using water at 20þC (68þF) with a gradient of 1, under a compressive stress of 479 kPa (10,000 psf) between two smooth steel plates.

* * * * *

TECHNICAL SPECIFICATION
FOR
HDPE PIPE AND FLATSTOCK
SECTION 02725

ENVIRONMENTAL RESTORATION DISPOSAL FACILITY (ERDF)
CELLS 3 & 4 CONSTRUCTION

C	1/20/98	100% Design Review	FSS	LHA			
B	11/21/97	60% Design Review	FSS	LHA			
REV	DATE	REASON FOR REVISION	ORIGINATOR	CHECKER	GROUP LEADER	TASK DESIGN LEAD	PROJECT ENGINEER

	RICHLAND ENVIRONMENTAL RESTORATION PROJECT	JOB NO. 22192
		SPECIFICATION NO. 0600X-SP-C0048
		SHEET 1 of 10

This page is intentionally blank.

SECTION 02725

HDPE PIPE AND FLATSTOCK

PART 1 GENERAL

1.1 REFERENCES

The publications listed below form a part of this specification to the extent referenced. The publications are referred to in the text by basic designation only.

AMERICAN SOCIETY OF MECHANICAL ENGINEERS

ASME B31.3	Process Piping

AMERICAN SOCIETY FOR TESTING AND MATERIALS (ASTM)

ASTM D792	Standard Test Methods for Density and Specific Gravity (Relative Density) of Plastics by Displacement.
ASTM D1248	Specification for Polyethylene Plastics Molding and Extrusion Materials.
ASTM D1505	Standard Test Method for Density of Plastics by the Density-Gradient Technique.
ASTM D2513	Specification for Thermoplastic Gas Pressure Pipe, Tubing, and Fittings.
ASTM D2657	Practice for Heat Joining of Polyolefin Pipe and Fittings.
ASTM D2683	Specification for Socket-Type Polyethylene Fittings for Outside-Diameter Controlled Polyethylene Pipe and Tubing.
ASTM D3083	Standard Specification for Flexible Poly(Vinyl Chloride) Plastic Sheeting for Pond, Canal, and Reservoir Lining.
ASTM D3350	Specification for Polyethylene Plastics Pipe and Fitting Materials.

CODE OF FEDERAL REGULATIONS (CFR)

49 CFR 192.285	Plastic pipe; qualifying persons to make joints.

1.2 DESCRIPTION

1.2.1 Pipe

This section includes all High Density Polyethylene (HDPE) Pipe used in the ERDF landfill including but not limited to:

1. Leachate collection piping on floor and cleanout access pipes on the slopes of the trench.

2. Side-slope riser pipes containing submersible sump pumps.

3. Access pipes for transducers which measure leachate level in the sumps.

4. Sump pump discharge piping.

5. Prefabricated HDPE boots to be placed around all pipe penetrations through the HDPE liner.

6. Double containment piping on riser pipe pad at slope crest and elsewhere as shown on the Drawings.

1.2.2 Flatstock

This section includes HDPE flatstock installed in sumps.

1.3 SUBMITTALS

Submittals shall be furnished in accordance with Exhibit I.

SD-04 Drawings

Fabrication drawings for piping system.

SD-13 Certificates

Certificates for pipe manufacturer's quality control tests, and for calibration of acceptance testing equipment.

SD-18 Records

Records demonstrating personnel qualifications.

PART 2 PRODUCTS

2.1 HDPE MATERIALS

All HDPE pipe and flatstock shall meet the following requirements:

a. Specific Gravity, as determined by ASTM D792 or D1505:

0.94 minimum.

b. Carbon Black Content, as determined by ASTM D1603:

2.0% minimum.

c. Resistance to Soil Burial, as determined by ASTM D3083, as modified by NSF Standard 54 Appendix A, Part 3:

At least 90% strength retained.

d. Melt Index, as determined by ASTM D1238 Condition 190.2.16:

0.1 to 1.1 g per 10 min

2.2 HDPE PIPE

2.2.1 Resin

HDPE pipe shall be manufactured from first quality polyethylene resin containing no more than 2% clean recycled polymer by weight. Resin shall be Type III, Category 5, Class C, Grade 34 per ASTM D1248. The cell classification shall be 345434C per ASTM D3350. Pipe shall be rated PE3408.

2.2.2 Quality

The pipe shall have uniform wall thickness and shall be uniform in color, opacity, density, and other physical properties. Pipe shall be homogeneous throughout and free of visible cracks, holes, blisters, bubbles, un-dispersed raw materials, or any contamination by foreign matter. Any pipe with nicks, scrapes, or gouges deeper than 25 percent of the nominal wall thickness shall be rejected.

2.2.3 Form

Pipe may be supplied in a continuous extruded seamless piece or in sections.

2.2.4 Manufacturer's QC Certificates

Prior to shipment, the HDPE pipe Manufacturer shall submit a quality control certificate for each lot/batch of HDPE pipe provided. The quality control certificate shall be signed by a responsible party employed by the HDPE pipe Manufacturer, such as the Production Manager. The quality control certificate shall include both:

a. Lot/batch numbers and identification.

b. Sampling procedures and results of quality control tests.

2.3 DOUBLE CONTAINMENT PIPE

2.3.1 Pipe Materials

Both carrier pipe and containment pipe shall meet the requirements of paragraphs 2.1 and 2.2 of this section.

2.3.2 Configuration

Double containment pipe shall consist of factory pre-fabricated components, with a carrier pipe installed within a containment pipe. All pipe and fittings shall provide a continuous annular space between the carrier and containment pipes to accommodate monitoring systems and possible flow of fluid from the carrier pipe.

2.3.3 Support Spacers

Support spacers shall be manufactured from non-metallic, corrosion resistant material. Spacers shall be secured to the carrier pipe at nominal 4-foot intervals. Support spacers shall not restrict longitudinal movement between the carrier and containment pipes. The spacers shall maintain the specified annulus

between the carrier and containment pipes and shall allow for unrestricted passage of monitoring systems and possible flow of fluid from the carrier pipe.

2.3.4 End Seals

Expansion type end seals or fixed end caps shall be used to seal the annulus between the carrier and containment pipes. End seals shall include side ports for monitoring systems or to drain fluid from the annulus. End seals shall be factory manufactured.

2.3.5 Fittings

Fittings shall conform to the requirements of paragraphs 2.1 and 2.2 of this section and shall be compatible with the other components of the double containment system. Fittings shall be pre-fabricated with the carrier fitting installed within the containment fitting and all spacers installed.

2.4 COUPLINGS AND END CAPS

2.4.1 Couplings

Couplings for socket fusion shall satisfy the specifications listed above for HDPE pipe, except that other cell classifications are acceptable provided that they are compatible with the HDPE pipe and provide equivalent performance to class 345434C. Couplings shall satisfy the requirements of ASTM D2513 and shall be manufactured in compliance with ASTM D2683.

2.4.2 Flanged Connections

Where pipes or fittings of different materials are connected, the coupling shall be a flanged connection. The flanges shall be ANSI 150 pound class flanges. The flange joints shall use stainless steel nuts and bolts. Gaskets shall be required when joining to nonpolyethylene materials.

2.4.3 End Caps

Provide molded polyethylene end caps for ends of all cleanout access pipes. Caps shall prevent entry of soil or debris into the cleanout pipe and shall be removable. Composition of polyethylene shall be compatible with cleanout pipes per manufacturer's recommendations and shall withstand outdoor conditions.

2.5 PERFORATIONS AND PENETRATIONS

2.5.1 Leachate Collection Piping

Leachate collection piping on the floor of the landfill, on the access ramp, and elsewhere as shown on the Drawings shall be perforated. Perforations shall be as shown on the Drawings. Alternatively, slotted (sawn) pipe may be used; submit evidence of equivalent flow capacity. Cleanout access pipes shall not be perforated.

2.5.2 Sump Pipes

The sump pipes (lower portion of the side slope riser pipes within the sump gravel) shall be perforated as shown on the Drawings.

2.6 FLATSTOCK

2.6.1 Resin

Flatstock shall meet or exceed ASTM D1248 requirements for Type III, Class A, B, or C; Category 3; Grade G5. Flatstock shall be manufactured from first quality polyethylene resin containing no more than 2% clean recycled polymer by weight.

2.6.2 Material Properties

The flatstock shall meet the requirements for specific gravity, carbon black content, and melt index described in Part 2.1.

2.6.3 Thickness

The flatstock used in the primary sump shall have a nominal thickness of one inch. The edges of the flatstock shall have a 6.4 mm (0.25 inch) bevel.

2.7 BOOTS

The Contractor shall supply prefabricated HDPE boots conforming to the requirements for geomembrane for miscellaneous applications presented in Section 02275 GEOMEMBRANES for all penetrations of HDPE pipe through the geomembrane liner.

2.8 SCHEDULE

HDPE pipe nominal diameter and wall thickness shall be as follows:

Submersible pump discharge piping	1½" diam. SDR 13.5 or SDR 11
Submersible pump discharge piping	3" diam. SDR 11
Sump level transducer access pipe	3" diam. SDR 11
Slope riser pipe	12" diam. SDR 13.5
Slope riser pipe	18" diam. SDR 13.5
Double containment pipe 2/6	2" diam. SDR 11 / 6" diam. SDR 17
Double containment pipe 4/8	4" diam. SDR 11 / 8" diam. SDR 17
Double containment pipe 10/14	10" diam. SDR 11 / 14" diam. SDR 17
Perforated leachate collection	4" diam. SDR 11
Perforated leachate collection	6" diam. SDR 11
Cleanout access pipes	4" diam. SDR 11

PART 3 EXECUTION

3.1 FABRICATION DRAWINGS

Prior to construction, the Contractor shall submit pipe fabrication drawings. Drawings shall include materials list; piping layout; joining methods; fittings; type, size, and spacing of perforations; and penetration details.

3.2 DIMENSIONS

Piping dimensions shown on the Drawings are approximate. It is the Contractor's responsibility to furnish and install piping of the proper dimensions, which will properly fit with the connecting elements, pipes, fittings, pumps, etc.

3.3 INSTALLATION

a. Pipe shall be handled and stored in such a manner as to ensure a sound, undamaged condition.

b. Pipe shall be cut in a neat, workmanlike manner using an approved mechanical cutter that will not damage the pipe.

c. Joining of HDPE pipe to HDPE pipe shall be accomplished by thermal butt or socket fusion; no solvent or adhesive welding shall be allowed. Pipe shall be joined per ASTM D2657 and manufacturer's recommendations. Installation personnel who join HDPE pipe shall be experienced and certified in accordance with 49 CFR 192.285. The Contractor shall submit a list of proposed joining personnel and their qualifications.

   Single butt fusion welds shall be used to create pipe sections as long as practicable or as specified in the Contractor's procedure. Fabricated pipe sections and fittings may be joined by the double butt fusion process.

d. During installation, the pipe shall not be pulled across sharp projections that could cause gouges, kinks, or other types of damage.

e. The pipe shall not be dropped into the trench. The full length of the pipe shall be firmly bedded on the trench bottom. The pipe shall be bedded in such a way as to maintain grade with a tolerance of -0.0%, +0.5%.

f. Temporarily close pipe ends as required to avoid introducing dirt or other foreign material into the pipe.

g. Trenching and backfilling operations shall be conducted in accordance with the requirements of Section 02210, EARTHWORK, for utility trenching. Backfilling operations shall ensure that no voids are present under or at the sides of the pipe. Backfill shall initially be placed to the top of the pipe, then hand compacted. The remainder of the trench shall then be backfilled and compacted by hand or with a power tamper only.

h. Where flanged joints are used, the bolts shall be evenly torqued using a crossing pattern to gradually tighten the lug nuts. Flanged joints shall be retorqued after one hour or more has passed.

i. Boots shall be welded to the surrounding liner and the HDPE pipe using methods described in Section 02275, GEOMEMBRANES, as applicable.

j. Flaws (minor imperfections, damaged areas, etc.) in HDPE pipe with a depth of 10% or less of the nominal wall thickness will not require repair or replacement. In double containment systems, carrier pipe with flaws deeper than 10% of the wall thickness shall be replaced. Single pipe or containment pipe with flaws between 10% and 25% of the wall thickness shall be repaired in accordance with the pipe manufacturer's recommendations. The Contractor shall certify in writing that the repaired area will have material properties that meet or exceed those of intact pipe. Any pipe with flaws deeper than 25% of the nominal wall thickness shall be rejected.

3.4 CLEANING

Clean all piping as required to remove all foreign materials including dirt, grease, and other matter.

3.5 ACCEPTANCE TESTING

The Contractor shall perform acceptance testing of all HDPE piping. Where the pipe will be covered with liner, the Contractor shall complete the required testing and receive approval by the Contracting Officer prior to burying the pipe or covering the pipe with liner. Where no liner will be installed over the pipe, the Contractor may bury the pipe prior to testing.

3.5.1 General

Provide all test equipment and materials, including test pumps, gages, water, volumetric measuring equipment, and other equipment required. Pressure gages used shall be graduated in increments not greater than 34.5 kPa (5 psi) and shall have range of approximately twice test pressure. Use only calibrated gages and instruments. Provide calibration certificates.

3.5.2 Sideslope Riser Pipes

With pipe in final location, insert submersible pump, discharge piping, and wiring to check pump location and to demonstrate that pipe is free from obstructions.

3.5.3 Sump Level Transducer Access Pipes

With pipe in final location, insert to measurement location to demonstrate that pipe is free from obstructions.

3.5.4 Discharge Pipes

Pressure test to 345 kPa (50 psi). Hold test pressure for 1 hour.

3.5.5 Crest Pad Piping

a. Test in accordance with applicable provisions of ASME B31.3, normal fluid service, as modified by the requirements of this section.

b. Test with piping in final location. Pressure test single containment piping to 207 kPa (30 psi). Pressure test the carrier pipe of double containment piping to 207 kPa (30 psi) and the containment pipe of double containment piping to 103 kPa (15 psi).

c. Hold test pressure for 1 hour. Test time will be accrued only while full test pressure is applied to system.

d. During testing, remove from systems all equipment which would be damaged by test pressure. Replace removed equipment after testing.

e. Systems may be tested in sections as work progresses; however, any previously tested portion shall become a part of any later test of composite system.

f. Where new pipe connects to existing piping, the joint between the two pipes shall be tested. Correct leaks by remaking joints with new material; makeshift remedies will not be permitted.

g. The Contractor shall be responsible for providing all temporary fittings, plugs, and thrust blocking for all testing at the specified pressure.

h. Leakage shall be zero for the piping at the specified test pressure throughout the specified duration.

3.6 CONTRACTOR QUALITY CONTROL

The Contractor shall establish and maintain a quality control system to assure compliance with contract requirements and shall maintain records of his quality control for all operations including but not limited to the following:

(1) Conformance of materials to the requirements of this section.

(2) Installation in accordance with the requirements of this section and Section 02210, EARTHWORK.

(3) As-built locations of all piping.

(4) Acceptance testing in accordance with the requirements of this section.

Copies in duplicate of these records and tests, as well as records of corrective action taken when results are unsatisfactory, shall be furnished to the Contracting Officer within one working day following the inspection or test.

PART 4 SUBMITTAL SUMMARY

4.1 SUMMARY OF SUBMITTALS

Submittals to be furnished by the Contractor shall include the following:

Paragraph	Item	SD
02725-3.1	Fabrication Drawings	04
02725-2.2.4	Manufacturer's QC Certificates	13
02725-3.5.1	Calibration Certificates	13
02725-3.3.c	Personnel Qualifications	18

Code for Type of Submittal (SD)

01 - Data
04 - Drawings
06 - Instructions
07 - Schedules
08 - Statements
09 - Reports
13 - Certificates
14 - Samples
18 - Records
19 - O & M Manuals

* * * * *

This page is intentionally blank.

TECHNICAL SPECIFICATION
FOR
LEACHATE SYSTEM
SECTION 02731

ENVIRONMENTAL RESTORATION DISPOSAL FACILITY (ERDF)
CELLS 3 & 4 CONSTRUCTION

REV	DATE	REASON FOR REVISION	ORIGINATOR	CHECKER	GROUP LEADER	TASK DESIGN LEAD	PROJECT ENGINEER
C	01/20/98	100% Design Review	MGM	LHA			
B	11/21/97	60% Design Review	MGM	LHA			

RICHLAND ENVIRONMENTAL RESTORATION PROJECT	JOB NO. 22192
	SPECIFICATION NO. 0600X-SP-C0049
	SHEET 1 of 10

SECTION 02731

LEACHATE SYSTEM

PART 1 GENERAL

1.1 REFERENCES

The publications listed below form a part of this specification to the extent referenced. The publications are referred to in the text by basic designation only.

AMERICAN SOCIETY FOR TESTING AND MATERIALS (ASTM)

ASTM A 123	(1989a) Zinc (Hot-Dip Galvanized) Coatings on Iron and Steel Products
ASTM C 478	(1990b) Precast Reinforced Concrete Manhole Sections

AMERICAN SOCIETY OF MECHANICAL ENGINEERS (ASME)

ASME B16.1	(1989) Cast Iron Pipe Flanges and Flanged Fittings

AMERICAN WATER WORKS ASSOCIATION (AWWA)

AWWA C104	(1990) Cement Mortar Lining for Ductile-Iron Pipe and Fitting for Water
AWWA C105	(1988) Polyethylene Encasement for Ductile-Iron Piping for Water and Other Liquids
AWWA C110	(1987) Ductile-Iron and Gray-Iron Fittings, 3 In. Through 48 In., for Water and Other Liquids
AWWA C111	(1990) Rubber-Gasket Joints for Ductile-Iron Pressure Pipe and Fittings
AWWA C115	(1988) Flanged Ductile-Iron Pipe with Threaded Flanges
AWWA C151	(1991) Ductile-Iron Pipe, Centrifugally Cast for Water or Other Liquids
AWWA C504	(1987) Rubber-Seated Butterfly Valves
AWWA C600	(1987) Installation of Ductile-Iron Water Mains and Their Appurtenances

MANUFACTURERS STANDARDIZATION SOCIETY OF THE VALVE AND FITTINGS INDUSTRY (MSS)

MSS SP-80	(1987) Bronze Gate, Globe, Angle and Check Valves

1.2 GENERAL REQUIREMENTS

This specification covers the procurement, installation, and testing of the leachate system. The leachate system consists of gravity double containment piping between the crest pad and existing manholes, piping inside the leachate pump house, and transfer line piping. The Contractor shall have a copy of the manufacturer's instructions available at the construction site at all times and shall follow those instructions unless directed otherwise by the Contracting Officer. Before, during and after installation plastic pipe and fittings shall be protected from any environment that would result in damage or deterioration to the material. Excavation and backfill is specified in Section 02210 EARTHWORK. Backfilling shall be accomplished after inspection by the Contracting Officer. The Contractor shall replace damaged materials and redo unacceptable work at no additional cost to the Government.

1.3 SUBMITTALS

Submittals shall be furnished in accordance with Exhibit I.

SD-04 Drawings

Fabrication Drawings showing lengths of pipe and fittings, connection details, clearances, and all information necessary for field installation.

SD-06 Instructions

Installation;

The manufacturer's recommendations for each material or procedure to be utilized.

SD-09 Reports

Hydrostatic Tests;

Copies of test results.

1.4 DELIVERY, STORAGE AND HANDLING

Materials and equipment shall be handled so as to insure delivery to the site in sound, undamaged condition. All equipment placed in storage shall be stored with protection from weather, humidity, and temperature variations, dirt and dust, or other contaminants, in accordance with manufacture's recommendations. Proper protection and care of materials before, during, and after installation shall be contractor's responsibility. Any materials found to be damaged shall be repaired or replaced at Contractor's expense. During installation, piping and similar openings shall be capped to keep out dirt and other foreign matter.

PART 2 PRODUCTS

2.1 NAMEPLATES

Valves within this specification shall have an attached nameplate to list the manufacturer's name, address, component type or style, model or serial number, catalog number, capacity or size, and the

system which is controlled. Plates shall be durable and legible throughout equipment life and made of stainless steel. Plates shall be fixed in prominent locations with nonferrous screws or bolts.

2.2 PIPE AND FITTINGS

Piping material is identified on drawings. Pipe shall conform to the respective specifications and other requirements listed below.

2.2.1 HDPE Pipe

HDPE pipe and fittings shall be in accordance with Section 02725, HDPE PIPE AND FLATSTOCK.

2.2.2 Ductile Iron Pipe

Ductile-iron pipe shall conform to AWWA C151, working pressure not less than 2413 kPa (350 psi), unless otherwise shown or specified. Pipe shall be cement-mortar lined in accordance with AWWA C104. Linings shall be standard. Flanged ductile iron pipe with threaded flanges shall be in accordance with AWWA C115. Ductile iron mechanical fittings shall comply with AWWA C110, rated for 2413 kPa (350 psi). Ductile iron push on fitting shall comply with AWWA C110 and AWWA C111, rated for 2413 kPa (350 psi). Below ground ductile-iron pipe and fittings shall be encased in polyethylene as per AWWA C105.

2.2.3 PVC Pipe

Pipe, couplings and fittings 100 mm (4 inch) through 300 mm (12 inch) diameter shall conform to AWWA C900, Class 200 CIOD pipe dimensions, elastomeric-gasket joint, unless otherwise shown or specified. Fittings and specials shall be iron, bell end in accordance with AWWA C110, 2.42 MPa (350 psi) pressure rating unless otherwise shown or specified, except that profile of bell may have special dimensions as required by the pipe manufacturer; or may be fittings and specials of the same material as the pipe with elastomeric gaskets, all in conformance with AWWA C900. Iron fittings and specials shall be cement-motar lined (standard thickness) in accordance with AWWA C104. Fittings shall be bell and spigot or plain end pipe, or as applicable. Ductile iron compact fittings shall be in accordance with AWWA C153.

2.3 VALVES

2.3.1 Swing Check Valves

Check valves shall be designed for a minimum working pressure of 1.03 MPa (150 psi) or as indicated. Valves shall have a clear waterway equal to the full nominal diameter of the valve. Valves shall open to permit flow when inlet pressure is greater than the discharge pressure, and shall close tightly to prevent return flow when discharge pressure exceeds inlet pressure. The size of the valve, working pressure, manufacturer's name, initials, or trademark shall be cast on the body of each valve.

a. Valves larger than 50 mm (2 inches) shall be iron body, bronze mounted, shall have flanged ends, and shall be the non-slam type. Flanges shall be the Class 125 type conforming to ASME B16.1.

2.3.2 Eccentric Plug Valve

Eccentric plug valves shall be of the non-lubricated eccentric type with cast iron bodies, resilient faced plugs, or a replaceable, resilient seat in the body. Unless otherwise shown or specified, all valves for sizes 100 mm (4 inch) and larger shall have worm gear operators, nickel or stainless steel seats, and ANSI 125 psi flanged or grooved ends. Valves 76 mm (3 inch) or smaller shall have operating levers, nickel or stainless steel seats, and screwed ends. Resilient facing shall be suitable for the intended service. All submerged and buried valves, shall be equipped with worm gear operators, lubricated and sealed to prevent entry of dirt and water into the operator. All shaft bearings shall be of stainless steel, furnished with permanently lubricated bearing surfaces. The operator shall clearly indicate valve position. All valves up to and including 508 mm (20 inch) in size shall have an unobstructed port area of not less than 80 percent of full pipe area, and not less than 70 percent for larger valves, unless otherwise specified. All eccentric plug valves shall have a pressure rating of not less than 1034 kPa (150 psi) WOG, for bubble-tight shut-off.

2.3.3 Butterfly Valves

Butterfly valves shall conform to AWWA C504, subject to the following requirements. Valves shall have a pressure rating of not less than 1.03 MPa (150 psi) WOG. Flanged valves shall have ANSI 1.03 MPa (150 psi) flanges. Valve bodies shall be cast iron. Valve discs shall be cast iron with type 316 stainless steel seating edge. Valve seat shall be Buna N. Seat shall be positively clamped or bonded into the disc or body of the valve, but cartridge-type seats which rely on a high coefficient of friction for retention shall not be used. Valve shaft shall be type 304 stainless steel. Shaft seals shall be designed for use with standard split-V type packing, or other acceptable seal. The interior passages of butterfly valves shall not have any obstructions or stops. All butterfly valves shall be furnished with manual actuators. Valves sizes up to and including 102 mm (4 inches) shall have direct acting lever or handwheel actuators of the manufacturer's best standard design. Larger valves shall have gear-assisted manual actuators with position indicators. All buried valves shall have worm-gear actuators, hermetically-sealed and grease-packed. Buried valves shall have extension stems to grade, with square nuts, position indicators, covers, and operating keys.

2.3.4 Motorized Valve Actuator

2.3.4.1 Equipment Requirements

Where electric motor actuators are indicated, an electric motor-actuated valve control unit shall be attached to the actuating mechanism housing by means of a flanged motor adaptor piece.

2.3.4.2 Gearing

The motor actuator shall include the motor, reduction gearing, reversing starter, torque switches, and limit switches in a weather-proof NEMA 4 assembly. The actuator shall be a single or double reduction unit consisting of spur or helical gears and worm-gearing. The spur or helical gears shall be of hardened alloy steel and the worm-gear shall be alloy bronze. All gearing shall be accurately cut with hobbing machines. All power gearing shall be grease- or oil-lubricated in a sealed housing. Ball or roller bearings shall be used throughout. Actuator output speed changes shall be mechanically possible by simply removing the motor and changing the exposed or helical gearset ratio without further disassembly of the electric actuator.

2.3.4.3 Starting Device

Except for modulating valves, the unit shall be so designed that a hammer blow is imparted to the stem nut when opening a closed valve or closing an open valve. The device should allow free movement at

the stem nut before imparting the hammer blow. The actuator motor must attain full speed before stem load is encountered.

2.3.4.4 Switches and Wiring

Travel in the opening and closing directions shall be governed by a switch responsive to mechanical torque developed in seating the valve, or by an obstruction met in opening or closing the valve, or by an on-board microprocessor. The torque switch shall be adjustable and shall function without auxiliary relays or devices, or it shall be adjustable in one-percent increments, sensed by a pulse-counter which receives 15 pulses per rotation of the unit. The geared limit switches shall be of the open type and shall be actuated by a rotor cam with 4 contacts to each cam or gear train. The actuator shall have a number of gear trains as required to produce the operation indicated. The actuator shall be wired in accordance with the schematic diagram. All wiring for external connections shall be connected to marked terminals. One 25 mm (1 inch) and one 32 mm (1 1/4 inch) conduit connection shall be provided in the enclosing case. A calibration tag shall be mounted near each switch correlating the dial setting to the unit output torque. Position limit switches and associated gearing shall be an integral part of the valve actuator. To provide the best possible accuracy and repeatability, limit-switch gearing shall be of the "counting" intermittent type, made of stainless steel, grease-lubricated, and enclosed in its own gearcase to prevent dirt and foreign matter from entering the gear train. Switches shall not be subject to breakage or slippage due to over-travel. Traveling-nuts, cams, or microswitch tripping mechanisms shall not be used. Limit-switches shall be of the heavy-duty open contact type with rotary wiping action.

2.3.4.5 Handwheel Operation

A permanently-attached handwheel shall be provided for emergency manual operation. The handwheel shall not rotate during electrical operation. The maximum torque required on the handwheel under the most adverse conditions shall not exceed 81 N-M (60 lb-ft), and the maximum force required on the rim of the handwheel shall not exceed 267 N (60 lb). An arrow and either the word "open" or "close" shall be cast or permanently affixed on the handwheel to indicate the appropriate direction to turn the handwheel.

2.3.4.6 Motor

The motor shall be of the totally-enclosed, non-ventilated, high-starting torque, low-starting current type for full voltage starting. It shall be suitable for operation on 480-volt, 3-phase, 60-Hz current, and have Class F insulation and a motor frame with all dimensions in accordance with the latest revised NEMA MG Standards. The observed temperature rise by thermometer shall not exceed 55 degrees C (131 degrees F) above an ambient temperature of 40 degrees C (104 degrees F) when operating continuously for 15 minutes under full rated load. With a line voltage ranging between 10 percent above to 10 percent below the rated voltage, the motor shall develop full rated torque continuously for 15 minutes without causing the thermal contact protective devices imbedded in the motor windings to trip or the starter overloads to drop-out. All bearings shall be of the ball type and thrust bearings shall be provided where necessary. All bearings shall be provided with suitable seals to confine the lubricant and prevent the entrance of dirt and dust. Motor conduit connections shall be watertight. Motor construction shall incorporate the use of stator and rotor as independent components from the valve operation such that the failure of either item shall not require actuator disassembly or gearing replacement. The motor shall be furnished with a space heater suitable for operation on 120-volt, single-phase, 60-Hz circuit unless the entire actuator is an hermetically-sealed, non-breathing design with a separately sealed terminal compartment which prevents moisture intrusion.

2.3.4.7 Actuator Appurtenances

The actuator for each valve shall be supplied with open and close status lights; open, close and lock-out-stop push-buttons, and all other devices indicated.

2.3.4.8 Starter

The starter shall be a suitably sized amperage rated reversing starter with its coils rated for operation on 120-volt, 1-phase, 60-Hz current. A control power transformer shall be included to provide a 120-volt source, unless otherwise indicated. The starter shall be equipped with 3 overload relays of the automatic reset type. Its control circuit shall be wired as indicated. The integral weatherproof compartment shall contain a suitably sized 120-volt ac, single-phase, 60-Hz space heater to prevent moisture condensation on electrical components.

2.4 METERS

See Section 15150, METERS

2.5 GAUGES

See Section 15183, GAUGES

2.6 MANHOLES

Precast reinforced concrete manhole sections shall conform to ASTM C 478. Joints shall be cement motar, or an approved mastic or rubber gasket, or an approved combination of these types. Ladders shall be constructed to OSHA 1910 safety standards. Steel ladders and inserts shall be galvanized after fabrication in conformance with ASTM A 123.

2.7 FLOOD SWITCHES

Flood switches shall be of the type that traps air in an inverted column. Contact transfer is initiated by a pressure switch actuated by increasing pressure in the column. The pressure switch shall be isolated from the process with a diaphragm. Flood switches shall be water tight and capable of being submersed without adversely effecting electrical signal components.

PART 3 EXECUTION

3.1 EXCAVATION FOR LEACHATE PIPE

Excavation, trenching, and backfilling shall be as specified in Section 02210 EARTHWORK.

3.2 PIPE

Piping shall be inspected, tested, and approved before burying, covering, or concealing. Piping shall be installed straight and true to bear evenly on supports. Piping shall be free of traps. Any pipe, fittings, or appurtenances found defective after installation shall be replaced. Piping connections to equipment shall be as indicated or as required by the equipment manufacturer. Pipe and accessories shall be handled carefully to assure a sound, undamaged condition. The interior of the pipe shall be thoroughly cleaned of foreign matter and shall be kept clean during installation.

3.2.1 Cutting Of Pipe

Cutting of pipe shall be done in a neat and workmanlike manner without damage to the pipe. Unless otherwise recommended by the manufacturer and authorized by the Contracting Officer, cutting shall be done with an approved type mechanical cutter. Wheel cutter shall be used when practicable. Squeeze type mechanical cutters shall not be used for ductile iron. Sharp and rough edges shall be ground smooth and loose material removed from the pipe before laying.

3.2.2 Laying Of Pipe

Pipe and accessories shall be carefully lowered into the trench by means of derrick, ropes, belt slings, or other authorized equipment. Under no circumstances shall any of the pipe materials be free rolled, dropped, or dumped into the trench. Care shall be taken to avoid abrasion of the pipe coating. The full length of each section of pipe shall rest solidly upon the pipe bed. Pipe that has the grade or joint disturbed after laying shall be taken up and relaid. Pipe shall not be laid in water or when trench conditions are unsuitable for the work. Water shall be kept out of the trench until joints are complete. When work is not in progress, open ends of pipe, fittings, and valves shall be securely closed so that no trench water, earth, or other substance will enter the pipes or fittings. Where any part of the coating or lining is damaged, the repair shall be made by the Contractor at his expense in a satisfactory manner. Pipe ends left for future connections shall be valved, plugged, or capped, and anchored, as shown.

3.2.3 Jointing

Joints connecting pipe of differing materials shall be made in accordance with the manufacturer's recommendations as approved by the Contracting Officer. Maximum offset in alignment between adjacent flexible plastic pipe joints shall be as recommended by the manufacturer and approved by the Contracting Officer, but in no case shall it exceed 5 degrees.

3.2.4 Pipe Sleeve

Piping passing through concrete or masonry construction shall be fitted with sleeves except for cored openings in precast concrete structures. Sleeve shall be of sufficient length to pass through the entire thickness of the associated structural member and be large enough to provide a minimum clear distance of 15 mm (l/2-inch) between the pipe and sleeve. Sleeves through concrete shall be 0.91 mm (20 gauge) steel, fiberglass, or other material as shown on the drawings or as approved by the Contracting Officer. Sleeves shall be accurately located on center with the piping and securely fastened in place. The space between a sleeve and a pipe shall be caulked and sealed as specified as shown on the drawings.

3.3 VALVES

Prior to installation, valves shall be cleaned of all foreign matter and inspected for damage. Valves shall be fully opened and closed to ensure that all parts are properly operating. Valves shall be installed with stems in vertical positions, unless otherwise specified on drawings.

3.4 ACCEPTANCE TESTING

Pressure pipelines shall be pressure tested to 1.38 MPa (200 psi). Testing shall be the responsibility of the Contractor. Testing shall be performed by an approved independent testing laboratory or by the Contractor subject to approval by the Contracting Officer. The test shall be witnessed by the Contracting Officer. Gravity drain double contained piping shall be tested as follows:

- Carrier Piping to 207 kPa (30 psi)
- Containment Piping to 103 kPa (15 psi)

3.5 DOUBLE CONTAINMENT PIPE

For installation of double containment piping see applicable section of Specification Section 02725 HDPE PIPE AND FLATSTOCK.

3.6 PIPE FIT-UP AT MANHOLES

Piping and fittings in manholes shall be installed and connected to a single length of pipe which penetrates the manhole prior to being connected to the remaining long run of pipe in between manholes. Contractor shall provide fabrication drawings showing all lengths of fittings, valves, and piping layout prior to installation of any piping materials.

3.7 CLEANUP

Upon completion of the installation of pipelines, all debris, wastewater, and surplus materials resulting from work shall be removed.

3.8 CONTRACTOR QUALITY CONTROL

The Contractor shall establish and maintain a quality control system to assure compliance with contract requirements and shall maintain records of his quality control for all operations including but not limited to the following:

(1) Inspection of material delivered to project site against approved material data.

(2) Storage and handling of materials.

(3) Installation to lines indicated.

(4) Finished appearance.

(5) Completion of required tests.

(6) Placement of piping in trench.

Copies in duplicate of these records and tests, as well as records of corrective action taken when results are unsatisfactory, shall be furnished to the Contracting Officer within 1 working day of the inspection or test.

PART 4 SUBMITTAL SUMMARY

4.1 SUMMARY OF SUBMITTALS

Submittals to be furnished by the Contractor shall include the following:

Paragraph	Item	SD
02731-1.2	Installation Instructions	06
02731-3.4	Hydrostatic Test	09
02731-3.6	Fabrication Drawings	04

Code for Type of Submittal (SD)

01	-	Data
04	-	Drawings
06	-	Instructions
07	-	Schedules
08	-	Statements
09	-	Reports
13	-	Certificates
14	-	Samples
18	-	Records
19	-	O & M Manuals

- END OF SECTION

* * * * *

This page is intentionally blank.

TECHNICAL SPECIFICATION
FOR
STRUCTURAL CONCRETE FORMWORK
SECTION 03100

ENVIRONMENTAL RESTORATION DISPOSAL FACILITY (ERDF)
CELLS 3 & 4 CONSTRUCTION

REV	DATE	REASON FOR REVISION	ORIGINATOR	CHECKER	GROUP LEADER	TASK DESIGN LEAD	PROJECT ENGINEER
C	01/20/98	100% Design Review	DH	LHA			
B	11/21/97	60% Design Review	DH	LHA			

	RICHLAND ENVIRONMENTAL RESTORATION PROJECT	JOB NO. 22192
		SPECIFICATION NO. 0600X-SP-C0051
		SHEET 1 of 5

SECTION 03100

STRUCTURAL CONCRETE FORMWORK

PART 1 GENERAL

1.1 REFERENCES

The publications listed below form a part of this specification to the extent referenced. The publications are referred to in the text by basic designation only.

AMERICAN CONCRETE INSTITUTE (ACI)

ACI 347R	(1988) Guide to Formwork for Concrete

AMERICAN HARDBOARD ASSOCIATION (AHA)

AHA A135.4	(1982; R 1988) Basic Hardboard

DEPARTMENT OF COMMERCE (DOC)

DOC PS 1	(1983) Construction and Industrial Plywood

1.2 DESIGN

Formwork shall be designed in accordance with methodology of ACI 347R for anticipated loads, lateral pressures, and stresses. Forms shall be capable of producing a surface which meets the requirements of the class of finish specified in Section 03300 CONCRETE FOR BUILDING CONSTRUCTION. Forms shall be capable of withstanding the pressures resulting from placement and vibration of concrete.

1.3 STORAGE AND HANDLING

Fiber voids shall be stored above ground level in a dry location. Fiber voids shall be kept dry until installed and overlaid with concrete.

PART 2 PRODUCTS

2.1 FORM MATERIALS

2.1.1 Forms For Class A and Class B Finish

Forms for Class A and Class B finished surfaces shall be plywood panels conforming to DOC PS 1, Grade B-B concrete form panels, Class I or II. Other form materials or liners may be used provided the smoothness and appearance of concrete produced will be equivalent to that produced by the plywood concrete form panels. Forms for round columns shall be the prefabricated seamless type.

2.1.2 Forms For Class C Finish

Forms for Class C finished surfaces shall be shiplap lumber; plywood conforming to DOC PS 1, Grade B-B concrete form panels, Class I or II; tempered concrete form hardboard conforming to AHA A135.4; other approved concrete form material; or steel, except that steel lining on wood sheathing shall not be used.

2.1.3 Form Ties

Form ties shall be factory-fabricated metal ties, shall be of the removable or internal disconnecting or snap-off type, and shall be of a design that will not permit form deflection and will not spall concrete upon removal. Solid backing shall be provided for each tie. Except where removable tie rods are used, ties shall not leave holes in the concrete surface less than 6 mm (1/4 inch) nor more than 25 mm (1 inch) deep and not more than 25 mm (1 inch) in diameter. Removable tie rods shall be not more than 38 mm (1-1/2) inches in diameter.

2.1.4 Form Releasing Agents

Form releasing agents shall be commercial formulations that will not bond with, stain or adversely affect concrete surfaces. Agents shall not impair subsequent treatment of concrete surfaces depending upon bond or adhesion nor impede the wetting of surfaces to be cured with water or curing compounds.

PART 3 EXECUTION

3.1 INSTALLATION

3.1.1 Formwork

Forms shall be mortar tight, properly aligned and adequately supported to produce concrete surfaces meeting the surface requirements specified in Section 03300 CONCRETE FOR BUILDING CONSTRUCTION and conforming to construction tolerance given in TABLE 1. Where concrete surfaces are to have a Class A or Class B finish, joints in form panels shall be arranged as approved. Where forms for continuous surfaces are placed in successive units, care shall be taken to fit the forms over the completed surface so as to obtain accurate alignment of the surface and to prevent leakage of mortar. Forms shall not be reused if there is any evidence of surface wear and tear or defects which would impair the quality of the surface. Surfaces of forms to be reused shall be cleaned of mortar from previous concreting and of all other foreign material before reuse. Form ties that are to be completely withdrawn shall be coated with a nonstaining bond breaker.

3.2 CHAMFERING

Except as otherwise shown, external corners that will be exposed shall be chamfered, beveled, or rounded by moldings placed in the forms.

3.3 COATING

Forms for Class A and Class B finished surfaces shall be coated with a form releasing agent before the form or reinforcement is placed in final position. The coating shall be used as recommended in the manufacturer's printed or written instructions. Forms for Class C and D finished surfaces may be wet

with water in lieu of coating immediately before placing concrete, except that in cold weather with probable freezing temperatures coating shall be mandatory. Surplus coating on form surfaces and coating on reinforcing steel and construction joints shall be removed before placing concrete.

3.4 REMOVAL OF FORMS

Forms shall be removed in a manner that will prevent injury to the concrete and ensure the complete safety of the structure. Formwork for columns, walls, side of beams and other parts not supporting the weight of concrete may be removed when the concrete has attained sufficient strength to resist damage from the removal operation but not before at least 24 hours has elapsed since concrete placement. Supporting forms and shores shall not be removed from beams, floors and walls until the structural units are strong enough to carry their own weight and any other construction or natural loads. In no case will supporting forms or shores be removed before the concrete strength has reached 70 percent of design strengths as determined by field cured cylinders or other approved methods. This strength shall be demonstrated by job-cured test specimens, and by a structural analysis considering the proposed loads in relation to these test strengths and the strength of forming and shoring system. The job-cured test specimens for form removal purposes shall be provided in numbers as directed and shall be in addition to those required for concrete quality control. The specimens shall be removed from molds at the age of 24 hours and shall receive, insofar as possible, the same curing and protection as the structures they represent.

TABLE 1
TOLERANCES FOR FORMED SURFACES

1. Variations from the plumb:		
a. In the lines and surfaces of columns piers, walls and in arises	In any 3 m (10 ft) of length Maximum for entire length	6 mm (1/4 in) 25 mm (1 in)
b. For exposed corner columns, control-joint grooves, and other conspicuous lines	In any 6 m (20 ft) of length Maximum for entire length	6 mm (1/4 in) 13 mm (1/2 in)
2. Variation of the linear building lines from established position in plan	In any 6 m (20 ft) Maximum	13 mm (1/2 in) 25 mm (1 in)
3. Variation of distance between walls, columns, partitions	6 mm (1/4 in) per 3 m (10 ft) of distance, but not more than 13 mm (1/2 in)in any one bay, and not more than 25 mm (1 in) total variation	
4. Variation in the sizes and locations of sleeves, floor openings, and wall opening	Minus Plus	6 mm (1/4 in) 13 mm (1/2 in)
5. Variation in cross-sectional dimensions of columns and beams and in the thickness of slabs and walls	Minus Plus	6 mm (1/4 in) 13 mm (1/2 in)

TABLE 1
TOLERANCES FOR FORMED SURFACES (CONTINUED)

6. Footings:

a.	Variation of dimensions in plan	Minus	13 mm (1/2 in)
		Plus	50 mm (2 in)
		when formed or plus 75 mm (3 in) when placed against unformed excavation	
b.	Misplacement of eccentricity	2 percent of the footing width in the direction of misplacement, but not more than	50 mm (2 in)
c.	Reduction in thickness	Minus	5 percent of specified thickness

3.5 CONTRACTOR QUALITY CONTROL

The Contractor shall establish and maintain a quality control system to assure compliance with contract requirements and shall maintain records of his quality control for all operations including but not limited to the following:

(1) Inspection of forms for adequate bracing.

(2) Check dimensions, and elevations for conformance to contract documents.

(3) Periodic inspection of condition of forms.

Copies in duplicate of these records and tests, as well as records of corrective action taken when results are unsatisfactory, shall be furnished to the Contracting Officer within 1 working day of the inspection or test.

PART 4 SUBMITTAL SUMMARY (Not Applicable)

- END OF SECTION -

* * * * *

TECHNICAL SPECIFICATION
FOR
CONCRETE REINFORCEMENT
SECTION 03200

ENVIRONMENTAL RESTORATION DISPOSAL FACILITY (ERDF)
CELLS 3 & 4 CONSTRUCTION

REV	DATE	REASON FOR REVISION	ORIGINATOR	CHECKER	GROUP LEADER	TASK DESIGN LEAD	PROJECT ENGINEER
C	01/20/98	100% Design Review	DH	LHA			
B	11/21/97	60% Design Review	DH	LHA			

	RICHLAND ENVIRONMENTAL RESTORATION PROJECT	JOB NO. 22192
		SPECIFICATION NO. 0600X-SP-C0052
		SHEET 1 of 5

This page is intentionally blank.

SECTION 03200

CONCRETE REINFORCEMENT

PART 1 GENERAL

1.1 REFERENCES

The publications listed below form a part of this specification to the extent referenced. The publications are referred to in the text by basic designation only.

AMERICAN CONCRETE INSTITUTE (ACI)

ACI 318/318R	(1989; Rev 1992; Errata) Building Code Requirements for Reinforced Concrete

AMERICAN SOCIETY FOR TESTING AND MATERIALS (ASTM)

ASTM A 615	(1992b) Deformed and Plain Billet-Steel Bars for Concrete Reinforcement
ASTM A 675	(1990a) Steel Bars, Carbon, Hot-Wrought, Special Quality, Mechanical Properties

CONCRETE REINFORCING STEEL INSTITUTE (CRSI)

CRSI MSP-1	(1990) Manual of Standard Practice

1.2 SUBMITTALS

The following shall be submitted in accordance with Exhibit I.

SD-04 Drawings

Detail drawings showing reinforcing steel schedules, sizes, grades, and splicing and bending details. Drawings shall show support details including types, sizes and spacing.

1.3 DELIVERY AND STORAGE

Reinforcement and accessories shall be stored off the ground on platforms. skids, or other supports.

PART 2 PRODUCTS

2.1 DOWELS

Dowels shall conform to ASTM A 615, Grade 60.

2.2 REINFORCING STEEL

Reinforcing steel shall be deformed bars conforming to ASTM A 615 grade 60 with sizes as indicated.

2.3 WIRE TIES

Wire ties shall be 16 gauge or heavier black annealed steel wire.

2.4 SUPPORTS

Bar supports for formed surfaces shall be designed and fabricated in accordance with CRSI MSP-1 and shall be steel or precast concrete blocks. Precast concrete blocks shall have wire ties and shall be not less than 75 by 75 mm (3 x 3 inches) inches square when supporting reinforcement on ground. Precast concrete block shall have compressive strength equal to that of the surrounding concrete. Where concrete formed surfaces will be exposed to weather or where surfaces are to be painted, steel supports within 13 mm (1/2 inch) of concrete surface shall be galvanized, plastic protected or of stainless steel. Concrete supports used in concrete exposed to view shall have the same color and texture as the finish surface. For slabs on grade, supports shall be precast concrete blocks, plastic coated steel fabricated with bearing plates, or specifically designed wire-fabric supports fabricated of plastic.

PART 3 EXECUTION

3.1 REINFORCEMENT

Reinforcement shall be fabricated to shapes and dimensions shown and shall conform to the requirements of ACI 318/318R. Reinforcement shall be cold bent unless otherwise authorized. Bending may be accomplished in the field or at the mill. Bars shall not be bent after embedment in concrete. Safety caps shall be placed on all exposed ends of vertical concrete reinforcement bars that pose a danger to life safety. Wire tie ends shall face away from the forms.

3.1.1 Placement

Reinforcement shall be free from loose rust and scale, dirt, oil, or other deleterious coating that could reduce bond with the concrete. Reinforcement shall be placed in accordance with ACI 318/318R at locations shown plus or minus one bar diameter. Reinforcement shall not be continuous through expansion joints and shall be as indicated through construction or contraction joints. Concrete coverage shall be as indicated or as required by ACI 318/318R. If bars are moved more than 50 mm (2 inches) to avoid interferences with other reinforcement, conduits, or embedded items, additional reinforcement shall be added.

3.1.2 Splicing

Splices of reinforcement shall conform to ACI 318/318R and shall be made only as required or indicated. Splicing shall be by lapping or by mechanical or welded butt connection; except that lap splices shall not be used for bars larger than No. 11 unless otherwise indicated. Lapped bars shall be placed in contact and securely tied or spaced transversely apart to permit the embedment of the entire surface of each bar in concrete. Lapped bars shall not be spaced farther apart than one-fifth the required length of lap or 150 mm (6 inches). Mechanical butt splices shall be in accordance with the recommendation of the manufacturer of the mechanical splicing device. Butt splices shall develop 125 percent of the specified

minimum yield tensile strength of the spliced bars or of the smaller bar in transition splices. Bars shall be flame dried before butt splicing. Adequate jigs and clamps or other devices shall be provided to support, align, and hold the longitudinal centerline of the bars to be butt spliced in a straight line.

3.2 DOWELS

Dowels shall be installed in slabs on grade at locations indicated and at right angles to joint being doweled. Dowels shall be accurately positioned and aligned parallel to the finished concrete surface before concrete placement. Dowels shall be rigidly supported during concrete placement.

3.3 CONTRACTOR QUALITY CONTROL

The Contractor shall establish and maintain a quality control system to assure compliance with contract requirements and shall maintain records of his quality control for all operations including but not limited to the following:

(1) Check delivered material against approved shop drawings

(2) Inspection of location and spacing of bars

Copies in duplicate of these records and tests, as well as records of corrective action taken when results are unsatisfactory, shall be furnished to the Contracting Officer within 1 working day of the inspection or test.

PART 4 SUBMITTAL SUMMARY

4.1 SUMMARY OF SUBMITTALS

Submittals to be furnished by the Contractor shall include the following:

Paragraph	Item	SD
03200-3.1	Reinforcing Steel	04

Code for Type of Submittal (SD)

01 - Data
04 - Drawings
06 - Instructions
07 - Schedules
08 - Statements
09 - Reports
13 - Certificates
14 - Samples
18 - Records
19 - O & M Manuals

- END OF SECTION -

* * * * *

TECHNICAL SPECIFICATION
FOR
CONCRETE FOR BUILDING CONSTRUCTION
SECTION 03300

ENVIRONMENTAL RESTORATION DISPOSAL FACILITY (ERDF)
CELLS 3 & 4 CONSTRUCTION

REV	DATE	REASON FOR REVISION	ORIGINATOR	CHECKER	GROUP LEADER	TASK DESIGN LEAD	PROJECT ENGINEER
C	01/20/98	100% Design Review	DH	LHA			
B	11/21/97	60% Design Review	DH	LHA			

	RICHLAND ENVIRONMENTAL RESTORATION PROJECT	JOB NO. 22192
		SPECIFICATION NO. 0600X-SP-C0054
		SHEET 1 of 18

SECTION 03300

CONCRETE FOR BUILDING CONSTRUCTION

PART 1 GENERAL

1.1 REFERENCES

The publications listed below form a part of this specification to the extent referenced. The publications are referred to in the text by basic designation only.

AMERICAN CONCRETE INSTITUTE (ACI)

ACI 117	(1990; Errata) Standard Tolerances for Concrete Construction and Materials
ACI 211.1	(1991) Standard Practice for Selecting Proportions for Normal, Heavyweight, and Mass Concrete
ACI 301	(1989) Structural Concrete for Buildings
ACI 304	(1989) Heavyweight Concrete; Measuring, Mixing, Transporting and Placing
ACI 305R	(1991) Hot Weather Concreting
ACI 306R	(1988) Cold Weather Concreting
ACI 318	(1995) Building Code Requirements for Reinforced Concrete

AMERICAN SOCIETY FOR TESTING AND MATERIALS (ASTM)

ASTM C 31	(1991) Making and Curing Concrete Test Specimens in the Field
ASTM C 33	(1990) Concrete Aggregates
ASTM C 39	(1986) Compressive Strength of Cylindrical Concrete Specimens
ASTM C 42	(1990) Obtaining and Testing Drilled Cores and Sawed Beams of Concrete
ASTM C 78	(1984) Flexural Strength of Concrete (Using Simple Beam With Third-Point Loading)
ASTM C 94	(1992) Ready-Mixed Concrete

ASTM C 109	(1992) Compressive Strength of Hydraulic Cement Mortars (Using 2-in. or 50-mm Cube Specimens)
ASTM C 143	(1990a) Slump of Hydraulic Cement Concrete
ASTM C 150	(1992) Portland Cement
ASTM C 171	(1992) Sheet Materials for Curing Concrete
ASTM C 172	(1990) Sampling Freshly Mixed Concrete
ASTM C 173	(1978) Air Content of Freshly Mixed Concrete by the Volumetric Method
ASTM C 192	(1990a) Making and Curing Concrete Test Specimens in the Laboratory
ASTM C 231	(1991b) Air Content of Freshly Mixed Concrete by the Pressure Method
ASTM C 260	(1986) Air-Entraining Admixtures for Concrete
ASTM C 309	(1991) Liquid Membrane-Forming Compounds for Curing Concrete
ASTM C 494	(1992) Chemical Admixtures for Concrete
ASTM C 578	(1992) Rigid, Preformed, Cellular Polystyrene Thermal Insulation
ASTM C 591	(1985) Unfaced Preformed Rigid Cellular Polyurethane Thermal Insulation
ASTM C 595	(1992a) Blended Hydraulic Cements
ASTM C 597	(1983; R 1991) Pulse Velocity Through Concrete
ASTM C 618	(1992a) Fly Ash and Raw or Calcined Natural Pozzolan for Use as a Mineral Admixture in Portland Cement Concrete
ASTM C 803	(1990) Penetration Resistance of Hardened Concrete
ASTM C 805	(1985) Rebound Number of Hardened Concrete
ASTM C 1017	(1992) Chemical Admixtures for Use in Producing Flowing Concrete
ASTM C 1107	(1991a) Packaged Dry, Hydraulic-Cement Grout (Nonshrink)
ASTM D 98	(1987) Calcium Chloride
ASTM E 96	(1993) Water Vapor Transmission of Materials

FEDERAL SPECIFICATIONS (FS)

FS CCC-C-467	(Rev C) Cloth, Burlap, Jute (or Kenaf)

NATIONAL READY-MIXED CONCRETE ASSOCIATION (NRMCA)

NRMCA CPMB 100	(1990) Concrete Plant Standards
NRMCA QC 3	(1984) Quality Control Manual: Section 3, Plant Certifications Checklist: Certification of Ready-Mixed Concrete Production Facilities
NRMCA TMMB	(1989) Truck Mixer, and Agitator Standards

1.2 SUBMITTALS

The following shall be submitted in accordance with Exhibit I.

SD-08 Statements

The results of trial mix along with a statement giving the maximum nominal coarse aggregate size and the proportions of all ingredients that will be used in the manufacture of each strength of concrete, at least 14 days prior to commencing concrete placing operations. Aggregate weights shall be based on the saturated surface dry condition. The statement shall be accompanied by test results from an independent commercial testing laboratory, attesting that the proportions selected will produce concrete of the qualities indicated. No substitutions shall be made in the materials used in the work without additional tests to show that the quality of the concrete is satisfactory.

SD-09 Reports

Copies of test reports.

1.3 GENERAL REQUIREMENTS

Tolerances for concrete construction and materials shall be in accordance with ACI 117.

1.3.1 Strength Requirements

Structural concrete for all work shall have a 28-day compressive strength of 27.59 MPa (4000 psi). Concrete made with high-early strength cement shall have a 7-day strength equal to the specified 28-day strength for concrete made with Type I or II portland cement.

1.3.2 Air Entrainment

Concrete in all structures shall contain from 5 to 7 percent total air. Miscellaneous concrete may, at the option of the Contractor, be air entrained to produce concrete with 3 to 5 percent total air.

1.3.3 Special Properties

Concrete may contain other admixtures, such as water reducers, superplasticizers, or set retarding agents to provide special properties to the concrete, if approved.

1.3.4 Water Cement Ratio

The maximum water cement ratio shall be 0.45.

1.3.5 Slump

Slump shall be within the following limits:

Structural Element	Slump in millimeters (inch) Minimum	Maximum
Walls, columns and beams 100 (4 in)	50 (2 in)	100 (4 in)
Foundation walls, substructure walls, footings, pavement, and slabs	50 (2 in)	100 (4 in)
Any structural concrete approved for placement by pumping	None	150 (6 in)

Where use of superplasticizers are approved to produce flowing concrete these slump requirements do not apply.

1.3.6 Floor Hardener (Surface Applied)

Floor hardener shall be applied to the Loading/unloading slab.

1.4 PROPORTIONS OF MIX

1.4.1 Mixture Proportioning, Normal Weight Concrete

Trial batches shall contain materials proposed to be used in the project. Trial mixtures having proportions, consistencies and air content suitable for the work shall be made based on methodology described in ACI 211.1, using at least three different water-cement ratios. Trial mixes shall be proportioned to produce concrete strengths specified. In the case where ground iron blast-furnace slag is used, the weight of the slag will be substituted in the equations for the term P which is used to denote the weight of pozzolan. Trial mixtures shall be designed for maximum permitted slump and air content. The temperature of concrete in each trial batch shall be reported. For each water-cement ratio at least three test cylinders or beams for each test age shall be made and cured in accordance with ASTM C 192. They shall be tested at 7 and 28 days in accordance with ASTM C 39 or ASTM C 78. From these test results a curve shall be plotted showing the relationship between water-cement ratio and strength. For each strength of concrete the maximum allowable water-cement ratio shall be that shown by these curves to produce an average strength as specified in paragraph AVERAGE STRENGTH.

1.4.2 Average Strength

In meeting the strength requirements specified, the selected mixture proportion shall produce an average compressive strength exceeding the specified strength by the amount indicated below. Where a concrete production facility has test records, a standard deviation shall be established. Test records from which a standard deviation is calculated shall represent materials, quality control procedures, and conditions similar to those expected; shall represent concrete produced to meet a specified strength or strengths within 6.9 MPa (1000 psi) of that specified for proposed work; and shall consist of at least 30

consecutive tests. A strength test shall be the average of the strengths of two cylinders made from the same sample of concrete and tested at 28 days or at other test age designated for determination of the specified strength.

1.4.2.1 Test Records Exceeding 29

Required average compressive strength used as the basis for selection of concrete proportions shall be the larger of the specified strength plus the standard deviation multiplied by 1.34 or the specified strength plus the standard deviation multiplied by 2.33 minus 500.

1.4.2.2 Test Records Less Than 29

Where a concrete production facility does not have test records meeting the above requirements but does have a record based on 15 to 29 consecutive tests, a standard deviation may be established as the product of the calculated standard deviation and a modification factor from the following table:

No. of Tests (1)	Modification Factor for Standard Deviation
less than 15	See Note
15	1.16
20	1.08
25	1.03
30 or more	1.00

(1) Interpolate for intermediate numbers of tests.

When a concrete production facility does not have field strength test records for calculation of standard deviation or the number of tests is less than 15, the required average strength shall be:

a. The specified strength plus 8.3 MPa (1200 psi) for specified strengths of 20.7 to 34.5 MPa (3000 to 5000 psi).

1.5 STORAGE OF MATERIALS

Cement and pozzolan shall be stored in weathertight buildings, bins, or silos which will exclude moisture and contaminants. Aggregate stockpiles shall be arranged and used in a manner to avoid excessive segregation and to prevent contamination with other materials or with other sizes of aggregates. Reinforcing bars and accessories shall be stored above the ground on platforms, skids or other supports. Other materials shall be stored in such a manner as to avoid contamination and deterioration. Admixtures which have been in storage at the project site for longer than 6 months or which have been subjected to freezing shall not be used unless retested and proven to meet the specified requirements.

PART 2 PRODUCTS

2.1 ADMIXTURES

Admixtures shall conform to the following:

2.1.1 Accelerating Admixture

ASTM C 494, Type C or E; or calcium chloride conforming to ASTM D 98.

2.1.2 Air-Entraining Admixture

ASTM C 260.

2.1.3 Flowing Concrete Admixture (Superplasticizers)

ASTM C 1017, Type 1 or 2.

2.1.4 Water-Reducing or Retarding Admixture

ASTM C 494, Type A, B, D, F, or G.

2.2 CEMENTITIOUS MATERIALS

Cementitious materials shall each be of one type and from one source when used in concrete which will have surfaces exposed in the finished structure. Cementitious materials shall conform to one of the following:

2.2.1 Cement

ASTM C 150, Type I or II.

2.2.2 Portland-Pozzolan Cement

ASTM C 595, Type IP.

2.2.3 Pozzolan

ASTM C 618, Class F. Pozzolan may be blended with Type I or II portland cement. When a pozzolan is used in a flexural strength concrete mix design, the solid volume of pozzolan when combined with portland cement shall not exceed 25 percent of the solid volume of portland cement plus pozzolan. Only one class of pozzolan, from a single source, shall be used.

2.3 AGGREGATES

Aggregates shall conform to the following:

2.3.1 Normal Weight Aggregate

ASTM C 33. Grading requirement for coarse aggregate shall conform to size number 57.

2.4 CURING MATERIALS

2.4.1 Burlap

FS CCC-C-467.

2.4.2 Impervious Sheets

ASTM C 171, type optional, except that polyethylene film, if used, shall be white opaque.

2.4.3 Membrane-Forming Compounds

ASTM C 309, Type 1-D, Class A or B.

2.5 EMBEDDED ITEMS

Embedded items shall be of the size and type indicated on drawings or as needed for the application. Inserts for shelf angles and bolt hangers shall be of malleable iron or cast or wrought steel.

2.6 NONSHRINK GROUT

Nonshrink grout shall conform to ASTM C 1107 Grade C and shall be a formulation suitable for the application.

2.7 FLOOR HARDENER

Floor hardener shall be a colorless aqueous solution containing zinc silicofluoride, magnesium silicofluoride, or sodium silicofluorides. These silicofluorides can be used individually or in combination. Proprietary hardeners may be used if approved by the contracting officer.

2.8 VAPOR BARRIER

Vapor barrier shall be polyethylene sheeting with a minimum thickness of 0.152 mm (6 mils) or other equivalent material having a vapor permeance rating not exceeding 28.6 nanograms per Pascal per second per square meter (0.5 perms) as determined in accordance with ASTM E 96.

2.9 WATER

Water shall be potable, except that nonpotable water may be used if it produces mortar cubes having 7- and 28-day strengths at least 90 percent of the strength of similar specimens made with water from a municipal supply. The strength comparison shall be made on mortars, identical except for mixing water, prepared and tested in accordance with ASTM C 109. Water for curing shall not contain any substance injurious to concrete, or which causes staining.

PART 3 EXECUTION

3.1 PREPARATION OF SURFACES

Surfaces to receive concrete shall be clean and free from frost, ice, mud, and water. Conduit and other similar items shall be in place and clean of any deleterious substance.

3.1.1 Foundations

Earthwork shall be as specified in Section 02210, EARTHWORK. Flowing water shall be diverted without washing over freshly deposited concrete. Semiporous subgrades for foundations and footings shall be damp when concrete is placed. Pervious subgrades shall be sealed by blending impervious material with the top 150 mm (6 inches) of the in-place pervious material or by covering with an impervious membrane.

3.1.2 Vapor Barrier

Unless otherwise indicated, subgrades for slabs in buildings shall be covered with a vapor barrier. Vapor barrier edges shall be lapped at least 100 mm (4 inches) and ends shall be lapped not less than 150 mm (6 inches). Patches and lapped joints shall be sealed with pressure-sensitive adhesive or tape not less than 50 mm (2 inches) wide and compatible with the membrane.

3.1.3 Preparation of Previously Placed Concrete

Concrete surfaces to which other concrete is to be bonded shall be roughened in an approved manner that will expose sound aggregate uniformly without damaging the concrete. Laitance and loose particles shall be removed. Surfaces shall be moist but without free water when concrete is placed.

3.2 INSTALLATION OF EMBEDDED ITEMS

Embedded items shall be free from oil, loose scale or rust, and paint. Embedded items shall be installed at the locations indicated on drawings and required to serve the intended purpose. Voids in sleeves, slots and inserts shall be filled with readily removable material to prevent the entry of concrete.

3.3 BATCHING, MIXING AND TRANSPORTING CONCRETE

Ready-mixed concrete shall be batched, mixed and transported in accordance with ASTM C 94, except as otherwise specified. Truck mixers, agitators, and non-agitating units shall comply with NRMCA TMMB. Ready-mix plant equipment and facilities shall be certified in accordance with NRMCA QC 3. Site-mixed concrete shall be mixed in accordance with ACI 301. On-site plant shall conform to the NRMCA CPMB 100.

3.3.1 Admixtures

Admixtures shall be batched within an accuracy of 3 percent. Where two or more admixtures are used in the same batch, they shall be batched separately and must be compatible. Retarding admixture shall be added within one minute after addition of water is complete or in the first quarter of the required mixing time, whichever is first. Superplasticizing admixtures shall be added as recommended by manufacturer. Concrete that shows evidence of total collapse or segregation caused by the use of admixture shall be removed from the site.

3.3.2 Control of Mixing Water

No water from the truck system or elsewhere shall be added after the initial introduction of mixing water for the batch except when on arrival at the jobsite, the slump of the concrete is less than that specified. Water added to bring the slump within the specified range shall not change the total water in the concrete to a point that the approved water-cement ratio is exceeded. The drum shall be turned an

additional 30 revolutions, or more, if necessary, until the added water is uniformly mixed into the concrete. Water shall not be added to the batch at any later time.

3.4 SAMPLING AND TESTING

Sampling and Testing is the responsibility of the Contractor and shall be performed by an approved testing agency.

3.4.1 Aggregates

Aggregates for normal weight concrete shall be sampled and tested in accordance with ASTM C 33. Gradation tests shall be performed on the first day and every other day thereafter during concrete construction.

3.4.2 Sampling of Concrete

Samples of concrete for air, slump, unit weight, and strength tests shall be taken in accordance with ASTM C 172.

3.4.2.1 Air Content

Test for air content shall be performed in accordance with ASTM C 173 or ASTM C 231. A minimum of 1 test per day shall be conducted.

3.4.2.2 Slump

At least 2 slump tests shall be made on randomly selected batches of each mixture of concrete during each day's concrete placement. Tests shall be performed in accordance with ASTM C 143.

3.4.3 Evaluation and Acceptance of Concrete

3.4.3.1 Frequency of Testing

Samples for strength tests of each class of concrete placed each day shall be taken not less than once a day, nor less than once for each 100 cubic meters (150 cubic yards) of concrete, nor less than once for each 450 square meters (5000 square feet) of surface area for slabs or walls. If this sampling frequency results in less than 5 strength tests for a given class of concrete, tests shall be made from at least 5 randomly selected trucks or from each truck if fewer than 5 truck loads are used. Field cured specimens for determining form removal time or when a structure may be put in service shall be made in numbers directed to check the adequacy of curing and protection of concrete in the structure. The specimens shall be removed from the molds at the age of 24 hours and shall be cured and protected, insofar as practicable, in the same manner as that given to the portion of the structure the samples represent.

3.4.3.2 Testing Procedures

Cylinders and beams for acceptance tests shall be molded and cured in accordance with ASTM C 31. Cylinders shall be tested in accordance with ASTM C 39 and beams shall be tested in accordance with ASTM C 78. A strength test shall be the average of the strengths of two cylinders or beams made from the same sample of concrete and tested at 28 days or at another specified test age.

3.4.3.3 Evaluation of Results

Concrete specified on the basis of compressive strength will be considered satisfactory if the averages of all sets of three consecutive strength test results equal or exceed the specified strength and no individual strength test result falls below the required strength by more than 3.4 MPa (500 pounds per square inch).

3.4.4 Investigation of Low-Strength Test Results

When any strength test of standard-cured test cylinder falls below the specified strength requirement by more than 3.4 MPa (500 pounds per square inch), or if tests of field-cured cylinders indicate deficiencies in protection and curing, steps shall be taken to assure that load-carrying capacity of the structure is not jeopardized. Nondestructive testing in accordance with ASTM C 597, ASTM C 803 or ASTM C 805 may be permitted by the Contracting Officer to determine the relative strengths at various locations in the structure as an aid in evaluating concrete strength in place or for selecting areas to be cored. Such tests, unless properly calibrated and correlated with other test data, shall not be used as a basis for acceptance or rejection. When strength of concrete in place is considered potentially deficient, cores shall be obtained and tested in accordance with ASTM C 42. At least three representative cores shall be taken from each member or area of concrete in place that is considered potentially deficient. The location of cores shall be determined by the Contracting Officer to least impair the strength of the structure. If the concrete in the structure will be dry under service conditions, the cores shall be air dried [temperature 16 to 27 degrees C, (60 to 80 degrees F), relative humidity less than 60 percent] for seven days before testing and shall be tested dry. If the concrete in the structure will be more than superficially wet under service conditions, the cores shall be tested after moisture conditioning in accordance with ASTM C 42. Concrete in the area represented by the core testing will be considered adequate if the average strength of the cores is equal to or at least 85 percent of the specified strength requirement and if no single core is less than 75 percent of the specified strength requirement. If the core tests are inconclusive or impractical to obtain, or if structural analysis does not confirm the safety of the structure, load tests may be directed by the Contracting Officer in accordance with the requirements of ACI 318. Concrete work evaluated by structural analysis or by results of a load test and found deficient shall be corrected in a manner satisfactory to the Contracting Officer. All investigations, testing, load tests, and correction of deficiencies shall be performed, and approved by the Contracting Officer, at the expense of the Contractor.

3.5 CONVEYING CONCRETE

Concrete shall be conveyed from mixer to forms as rapidly as possible and within the time interval specified in paragraph CONCRETE PLACEMENT by methods which will prevent segregation or loss of ingredients.

3.5.1 Chutes

When concrete can be placed directly from a truck mixer or other transporting equipment, chutes attached to this equipment may be used. Separate chutes will not be permitted except when specifically approved.

3.5.2 Buckets

Bucket design shall be such that concrete of the required slump can be readily discharged. Bucket gates shall be essentially grout tight when closed. The bucket shall provide means for positive regulations of the amount and rate of deposit of concrete in each dumping position.

3.5.3 Belt Conveyors

Belt conveyors may be used when approved. Belt conveyors shall be designed for conveying concrete and shall be operated to assure a uniform flow of concrete to the final place of deposit without segregation or loss of mortar. Conveyors shall be provided with positive means for preventing segregation of the concrete at transfer points and point of placement.

3.5.4 Pumps

Concrete may be conveyed by positive displacement pumps when approved. Pump shall be the piston or squeeze pressure type. Pipeline shall be steel pipe or heavy duty flexible hose. Inside diameter of the pipe shall be at least three times the maximum size of the coarse aggregate. Distance to be pumped shall not exceed the limits recommended by the pump manufacturer. Concrete shall be supplied to the pump continuously. When pumping is completed, the concrete remaining in the pipeline shall be ejected without contaminating the concrete in place. After each use, the equipment shall be thoroughly cleaned. Flushing water shall be wasted outside the forms.

3.6 CONCRETE PLACEMENT

Mixed concrete which is transported in truck mixers or agitators or concrete which is truck mixed, shall be discharged within 1-1/2 hours or before the drum has revolved 300 revolutions, whichever comes first after the introduction of the mixing water to the cement and aggregates or the introduction of the cement to the aggregates. These limitations may be waived by the Government if the concrete is of such slump after the 1-1/2 hour time or 300 revolution limit has been reached that it can be placed, without the addition of water to the batch. When the concrete temperature exceeds 29 degrees C, (85 degrees F), the time shall be reduced to 45 minutes. Concrete shall be placed within 15 minutes after it has been discharged from the truck.

3.6.1 Placing Operation

Concrete shall be handled from mixer to forms in a continuous manner until the approved unit of operation is completed. Adequate scaffolding, ramps and walkways shall be provided so that personnel and equipment are not supported by in-place reinforcement. Placing will not be permitted when the sun, heat, wind, or limitations of facilities furnished by the Contractor prevent proper consolidation, finishing and curing. Concrete shall be deposited as close as possible to its final position in the forms, and there shall be no vertical drop greater than 2.5 m (8 feet) except where suitable equipment is provided to prevent segregation and where specifically authorized. Depositing of the concrete shall be so regulated that it will be effectively consolidated in horizontal layers not more than 300 mm (12 inches thick), except that all slabs shall be placed in a single layer. Concrete to receive other construction shall be screeded to the proper level to avoid excessive shimming or grouting.

3.6.2 Consolidation

Immediately after placing, each layer of concrete shall be consolidated by internal vibrators, except for slabs 100 mm (4 inches) thick or less. The vibrators shall at all times be adequate in effectiveness and number to properly consolidate the concrete; a spare vibrator shall be kept at the jobsite during all concrete placing operations. The vibrators shall have a frequency of not less than 8000 vibrations per minute, and the head diameter and amplitude shall be appropriate for the concrete mixture being placed. Vibrators shall be inserted vertically at uniform spacing over the area of placement. The distance between insertions shall be approximately 1-1/2 times the radius of action of the vibrator so that the area being vibrated will overlap the adjacent just-vibrated area by a few inches. The vibrator shall penetrate rapidly to the bottom of the layer and at least 150 mm (6 inches) into the preceding layer if there is such.

Vibrator shall be held stationary until the concrete is consolidated and then withdrawn slowly. The use of form vibrators must be specifically approved. Vibrators shall not be used to transport concrete within the forms. Slabs 100 mm (4 inches) and less in thickness shall be consolidated by properly designed vibrating screeds or other approved technique.

3.6.3 Cold Weather Requirements

Special protection measures in accordance with ACI 306R, approved by the Contracting Officer, shall be used if freezing temperatures are anticipated before the expiration of the specified curing period. The ambient temperature of the air where concrete is to be placed and the temperature of surfaces to receive concrete shall be not less than 4 degrees C (40 degrees F). The temperature of the concrete when placed shall be not less than 10 degrees C (50 degrees F) nor more than 24 degrees C (75 degrees F). Heating of the mixing water or aggregates will be required to regulate the concrete placing temperature. Materials entering the mixer shall be free from ice, snow, or frozen lumps. Salt, chemicals or other materials shall not be incorporated in the concrete to prevent freezing. Upon written approval, calcium chloride or chemical admixture conforming to ASTM C 494 Type C or E may be used. The amount of calcium chloride shall not exceed 2 percent by weight of the cement, and it shall be batched in solution form. Calcium chloride shall not be used where concrete will be in contact with aluminum or zinc-coated items, or where sulfate resistant or prestressed concrete is specified.

3.6.4 Warm Weather Requirements

The temperature of the concrete placed during warm weather shall not exceed 29 degrees C (85 degrees F) except where an approved retarder is used. The mixing water and/or aggregates shall be cooled, if necessary, to maintain a satisfactory placing temperature. In no case shall the placing temperature exceed 35 degrees C (95 degrees F). Other placement operations shall be in accordance with ACI 305R.

3.7 CONSTRUCTION JOINTS

Construction joints shall be located as indicated on drawings or approved. Where concrete work is interrupted by weather, end of work shift or other similar type of delay, location and type of construction joint shall be subject to approval of the Contracting Officer. Unless otherwise indicated and except for slabs on grade, reinforcing steel shall extend through construction joints. Construction joints in slabs on grade shall be keyed or doweled as shown.

3.8 FINISHING CONCRETE

3.8.1 Formed Surfaces

3.8.1.1 Repair of Surface Defects

Surface defects shall be repaired within 24 hours after the removal of forms. Honeycombed and other defective areas shall be cut back to solid concrete or to a depth of not less than 25 mm (1 inch), whichever is greater. Edges shall be cut perpendicular to the surface of the concrete. The prepared areas shall be dampened and brush-coated with neat cement grout. The repair shall be made using mortar consisting of not more than 1 part cement to 2-1/2 parts sand. The mixed mortar shall be allowed to stand to stiffen (approximately 45 minutes), during which time the mortar shall be intermittently remixed without the addition of water. After the mortar has attained the stiffest consistency that will permit placing, the patching mix shall be thoroughly tamped into place by means approved by the Contracting Officer and finished slightly higher than the surrounding surface. For Class A and Class B

finished surfaces the cement used in the patching mortar shall be a blend of job cement and white cement proportioned to produce a finished repair surface matching, after curing, the color of adjacent surfaces. Holes left after the removal of form ties shall be cleaned and filled with patching mortar. Holes left by the removal of tie rods shall be reamed and filled by dry-packing. Repaired surfaces shall be cured as required for adjacent surfaces. The temperature of concrete, mortar patching material, and ambient air shall be above 10 degrees C (50 degrees F) while making repairs and during the curing period. Concrete with defects which affect the strength of the member or with excessive honeycombs will be rejected, or the defects shall be corrected as directed.

3.8.1.2 Class A Finish

Where a Class A finish is indicated, fins shall be removed. A mortar mix consisting of one part portland cement and two parts well-graded sand passing a 0.600 mm (No. 30 sieve), with water added to give the consistency of thick paint, shall be prepared. White cement shall be used to replace part of the job cement. After the surface has been thoroughly wetted and allowed to approach surface dryness, the mortar shall be vigorously applied to the area by clean burlap pads or by cork or wood-floating, to completely fill all surface voids. Excess grout shall be scraped off with a trowel. As soon as it can be accomplished without pulling the mortar from the voids, the area shall be rubbed with burlap pads until all visible grout film is removed. The rubbing pads shall have on their surfaces the same sand-cement mix specified above but without any mixing water. The finish of any area shall be completed in the same day, and the limits of a finished area shall be made at natural breaks in the surface. The surface shall be continuously moist cured for 48 hours. The temperature of the air adjacent to the surface shall be not less than 10 degrees C (50 degrees F) for 24 hours prior to, and 48 hours after, the application. In hot, dry weather the smooth finish shall be applied in shaded areas.

3.8.1.3 Class B Finish

Where a Class B finish is indicated, fins shall be removed. Concrete surface shall be smooth with a texture at least equal to that obtained through the use of Grade B-B plywood forms.

3.8.1.4 Class C Finish

Where a Class C finish is indicated, fins shall be removed. Concrete surfaces shall be relatively smooth with a texture imparted by the forms used.

3.8.2 Unformed Surfaces

In cold weather, the air temperature in areas where concrete is being finished shall not be less than 10 degrees C (50 degrees F). In hot windy weather when the rate of evaporation of surface moisture, as determined by methodology presented in ACI 305R, may reasonably be expected to exceed 1 kg per square meter per hour (0.2 pounds per square foot per hour); coverings, windbreaks, or fog sprays shall be provided as necessary to prevent premature setting and drying of the surface. The dusting of surfaces with dry materials or the addition of water during finishing will not be permitted. Finished surfaces shall be plane, with no deviation greater than 8 mm (5/16 inch) when tested with a 3.05 m (10-foot) straightedge. Floor tolerance measurements shall be made as soon as possible after finishing. When forms or shoring are used the measurements shall be made prior to their removal. Surfaces shall be pitched to drains.

3.8.2.1 Float Finish

Slabs to receive a steel trowel finish and slabs, where indicated, shall be given a float finish. Screeding shall be followed immediately by darbying or bull floating before bleeding water is present, to bring the surface to a true, even plane. After the concrete has stiffened to permit the operation and the water

sheen has disappeared, it shall be wood floated. Lightweight concrete or concrete that portrays stickiness shall be finished with a magnesium float in lieu of a wood float, and left free of ridges and other projections. Care shall be exercised not to increase the bleed water while finishing the loading/unloading slab.

3.8.2.2 Floor Hardener

Floor hardener shall be applied after the concrete has been air dried for 14 days. Three coats shall be applied, each the day after the preceding coat was applied. For the first application, 0.454 kg (one pound) of the silicofluoride shall be dissolved in 3.8 liters (one gallon) of water. For subsequent applications, the solution shall be 0.908 kg (two pounds) of silicofluoride to each 3.8 liters (gallon) of water. Floor should be mopped with clear water shortly after the preceding application has dried to remove encrusted salts. Proprietary hardeners shall be applied in accordance with the manufacturer's instructions. During application, area should be well ventilated. Precautions shall be taken when applying silicofluorides due to the toxicity of the salts. Any compound that contacts glass or aluminum should be immediately removed with clear water.

3.8.2.3 Finish Schedule

Concrete Surface	Finish Type
Vertical Exterior Exposed	Class A
Vertical Unexposed	Class C
Vertical Interior Exposed	Class B
Loading/Unloading Slab	Float
Crest Pad Building Slab	Float

3.9 CURING AND PROTECTION

3.9.1 General

All concrete shall be cured by an approved method for the period of time given below:

Concrete with Type III cement	3 days
Concrete with Type I, II, IP or IS cement	7 days
Concrete with Type I or Type II cement blended with pozzolan	7 days

Immediately after placement, concrete shall be protected from premature drying extremes in temperatures, rapid temperature change, mechanical injury and injury from rain and flowing water. Air and forms in contact with concrete shall be maintained at a temperature above 10 degrees C (50 degrees F) for the first 3 days and at a temperature above 0 degrees C (32 degrees F) for the remainder of the specified curing period. Exhaust fumes from combustion heating units shall be vented to the outside of the enclosure and heaters and ducts shall be placed and directed so as not to cause areas of overheating and drying of concrete surfaces or to create fire hazards. All materials and equipment needed for adequate curing and protection shall be available and at the site prior to placing concrete. No fire or excessive heat shall be permitted near or in direct contact with the concrete at any time. Curing shall be accomplished by any of the following methods, or combination thereof, as approved.

3.9.2 Moist Curing

Concrete to be moist-cured shall be maintained continuously wet for the entire curing period. If water or curing materials used stains or discolors concrete surfaces which are to be permanently exposed, the concrete surfaces shall be cleaned. When wooden forms are left in place during curing, they shall be kept wet at all times. If the forms are removed before the end of the curing period, curing shall be carried out as on unformed surfaces, using suitable materials. Horizontal surfaces shall be cured by ponding, by covering with a 50 mm (2-inch) minimum thickness of continuously saturated sand, or by covering with waterproof paper, polyethylene sheet, polyethylene-coated burlap or saturated burlap.

3.9.3 Membrane Curing

Membrane curing shall not be used on surfaces that are to receive any subsequent treatment depending on adhesion or bonding to the concrete; except a styrene acrylate or chlorinated rubber compound meeting ASTM C 309, Class B requirements may be used for surfaces which are to be painted or are to receive bituminous roofing or waterproofing, or floors that are to receive adhesive applications of resilient flooring. The curing compound selected shall be compatible with any subsequent paint, roofing, waterproofing or flooring specified. Membrane curing compound shall not be used on surfaces that are maintained at curing temperatures with free steam. Curing compound shall be applied to formed surfaces immediately after the forms are removed and prior to any patching or other surface treatment except the cleaning of loose sand, mortar, and debris from the surface. Surfaces shall be thoroughly moistened with water and the curing compound shall be applied to slab surfaces as soon as the bleeding water has disappeared, with the tops of joints being temporarily sealed to prevent entry of the compound and to prevent moisture loss during the curing period. Compound shall be applied in a one-coat continuous operation by mechanical spraying equipment, at a uniform coverage in accordance with the manufacturer's printed instructions. Concrete surfaces which have been subjected to rainfall within 3 hours after curing compound has been applied shall be re-sprayed by the method and at the coverage specified. On surfaces permanently exposed to view, the surface shall be shaded from direct rays of the sun for the duration of the curing period. Surfaces coated with curing compound shall be kept free of foot and vehicular traffic, and from other sources of abrasion and contamination during the curing period.

3.10 SETTING BASE PLATES AND BEARING PLATES

After being properly positioned, column base plates, bearing plates for beams and similar structural members, and machinery and equipment base plates shall be set to the proper line and elevation with damp-pack bedding mortar, except where nonshrink grout is indicated. The thickness of the mortar or grout shall be approximately 1/24 the width of the plate, but not less than 20 mm (3/4 inch). Concrete and metal surfaces in contact with grout shall be clean and free of oil and grease, and concrete surfaces in contact with grout shall be damp and free of laitance when grout is placed.

3.10.1 Damp-Pack Bedding Mortar

Damp-pack bedding mortar shall consist of 1 part cement and 2-1/2 parts fine aggregate having water content such that a mass of mortar tightly squeezed in the hand will retain its shape but will crumble when disturbed. The space between the top of the concrete and bottom of the bearing plate or base shall be packed with the bedding mortar by tamping or ramming with a bar or rod until it is completely filled.

3.10.2 Nonshrink Grout

Nonshrink grout shall be mixed and placed in accordance with material manufacturer's written recommendations. Forms of wood or other suitable material shall be used to retain the grout. The grout

shall be placed quickly and continuously, completely filling the space without segregation or bleeding of the mix.

3.10.3 Treatment of Exposed Surfaces

For metal-oxidizing nonshrink grout, exposed surfaces shall be cut back 25 mm (1 inch) and immediately covered with a parget coat of mortar consisting of 1 part portland cement and 2-1/2 parts fine aggregate by weight, with sufficient water to make a plastic mixture. The parge coat shall have a smooth finish. For other mortars or grouts, exposed surfaces shall be left untreated. Curing shall comply with paragraph CURING AND PROTECTION.

3.11 CONTRACTOR QUALITY CONTROL

The Contractor shall establish and maintain a quality control system to assure compliance with contract requirements and shall maintain records of his quality control for all operations including but not limited to the following:

(1) Concrete Cylinder Strength Tests.

(2) Test For Concrete Air Entrainment.

(3) Concrete Slump Tests.

Copies in duplicate of these records and tests, as well as records of corrective action taken when results are unsatisfactory, shall be furnished to the Contracting Officer within 1 working day of the inspection or test.

PART 4 SUBMITTAL SUMMARY

4.1 SUMMARY OF SUBMITTALS

Submittals to be furnished by the Contractor shall include the following:

Paragraph	Item	SD
03300-1.2,1.4	Concrete proportions, Strength	08
03300-3.4	Sampling and Testing	09

Code for Type of Submittal (SD)

01	-	Data
04	-	Drawings
06	-	Instructions
07	-	Schedules
08	-	Statements
09	-	Reports
13	-	Certificates
14	-	Samples
18	-	Records
19	-	O & M Manuals

- END OF SECTION -

* * * * *

This page is intentionally blank.

TECHNICAL SPECIFICATION
FOR
WELDING, STRUCTURAL
SECTION 05055

ENVIRONMENTAL RESTORATION DISPOSAL FACILITY (ERDF)
CELLS 3 & 4 CONSTRUCTION

REV	DATE	REASON FOR REVISION	ORIGINATOR	CHECKER	GROUP LEADER	TASK DESIGN LEAD	PROJECT ENGINEER
C	01/20/98	100% Design Review	DH	LHA			
B	11/21/97	60% Design Review	DH	LHA			

	RICHLAND ENVIRONMENTAL RESTORATION PROJECT	JOB NO. 22192
		SPECIFICATION NO. 0600X-SP-C0055
		SHEET 1 of 8

This page is intentionally blank.

SECTION 05055

WELDING, STRUCTURAL

PART 1 GENERAL

1.1 REFERENCES

The publications listed below form a part of this specification to the extent referenced. The publications are referred to in the text by basic designation only.

AMERICAN INSTITUTE OF STEEL CONSTRUCTION (AISC)

AISC S335	(1989) Specification for Structural Steel Buildings - Allowable Stress Design and Plastic Design

AMERICAN NATIONAL STANDARDS INSTITUTE (ANSI)

ANSI Z49.1	(1988) Safety in Welding and Cutting

AMERICAN SOCIETY FOR NONDESTRUCTIVE TESTING (ASNT)

ASNT-01	(1988) Recommended Practice SNT-TC-1A

AMERICAN WELDING SOCIETY (AWS)

AWS A2.4	(1986) Symbols for Welding, Brazing and Nondestructive Examination
AWS A3.0	(1989) Standard Welding Terms and Definitions
AWS D1.1	(1992) Structural Welding Code - Steel

WASHINGTON ADMINISTRATIVE CODE (WAC)

WAC 296-24	General Safety and Health Standards

1.2 DEFINITIONS

Definitions of welding terms shall be in accordance with AWS A3.0.

1.3 GENERAL REQUIREMENTS

The design of welded connections shall conform to AISC S335 unless otherwise indicated or specified. Material with welds will not be accepted unless the welding is specified or indicated on the drawings or otherwise approved by the Contracting Officer. Welding shall be as specified in this section, except where additional requirements are shown on the drawings or are specified in other sections. Welding

shall not be started until welding procedures, welders, welding operators, and tackers have been qualified and the submittals approved by the Contracting Officer. Qualification testing shall be performed at or near the work site. Each Contractor performing welding shall maintain records of the test results obtained in welding procedure, welder, welding operator, and tacker performance qualifications.

1.4 SUBMITTALS

The following shall be submitted in accordance with Exhibit I.

SD-18 Records

A quality control plan and records of tests and inspections.

1.5 WELDING PROCEDURE QUALIFICATIONS

Except for prequalified (per AWS D1.1) and previously qualified procedures, each Contractor performing welding shall record in detail and shall qualify the welding procedure specification for any welding procedure followed in the fabrication of weldments. Qualification of welding procedures shall conform to AWS D1.1.

1.5.1 Previous Qualifications

Welding procedures previously qualified by test may be accepted for this contract without requalification if the following conditions are met:

a. Testing was performed by an approved testing laboratory, technical consultant, or the Contractor's approved quality control organization.

b. The qualified welding procedure conforms to the requirements of this specification and is applicable to welding conditions encountered under this contract.

c. The welder, welding operator, and tacker qualification tests conform to the requirements of this specification and are applicable to welding conditions encountered under this contract.

1.5.2 Prequalified Procedures

Welding procedures which are considered prequalified as specified in AWS D1.1 will be accepted without further qualification.

1.6 WELDER, WELDING OPERATOR, AND TACKER QUALIFICATION

Each welder, welding operator, and tacker assigned to work on this contract shall be qualified in accordance with the applicable requirements of AWS D1.1 and as specified in this section. Welders, welding operators, and tackers who make acceptable procedure qualification test welds will be considered qualified for the welding procedure used.

1.6.1 Previous Qualifications

At the discretion of the Contracting Officer, welders, welding operators, and tackers qualified by test within the previous 6 months may be accepted for this contract without requalification if all the following conditions are met:

a. Copies of the welding procedure specifications, the procedure qualification test records, and the welder, welding operator, and tacker qualification test records are on file with the Contractor.

b. Testing was performed by an approved testing laboratory, technical consultant, or the Contractor's approved quality control organization.

c. The previously qualified welding procedure conforms to the requirements of this specification and is applicable to welding conditions encountered under this contract.

d. The welder, welding operator, and tacker qualification tests conform to the requirements of this specification and are applicable to welding conditions encountered under this contract.

1.6.2 Certificates

The welder, welding operator, or tacker certification shall state the type of welding and positions for which the welder, welding operator, or tacker is qualified, the code and procedure under which the individual is qualified, the date qualified, and the name of the firm and person certifying the qualification tests. The certification shall be kept on file with the Contractor. The certification shall be kept current for the duration of the contract.

1.6.3 Renewal of Qualification

Requalification of a welder or welding operator shall be required under any of the following conditions:

a. It has been more than 6 months since the welder or welding operator has used the specific welding process for which he is qualified.

b. There is specific reason to question the welder or welding operator's ability to make welds that meet the requirements of these specifications.

c. The welder or welding operator was qualified by an employer other than those firms performing work under this contract, and a qualification test has not been taken within the past 12 months.

d. A tacker who passes the qualification test shall be considered eligible to perform tack welding indefinitely in the positions and with the processes for which he is qualified, unless there is some specific reason to question the tacker's ability. In such a case, the tacker shall be required to pass the prescribed tack welding test.

1.7 INSPECTOR QUALIFICATION

Inspection and nondestructive testing personnel shall be qualified in accordance with the requirements of ASNT-01 for Levels I or II in the applicable nondestructive testing method. The inspector may be

supported by assistant welding inspectors who are not qualified to ASNT-01, and assistant inspectors may perform specific inspection functions under the supervision of the qualified inspector.

1.8 SYMBOLS

Symbols shall be in accordance with AWS A2.4, unless otherwise indicated.

1.9 SAFETY

Safety precautions during welding shall conform to ANSI Z49.1 and OSHA 1926.

PART 2 PRODUCTS

2.1 WELDING EQUIPMENT AND MATERIALS

All welding equipment, electrodes, welding wire, and fluxes shall be capable of producing satisfactory welds when used by a qualified welder or welding operator performing qualified welding procedures. All welding equipment and materials shall comply with the applicable requirements of AWS D1.1.

PART 3 EXECUTION

3.1 WELDING OPERATIONS

3.1.1 Requirements

Workmanship and techniques for welded construction shall conform to the requirements of AWS D1.1 and AISC S335. When AWS D1.1 and the AISC S335 specification conflict, the requirements of AWS D1.1 shall govern.

3.1.2 Identification

Welds shall be identified in one of the following ways:

a. Written records shall be submitted to indicate the location of welds made by each welder, welding operator, or tacker.

b. Each welder, welding operator, or tacker shall be assigned a number, letter, or symbol to identify welds made by that individual. The Contracting Officer may require welders, welding operators, and tackers to apply their symbol next to the weld by means of rubber stamp, felt-tipped marker with waterproof ink, or other methods that do not cause an indentation in the metal. For seam welds, the identification mark shall be adjacent to the weld at 1 meter (3-foot) intervals. Identification with die stamps or electric etchers shall not be allowed.

3.2 QUALITY CONTROL

Testing shall be done by an approved inspection or testing laboratory or technical consultant, or if approved by the Contracting Officer, the Contractor's inspection and testing personnel may be used instead of the commercial inspection or testing laboratory or technical consultant. The Contractor shall perform visual and radiographic,magnetic particle, inspection to determine conformance with paragraph STANDARDS OF ACCEPTANCE. Procedures and techniques for inspection shall be in accordance with applicable requirements of AWS D1.1, except that in radiographic inspection only film types designated as "fine grain," or "extra fine," shall be employed.

3.3 STANDARDS OF ACCEPTANCE

Dimensional tolerances for welded construction, details of welds, and quality of welds shall be in accordance with the applicable requirements of AWS D1.1 and the contract drawings. Nondestructive testing shall be by visual inspection, radiographic, and magnetic particle, methods. The minimum extent of nondestructive testing shall be a random 25 percent of welds or joints.

3.3.1 Nondestructive Examination

The welding shall be subject to inspection and tests in the mill, shop, and field. Inspection and tests in the mill or shop will not relieve the Contractor of the responsibility to furnish weldments of satisfactory quality. When materials or workmanship do not conform to the specification requirements, the Government reserves the right to reject material or workmanship or both at any time before final acceptance of the structure containing the weldment.

3.3.2 DESTRUCTIVE TESTS

When metallographic specimens are removed from any part of a structure, the Contractor shall make repairs. The Contractor shall employ qualified welders or welding operators, and shall use the proper joints and welding procedures, including peening or heat treatment if required, to develop the full strength of the members and joints cut and to relieve residual stress.

3.4 GOVERNMENT INSPECTION AND TESTING

In addition to the inspection and tests performed by the Contractor for quality control, the Government will perform inspection and testing for acceptance to the extent determined by the Contracting Officer. The costs of such inspection and testing will be borne by the Contractor if unsatisfactory welds are discovered, or by the Government if the welds are satisfactory. The work may be performed by the Government's own forces or under a separate contract for inspection and testing. The Government reserves the right to perform supplemental nondestructive and destructive tests to determine compliance with paragraph STANDARDS OF ACCEPTANCE.

3.5 CORRECTIONS AND REPAIRS

When inspection or testing indicates defects in the weld joints, the welds shall be repaired using a qualified welder or welding operator as applicable. Corrections shall be in accordance with the requirements of AWS D1.1 and the specifications. Defects shall be repaired in accordance with the approved procedures. Defects discovered between passes shall be repaired before additional weld material is deposited. Wherever a defect is removed and repair by welding is not required, the affected area shall be blended into the surrounding surface to eliminate sharp notches, crevices, or corners.

After a defect is thought to have been removed, and before rewelding, the area shall be examined by suitable methods to insure that the defect has been eliminated. Repair welds shall meet the inspection requirements for the original welds. Any indication of a defect shall be regarded as a defect, unless reevaluation by nondestructive methods or by surface conditioning shows that no unacceptable defect is present.

3.6 CONTRACTOR QUALITY CONTROL

The Contractor shall establish and maintain a quality control system to assure compliance with contract requirements and shall maintain records of his quality control for all operations including but not limited to the following:

(1) All weld procedure specifications

(2) Procedure qualifications test records.

(3) Welder, Welding operator, or tacker qualification test records or renewals.

(4) Nondestructive or destructive material tests or examinations.

(5) Correction or repair records.

Copies in duplicate of these records and tests, as well as records of corrective action taken when results are unsatisfactory, shall be furnished to the Contracting Officer within 1 working day of the inspection or test.

PART 4 SUBMITTAL SUMMARY

4.1 SUMMARY OF SUBMITTALS

Submittals to be furnished by the Contractor shall include the following:

Paragraph	Item	SD
05055-3.2	Quality Control Plan	18
05055-3.3	Inspection and Tests	18

Code for Type of Submittal (SD)

01 - Data
04 - Drawings
06 - Instructions
07 - Schedules
08 - Statements
09 - Reports
13 - Certificates
14 - Samples
18 - Records
19 - O & M Manuals

- END OF SECTION -

* * * * *

This page is intentionally blank.

TECHNICAL SPECIFICATION
FOR
STRUCTURAL STEEL
SECTION 05120

ENVIRONMENTAL RESTORATION DISPOSAL FACILITY (ERDF)
CELLS 3 & 4 CONSTRUCTION

REV	DATE	REASON FOR REVISION	ORIGINATOR	CHECKER	GROUP LEADER	TASK DESIGN LEAD	PROJECT ENGINEER
C	01/20/98	100% Design Review	DH	LHA			
B	11/21/97	60% Design Review	DH	LHA			

RICHLAND ENVIRONMENTAL RESTORATION PROJECT	JOB NO. 22192
	SPECIFICATION NO. 0600X-SP-C0056
	SHEET 1 of 6

SECTION 05120

STRUCTURAL STEEL

PART 1 GENERAL

1.1 REFERENCES

The publications listed below form a part of this specification to the extent referenced. The publications are referred to in the text by basic designation only.

AMERICAN INSTITUTE OF STEEL CONSTRUCTION (AISC)

AISC-M016	(1989) Manual of Steel Construction Allowable Stress Design, 9th Edition
AISC S303	(1992) Code of Practice for Steel Buildings and Bridges
AISC S329	(1986) Allowable Stress Design Specification for Structural Joints Using ASTM A325 or ASTM A490 Bolts
AISC S335	(1989) Specification for Structural Steel Buildings - Allowable Stress Design and Plastic Design

AMERICAN SOCIETY FOR TESTING AND MATERIALS (ASTM)

ASTM A 6	(1990a) Rolled Steel Plates, Shapes, Sheet Piling, and Bars for Structural Use
ASTM A 36	(1991) Structural Steel
ASTM A 242	(1991a) High-Strength Low-Alloy Structural Steel
ASTM A 307	(1991) Carbon Steel Bolts and Studs, 60 000 PSI Tensile Strength
ASTM A 325	(1991c) Structural Bolts, Steel, Heat Treated, 120/105 ksi Minimum Tensile Strength
ASTM A 563	(1991c) Carbon and Alloy Steel Nuts
ASTM F 436	(1991) Hardened Steel Washers
ASTM F 844	(1990) Washers, Steel, Plain (Flat), Unhardened for General Use

AMERICAN SOCIETY OF MECHANICAL ENGINEERS (ASME)

ASME B18.21.1	(1990) Lock Washers (Inch Series)

ASME B46.1	(1985) Surface Texture (Surface Roughness, Waviness and Lay)

AMERICAN WELDING SOCIETY (AWS)

AWS A2.4	(1986) Symbols for Welding, Brazing and Nondestructive Examination
AWS D1.1	(1992) Structural Welding Code - Steel

STEEL STRUCTURES PAINTING COUNCIL (SSPC)

SSPC Paint 25	(1991) Red Iron Oxide, Zinc Oxide, Raw Linseed Oil and Alkyd Primer (without Lead and Chromate Pigments)

1.2 GENERAL REQUIREMENTS

Structural steel fabrication and erection shall be performed by an organization experienced in structural steel work of equivalent magnitude. The Contractor shall be responsible for correctness of detailing, fabrication, and for the correct fitting of structural members. Connections, for any part of the structure not shown on the contract drawings, shall be considered simple shear connections and shall be designed and detailed in accordance with AISC-M016. Substitution of sections or modification of connection details will not be accepted unless approved by the Contracting Officer. AISC S335 shall govern the work. Welding shall be in accordance with AWS D1.1. High-strength bolting shall be in accordance with AISC S329.

1.3 SUBMITTALS

The following shall be submitted in accordance with Exhibit I.

SD-04 Drawings

Shop and erection details including members (with their connections) not shown on the contract drawings. Welds shall be indicated by standard welding symbols in accordance with AWS A2.4.

1.4 STORAGE

Material shall be stored out of contact with the ground in such manner and location as will minimize deterioration.

PART 2 PRODUCTS

2.1 STRUCTURAL STEEL

2.1.1 Carbon Grade Steel

Carbon grade steel shall conform to ASTM A 36.

2.2 HIGH STRENGTH BOLTS

High strength bolts shall conform to ASTM A 325.

2.3 CARBON STEEL BOLTS

Carbon steel bolts shall conform to ASTM A 307, Grade A.

2.4 CARBON STEEL NUTS

Carbon steel nuts shall conform to ASTM A 563, Grade A, Hex.

2.5 WASHERS

Plain washers shall conform to ASTM F 844. Other types, when required, shall conform to ASME B18.21.1.

PART 3 EXECUTION

3.1 FABRICATION

Fabrication shall be in accordance with the applicable provisions of the AISC S335. Fabrication and assembly shall be done in the shop to the greatest extent possible. The fabricating plant shall be certified under the AISC quality certification program for Category I supplement structural steelwork. Compression joints depending on contact bearing shall have a surface roughness not in excess of 12.7 micrometer (500 micro inches) as determined by ASME B46.1, and ends shall be square within the tolerances for milled ends specified in ASTM A 6. Structural steelwork, except surfaces of steel to be encased in concrete, surfaces to be field welded and contact surfaces of friction-type high-strength bolted connections shall be prepared for painting in accordance with the AISC S335 and primed with the specified paint.

3.2 ERECTION

Erection of structural steel shall be in accordance with the applicable provisions of the AISC S335.

3.2.1 Connections

Anchor bolts and other connections between the structural steel and foundations shall be provided and shall be properly located and built into connecting work.

3.2.2 Base Plates and Bearing Plates

Column base plates for columns and bearing plates for beams, girders, and similar members shall be provided. Base plates and bearing plates shall be provided with full bearing after the supported members have been plumbed and properly positioned, but prior to placing superimposed loads. Separate setting plates under column base plates will not be permitted. The area under the plate shall be damp-packed solidly with bedding mortar, except where non-shrink grout is indicated on the

drawings. Bedding mortar and grout shall be as specified in Section 03300 CONCRETE FOR BUILDING CONSTRUCTION.

3.2.3 Field Welded Connections

Field welded structural connections shall be completed before load is applied.

3.2.4 Field Priming

After erection, the field bolt heads and nuts, field welds, and any abrasions in the shop coat shall be cleaned and primed with paint of the same quality as that used for the shop coat.

3.3 CONTRACTOR QUALITY CONTROL

The Contractor shall establish and maintain a quality control system to assure compliance with contract requirements and shall maintain records of his quality control for all operations including but not limited to the following:

(1) Certified copies of welder qualification test records.

Copies in duplicate of these records and tests, as well as records of corrective action taken when results are unsatisfactory, shall be furnished to the Contracting Officer within 1 working day of the inspection or test.

PART 4 SUBMITTAL SUMMARY

4.1 SUMMARY OF SUBMITTALS

Submittals to be furnished by the Contractor shall include the following:

Paragraph	Item	SD
05120-1.3	Shop and Erection drawings Showing dimension, connection, Welds	04

Code for Type of Submittal (SD)

01 - Data
04 - Drawings
06 - Instructions
07 - Schedules
08 - Statements
09 - Reports
13 - Certificates
14 - Samples
18 - Records
19 - O & M Manuals

- END OF SECTION -

* * * * *

This page is intentionally blank.

TECHNICAL SPECIFICATION
FOR
ROUGH CARPENTRY
SECTION 06100

ENVIRONMENTAL RESTORATION DISPOSAL FACILITY (ERDF)
CELLS 3 & 4 CONSTRUCTION

REV	DATE	REASON FOR REVISION	ORIGINATOR	CHECKER	GROUP LEADER	TASK DESIGN LEAD	PROJECT ENGINEER
C	01/20/98	100% Design Review	MGM	LHA			
B	11/21/97	60% Design Review	MGM	LHA			

RICHLAND ENVIRONMENTAL RESTORATION PROJECT	JOB NO. 22192
	SPECIFICATION NO. 0600X-SP-A0012
	SHEET 1 of 4

This page is intentionally blank.

SECTION 06100

ROUGH CARPENTRY

PART 1 GENERAL

1.1 REFERENCES

The publications listed below form a part of this specification to the extent referenced. The publications are referred to in the text by basic designation only.

AMERICAN SOCIETY FOR TESTING AND MATERIALS (ASTM)

ASTM D 2898	(1981; R 1986) Accelerated Weathering of Fire-Retardant-Treated Wood for Fire Testing

AMERICAN WOOD PRESERVERS' ASSOCIATION (AWPA)

AWPA C2	(1992) Lumber, Timbers, Bridge Ties and Mine Ties - Preservative Treatment by Pressure Processes
AWPA C20	(1991) Structural Lumber - Fire-Retardant Treatment by Pressure Processes
AWPA C27	(1991) Plywood - Fire-Retardant Treatment by Pressure Processes

DEPARTMENT OF COMMERCE (DOC)

DOC PS 1	(1983) Construction and Industrial Plywood

1.2 DELIVERY AND STORAGE

Materials shall be delivered to the site in undamaged condition, stored off ground in fully covered, well ventilated areas, and protected from extreme changes in temperature and humidity.

PART 2 PRODUCTS

2.1 LUMBER AND SHEATHING

2.1.1 Grading and Marking

2.1.1.1 Plywood

Materials shall bear the grademark, stamp or other identifying marks indicating grades of material and rules or standards under which produced. Such identifying marks shall be in accordance with the rule or

standard under which the material is produced, including requirements for qualifications and authority of the inspection organization, usage of authorized identification, and information included in the identification. Surfaces that are to be architecturally exposed to view shall not bear grademarks, stamps, or other types of identifying marks.

2.1.2 Fire-Retardant Treatment

Fire-retardant treated wood shall be pressure treated in accordance with AWPA C27 for plywood. Material use shall be defined in AWPA C20 and AWPA C27 for Interior Type A and B. Treatment and performance inspection shall be by an independent and qualified testing agency that establishes performance ratings. Each piece or bundle of treated material shall bear identification of the testing agency to indicate performance in accordance with such rating.

2.1.2.1 Plywood

Plywood shall conform to DOC PS 1, Grade C-D with exterior glue. Plywood walls and wainscot without corner bracing of framing shall have a span rating of 24/0 or greater for supports 600 mm (24 inches) on center.

2.2 ACCESSORIES

2.2.1 Bolts: Lag, Toggle, and Miscellaneous Bolts and Screws

Type, size, and finish best suited for intended use. Finish options include zinc compounds, cadmium, and aluminum paint impregnated finishes.

2.2.2 Screws

Screws shall be self taping type to connect to structural steel members.

PART 3 EXECUTION

3.1 INSTALLATION OF SHEATHING

3.1.1 Plywood Panels

Panels shall be applied with tight edges at side and end joints, and screwed at supported edges at 300 mm (12 inches) on center and at intermediate supports 300 mm (12 inches) on center. Fasteners of edges shall be 13 mm (1/2 inch) from the edges. Wall wainscot panels shall extend over top girt and bottom angles plates.

3.2 CONTRACTOR QUALITY CONTROL

The Contractor shall establish and maintain a quality control system to assure compliance with contract requirements and shall maintain records of his quality control for all operations including but not limited to the following:

(1) Inspection of Material delivered to the project site against approved material data.

(2) Installation as indicated

Copies in duplicate of these records, as well as records of corrective action taken when results are unsatisfactory, shall be furnished to the Contracting Officer within 1 working day of the inspection or test.

PART 4 SUBMITTAL SUMMARY (Not Applicable)

- END OF SECTION -

* * * * *

TECHNICAL SPECIFICATION
FOR
BUILDING INSULATION
SECTION 07200

ENVIRONMENTAL RESTORATION DISPOSAL FACILITY (ERDF)
CELLS 3 & 4 CONSTRUCTION

C	01/20/98	100% Design Review	MGM	LHA			
B	11/21/97	60% Design Review	MGM	LHA			
REV	DATE	REASON FOR REVISION	ORIGINATOR	CHECKER	GROUP LEADER	TASK DESIGN LEAD	PROJECT ENGINEER

	RICHLAND ENVIRONMENTAL RESTORATION PROJECT	JOB NO. 22192
		SPECIFICATION NO. 0600X-SP-A0013
		SHEET 1 of 4

This page is intentionally blank.

SECTION 07200

BUILDING INSULATION

PART 1 GENERAL

1.1 REFERENCES

The publications listed below form a part of this specification to the extent referenced. The publications are referred to in the text by basic designation only.

AMERICAN SOCIETY FOR TESTING AND MATERIALS (ASTM)

ASTM C 518	(1991) Standard Test Method for Steady-State Heat Flux Measurements and Thermal Transmission Properties by Means of the Heat Flow Meter Apparatus
ASTM C 553	(1992) Mineral Fiber Blanket Thermal Insulation for Commercial and Industrial Applications
ASTM C 612	(1993) Mineral Fiber Block and Board Thermal Insulation
ASTM E 84	(1994) Test Method for Surface Burning Characteristics of Building Materials
ASTM E 96	(1994) Standard Test Methods for Water Vapor Transmission of Materials

FEDERAL SPECIFICATIONS (FS)

FS FF-N-105	(Rev B; Int Am 4) Nails, Brads, Staples and Spikes: Wire, Cut and Wrought

1.2 STORAGE OF MATERIALS

Insulation, sealants, and fasteners shall be kept dry at all times, before, during, and after delivery to the site and shall be stored in an enclosed building or in a closed trailer. Wet insulation shall be permanently removed from the site.

1.3 FIRE CLASSIFICATION

Insulation shall have been tested by an approved testing laboratory such as Underwriters Laboratories or Factory Mutual and have a flame spread rating of 25 or less and a smoke density not exceeding 450 when tested in accordance with ASTM E 84.

PART 2 PRODUCTS

2.1 INSULATION

Insulation shall be a standard product of the manufacturer and shall be factory marked with the manufacturer's name or trade mark, the material specification number, the R-value at 24 degrees C (75 degrees F), and the thickness. Minimum thickness shall be as recommended by the manufacturer. Identification shall be on individual pieces or individual packages. The thermal resistance of insulation shall be not less than the R-value of 11.

R-values shall be determined at 24 degrees C (75 degrees F) in accordance with ASTM C 518. Insulation shall have a facing providing a permeability of 1.15 ng/(Pa.s square meter) (0.02 perm) or less when tested in accordance with ASTM E 96. Facing shall be of 0.05 mm (2-mil) thick white vinyl backed with 150 mm by 150 mm (6 inch by 6 inch) glass scrim and 0.02 mm (0.7-mil) thick metal foil laminate. Reinforced foil with a natural finish may be used for facing in concealed locations.

2.1.1 Blanket Insulation

Blanket insulation shall conform to ASTM C 553. Exposed insulation shall have white sheet vinyl facing.

2.2 FASTENERS

Fasteners shall be as recommended in writing by the insulation manufacturer for insulation, framing type, and wall surfaces.

2.3 INSULATION RETAINERS

Insulation retainers shall be type, size and design necessary to adequately hold the insulation and to provide a neat appearance. Metallic retaining members shall be nonferrous or have a nonferrous coating. Nonmetallic retaining members, including adhesives used in conjunction with mechanical retainers or at insulation seams, shall have a fire resistance classification not less than permitted for the insulation.

PART 3 EXECUTION

3.1 COORDINATION REQUIREMENTS

Insulation, structural framing system, and roofing system shall be coordinated by the Contractor to prevent damage to the insulation and to ensure installation of the insulation conforms to insulation and roofing system manufacturer's requirements.

3.2 SUBSTRATE PREPARATION

The substrate construction of the building shall be completed before insulation work is begun thereon.

3.3 BLANKET INSULATION

Insulation shall be installed as indicated and in accordance with manufacturer's instructions. Final appearance of installed insulation shall be free of unsightly sags and wrinkles. Joint shall be tight and sealed as required by the manufacturer.

3.3.1 Protection Requirements

The insulation shall be kept dry at all times. Insulation shall not be kicked into position. All rips and tears shall be repaired or replaced if required by the Contracting Officer.

3.4 INSPECTION

The Contractor shall establish and maintain an inspection procedure to assure compliance of the installed insulation with the contract requirements. Any work found not to be in compliance with the contract shall be promptly removed and replaced or corrected in an approved manner.

3.5 CONTRACTOR QUALITY CONTROL

The Contractor shall establish and maintain a quality control system to assure compliance with contract requirements and shall maintain records of his quality control for all operations including but not limited to the following:

(1) Inspection of material delivered to the project site against approved material data.

(2) Storage and handling of materials.

(3) Installation as indicted.

Copies in duplicate of these records and tests, as well as records of corrective action taken when results are unsatisfactory, shall be furnished to the Contracting Officer within 1 working day of the inspection or test.

PART 4 SUBMITTAL SUMMARY (Not Applicable)

- END OF SECTION -

* * * * *

This page is intentionally blank.

TECHNICAL SPECIFICATION
FOR
CAULKING AND SEALANTS
SECTION 07920

ENVIRONMENTAL RESTORATION DISPOSAL FACILITY (ERDF)
CELLS 3 & 4 CONSTRUCTION

REV	DATE	REASON FOR REVISION	ORIGINATOR	CHECKER	GROUP LEADER	TASK DESIGN LEAD	PROJECT ENGINEER
C	01/20/98	100% Design Review	MGM	LHA			
B	11/21/97	60% Design Review	MGM	LHA			

	RICHLAND ENVIRONMENTAL RESTORATION PROJECT	JOB NO. 22192
		SPECIFICATION NO. 0600X-SP-A0014
		SHEET 1 of 5

This page is intentionally blank.

SECTION 07920

CAULKING AND SEALANTS

PART 1 GENERAL

1.1 REFERENCES

The publications listed below form a part of this specification to the extent referenced. The publications are referred to in the text by basic designation only.

AMERICAN SOCIETY FOR TESTING AND MATERIALS (ASTM)

ASTM C 920	(1987) Elastomeric Joint Sealants

1.2 SUBMITTALS

Submittals shall be furnished in accordance with Exhibit I.

SD-01 Data

Sealant;

Manufacturer's descriptive data including storage requirements, shelf life, curing time, instructions for mixing and application, and primer data (if required) for sealants being used. A copy of the Material Safety Data Sheet shall be provided for each solvent, primer or sealant material.

1.3 ENVIRONMENTAL REQUIREMENTS

The ambient temperature shall be within the limits of 4 to 32 degrees C (40 to 90 degrees F) when the sealants are applied.

1.4 DELIVERY AND STORAGE

Materials shall be delivered to the job in the manufacturer's original unopened containers. The container label or accompanying data sheet shall include the following information as applicable: manufacturer, name of material, formula or specification number, lot number, color, date of manufacture, mixing instructions, shelf life, and curing time at the standard conditions for laboratory tests. Materials shall be handled and stored to prevent inclusion of foreign materials. Materials shall be stored at temperatures between 4 and 32 degrees C (40 and 90 degrees F) unless otherwise specified by the manufacturer.

PART 2 PRODUCTS

2.1 ELASTOMERIC SEALANTS

Elastomeric sealants shall conform to ASTM C 920 and the following:

a. Polysulfide Sealant B: Polysulfide sealant, Type S, Grade NS, Class 25, Use NT, M,G,A,O.

b. Polyurethane Sealant C: Polyurethane sealant, Grade NS, Class 25, Use NT, M,G,A,O.

c. Silicone Sealant D: Silicone sealant, Type S, Grade NS, Class 25, Use NT, M,G,A,O.

2.2 SOLVENTS AND CLEANING AGENTS

Solvents, cleaning agents, and accessory materials used in conjunction with caulking and sealants shall comply with the manufacturer's recommendations.

PART 3 EXECUTION

3.1 GENERAL

3.1.1 Surface Preparation

The surfaces of joints to be sealed shall be dry. Oil, grease, dirt, chalk, particles of mortar, dust, loose rust, loose mill scale, and other foreign substances shall be removed from surfaces of joints to be in contact with the sealant. Oil and grease shall be removed with solvent and surfaces shall be wiped dry with clean cloths.

3.1.2 Concrete Surfaces

Where surfaces have been treated with curing compounds, oil, or other such materials, the materials shall be removed by sandblasting or wire brushing. Laitance, efflorescence and loose mortar shall be removed from the joint cavity.

3.2 APPLICATION

3.2.1 Sealant

Sealant shall be used before expiration of shelf life. Multi-component sealants shall be mixed according to manufacturer's printed instructions. Sealant in guns shall be applied with a nozzle of proper size to fit the width of joint. Joints shall be sealed as detailed in the drawings. Sealant shall be forced into joints with sufficient pressure to expel air and fill the groove solidly. Sealant shall be installed to the indicated depth without displacing the backing. Unless otherwise indicated, specified, or recommended by the manufacturer, the installed sealant shall be tooled so that the surface is uniformly smooth and free of wrinkles and to assure full adhesion to the sides of the joint. Sealants shall be installed free of air pockets, foreign embedded matter, ridges and sags. Sealer shall be applied over the sealant when and as specified by the sealant manufacturer.

3.3 CLEANING

The surfaces adjoining the sealed joints shall be cleaned of smears and other soiling resulting from the sealant application as work progresses.

3.4 CONTRACTOR QUALITY CONTROL

The Contractor shall establish and maintain a quality control system to assure compliance with contract requirements and shall maintain records of his quality control for all operations including but not limited to the following:

(1) Inspection of material delivered to the project site against approved material data.

(2) Installation as indicated.

Copies in duplicate of these records and tests, as well as records of corrective action taken when results are unsatisfactory, shall be furnished to the Contracting Officer within 1 working day of the inspection or test.

PART 4 SUBMITTAL SUMMARY

4.1 SUMMARY OF SUBMITTALS

Submittals to be furnished by the Contractor shall include the following:

Paragraph	Item	SD
07920-2.1	Elastomeric Sealants	01
07920-2.2	Solvents and Cleaning Agents	01

Code for Type of Submittal (SD)

01	-	Data
04	-	Drawings
06	-	Instructions
07	-	Schedules
08	-	Statements
09	-	Reports
13	-	Certificates
14	-	Samples
18	-	Records
19	-	O & M Manuals

- END OF SECTION -

* * * * *

TECHNICAL SPECIFICATION
FOR
STEEL DOORS AND FRAMES
SECTION 08110

ENVIRONMENTAL RESTORATION DISPOSAL FACILITY (ERDF)
CELLS 3 & 4 CONSTRUCTION

REV	DATE	REASON FOR REVISION	ORIGINATOR	CHECKER	GROUP LEADER	TASK DESIGN LEAD	PROJECT ENGINEER
C	01/20/98	100% Design Review	MGM	LHA			
B	11/21/97	60% Design Review	MGM	LHA			

	RICHLAND ENVIRONMENTAL RESTORATION PROJECT	JOB NO. 22192
		SPECIFICATION NO. 0600X-SP-A0015
		SHEET 1 of 4

This page is intentionally blank.

SECTION 08110

STEEL DOORS AND FRAMES

PART 1 GENERAL

1.1 REFERENCES

The publications listed below form a part of this specification to the extent referenced. The publications are referred to in the text by basic designation only.

AMERICAN SOCIETY FOR TESTING AND MATERIALS (ASTM)

ASTM E 283	(1991) Determining the Rate of Air Leakage Through Exterior Windows, Curtain Walls, and Doors Under Specified Pressure Differences Across the Specimen

DOOR AND HARDWARE INSTITUTE (DHI)

DHI-02	(1986) Installation Guide for Doors and Hardware

NATIONAL ASSOCIATION OF ARCHITECTURAL METAL MANUFACTURERS (NAAMM)

NAAMM HMMA 861	(1987) Hollow Metal Manual; Section: Guide Specifications for Commercial Hollow Metal Doors and Frames

STEEL DOOR INSTITUTE (SDOI)

SDOI SDI 100	(1991) Standard Steel Doors and Frames
SDOI SDI 107	(1984) Hardware on Steel Doors (Reinforcement - Application)

1.2 DELIVERY AND STORAGE

To provide protection during shipment, welded unit type frames shall be strapped together in pairs with heads at opposite ends or provided with temporary steel spreaders at the bottom of each frame; and knockdown type frames shall be securely strapped in bundles. Materials shall be delivered to the site in undamaged condition, and stored out of contact with the ground and under a weathertight covering permitting good air circulation. Doors and assembled frames shall be stored in an upright position. Whenever damage becomes evident, abraded, scarred, or rusty areas shall be cleaned and touched up with the paint used for the shop painting.

PART 2 PRODUCTS

2.1 DOORS AND FRAMES

Doors and frames shall be factory fabricated conforming to SDOI SDI 100 and the additional requirements specified herein. Door grade shall be extra heavy duty. Doors and frames shall be galvanized. Doors and frames shall be prepared to receive hardware conforming to the templates and information provided under Section 08700 BUILDERS' HARDWARE. Rubber silencers shall be installed into factory predrilled holes in door frames; adhesively applied silencers are not acceptable. The Contractor shall coordinate between the hardware and door suppliers to assure that reinforcing of door assemblies for closers and other required hardware shall conform to SDOI SDI 100. Exterior doors shall have top edges closed flush and sealed against water penetration.

2.1.1 Weatherstripping

Weatherstripping for head and jamb shall be manufacturers standard elastomeric type of synthetic rubber, vinyl, or neoprene and shall be installed at the factory or on the jobsite in accordance with the door frame manufacturer's recommendations. Weatherstripping for bottom of doors shall be as shown. Air leakage rate of weatherstripping shall not exceed 0.31 l/s per linear meter (0.20 cubic feet per minute per linear foot) of crack when tested in accordance with ASTM E 283 at standard test conditions.

2.1.2 Glazing

Glazing requirements are specified in Section 08810 GLASS AND GLAZING. Removable glazing beads shall be screw-on or snap-on type.

2.2 THERMAL INSULATED DOORS

All exterior doors shall be thermally insulated. Interior of thermal insulated doors shall be completely filled with rigid foamed-in-place polyurethane or precured polystyrene foamed board, permanently bonded to each face panel. The thermal conductance (U-value) through the door shall not exceed 1.36 W/sq m times K (0.24).

PART 3 EXECUTION

3.1 INSTALLATION

Installation shall conform to DHI-02, The Installation of Commercial Steel Doors and Steel Frames. Steel doors and frames shall be reinforced, drilled, and tapped to receive mortised hinges, locks, latches, flush bolts, and closers as required. Preparation for hardware shall be in accordance with SDOI SDI 107. Weatherstripping shall be installed at exterior door openings to provide a weathertight installation.

3.2 THERMAL INSULATED DOORS

Hardware and perimeter seals shall be adjusted for proper operation.

3.3 CONTRACTOR QUALITY CONTROL

The Contractor shall establish and maintain a quality control system to assure compliance with contract requirements and shall maintain records of his quality control for all operations including but not limited to the following:

(1) Inspection of material delivered to the project site against approved material data.

(2) Storage and handling of materials.

(3) Installation as indicated.

Copies in duplicate of these records as well as records of corrective action taken when results are unsatisfactory, shall be furnished to the Contracting Officer within 1 working day of the inspection or test.

PART 4 SUBMITTAL SUMMARY (Not Applicable)

- END OF SECTION -

* * * * *

This page is intentionally blank.

TECHNICAL SPECIFICATION
FOR
OVERHEAD ROLLING DOORS
SECTION 08330

ENVIRONMENTAL RESTORATION DISPOSAL FACILITY (ERDF)
CELLS 3 & 4 CONSTRUCTION

REV	DATE	REASON FOR REVISION	ORIGINATOR	CHECKER	GROUP LEADER	TASK DESIGN LEAD	PROJECT ENGINEER
C	01/20/98	100% Design Review	MGM	LHA			
B	11/21/97	60% Design Review	MGM	LHA			

	RICHLAND ENVIRONMENTAL RESTORATION PROJECT	JOB NO. 22192
		SPECIFICATION NO. 0600X-SP-A0016
		SHEET 1 of 6

SECTION 08330

OVERHEAD ROLLING DOORS

PART 1 GENERAL

1.1 REFERENCES

AMERICAN SOCIETY FOR TESTING AND MATERIALS (ASTM)

ASTM A 525	(1991b) General Requirements for Steel Sheet, Zinc-Coated (Galvanized) by the Hot-Dip Process
ASTM E 330	(1990) Structural Performance of Exterior Windows, Curtain Walls, and Door by Uniform Static Air Pressure Difference

AMERICAN SOCIETY OF HEATING, REFRIGERATING, AND AIR-CONDITIONING ENGINEERS (ASHRAE)

ASHRAE-03	(1993; Errata) Handbook, Fundamentals I-P Edition

1.2 DESCRIPTION

Overhead rolling door shall be spring counterbalanced, rolling type, with interlocking slats, complete with guides, fastenings, hood, brackets, and operating mechanisms, and shall be designed for use on openings as indicated.

1.2.1 Wind Load Requirements

Door and components shall be designed to withstand the minimum design wind load of 20 psf. Door shall be constructed to sustain a superimposed load, both inward and outward, equal to 1 1/2 times the minimum design wind load. The door shall support the superimposed loads for a minimum period of 10 seconds without evidence of serious damage and shall be operable after conclusion of the tests.

1.2.2 Operational Cycle Life

All portions of the door and door operating mechanism that are subject to movement, wear, or stress fatigue shall be designed to operate through a minimum of 50,000 cycles. One complete cycle of door operation will begin with the door in the closed position, move to the full open position and return to the closed position.

1.3 SUBMITTALS

Submittals shall be furnished in accordance with Exhibit I.

SD-13 Warranty

Manufacturer's standard guarantee.

1.4 DELIVERY AND STORAGE

Door shall be delivered to the jobsite wrapped in a protective covering with the brands and names clearly marked thereon. Door shall be stored in a dry location that is adequately ventilated and free from dirt and dust, water, and other contaminants, and in a manner that permits easy access for inspection and handling.

1.5 WARRANTY

Manufacturer's standard performance guarantees or warranties that extend beyond a 1-year period shall be provided.

PART 2 PRODUCTS

2.1 OVERHEAD ROLLING DOOR

Door shall be surface-mounted type with guides at jambs set back a sufficient distance to clear the opening.

2.1.1 Curtain

The curtain shall roll up on a barrel supported at the head of opening on brackets, and shall be balanced by helical springs. Galvanized steel slats shall be minimum bare metal thickness of 20 gauge. Slats shall be of the minimum bare metal decimal thickness required for the width indicated and the wind pressure specified above. Curtain shall be formed of interlocking slats of shapes standard with the manufacturer. Slats for exterior door shall be flat type.

2.1.2 Endlocks and Windlocks

The ends of each alternate slat for interior door shall have malleable endlocks of manufacturer's stock design. In addition to endlocks, exterior door shall have the manufacturer's standard windlocks as required to withstand the wind load. Windlocks shall prevent the curtain from leaving guides because of deflection from specified wind pressure.

2.1.3 Bottom Bar

The curtain shall have a sloped bottom bar consisting of two hot-dip galvanized steel angles for steel Door.

2.1.4 Guides

Guides shall be galvanized steel structural shapes or formed steel shapes, Guides shall be steel structural shapes or formed steel shapes, of a size and depth to provide proper clearance for operation and resistance under the design windload. Guides shall be attached to adjoining construction with fasteners recommended by the manufacturer. Spacing of fasteners shall be as required to meet the minimum design windload.

2.1.5 Barrel

The barrel shall be steel pipe or commercial welded steel tubing of proper diameter for the size of curtain. Deflection shall not exceed 0.03 inch per foot of span. Ends of the barrel shall be closed with cast-iron or steel plugs, machined to fit the pipe.

2.1.6 Springs

Oil tempered helical steel counter-balance torsion springs shall be installed within the barrel and shall be capable of producing sufficient torque to assure easy operation of the door curtain. Access shall be provided for spring tension adjustment from outside of the bracket without removing the hood.

2.1.7 Brackets

Brackets shall be of steel plates to close the ends of the roller-shaft housing, and to provide mounting surfaces for the hood. An operation bracket hub and shaft plugs shall have sealed prelubricated ball bearings.

2.1.8 Hood

Hood shall be galvanized with minimum bare metal thickness of 16 gauge, formed to fit contour of the end brackets, and shall be reinforced with steel rods, rolled beads, or flanges at top and bottom edges. Multiple segment and single piece hoods shall be provided with support brackets of the manufacturer's standard design as required for adequate support.

2.1.9 Weatherstripping

Exterior Door shall be fully weatherstripped. A nylon brush type weatherstrip shall be attached to the bottom bar to permit hose exercise training water to run out beneath the door. Weather seal at door guides shall be continuous vinyl or neoprene, bulb or leaf type, or shall be nylon-brush type. A weather baffle shall be provided at the lintel or inside the hood. Weatherstripping shall be easily replaced without special tools.

2.1.10 Operation

Door shall be operated by means of a roller chain drive. Manual lifting handles shall also be provided on each side of the door.

2.1.11 Inertia Brake

Overhead rolling door shall have a mechanical inertia brake device which will stop the door from free fall in any position, should there be a failure in the roller chain drive. The unit shall be capable of being reset with an easy back drive action.

2.1.12 Locking

Locking shall consist of interior slide bolts, suitable for padlock by others, for manual push-up Door.

2.1.13 Finish

Steel slats, hood, and door guides shall be hot-dip galvanized G90 in accordance with ASTM A 525, and shall be treated for paint adhesion and shall receive a baked on top coat for field finishing. Surfaces other than slats, hood, guides and faying surfaces shall be cleaned and treated to assure maximum paint adherence and shall be given a factory dip or spray coat of rust inhibitive metallic oxide or synthetic resin primer. Color shall be as shown on drawings.

PART 3 EXECUTION

3.1 PROJECT CONDITIONS

3.1.1 Field Measurements

Take field measurements prior to preparation of shop drawings and fabrication to ensure proper fitting. Show recorded measurements on final shop drawings. Allow for trimming and fitting wherever measurements may effect final assembly and construction.

3.2 INSPECTION

Installer shall thoroughly examine all substrates, areas and conditions under which installation work of this Section is to be undertaken and notify the Contractor in writing of conditions detrimental to proper, timely and successful completion of the installation. Work shall not proceed until unsatisfactory conditions have been corrected. Starting of installation work shall be construed as installer's acceptance of substrates, surfaces and conditions within any particular area.

3.3 INSTALLATION

Install overhead rolling door units in location, configuration, and at mounting heights indicated and in accordance with the manufacturer's instructions. Keep perimeter lines straight, plumb, and level. Provide grounds, clips, backing materials, adhesives, brackets, anchors, trim, and accessories necessary for a complete installation.

3.4 ADJUST AND CLEAN

Verify that accessories required for the unit have been properly installed and that operating unit functions properly. Clean unit in accordance with the manufacturer's instructions.

3.5 CONTRACTOR QUALITY CONTROL

The Contractor shall establish and maintain a quality control system to assure compliance with contract requirements and shall maintain records of his quality control for all operations including but not limited to the following:

(1) Thorough inspection of materials and assemblies delivered to the Project Site.

(2) Thoroughly document the installer's review and acceptance of substrates as acceptable for the installation of overhead rolling Door.

Copies in duplicate of these records and tests, as well as records of corrective action taken when results are unsatisfactory, shall be furnished to the Contracting Officer within 1 working day of the inspection or test.

PART 4 SUBMITTALS

4.1 SUMMARY OF SUBMITTALS

Submittals to be furnished by the Contractor shall include the following:

Paragraph	Item	SD
08330-1.5	Warranty	13

Code for Type of Submittal (SD)

01 - Data
04 - Drawings
06 - Instructions
07 - Schedules
08 - Statements
09 - Reports
13 - Certificates
14 - Samples
18 - Records
19 - O & M Manuals

- END OF SECTION -

* * * * *

This page is intentionally blank.

TECHNICAL SPECIFICATION
FOR
BUILDERS' HARDWARE
SECTION 08700

ENVIRONMENTAL RESTORATION DISPOSAL FACILITY (ERDF)
CELLS 3 & 4 CONSTRUCTION

REV	DATE	REASON FOR REVISION	ORIGINATOR	CHECKER	GROUP LEADER	TASK DESIGN LEAD	PROJECT ENGINEER
C	01/20/98	100% Design Review	MGM	LHA			
B	11/21/97	60% Design Review	MGM	LHA			

	RICHLAND ENVIRONMENTAL RESTORATION PROJECT	JOB NO. 22192
		SPECIFICATION NO. 0600X-SP-A0017
		SHEET 1 of 6

This page is intentionally blank.

SECTION 08700

BUILDERS' HARDWARE

PART 1 GENERAL

1.1 REFERENCES

The publications listed below form a part of this specification to the extent referenced. The publications are referred to in the text by basic designation only.

AMERICAN SOCIETY FOR TESTING AND MATERIALS (ASTM)

ASTM E 283	(1991) Determining the Rate of Air Leakage Through Exterior Windows, Curtain Walls and Doors Under Specified Pressure Differences Across the Specimen

BUILDERS HARDWARE MANUFACTURERS ASSOCIATION (BHMA)

ANSI/BHMA A156.1	(1988) Butts and Hinges
ANSI/BHMA A156.2	(1989) Bored and Preassembled Locks and Latches
ANSI/BHMA A156.4	(1986) Door Controls - Closers
ANSI/BHMA A156.7	(1988) Template Hinge Dimensions
ANSI/BHMA A156.8	(1988) Door Controls - Overhead Holders
ANSI/BHMA A156.13	(1987) Mortise Locks & Latches
ANSI/BHMA A156.18	(1987) Materials and Finishes
ANSI/BHMA A156.21	(1989) Thresholds

DOOR AND HARDWARE INSTITUTE (DHI)

DHI-02	(1986) Installation Guide for Doors and Hardware
DHI-04	(1976) Recommended Locations for Builders' Hardware for Custom Steel Doors and Frames
DHI-05	(1990) Recommended Locations for Architectural Hardware for Standard Steel Doors and Frames
DHI A115-W	(1988) Wood Door Hardware Standards (Incl A115-W1 thru A115-W9)

1.2 DELIVERY, STORAGE, AND HANDLING

Hardware shall be delivered to the project site in the manufacturer's original packages. Each article of hardware shall be individually packaged in the manufacturer's standard commercial carton or container, and shall be properly marked or labeled to be readily identifiable with the approved hardware schedule. Each change key shall be tagged or otherwise identified with the door for which its cylinder is intended. Where double cylinder functions are used or where it is not obvious which is the key side of a door, appropriate instructions shall be included with the lock and on the hardware schedule. Manufacturer's printed installation instructions, fasteners, and special tools shall be included in each package.

1.3 SPECIAL TOOLS

Special tools, such as those supplied by the manufacturer, spanner and socket wrenches, and dogging keys, shall be provided as required to adjust hardware items.

PART 2 PRODUCTS

2.1 GENERAL HARDWARE REQUIREMENTS

Hardware shall conform to the requirements specified herein and the HARDWARE SETS listing at the end of this section. Hardware set numbers correspond to the set numbers shown on the drawings.

2.2 TEMPLATES

Requirements for hardware to be mounted on metal doors or metal frames shall be coordinated between hardware manufacturer and door or frame manufacturer by use of templates and other information to establish location, reinforcement required, size of holes, and similar details. Templates of hinges shall conform to BHMA A156.7.

2.3 HINGES

Hinges shall conform to BHMA A156.1. Hinges used on metal doors and frames shall also conform to BHMA A156.7. Except as otherwise specified, hinge sizes shall conform to the hinge manufacturer's printed recommendations.

2.4 LOCKS AND LATCHES

Locksets, and latchsets shall be the products of a single manufacturer. Lock and latch set trim (handles, roses and escutcheons) shall be of a simple design in accordance with manufacturer's standard practice.

2.4.1 Mortise Lock and Latchsets

Mortise lock, latchsets, and strikes shall be series 1000 and shall conform to BHMA A156.13, operational Grade 1. Strikes for doors shall be rectangular without curved lip. Mortise type locks and latches for doors 44 mm (1-3/4 inches) thick and over shall have adjustable bevel fronts or otherwise conform to the shape of the door. Mortise locks shall have armored fronts.

2.4.2 Lock Cylinders (Mortise)

Lock cylinders shall comply with BHMA A156.5. Lock cylinder shall have not less than six pins. A grand master keying system shall be provided. All locksets and padlocks shall accept the same interchangeable cores.

2.4.3 Lock Trim

Lock trim shall be cast, forged, or heavy wrought construction of commercial plain design. In addition to meeting the test requirement of BHMA A156.2 or BHMA A156.13, knobs, roses, and escutcheons shall be 1.27 mm (0.050 inch) thick, if unreinforced. If reinforced, the outer shell shall be 0.89 mm (0.035 inch) thick and the combined thickness shall be 1.78 mm (0.070 inch) except that knob shanks shall be 1.52 mm (0.060 inch) thick.

2.5 KEYING

Locks shall be keyed in sets or subsets as scheduled. Locks shall be furnished with the manufacturer's standard construction key system. Change keys for locks shall be stamped with change number and the inscription "U.S. Property - Do Not Duplicate." Keys shall be supplied as follows:

Locks:	2 change keys each lock.
Master keyed sets:	6 keys each set.
Grand master keys:	2 total.

The keys shall be furnished to the Contracting Officer arranged in a container storage in sets or subsets as scheduled.

2.6 DOOR CLOSING DEVICES

Door closing devices shall conform to BHMA A156.4, Grade 1. Closing devices shall be products of one manufacturer for each type specified.

2.6.1 Surface Type Closers

Surface type closers shall be Grade 1, Series C02000 Standard Cover with options PT-4H, Size 1 or 2 through Size 6, and PT-4D with back check position valve. Except as otherwise specified, sizes shall conform to the manufacturer's published recommendations.

2.7 DOOR CONTROLS - OVERHEAD HOLDERS

Door controls - overhead holders shall conform to BHMA A156.8.

2.8 AUXILIARY HARDWARE

Door stops shall conform to BHMA A156.16. Dust-proof strikes shall be Type L04011.

2.9 MISCELLANEOUS

2.9.1 Metal Thresholds

Thresholds shall conform to BHMA A156.21. Thresholds for exterior doors shall be extruded aluminum of the type indicated and shall provide proper clearance and an effective seal with specified weather stripping. Latching thresholds shall conform to BHMA A156.3, Type 26, and of such height that the bottom of the door shall be 3 mm (1/8 inch) over the tread of the threshold and 3 mm (1/8 inch) below the top of the stop. Where required, thresholds shall be modified to receive projecting bolts. Air leakage rate of weatherstripping shall not exceed 0.775 l/s per lineal meter (0.5 cubic feet per minute per lineal foot) 0.5 cubic feet per minute per lineal foot of crack when tested in accordance with ASTM E 283 at standard test conditions.

2.10 FASTENINGS

Fastenings of proper type, size, quantity, and finish shall be supplied with each article of hardware. Fastenings exposed to the weather in the finished work shall be of brass, bronze, or stainless steel.

2.11 FINISHES

Unless otherwise specified, finishes shall conform to those identified in BHMA A156.18.

PART 3 EXECUTION

3.1 APPLICATION

Hardware shall be located in accordance with DHI-04 and DHI-05. When approved, slight variations in locations or dimensions will be permitted. Application shall be in accordance with DHI-02 or DHI A115-W. Door control devices for exterior doors such as closers and holders, shall normally attach to doors with thru bolts and nuts or sex bolts.

3.1.1 Door-Closing Devices

Door-closing devices shall be installed and adjusted in accordance with the templates and printed instructions supplied by the manufacturer of the devices. Doors shall have the closer mounted on the room side of the door.

3.1.2 Thresholds

Thresholds shall be secured with a minimum of 3 fasteners per single door width. Exterior thresholds shall be installed in a bed of sealant with expansion anchors and stainless steel screws. Minimum screw size shall be No. 10 length, dependent on job conditions, with a minimum of 19 mm (3/4-inch) thread engagement into the floor or anchoring device used.

3.1.3 Weatherseals

Weatherseals shall be snug to door face and fastened in place with color matched metal screws after door and frames have been finish painted. Screw spacing shall be as recommended by manufacturer.

3.2 HARDWARE SETS

HW-4	Single
3	Hinges
1	Lockset/Levers & Cylinder
1	Closers
1	Overhead Stop
1	Threshold
1	Door Bottom Seal
3	Silencers
	Weatherstrip

3.3 CONTRACTOR QUALITY CONTROL

The Contractor shall establish and maintain a quality control system to assure compliance with contract requirements and shall maintain records of his quality control for all operations including but not limited to the following:

(1) Inspection of material delivered to the project site against approved material data.

(2) Storage and handling of materials.

(3) Installation as indicated.

Copies in duplicate of these records and tests, as well as records of corrective action taken when results are unsatisfactory, shall be furnished to the Contracting Officer within 1 working day of the inspection or test.

PART 4 SUBMITTAL SUMMARY (Not Applicable)

- END OF SECTION -

* * * * *

This page is intentionally blank.

TECHNICAL SPECIFICATION
FOR
GLASS AND GLAZING
SECTION 08810

ENVIRONMENTAL RESTORATION DISPOSAL FACILITY (ERDF)
CELLS 3 & 4 CONSTRUCTION

REV	DATE	REASON FOR REVISION	ORIGINATOR	CHECKER	GROUP LEADER	TASK DESIGN LEAD	PROJECT ENGINEER
C	01/20/98	100% Design Review	MGM	LHA			
B	11/21/97	60% Design Review	MGM	LHA			

	RICHLAND ENVIRONMENTAL RESTORATION PROJECT	JOB NO. 22192
		SPECIFICATION NO. 0600X-SP-A0018
		SHEET 1 of 5

This page is intentionally blank.

SECTION 08810

GLASS AND GLAZING

PART 1 GENERAL

1.1 REFERENCES

The publications listed below form a part of this specification to the extent referenced. The publications are referred to in the text by basic designation only.

AMERICAN NATIONAL STANDARDS INSTITUTE (ANSI)

ANSI Z97.1	(1984, R-1994) Safety Glazing Materials Used in Buildings - Safety Performance Specifications and Methods of Tests

AMERICAN SOCIETY FOR TESTING AND MATERIALS (ASTM)

ASTM C 509	(1991) Elastomeric Cellular Preformed Gasket and Sealing Material
ASTM C 669	(1975; R 1989) Glazing Compounds for Back Bedding and Face Glazing of Metal Sash
ASTM C 864	(1990) Dense Elastomeric Seal Gaskets, Setting Blocks, and Spacers
ASTM C 920	(1987) Elastomeric Joint Sealants
ASTM C 1048	(1992) Heat-Treated Flat Glass - Kind HS, Kind FT Coated and Uncoated Glass
ASTM D 395	(1989) Rubber Property - Compression Set

FEDERAL SPECIFICATIONS (FS)

FS TT-P-00791	(Rev B; Am 2) Putty: Linseed-Oil Type, (For Wood-Sash-Glazing)

FLAT GLASS MARKETING ASSOCIATION (FGMA)

FGMA-01	(1990) Glazing Manual

1.2 SYSTEM DESCRIPTION

Glazing systems shall be fabricated and installed watertight and airtight to withstand thermal movement and wind loading without glass breakage, gasket failure, deterioration of glazing accessories, and defects in the work.

1.3 DELIVERY, STORAGE AND HANDLING

Glazing compounds shall be delivered to the site in the manufacturer's unopened containers. Glass shall be stored indoors in a safe, well ventilated dry location in accordance with manufacturer's instructions, and shall not be unpacked until needed for installation. Glass shall not be stored on site over 1 month.

1.4 PROJECT/SITE CONDITIONS

Glazing work shall not be started until outdoor temperature is above 40 degrees F and rising, unless procedures recommended by glass manufacturer and approved by Contracting Officer are made to warm the glass and rabbet surfaces. Ventilation shall be provided to prevent condensation of moisture on glazing work during installation. Glazing work shall not be performed during damp or raining weather.

PART 2 PRODUCTS

2.1 HEAT-TREATED GLASS (Tempered Glass)

Heat-treated glass shall conform to the following requirements.

2.1.1 Tempered Glass

Tempered glass shall be fully tempered transparent flat type glass conforming with ASTM C 1048. Clear tempered transparent glass shall be Class 1-clear, Quality q3-glazing select with 100 percent light transmittance and 0 percent shading coefficient. Tinted (gray color) tempered transparent glass shall be Class 2-tinted, Condition A uncoated surface, Quality q-3 glazing select 40-50 percent light transmittance and 75-76 percent shading coefficient. Tempered glass shall meet ASTM C 1048 and ANSI Z97.1 requirements qualifying as a safety glazing material. Interior tempered glass shall be clear 1/4 inch thick tempered glass unless otherwise noted. Tempered glass in exterior doors shall be 1 inch thick gray tempered glass.

2.2 GLAZING ACCESSORIES

2.2.1 Preformed Tape

Preformed tape shall be elastomeric rubber extruded into a ribbon of a width and thickness suitable for specific application. Tape shall be of type which will remain resilient, have excellent adhesion, and be chemically compatible to glass, metal, or wood.

2.2.2 Sealant

Sealant shall be elastomeric conforming to ASTM C 920, Type S or M, Grade NS, Class 12.5, Use G, of type chemically compatible with setting blocks, preformed sealing tape and sealants used in manufacturing insulating glass. Color of sealant shall be light gray.

2.2.3 Glazing Gaskets

Glazing gaskets shall be extruded with continuous integral locking projection designed to engage into metal glass holding members to provide a watertight seal during dynamic loading, building movements and thermal movements. Glazing gaskets for a single glazed opening shall be continuous one-piece units with factory-fabricated injection-molded corners free of flashing and burrs. Glazing gaskets shall be in lengths or units recommended by manufacturer to ensure against pull-back at corners.

2.2.3.1 Fixed Glazing Gaskets

Fixed glazing gaskets shall be closed-cell (sponge) smooth extruded compression gaskets of cured elastomeric virgin neoprene compounds conforming to ASTM C 509, Type 2, Option 1.

2.2.3.2 Wedge Glazing Gaskets

Wedge glazing gaskets shall be high-quality extrusions of cured elastomeric virgin neoprene compounds, ozone resistant, conforming to ASTM C 864, Option 1, Shore A durometer between 65 and 75.

2.2.3.3 Aluminum Framing Glazing Gaskets

Glazing gaskets for aluminum framing shall be permanent, elastic, non-shrinking, non-migrating, watertight and weathertight.

2.2.4 Putty and Glazing Compound

Glazing compound shall conform to ASTM C 669 for face-glazing metal sash. Putty shall be linseed oil type conforming to FS TT-P-00791 for face-glazing primed wood sash. Putty and glazing compounds shall never be used with insulating glass or laminated glass.

2.2.5 Setting and Edge Blocking

Neoprene setting blocks shall be dense extruded type conforming to ASTM D 395, Method B, Shore A durometer between 70 and 90. Edge blocking shall be Shore A durometer of 50 (+ or -) 5. Silicone setting blocks shall be required when blocks are in contact with silicone sealant. Profiles, lengths and locations shall be as required and recommended in writing by glass manufacturer.

PART 3 EXECUTION

3.1 PREPARATION

Detrimental materials shall be removed from glazing rabbet and glass surfaces and wiped dry with solvent. Glazing surfaces shall be dry and free of frost.

3.2 INSTALLATION

Glass and glazing work shall be performed in accordance with FGMA-01 and the glass manufacturer's instructions and warranty requirements. Glass shall be installed with factory labels intact and removed only when instructed. Edges and corners shall not be ground, nipped or cut after leaving factory. Springing, forcing or twisting of units during installation will not be permitted.

3.3 CLEANING

Upon completion of project, outside surfaces of glass shall be washed clean and the inside surfaces of glass shall be washed and polished in accordance with glass manufacturer's recommendations.

3.4 PROTECTION

Glass work shall be protected immediately after installation. Glazed openings shall be identified with suitable warning tapes, cloth or paper flags, attached with non-staining adhesives. Reflective glass shall be protected with a protective material to eliminate any contamination of the reflective coating. Protective material shall be placed far enough away from the coated glass to allow air to circulate to reduce heat buildup and moisture accumulation on the glass. Glass units which are broken, chipped, cracked, abraded, or otherwise damaged during construction activities shall be removed and replaced with new units.

3.5 CONTRACTOR QUALITY CONTROL

The Contractor shall establish and maintain a quality control system to assure compliance with contract requirements and shall maintain records of his quality control for all operations including but not limited to the following:

(1) Fabrication and installation is watertight and airtight, and free from defects.

Copies in duplicate of these records and tests, as well as records of corrective action taken when results are unsatisfactory, shall be furnished to the Contracting Officer within 1 working day of the inspection or test.

PART 4 SUBMITTALS (Not Applicable)

- END OF SECTION -

* * * * *

TECHNICAL SPECIFICATION
FOR
PAINTING, GENERAL
SECTION 09900

ENVIRONMENTAL RESTORATION DISPOSAL FACILITY (ERDF)
CELLS 3 & 4 CONSTRUCTION

REV	DATE	REASON FOR REVISION	ORIGINATOR	CHECKER	GROUP LEADER	TASK DESIGN LEAD	PROJECT ENGINEER
C	01/20/98	100% Design Review	MGM	LHA			
B	11/21/97	60% Design Review	MGM	LHA			

	RICHLAND ENVIRONMENTAL RESTORATION PROJECT	JOB NO. 22192
		SPECIFICATION NO. 0600X-SP-A0019
		SHEET 1 of 8

This page is intentionally blank.

SECTION 09900

PAINTING, GENERAL

PART 1 GENERAL

1.1 REFERENCES

The publications listed below form a part of this specification to the extent referenced. The publications are referred to in the text by basic designation only.

AMERICAN CONFERENCE OF GOVERNMENTAL INDUSTRIAL HYGIENISTS (ACGIH)

ACGIH-02	(1991) 1991-1992 Threshold Limit Values for Chemical Substances and Physical Agents and Biological Exposure Indices

FEDERAL SPECIFICATIONS (FS)

FS TT-E-489	(Rev H) Enamel, Alkyd, Gloss, Low VOC Content
FS TT-E-508	(Rev C; Am 1) Enamel, Interior Semigloss, Tints and White
FS TT-E-509	(Rev C) Enamel, Odorless, Alkyd, Interior, Semigloss, White and Tints
FS TT-P-25E	(Rev F, Am 1) Primer Coating, Exterior Under Coat for Wood, Ready-Mixed, White and Tints
FS TT-P-96	(Rev D, Am 1) Paint, Latex Base, For Exterior Surfaces, Whites and Tints
FS TT-P-645	(Rev B) Primer, Paint, Zinc-Molybdate, Alkyd Type

STEEL STRUCTURES PAINTING COUNCIL (SSPC)

SSPC SP 1	(1982) Solvent Cleaning
SSPC SP 2	(1989) Hand Tool Cleaning
SSPC SP 3	(1989) Power Tool Cleaning
SSPC SP 7	(1991) Brush-Off Blast Cleaning

1.2 PACKAGING, LABELING, AND STORING

Paints shall be in sealed containers that legibly show the designated name, formula or specification number, batch number, color, quantity, date of manufacture, manufacturer's formulation number, manufacturer's directions including any warnings and special precautions, and name of manufacturer. Pigmented paints shall be furnished in containers not larger than 20 liters (5 gallons). Paints and thinner shall be stored in accordance with the manufacturer's written directions and as a minimum stored off the ground, under cover, with sufficient ventilation to prevent the buildup of flammable vapors and at temperatures between 4 and 35 degrees C (40 and 95 degrees F). Paints shall be stored on the project site or segregated at the source of supply sufficiently in advance of need to allow 30 days for testing.

1.3 APPROVAL OF MATERIALS

Materials will be approved based on test reports furnished with them. If materials are approved based on test reports furnished, samples will be retained by the Government for testing should the materials appear defective during or after application. In addition to any other remedies under the contract the cost of retesting defective materials will be at the Contractor's expense.

1.4 ENVIRONMENTAL CONDITIONS

Unless otherwise recommended by the paint manufacturer, the ambient temperature shall be between 7 and 35 degrees C (45 and 95 degrees F) when applying coatings other than water-thinned, epoxy, and moisture-curing polyurethane coatings. Water-thinned coatings shall be applied only when ambient temperature is between 10 and 32 degrees C (50 and 90 degrees F). Epoxy shall be applied only within the minimum and maximum temperatures recommended by the coating manufacturer.

1.5 SAFETY AND HEALTH

Work shall comply with applicable Federal laws and regulations, and with the Contractors Safety and Health Plan. The Safety and Health Plan shall include analyses of the potential impact of painting operations on painting personnel and on others involved in and adjacent to the work zone.

1.5.1 Worker Exposures

Exposure of workers to chemical substances shall not exceed limits as established by ACGIH-02, or as required by a more stringent applicable regulation.

1.5.2 Toxic Compounds

Toxic compounds having ineffective physiological properties, such as odor or irritation levels, shall not be used unless approved by the Contracting Officer.

1.5.3 Training

Workers having access to an affected work area shall be informed of the contents of the applicable material safety data sheets (MSDS) and shall be informed of potential health and safety hazard and protective controls associated with materials used on the project. An affected work area is one which may receive mists and odors from the painting operations. Workers involved in preparation, painting and clean-up shall be trained in the safe handling and application, and the exposure limit, for each material

which the worker will use in the project. Personnel having a need to use respirators and masks shall be instructed in the use and maintenance of such equipment.

1.5.4 Coordination

Work shall be coordinated to minimize exposure of other Contractor personnel, and visitors to mists and odors from preparation, painting and clean-up operations.

PART 2 PRODUCTS

2.1 PAINT

The term "paint" as used herein includes enamels, paints, epoxy, and other coatings, whether used as prime, intermediate, or finish coat. Paint shall conform to the respective specifications listed for use in the painting schedules at the end of this section.

2.1.1 Colors and Tints

Colors shall be as selected by the Contracting Officer from manufacturer's standard colors, as indicated. Manufacturer's standard color is for identification of color only. Tinting of paints shall be done by the manufacturer. The color of the undercoats shall vary slightly from the color of the next coat.

2.1.2 Lead

Paints containing lead in excess of 0.06 percent by weight of the total nonvolatile content (calculated as lead metal) shall not be used.

2.1.3 Chromium

Paints containing zinc chromate or strontium chromate pigments shall not be used.

2.1.4 Volatile Organic Compound (VOC) Content

Paints shall comply with applicable state and local laws enacted to insure compliance with Federal Clean Air Standards and shall conform to the restrictions of the local air pollution control authority.

2.1.5 Epoxy

Amerlock 400, or approved equal, manufactured by Ameron.

PART 3 EXECUTION

3.1 PROTECTION OF AREAS NOT TO BE PAINTED

Items not to be painted which are in contact with or adjacent to painted surfaces shall be removed or protected prior to surface preparation and painting operations. Items removed prior to painting shall be replaced when painting is completed. Following completion of painting, workmen skilled in the trades involved shall reinstall removed items. Surfaces contaminated by coating materials shall be restored to original condition.

3.2 SURFACE PREPARATION

Surfaces to be painted shall be clean and free of foreign matter before application of paint or surface treatments. Oil and grease shall be removed with clean cloths and cleaning solvents prior to mechanical cleaning. Cleaning solvents shall be of low toxicity with a flashpoint in excess of 38 degrees C (100 degrees F). Cleaning shall be programmed so that dust and other contaminants will not fall on wet, newly painted surfaces. Exposed ferrous metals such as nail heads on or in contact with surfaces to be painted with water-thinned paints, shall be spot-primmed with a suitable corrosion-inhibitive primer capable of preventing flash rusting and compatible with the coating specified for the adjacent areas.

3.2.1 Concrete Surfaces

Concrete surfaces shall be allowed to dry at least 30 days before painting, except concrete slab on grade which shall be allowed to cure 90 days before painting. Glaze, efflorescence, laitance, dirt, grease, oil, asphalt, surface deposits of free iron and other foreign matter shall be removed prior to painting. Surfaces to receive epoxy coatings shall be acid-etched or mechanically abraded as specified by the coating manufacturer, rinsed with water, allowed to dry, and treated with the manufacturer's recommended conditioner prior to application of the first coat.

3.2.2 Ferrous Surfaces

Ferrous surfaces including those that have been shop-coated, shall be solvent-cleaned. Surfaces that contain loose rust, loose mill scale, and other foreign substances shall be cleaned mechanically with hand tools according to SSPC SP 2, power tools according to SSPC SP 3 or by sandblasting according to SSPC SP 7. Shop-coated ferrous surfaces shall be protected from corrosion by treating and touching up corroded areas immediately upon detection.

3.2.3 Nonferrous Metallic Surfaces

Nonferrous metal surfaces shall be solvent-cleaned in accordance with SSPC SP 1.

3.2.4 Plywood Surfaces

Plywood surfaces shall be dry and shall have all loose dirt and dust removed by brushing with a soft brush, rubbing with a cloth, or vacuum-cleaning prior to application of the first-coat material.

3.3 MIXING AND THINNING

When thinning is approved as necessary to suit surface, temperature, weather conditions, or application methods, paints may be thinned in accordance with the manufacturer's directions. When thinning is allowed, paints shall be thinned immediately prior to application with not more than 0.5 L (1 pint) of suitable thinner per liter (gallon). The use of thinner shall not relieve the Contractor from obtaining complete hiding, full film thickness, or required gloss. Thinning shall not cause the paint to exceed local limits on volatile organic compounds. Paints of different manufacturers shall not be mixed.

3.3.1 Two-Component Systems

Two-component systems shall be mixed in accordance with manufacturer's instructions. Any thinning of the first coat to ensure proper penetration and sealing shall be as recommended by the manufacturer for each type of substrate.

3.4 APPLICATION

Painting practices shall comply with applicable state and local laws enacted to insure compliance with Federal Clean Air Standards. Unless otherwise specified or recommended by the paint manufacturer, paint may be applied by brush, roller, or spray. At the time of application, paint shall show no signs of deterioration. Uniform suspension of pigments shall be maintained during application. Each coat of paint shall be applied so dry film shall be of uniform thickness and free from runs, drops, ridges, waves, pinholes or other voids, laps, brush marks, and variations in color, texture, and finish. Hiding shall be complete. Rollers for applying paints and enamels shall be of a type designed for the coating to be applied and the surface to be coated. Special attention shall be given to insure that all edges, corners, crevices, welds, and rivets receive a film thickness equal to that of adjacent painted surfaces. Paints, except water-thinned types, shall be applied only to surfaces that are completely free of moisture as determined by sight or touch.

3.4.1 Ventilation

Affected areas shall be ventilated during paint application so that workers exposure to chemical substances shall not exceed limits as established by ACGIH-02, or as required by a more stringent applicable regulation.

3.4.2 Respirators

Operators and personnel in the vicinity of operating paint sprayers shall wear respirators.

3.4.3 First Coat

The first coat on plywood shall include repeated touching up of suction spots or overall application of primer or sealer to produce uniform color and gloss. Excess sealer shall be wiped off after each application.

3.4.4 Timing

Surfaces that have been cleaned, pre-treated, and otherwise prepared for painting shall be given a coat of the specified first coat as soon as practical after such pretreatment has been completed, but prior to any deterioration of the prepared surface. Sufficient time shall elapse between successive coats to permit proper drying. This period shall be modified as necessary to suit weather conditions. Manufacturer's instructions for application, curing and drying time between coats of two-component systems shall be followed.

3.4.5 Fillers

Concrete surface voids shall be filled with filler material recommended by the paint manufacturer: however, surface irregularities need not be completely filled. The dried filler shall be uniform and free of pinholes. Filler shall not be applied over caulking compound.

3.4.6 Ferrous-Metal Primer

Primer for ferrous-metal shall be applied to ferrous surfaces to receive paint other than asphalt varnish prior to deterioration of the prepared surface. The semitransparent film applied to some pipes and tubing at the mill is not to be considered a shop coat, but shall be overcoated with the specified ferrous-metal primer prior to application of finish coats.

3.5 SURFACES TO BE PAINTED

Surfaces listed in the painting schedules at the end of this section, other than those listed in paragraph SURFACES NOT TO BE PAINTED, shall be painted as scheduled.

3.6 SURFACES NOT TO BE PAINTED

Surfaces of hardware, fittings, and other factory finished items shall not be painted.

3.7 CLEANING

Cloths, cotton waste and other debris that might constitute a fire hazard shall be placed in closed metal containers and removed at the end of each day. Upon completion of the work, staging, scaffolding, and containers shall be removed from the site or destroyed in an approved manner. Paint and other deposits on adjacent surfaces shall be removed and the entire job left clean and acceptable.

3.8 PAINTING SCHEDULES

The following painting schedules identify the surfaces to be painted and prescribe the paint to be used and the number of coats of paint to be applied. Contractor options are indicated by ------or------ between optional systems or coats.

INTERIOR PAINTING SCHEDULE

Surface	System No.	First Coat	Second Coat	Third Coat
Concrete, floors and curb in Crest Pad Building Pump room	P6	Amerlock 400 or equal @ 5-8 mils dry	Amerlock 400 or equal @ 5.8 mils dry	None
Wood and Plywood Surfaces:	P2	FS TT-P-25E @ 1.6 mil dry	FS TT-P-96 @ 1.6 mil dry	FS TT-P-96 @ 1.6 mil dry
Ferrous metal factory-primed mechanical and electrical equipment.	P5	FS TT-E-489, @ 2-2.5 mil dry	FS TT-E-489, @ 2-2.5 mil dry	None
Ferrous metal:	P5	FS TT-P-645 @ 2-2.5 mil dry	FS TT-E-508 -----or----- FS TT-E-509 @ 2-2.5 mil dry	

3.9 CONTRACTOR QUALITY CONTROL

The Contractor shall establish and maintain a quality control system to assure compliance with contract requirements and shall maintain records of his quality control for all operations including but not limited to the following:

(1) Inspection of material delivered to the project site against approved material data.

(2) Storage and handling of materials.

(3) Installation as indicated.

Copies in duplicate of these records and tests, as well as records of corrective action taken when results are unsatisfactory, shall be furnished to the Contracting Officer within 1 working day of the inspection or test.

PART 4 SUBMITTAL SUMMARY (Not Applicable)

- END OF SECTION -

* * * * *

This page is intentionally blank.

TECHNICAL SPECIFICATION
FOR
LEACHATE PUMPS
SECTION 11210

ENVIRONMENTAL RESTORATION DISPOSAL FACILITY (ERDF)
CELLS 3 & 4 CONSTRUCTION

REV	DATE	REASON FOR REVISION	ORIGINATOR	CHECKER	GROUP LEADER	TASK DESIGN LEAD	PROJECT ENGINEER
C	1/20/98	100% Design Review	FSS	LHA			
B	11/21/97	60% Design Review	FSS	LHA			

	RICHLAND ENVIRONMENTAL RESTORATION PROJECT	JOB NO. 22192
		SPECIFICATION NO. 0600X-SP-M0016
		SHEET 1 of 5

This page is intentionally blank.

SECTION 11210

LEACHATE PUMPS

PART 1 GENERAL

1.1 DESCRIPTION

This section includes:

a. The low-capacity submersible pumps in the primary and secondary leachate collection systems of the ERDF trench.

b. The high-capacity submersible pump in the primary leachate collection system only.

1.2 SUBMITTALS

Submittals shall be furnished in accordance with Exhibit I.

SD-01 Data

Submit detailed information on proposed pumps, motors, materials, connections, and electrical requirements.

SD-19 O&M Manuals

Submit three copies of operating and maintenance instructions prior to 75 percent completion of the project. Operating instructions shall outline the step-by-step procedures required for system startup, operation, and shutdown. The instructions shall include the manufacturer's name, model number, service manual, parts list, and brief description of all equipment and their operating features. Maintenance instructions shall include routine maintenance procedures, possible breakdowns and repairs, and troubleshooting guide. As-built installation and wiring diagrams shall be submitted at the conclusion of the project.

PART 2 PRODUCTS

2.1 SUBMERSIBLE PUMPS

2.1.1 General

a. Pumps shall be constructed such that all wetted parts are type 304 or 316 stainless steel, Teflon, and other highly corrosion resistant materials.

b. The pump and motor shall have bearings which permit the pump to be operated in continuous or intermittent service in the horizontal position. The pump shaft shall be type 304 stainless steel and rotate on Teflon bearings which are product-lubricated.

c. The external portions of the case shall be free of sharp edges or burrs which would damage the HDPE slope riser pipes, or which might prevent the free travel of the pump along the enclosing pipe.

d. The pumps shall be permanently mounted on factory-installed wheeled trolley assemblies to facilitate placement and removal from the riser pipes.

e. Each pump shall be fitted with a stainless steel lifting cable of sufficient strength to raise the pump unit, discharge line, power cable, and any other associated equipment.

f. Each pump shall have a built-in, stainless steel check valve with a Teflon seat.

g. The motors shall be submersible, hermetically sealed Franklin motors constructed of 316 stainless steel. Motors shall be wired to run on three phase, 480 Volt, 60 Hz service. The motors shall have thermal protection in the motor windings to protect the windings from overload. The unit shall restart automatically after the motor cools.

h. Pumps shall be commercially-available units from a manufacturer normally engaged in the production of leachate removal pumps for horizontal installations through side slope riser pipes.

i. Pumps shall be capable of draining the sumps to the lowest levels possible, but in any case shall drain to less than 1 foot.

2.1.2 Low-Capacity Submersible Pumps

a. The low-capacity submersible pumps for both primary and secondary leachate collection systems shall be identical.

b. The pumps shall be rated as follows:

RATED CAPACITY	15 gpm
TOTAL DYNAMIC HEAD	140 feet

c. Schedule:

Pump No.	Description
2-P-14, 2-P-17	Primary Sump
2-P-15, 2-P-18	Secondary Sump

2.1.3 High-Capacity Submersible Pump

a. The high-capacity submersible pump shall be rated approximately as follows:

RATED CAPACITY	250 gpm
TOTAL DYNAMIC HEAD	120 feet

b. Schedule:

Pump No.	Description
2-P-13, 2-P-16	Primary Sump

2.2 PUMP MARKING

Pumps shall have stainless steel (SS) indented marker plates marked with the pump number, Panduit Corporation, Catalog No. MMP350-C or approved equal, held in place with SS ties, Panduit Corporation,

Catalog No. MLT4S-CP or approved equal. Characters shall be 3/16" in height minimum, indented with indenter marker press, Panduit Corporation, Catalog No. IMP187, or approved equal.

PART 3 EXECUTION

3.1 INSTALLATION

Contractor shall install all pumps and motors in accordance with manufacturers' instructions and as shown on the Drawings. Installation shall include all piping, lifting cables, and wiring.

3.2 ACCEPTANCE TESTING

Contractor shall test pumps on-site to demonstrate their ability to operate at the design flow rate and dynamic head.

3.3 CONTRACTOR QUALITY CONTROL

The Contractor shall establish and maintain a quality control system to assure compliance with contract requirements and shall maintain records of his quality control for all operations including but not limited to the following:

(1) Acceptance test data and results.

(2) O&M Manuals including as-built wiring diagrams.

Copies in duplicate of these records and tests, as well as records of corrective action taken when results are unsatisfactory, shall be furnished to the Contracting Officer within one working day following the inspection or test.

PART 4 SUBMITTAL SUMMARY

4.1 SUMMARY OF SUBMITTALS

Submittals to be furnished by the Contractor shall include the following:

Paragraph	Item	SD
11210-1.2	O & M Manuals	19
11210-2.1	Pump Manufacturer's Data	01

Code for Type of Submittal (SD)

01 - Data
04 - Drawings
06 - Instructions
07 - Schedules
08 - Statements
09 - Reports
13 - Certificates
14 - Samples
18 - Records
19 - O & M Manuals

* * * * *

TECHNICAL SPECIFICATION
FOR
HORIZONTAL END SUCTION PUMPS
SECTION 11211

ENVIRONMENTAL RESTORATION DISPOSAL FACILITY (ERDF)
CELLS 3 & 4 CONSTRUCTION

C	01/20/98	100% Design Review	MGM	LHA			
REV	DATE	REASON FOR REVISION	ORIGINATOR	CHECKER	GROUP LEADER	TASK DESIGN LEAD	PROJECT ENGINEER

RICHLAND ENVIRONMENTAL RESTORATION PROJECT	JOB NO. 22192
	SPECIFICATION NO. 0600X-SP-M0017
	SHEET 1 of 12

SECTION 11211

HORIZONTAL END SUCTION PUMPS

PART 1 GENERAL

1.1 REFERENCES

The publications listed below form a part of this specification to the extent referenced. The publications are referred to in the text by basic designation only.

AMERICAN SOCIETY FOR TESTING AND MATERIALS (ASTM)

ASTM A 123	(1989a) Zinc (Hot-Dip Galvanized) Coatings on Iron and Steel Products
ASTM A 153	(1982; R 1987) Zinc Coating (Hot-Dip) on Iron and Steel Hardware
ASTM A 307	(1991) Carbon Steel Bolts and Studs, 60,000 PSI Tensile Strength

AMERICAN SOCIETY OF MECHANICAL ENGINEERS (ASME)

ASME B1.1	(1989; B1.1a) Unified Inch Screw Threads (UN and UNR Thread Form)
ASME B16.1	(1989) Cast Iron Pipe Flanges and Flanged Fittings
ASME B16.5	(1988; Errata Oct 1988) Pipe Flanges and Flanged Fittings
ASME B40.1	(1991) Gauges - Pressure Indicating Dial Type - Elastic Element

FEDERAL SPECIFICATION (FS)

FS TT-E-489	(Rev H) Enamel, Alkyd, Gloss, Low Voc Content

HYDRAULIC INSTITUTE (HI)

HI-01	(1983) Standards for Centrifugal, Rotary & Reciprocating Pumps

NATIONAL ELECTRICAL MANUFACTURERS ASSOCIATION (NEMA)

NEMA MG 1	(1987; Rev 1) Motors and Generators

NATIONAL FIRE PROTECTION ASSOCIATION (NFPA)

NFPA 70 (1993) National Electrical Code

1.2 GENERAL REQUIREMENTS

1.2.1 Standard Products

Material and equipment shall be the standard products of a manufacturer regularly engaged in the manufacture of such products and shall essentially duplicate equipment that has been in satisfactory waterworks operation at least 2 years prior to bid opening. Pumps and motors of the same types shall each be the product of one manufacturer.

1.2.2 Description

The pumps shall be horizontal end suction centrifugal pumps of the types indicated and specified. The single driving units for the pumps shall be electric motors as indicated and specified.

1.2.3 Safety Requirements

Gears, couplings, projecting set-screws, keys, and other rotating parts, so located that any person can come in close proximity thereto, shall be fully enclosed or properly guarded.

1.2.4 Nameplates

Pumps and motors shall have a standard nameplate securely affixed in a conspicuous place showing the manufacturer's name, address, type or style, model, serial number, and catalog number. In addition, the nameplate for each pump shall show the capacity in gpm, at rated speed in rpm, and head in feet of water. Nameplate for each electric motor shall show at least the minimum information required by 10.38 NEMA MG 1. Such other information as the manufacturer may consider necessary to complete identification shall be shown on the nameplate.

1.2.5 Electrical Work

Electrical motor driven equipment specified herein shall be provided complete with motors, motor starters, and controls. Electric equipment and wiring shall be in accordance with Section 16415 ELECTRICAL WORK. Electrical characteristics shall be as indicated. Motor starters shall be provided complete with properly sized thermal overload protection in each phase and other appurtenances necessary for the motor control specified. Each motor shall be of sufficient capacity to drive the equipment at the specified capacity without exceeding the nameplate rating of the motor when operating at proper electrical system voltage and frequency. Manual or automatic control and protective or signal devices required for the operation herein specified and any control wiring required for controls and devices but not shown on electrical plans shall be provided under this section of the specifications.

1.2.6 Selection Criteria

Pumps shall be designed using hydraulic criteria based upon actual model developmental test data. Pumps shall be selected at a point within the maximum efficiency for a given impeller casing combination. Deviations within 3 percent of maximum efficiency are permissible, provided the lesser efficiency is not less than the scheduled efficiency.

1.2.7 Conformance With Agency Requirements

Where materials or equipment are specified to be an approved type, the seal or label of approval from a nationally recognized testing agency, adequately equipped and competent to perform such services, shall be attached thereto.

1.2.8 Verification of Dimensions

The Contractor shall become familiar with all details of the work, verify all dimensions in the field and shall advise the Contracting Officer of any discrepancy before performing the work.

1.2.9 Factory Tests

Pumps shall be tested by the manufacturer or a nationally recognized testing agency in compliance with Hydraulic Institute Standards. Where two or more identical pumps are specified, each pump shall be tested. Certified test results shall be submitted to the Contracting Officer.

1.3 SUBMITTALS

Submittals shall be furnished in accordance with Exhibit I.

SD-01 Data

Materials and Equipment;

Manufacturer's descriptive data and technical literature, performance charts and curves for all impeller sizes for a given casing, catalog cuts, and installation instructions. Spare parts data for each different item of material and equipment specified, after approval of the detail drawings and not later than 2 months prior to the date of beneficial occupancy. Data shall include a complete list of parts and supplies, with current unit prices and source of supply.

SD-04 Drawings

Centrifugal Pump System;

A complete listing of equipment and materials. Drawings containing complete wiring and schematic diagrams and any other details required to demonstrate that the system has been coordinated and will properly function as a unit. Drawings shall show proposed layout and anchorage of equipment and appurtenances, and equipment relationship to other parts of the work including clearances for maintenance and operation.

SD-09 Reports

Tests;

Test reports in booklet form showing all field tests performed to adjust each component and all field tests performed to prove compliance with the specified performance criteria, upon completion and testing of the installed system. Each test report shall indicate the final position of controls.

SD-19 Operation and Maintenance Manuals

Centrifugal Pump System;

Six complete sets of instructions containing the manufacturer's operating and maintenance instructions for each piece of equipment. The manual shall be submitted not later than at the 75 percent of construction completion date. Each set shall be permanently bound and shall have a hard cover. The following identification shall be inscribed on the covers: the words "OPERATING AND MAINTENANCE INSTRUCTIONS", name and location of the building, name of the Contractor, and contract number. Flysheets shall be placed before instructions covering each subject. Instruction sheets shall be approximately 216 mm BY 278 mm (8-1/2 by 11 inches), with large sheets of drawings folded in. Instructions shall include, but not be limited to, the following:

a. System layout showing piping, valves, and controls.

b. Approved wiring and control diagrams.

c. A control sequence describing startup, operation, and shutdown.

d. Operating and maintenance instructions for each piece of equipment, including lubrication instructions and troubleshooting guide.

e. Manufacturer's bulletins, cuts, and descriptive data; and parts list and recommended spare parts.

1.4 DELIVERY AND STORAGE

All equipment delivered and placed in storage shall be stored with protection from the weather, humidity and temperature variations, dirt and dust, or other contaminants.

PART 2 PRODUCTS

2.1 MATERIALS AND EQUIPMENT

Materials and equipment shall be as specified below and as shown, and shall be suitable for the service intended. Materials and equipment shall be new and unused, except for tests. Where two or more pieces of equipment performing the same function are required, they shall be duplicate products of the same manufacturer.

2.2 LEACHATE TRANSFER PUMPS

The pumps shall be the centrifugal, single-stage, designed for waterworks service in the following configurations:

Pump	Pump No.	Location
Leachate Transfer	2-P-2	Leachate Pump Station
Leachate Transfer	2-P-19	Leachate Pump Station

2.2.1 Pump Service

The pumps shall be utilized for the following service: leachate and washwater.

2.2.2 Pump Drives

The pumps shall have electric drive motors and shall be directly connected to the motors through solid shafts.

2.2.3 Pump Construction

Except as below specified, centrifugal water pumps shall be constructed in accordance with the Hydraulic Institute HI-01.

2.2.4 Pump Characteristics

The pumps shall be capable of discharging quantities at total discharge heads measured at the discharge flange, between the following limits:

Pump No.	Liters per second at total discharge head, m H_2O	Gallons per minute at total discharge head, ft H_2O	Percent Efficiency (Min)
2-P-2	16.7 l/s @ 50.3 m	265 gpm @ 165 ft	70
2-P-19	16.7 l/s @ 50.3 m	265 gpm @ 165 ft	70

Pumps shall operate at optimum efficiencies to produce the most economical pumping system under the conditions encountered. Pumps shall furnish not less than 150 percent of rated capacity at a total discharge head of not less than 60 percent of total rated head.

2.2.5 Pump Casings

Pumps shall be horizontal shaft with cast iron vertical split casing. The casings shall be designed to permit replacement of wearing parts. Pump casings shall be of uniform quality and free from blowholes, porosity, hard spots, shrinkage defects, cracks and other injurious defects. Defects in casings shall not be repaired except when such work is approved and is done by or under the supervision of the pump manufacturer, and then only when the defects are small and do not adversely affect the strength or use of the casing. Casings shall be single or double volute with flanged piping connections conforming to ASME B16.1, Class 125. The direction of shaft rotation shall be conspicuously indicated. The casing shall have tapped openings for air venting, priming, draining, and suction and discharge gauges. A brass or bronze umbrella or vent cock shall be furnished for venting except where automatic air vents are indicated. Drain openings in the volute, intake, or other passages capable of retaining trapped water shall be located in the low point of such passages.

2.2.6 Impellers

Impellers shall be of enclosed design and shall be constructed of cast iron carefully finished with smooth water passageways, and shall be statically and dynamically balanced. Impellers shall be securely keyed to the pump shaft. Impellers on vertical-split pumps shall be additionally secured with a self-locking nut.

2.2.7 Wearing Rings

Wearing rings of cast iron shall be provided for impellers. Wearing rings of a different composition or of a suitable ferrous material shall be provided for pump casings. Casing rings shall be securely fixed in position to prevent rotation. Rings shall be renewable and designed to ensure ease of maintenance.

2.2.8 Shaft

Shaft shall be of high grade steel, accurately machined, and shall be of sufficient size and strength to perform the work required. Bronze renewable shaft sleeves shall be provided for protection of the shaft in contact with water, and in the stuffing boxes. Shaft sleeves shall be keyed to the pump shaft.

2.2.8.1 Gland

Gland shall be one piece type of 304 stainless steel construction with AISI 18-8 stainless steel eyebolts and pins or studs. Hex-nuts shall be bronze or nongalling stainless steel.

2.2.8.2 Stuffing boxes

Stuffing boxes exposed to below atmospheric pressure at any operating condition, including starting, shall be provided with a water seal. Water seal shall consist of nonferrous lantern ring or a seal cage and required connections to the pump case.

2.2.9 Couplings

Couplings shall be of the heavy-duty flexible type, keyed and locked to the shaft. The outside surface of the couplings for horizontal pumps shall be machined parallel to the axis of the shaft. The faces of the couplings shall be machined perpendicular to the axis of the shaft. Disconnecting the couplings shall be accomplished without removing the driver half or the pump half of the couplings from the shaft. Flexible couplings shall not be used to compensate for misalignment of pump.

2.2.10 Balance

All rotating parts of the equipment shall operate throughout the required range without excessive end thrust, vibration, or noise. Defects of this type that cannot be eliminated by installation adjustments will be sufficient cause for rejection of the equipment. Pump impeller assemblies shall be statically and dynamically balanced to within 1/2 percent of W times R squared, where W equals weight and R equals impeller radius. Shaft construction shall be substantial to prevent seal or bearing failure due to vibration. Total shaft peak-to-peak dynamic deflection measured by vibrometer at pump-seal face shall not exceed 0.051 mm (2.0 mils) under shutoff-head operating conditions. Flow from 6.4 mm (1/4 inch) iron pipe size (ips) pipe shall be provided during testing.

2.2.11 Bearings

Bearings shall be ball or roller type, and the main bearings shall take all radial and end thrust. Pumps that depend only on hydraulic balance to overcome end thrust will not be acceptable.

2.2.12 Lubrication

Bearings on horizontal-shaft pumps shall be either oil-bath type or grease type. Each oil reservoir shall be liberal in size and provided with an opening for filling, an overflow opening at the proper location to prevent overfilling, an oil-level sight glass, and a drain at the lowest point. Grease type bearings shall be provided with fittings for a grease gun and, if the bearings are not easily accessible, with grease tubing

extending to convenient locations. The grease fittings shall be of a type that prevent over lubrication and the buildup of pressure injurious to the bearings.

2.2.13 Base Plates

Horizontal-shaft centrifugal pumps shall be provided with a common base for mounting each pump and driving unit of the pump on the same base. Each base shall be constructed of cast iron with a raised lip tapped for drainage, or of welded steel shapes with suitable drainage pan. The drainage structure shall collect the packing box leakage and shall have a 13 mm (1/2-inch) NPT connection to connect it to a drain.

2.2.14 Cocks, Plugs, and Accessories

The pumps shall be equipped with air cocks, drain plugs, and single gauges indicating discharge pressures for all pumps. Gauges, equipped with a shutoff cock and snubber, shall conform to ASME B40.1, and shall be calibrated in kilopascals and pounds per square inch in not more than 13.8 kPa and 2 psi increments. Gauge ranges shall be appropriate for the particular installation. Normal operating suction and discharge pressures of the pump shall be indicated on the mid-point range of the gauges.

2.2.15 Piping Connections

The pump suction and discharge shall be provided with flanged connections of suitable size and suitably arranged for piping shown. Pipe flanges shall conform to ASME B16.1 and ASME B16.5. Piping shall be installed to preclude the formation of air pockets.

2.2.16 Finish

Pump shall have painted or enameled finish as is standard with the manufacturer.

2.3 ELECTRICAL EQUIPMENT

Electrical equipment shall conform to Section 16415 ELECTRICAL WORK. Electrical motor driven equipment herein specified shall be provided complete with motors, motor starters, and controls. Motor controls, equipment, and wiring shall be in accordance with NFPA 70.

2.3.1 Electric Motors

Each electric motor-driven pump shall be driven by a totally-enclosed fan cooled continuous-duty electric motor. Motor shall have a 1.15 service factor. Motors shall be squirrel-cage induction motors having normal-starting-torque and low-starting-current characteristics, and shall be of sufficient size so that the nameplate horsepower rating will not be exceeded throughout the entire published pump characteristic curve. Motor bearings shall provide smooth operations under the conditions encountered for the life of the motor. Adequate thrust bearing shall be provided in the motor to carry the weight of all rotating parts plus the hydraulic thrust and shall be capable of withstanding upthrust imposed during pump starting. Motors shall be rated 480 volts, 3 phase, 60 Hz and such rating shall be stamped on the nameplate. Motors shall conform to NEMA MG 1.

2.3.2 Control Equipment

Manually controlled pumps shall have START-STOP pushbutton in cover. Additional controls or protective devices shall be as indicated. A pump low-water cutoff shall be installed in the tanks and shall shut the pump off when reached. Low level shut-off shall be field adjusted.

2.4 EQUIPMENT APPURTENANCES

2.4.1 Attachments

All necessary bolts, nuts, washers, bolt sleeves, and other types of attachments for the installation of the equipment shall be furnished with the equipment. Bolts shall conform to the requirements of ASTM A 307 and nuts shall be hexagonal of the same quality as the bolts used. Threads shall be clean-cut and shall conform to ASME B1.1. Bolts, nuts, and washers specified to be galvanized or not otherwise indicated or specified, shall be zinc coated after being threaded, by the hot-dip process conforming to ASTM A 123 as appropriate. Bolts, nuts, and washers specified or indicated to be stainless steel shall be Type 316.

2.4.2 Equipment Guards

Equipment driven by open shafts, belts, chains, or gears shall be provided with all-metal guards enclosing the drive mechanism. Guard shall be constructed of galvanized sheet steel or galvanized woven wire or expanded metal set in a frame of galvanized steel members. Guards shall be secured in position by steel braces or straps which will permit easy removal for servicing the equipment. The guards shall conform in all respects to all applicable safety codes and regulations.

2.4.3 Tools

A complete set of all special tools which may be necessary for the adjustment, operation, maintenance, and disassembly of all equipment shall be furnished. Special tools are considered to be those tools which because of their limited use are not normally available, but which are necessary for the particular equipment. Special tools shall be high-grade, smooth, forged, alloy, tool steel. One pressure grease gun for each type of grease required shall also be furnished. All tools shall be delivered at the same time as the equipment to which they pertain. The Contractor shall properly store and safeguard such tools until completion of the work, at which time they shall be delivered to the Contracting Officer.

2.4.4 Shop Painting

All motors, pump casings, and similar parts of equipment customarily finished in the shop shall be thoroughly cleaned, primed, and given two finish coats of paint at the factory in accordance with the recommendations of the manufacturer. Ferrous surfaces not to be painted shall be given a shop coat of grease or other suitable rust-resistant coating.

PART 3 EXECUTION

3.1 INSTALLATION

Each pump shall be installed in accordance with the written instructions of the manufacturer and under direct supervision of the manufacturer's representative. Pump shall be connected via approved couplings and alignment as per manufacturer's recommendations.

3.1.1 Concrete Foundations

Concrete for equipment foundations shall be as specified in Section 03300 CONCRETE FOR BUILDING CONSTRUCTION. Concrete foundations shall be doweled into the building floor as shown on drawings. Foundation bolts, as required, shall be furnished for proper positioning during the placement of the concrete. Coordinate equipment foundation with pump manufacturer.

3.2 TESTS

After installation of the pumping units and appurtenances is complete, operating tests shall be carried out to assure that the pumping installation operates properly. The Contractor shall make arrangements to have the manufacturer's representatives present when field equipment tests are made. Each installed pumping unit shall be given a running field test in the presence of the Contracting Officer for a minimum of 2 hours. Each pumping unit shall be operated at its rated capacity or such other point on its head-capacity curve selected by the Contracting Officer. The Contractor shall provide an accurate and acceptable method of measuring the discharge flow. Tests shall assure that the units and appurtenances have been installed correctly, that there is no objectionable heating, vibration, or noise from any parts, and that all manual and automatic controls function properly. If any deficiencies are revealed during any tests, such deficiencies shall be corrected and the tests shall be reconducted.

3.3 FIELD PAINTING

Stainless steel, galvanized steel, and nonferrous surfaces shall not be painted.

3.3.1 Touch-Up Painting

Factory painted items requiring touching up in the field shall be thoroughly cleaned of all foreign material and shall be primed and topcoated with the manufacturer's standard factory finish.

3.3.2 Exposed Ferrous Surfaces

Exposed ferrous surfaces shall be painted with two coats of enamel paint conforming to FS TT-E-489, Class A. Factory primed surfaces shall be solvent-cleaned before painting. Surfaces that have not been factory primed shall be prepared and primed in accordance with the enamel paint manufacturer's recommendations.

3.4 MANUFACTURER'S FIELD SERVICES

The Contractor shall obtain the services of a manufacturer's representative experienced in the installation, adjustment, and operation of the equipment specified. The representative shall supervise the installation, adjustment, and testing of the equipment.

3.5 DEMONSTRATION

Upon completion of the work and at a time designated by the Contracting Officer, the services of one or more competent engineers shall be provided by the Contractor for a period of not less than 4 hours to instruct a representative of the Government in the operation and maintenance of equipment furnished under this section of the specifications.

3.6 DELIVERY OF SPARE PUMP

The spare pump shall be submitted to the Contracting Officer in its original shipping crate for long term storage. Any adjustments or maintenance procedures recommended by the pump manufacturer shall be performed prior to turnover.

3.7 CONTRACTOR QUALITY CONTROL

The Contractor shall establish and maintain a quality control system to assure compliance with contract requirements and shall maintain records of his quality control for all operations including but not limited to the following:

(1) Inspection of material delivered to project site against approved material list.

(2) Storage and handling of materials.

(3) Installation as indicated.

(4) Finished appearance.

(5) Completion of required tests.

Copies in duplicate of these records and tests, as well as records of corrective action taken when results are unsatisfactory, shall be furnished to the Contracting Officer within 1 working day following the inspection or test.

PART 4 SUBMITTAL SUMMARY

4.1 SUMMARY OF SUBMITTALS

Submittals to be furnished by the Contractor shall include the following:

Paragraph	Item	SD
11211-2.2	Leachate Pumps	01, 04
11211-1.2.9, 3.2	Test Reports	09
11211-1.3	O & M Manuals	19

Code for Type of Submittal (SD)

01	-	Data
04	-	Drawings
06	-	Instructions
07	-	Schedules
08	-	Statements
09	-	Reports
13	-	Certificates
14	-	Samples
18	-	Records
19	-	O & M Manuals

-END OF SECTION-

* * * * *

TECHNICAL SPECIFICATION
FOR
CREST PAD BUILDING
SECTION 13120

ENVIRONMENTAL RESTORATION DISPOSAL FACILITY (ERDF)
CELLS 3 & 4 CONSTRUCTION

REV	DATE	REASON FOR REVISION	ORIGINATOR	CHECKER	GROUP LEADER	TASK DESIGN LEAD	PROJECT ENGINEER
C	01/20/98	100% Design Review	MGM	LHA			
B	11/21/97	60% Design Review	MGM	LHA			

RICHLAND ENVIRONMENTAL RESTORATION PROJECT	JOB NO. 22192
	SPECIFICATION NO. 0600X-SP-M0018
	SHEET 1 of 8

SECTION 13120

CREST PAD BUILDING

PART 1 GENERAL

1.1 REFERENCES

The publications listed below form a part of this specification to the extent referenced. The publications are referred to in the text by basic designation only.

AMERICAN SOCIETY FOR TESTING AND MATERIALS (ASTM)

ASTM A 36	(1991) Structural Steel
ASTM A 53	(1990b) Pipe, Steel, Black and Hot-Dipped, Zinc-Coated Welded and Seamless
ASTM A 446	(1991) Steel Sheet, Zinc-Coated (Galvanized) by the Hot-Dip Process, Structural (Physical) Quality
ASTM A 500	(1990a) Cold-Formed Welded and Seamless Carbon Steel Structural Tubing in Rounds and Shapes
ASTM A 501	(1989) Hot-Formed Welded and Seamless Carbon Steel Structural Tubing
ASTM A 529	(1992) High-Strength Carbon-Manganese Steel of Structural Quality
ASTM A 570	(1992) Steel, Sheet and Strip, Carbon, Hot-Rolled, Structural Quality
ASTM A 588	(1991a) High-Strength Low-Alloy Structural Steel with 50 ksi (345 MPa) Minimum Yield Point to 4 in. (100 mm) Thick
ASTM A 606	(1991a) Steel, Sheet and Strip, High-Strength, Low-Alloy, Hot-Rolled and Cold-Rolled, with Improved Atmospheric Corrosion Resistance
ASTM A 607	(1992a) Steel, Sheet and Strip, High-Strength, Low-Alloy, Columbium or Vanadium, or Both, Hot-Rolled and Cold-Rolled
ASTM A 618	(1990a) Hot-Formed Welded and Seamless High-Strength Low-Alloy Structural Tubing

AMERICAN SOCIETY OF CIVIL ENGINEERS (ASCE)

ASCE STD 7-95	(1995) Minimum Design Loads for Buildings and Other Structures

METAL BUILDING MANUFACTURERS ASSOCIATION (MBMA)

MBMA-01	(1986; Errata; Supple 1990) Low Rise Building Systems Manual

INTERNATIONAL CONFERENCE OF BUILDING OFFICIALS (ICBO)

UBC	(1997) Uniform Building Code

1.2 GENERAL

1.2.1 Building Configuration

Building shall have vertical walls and gable-slope roofs. Roof slope shall be as indicated. Building shall be a pre-engineered self frame building type. Building dimensions shall be as standard with the manufacturer and not less than those indicated, but exceeding the indicated dimensions only by the amount of the closest standard size thereto. When the building dimensions given are exceeded, the Contractor shall at no additional cost to the government also increase the dimensions of the concrete pad to compensate for the increased length and width of the building.

1.2.2 Manufacturer

Metal building shall be the product of a recognized metal building systems manufacturer who has been in the practice of manufacturing metal buildings for a period of no less than 5 years. The manufacturer shall be chiefly engaged in the practice of designing and fabricating metal building systems.

1.2.3 Installer

Erector shall have specialized experience in the erection of metal building systems for a period of at least 3 years.

1.3 DESIGN REQUIREMENTS

1.3.1 Design Conditions

Loading combinations and definitions shall be in accordance with MBMA-01. Loading criteria as set out by MBMA-01 shall apply.

1.3.1.1 Dead Load

The dead load shall consist of the weight of the structural frame and all other materials of the building system.

1.3.1.2 Collateral Loads

Collateral load of 20 pounds per square foot shall be applied to the entire structure to account for the weight of additional permanent materials other than the building system, such as electrical systems and future minor equipment.

1.3.1.3 Roof Live Loads

Roof live loads shall be determined and applied in accordance with MBMA-01.

1.3.1.4 Roof Snow Loads

Roof snow loads shall be developed using a ground snow load of 25 pounds per square foot. Roof snow load shall be computed and applied in accordance with MBMA-01 using an importance factor of 1.0.

1.3.1.5 Wind Loads

Wind pressures shall be computed and applied in accordance with ASCE Std 7-95 using an importance factor of 1.0.

1.3.1.6 Seismic Loads

Seismic loads shall be computed for seismic zone 2B in accordance with UBC using an importance factor of 1.0.

1.3.1.7 Impact Loads

Impact loads due to bridge cranes shall be applied as indicated in MBMA-01.

1.3.1.8 Bridge Crane Loading

Bridge crane rails and brackets shall be an intregral part of the pre-engineered building steel and support a 1/2 ton hoist and bridge. See drawings for specific details.

1.3.2 Framing and Structural Members

Framed openings shall be designed to structurally replace the covering and framing displaced. The allowable live load deflection of roof elements shall not exceed 1/240th of the span. Deflection for wall members shall not exceed 1/180th of the span. Members with openings in their webs shall be designed with consideration of the additional stresses which will result due to the openings.

1.3.3 Exterior Covering

Maximum deflection for wall and roof panels under full dead and live and/or wind loads shall not exceed 1/240th of the span between supports for the roof and 1/180th of the span between supports for the wall. The design analysis shall establish that the roof when deflected under dead plus live or snow loads, will not result in a negative gradient. Maximum deflections shall be based on sheets continuous across two or more supports with sheets unfastened and fully free to deflect. In addition to the loads indicated above, the roof decking shall be designed for a 200-pound concentrated load at midspan on a 12 inch wide section of deck. Panels thinner than 0.03 inches are not permitted for diaphragms used to resist seismic loads.

1.3.4 Drift Provision

Lateral deflections, or drift at the roof level of a structure in relation to the floor or slab on grade, caused by deflection of horizontal force resisting elements shall conform to MBMA-01.

1.4 SUBMITTALS

Submittals shall be furnished in accordance with Exhibit I.

SD-01 Data

Manufacturer's descriptive data, specification sheets, literature, and other data as necessary to fully demonstrate that the buildings and associated hardware proposed for use comply with the requirements of these specifications.

SD-04 Drawings

Shop drawings of building, including design and erection drawings, materials schedule, and other data as necessary to clearly describe design, materials, sizes, layouts, construction details, fasteners, and erection. Drawings shall be accompanied by engineering design calculations for the structural performance of roofing and siding components.

SD-18 Records

Records documenting compliance with Contractor Quality Control requirements.

1.5 DELIVERY AND STORAGE

Materials shall be delivered to the site in a dry and undamaged condition and stored out of contact with the ground. Materials other than framing and structural members shall be covered with weathertight coverings and kept dry. Storage accommodations for roof and wall covering shall provide good air circulation and protection from surface staining.

1.6 GUARANTEE

The metal building system shall be guaranteed against water leaks arising out of or caused by ordinary wear and tear by the elements for a period of 1 year. The metal panels shall be provided with a 20 year warranty attesting that the materials and finishes are free from defects in materials and workmanship and, when properly installed, shall not rupture, crack, or perforate under normal conditions. Such guarantee shall start upon final acceptance of the work or the date the Government takes possession, whichever is earlier.

PART 2 PRODUCTS

2.1 BUILDING COMPONENTS

Each piece or part of the assembly shall be clearly and legibly marked to correspond with the detail drawings.

2.2 FRAMING AND STRUCTURAL MEMBERS

Steel 1/8 inch or more in thickness shall conform to ASTM A 36, ASTM A 529, or ASTM A 588. Uncoated steel less than 1/8 inch in thickness shall conform to ASTM A 570, ASTM A 606, or ASTM A 607. All steel framing members, girts, purling, and miscellaneous framing members shall be galvanized steel in conformance to ASTM A 446, G 90 coating designation, 0.045-inch minimum thickness. Holes for bolts shall be made in the shop.

2.3 ROOF AND WALL SYSTEMS

Panels shall be steel and shall have a factory color finish. Length of sheets shall be sufficient to cover the entire length of any unbroken roof slope or the entire height of any unbroken wall surface. Width of sheets with overlapping configurations shall provide not less than 24 inches of coverage in place, and those with interlocking ribs shall provide not less than 12 inches of coverage in place. Design provisions shall be made for thermal expansion and contraction consistent with the type of system to be used. All sheets shall be square cut, except gable end wall sheets may be cut in the shop to correspond to the roof slope and may have a horizontal joint at the eave line.

2.3.1 Roof

Acceptable roof system shall be the standard metal roof system recommended by the Metal Building Manufacturer in conformance with these specifications.

2.3.2 Wall Panels

Wall panels shall be the standard metal wall system recommended by the Metal Building Manufacturer in conformance with these specifications.

PART 3 EXECUTION

3.1 GENERAL

Erect building and install hardware in conformance with manufacturer's recommendations and the requirements of these specifications.

3.1.1 Framing and Structural Members

Anchor bolts shall be accurately set by template while the concrete is in a plastic state. Uniform bearing under base plates and sill members shall be provided using a nonshrinking grout when necessary. Members shall be accurately spaced to assure proper fitting of covering. Separate leveling plates under column base plates shall not be used. As erection progresses, the work shall be securely fastened to resist the dead load and wind and erection stresses.

3.2 CONTRACTOR QUALITY CONTROL

The Contractor shall establish and maintain a quality control system to assure compliance with contract requirements and shall maintain records of his quality control for all operations including but not limited to the following:

(1) Inspection of material delivered to the project site against approved material data.

(2) Storage and handling of materials.

(3) Installation as required.

Copies in duplicate of these records and tests, as well as records of corrective action taken when results are unsatisfactory, shall be furnished to the Contracting Officer within 1 working day of the inspection or test.

PART 4 SUBMITTAL SUMMARY

4.1 SUMMARY OF SUBMITTALS

Submittals to be furnished by the Contractor shall include the following:

Paragraph	Item	SD
13120-2.2	Framing and Structural Members	01, 04
13120-2.3	Roof and Wall Systems	01, 04

Code for Type of Submittal (SD)

01 - Data
04 - Drawings
06 - Instructions
07 - Schedules
08 - Statements
09 - Reports
13 - Certificates
14 - Samples
18 - Records
19 - O & M Manuals

- END OF SECTION -

* * * * *

TECHNICAL SPECIFICATION
FOR
BRIDGE CRANE
SECTION 14630

ENVIRONMENTAL RESTORATION DISPOSAL FACILITY (ERDF)
CELLS 3 & 4 CONSTRUCTION

C	01/20/98	100% Design Review	MGB	LHA			
REV	DATE	REASON FOR REVISION	ORIGINATOR	CHECKER	GROUP LEADER	TASK DESIGN LEAD	PROJECT ENGINEER

	RICHLAND ENVIRONMENTAL RESTORATION PROJECT	JOB NO. 22192
		SPECIFICATION NO. 0600X-SP-M0024
		SHEET 1 of 6

This page is intentionally blank.

SECTION 14630

BRIDGE CRANE

PART 1 GENERAL

1.1 SUBMITTTALS

The following shall be submitted in accordance with Exhibit I.

SD-01 Data

Bridge Crane

A complete list of equipment and materials, including manufacturer's descriptive data and technical literature, catalog cuts, and installation instructions.

Spare Parts

Spare parts data for each different item of material and equipment specified, after approval of the system and not later than two months prior to the date of beneficial occupancy. The data shall include a complete list of parts, supplies, and source of supply.

SD-04 Drawings

Bridge Crane

Detailed shop drawings of each piece of equipment and appurtenances. Drawings shall include all weights, wheel loads, dimensions, installation requirements, and clearances required.

SD-09 Reports

Acceptance Testing

Test reports in booklet form showing all field tests performed to adjust each component and to verify operation. A preliminary test report shall be submitted prior to performing the load test required by paragraph ACCEPTANCE TESTING. Final test reports shall include results of the witnessed load test.

SD-19 Operations and Maintenance Manuals

Bridge Crane

Six copies of operations and maintenance manuals for the equipment furnished. One complete set prior to performance testing and the remainder upon acceptance. Operation manuals shall detail the step-by-step procedures required for equipment operation. Operation manuals shall include the manufacturer's name, model number, parts list, and brief description of all equipment and basic operating features. Maintenance manuals shall list routine maintenance procedures, possible breakdowns and repairs, and trouble shooting guides.

1.2 TOOLS AND SPARE PARTS

The Contractor shall supply one complete set of special wrenches or other special tools necessary for the assembly, adjustment, and dismantling of the equipment. Each piece of equipment shall be furnished with one year's supply of lubricants, as wells as spare parts as recommended by the manufacturer.

PART 2 PRODUCTS

2.1 GENERAL

Bridge crane shall operate in the given space and shall match the runway dimensions and rails indicated. Bridge Crane shall be hand-propelled, non-electrified, interlocking type. The rails shall be firmly anchored to the structure in accordance with AISC design manual recommendations. The crane's hoist shall be manually operated, hand chain type, and shall meet the requirements listed below. Trolley travel stops shall be provided at each end of the bridge.

2.1.1 Site Conditions

Location	-	Crest Pad Buildings
Atmosphere	-	Indoors
Quantity Required	-	2 Total

2.1.2 Design Requirements

The bridge crane system shall meet the following requirements:

Type of Crane	-	Underhung
Type of Bridge	-	Single Beam
Capacity	-	4.45 kN (1000 lb.)
Maximum Lift	-	3.35 m (11 ft.)
Span Between Tracks / Length of Bridge	-	4.88 m (16 ft.) +/-
Trolley Suspension	-	Lug US Army Type
Trolley Type	-	Push
Hoist Type	-	Manual Pull Chain
Hoist Brake	-	Automatic
Hoist Chain Pull at Full Load	-	214 N (48 lb.)
Hoist Overload Device	-	Yes

2.2 MATERIALS

2.2.1 General

All materials used shall be new and of the best commercial grade. Where materials are not specified, the Contractor shall have the manufacturer use the most suitable selection for the given application and environment.

2.2.2 Hoist

Hoist shall be US army type, with integral trolley (plain), and have the features listed above. Hoist shall be so designed that, when the actuating force is removed, it will automatically stop and hold any test load up to 125% of the rated load. Load chain shall be pitched (calibrated) so as to pass over all load sprockets without binding. Trolley assembly shall be supported by trolley wheels of tread surfaces hardened to 425 Brinell. The tread shall be tapered to provide suitable running alignment for the trolley. Each wheel shall be supported on tapered roller bearings suitable to take radial and thrust loads. Bearings shall provide a minimum L-10 life of 5,000 hours. The wheel mounting shall be designed so that axles and wheels can be removed without disturbing other truck elements of their alignment. The wheel tread shall be smooth, true, and uniform within 0.25 mm (0.010-inch) tread diameter on all wheels. The lifting hook shall be of drop-forged, heat-treated steel with a 360-degree swivel on a shielded roller thrust bearing with safety spring latch.

2.2.3 End Trucks (Plain)

End trucks shall be traversed by stable assembly of structural shapes welded together to provide proper wheel and bearing alignment. The end truck wheel base shall be a minimum of 1/7 of the crane span. The crane and trucks shall contain diaphragm members welded to truck frames to maintain alignment and distribute truck loads on inner and outer truck members. The truck shall be designed so that, in case of a wheel axle or wheel failure, the drop of the load will be limited to one inch. The end trucks shall be fastened to the bridge beams with bolts to ensure alignment in assembly.

2.2.4 Plant Fabricated Items

All fabrication, assembly, and welding shall be carried out by factory-trained specialists and certified welders.

PART 3 EXECUTION

3.1 INSTALLATION

All bridge crane equipment shall be installed in strict accordance with the manufacturer's published or written instructions. After installation, crane hoist shall be tested for proper operation as per the manufacturer's instructions.

3.2 ACCEPTANCE TESTING

3.2.1 General

The Contractor shall provide all personnel necessary to conduct the required testing along with rigging gear and test weights. Testing shall be performed in the presence of the Contracting Officer or his

designated representative. The Contractor shall notify the Contracting Officer 7 days prior to testing operations. The Contractor shall operate all equipment and make all necessary corrections and adjustments prior to the testing operations witnessed by the Contracting Officer.

3.2.2 Load Test

Test loads shall be compact and permit a minimum of 50 percent of vertical lift. Test weights required are 1.11 kN (250 lb), 2.22 kN (500 lb), 3.34 kN (750 lb), and 4.45 kN (1000 lb). Test weights shall be picked and traversed across the full vertical and horizontal (bridge and runway) range of the bridge crane system. During each load test and immediately following, inspect for evidence of bending, warping, permanent deformation, cracking or malfunction of structural components.

PART 4 SUBMITTAL SUMMARY

4.1 SUMMARY OF SUBITTALS

Submittals to be furnished by the Contractor shall include the following:

Paragraph	Item	SD
14630-2.2.2	Hoist	01, 04, 19
14630-2.2.3	End Trucks	01, 04, 19
14630-3.2.2	Acceptance Test	09

Code for Type of Submittal (SD)

01	-	Data
04	-	Drawings
06	-	Instructions
07	-	Schedules
08	-	Statements
09	-	Reports
13	-	Certificates
14	-	Samples
18	-	Records
19	-	O & M Manuals

- End of Section -

* * * * *

This page is intentionally blank.

TECHNICAL SPECIFICATION
FOR
PIPING IDENTIFICATION SYSTEMS
SECTION 15005

ENVIRONMENTAL RESTORATION DISPOSAL FACILITY (ERDF)
CELLS 3 & 4 CONSTRUCTION

REV	DATE	REASON FOR REVISION	ORIGINATOR	CHECKER	GROUP LEADER	TASK DESIGN LEAD	PROJECT ENGINEER
C	01/20/98	100% Design Review	MGM	LHA			
B	11/21/97	60% Design Review	MGM	LHA			

RICHLAND ENVIRONMENTAL RESTORATION PROJECT	JOB NO. 22192	
	SPECIFICATION NO. 0600X-SP-M0019	
	SHEET 1 of 5	

This page is intentionally blank.

SECTION 15005

PIPING IDENTIFICATION SYSTEMS

PART 1 GENERAL

1.1 REFERENCES

The publications listed below form a part of this specification to the extent referenced. The publications are referred to in the text by basic designation only.

AMERICAN NATIONAL STATNDARDS INSTITUTE (ANSI)

ANSI A13.1	Scheme for the Identification of Piping Systems

1.2 SUBMITTALS

Submittals shall be furnished in accordance with Exhibit I.

SD-08 Statements

Provide a list of suggested wordings for all valve tags prior to fabrication.

SD-14 Samples

Submit samples of all type of the identification devices to be used in the work.

PART 2 PRODUCTS

2.1 IDENTIFICATION OF PIPING

2.1.1 General

Identification of all exposed pipe shall be accomplished by color-coding with bands and by lettering as specified in Part 3, herein. Color bands shall either be painted directly upon the pipe or shall be pressure-sensitive adhesive-backed vinyl cloth or plastic tape.

2.1.2 Labels

Each pipe identification shall consist of 2 color-coded bands, a printed label identifying the name of the pipe, and a flow arrow to indicate direction of flow in the pipe. All labels shall be preprinted on pressure-sensitive adhesive-backed vinyl cloth or plastic tape. Arrows shall be die-cut of the same type of material as the labels.

2.1.3 Lettering

Letter sizes and colors for lettering, arrows, and background shall conform to ANSI A13.1.

2.2 IDENTIFICATION OF VALVES AND SHORT PIPE LENGTHS

2.2.1 General

Identifying devices for valves and the sections of pipe that are too short to be identified with color bands, lettered labels, and arrows shall be identified with metal or plastic tags as specified herein.

2.2.2 Tags

Metal tags shall be of stainless steel with embossed lettering. Plastic tags shall be of solid black plastic laminate with white embossed letters. All tags shall be designed to be firmly attached to the valves or short pipes or to the structure immediately adjacent to such valves or short pipes.

PART 3 EXECUTION

3.1 GENERAL

The Contractor shall furnish, mark, and install identification devices for all exposed piping and valves using color bands, lettering, flow direction arrows, and related permanent identification devices, and all appurtenant works, in accordance with the requirements of the Contract Documents. All labels and identification tags shall be installed in accordance with the manufacturer's printed instructions, and shall be neat and uniform in appearance. All such tags or labels shall be readily visible from all normal working locations.

3.2 VALVE TAGS

3.2.1 Attachment

Valve tags shall be permanently attached to the valve or structure by means of 2 stainless steel bolts or screws.

3.2.2 Wording

The wording on the valve tags shall describe the exact function of each valve, e.g., LE - Tank 1 shut-off.

3.3 PIPE IDENTIFICATION

3.3.1 Intervals

Each pipe shall be identified at intervals of 20 feet, and at least one time in each room. Piping shall also be identified at a point approximately within 2 feet of all turns, ells, valves, and on the upstream side of all distribution fittings or branches. Sections of pipe that are too short to be identified with color bands, lettered labels, and directional arrows shall be tagged and identified similar to valves.

3.3.2 Positioning

Pipe identification shall consist of 4 elements, i.e., 2 color bands, a lettered label, and a directional label. The bands shall be arranged so that the lettered label and the directional arrow is placed between the 2 bands.

3.4 IDENTIFICATION SCHEDULE

Application of identifying devices shall conform to the following color codes.

Fluid Abbreviation	Function and Identification	Identification Color
LE	Leachate	Yellow/Magenta

3.5 CONTRACTOR QUALITY CONTROL

The Contractor shall establish and maintain a quality control system to assure compliance with contract requirements and shall maintain records of his quality control for all operations including but not limited to the following:

(1) Placement of identification tags.

Copies in duplicate of these records and tests, as well as records of corrective action taken when results are unsatisfactory, shall be furnished to the Contracting Officer within 1 working day of the inspection or test.

PART 4 SUBMITTAL SUMMARY

4.1 SUMMARY OF SUBMITTALS

Submittals to be furnished by the Contractor shall include the following:

Paragraph	Item	SD
15005-1.2	Suggested Wording for Valve Tags	08
15005-1.2	Samples	14

Code for Type of Submittal (SD)

01	-	Data
04	-	Drawings
06	-	Instructions
07	-	Schedules
08	-	Statements
09	-	Reports
13	-	Certificates
14	-	Samples
18	-	Records
19	-	O & M Manuals

- END OF SECTION -

* * * * *

TECHNICAL SPECIFICATION
FOR
CREST PAD PIPING
SECTION 15060

ENVIRONMENTAL RESTORATION DISPOSAL FACILITY (ERDF)
CELLS 3 & 4 CONSTRUCTION

REV	DATE	REASON FOR REVISION	ORIGINATOR	CHECKER	GROUP LEADER	TASK DESIGN LEAD	PROJECT ENGINEER
C	1/20/98	100% Design Review	FSS	LHA			
B	11/21/97	60% Design Review	FSS	LHA			

	RICHLAND ENVIRONMENTAL RESTORATION PROJECT	JOB NO. 22192
		SPECIFICATION NO. 0600X-SP-M0020
		SHEET 1 of 7

This page is intentionally blank.

SECTION 15060

CREST PAD PIPING

PART 1 GENERAL

1.1 REFERENCES

AMERICAN SOCIETY FOR TESTING AND MATERIALS (ASTM)

ASTM A182	Standard Specification for Forged or Rolled Alloy-Steel Pipe Flanges, Forged Fittings, and Valves and Parts for High-Temperature Service.
ASTM A312	Seamless and Welded Austenitic Stainless Steel Pipe.
ASTM A403	Wrought Austenitic Stainless Steel Piping Fittings.
ASTM D1784	Rigid Poly(Vinyl Chloride) (PVC) Compounds and Chlorinated Poly(Vinyl Chloride) (CPVC) Compounds.
ASTM D1785	Specification for Poly(Vinyl Chloride) (PVC) Plastic Pipe, Schedules 40, 80, and 120.
ASTM D2464	Threaded Poly(Vinyl Chloride) (PVC) Plastic Pipe Fittings, Schedule 80.
ASTM D2467	Socket-Type Poly(Vinyl Chloride) (PVC) Plastic Pipe Fittings, Schedule 80.
ASTM D 2564	Solvent Cements for Poly(Vinyl Chloride) (PVC) Plastic Piping Systems.
ASTM D 2855	Making Solvent-Cemented Joints with Poly(Vinyl Chloride) (PVC) Pipe and Fittings.

AMERICAN PETROLEUM INSTITUTE (API)

API 1104	Welding of Pipeline and Related Facilities.

AMERICAN SOCIETY OF MECHANICAL ENGINEERS (ASME)

ASME	Boiler and Pressure Vessel Code.
ASME B1.20.1	Pipe Threads, General Purpose (Inch)

AMERICAN WATER WORKS ASSOCIATION (AWWA)

AWWA M11	Steel Pipe: A Guide for Design and Installation.

MANUFACTURERS STANDARDIZATION SOCIETY OF THE VALVE AND FITTINGS INDUSTRY (MSS)

MSS SP-58	Pipe Hangers and Supports - Materials, Design and Manufacture.
MSS SP-69	Pipe Hangers and Supports - Selection and Application.

1.2 DESCRIPTION

This section includes piping and pipe support systems to be installed above ground at the crest pads.

1.3 SUBMITTALS

Submittals shall be furnished in accordance with Exhibit I.

SD-04 Drawings

Shop drawings of piping system.

SD-13 Certificates

Welders' certificates.

PART 2 PRODUCTS

2.1 PIPE

All crest pad piping shall be HDPE, PVC, or stainless steel, as indicated on the Drawings.

2.1.1 HDPE Pipe

High density polyethylene pipe shall conform to the requirements of Section 02725, HDPE PIPE AND FLATSTOCK.

2.1.2 Stainless Steel Pipe

Stainless steel pipe shall be Schedule 40 Type 316 Stainless Steel, conforming to ASTM A312.

2.1.3 PVC Pipe

Polyvinyl Chloride (PVC) pipe shall conform to ASTM D1784, Class 12454B. Dimensions shall conform to ASTM D1785 Schedule 80.

2.2 FITTINGS

All wetted surfaces of fittings shall be HDPE, PVC, or Type 316 stainless steel.

Stainless steel fittings shall conform to ASTM A182 or A403.

HDPE fittings shall conform to the requirements of Section 02725 of these specifications.

Threaded fittings for PVC pipe shall conform to requirements of ASTM D2464. Threads shall conform to the requirements of ASME B1.20.1 for use with Schedule 80 pipe and fittings.

Fittings for solvent cement joining of PVC pipe shall conform to ASTM D2467.

Standard fittings and special fittings shall be manufactured from the same class of material as the associated pipe and shall be fully compatible. Fabricated fittings shall be pressure rated to match the system piping.

2.3 FLANGES

Flanges shall be rated for a working pressure equal to or greater than the system design pressure. Flanges shall include ANSI backup rings rated equal to or greater than the system design pressure for the piping. Gaskets for flanges shall be 1/8" thick neoprene or approved equal. Flanged joints shall use grade 2 or higher stainless steel bolts.

2.4 SOLVENTS

Solvents for joining PVC piping shall conform to ASTM D2564.

2.5 PIPE SUPPORTS

Pipe supports shall consist of prefabricated channel sections commercially manufactured for this purpose. Supports shall allow for vertical adjustment after erection. Supports shall be capable of supporting the piping and associated equipment as shown on the Drawings. Pipe shall be attached to channel sections using standard pipe clamps of correct dimension for the pipe. All pipe supports and accessories shall be hot-dipped galvanized and shall be provided from a single manufacturer. Pipe supports and accessories shall conform to MSS SP-58 and MSS SP-69.

PART 3 EXECUTION

3.1 GENERAL

3.1.1 Handling and Installation

Pipe shall be handled and installed in accordance with AWWA M11, Chapter 16 as applicable.

3.1.2 Dimensions

Piping dimensions shown on the Drawings are approximate. It is the Contractor's responsibility to furnish and install piping of the proper dimensions, which will properly fit with the connecting elements, other pipes, fittings, valves, and other components of the system.

3.1.3 Shop Drawings

Prior to installation, submit shop drawings showing piping and support layout, connection and anchorage details, material lists, and other information required for installation.

3.2 CUTTING

Cutting of pipe shall be done in a neat and workmanlike manner without damage to the pipe. Unless otherwise recommended by the manufacturer and authorized by the Contracting Officer, cutting shall be done with an approved type mechanical cutter. Wheel cutters shall be used when practicable.

3.3 PIPE JOINING

3.3.1 HDPE Pipe

Welded connection of HDPE pipe to HDPE pipe or fittings shall be done in accordance with Section 02725, HDPE PIPE AND FLATSTOCK, of these specifications.

3.3.2 Stainless Steel Pipe

Welding of stainless steel pipe shall be performed by ASME Section 9-certified welders using shielded metal arc, gas shielded arc, or submerged arc welding methods. Each welder's certificate shall be provided to the Contracting Officer prior to that welder working on the job. Welds shall be in accordance with the requirements of ASME Boiler and Pressure Vessel Code (Class I) and API 1104 and the pipe manufacturer's recommendations. Socket welds shall be acceptable. Regardless of method, there shall be no internal obstructions in the piping within the clear distance immediately upstream and downstream of the flowmeters, as shown on the drawings.

3.3.3 PVC Pipe

Threaded joints shall be made by wrapping the male threads with approved thread tape or applying an approved lubricant, then threading the joining members together. The joint shall be tightened using strap wrenches to prevent damage to the pipe and/or fitting. To avoid excessive torque, joints shall be tightened no more than one thread past hand-tight.

Solvent joints shall be made in accordance with ASTM D2855 and the manufacturer's specific recommendations.

3.3.4 Flanges

In flanged joints, the bolts shall be evenly torqued using a crossing pattern to gradually tighten lug nuts. Flanged joints shall be retorqued after one hour or more has passed.

3.4 PIPE SUPPORTS

The pipe support system shall be installed in accordance with MSS SP-58, MSS SP-69, and the piping support system manufacturer's recommendations. All piping shall be rigidly supported and anchored so that there is no movement or visible sagging between supports.

Pipe supports shall be anchored to the protective enclosure or top of curb surrounding the crest pad. In no case shall the anchorage penetrate the HDPE liner on the floor of the crest pad.

3.5 TESTING

Test all crest pad piping in accordance with Section 02725, HDPE PIPE AND FLATSTOCK, of these specifications.

3.6 CONTRACTOR QUALITY CONTROL

The Contractor shall establish and maintain a quality control system to assure compliance with contract requirements and shall maintain records of his quality control for all operations including but not limited to the following:

(1) Conformance of materials to the requirements of this section.

(2) Storage and handling of materials.

(3) Installation in accordance with the requirements of this section.

(4) Pipe joining in accordance with the requirements of this section.

(5) Acceptance testing in accordance with the requirements of this section.

Copies in duplicate of these records and tests, as well as records of corrective action taken when results are unsatisfactory, shall be furnished to the Contracting Officer within one working day following the inspection or test.

PART 4 SUBMITTAL SUMMARY

4.1 SUMMARY OF SUBMITTALS

Submittals to be furnished by the Contractor shall include the following:

Paragraph	Item	SD
15060-3.1.3	Shop Drawings	04
15060-3.2.2	Welders' Certificates	13

Code for Type of Submittal (SD)

01 - Data
04 - Drawings
06 - Instructions
07 - Schedules
08 - Statements
09 - Reports
13 - Certificates
14 - Samples
18 - Records
19 - O & M Manuals

* * * * *

TECHNICAL SPECIFICATION
FOR
CREST PAD VALVES
SECTION 15100

ENVIRONMENTAL RESTORATION DISPOSAL FACILITY (ERDF)
CELLS 3 & 4 CONSTRUCTION

REV	DATE	REASON FOR REVISION	ORIGINATOR	CHECKER	GROUP LEADER	TASK DESIGN LEAD	PROJECT ENGINEER
C	1/20/98	100% Design Review	FSS	LHA			
B	11/21/97	60% Design Review	FSS	LHA			

	RICHLAND ENVIRONMENTAL RESTORATION PROJECT	JOB NO. 22192
		SPECIFICATION NO. 0600X-SP-M0021
		SHEET 1 of 5

This page is intentionally blank.

SECTION 15100

CREST PAD VALVES

PART 1 GENERAL

1.1 DESCRIPTION

The section specifies those valves used on leachate discharge lines at the crest pads of the ERDF trench. Requirements for valves used in other locations are contained in other sections of these specifications.

1.2 SUBMITTALS

Submittals shall be furnished in accordance with Exhibit I.

SD-19 O&M Manuals

Submit three copies of operating and maintenance instructions prior to 75 percent completion of the project. The instructions shall include the manufacturer's name, model number, service manual, parts list, and brief description of all equipment and their operating features. Maintenance instructions shall include routine maintenance procedures, possible breakdowns and repairs, and troubleshooting guide. As-built diagrams of the piping system including valve locations shall be submitted at the conclusion of the project.

PART 2 PRODUCTS

2.1 VACUUM RELEASE VALVES

Vacuum release valves shall be constructed of corrosion resistant wetted parts. Valves on low-capacity submersible pump lines shall be 19 mm (3/4 inch) size. Valve on high-capacity submersible pump lines shall be 32 mm (1 1/4 inch) size.

2.2 VACUUM / AIR RELEASE VALVES

Vacuum / air release valves shall be constructed of corrosion-resistant material and function as both air release and vacuum breaker valves. Vacuum / air release valves shall be VA Series manufactured by Midwesco Simtech Inc. (aka FIP), Niles, IL, or approved equal. Valves on low-capacity submersible pump lines shall be 19 mm (3/4 inch) size. Valve on high-capacity submersible pump lines shall be 32 mm (1 1/4 inch) size.

2.3 VACUUM / AIR RELEASE VALVE DRAIN LINE

Drain line for vacuum / air release valves shall be flexible 10 mm (3/8 inch) nylon tubing, capable of supporting negative pressure, or approved equal. Drain line material shall not deteriorate from seasonal temperature changes, moisture, exposure to the atmosphere, age, or exposure to low levels of radiation over the design life of the system. Alternatively, stainless steel or rigid plastic tubing may be used for drain line.

2.4 CHECK VALVES

Furnish and install check valves sized as shown on the Drawings. Wetted parts shall be type 316 stainless steel, rubber, thermoplastic, or other approved corrosion-resistant material.

2.5 BALL VALVES

Furnish and install ball valves on discharge lines as shown on the Drawings. Valves shall be manually operated. Wetted parts shall be type 316 stainless steel or other approved corrosion resistant material. Valves shall be similar in quality to Watts Regulator Industrial Products Division series S-8XXX, Velan EE-1000, or approved equal.

2.6 VALVE MARKING

Valves shall have stainless steel (SS) indented marker plates marked with the valve number, Panduit Corporation, Catalog No. MMP350-C or approved equal, held in place with SS ties, Panduit Corporation, Catalog No. MLT4S-CP or approved equal. Characters shall be 3/16" in height minimum, indented with indenter marker press, Panduit Corporation, Catalog No. IMP187, or approved equal.

2.7 VALVE SCHEDULE (EACH CREST PAD)

Valve No.	Description
CV1	38 mm (1 1/2 in) secondary check valve
CV2	38 mm (1 1/2 in) primary check valve
CV3	76 mm (3 in) primary check valve
VARV1	19 mm (3/4 in) Vacuum / air release valve, secondary leachate discharge line
VARV2	19 mm (3/4 in) Vacuum / air release valve, primary leachate discharge line (low capacity pump)
VARV3	32 mm (1 1/4 in) Vacuum / air release valve, primary leachate discharge line (high capacity pump)
VRV1	19 mm (3/4 in) Vacuum release valve, secondary discharge line
VRV2	19 mm (3/4 in) Vacuum release valve, primary low capacity discharge line
VRV3	32 mm (1 1/4 in) Vacuum release valve, primary high capacity discharge line
BV1	38 mm (1 1/2 in) manually operated ball valve, secondary discharge line
BV2	38 mm (1 1/2 in) manually operated ball valve, leachate piping valved-intertie

PART 3 EXECUTION

3.1 GENERAL

All valves shall be installed in accordance with AWWA Standards and manufacturer's recommendations. Connect VRVs and VARVs to stainless steel pipe by tee fitting, direct tapping, or other method approved by the Contracting Officer.

3.2 VACUUM / AIR RELEASE VALVE DRAIN LINES

a. Attach vacuum / air release valve drain lines to associated piping prior to installing heat trace and insulation.

b. Vacuum / air release drain lines shall penetrate the caps over the end of the riser pipes in a neat manner to provide at least the same quality of seal as other penetrations. Drain lines shall extend 0.9 to 1.5 m (3 to 5 feet) into the associated riser pipes.

3.3 CONTRACTOR QUALITY CONTROL (Not Applicable)

PART 4 SUBMITTAL SUMMARY

4.1 SUMMARY OF SUBMITTALS

Submittals to be furnished by the Contractor shall include the following:

Paragraph	Item	SD
15100-2.1	Vacuum Release Valves	19
15100-2.2	Vacuum / Air Release Valves	19
15100-2.4	Check Valves	19
15100-2.5	Ball Valves	19

Code for Type of Submittal (SD)

01 - Data
04 - Drawings
06 - Instructions
07 - Schedules
08 - Statements
09 - Reports
13 - Certificates
14 - Samples
18 - Records
19 - O & M Manuals

*****

TECHNICAL SPECIFICATION
FOR
METERS
SECTION 15150

ENVIRONMENTAL RESTORATION DISPOSAL FACILITY (ERDF)
CELLS 3 & 4 CONSTRUCTION

REV	DATE	REASON FOR REVISION	ORIGINATOR	CHECKER	GROUP LEADER	TASK DESIGN LEAD	PROJECT ENGINEER
C	01/20/98	100% Design Review	MGM	LHA			
B	11/21/97	60% Design Review	MGM	LHA			

	RICHLAND ENVIRONMENTAL RESTORATION PROJECT	JOB NO. 22192
		SPECIFICATION NO. 0600X-SP-M0022
		SHEET 1 of 5

This page is intentionally blank.

SECTION 15150

METERS

PART 1 GENERAL

1.1 THE REQUIREMENT

The Contractor shall furnish and install all meters and flow measurement devices with associated instrumentation and controls as shown and specified herein, complete and operable, for functions including flow measurement and batch metering of fluids including leachate, in accordance with the requirements of the Contract Documents.

1.2 SUBMITTALS

Submittals shall be furnished in accordance with Exhibit I.

SD-13 Certificates

Certifications of flowmeter calibration.

SD-18 Records

Complete test data for flowmeter calibration.

PART 2 PRODUCTS

2.1 PADDLE METERS

The Contractor shall furnish and install the following paddle meters:

I.D. No.	Service	Pipe Size	Flow Range	Inlet Pressure in. W.C.	Service Temp.	Pipeline Material
2-M-8	Leachate	51 mm (2 inch)	0-18.9 l/s (0-300 gpm)	15.24 m (50 ft)	21 °C (70 °F)	See Drawings
2-M-9	Leachate	19 mm (3/4 inch)	0-1.9 l/s (0-30 gpm)	21.34 m (70 ft)	21 °C (70 °F)	See Drawings
2-M-10	Leachate	19 mm (3/4 inch)	0-1.9 l/s (0-30 gpm)	21.34 m (70 ft)	21 °C (70 °F)	See Drawings

I.D. No.	Service	Pipe Size	Flow Range	Inlet Pressure in. W.C.	Service Temp.	Pipeline Material
2-M-11	Leachate	51 mm (2 inch)	0-18.9 l/s (0-300 gpm)	15.24 m (50 ft)	21 °C (70 °F)	See Drawings
2-M-12	Leachate	19 mm (3/4 inch)	0-1.9 l/s (0-30 gpm)	21.34 m (70 ft)	21 °C (70 °F)	See Drawings
2-M-13	Leachate	19 mm (3/4 inch)	0-1.9 l/s (0-30 gpm)	21.34 m (70 ft)	21 °C (70 °F)	See Drawings

The paddle wheel insertion meter shall be designed for easy insertion and withdrawal under pressure, of materials suitable for the intended service. The meter stem shall contain an electronic pickup, sensing the passage of each rotor blade. A pulsed output thus obtained shall produce a repetition rate directly related to flow velocity. The meter shall be capable of registering flow with an accuracy of ±2 percent over a 10 to 1 range, with a negligible pressure loss.

The meter inserts shall be made of Type 316 stainless steel or of plastic material suitable for the intended service. The shaft material shall be stainless steel, titanium, or Hastelloy. The paddle wheels shall be of Type 316 stainless steel or suitable plastic.

The meter inserts shall be mounted securely through a screwed, flanged, welded, or socket-welded tee connection or fitting, for precise positioning in the pipeline. The fittings shall be of the same material as the pipeline and, unless otherwise called out, the inserts shall be easily retractable and replaceable under line pressure through a gate or ball valve with a gland and retaining cable or chain. The mounting hardware or probe shall include a clear indicating device to correctly position the meter insert in the pipeline.

A transmitter shall be provided for remote indication of flow and totalized quantity.

PART 3 EXECUTION

3.1 INSTALLATION

The Contractor shall assemble and install all equipment specified herein, in strict accordance with the manufacturer's published instructions.

3.2 TESTING

Equipment shall be prepared for operational use in accordance with manufacturer's instructions, including bench test and calibration, where required.

Each item shall be subjected to an operating test over the total range of capability of the equipment. Where applicable, tests shall be conducted in accordance with the Test Code of the Standards of the

Hydraulic Institute. The Contractor shall obtain copies of factory test certifications and shall notify the Contracting Officer one week in advance of all tests to be conducted on site.

3.3 CLEANUP

After completion and testing of its work, the Contractor shall remove all debris from the site, clean all meters, controls, cabinets, and other metering appurtenances, to hand over each system in perfect operating condition.

3.4 GUARANTEES, WARRANTIES

After completion the Contractor shall furnish to the Government the manufacturer's written guarantees, that the metering systems will operate within the published accuracies and flow ranges and meet these Specifications. The Contractor shall also furnish the manufacturer's warranties as published in its literature and as specified.

3.5 CONTRACTOR QUALITY CONTROL

The Contractor shall establish and maintain a quality control system to assure compliance with contract requirements and shall maintain records of his quality control for all operations including but not limited to the following:

(1) Inspection of materials delivered to project site against approved material data.

(2) Storage and handling of materials.

(3) Installation in accordance with manufacturer's recommendations.

(4) Calibration to an accuracy of ±2 percent of actual flow throughout the range specified.

(5) Finished appearance.

Copies in duplicate of these records and tests, as well as records of corrective action taken when results are unsatisfactory, shall be furnished to the Contracting Officer within 1 working day of the inspection or test.

PART 4 SUBMITTAL SUMMARY

4.1 SUMMARY OF SUBMITTALS

Submittals to be furnished by the Contractor shall include the following:

Paragraph	Item	SD
15150-3.2	Calibration Certificates	13, 18

Code for Type of Submittal (SD)

01 - Data
04 - Drawings
06 - Instructions
07 - Schedules
08 - Statements
09 - Reports
13 - Certificates
14 - Samples
18 - Records
19 - O & M Manuals

- END OF SECTION -

* * * * *

TECHNICAL SPECIFICATION
FOR
GAUGES
SECTION 15183

ENVIRONMENTAL RESTORATION DISPOSAL FACILITY (ERDF)
CELLS 3 & 4 CONSTRUCTION

C	01/20/98	100% Design Review	MGM	LHA			
B	11/21/97	60% Design Review	MGM	LHA			
REV	DATE	REASON FOR REVISION	ORIGINATOR	CHECKER	GROUP LEADER	TASK DESIGN LEAD	PROJECT ENGINEER

	RICHLAND ENVIRONMENTAL RESTORATION PROJECT	JOB NO. 22192
		SPECIFICATION NO. 0600X-SP-M0023
		SHEET 1 of 4

This page is intentionally blank.

SECTION 15183

GAUGES

PART 1 GENERAL

1.1 REFERENCES

The publications listed below form a part of this specification to the extent referenced. The publication are referred to in the text by basic designation only.

AMERICAN SOCIETY OF MECHANICAL ENGINEERS (ASME)

ASME B1.1	(1989; B1.1a) Unified Inch Screw Threads (UN and UNR Thread Form)
ASME B40.1	(1991) Gauges-Pressure Indicating Dial Type-Elastic Element

1.2 GENERAL REQUIREMENTS

This specification section covers pressure gauges which are used in various piping and pumping systems.

1.3 DELIVERY AND STORAGE

All equipment delivered and placed in storage shall be with protection from the weather, humidity and temperature variations, dirt and dust, or other contaminants.

PART 2 PRODUCTS

2.1 PRESSURE GAUGES

2.1.1 General

Pressure gauges shall be provided on suction and discharge connections to pumps, as specified under pumps; each side of pressure reducing valves; and where shown. Vacuum gauges shall be provided where shown. In all locations (such as certain pump suction connections) where pressures may vary from below to above atmospheric head, compound gauges shall be installed.

2.1.2 Gauge Construction

Gauges shall be industrial quality type with Type 316 stainless steel movement and stainless steel or alloy case. Unless otherwise shown or specified, gauges shall have a 89 mm (3 1/2 inch) dial, 6.4 mm (1/4 inch) threaded connection, a Type 316 stainless steal snubber adapter, and a shut-off valve. Gauges shall be calibrated to read in applicable units, with an accuracy of ± 1 percent, to 150 percent of

the working pressure or vacuum of the pipe or vessel to which they are connected. All gauges shall be vibration and shock resistant.

2.1.3 Diaphragm Seal

Gauges attached to systems involving chemical solutions, corrosive fluids, leachate, sewage, or other liquids containing solids, shall be equipped with diaphragm seals, or equal protective pressure or vacuum sensing devices, as follows:

a. leachate liquids containing solids, pulsating flow

Seals of all Type 316 stainless steel, with stainless steel diaphragm for pressures over 2.18 kPa (15 psi), and elastomer diaphragm for pressures of 2.18 kPa (15 psi) and below, Type 316 stainless steel nuts and bolts, fill connection and valved flush port size 6.4 mm (1/4 inch) NPT, capable of disassembly without loss of filler fluid.

PART 3 EXECUTION

3.1 PRESSURE GAUGES

3.1.1 Orientation

All gauges shall be installed with the face in the vertical position, at the locations shown and in strict accordance with the manufacturer's printed instructions. Care shall be taken to minimize the effect of water hammer or vibrations on the gauges. In extreme cases, the gauges may have to be mounted independently, with flexible connectors.

3.1.2 Location and Accessories

The Contractor shall furnish and install pressure gauges as specified, complete, including all fittings, snubbers, connections, gaskets, supports, and accessories in the locations shown or specified, in accordance with the requirements of the Contract Documents.

3.1.3 Snubbing

Snubbers shall be provided on gauges located on pump discharges.

3.2 SCHEDULE

Location	Units	Range
Transfer Line Pump discharge	psi	0-200

3.3 CONTRACTOR QUALITY CONTROL

The Contractor shall establish and maintain a quality control system to assure compliance with contract requirements and shall maintain records of his quality control for all operations including but not limited to the following:

(1) Inspection of material delivered to project site against approved material data.

(2) Storage and hauling of materials.

(3) Finished appearance.

Copies in duplicate of these records and tests, as well as records of corrective action taken when results are unsatisfactory, shall be furnished to the Contracting Officer within 1 working day of the inspection or test.

PART 4 SUBMITTAL SUMMARY (Not Applicable)

- END OF SECTION -

* * * * *

This page is intentionally blank.

TECHNICAL SPECIFICATION
FOR
ELECTRICAL DISTRIBUTION SYSTEM, UNDERGROUND
SECTION 16375

ENVIRONMENTAL RESTORATION DISPOSAL FACILITY (ERDF)
CELLS 3 & 4 CONSTRUCTION

C	01/20/98	100% Design Review	SL	LHA			
B	11/21/97	60% Design Review	SL	LHA			
REV	DATE	REASON FOR REVISION	ORIGINATOR	CHECKER	GROUP LEADER	TASK DESIGN LEAD	PROJECT ENGINEER

	RICHLAND ENVIRONMENTAL RESTORATION PROJECT	JOB NO. 22192
		SPECIFICATION NO. 0600X-SP-E0012
		SHEET 1 of 17

This page is intentionally blank.

SECTION 16375

ELECTRICAL DISTRIBUTION SYSTEM, UNDERGROUND

PART 1 GENERAL

1.1 REFERENCES

The publications listed below form a part of this specification to the extent referenced. The publications are referred to in the text by basic designation only.

AMERICAN NATIONAL STANDARDS INSTITUTE (ANSI)

ANSI C2	(1993) National Electrical Safety Code
ANSI C80.1	(1990) Rigid Steel Conduit - Zinc Coated
ANSI C119.1	(1986) Sealed Insulated Underground Connector Systems Rated 600 Volts

AMERICAN SOCIETY FOR TESTING AND MATERIALS (ASTM)

ASTM A 123	(1989a) Zinc (Hot-Dip Galvanized) Coatings on Iron and Steel Products
ASTM A 153	(1982; R 1987) Zinc Coating (Hot-Dip) on Iron and Steel Hardware
ASTM B 8	(1990) Concentric-Lay-Stranded Copper Conductors, Hard, Medium-Hard, or Soft
ASTM B 117	(1990) Salt Spray (Fog) Testing

FEDERAL SPECIFICATIONS (FS)

FS W-S-610	(Rev E) Splice Connectors

INSTITUTE OF ELECTRICAL AND ELECTRONIC ENGINEERS (IEEE)

IEEE Std 81	(1983) Guide for Measuring Earth Resistivity, Ground Impedance, and Earth Surface Potentials of a Ground System
IEEE Std 100	(1988) IEEE Standard Dictionary of Electrical and Electronics Terms

NATIONAL ELECTRICAL MANUFACTURERS ASSOCIATION (NEMA)

NEMA FB 1	(1988) Fittings, Cast Metal Boxes, and Conduit Bodies for Conduit and Cable Assemblies

NEMA TC 7	(1990) Smooth-Wall Coilable Polyethylene Electrical Plastic Duct

NATIONAL FIRE PROTECTION ASSOCIATION (NFPA)

NFPA 70	(1993) National Electrical Code

UNDERWRITERS LABORATORIES (UL)

UL 6	(1981; Rev thru Dec 1992) Rigid Metal Conduit
UL 467	(1984; Rev thru Nov 1986) Grounding and Bonding Equipment
UL 486A	(1991; Rev Oct 1991) Wire Connectors and Soldering Lugs for Use with Copper Conductors
UL 486B	(1991; Rev thru Apr 1992) Wire Connectors for Use with Aluminum Conductors
UL 514A	(1991) Metallic Outlet Boxes
UL 651	(1989; Rev thru Dec 1989) Schedule 40 and 80 Rigid PVC Conduit

1.2 GENERAL REQUIREMENTS

1.2.1 Terminology

Terminology used in this specification is as defined in IEEE Std 100.

1.2.2 Service Conditions

Items provided under this section shall be specifically suitable for the following service conditions:

a. Altitude 213 m (700 feet)

b. Ambient Temperature minus 20 degrees C (minus 5 degrees F) to 43 degrees C (110 degrees F)

c. Frequency 60

d. Seismic Zone 2B

1.3 SUBMITTALS

Submittals shall be furnished in accordance with Exhibit I.

SD-01 Data

Nameplates.

SD-09 Reports

Factory Test;

Certified factory test reports shall be submitted when the manufacturer performs routine factory tests, including tests required by standards listed in paragraph REFERENCES. Results of factory tests performed shall be certified by the manufacturer, or an approved testing laboratory, and submitted within 7 days following successful completion of the tests specified in applicable publications or in these specifications. The manufacturer's pass-fail criteria for tests specified in paragraph FIELD TESTING shall be included.

Field Testing;

A proposed field test plan, 20 days prior to testing the installed system. No field test shall be performed until the test plan is approved. The test plan shall consist of complete field test procedures including tests to be performed, test equipment required, and tolerance limits.

Test Reports;

Three copies of the information described below in 215.9 mm by 279.4 mm (8 1/2 by 11 inch) binders having a minimum of 5 rings from which material may readily be moved and replaced, including a separate section for each test. Sections shall be separated by heavy plastic dividers with tabs.

a. A list of all equipment used, with calibration certifications.

b. A copy of all measurements taken.

c. The dates of testing.

d. The equipment and values to be verified.

e. The condition specified for the test.

f. The test results, signed and dated.

g. A description of all adjustments made.

Cable Installation Reports;

Three copies of the information described below in 215.9 mm by 279.4 mm (8 1/2 by 11 inch) binders having a minimum of 5 rings from which material may readily be removed and replaced, including a separate section for each cable pull. Sections shall be separated by heavy plastic dividers with tabs, with all data sheets signed and dated by the person supervising the pull.

a. Site layout drawing with all cable pulls numerically identified.

b. A list of all equipment used, with calibration certifications. The manufacturer of and quantity of lubricant used on pull.

c. The cable manufacturer and type of cable.

d. The dates of cable pulls, time of day, and ambient temperature.

e. The length of cable pull and calculated cable pulling tensions.

f. The actual cable pulling tensions encountered during pull.

SD-19 O & M Manuals

Electrical Distribution System;

Three copies of Operation and Maintenance manuals, within 7 calendar days following the completion of test and including assembly, installation, operation and maintenance instructions, spare parts data which provides supplier name, current cost, catalog order number, and a recommended list of spare parts to be stocked. Manuals shall also include data outlining detailed procedures for system startup and operation, and a troubleshooting guide which lists possible operational problems and corrective action to be taken. A brief description of all equipment, basic operating features, and routine maintenance requirements shall also be included. Documents shall be bound in a binder marked or identified on the spine and front cover. A table of contents page shall be included and marked with pertinent contract information and contents of the manual. Tabs shall be provided to separate different types of documents, such as catalog ordering information, drawings, instructions, and spare parts data. Index sheets shall be provided for each section of the manual when warranted by the quantity of documents included under separate tabs or dividers.

1.4 DELIVERY, STORAGE, AND HANDLING

Devices and equipment shall be visually inspected by the Contractor when received and prior to acceptance from conveyance. Stored items shall be protected from the environment in accordance with the manufacturer's published instructions. Damaged items shall be replaced.

1.5 EXTRA MATERIALS

One additional spare fuse or fuse element for each furnished fuse or fuse element shall be delivered to the contracting officer when the electrical system is accepted. Two complete sets of all special tools required for maintenance shall be provided, complete with a suitable tool box. Special tools are those that only the manufacturer provides, for special purposes (to access compartments, or operate, adjust, or maintain special parts).

PART 2 PRODUCTS

2.1 STANDARD PRODUCT

Material and equipment shall be the standard product of a manufacturer regularly engaged in the manufacture of the product and shall essentially duplicate items that have been in satisfactory use for at least 2 years prior to bid opening. Items of the same classification shall be identical including equipment, assemblies, parts, and components.

2.2 NAMEPLATES

2.2.1 General

Each major component of this specification shall have the manufacturer's name, address, type or style, model or serial number, and catalog number on a nameplate securely attached to the equipment. Nameplates shall be made of noncorrosive metal. Nameplates shall be provided for transformers, circuit breakers, meters, switches, and lighting panels as shown on the drawings.

2.3 CORROSION PROTECTION

2.3.1 Aluminum Materials

Aluminum shall not be used.

2.3.2 Ferrous Metal Materials

2.3.2.1 Hardware

Ferrous metal hardware shall be hot-dip galvanized in accordance with ASTM A 153 and ASTM A 123.

2.3.2.2 Equipment

Equipment and component items shall be provided with corrosion-resistant finishes which shall withstand 120 hours of exposure to the salt spray test specified in ASTM B 117 without loss of paint or release of adhesion of the paint primer coat to the metal surface in excess of 1.6 mm (1/16 inch) from the test mark. The scribed test mark and test evaluation shall be in accordance with ASTM D 1654 with a rating of not less than 7 in accordance with TABLE 1, (procedure A). Cut edges or otherwise damaged surfaces of hot-dip galvanized sheet steel or mill galvanized sheet steel shall be coated with a zinc rich paint conforming to the manufacturer's standard.

2.3.3 Finishing

Painting required for surfaces not otherwise specified and finish painting of items only primed at the factory shall be as specified in Section 09900 PAINTING, GENERAL.

2.4 CABLES

Cables shall be single conductor type unless otherwise indicated.

2.4.1 Conductor Material

Underground cables shall be of soft drawn copper conductor material.

2.4.2 Low-Voltage Cables

2.4.2.1 In Duct

Cables shall be single-conductor cable, Type XHHW in accordance with NFPA 70. Cables in factory-installed, coilable-plastic-duct assemblies shall conform to NEMA TC 5 or NEMA TC 7.

2.5 CABLE JOINTS, TERMINATIONS, AND CONNECTORS

2.5.1 Low-Voltage Cable Splices

Low-voltage cable splices and terminations shall be rated at not less than 600 Volts. Splices in conductors No. 10 AWG and smaller shall be made with an insulated, solderless, pressure type connector, Type I, Class 1, Grade B, Style G, or Type II, Class 1 of FS W-S-610 and conforming to the applicable requirements of UL 486A. Splices in conductors No. 8 AWG and larger shall be made with noninsulated, solderless, pressure type connector, Type II, Class 2 of FS W-S-610, conforming to the applicable requirements of UL 486A and UL 486B. Splices shall then be covered with an insulation and jacket material equivalent to the conductor insulation and jacket. Splices below grade or in wet locations shall be sealed type conforming to ANSI C119.1 or shall be waterproofed by a sealant-filled, thick wall, heat shrinkable, thermosetting tubing or by pouring a thermosetting resin into a mold that surrounds the joined conductors.

2.5.2 Terminations

Terminations shall be in accordance with IEEE Std 48, Class 1 or Class 2; of the molded elastomer, wet-process porcelain, prestretched elastomer, heat-shrinkable elastomer, or taped type. Acceptable elastomers are track-resistant silicone rubber or track-resistant ethylene propylene compounds, such as ethylene propylene rubber or ethylene propylene diene monomer. Separable insulated connectors may be used for apparatus terminations, when such apparatus is provided with suitable bushings. Terminations shall be of the outdoor type, except that where installed inside outdoor equipment housings which are sealed against normal infiltration of moisture and outside air, indoor, Class 2 terminations are acceptable. Class 3 terminations are not acceptable. Terminations, where required, shall be provided with mounting brackets suitable for the intended installation and with grounding provisions for the cable shielding, metallic sheath, and armor.

2.5.2.1 Factory Preformed Type

Molded elastomer, wet-process porcelain, prestretched, and heat-shrinkable terminations shall utilize factory preformed components to the maximum extent practicable rather than tape build-up. Terminations shall have basic impulse levels as required for the system voltage level. Leakage distances shall comply with wet withstand voltage test requirements of IEEE Std 48 for the next higher Basic Insulation Level (BIL) level. Anti-tracking tape shall be applied over exposed insulation of preformed molded elastomer terminations.

2.5.2.2 Taped Terminations

Taped terminations shall use standard termination kits providing terminal connectors, field-fabricated stress cones, and rain hoods. Terminations shall be at least 315 mm (12-1/2 inches) long from the end of the tapered cable jacket to the start of the terminal connector, or not less than the kit manufacturer's recommendations, whichever is greater.

2.6 CONDUIT AND DUCTS

Duct lines shall be concrete-encased unless specified or shown otherwise. Single duct low-voltage lines or communication lines may be direct-burial.

2.6.1 Metallic Conduit

Intermediate metal conduit shall comply with UL 1242. Rigid galvanized steel conduit shall comply with UL 6 and ANSI C80.1. Metallic conduit fittings and outlets shall comply with UL 514A and NEMA FB 1.

2.6.1.1 Concrete Encased Ducts

UL 651 Schedule 40.

2.6.1.2 Direct Burial

UL 651 Schedule 80.

2.6.2 Conduit Sealing Compound

Compounds for sealing ducts and conduit shall have a putty-like consistency workable with the hands at temperatures as low as 2 degrees C (35 degrees F), shall neither slump at a temperature of 150 degrees C (300 degrees F), nor harden materially when exposed to the air. Compounds shall adhere to clean surfaces of fiber or plastic ducts; metallic conduits or conduit coatings; concrete, masonry, or lead; any cable sheaths, jackets, covers, or insulation materials; and the common metals. Compounds shall form a seal without dissolving, noticeably changing characteristics, or removing any of the ingredients. Compounds shall have no injurious effect upon the hands of workmen or upon materials. Compound shall not have any injurious effect on cables or wires insulation or jacket routed through the sealing compound. Compound shall be evaluated for any effects on ampacities of cable or wires that would require a correction factor be applied.

2.7 PULLBOXES

Pullboxes shall be as indicated. Concrete pullboxes shall consist of precast reinforced concrete boxes, extensions, bases, and covers. Frames and covers shall be galvanized.

2.8 GROUNDING

2.8.1 Driven Ground Rods

Ground rods shall be copper-clad steel conforming to UL 467 C135.30 not less than 19.1 mm (3/4 inch) in diameter by 3.1 m (10 ft) in length or as shown on drawings. Sectional type rods may be used.

2.8.2 Grounding Conductors

Grounding conductors shall be bare. Bare conductors shall be ASTM B 8 soft-drawn unless otherwise indicated. Aluminum is not acceptable.

2.9 CONCRETE AND REINFORCEMENT

Concrete shall be a minimum of 17.3 MPa (2500 psi) at 28 days. Concrete color shall be red. Concrete reinforcing shall be as shown on drawings and as specified in Section 03200 CONCRETE REINFORCEMENT.

PART 3 EXECUTION

3.1 GENERAL INSTALLATION REQUIREMENTS

Equipment and devices shall be installed and energized in accordance with the manufacturer's published instructions. Steel conduits installed underground shall be installed and protected from corrosion in conformance with the requirements of Section 16415 ELECTRICAL WORK. Except as covered herein, excavation, trenching, and backfilling shall conform to the requirements of Section 02210 EARTHWORK.

3.1.1 Conformance to Codes

The installation shall comply with the requirements and recommendations of NFPA 70 and ANSI C2 as applicable.

3.1.2 Verification of Work and Dimensions and Construction Sequencing

The Contractor shall become familiar with details of the work, shall verify dimensions in the field, and shall advise the Contracting Officer of any discrepancy before performing any work. The Contractor shall carefully examine all work to be done in, on, or adjacent to existing equipment. Work shall be scheduled, subject to the Contracting Officer's approval, to avoid plant shutdown. All switching, safety tagging, etc. required to isolate existing equipment shall be performed by the Contractor. In no case shall the Contractor begin any work in, on, or adjacent to existing equipment without written authorization by the Contracting Officer. The Contractor shall make all modifications or alterations to existing electrical facilities required to successfully install and integrate the new electrical equipment as indicated. All modifications to existing equipment, panels, or cabinets shall be made in a professional manner with all coatings repaired to match existing. The costs for all modifications to existing electrical facilities required for a complete and operating system shall be included in the Contractor's original bid amount and no additional payment for this work shall be authorized. The Contractor shall be responsible for identifying all available existing circuit breakers in lighting panels for the intended use as required by the drawings. Contractor shall also be responsible for field verifying the available space in substation switchboards to integrate new power circuit breakers. Costs for this work shall be included in the Contractor's original bid amount. To facilitate continuous operation of existing equipment, the Contractor shall be required to provide temporary equipment as required to maintain the existing facility operation. All costs associated with these temporary installations shall be part of the original bid.

3.2 CABLE INSTALLATION

The Contractor shall obtain from the manufacturer an installation manual or set of instructions which addresses such aspects as cable construction, insulation type, cable diameter, bending radius, cable temperature, lubricants, coefficient of friction, conduit cleaning, storage procedures, moisture seals, testing for and purging moisture, etc. The Contractor shall then perform pulling calculations and prepare a pulling plan that will be followed during cable installation.

3.2.1 Cable Installation Plan and Procedure

Cable shall be installed strictly in accordance with the cable manufacturer's recommendations. Each circuit shall be identified by means of a fiber, laminated plastic, or non-ferrous metal tags, or approved equal, in each pullbox and each terminal. Identification shall be per wire and cable numbers as shown on drawings. Wire and cables not numbered on drawings shall be labeled as directed by the Contracting Officer.

3.2.1.1 Cable Inspection

The cable reel shall be inspected for correct storage positions, signs of physical damage, and broken end seals. If end seal is broken, moisture shall be removed from cable in accordance with the cable manufacturer's recommendations.

3.2.1.2 Duct Cleaning

Duct shall be cleaned with an assembly that consists of a flexible mandrel (manufacturers standard product in lengths recommended for the specific size and type of duct) that is 6.4 mm (1/4 inch) less than inside diameter of duct, 2 wire brushes, and a rag. The cleaning assembly shall be pulled through conduit a minimum of 2 times or until less than a volume of 131 cubic centimeters (8 inches) of debris is expelled from the duct.

3.2.1.3 Duct Lubrication

The cable lubricant shall be compatible with the cable jacket for cable that is being installed. Application of lubricant shall be in accordance with lubricant manufacturer's recommendations.

3.2.1.4 Cable Installation

The Contractor shall provide a cable feeding truck and a cable pulling winch. The Contractor shall provide a pulling grip or pulling eye in accordance with cable manufacturer's recommendations. The pulling grip or pulling eye apparatus shall be attached to polypropylene or manilla rope followed by lubricant front end packs and then by power cables. A dynamometer shall be used to monitor pulling tension. Pulling tension shall not exceed cable manufacturer's recommendations. The Contractor shall not allow cables to cross over while cables are being fed into duct. For cable installation in cold weather, cables shall be kept at 10 degrees C (50 degrees F) temperature for at least 24 hours before installation.

3.2.1.5 Cable Installation Plan

Cable installation plan shall include:

a. Site layout drawing with cable pulls identified in numeric order of expected pulling sequence and direction of cable pull.

b. List of cable installation equipment.

c. Lubricant manufacturer's application instructions.

d. Procedure for resealing cable ends to prevent moisture from entering cable.

e. Cable pulling tension calculations of all cable pulls.

f. Cable percentage conduit fill.

g. Cable sidewall thrust pressure.

h. Cable minimum bend radius and minimum diameter of pulling wheels used.

i. Cable jam ratio.

j. Maximum allowable pulling tension on each different type and size of conductor.

k. Maximum allowable pulling tension on pulling device.

3.2.2 Duct Line

Cables shall be installed in duct lines where indicated. Cable splices in low-voltage cables shall be made in manholes and handholes only, except as otherwise noted. Neutral and grounding conductors shall be installed in the same duct with their associated phase conductors.

3.2.3 Electric Pullboxes

Cables shall be routed around the interior walls and securely supported from walls on cables racks. Cable routing shall minimize cable crossover, provide access space for maintenance and installation of additional cables, and maintain cable separation in accordance with ANSI C2.

3.3 DUCT LINES

3.3.1 Requirements

Numbers and sizes of ducts shall be as indicated. Duct lines shall be laid with a minimum slope of 100 mm per 30 m (4 inches per 100 feet). Depending on the contour of the finished grade, the high-point may be at a terminal, a pullbox, or between pullboxes. Short-radius manufactured 90-degree duct bends may be used only for pole or equipment risers, unless specifically indicated as acceptable. The minimum manufactured bend radius shall be 450 mm (18 inches) for ducts of less than 80 mm (3-inch) diameter, and 900 mm (36 inches) for ducts 80 mm (3 inches) or greater in diameter. Otherwise, long sweep bends having a minimum radius of 7.6 m (25 feet) shall be used for a change of direction of more than 5 degrees, either horizontally or vertically. Both curved and straight sections may be used to form long sweep bends, but the maximum curve used shall be 30 degrees and manufactured bends shall be used. Ducts shall be provided with end bells whenever duct lines terminate in pullboxes.

3.3.2 Treatment

Ducts shall be kept clean of concrete, dirt, or foreign substances during construction. Field cuts requiring tapers shall be made with proper tools and match factory tapers. A coupling recommended by the duct manufacturer shall be used whenever an existing duct is connected to a duct of different material or shape. Ducts shall be stored to avoid warping and deterioration with ends sufficiently plugged to prevent entry of any water or solid substances. Ducts shall be thoroughly cleaned before being laid. Plastic ducts shall be stored on a flat surface and protected from the direct rays of the sun.

3.3.3 Concrete Encasement

Duct line encasements shall be monolithic construction. Where a connection is made to a previously poured encasement or pullbox, the new encasement shall be well bonded or doweled to the existing encasement. At any point tops of concrete encasements shall be not less than the cover requirements listed in NFPA 70. As shown duct lines shall be encased with concrete and reinforced as indicated to withstand specified surface loadings. Separators or spacing blocks shall be made of steel, concrete, plastic, or a combination of these materials placed not farther apart than 1.2 m (4 feet) on centers. Ducts shall be securely anchored to prevent movement during the placement of concrete and joints shall be staggered at least 150 mm (6 inches) vertically.

3.3.4 Nonencased Direct-Burial

Top of duct lines shall be less than 762 mm (30 inches) below finished grade and shall be installed with a minimum of 75 mm (3 inches) of earth around each duct, except that between adjacent electric power and communication ducts, 300 (12 inches) of earth is required. Bottoms of trenches shall be graded toward pullboxes and shall be smooth and free of stones, soft spots, and sharp objects. Where bottoms of trenches comprise materials other than sand, a 75 mm (3 inch) layer of sand shall be laid first and compacted to approximate densities of surrounding firm soil before installing ducts. The rest of the excavation shall be backfilled and compacted in 75 mm to 150 mm (3-to 6-inch) layers.

3.3.5 Installation of Couplings

Joints in each type of duct shall be made up in accordance with the manufacturer's recommendations for the particular type of duct and coupling selected and as approved.

3.3.5.1 Plastic Duct

Duct joints shall be made by brushing a plastic solvent cement on insides of plastic coupling fittings and on outsides of duct ends. Each duct and fitting shall then be slipped together with a quick 1/4-turn twist to set the joint tightly.

3.3.6 Duct Line Markers

A 0.127 mm (5-mil) brightly colored plastic tape, not less than 75 mm (3 inches) in width and suitably inscribed at not more than 3 m (10 feet) on centers with a continuous metallic backing and a corrosion-resistant 0.0254 mm (1 mil) metallic foil core to permit easy location of the duct line, shall be placed approximately 300 mm (12 inches) below finished grade levels for all duct lines.

3.4 PULLBOXES

3.4.1 General

Pullboxes shall be constructed approximately where shown. The exact location of each pullbox shall be determined after careful consideration has been given to the location of other utilities and grading. The location of each pullbox shall be approved by the Contracting Officer before construction of the pullbox is started. In unpaved areas, the top of manhole covers shall be approximately 15 mm (1/2 inch) above the finished grade. Where existing grades that are higher than finished grades are encountered, concrete assemblies designed for the purpose shall be installed to elevate temporarily the manhole cover to existing grade level. Where duct lines enter manholes, the sections of duct may be either cast in the concrete or may enter the manhole through a square or rectangular opening of suitable dimensions provided in the manhole walls. Where openings are provided for the entrance of duct lines, the space between ducts and between ducts and manhole walls shall be caulked tight with lead wool or approved equal. A cast metal grille-type sump frame and cover shall be installed over the manhole sump. A cable-pulling iron shall be installed in the wall opposite each duct line entrance.

3.4.2 Electric Pullboxes

Cables shall be securely supported from walls by hot-dip galvanized cable racks and equipped with adjustable hooks and insulators. Cable racks shall be installed in each manhole and not less than 2 spare hooks shall be installed on each cable rack. Insulators shall be made of high-glazed porcelain. Insulators will not be required on spare hooks. Covers shall be marked "Low Voltage" and provided with

2 lifting eyes and 2 hold-down bolts. Each box shall have a suitable opening for a ground rod. Conduit, cable, ground rod entrances, and unused openings shall be sealed with mortar.

3.4.3 Signal Pullboxes

The number of hot-dip galvanized cable racks indicated shall be installed in each Signal Pullbox. Each cable rack shall be provided with 2 cable hooks. Cables for the telephone and communication systems will be installed by others. Each box shall have a suitable opening for a ground rod.

3.4.4 Ground Rods

A ground rod shall be installed at the pullboxes. When precast concrete manholes are used, the top of the ground rod may be below the manhole floor and a No. 1/0 AWG tinned ground conductor brought into the manhole through a watertight sleeve in the manhole wall.

3.5 PAD-MOUNTED EQUIPMENT INSTALLATION

Pad-mounted equipment, shall be installed on concrete pads in accordance with the manufacturers published, standard installation drawings and procedures, except that they shall be modified to meet the requirements of this document. Units shall be carefully installed so as not to damage equipment or scratch painted or coated surfaces. After installation, surfaces shall be inspected and scratches touched up with a paint or coating provided by the manufacturer especially for this purpose.

3.5.1 Concrete Pads

3.5.1.1 Construction

Concrete pads for pad-mounted electrical equipment shall be poured-in-place. Pads shall be constructed as indicated except that exact pad dimensions and mounting details are equipment specific and are the responsibility of the Contractor. Tops of concrete pads shall be level and shall project 100 mm (4 inches) above finished paving or grade and sloped to drain. Edges of concrete pads shall have 20 mm (3/4 inch) chamfer. Conduits for primary, secondary, and grounding conductors shall be set in place prior to placement of concrete pads. Where grounding electrode conductors are installed through concrete pads, PVC conduit sleeves shall be installed through the concrete to provide physical protection.

3.5.1.2 Sealing

When the installation is complete, the Contractor shall seal all conduit and other entries into the equipment enclosure with an approved sealing compound. Seals shall be of sufficient strength and durability to protect all energized live parts of the equipment from rodents, insects, or other foreign matter.

3.6 CONNECTIONS TO BUILDINGS

Cables shall be extended into the various buildings as indicated, and shall be connected to the first applicable termination point in each building. Interfacing with building interior conduit systems shall be at conduit stubouts terminating 1.5 m (5 ft) outside of a building and 600 mm (2 ft) below finished grade as specified and provided under Section 16415 ELECTRICAL WORK. After installation of cables, conduits shall be sealed with caulking compound to prevent entrance of moisture or gases into buildings.

3.7 GROUNDING

A ground ring consisting of the indicated configuration of bare copper conductors and driven ground rods shall be installed around pad-mounted equipment as shown. Equipment frames of metal-enclosed equipment, and other noncurrent-carrying metal parts, such as cable shields, cable sheaths and armor, and metallic conduit shall be grounded. At least 2 connections shall be provided from a transformer and a motor control center to the ground ring.

3.7.1 Grounding Electrodes

Grounding electrodes shall be installed as shown on the drawings and as follows:

a. Driven rod electrodes - Unless otherwise indicated, ground rods shall be driven into the earth until the tops of the rods are approximately 300 mm (1 ft) below finished grade.

b. Ground ring - A ground ring shall be installed as shown consisting of bare copper conductors installed 450 mm 18 inches, plus or minus 75 mm, (3 inches), below finished top of soil grade. Ground ring conductors shall be sized as shown.

c. Additional electrodes - Whenever the required ground resistance is not met, provide additional electrodes interconnected with grounding conductors, to achieve the specified ground resistance. The additional electrodes will be 3, 3.1 m (10-foot) rods spaced a minimum of 6.2 m (20 feet) apart.

3.7.2 Grounding and Bonding Connections

Connections above grade shall be made by the fusion-welding process or with bolted solderless connectors, in compliance with UL 467, and those below grade shall be made by a fusion-welding process. Where grounding conductors are connected to aluminum-composition conductors, specially treated or lined copper-to-aluminum connectors suitable for this purpose shall be used.

3.7.3 Grounding and Bonding Conductors

Grounding and bonding conductors include all conductors used to bond transformer enclosures and equipment frames to the grounding electrode system. Grounding and bonding conductors shall be sized as shown, and located to provide maximum physical protection. Bends greater than 45 degrees in ground conductors are not permitted. Routing of ground conductors through concrete shall be avoided. When concrete penetration is necessary, nonmetallic conduit shall be cast flush with the points of concrete entrance and exit so as to provide an opening for the ground conductor, and the opening shall be sealed with a suitable compound after installation.

3.7.4 Pullbox Grounding

Ground rods installed in electrical-distribution-system pullboxes shall be connected to cable racks, cable-pulling irons, the cable shielding, metallic sheath, and armor at each cable joint or splice by means of a No. 4 AWG braided tinned copper wire. Connections to metallic cable sheaths shall be by means of tinned terminals soldered to ground wires and to cable sheaths. Care shall be taken in soldering not to damage metallic cable sheaths or shields. Ground rods shall be protected with a double wrapping of pressure-sensitive plastic tape for a distance of 50 mm (2 inches) above and 150 mm (6 inches) below concrete penetrations. Grounding electrode conductors shall be neatly and firmly attached to pullbox walls and the amount of exposed bare wire shall be held to a minimum.

3.8 FIELD TESTING

3.8.1 General

Field testing shall be performed in the presence of the Contracting Officer. The Contractor shall notify the Contracting Officer 10 days prior to conducting tests. The Contractor shall furnish all materials, labor, and equipment necessary to conduct field tests. The Contractor shall perform all tests and inspections recommended by the manufacturer unless specifically waived by the Contracting Officer. The Contractor shall maintain a written record of all tests which includes date, test performed, personnel involved, devices tested, serial number and name of test equipment, and test results. All field test reports shall be signed and dated by the Contractor.

3.8.2 Safety

The Contractor shall provide and use safety devices such as rubber gloves, protective barriers, and danger signs to protect and warn personnel in the test vicinity. The Contractor shall replace any devices or equipment which are damaged due to improper test procedures or handling.

3.8.3 Ground-Resistance Tests

The resistance of each grounding electrode system shall be measured using the fall-of-potential method defined in IEEE Std 81. Ground resistance measurements shall be made before the electrical distribution system is energized and shall be made in normally dry conditions not less than 48 hours after the last rainfall. Resistance measurements of separate grounding electrode systems shall be made before the systems are bonded together below grade. The combined resistance of separate systems may be used to meet the required resistance, but the specified number of electrodes must still be provided.

a. Single rod electrode - 25 ohms.

b. Multiple rod electrodes - 5 ohms.

c. Ground ring - 5 ohms.

3.8.4 Low-Voltage Cable Test

After installation, but just prior to terminal connection, low voltage cables shall be tested as follows:

a. One thousand volt "Megger" test with all other conductors in each conduit or cable grounded. The final resistance of each conductor shall not be less than one (1) megohm.

b. Continuity test of each conductor from terminal to terminal and phase identification check of power conductors.

c. Suitable records shall be kept of all tests, indicating the "Megger" readings, continuity test, and conductor identification markings. All tests shall be witnessed and signed by a Representative of the Contracting Officer. A duplicate record of all tests shall be furnished to the Contracting Officer. Prior to testing, the Contractor shall submit his test record form for approval of the Contracting Officer.

d. Any length of wires or cable failing under the above tests shall be replaced by the Contractor at no additional cost to the Government.

e. The Contractor shall furnish all instruments and personnel required to these tests.

f. Tests shall be witnessed by a representative of the Contracting Officer and the test form shall provide room for his signature.

3.9 MANUFACTURER'S FIELD SERVICE

3.9.1 Onsite Training

The Contractor shall conduct a training course for the operating staff as designated by the Contracting Officer. The training period shall consist of a minimum of 16 hours of normal working time and shall start after the system is functionally completed but prior to facility turnover. The course instruction shall cover pertinent points involved in operating, starting, stopping, and servicing the equipment, as well as all major elements of the operation and maintenance manuals. Additionally, the course instructions shall demonstrate all routine maintenance operations.

3.9.2 Installation Engineer

After delivery of the equipment, the Contractor shall furnish one or more field engineers, regularly employed by the equipment manufacturer to supervise the installation of the equipment, assist in the performance of the onsite tests, initial operation, and instruct personnel as to the operational and maintenance features of the equipment.

3.10 ACCEPTANCE

Final acceptance of the facility will not be given until the Contractor has successfully completed all tests and after all defects in installation, material or operation have been corrected and Contractor has met all the requirements of the GENERAL CONDITIONS article titled "FINAL INSPECTION AND ACCEPTANCE".

3.11 CONTRACTOR QUALITY CONTROL

The Contractor shall establish and maintain a quality control system to assure compliance with contract requirements and shall maintain records of his quality control for all operations including but not limited to the following:

(1) Delivery, storage, and handling of devices and equipment used.

(2) Conformance of materials to the requirements of these specifications.

(3) Inspection of devices and equipment installed.

(4) Field Testing of devices and equipment.

(5) Installation of devices and equipment to these requirements and applicable codes and standards.

Copies in duplicate of these records and tests, as well as records of corrective action taken when results are unsatisfactory, shall be furnished to the Contracting Officer within 1 working day of the inspection or test.

PART 4 SUBMITTAL SUMMARY

4.1 SUMMARY OF SUBMITTALS

Submittals to be furnished by the Contractor shall include the following:

Paragraph	Item	SD
16375-1.3	Electrical Distribution System Drawings	04
16375-1.3	Factory Tests	09
16375-1.3	Field Testing Plan	09
16375-1.3	Cable Installation Report	09
16375-1.3	O & M Manuals	19
16375-2.2	Nameplates	01
16375-3.8.3	Ground-Resistant Tests	09
16375-3.8.4	Low-Voltage Cable Tests	09

Code for Type of Submittal (SD)

01	-	Data
04	-	Drawings
06	-	Instructions
07	-	Schedules
08	-	Statements
09	-	Reports
13	-	Certificates
14	-	Samples
18	-	Records
19	-	O & M Manuals

- END OF SECTION -

* * * * *

TECHNICAL SPECIFICATION
FOR
ELECTRICAL WORK
SECTION 16415

ENVIRONMENTAL RESTORATION DISPOSAL FACILITY (ERDF)
CELLS 3 & 4 CONSTRUCTION

REV	DATE	REASON FOR REVISION	ORIGINATOR	CHECKER	GROUP LEADER	TASK DESIGN LEAD	PROJECT ENGINEER
C	01/20/98	100% Design Review	SL	LHA			
B	11/21/97	60% Design Review	SL	LHA			

RICHLAND ENVIRONMENTAL RESTORATION PROJECT	JOB NO. 22192
	SPECIFICATION NO. 0600X-SP-E0013
	SHEET 1 of 21

This page is intentionally blank.

SECTION 16415

ELECTRICAL WORK

PART 1 GENERAL

1.1 REFERENCES

The publications listed below form a part of this specification to the extent referenced. The publications are referred to in the text by basic designation only.

AMERICAN NATIONAL STANDARDS INSTITUTE (ANSI)

ANSI C57.12.50	(1981) Ventilated Dry-Type Distribution Transformers, 1 to 500 kVa, Single-Phase, and 15 to 500 kVa, Three-Phase, With High Voltage 601 to 34 500 Volts, Low Voltage 120 to 600 Volts
ANSI C82.4	(1985; C82.4a) Ballasts for High-Intensity-Discharge and Low-Pressure Sodium Lamps (Multiple-Supply Type)

CODE OF FEDERAL REGULATIONS (CFR)

CFR 47 Part 18	(Rev Oct 1, 1994) Industrial, Scientific, and Medical Equipment

FEDERAL SPECIFICATIONS (FS)

FS L-C-530	(Rev C) Coating, Pipe, Thermoplastic Resin
FS L-P-387	(Rev A; Am 1, Int Am 2) Plastic Sheet, Laminated, Thermosetting (for Designation Plates)

INSTITUTE OF ELECTRICAL AND ELECTRONICS ENGINEERS (IEEE)

IEEE C57.12.01	(1989) Dry-Type Distribution and Power Transformers Including Those With Solid Cast and/or Resin - Encapsulated Windings
IEEE C57.12.80	(1978; R 1986) Terminology for Power and Distribution Transformers
IEEE C57.12.91	(1979) Test Code for Dry Type Distribution and Power Transformers
IEEE C57.94	(1982; R 1987) Installation, Application, Operation and Maintenance of Dry-Type General Purpose Distribution and Power Transformers

IEEE C57.98	(1986) Guide for Transformer Impulse Tests - Appendix to C57.12.90
IEEE C57.105	(1978; R 1987) Transformers Connections in Three Phase Distribution Systems
IEEE C62.41	(1991) Surge Voltages in Low-Voltage AC Power Circuits

NATIONAL ELECTRICAL MANUFACTURERS ASSOCIATION (NEMA)

NEMA 250	(1991) Enclosures for Electrical Equipment (1000 Volts Maximum)
NEMA AB 1	(1986; Rev 1) Molded Case Circuit Breakers and Molded Case Switches
NEMA FU 1	(1986) Low Voltage Cartridge Fuses
NEMA ICS 1	(1988; Rev 1, 2 & 3) Industrial Controls and Systems
NEMA ICS 2	(1988; Rev 1) Industrial Control Devices, Controllers and Assemblies
NEMA ICS 3	(1988; Rev 1) Industrial Systems
NEMA ICS 6	(1988; Rev 1) Enclosures for Industrial Control and Systems
NEMA MG 1	(1987; Rev 1 and 2) Motors and Generators
NEMA MG 10	(1983; R 1988) Energy Management Guide for Selection and Use of Polyphase Motors
NEMA OS 1	(1989) Sheet Steel Outlet Boxes, Device Boxes, Covers, and Box Supports
NEMA PB 1	(1990; PB 1.1) Panelboards
NEMA RN 1	(1989) Polyvinyl-Chloride (PVC) Externally Coated Galvanized Rigid Steel Conduit and Intermediate Metal Conduit
NEMA TC 2	(1990) Electrical Polyvinyl Chloride (PVC) Tubing (EPT) and Conduit (EPC-40 and EPC-80)
NEMA WD 1	(1983; R 1989) General Requirements for Wiring Devices
NEMA WD 6	(1988) Wiring Devices - Dimensional Requirements

NATIONAL FIRE PROTECTION ASSOCIATION (NFPA)

NFPA 70	(1993) National Electrical Code
NFPA 101	(1991) Safety to Life from Fire in Buildings and Structures

UNDERWRITERS LABORATORIES (UL)

UL 1	(1985; Rev thru Nov 1992) Flexible Metal Conduit
UL 6	(1981; Rev thru Dec 1992) Rigid Metal Conduit
UL 20	(1986; Rev thru Jul 1991) General-Use Snap Switches
UL 44	(1991; Rev thru Jan 1993) Rubber-Insulated Wires and Cables
UL 50	(1992) Enclosures for Electrical Equipment
UL 67	(1988; Rev thru Feb 1993) Panelboards
UL 83	(1991; Rev thru Jul 1992) Thermoplastic-Insulated Wires and Cables
UL 98	(1987; Rev thru Apr 1990) Enclosed and Dead-Front Switches
UL 360	(1986; Rev thru Jan 1993) Liquid-Tight Flexible Steel Conduit
UL 467	(1984; Rev thru Nov 1986) Grounding and Bonding Equipment
UL 486A	(1991; Rev Oct 1991) Wire Connectors and Soldering Lugs for Use with Copper Conductors
UL 486C	(1991; Rev thru Sep 1992) Splicing Wire Connectors
UL 489	(1991; Rev thru May 1992) Molded-Case Circuit Breakers and Circuit-Breaker Enclosures
UL 508	(1993) Industrial Control Equipment
UL 510	(1986; Rev Oct 1986) Insulating Tape
UL 512	(1987) Fuseholders
UL 514A	(1991) Metallic Outlet Boxes
UL 514B	(1992; Rev thru Mar 1993) Fittings for Conduit and Outlet Boxes

UL 542	(1985; Rev thru Dec 1992) Lampholders, Starters, and Starter Holders for Fluorescent Lamps
UL 651	(1989; Rev thru Dec 1989) Schedule 40 and 80 Rigid PVC Conduit
UL 651A	(1989; Rev thru Dec 1989) Type EB and A Rigid PVC Conduit and HDPE Conduit
UL 719	(1994) Non-Metalic Sheathed Cables
UL 845	(1988; Rev thru Aug 1989) Motor Control Centers
UL 869A	(1987; Rev thru Sep 1992) Reference Standard for Service Equipment
UL 935	(1993; Rev Feb 1993) Fluorescent-Lamp Ballasts
UL 943	(1985; Rev thru Mar 1993) Ground-Fault Circuit Interrupters
UL 1004	(1989; Rev thru Mar 1993) Electric Motors
UL 1029	(1986; Rev thru Nov 1991) High-Intensity-Discharge Lamp Ballasts
UL 1561	(1986; Rev thru Jul 1992) Dry-Type General Purpose and Power Transformers
UL 1570	(1988; Rev thru Feb 1993) Fluorescent Lighting Fixtures
UL 1660	(1987) Liquid-Tight Flexible Nonmetallic Conduit

1.2 GENERAL

1.2.1 Rules

The installation shall conform to the requirements of NFPA 70 and NFPA 101, unless more stringent requirements are indicated herein or shown.

1.2.2 Coordination

The drawings indicate the extent and the general location and arrangement of equipment, conduit, and wiring. The Contractor shall become familiar with all details of the work and verify all dimensions in the field so that the outlets and equipment shall be properly located and readily accessible. Lighting fixtures, outlets, and other equipment and materials shall be located to avoid interference with mechanical or structural features; otherwise, lighting fixtures shall be symmetrically located according to the room arrangement when uniform illumination is required, or asymmetrically located to suit conditions fixed by design as shown. Raceways, junction and outlet boxes, and lighting fixtures shall not be supported from sheet metal roof decks. If any conflicts occur necessitating departures from the drawings, details of and reasons for departures shall be submitted and approved prior to implementing any change. The

Electrical Contractor shall coordinate the electrical work with HVAC and electrical drawings and provide all power related wiring even if they are not shown on electrical drawings.

1.2.3 Construction Sequencing

The Contractor shall carefully examine all work to be done in, on, or adjacent to existing equipment. Work shall be scheduled, subject to the Contracting Officer's approval, to avoid plant shutdown. All switching, safety tagging, etc. required to isolate existing equipment shall be performed by the Contractor. In no case shall the Contractor begin any work in, on, or adjacent to existing equipment without written authorization by the Contracting Officer. The Contractor shall make all modifications or alterations to existing electrical facilities required to successfully install and integrate the new electrical equipment as indicated. All modifications to existing equipment, panels, or cabinets shall be made in a professional manner with all coatings repaired to match existing. The costs for all modifications to existing electrical facilities required for a complete and operating system shall be included in the Contractor's original bid amount and no additional payment for this work shall be authorized. The Contractor shall be responsible for identifying all available existing circuit breakers in lighting panels for the intended use as required by the drawings. Contractor shall also be responsible for field verifying the available space in substation switchboards to integrate new power circuit breakers. Costs for this work shall be included in the Contractor's original bid amount. To facilitate continuous operation of existing equipment, the Contractor shall be required to provide temporary equipment as required to maintain the existing facility operation. All costs associated with these temporary installations shall be part of the original bid.

1.2.4 Standard Products

Material and equipment shall be a standard product of a manufacturer regularly engaged in the manufacture of the product and shall essentially duplicate items that have been in satisfactory use for at least 2 years prior to bid opening.

1.2.5 Identification Nameplates

Major items of electrical equipment and major components shall be permanently marked with an identification name to identify the equipment by type or function and specific unit number as indicated. Designation of motors shall coincide with their designation in the motor control center or panel. Unless otherwise specified, all identification nameplates shall be made of laminated plastic in accordance with FS L-P-387 with black outer layers and a white core. Edges shall be chamfered. Plates shall be fastened with black-finished round-head drive screws, except motors, or approved nonadhesive metal fasteners. When the nameplate is to be installed on an irregular-shaped object, the Contractor shall devise an approved support suitable for the application and ensure the proper installation of the supports and nameplates. In all instances, the nameplate shall be installed in a conspicuous location. At the option of the Contractor, the equipment manufacturer's standard embossed nameplate material with black paint-filled letters may be furnished in lieu of laminated plastic. The front of each panelboard and motor control center shall have a nameplate to indicate the phase letter, corresponding color and arrangement of the phase conductors. The following equipment, as a minimum, shall be provided with identification nameplates:

Minimum 6.4 mm (1/4 inch) High Letters	Minimum 3.2 mm (1/8 inch) High Letters
Panelboards	Control Power Transformers
Starters	Control Devices
Safety Switches	
Motor Control Centers	
Transformers	
Equipment Enclosures	
Motors	

Each panel, section, or unit in motor control centers or similar assemblies shall be provided with a nameplate in addition to nameplates listed above, which shall be provided for individual compartments in the respective assembly, including nameplates which identify "future," "spare," and "dedicated" or "equipped spaces."

1.2.6 As Built Drawings

Following the project completion or turnover, within 30 days the Contractor shall furnish two sets of as built drawings to the Contracting Officer.

1.3 SUBMITTALS

Submittals shall be furnished in accordance with Exhibit I.

SD-01 Data

Manufacturers product data for materials and equipment used on the job.

SD-04 Drawings

Electrical Work.

Detail drawings for materials and equipment listed. Detail drawings shall consist of a complete list of equipment and materials, including manufacturer's descriptive and technical data; catalog cuts; and any special installation instructions that may be required. Drawings shall show applicable schematic diagrams; and equipment layout and anchorage.

SD-09 Reports

Materials and Equipment.

The label or listing of the Underwriters Laboratories, Inc., shall be accepted as evidence that the materials or equipment conform to the applicable standards of that agency. Materials and equipment shall be approved based on the manufacturer's published data.

For other than equipment and materials specified to conform to UL publications, a manufacturer's statement indicating complete compliance with the applicable Federal Specification, or standard of the American Society for Testing and Materials, National Electrical Manufacturers Association, or other commercial standard, is acceptable.

SD-13 Certificates

Certified tests of level measurement equipment and their calibrations.

SD-19 O & M Manuals

Three copies of O & M manuals shall be submitted. O & M manuals shall include assembly, installation, operation and maintenance instructions, spare parts, catalog order numbers and recommended list of spare parts.

1.4 WORKMANSHIP

Materials and equipment shall be installed in accordance with recommendations of the manufacturer and as shown.

PART 2 PRODUCTS

2.1 MATERIALS AND EQUIPMENT

Materials and equipment shall conform to the respective publications and other requirements specified below. Materials and equipment not listed below shall be as specified elsewhere in this section.

2.1.1 Cables and Wires

Conductors in cables shall be annealed copper. Cables shall be single-conductor type, unless otherwise indicated. Cables and wires shall conform to UL 44 for rubber-insulated type; UL 83 for the thermoplastic-insulated type; and UL 719 for the nonmetallic-sheathed cables.

2.1.1.1 Grounding Cables

Grounding cables shall be bare.

2.1.2 Circuit Breakers

Circuit breakers shall have voltage, current and interrupting ratings as indicated.

2.1.2.1 Molded-Case and Insulated-Case Circuit Breakers

NEMA AB 1 and UL 489 for circuit breakers,

Molded-Case Circuit Breakers: Single-pole breakers shall be full module size; two poles shall not be installed in a single module. Multipole breakers shall be of the common-trip type having a single operating handle, but for sizes of 100 amperes or less may consist of single-pole breakers permanently factory assembled into a multipole unit having an internal, mechanical, nontamperable common-trip mechanism and external handle ties. Breakers shall have interchangeable, adjustable magnetic, trips in 225 amperes frame and larger. Breakers coordinated with current-limiting fuses shall have a combined interrupting capacity of 100,000 symmetrical amperes. All poles of associated breakers shall open if any fuse blows.

2.1.3 Conduit and Tubing

2.1.3.1 Flexible Conduit, Steel and Plastic

General-purpose type, UL 1; liquid tight, UL 360, and UL 1660.

2.1.3.2 PVC Coated Rigid Steel Conduit

NEMA RN 1.

2.1.3.3 Rigid Zinc-Coated Steel

UL 6.

2.1.3.4 Rigid Plastic

NEMA TC 2, UL 651 and UL 651A.

2.1.4 Conduit and Device Boxes and Fittings

2.1.4.1 Boxes, Metallic Outlet

NEMA OS 1 and UL 514A.

2.1.4.2 Boxes, Switch (Enclosed), Surface-Mounted

UL 98.

2.1.4.3 Fittings for Conduit and Outlet Boxes

UL 514B.

2.1.4.4 Fittings, PVC, for Use with Rigid PVC Conduit and Tubing

UL 514B.

2.1.5 Conduit Coatings Plastic Resin System

FS L-C-530 or NEMA RN 1, Type A-40.

2.1.6 Connectors, Wire Pressure

2.1.6.1 Copper Conductors

UL 486A.

2.1.7 Electrical Grounding and Bonding Equipment

UL 467.

2.1.8 Enclosures

NEMA ICS 6 or NEMA 250 unless otherwise specified.

2.1.8.1 Cabinets and Boxes

UL 50.

2.1.9 Fixtures, Lighting and Fixture Accessories/Components

Fixtures, accessories and components, including ballasts, lampholders, lamps, starters and starter holders, shall conform to industry standards specified below.

2.1.9.1 Fluorescent

a. Fixture: UL 1570. Fixtures shall be plainly marked for proper lamp and ballast type to identify lamp diameter, wattage, color and start type. Marking shall be readily visible to service personnel, but not visible from normal viewing angles. High-intensity-discharge lamps shall be the high-pressure sodium type unless otherwise indicated, shown, or approved.

b. Electronic Ballast. Electronic ballasts shall consist of a rectifier, high frequency inverter, and power control and regulation circuitry. The ballasts shall be UL listed, Class P, with a Class A sound rating and shall contain no PCBs. Ballasts shall meet CFR 47 Part 18 for electromagnetic interference and shall not interfere with the operation of other electrical equipment. Design shall withstand line transients per IEEE C62.41, Category A. Unless otherwise indicated, the minimum number of ballasts shall be used to serve each individual fixture, using two lamp ballasts. A single ballast may be used to serve multiple fixtures if they are continuous mounted, factory manufactured for that installation with an integral wireway and are identically controlled.

c. Lampholders, Starters, and Starter Holders: UL 542.

2.1.9.2 High-Intensity-Discharge

a. High-intensity-discharge lamps shall be the high-pressure sodium type unless otherwise indicated, shown, or approved.

b. Ballasts: ANSI C82.4 for multiple supply types and UL 1029.

2.1.10 Fuses and Fuseholders

2.1.10.1 Fuses, Low Voltage Cartridge Type

NEMA FU 1.

2.1.10.2 Fuseholders

UL 512.

2.1.11 Motors, ac, Fractional and Integral Horsepower

Motors, ac, fractional and integral horsepower shall conform to NEMA MG 1 and UL 1004 for motors; and NEMA MG 10 for energy management selection of polyphase motors. Polyphase motors shall comply with NEMA Design B. Single-phase motors 1/8 hp and small shall be shaded pole or permanent split capacitor; those larger than1/8 hp shall be capacitor start.

2.1.11.1 Motor Efficiencies

All permanently wired polyphase motors of 1 hp or more shall meet the minimum full-load efficiencies as indicated in the following table, and as specified in this specification. Motors of 1 hp or more with open, drip-proof or totally enclosed fan cooled enclosures shall be high efficiency type, unless otherwise indicated. Motors provided as an integral part of motor driven equipment are excluded from this requirement if a minimum seasonal or overall efficiency requirement is indicated for that equipment by the provisions of another section.

Minimum Motor Efficiency

HP	Std. Efficiency	High Efficiency
1	77.0	85.5
1.5	78.5	85.5
2	78.5	85.5
3	78.5	88.5
5	82.5	88.5
7.5	84.0	90.0
10	85.5	90.0
20	87.5	92.0
25	88.5	92.0

2.1.12 Motor Controls and Motor Control Centers

NEMA ICS 1, NEMA ICS 2, NEMA ICS 3 and NEMA ICS 6, and UL 508 and UL 845.

2.1.13 Panelboards

Dead-front construction, NEMA PB 1 and UL 67.

2.1.14 Receptacles

2.1.14.1 Ground Fault Interrupters

UL 943, Class A.

2.1.15 Service Equipment

UL 869A.

2.1.16 Splice, Conductor

UL 486C.

2.1.17 Snap Switches

UL 20.

2.1.18 Tapes

2.1.18.1 Plastic Tape

UL 510.

2.1.18.2 Rubber Tape

UL 510.

2.1.19 Transformers

2.1.19.1 Conventional Dry-Type

IEEE C57.12.01, IEEE C57.12.10, IEEE C57.12.80, IEEE C57.12.91, IEEE C57.94, IEEE C57.98, IEEE C57.105 and UL 1561 in addition to the specific standards referenced below.

a. Distribution: Ventilated, 1 to 500 kVA, single-phase, and 15 to 500 kVA, three-phase with high-voltage 601 to 34500 volts, low-voltage 120-600 volts: ANSI C57.12.50.

2.1.20 Wiring Devices

NEMA WD 1 for general-purpose wiring devices, and NEMA WD 6 for dimensional requirements of wiring devices.

2.1.21 Level Measurement

2.1.21.1 Chart Recorder

Chart recorder shall be UL listed and not less than a 3 pen recorder with 4 to 20 mA input. The input scan rate shall be programable. The chart recorder shall include a battery for memory backup with minimum life of 5 years. Pens shall be disposable and not less than 3 colors of pens shall be provided. Chart shall be 305 mm (12 inch) circular with a rotation capability of 6 to 9999 hours per revolution. Contractor shall supply a sufficient quality of pens and chart to operator each chart recorder at 6 hours per revolution for a full year of operation.

2.1.21.2 Level Measurement with Submersible Transducer for Sumps

System shall use a submersible transducer with a pressure sensing range suitable for a depth application of 0.30 to 3.0 meters (1 to 10 feet). Transducer shall provide a 4-20 ma output to a digital monitor/controller for level monitoring and control with 2 adjustable setpoint relay outputs. Transducer shall be provided with a cable of unspliced length sufficient to route to the monitor/controller. Monitor/controller shall provide two relay outputs.

PART 3 EXECUTION

3.1 GROUNDING

Grounding shall be in conformance with NFPA 70, the contract drawings, and the following specifications.

3.1.1 Ground Bus

Ground bus shall be provided in the electrical equipment rooms. Non-current-carrying metal parts of transformer neutrals and other electrical equipment shall be effectively grounded by bonding to the bus. The ground bus shall be bonded to both the entrance ground, and to a ground rod or rods. Connections and splices shall be of the brazed, welded, bolted, or pressure-connector type, except that pressure connectors or bolted connections shall be used for connections to removable equipment.

3.1.2 Grounding Conductors

All equipment grounding conductors shall be bonded or joined together in each wiring box or equipment enclosure. Metallic boxes and enclosures, if used, shall also be bonded to these grounding conductors by an approved means per NFPA 70. When boxes for receptacles, switches, or other utilization devices are installed, any designated grounding terminal on these devices shall also be bonded to the equipment grounding conductor junction with a short jumper.

3.2 WIRING METHODS

3.2.1 General Requirements

Unless otherwise indicated, wiring shall consist of insulated conductors installed in rigid zinc-coated steel conduit or rigid plastic conduit.

3.2.2 Conduit Systems

Conduit systems shall be installed as indicated. Only metal conduits will be permitted when conduits are required for shielding or other special purposes indicated, or when required by conformance to NFPA 70. Nonmetallic conduit may be used in damp, wet or corrosive locations when permitted by NFPA 70 and the conduit system is provided with appropriate boxes, covers, clamps, screws or other appropriate type of fittings. Electrical metallic tubing may be installed only within buildings. Bushings, manufactured fittings or boxes providing equivalent means of protection shall be installed on the ends of all conduits and shall be of the insulating type, where required by NFPA 70.

3.2.2.1 Below Slab-on-Grade or in the Ground

All electrical wiring below slab-on-grade shall be protected by a conduit system. Conduit passing vertically through slabs-on-grade shall be rigid steel. Rigid steel conduits installed below slab-on-grade or in the earth shall be field wrapped with 0.254 mm (0.010 inch) thick pipe-wrapping plastic tape applied with a 50 percent overlay, or shall have a factory-applied polyvinyl chloride, plastic resin, or epoxy coating system.

3.2.2.2 Changes in Direction of Runs

Changes in direction of runs shall be made with symmetrical bends or cast-metal fittings. Field-made bends and offsets shall be made with an approved hickey or conduit-bending machine. Care shall be taken to prevent the lodgment of dirt or trash in boxes, fittings and equipment during the course of construction.

3.2.2.3 Supports

Metallic conduits shall be securely and rigidly fastened in place at intervals of not more than 3 meters (10 feet) and within 900 mm (3 feet) of boxes, cabinets, and fittings, with approved pipe straps, wall

brackets, conduit clamps, conduit hangers, threaded C-clamps, or ceiling trapeze. C-clamps or beam clamps shall have strap or rod-type retainers. Rigid plastic conduits (if permitted as a wiring method) shall be supported as indicated above, except that they will be supported at intervals as indicated in NFPA 70. Loads and supports shall be coordinated with supporting structure to prevent damage or deformation to the structures, but no load shall be applied to joist bridging. Fastenings shall be by expansion bolts on concrete; by machine screws, welded threaded studs, heat-treated or spring-steel-tension clamps on steel work. Nail-type nylon anchors or threaded studs driven in by a powder charge and provided with lock washers and nuts may be used in lieu of expansion bolts or machine screws. Pipe straps shall not be welded to steel structures. In partitions of light steel construction, sheet-metal screws may be used. Conduit shall not be supported using wire or nylon ties. Conduits shall be fastened to all sheet-metal boxes and cabinets with two locknuts where required by the NFPA 70, where insulating bushings are used, and where bushings cannot be brought into firm contact with the box; otherwise, a single locknut and bushing may be used. Threadless fittings for electrical metallic tubing shall be of a type approved for the conditions encountered.

3.2.3 Cables and Conductors

Wire connectors of insulating material or solderless pressure connectors properly taped shall be utilized for all splices.

3.2.3.1 Power Conductor Identification

Phase conductors shall be identified by color coding. The color of the insulation on phases A, B, and C respectively (for three phase) or phases A and B respectively (for single phase) of different voltage systems shall be as follows:

120/208 volt, 3-phase: Black, red, and blue; white neutral, green or bare ground.

277/480 volt, 3-phase: Brown, orange, and yellow; gray neutral, green or bare ground.

120/240 volt, single/phase: Black and red; white neutral, green or bare ground.

Conductor phase and voltage identification shall be made by color-coded insulation for all conductors smaller than No. 6 AWG. For conductors No. 6 AWG and larger, identification shall be made by color-coded insulation, or conductors with black insulation may be furnished and identified by the use of half-lapped bands of colored electrical tape wrapped around the insulation for a minimum of 75 mm (3 inches) of length near the end, or other method as submitted by the Contractor and approved by the Contracting Officer. Conductor identification shall be provided within each enclosure where a tap, splice, or termination is made. Phase identification by a particular color shall be maintained continuously for the length of a circuit, including junctions.

3.2.3.2 Control Conductor Identification

Control circuit conductor identification shall be made by color-coded insulated conductors, plastic-coated self-sticking printed markers, permanently attached stamped metal foil markers, or equivalent means as approved. All control circuit terminals of equipment shall be properly identified with terminal and conductor identification matching that shown on drawings. When conductor identification is not shown, Contractor shall provide identification list to the Contracting Officer for approval. Hand lettering or marking is not acceptable.

3.3 BOXES AND SUPPORTS

Boxes shall be provided in the wiring systems wherever required for pulling of wires, making connections, and mounting of devices or fixtures. Boxes shall be sheet steel except that aluminum boxes may be used with aluminum conduit, and nonmetallic boxes may be used with nonmetallic conduit and tubing or nonmetallic sheathed cable system, when permitted by NFPA 70. In partitions of light steel construction bar hangers with 25 mm (1 inch) long studs, mounted between metal wall studs or metal stud "C" brackets snapped on and tab-locked to metal wall studs, shall be used to secure boxes to the building structure. When "C" brackets are used, additional box support shall be provided on the side of the box opposite the brackets. The edges of boxes for electrical devices shall be flush with the finished surfaces in plywood installations. Boxes for mounting lighting fixtures shall be not less than 101.6 mm (4 inches) square. Boxes installed for concealed wiring shall be provided with suitable extension rings or plaster covers, as required. Unless otherwise indicated, boxes for wall switches shall be mounted 1.2 meters (48 inches) above finished floors. Cast-metal boxes installed in wet locations and boxes installed flush with the outside of exterior surfaces shall be gasketed. Boxes and supports shall be fastened with machine screws or welded studs on steel work. Threaded studs driven in by powder charge and provided with lockwashers and nuts, or nail-type nylon anchors may be used in lieu of machine screws. In open overhead spaces, cast-metal boxes having threadless connectors and sheet metal boxes shall be supported directly from the building structure or by bar hangers. Hangers shall not be fastened to or supported from joist bridging. Cast-metal boxes with 2.4 mm (3/32 in) wall thickness are acceptable.

3.3.1 Pull Boxes

Pull boxes of not less than the minimum size required by NFPA 70 shall be constructed of aluminum or galvanized sheet steel, except where cast-metal boxes are required in locations specified above. Boxes shall be furnished with screw-fastened covers. Where several feeders pass through a common pull box, the feeders shall be tagged to indicate clearly the electrical characteristics, circuit number, and panel designation.

3.3.2 Conduit Stub-Ups

Conduits stubbed up through concrete floors for connections to freestanding equipment shall be provided with a short elbow and an adjustable top or coupling threaded inside for plugs, set flush with the finished floor. Wiring shall be extended in rigid threaded conduit to equipment, except that where required, flexible conduit may be used 150 mm (6 in.) above the floor. Screwdriver-operated threaded flush plugs shall be installed in conduits from which no equipment connections are made to suit the devices installed.

3.4 DEVICE PLATES

One-piece type device plates shall be provided for all outlets and fittings. Plates on walls and on fittings shall be of zinc-coated sheet steel, cast-metal, or impact resistant plastic having rounded or beveled edges. Screws shall be of metal with countersunk heads, in a color to match the finish of the plate. Plates shall be installed with all four edges in continuous contact with finished wall surfaces without the use of mats or similar devices. Plates shall be installed with an alignment tolerance of 16 mm (1/16 inch). The use of sectional-type device plates will not be permitted. Plates installed in wet locations shall be gasketed and provided with a hinged, gasketed cover, unless otherwise specified.

3.5 RECEPTACLES

3.5.1 Duplex

Duplex receptacles shall be rated 20 amperes, 125 volts, two-pole, three-wire, grounding type with polarized parallel slots. Contact arrangement shall be such that contact is made on two sides of an inserted blade. Receptacle shall be side- or back-wired with two screws per terminal. The third grounding pole shall be connected to the metal mounting yoke.

3.5.2 Weatherproof

Weatherproof receptacles shown shall be mounted in a box with a gasketed, weatherproof, cast-metal cover plate and gasketed cap over each receptacle opening. The receptacle shall be weatherproof with plug inserted.

3.6 WALL SWITCHES

Wall switches shall be of the totally enclosed tumbler type. The wall switch handle and switch plate color shall harmonize with the color of the respective wall. Wiring terminals shall be of the screw type or of the solderless pressure type having suitable conductor-release arrangement. Not more than two switches shall be installed in a single-gang position. Switches shall be rated 20-ampere 120-volt for use on alternating current only.

3.7 SERVICE EQUIPMENT

Service-disconnecting means shall be of the fusible safety switch type as indicated with external handle for manual operation. When service disconnecting means is a part of an assembly, the assembly shall be listed as suitable for service entrance equipment. Enclosures shall be sheet metal with hinged cover for surface mounting unless otherwise indicated.

3.8 PANELBOARDS AND LOADCENTERS

Circuit breakers and switches used as a motor disconnecting means, and not in sight of the motor and the driven machinery location, shall be capable of being locked in the open position. Door locks shall be keyed alike. Nameplates shall be as approved. Directories shall be typed to indicate loads served by each circuit and mounted in a holder behind a clear protective covering. Busses shall be copper.

3.8.1 Loadcenters

Loadcenters shall be circuit breaker equipped.

3.8.2 Panelboards

Panelboards shall be circuit breaker equipped as indicated on the drawings.

3.9 FUSES

Equipment provided under this contract shall be provided with a complete set of properly rated fuses when the equipment manufacturer utilize fuses in the manufacture of the equipment, or if current-limiting

fuses are required to be installed to limit the ampere-interrupting capacity of circuit breakers or equipment to less than the maximum available fault current at the location of the equipment to be installed. Fuses shall have a voltage rating of not less than the phase-to-phase circuit voltage, and shall have the time-current characteristics required for effective power system coordination.

3.10 UNDERGROUND-SERVICE CONDUITS

Empty conduits for underground electric-service cable and signal cable shall be installed as indicated. Except where otherwise indicated, conduits shall terminate approximately 1.5 meter (5 feet) beyond the building wall and 600 mm (2 feet) below finished grade, with the outside ends bushed and plugged or capped.

3.11 MOTORS

Fractional and Integral Kilowatt, (Horsepower), whether or not motors are separately provided or included in equipment assemblies specified in other sections of these specifications. Each motor shall conform to the kW (hp) and voltage ratings indicated, and shall have a service factor and other characteristics that are essential to the proper application and performance of the motors under conditions shown or specified. Three-phase motors for use on 3-phase 208-volt systems shall have a nameplate rating of 200 volts. Unless otherwise specified, all motors shall have open frames, and continuous-duty classification based on a 40 degree C ambient temperature reference. Polyphase motors shall be squirrel-cage type, having normal-starting-torque and low-starting-current characteristics, unless other characteristics are specified in other sections of these specifications or shown on contract drawings. When electrically driven equipment furnished under other sections of these specifications materially differs from the design, the Contractor shall make the necessary adjustments to the wiring, disconnect devices and branch-circuit protection to accommodate the equipment actually installed.

3.12 MOTOR CONTROL

Each motor or group of motors requiring a single control and not controlled from a motor-control center shall be provided under other sections of these specifications with a suitable controller and devices that will perform the functions as specified for the respective motors. Each motor of 93 W (1/8 hp) or larger shall be provided with thermal-overload protection. Polyphase motors shall have overload protection in each ungrounded conductor. The overload-protection device shall be provided either integral with the motor or controller, or shall be mounted in a separate enclosure. Unless otherwise specified, the protective device shall be of the manually reset type. Single or double pole tumbler switches specifically designed for alternating-current operation only may be used as manual controllers for single-phase motors having a current rating not in excess of 80 percent of the switch rating. Automatic control devices such as thermostats, float or pressure switches may control the starting and stopping of motors directly, provided the devices used are designed for that purpose and have an adequate kilowatt (horsepower) rating. When the automatic-control device does not have such a rating, a magnetic starter shall be used, with the automatic-control device actuating the pilot-control circuit. When combination manual and automatic control is specified and the automatic-control device operates the motor directly, a double-throw, three-position tumbler or rotary switch shall be provided for the manual control; when the automatic-control device actuates the pilot control circuit of a magnetic starter, the latter shall be provided with a three-position selector switch marked MANUAL-OFF-AUTOMATIC. Connections to the selector switch shall be such that only the normal automatic regulatory control devices will be bypassed when the switch is in the Manual position; all safety control devices, such as low- or high-pressure cutouts, high-temperature cutouts, and motor-overload protective devices, shall be connected in the

motor-control circuit in both the Manual and the Automatic positions of the selector switch. Control circuit connections to any MANUAL-OFF-AUTOMATIC switch or to more than one automatic regulatory control device shall be made in accordance with wiring diagram approved by the Contracting Officer unless such diagram is included on the drawings. All controls shall be 120 volts or less unless otherwise indicated.

3.12.1 Motor Control Centers

Control centers shall be indoor type and shall contain combination starters and other equipment as indicated. Control centers shall be NEMA ICS 2, Class 1, Type 2. Each control center shall be mounted on floor sills or mounting channels. Each circuit shall have a suitable metal or laminated plastic nameplate with white cut letters. Combination starters shall be provided with circuit breakers. Motor control centers shall be provided with a full-length ground bus bar.

3.12.2 Contacts

Contacts in miscellaneous control devices such as float switches, pressure switches, and auxiliary relays shall have current and voltage ratings in accordance with NEMA ICS 2 for rating designation B300.

3.13 MOTOR-DISCONNECT MEANS

Each motor shall be provided with a disconnecting means when required by NFPA 70 even though not indicated. For single-phase motors, a single or double pole toggle switch, rated only for alternating current, will be acceptable for capacities less than 30 amperes, provided the ampere rating of the switch is at least 125 percent of the motor rating. Switches shall disconnect all ungrounded conductors.

3.14 TRANSFORMERS

Only transformers having two windings per phase will be approved. Three-phase transformers shall be connected only in a delta-wye or wye-delta configuration. "T " connections may be used for transformers rated at 15 kVA or below. The insulation on transformer windings may be the manufacturer's standard for transformers rated for operation in a 40 degree C (104 degrees F) ambient temperature. Single kVA ratings shown are based on self-cooled operation. The basic impulse level (BIL) of individual transformers shall be as stated in the following paragraphs. The conventional dry-type transformer shown located within 1.5 meters (5 feet) of the exterior wall shall be provided in a weatherproof enclosure. The average sound level in decibels (dB) of transformers shall not exceed the 50 dB level.

3.14.1 Conventional Dry-Type Transformers

Transformers having the primary or higher-voltage winding rated at 600 volts or less and a secondary or lower-voltage winding rated at 240 volts or less may be manufacturer's standard ventilated or enclosed, self-cooled type of transformer unless otherwise shown, specified or required for proper and safe application.

3.15 LAMPS AND LIGHTING FIXTURES

3.15.1 Lamps

Lamps of the type, wattage, and voltage rating indicated shall be delivered to the project in the original cartons and installed in the fixtures just prior to the completion of the project.

3.15.2 Accessories

Accessories such as straps, mounting plates, nipples, or brackets shall be provided for proper installation. Open type fluorescent fixtures with exposed lamps shall have a wire-basket type guard.

3.16 EQUIPMENT CONNECTIONS

All wiring not furnished and installed under other sections of the specifications for the connection of electrical equipment as indicated on the drawings shall be furnished and installed under this section of the specifications. Connections shall comply with the applicable requirements of paragraph WIRING METHODS. Flexible conduits 6 feet or less in length shall be provided to all electrical equipment subject to periodic removal, vibration, or movement and for all motors. All motors shall be provided with separate grounding conductors. Liquid-tight conduits shall be used in damp or wet locations.

3.16.1 Motors and Motor Control

Control equipment shall be connected under this section of the specifications unless shown or specified otherwise.

3.17 PAINTING AND FINISHING

Field-applied paint on exposed surfaces shall be provided under Section 09900 PAINTING, GENERAL.

3.18 REPAIR OF EXISTING WORK

The work shall be carefully laid out in advance, and where cutting, channeling, chasing, or drilling of floors, walls, partitions, ceiling, or other surfaces is necessary for the proper installation, support, or anchorage of the conduit, or other electrical work, this work shall be carefully done, and any damage to building, piping, or equipment shall be repaired by skilled mechanics of the trades involved, at no additional cost to the Government.

3.19 TESTS

After the interior-wiring-system installation is completed, and at such time as the Contracting Officer may direct, the Contractor shall conduct an operating test for approval. The equipment shall be demonstrated to operate in accordance with the requirements of this specification. The test shall be performed in the presence of the Contracting Officer. The Contractor shall furnish all instruments and personnel required for the tests, and the Government will furnish the necessary electric power. No part of the electrical distribution system shall be energized prior to the resistance testing of that system's ground rods and submission of test results to the Contracting Officer. Low voltage cable tests shall also be performed on each wire as specified in Section 16375 ELECTRICAL DISTRIBUTION SYSTEM, UNDERGROUND.

3.20 CONTRACTOR QUALITY CONTROL

The Contractor shall establish and maintain a quality control system to assure compliance with contract requirements and shall maintain records of his quality control for all operations including but not limited to the following:

(1) Conformance of materials to the requirements of this section.

(2) Storage and handling of materials.

(3) Methods and procedures for wiring and installation.

Copies in duplicate of these records and tests, as well as records of corrective action taken when results are unsatisfactory, shall be furnished to the Contracting Officer within 1 working day of the inspection or test.

PART 4 SUBMITTAL SUMMARY

4.1 SUMMARY OF SUBMITTALS

Submittals to be furnished by the Contractor shall include the following:

Paragraph	Item	SD
16415-2.1.2	Circuit Breakers	01, 09, 19
16415-2.1.8	Enclosures	01, 09, 19
16415-2.1.9	Fixtures, Lighting and Fixture Accessories Components	01, 09, 19
16415-2.1.12	Motor Controls and Motor Control Centers	01, 09, 19, 04
16415-2.1.13	Panel Boards	01, 09, 19
16415-2.1.19	Transformers	01, 09, 19
16415-2.1.21	Level Measurement	01, 04, 13
16415-1.2.6	As Built Drawings	04

Code for Type of Submittal (SD)

01	-	Data
04	-	Drawings
06	-	Instructions
07	-	Schedules
08	-	Statements
09	-	Reports
13	-	Certificates
14	-	Samples
18	-	Records
19	-	O & M Manuals

- END OF SECTION -

* * * * *

TECHNICAL SPECIFICATION
FOR
UNIT HEATERS AND EXHAUST FANS
SECTION 16855

ENVIRONMENTAL RESTORATION DISPOSAL FACILITY (ERDF)
CELLS 3 & 4 CONSTRUCTION

REV	DATE	REASON FOR REVISION	ORIGINATOR	CHECKER	GROUP LEADER	TASK DESIGN LEAD	PROJECT ENGINEER
C	01/20/98	100% Design Review	SL	LHA			
B	11/21/97	60% Design Review	SL	LHA			

RICHLAND ENVIRONMENTAL RESTORATION PROJECT	JOB NO. 22192
	SPECIFICATION NO. 0600X-SP-E0014
	SHEET 1 of 6

This page is intentionally blank.

SECTION 16855

UNIT HEATERS AND EXHAUST FANS

PART 1 GENERAL

1.1 REFERENCES

The publications listed below form a part of this specification to the extent referenced. The publications are referred to in the text by basic designation only.

NATIONAL FIRE PROTECTION ASSOCIATION (NFPA)

NFPA 70	(1993) National Electrical Code

UNDERWRITERS LABORATORIES (UL)

UL 1025	(1980; Rev thru Feb 1990) Electric Air Heaters

1.2 SUBMITTALS

Submittals shall be furnished in accordance with Exhibit I.

SD-01 Data

Manufacturers descriptive data.

SD-19 O & M Manuals

Three copies of O & M manuals.

1.3 STANDARD PRODUCTS

Material and equipment shall be a standard product of a manufacturer regularly engaged in the manufacturer of the product and shall essentially duplicate items that have been in satisfactory use for at least two years prior to bid opening. Use shall include applications of equipment and materials under similar circumstances and of typical design and rating. Equipment items provided shall be capable of being serviced by an organization that is, in the opinion of the Contracting Officer, reasonably convenient to the site.

1.4 NAMEPLATES

A nameplate, no smaller than 25 mm (1 inch) by 102 mm (4 inches) and raised or engraved with not less than 6.4 mm (1/4-inch) characters, shall be mounted on the front of the enclosure to adequately identify the unit heater and exhaust fan assembly. Fans and motors shall have the manufacturer's name, address, type or style, model or aerial number and catalog number on a plate secured to the item of equipment.

1.5 CODES

Unless otherwise specified all work shall be in accordance with NFPA 70.

1.6 DELIVERY AND STORAGE

Equipment placed in storage shall be stored with protection from the weather, humidity and temperature variations, dirt and dust or other contaminants.

PART 2 PRODUCTS

2.1 UNIT HEATERS (HORIZONTAL PROPELLER FAN TYPE)

2.1.1 Construction

Complete unit heater assembly shall comply with the requirements of UL 1025 and the requirements specified. Each unit heater shall be provided with terminals for control circuits and a single source of power as necessary. Control transformers, where required, shall be factory installed and of adequate capacity. Maximum discharge air temperature shall not exceed 60 degrees C (140 degrees F) when inlet air temperature is 16 degrees C (60 degrees F).

2.1.2 Heating Elements

Heating elements shall consist of nickel-chromium heating wire embedded in magnesium-oxide insulating refractory and sealed in corrosion-resisting metallic sheath with fins. The ends of elements shall be sealed and enclosed in terminal box, and element sheath shall be mechanically pressed after filling to ensure maximum magnesium oxide compaction. Sheath and fins shall be cast aluminum or steel with fins brazed to sheath. Castings shall be free from defects of any nature. Steel sheath and fins shall be stainless steel or be corrosion protected by high-temperature ceramic coating. Heat transfer between sheath and fine shall be uniform. Fins shall be spaced a maximum of six per inch and fin surface temperature at any point shall not exceed 288 degrees C (550 degrees F) during normal operation. Elements shall be free from expansion noise and 60-cycle hum.

2.1.3 Enclosure

Heated fan, motor, and auxiliaries shall be contained in a housing. All metal surfaces of housing shall be not less than 18 US gauge. Housings shall have the manufacturer's standard factory baked enamel finish. All parts shall be rigidly braced with heavy steel plates or structural steel shapes to prevent vibration and maintain alignment. Housing design shall provide ready access to interior parts without unfastening housing from mounting bracket.

2.1.4 Louvers

Horizontal air discharge units shall have individually adjustable horizontal louvers to direct discharge air horizontally as desired. A louvered back, heavy grille, or wire guard shall be provided for inlet air.

2.1.5 Fans and Motors

Fans shall be the propeller type direct connected to fan motor, dynamically balanced, and designed specifically for unit heater application and low noise level. Bail and roller type bearings shall be sealed,

self-aligning and permanently lubricated. Fan motor shall be totally enclosed, continuous duty with built-in manually reset thermal overload protection. Motor shall operate from the same power supply as the heater, and at the same voltage unless a factory-furnished step-down transformer is provided. Motor speed shall not exceed 1800 rpm.

2.1.6 Limit Controls

Manual reset thermal overheat protection of unit shall be provided to protect against overheating of the unit and mounted in a convenient location.

2.1.7 Controls

Unit heater shall be controlled by an adjustable internal or remote thermostat. If remote thermostat controls are provided, Contractor shall provide all materials and equipment necessary for installing thermostat. Remote thermostats shall be installed adjacent to the exhaust fan thermostat. Thermostat range shall be a minimum of 1.7 degrees C (35 degrees F) to 27 degrees C (80 degrees F).

2.1.8 Wiring

Heaters shall be furnished complete, factory prewired to terminal strips, ready to receive branch circuit and control connections.

2.2 EXHAUST FANS

2.2.1 General

Fans shall include all units shown and shall be 1/2 HP, 120 VAC, single phase prop type. Fans shall be complete with motors, safety cages, vibration isolators, and necessary accessories. Fans shall be suitable for continuous operation. Exhaust fans shall be supported on metal frames for mounting, with safety guards. Wall openings and louvers shall be of sufficient size for the fan capacity.

2.2.2 Remote Controls

Exhaust fans shall be operated remotely by a wall thermostat located as shown on drawings. Thermostat range shall be a minimum of 24 degrees C (75 degrees F) to 43 degrees C (110 degrees F).

PART 3 EXECUTION

3.1 HEATERS AND EXHAUST FANS

Heaters shall be installed at the locations shown and in accordance with the recommendations of the manufacturer.

3.2 CONTRACTOR QUALITY CONTROL

The Contractor shall establish and maintain a quality control system to assure compliance with contract requirements and shall maintain records of his quality control for all operations including, but not limited to the following:

(1) Unit Heaters.

(2) Exhaust Fans.

Copies in duplicate of these records and tests, as well as records of corrective action taken when results are unsatisfactory, shall be furnished to the Contracting Officer within 1 working day of the inspection or test.

PART 4 SUBMITTAL SUMMARY

4.1 SUMMARY OF SUBMITTALS

Submittals to be furnished by the Contractor shall include the following:

Paragraph	Item	SD
16855-2.1	Unit Heaters	01, 19
16855-2.2	Exhaust Fans	01, 19

Code for Type of Submittal (SD)

01	-	Data
04	-	Drawings
06	-	Instructions
07	-	Schedules
08	-	Statements
09	-	Reports
13	-	Certificates
14	-	Samples
18	-	Records
19	-	O & M Manuals

- END OF SECTION -

* * * * *

This page is intentionally blank.

0048805
18/18

ENVIRONMENTAL RESTORATION DISPOSAL FACILITY CELLS 3 & 4 CONSTRUCTION AT THE HANFORD SITE RICHLAND, WASHINGTON

DRAWINGS

JANUARY 20, 1998

Bechtel Job No. 22192
DOE Contract No. DE-AC06-93RL12367

Prepared for
Bechtel Hanford Inc.

Prepared by
Montgomery Watson
Richland, Washington

DRAWING NO.	REV. NO.
0600X-DD-G0011	C

PROJECT TITLE:

ENVIRONMENTAL RESTORATION DISPOSAL FACILITY (ERDF) CELLS 3 & 4 CONSTRUCTION DRAWINGS

FOR:

BECHTEL HANFORD INC.

BY:

MONTGOMERY WATSON

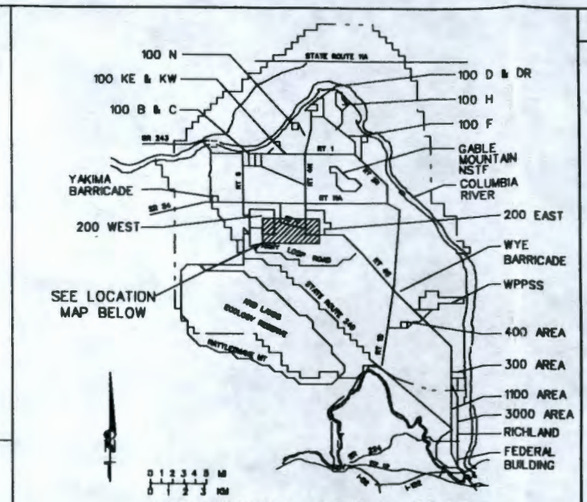

HANFORD AREA MAP

NOTES

100%
REVIEW SUBMITTAL
NOT FOR CONSTRUCTION

200 WEST AREA

200 EAST AREA

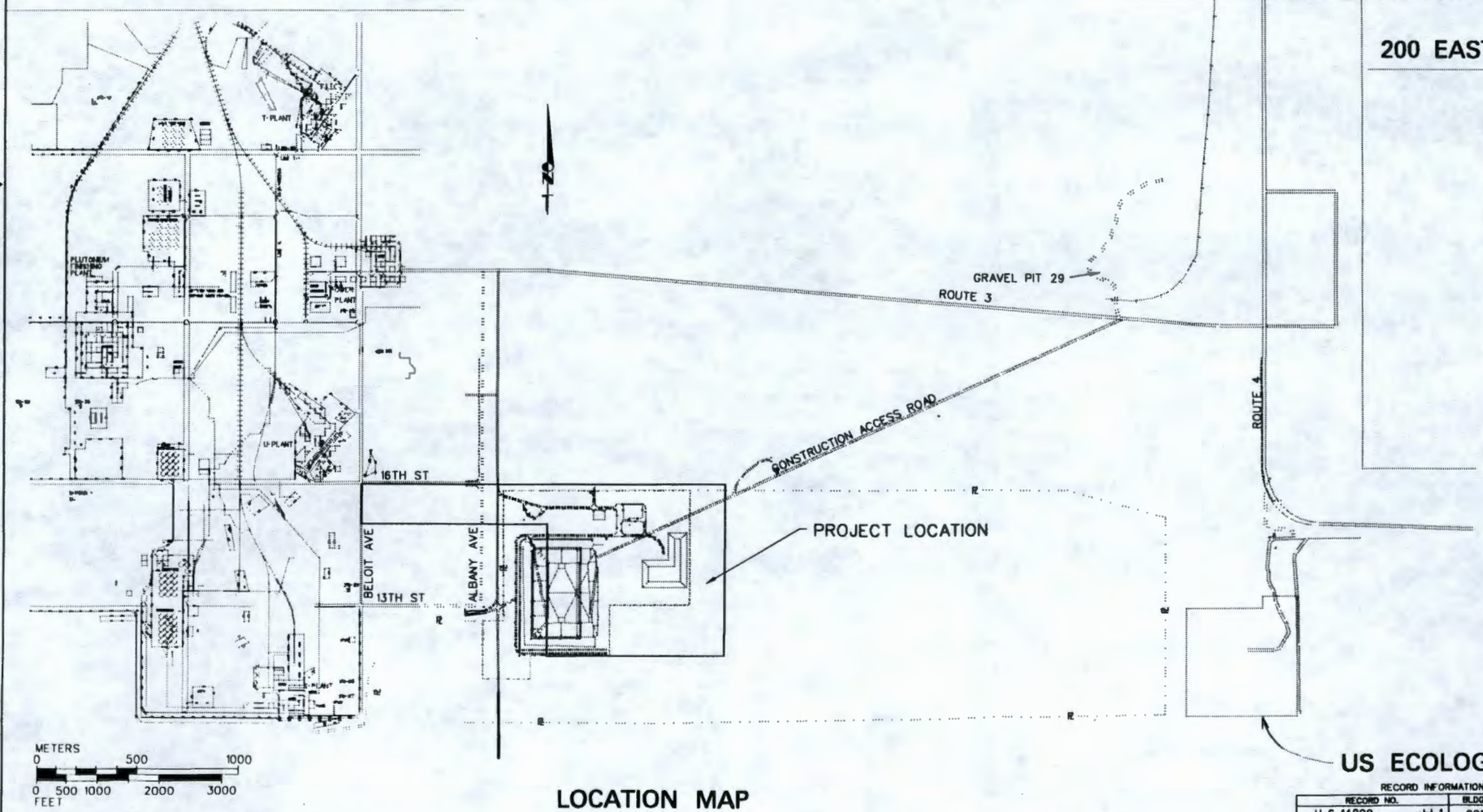

LOCATION MAP

RECORD INFORMATION		
RECORD NO.	BLDG NO.	INDEX NO.
H-6-14809 sht 1	600G	0100

REV.	DATE	DESCRIPTION	DESIGN BY	DRAFT CHK	DSGN ENGR	DWG CHK	PROJ ENGR	PROJ MGR
C	1/20/98	ISSUED FOR 100% DESIGN REVIEW	PDH	MGM	MGM	LHA		
B	11/21/97	ISSUED FOR 60% DESIGN REVIEW	PDH	MGM	MGM	LHA		
A	10/7/97	ISSUED FOR 30% DESIGN REVIEW	PDH	MGM	MGM	LHA		

SCALE:

U.S. DEPARTMENT OF ENERGY
DOE FIELD OFFICE, RICHLAND
HANFORD ENVIRONMENTAL RESTORATION PROGRAM

BECHTEL HANFORD INC.
RICHLAND, WASHINGTON

MONTGOMERY WATSON
RICHLAND, WASHINGTON

ENVIRONMENTAL RESTORATION DISPOSAL FACILITY
CELLS 3 & 4
TITLE, LOCATION & HANFORD AREA MAPS

BECHTEL JOB NO.	DOE CONTRACT NO.	CADD FILENAME
22192	DE-AC06-93RL12367	6xdg0011.dgn

TASK	DRAWING NO.	REV. NO.
600	0600X-DD-G0011	C

DRAWING NO.	REV. NO.
0600X-DD-G0012	C

DRAWING LIST

GENERAL

0600X-DD-G0011	REV. C	TITLE, LOCATION & HANFORD AREA MAPS
0600X-DD-G0012	REV. C	DRAWING LIST
0600X-DD-G0013	REV. C	SYMBOLS
0600X-DD-G0014	REV. C	ABBREVIATIONS

CIVIL

0600X-DD-C0095	REV. C	OVERALL SITE PLAN
0600X-DD-C0096	REV. C	LIMITS OF CONSTRUCTION
0600X-DD-C0097	REV. C	COORDINATE TABLE
0600X-DD-C0098	REV. C	RESERVED
0600X-DD-C0099	REV. C	RESERVED
0600X-DD-C0100	REV. C	FACILITIES GRADING AREA INDEX
0600X-DD-C0101	REV. C	GRADING PLAN - AREA 1
0600X-DD-C0102	REV. C	GRADING PLAN - AREA 2
0600X-DD-C0103	REV. C	GRADING PLAN - AREA 3
0600X-DD-C0104	REV. C	GRADING PLAN - AREA 4
0600X-DD-C0105	REV. C	CIVIL SECTIONS
0600X-DD-C0106	REV. C	YARD PIPING PLANS - AREAS 1 & 2
0600X-DD-C0107	REV. C	TRANSFER LINE PLAN & PROFILES 1
0600X-DD-C0108	REV. C	TRANSFER LINE PLAN & PROFILES 2
0600X-DD-C0109	REV. C	TRANSFER LINE PLAN & PROFILES 3
0600X-DD-C0110	REV. C	CIVIL DETAILS 1
0600X-DD-C0111	REV. C	CIVIL DETAILS 2

TRENCH

0600X-DD-C0123	REV. C	OVERALL PLAN
0600X-DD-C0124	REV. C	SUBGRADE CONTOURS
0600X-DD-C0125	REV. C	SUBGRADE SURVEY CONTROL
0600X-DD-C0126	REV. C	ADMIX LAYER CONTOURS
0600X-DD-C0127	REV. C	OPERATIONS LAYER CONTOURS
0600X-DD-C0128	REV. C	GENERAL CROSS-SECTIONS
0600X-DD-C0129	REV. C	LINER SYSTEM DETAILS - 1
0600X-DD-C0130	REV. C	LINER SYSTEM DETAILS - 2
0600X-DD-C0131	REV. C	LINER TERMINATION / TIE-IN DETAILS
0600X-DD-C0132	REV. C	SUMP LAYOUT PLAN - CELL 3
0600X-DD-C0133	REV. C	SUMP LAYOUT PLAN - CELL 4
0600X-DD-C0134	REV. C	SUMP DETAILS - 1
0600X-DD-C0135	REV. C	SUMP DETAILS - 2
0600X-DD-C0136	REV. C	LEACHATE PIPING PLAN
0600X-DD-C0137	REV. C	CREST PAD DETAILS - SHEET 1
0600X-DD-C0138	REV. C	CREST PAD DETAILS - SHEET 2
0600X-DD-C0139	REV. C	CREST PAD DETAILS - SHEET 3
0600X-DD-C0140	REV. C	CREST PAD DETAILS - SHEET 4
0600X-DD-C0141	REV. C	STOCKPILE PLAN - TRENCH
0600X-DD-C0142	REV. C	TEST PIT AND BORING LOCATIONS
0600X-DD-C0143	REV. C	SOIL BORING LOGS - 1
0600X-DD-C0144	REV. C	SOIL BORING LOGS - 2
0600X-DD-C0145	REV. C	SOIL BORING LOGS - 3
0600X-DD-C0146	REV. C	TEST PIT LOGS - 1
0600X-DD-C0147	REV. C	TEST PIT LOGS - 2
0600X-DD-C0148	REV. C	TEST PIT LOGS - 3
0600X-DD-C0149	REV. C	TEST PIT LOGS - 4
0600X-DD-C0150	REV. C	TEST PIT LOGS - 5

STRUCTURAL

0600X-DD-C0158	REV. C	STRUCTURAL DETAILS - 1
0600X-DD-C0159	REV. C	STRUCTURAL DETAILS - 2
0600X-DD-C0160	REV. C	CREST PAD BUILDING - PLANS AND SECTIONS
0600X-DD-C0161	REV. C	LOADING / UNLOADING SLAB PLAN

ARCHITECTURAL

0600X-DD-A0006	REV. C	DOOR, WINDOW AND FINISH SCHEDULES
0600X-DD-A0007	REV. C	CREST PAD BLDG - PLANS AND SECTIONS
0600X-DD-A0008	REV. C	CREST PAD BLDG - SECTIONS AND DETAILS

MECHANICAL

0600X-DD-M0009	REV. C	PIPING SCHEDULE
0600X-DD-M0010	REV. C	MECHANICAL SCHEDULES
0600X-DD-M0011	REV. C	MECHANICAL DETAILS 1
0600X-DD-M0012	REV. C	LEACHATE PUMP STATION DEMOLITION PLAN
0600X-DD-M0013	REV. C	LEACHATE PUMP STATION PUMP & PIPING MODIFICATIONS

ELECTRICAL

0600X-DD-E0038	REV. C	ELECTRICAL SYMBOLS
0600X-DD-E0039	REV. C	ABBREVIATIONS AND GENERAL NOTES
0600X-DD-E0040	REV. C	ELECTRICAL DETAILS - 1
0600X-DD-E0041	REV. C	ELECTRICAL DETAILS - 2
0600X-DD-E0042	REV. C	DUCT BANK, CONDUIT AND CABLE SCHEDULE
0600X-DD-E0043	REV. C	AIR MONITOR STATION PLAN
0600X-DD-E0044	REV. C	ELECTRICAL SITE PLAN - 1
0600X-DD-E0045	REV. C	ELECTRICAL SITE PLAN - 2
0600X-DD-E0046	REV. C	RESERVED
0600X-DD-E0047	REV. C	ELECTRICAL SWITCHGEAR ONE LINE DIAGRAM
0600X-DD-E0048	REV. C	MCC ONE LINE DIAGRAM - 1
0600X-DD-E0049	REV. C	MCC ONE LINE DIAGRAM - 2
0600X-DD-E0050	REV. C	MCC ELEVATIONS AND DETAILS
0600X-DD-E0051	REV. C	ELECTRICAL SCHEDULES
0600X-DD-E0052	REV. C	CONTROL SCHEMATICS - 1
0600X-DD-E0053	REV. C	CONTROL SCHEMATICS - 2
0600X-DD-E0054	REV. C	CONTROL SCHEMATICS - 3
0600X-DD-E0055	REV. C	CONTROL SCHEMATICS - 4
0600X-DD-E0056	REV. C	CONTROL SCHEMATICS - 5
0600X-DD-E0057	REV. C	CREST PAD BLDG - ELEC. POWER PLAN
0600X-DD-E0058	REV. C	CREST PAD BLDG - LIGHTING, RECP. & GROUNDING PLAN

NOTES

100%
REVIEW SUBMITTAL
NOT FOR CONSTRUCTION

REV.	DATE	DESCRIPTION	DRAWN BY	DRFT CHK	DSGN CHK	DSGN APR	CLIENT APPROV	CLIENT ACCEPT
C	1/30/98	ISSUED FOR 100% DESIGN REVIEW	PSH	MGM	MGM	LHA		
B	11/21/97	ISSUED FOR 60% DESIGN REVIEW	PSH	MGM	MGM	LHA		
A	10/7/97	ISSUED FOR 30% DESIGN REVIEW	PSH	MGM	MGM	LHA		

SEAL

U.S. DEPARTMENT OF ENERGY
DOE FIELD OFFICE, RICHLAND
HANFORD ENVIRONMENTAL RESTORATION PROGRAM

BECHTEL HANFORD INC.
RICHLAND, WASHINGTON

MONTGOMERY WATSON
RICHLAND, WASHINGTON

ENVIRONMENTAL RESTORATION DISPOSAL FACILITY
CELLS 3 & 4
DRAWING LIST

BECHTEL JOB NO.	DOE CONTRACT NO.	CADD FILENAME
22192	DE-AC06-93RL12367	6xdg0012.DWG

TASK	DRAWING NO.	REV. NO.
600	0600X-DD-G0012	C

RECORD INFORMATION

RECORD NO.	BLDG NO.	INDEX NO.
H-6-14810 SHT 1	600G	0000

DRAWING NO.	REV. NO.
0600X-DD-G0013	C

- N400000 — HANFORD COORDINATE GRID LINE
- EXISTING SURFACE FEATURE OR PIPE
- EXISTING UNDERGROUND PIPE
- NEW PIPELINE (CIVIL SHEETS) 10" DIA. OR SMALLER
- NEW FENCE
- EXISTING FENCE
- EXIST. RAILING
- NEW RAILING
- CENTERLINE
- PROPERTY LINE
- 123 — CONTOUR LINE, FINISHED GRADE
- 123 — CONTOUR LINE, EXISTING GRADE
- 123.20 — FINISHED ELEVATION
- (123.20) — EXISTING ELEVATION
- NEW A.C. PAVING
- EXISTING A.C. PAVING
- NEW RAILROAD
- EXISTING RAILROAD
- SLOPE INDICATION
- LIMITS OF CONSTRUCTION
- FUTURE STRUCTURE OR FACILITY
- EXISTING STRUCTURE OR FACILITY
- EXISTING UNDERGROUND STRUCTUR OR FACILITY
- POTENTIAL FUTURE STRUCTURE OR FACILITY
- GRAVEL
- CONCRETE
- EARTH
- SAND
- GRATING
- LOW PERMEABILITY SOIL LINER
- GATE VALVE, BURIED WITH VALVE BOX
- BUTTERFLY VALVE, BURIED WITH VALVE BOX
- ECCENTRIC PLUG VALVE, BURIED WITH VALVE BOX
- FH — FIRE HYDRANT
- MH — MANHOLE
- PCOTG — PRESSURE CLEANOUT TO GRADE
- COTG — CLEANOUT TO GRADE
- CB — CATCH BASIN
- BULK WATER STATION
- BOLLARD
- SOIL TEST PIT
- SURVEY MONUMENTS

- SURVEY CONTROL POINT
- EXISTING WELL
- FUTURE WELL
- SOIL BORING LOCATION
- 3 — COORDINATE POINT
- DOWN GUY
- TELEPHONE/POWER POLE
- CHANGE IN PIPING MATERIAL
- Ø — ROUND OR DIAMETER
- SQUARE
- @ — AT
- ∠ — ANGLE
- 12" RW (PVC) — PIPE CALLOUT
- ME-2 — EQUIPMENT NUMBER (SEE EQUIPMENT SCHEDULE)
- NIC — EQUIPMENT, ITEMS OR DETAILS NOT PRETAINING TO THIS CONTRACT OR PROJECT ARE SHOWN THUS WITH THE NIC - NOT IN CONTRACT
- GATE VALVE
- BUTTERFLY VALVE
- ECCENTRIC PLUG VALVE
- GLOBE VALVE
- BALL VALVE
- DIAPHRAGM VALVE
- CHECK VALVE
- PRESSURE REGULATING VALVE
- BACK-PRESSURE VALVE
- FLOAT OPERATED VALVE
- NEEDLE VALVE
- PRESSURE RELIEF VALVE
- M P — MOTOR OPERATOR FOR VALVES (M - ELECTRIC, P - PNEUMATIC)
- S — SOLENOID VALVE
- HOSE BIBB (H/B)
- B — BUBBLER LEVEL CONTROL
- CENTRIFUGAL OR TURBINE PUMP OR FAN
- CHEMICAL FEED PUMP
- PROGRESSING CAVITY, POSITIVE DISPLACEMENT PUMP
- BLOWER OR COMPRESSOR
- INJECTOR OR EDUCTOR

- AIR VACUUM AND AIR RELEASE ASSEMBLY
- THERMOMETER
- PIPE ANCHOR
- STOP GATE
- SLIDE GATE
- SLUICE GATE
- INLINE STATIC MIXER
- HUB DRAIN
- FLOOR DRAIN
- DRAIN
- DRAIN TRAP
- CUT PIPE
- FEXT — FIRE EXTINGUISHER
- G — PRESSURE GAUGE
- G — PRESSURE GAUGE WITH DIAPHRAGM SEAL
- S — PRESSURE SWITCH
- S — PRESSURE SWITCH WITH DIAPHRAGM SEAL
- FLANGED FITTING
- WELDED FITTING
- MECHANICAL-TYPE FITTING (GROOVED)
- SCREWED, SOCKET-WELD, BELL AND SPIGOT OR HUBLESS FITTING
- SLEEVE-TYPE COUPLING
- FLANGED ADAPTER COUPLING
- FLANGED ADAPTER - SET SCREW TYPE
- EXPANSION JOINT
- MECHANICAL TYPE COUPLING
- FLEXIBLE COUPLING
- UNION
- QUICK DISCONNECT COUPLER
- CAPPED END OR PLUGGED END
- BLIND FLANGE
- REDUCER OR INCREASER
- STRAINER
- M M — MAGNETIC METER
- D M — DENSITY METER
- ORIFICE PLATE AND FLANGES
- ROTAMETER

- PIPE SUPPORT (IN PLAN ONLY)
- MALE FIRE HOSE CONNECTION WITH CAP

SECTION AND DETAIL IDENTIFICATION

SECTION IDENTIFICATION

(1) SECTION CUT SHOWN ON DRAWING AS:

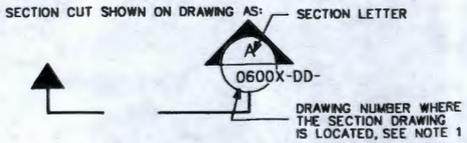

(2) ON DRAWING NUMBER 0600X-DD- THIS SECTION IS IDENTIFIED AS:

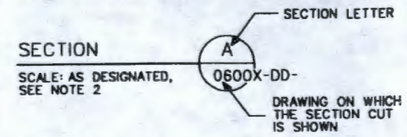

DETAIL IDENTIFICATION

(1) DETAIL IDENTIFICATION SHOWN ON DRAWING AS:

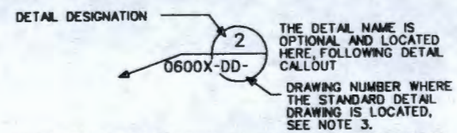

(2) ON DRAWING NUMBER 0600X-DD-- THIS DETAIL IDENTIFIED AS:

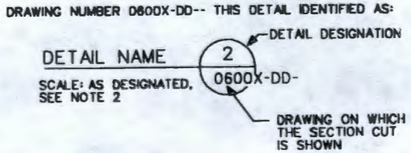

NOTES

1. IF PLAN AND SECTION (OR DETAIL CALL-OUT AND DETAIL) ARE SHOWN ON SAME DRAWING, DRAWING NUMBER IS REPLACED BY A HORIZONTAL LINE.
2. IF SECTION AND/OR DETAILS ARE THE SAME SCALE AND ON THE SAME DRAWING, SEE TITLE BLOCK AT "SCALE:" ; THE SCALE TEXT AT CALLOUT SHALL BE OMITTED.
3. FOR DETAILS WHICH ARE LOCATED ON VARIOUS DRAWINGS, DRAWING NUMBER IS REPLACED WITH "VAR" FOR VARIOUS.
4. SOME SYMBOLS SHOWN ON THIS DRAWING MAY NOT BE USED ON OTHER DRAWINGS.

100% REVIEW SUBMITTAL NOT FOR CONSTRUCTION

REV.	DATE	DESCRIPTION	DRAWN BY	DSGN ENGR	DSGN MGR	PROJ ENGR	PROJ MGR	DOE
C	1/20/98	ISSUED FOR 100% DESIGN REVIEW	PDH	MGM	MGM	LHA		
B	11/21/97	ISSUED FOR 60% DESIGN REVIEW	PDH	MGM	MGM	LHA		
A	10/7/97	ISSUED FOR 30% DESIGN REVIEW	PDH	MGM	MGM	LHA		

SCALE:

U.S. DEPARTMENT OF ENERGY
DOE FIELD OFFICE, RICHLAND
HANFORD ENVIRONMENTAL RESTORATION PROGRAM

BECHTEL HANFORD INC. RICHLAND, WASHINGTON | MONTGOMERY WATSON RICHLAND, WASHINGTON

ENVIRONMENTAL RESTORATION DISPOSAL FACILITY
CELLS 3 & 4
SYMBOLS

BECHTEL JOB NO.	DOE CONTRACT NO.	CADD FILENAME
22192	DE-AC06-93RL12367	6xdg0013.dgn

TASK	DRAWING NO.	REV. NO.
600	0600X-DD-G0013	C

RECORD INFORMATION

RECORD NO.	BLDG NO.	INDEX NO.
H-6-14811 sht 1	600G	0000

DRAWING NO.	REV. NO.
0600X-DD-G0014	C

AB	ANCHOR BOLT
ABAND	ABANDONED
ABBR	ABBREVIATION
AC	ASPHALT CONCRETE
A/C	AIR CONDITIONING
ACFM	ACTUAL CUBIC FEET PER MINUTE
ACOUS	ACOUSTIC OR ACOUSTICAL
ACP	ASPHALTIC CONCRETE PAVEMENT
AER	AERATION
AH	AHEAD
AL	ALUM
ALUM	ALUMINUM
ANSI	AMERICAN NATIONAL STANDARDS INSTITUTE (FORMERLY A.S.A.)
API	AMERICAN PETROLEUM INSTITUTE
APPVD	APPROVED
APPROX	APPROXIMATE
ARCH	ARCHITECTURAL
ASME	AMERICAN SOCIETY OF MECHANICAL ENGINEERS
ASPH	ASPHALT
ASTM	AMERICAN SOCIETY FOR TESTING AND MATERIAL
ASSY	ASSEMBLY
ATM	ATMOSPHERE
AVAR	AIR VACUUM AND AIR RELEASE
AWWA	AMERICAN WATER WORKS ASSOCIATION
BC	BEGIN CURVE OR BOLT CIRCLE
BCR	BEGIN CURB RETURN
BD	BOARD
BFP	BACK FLOW PREVENTER
BHP	BRAKE HORSEPOWER
BK	BACK
BLDG	BUILDING
BLD FLG	BLIND FLANGE
BLK	BLACK OR BLOCK
BLKG	BLOCKING
BM	BEAM OR BENCH MARK
BO	BLOW-OFF ASSEMBLY
BOD	BIOCHEMICAL OXYGEN DEMAND
BOT	BOTTOM
BPV	BACK PRESSURE VALVE
B & S	BELL AND SPIGOT
BRG	BEARING
BSMT	BASEMENT
BTU	BRITISH THERMAL UNIT
BTUH	BRITISH THERMAL UNIT PER HOUR
BETW	BETWEEN
BFV	BUTTERFLY VALVE
BVC	BEGIN VERTICAL CURVE
BWV	BACK WATER VALVE
C	CELSIUS
CAP	CAPACITY
CATH	CATHODIC
CB	CATCH BASIN
CC	CENTER TO CENTER
CD	CEILING DIFFUSER
CFH	CUBIC FEET PER HOUR
CFM	CUBIC FEET PER MINUTE
CFS	CUBIC FEET PER SECOND
CHEM	CHEMICAL
CHK V	CHECK VALVE
CHKD PL	CHECKERED PLATE
CHLR	CHLORINATOR
CI	CAST IRON
CKT	CIRCUIT
CL	CHLORINE GAS, CHAIN LINK OR CENTERLINE
CLR	CLEAR OR CLEARANCE
CLG	COOLING
CM	CENTIMETER
CML & C	CEMENT MORTAR LINED AND COATED
CMP	CORRUGATED METAL PIPE
CMU	CONCRETE MASONRY UNITS
CO	CLEANOUT
COL	COLUMN
COMB	COMBINATION
COND	CONDUIT
COORD	COORDINATE
COR	CORNER
CONC	CONCRETE
CONN	CONNECTION
CONSTR	CONSTRUCTION OR CONSTRUCT
CONT	CONTINUED OR CONTINUOUS
CONTR	CONTRACTOR
COMP	COMPRESSOR
COTG	CLEAN-OUT TO GRADE
CPLG	COUPLING
CS	CAUSTIC SODA
CT STL	CAST STEEL
CTSK	COUNTERSUNK
CTR	CENTER
CU	COPPER OR CUBIC
CYL	CYLINDER
CWO	CHAIN WHEEL OPERATOR
DET	DETAIL
DF	DRINKING FOUNTAIN
DG	DOOR GRILLE
DI	DUCTILE IRON
DIA	DIAMETER
DIAG	DIAGONAL
DIAPH	DIAPHRAGM
DISCH	DISCHARGE
DISP	DISPENSER
DN	DOWN OR DECANT
DO	DISSOLVED OXYGEN
DOCS	DAILY OPERATIONAL COVER STOCKPILE
DOE	DEPARTMENT OF ENERGY
DR	DRAIN
DS	DRENCH SHOWER AND EYE WASH
DWG(S)	DRAWING(S)
DIFF	DIFFUSER
DIFRTL	DIFFERENTIAL
E	EAST
EA	EACH
EC	END CURVE
ECC	ECCENTRIC
ECR	END CURB RETURN
EF	EACH FACE
EFL	EFFLUENT
EG	EXHAUST GRILLE
EL	ELEVATION
ELEC	ELECTRICAL OR ELECTRONIC
EMBED	EMBEDMENT
ENC	ENCASEMENT
ENCL	ENCLOSURE
ENG	ENGINE
EQL	EQUAL
EQUIP	EQUIPMENT
EVAP	EVAPORATION, EVAPORATOR
EVC	END VERTICAL CURVE
EW	EACH WAY
EWH	EYE WASH
EXH	EXHAUST
EXHF	EXHAUST FAN
EX-HY	EXTRA HEAVY
EXST	EXISTING
EXP	EXPANSION
EXP JT	EXPANSION JOINT
EXT	EXTERIOR OR EXTENSION
F	FAHRENHEIT
FABR	FABRICATION, FABRICATE OR FABRICATED
FAI	FRESH AIR INTAKE
FB	FLAT BAR
FCO	FLOOR CLEANOUT
FD	FLOOR DRAIN
FD BK	FIELD BOOK
FDN	FOUNDATION
FDR	FEEDER
FE	FINAL EFFLUENT
FEXT	FIRE EXTINGUISHER
FF	FLAT FACE OR FAR FACE
F TO F	FACE TO FACE
FG	FINISHED GRADE
FH	FIRE HYDRANT
FIG	FIGURE
FIT	FUEL ISLAND TERMINAL
FL	FLOWLINE
FLEX	FLEXIBLE
FLOCC	FLOCCULATOR OR FLOCCULATION
FLG	FLANGE
FLGD	FLANGED
FLR	FLOOR
FLR BM	FLOOR BEAM
FMH	FLEXIBLE METAL HOSE
FNSH	FINISH OR FINISHED
FOC	FACE OF CONCRETE
FOM	FACE OF MASONRY
FOS	FACE OF STUDS
FOW	FACE OF WALL
FPC	FLEXIBLE PIPE COUPLING
FPM	FEET PER MINUTE
FPS	FEET PER SECOND
FRP	FIBERGLASS REINFORCED PLASTIC
FS	FAR SIDE, FLOOR SINK, FINISHED SURFACE, FORGED STEEL OR FROTH SPRAY
FT	FEET OR FOOT
FTG	FOOTING
FUT	FUTURE
FWW	FILTER WASTE WASHWATER
GA	GAGE OR GAUGE
GAL	GALLON
GALV	GALVANIZED
GEN	GENERAL OR GENERATOR
GFA	GROOVED FLANGE ADAPTER
GI	GALVANIZED IRON
GLV	GLOBE VALVE
GND	GROUND
GPD	GALLONS PER DAY
GPH	GALLONS PER HOUR
GPM	GALLONS PER MINUTE
GPR	GROUND PENETRATING RADAR
GRD	GRADE
GR BRK	GRADE BREAK
GV	GATE VALVE
GVL	GRAVEL
GYP	GYPSUM
H	HEIGHT
H/B	HOSE BIBB
HDR	HEADER
HDPE	HIGH DENSITY POLYETHYLENE
HEX	HEXAGONAL
Hg	MERCURY
HORIZ	HORIZONTAL
HP	HORSEPOWER
HPR	HIGH PRESSURE
HPT	HIGH POINT
HR	HEATING RETURN OR HOUR
HTG	HEATING
HTR	HEATER
H & V	HEATING AND VENTILATING
HVAC	HEATING, VENTILATING AND AIR CONDITIONING
HWO	HANDWHEEL OPERATED
HYD	HYDRAULIC OR HYDRANT
ICFM	INLET CUBIC FEET PER MINUTE
	INSIDE DIAMETER
ID	INSIDE FACE
IF	INCH
INFL	INFLUENT
INSUL	INSULATION OR INSULATED
INSTR	INSTRUMENT OR INSTRUMENTATION
INTFC	INTERFACE
INVT	INVERT ELEVATION
I/O	INPUT/OUTPUT
IP	IRON PIPE
IPS	IRON PIPE STANDARD
IRRG	IRRIGATION
JAN	JANITOR
JT	JOINT
KG	KILOGRAM
KM	KILOMETER
KV	KILOVOLT
KW	KILOWATT
KWH	KILOWATT HOUR
L	LITER OR LENGTH
LAV	LAVATORY
LB	POUND
LCU	LOCAL CONTROL UNIT
LVL	LEVEL
LG	LONG
LO	LEVER OPERATED
LOC	LOCATION
LPT	LIGHT POLE
LP	LOW POINT
LPV	LUBRICATED PLUG VALVE
LT	LEFT
LWR	LOWER
LGTH	LENGTH
M	METER
MAG	MAGNETIC
MAN	MANUAL
MACH	MACHINE
MAX	MAXIMUM
MCC	MOTOR CONTROL CENTER
MECH	MECHANICAL
MFR	MANUFACTURER
MGD	MILLION GALLONS PER DAY
MH	MANHOLE
MI	MALLEABLE IRON
MIN	MINIMUM
MISC	MISCELLANEOUS
MK	MARK
MO	MOTOR OPERATED OR MASONRY OPENING
MOD	MODEL
MS	MOP SINK
MTC	MECHANICAL-TYPE COUPLING
MT	MOUNT
MATL	MATERIAL
MTR	MOTOR
N	NORTH
NAD	NORTH AMERICAN DATUM
NAVD	NORTH AMERICAN VERTICAL DATUM
NBS	NATIONAL BUREAU OF STANDARDS
NC	NORMALLY CLOSED
NEMA	NATIONAL ELECTRICAL MANUFACTURERS ASSOCIATION
NFPA	NATIONAL FIRE PROTECTION ASSOCIATION
NF	NEAR FACE
NIC	NOT IN CONTRACT
NO	NUMBER OR NORMALLY OPEN
NPS	NOMINAL PIPE SIZE (FORMERLY I.P.S.)
NPT	NATIONAL PIPE THREAD
NRS	NON-RISING STEM
NS	NEAR SIDE
NTS	NOT TO SCALE
OC	ON CENTER
OD	OUTSIDE DIAMETER
OF	OVERFLOW OR OUTSIDE FACE
OPER	OPERATOR OR OPERATING
OPNG	OPENING
OS & Y	OUTSIDE SCREW AND YOKE
OVHD	OVERHEAD
OZ	OUNCE
P	POLE OR PAGE
PAVMT	PAVEMENT
PC	PRIMARY CLARIFIER OR PORTLAND CEMENT
PCOTG	PRESSURE CLEANOUT TO GRADE
PE	POLYELECTROLYTE OR POLYMER
PEF	PLANT EFFLUENT
PEN	PENETRATION
PER	PERIMETER
PG	PRESSURE GAGE
pH	HYDROGEN ION CONCENTRATION
PI	POINT OF INTERSECTION
PIV	POST INDICATOR VALVE
PL	PLACES
PLAS	PLASTER OR PLASTIC
PNEU	PNEUMATIC
POB	POINT OF BEGINING
POE	POINT OF END
PP	POWER POLE
PLT	PLANT
PNLBD	PANELBOARD
PPD	POUNDS PER DAY
PPH	POUNDS PER HOUR
PPM	PARTS PER MILLION
PR	PAIR
PRC	POINT OF REVERSE CURVATURE
PRE	PREVIOUS
PRESS	PRESSURE
PRV	PRESSURE REGULATING, RELIEF OR REDUCING VALVE
PS	PRESSURE SWITCH
PSF	POUNDS PER SQUARE FOOT
PSI	POUNDS PER SQUARE INCH
PSIA	POUNDS PER SQUARE INCH ABSOLUTE
PSIG	POUNDS PER SQUARE INCH GAUGE
PT	POINT OR POINT OF TANGENCY
PV	PLUG VALVE
PVC	POLYVINYL CHLORIDE
PW	POTABLE WATER
PWR	POWER
RAD	RADIUS
RADN	RADIATION
RAG	RETURN AIR GRILLE
RC	REINFORCED CONCRETE
RCA	RADIOLOGICAL CONTROLLED AREA
RCP	REINFORCED CONCRETE PIPE
RD	ROOF DRAIN, ROUND, OR ROAD
RDWD	REDWOOD
RDCR	REDUCER
RECM	RECOMMENDATION
REF	REFERENCE OR REFER
REG	REGULATING
REINF	REINFORCE OR REINFORCED
RE-STL	REINFORCING STEEL
REQD	REQUIRED
RET	RETURN
REV	REVISION
RF	RAISED FACE
RLF	RELIEF
RM	ROOM
ROS	RATE OF SLOPE
RPM	REVOLUTIONS PER MINUTE OR REINFORCED PLASTIC MORTAR
RR	RAILROAD
RT	RIGHT
RW	RAW WATER
R/W	RIGHT OF WAY
RWL	RAINWATER LEADER
S	SOUTH
SA	SAMPLE
SC	SPARE CHEMICAL OR SECONDARY CLARIFIER
SCC	SOLIDS CONTACT CLARIFIER
SCD	SCREWED
SCFM	STANDARD CUBIC FEET PER MINUTE
SCH	SCHEDULE
SCHED	SCHEDULE
SDR	STORM DRAINS
SCA	SOIL CONTAMINATION AREA
SEC	SECONDARY
SECT	SECTION
SER	SERIES
SER SK	SERVICE SINK
SETT	SETTLING
SH	SHOWER
SHT	SHEET
SIM	SIMILAR
SL	SLUDGE
SLP	SLOPE
SLV	SLEEVE
SP	SPACING
SPECS	SPECIFICATIONS
SQ	SQUARE
SS	SANITARY SEWER
SST	STAINLESS STEEL
SSU	SECONDS SAYBOLT UNIVERSAL
STA	STATION
STC	SLEEVE-TYPE COUPLING
STD	STANDARD
STL	STEEL
STM	STEAM
STN	STAINLESS
SST	STAINLESS STEEL
STR TRD	STAIR TREAD
STRUCT	STRUCTURAL OR STRUCTURE
SUBST	SUBSTITUTE
SUCT	SUCTION
SURV	SURVEY
SV	SOLENOID VALVE
SW	SANITARY WATER
SWR	SIDEWALL REGISTER
SYM	SYMMETRICAL OR SYMBOL
SYS	SYSTEM
T	THERMOSTAT OR TANGENT
TB	THRUST BLOCK
T & B	TOP AND BOTTOM
TBC	TOP BACK OF CURB
TBE	THREAD BOTH ENDS
TBM	TEMPORARY BENCH MARK
TC	TOP OF CURB
TDH	TOTAL DYNAMIC HEAD
TELE	TELEPHONE
TEMP	TEMPORARY
TERM	TERMINAL
T & G	TONGUE AND GROOVE
THK	THICK OR THICKNESS
THD	THREADED
THRHLD	THRESHOLD
TK	TANK
TOE	THREAD ONE END
TOG	TOP OF GRATING
TOL	TOLERANCE
TOS	TOP OF STEEL
TOW	TOP OF WALL
TP	TELEPHONE POLE OR TELEGRAPH POLE
TRANS	TRANSITION
TRTMT	TREATMENT
TV	THERMOSTATIC VALVE
TW	THERMOMETER WELL
TYP	TYPICAL
UBC	UNIFORM BUILDING CODE
UC	UNDER-CROSSING
UGND	UNDERGROUND
UGC	UNDERGROUND CONDUIT
UH	UNIT HEATER
UL	UNDERWRITERS LABORATORIES
UNO	UNLESS NOTED OTHERWISE
UP	UTILITY POLE
UR	URINAL
USACE	UNITED STATES ARMY CORP OF ENGINEERS
V	VENT, VOLT
VAC	VACUUM
VAR	VARIES OR VARIABLE
VCP	VITRIFIED CLAY PIPE
VERT	VERTICAL
VLV	VALVE
VOL	VOLUME
VPC	VERT POINT OF CURVATURE
VPI	VERT POINT OF INTERSECTION
VPRC	VERT POINT OF REVERSE CURVE
VPT	VERT POINT OF TANGENCY
VTC	VENT TO CEILING
VTR	VENT THROUGH ROOF
W	WEST OR WIDTH
W/	WITH
WC	WATER COLUMN OR WATER CLOSET
WCO	WALL CLEANOUT
WD	WOOD
WOG	WATER, OIL, GAS
W/O	WITHOUT
WS	WATER SURFACE
WSCOT	WAINSCOT
WSTP	WATER STOP
WT	WEIGHT
WWF	WELDED WIRE FABRIC
WWM	WELDED WIRE MESH
XFR	TRANSFER
XFMR	TRANSFORMER
XING	CROSSING
XMTR	TRANSMITTER
XS	EXTRA STRONG
YD	YARD

NOTES

1. ELECTRICAL ABBREVIATIONS SHOWN ON ELECTRICAL SHEETS.
2. ADDITIONAL ABBREVIATIONS CONFORM TO ANSI STANDARD ABBREVIATIONS Y 1.1.
3. PIPING ABBREVIATIONS SHOWN ON MECHANICAL SHEETS.
4. SOME ABBREVIATIONS SHOWN ON THIS DRAWING MAY NOT BE USED ON OTHER DRAWINGS.

100%
REVIEW SUBMITTAL
NOT FOR CONSTRUCTION

REV.	DATE	DESCRIPTION						
C	1/30/98	ISSUED FOR 100% DESIGN REVIEW	PDH	MGM	MGM	LHA		
B	11/21/97	ISSUED FOR 90% DESIGN REVIEW	PDH	MGM	MGM	LHA		
A	10/7/97	ISSUED FOR 30% DESIGN REVIEW	PDH	MGM	MGM	LHA		

SCALE

U.S. DEPARTMENT OF ENERGY
DOE FIELD OFFICE, RICHLAND
HANFORD ENVIRONMENTAL RESTORATION PROGRAM

BECHTEL HANFORD INC.
RICHLAND, WASHINGTON

MONTGOMERY WATSON
RICHLAND, WASHINGTON

ENVIRONMENTAL RESTORATION DISPOSAL FACILITY
CELLS 3 & 4
ABBREVIATIONS

BECHTEL JOB NO.	DOE CONTRACT NO.	CADD FILENAME
22192	DE-AC06-93RL12367	6xdg0014.DWG

TASK	DRAWING NO.	REV. NO.
600	0600X-DD-G0014	C

HANFORD

RECORD INFORMATION

RECORD NO.	BLDG NO.	INDEX NO.
H-6-14812 SHT 1	600G	0000

DRAWING NO. 0600X-DD-C0095 | REV. NO. C

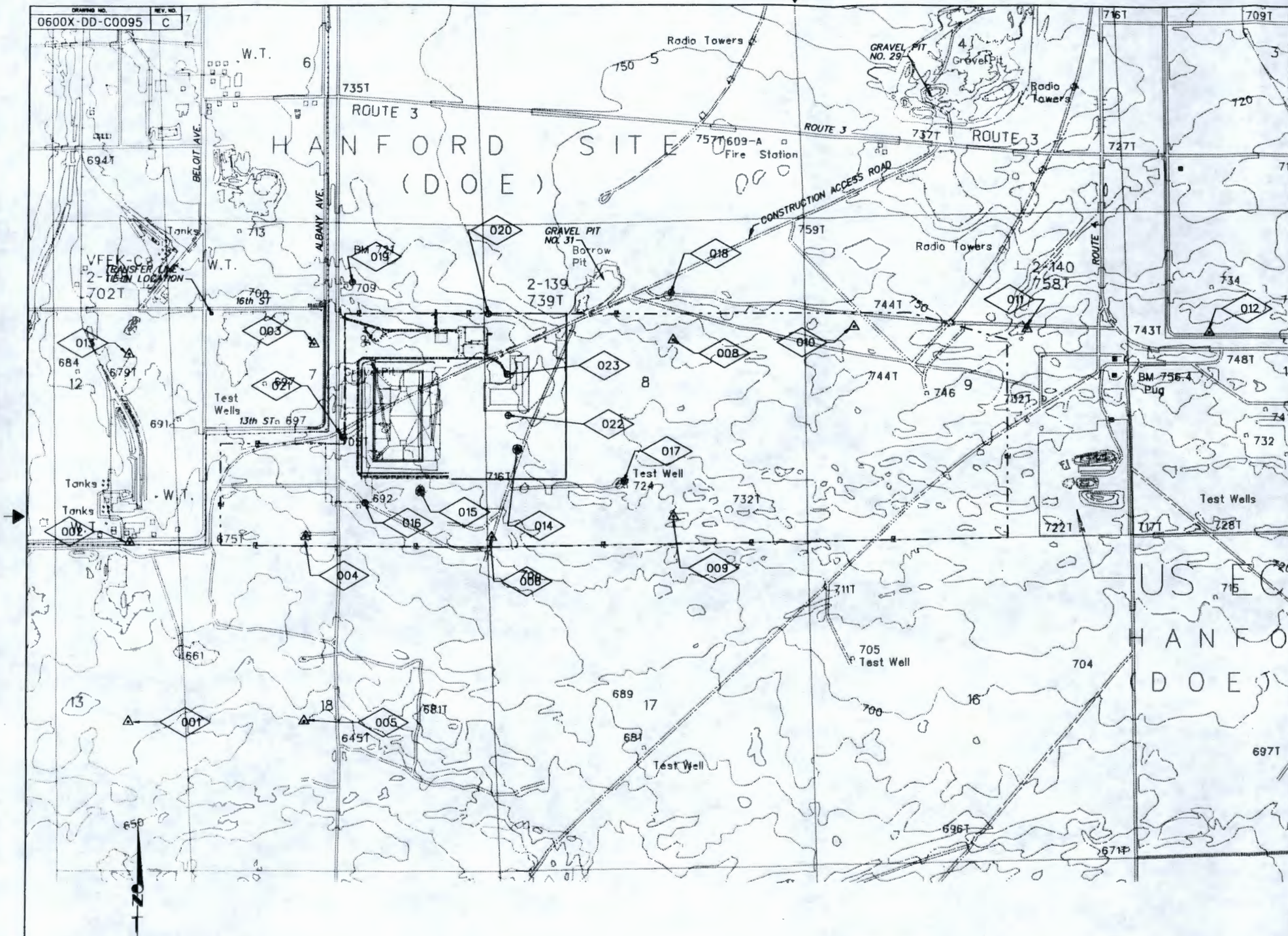

CONTOUR INTERVAL: 10 FT

NOTES

1. TOPOGRAPHY SHOWN IS FROM THE ORIGINAL SURVEY FOR THE ERDF SITE PRIOR TO CONSTRUCTION OF CELLS 1 AND 2. SOME VARIATION WILL BE FOUND IN EXISTING CONTOURS AND ELEVATIONS FROM THAT SHOWN.
2. TOPOGRAPHY IS SHOWN IN FEET ABOVE SEA LEVEL.
3. CONTRACTOR ACCESS TO PROJECT SITE SHALL BE FROM THE CONSTRUCTION ACCESS ROAD.
4. CONTRACTOR SHALL VERIFY ALL CONTOURS AND ELEVATIONS THAT EFFECT CONSTRUCTION ACTIVITIES.
5. SURVEY DATUM
   VERTICAL NAVD 88
   HORIZONTAL NAD 83 (91)

100% REVIEW SUBMITTAL NOT FOR CONSTRUCTION

REV.	DATE	DESCRIPTION	DRAWN BY	CHKD BY	CHKD BY	CHKD BY	BECHTEL APPROVAL	MW APPROVAL
C	1/20/98	ISSUED FOR 100% DESIGN REVIEW	PDH	MGM	MGM	LHA		
B	11/21/97	ISSUED FOR 60% DESIGN REVIEW	PDH	MGM	MGM	LHA		
A	10/7/97	ISSUED FOR 30% DESIGN REVIEW	PDH	MGM	MGM	LHA		

SCALE:

U.S. DEPARTMENT OF ENERGY
DOE FIELD OFFICE, RICHLAND
HANFORD ENVIRONMENTAL RESTORATION PROGRAM

BECHTEL HANFORD INC. RICHLAND, WASHINGTON | MONTGOMERY WATSON RICHLAND, WASHINGTON

ENVIRONMENTAL RESTORATION DISPOSAL FACILITY
CELLS 3 & 4
OVERALL SITE PLAN

BECHTEL JOB NO.	DOE CONTRACT NO.	CADD FILENAME
22192	DE-AC06-93RL12367	6xdc0095.dgn

TASK	DRAWING NO.	REV. NO.
600	0600X-DD-C0095	C

RECORD INFORMATION

RECORD NO.	BLDG NO.	INDEX NO.
H-6-14720 sht 1	600G	0100

DRAWING NO.	REV. NO.
0600X-DD-C0096	C

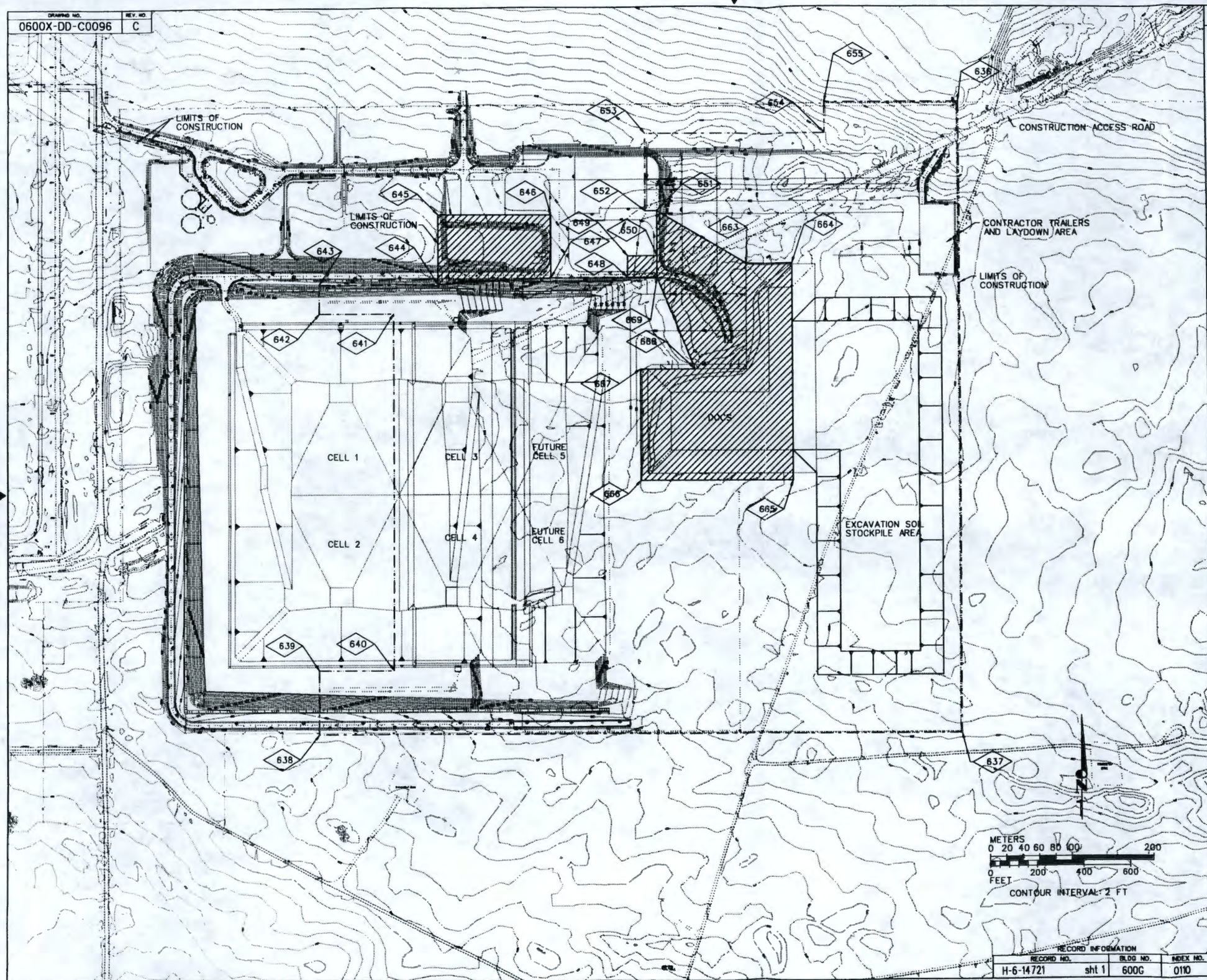

NOTES

1. SURVEY DATUM:
   VERTICAL NAVD 88
   HORIZONTAL NAD 83 (91)
2. SHARED ACCESS AREA WITH ERDF OPERATIONS. CONTRACTOR SHALL COORDINATE ACTIVITIES WITH CONTRACTING OFFICER. AREA MUST BE ACCESSIBLE BY ERDF OPERATIONS AT ALL TIMES UNLESS AUTHORIZED OTHERWISE BY THE CONTRACTING OFFICER.
3. SEE DRAWINGS 0600X-DD-C0107 THRU DRAWING 0600X-DD-C0109 FOR TRANSFER LINE LIMITS OF CONSTRUCTION.
4. EXACT BOUNDARIES FOR DOCS ARE NOT KNOWN. OUTLINE SHOWN IS ONLY A GENERAL REPRESENTATION.
5. THE LIMITS OF CONSTRUCTION INDICATE THE AREA WITHIN WHICH THE CONTRACTOR HAS FREE ACCESS. IN SOME CASES, THE CONTRACTOR MAY BE REQUIRED TO PERFORM WORK OUTSIDE THE LIMITS SHOWN (e.g. PULLING WIRE THROUGH EXISTING PULL BOXES AND TIE NEW WORK INTO EXISTING) IN THESE INSTANCES THE CONTRACTOR SHALL NOTIFY THE CONTRACTING OFFICER 48 HOURS IN ADVANCE AND SHALL MINIMIZE THE TIME REQUIRED TO PERFORM THE WORK.
6. TOPOGRAPHY SHOWN IS FROM ORIGINAL SURVEY AND PHASE 1 RECORD DRAWINGS PRIOR TO CLEARING AND GRUBBING FOR THIS PROJECT. SOME VARIATION WILL BE FOUND FROM CONTOURING AND ELEVATIONS SHOWN. CONTRACTOR SHALL CONSTRUCT FACILITIES TO THE FINISHED ELEVATIONS SHOWN.

100% REVIEW SUBMITTAL NOT FOR CONSTRUCTION

REV.	DATE	DESCRIPTION	DRAWN BY	CHK'T BY	DSGN ENGR	PROJ ENGR	PL CTL ENGR	PL ENGR
C	1/20/98	ISSUED FOR 100% DESIGN REVIEW	PDH	MGM	MGM	LHA		
B	11/21/97	ISSUED FOR 60% DESIGN REVIEW	PDH	MGM	MGM	LHA		
A	10/7/97	ISSUED FOR 30% DESIGN REVIEW	PDH	MGM	MGM	LHA		

SEALS

U.S. DEPARTMENT OF ENERGY
DOE FIELD OFFICE, RICHLAND
HANFORD ENVIRONMENTAL RESTORATION PROGRAM

BECHTEL HANFORD INC.
RICHLAND, WASHINGTON

MONTGOMERY WATSON
RICHLAND, WASHINGTON

ENVIRONMENTAL RESTORATION DISPOSAL FACILITY
CELLS 3 & 4
LIMITS OF CONSTRUCTION

BECHTEL JOB NO.	DOE CONTRACT NO.	CADD FILENAME
22192	DE-AC06-93RL12367	6xdc0096.dgn

TASK	DRAWING NO.	REV. NO.
600	0600X-DD-C0096	C

RECORD INFORMATION

RECORD NO.		BLDG NO.	INDEX NO.
H-6-14721	sht 1	600G	0110

DRAWING NO.	REV. NO.
0600X-DD-C0097	C

COORDINATES

POINT NO.	DESCRIPTION	NORTH	EAST	ELEVATION	REMARKS
	EXISTING FEATURES				
001	SURVEY CONTROL POINT HSM-149	436000.7378	1861560.7550	669.29	
002	SURVEY CONTROL POINT HSM-142	438947.3668	1861429.3610	678.071	
003	SURVEY CONTROL POINT HSM-136	442215.0768	1864490.3260	690.541	
004	SURVEY CONTROL POINT HSM-143	438966.7238	1864376.9180	680.440	
005	SURVEY CONTROL POINT HSM-150	436034.9668	1864430.9920	655.77	
006	SURVEY CONTROL POINT HSM-144	438966.6118	1867428.5820	704.728	
007	NOT USED				
008	SURVEY CONTROL POINT HSM-138	442270.2478	1870411.8430	733.576	
009	SURVEY CONTROL POINT HSM-145	439312.8478	1870414.9040	722.01	
010	SURVEY CONTROL POINT HSM-139	442458.0198	1873311.5000	745.93	
011	SURVEY CONTROL POINT HSM-140	442510.2408	1876208.3110	739.27	
012	SURVEY CONTROL POINT HSM-141	442459.5518	1879193.4860	744.91	
013	SURVEY CONTROL POINT HSM-135	442045.8388	1861410.8770	692.42	
014	BORING 699-35-68B	440475.56	1867862.63	713.9	
015	BORING 699-35-69B	439789.36	1866279.31	701.4	
016	WELL 699-35-70	439591.81	1865375.65	696.61	
017	WELL 696-35-66	439958.15	1869612.46	729.83	
018	WELL 6-38-65	443044.12	1870374.64	756.92	
019	WELL 6-38-70	443206.08	1865160.94	714.25	
020	WELL 699-36-68A	442688.78	1867389.45	718.1726	
021	WELL 699-36-70A	440666.01	1865009.84		
022	MONITORING WELL 699-36-67	441026.94	1867714.90		
023	MONITORING WELL 699-37-68	441697.70	1867695.57		
	ROADWAYS				
157	RADIUS PT EDGE TRENCH ROAD	442030.13	1867437.04	----	
170	PT EDGE OPERATIONS AREA	442347.04	1867324.53	722.60	
171	PT EDGE OPERATIONS AREA	442471.04	1867324.53	----	
214	EXIST. POE TRENCH ROAD	440025.00	1866742.89	715.44	
232	PT EDGE OPERATIONS AREA	442195.27	1867376.78	717.85	
	DRAINAGE FEATURES				
400	POB EXIST. DRAINAGE DITCH	441901.1	1866509.3	721.6	
433	POB EXIST. TRENCH DRAINAGE DITCH	440085.00	1866744.00	714.00	
434	CULVERT "B" DOWNSTREAM	441994.1	1866704.8		
435	CULVERT "B" UPSTREAM	441940.3	1866704.8		
436	PT DRAINAGE DITCH	441887.7	1866703.4		
437	POB DRAINAGE DITCH	441887.7	1867084.7		
438	POB TRENCH DRAINAGE DITCH	440085.00	1867153.53		
	SITE FEATURES				
636	LIMITS OF CONSTRUCTION	442705	1868671		
637	LIMITS OF CONSTRUCTION	439983	1868671		
638	LIMITS OF CONSTRUCTION	439983	1865909		
639	LIMITS OF CONSTRUCTION	440257	1865909		
640	LIMITS OF CONSTRUCTION	440257	1866232		
641	LIMITS OF CONSTRUCTION	441798	1866232		
642	LIMITS OF CONSTRUCTION	441798	1865910		
643	LIMITS OF CONSTRUCTION	441924	1865910		
644	LIMITS OF CONSTRUCTION	441923	1866423		
645	LIMITS OF CONSTRUCTION	442223	1866423		
646	LIMITS OF CONSTRUCTION	442223	1866911		
647	LIMITS OF CONSTRUCTION	441951	1866911		
648	LIMITS OF CONSTRUCTION	441951	1867240		
649	LIMITS OF CONSTRUCTION	442043	1867240		
650	LIMITS OF CONSTRUCTION	442043	1867365		
651	LIMITS OF CONSTRUCTION	442236	1867365		
652	LIMITS OF CONSTRUCTION	442236	1867315		
653	LIMITS OF CONSTRUCTION	442570	1867315		
654	LIMITS OF CONSTRUCTION	442570	1868093		
655	LIMITS OF CONSTRUCTION	442705	1868093		
663	SHARED ACCESS AREA	442010	1867749		
664	SHARED ACCESS AREA	442010	1867949		
665	SHARED ACCESS AREA	441075	1867949		
666	SHARED ACCESS AREA	441075	1867293		
667	SHARED ACCESS AREA	441555	1867293		
668	SHARED ACCESS AREA	441555	1867528		

POINT NO.	DESCRIPTION	NORTH	EAST	ELEVATION	REMARKS
669	SHARED ACCESS AREA	441951	1867365		
670	PT CONTOUR	442194.7	1866460.4		
671	RADIUS PT CONTOUR	442038.2	1866470.9		
672	RADIUS PT CONTOUR	441996.7	1866706.1		
673	PT CONTOUR	441979.1	1866795.8		
674	GRADE BREAK	441872.2	1866653.7		
675	GRADE BREAK	441864.1	1866754.0		
676	PT CONTOUR	441869.3	1867086.2		
677	PT CONTOUR	441812.0	1867071.9		
678	PT CONTOUR	441812.0	1867234.8		
679	PT CONTOUR	441877.9	1867323.0		
680	RADIUS PT CONTOUR	441827.9	1867300.7		
681	PT CONTOUR	441877.9	1867397.0		
682	CORNER LOADING/UNLOADING PAD	442371.0	1867324.5		
712	PT LOADING/UNLOADING PAD	442371.0	1867377.0		
713	CORNER STRUCTURE FILL AREA	442471.0	1867474.5		
714	CORNER LOADING/UNLOADING PAD	442371.0	1867474.5		
715	CORNER STRUCTURE FILL AREA	441959.2	1867474.5		
716	CORNER STRUCTURE FILL AREA	441959.2	1867624.5		
717	CORNER STRUCTURE FILL AREA	442471.0	1867624.5		
718	GRADE BREAK	442347.9	1868457.8	722.60	
719	RADIUS PT CONTOUR	441668.7	1867325.7		
720	RADIUS PT CONTOUR	441524.1	1867350.7		
722	PT BREAK LINE	440134.1	1866558.3		
723	PT BREAK LINE	440130.0	1866654.0		
724	PT BREAK LINE	440133.3	1866754.0		
725	PT BREAK LINE	440121.4	1867107.6		
726	PT BREAK LINE	440172.0	1867102.5		
727	RADIUS PT CONTOUR	440078.2	1867213.4		
728	RADIUS PT CONTOUR	440060.7	1867234.9		
729	POE ACCESS ROAD	440025.0	1867242.9	716	
730	PT CONTOUR	440172.0	1867274.1		
731	LIMITS OF CONSTRUCTION	442292	1865457		
732	LIMITS OF CONSTRUCTION	442238	1865403		
733	LIMITS OF CONSTRUCTION	442263	1865377		
734	LIMITS OF CONSTRUCTION	442297	1865411		
735	LIMITS OF CONSTRUCTION	442410	1865298		
736	LIMITS OF CONSTRUCTION	442491	1865298		
737	LIMITS OF CONSTRUCTION	442603	1864908		
738	LIMITS OF CONSTRUCTION	442770	1864908		
739	LIMITS OF CONSTRUCTION	442770	1862772		
740	LIMITS OF CONSTRUCTION	442800	1862772		
741	LIMITS OF CONSTRUCTION	442800	1864938		
742	LIMITS OF CONSTRUCTION	442626	1864938		
743	LIMITS OF CONSTRUCTION	442545	1865323		
744	TIE-IN AIR MONITOR LINE	439993.3	1866783.0		
745	AIR MONITOR NO. 2	439993.3	1867715.0		
746	AIR MONITOR NO. 1	441022.0	1867715.0		
748	AIR MONITOR NO. 3	442686.6	1868649.7		
801	AIR MONITORING STATION NO. 1 (EXIST)	440830	1867591		
802	TIE-IN AIR MONITOR LINE	442686.6	1867301.9		
851	AIR MONITORING STATION NO. 2 (EXIST)	439993.3	1866525.0		
	YARD PIPING				
511	MANHOLE 23	441857.00	1866500.24	727.25	TOP OF MANHOLE
512	MANHOLE 24	440174.00	1866500.24	727.25	TOP OF MANHOLE
525	MANHOLE 12	441857.00	1866002.76	727.25	TOP OF MANHOLE
527	MANHOLE 14	440177.00	1866003.74	727.25	TOP OF MANHOLE
900	90° ELBOW	442262.04	1865397.98	696.67	
901	90° ELBOW	442290.34	1865426.27	695.00	
902	45° ELBOW	442408.14	1865308.48	694.67	
903	45° ELBOW	442498.77	1865308.48	691.00	
904	45° ELBOW	442607.61	1864928.45	692.67	
905	90° ELBOW	442780.16	1864928.45	691.00	
906	BLIND FLANGE	441927.93	1866514.24	719.00	
907	254mm(10") ELBOW	441857.00	1866514.24		
908	END DOUBLE CONTAINMENT	441857.00	1866510.24	719.61	
909	END DOUBLE CONTAINMENT	440177.00	1866510.24	719.61	
910	254mm(10") ELBOW	440177.00	1866514.24		
911	BLIND FLANGE	440112.57	1866514.24	719.00	

NOTES

1. COORDINATES FOR THE TRENCH CELLS ARE SHOWN ON DRAWINGS 0600X-DD-C0125, C0132, C0133 AND C0141.

100%
REVIEW SUBMITTAL
NOT FOR CONSTRUCTION

REV.	DATE	DESCRIPTION	DRAWN BY	DSGN/ENGR	CHK/ENGR	DWG APP	PL/CTL APPROVAL
C	1/20/98	ISSUED FOR 100% DESIGN REVIEW	PDH	MDM	MDM	LVA	
B	11/21/97	ISSUED FOR 60% DESIGN REVIEW	PDH	MDM	MDM	LVA	
A	10/7/97	ISSUED FOR 30% DESIGN REVIEW	PDH	MDM	MDM	LVA	

SCALE

U.S. DEPARTMENT OF ENERGY
DOE FIELD OFFICE, RICHLAND
HANFORD ENVIRONMENTAL RESTORATION PROGRAM

BECHTEL HANFORD INC.
RICHLAND, WASHINGTON

MONTGOMERY WATSON
RICHLAND, WASHINGTON

ENVIRONMENTAL RESTORATION DISPOSAL FACILITY
CELLS 3 & 4
COORDINATE TABLE

BECHTEL JOB NO.	DOE CONTRACT NO.	CADD FILENAME
22192	DE-AC06-93RL12367	6xdc0097.DWG

TASK	DRAWING NO.	REV. NO.
600	0600X-DD-C0097	C

RECORD INFORMATION

RECORD NO.	BLDG NO.	INDEX NO.
H-6-14722 SHT 1	600G	0000

DRAWING NO.	REV. NO.
0600X-DD-C0100	C

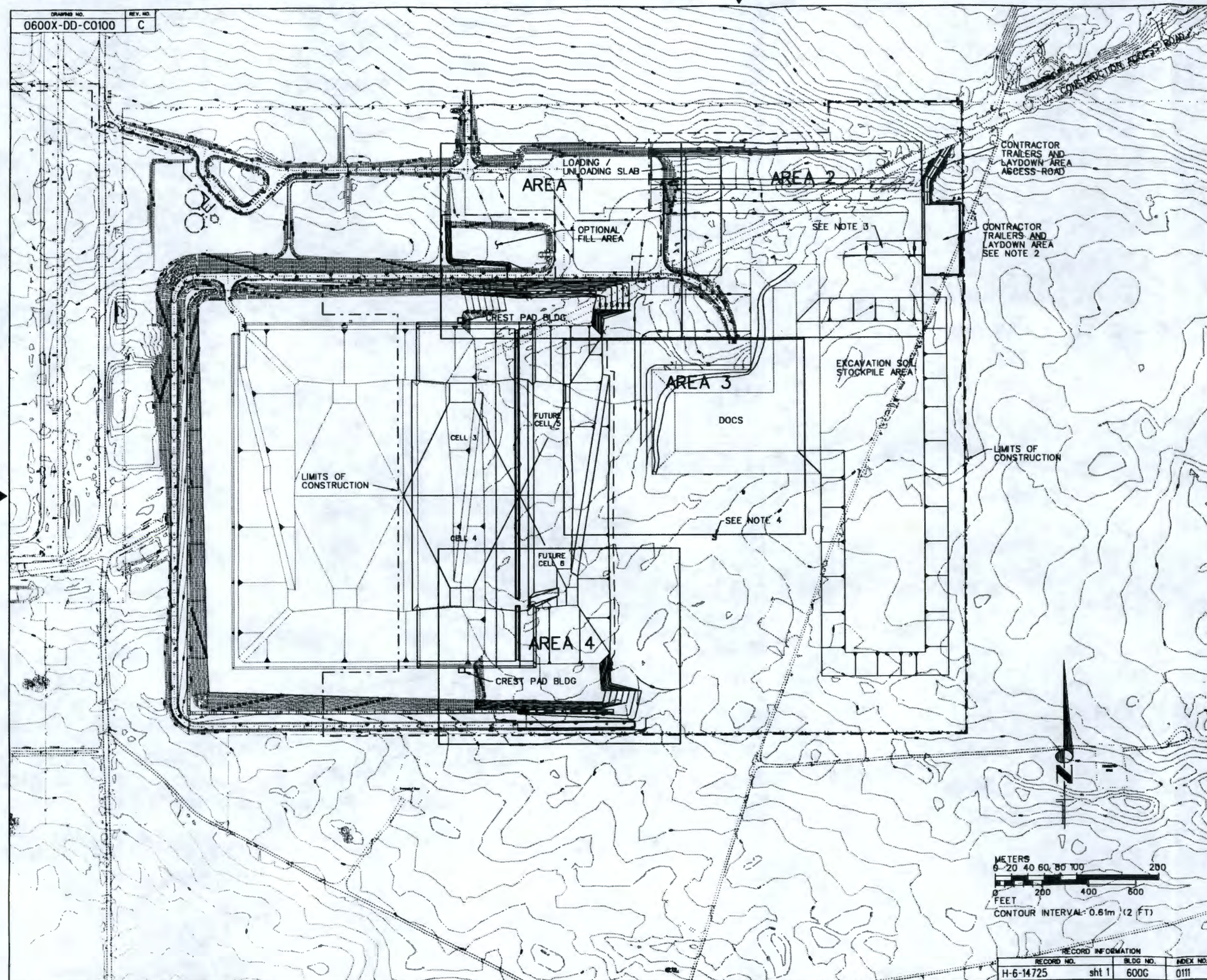

NOTES

1. CONTRACTOR ACCESS TO PROJECT SITE SHALL BE FROM THE CONSTRUCTION ACCESS ROAD.
2. PRIOR TO PLACEMENT OF TRAILERS, CONTRACTOR SHALL INSTALL 152.4mm(6") OF BASE MATERIAL ON PREVIOUSLY GRADED CONTRACTOR TRAILERS LAYDOWN AREA AND IT'S ACCESS ROAD. SURFACE AREA TO BE GRAVELED IS APPROXIMATELY 10405 SQ. METERS (112.000 SQ.FT.)
3. PROVIDE AND MAINTAIN 18.29m(60 FT) MIN. ROADWAY FOR VEHICLE ACCESS TO CONSTRUCTION AREA. EXACT LOCATION TO BE DETERMINED BY CONTRACTOR AND LOCATED TO PROVIDE CONVENIENT ACCESS TO CONTRACTOR TRAILERS AND LAYDOWN AREA FROM CONSTRUCTION AREA.
4. EXISTING AIR MONITORING STATIONS SEE DRAWING 0600X-DD-E0043.
5. TOPOGRAPHY SHOWN IS FROM ORIGINAL SURVEY AND PHASE 1 RECORD DRAWINGS PRIOR TO CLEARING AND GRUBBING FOR THIS PROJECT. SOME VARIATION WILL BE FOUND FROM CONTOURING AND ELEVATIONS SHOWN. CONTRACTOR SHALL CONSTRUCT FACILITIES TO THE FINISHED ELEVATIONS SHOWN.

100%
REVIEW SUBMITTAL
NOT FOR CONSTRUCTION

REV.	DATE	DESCRIPTION	PREPARED BY	DRAFT CHK	DESIGN CHK	CADD CHK	ELECTR. CHK	PE CHK
C	1/20/98	ISSUED FOR 100% DESIGN REVIEW	PDH	MGM	MGM	LHA		
B	11/21/97	ISSUED FOR 80% DESIGN REVIEW	PDH	MGM	MGM	LHA		
A	10/7/97	ISSUED FOR 30% DESIGN REVIEW	PDH	MGM	MGM	LHA		

SEALED

U.S. DEPARTMENT OF ENERGY
DOE FIELD OFFICE, RICHLAND
HANFORD ENVIRONMENTAL RESTORATION PROGRAM

BECHTEL HANFORD INC.
RICHLAND, WASHINGTON

MONTGOMERY WATSON
RICHLAND, WASHINGTON

ENVIRONMENTAL RESTORATION DISPOSAL FACILITY
CELLS 3 & 4
FACILITIES GRADING AREA INDEX

BECHTEL JOB NO.	DOE CONTRACT NO.	CADD FILENAME
22192	DE-AC06-93RL12367	6xdc0100.dgn

TASK	DRAWING NO.	REV. NO.
600	0600X-DD-C0100	C

RECORD INFORMATION

RECORD NO.	BLDG NO.	INDEX NO.
H-6-14725 sht 1	600G	0111

DRAWING NO.	REV. NO.
0600X-DD-C0101	C

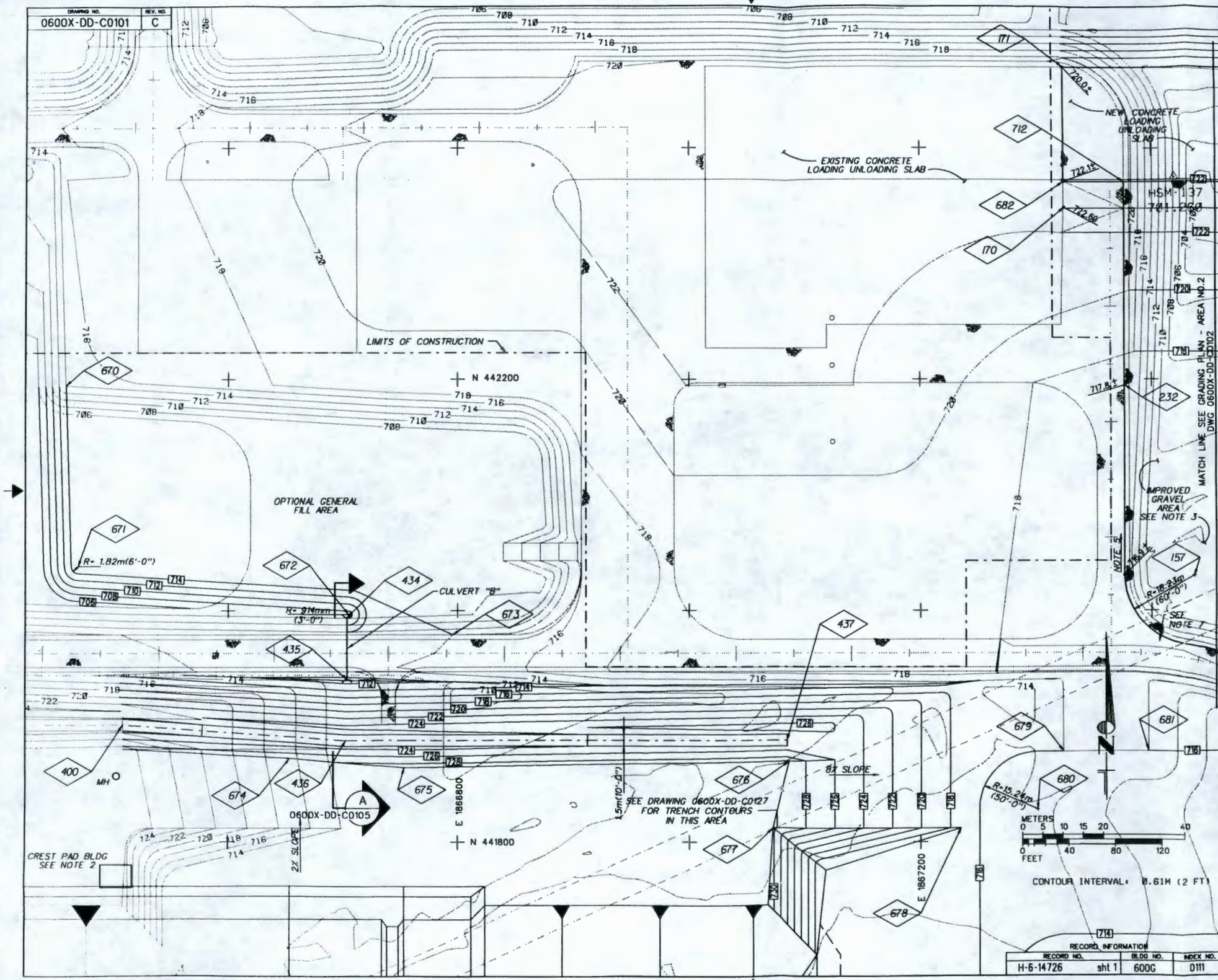

NOTES

1. SURVEY DATUM:
   VERTICAL NAVD 88
   HORIZONTAL NAD 83 (91)
2. SEE DRAWINGS 0600X-DD-C0137 AND 0600X-DD-C0138 FOR CREST PAD BUILDING LOCATION.
3. PROVIDE 508mm(20") OF BASE MATERIAL OVER STRUCTURAL FILL IN IMPROVED GRAVEL AREA.
4. SEE DRAWING 0600X-DD-C0161 FOR LOADING / UNLOADING SLAB PLAN.
5. MATCH EXISTING ELEVATIONS WHERE NEW GRADE MEETS EXISTING GRADE UNLESS SHOWN OTHERWISE.
6. ALL SLOPES ARE 3H:1V UNLESS SHOWN OTHERWISE.
7. GRADE EXISTING SOIL IN THIS AREA TO PROVIDE DRAINAGE.
8. TOPOGRAPHY SHOWN IS FROM ORIGINAL SURVEY AND PHASE 1 RECORD DRAWINGS PRIOR TO CLEARING AND GRUBBING FOR THIS PROJECT. SOME VARIATION WILL BE FOUND FROM CONTOURING AND ELEVATIONS SHOWN. CONTRACTOR SHALL CONSTRUCT FACILITIES TO THE FINISHED ELEVATIONS SHOWN.

100% REVIEW SUBMITTAL NOT FOR CONSTRUCTION

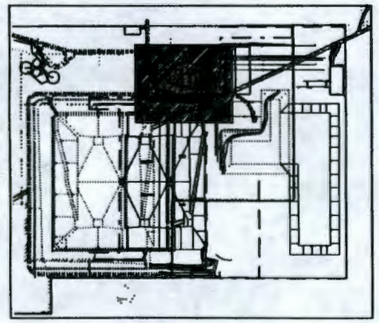

KEY PLAN

REV.	DATE	DESCRIPTION	DRAWN BY	PROJ ENG	DSGN ENGR	PROJ CHF	CL/TEL APPROVAL	DOE APPROVAL
C	1/20/98	ISSUED FOR 100% DESIGN REVIEW	PDH	MGM	MGM	LHA		
B	11/21/97	ISSUED FOR 60% DESIGN REVIEW	PDH	MGM	MGM	LHA		
A	10/7/97	ISSUED FOR 30% DESIGN REVIEW	PDH	MGM	MGM	LHA		

SCALE:

U.S. DEPARTMENT OF ENERGY
DOE FIELD OFFICE, RICHLAND
HANFORD ENVIRONMENTAL RESTORATION PROGRAM

BECHTEL HANFORD INC. RICHLAND, WASHINGTON | MONTGOMERY WATSON RICHLAND, WASHINGTON

ENVIRONMENTAL RESTORATION DISPOSAL FACILITY
CELLS 3 & 4
GRADING PLAN - AREA 1

BECHTEL JOB NO.	DOE CONTRACT NO.	CADD FILENAME
22192	DE-AC06-93RL12367	6xdc0101.dgn

TASK	DRAWING NO.	REV. NO.
600	0600X-DD-C0101	C

RECORD INFORMATION

RECORD NO.	BLDG NO.	INDEX NO.
H-6-14726 sht 1	600G	0111

DRAWING NO.	REV. NO.
0600X-DD-C0102	C

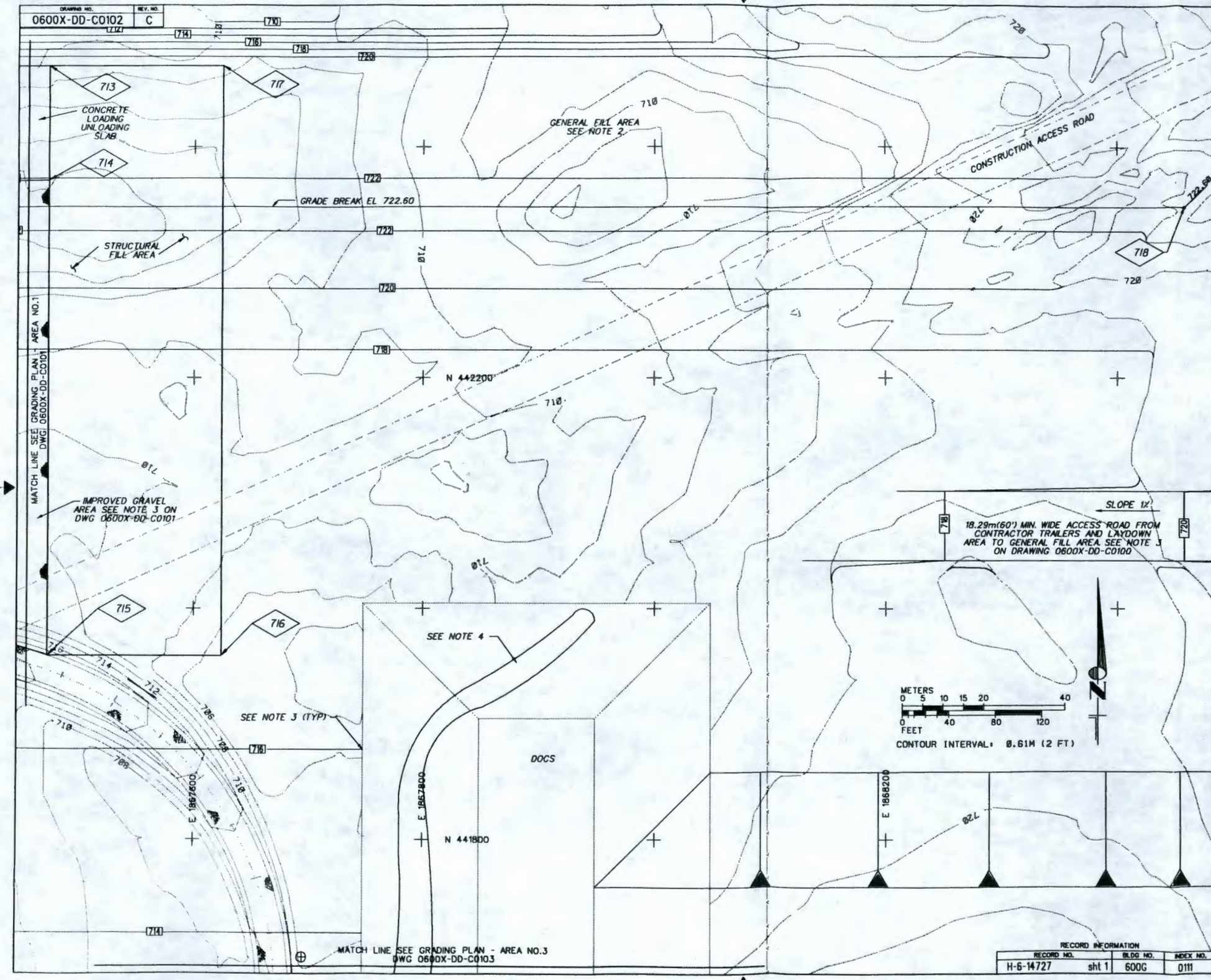

RECORD INFORMATION		
RECORD NO.	BLDG NO.	INDEX NO.
H-6-14727 sht 1	600G	0111

NOTES

1. SURVEY DATUM:
   VERTICAL NAVD 88
   HORIZONTAL NAD 83 (91)
2. FILL MATERIAL TO BE PLACED IN THE GENERAL FILL AREA SHALL BE PLACED TO ACHIEVE CONTOURS AND ELEVATIONS SHOWN. CONTRACTOR IS NOT REQUIRED TO CUT EXISTING MATERIAL EXCEPT AS NOTED AND MAY TERMINATE FILL WHEN EXISTING GRADE MATCHES THAT OF NEW CONTOUR GRADE AT AN EASTING OF PLUS 1868400.
3. WHEN CONTOURS ARE SHOWN DISAPPEARING INTO THE DOCS AREA, CONTINUE CONTOUR EAST UNTIL ELEVATION IS MATCHED AT DOCS.
4. PROVIDE A SWALE AT INTERFACE BETWEEN NEW GRADE AND DOCS TO ALLOW DRAINAGE FROM NORTH SIDE OF DOCS TO LOW SPOT SHOWN IN GRADING PLAN - AREA 3.
5. TOPOGRAPHY SHOWN IS FROM ORIGINAL SURVEY AND PHASE 1 RECORD DRAWINGS PRIOR TO CLEARING AND GRUBBING FOR THIS PROJECT. SOME VARIATION WILL BE FOUND FROM CONTOURING AND ELEVATIONS SHOWN. CONTRACTOR SHALL CONSTRUCT FACILITIES TO THE FINISHED ELEVATIONS SHOWN.

100%
REVIEW SUBMITTAL
NOT FOR CONSTRUCTION

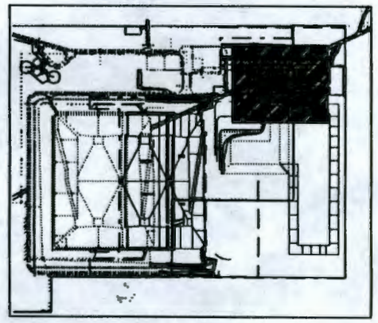

KEY PLAN

REV.	DATE	DESCRIPTION	DRAWN BY	CHKD BY	DESIGN CHKD	CHKD BY	PL/CD APPROVAL	PE APPROVAL
C	1/20/98	ISSUED FOR 100% DESIGN REVIEW	PDH	MGM	MGM	LHA		
B	11/21/97	ISSUED FOR 60% DESIGN REVIEW	PDH	MGM	MGM	LHA		
A	10/7/97	ISSUED FOR 30% DESIGN REVIEW	PDH	MGM	MBM	LHA		

SCALE:

U.S. DEPARTMENT OF ENERGY
DOE FIELD OFFICE, RICHLAND
HANFORD ENVIRONMENTAL RESTORATION PROGRAM

BECHTEL HANFORD INC.
RICHLAND, WASHINGTON

MONTGOMERY WATSON
RICHLAND, WASHINGTON

ENVIRONMENTAL RESTORATION DISPOSAL FACILITY
CELLS 3 & 4
GRADING PLAN - AREA 2

BECHTEL JOB NO.	DOE CONTRACT NO.	CADD FILENAME
22192	DE-AC06-93RL12367	6xdc0102.dgn

TASK	DRAWING NO.	REV. NO.
600	0600X-DD-C0102	C

DRAWING NO.	REV. NO.
0600X-DD-C0103	C

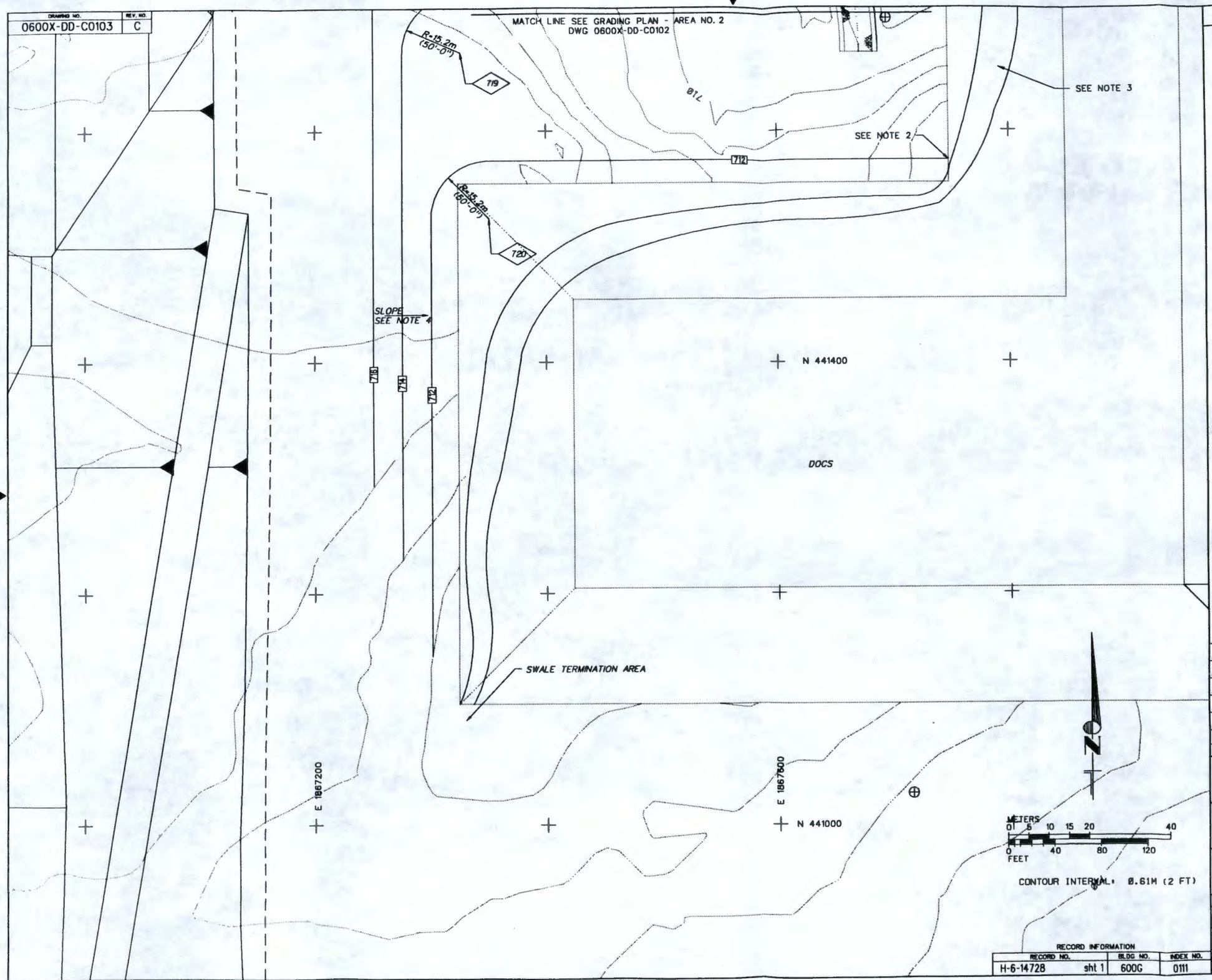

NOTES

1. SURVEY DATUM:
   VERTICAL NAVD 88
   HORIZONTAL NAD 83 (91)
2. WHEN CONTOURS ARE SHOWN DISAPPEARING INTO THE DOCS AREA, CONTINUE CONTOUR EAST UNTILL ELEVATION IS MATCHED AT DOCS.
3. PROVIDE A SWALE AT INTERFACE BETWEEN NEW GRADE AND DOCS TO ALLOW DRAINAGE FROM NORTH SIDE OF DOCS TO LOW SPOT.
4. SLOPE BETWEEN CONTOURS 718 AND 712 IS 8%. AT ELEVATION LESS THAN 712 PROVIDE SLOPE THAT WILL ALLOW FOR DRAINAGE THROUGH SWALE TO SWALE TERMINATION AREA.
5. TOPOGRAPHY SHOWN IS FROM ORIGINAL SURVEY AND PHASE 1 RECORD DRAWINGS PRIOR TO CLEARING AND GRUBBING FOR THIS PROJECT. SOME VARIATION WILL BE FOUND FROM CONTOURING AND ELEVATIONS SHOWN. CONTRACTOR SHALL CONSTRUCT FACILITIES TO THE FINISHED ELEVATIONS SHOWN.

100%
REVIEW SUBMITTAL
NOT FOR CONSTRUCTION

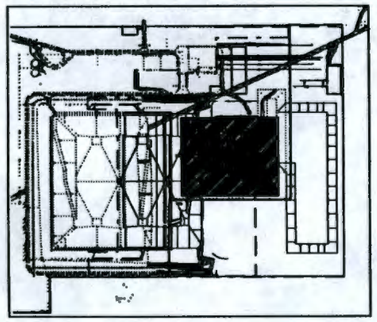

KEY PLAN

REV.	DATE	DESCRIPTION	DRAWN BY	TECH CHK	ENGR CHK	PROJ CHK	PL/CEL APPROVAL	DOE APPROVAL
C	1/20/98	ISSUED FOR 100% DESIGN REVIEW	PDH	MGM	MGM	LHA		
B	11/21/97	ISSUED FOR 60% DESIGN REVIEW	PDH	MGM	MGM	LHA		
A	10/7/97	ISSUED FOR 30% DESIGN REVIEW	PDH	MGM	MBM	LHA		

SCALE:

U.S. DEPARTMENT OF ENERGY
DOE FIELD OFFICE, RICHLAND
HANFORD ENVIRONMENTAL RESTORATION PROGRAM

BECHTEL HANFORD INC.
RICHLAND, WASHINGTON

MONTGOMERY WATSON
RICHLAND, WASHINGTON

ENVIRONMENTAL RESTORATION DISPOSAL FACILITY
CELLS 3 & 4
GRADING PLAN - AREA 3

BECHTEL JOB NO.	DOE CONTRACT NO.	CADD FILENAME
22192	DE-AC06-93RL12367	6xdc0103.dgn

TASK	DRAWING NO.	REV. NO.
600	0600X-DD-C0103	C

RECORD INFORMATION

RECORD NO.	BLDG NO.	INDEX NO.
H-6-14728 sht 1	600G	0111

DRAWING NO.	REV. NO.
0600X-DD-C0104	C

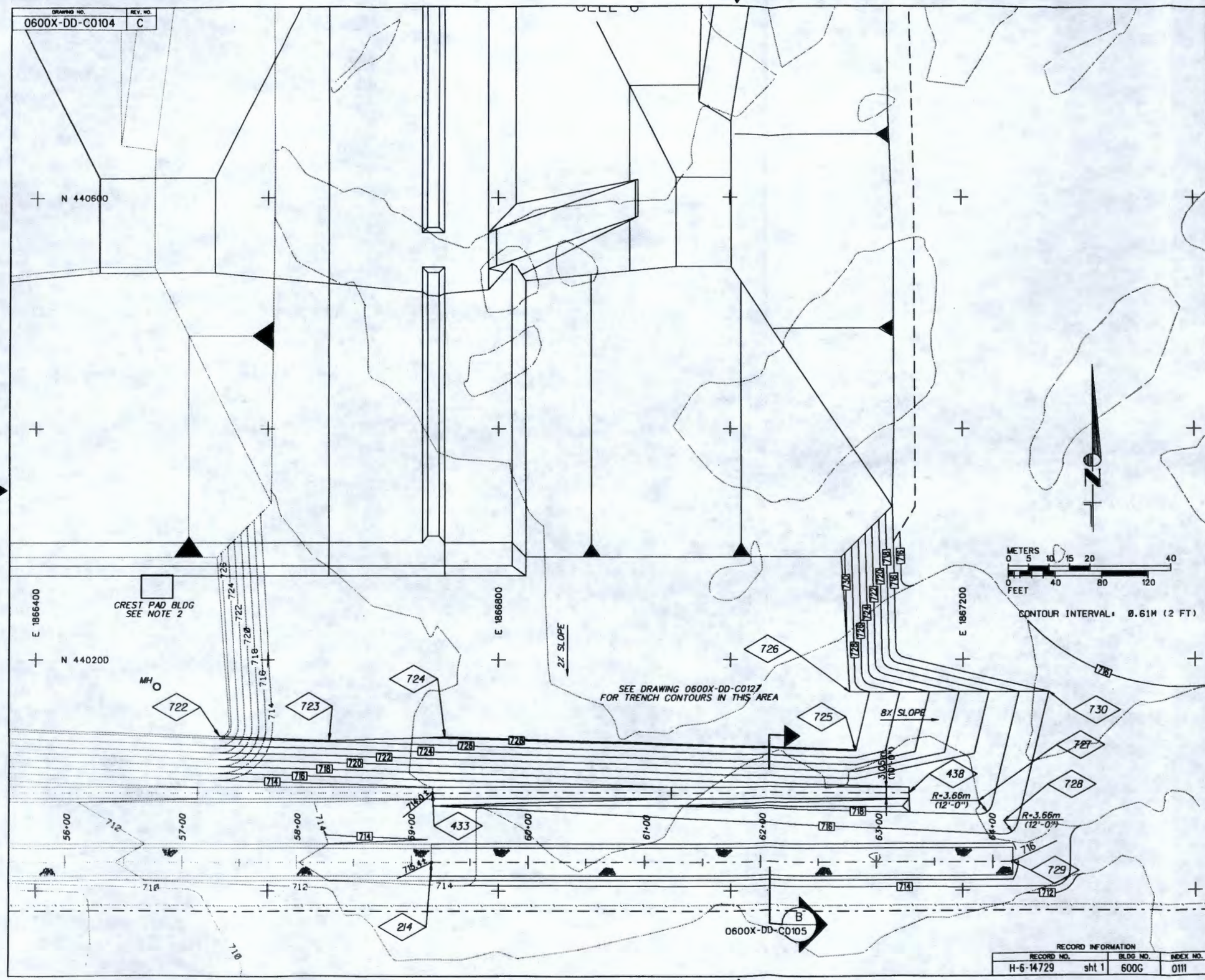

NOTES

1. SURVEY DATUM:
   VERTICAL NAVD 88
   HORIZONTAL NAD 83 (91)
2. SEE DRAWINGS 0600X-DD-C0137 AND 0600X-DD-C0138 FOR CREST PAD BUILDING LOCATION.

100%
REVIEW SUBMITTAL
NOT FOR CONSTRUCTION

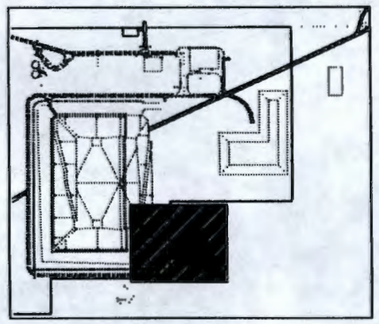

KEY PLAN

REV.	DATE	DESCRIPTION	DRAWN BY	SCALE/ DATE	DSGN/ CHKD	CHKD DATE	SUPTD/ APPROVED	DATE
C	1/20/98	ISSUED FOR 100% DESIGN REVIEW	PDH	MGM	MGM	LHA		
B	11/21/97	ISSUED FOR 60% DESIGN REVIEW	PDH	MGM	MGM	LHA		
A	10/7/97	ISSUED FOR 30% DESIGN REVIEW	PDH	MGM	MGM	LHA		

SOILD

U.S. DEPARTMENT OF ENERGY
DOE FIELD OFFICE, RICHLAND
HANFORD ENVIRONMENTAL RESTORATION PROGRAM

BECHTEL HANFORD INC.
RICHLAND, WASHINGTON

MONTGOMERY WATSON
RICHLAND, WASHINGTON

ENVIRONMENTAL RESTORATION DISPOSAL FACILITY
CELLS 3 & 4
GRADING PLAN - AREA 4

BECHTEL JOB NO.	DOE CONTRACT NO.	CADD FILENAME
22192	DE-AC06-93RL12367	6xdc0104.dgn

TASK	DRAWING NO.	REV. NO.
600	0600X-DD-C0104	C

RECORD INFORMATION

RECORD NO.	BLDG NO.	INDEX NO.
H-6-14729 sht 1	600G	0111

DRAWING NO.	REV. NO.
0600X-DD-C0105	C

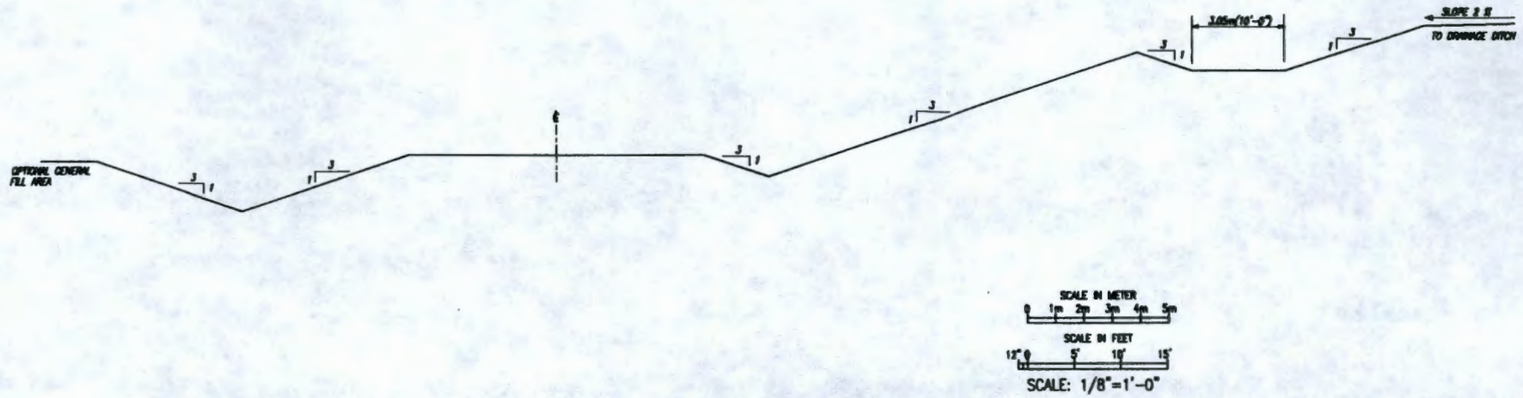

TYPICAL NORTH TRENCH SECTION (A)
SCALE: AS NOTED 0600X-DD-C0101

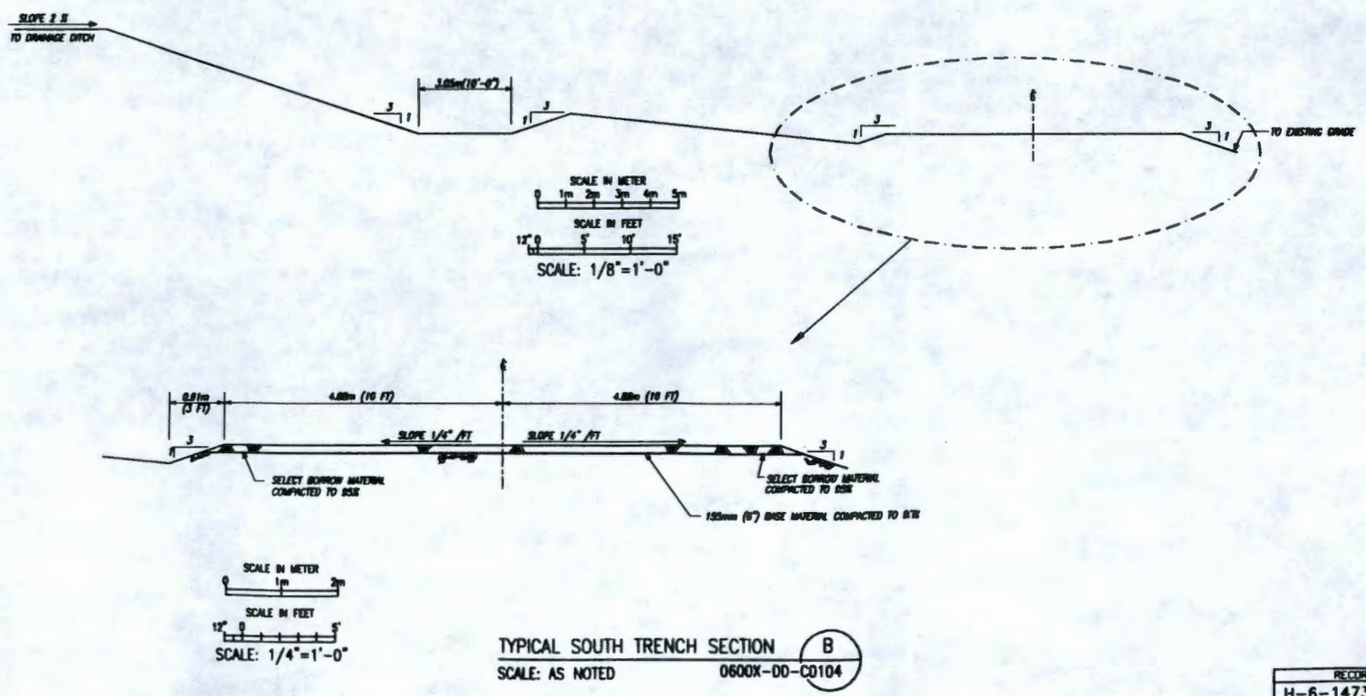

TYPICAL SOUTH TRENCH SECTION (B)
SCALE: AS NOTED 0600X-DD-C0104

NOTES

100%
REVIEW SUBMITTAL
NOT FOR CONSTRUCTION

REV.	DATE	DESCRIPTION	DRAWN BY	DSGN ENGR	DWG/ ENGR	DWG CHK	EL/TEL APPROV	ISSUED FOR CONSTRUCTION
C	1/20/98	ISSUED FOR 100% DESIGN REVIEW	PDH	MOM	MOM	LHA		

SCALE

U.S. DEPARTMENT OF ENERGY
DOE FIELD OFFICE, RICHLAND
HANFORD ENVIRONMENTAL RESTORATION PROGRAM

BECHTEL HANFORD INC.
RICHLAND, WASHINGTON

MONTGOMERY WATSON
RICHLAND, WASHINGTON

ENVIRONMENTAL RESTORATION DISPOSAL FACILITY
CELLS 3 & 4
CIVIL SECTIONS

BECHTEL JOB NO.	DOE CONTRACT NO.	CADD FILENAME
22192	DE-AC06-93RL12367	6xdc0105.DWG

TASK	DRAWING NO.	REV. NO.
600	0600X-DD-C0105	C

RECORD INFORMATION

RECORD NO.	BLDG NO.	INDEX NO.
H-6-14730 SHT 1	600G	0111

DRAWING NO.	REV. NO.
0600X-DD-C0106	C

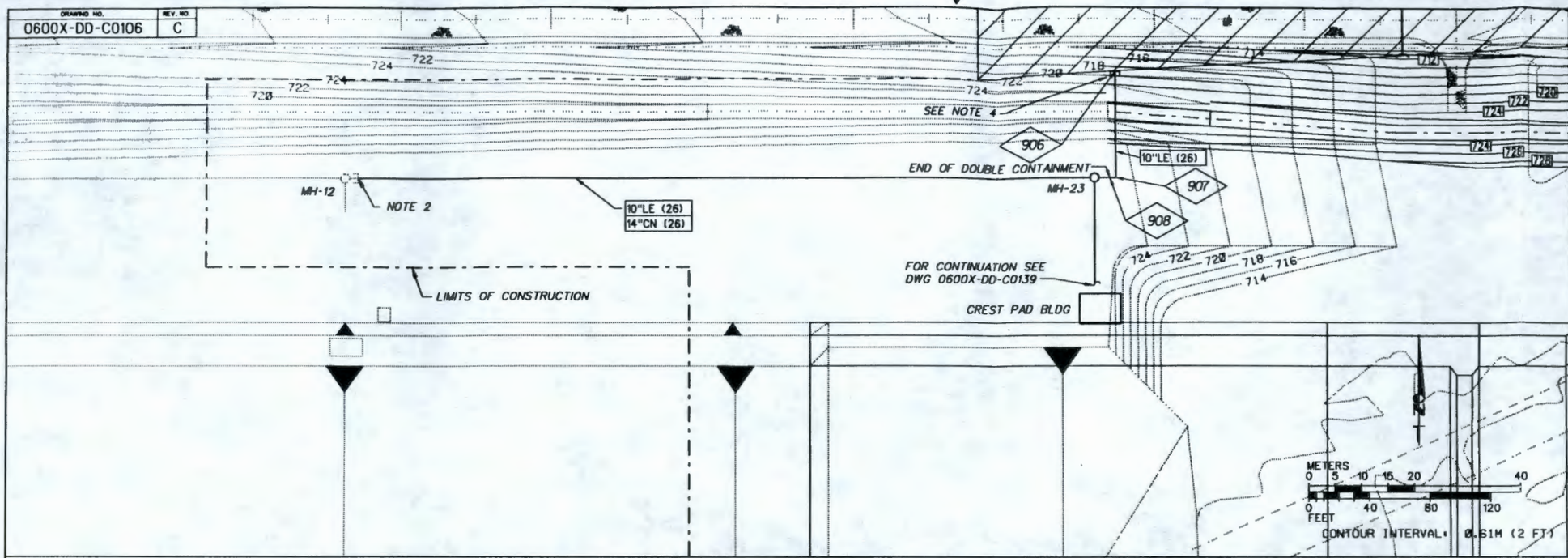

PIPING AREA 1

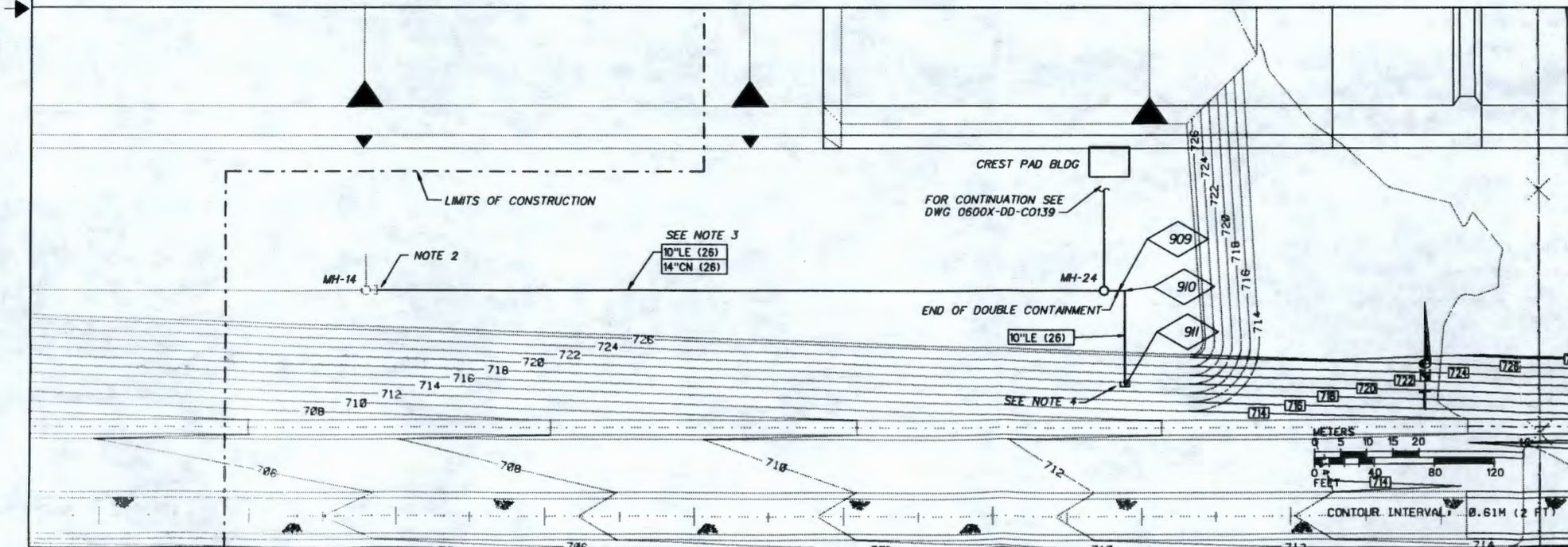

PIPING AREA 2

NOTES

1. SURVEY DATUM:
   VERTICAL NAVD 88
   HORIZONTAL NAD 83 (91)
2. REMOVE EXISTING CAP AND FUSION WELD NEW PIPE TO EXISTING. TIE-IN WORK IS CONSIDERED HAZARDOUS AND SHALL COMPLY WITH FEDERAL REGULATIONS AND BHI WORK PRACTICES FOR RADIOLOGICAL AND HAZARDOUS WORK.
3. SEE DRAWING 0600X-DD-M0009 AND 0600X-DD-M0010 FOR PIPING MATERIAL DESIGNATION.
4. CAPPED PIPE SHALL EXTEND 305mm(12") OUT FROM THE GROUND SURFACE.

100%
REVIEW SUBMITTAL
NOT FOR CONSTRUCTION

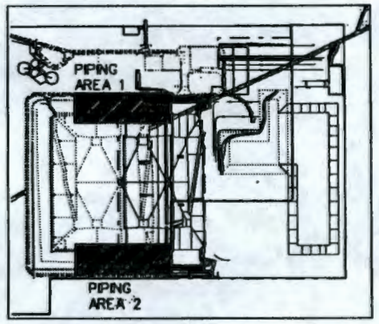

KEY PLAN

REV.	DATE	DESCRIPTION	DRAWN BY	CHKD BY	DSGN BY	CHKD BY	DR/TEC APPROVAL	PE APPROVAL
C	1/20/98	ISSUED FOR 100% DESIGN REVIEW	PDH	MGM	MGM	LHA		
B	11/21/97	ISSUED FOR 60% DESIGN REVIEW	PDH	MGM	MGM	LHA		
A	10/7/97	ISSUED FOR 30% DESIGN REVIEW	PDH	MGM	MBM	LHA		

SCALE:

U.S. DEPARTMENT OF ENERGY
DOE FIELD OFFICE, RICHLAND
HANFORD ENVIRONMENTAL RESTORATION PROGRAM

BECHTEL HANFORD INC.
RICHLAND, WASHINGTON

MONTGOMERY WATSON
RICHLAND, WASHINGTON

ENVIRONMENTAL RESTORATION DISPOSAL FACILITY
CELLS 3 & 4
YARD PIPING PLANS - AREAS 1 & 2

BECHTEL JOB NO.	DOE CONTRACT NO.	CADD FILENAME
22192	DE-AC06-93RL12367	6xdc0106.dgn

TASK	DRAWING NO.	REV. NO.
600	0600X-DD-C0106	C

RECORD INFORMATION

RECORD NO.	BLDG NO.	INDEX NO.
H-6-14731 sht 1	600G	0105

DRAWING NO.	REV. NO.
0600X-DD-C0107	C

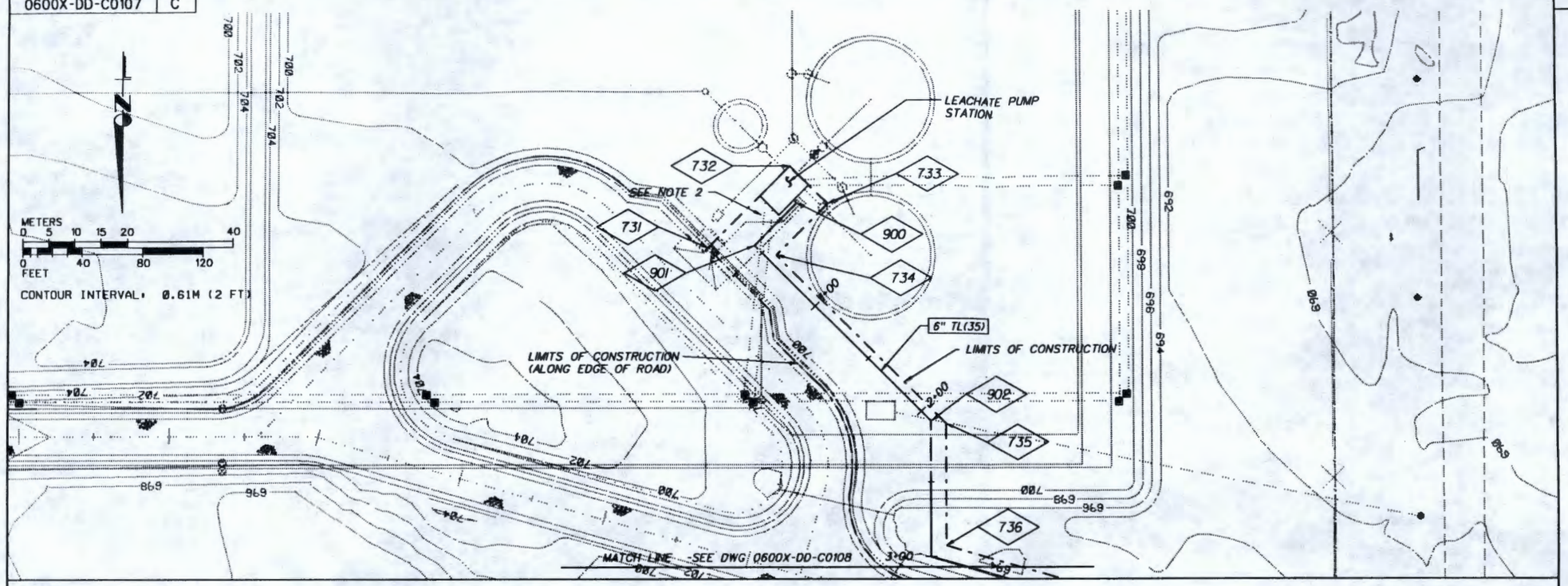

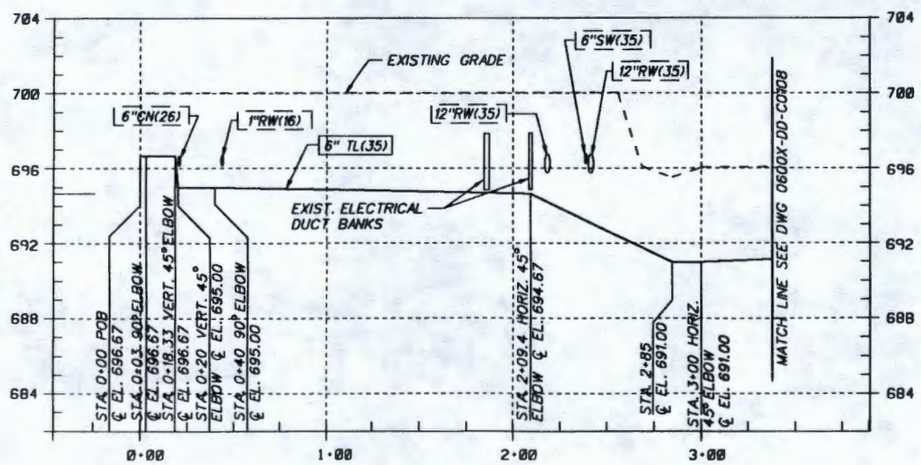

NOTES

1. SURVEY DATUM:
   VERTICAL NAVD 88
   HORIZONTAL NAD 83 (91)
2. CONTRACTOR SHALL COOPERATE WITH BHI AND OTHER FORCES WHICH MAY BE PERFORMING OPERATIONS OR OTHER WORK IN AND AROUND THE LEACHATE PUMP STATION.

100%
REVIEW SUBMITTAL
NOT FOR CONSTRUCTION

HORIZONTAL SCALE
METER 0 10 20 30 40
FEET 0 40 80 160

VERTICAL SCALE
METER 0 1 2 3 4
FEET 0 4 8 16

REV.	DATE	DESCRIPTION	DRAWN BY	REVIEW BY	ENGR BY	CHIEF ENGR	PL/TEL APPROV	PE CHIEF ENGR
C	1/20/98	ISSUED FOR 100% DESIGN REVIEW	PDH	LHA	LHA	MGM		
B	11/21/97	ISSUED FOR 80% DESIGN REVIEW	PDH	LHA	LHA	MGM		

SCALE:

U.S. DEPARTMENT OF ENERGY
DOE FIELD OFFICE, RICHLAND
HANFORD ENVIRONMENTAL RESTORATION PROGRAM

BECHTEL HANFORD INC.
RICHLAND, WASHINGTON

MONTGOMERY WATSON
RICHLAND, WASHINGTON

ENVIRONMENTAL RESTORATION DISPOSAL FACILITY
CELLS 3 & 4
TRANSFER LINE PLAN & PROFILES 1

BECHTEL JOB NO.	DOE CONTRACT NO.	CADD FILENAME
22192	DE-AC06-93RL12367	6xdc0107.dgn

TASK	DRAWING NO.	REV. NO.
600	0600X-DD-C0107	C

RECORD INFORMATION

RECORD NO.	BLDG NO.	INDEX NO.
H-6-14732 sht 1	600G	0105

DRAWING NO.	REV. NO.
0600X-DD-C0108	C

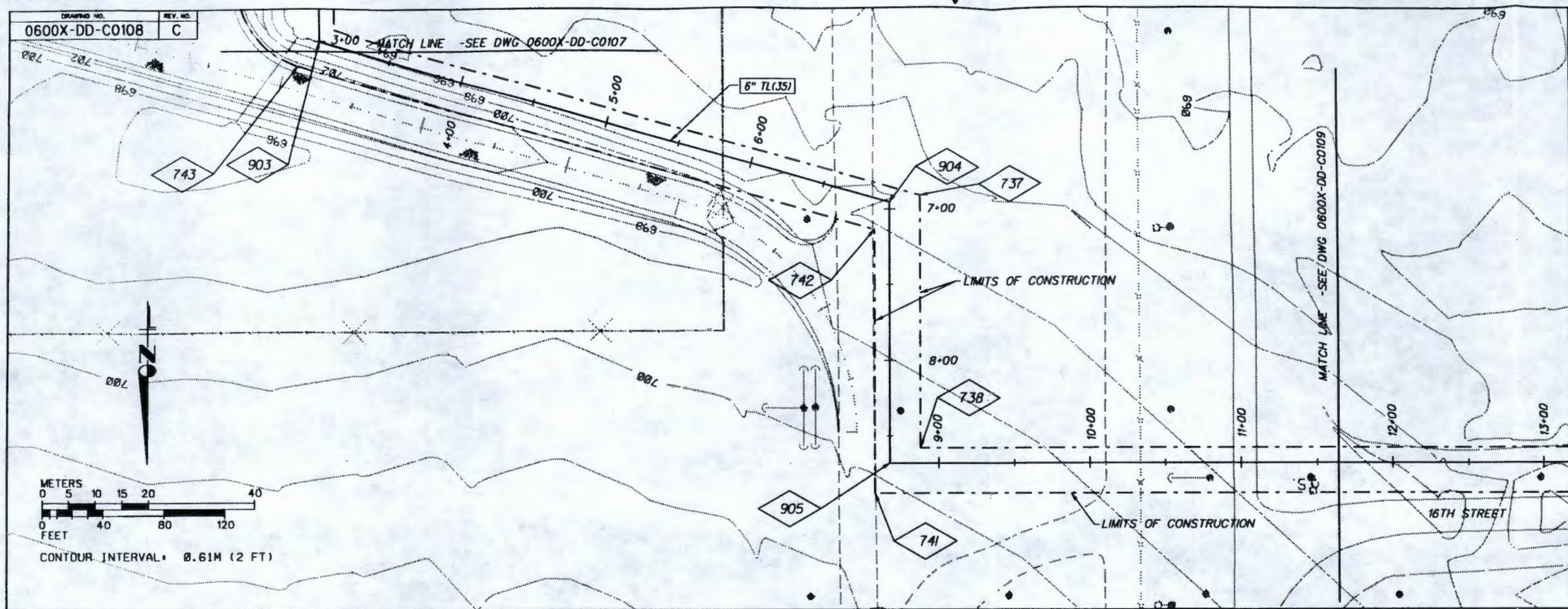

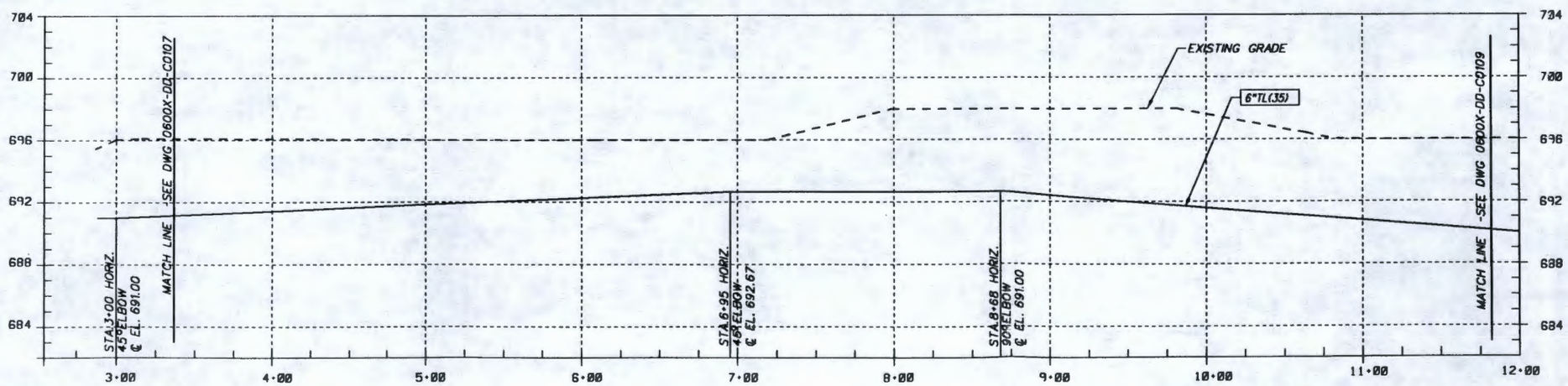

NOTES

1. SURVEY DATUM:
   VERTICAL NAVD 88
   HORIZONTAL NAD 83 (91)

100% REVIEW SUBMITTAL NOT FOR CONSTRUCTION

HORIZONTAL SCALE
METER 0 10 20 30 40
FEET 0 40 80 160

VERTICAL SCALE
METER 0 1 2 3 4
FEET 0 4 8 16

REV.	DATE	DESCRIPTION	DRAWN BY	REVIEW BY	ENGR DATE	DSGN DATE	CLIENT APPROVAL	QA APPROVAL
C	1/20/98	ISSUED FOR 100% DESIGN REVIEW	PDH	LHA	LHA	MGM		
B	11/21/97	ISSUED FOR 60% DESIGN REVIEW	PDH	LHA	LHA	MGM		

SCALE:

U.S. DEPARTMENT OF ENERGY
DOE FIELD OFFICE, RICHLAND
HANFORD ENVIRONMENTAL RESTORATION PROGRAM

BECHTEL HANFORD INC.
RICHLAND, WASHINGTON

MONTGOMERY WATSON
RICHLAND, WASHINGTON

ENVIRONMENTAL RESTORATION DISPOSAL FACILITY
CELLS 3 & 4
TRANSFER LINE PLAN & PROFILES 2

BECHTEL JOB NO.	DOE CONTRACT NO.	CADD FILENAME
22192	DE-AC06-93RL12367	6xdc0108.dgn

TASK	DRAWING NO.	REV. NO.
600	0600X-DD-C0108	C

RECORD INFORMATION

RECORD NO.	BLDG NO.	INDEX NO.
H-6-14733 sht 1	600G	0105

DRAWING NO.	REV. NO.
0600X-DD-C0109	C

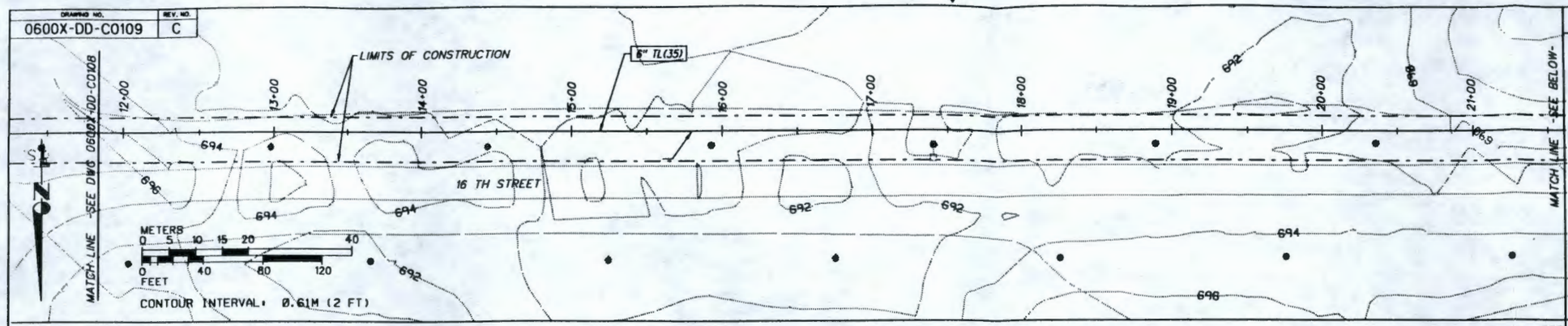

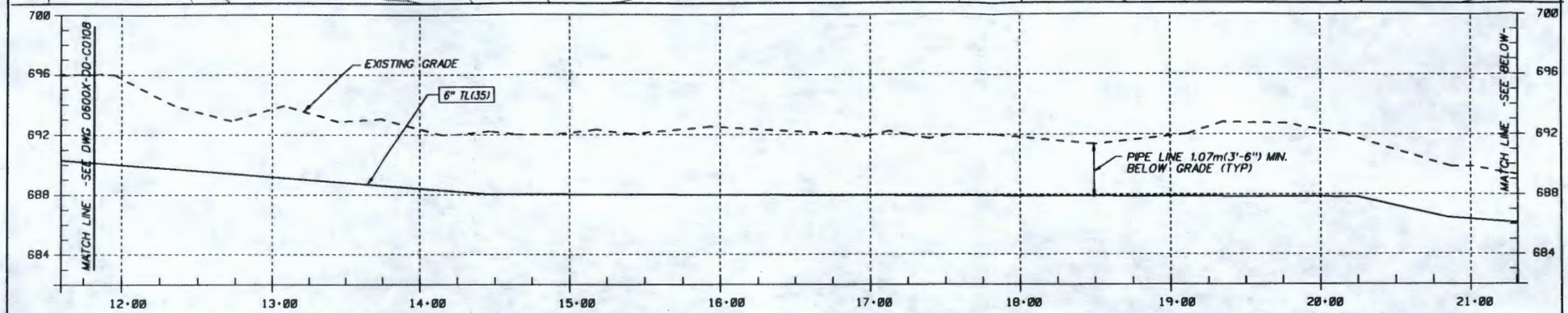

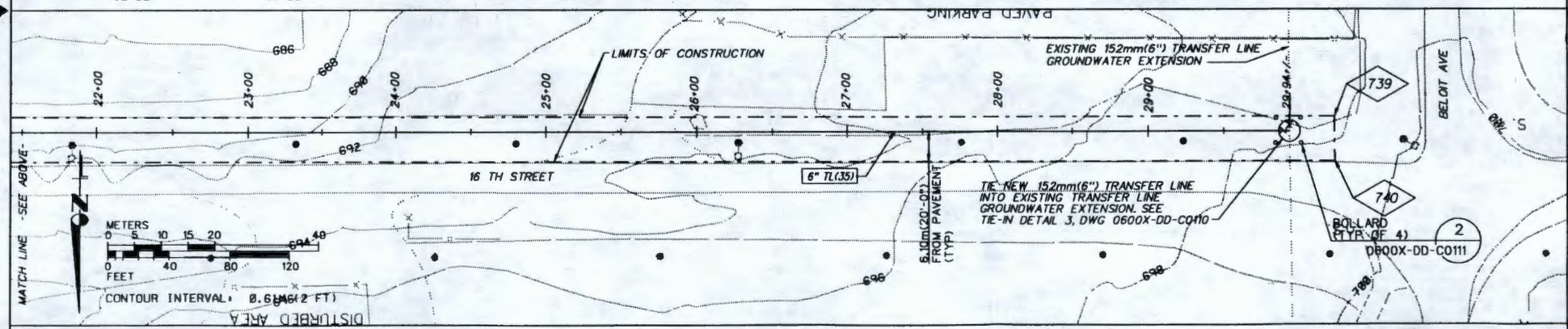

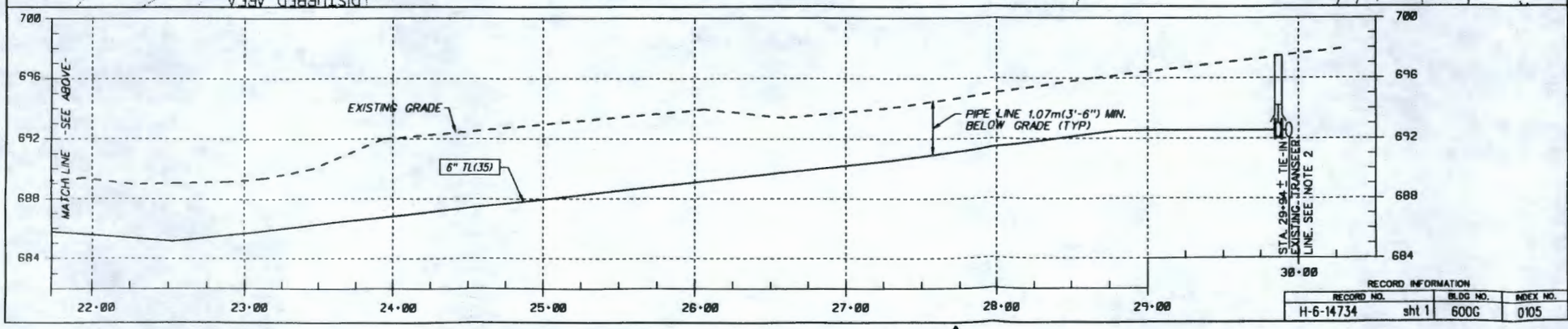

NOTES

1. SURVEY DATUM:
   VERTICAL NAVD 88
   HORIZONTAL NAD 83 (91)
2. EXISTING TRANSFER LINE 1.52m(5')± DEEP CONTRACTOR SHALL VERIFY LOCATION AND DEPTH.

100%
REVIEW SUBMITTAL
NOT FOR CONSTRUCTION

HORIZONTAL SCALE
METER 0 10 20 30 40
FEET 0 40 80 160

VERTICAL SCALE
METER 0 1 2 3 4
FEET 0 4 8 16

REV.	DATE	DESCRIPTION	DRAWN BY	REVIEW DATE	DESIGN ENGR	CHECK DR	PL/CTL APPROV	DR ENGR
C	1/20/98	ISSUED FOR 100% DESIGN REVIEW	PDH	LHA	LHA	MGM		
B	11/21/97	ISSUED FOR 60% DESIGN REVIEW	PDH	LHA	LHA	MGM		

SCALE:

U.S. DEPARTMENT OF ENERGY
DOE FIELD OFFICE, RICHLAND
HANFORD ENVIRONMENTAL RESTORATION PROGRAM

BECHTEL HANFORD INC.
RICHLAND, WASHINGTON

MONTGOMERY WATSON
RICHLAND, WASHINGTON

ENVIRONMENTAL RESTORATION DISPOSAL FACILITY
CELLS 3 & 4
TRANSFER LINE PLAN & PROFILES 3

BECHTEL JOB NO.	DOE CONTRACT NO.	CADD FILENAME
22192	DE-AC06-93RL12367	6xdc0109.dgn

TASK	DRAWING NO.	REV. NO.
600	0600X-DD-C0109	C

RECORD INFORMATION

RECORD NO.		BLDG. NO.	INDEX NO.
H-6-14734	sht 1	600G	0105

DRAWING NO.	REV. NO.
0600X-DD-C0110	C

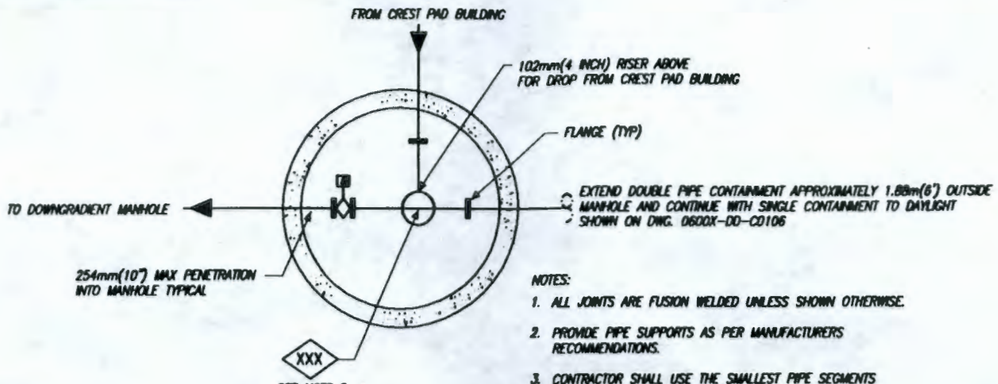

NOTES:

1. ALL JOINTS ARE FUSION WELDED UNLESS SHOWN OTHERWISE.
2. PROVIDE PIPE SUPPORTS AS PER MANUFACTURERS RECOMMENDATIONS.
3. CONTRACTOR SHALL USE THE SMALLEST PIPE SEGMENTS POSSIBLE FOR FABRICATING FITTINGS.
4. SECONDARY CONTAINMENT AND PENETRATION DETAILS NOT SHOWN.
5. MANHOLE COORDINATE LOCATION IS AT INTERSECTION OF PIPES. SEE MANHOLE SCHEDULE.
6. PIPING INSIDE MANHOLE SHALL BE FABRICATED AND PLACED IN POSITION PRIOR TO FABRICATION OF PIPING OUTSIDE OF MANHOLE.

FITTING CONFIGURATION FOR MANHOLE 24 (23 SIM) — 1 / --

MANHOLE SCHEDULE

COORDINATE NO.	MANHOLE NO.	INVERT ELEV. IN	INVERT ELEV. OUT	SIDE INLET ELEV.	TOP OF MH ELEV.	DIA. m(FT)	NOTES
525	MH-12	716.56±	716.53±	723.00	727.25	1.52(5)	EXISTING (DATA IS APPROXIMATE)
527	MH-14	716.56±	716.53±	723.00	727.25	1.52(5)	EXISTING (DATA IS APPROXIMATE)
511	MH-23	719.57	719.53	723.00	727.25	2.13(7)	
512	MH-24	719.57	719.53	723.00	727.25	2.13(7)	

SCHEDULE FOR STORM WATER CULVERTS (SEE NOTES)

ITEM NO.	SIZE	PIPE MATERIAL	TOP OF ROAD ℄ EL.	SHOULDER ELEVATION	UPSTREAM INVERT	DOWNSTREAM INVERT	LENGTH in METERS (FT)	PIPE SLOPE
8	0.46m (18")	CMP	713.43±	713.59± 713.11±	710.65	708.00	17.1m (56.25 FT)	0.347

NOTES

1. CMP SHALL BE ZINC COATED OF TYPE 1 PIPE WITH HELICAL CORRUGATIONS MINIMUM THICKNESS INCLUDING COATING SHALL BE 2.77mm(0.109 INCHES).
2. EACH END OF CMP SHALL HAVE A FLARED END SECTION FABRICATED FROM ZINC COATED STEEL SHEETS MEETING ASTM A-444.
3. PLACE OUTSIDE LAPS OF CIRCUMFERENTIAL JOINTS POINTING UPSTREAM AND LONGITUDINAL LAPS ON THE SIDES.
4. DEPTH OF BASE MATERIAL ACROSS ROAD AND SHOULDER AT CULVERT EXCAVATION SHALL BE 508mm(20").

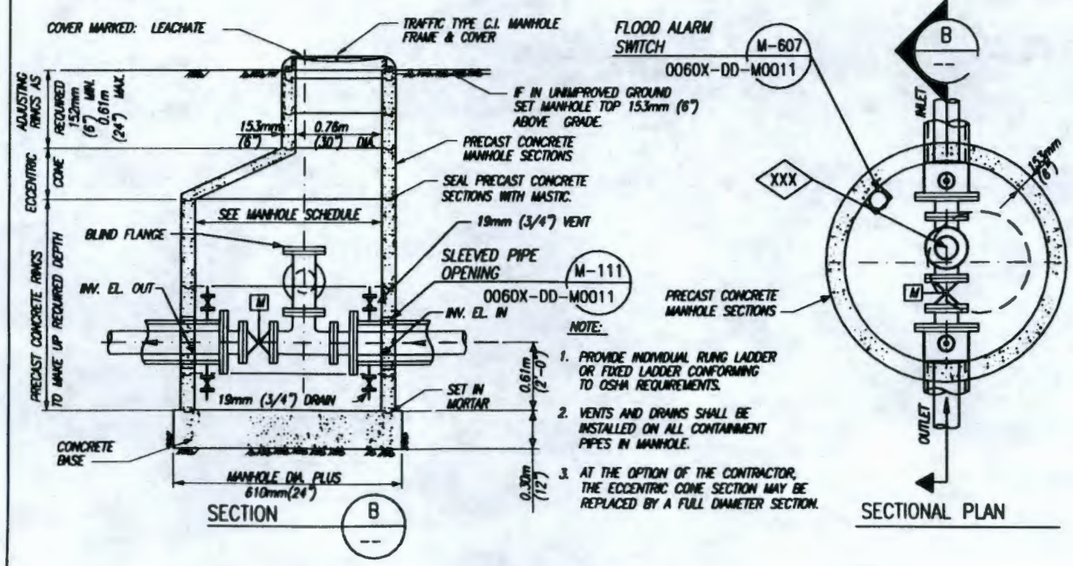

DOUBLE CONTAINED PIPE MANHOLE WITH VALVES — 2 / --

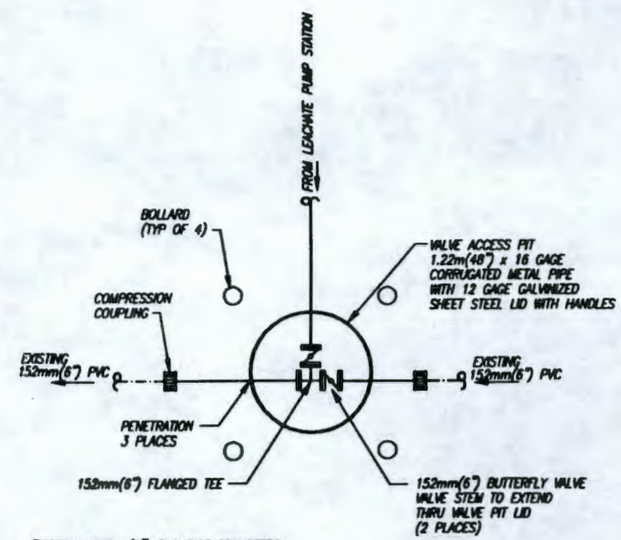

EXISTING 152mm(6") PVC PIPE TRANSFERS A LISTED WASTE. TIE-IN WORK SHALL COMPLY WITH APPROPRIATE SITE AND REGULATORY REQUIREMENTS FOR WORKING WITH HAZARDOUS WASTE.

TIE-IN DETAIL — 3 / 0600X-DD-C0109

100% REVIEW SUBMITTAL NOT FOR CONSTRUCTION

REV.	DATE	DESCRIPTION	DRAWN BY	DSGN ENGR	CHK'D ENGR	CHK'D DATE	SUPV ENGR	SUPV DATE
C	1/30/98	ISSUED FOR 100% DESIGN REVIEW	PDH	MGM	MGM	LHA		
B	11/21/97	ISSUED FOR 60% DESIGN REVIEW	PDH	MGM	MGM	LHA		
A	10/7/97	ISSUED FOR 30% DESIGN REVIEW	PDH	MGM	MGM	LHA		

SCALE

U.S. DEPARTMENT OF ENERGY
DOE FIELD OFFICE, RICHLAND
HANFORD ENVIRONMENTAL RESTORATION PROGRAM

BECHTEL HANFORD INC. RICHLAND, WASHINGTON | MONTGOMERY WATSON RICHLAND, WASHINGTON

ENVIRONMENTAL RESTORATION DISPOSAL FACILITY
CELLS 3 & 4
CIVIL DETAILS 1

BECHTEL JOB NO.	DOE CONTRACT NO.	CADD FILENAME
22192	DE-AC06-93RL12367	6xdc0110.DWG

TASK	DRAWING NO.	REV. NO.
600	0600X-DD-C0110	C

RECORD INFORMATION

RECORD NO.	BLDG NO.	INDEX NO.
H-6-14735 SHT 1	600G	0105

DRAWING NO.	REV. NO.
0600X-DD-C0111	C

1. ALTERNATIVE TRENCH SECTIONS (A,B, AND C) ARE FOR USE ONLY WHERE STABLE, COMPACT SOIL CONDITIONS EXIST.
   A. VERTICAL TRENCH WALLS - SECTION
      1. THE NEED FOR PROTECTIVE SYSTEMS SHALL BE DETERMINED IN ACCORDANCE WITH OSHA.
      2. PROTECTIVE SYSTEMS SHALL BE DESIGNED AND BUILT IN ACCORDANCE WITH OSHA.
   B. SLOPING TRENCH WALLS - SECTION
      1. SLOPING TRENCH WALL SECTION SHALL NOT BE USED WITHOUT APPROVAL OF ENGINEER, UNLESS SPECIFICALLY DESIGNATED ON PLANS OR SPECIFICATIONS.
      2. UNSUPPORTED SLOPING TRENCH WALLS SHALL NOT BE STEEPER THAN ALLOWED BY APPLICABLE SAFETY STANDARDS AND REGULATIONS.
   C. COMBINATION OF VERTICAL AND SLOPING TRENCH WALLS - SECTION
      1. TRENCH DEPTHS NOT EXCEEDING 1.22m (4 FT) SHALL HAVE VERTICAL WALLS IN PIPE ZONE UNLESS OTHERWISE APPROVED, BY ENGINEER, OR WHERE SPECIFIED.
      2. FOR TRENCHES WITH COMBINED WALLS AND ANY DEPTH EXCEEDING 1.22m (4 FT), DESIGN CALCULATIONS BY A REGISTERED CIVIL ENGINEER AND APPROVAL BY GOVERNING AGENCY OF SUPPORTED METHODS ARE REQUIRED.
2. WHERE WET, UNSTABLE OR RUNNING SOIL IS ENCOUNTERED, A SYSTEM SHALL BE DESIGNED AND BUILT IN ACCORDANCE WITH APPLICABLE SAFETY STANDARDS AND REGULATIONS TO PROTECT EMPLOYEES AND PREVENT CAVE INS.
3. WHERE TRENCH SECTIONS CROSS ROADWAYS, THE CONTRACTOR SHALL CUT EXISTING ASPHALT AS NECESSARY FOR TRENCH EXCAVATION. AFTER BACKFILLING THE TRENCH AND PRIOR TO PLACING NEW ASPHALT, THE EDGE OF THE EXISTING ASPHALT SHALL BE CLEANED AND AN APPROVED BINDER SHALL BE APPLIED. THE CONTRACTOR SHALL LAY A MINIMUM OF 152.4mm (6") NEW ASPHALT WHICH SHALL BE PLACED IN TWO SEPARATE LAYERS OF 76.2mm (3") EACH. EACH LAYER SHALL BE COMPACTED TO 96% DENSITY. PRIOR TO PLACING ASPHALT CONTRACTOR SHALL SUBMIT MIX FOR APPROVAL.

NOTE: TRENCH SECTIONS SHOWN DO NOT DESIGNATE PAY LINES.

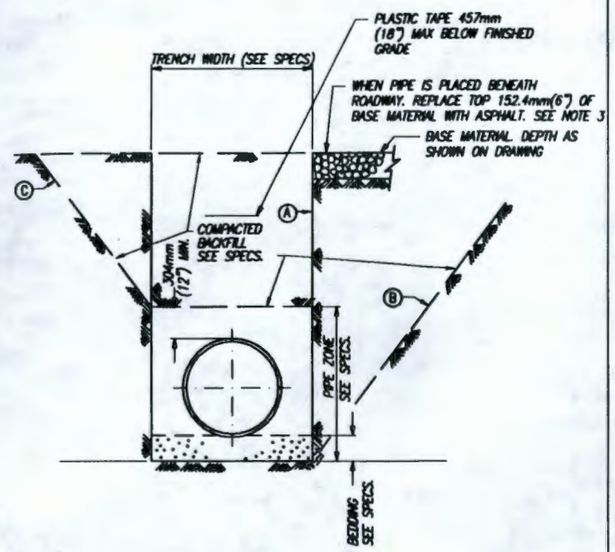

TYPICAL TRENCH SECTION 1/--

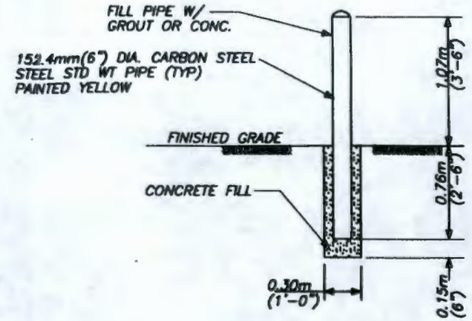

BOLLARD DETAIL 2/--
NTS

NOTES

100%
REVIEW SUBMITTAL
NOT FOR CONSTRUCTION

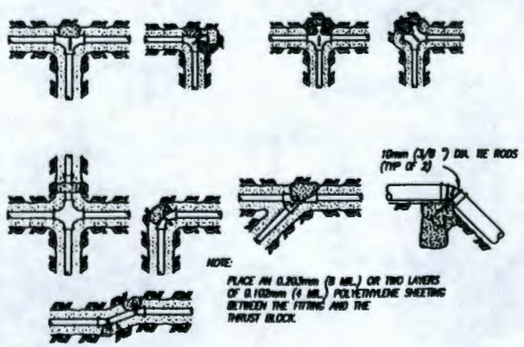

NOTE:
PLACE AN 0.203mm (8 MIL.) OR TWO LAYERS OF 0.102mm (4 MIL.) POLYETHYLENE SHEETING BETWEEN THE FITTING AND THE THRUST BLOCK.

PVC & DUCTILE IRON PIPE 1.03 MPa (150 PSI) TEST PRESSURE

TABLE FOR BEARING AREAS OF THRUST BLOCKS

PIPE SIZE	TEES AND DEAD ENDS *	90 DEGREE BEND *	45 DEGREE BEND *	11-1/4 DEGREE 22-1/2 DEGREE BEND *
102mm (4") & LESS	0.09sqm (0.94)	0.12sqm (1.33)	0.07sqm (0.76)	0.04sqm (0.38)
152mm (6")	0.20sqm (2.12)	0.28sqm (3.01)	0.16sqm (1.71)	0.09sqm (0.86)
203mm (8")	0.36sqm (3.83)	0.50sqm (5.40)	0.28sqm (3.02)	0.15sqm (1.54)
254mm (10")	0.55sqm (5.93)	0.78sqm (8.40)	0.44sqm (4.73)	0.21sqm (2.38)
305mm (12")	0.78sqm (8.46)	1.12sqm (12.0)	0.64sqm (6.83)	0.23sqm (3.46)
356mm (14")	1.07sqm (11.5)	1.52sqm (16.40)	0.87sqm (9.32)	0.44sqm (4.68)
406mm (16")	1.40sqm (15.06)	2.00sqm (21.41)	1.13sqm (12.14)	0.57sqm (6.10)

* ALL BEARING AREAS IN SQUARE METERS (SQUARE FEET).

THRUST BLOCK NOTES:

1. CONCRETE THRUST BLOCKING SHALL BE POURED AGAINST UNDISTURBED EARTH.
2. KEEP CONCRETE CLEAR OF JOINT AND ACCESSORIES.
3. BEARING LOAD IS CALCULATED AT 95 KPa (2,000 LB. PER SQ. FT.)
4. FOR OTHER PRESURES, MULTIPLY TABLE BY RATIO OF NEW PRESSURE TO 1.0.3MPa (150 psi) (I.E. 250/150 = 1.67)
5. USE MAXIMUM INTERNAL PRESSURE ANTICIPATED (I.e., HYDROSTATIC TEST PRESSURE).
6. ARROW (↑) INDICATES THRUST DIRECTION.
7. CONCRETE FOR THRUST BLOCKS SHALL BE MINIMUM 17.2 MPa (2500 psi) STRENGTH.

CONCRETE THRUST BLOCKS FOR DUCTILE IRON AND P.V.C. PIPE 3/VAR
NTS

REV.	DATE	DESCRIPTION	DRAWN BY	CHKD BY	DSGN BY	RVWD BY	DR/CTR APPROVAL	DOE APPROVAL
C	1/28/98	ISSUED FOR 100% DESIGN REVIEW	PDH	MGM	MGM	LMA		
B	11/21/97	ISSUED FOR 90% DESIGN REVIEW	PDH	MGM	MGM	LMA		
A	10/7/97	ISSUED FOR 30% DESIGN REVIEW	PDH	MGM	MGM	LMA		

SCALE

U.S. DEPARTMENT OF ENERGY
DOE FIELD OFFICE, RICHLAND
HANFORD ENVIRONMENTAL RESTORATION PROGRAM

BECHTEL HANFORD INC.
RICHLAND, WASHINGTON

MONTGOMERY WATSON
RICHLAND, WASHINGTON

ENVIRONMENTAL RESTORATION DISPOSAL FACILITY
CELLS 3 & 4
CIVIL DETAILS 2

BECHTEL JOB NO.	DOE CONTRACT NO.	CADD FILENAME
22192	DE-AC06-93RL12367	6xdc0111.DWG

TASK	DRAWING NO.	REV. NO.
600	0600X-DD-C0111	C

RECORD INFORMATION

RECORD NO.	BLDG NO.	INDEX NO.
H-6-14736 SHT 1	600G	0105

DRAWING NO.	REV. NO.
0600X-DD-C0123	C

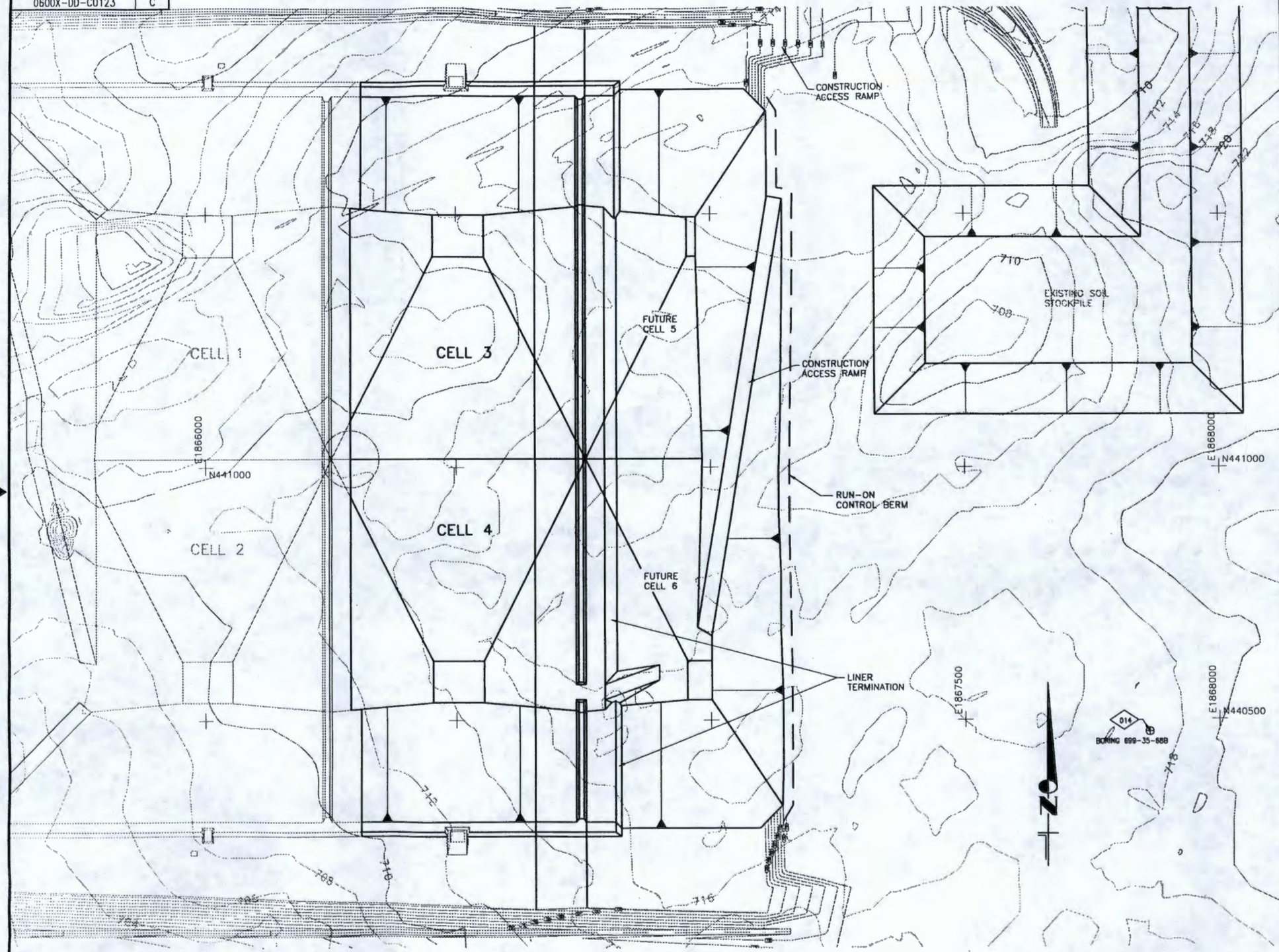

NOTES

1. STORE EXCAVATED MATERIALS IN EXCAVATION SOIL STOCKPILE AREA DELINEATED ON DWG NO. 600X-DD-C0141 "STOCKPILE PLAN".
2. EXISTING CONTOURS FROM AERIAL MAPPING PREPARED BY WALKER AND ASSOCIATES, PHOTOGRAMMETRY DATED MAY, 1994. TOPOGRAPHY DOES NOT REFLECT CHANGES FROM CLEARING AND GRUBBING OPERATIONS. CONTRACTOR SHALL CONSTRUCT FACILITIES TO THE FINISHED ELEVATIONS SHOWN.
3. SURVEY DATUM:
   VERTICAL NAVD: 88
   HORIZONTAL NAD: 83 (91)

LEGEND:

GRADE BREAK

722 EXISTING CONTOUR

METERS
0 10 20 30 40 50 100
0 100 200
FEET
CONTOUR INTERVAL: 0.61 m (2 FT).

100%
REVIEW SUBMITTAL
NOT FOR CONSTRUCTION

REV.	DATE	DESCRIPTION	DRAWN BY	DRAFT CH'K	ORIG/ ENG'R	ENG'R CH'K	DL/TDL APPROV	Rev. APPD ENG'R
C	1/20/98	ISSUED FOR 100% REVIEW	DJH	FSS	FSS	LHA		
B	11/21/97	ISSUED FOR 60% REVIEW	DJH	FSS	FSS	LHA		
A	10/7/97	ISSUED FOR 30% REVIEW	SJS	FSS	FSS	LHA		

SCALE: AS SHOWN

U.S. DEPARTMENT OF ENERGY
DOE FIELD OFFICE, RICHLAND
HANFORD ENVIRONMENTAL RESTORATION PROGRAM

BECHTEL HANFORD INC.
RICHLAND, WASHINGTON

Golder Associates
Redmond, Washington

ENVIRONMENTAL RESTORATION DISPOSAL FACILITY
CELLS 3 AND 4
OVERALL PLAN

BECHTEL JOB NO.	DOE CONTRACT NO.	CADD FILENAME
22192	DE-AC06-93RL12367	58260RC.DWG

TASK	DRAWING NO.	REV. NO.
600	0600X-DD-C0123	C

RECORD INFORMATION

RECORD NO.	BLDG NO.	INDEX NO.
H-6-14781 SHT01	600G	0111

DRC234 4/1/95

CAD_4 | K:\CAD\SDSKPROJ\9731810\1300\58260RC.DWG | 1-14-98 15:57 | xrf: NONE

DRAWING NO.	REV. NO.
0600X-DD-C0124	C

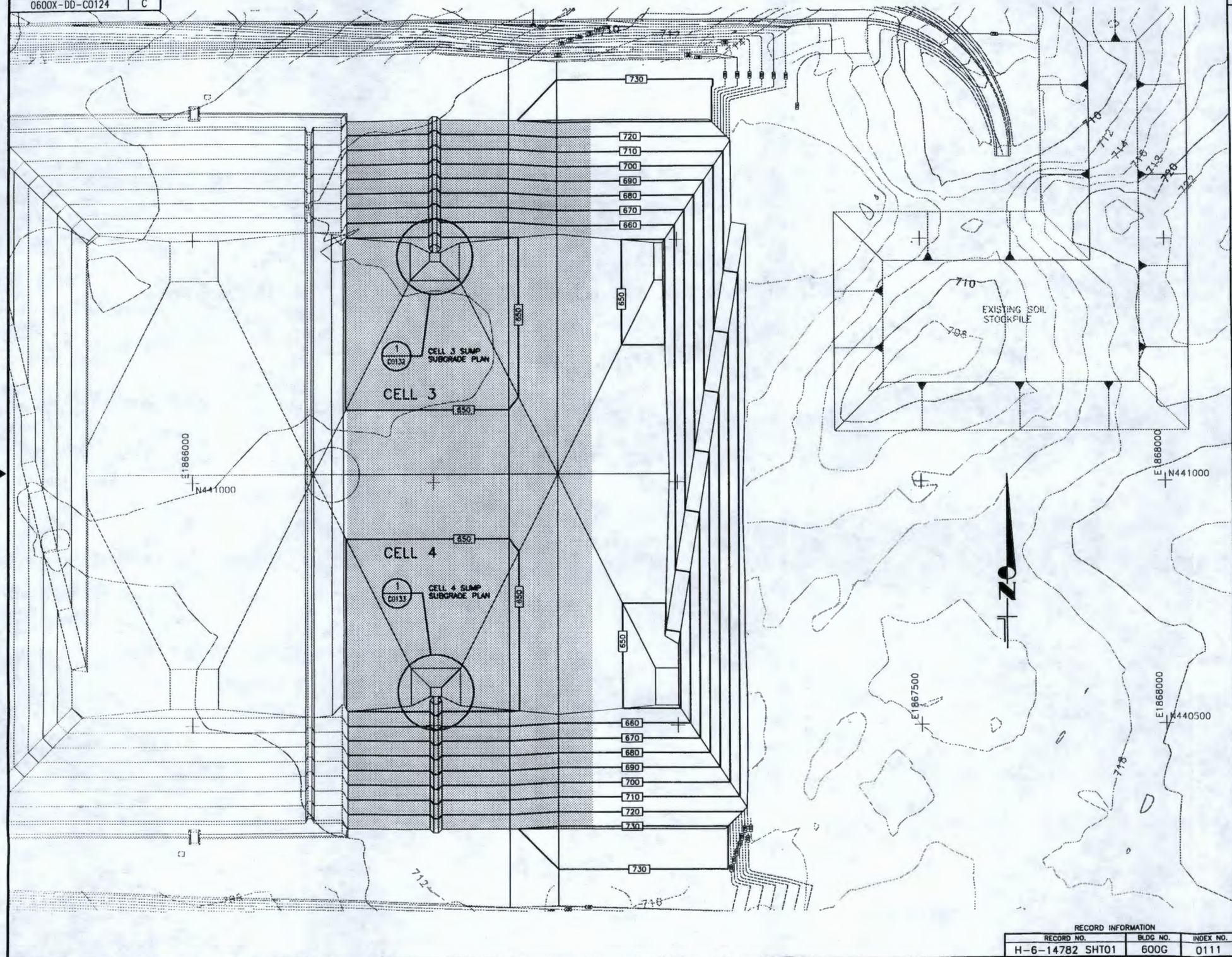

NOTES

1. FINISH GRADING IN TRENCH IN SHADED AREA AS SHOWN ONLY.
2. GRADING TOLERANCES SHOWN ON DWG. NO. 0600-DD-C0130.
3. EXISTING CONTOURS FROM AERIAL MAPPING PREPARED BY WALKER AND ASSOCIATES, PHOTOGRAMMETRY DATED MAY, 1994. TOPOGRAPHY DOES NOT REFLECT CHANGES FROM CLEARING AND GRUBBING OPERATIONS. CONTRACTOR SHALL CONSTRUCT FACILITIES TO THE FINISHED ELEVATIONS SHOWN.
4. SURVEY DATUM:
   VERTICAL NAVD: 88
   HORIZONTAL NAD: 83 (91)

LEGEND:

- SUBGRADE GRADE BREAK
- 722 EXISTING CONTOUR
- 660 SUBGRADE CONTOUR
- FINISH GRADE AREA

METERS
0 10 20 30 40 50 100
0 100 200
FEET
CONTOUR INTERVAL: 0.61 m (2 FT).

100%
REVIEW SUBMITTAL
NOT FOR CONSTRUCTION

REV.	DATE	DESCRIPTION	DRAWN BY	DRAFT CH'K	ORIG/ ENG'R	ENG'G CH'K	DL/TDL APPROV	G-6 PROJ ENG'R
C	1/20/98	ISSUED FOR 100% REVIEW	DJH	FSS	FSS	LHA		
B	11/21/97	ISSUED FOR 60% REVIEW	DJH	FSS	FSS	LHA		
A	10/7/97	ISSUED FOR 30% REVIEW	SJS	FSS	FSS	LHA		

SCALE: AS SHOWN

U.S. DEPARTMENT OF ENERGY
DOE FIELD OFFICE, RICHLAND
HANFORD ENVIRONMENTAL RESTORATION PROGRAM

BECHTEL HANFORD INC.
RICHLAND, WASHINGTON

Golder Associates
Redmond, Washington

ENVIRONMENTAL RESTORATION DISPOSAL FACILITY
CELLS 3 AND 4
SUBGRADE CONTOURS

BECHTEL JOB NO.	DOE CONTRACT NO.	CADD FILENAME
22192	DE-AC06-93RL12367	58261RC.DWG

TASK	DRAWING NO.	REV. NO.
600	0600X-DD-C0124	C

RECORD INFORMATION

RECORD NO.	BLDG NO.	INDEX NO.
H-6-14782 SHT01	600G	0111

HANFORD

DC22234 4/1/95

CAD_4 | K:\CAD\SDSKPROJ\9731810\1300\58261RC.DWG | 1-14-98 15:06 | xrf: NONE

DRAWING NO.	REV. NO
0600X-DD-C0125	C

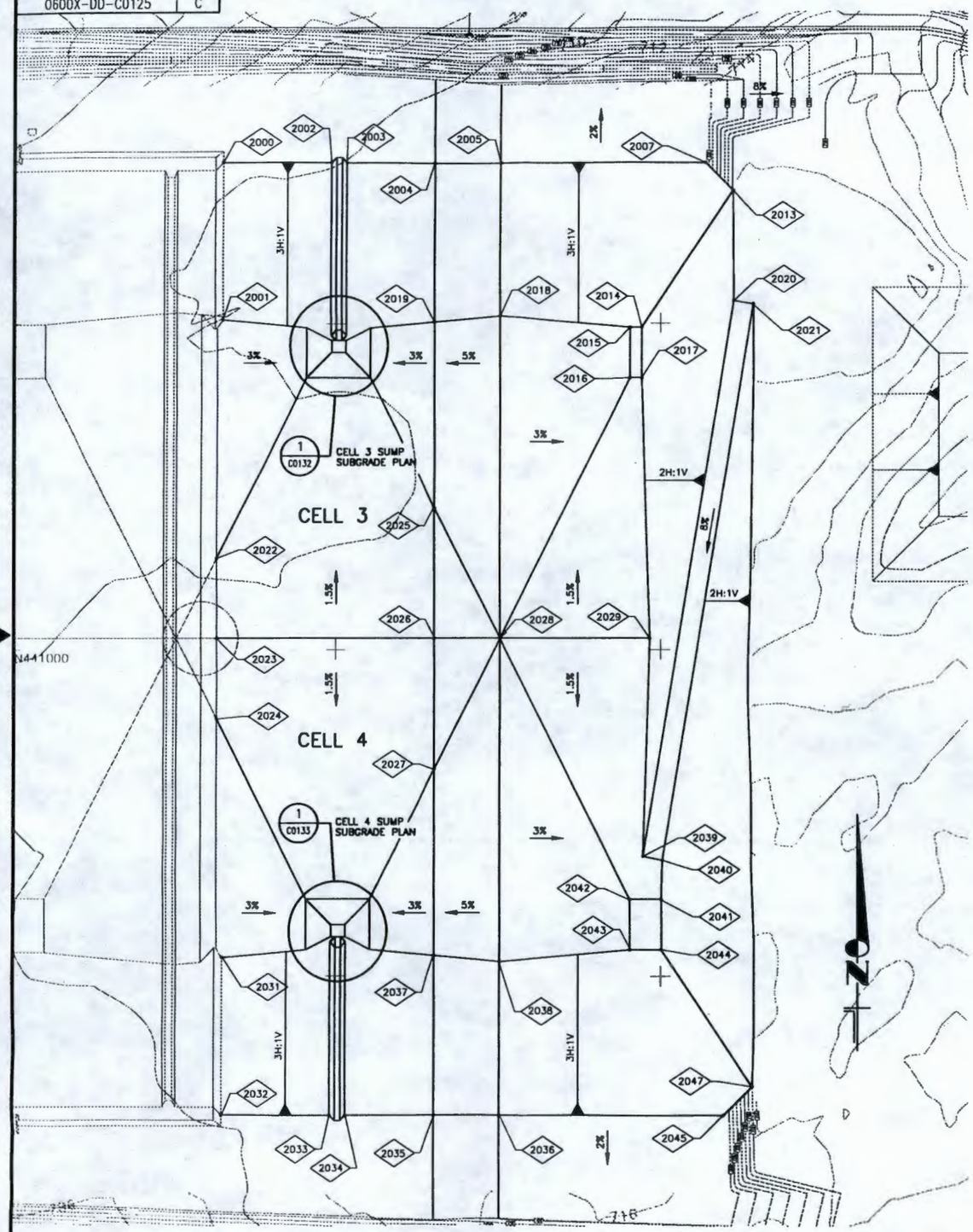

SUBGRADE CONTROL POINTS
COORDINATES (WASHINGTON STATE PLANE, FT)

POINT #	NORTHING	EASTING	ELEVATION	DESCRIPTION
2000	441744.90	1866324.00	729.64	SLOPE CREST – TIE IN
2001	441505.68	1866324.00	649.90	TOE OF SLOPE – TIE IN
2002	441744.90	1866492.01	729.64	SLOPE CREST – RISER TRENCH
2003	441744.90	1866515.99	729.64	SLOPE CREST – RISER TRENCH
2004	441744.90	1866654.00	729.64	SLOPE CREST – TRANSITION
2005	441744.90	1866754.00	731.64	SLOPE CREST – TRANSITION
2007	441744.90	1867068.16	731.64	SLOPE CREST – PERIMETER BERM
2013	441702.33	1867110.73	717.45	TOE OF BERM/CREST OF CUT
2014	441493.97	1866971.82	648.00	TOE OF SLOPE
2015	441493.97	1866953.88	648.00	FUTURE SUMP CORNER
2016	441416.94	1866953.88	648.00	FUTURE SUMP CORNER
2017	441416.94	1866971.82	648.00	TOE OF SLOPE
2018	441511.96	1866754.00	654.00	TOE OF SLOPE – CELL BOUNDARY
2019	441502.96	1866654.00	649.00	TOE OF SLOPE – TRANSITION
2020	441534.50	1867111.82	718.00	TOP OF CONSTRUCTION RAMP
2021	441529.70	1867141.44	718.00	TOP OF CONSTRUCTION RAMP
2022	441140.15	1866315.49	650.15	GRADE BREAK – TIE IN
2023	441017.00	1866315.49	652.00	CELL BOUNDARY – TIE IN
2024	440893.85	1866315.49	650.15	GRADE BREAK – TIE IN
2025	441217.18	1866654.00	649.00	GRADE BREAK – TRANSITION
2026	441017.00	1866654.00	652.00	CELL BOUNDARY – TRANSITION
2027	440816.82	1866654.00	649.00	GRADE BREAK – TRANSITION
2028	441017.00	1866754.00	654.00	CELL BOUNDARY
2029	441017.00	1866983.82	654.00	CELL BOUNDARY – TOE OF SLOPE
2031	440528.34	1866324.00	649.90	TOE OF SLOPE – TIE IN
2032	440289.10	1866324.00	729.64	SLOPE CREST – TIE IN
2033	440289.10	1866492.01	729.64	SLOPE CREST – RISER TRENCH
2034	440289.10	1866515.99	729.64	SLOPE CREST – RISER TRENCH
2035	440289.10	1866654.00	729.64	SLOPE CREST – TRANSITION
2036	440289.10	1866754.00	731.64	SLOPE CREST – TRANSITION
2037	440531.04	1866654.00	649.00	TOE OF SLOPE – TRANSITION
2038	440522.04	1866754.00	654.00	TOE OF SLOPE – CELL BOUNDARY
2039	440682.98	1866973.80	648.99	BASE OF CONSTRUCTION RAMP
2040	440677.09	1867003.24	648.90	BASE OF CONSTRUCTION RAMP
2041	440617.06	1867001.44	648.00	TOE OF SLOPE
2042	440617.06	1866953.88	648.00	FUTURE SUMP CORNER
2043	440540.03	1866953.88	648.00	FUTURE SUMP CORNER
2044	440540.03	1867001.44	648.00	TOE OF SLOPE
2045	440289.10	1867095.76	731.64	SLOPE CREST – PERIMETER BERM
2047	440332.88	1867139.54	717.05	TOE OF BERM/CREST OF CUT

NOTES

1. GRADING TOLERANCES SHOWN ON DWG. NO. 0600-DD-C0130.
2. CONTROL POINTS ARE FOR FINISHED SUBGRADE.
3. SURVEY DATUM:
   VERTICAL NAVD: 88
   HORIZONTAL NAD: 83 (91)

LEGEND:

SUBGRADE GRADE BREAK

EXISTING CONTOUR

9999 SUBGRADE CONTROL POINT, SEE TABLE THIS DRAWING

METERS
0 10 20 30 40 50 100
0 100 200
FEET
CONTOUR INTERVAL: 0.61 m (2 FT).

100%
REVIEW SUBMITTAL
NOT FOR CONSTRUCTION

REV.	DATE	DESCRIPTION	DRAWN BY	DRAFT CH'K	DRG/ ENG'R	ENG'R CH'K	GL/TEL APPROV	B-E PROJ ENG'R
C	1/20/98	ISSUED FOR 100% REVIEW	SJS	FSS	FSS	LHA		
B	11/21/97	ISSUED FOR 60% REVIEW	DJH	FSS	FSS	LHA		
A	10/7/97	ISSUED FOR 30% REVIEW	SJS	FSS	FSS	LHA		

SCALE: AS SHOWN

U.S. DEPARTMENT OF ENERGY
DOE FIELD OFFICE, RICHLAND
HANFORD ENVIRONMENTAL RESTORATION PROGRAM

BECHTEL HANFORD INC.
RICHLAND, WASHINGTON

Golder Associates
Redmond, Washington

ENVIRONMENTAL RESTORATION DISPOSAL FACILITY
CELLS 3 AND 4
SUBGRADE SURVEY CONTROL

BECHTEL JOB NO.	DOE CONTRACT NO.	CADD FILENAME
22192	DE-AC06-93RL12367	58262RB.DWG

TASK	DRAWING NO.	REV. NO.
600	0600X-DD-C0125	C

HANFORD

RECORD INFORMATION

RECORD NO.	BLDG NO.	INDEX NO.
H-6-14783 SHT01	600G	0111

J_SHOW | K:\CAD\SDSKPROJ\9731810\1300\58262RC.DWG | 12-29-97 15:32 | xrf: NONE

DRAWING NO.	REV. NO.
0600X-DD-C0126	C

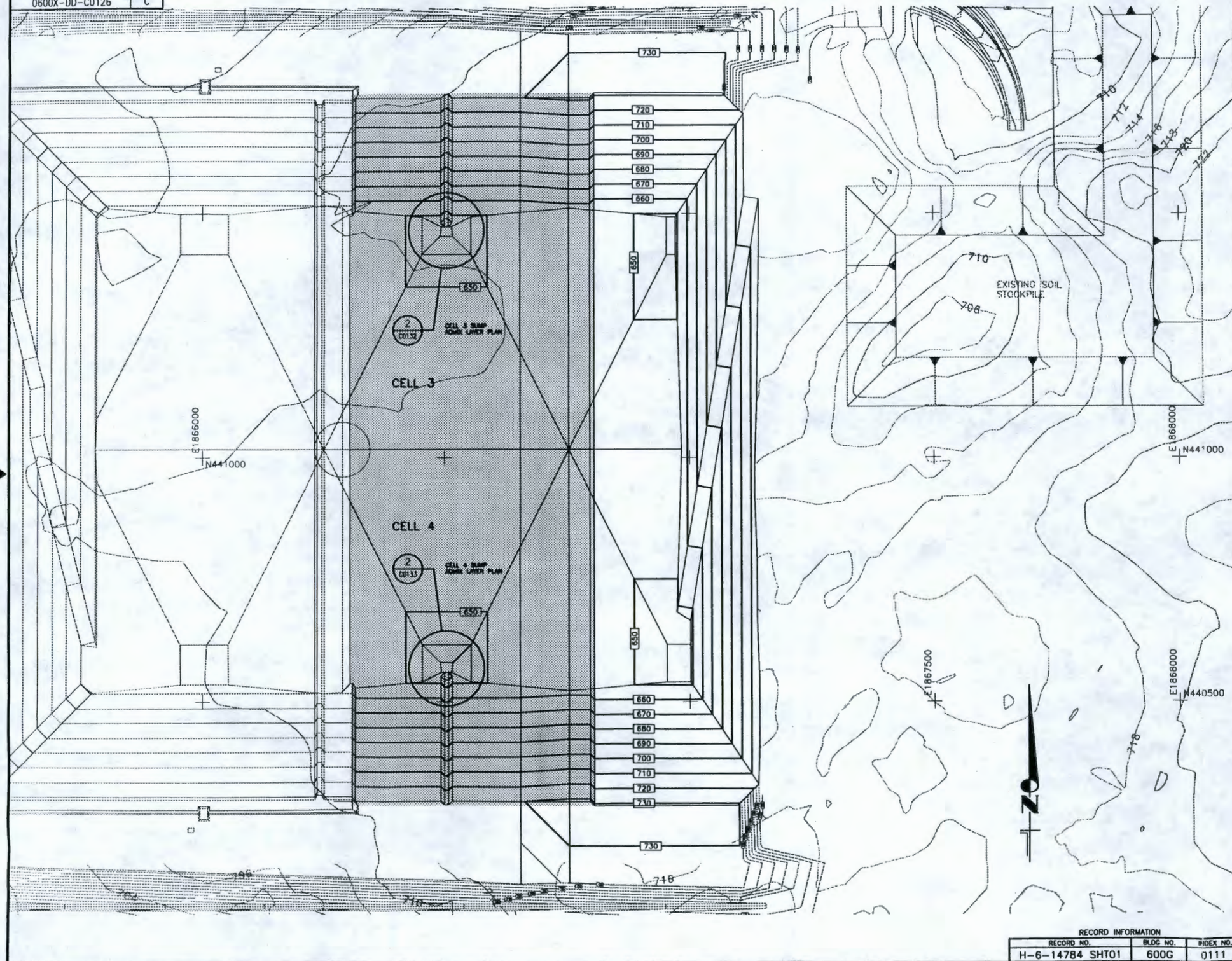

NOTES

1. SURVEY DATUM:
   VERTICAL NAVD: 88
   HORIZONTAL NAD: 83 (91)

LEGEND:

- GRADE BREAK
- EXISTING CONTOUR
- 660 CONTOUR
- AREA OF ADMIX PLACEMENT

METERS
0 10 20 30 40 50 100
0 100 200
FEET
CONTOUR INTERVAL: 0.61 m (2 FT).

100%
REVIEW SUBMITTAL
NOT FOR CONSTRUCTION

REV.	DATE	DESCRIPTION	DRAWN BY	DWG'T CH'K	ORIG/ ENG'R	ENG'R CH'K	DL/TDL APPROV	BS MGR/ ENG'R
C	1/20/98	ISSUED FOR 100% REVIEW	DJH	FSS	FSS	LHA		
B	11/21/97	ISSUED FOR 60% REVIEW	DJH	FSS	FSS	LHA		
A	10/7/97	ISSUED FOR 30% REVIEW	SJS	FSS	FSS	LHA		

SCALE: AS SHOWN

U.S. DEPARTMENT OF ENERGY
DOE FIELD OFFICE, RICHLAND
HANFORD ENVIRONMENTAL RESTORATION PROGRAM

BECHTEL HANFORD INC.
RICHLAND, WASHINGTON

Golder Associates
Redmond, Washington

ENVIRONMENTAL RESTORATION DISPOSAL FACILITY
CELLS 3 AND 4
ADMIX LAYER CONTOURS

BECHTEL JOB NO.	DOE CONTRACT NO.	CADD FILENAME
22192	DE-AC06-93RL12367	58263RC.DWG

TASK	DRAWING NO.	REV. NO.
600	0600X-DD-C0126	C

RECORD INFORMATION

RECORD NO.	BLDG NO.	INDEX NO.
H-6-14784 SHT01	600G	0111

J_SHOW | K:\CAD\SDSKPRO\9731810\1300\58263RC.DWG | 12-29-97 14:28 | xrf: NONE

DRAWING NO.	REV. NO.
0600X-DD-C0127	C

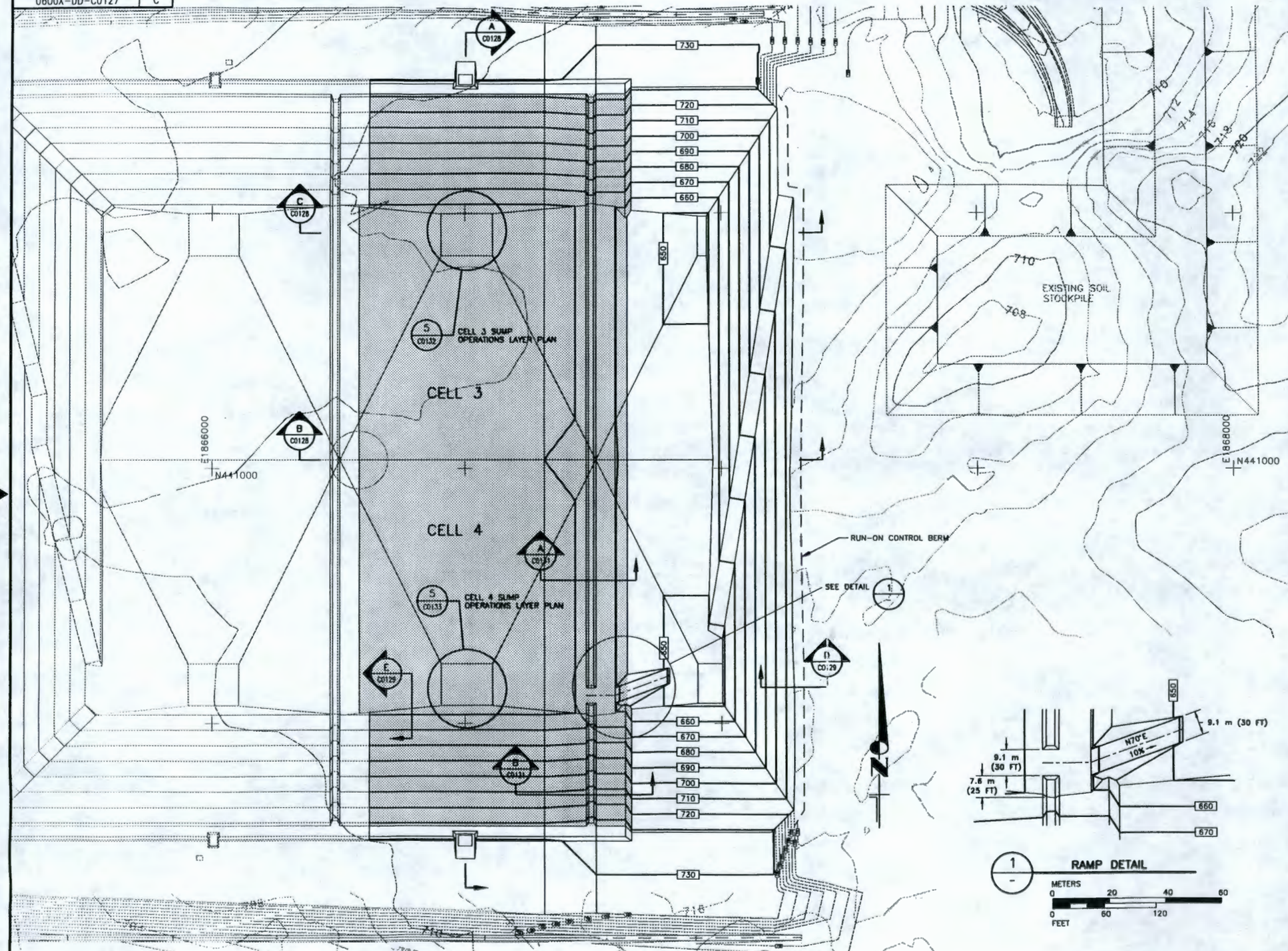

1 RAMP DETAIL

METERS 0 20 40 60
FEET 0 60 120

NOTES

1. STORE EXCAVATED MATERIALS IN EXCAVATION SOIL STOCKPILE AREA DELINEATED ON DWG NO. 600X-DD-C0141 "STOCKPILE PLAN".
2. EXISTING CONTOURS FROM AERIAL MAPPING PREPARED BY WALKER AND ASSOCIATES, PHOTOGRAMMETRY DATED MAY, 1994. TOPOGRAPHY DOES NOT REFLECT CHANGES FROM CLEARING AND GRUBBING OPERATIONS. CONTRACTOR SHALL CONSTRUCT FACILITIES TO THE FINISHED ELEVATIONS SHOWN.
3. SURVEY DATUM:
   VERTICAL NAVD: 88
   HORIZONTAL NAD: 83 (91)

LEGEND:

- SUBGRADE GRADE BREAK
- EXISTING CONTOUR
- 660 SUBGRADE CONTOUR
- AREA OF OPERATIONS LAYER PLACEMENT

METERS 0 10 20 30 40 50 100
FEET 0 100 200

CONTOUR INTERVAL: 0.61 m (2 FT).

100%
REVIEW SUBMITTAL
NOT FOR CONSTRUCTION

REV.	DATE	DESCRIPTION	DRAWN BY	DRAFT CH'K	DRG/ ENG'R	ENG'R CH'K	CL/TDL APPROV	B&R PROJ. ENG'R
C	1/20/98	ISSUED FOR 100% REVIEW	DJH	FSS	FSS	LHA		
B	11/21/97	ISSUED FOR 60% REVIEW	DJH	FSS	FSS	LHA		
A	10/7/97	ISSUED FOR 30% REVISION	SJS	FSS	FSS	LHA		

SCALE: AS SHOWN

U.S. DEPARTMENT OF ENERGY
DOE FIELD OFFICE, RICHLAND
HANFORD ENVIRONMENTAL RESTORATION PROGRAM

BECHTEL HANFORD INC.
RICHLAND, WASHINGTON

Golder Associates
Redmond, Washington

ENVIRONMENTAL RESTORATION DISPOSAL FACILITY
CELLS 3 AND 4
OPERATIONS LAYER CONTOURS

BECHTEL JOB NO.	DOE CONTRACT NO.	CADD FILENAME
22192	DE-AC06-93RL12367	58264RC.DWG

TASK	DRAWING NO.	REV. NO.
600	0600X-DD-C0127	C

RECORD INFORMATION

RECORD NO.	BLDG NO.	INDEX NO.
H-6-14785 SHT01	600G	0111

DWG22A 4/1/95

CAD_4 | K:\CAD\SDSKPRO\9731810\1300\58264RC.DWG | 1-14-98 15:10 | xrf: NONE

DRAWING NO.	REV. NO.
0600X-DD-C0128	C

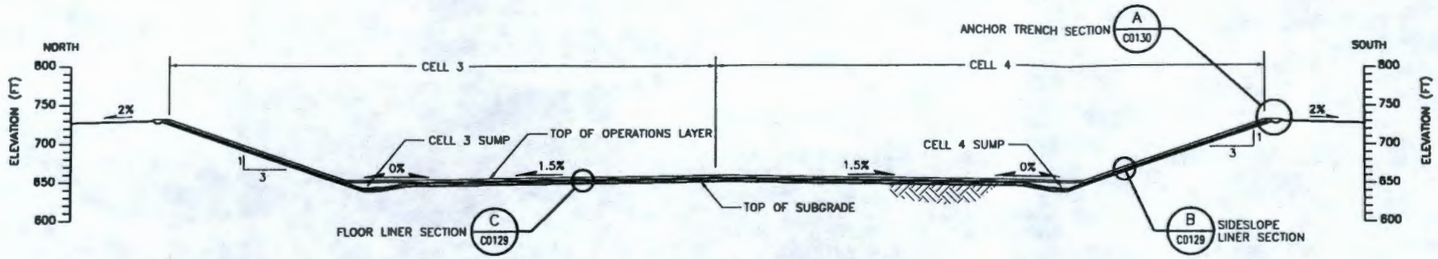

A C0127 NORTH-SOUTH SECTION

METERS 0 10 20 30 40 50 100
FEET 0 100 200

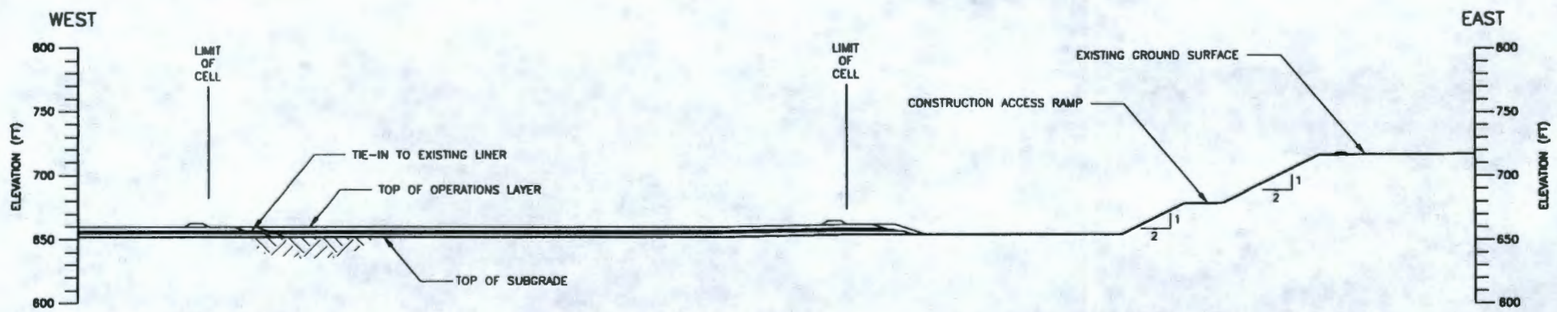

B C0127 E-W SECTION

METERS 0 20 40 60
FEET 0 60 120

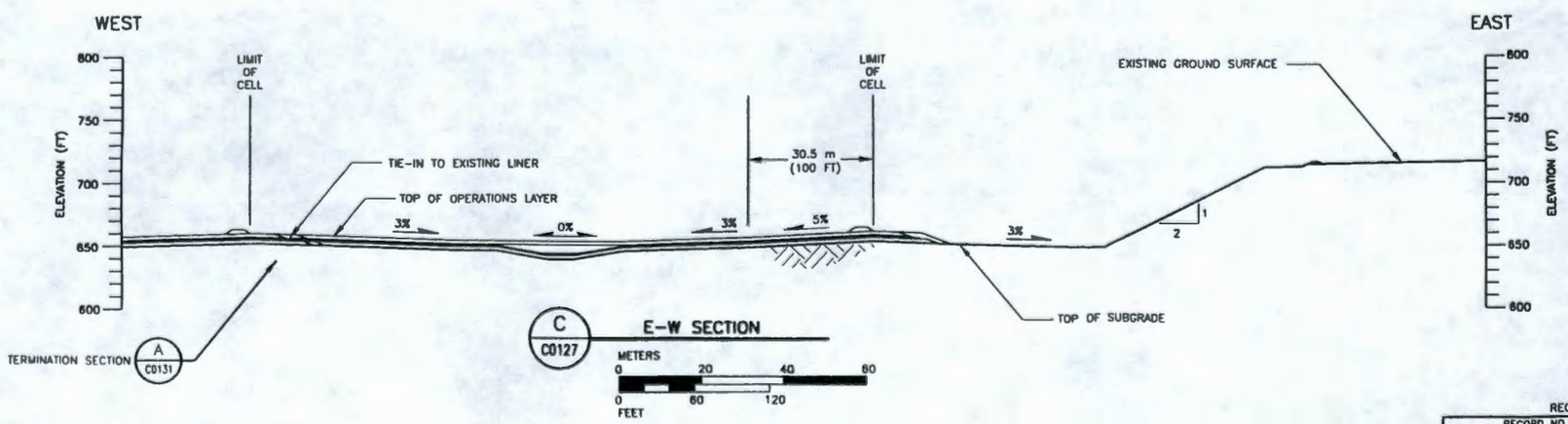

C C0127 E-W SECTION

METERS 0 20 40 60
FEET 0 60 120

NOTES

100%
REVIEW SUBMITTAL
NOT FOR CONSTRUCTION

REV.	DATE	DESCRIPTION	DRAWN BY	DRAFT CH'K	ORIG/ ENG'R	ENG'R CH'K	DL/TEL APPROV	BH PROJ ENG'R
C	1/20/98	ISSUED FOR 100% REVIEW	DJH	FSS	FSS	LHA		
B	11/21/97	ISSUED FOR 60% REVIEW	DJH	FSS	FSS	LHA		
A	11/7/97	ISSUED FOR 30% REVIEW	SJS	FSS	FSS	LHA		

SCALE: AS SHOWN

U.S. DEPARTMENT OF ENERGY
DOE FIELD OFFICE, RICHLAND
HANFORD ENVIRONMENTAL RESTORATION PROGRAM

BECHTEL HANFORD INC.
RICHLAND, WASHINGTON

Golder Associates
Redmond, Washington

ENVIRONMENTAL RESTORATION DISPOSAL FACILITY
CELLS 3 AND 4
GENERAL CROSS-SECTIONS

BECHTEL JOB NO.	DOE CONTRACT NO.	CADD FILENAME
22192	DE-AC06-93RL12367	58265RC.DWG

TASK	DRAWING NO.	REV. NO.
600	0600X-DD-C0128	C

RECORD INFORMATION

RECORD NO.	BLDG NO.	INDEX NO.
H-6-14786 SHT01	600G	0111

J_SHOW | K:\CAD\SDSKPROJ\9751810\1300\58265RC.DWG | 1-14-98 14:34 | xrf: NONE

DRAWING NO.	REV. NO.
0600X-DD-C0129	C

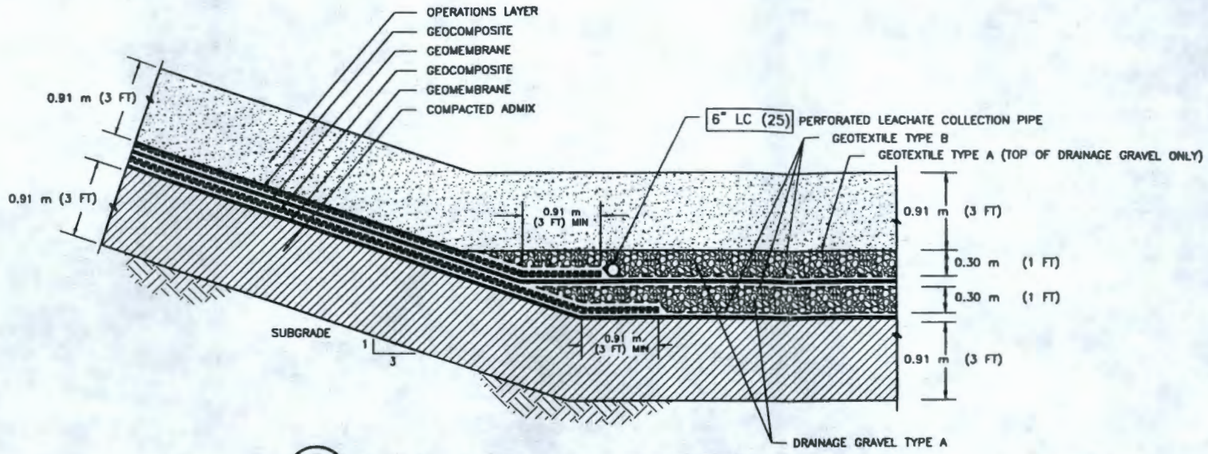

E / C0127 LINER TRANSITION – FLOOR TO SIDESLOPE

METERS 0 1 2 3
FEET 0 3 6

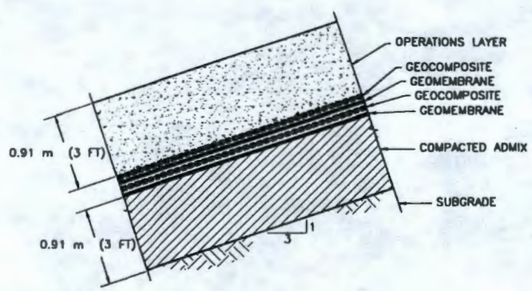

B / C0128 SIDESLOPE LINER SECTION

METERS 0 1 2 3
FEET 0 3 6

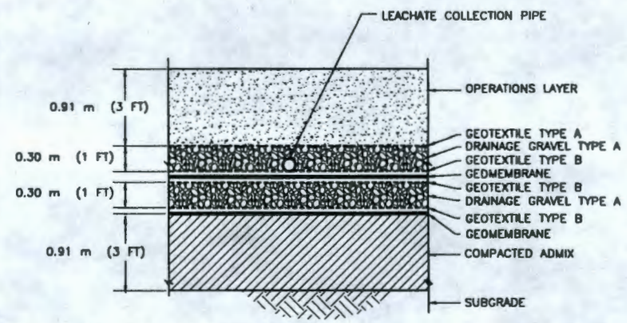

C / C0128,C0134,C0135 FLOOR LINER SECTION

METERS 0 1 2 3
FEET 0 3 6

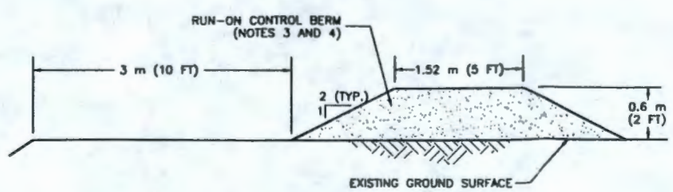

D / C0127 RUN-ON CONTROL BERM SECTION

METERS 0 1 2 3
FEET 0 3 6

NOTES

1. LINER SYSTEM COMPONENT THICKNESSES EXAGGERATED FOR CLARITY.
2. REFER TO TECHNICAL SPECIFICATIONS FOR MATERIAL, HANDLING, AND INSTALLATION REQUIREMENTS.
3. CONSTRUCT RUN-ON CONTROL BERM FROM FILL TYPE I.
4. FLATTEN BERM SLOPES AT ENTRANCE TO CONSTRUCTION ACCESS RAMP AS REQUIRED FOR VEHICLE ACCESS.

100%
REVIEW SUBMITTAL
NOT FOR CONSTRUCTION

REV.	DATE	DESCRIPTION	DRAWN BY	DRAFT CH'K	DSG/ ENG'R	ENG'R CH'K	DL/TDL APPROV	BH PROJ ENG'R
C	1/20/98	ISSUED FOR 100% REVIEW	SJS	FSS	FSS	LHA		
B	11/21/97	ISSUED FOR 60% REVIEW	DJH	FSS	FSS	LHA		
A	11/7/97	ISSUED FOR 30% REVIEW	SJS	FSS	FSS	LHA		

SCALE: AS SHOWN

U.S. DEPARTMENT OF ENERGY
DOE FIELD OFFICE, RICHLAND
HANFORD ENVIRONMENTAL RESTORATION PROGRAM

BECHTEL HANFORD INC.
RICHLAND, WASHINGTON

Golder Associates
Redmond, Washington

ENVIRONMENTAL RESTORATION DISPOSAL FACILITY
CELLS 3 AND 4
LINER SYSTEM DETAILS – 1

BECHTEL JOB NO.	DOE CONTRACT NO.	CADD FILENAME
22192	DE-AC06-93RL12367	58266RB.DWG

TASK	DRAWING NO.	REV. NO.
600	0600X-DD-C0129	C

RECORD INFORMATION

RECORD NO.	BLDG NO.	INDEX NO.
H-6-14787 SHT01	600G	0111

J_SNOW | K:\CAD\SDSKPROJ\9731810\1300\58266RC.DWG | 1-14-98 14:36 | xrf: NONE

DRAWING NO.	REV. NO
0600X-DD-C0130	C

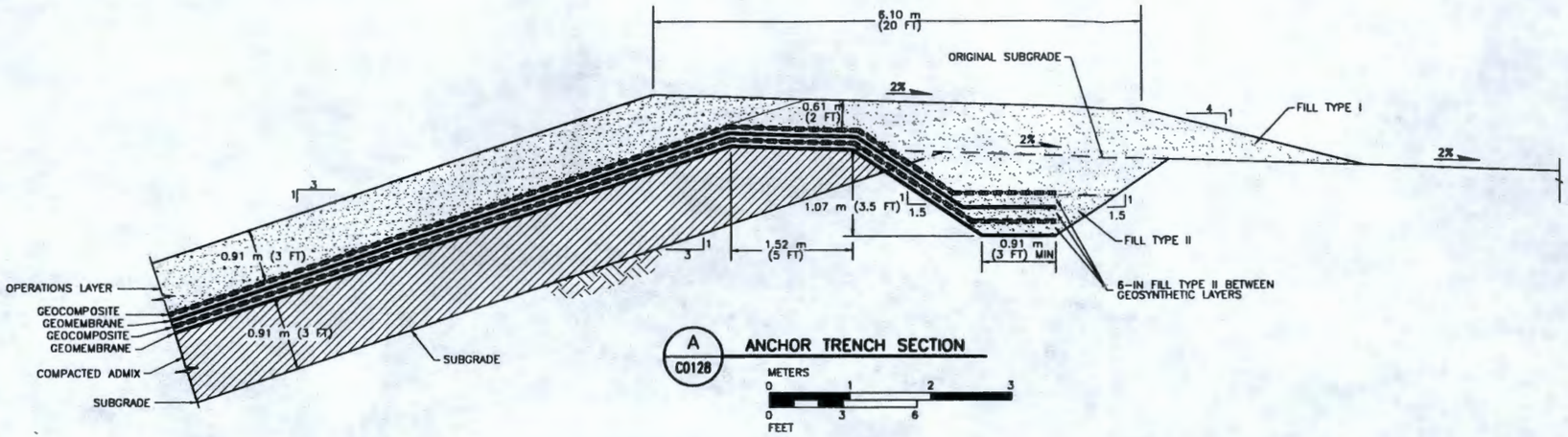

A / C0128 **ANCHOR TRENCH SECTION**

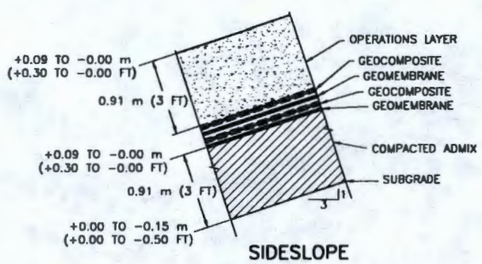

SIDESLOPE

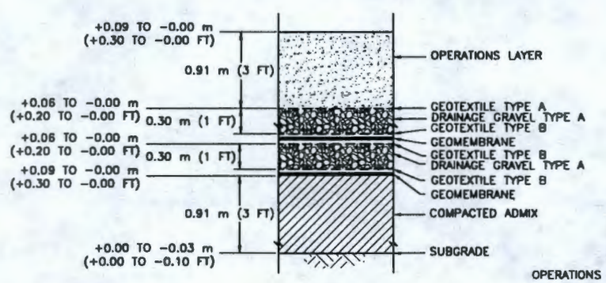

FLOOR

B / - **GRADING TOLERANCES**

METERS 0 1 2 3 — 0 3 6 FEET

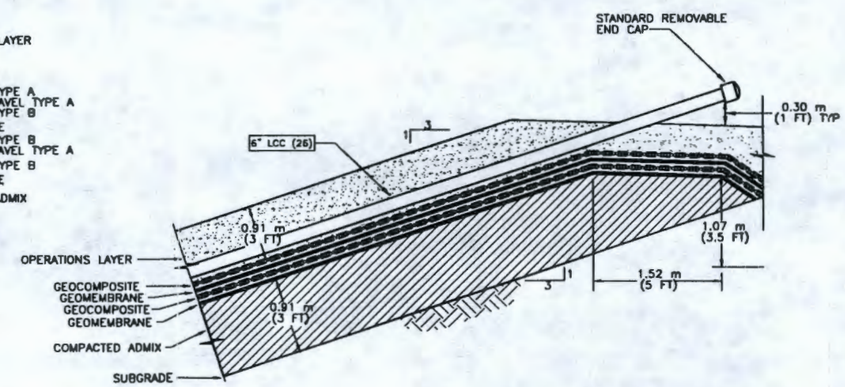

C / C0136 **LEACHATE PIPE CLEANOUT**

METERS 0 1 2 3 — 0 3 6 FEET

NOTES

1. LINER SYSTEM COMPONENT THICKNESSES EXAGGERATED FOR CLARITY.
2. REFER TO TECHNICAL SPECIFICATIONS FOR MATERIAL, HANDLING, AND INSTALLATION REQUIREMENTS.

100%
REVIEW SUBMITTAL
NOT FOR CONSTRUCTION

REV.	DATE	DESCRIPTION	DRAWN BY	DRAFT CH'K	DRG/ ENG'R	ENG'R CH'K	GL/TDL APPROV	BH PROJ ENG'R
C	1/20/98	ISSUED FOR 100% REVIEW	SJS	FSS	FSS	LHA		
B	11/21/97	ISSUED FOR 60% REVIEW	DJH	FSS	FSS	LHA		
A	10/7/97	ISSUED FOR 30% REVIEW	SJS	FSS	FSS	LHA		

SCALE: AS SHOWN

U.S. DEPARTMENT OF ENERGY
DOE FIELD OFFICE, RICHLAND
HANFORD ENVIRONMENTAL RESTORATION PROGRAM

BECHTEL HANFORD INC.
RICHLAND, WASHINGTON

Golder Associates
Redmond, Washington

ENVIRONMENTAL RESTORATION DISPOSAL FACILITY
CELLS 3 AND 4
LINER SYSTEM DETAILS - 2

BECHTEL JOB NO.	DOE CONTRACT NO.	CADD FILENAME
22192	DE-AC06-93RL12367	58267RB.DWG

TASK	DRAWING NO.	REV. NO.
600	0600X-DD-C0130	C

RECORD INFORMATION

RECORD NO.	BLDG NO.	INDEX NO.
H-6-14788 SHT01	600G	0111

J_SNOW | K:\CAD\SDSKPRO\9731810\1300\58267RC.DWG | 1-14-98 14:43 | xrf: NONE

DRAWING NO.	REV. NO.
0600X-DD-C0130	C

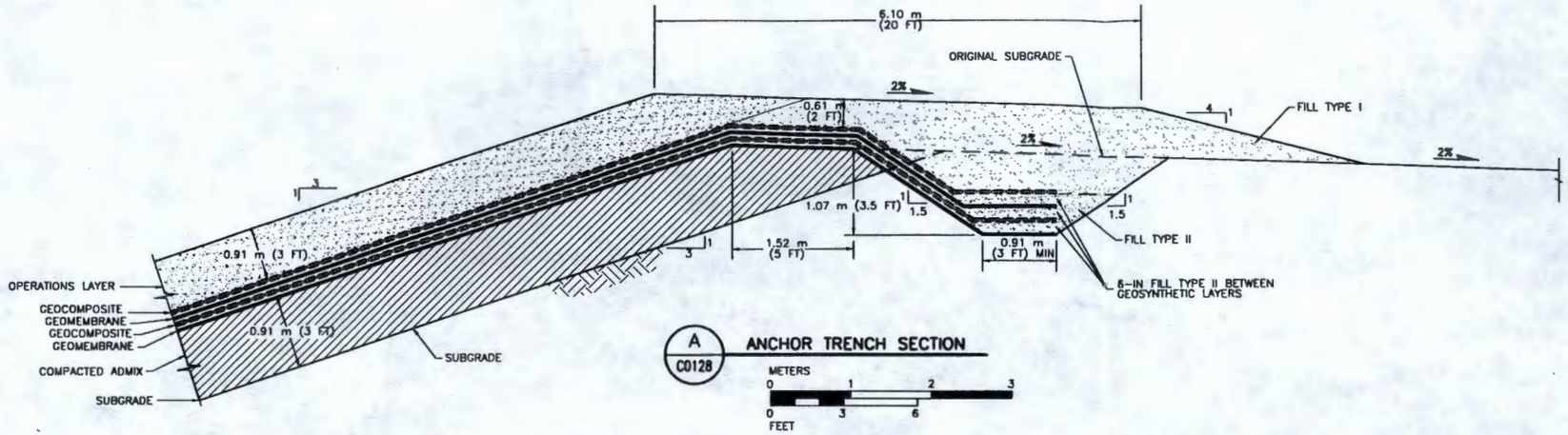

A / C0128 **ANCHOR TRENCH SECTION**

METERS 0 1 2 3
FEET 0 3 6

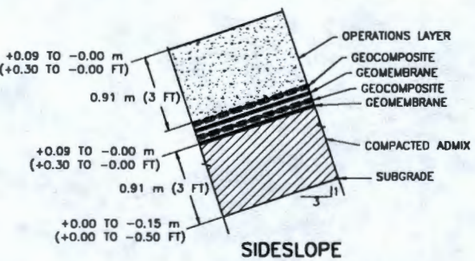

SIDESLOPE

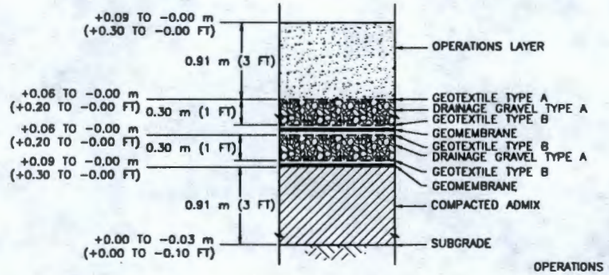

FLOOR

B / - **GRADING TOLERANCES**

METERS 0 1 2 3
FEET 0 3 6

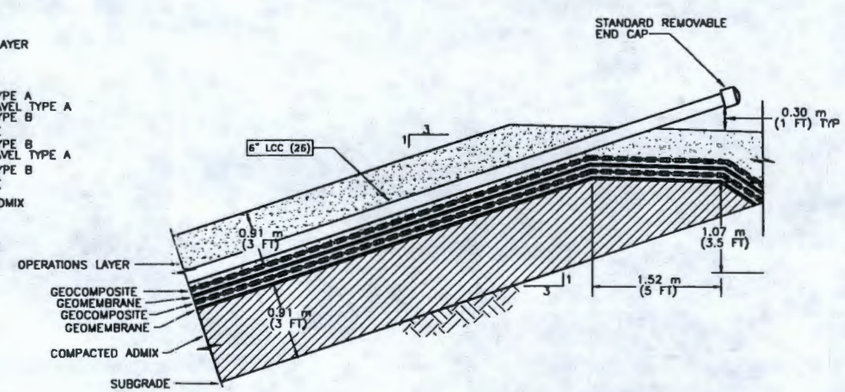

C / C0136 **LEACHATE PIPE CLEANOUT**

METERS 0 1 2 3
FEET 0 3 6

NOTES

1. LINER SYSTEM COMPONENT THICKNESSES EXAGGERATED FOR CLARITY.
2. REFER TO TECHNICAL SPECIFICATIONS FOR MATERIAL, HANDLING, AND INSTALLATION REQUIREMENTS.

100%
REVIEW SUBMITTAL
NOT FOR CONSTRUCTION

REV.	DATE	DESCRIPTION	DRAWN BY	DRAFT CH'K	ORIG/ ENG'R	ENG'R CH'K	GL/TDL APPROV	BH PROJ ENG'R
C	1/20/98	ISSUED FOR 100% REVIEW	SJS	FSS	FSS	LHA		
B	11/21/97	ISSUED FOR 60% REVIEW	DJH	FSS	FSS	LHA		
A	10/7/97	ISSUED FOR 30% REVIEW	SJS	FSS	FSS	LHA		

SCALE: AS SHOWN

U.S. DEPARTMENT OF ENERGY
DOE FIELD OFFICE, RICHLAND
HANFORD ENVIRONMENTAL RESTORATION PROGRAM

BECHTEL HANFORD INC.
RICHLAND, WASHINGTON

Golder Associates
Redmond, Washington

ENVIRONMENTAL RESTORATION DISPOSAL FACILITY
CELLS 3 AND 4
LINER SYSTEM DETAILS - 2

BECHTEL JOB NO.	DOE CONTRACT NO.	CADD FILENAME
22192	DE-AC06-93RL12367	58267RB.DWG

TASK	DRAWING NO.	REV. NO.
600	0600X-DD-C0130	C

RECORD INFORMATION

RECORD NO.	BLDG NO.	INDEX NO.
H-6-14788 SHT01	600G	0111

J_SHOW | K:\CAD\SDSKPRO\9731810\1300\58267RC.DWG | 1-14-98 14:43 | xrf: NONE

DRAWING NO.	REV. NO.
0600X-DD-C0131	C

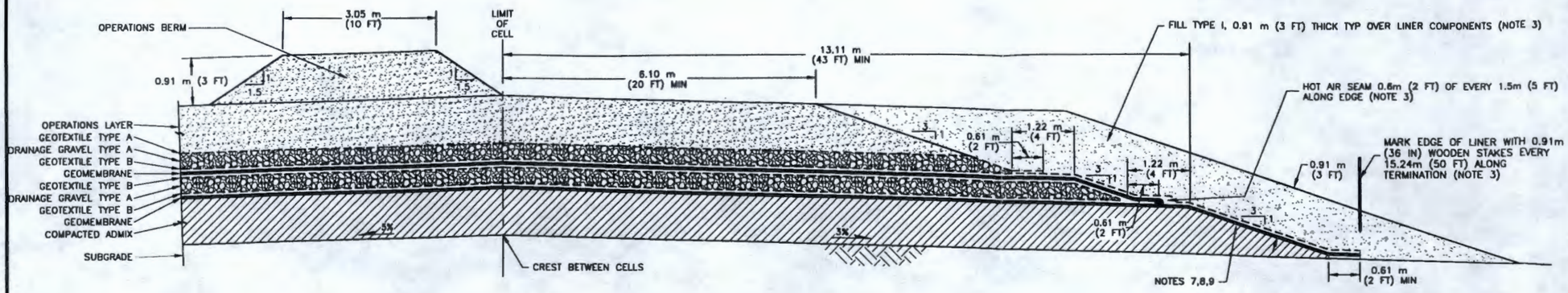

A C0127 **FLOOR LINER TERMINATION SECTION**

METERS 0 2 4 / 0 4 8 FEET

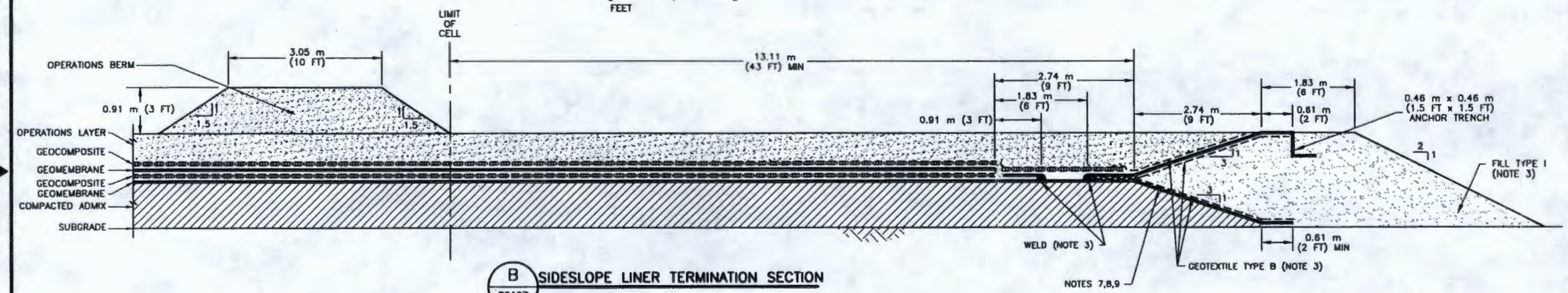

B C0127 **SIDESLOPE LINER TERMINATION SECTION**

METERS 0 2 4 / 0 4 8 FEET

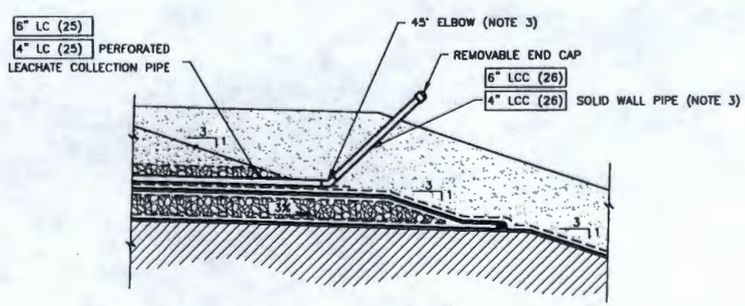

C C0136 **LEACHATE PIPING TERMINATION SECTION (TYPICAL)**

METERS 0 2 4 / 0 4 8 FEET

NOTES

1. LINER SYSTEM COMPONENT THICKNESSES EXAGGERATED FOR CLARITY.
2. REFER TO TECHNICAL SPECIFICATIONS FOR MATERIAL, HANDLING, AND INSTALLATION REQUIREMENTS.
3. REMOVE FOR LINER SYSTEM TIE-IN.
4. FOR LINER TIE-IN, REMOVE ALL DAMAGED, DETERIORATED, OR OTHERWISE UNSATISFACTORY EXISTING GEOSYNTHETIC MATERIALS TO THE SATISFACTION OF THE CONTRACTOR.
5. JOIN GEOSYNTHETIC MATERIALS BETWEEN EXISTING AND NEW LINER SECTIONS USING STANDARD METHODS DESCRIBED IN TECHNICAL SPECIFICATIONS, EXCEPT AS NOTED.
6. EXTRUSION WELDING SHALL NOT BE USED TO JOIN NEW AND EXISTING GEOMEMBRANES.
7. FOR LINER TIE-IN, REMOVE ANY CRACKED OR OTHERWISE UNSUITABLE EXISTING ADMIX TO THE SATISFACTION OF THE CONTRACTOR.
8. SEAM BETWEEN NEW AND EXISTING ADMIX SHALL BE NO STEEPER THAN 3H:1V.
9. KNEAD NEW ADMIX THOROUGHLY INTO EXISTING ADMIX.
10. ALL LAYERS OF NEW LINER SYSTEM SHALL BE CONTINUOUS WITH CORRESPONDING LAYERS IN EXISTING LINER.

100%
REVIEW SUBMITTAL
NOT FOR CONSTRUCTION

REV	DATE	DESCRIPTION	DRAWN BY	DRAFT CH'K	ORIG/ ENG R	ENG'R CH'K	DL/TDL APPROV	B-E PROJ ENG R
C	1/20/98	ISSUED FOR 100% REVIEW	SJS	FSS	FSS	LHA		
B	11/21/97	ISSUED FOR 60% REVIEW	DJH	FSS	FSS	LHA		
A	10/7/97	ISSUED FOR 30% REVIEW	SJS	FSS	FSS	LHA		

SCALE: AS SHOWN

U.S. DEPARTMENT OF ENERGY
DOE FIELD OFFICE, RICHLAND
HANFORD ENVIRONMENTAL RESTORATION PROGRAM

BECHTEL HANFORD INC. RICHLAND, WASHINGTON | Golder Associates Redmond, Washington

ENVIRONMENTAL RESTORATION DISPOSAL FACILITY
CELLS 3 AND 4
LINER TERMINATION / TIE-IN DETAILS

BECHTEL JOB NO.	DOE CONTRACT NO.	CADD FILENAME
22192	DE-AC06-93RL12367	58268RB.DWG

TASK	DRAWING NO.	REV. NO.
600	0600X-DD-C0131	C

HANFORD

RECORD INFORMATION

RECORD NO.	BLDG NO.	INDEX NO.
H-6-14789 SHT01	600G	0111

DK2224 4/1/95

J..SNOW | K:\CAD\SOSKPROJ\9731810\1300\58268RC.DWG | 12-29-97 14:41 | xrf: NONE

DRAWING NO.	REV. NO.
0600X-DD-C0132	C

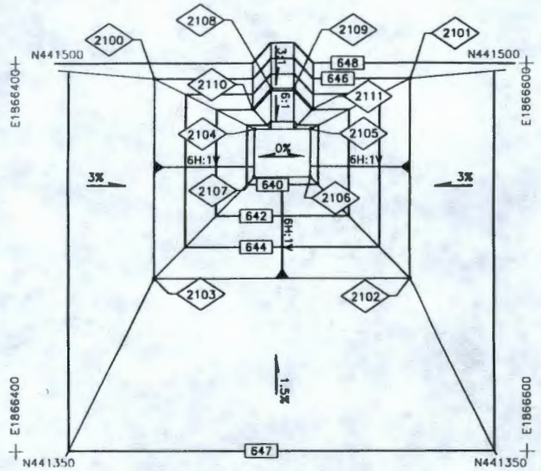

1 / C0125 CELL 3 SUMP SUBGRADE CONTROL

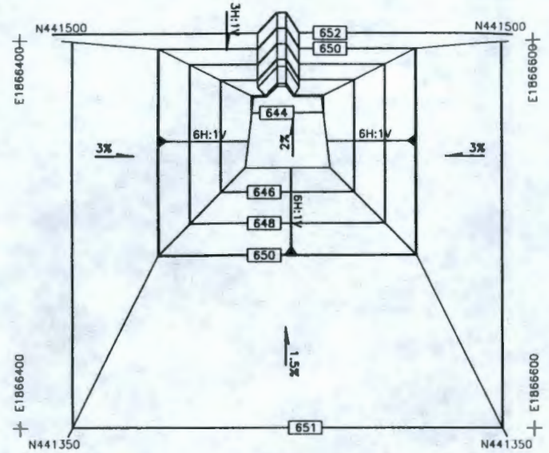

3 / - CELL 3 SUMP SECONDARY DRAINAGE LAYER

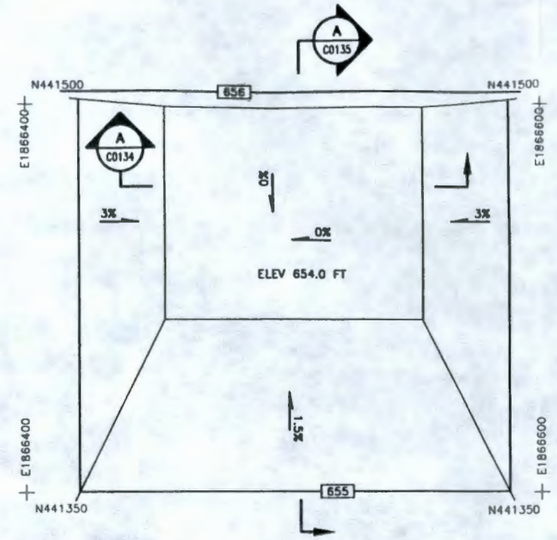

5 / - CELL 3 SUMP OPERATIONS LAYER PLAN

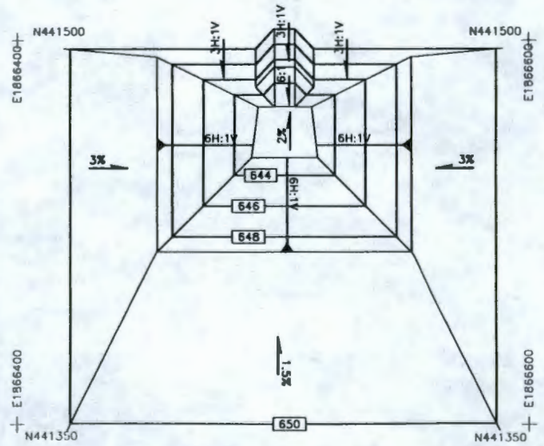

2 / - CELL 3 SUMP COMPACTED ADMIX PLAN

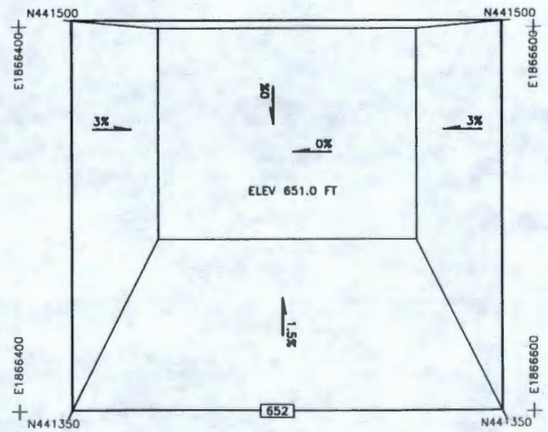

4 / - CELL 3 SUMP PRIMARY DRAINAGE LAYER

SUBGRADE CONTROL POINTS COORDINATES (WASHINGTON STATE PLANE, FT)

POINT #	NORTHING	EASTING	ELEVATION	DESCRIPTION
2100	441493.97	1866453.88	646.00	TOP OF SUMP
2101	441493.97	1866554.12	646.00	TOP OF SUMP
2102	441416.94	1866554.12	646.00	TOP OF SUMP
2103	441416.94	1866453.88	646.00	TOP OF SUMP
2104	441474.47	1866492.88	639.50	FLOOR OF SUMP
2105	441474.47	1866515.12	639.50	FLOOR OF SUMP
2106	441455.94	1866515.12	639.50	FLOOR OF SUMP
2107	441455.94	1866492.88	639.50	FLOOR OF SUMP
2108	441490.29	1866499.51	642.14	RISER TRENCH
2109	441490.29	1866508.49	642.14	RISER TRENCH
2110	441482.38	1866492.01	642.14	RISER TRENCH
2111	441482.38	1866515.99	642.14	RISER TRENCH

RECORD INFORMATION

RECORD NO.	BLDG NO.	INDEX NO.
H-6-14790 SHT01	600G	0111

NOTES

1. ELEVATIONS SHOWN ARE NOMINAL. ACTUAL ELEVATIONS SHALL BE DETERMINED BY MINIMUM REQUIRED COMPONENT THICKNESS PER GRADING TOLERANCE ON DWG NO. 0600X-DD-C0130.
2. SURVEY DATUM
   VERTICAL NAVD: 88
   HORIZONTAL NAD: 83 (91)

LEGEND:
GRADE BREAK
660 CONTOUR

METERS 0 10 20 30
FEET 0 30 60

100% REVIEW SUBMITTAL NOT FOR CONSTRUCTION

REV.	DATE	DESCRIPTION	DRAWN BY	DRAFT CH'K	DES/ ENG'R	ENG'R CH'K	CL/TDL APPROV	DOE PROJ ENG'R
C	1/20/98	ISSUED FOR 100% REVIEW	SJS	FSS	FSS	LHA		
B	11/21/97	ISSUED FOR 60% REVIEW	SJS	FSS	FSS	LHA		
A	10/7/97	ISSUED FOR 30% REVIEW	SJS	FSS	FSS	LHA		

SCALE: AS SHOWN

U.S. DEPARTMENT OF ENERGY
DOE FIELD OFFICE, RICHLAND
HANFORD ENVIRONMENTAL RESTORATION PROGRAM

BECHTEL HANFORD INC. RICHLAND, WASHINGTON
Golder Associates Redmond, Washington

ENVIRONMENTAL RESTORATION DISPOSAL FACILITY
CELLS 3 AND 4
SUMP LAYOUT PLAN - CELL 3

BECHTEL JOB NO.	DOE CONTRACT NO.	CADD FILENAME
22192	DE-AC06-93RL12367	58269RB.DWG

HANFORD	TASK	DRAWING NO.	REV. NO.
	600	0600X-DD-C0132	C

J_SNOW | K:\CAD\SOSKPROJ\9731810\1300\58269RC.DWG | 1-14-98 14:45 | xrf: NONE

DRAWING NO.	REV. NO.
0600X-DD-C0133	C

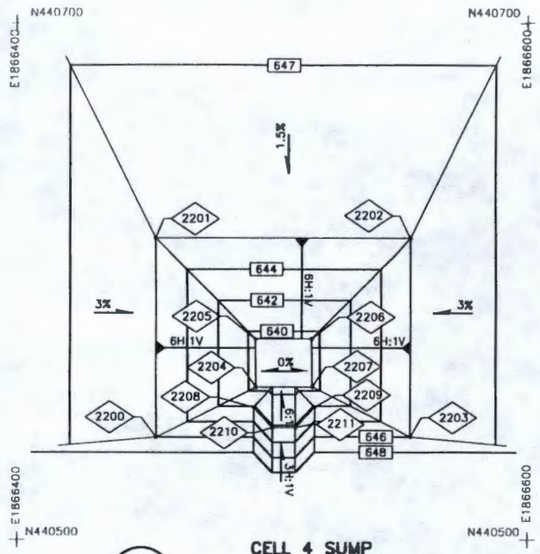

1 / C0125 CELL 4 SUMP SUBGRADE CONTROL

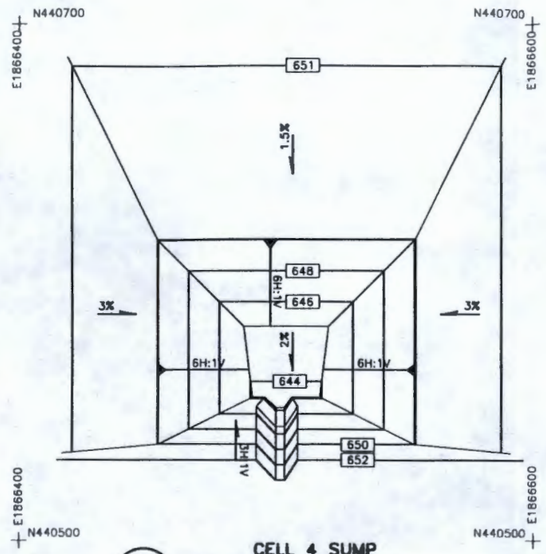

3 / - CELL 4 SUMP SECONDARY DRAINAGE PLAN

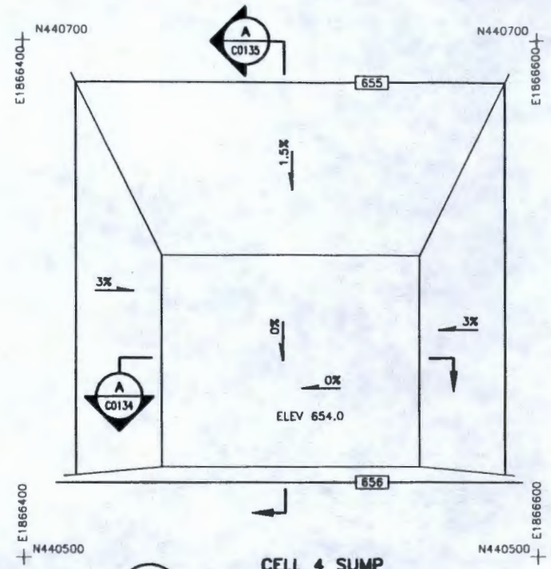

5 / - CELL 4 SUMP OPERATIONS LAYER PLAN

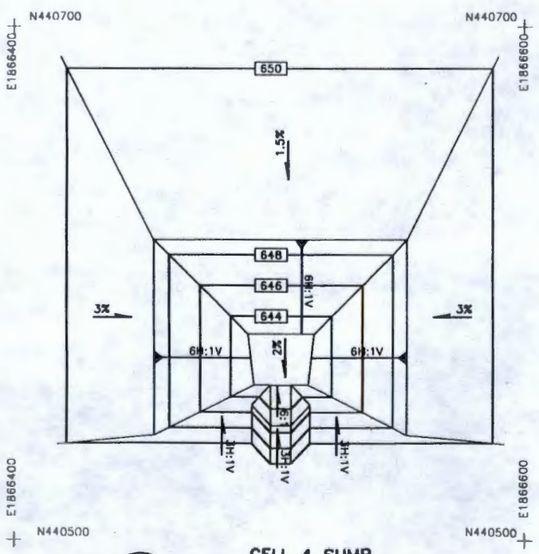

2 / - CELL 4 SUMP COMPACTED ADMIX PLAN

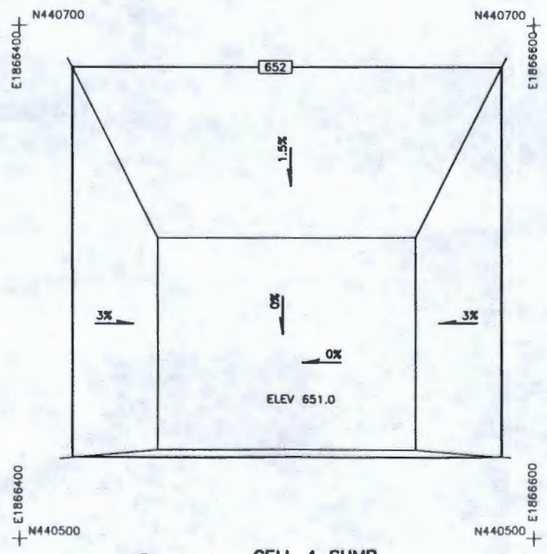

4 / - CELL 4 SUMP PRIMARY DRAINAGE PLAN

SUBGRADE CONTROL POINTS
COORDINATES (WASHINGTON STATE PLANE, FT)

POINT #	NORTHING	EASTING	ELEVATION	DESCRIPTION
2200	440540.03	1866453.88	646.00	TOP OF SUMP
2201	440617.06	1866453.88	646.00	TOP OF SUMP
2202	440617.06	1866554.12	646.00	TOP OF SUMP
2203	440540.03	1866554.12	646.00	TOP OF SUMP
2204	440559.53	1866492.88	639.50	FLOOR OF SUMP
2205	440578.06	1866492.88	639.50	FLOOR OF SUMP
2206	440578.06	1866515.12	639.50	FLOOR OF SUMP
2207	440559.53	1866515.12	639.50	FLOOR OF SUMP
2208	440551.62	1866492.01	642.14	RISER TRENCH
2209	440551.62	1866515.99	642.14	RISER TRENCH
2210	440543.71	1866499.51	642.14	RISER TRENCH
2211	440543.71	1866508.49	642.14	RISER TRENCH

NOTES

1. ELEVATIONS SHOWN ARE NOMINAL. ACTUAL ELEVATIONS SHALL BE DETERMINED BY MINIMUM REQUIRED COMPONENT THICKNESS PER GRADING TOLERANCE ON DWG NO. 0600X-DD-C0130.
2. SURVEY DATUM
   VERTICAL NAVD: 88
   HORIZONTAL NAD: 83 (91)

LEGEND:

GRADE BREAK

660 CONTOUR

METERS 0 10 20 30
FEET 0 30 60

100%
REVIEW SUBMITTAL
NOT FOR CONSTRUCTION

REV.	DATE	DESCRIPTION	DRAWN BY	DRAFT CH'K	DRSG/ ENG'R	ENG'R CH'K	GL/TDL APPROV	BHI PROJ ENG'R
C	1/20/98	ISSUED FOR 100% REVIEW	SJS	FSS	FSS	LHA		
B	11/21/97	ISSUED FOR 60% REVIEW	DJH	FSS	FSS	LHA		
A	10/7/97	ISSUED FOR 30% REVIEW	SJS	FSS	FSS	LHA		

SCALE: AS SHOWN

U.S. DEPARTMENT OF ENERGY
DOE FIELD OFFICE, RICHLAND
HANFORD ENVIRONMENTAL RESTORATION PROGRAM

BECHTEL HANFORD INC.
RICHLAND, WASHINGTON

Golder Associates
Redmond, Washington

ENVIRONMENTAL RESTORATION DISPOSAL FACILITY
CELLS 3 AND 4
SUMP LAYOUT PLAN - CELL 4

BECHTEL JOB NO.	DOE CONTRACT NO.	CADD FILENAME
22192	DE-AC06-93RL12367	58270RB.DWG

TASK	DRAWING NO.	REV. NO.
600	0600X-DD-C0133	C

RECORD INFORMATION

RECORD NO.	BLDG NO.	INDEX NO.
H-6-14791 SHT01	600G	0111

J_SHOW | K:\CAD\SDSKPROJ\8731810\1300\58270RC.DWG | 1-14-98 14:46 | xrf: NONE

DN2224 4/7/95

DRAWING NO.	REV. NO.
0600X-DD-C0134	C

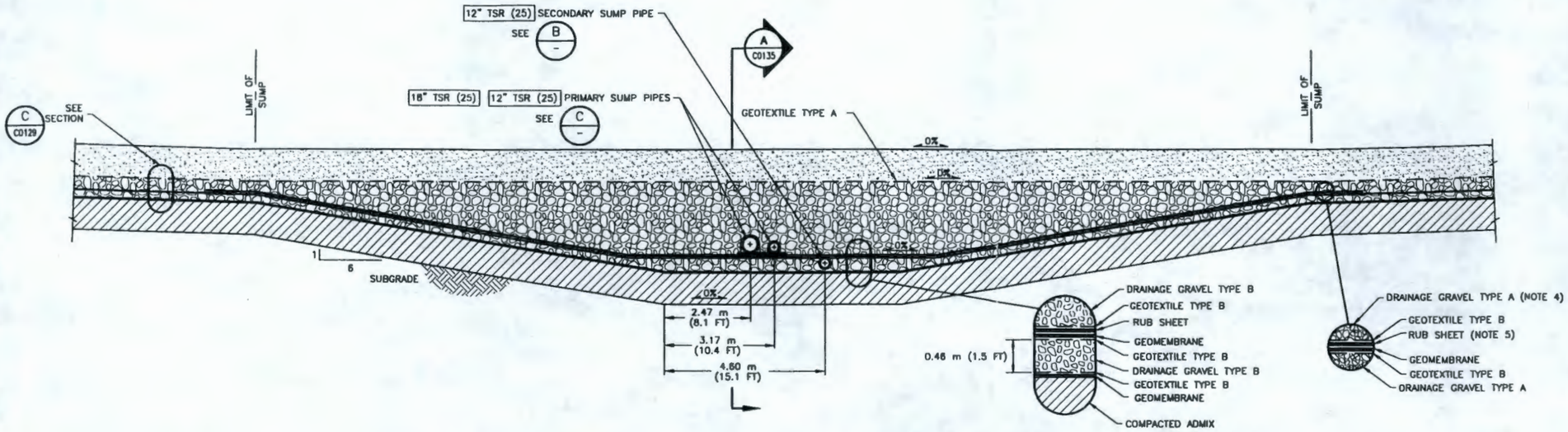

A TYPICAL SUMP SECTION
C0132,C0133,C0135 (NOTE 6)

METERS 0 2 4 6
FEET 0 6 12

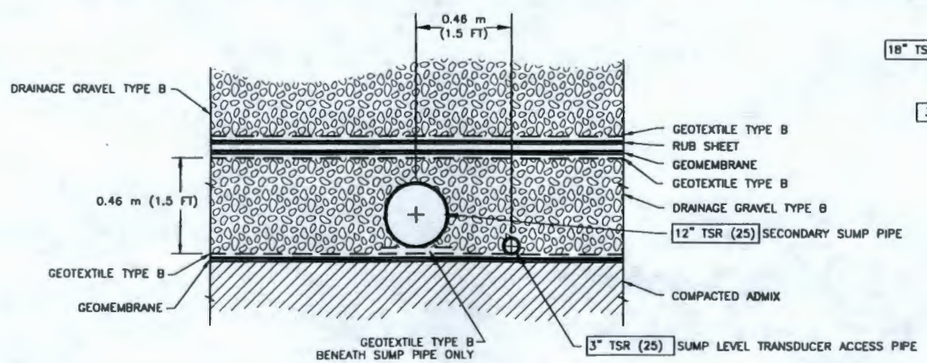

B - SECONDARY SUMP PIPE
NOT TO SCALE

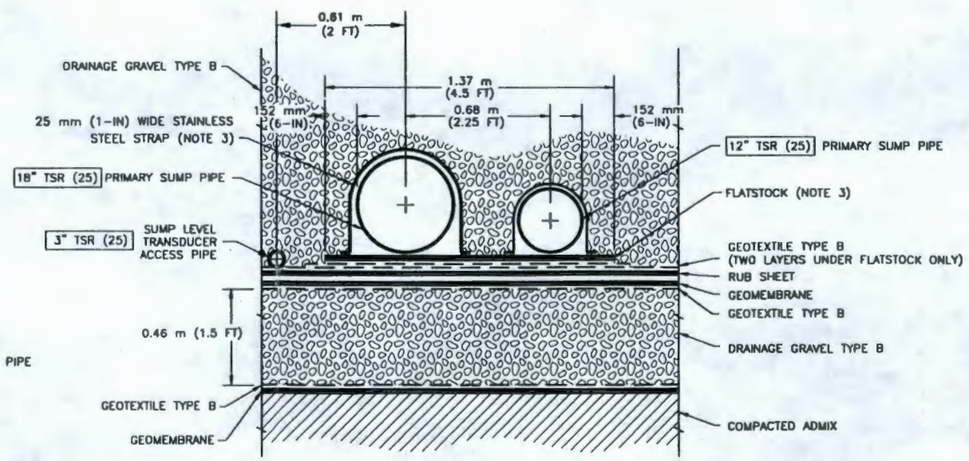

C - PRIMARY SUMP PIPES
NOT TO SCALE

NOTES

1. LINER SYSTEM COMPONENT THICKNESSES EXAGGERATED FOR CLARITY.
2. REFER TO TECHNICAL SPECIFICATIONS FOR MATERIAL, HANDLING, AND INSTALLATION REQUIREMENTS.
3. FLATSTOCK SHALL EXTEND UNDER ENTIRE LENGTH OF PIPES AND 152 mm (6-IN) MIN BEYOND PIPE END. ANCHOR PIPES TO FLATSTOCK WITH 25 mm (1-IN) WIDE SS STRAPS AT 1.52 m (5 FT) INTERVALS. ATTACH STRAPS TO FLATSTOCK USING STAINLESS STEEL BOLTS AND WASHERS OR SCREWS. FASTENERS SHALL NOT PROTRUDE BEYOND BOTTOM OF FLATSTOCK.
4. TRANSITION BETWEEN DRAINAGE GRAVEL TYPE A AND DRAINAGE GRAVEL TYPE B AT LIMITS OF SUMP.
5. RUB SHEET SHALL EXTEND 1.52 m (5 FT) MIN ALONG SLOPE BEYOND LIMITS OF SUMP ALL AROUND.
6. SUMP LEVEL TRANSDUCER ACCESS PIPES NOT SHOWN IN THIS SECTION.

100%
REVIEW SUBMITTAL
NOT FOR CONSTRUCTION

REV.	DATE	DESCRIPTION	DRAWN BY	DRAFT CH'K	DSG/ ENG'R	ENG'R CH'K	GL/TDL APPROV	BH PROJ ENG'R
C	1/20/98	ISSUED FOR 100% REVIEW	SJS	FSS	FSS	LHA		
B	11/21/97	ISSUED FOR 60% REVIEW	DJH	FSS	FSS	LHA		
A	10/7/97	ISSUED FOR 30% REVIEW	SJS	FSS	FSS	LHA		

SCALE: AS SHOWN

U.S. DEPARTMENT OF ENERGY
DOE FIELD OFFICE, RICHLAND
HANFORD ENVIRONMENTAL RESTORATION PROGRAM

BECHTEL HANFORD INC.
RICHLAND, WASHINGTON

Golder Associates
Redmond, Washington

ENVIRONMENTAL RESTORATION DISPOSAL FACILITY
CELLS 3 AND 4
SUMP DETAILS - 1

BECHTEL JOB NO.	DOE CONTRACT NO.	CADD FILENAME
22192	DE-AC06-93RL12367	58271RB.DWG

TASK	DRAWING NO.	REV. NO.
600	0600X-DD-C0134	C

RECORD INFORMATION

RECORD NO.	BLDG NO.	INDEX NO.
H-6-14792 SHT01	600G	0111

J_SNOW | K:\CAD\SOSKPROJ\9731810\1300\58271RC.DWG | 1-14-98 14:48 | xrf: NONE

DRAWING NO.	REV. NO.
0600X-DD-C0135	C

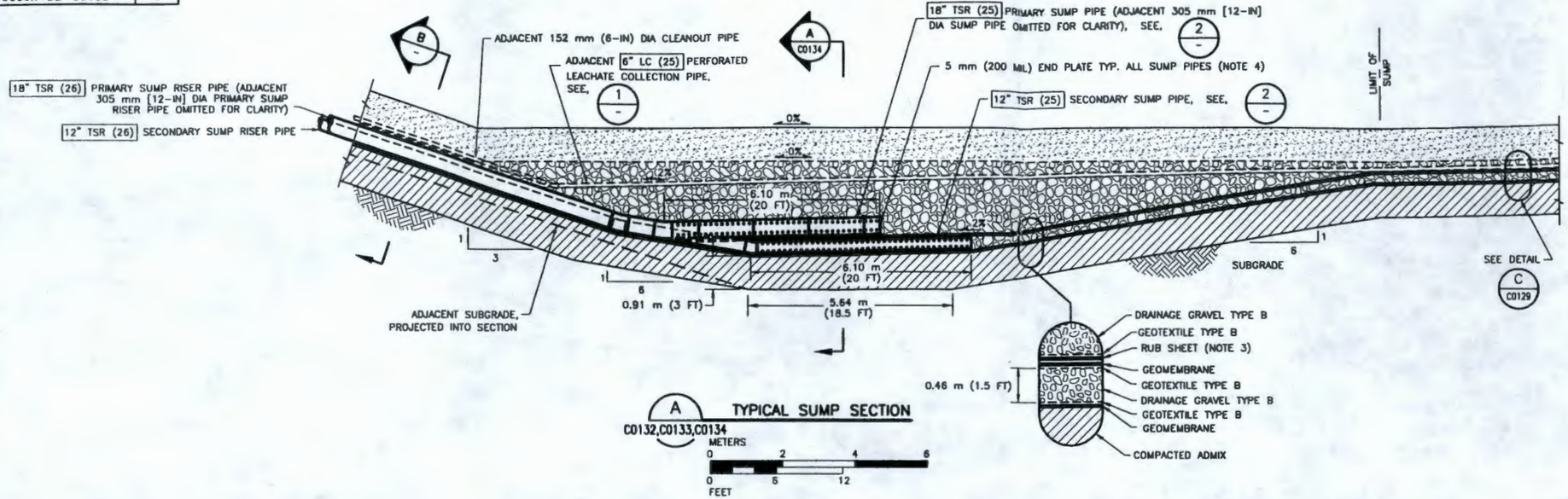

A TYPICAL SUMP SECTION
C0132,C0133,C0134

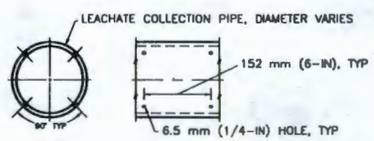

1 PERFORATION DETAIL, LEACHATE COLLECTION PIPES

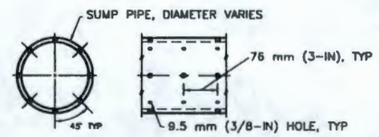

2 PERFORATION DETAIL, SUMP PIPES

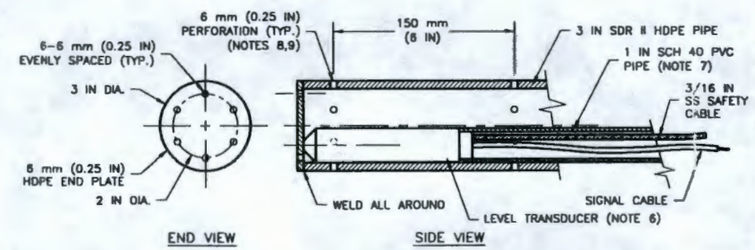

3 SUMP LEVEL TRANSDUCER INSTALLATION

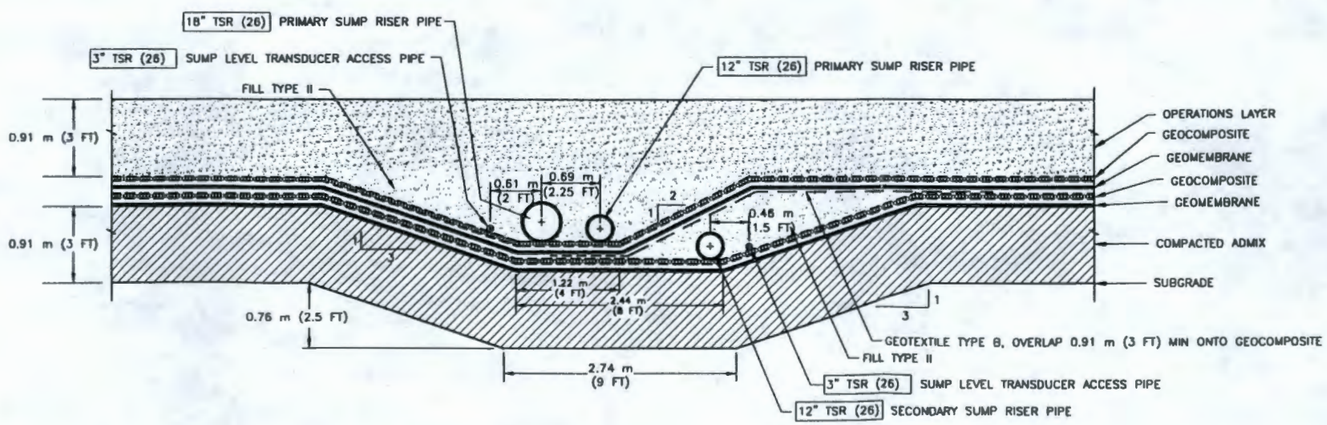

B SIDESLOPE RISER TRENCH SECTION

NOTES

1. LINER SYSTEM COMPONENT THICKNESSES EXAGGERATED FOR CLARITY.
2. REFER TO TECHNICAL SPECIFICATIONS FOR MATERIAL, HANDLING, AND INSTALLATION REQUIREMENTS.
3. RUB SHEET TO EXTEND 1.5 m (5 FT) MIN ALONG SLOPE BEYOND LIMITS OF SUMP ALL AROUND.
4. WELD END PLATE TO SUMP PIPE ALL AROUND. ALTERNATIVELY, BOLT PLATE TO SUMP PIPE USING 8 BOLTS MINIMUM IN RADIAL PATTERN WITH WASHERS. BOLTS AND WASHERS SHALL BE STAINLESS STEEL.
5. LEACHATE REMOVAL PUMPS TO BE PLACED WITHIN PERFORATED SECTION OF SUMP PIPE AT LOWEST ELEVATION.
6. SENSOR AND CABLES NOT SHOWN IN SECTION.
7. JOINTS SHALL BE SOLVENT WELDED OR THREADED.
8. SIX PERFORATIONS PER ROW. SPACE EVENLY AROUND CIRCUMFERENCE.
9. PERFORATION ZONE SHALL BE 1.5 m (5 FT) FROM END OF PIPE.
10. END OF SUMP LEVEL TRANSDUCER PIPE TO BE 3.0 m (10 FT) FROM END OF ASSOCIATED SUMP PIPE.

100%
REVIEW SUBMITTAL
NOT FOR CONSTRUCTION

REV.	DATE	DESCRIPTION	DRAWN BY	DRAFT CHK	ORIG/ ENG'R	ENG'R CHK	GL/TDA APPROV	BH PROJ ENG'R
C	1/20/98	ISSUED FOR 100% REVIEW	SJS	FSS	FSS	FSS	LHA	
B	11/21/97	ISSUED FOR 60% REVIEW	DJH	FSS	FSS	FSS	LHA	
A	10/7/97	ISSUED FOR 30% REVIEW	SJS	FSS	FSS	FSS	LHA	

SCALE: AS SHOWN

U.S. DEPARTMENT OF ENERGY
DOE FIELD OFFICE, RICHLAND
HANFORD ENVIRONMENTAL RESTORATION PROGRAM

BECHTEL HANFORD INC.
RICHLAND, WASHINGTON

Golder Associates
Redmond, Washington

ENVIRONMENTAL RESTORATION DISPOSAL FACILITY
CELLS 3 AND 4
SUMP DETAILS - 2

BECHTEL JOB NO.	DOE CONTRACT NO.	CADD FILENAME
22192	DE-AC06-93RL12367	58272RB.DWG

TASK	DRAWING NO.	REV. NO.
600	0600X-DD-C0135	C

RECORD INFORMATION

RECORD NO.	BLDG NO.	INDEX NO.
H-6-14793 SHT01	600G	0111

J_SHOW | K:\CAD\SDSKPROJ\9731810\1300\58272RC.DWG | 1-14-98 14:50 | xrf: NONE

DRAWING NO.	REV. NO.
0600X-DD-C0136	C

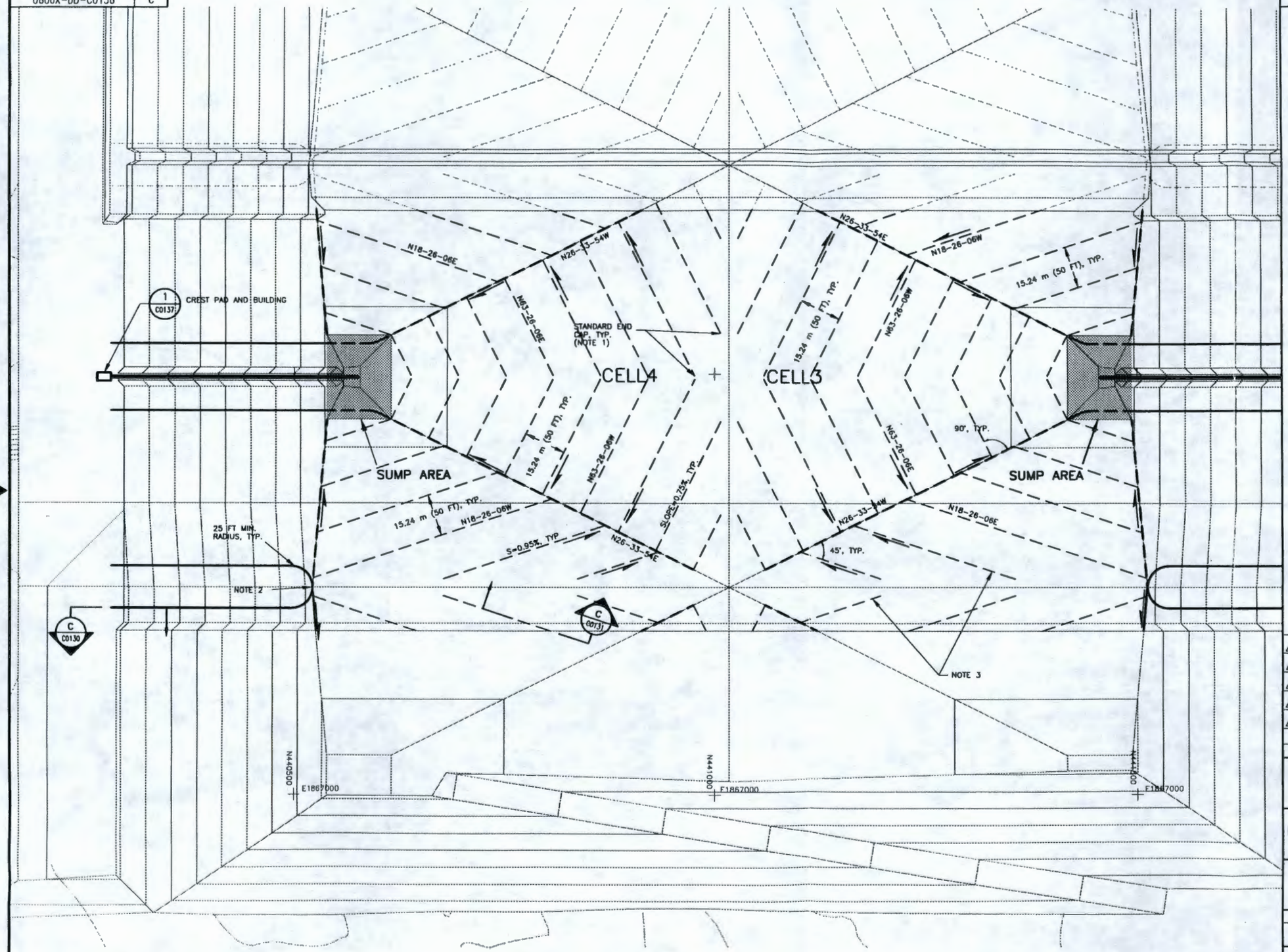

NOTES

1. ALL 102 mm (4-IN) PERF PIPE SHALL BE CONNECTED AT BOTH ENDS TO 152 mm (6-IN) PERF PIPE ONLY, WHERE POSSIBLE. OTHERWISE CLOSE WITH STANDARD END CAP.
2. CLEANOUT PIPES SHALL CROSS OVER EACH OTHER AND SHALL NOT BE INTERCONNECTED.
3. TERMINATE AND CAP ALL 102 mm (4-IN) LEACHATE COLLECTION PIPES 3.05 m (10 FT) FROM BOUNDARIES BETWEEN CELLS. TERMINATE AND CAP 152 mm (6-IN) PIPES WHERE SHOWN.

LEGEND:

- CONTOUR OR GRADE BREAK
- 4" LC (25) PERFORATED LEACHATE COLLECTION PIPE
- 6" LC (25) PERFORATED LEACHATE COLLECTION PIPE
- 6" LCC (26) CLEANOUT RISER
- N18-26-06W BEARING OF PIPE
- EXISTING LEACHATE COLLECTION PIPE

METERS 0 20 40 60
FEET 0 60 120

100%
REVIEW SUBMITTAL
NOT FOR CONSTRUCTION

REV	DATE	DESCRIPTION	DRAWN BY	DRAFT CH'K	DRG/ ENG'R	ENG'R CH'K	DL/TDL APPROV	BH PROJ ENG'R
C	1/20/98	ISSUED FOR 100% REVIEW	DJH	FSS	FSS	LJHA		
B	11/21/97	ISSUED FOR 60% REVIEW	DJH	FSS	FSS	LJHA		
A	10/7/97	ISSUED FOR 30% REVIEW	SJS	FSS	FSS	LJHA		

SCALE: AS SHOWN

U.S. DEPARTMENT OF ENERGY
DOE FIELD OFFICE, RICHLAND
HANFORD ENVIRONMENTAL RESTORATION PROGRAM

BECHTEL HANFORD INC.
RICHLAND, WASHINGTON

Golder Associates
Redmond, Washington

ENVIRONMENTAL RESTORATION DISPOSAL FACILITY
CELLS 3 AND 4
LEACHATE PIPING PLAN

BECHTEL JOB NO.	DOE CONTRACT NO.	CADD FILENAME
22192	DE-AC06-93RL12367	58273RC.DWG

TASK	DRAWING NO.	REV. NO.
600	0600X-DD-C0136	C

RECORD INFORMATION

RECORD NO.	BLDG NO.	INDEX NO.
H-6-14794 SHT01	600G	0111

DR233A 4/1/95

J_SNOW | K:\CAD\SDSKPROJ\9731810\1300\58273RC.DWG | 12-29-97 15:25 | xrf: NONE

DRAWING NO.	REV NO.
0600X-DD-C0137	C

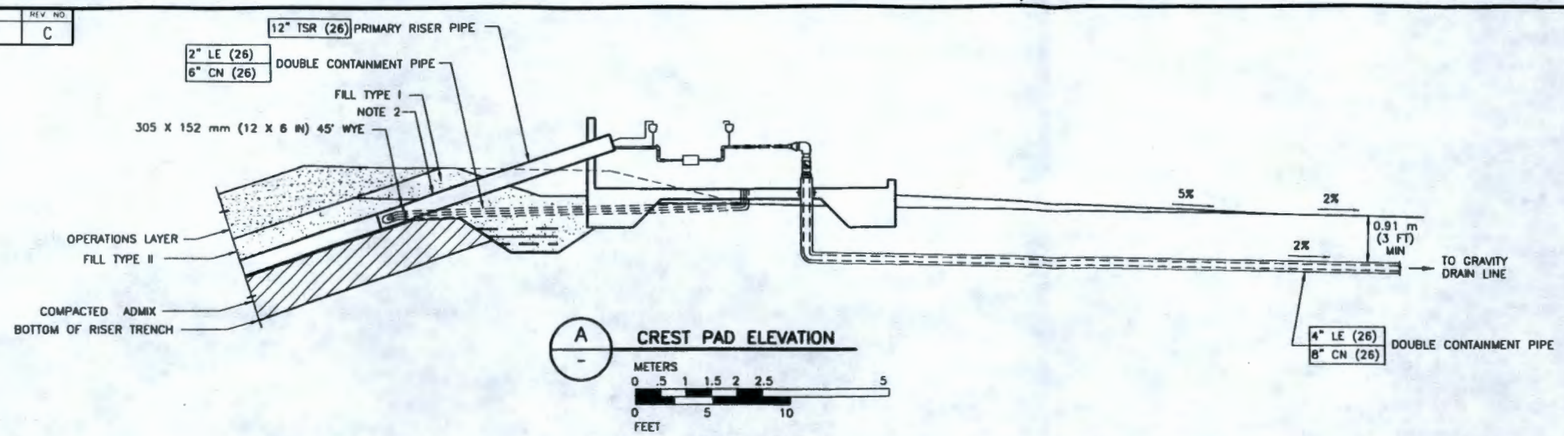

A
–
CREST PAD ELEVATION

METERS
0 .5 1 1.5 2 2.5 5
0 5 10
FEET

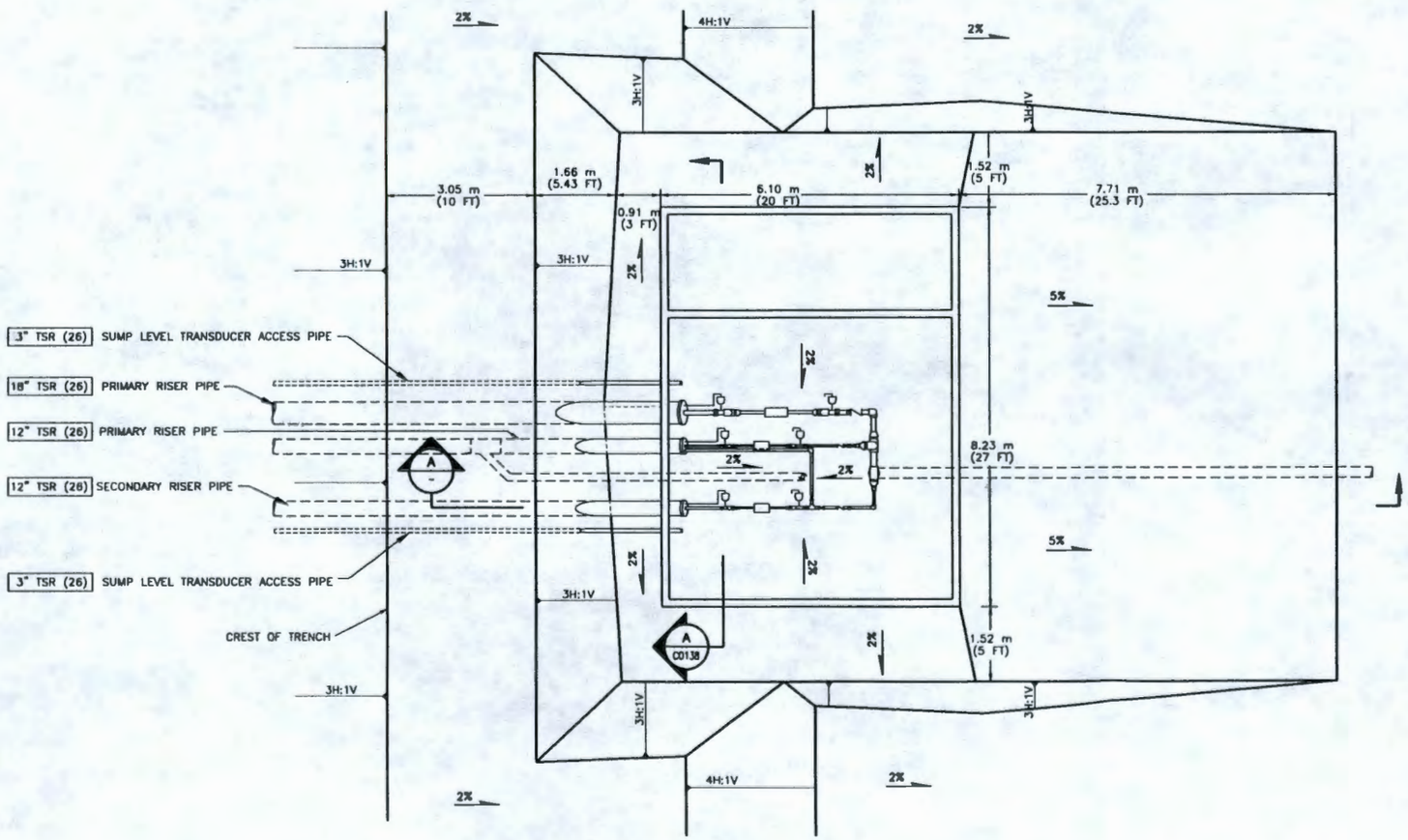

1
C0136
CREST PAD PLAN

METERS
0 .5 1 1.5 2 2.5 5
0 5 10
FEET

NOTES

1. PIPE SUPPORTS AND JUNCTION BOXES NOT SHOWN.
2. WELD PRIMARY GEOMEMBRANE TO SECONDARY RISER PIPE ALL AROUND AT PENETRATION. BOOT MAY BE USED SUBJECT TO APPROVAL BY CONTRACTING OFFICER.

100%
REVIEW SUBMITTAL
NOT FOR CONSTRUCTION

REV.	DATE	DESCRIPTION	DRAWN BY	DRAFT CHK	ORIG/ ENG'R	ENG'R CHK	QL/TDL APPROV	BH PROJ ENG'R
C	1/20/98	ISSUED FOR 100% REVIEW	SJS	FSS	FSS	LHA		
B	11/21/97	ISSUED FOR 60% REVIEW	DJH	FSS	FSS	LHA		
A	10/7/97	ISSUED FOR 30% REVIEW	SJS	FSS	FSS	LHA		

SCALE: AS SHOWN

U.S. DEPARTMENT OF ENERGY
DOE FIELD OFFICE, RICHLAND
HANFORD ENVIRONMENTAL RESTORATION PROGRAM

BECHTEL HANFORD INC.
RICHLAND, WASHINGTON

Golder Associates
Redmond, Washington

ENVIRONMENTAL RESTORATION DISPOSAL FACILITY
CELLS 3 AND 4
CREST PAD DETAILS – SHEET 1

BECHTEL JOB NO.	DOE CONTRACT NO.	CADD FILENAME
22192	DE-AC06-93RL12367	58274RB.DWG

TASK	DRAWING NO.	REV. NO.
600	0600X-DD-C0137	C

RECORD INFORMATION

RECORD NO.	BLDG NO.	INDEX NO.
H-6-14795 SHT01	600G	0111

CAD_4 | K:\CAD\SDSKPROJ\9731810\1300\58274RC.DWG | 1-14-98 9:45 | xrf: NONE

DRAWING NO.	REV. NO.
0600X-DD-C0138	C

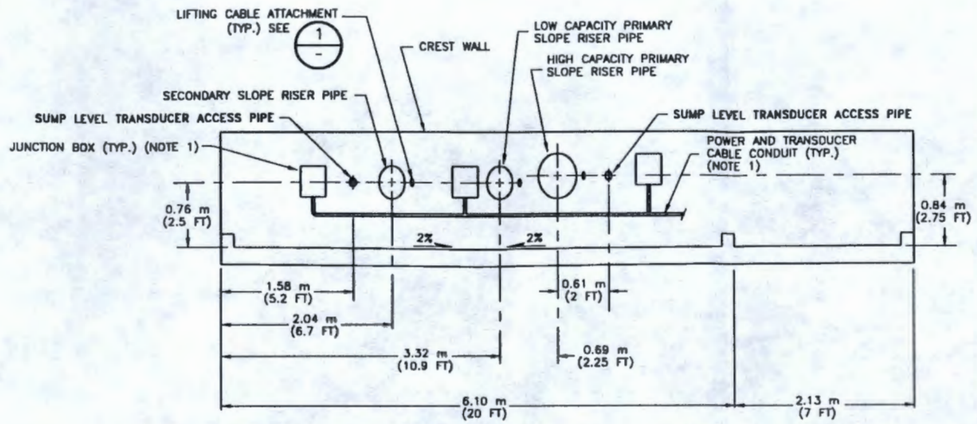

A / C0137 **CREST WALL ELEVATION**

METERS 0 1 2 3
FEET 0 3 6

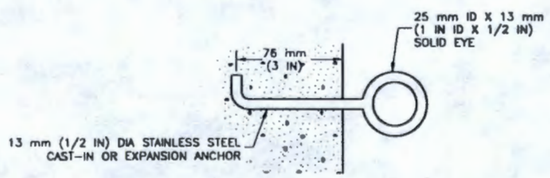

1 / - **LIFTING CABLE ATTACHMENT DETAIL**
NOT TO SCALE

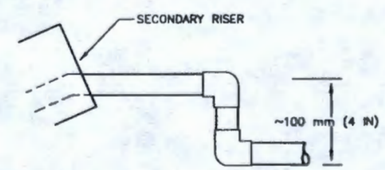

2 / - **INTERTIE DETAIL (ELEVATION)**
NOT TO SCALE

NOTES

1. LOCATE JUCTION BOXES AND CONDUITS AS CONVENIENT SUBJECT TO CONTRACTOR'S APPROVAL.

100%
REVIEW SUBMITTAL
NOT FOR CONSTRUCTION

REV.	DATE	DESCRIPTION	DRAWN BY	DRAFT CH'K	DRG/ ENG'R	ENG'R CH'K	GL/TDL APPROV	BH PROJ ENG'R
C	1/20/98	ISSUED FOR 100% REVIEW	DJH	FSS	FSS	LHA		
B	11/21/97	ISSUED FOR 60% REVIEW	DJH	FSS	FSS	LHA		
A	10/7/97	ISSUED FOR 30% REVIEW	SJS	FSS	FSS	LHA		

SCALE: AS SHOWN

U.S. DEPARTMENT OF ENERGY
DOE FIELD OFFICE, RICHLAND
HANFORD ENVIRONMENTAL RESTORATION PROGRAM

BECHTEL HANFORD INC.
RICHLAND, WASHINGTON

Golder Associates
Redmond, Washington

ENVIRONMENTAL RESTORATION DISPOSAL FACILITY
CELLS 3 AND 4
CREST PAD DETAILS - SHEET 2

BECHTEL JOB NO.	DOE CONTRACT NO.	CADD FILENAME
22192	DE-AC06-93RL12367	58275RC.DWG

TASK	DRAWING NO.	REV. NO.
600	0600X-DD-C0138	C

RECORD INFORMATION

RECORD NO.	BLDG NO.	INDEX NO.
H-6-14796 SHT01	600G	0111

DRAWING NO.	REV. NO.
0600X-DD-C0139	C

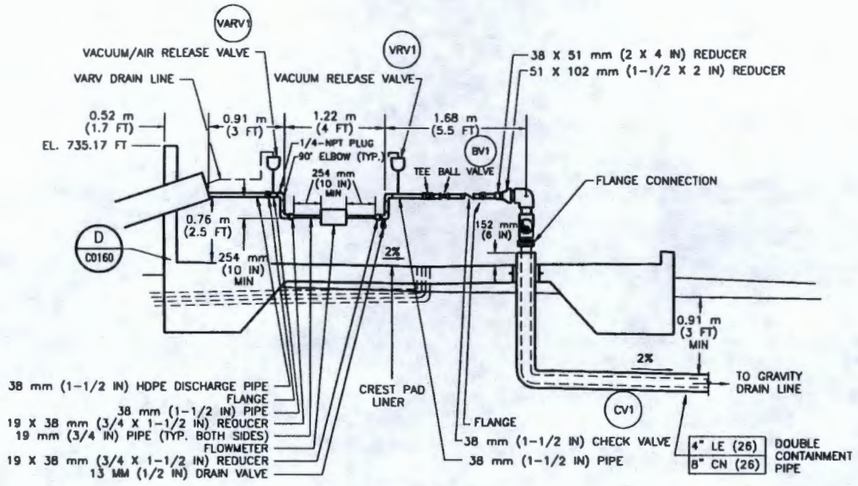

A / - CREST DISCHARGE PROFILE, LOW CAPACITY LINE (SECONDARY) (NOTE 2)

METERS 0 1 2 3
FEET 0 3 6

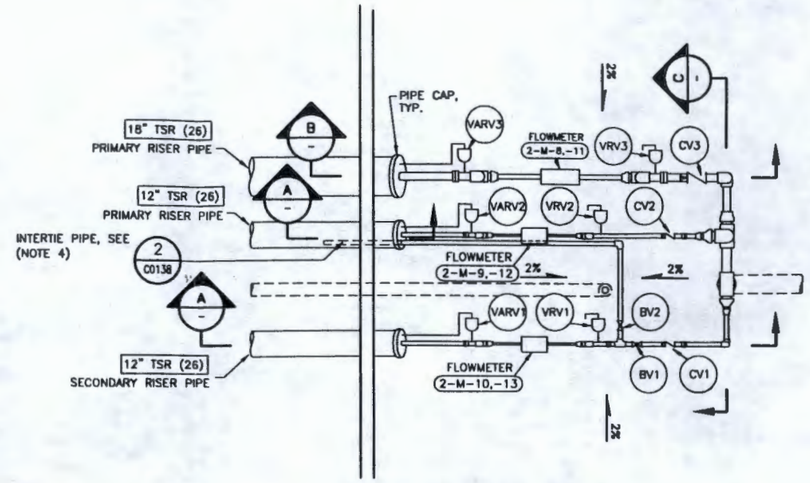

1 / - CREST PAD PLAN (NOTES 1, 3)

METERS 0 1 2 3
FEET 0 3 6

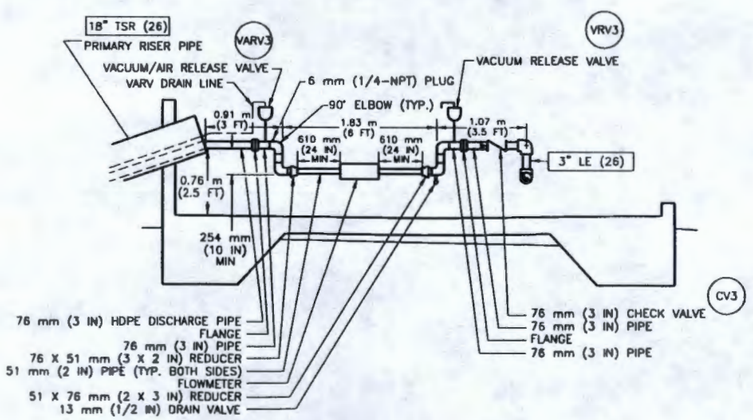

B / - CREST PAD PROFILE, HIGH CAPACITY LINE (PRIMARY)

METERS 0 1 2 3
FEET 0 3 6

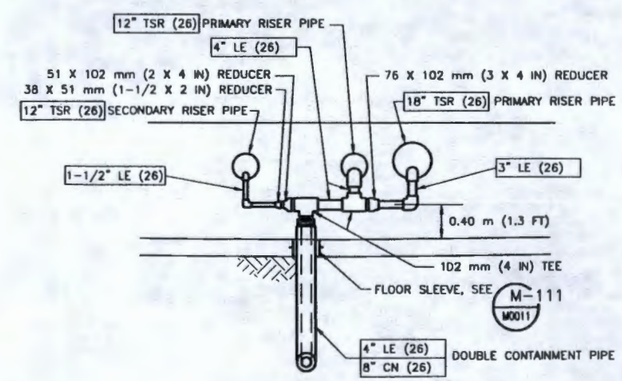

C / - HEADER PIPE ELEVATION

METERS 0 1 2 3
FEET 0 3 6

NOTES

1. PIPE SUPPORTS, PIPE CAPS, JUNCTION BOXES, AND CONDUIT NOT SHOWN.
2. PRIMARY LOW-CAPACITY DISCHARGE LINE GENERALLY SIMILAR.
3. CREST PAD PIPING MATERIAL SHALL BE HDPE, STAINLESS STEEL, OR PVC CONFORMING TO THE REQUIREMENTS OF THE TECHNICAL SPECIFICATIONS. SPECIFIC MATERIALS SHALL BE USED WHERE INDICATED. ALL PIPING CONNECTIONS SHALL ALLOW REMOVAL AND REPLACEMENT OF ALL VALVES, METERS, AND SIMILAR COMPONENTS WITHOUT CUTTING OF PIPE OR FITTINGS.
4. EXTEND INTERTIE PIPE 0.9 m (3 FT) INTO PRIMARY RISER PIPE.

LEGEND

VRV3 VALVE NUMBER

100%
REVIEW SUBMITTAL
NOT FOR CONSTRUCTION

REV.	DATE	DESCRIPTION	DRAWN BY	DRAFT CH'K	DSGN/ ENG'R	ENG'R CH'K	CG/TDL APPROV	BH PROJ ENG'R
C	1/20/98	ISSUED FOR 100% REVIEW	DJH	FSS	FSS	LHA		
B	11/21/97	ISSUED FOR 60% REVIEW	DJH	FSS	FSS	LHA		
A	10/7/97	ISSUED FOR 30% REVIEW	SJS	FSS	FSS	LHA		

SCALE: AS SHOWN

U.S. DEPARTMENT OF ENERGY
DOE FIELD OFFICE, RICHLAND
HANFORD ENVIRONMENTAL RESTORATION PROGRAM

BECHTEL HANFORD INC.
RICHLAND, WASHINGTON

Golder Associates
Redmond, Washington

ENVIRONMENTAL RESTORATION DISPOSAL FACILITY
CELLS 3 AND 4
CREST PAD DETAILS - SHEET 3

BECHTEL JOB NO.	DOE CONTRACT NO.	CADD FILENAME
22192	DE-AC06-93RL12367	58276RC.DWG

TASK	DRAWING NO.	REV. NO.
600	0600X-DD-C0139	C

RECORD INFORMATION

RECORD NO.	BLDG NO.	INDEX NO.
H-6-14797 SHT01	600G	0111

J_SHOW | K:\CAD\SDSKPROJ\8731810\1300\58276RC.DWG | 1-14-98 15:55 | xrf: NONE

DRAWING NO.	REV. NO.
0600X-DD-C0140	C

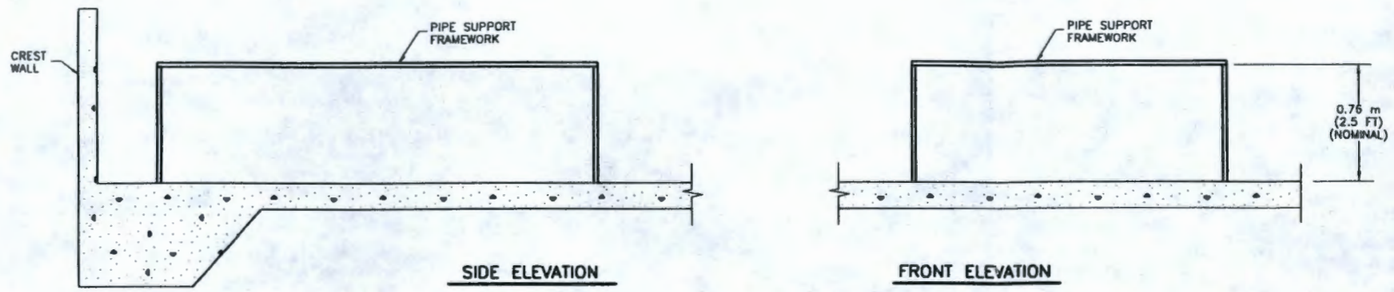

1 / - PIPE SUPPORT ELEVATION

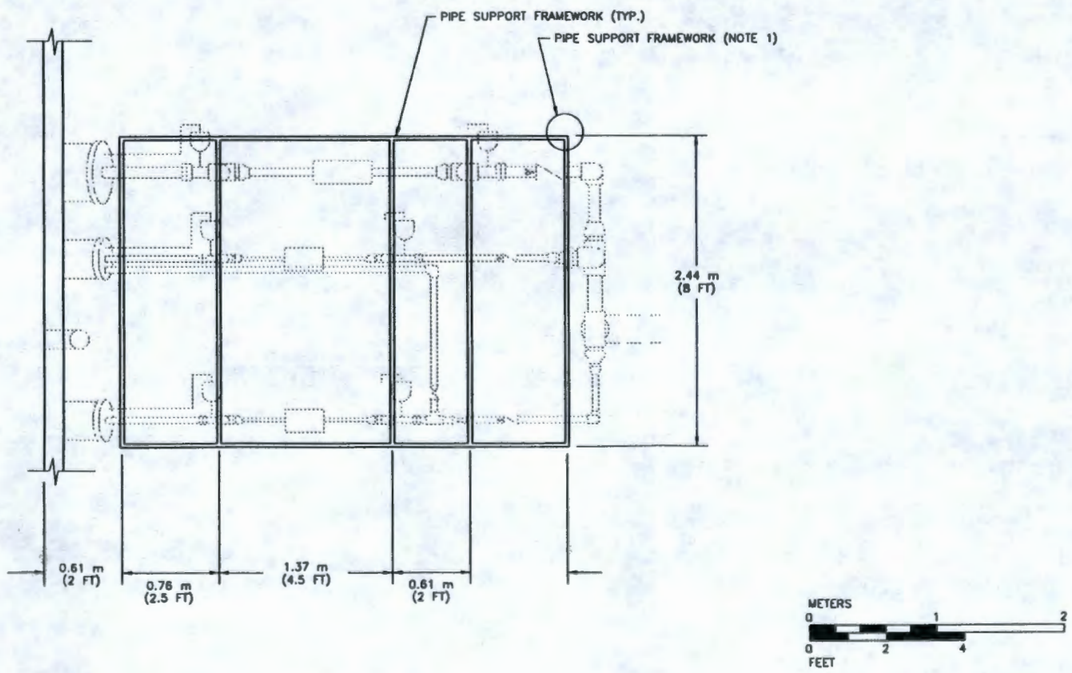

2 / - PIPE SUPPORT PLAN LAYOUT (NOTES 1, 2, 3)

NOTES

1. BOLT FRAMEWORK TO CONCRETE FLOOR USING NUMBER, SIZE, AND TYPE OF ANCHOR BOLTS PER FRAMEWORK MANUFACTURER'S RECOMMENDATIONS.
2. PIPE SUPPORT LAYOUT MAY BE ADJUSTED TO SUIT FIELD CONDITIONS WITH APPROVAL OF CONTRACTING OFFICER.
3. CREST PAD BUILDING NOT SHOWN.

100%
REVIEW SUBMITTAL
NOT FOR CONSTRUCTION

REV	DATE	DESCRIPTION	DRAWN BY	DRAFT CH'K	ORIG/ ENG'R	ENG'R CH'K	GL/TTA APPROV	BH ORIG/ ENG'R
C	1/20/98	ISSUED FOR 100% REVIEW	DJH	FSS	FSS	LHA		
B	11/21/97	ISSUED FOR 60% REVIEW	DJH	FSS	FSS	LHA		
A	10/7/97	ISSUED FOR 30% REVIEW	SJS	FSS	FSS	LHA		

SCALE: AS SHOWN

U.S. DEPARTMENT OF ENERGY
DOE FIELD OFFICE, RICHLAND
HANFORD ENVIRONMENTAL RESTORATION PROGRAM

BECHTEL HANFORD INC.
RICHLAND, WASHINGTON

Golder Associates
Redmond, Washington

ENVIRONMENTAL RESTORATION DISPOSAL FACILITY
CELLS 3 AND 4
CREST PAD DETAILS - SHEET 4

BECHTEL JOB NO.	DOE CONTRACT NO.	CADD FILENAME
22192	DE-AC06-93RL12367	58277RC.DWG

TASK	DRAWING NO.	REV. NO.
600	0600X-DD-C0140	C

RECORD INFORMATION

RECORD NO.	BLDG NO.	INDEX NO.
H-6-14798 SHT01	600G	0111

J_SNOW | K:\CAD\SDSKPROJ\9731810\1300\58277RC.DWG | 1-14-98 15:59 | xrf: NONE

DRAWING NO.	REV. NO.
0600X-DD-C0141	C

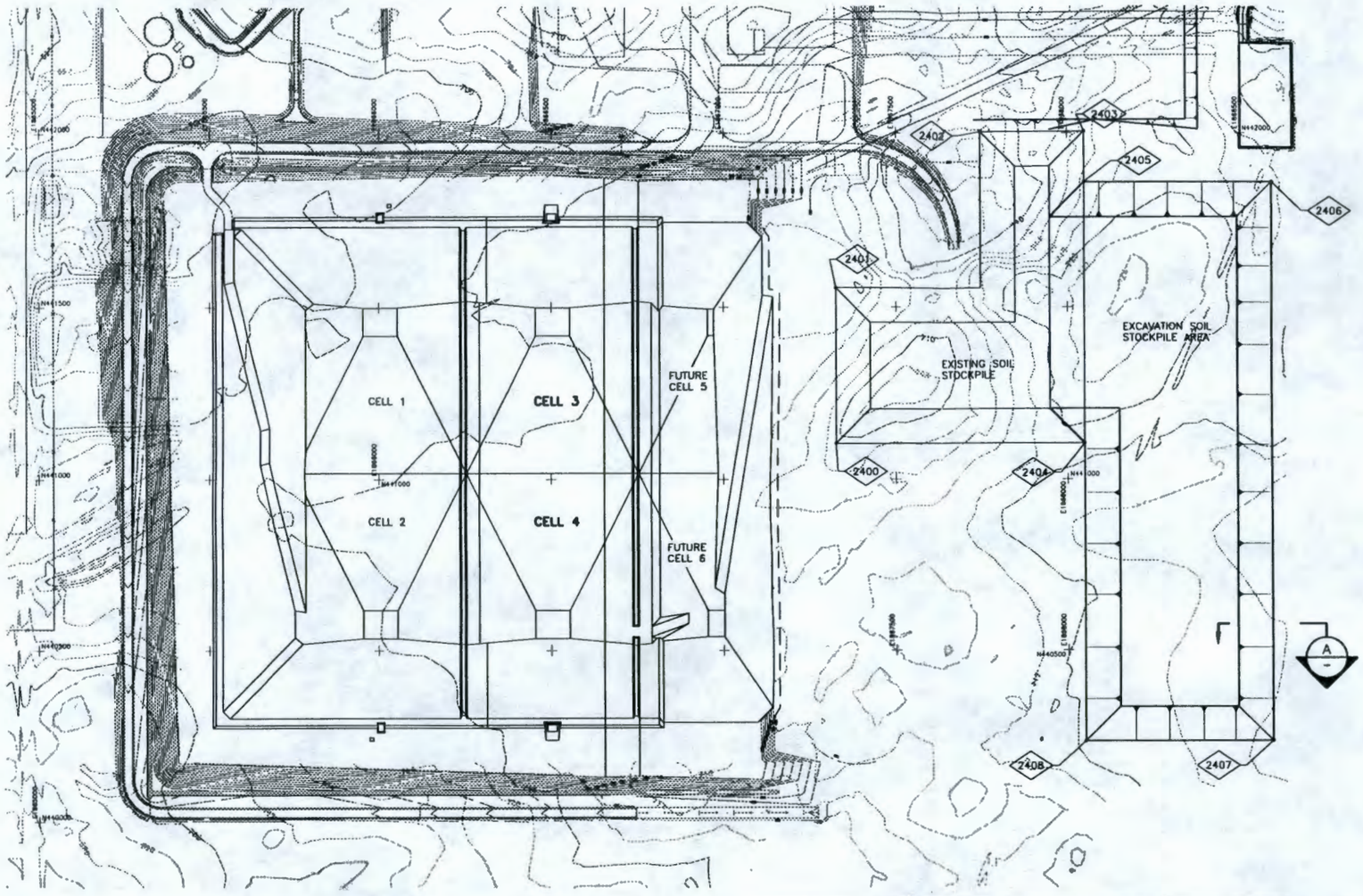

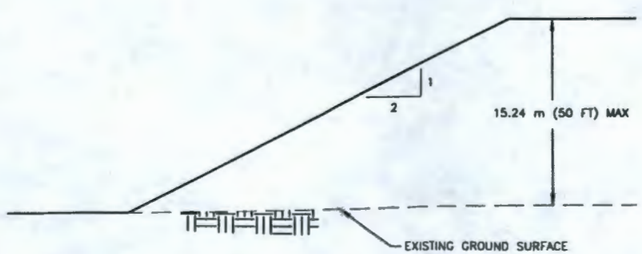

A

TYPICAL STOCKPILE EDGE SECTION

METERS 0 10 20
0 20 40 FEET

SUBGRADE CONTROL POINTS
COORDINATES (WASHINGTON STATE PLANE, FT)

POINT #	NORTHING	EASTING	DESCRIPTION
2400	441,104.50	1,867,324.00	SOIL STOCKPILE
2401	441,554.50	1,867,324.00	SOIL STOCKPILE
2402	442,004.50	1,867,749.00	SOIL STOCKPILE
2403	442,004.50	1,868,049.00	SOIL STOCKPILE
2404	441,104.50	1,868,049.00	SOIL STOCKPILE
2405	441,858.50	1,868,049.00	EXCAVATION SOIL STOCKPILE
2406	441,858.50	1,868,591.00	EXCAVATION SOIL STOCKPILE
2407	440,233.00	1,868,591.00	EXCAVATION SOIL STOCKPILE
2408	440,233.00	1,868,049.00	EXCAVATION SOIL STOCKPILE

NOTES

1. STORE EXCAVATED MATERIALS IN AREA DELINEATED.
2. EXISTING CONTOURS FROM AERIAL MAPPING PREPARED BY WALKER AND ASSOCIATES, PHOTOGRAMMETRY DATED MAY, 1994. TOPOGRAPHY DOES NOT REFLECT CHANGES FROM CLEARING AND GRUBBING OPERATIONS. CONTRACTOR SHALL CONSTRUCT FACILITIES TO THE FINISHED ELEVATIONS SHOWN.
3. SURVEY DATUM:
   VERTICAL NAVD: 88
   HORIZONTAL NAD: 83 (91)
4. CONTOUR INTERVAL 0.61 m (2 FT).

LEGEND:

GRADE BREAK

EXISTING CONTOUR

METERS 0 20 40 60 80 100 200
0 200 400 FEET
CONTOUR INTERVAL: 0.61 m (2 FT).

100%
REVIEW SUBMITTAL
NOT FOR CONSTRUCTION

REV.	DATE	DESCRIPTION	DRAWN BY	DRAFT CHK	ORIG/ ENG R	ENG R CHK	QA/TEA APPROV	B&R PROJ ENG R
C	1/20/98	ISSUED FOR 100% REVIEW	SJS	FSS	FSS	LHA		
B	11/21/97	ISSUED FOR 60% REVIEW	DJH	FSS	FSS	LHA		
A	10/7/97	ISSUED FOR 30% REVIEW	SJS	FSS	FSS	LHA		

SCALE: AS SHOWN

U.S. DEPARTMENT OF ENERGY
DOE FIELD OFFICE, RICHLAND
HANFORD ENVIRONMENTAL RESTORATION PROGRAM

BECHTEL HANFORD INC.
RICHLAND, WASHINGTON

Golder Associates
Redmond, Washington

ENVIRONMENTAL RESTORATION DISPOSAL FACILITY
CELLS 3 AND 4
STOCKPILE PLAN – TRENCH

BECHTEL JOB NO.	DOE CONTRACT NO.	CADD FILENAME
22192	DE-AC06-93RL12367	58278RB.DWG

TASK	DRAWING NO.	REV. NO.
600	0600X-DD-C0141	C

RECORD INFORMATION

RECORD NO.	BLDG NO.	INDEX NO.
H-6-14799 SHT01	600G	0100

DC2234 4/1/93

CAD_4 | K:\CAD\SDSKPROJ\9731810\1300\58278RC.DWG | 1-14-98 15:17 | xrf: NONE

DRAWING NO.	REV. NO.
0600X-DD-C0142	C

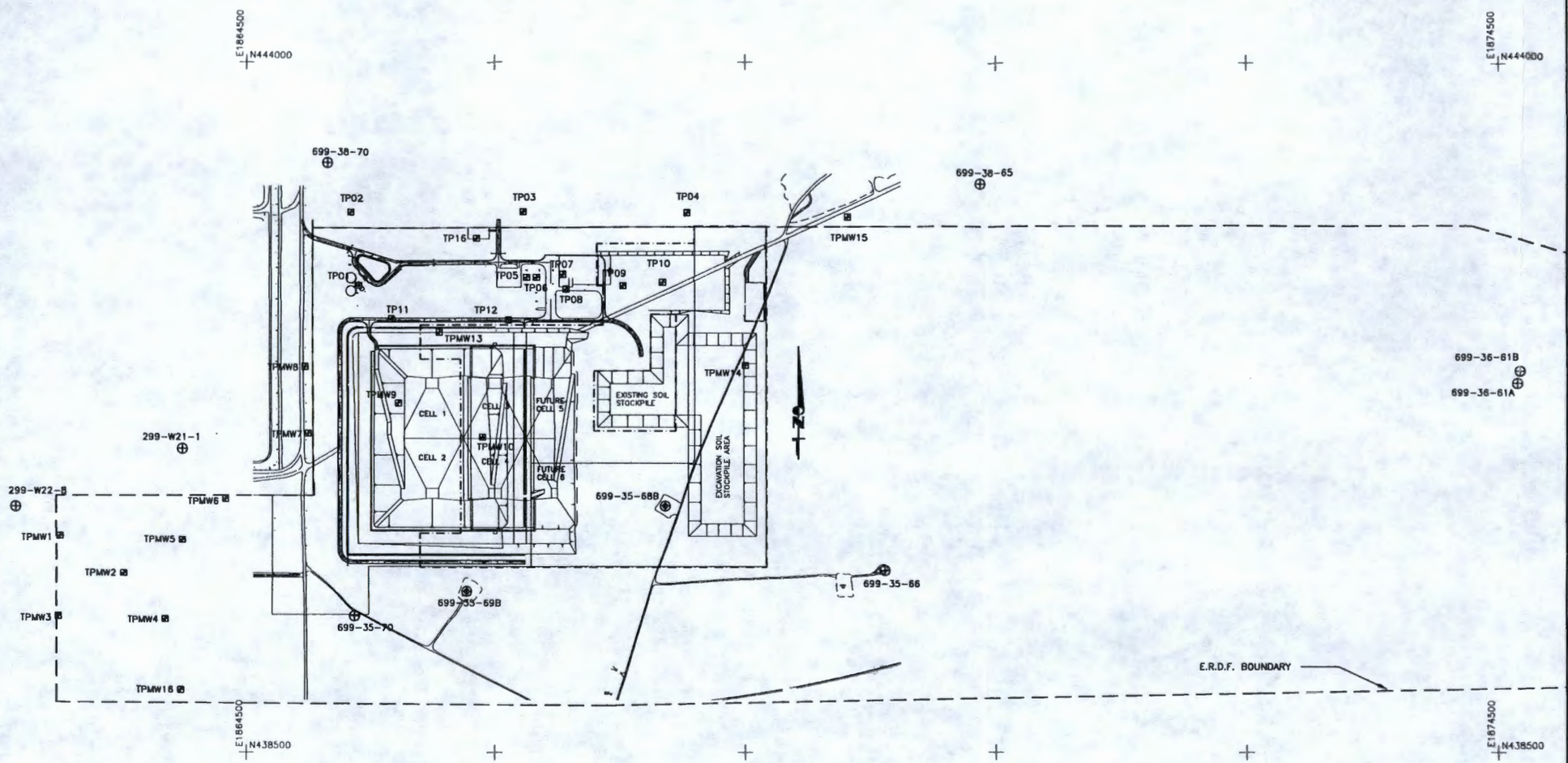

NOTES

LEGEND:

- BORING LOCATION
- TEST PIT LOCATION
- EXISTING WELL LOCATION

METERS 0 10 50 100
FEET 0 500 1000

100%
REVIEW SUBMITTAL
NOT FOR CONSTRUCTION

REV.	DATE	DESCRIPTION	DRAWN BY	DRAFT CH'K	DRG/ ENG'R	ENG'R CH'K	DS/TDL APPROV	BH PROJ ENG'R
C	1/20/98	ISSUED FOR 100% REVIEW	DJH	FSS	FSS	LHA		
B	11/21/97	ISSUED FOR 60% REVIEW	DJH	FSS	FSS	LHA		
A	10/7/97	ISSUED FOR 30% REVIEW	SJS	FSS	FSS	LHA		

SCALE: AS SHOWN

U.S. DEPARTMENT OF ENERGY
DOE FIELD OFFICE, RICHLAND
HANFORD ENVIRONMENTAL RESTORATION PROGRAM

BECHTEL HANFORD INC.
RICHLAND, WASHINGTON

Golder Associates
Redmond, Washington

ENVIRONMENTAL RESTORATION DISPOSAL FACILITY
CELLS 3 AND 4
TEST PIT AND BORING LOCATIONS

BECHTEL JOB NO.	DOE CONTRACT NO.	CADD FILENAME
22192	DE-AC06-93RL12367	58279RC.DWG

TASK	DRAWING NO.	REV. NO.
600	0600X-DD-C0142	C

RECORD INFORMATION

RECORD NO.	BLDG NO.	INDEX NO.
H-6-14800 SHT01	600G	0500

J_SNOW | K:\CAD\SDSKPRO\9731810\1300\58279RC.DWG | 12-29-97 15:52 | xrf: NONE

DRAWING NO.	REV. NO.
0600X-DD-C0143	C

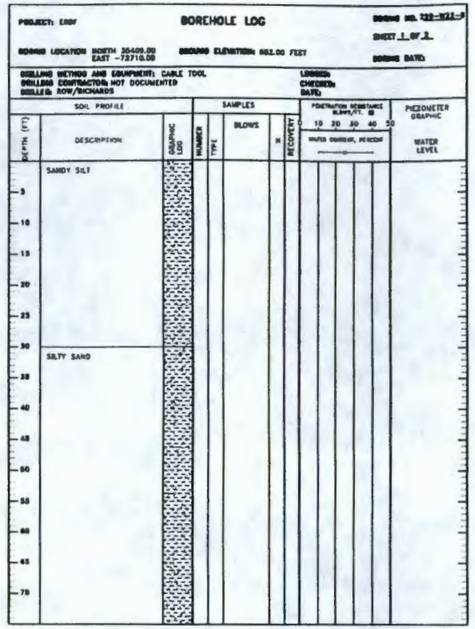

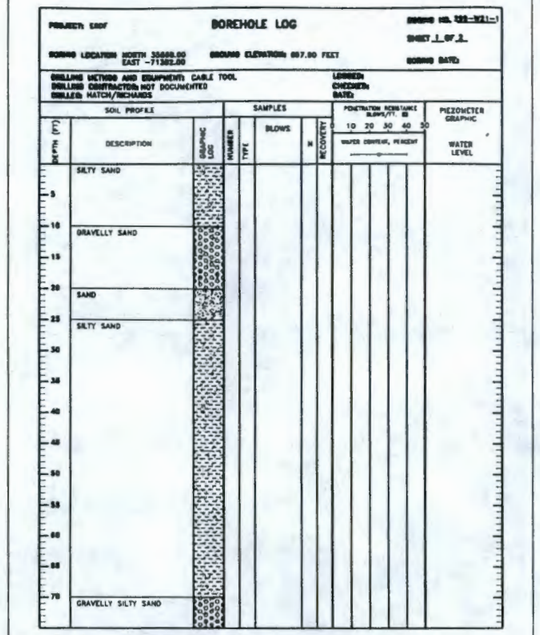

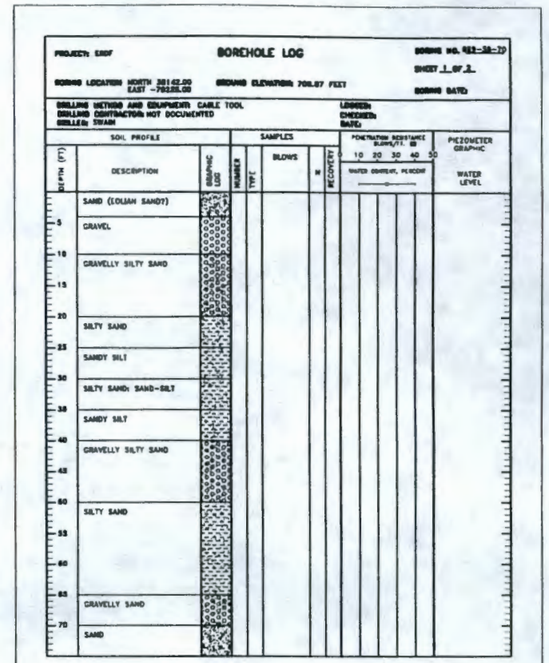

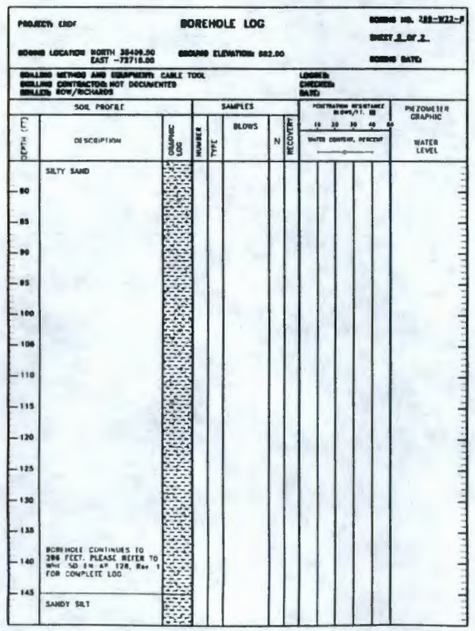

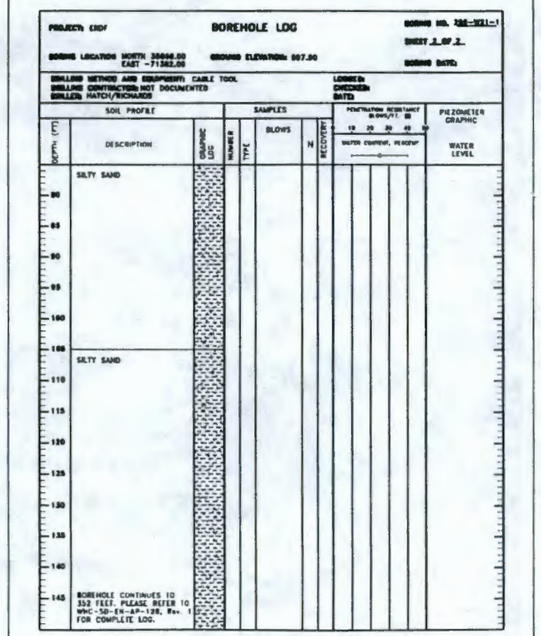

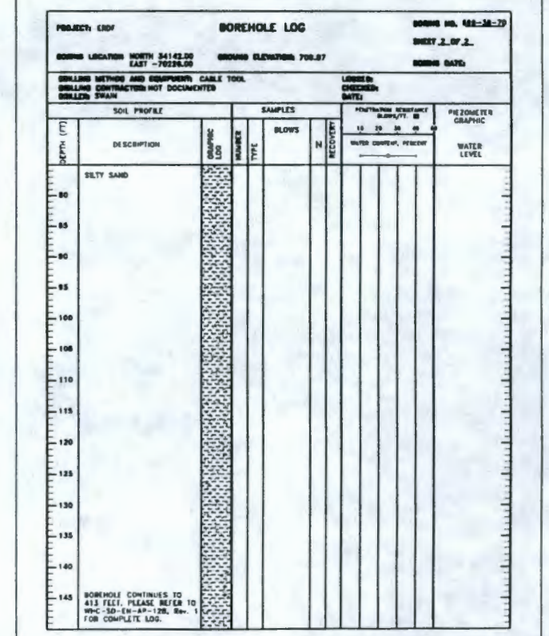

NOTES

1. BORINGS 699-35-69B AND 669-35-68B TRANSCRIBED FROM BORING LOGS SUPPLIED BY WHC GEOTECHNICAL DEPARTMENT. REMAINDER OF BORING LOGS TRANSCRIBED FROM WHC-SD-AP-128 REV.1, "SITE CHARACTERIZATION PLAN FOR THE ENVIRONMENTAL RESTORATION DISPOSAL FACILITY".
2. FOR LOCATIONS OF SOIL BORINGS, SOIL TEST PITS, AND EXISTING WELLS, SEE DRAWING NO. 0600X-DD-C0142.

100%
REVIEW SUBMITTAL
NOT FOR CONSTRUCTION

REV	DATE	DESCRIPTION	DRAWN BY	DRAFT CH'K	ENGR/ ENG'R	ENG'R CH'K	CG/TEN APPROV	RPS PROJ ENG'R
C	1/20/98	ISSUED FOR 100% REVIEW	DJH	FSS	FSS	FSS	LHA	
B	11/21/97	ISSUED FOR 60% REVIEW	DJH	FSS	FSS	FSS	LHA	
A	10/7/97	ISSUED FOR 30% REVIEW	SJS	FSS	FSS	FSS	LHA	

SCALE: AS SHOWN

U.S. DEPARTMENT OF ENERGY
DOE FIELD OFFICE, RICHLAND
HANFORD ENVIRONMENTAL RESTORATION PROGRAM

BECHTEL HANFORD INC.
RICHLAND, WASHINGTON

Golder Associates
Redmond, Washington

ENVIRONMENTAL RESTORATION DISPOSAL FACILITY
CELLS 3 AND 4
SOIL BORING LOGS - 1

BECHTEL JOB NO.	DOE CONTRACT NO.	CADD FILENAME
22192	DE-AC06-93RL12367	5880RC.DWG

TASK	DRAWING NO.	REV. NO.
600	0600X-DD-C0143	C

RECORD INFORMATION

RECORD NO.	BLDG NO.	INDEX NO.
H-6-14801 SHT01	600G	0500

J_SNOW | K:\CAD\SDSKPROJ\9731810\1300\5880RC.DWG | 1-14-98 15:01 | xrf: NONE

DRAWING NO.	REV. NO.
0600X-DD-C0144	C

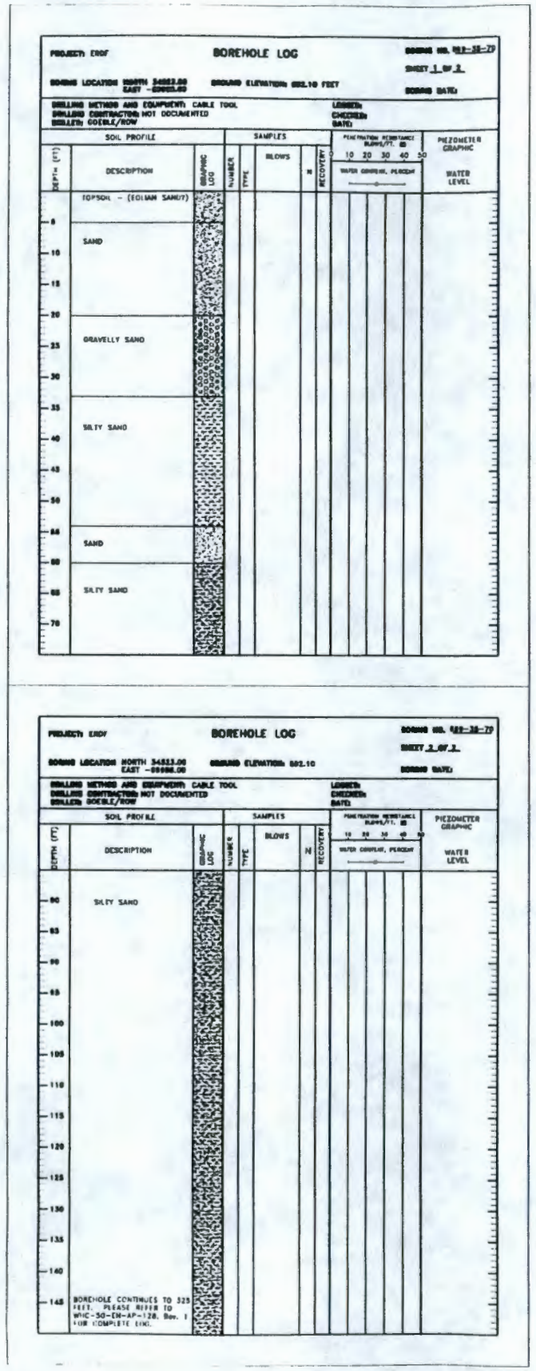

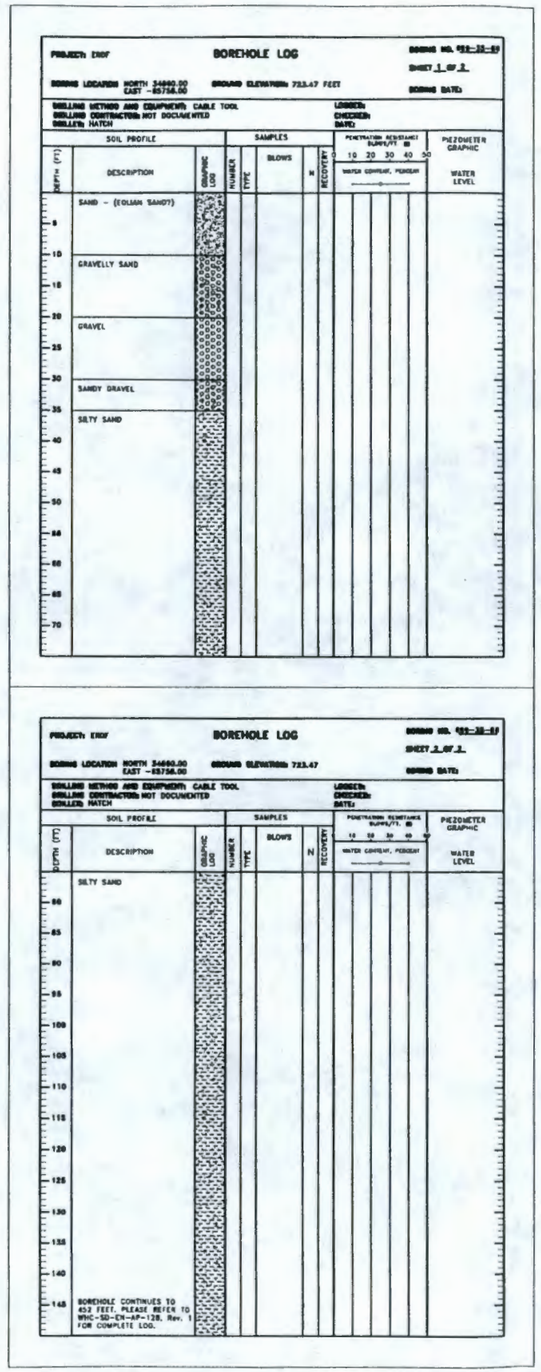

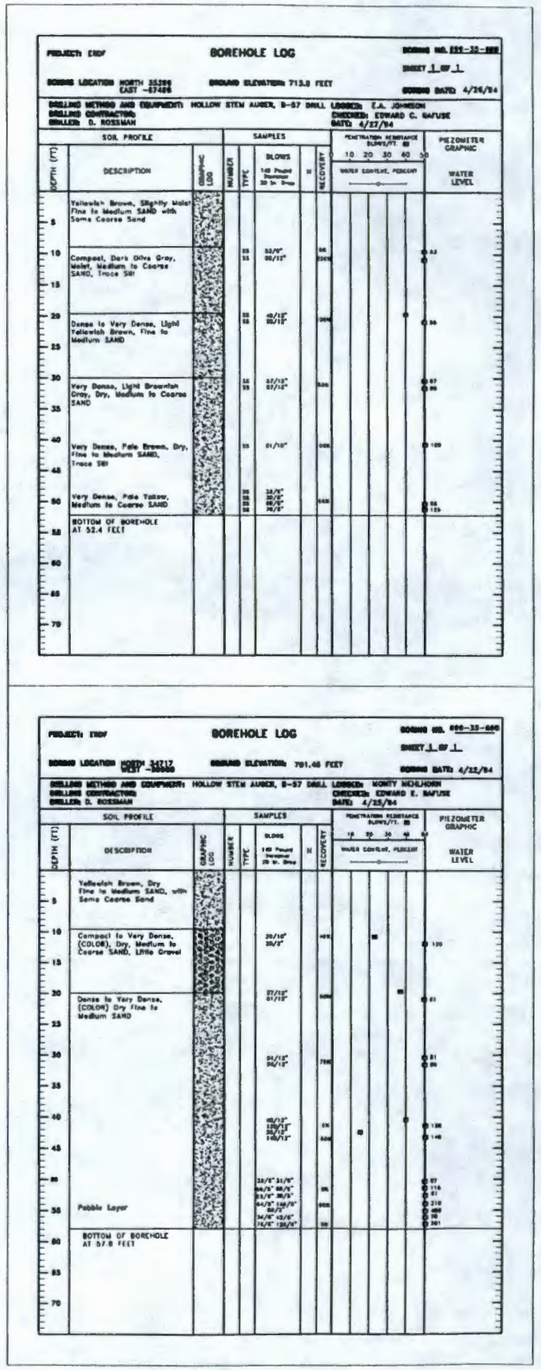

NOTES

1. BORINGS 699-35-69B AND 699-35-68B TRANSCRIBED FROM BORING LOGS SUPPLIED BY WHC GEOTECHNICAL DEPARTMENT. REMAINDER OF BORING LOGS TRANSCRIBED FROM WHC-SD-AP-128 REV.1. "SITE CHARACTERIZATION PLAN FOR THE ENVIRONMENTAL RESTORATION DISPOSAL FACILITY".

2. FOR LOCATIONS OF SOIL BORINGS, SOIL TEST PITS, AND EXISTING WELLS, SEE DRAWING NO. 0600X-DD-C0142.

100%
REVIEW SUBMITTAL
NOT FOR CONSTRUCTION

REV.	DATE	DESCRIPTION	DRAWN BY	DRAFT CHK	ORIG/ ENG R	ENGR CHK	CU/TEL APPROV	BE PROJ ENG R
C	1/20/98	ISSUED FOR 100% REVIEW	DJH	FSS	FSS	LHA		
B	11/21/97	ISSUED FOR 80% REVIEW	DJH	FSS	FSS	LHA		
A	10/7/97	ISSUED FOR 30% REVIEW	SJS	FSS	FSS	LHA		

SCALE: AS SHOWN

U.S. DEPARTMENT OF ENERGY
DOE FIELD OFFICE, RICHLAND
HANFORD ENVIRONMENTAL RESTORATION PROGRAM

BECHTEL HANFORD INC.
RICHLAND, WASHINGTON

Golder Associates
Redmond, Washington

ENVIRONMENTAL RESTORATION DISPOSAL FACILITY
CELLS 3 AND 4
SOIL BORING LOGS - 2

BECHTEL JOB NO.	DOE CONTRACT NO.	CADD FILENAME
22192	DE-AC06-93RL12367	58281RC.DWG

TASK	DRAWING NO.	REV. NO.
600	0600X-DD-C0144	C

RECORD INFORMATION

RECORD NO.	BLDG NO.	INDEX NO.
H-6-14802 SHT01	600G	0500

DRAWING NO.	REV NO.
0600X-DD-C0145	C

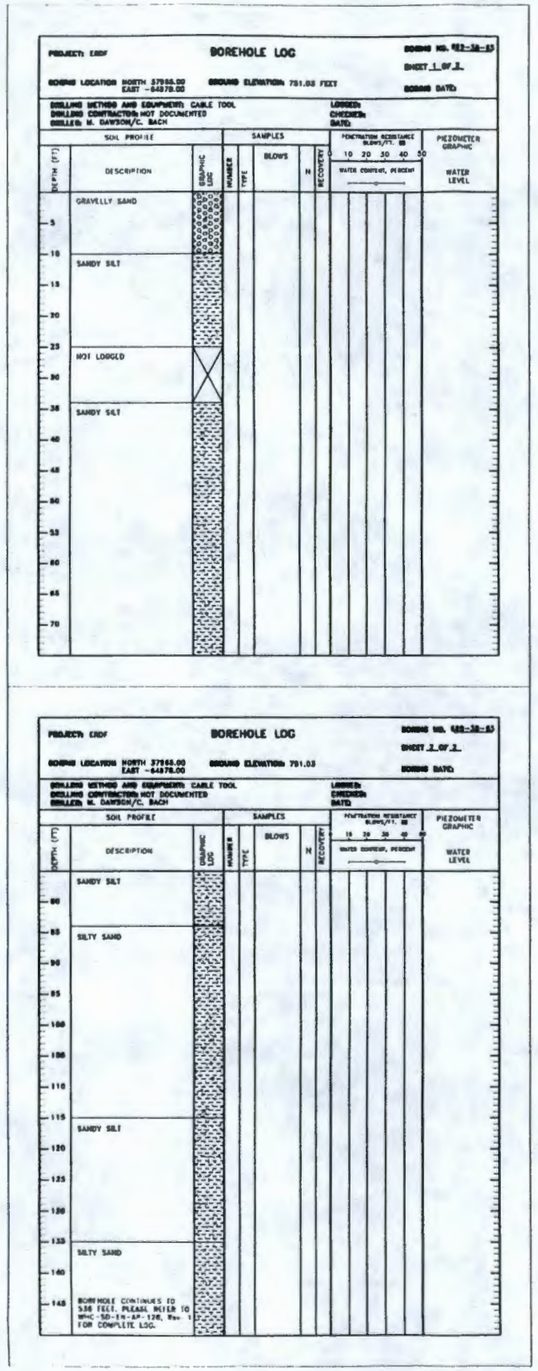

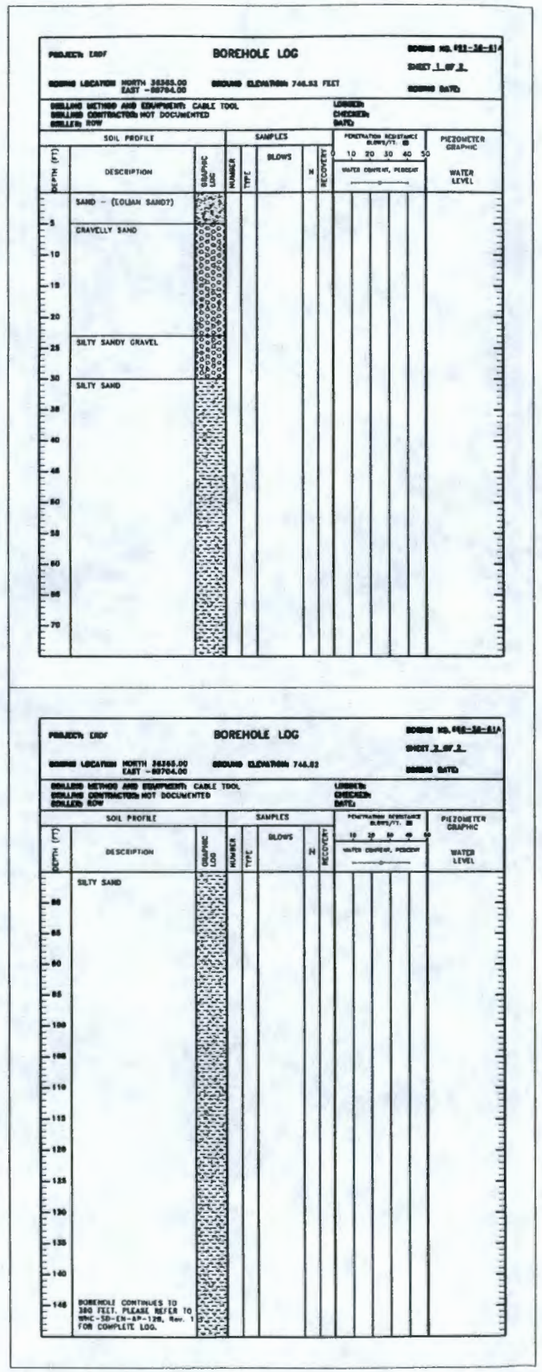

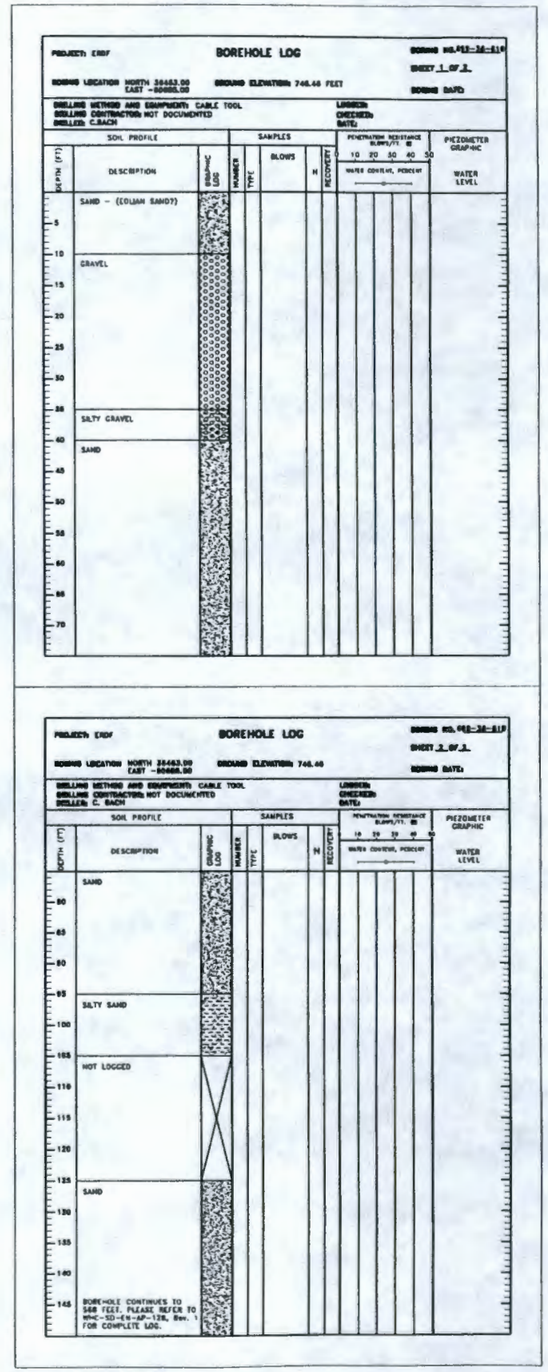

NOTES

1. BORINGS 699-35-69B AND 669-35-68B TRANSCRIBED FROM BORING LOGS SUPPLIED BY WHC GEOTECHNICAL DEPARTMENT. REMAINDER OF BORING LOGS TRANSCRIBED FROM WHC-SD-AP-128 REV.1, "SITE CHARACTERIZATION PLAN FOR THE ENVIRONMENTAL RESTORATION DISPOSAL FACILITY".

2. FOR LOCATIONS OF SOIL BORINGS, SOIL TEST PITS, AND EXISTING WELLS, SEE DRAWING NO. 0600X-DD-C0142.

100%
REVIEW SUBMITTAL
NOT FOR CONSTRUCTION

REV	DATE	DESCRIPTION	DRAWN BY	DRAFT CH'K	ORIG/ ENG R	ENG'R CH'K	DL/TEA APPROV	BH PROJ ENG R
C	1/20/98	ISSUED FOR 100% REVIEW	DJH	FSS	FSS	LHA		
B	10/21/97	ISSUED FOR 80% REVIEW	DJH	FSS	FSS	LHA		
A	10/7/97	ISSUED FOR 30% REVIEW	SJS	FSS	FSS	LHA		

SCALE: AS SHOWN

U.S. DEPARTMENT OF ENERGY
DOE FIELD OFFICE, RICHLAND
HANFORD ENVIRONMENTAL RESTORATION PROGRAM

BECHTEL HANFORD INC.
RICHLAND, WASHINGTON

Golder Associates
Redmond, Washington

ENVIRONMENTAL RESTORATION DISPOSAL FACILITY
CELLS 3 AND 4
SOIL BORING LOGS - 3

BECHTEL JOB NO.	DOE CONTRACT NO.	CADD FILENAME
22192	DE-AC06-93RL12367	58282RC.DWG

TASK	DRAWING NO.	REV. NO.
600	0600X-DD-C0145	C

RECORD INFORMATION

RECORD NO.	BLDG NO.	INDEX NO.
H-6-14803 SHT01	600G	0500

CAD_4 | K:\CAD\SDSKPRO\9731810\1300\58282RC.DWG | 1-14-98 15:31 | xrf: NONE

DRAWING NO.	REV. NO.
0600X-DD-C0146	C

PROJECT: ERDF — FIELD TEST PIT LOG — TEST PIT NO. TP1W1
SHEET 1 OF 1
PIT LOCATION: – GROUND ELEVATION: – TEST PIT DATE: 5/31/94
TRENCHING METHOD AND EQUIPMENT: CASE 590 TURBO
CONTRACTOR: E.F. JOHNSON CONSTRUCTION
OPERATOR: D. CADIEU
LOGGED: MARK ANDERSON
CHECKED: RICHARD LUARK
DATE: 5/31/94

DEPTH (FT)	GRAPHIC LOG	SAMPLES	MOISTURE CONTENT (%)	SOIL PROFILE DESCRIPTION
1–2		S1	3.5	COMPACT, MODERATE YELLOWISH BROWN, SILTY FINE TO COARSE SAND (SM), (EOLIAN DEPOSIT)
3–4				COMPACT, OLIVE BLACK, COARSE TO FINE SAND (SP), (HANFORD FORMATION)
5–12		S2	2.9	NOTE: 1 INCH CALICHE LAYER AT 4 FEET COMPACT, OLIVE BLACK, LAMINATED COARSE TO FINE SAND, TRACE SILT, LITTLE GRAVEL (SP), (HANFORD FORMATION)
13–14				TOTAL DEPTH = 12.5 FEET

PROJECT: ERDF — FIELD TEST PIT LOG — TEST PIT NO. TP1W2
SHEET 1 OF 1
PIT LOCATION: – GROUND ELEVATION: – TEST PIT DATE: 5/31/94
TRENCHING METHOD AND EQUIPMENT: CASE 590 TURBO
CONTRACTOR: E.F. JOHNSON CONSTRUCTION
OPERATOR: D. CADIEU
LOGGED: MARK ANDERSON
CHECKED: RICHARD LUARK
DATE: 5/31/94

DEPTH (FT)	GRAPHIC LOG	SAMPLES	MOISTURE CONTENT (%)	SOIL PROFILE DESCRIPTION
1–6		S1	3.1	COMPACT, MODERATE YELLOWISH BROWN SILTY FINE TO COARSE SAND (SM), (EOLIAN DEPOSIT)
7–8		S2	2.4	COMPACT, OLIVE GRAY, COARSE TO FINE SAND, TRACE FINE GRAVEL (SP), (HANFORD FORMATION)
9–14				TOTAL DEPTH = 8.7 FEET

PROJECT: ERDF — FIELD TEST PIT LOG — TEST PIT NO. TP1W3
SHEET 1 OF 1
PIT LOCATION: – GROUND ELEVATION: – TEST PIT DATE: 5/31/94
TRENCHING METHOD AND EQUIPMENT: CASE 590 EXTENDAHOE
CONTRACTOR: E.F. JOHNSON CONSTRUCTION
OPERATOR: D. CADIEU
LOGGED: MARK ANDERSON
CHECKED: RICHARD LUARK
DATE: 5/31/94

DEPTH (FT)	GRAPHIC LOG	SAMPLES	MOISTURE CONTENT (%)	SOIL PROFILE DESCRIPTION
1–2		S1	3.7	COMPACT, MODERATE YELLOWISH BROWN, SILTY, FINE TO COARSE SAND (SM), (EOLIAN DEPOSIT)
3–4				COMPACT, OLIVE GRAY, COARSE TO FINE SAND, LITTLE GRAVEL (SP), (HANFORD FORMATION)
5–12		S2	2.7	CALCIUM CEMENTED SAND LAYER ~1 INCH COMPACT TO DENSE, OLIVE GRAY, LAMINATED COARSE TO FINE SAND, LITTLE GRAVEL (SP), (HANFORD FORMATION)
13–14				TOTAL DEPTH = 13.7 FEET

PROJECT: ERDF — FIELD TEST PIT LOG — TEST PIT NO. TP1W4
SHEET 1 OF 1
PIT LOCATION: – GROUND ELEVATION: – TEST PIT DATE: 5/31/94
TRENCHING METHOD AND EQUIPMENT: CASE 590 EXTENDAHOE
CONTRACTOR: E.F. JOHNSON CONSTRUCTION
OPERATOR: D. CADIEU
LOGGED: MARK ANDERSON
CHECKED: RICHARD LUARK
DATE: 5/31/94

DEPTH (FT)	GRAPHIC LOG	SAMPLES	MOISTURE CONTENT (%)	SOIL PROFILE DESCRIPTION
1–2				COMPACT, MODERATE YELLOWISH BROWN, SILTY FINE TO COARSE SAND (SM), (EOLIAN DEPOSIT)
3–8				CALCIUM CEMENTED COARSE SAND LAYER ~2" COMPACT, OLIVE GRAY, COARSE TO FINE SAND, LITTLE GRAVEL (SP), (HANFORD FORMATION)
9–14				TOTAL DEPTH = 8 FEET

NOTES

1. FOR LOCATIONS OF SOIL BORINGS, SOIL TEST PITS, AND EXISTING WELLS, SEE DRAWING NO. 0600X-DD-C0142.

100%
REVIEW SUBMITTAL
NOT FOR CONSTRUCTION

REV	DATE	DESCRIPTION	DRAWN BY	DWFT CH'K	ORIG/ ENG R	ENG'R CH'K	DL/TEL APPROV	BH PROJ ENG'R
C	1/20/98	ISSUED FOR 100% REVIEW	DJH	FSS	FSS	LJHA		
B	11/21/97	ISSUED FOR 80% REVIEW	DJH	FSS	FSS	LJHA		
A	10/7/97	ISSUED FOR 30% REVIEW	SJS	FSS	FSS	LJHA		

SCALE: AS SHOWN

U.S. DEPARTMENT OF ENERGY
DOE FIELD OFFICE, RICHLAND
HANFORD ENVIRONMENTAL RESTORATION PROGRAM

BECHTEL HANFORD INC.
RICHLAND, WASHINGTON

Golder Associates
Redmond, Washington

ENVIRONMENTAL RESTORATION DISPOSAL FACILITY
CELLS 3 AND 4
TEST PIT LOGS – 1

BECHTEL JOB NO.	DOE CONTRACT NO.	CADD FILENAME
22192	DE-AC06-93RL12367	58283RC.DWG

TASK	DRAWING NO.	REV. NO.
600	0600X-DD-C0146	C

RECORD INFORMATION

RECORD NO.	BLDG NO.	INDEX NO.
H-6-14804 SHT01	600G	0500

DRAWING NO.	REV. NO.
0600X-DD-C0147	C

NOTES

1. FOR LOCATIONS OF SOIL BORINGS, SOIL TEST PITS, AND EXISTING WELLS, SEE DRAWING NO. 0600X-DD-C0142.

FIELD TEST PIT LOG

PROJECT: ERDF
PIT LOCATION: –
GROUND ELEVATION: –
TEST PIT NO. TP4R8
SHEET 1 OF 1
TEST PIT DATE: 5/31/94
TRENCHING METHOD AND EQUIPMENT: CASE 580 EXTENDAHOE
CONTRACTOR: E.P. JOHNSON CONSTRUCTION
OPERATOR: D. CADIEU
LOGGED: MARK ANDERSON
CHECKED: RICHARD LUARK
DATE: 5/31/94

DEPTH (FT)	GRAPHIC LOG	SAMPLES	MOISTURE CONTENT (%)	SOIL PROFILE DESCRIPTION
1–4		S1	2.9	COMPACT, MODERATE YELLOWISH BROWN, SILTY FINE TO COARSE SAND (SM), (EOLIAN DEPOSIT)
5–8		S2	3.5	COMPACT TO DENSE, PALE YELLOWISH BROWN, CALCIUM CEMENTED COARSE SAND, LITTLE TO TRACE FINE GRAVEL (SP), (HANFORD FORMATION)
				COMPACT, OLIVE BLACK, COARSE TO FINE SAND, TRACE GRAVEL (SP), (HANFORD FORMATION)
9				TOTAL DEPTH = 9 FEET

FIELD TEST PIT LOG

PROJECT: ERDF
PIT LOCATION: –
GROUND ELEVATION: –
TEST PIT NO. TP4R9
SHEET 1 OF 1
TEST PIT DATE: 6/1/94
TRENCHING METHOD AND EQUIPMENT: CASE 580 EXTENDAHOE
CONTRACTOR: E.P. JOHNSON CONSTRUCTION
OPERATOR: D. CADIEU
LOGGED: MARK ANDERSON
CHECKED: RICHARD LUARK
DATE: 5/31/94

DEPTH (FT)	GRAPHIC LOG	SAMPLES	MOISTURE CONTENT (%)	SOIL PROFILE DESCRIPTION
1–4		S1	4.5	COMPACT, PALE YELLOWISH BROWN, SILTY FINE TO COARSE SAND (SM), (EOLIAN DEPOSIT)
5–8		S2	2.8	COMPACT, OLIVE BLACK, COARSE TO FINE SAND TO SAND AND GRAVEL, LITTLE SILT (SW-GW), (HANFORD FORMATION)
9				TOTAL DEPTH = 9 FEET

FIELD TEST PIT LOG

PROJECT: ERDF
PIT LOCATION: –
GROUND ELEVATION: –
TEST PIT NO. TP4R7
SHEET 1 OF 1
TEST PIT DATE: 6/1/94
TRENCHING METHOD AND EQUIPMENT: CASE 580 EXTENDAHOE
CONTRACTOR: E.P. JOHNSON CONSTRUCTION
OPERATOR: D. CADIEU
LOGGED: MARK ANDERSON
CHECKED: RICHARD LUARK
DATE: 5/31/94

DEPTH (FT)	GRAPHIC LOG	SAMPLES	MOISTURE CONTENT (%)	SOIL PROFILE DESCRIPTION
1–6				COMPACT, PALE YELLOWISH BROWN, SILTY FINE TO COARSE SAND (SM)
7				COMPACT, OLIVE BLACK, COARSE TO FINE SAND AND GRAVEL (SP), (HANFORD FORMATION)
8–12		S1	2.8	COMPACT TO DENSE, MODERATE YELLOWISH BROWN, SILTY COARSE TO FINE SAND, LITTLE TO SOME GRAVEL (SM), (HANFORD FORMATION)
13				TOTAL DEPTH = 13 FEET

FIELD TEST PIT LOG

PROJECT: ERDF
PIT LOCATION: –
GROUND ELEVATION: –
TEST PIT NO. TP4R6
SHEET 1 OF 1
TEST PIT DATE: 6/1/94
TRENCHING METHOD AND EQUIPMENT: CASE 580 EXTENDAHOE
CONTRACTOR: E.P. JOHNSON CONSTRUCTION
OPERATOR: D. CADIEU
LOGGED: MARK ANDERSON
CHECKED: RICHARD LUARK
DATE: 5/31/94

DEPTH (FT)	GRAPHIC LOG	SAMPLES	MOISTURE CONTENT (%)	SOIL PROFILE DESCRIPTION
1–4		S1	4.5	COMPACT, MODERATE YELLOWISH BROWN, SILTY FINE TO COARSE SAND (SP-SM), (EOLIAN DEPOSIT)
7				COMPACT, OLIVE BLACK, COARSE SANDY GRAVEL (GP), (HANFORD FORMATION)
9–12		S2	3.5	COMPACT TO DENSE, MODERATE YELLOWISH BROWN, SILTY COARSE TO FINE SAND, LITTLE TO SOME GRAVEL (SM), (HANFORD FORMATION)
13				TOTAL DEPTH = 13 FEET

FIELD TEST PIT LOG

PROJECT: ERDF
PIT LOCATION: –
GROUND ELEVATION: –
TEST PIT NO. TP4R5
SHEET 1 OF 1
TEST PIT DATE: 6/1/94
TRENCHING METHOD AND EQUIPMENT: CASE 580 EXTENDAHOE
CONTRACTOR: E.P. JOHNSON CONSTRUCTION
OPERATOR: D. CADIEU
LOGGED: MARK ANDERSON
CHECKED: RICHARD LUARK
DATE: 5/31/94

DEPTH (FT)	GRAPHIC LOG	SAMPLES	MOISTURE CONTENT (%)	SOIL PROFILE DESCRIPTION
1–8				COMPACT, MODERATE YELLOWISH BROWN, SILTY FINE TO MEDIUM SAND (SM), (EOLIAN DEPOSIT)
6–7		S1	2.6	COMPACT, OLIVE BLACK, COARSE TO FINE SAND, SOME GRAVEL (GP), (HANFORD FORMATION)
7				COMPACT, MODERATE YELLOWISH BROWN, SILTY, COARSE TO FINE SAND, SOME GRAVEL (SM), (HANFORD FORMATION)
9				TOTAL DEPTH = 9 FEET

FIELD TEST PIT LOG

PROJECT: ERDF
PIT LOCATION: –
GROUND ELEVATION: –
TEST PIT NO. TP4R10
SHEET 1 OF 1
TEST PIT DATE: 6/1/94
TRENCHING METHOD AND EQUIPMENT: CASE 580 EXTENDAHOE
CONTRACTOR: E.P. JOHNSON CONSTRUCTION
OPERATOR: D. CADIEU
LOGGED: MARK ANDERSON
CHECKED: RICHARD LUARK
DATE: 5/31/94

DEPTH (FT)	GRAPHIC LOG	SAMPLES	MOISTURE CONTENT (%)	SOIL PROFILE DESCRIPTION
1–4		S1	6.7	COMPACT, MODERATE YELLOWISH BROWN, SILTY FINE TO COARSE SAND, TRACE GRAVEL (SM), (EOLIAN DEPOSIT)
5–8		S2	2.0	COMPACT, OLIVE BLACK, COARSE TO FINE SAND AND GRAVEL WITH COBBLES TO COARSE TO FINE SAND, SOME GRAVEL WITH COBBLES (SP TO GP), (HANFORD FORMATION)
9				TOTAL DEPTH = 9 FEET

100%
REVIEW SUBMITTAL
NOT FOR CONSTRUCTION

REV	DATE	DESCRIPTION	DRAWN BY	DRAFT CH'K	DRG/ ENG R	ENG'R CH'K	DI/TEA APPROV	IR& PROJ ENG R
△								
△								
C	1/20/98	ISSUED FOR 100% REVIEW	DJH	FSS	FSS	LHA		
B	11/21/97	ISSUED FOR 80% REVIEW	DJH	FSS	FSS	LHA		
A	10/7/97	ISSUED FOR 30% REVIEW	SJS	FSS	FSS	LHA		

SCALE: AS SHOWN

U.S. DEPARTMENT OF ENERGY
DOE FIELD OFFICE, RICHLAND
HANFORD ENVIRONMENTAL RESTORATION PROGRAM

BECHTEL HANFORD INC.
RICHLAND, WASHINGTON

Golder Associates
Redmond, Washington

ENVIRONMENTAL RESTORATION DISPOSAL FACILITY
CELLS 3 AND 4
TEST PIT LOGS – 2

BECHTEL JOB NO.	DOE CONTRACT NO.	CADD FILENAME
22192	DE-AC06-93RL12367	58284RC.DWG

TASK	DRAWING NO.	REV. NO.
600	0600X-DD-C0147	C

RECORD INFORMATION

RECORD NO.	BLDG NO.	INDEX NO.
H-6-14805 SHT01	600G	0500

CAD. 4 | K:\CAD\SDSKPROJ\9731810\1300\58284RC.DWG | 1-14-98 15:36 | xrf: NONE

DRAWING NO.	REV. NO.
0600X-DD-C0148	C

PROJECT: EROF — FIELD TEST PIT LOG — TEST PIT NO. TP3809 — SHEET 1 OF 1

PIT LOCATION: – GROUND ELEVATION: – TEST PIT DATE: 5/31/94

TRENCHING METHOD AND EQUIPMENT: CASE 590 EXTENDAHOE — LOGGED: MARK ANDERSON
CONTRACTOR: E.P. JOHNSON CONSTRUCTION — CHECKED: RICHARD LUARK
OPERATOR: D. CADIEU — DATE: 5/31/94

DEPTH (FT)	GRAPHIC LOG	SAMPLES	MOISTURE CONTENT (%)	SOIL PROFILE DESCRIPTION
1–4		S1	2.9	COMPACT, MODERATE YELLOWISH BROWN, SILTY FINE TO COARSE SAND (SM), (EOLIAN DEPOSIT)
5–9		S2	3.3	COMPACT TO DENSE, PALE YELLOWISH BROWN, CALCIUM CEMENTED COARSE SAND, LITTLE TO TRACE FINE GRAVEL (SP). (HANFORD FORMATION)
				COMPACT, OLIVE BLACK, COARSE TO FINE SAND, TRACE GRAVEL (SP), (HANFORD FORMATION)
9–14				TOTAL DEPTH = 9 FEET

PROJECT: EROF — FIELD TEST PIT LOG — TEST PIT NO. TP3809 — SHEET 1 OF 1

PIT LOCATION: – GROUND ELEVATION: – TEST PIT DATE: 6/1/94

TRENCHING METHOD AND EQUIPMENT: CASE 590 EXTENDAHOE — LOGGED: MARK ANDERSON
CONTRACTOR: E.P. JOHNSON CONSTRUCTION — CHECKED: RICHARD LUARK
OPERATOR: D. CADIEU — DATE: 5/31/94

DEPTH (FT)	GRAPHIC LOG	SAMPLES	MOISTURE CONTENT (%)	SOIL PROFILE DESCRIPTION
1–5		S1	4.5	COMPACT, PALE YELLOWISH BROWN, SILTY FINE TO COARSE SAND (SM), (EOLIAN DEPOSIT)
6–9		S2	2.8	COMPACT, OLIVE BLACK, COARSE TO FINE SAND TO SAND AND GRAVEL, LITTLE SILT (SW-GW), (HANFORD FORMATION)
9–14				TOTAL DEPTH = 9 FEET

PROJECT: EROF — FIELD TEST PIT LOG — TEST PIT NO. TP3807 — SHEET 1 OF 1

PIT LOCATION: – GROUND ELEVATION: – TEST PIT DATE: 6/1/94

TRENCHING METHOD AND EQUIPMENT: CASE 590 EXTENDAHOE — LOGGED: MARK ANDERSON
CONTRACTOR: E.P. JOHNSON CONSTRUCTION — CHECKED: RICHARD LUARK
OPERATOR: D. CADIEU — DATE: 5/31/94

DEPTH (FT)	GRAPHIC LOG	SAMPLES	MOISTURE CONTENT (%)	SOIL PROFILE DESCRIPTION
1–6				COMPACT, PALE YELLOWISH BROWN, SILTY FINE TO COARSE SAND (SM)
7–8				COMPACT, OLIVE BLACK, COARSE TO FINE SAND AND GRAVEL (SP), (HANFORD FORMATION)
8–13		S1	2.8	COMPACT TO DENSE, MODERATE YELLOWISH BROWN, SILTY COARSE TO FINE SAND, LITTLE TO SOME GRAVEL (SM), (HANFORD FORMATION)
13–14				TOTAL DEPTH = 13 FEET

PROJECT: EROF — FIELD TEST PIT LOG — TEST PIT NO. TP3810 — SHEET 1 OF 1

PIT LOCATION: – GROUND ELEVATION: – TEST PIT DATE: 6/1/94

TRENCHING METHOD AND EQUIPMENT: CASE 590 EXTENDAHOE — LOGGED: MARK ANDERSON
CONTRACTOR: E.P. JOHNSON CONSTRUCTION — CHECKED: RICHARD LUARK
OPERATOR: D. CADIEU — DATE: 5/31/94

DEPTH (FT)	GRAPHIC LOG	SAMPLES	MOISTURE CONTENT (%)	SOIL PROFILE DESCRIPTION
1–4		S1	4.5	COMPACT, MODERATE YELLOWISH BROWN, SILTY FINE TO COARSE SAND (SP-SM), (EOLIAN DEPOSIT)
5–6				COMPACT, OLIVE BLACK, COARSE SANDY GRAVEL (GP), (HANFORD FORMATION)
9–13		S2	3.5	COMPACT TO DENSE, MODERATE YELLOWISH BROWN, SILTY COARSE TO FINE SAND, LITTLE TO SOME GRAVEL (SM), (HANFORD FORMATION)
13–14				TOTAL DEPTH = 13 FEET

PROJECT: EROF — FIELD TEST PIT LOG — TEST PIT NO. TP3812 — SHEET 1 OF 1

PIT LOCATION: – GROUND ELEVATION: – TEST PIT DATE: 6/1/94

TRENCHING METHOD AND EQUIPMENT: CASE 590 EXTENDAHOE — LOGGED: MARK ANDERSON
CONTRACTOR: E.P. JOHNSON CONSTRUCTION — CHECKED: RICHARD LUARK
OPERATOR: D. CADIEU — DATE: 5/31/94

DEPTH (FT)	GRAPHIC LOG	SAMPLES	MOISTURE CONTENT (%)	SOIL PROFILE DESCRIPTION
1–4				COMPACT, MODERATE YELLOWISH BROWN, SILTY FINE TO MEDIUM SAND (SM), (EOLIAN DEPOSIT)
5–6		S1	2.0	COMPACT, OLIVE BLACK, COARSE TO FINE SAND, SOME GRAVEL (SP), (HANFORD FORMATION)
7				COMPACT, MODERATE YELLOWISH BROWN, SILTY, COARSE TO FINE SAND, SOME GRAVEL (SM), (HANFORD FORMATION)
8–9				TOTAL DEPTH = 8 FEET

PROJECT: EROF — FIELD TEST PIT LOG — TEST PIT NO. TP3813 — SHEET 1 OF 1

PIT LOCATION: – GROUND ELEVATION: – TEST PIT DATE: 6/1/94

TRENCHING METHOD AND EQUIPMENT: CASE 590 EXTENDAHOE — LOGGED: MARK ANDERSON
CONTRACTOR: E.P. JOHNSON CONSTRUCTION — CHECKED: RICHARD LUARK
OPERATOR: D. CADIEU — DATE: 5/31/94

DEPTH (FT)	GRAPHIC LOG	SAMPLES	MOISTURE CONTENT (%)	SOIL PROFILE DESCRIPTION
1–4		S1	6.7	COMPACT, MODERATE YELLOWISH BROWN, SILTY FINE TO COARSE SAND, TRACE GRAVEL (SM), (EOLIAN DEPOSIT)
5–8		S2	2.0	COMPACT, OLIVE BLACK, COARSE TO FINE SAND AND GRAVEL WITH COBBLES TO COARSE TO FINE SAND, SOME GRAVEL WITH COBBLES (SP TO GP), (HANFORD FORMATION)
9–14				TOTAL DEPTH = 9 FEET

NOTES

1. FOR LOCATIONS OF SOIL BORINGS, SOIL TEST PITS, AND EXISTING WELLS, SEE DRAWING NO. 0600X-DD-C0142.

100%
REVIEW SUBMITTAL
NOT FOR CONSTRUCTION

REV	DATE	DESCRIPTION	DRAWN BY	DRAFT CHK	ORIG/ ENGR	CHK'D CHK	GL/TEA APPROV	BH PROJ ENG A
C	1/20/98	ISSUED FOR 100% REVIEW	DJH	FSS	FSS	LHA		
B	11/21/97	ISSUED FOR 60% REVIEW	DJH	FSS	FSS	LHA		
A	10/7/97	ISSUED FOR 30% REVIEW	SJS	FSS	FSS	LHA		

SCALE: AS SHOWN

U.S. DEPARTMENT OF ENERGY
DOE FIELD OFFICE, RICHLAND
HANFORD ENVIRONMENTAL RESTORATION PROGRAM

BECHTEL HANFORD INC.
RICHLAND, WASHINGTON

Golder Associates
Redmond, Washington

ENVIRONMENTAL RESTORATION DISPOSAL FACILITY
CELLS 3 AND 4
TEST PIT LOGS – 3

BECHTEL JOB NO.	DOE CONTRACT NO.	CADD FILENAME
22192	DE-AC06-93RL12367	58285RC.DWG

TASK	DRAWING NO.	REV. NO.
600	0600X-DD-C0148	C

RECORD INFORMATION

RECORD NO.	BLDG NO.	INDEX NO.
H-6-14945 SHT01	600G	0500

CAD_4 | K:\CAD\SDSKPROJ\9731810\1300\58285RC.DWG | 1-14-98 15:37 | xrf: NONE

DRAWING NO	REV NO
0600X-DD-C0149	C

NOTES

1. FOR LOCATIONS OF SOIL BORINGS, SOIL TEST PITS, AND EXISTING WELLS, SEE DRAWING NO. 0600X-DD-C0142.

FIELD TEST PIT LOG

PROJECT: ERDF — TEST PIT NO. TP93
PIT LOCATION: – GROUND ELEVATION: – SHEET 1 OF 1 — TEST PIT DATE: 12/2/94
TRENCHING METHOD AND EQUIPMENT: FORD 8630 — LOGGED: MARK ANDERSON
CONTRACTOR: E.P. JOHNSON CONSTRUCTION — CHECKED: SCOTT STONEMAN
OPERATOR: D. CADIEU — DATE: 1/23/95

DEPTH (FT)	GRAPHIC LOG	SAMPLES	MOISTURE CONTENT (%)	SOIL PROFILE DESCRIPTION
1–6		S1, S2		LOOSE TO COMPACT, PALE YELLOWISH BROWN, COARSE TO FINE SAND WITH SOME SILT (SW-SM), (EOLIAN DEPOSIT)
7–10		S3		COMPACT TO DENSE, BROWNISH BLACK, COARSE TO FINE GRAVEL WITH SOME COARSE TO FINE SAND, DRY, CACO3 CEMENTATION AT CONTACT (GW), (HANFORD FORMATION)
				TOTAL DEPTH = 10 FEET

FIELD TEST PIT LOG

PROJECT: ERDF — TEST PIT NO. TP94
PIT LOCATION: – GROUND ELEVATION: – SHEET 1 OF 1 — TEST PIT DATE: 12/1/94
TRENCHING METHOD AND EQUIPMENT: FORD 8630 — LOGGED: MARK ANDERSON
CONTRACTOR: E.P. JOHNSON CONSTRUCTION — CHECKED: SCOTT STONEMAN
OPERATOR: D. CADIEU — DATE: 1/23/95

DEPTH (FT)	GRAPHIC LOG	SAMPLES	MOISTURE CONTENT (%)	SOIL PROFILE DESCRIPTION
1–6		S1		LOOSE, PALE YELLOWISH BROWN, COARSE TO FINE SAND WITH LITTLE SILT (SW-SM), (EOLIAN DEPOSIT)
7–8		S2		COMPACT TO DENSE, GRAY, COARSE TO FINE TO MEDIUM SAND, TRACE SILT (GW), (HANFORD FORMATION)
				TOTAL DEPTH = 8 FEET

FIELD TEST PIT LOG

PROJECT: ERDF — TEST PIT NO. TP95
PIT LOCATION: – GROUND ELEVATION: – SHEET 1 OF 1 — TEST PIT DATE: 11/31/94
TRENCHING METHOD AND EQUIPMENT: FORD 8630 — LOGGED: MARK ANDERSON
CONTRACTOR: E.P. JOHNSON CONSTRUCTION — CHECKED: SCOTT STONEMAN
OPERATOR: D. CADIEU — DATE: 1/23/95

DEPTH (FT)	GRAPHIC LOG	SAMPLES	MOISTURE CONTENT (%)	SOIL PROFILE DESCRIPTION
1–7		S1		PALE YELLOWISH BROWN, COARSE TO FINE SAND LITTLE SILT (SW), (EOLIAN DEPOSIT)
8–12		S2		LIGHT OLIVE BROWN, MEDIUM TO FINE SAND, SOME SILT, TRACE COARSE TO FINE GRAVEL (SM)
12				COMPACT TO DENSE, BROWNISH BLACK, COARSE TO FINE GRAVEL WITH SAND (GW), (HANFORD FORMATION)
				TOTAL DEPTH = 12.5 FEET

FIELD TEST PIT LOG

PROJECT: ERDF — TEST PIT NO. TP96
PIT LOCATION: – GROUND ELEVATION: – SHEET 1 OF 1 — TEST PIT DATE: 11/30/94
TRENCHING METHOD AND EQUIPMENT: FORD 8630 — LOGGED: MARK ANDERSON
CONTRACTOR: E.P. JOHNSON CONSTRUCTION — CHECKED: SCOTT STONEMAN
OPERATOR: D. CADIEU — DATE: 1/23/95

DEPTH (FT)	GRAPHIC LOG	SAMPLES	MOISTURE CONTENT (%)	SOIL PROFILE DESCRIPTION
1–9		S1		LOOSE, PALE YELLOWISH BROWN, COARSE TO FINE SAND, LITTLE TO SOME SILT (SW), (EOLIAN DEPOSIT)
10–9.5		S2		COMPACT, VERY DARK GRAY, COARSE TO MEDIUM SAND, SOME COBBLES, SOME COARSE TO FINE GRAVEL, TRACE SILT (SP)
				TOTAL DEPTH = 9.5 FEET

FIELD TEST PIT LOG

PROJECT: ERDF — TEST PIT NO. TP97
PIT LOCATION: – GROUND ELEVATION: – SHEET 1 OF 1 — TEST PIT DATE: 11/30/94
TRENCHING METHOD AND EQUIPMENT: FORD 8630 — LOGGED: MARK ANDERSON
CONTRACTOR: E.P. JOHNSON CONSTRUCTION — CHECKED: SCOTT STONEMAN
OPERATOR: D. CADIEU — DATE: 1/23/95

DEPTH (FT)	GRAPHIC LOG	SAMPLES	MOISTURE CONTENT (%)	SOIL PROFILE DESCRIPTION
1–5		S1		LOOSE, LIGHT BROWNISH GRAY, FINE SAND SOME SILT (SM), (EOLIAN DEPOSIT)
5				CALICHE LAYER~3 INCHES
6–9		S2		LOOSE TO COMPACT, BROWNISH BLACK, COARSE TO FINE GRAVEL, SOME COARSE TO FINE SAND, (HANFORD FORMATION)
				TOTAL DEPTH = 9 FEET

FIELD TEST PIT LOG

PROJECT: ERDF — TEST PIT NO. TP98
PIT LOCATION: – GROUND ELEVATION: – SHEET 1 OF 1 — TEST PIT DATE: 11/30/94
TRENCHING METHOD AND EQUIPMENT: FORD 8630 — LOGGED: MARK ANDERSON
CONTRACTOR: E.P. JOHNSON CONSTRUCTION — CHECKED: SCOTT STONEMAN
OPERATOR: D. CADIEU — DATE: 1/23/95

DEPTH (FT)	GRAPHIC LOG	SAMPLES	MOISTURE CONTENT (%)	SOIL PROFILE DESCRIPTION
1–4		S1		LOOSE, PALE YELLOWISH BROWN, COARSE TO FINE SAND, LITTLE TO SOME SILT (SM), (EOLIAN DEPOSIT)
4				CALICHE LAYER~0.4 FT
5–6				DENSE, COARSE GRAVEL, LITTLE COARSE TO FINE SAND (HANFORD FORMATION)
7–15		S2		COMPACT TO DENSE, PALE OLIVE, LAMINATED, MEDIUM TO FINE SAND, LITTLE SILT (SP-SM), (HANFORD FORMATION)
				TOTAL DEPTH = 15.3 FEET

100%
REVIEW SUBMITTAL
NOT FOR CONSTRUCTION

REV.	DATE	DESCRIPTION	DRAWN BY	DRAFT CH'K	ORIG/ ENG'R	ENG'R CH'K	DL/TEX APPROV	B&R PROJ ENG'R
C	1/20/98	ISSUED FOR 100% REVIEW	DJH	FSS	FSS	LHA		
B	11/21/97	ISSUED FOR 60% REVIEW	DJH	FSS	FSS	LHA		
A	10/7/97	ISSUED FOR 30% REVIEW	SJS	FSS	FSS	LHA		

SCALE: AS SHOWN

U.S. DEPARTMENT OF ENERGY
DOE FIELD OFFICE, RICHLAND
HANFORD ENVIRONMENTAL RESTORATION PROGRAM

BECHTEL HANFORD INC.
RICHLAND, WASHINGTON

Golder Associates
Redmond, Washington

ENVIRONMENTAL RESTORATION DISPOSAL FACILITY
CELLS 3 AND 4
TEST PIT LOGS – 4

BECHTEL JOB NO.	DOE CONTRACT NO.	CADD FILENAME
22192	DE-AC06-93RL12367	58286RC.DWG

TASK	DRAWING NO.	REV. NO.
600	0600X-DD-C0149	C

HANFORD

RECORD INFORMATION

RECORD NO.	BLDG NO.	INDEX NO.
H-6-14946 SHT01	600G	0500

CAD_4 | K:\CAD\SDSKPRO.A\9731810\1300\58286RC.DWG | 1-14-98 15:38 | xrf: NONE

DEC2234 4/7/95

DRAWING NO.	REV. NO.
0600X-DD-C0150	C

FIELD TEST PIT LOG

PROJECT: ERDF
PIT LOCATION: –
GROUND ELEVATION: –
TEST PIT NO. TP09
SHEET 1 OF 1
TEST PIT DATE: 11/30/94

TRENCHING METHOD AND EQUIPMENT: FORD 5550
CONTRACTOR: E.P. JOHNSON CONSTRUCTION
OPERATOR: D. CADKU
LOGGED: MARK ANDERSON
CHECKED: SCOTT STONEMAN
DATE: 1/23/95

DEPTH (FT)	GRAPHIC LOG	SAMPLES	MOISTURE CONTENT (%)	SOIL PROFILE DESCRIPTION
1–9		S1		LOOSE TO COMPACT, PALE YELLOWISH BROWN, COARSE TO FINE SAND, LITTLE SILT (SP–SM). (EOLIAN DEPOSIT)
10–15		S2		LOOSE, MODERATE YELLOWISH BROWN, COARSE TO FINE SAND, SOME SILT (SM) (HANFORD FORMATION)
				LOOSE TO COMPACT, BROWNISH BLACK, COARSE TO FINE SAND, SOME COARSE TO FINE GRAVEL (SW). (HANFORD FORMATION)
				SOFT, DARK YELLOWISH BROWN, SILTY CLAY (CL). (HANFORD FORMATION)
				TOTAL DEPTH = 15.0 FEET

FIELD TEST PIT LOG

PROJECT: ERDF
PIT LOCATION: –
GROUND ELEVATION: –
TEST PIT NO. TP10
SHEET 1 OF 1
TEST PIT DATE: 11/30/94

TRENCHING METHOD AND EQUIPMENT: FORD 5550
CONTRACTOR: E.P. JOHNSON CONSTRUCTION
OPERATOR: D. CADKU
LOGGED: MARK ANDERSON
CHECKED: SCOTT STONEMAN
DATE: 1/23/95

DEPTH (FT)	GRAPHIC LOG	SAMPLES	MOISTURE CONTENT (%)	SOIL PROFILE DESCRIPTION
1–7		S1		LOOSE, PALE YELLOWISH BROWN, COARSE TO FINE SAND, LITTLE SILT (SW–SM). (EOLIAN DEPOSIT)
8–12		S2		COMPACT TO DENSE, PALE YELLOWISH BROWN, COARSE TO FINE SAND, SOME SILT (SW). (HANFORD FORMATION)
13–15		S3		LOOSE TO COMPACT, DARK GRAY, COARSE TO FINE SAND, COARSE TO FINE SAND, AND COARSE TO FINE GRAVEL, TRACE SILT (SP). (HANFORD FORMATION)
				TOTAL DEPTH = 13.0 FEET

FIELD TEST PIT LOG

PROJECT: ERDF
PIT LOCATION: –
GROUND ELEVATION: –
TEST PIT NO. TP11
SHEET 1 OF 1
TEST PIT DATE: 11/30/94

TRENCHING METHOD AND EQUIPMENT: FORD 5550
CONTRACTOR: E.P. JOHNSON CONSTRUCTION
OPERATOR: D. CADKU
LOGGED: MARK ANDERSON
CHECKED: SCOTT STONEMAN
DATE: 1/23/95

DEPTH (FT)	GRAPHIC LOG	SAMPLES	MOISTURE CONTENT (%)	SOIL PROFILE DESCRIPTION
1–6		S1		LOOSE, LIGHT OLIVE BROWN, FINE SAND, SOME SILT (SM). (EOLIAN DEPOSIT)
7–10		S2		LOOSE TO COMPACT, DARK GRAY, COARSE TO MEDIUM SAND, SOME COARSE TO FINE GRAVEL, TRACE SILT, $CaCO_3$ CEMENT AT CONTACT (SP). (HANFORD FORMATION)
				TOTAL DEPTH = 10.0 FEET
11–15				

FIELD TEST PIT LOG

PROJECT: ERDF
PIT LOCATION: –
GROUND ELEVATION: –
TEST PIT NO. TP12
SHEET 1 OF 1
TEST PIT DATE: 12/1/94

TRENCHING METHOD AND EQUIPMENT: FORD 5550
CONTRACTOR: E.P. JOHNSON CONSTRUCTION
OPERATOR: D. CADKU
LOGGED: MARK ANDERSON
CHECKED: SCOTT STONEMAN
DATE: 1/23/95

DEPTH (FT)	GRAPHIC LOG	SAMPLES	MOISTURE CONTENT (%)	SOIL PROFILE DESCRIPTION
1–3		S1		LOOSE, PALE YELLOWISH BROWN, COARSE TO FINE SAND, LITTLE SILT (SW–SM). (EOLIAN DEPOSIT)
4–15		S2		LOOSE TO COMPACT, GRAY, LAMINATED, MEDIUM TO FINE SAND, TRACE SILT, TRACE FINE GRAVEL, SOME $CaCO_3$ CEMENTATION (SP). (HANFORD FORMATION)
				TOTAL DEPTH = 15.0 FEET

FIELD TEST PIT LOG

PROJECT: ERDF
PIT LOCATION: –
GROUND ELEVATION: –
TEST PIT NO. TP13
SHEET 1 OF 1
TEST PIT DATE: 12/1/94

TRENCHING METHOD AND EQUIPMENT: FORD 5550
CONTRACTOR: E.P. JOHNSON CONSTRUCTION
OPERATOR: D. CADKU
LOGGED: MARK ANDERSON
CHECKED: SCOTT STONEMAN
DATE: 1/23/95

DEPTH (FT)	GRAPHIC LOG	SAMPLES	MOISTURE CONTENT (%)	SOIL PROFILE DESCRIPTION
1–2		S1		LOOSE TO COMPACT, PALE YELLOWISH BROWN, COARSE TO FINE SAND, LITTLE SILT (SW–SM) (EOLIAN DEPOSIT)
2				CALICHE LAYER~0.25 FT
4–9				BROWNISH BLACK, COARSE TO FINE GRAVEL AND COARSE TO FINE SAND (GW). (HANFORD FORMATION)
				TOTAL DEPTH = 9.0 FEET

NOTES

1. FOR LOCATIONS OF SOIL BORINGS, SOIL TEST PITS, AND EXISTING WELLS, SEE DRAWING NO. 0600X-DD-C0142.

100%
REVIEW SUBMITTAL
NOT FOR CONSTRUCTION

REV	DATE	DESCRIPTION	DRAWN BY	DRAFT CHK	ORIG/ ENG R	ENG R CHK	QL/TEX APPROV	QA PROJ ENG R
C	1/20/98	ISSUED FOR 100% REVIEW	DJH	FSS	FSS	LHA		
B	11/21/97	ISSUED FOR 60% REVIEW	DJH	FSS	FSS	LHA		
A	10/7/97	ISSUED FOR 30% REVIEW	SJS	FSS	FSS	LHA		

SCALE: AS SHOWN

U.S. DEPARTMENT OF ENERGY
DOE FIELD OFFICE, RICHLAND
HANFORD ENVIRONMENTAL RESTORATION PROGRAM

BECHTEL HANFORD INC.
RICHLAND, WASHINGTON

Golder Associates
Redmond, Washington

ENVIRONMENTAL RESTORATION DISPOSAL FACILITY
CELLS 3 AND 4
TEST PIT LOGS – 5

BECHTEL JOB NO.	DOE CONTRACT NO.	CADD FILENAME
22192	DE-AC06-93RL12367	58287RC.DWG

TASK	DRAWING NO.	REV. NO.
600	0600X-DD-C0150	C

RECORD INFORMATION

RECORD NO.	BLDG NO.	INDEX NO.
H-6-14947 SHT01	600G	0500

DRAWING NO.	REV. NO.
0600X-DD-C0158	C

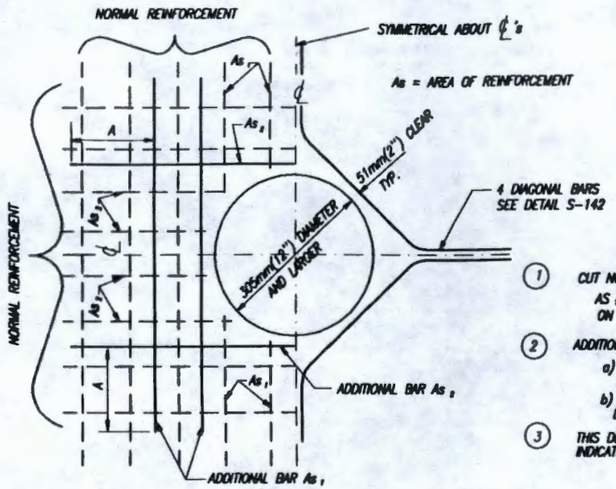

BAR SIZE	A GRADE 60
#4	381mm(15")
#5	533mm(21")
#6	610mm(24")
#7	686mm(27")
#8	914mm(36")
#9	1.07m(42")
#10	1.22m(48")

1. CUT NORMAL REINFORCEMENT AT OPENINGS:
   AS₁ AND AS₂ = 1/2 AREA OF CUT BARS TO BE ADDED ON EACH SIDE OF OPENING
2. ADDITIONAL BARS AS₁ AND AS₂ TO BE PLACED:
   a) AT ℄ OF WALLS OR SLABS WHERE ONE LAYER OF REINFORCEMENT IS PROVIDED
   b) AT EACH FACE OF WALLS OR SLABS WHERE TWO LAYERS OF REINFORCEMENT ARE PROVIDED
3. THIS DETAIL TO BE USED ONLY WHEN NO OTHER DETAIL IS INDICATED ON THE DRAWINGS

ADDITIONAL REINFORCEMENT AT CIRCULAR OPENINGS (305mm(12") DIA OR LARGER) REV 051893 S-144

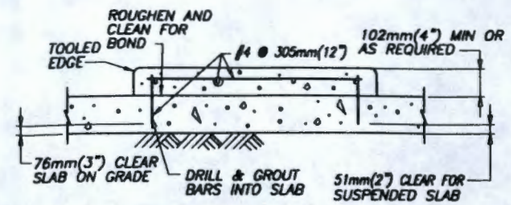

HOUSE KEEPING PAD REV 051893 S-191

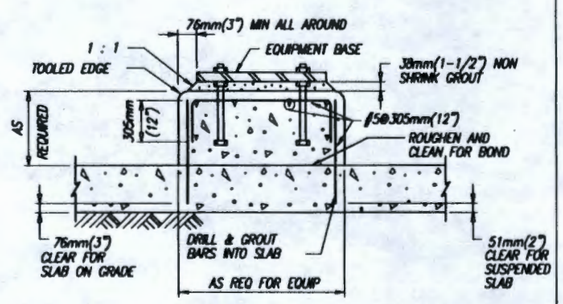

EQUIPMENT BASE REV 051893 S-192

NOTES

100%
REVIEW SUBMITTAL
NOT FOR CONSTRUCTION

REV.	DATE	DESCRIPTION	DRAWN BY	CHKD BY	ENGR CHKD	ENGR DATE	EL/TD APPROV	DE APPROV
0	1/20/96	ISSUED FOR 100% DESIGN REVIEW	PDH	MGM	MGM	MGM	LHA	

SCALE

U.S. DEPARTMENT OF ENERGY
DOE FIELD OFFICE, RICHLAND
HANFORD ENVIRONMENTAL RESTORATION PROGRAM

BECHTEL HANFORD INC.
RICHLAND, WASHINGTON

MONTGOMERY WATSON
RICHLAND, WASHINGTON

ENVIRONMENTAL RESTORATION DISPOSAL FACILITY
CELLS 3 & 4
STRUCTURAL DETAILS 1

BECHTEL JOB NO.	DOE CONTRACT NO.	CADD FILENAME
22192	DE-AC06-93RL12367	6xdc0158.DWG

TASK	DRAWING NO.	REV. NO.
600	0600X-DD-C0158	C

RECORD INFORMATION

RECORD NO.	BLDG NO.	INDEX NO.
H-6-14955 SHT 1	600G	0900

DRAWING NO.	REV. NO.
0600X-DD-C0159	C

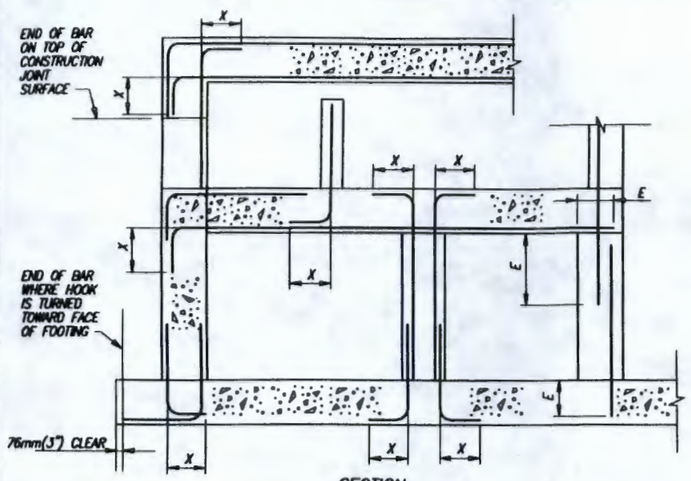

SECTION

LENGTH (INCHES)			
BAR SIZE	HOOK X	SPLICE	EMBEDMENT E
#3	152mm(6")	457mm(18")	305mm(12")
#4	203mm(8")	457mm(18")	356mm(14")
#5	254mm(10")	584mm(23")	457mm(18")
#6	305mm(12")	711mm(28")	559mm(22")
#7	356mm(14")	838mm(33")	635mm(25")

NOTES:

1. USE SPLICE LENGTHS AS DETERMINED FROM THESE TABLES UNLESS SHOWN OTHERWISE
2. THE TABLES SHOWN ARE FOR f'C=27.6MPa(4000 PSI) AND fy=413.7MPa(60,000 PSI)
3. MULTIPLY THE LENGTH SHOWN IN THESE TABLES BY 1.3 FOR WALL HORIZONTAL REBARS AND SLAB BARS WITH 305mm(12") OR MORE FRESH CONCRETE UNDERNEATH
4. WHEN BARS OF DIFFERENT SIZE ARE LAP SPLICED, SPLICE LENGTH SHALL BE THE LARGER OF:
   EMBEDMENT LENGTH OF LARGER BAR
   SPLICE LENGTH OF SMALLER BAR
5. ALL DOWEL BARS SHALL EXTEND AN EMBEDMENT LENGTH E INTO ANOTHER MEMBER OR ACROSS A CONSTRUCTION JOINT UNLESS SHOWN TO SPLICE WITH OTHER BARS OR TO EXTEND TO THE FAR FACE OF THE MEMBER AND END WITH A STANDARD HOOK

STANDARD 90° BAR HOOKS, EMBEDMENT LENGTHS AND SPLICE LENGTHS — REV 051893 — S-143

UNLESS OTHERWISE NOTED ON DWGS.

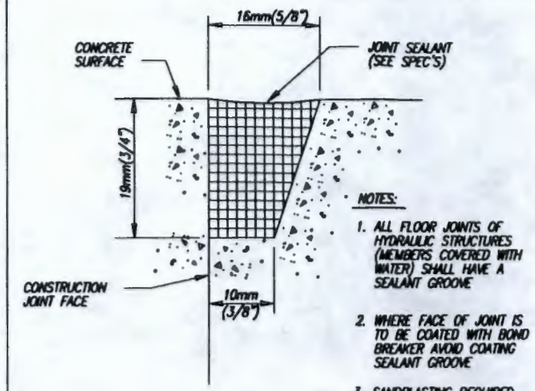

NOTES:

1. ALL FLOOR JOINTS OF HYDRAULIC STRUCTURES (MEMBERS COVERED WITH WATER) SHALL HAVE A SEALANT GROOVE
2. WHERE FACE OF JOINT IS TO BE COATED WITH BOND BREAKER AVOID COATING SEALANT GROOVE
3. SANDBLASTING REQUIRED PRIOR TO APPLICATION OF PRIMER

SEALANT GROOVE — REV 051893 — S-131

NOTES

CONCRETE (EXCEPT PRECAST CONCRETE)

UNLESS OTHERWISE NOTED OR SPECIFIED, ALL STRUCTURAL CONCRETE SHALL DEVELOP A MINIMUM COMPRESSIVE STRENGTH OF 27.6MPa(4,000 PSI) IN 28 DAYS.

REINFORCEMENT STEEL SHALL BE DEFORMED BARS CONFORMING IN QUALITY TO THE REQUIREMENTS OF THE "SPECIFICATIONS FOR DEFORMED BILLET-STEEL BARS FOR CONCRETE REINFORCEMENT" ASTM DESIGNATION A-615, GRADE 60.

COLUMN SPIRALS SHALL CONFORM TO "SPECIFICATION FOR COLD-DRAWN STEEL WIRE FOR CONCRETE REINFORCEMENT" ASTM DESIGNATION A-82.

ALL DETAILING, FABRICATION AND PLACING OF REINFORCING BARS, UNLESS OTHERWISE NOTED, SHALL BE IN ACCORDANCE WITH THE "MANUAL OF STANDARD PRACTICE FOR DETAILING REINFORCED CONCRETE STRUCTURES" ACI-315, LATEST EDITION.

TOLERANCES IN PLACING REINFORCEMENT SHALL BE:
± 9mm(3/8 INCH) FOR MEMBERS WITH D≤ 203mm(8 INCHES)
± 13mm(1/2 INCH) FOR MEMBERS WITH D > 203mm(8 INCHES)

ALL KEYWAYS IN CONSTRUCTION JOINTS SHALL BE ROUGH AND THOROUGHLY CLEANED FOR BOND.

DOWELS, PIPES, WATERSTOPS AND OTHER INSTALLED MATERIALS AND ACCESSORIES SHALL BE HELD SECURELY IN POSITION WHILE CONCRETE IS BEING PLACED.

UNLESS OTHERWISE SHOWN, ASIDE FROM NORMAL ACCESSORIES USED TO HOLD REINFORCING BARS FIRMLY IN POSITION, THE FOLLOWING SHALL BE ADDED:
A) IN SLABS #5 RISER BARS AT 914mm(36 INCHES) O.C. MAXIMUM TO SUPPORT TOP REINFORCING BARS.
B) IN WALLS WITH 2 CURTAINS #3 U OR Z SHAPE SPACERS AT 1.83m(6 FEET) O.C. EACH WAY.

METAL CLIPS OR SUPPORTS SHALL NOT BE PLACED IN CONTACT WITH THE FORMS OR THE SUBGRADE. CONC. BLOCKS (OR DOGBIES) SUPPORTING BARS ON SUBGRADE SHALL BE IN SUFFICIENT NUMBERS TO SUPPORT THE BARS WITHOUT SETTLEMENT, BUT IN NO CASE SHALL SUCH SUPPORT BE CONTINUOUS

DOWELS SHALL BE WIRED OR OTHERWISE HELD IN POSITION. THEY SHALL NOT BE SHOVED INTO FRESHLY PLACED CONCRETE.

UNLESS OTHERWISE NOTED ON THE DRAWINGS, SPLICES OF REINFORCEMENT SHALL BE AS SHOWN ON DETAIL S-143.

REINFORCING BARS AND ACCESSORIES SHALL NOT BE IN CONTACT WITH ANY PIPE, PIPE FLANGE OR METAL PARTS EMBEDDED IN CONCRETE. A MINIMUM OF 51mm(2 INCHES) CLEARANCE SHALL BE PROVIDED AT ALL TIMES.

ALUMINUM

ALUMINUM CONSTRUCTION SHALL BE IN ACCORDANCE WITH AMERICAN SOCIETY OF CIVIL ENGINEERS SPECIFICATIONS FOR STRUCTURES OF ALUMINUM ALLOY 6061-T6. ALUMINUM SURFACES SHALL BE PREVENTED FROM COMING IN DIRECT CONTACT WITH CONCRETE OR WITH METALS NOT COMPATIBLE WITH ALUMINUM, USING METHODS DESCRIBED IN THE SPECIFICATIONS.

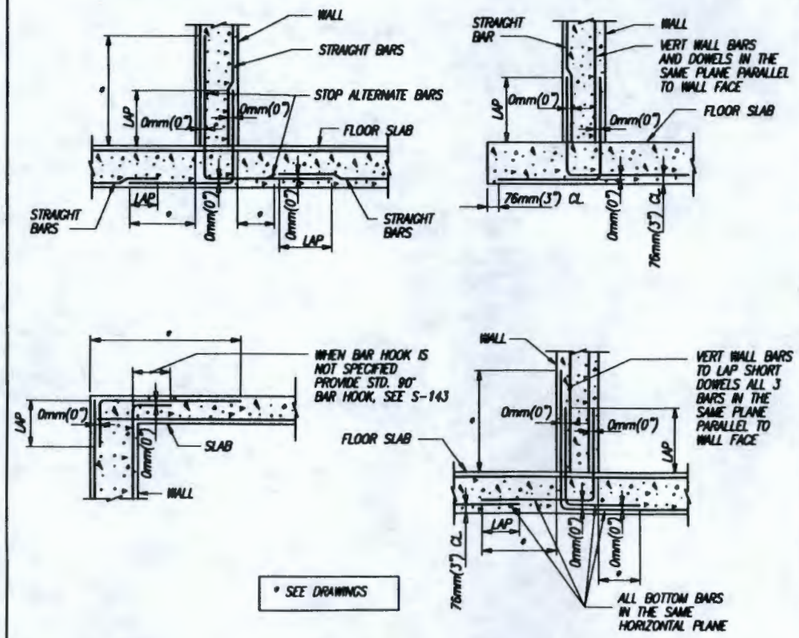

DRAFTING STANDARD FOR REINFORCING BAR DETAILING — REV 051893 — S-149

NOTES

GENERAL

STRUCTURAL DIMENSIONS CONTROLLED BY OR RELATED TO MECHANICAL OR ELECTRICAL EQUIPMENT SHALL BE VERIFIED BY THE CONTRACTOR PRIOR TO CONSTRUCTION.

MECHANICAL AND ELECTRICAL EQUIPMENT SUPPORTS, ANCHORAGES, OPENINGS, RECESSES AND REVEALS NOT SHOWN ON THE STRUCTURAL DRAWINGS BUT REQUIRED BY OTHER CONTRACT DRAWINGS, SHALL BE PROVIDED FOR PRIOR TO PLACING CONCRETE.

STRUCTURAL DRAWINGS SHALL BE USED IN COORDINATION WITH MECHANICAL, ELECTRICAL, ARCHITECTURAL, CIVIL DRAWINGS AND SHOP DRAWINGS PROVIDED BY MANUFACTURERS OF EQUIPMENT.

STRUCTURES HAVE BEEN DESIGNED FOR OPERATIONAL LOADS ON THE COMPLETED STRUCTURES. DURING CONSTRUCTION, THE STRUCTURES SHALL BE PROTECTED BY BRACING AND BALANCING WHEREVER EXCESSIVE CONSTRUCTION LOADS MAY OCCUR.

UNLESS OTHERWISE SHOWN, ON ALL STRUCTURAL DRAWINGS THE FINISH GRADE AROUND STRUCTURES IS SHOWN THUS: ////////////// INDICATING EITHER GROUND SURFACE, TOP OF CONCRETE SLAB OR A.C. PAVEMENT. FOR DETAILS OF FINISH SURFACES SEE CIVIL AND ARCHITECTURAL DRAWINGS.

STRUCTURAL

DESIGN IN ACCORDANCE WITH THE 1997 EDITION OF THE UNIFORM BUILDING CODE, EXCEPT WHERE OTHER APPLICABLE CODES OR THE FOLLOWING NOTES ARE MORE RESTRICTIVE.

LOADINGS:

FOUNDATION	143.6KPa(3000 PSF)
ROOF	958Pa(25 PSF)
WIND	70 MPH EXP "C"
SEISMIC	ZONE 2B
CRANE	1000 LB. LIFTING LOAD

LOCATION OF ALL CONSTRUCTION JOINTS SHALL BE AS SHOWN ON THE DRAWINGS OR APPROVED BY THE ENGINEER. ALL CONSTRUCTION JOINTS LOCATED ON THE DRAWINGS OR REQUIRED FOR CONSTRUCTION BUT NOT SHOWN ON THE DRAWINGS, SHALL HAVE A 152mm(6") FLATSTRIP WATERSTOP, IF IN MEMBERS IN CONTACT WITH WATER. IN ALL SLABS COVERED WITH WATER, CONSTRUCTION JOINTS SHALL HAVE A 152mm(6") FLATSTRIP WATERSTOP AND A SEALANT GROOVE.

STRUCTURAL STEEL

STEEL CONSTRUCTION SHALL CONFORM TO THE SPECIFICATIONS AND STANDARDS AS CONTAINED IN THE LATEST EDITION OF THE AISC STEEL CONSTRUCTION MANUAL.

ALL STRUCTURAL SHAPES, BARS, PLATES AND SHEETS SHALL BE OF STEEL MEETING ASTM A-36 SPECIFICATIONS.

ALL WELDING SHALL BE BY THE SHIELDED ARC METHOD AND SHALL CONFORM TO AWS CODE FOR ARC AND GAS WELDING IN BUILDING CONSTRUCTION. QUALIFICATIONS OF WELDERS SHALL BE IN ACCORDANCE WITH THE SPECIFICATIONS FOR STANDARD QUALIFICATION PROCEDURE OF THE AWS.

100% REVIEW SUBMITTAL NOT FOR CONSTRUCTION

REV.	DATE	DESCRIPTION	DRAWN BY	CHKD BY	ENGRG CHKD	ENGRG APPD	CLIENT APPROVAL	PE REQ'D
C	1/30/98	ISSUED FOR 100% DESIGN REVIEW	PDH	MGM	MGM	LHA		
B	11/21/97	ISSUED FOR 60% DESIGN REVIEW	PDH	MGM	MGM	LHA		
A	10/7/97	ISSUED FOR 30% DESIGN REVIEW	PDH	MGM	MGM	LHA		

SCALE

U.S. DEPARTMENT OF ENERGY
DOE FIELD OFFICE, RICHLAND
HANFORD ENVIRONMENTAL RESTORATION PROGRAM

BECHTEL HANFORD INC. RICHLAND, WASHINGTON | MONTGOMERY WATSON RICHLAND, WASHINGTON

ENVIRONMENTAL RESTORATION DISPOSAL FACILITY
CELLS 3 & 4
STRUCTURAL DETAILS 2

BECHTEL JOB NO.	DOE CONTRACT NO.	CADD FILENAME
22192	DE-AC06-93RL12367	6xdc0159.DWG

TASK	DRAWING NO.	REV. NO.
600	0600X-DD-C0159	C

RECORD INFORMATION

RECORD NO.	BLDG NO.	INDEX NO.
H-6-14956 SHT 1	600G	0900

DRAWING NO.	REV. NO.
0600X-DD-C0160	C

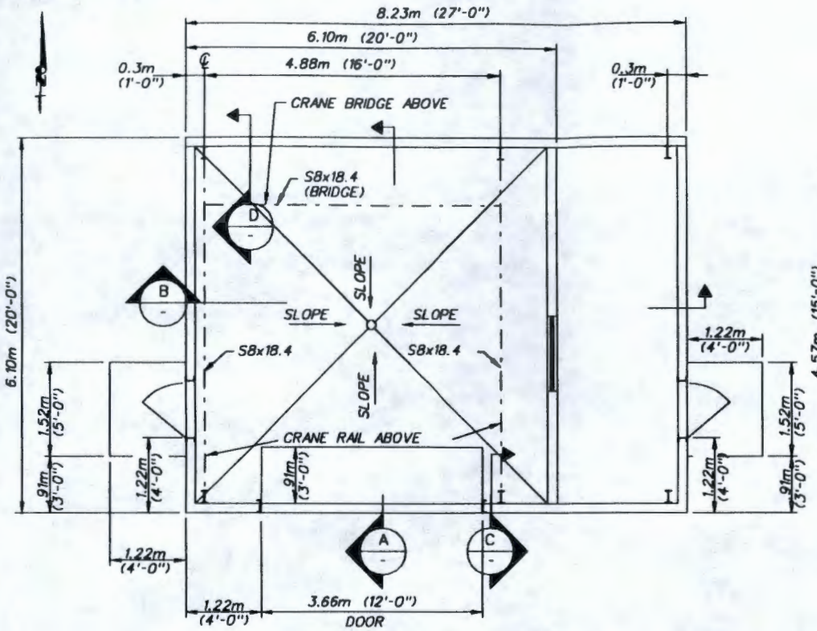

PLAN

METERS 0 1 2 3 4 5
FEET 0 5 10 15

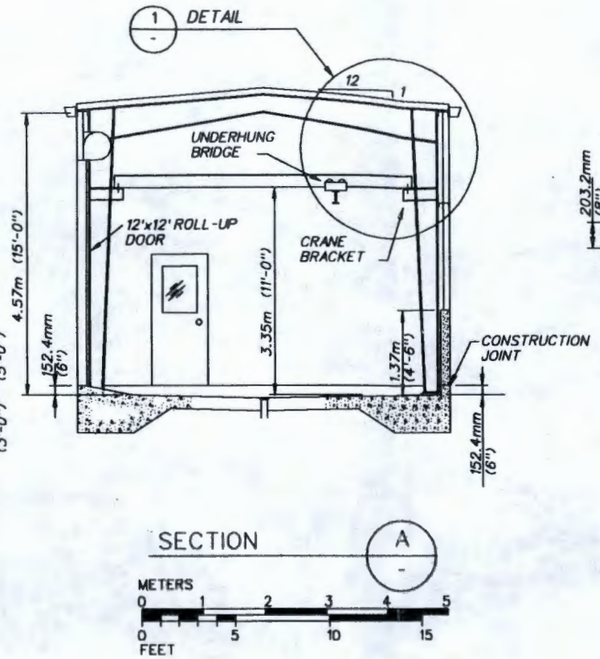

SECTION A

METERS 0 1 2 3 4 5
FEET 0 5 10 15

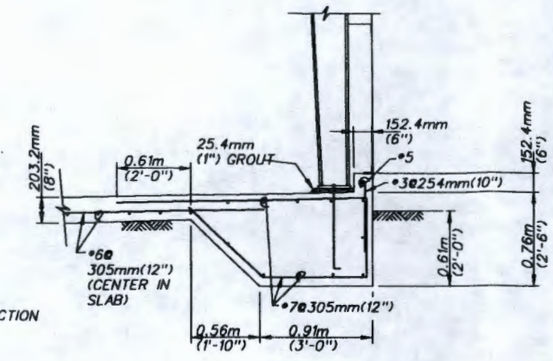

SECTION C

METERS 0 1 2 3
FEET 0 5 10

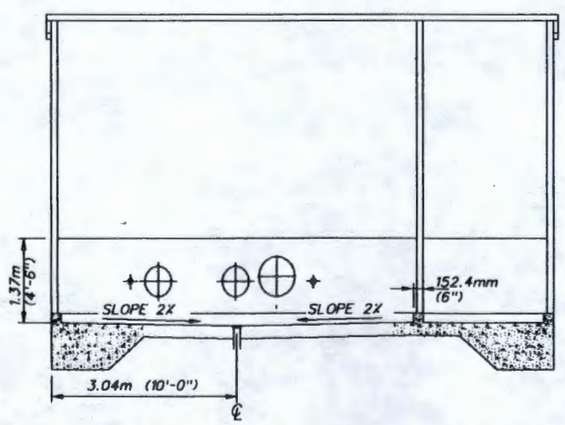

SECTION B

METERS 0 1 2 3 4 5
FEET 0 5 10 15

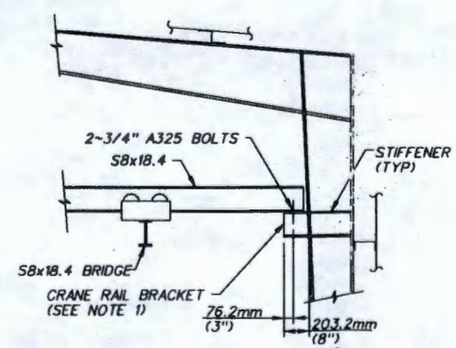

DETAIL 1

METERS 0 1 2 3
FEET 0 5 10

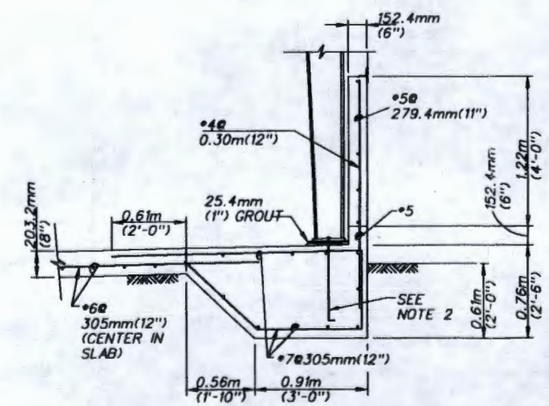

SECTION D

METERS 0 1 2 3
FEET 0 5 10

NOTES

1. METAL BUILDING SUPPLIER SHALL INCLUDE IN HIS DESIGN THE SUPPORT BRACKET FOR THE CRANE. IT SHALL BE DESIGNED USING A 1400 LB. LOAD REACTION FROM THE CRANE BEAM ASSUMED ACTING AT THE BOLT CONNECTION.
2. BUILDING FRAME ANCHOR BOLTS SHALL BE A MINIMUM OF (2)~3/4" DIA. COORDINATE WITH BUILDING SUPPLIER FOR BOLT NUMBER AND LOCATION

100%
REVIEW SUBMITTAL
NOT FOR CONSTRUCTION

REV.	DATE	DESCRIPTION	DRAWN BY	PROJ CHK	DESIG CHK	PROG CHK	PL/TEL APPROV	BC CHK
C	1/20/98	ISSUED FOR 100% DESIGN REVIEW	PDH	MGM	DNH	LHA		
B	11/21/97	ISSUED FOR 60% DESIGN REVIEW	PDH	MGM	MGM	LHA		
A	10/7/97	ISSUED FOR 30% DESIGN REVIEW	PDH	MGM	MBM	LHA		

SCALE: AS NOTED

U.S. DEPARTMENT OF ENERGY
DOE FIELD OFFICE, RICHLAND
HANFORD ENVIRONMENTAL RESTORATION PROGRAM

BECHTEL HANFORD INC.
RICHLAND, WASHINGTON

MONTGOMERY WATSON
RICHLAND, WASHINGTON

ENVIRONMENTAL RESTORATION DISPOSAL FACILITY
CELLS 3 & 4
CREST PAD BLDG - PLANS AND SECTIONS

BECHTEL JOB NO.	DOE CONTRACT NO.	CADD FILENAME
22192	DE-AC06-93RL12367	6xdc0160.dgn

TASK	DRAWING NO.	REV. NO.
600	0600X-DD-C0160	C

RECORD INFORMATION

RECORD NO.		BLDG NO.	INDEX NO.
H-6-14957	sht 1	600G	1000

DRAWING NO.	REV. NO.
0600X-DD-C0161	C

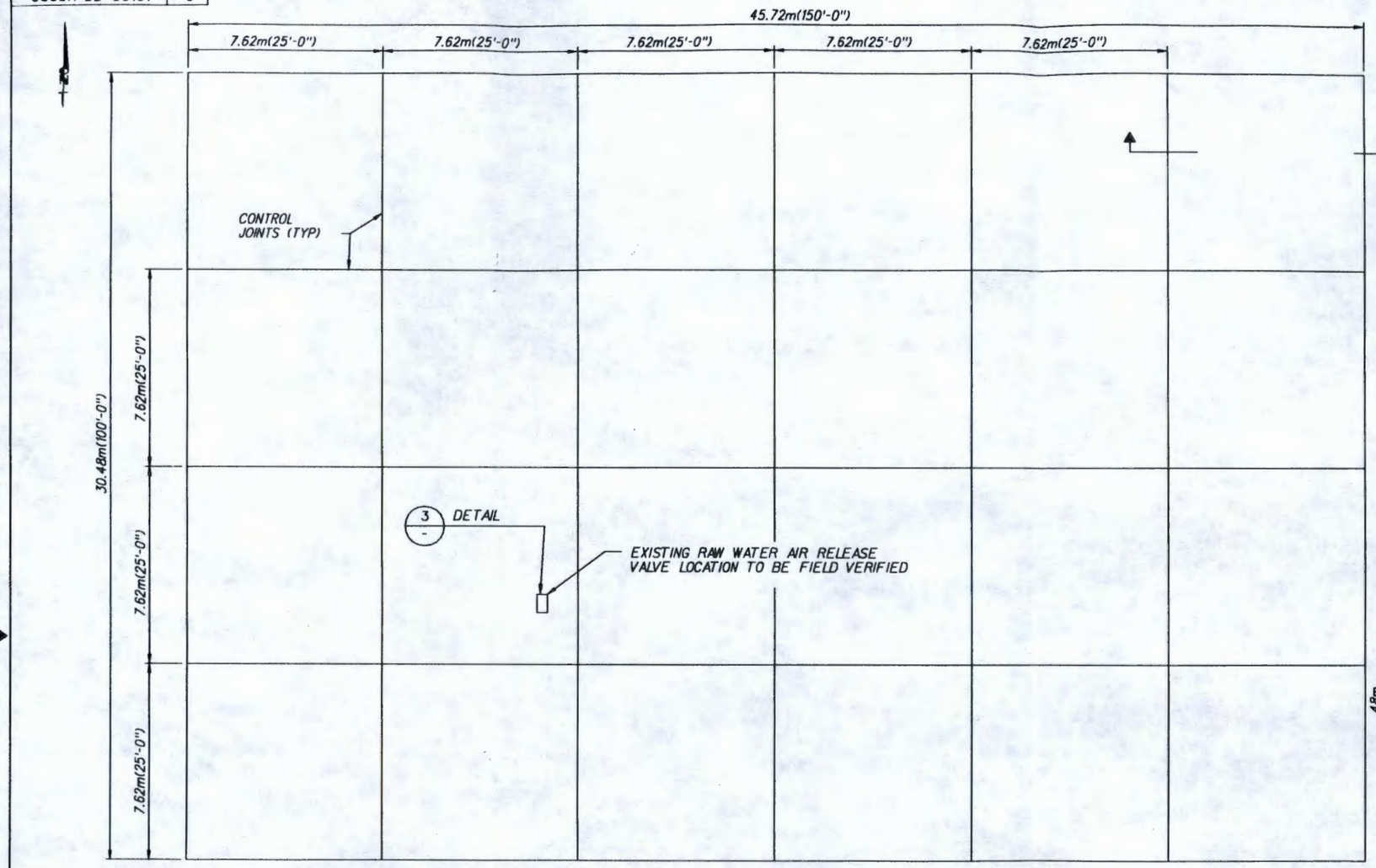

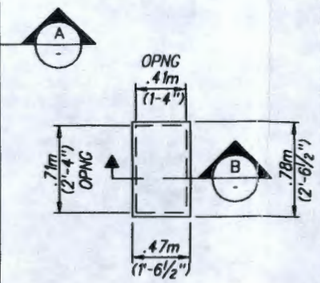

DETAIL 3
NO SCALE

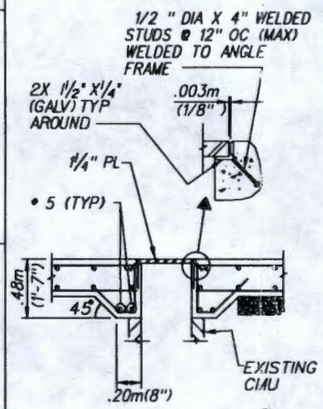

SECTION B

LOADING / UNLOADING SLAB PLAN

METERS 0 5 10 — FEET 0 5 10 25 30 35 — SCALE: ⅛"=1'-0"

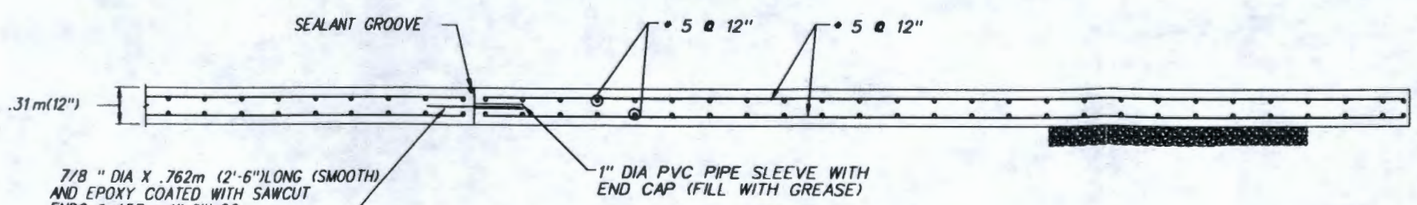

SECTION A

METERS 0 5 10 — FEET 0 5 — SCALE: ½"=1'-0"

NOTES

1. REFER TO DRAWING 0600X-DD-C0101 FOR LOCATION OF LOADING/ UNLOADING SLAB

100% REVIEW SUBMITTAL NOT FOR CONSTRUCTION

REV.	DATE	DESCRIPTION	DRAWN BY	PROJ CHK	DSGN ENGR	CHIEF ENGR	RL/TEL APPROV	RL/CRM APPROV
C	1/20/98	ISSUED FOR 100% DESIGN REVIEW	PDH	MGM	DHN	LHA		
B	11/21/97	ISSUED FOR 80% DESIGN REVIEW	PDH	MGM	MGM	LHA		
A	10/7/97	ISSUED FOR 30% DESIGN REVIEW	PDH	MGM	MRM	LHA		

SCALE: AS NOTED

U.S. DEPARTMENT OF ENERGY
DOE FIELD OFFICE, RICHLAND
HANFORD ENVIRONMENTAL RESTORATION PROGRAM

BECHTEL HANFORD INC. RICHLAND, WASHINGTON | MONTGOMERY WATSON RICHLAND, WASHINGTON

ENVIRONMENTAL RESTORATION DISPOSAL FACILITY
CELLS 3 & 4
LOADING / UNLOADING SLAB PLAN

BECHTEL JOB NO.	DOE CONTRACT NO.	CADD FILENAME
22192	DE-AC06-93RL12367	6xdc0161.dgn

TASK	DRAWING NO.	REV. NO.
600	0600X-DD-C0161	C

RECORD INFORMATION

RECORD NO.		BLDG NO.	INDEX NO.
H-6-14958	sht 1	600G	0900

DRAWING NO.	REV. NO.
0600X-DD-A0006	C

DOOR SCHEDULE

BLDG NAME	DOOR NO	SIZE WIDTH	SIZE HEIGHT	DOOR TYPE	DOOR THCK	DOOR MAT	DOOR FIN SYS	DOOR COLOR	FRAME MAT	FRAME FIN SYS	FRAME COLOR	DETAILS HEAD	DETAILS JAMB	DETAILS JAMB	DETAILS THR	HARD-WARE	FIRE LABEL	LOUVER SIZE	REMARKS
CRESTPAD BUILDINGS	C1	914mm(3'-0")	2.13m(7'-0")	A	44mm(1-3/4")	IM	P-5	SW2062	HM	P-5	SW2062	1/A0008	2/A0008	2/A0008	3/A0008	HW-4	—	—	
	C2	914mm(3'-0")	2.13m(7'-0")	A	44mm(1-3/4")	IM	P-5	SW2062	HM	P-5	SW2062	1/A0008	2/A0008	2/A0008	3/A0008	HW-4	—	—	
	C3	3.66m(12'-0")	3.66m(12'-0")	B	19mm(3/4")	GSM	GALV	SW2062	STL	GALV	SW2062	1/A0008	2/A0008	2/A0008	3/A0008	HW-4	—	—	
	C4	914mm(3'-0")	2.13m(7'-0")	A	44mm(1-3/4")	IM	P-5	SW2062	HM	P-5	SW2062	1/A0008	2/A0008	2/A0008	3/A0008	HW-4	—	—	
	C5	914mm(3'-0")	2.13m(7'-0")	A	44mm(1-3/4")	IM	P-5	SW2062	HM	P-5	SW2062	1/A0008	2/A0008	2/A0008	3/A0008	HW-4	—	—	
	C6	3.66m(12'-0")	3.66m(12'-0")	B	19mm(3/4")	IM	P-5	SW2062	HM	GALV	SW2062	1/A0008	2/A0008	2/A0008	3/A0008	HW-4	—	—	

DOOR TYPES

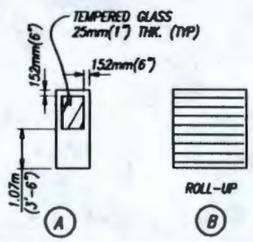

DOOR SCHEDULE NOTES

1. HM REFERS TO "HOLLOW METAL" WHICH INDICATES THAT DOORS AND FRAMES ARE METAL. THE INTERIOR CORE CONSTRUCTION IS NOT "HOLLOW" AND MAY VARY WITH THE PERFORMANCE REQUIREMENTS OF THE DOOR.
2. IM REFERS TO "INSULATED METAL" DOORS WHICH INDICATE THAT THE HOLLOW METAL INTERIOR CORE IS FILLED WITH NON-ABSORBENT MATERIAL HAVING THE SPECIFIED THERMAL VALUE.

GALV = GALVANIZED
GSM = GALVANIZED SHEET METAL
STL = STEEL

WINDOW SCHEDULE

	WINDOW NUMBER	SIZE (WxH)	WINDOW MATERIAL	TYPE	FINISH	GLAZING TYPE	GLAZING THICK.	FIRE RAT.				REMARKS/NOTES
CRESTPAD BUILDINGS	W1	1.22m x 1.22m (4'-0" x 4'-0")	AL			TEMP.	6mm(1/4")	–				HORIZONTAL SLIDING, SEE TYPICAL WALL FRAMING ELEVATION DWG 0600X-DD-A0007
	W2	1.22m x 1.22m (4'-0" x 4'-0")	AL			TEMP.	6mm(1/4")	–				HORIZONTAL SLIDING, SEE TYPICAL WALL FRAMING ELEVATION DWG 0600X-DD-A0007

INTERIOR FINISH SCHEDULE

BLDG NAME	ROOM NO	ROOM DESCRIPTION	FLOOR MATERIAL	FLOOR FIN SYS	FLOOR COLOR	BASE BASE	BASE COLOR	WAINSCOT MATERIAL	WAINSCOT COLOR	WALL MATERIAL	WALL FIN SYS	WALL COLOR	CEILING MATERIAL	CEILING FIN SYS	CEILING COLOR	CEILING CLG HT	REMARKS
CRESTPAD BUILDINGS	C-1	ELECTRICAL ROOM	SMOOTH CONC	SEALER	CLEAR	--	--	PLYWOOD	SW3510	EXPOSED INSUL / PLYWOOD	P-2	SW1095	EXPOSED INSUL		SW1095		EXT. WALLS – 8' PLYWOOD WAINSCOT INT. WALLS – PLYWOOD FULL HEIGHT
	C-2	METER ROOM	SMOOTH CONC	P-6	MFR STD	--	--	PLYWOOD	SW3510	EXPOSED INSUL / PLYWOOD	P-2	SW1095	EXPOSED INSUL		SW1095		EXT. WALLS – 8' PLYWOOD WAINSCOT INT. WALLS – PLYWOOD FULL HEIGHT

FINISH SCHEDULE ABBREVIATIONS :

AL	ALUMINUM
BD	BOARD
CLG HT	CEILING HEIGHT
CONC	CONCRETE
CONS	CONSTRUCTION
FIN SYS	FINISH SYSTEM
GYP BD	GYPSUM BOARD
INSUL	INSULATION

FINISH SCHEDULE NOTES:

1. WALL MATERIAL, FINISH SYSTEM AND COLOR SELECTION IS TYPICAL FOR ALL WALLS, WITHIN THE ROOM UNLESS SHOWN OTHERWISE ON THE PLANS.
2. ALL AREAS OF EXPOSED STEEL ROOF DECKING, OPEN WEB JOIST AND MISCELLANEOUS BRACING SHALL BE PAINTED. ALL STRUCTURAL STEEL, DUCTWORK, CONDUIT, MISCELLANEOUS METALS AND INCIDENTAL MECHANICAL AND ELECTRICAL ASSEMBLIES SHALL BE PAINTED TO MATCH.
3. EXPOSED INSULATION REFERS TO VINYL FACED INSULATION FOR STEEL BUILDINGS. EXPOSED STEEL ON THESE WALLS SHALL BE PAINTED.
4. PROPRIETARY PRODUCTS ARE LISTED AS A REFERENCE FOR QUALITY, STYLE, FINISH AND /OR COLOR REQUIRED. THE LIST DOES NOT PRECLUDE THE USE OF AN APPROVED EQUAL.
5. SCHEDULE IS TYPICAL FOR EACH BUILDING.

PAINT SCHEDULE

PAINT	PAINT TYPE	MANUFACTURER
P-2	ALKYD ENAMEL OVER PRIMER (SEMI-GLOSS)	SHERWIN WILLIAMS-INTERIOR PAINT
P-5	ALKYD ENAMEL OVER PRIMER (SEMI-GLOSS)	SHERWIN WILLIAMS-EXTERIOR PAINT
P-6	EPOXY	NSP OR AMERON

NOTES

100%
REVIEW SUBMITTAL
NOT FOR CONSTRUCTION

REV.	DATE	DESCRIPTION	DRAWN BY	DRAFT CHK	ENGR/CHPR	CHPR CHK	DR/TEC APPROVAL	DOE APPROVAL
C	1/20/98	ISSUED FOR 100% DESIGN REVIEW	PGH	MGM	MGM	LHA		
B	11/21/97	ISSUED FOR 90% DESIGN REVIEW	PGH	MGM	MGM	LHA		
A	10/7/97	ISSUED FOR 30% DESIGN REVIEW	PGH	MGM	MGM	LHA		

SCALE

U.S. DEPARTMENT OF ENERGY
DOE FIELD OFFICE, RICHLAND
HANFORD ENVIRONMENTAL RESTORATION PROGRAM

BECHTEL HANFORD INC.
RICHLAND, WASHINGTON

MONTGOMERY WATSON
RICHLAND, WASHINGTON

ENVIRONMENTAL RESTORATION DISPOSAL FACILITY
CELLS 3 & 4
DOOR, WINDOW AND FINISH SCHEDULES

BECHTEL JOB NO.	DOE CONTRACT NO.	CADD FILENAME
22192	DE-AC06-93RL12367	6xda0006.DWG

TASK	DRAWING NO.	REV. NO.
600	0600X-DD-A0006	C

RECORD INFORMATION

RECORD NO.	BLDG NO.	INDEX NO.
H-6-14709 SHT 1	600G	0802

DRAWING NO.	REV. NO.
0600X-DD-A0007	C

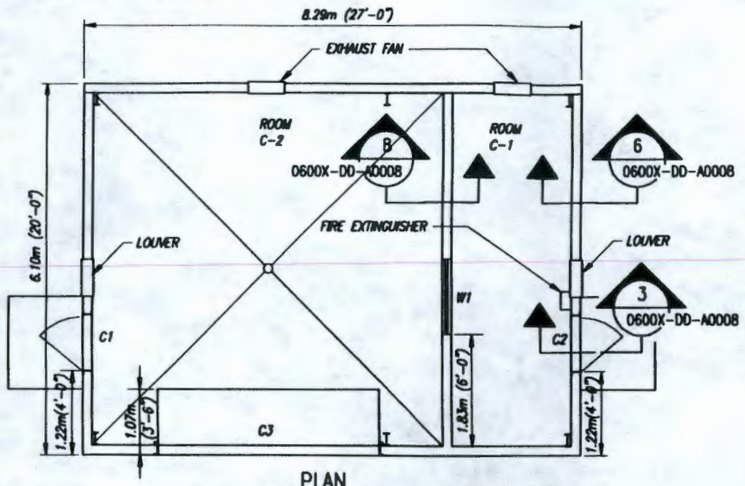

PLAN

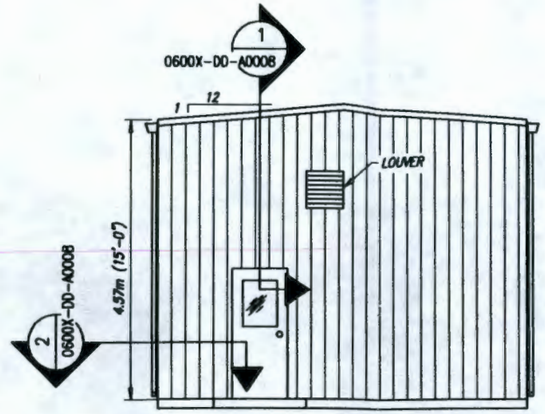

SIDE ELEVATION

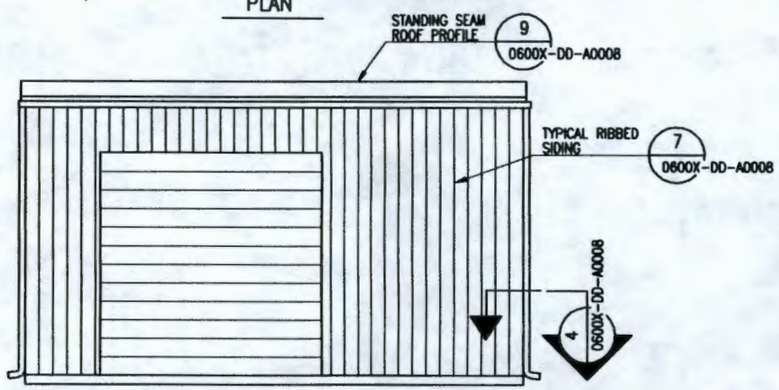

FRONT ELEVATION

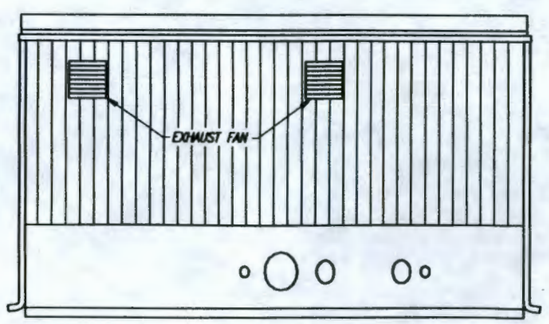

REAR ELEVATION

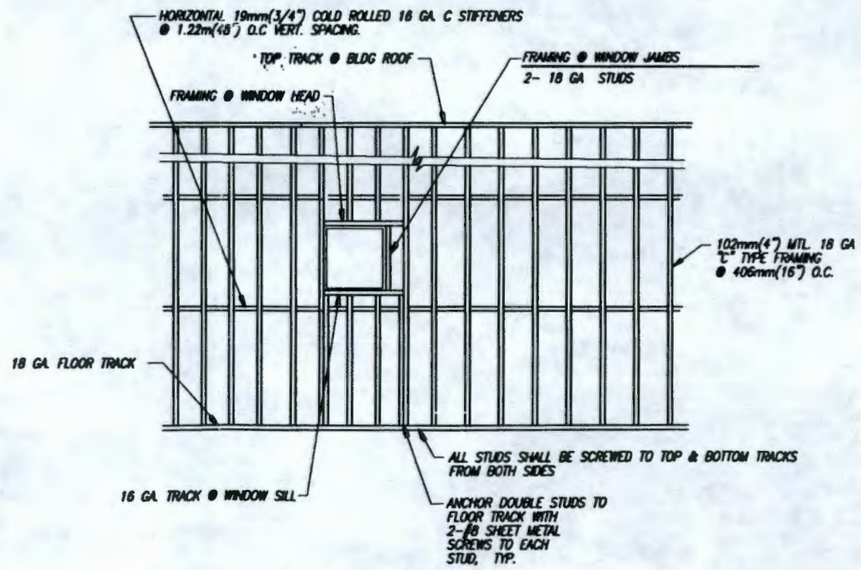

TYPICAL INTERIOR WALL FRAMING ELEV.

NTS

NOTES

1. DOORS AND WINDOWS SHOWN ARE FOR CRESTPAD BUILDING AT CELL 3. CORRESPONDING NUMBERS FOR CREST PAD BUILDING AT CELL 4 ARE AS FOLLOWS.

CELL 3	CELL 4
C1	C4
C2	C5
C3	C6
W1	W2

100%
REVIEW SUBMITTAL
NOT FOR CONSTRUCTION

REV.	DATE	DESCRIPTION	DRAWN BY	DRAFT DATE	CHECK DATE	CHECK DATE	DR/TR APPROVAL	RE DATE
C	1/20/98	ISSUED FOR 100% DESIGN REVIEW	PDH	MGM	MGM	LHA		
B	11/21/97	ISSUED FOR 60% DESIGN REVIEW	PDH	MGM	MGM	LHA		
A	10/7/97	ISSUED FOR 30% DESIGN REVIEW	PDH	MGM	MGM	LHA		

SCALE

U.S. DEPARTMENT OF ENERGY
DOE FIELD OFFICE, RICHLAND
HANFORD ENVIRONMENTAL RESTORATION PROGRAM

BECHTEL HANFORD INC.
RICHLAND, WASHINGTON

MONTGOMERY WATSON
RICHLAND, WASHINGTON

ENVIRONMENTAL RESTORATION DISPOSAL FACILITY
CELLS 3 & 4
CREST PAD BLDG - PLAN AND SECTIONS

BECHTEL JOB NO.	DOE CONTRACT NO.	CADD FILENAME
22192	DE-AC06-93RL12367	6xda0007.DWG

TASK	DRAWING NO.	REV. NO
600	0600X-DD-A0007	C

RECORD INFORMATION

RECORD NO.		BLDG NO.	INDEX NO.
H-6-14710	SHT 1	600G	0801

DRAWING NO.	REV. NO.
0600X-DD-A0008	C

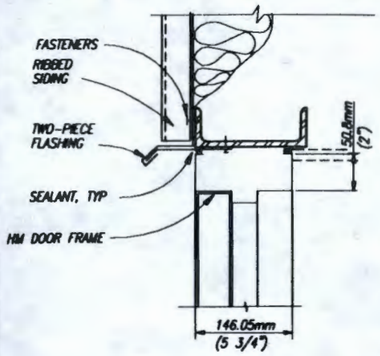

HEAD AT METAL SIDING (1)
NTS 0600X-DD-A0007

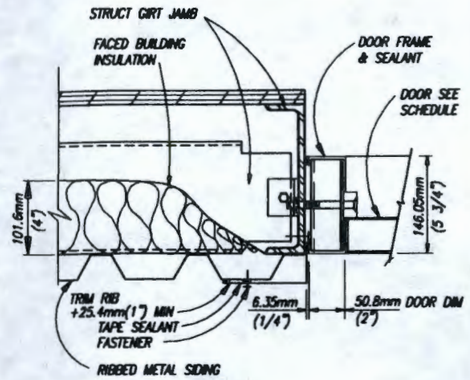

JAMB AT METAL SIDING (2)
NTS 0600X-DD-A0007

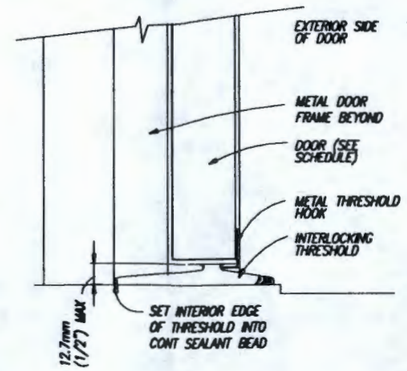

INTERLOCKING THRESHOLD (3)
NTS 0600X-DD-A0007

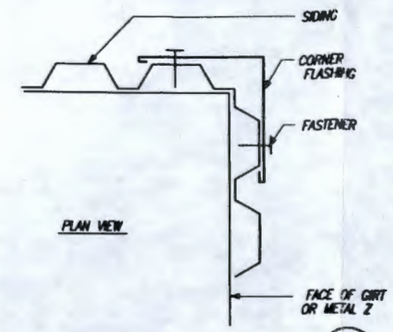

CORNER AT SIDING (4)
NTS 0600X-DD-A0007

NOTE:
1. DOWNSPOUT NOT SHOWN.

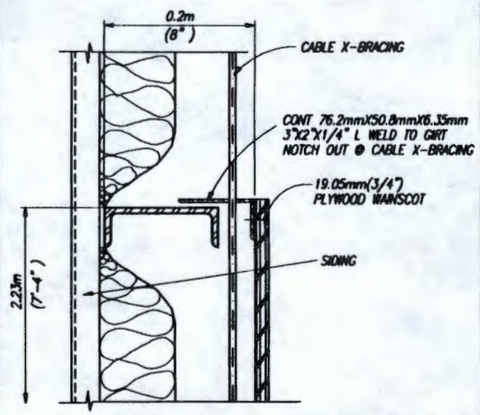

BRACED WALL & PLWD WAINSCOT (5)
NTS 0600X-DD-A0007

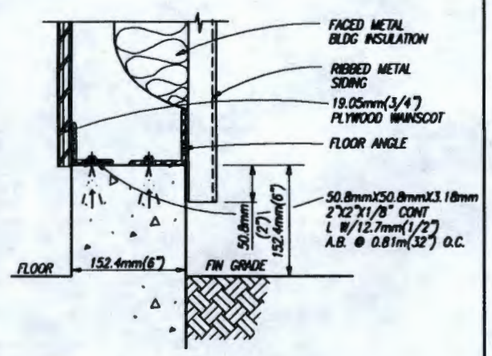

METAL SIDING AT FLOOR (6)
NTS 0600X-DD-A0007

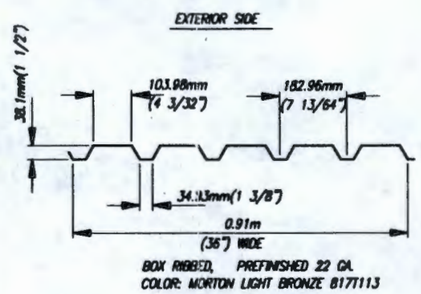

TYPICAL RIBBED SIDING (7)
NTS 0600X-DD-A0007

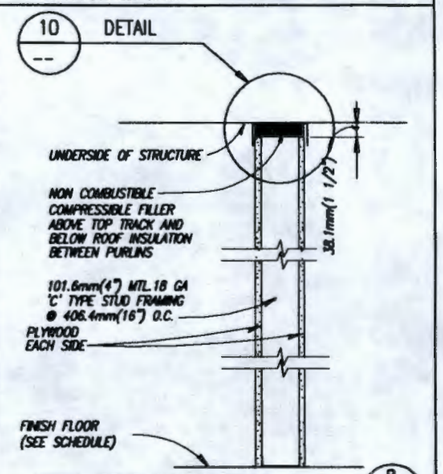

METAL STUD PARTITION (8)
NTS 0600X-DD-A0007

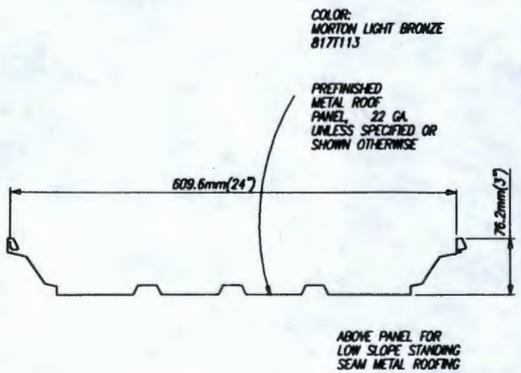

STANDING SEAM ROOF PROFILE (9)
NTS 0600X-DD-A0007

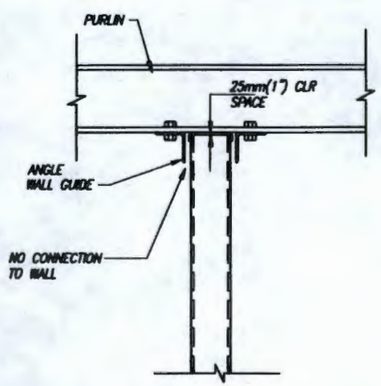

DETAIL (10 --)
NTS

NOTES

100%
REVIEW SUBMITTAL
NOT FOR CONSTRUCTION

REV.	DATE	DESCRIPTION	DRAWN BY	CHK'T DATE	CHK'D DATE	APPR DATE	G/TEL APPROVAL	
C	1/20/98	ISSUED FOR 100% DESIGN REVIEW	PDH	MGM	MGM	LMA		
B	11/21/97	ISSUED FOR 80% DESIGN REVIEW	PDH	MGM	MGM	LMA		
A	10/7/97	ISSUED FOR 30% DESIGN REVIEW	PDH	MGM	MGM	LMA		

SCALE

U.S. DEPARTMENT OF ENERGY
DOE FIELD OFFICE, RICHLAND
HANFORD ENVIRONMENTAL RESTORATION PROGRAM

BECHTEL HANFORD INC.
RICHLAND, WASHINGTON

MONTGOMERY WATSON
RICHLAND, WASHINGTON

ENVIRONMENTAL RESTORATION DISPOSAL FACILITY
CELLS 3 & 4
CREST PAD BLDG - SECTIONS AND DETAILS

BECHTEL JOB NO.	DOE CONTRACT NO.	CADD FILENAME
22192	DE-AC06-93RL12367	6xda0008.DWG

TASK	DRAWING NO.	REV. NO.
600	0600X-DD-A0008	C

RECORD INFORMATION

RECORD NO.	BLDG NO.	INDEX NO.
H-6-14711 SHT 1	600G	0801

DRAWING NO.	REV. NO.
0600X-DD-M0009	C

PIPING MATERIAL SCHEDULE (SEE NOTE 4)

GROUP NO.	PIPE (SEE NOTE 13)	FITTINGS	VALVES, 6 INCHES AND SMALLER (SEE NOTE 1, NOTE 11 AND NOTE 16)
1	STEEL, ASTM A120, SCHEDULE 40, BLACK WELDED.	2-1/2 INCH AND SMALLER, MALLEABLE IRON, ANSI B16.3, THREADED, BANDED, BLACK, 150 PSI OR STEEL, ANSI B16.9, BUTT-WELDED. 3 INCH AND LARGER, CAST IRON, ANSI B16.1, 125 PSI FLANGED OR MECHANICAL COUPLINGS.	SEE SPECS
2	STEEL, ASTM A53, SCHEDULE 40 WELDED, GALVANIZED.	2-1/2 INCH AND SMALLER, MALLEABLE IRON, ANSI B16.3, THREADED, BANDED, GALVANIZED 150 PSI. 3 INCH AND LARGER, CAST IRON, ANSI B16.1, 125 PSI FLANGED OR MECHANICAL COUPLINGS.	2-1/2 INCH AND SMALLER, ECCENTRIC PLUG, SYNTHETIC RUBBER FACED, DEZURIK 118S OR HOMESTEAD 1512. BALL, JENKINS NO. 900T OR JAMESBURY FIG. 351 . 3 INCH AND LARGER, ECCENTRIC PLUG, SYNTHETIC RUBBER FACED, DEZURIK 118F OR KEYSTONE 1522 OR 1532 EWG. GATE, AWWA C500. BUTTERFLY, AWWA, FLANGED.
3	STEEL, ASTM A53, SCHEDULE 80, SEAMLESS, BLACK.	FORGED STEEL, ANSI B16.11, SOCKET WELDED OR THREADED, BLACK, 2000 PSI, OR STEEL, ANSI B16.9, BUTT-WELDED, SCHEDULE 80.	CAST IRON, LUBRICATED PLUG, ROCKWELL FIG. 214 OR 305 OR POWELL FIG. 2210 OR 2211.
4	SAME AS GROUP NO. 1	CAST IRON, ANSI B16.12, THREADED, DRAINAGE PATTERN.	--------
5	WELDED STEEL, AWWA C200, UNLINED.	WELDED STEEL, FABRICATED, AWWA C200, UNLINED.	AS INDICATED ON DRAWINGS
6	STEEL, ASTM A53, SCHEDULE 40, SEAMLESS, BLACK.	STEEL, ANSI B16.9, BUTT-WELDED. CAST IRON, ANSI B16.4, 125 PSI, FLANGED. FORGED STEEL, SOCKET WELDED, ANSI B16.11, 2000 PSI OR STEEL, ANSI B16.5, 150 PSI FLANGED.	SEE SPECS
7	SAME AS GROUP NO. 2.	MALLEABLE IRON, ANSI B16.3, THREADED, BANDED, GALVANIZED, 300 PSI.	BRONZE THREADED, GLOBE, CRANE NO. 212P OR 229C OR STOCKHAM B-62 OR B-32. BALL, JENKINS NO. 900T OR JAMESBURY FIG. 351 CHECK, CRANE NO. 27 OR STOCKHAM B-322.
8	WELDED STEEL, AWWA C200.	WELDED STEEL, AWWA C200, FABRICATED.	AS INDICATED ON DRAWINGS.
9	SAME AS GROUP NO. 1.	2-1/2 INCH AND SMALLER, MALLEABLE IRON, ANSI B16.3, THREADED, BANDED, BLACK, 150 PSI. 3 INCH AND LARGER, STEEL, ANSI B16.9, BUTT-WELDED	ECCENTRIC PLUG, DEZURIK SERIES 118 OR KEYSTONE 1512, CHECK, CRANE NO. 336E OR WALWORTH NO. 904 OR POWELL FIG 668Y. BALL, JENKINS NO. 900T OR JAMESBURY FIG. 351.
10	SAME AS GROUP NO. 3.	1-1/4 INCH AND SMALLER, FORGED STEEL, ANSI B16.11, THREADED OR SOCKET WELDED, BLACK, 3000 PSI, WITH FLANGED AMMONIA UNIONS. 1-1/2 INCH AND LARGER, STEEL, ANSI B16.9, BUTT-WELDED OR FLANGED, SCHEDULE 80	SEMI-PLUG AND YOKE TYPE OR BALL FOR CHLORINE SERVICE, FORGED CARBON STEEL
11	DUCTILE IRON, ANSI A21.51, (AWWA C151) OR CAST IRON ANSI A21.8, 150 PSI, BELL AND SPIGOT, MECHANICAL JOINTS, MECHANICAL COUPLINGS, OR 125 PSI FLANGED (TYPICAL SERVICE - WATER LINES)	DUCTILE IRON OR CAST IRON, ANSI A21.10, OR AWWA C110, BELL AND SPIGOT, MECHANICAL COUPLINGS, FLANGED OR MECHANICAL JOINTS, 250 PSI, (PRESSURE RATING) 12 INCHES AND SMALLER, 150 PSI, (PRESSURE RATING) 14 INCHES AND LARGER, WITH 125 PSI ANSI B16.1 FLANGES.	GATE, AWWA C500, 'O' RING SEALS, MECHANICAL JOINTS ENDS, MUELLER A-2380-20, OR EDDY-IOWA (CLOW) F-5155. BUTTERFLY, AWWA. ECCENTRIC PLUG, DEZURIK SERIES 118 OR KEYSTONE 1512, OR BALL, PRATT OR W-K-M.
12	CAST IRON SOIL, ANSI/ASTM A-74, SERVICE WEIGHT, BELL AND SPIGOT OR HUBLESS. AT THE OPTION OF THE CONTRACTOR, OTHER MATERIALS IN SPECIFICATIONS SECTION 15400 MAY BE SUBSTITUTED	CAST IRON SOIL, ANSI/ASTM A-74, SERVICE WEIGHT, BELL AND SPIGOT OR HUBLESS. (HUBLESS ABOVE GRADE ONLY) AT THE OPTION OF THE CONTRACTOR, OTHER MATERIALS IN SPECIFICATION SECTION 15400 MAY BE SUBSTITUTED.	AS INDICATED IN THE SPECIFICATIONS
13	CORROSION RESISTANT (HIGH SILICON CONTENT) CAST IRON, SERVICE WEIGHT, BELL AND SPIGOT OR HUBLESS.	CORROSION RESISTANT (HIGH SILICON CONTENT) CAST IRON, SERVICE WEIGHT, BELL AND SPIGOT OR HUBLESS.	--------
14	STAINLESS STEEL, TYPE 316, ASTM A312, SCHEDULE 40S.	STAINLESS STEEL, TYPE 316 ANSI B16.3, SCREWED, 150 PSI, ANSI B16.9, BUTT-WELDED, SCHEDULE 40S, OR 150 PSI FLANGED.	STAINLESS STEEL, BALL, FLANGED, CHECK, OR AS SHOWN ON DRAWINGS.
15	STAINLESS STEEL, TYPE 316, ASTM A312, SCHEDULE 10S.	STAINLESS STEEL, TYPE 316 ANSI B16.9 BUTT-WELDED SCHEDULE 10S OR 150 PSI FLANGED.	STAINLESS STEEL, AS INDICATED ON DRAWINGS.
16	POLYVINYL CHLORIDE, SCHEDULE 80, NORMAL IMPACT. ASTM D1785	POLYVINYL CHLORIDE, SCHEDULE 80, NORMAL IMPACT, SOCKET SOLVENT WELD JOINTS, ASTM D2467.	POLYVINYL CHLORIDE, BALL, DIAPHRAGM, BUTTERFLY, BALL OR LIFT CHECK.
17	POLYPROPYLENE, ASTM D4101, SCHEDULE 40, WITH HEAT FUSED JOINTS.	POLYPROPYLENE, SCHEDULE 40, DRAINAGE TYPE WITH HEAT FUSED SOCKET JOINTS.	--------
18	FIBERGLASS REINFORCED PLASTIC, ASTM D2996, FILAMENT-WOUND, SOCKET AND SPIGOT ENDS, ADHESIVE BONDED.	FIBERGLASS REINFORCED PLASTIC, FILAMENT-WOUND, SOCKET ENDS, ADHESIVE BONDED, OR FIBERGLASS FLANGED.	PLASTIC LINED, FLANGED. FLANGES TO MATCH 150 PSI ANSI B16.5 DIMENSIONS, OR AS INDICATED ON DRAWINGS.
19	POLYVINYL CHLORIDE PRESSURE PIPE ASTM D2241 WITH BELL AND SPIGOT JOINTS.	CAST IRON, 150 PSI, FOR POLYVINYL CHLORIDE PIPE, AWWA C110 CEMENT MORTAR LINED, AWWA C104.	SAME AS GROUP NO. 11.
20	VITRIFIED CLAY, PERFORATED, ASTM C 700, EXTRA STRENGTH, FLEXIBLE COMPRESSION JOINTS FOR BELL AND SPIGOT PIPE OR PLAIN END WITH MECHANICAL COMPRESSION JOINTS.	VITRIFIED CLAY, ASTM C700, FLEXIBLE JOINTS FOR BELL AND SPIGOT PIPE OR PLAIN END WITH MECHANICAL COMPRESSION JOINTS.	--------
21	VITRIFIED CLAY, ASTM C700, EXTRA STRENGTH, FLEXIBLE COMPRESSION JOINTS FOR BELL AND SPIGOT PIPE OR PLAIN END WITH MECHANICAL COMPRESSION JOINTS	VITRIFIED CLAY, ASTM C700, FLEXIBLE JOINTS FOR BELL AND SPIGOT PIPE OR PLAIN END WITH MECHANICAL COMPRESSION JOINTS.	--------
22	REINFORCED CONCRETE, ASTM C76, TONGUE AND GROOVED JOINTS. (TYPICAL SERVICE-CULVERTS)	SAME AS GROUP NO. 8	--------
23	TEMPERED GLASS. (ARMORED, WHERE BURIED). ANSI/ASTM C599	TEMPERED GLASS DRAINAGE TYPE WITH COMPRESSION COUPLINGS AND TEFLON JOINTS. ANSI/ASTM C599 (ARMORED WHERE BURIED)	--------
24	COPPER, ASTM B88, TYPE K, SOFT TEMPERED WHERE BURIED, HARD TEMPERED WHERE EXPOSED. SEE ALSO SPEC 15400	WROUGHT COPPER OR CAST BRONZE, ANSI B16.22, SOLDER JOINT, 150 PSI, OR COMPRESSION FITTINGS. (FOR OXYGEN PIPING USE SILVER SOLDER, FOR COMPRESSED AIR PIPING USE 95-5 TIN-ANTIMONY SOLDER).	SEE SPECS
25	HPDE PERFORATED, ASTM D-2513 AND 3350, RESIN TYPE III, CATEGORY 5, CLASS C, GRADE 34, ASTM D-1248	HPDE, SOCKET WELD OR HEAT FUSION	--------
26	HDPE, CELL CLASSIFICATION 345434C ASTM D-2513 AND 3350; RESIN TYPE III, CATEGORY 5, CLASS C, GRADE 34, ASTM D-1248	HPDE, HEAT FUSION, ASTM D-702	SEE SPECS
27	POLYVINYL CHLORIDE GRAVITY SEWER PIPE, ASTM D3034, BELL AND SPIGOT.	POLYVINYL CHLORIDE, ANSI/ASTM D-3034, BELL AND/OR SPIGOT.	--------
28	REINFORCED CONCRETE, AWWA C302, CLASS-SEE DRAWINGS, (TYPICAL SERVICE - PRESSURE PIPELINES)	SAME AS GROUP NO. 8.	AS INDICATED ON DRAWINGS.
29	SAME GROUP NO.1.	2 INCH AND SMALLER, MALLEABLE IRON, ANSI B16.3, THREADED, BANDED, BLACK, 150 PSI. 2-1/2 INCH AND LARGER, STEEL ANSI B16.9, BUTT-WELDED.	SAME AS GROUP NO. 1, EXCEPT LUBRICATED PLUG SHALL BE ROCKWELL FIG. 114 OR 115, OR POWELL FIG. 2202 OR 2203.
30	SAME AS GROUP NO.11, GLASS-LINED OR STEEL ASTM A120, SCHEDULE 40, GLASS-LINED	SAME AS GROUP NO.11, GLASS-LINED OR STEEL, ANSI B16.9, SCHEDULE 40, GROOVED WITH MECHANICAL COUPLINGS, GLASS-LINED.	SAME AS GROUP NO. 28.
31	2-1/2 INCH AND SMALLER, STEEL, ASTM A106 OR A53, SCHEDULE 80, SEAMLESS, BLACK. 3 INCH AND LARGER DUCTILE IRON, ANSI A21.51 (AWWA C151) OR CAST IRON ANSI A21.6 OR A21.8 MECHANICAL COUPLINGS OR 125 PSI FLANGED.	2-1/2 INCH AND SMALLER, FORGED STEEL, ANSI B16.11, SOCKET-WELDED OR THREADED, BLACK, 2000 PSI, OR STEEL, ANSI B16.9, BUTT-WELDED SCHEDULE 80. 3 INCH AND LARGER, DUCTILE IRON OR CAST IRON, ANSI A21.10 OR AWWA C110, MEHCANICAL COUPLING OR 125 PSI FLANGED.	CAST IRON, LUBRICATED PLUG, ROCKWELL FIG. 142 OR 143, OR POWELL FIG. 2200 OR 2201.
32	POLYVINYL CHLORIDE TYPE 1, GRADE 1, 18 ASTM D-1784 AWWA C-905	SHORT BODY CAST IRON OR DUCTILE IRON AWWA C110	SAME AS GROUP 11
33	PVC, PERFORATED BELL AND SPIGOT OR SOCKET SOLVENT WELD JOINTS, VERTICAL SECTIONS NOT PERFORATED UNLESS OTHERWISE INDICATED	SAME AS GROUP 18 POLYVINYL CHLORIDE, BELL AND SPIGOT OR SOCKET SOLVENT WELD JOINTS, ASTM D2729	--------
34	DOUBLE CONTAINMENT PVC SCH 80/80, SOCKET SOLVENT WELD JOINTS, ASTM D-1784 TYPE I, GRADE 1.	PVC SCH 80, SOLVENT WELD, ASTM D-2467	POLYVINYL CHLORIDE, BALL VALVES
35	POLYVINYL CHLORIDE TYPE 1, GRADE 1, 18 ASTM D-1784 AWWA C-900	SHORT BODY CAST IRON OR DUCTILE IRON AWWA C110	SAME AS GROUP 11
36	POLYVINYL CHLORIDE PLASTIC IRRIGATION PIPE TYPE 1, GRADE 1, ASTM D1784, SDR 51	SHORT BODY CAST IRON OR DUCTILE IRON AWWA C110	SAME AS GROUP 11

LIST OF SAMPLE LINES

PIPE DESIGNATION	SAMPLE POINT

TYPICAL PIPE DESIGNATION:

2" UW (24)

PIPE DIAMETER — FLUID ABBREVIATION — MATERIAL GROUP NUMBER (SEE NOTE 12)

NOTES

NOTE 1
PROPRIETARY NAMES HAVE BEEN QUOTED FOR IDENTIFICATION PURPOSES ONLY. SUBSTITUTIONS WILL BE PERMITTED SUBJECT TO PROVISIONS OF THE SPECIFICATIONS.

NOTE 2
LEAKAGE ALLOWANCE IS AS FOLLOWS:
(A) PIPES SO DESIGNATED SHALL SHOW ZERO LEAKAGE.
(B) PIPES SO DESIGNATED SHALL SHOW ZERO LEAKAGE FOR UNBURIED PIPE AND NOT MORE THAN 0.002 GALLON PER HOUR PER INCH DIAMETER PER 100 FEET OF BURIED PIPE.
(C) PIPES SO DESIGNATED SHALL NOT SHOW A LEAKAGE OF MORE THAN 0.15 GALLON PER HOUR PER INCH OF DIAMETER PER 100 FEET OF PIPE.
(D) PIPES SO DESIGNATED SHALL NOT SHOW A LOSS OF PRESSURE OF MORE THAN 5 PERCENT.
(E) SEE SPECS.

NOTE 3
FOR FIELD TEST PROCEDURES AND ADDITIONAL TEST REQUIREMENTS, SEE PIPING SECTION OF SPECIFICATIONS.

NOTE 4
ANY DEVIATION FROM THE PIPING MATERIALS OR FIELD TEST REQUIREMENTS SHOWN WILL BE NOTED IN THE SPECIFICATIONS OR ON THE DRAWINGS.

NOTES

NOTE 5
PIPING GROUP NUMBER SHOWN THUS * SHALL BE INSULATED, SEE PIPING SECTION OF SPECIFICATIONS FOR INSULATING MATERIALS.

NOTE 6
STATIC WATER TEST WITH SURFACE 5 FEET ABOVE HIGH POINT OF PIPE.

NOTE 7
INSPECTION AND TESTING SHALL BE IN ACCORDANCE WITH APPLICABLE PLUMBING CODE AND THE SPECIFICATIONS.

NOTE 8
NO APPARENT LEAKS UNDER NORMAL OPERATING CONDITIONS.

NOTE 9
INSPECTION AND TESTING SHALL BE IN ACCORDANCE WITH APPLICABLE NATIONAL FIRE PROTECTION ASSOCIATION STANDARDS.

NOTE 10
PIPING MATERIALS SHALL BE IN ACCORDANCE WITH NATIONAL FIRE PROTECTION ASSOCIATION STANDARDS.

NOTE 11
FOR VALVES 8 INCHES AND LARGER SEE VALVE SCHEDULE. FOR SPECIAL VALVES SEE SPECIFICATIONS.

NOTE 12
CHANGE IN PIPING MATERIAL GROUP NUMBER IS INDICATED THUS: ——◆

NOTE 13
FOR PIPE LINING AND COATING, SEE SPECIFICATIONS.

NOTE 14
EXPOSED PIPING SHALL BE PAINTED IN ACCORDANCE WITH SPECIFICATIONS.

NOTE 15
PIPING MATERIAL SHALL BE NON-ABRASIVE FLEXIBLE RUBBER HOSE AND QUICK CONNECTION COUPLINGS WITH GROUP NO. 1 AT EQUIPMENT.

NOTE 16
VALVES 2- 1/2 INCH AND SMALLER MAY HAVE SCREWED ENDS VALVES 3 INCH AND LARGER SHALL HAVE FLANGED ENDS, UNLESS OTHERWISE SHOWN OR SPECIFIED.

NOTE 17
NOT ALL PIPING GROUPS SHOWN ARE USED.

NOTE 18
FOR GROUP 26 SEE SPECIFICATION SECTION 02725.

100% REVIEW SUBMITTAL NOT FOR CONSTRUCTION

REV.	DATE	DESCRIPTION	DRAWN BY	DRAFT CHK	ENGR/CHKD	ENGR CHK		
C	1/20/98	ISSUED FOR 100% DESIGN REVIEW	PDH	MOM	MOM	LHA		
B	11/21/97	ISSUED FOR 90% DESIGN REVIEW	PDH	MOM	MOM	LHA		
A	10/7/97	ISSUED FOR 30% DESIGN REVIEW	PDH	MOM	MOM	LHA		

SCALE:

U.S. DEPARTMENT OF ENERGY
DOE FIELD OFFICE, RICHLAND
HANFORD ENVIRONMENTAL RESTORATION PROGRAM

BECHTEL HANFORD INC.
RICHLAND, WASHINGTON

MONTGOMERY WATSON
RICHLAND, WASHINGTON

ENVIRONMENTAL RESTORATION DISPOSAL FACILITY
CELLS 3 & 4
PIPING SCHEDULE

BECHTEL JOB NO.	DOE CONTRACT NO.	CADD FILENAME
22192	DE-AC06-93RL12367	6xdm0009.DWG

TASK	DRAWING NO.	REV. NO
600	0600X-DD-M0009	C

RECORD INFORMATION

RECORD NO.	BLDG NO.	INDEX NO.
H-6-14833 SHT 1	600G	0105

DRAWING NO.	REV. NO.
0600X-DD-M0010	C

PUMP SCHEDULE

EQUIPMENT NO.	LOCATION	SERVICE	PIPE FLOW	T.D.H.	MOTOR SIZE (MIN)	TYPE	REMARKS
2-P-13	TRENCH CELL 3 PRIMARY SUMP	LEACHATE	15.7 l/S (250gpm)	36.58m (120 ft)	7.46kw (10hp)	SUBMERSIBLE CENTRIFUGAL	MOUNTED ON WHEELED TROLLEYS
2-P-14	TRENCH CELL 3 PRIMARY SUMP	LEACHATE	0.95 l/S (15gpm)	42.67m (140 ft)	0.56kw (0.75hp)	SUBMERSIBLE CENTRIFUGAL	MOUNTED ON WHEELED TROLLEYS
2-P-15	TRENCH CELL 3 SECONDARY SUMP	LEACHATE	0.95 l/S (15gpm)	42.67m (140 ft)	0.56kw (0.75hp)	SUBMERSIBLE CENTRIFUGAL	MOUNTED ON WHEELED TROLLEYS
2-P-16	TRENCH CELL 4 PRIMARY SUMP	LEACHATE	15.7 l/S (250gpm)	36.58m (120 ft)	7.46kw (10hp)	SUBMERSIBLE CENTRIFUGAL	MOUNTED ON WHEELED TROLLEYS
2-P-17	TRENCH CELL 4 PRIMARY SUMP	LEACHATE	0.95 l/S (15gpm)	42.67m (140 ft)	0.56kw (0.75hp)	SUBMERSIBLE CENTRIFUGAL	MOUNTED ON WHEELED TROLLEYS
2-P-18	TRENCH CELL 4 SECONDARY SUMP	LEACHATE	0.95 l/S (15gpm)	42.67m (140 ft)	0.56kw (0.75hp)	SUBMERSIBLE CENTRIFUGAL	MOUNTED ON WHEELED TROLLEYS
2-P-2	TRANSFER LINE PUMP	TRANSFER LIQUID	16.7 l/S (265gpm)	50.3m (165 ft)	14.92kw (20hp)	END SUCTION CENTRIFUGAL	REPLACE EXISTING PUMP - TURN OVER EXISTING PUMP TO CONTRACTING OFFICER.
2-P-19	TRANSFER LINE SPARE	TRANSFER LIQUID	16.7 l/S (265gpm)	50.3m (165 ft)	14.92kw (20hp)	END SUCTION CENTRIFUGAL	PROVIDE PUMP TO CONTRACTING OFFICER

VALVE SCHEDULE (203mm(8") AND LARGER MECHANICAL AND ALL MOTORIZED)

VALVE NO.	LOCATION	SERVICE	TYPE	SIZE	PRESSURE (PSI)	OPERATOR	REMARKS
2-V-15	MH-23	LEACHATE	ECCENTRIC PLUG VALVE	254.2mm (10 in)	1034 kPa (150 psi)	MOTORIZED	
2-V-16	MH-24	LEACHATE	ECCENTRIC PLUG VALVE	254.2mm (10 in)	1034 kPa (150 psi)	MOTORIZED	

METER SCHEDULE

METER NO.	LOCATION	SERVICE	TYPE	PIPE SIZE	FLOW RANGE	REMARKS
2-M-8	CREST PAD CELL 3	LEACHATE	PADDLE METER	50.8mm (2")	0-18.9 l/S (0-300gpm)	
2-M-9	CREST PAD CELL 3	LEACHATE	PADDLE METER	19.1mm (3/4")	0-1.6 l/S (0-25gpm)	
2-M-10	CREST PAD CELL 3	LEACHATE	PADDLE METER	19.1mm (3/4")	0-1.6 l/S (0-25gpm)	
2-M-11	CREST PAD CELL 4	LEACHATE	PADDLE METER	50.8mm (2")	0-18.9 l/S (0-300gpm)	
2-M-12	CREST PAD CELL 4	LEACHATE	PADDLE METER	19.1mm (3/4")	0-1.6 l/S (0-25gpm)	
2-M-13	CREST PAD CELL 4	LEACHATE	PADDLE METER	19.1mm (3/4")	0-1.6 l/S (0-25gpm)	

FLUID ABBREVIATION	FUNCTION THIS LIST INCLUDES SOME LINES NOT USED IN THIS PROJECT	PIPING MATERIALS (SEE SCHEDULE AT RIGHT) EXPOSED PIPING (SEE NOTE 14) 2 IN. DIA. AND SMALLER	EXPOSED PIPING (SEE NOTE 14) 2-1/2 IN. DIA. AND LARGER	BURIED PIPING (SEE NOTE 13) 2 IN. DIA. AND SMALLER	BURIED PIPING (SEE NOTE 13) 2-1/2 IN. DIA. AND LARGER	FIELD TEST REQUIREMENTS (SEE NOTE 3 AND NOTE 4) MINIMUM TEST PRESSURE PSI	TEST MEDIUM	LEAKAGE ALLOWANCE (SEE NOTE 2)
CN	CONTAINER PIPE	--	26	--	26,34	SEE SPEC	WATER	(A)
LC	LEACHATE COLLECTION	--	--	--	25	SEE SPEC	--	--
LCC	LEACHATE COLLECTION CLEANOUT	--	26	--	26	SEE SPEC	--	--
LE	LEACHATE	15,16,26	11,15,16,26	26	26	SEE SPEC	WATER	(A) (D)
		--	--	--	--	SEE SPEC	--	--
TL	TRANSFER LINE	--	11	--	35	SEE SPEC	WATER	(A)
TSR	TRENCH SUMP RISER PIPE	--	26	--	26	SEE SPEC	WATER	(A)

NOTES

1. NOTES CALLED OUT IN SCHEDULES ON THIS SHEET ARE LOCATED ON DWG 0600X-DD-M0009.
2. SEE ELECTRICAL DRAWING 0600X-DD-ED057 FOR UNIT HEATERS, EXHAUST FANS AND LOUVERS.

100%
REVIEW SUBMITTAL
NOT FOR CONSTRUCTION

REV.	DATE	DESCRIPTION	DRAWN BY	CHKD BY	DSGN/ENGR	SUPR CHK	PL/TD APPROV	PE APPROV
C	1/30/98	ISSUED FOR 100% DESIGN REVIEW	PDH	MGM	MGM	LHA		
B	11/21/97	ISSUED FOR 60% DESIGN REVIEW	PDH	MGM	MGM	LHA		
A	10/7/97	ISSUED FOR 30% DESIGN REVIEW	PDH	MGM	MGM	LHA		

SCALE

U.S. DEPARTMENT OF ENERGY
DOE FIELD OFFICE, RICHLAND
HANFORD ENVIRONMENTAL RESTORATION PROGRAM

BECHTEL HANFORD INC.
RICHLAND, WASHINGTON

MONTGOMERY WATSON
RICHLAND, WASHINGTON

ENVIRONMENTAL RESTORATION DISPOSAL FACILITY
CELLS 3 & 4
MECHANICAL SCHEDULES

BECHTEL JOB NO.	DOE CONTRACT NO.	CADD FILENAME
22192	DE-AC06-93RL12367	6xdm0010.DWG

HANFORD	TASK	DRAWING NO.	REV. NO.
	600	0600X-DD-M0010	C

RECORD INFORMATION

RECORD NO.	BLDG NO.	INDEX NO.
H-6-14834 SHT 1	600G	0105

DRAWING NO.	REV. NO.
0600X-DD-M0011	C

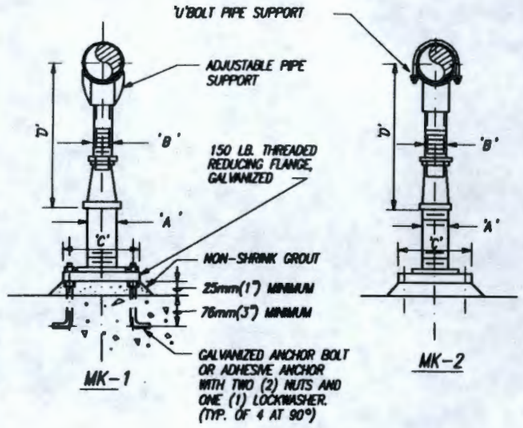

ADJUSTABLE PIPE SUPPORT WITH OR WITHOUT 'U' BOLT — M-108

ADJUSTABLE PIPE SUPPORT
APPROXIMATE DIMENSIONS IN MM(INCHES)

PIPE SIZE	'A'	'B'	'C'	'D' MINIMUM	'D' MAXIMUM
64mm(2-1/2")	64mm(2-1/2")	38mm(1-1/2")	229mm(9")	203mm(8")	292mm(11-1/2")
76mm(3")	64mm(2-1/2")	38mm(1-1/2")	229mm(9")	210mm(8-1/4")	298mm(11-3/4")
89mm(3-1/2")	64mm(2-1/2")	38mm(1-1/2")	229mm(9")	216mm(8-1/2")	305mm(12")
102mm(4")	76mm(3")	* 64mm(2-1/2")	229mm(9")	260mm(10-1/4")	356mm(14")
152mm(6")	76mm(3")	* 64mm(2-1/2")	229mm(9")	295mm(11-5/8")	387mm(15-1/4")
203mm(8")	76mm(3")	* 64mm(2-1/2")	229mm(9")	346mm(13-5/8")	419mm(16-1/2")
254mm(10")	76mm(3")	* 64mm(2-1/2")	229mm(9")	371mm(14-5/8")	464mm(18-1/4")
305mm(12")	76mm(3")	* 64mm(2-1/2")	229mm(9")	397mm(15-5/8")	502mm(19-3/4")
356mm(14")	102mm(4")	76mm(3")	279mm(11")	479mm(18-7/8")	527mm(20-3/4")
406mm(16")	102mm(4")	76mm(3")	279mm(11")	505mm(19-7/8")	565mm(22-1/4")
457mm(18")	152mm(6")	89mm(3-1/2")	343mm(13-1/2")	540mm(21-1/4")	610mm(24")
508mm(20")	152mm(6")	89mm(3-1/2")	343mm(13-1/2")	591mm(23-1/4")	648mm(25-1/2")
610mm(24")	152mm(6")	102mm(4")	343mm(13-1/2")	673mm(26-1/2")	718mm(28-1/4)
762mm(30")	152mm(6")	102mm(4")	343mm(13-1/2")	752mm(29-5/8")	800mm(31-1/2")
813mm(32")	152mm(6")	102mm(4")	343mm(13-1/2")	778mm(30-5/8")	832mm(32-3/4")
914mm(36")	152mm(6")	102mm(4")	343mm(13-1/2")	829mm(32-5/8)	883mm(34-3/4")

*SEE MFR.

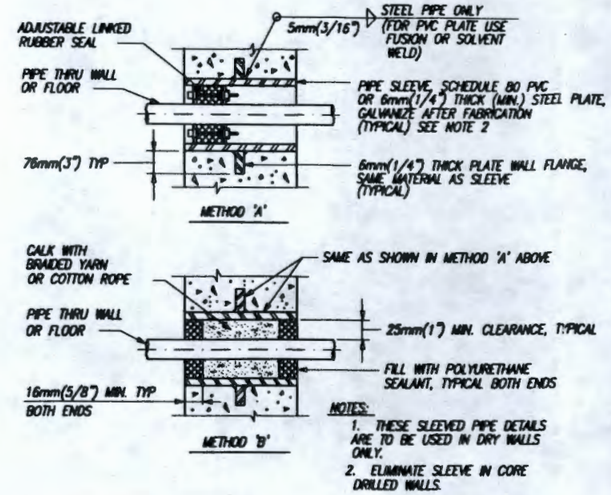

NOTES:
1. THESE SLEEVED PIPE DETAILS ARE TO BE USED IN DRY WALLS ONLY.
2. ELIMINATE SLEEVE IN CORE DRILLED WALLS.

SLEEVED PIPE OPENING — M-111

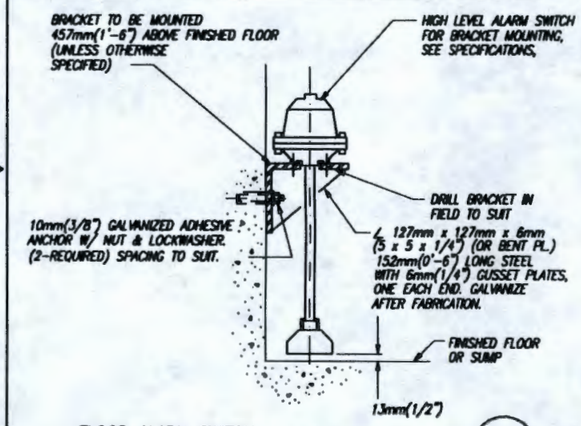

FLOOD ALARM SWITCH — M-607

100%
REVIEW SUBMITTAL
NOT FOR CONSTRUCTION

REV.	DATE	DESCRIPTION	DRAWN BY	DSGN/ENGR	DSGN/ENGR	PROJ MGR	CL/TEL APPROV	PE APPROV
C	1/20/98	ISSUED FOR 100% DESIGN REVIEW	PDH	MDM	MDM	LHA		
B	11/21/97	ISSUED FOR 60% DESIGN REVIEW	PDH	MDM	MDM	LHA		
A	10/7/97	ISSUED FOR 30% DESIGN REVIEW	PDH	MDM	MDM	LHA		

SCALE

U.S. DEPARTMENT OF ENERGY
DOE FIELD OFFICE, RICHLAND
HANFORD ENVIRONMENTAL RESTORATION PROGRAM

BECHTEL HANFORD INC.
RICHLAND, WASHINGTON

MONTGOMERY WATSON
RICHLAND, WASHINGTON

ENVIRONMENTAL RESTORATION DISPOSAL FACILITY
CELLS 3 & 4
MECHANICAL DETAILS 1

BECHTEL JOB NO.	DOE CONTRACT NO.	CADD FILENAME
22192	DE-AC06-93RL12367	6xdm0011.DWG

TASK	DRAWING NO.	REV. NO.
600	0600X-DD-M0011	C

RECORD INFORMATION

RECORD NO.	BLDG NO.	INDEX NO.
H-6-14835 SHT 1	600G	0105

DRAWING NO.	REV. NO.
0600X-DD-M0012	C

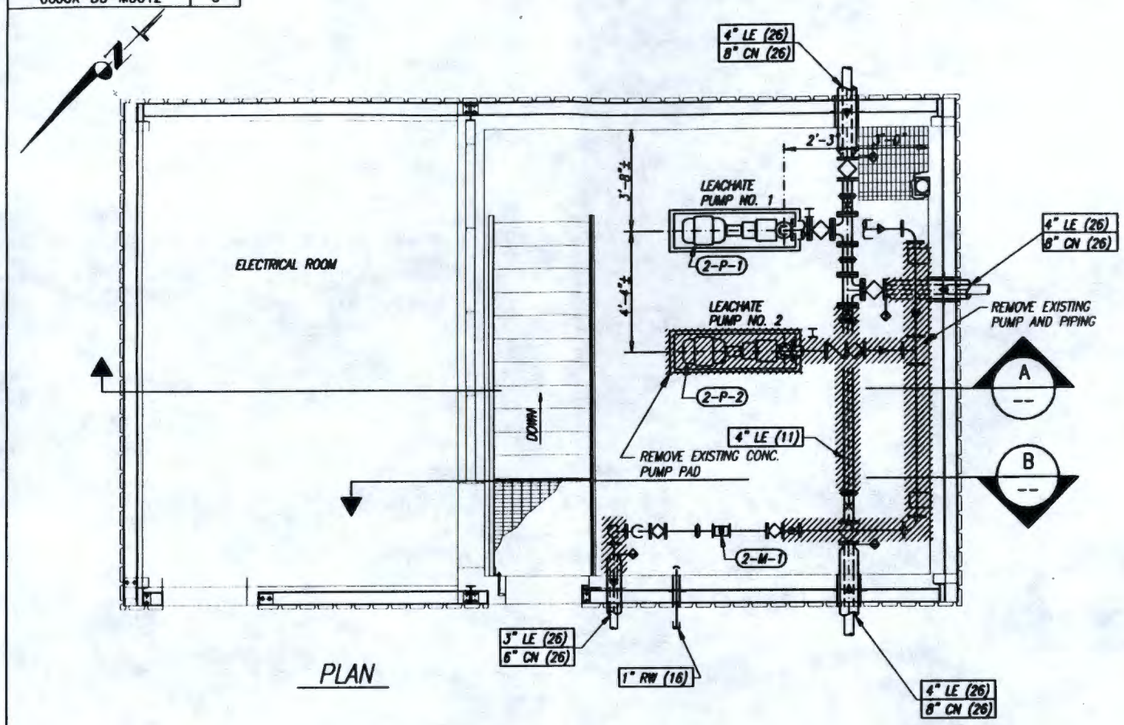

PLAN

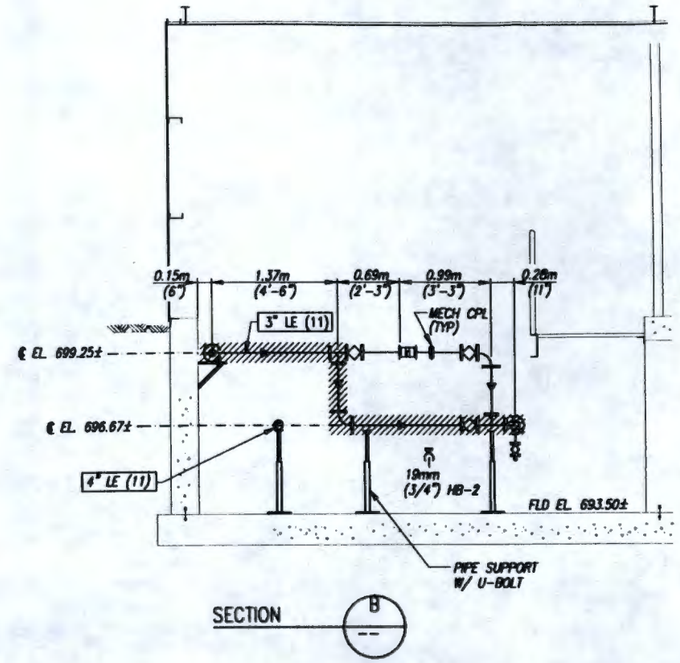

SECTION B

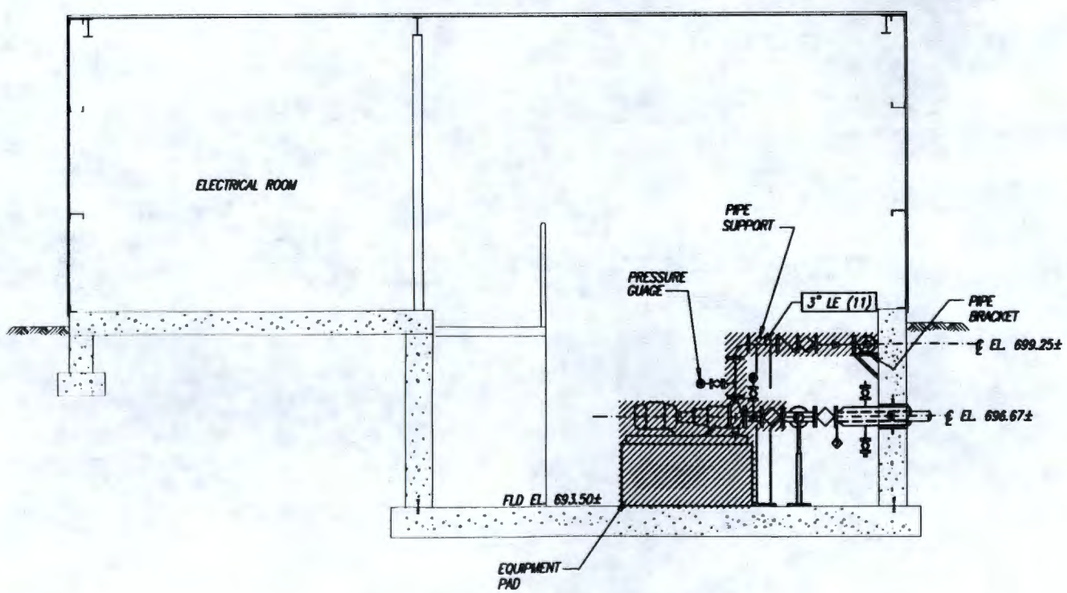

SECTION A

CENTIMETERS 0 50 100 200
FEET 0 1 2 3 4 5

NOTES

100%
REVIEW SUBMITTAL
NOT FOR CONSTRUCTION

REV.	DATE	DESCRIPTION	DRAWN BY	DSGN ENG	DSGN/ CHEM	DSGN ENG	CH/TEL APPROV	PROJ ENGR
C	1/20/98	ISSUED FOR 100% DESIGN REVIEW	PDM	LHA	LHA	MGM		

SCALE 3/8"=1'-0"

U.S. DEPARTMENT OF ENERGY
DOE FIELD OFFICE, RICHLAND
HANFORD ENVIRONMENTAL RESTORATION PROGRAM

BECHTEL HANFORD INC.
RICHLAND, WASHINGTON

MONTGOMERY WATSON
RICHLAND, WASHINGTON

ENVIRONMENTAL RESTORATION DISPOSAL FACILITY
CELLS 3 & 4
LEACHATE PUMP STATION DEMOLITION PLAN

BECHTEL JOB NO.	DOE CONTRACT NO.	CADD FILENAME
22192	DE-AC06-93RL12367	6xdm0012.DWG

TASK	DRAWING NO.	REV. NO.
600	0600X-DD-M0012	C

RECORD INFORMATION

RECORD NO.	BLDG NO.	INDEX NO.
H-6-14836 SHT 1	600G	0105

DRAWING NO.	REV. NO.
0600X-DD-M0013	C

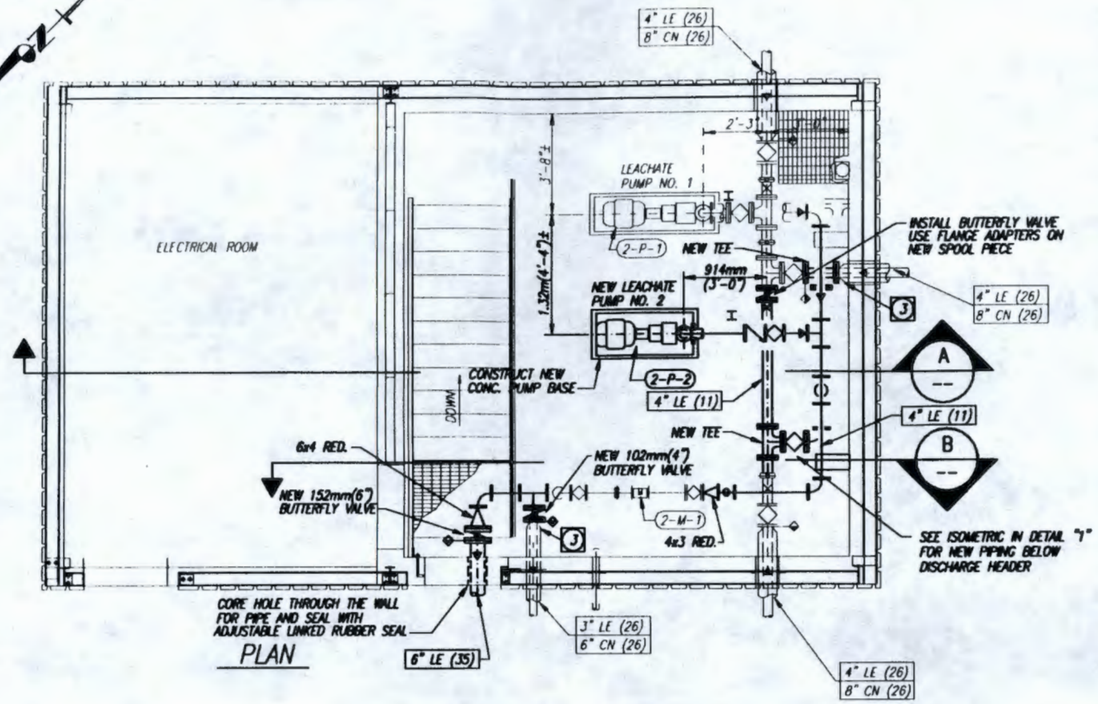

PLAN

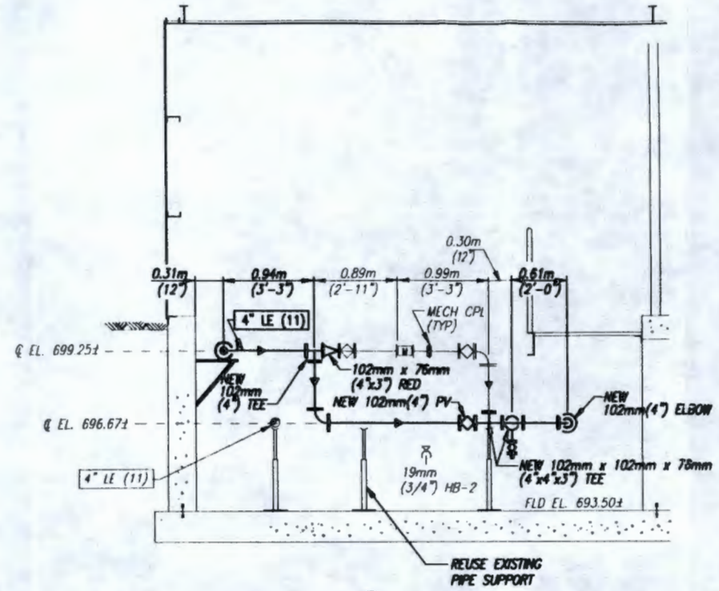

SECTION B --

NOTES

1. INSTALL EXISTING GAUGE ON NEW SPOOL PIECE.
2. USE FLANGE ADAPTER ON SPOOL PIECE FOR ADJUSTMENT.
3. ADJUST EXISTING CONTAINMENT PIPING AS NECESSARY TO ACCOMODATE INSTALLATION OF NEW VALVING OR FITTINGS.

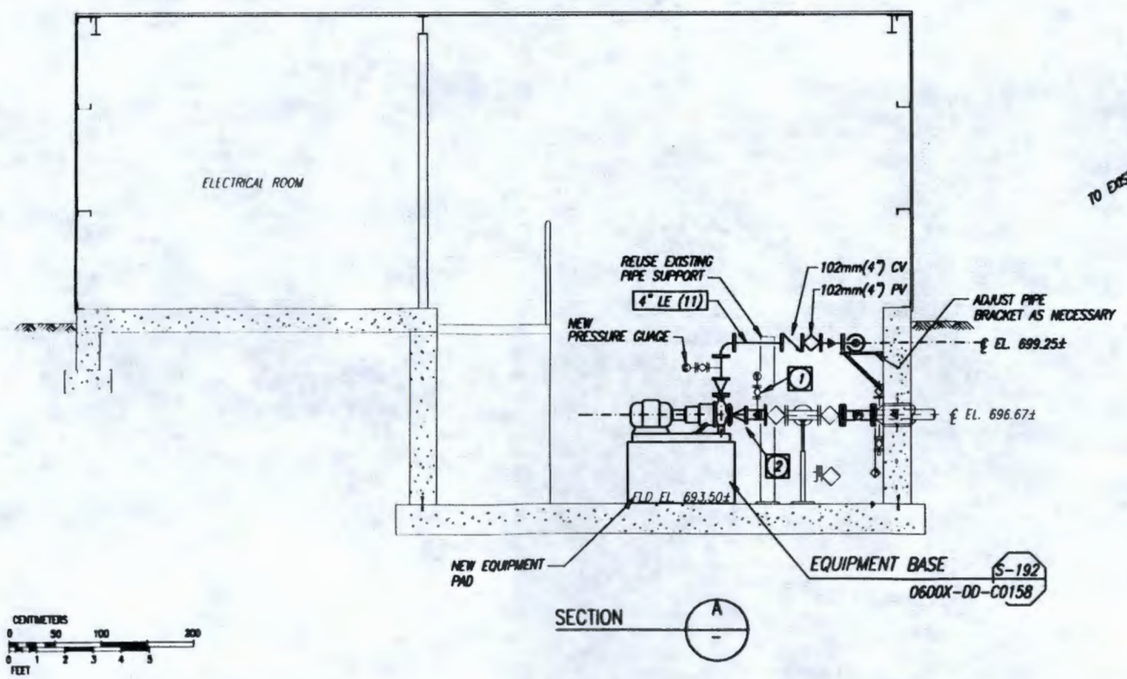

SECTION A -

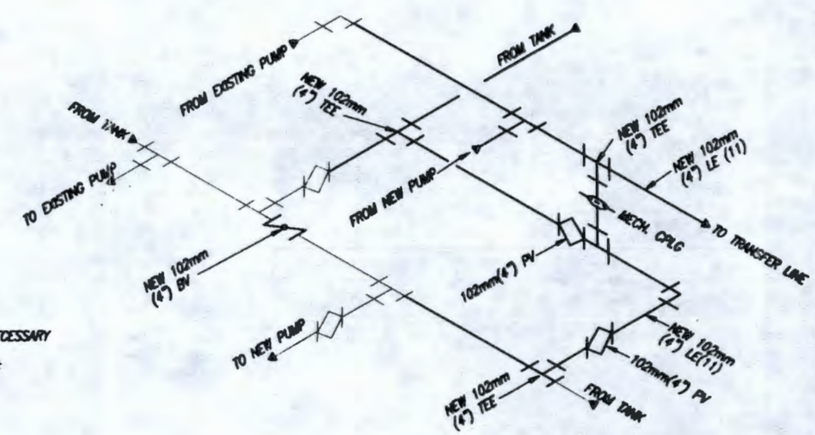

DETAIL 1 --
NTS

100%
REVIEW SUBMITTAL
NOT FOR CONSTRUCTION

REV.	DATE	DESCRIPTION	DRAWN BY	DSGN ENGR	ENGR ENGR	DSGN OFC	CH./TEC. ENGRS	PROJ. ENGR
C	1/20/98	ISSUED FOR 100% DESIGN REVIEW	PDH	LVA	LVA	MRM		

SCALE 3/8"=1'-0"

U.S. DEPARTMENT OF ENERGY
DOE FIELD OFFICE, RICHLAND
HANFORD ENVIRONMENTAL RESTORATION PROGRAM

BECHTEL HANFORD INC.
RICHLAND, WASHINGTON

MONTGOMERY WATSON
RICHLAND, WASHINGTON

ENVIRONMENTAL RESTORATION DISPOSAL FACILITY
CELLS 3 & 4
LEACHATE PUMP STATION PUMP & PIPING MODIFICATIONS

BECHTEL JOB NO.	DOE CONTRACT NO.	CADD FILENAME
22192	DE-AC06-93RL12367	6xdm0013.DWG

TASK	DRAWING NO.	REV. NO.
600	0600X-DD-M0013	C

RECORD INFORMATION

RECORD NO.		BLDG NO.	INDEX NO.
H-6-14837	SHT 1	600G	0105

DRAWING NO.	REV. NO.
0600X-DD-E0038	C

PLAN

- GROUND BUS
- EXPOSED CONDUIT
- CONDUIT CONCEALED ABOVE FLOOR.
- CONDUIT RUN UNDERGROUND OR IN CONCRETE
- EXPOSED CONDUIT RUN BEHIND OBSTRUCTION
- BARE COPPER GROUND TO GROUND WIRE IN SLAB, OR UNDERGROUND GROUND GRID, SIZE AS NOTED.
- UNDERGROUND TELEMETRY CONDUIT
- LP1-1, 3, 7 — HOME RUN TO PANEL "LP1", CIRCUITS #1, 3, 7. CONDUCTORS SHALL BE NO. 12 UNLESS OTHERWISE NOTED. CONDUIT SHALL BE 3/4", UNLESS OTHERWISE NOTED. CONDUIT SIZES NOT IDENTIFIED SHALL BE 3/4" MINIMUM WITH 2#12. G INDICATES GROUND WIRE.
- T — TELEPHONE CONDUIT ONLY. "UNLESS OTHERWISE NOTED".
- CONDUIT RUN – CHANGE IN ELEVATION
- CONDUIT BENDS TOWARD OBSERVER
- CONDUIT BENDS AWAY FROM OBSERVER
- CONDUIT CAPPED, OR SEALED
- FLEXIBLE LIQUID – TIGHT CONDUIT CONNECTION
- C135 — INDICATES CONDUIT NUMBER
- 2a — CEILING OR PENDANT INCANDESCENT, MERCURY VAPOR, OR SIMILAR LAMP FIXTURE. "2" INDICATES CIRCUIT NUMBER. "a" INDICATES FIXTURE CONTROLLED BY SWITCH "a".
- WALL BRACKET INCANDESCENT, MERCURY VAPOR, OR SIMILAR LAMP FIXTURE WITH EXPOSED BACK BOX AND CONDUIT.
- WALL BRACKET FLOOD OR SPOTLIGHT WITH CONCEALED BACK BOX AND CONDUIT.
- 1 — POLE MOUNTED FIXTURE DISTRIBUTION TYPE AS INDICATED ON PLAN
- A 2/40 3 — FIXTURE TYPE A. 2-40 WATT LAMPS 3 – NUMBER OF TYPE "A" FIXTURES
- FLUORESCENT LIGHTING FIXTURE, UNSWITCHED (SWITCHED AT LIGHTING PANEL ONLY)
- E — FLUORESCENT LIGHTING FIXTURE ON EMERGENCY CIRCUIT
- FLUORESCENT LIGHTING FIXTURE
- BATTERY EMERGENCY LIGHT FIXTURE
- S_a — SINGLE POLE SWITCH. "a" INDICATES CIRCUIT CONTROLLED
- S_2 — DOUBLE POLE SWITCH
- S_3 — THREE-WAY SWITCH
- S_4 — FOUR-WAY SWITCH
- S_K — KEY-OPERATED SWITCH
- S_P — SWITCH AND PILOT LIGHT
- S_M — MANUAL MOTOR STARTER

WALL FLOOR

- 120V SINGLE RECEPTACLE, NEMA CONFIGURATION 5-20.
- 120V DUPLEX RECEPTACLE, NEMA CONFIGURATION 5-20
- 240V DUPLEX RECEPTACLE, NEMA CONFIGURATION 6-20
- SINGLE SPECIAL-PURPOSE RECEPTACLE, ASTERISK INDICATES NUMBER, SUCH AS AMPERAGE, TO DIFFERENTIATE BETWEEN TWO OR MORE DIFFERENT TYPES. 120 OR 240 V.A.C.
- 240V SINGLE RECEPTACLE, NEMA CONFIGURATION 6-20
- WELDING RECEPTACLE, 100A, 2W, 3P MOUNT 42" ABOVE FLOOR
- SINGLE SPECIAL PURPOSE RECEPTACLE 480 VAC
- C — CLOCK HANGER RECEPTACLE
- LIGHTING PANEL
- POWER PANEL
- MOTOR CONTROL CENTER
- FLOOR TYPE TELEPHONE OUTLET
- PUBLIC TELEPHONE SYSTEM DEVICE
- PRIVATE TELEPHONE (ANY TYPE) SYSTEM DEVICE
- DISCONNECT SWITCH
- MOTOR STARTER
- M — MOTOR
- SS — PUSHBUTTON STATION "SS" START-STOP, "LOS" LOCKOUT-STOP, "SLOS" START-LOCKOUT-STOP
- JB — RACEWAY BOX "HH" HANDHOLE "JB" JUNCTION BOX "PB" PULLBOX "TB" TERMINAL BOX
- J — JUNCTION BOX OR FITTING
- PSL-1 — FIELD INSTRUMENT I.E. "PSL" PRESSURE SWITCH "LSH" LEVEL SWITCH "SV" SOLENOID VALVE
- SV — SOLENOID VALVE
- T — THERMOSTAT
- H — HEATER
- HORN
- 1 — DENOTES REFERENCE TO NOTE 1 I.E. – " SEE NOTE 1 "
- GROUND ROD 3/4" x 10' – 0" (UNLESS OTHERWISE NOTED)
- GROUND ROD AND GROUND WELL
- GROUND CONNECTION BOLTED TYPE
- GROUND CONNECTION – EXOTHERMIC TYPE
- M — MOTOR OPERATED VALVE

SINGLE LINE DIAGRAM

- BUS
- 2 — ACROSS-THE-LINE, NON-REVERSING NEMA SIZE 2 MAGNETIC STARTER
- 30A — CONTACTOR, SIZE AS NOTED
- 50A — MOLDED CASE CIRCUIT BREAKER, 3 POLE UNLESS OTHERWISE NOTED: 50A.-TRIP RATING IN AMPERE NA- NON-AUTOMATIC MCP – MOTOR CIRCUIT PROTECTOR AT-TRIP RATING (125 AMPS NOTED)
- OR
- 225AF 125AT
- 52 — MEDIUM OR HIGH VOLTAGE DRAWOUT BREAKER
- DRAWOUT BREAKER, SIZE AS NOTED ED – DENOTES ELECTRICALLY OPERATED
- MEDIUM OR HIGH VOLTAGE STARTER
- SURGE ARRESTOR
- 10 — MOTOR – 10 HP NOTED
- 480/120V — TRANSFORMER WITH GROUNDED SECONDARY, KVA SIZE & VOLTAGE RATIO AS NOTED.
- PT (2) — POTENTIAL TRANSFORMER, RATIO AND NUMBER OF PT'S AS NOTED
- CT 100/5 (3) — CURRENT TRANSFORMER, RATIO AND NUMBER OF CT'S AS NOTED
- 1 — ELECTRICAL INTERLOCK
- ELECTRICAL ENCLOSURE OUTLINE
- MOV — ELECTRICAL MOTOR OPERATED VALVE, WITH INTEGRAL REVERSING STARTER
- DISCONNECT SWITCH, SIZE AS NOTED
- FUSED DISCONNECT SWITCH
- 10 KVAR — CAPACITOR, KVAR AS NOTED
- KWH/DM — KILOWATTHOUR METER WITH DEMAND REGISTER
- AM — AMMETER
- VM — VOLTMETER
- PF — POWER FACTOR METER
- VAR — VARMETER
- AS — AMMETER SWITCH
- VS — VOLTMETER SWITCH

SCHEMATIC DIAGRAM

- CONTROL RELAY OR COIL
  - EXAMPLE: TD2 TIME DELAY RELAY NO. 2; CR1 CONTROL RELAY; 1M STARTER NO. 1 MAIN COIL
- N.O. CONTACT
- N.C. CONTACT
- TORQUE SWITCH (SPECIFY WHEN OPEN)
- NORMALLY OPEN LIMIT SWITCH
- NORMALLY CLOSED LIMIT SWITCH
- FLOAT TYPE LIQUID LEVEL SWITCH, CLOSING ON RISING LEVEL
- FLOAT TYPE LIQUID LEVEL SWITCH, OPENING ON RISING LEVEL
- VACUUM OR PRESSURE SWITCH, CLOSING ON RISING PRESSURE
- VACUUM OR PRESSURE SWITCH, OPENING ON RISING PRESSURE
- TEMPERATURE ACTUATED SWITCH; CLOSING ON RISING TEMPERATURE
- TEMPERATURE ACTUATED SWITCH; OPENING ON RISING TEMPERATURE
- FLOW SWITCH (AIR, WATER, ETC.); CLOSING ON FLOW INCREASE
- FLOW SWITCH (AIR, WATER, ETC.); OPENING ON FLOW INCREASE
- NORMALLY OPEN PUSHBUTTON, MOMENTARY CLOSE
- NORMALLY CLOSED PUSHBUTTON, MOMENTARY OPEN
- NO/NC MAINTAINED PUSHBUTTON
- ON OFF — TWO-POSITION SELECTOR SWITCH: H-HAND, M-MANUAL, R-REMOTE, L-LOCAL, A-AUTOMATIC, O-OFF
- H O A — THREE-POSITION SELECTOR SWITCH. (SAME AS ABOVE)
- THREE-POSITION SPRING RETURN-TO-CENTER MOMENTARY CONTACT SWITCH ("LATCH-UNLATCH," "ON-OFF," ETC.)
- SINGLE POLE TOGGLE SWITCH ("ON-OFF", ETC.)
- OL — OVERLOAD RELAY CONTACTS (MAGNETIC)

TIMED CONTACTS – CONTACT ACTION DELAYED AFTER COIL IS:

ENERGIZED

- NORMALLY OPEN WITH TIME DELAY CLOSING
- NORMALLY CLOSED WITH TIME DELAY OPENING

DE-ENERGIZED

- NORMALLY OPEN WITH INSTANT CLOSING AND TIME DELAY OPENING
- NORMALLY CLOSED WITH INSTANT OPENING AND TIME DELAY CLOSING
- MANUAL MOTOR STARTER WITH OVERLOAD PROTECTION
- FUSE
- RES — RESISTOR (FIXED) POTENTIOMETER TYPE
- RESISTOR (CONTINUOUSLY ADJUSTABLE)
- R — PUSH-TO-TEST INDICATING LIGHT
- ETM — ELAPSED TIME METER
- HEATER
- CROSSING OF CONDUCTORS-NOT CONNECTED
- CONNECTION OF CONDUCTORS, FITTING AS REQUIRED
- DISCONNECT SWITCH
- GROUND CONNECTION
- SURGE SUPPRESSOR
- ELECTRICAL CORD CONNECTOR
- G — INDICATING LIGHT G – GREEN R – RED A – AMBER
- SIGNAL ISOLATOR
- M — SIGNAL PHASE MOTOR
- GFI — GROUND FAULT

NOTES

100%
REVIEW SUBMITTAL
NOT FOR CONSTRUCTION

REV.	DATE	DESCRIPTION	DRAWN BY	CHKD BY	ENGR/DSGN	MGR DPT	PL/TEL APPROV	PROJ ENGR
C	1/30/98	ISSUED FOR 100% DESIGN REVIEW	PDH	MGW	SIL	LHA		
B	11/21/97	ISSUED FOR 80% DESIGN REVIEW	PDH	MGW	SIL	LHA		
A	10/7/97	ISSUED FOR 30% DESIGN REVIEW	PDH	MGW	SIL	LHA		

SCALE

U.S. DEPARTMENT OF ENERGY
DOE FIELD OFFICE, RICHLAND
HANFORD ENVIRONMENTAL RESTORATION PROGRAM

BECHTEL HANFORD INC. RICHLAND, WASHINGTON | MONTGOMERY WATSON RICHLAND, WASHINGTON

ENVIRONMENTAL RESTORATION DISPOSAL FACILITY
CELLS 3 & 4
ELECTRICAL SYMBOLS

BECHTEL JOB NO.	DOE CONTRACT NO.	CADD FILENAME
22192	DE-AC06-93RL12367	6xde0038.DWG

TASK	DRAWING NO.	REV. NO.
600	0600X-DD-E0038	C

RECORD INFORMATION

RECORD NO.	BLDG NO.	INDEX NO.
H-6-14819 SHT 1	600G	7100

DRAWING NO.	REV. NO.
0600X-DD-E0039	C

A B B R E V I A T I O N S

A	AMPERE, AUTO, AMMETER
AC	ALTERNATING CURRENT
A/C	AIR CONDITIONING
AF	AMPERE FRAME SIZE OF CKT. BREAKERS
AFF	ABOVE FINISHED FLOOR
AL	ALUMINUM
AM	AMMETER
ANN	ANNUNCIATOR
AMP	AMPERES, AMPERAGE
APPR	APPROVED
AS	AMMETER SWITCH, ADJUSTABLE SPEED
AT	AMPERE TRIP
ATS	AUTOMATIC TRANSFER SWITCH
AUTO	AUTOMATIC
AWG	AMERICAN WIRE GAUGE
BATT	BATTERY
BKR	BREAKER
BBL	BUBBLER
BLDG	BUILDING
C	CONDUIT, CLOSED
CAB	CABINET
CB	CIRCUIT BREAKER
CKT	CIRCUIT
CO	CONDUIT ONLY
COND	CONDUIT
COMPT	COMPARTMENT
COMPR	COMPRESSOR
CP	CONTROL PANEL
CPT	CONTROL POWER TRANSFORMER (IN INDIVIDUAL STARTER CUBICLE)
CR	CONTROL RELAY (MAGNETICALLY HELD)
CT	CURRENT TRANSFORMER
CU	COPPER
DC	DIRECT CURRENT
DH	DATA HIGHWAY
DISC	DISCONNECT
DISTR	DISTRIBUTION
DPDT	DOUBLE POLE DOUBLE THROW
DWG	DRAWING
E	EMPTY, EMERGENCY
ELEV	ELEVATION
EMERG	EMERGENCY
EMT	ELECTRICAL METALLIC TUBING
ENCL	ENCLOSURE
EP	EXPLOSION PROOF
EQPT	EQUIPMENT
ER	CONDUCTANCE LEVEL RELAY
ETM	ELAPSED TIME METER
EXH	EXHAUST
EXIST	EXISTING
F, ~	FREQUENCY
FDR	FEEDER
FLEX	FLEXIBLE
FLUOR	FLUORESCENT
FM	FREQUENCY METER
FUT	FUTURE
FVR	FULL VOLTAGE REVERSING
FVNR	FULL VOLTAGE NON-REVERSING
FWD	FORWARD CONTACTOR COIL
GALV	GALVANIZED
GEN	GENERATOR
G	GROUND
GRD	GROUND
HH	HAND HOLE
HID	HIGH INTENSITY DISCHARGE
HIGH	HIGH SPEED CONTACTOR
HOA	HAND - OFF - AUTOMATIC
HP	HORSE POWER
HPS	HIGH PRESSURE SODIUM
HTR	HEATER
HVAC	HEATING VENTILATION AIR CONDITIONING
HZ	HERTZ
INCAND	INCANDESCENT
IND	INDICATION (SYSTEM)
I/O	INPUT/OUTPUT
INST	INSTANTANEOUS (TD CONTACT)
INSTR	INSTRUMENT
Isc	SHORT CIRCUIT CURRENT, AMPS
J BOX	JUNCTION BOX
JB	JUNCTION BOX
KVA	KILO (1000) VOLT AMPS
KW	KILOWATTS
KWH	KILOWATT HOUR
LC	LIGHTING CONTACTOR
LCB	LOCAL CONTROL BOARD
LCP	LOCAL CONTROL PANEL
LOC	LOCAL
LOS	PUSHBUTTON W/"LOCK-OUT-STOP"
LS	LEVEL SWITCH
LT, LTS	LIGHT, LIGHTS
LTG	LIGHTING
LOW	LOW SPEED CONTACTOR
M	MOTOR CONTACTOR COIL
MA	MILLIAMPS
MAN	MANUAL
MAG	MAGNETIC
MAX	MAXIMUM
MCC	MOTOR CONTROL CENTER
MCB	MAIN CONTROL BOARD
MCM	THOUSAND CIRCULAR MILS
MCP	MOTOR CIRCUIT PROTECTOR
MD	MOTORIZED DAMPER
MH	MANHOLE
MIN	MINUTES, MINIMUM
MLO	MAIN LUGS ONLY
MOV	MOTOR OPERATED VALVE
MS	MANUAL MOTOR STARTER
MT, MTD	MOUNT, MOUNTED
MTR	MOTOR
MUX	MULTIPLEXING PANEL
N	NEUTRAL
NA	NON-AUTOMATIC
NC	NORMALLY CLOSED
NO, NOS	NUMBER, NUMBERS, NORMALLY OPEN
NP	NAMEPLATE
NIC	NOT IN CONTRACT
NITS	NOT IN THIS SECTION
NTS	NOT TO SCALE
O	OPEN
OC	ON CENTER
CC	CENTER TO CENTER
OL	OVERLOAD RELAY
P	POLE
PB	PUSHBUTTON
PCM	PROCESS CONTROL MODULE
PCP	PROCESS CONTROL PANEL
PF	POWER FACTOR
PH	PHASE
PNL	PANEL
PNLBD	PANELBOARD
POS	POSITION
POT	POTENTIOMETER
PRI	PRIMARY
PS	PRESSURE SWITCH
PT	POTENTIAL TRANSFORMER
PVC	POLYVINYL CHLORIDE
PW	PART WINDING
PWR	POWER
REC	RECEPTACLE
RECPTS	RECEPTACLES
REQ'D	REQUIRED
REV	REVERSE CONTACTOR COIL
RGS	RIGID GALVANIZED STEEL
RUN	RUN CONTACTOR COIL
RTU	REMOTE TERMINAL UNIT
RVAT	REDUCED VOLTAGE AUTO-TRANSFORMER
RVNR	REDUCED VOLTAGE NON-REVERSING
SCH	SCHEDULE
SEC	SECONDS, SECONDARY
SECT	SECTION
SEL SW	SELECTOR SWITCH
SEQ	SEQUENCE
SHLD	SHIELDED
SHT	SHEET
SIG	SIGNAL
S1, S2	START CONTACTOR COILS
SP	SPARE
SPDT	SINGLE POLE DOUBLE THROW
SPECS	SPECIFICATIONS
SP HTR	SPACE HEATER
SPST	SINGLE POLE SINGLE THROW
ST, SH	SHUNT TRIP
STA	STATION
STD	STANDARD
STL	STEEL
STR	STARTER
SV	SOLENOID VALVE
SW	SWITCH
SYS	SYSTEM
TB	TERMINAL BOX
TC	TIME CLOCK
TACH	TACHOMETER
TEMP	TEMPERATURE
TERM	TERMINAL
TH	THERMOSTAT
TM	REPEAT CYCLE TIMER
TD	TIME DELAY RELAY
TS	TEMPERATURE SWITCH
TYP	TYPICAL
UG	UNDERGROUND
UH	UNIT HEATER
US	UNIT SUBSTATION
UST	UNIT SUBSTATION TRANSFORMER
V	VOLTAGE, VOLTS
VAR	VAR METER
VFD	VARIABLE FREQUENCY DRIVE
VSD	VARIABLE SPEED DRIVE (OTHER THAN VFD)
VP	VAPORPROOF
VS	VARIABLE SPEED, VOLTMETER SWITCH
W	WATTS, WIRE
WHD	WATTHOUR DEMAND METER
WHM	WATTHOUR METER
WP	WEATHERPROOF
XD	TRANSDUCER
XFMR	TRANSFORMER
XMTR	TRANSMITTER

G E N E R A L   N O T E S

RACEWAY

1. ALL CONDUIT, CABLE, CABLE TRAY RUNS ARE SHOWN DIAGRAMMATICALLY AND THEY SHALL BE ROUTED TO SUIT FIELD CONDITIONS.
2. THE CONTRACTOR SHALL VERIFY EXACT LOCATION OF TERMINAL BOXES AND CONDUIT ENTRANCES OF ALL EQUIPMENT AGAINST SHOP DRAWINGS BEFORE STUBBING UP CONDUITS.
3. CONNECTION BETWEEN RIGID CONDUIT AND MOTOR TERMINAL BOX SHALL BE LIQUID TIGHT FLEXIBLE CONDUIT.
4. CONDUIT TERMINATING AT SWITCHBOARD, MOTOR CONTROL CENTER, POWER AND LIGHTING PANEL, CONTROL CABINET, ETC. SHALL BE EQUIPPED WITH GROUNDING BUSHING AND SHALL BE GROUNDED WITH NO. 6 GROUND WIRE.
5. INSTALL EXPANSION FITTINGS EVERY 200 FEET OF STRAIGHT RUN OF CONDUITS AND CABLE TRAYS.
6. CONDUIT FITTINGS AND SUPPORTS ARE NOT SHOWN ON THE DRAWINGS. THE CONTRACTOR SHALL PROVIDE ALL FITTINGS AND SUPPORT REQUIRED TO SUIT THE CONDITIONS.
7. THE CONTRACTOR SHALL LIMIT THE NUMBER OF BENDS BETWEEN PULL POINTS.
8. THE CONTRACTOR SHALL BE RESPONSIBLE FOR PROVIDING ALL SLEEVES AND OPENINGS REQUIRED FOR THE PASSAGE OF ELECTRICAL RACEWAYS OR CABLES EVEN WHEN THESE OPENINGS OR SLEEVES ARE NOT SPECIFICALLY SHOWN ON THE DRAWINGS.
9. PROVIDE FLEXIBLE CONDUIT WHERE RIGID CONDUIT TERMINATES AT EQUIPMENT OR WHEN DEVICES ARE SUBJECT TO MOVEMENT FROM VIBRATION, EXPANSION OR CONTRACTION.
10. ALL UNDERGROUND CONDUIT RUNS SHALL BE WITH LONG RADIUS SWEEP BENDS. THE MINIMUM BENDING RADIUS SHALL BE 12 TIMES NOMINAL DIAMETER OF THE CONDUIT, AND NO FACTORY BENDS SHALL BE PERMITTED.
11. ALL UNDERGROUND CONDUITS NOT ENCASED IN CONCRETE SHALL BE RIGID STEEL, GALVANIZED, PVC COATED UNLESS OTHERWISE NOTED.
12. THE MINIMUM SIZE OF CONDUITS INSTALLED BELOW GRADE SHALL BE 1" UNLESS OTHERWISE NOTED.
13. THE MINIMUM SIZE OF CONDUIT INSTALLED ABOVE GRADE SHALL BE 3/4" UNLESS OTHERWISE NOTED.
14. ALL FLEXIBLE CONDUIT SHALL HAVE OUTER GROUNDING CONDUCTOR.
15. ALL SPARE OR UN-USED CONDUIT SHALL BE PROVIDED WITH A 3/8" NYLON PULL CORD.
16. ALL UNDERGROUND CONDUIT (EXCEPT SINGLE CONDUIT RUNS) SHALL BE CONCRETE ENCASED UNLESS NOTED OTHERWISE.

GROUNDING

1. ALL METALLIC STRUCTURES, METALLIC ENCLOSURES, AND ELECTRICAL EQUIPMENT, SUCH AS STRUCTURAL STEEL, METALLIC RACEWAY, FENCE, STAIR HANDRAILS, LIGHTING POLE, TANK, VESSELS, SWITCHING EQUIPMENT, PANEL, EQUIPMENT ENCLOSURE AND CABINETS GENERATOR, MOTOR, TRANSFORMER, SWITCHGEAR, ETC. SHALL BE PERMANENTLY AND EFFECTIVELY GROUNDED AND GROUND CONNECTION SHALL BE MADE TO THE PLANT GROUND GRID. THE GROUND CONDUCTOR SHALL BE SIZED PER N. E. C. UNLESS OTHERWISE SHOWN.
2. GROUNDING CONDUCTOR STUB-UP AND INSERT LOCATION ARE APPROXIMATE ONLY. THE CONTRCTOR SHALL USE HIS BEST JUDGEMENT FOR CORRECT LOCATIONS IN FIELD.
3. ALL GROUND CONDUCTORS SHALL BE #4/0 SIZE UNLESS OTHERWISE NOTED.
4. ALL GROUND CONDUCTORS SHALL BE BARE, COPPER, STRANDED UNLESS OTHERWISE NOTED.
5. ALL GROUNDING CONDUCTORS SHALL BE MINIMUM OF 18" BELOW GRADE EXCEPT UNDER BUILDING SLAB WHEN THEY SHALL BE MINIMUM OF 6" BELOW SLAB.

EQUIPMENT AND DEVICES

1. LOCATIONS OF EQUIPMENT, CONTROL DEVICES, INSTRUMENTS, BOXES, PANELS, ETC ARE APPROXIMATE ONLY, AND PROPER JUDGEMENT MUST BE EXERCIZED IN EXECUTING THE WORK TO INSURE THE BEST POSSIBLE INSTALLATION.
2. PACKAGE EQUIPMENT: SOME CONDUITS AND WIRES ARE SHOWN ON THE DRAWINGS, BUT IT IS EXPECTED THAT SOME ADDITIONAL CONDUITS AND WIRES MAY BE REQUIRED BY EQUIPMENT MANUFACTURERS TO COMPLETE INSTALLATION. IT IS INCUMBENT UPON THE GENERAL CONTRACTOR TO COORDINATE THIS REQUIREMENT WITH HIS SUBCONTRACTORS TO MAKE SURE THAT EQUIPMENT SUPPLIER PROVIDES ALL NECESSARY ELECTRICAL INFORMATION TO HIS ELECTRICAL SUBCONTRACTOR FOR INCLUSION OF COSTS IN BID PACKAGE. ALL NECESSARY MATERIALS AND LABOR TO COMPLETE ELECTRICAL INSTALLATION SHALL BE PROVIDED WHETHER SHOWN OR NOT SHOWN ON THE DRAWINGS. ALL ELECTRICAL WORK SHALL BE IN ACCORDANCE WITH ALL CODES AND STANDARDS PER SPEC. SECTIONS DIVISION 16.
3. ALL EQUIPMENT DIMENSIONS SHOWN ON PLANS AND ELEVATIONS ARE APPROXIMATE ONLY. THE CONTRACTOR SHALL USE SHOP DRAWINGS FOR PROPER LAYOUT, FOUNDATION AND PAD, ETC. FOR FINAL INSTALLATION WITHOUT ANY ADDITIONAL COST TO THE OWNER.
4. SWITCHGEAR, SWITCHBOARD, MOTOR CONTROL CENTER AND ALL FREE STANDING PANELS SHALL BE SET ON CONCRETE PAD AND LEVELING CHANNELS EMBEDDED IN THE PAD UNLESS OTHERWISE NOTED.

SCHEMATIC DIAGRAMS

1. ALL CONTROLS ARE SHOWN DE-ENERGIZED
2. ALL CONTROL DIAGRAMS SHOW CONTROL FUNCTION ONLY. CONTRACTOR SHALL INCORPORATE OTHER NECESSARY FUNCTIONS FOR PROPER OPERATIONS AND PROTECTION ON THE SYSTEM.
3. SLAVE RELAY SHALL BE ADDED WHERE REQUIRED TO PROVIDE ALL NECESSARY CONTACTS FOR THE SCHEMATIC DIAGRAMS SHOWN.
4. ALL DEVICES SHOWN ON MOTOR STARTER SCHEMATIC DIAGRAMS SHALL BE MOUNTED IN THE MOTOR STARTER CUBICLES UNLESS OTHERWISE NOTED.
5. ALL DEVICES SHOWN IN THE CONTROL PANEL OR CABINET SHALL BE MOUNTED IN THE CONTROL PANEL OR CABINET UNLESS OTHERWISE NOTED.
6. ALL MOTOR OPERATED VALVES ARE SHOWN FULLY OPEN.

MISCELLANEOUS

1. IN CASE OF INTERFERENCE BETWEEN ELECTRICAL EQUIPMENT SHOWN ON THE DRAWINGS AND THE OTHER EQUIPMENT, THE CONTRACTOR SHALL NOTIFY THE CONTRACTING OFFICER IN WRITING AND THE CONTRACTING OFFICER SHALL REVIEW THE PROPOSED CHANGES BEFORE THEY ARE MADE.
2. ALL OUTDOOR DEVICES SHALL BE WEATHERPROOF TYPE.
3. LOCATION OF MANHOLES AND PULLBOXES ARE APPROXIMATE. CONTRACTOR SHALL COORDINATE EXACT LOCATION OF MANHOLES AND PULLBOXES WITH MECHANICAL AND CIVIL WORK.
4. CONTRACTOR SHALL PROVIDE ADDITIONAL PULL BOXES TO THOSE SHOWN WHERE THEY ARE REQUIRED TO MAKE A WORKABLE INSTALLATION.
5. CIRCUITS OF DIFFERENT SERVICE VOLTAGE SHALL BE INSTALLED IN SEPARATE RACEWAYS, MANHOLES, HANDHOLES, PULLBOXES AND JUNCTION BOXES. THE VOLTAGE AND SERVICE LEVELS ARE:
   - (1) 12KV, 13.2KV, 16.5KV, 21KV
   - (2) 120V-480VOLT
   - (3) INSTRUMENTATION LESS THAN 50VDC
   - (4) TELEPHONE AND COMMUNICATIONS.

NOTES

100%
REVIEW SUBMITTAL
NOT FOR CONSTRUCTION

REV.	DATE	DESCRIPTION	DRAWN BY	DRAFT CHK	DSGN/CHKR	DSGN CHK	CL/TSL APPROVAL	
C	1/20/98	ISSUED FOR 100% DESIGN REVIEW	PDH	MDM	BL	LHA		
B	11/21/97	ISSUED FOR 90% DESIGN REVIEW	PDH	MDM	BL	LHA		
A	10/7/97	ISSUED FOR 30% DESIGN REVIEW	PDH	MDM	BL	LHA		

SCALE

U.S. DEPARTMENT OF ENERGY
DOE FIELD OFFICE, RICHLAND
HANFORD ENVIRONMENTAL RESTORATION PROGRAM

BECHTEL HANFORD INC.
RICHLAND, WASHINGTON

MONTGOMERY WATSON
RICHLAND, WASHINGTON

ENVIRONMENTAL RESTORATION DISPOSAL FACILITY
CELLS 3 & 4
ABBREVIATIONS AND GENERAL NOTES

BECHTEL JOB NO.	DOE CONTRACT NO.	CADD FILENAME
22192	DE-AC06-93RL12367	6xde0039.DWG

TASK	DRAWING NO.	REV. NO.
600	0600X-DD-E0039	C

HANFORD

RECORD INFORMATION

RECORD NO.	BLDG NO.	INDEX NO.
H-6-14820 SHT 1	600G	7100

DRAWING NO.	REV. NO.
0600X-DD-E0040	C

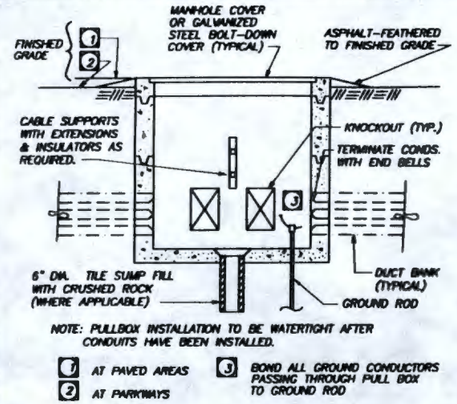

TYPICAL PULLBOX — A — MW

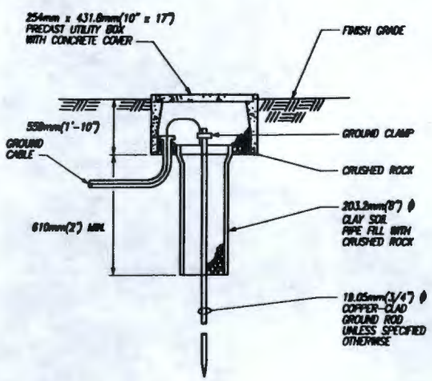

GROUND ROD AND WELL — B — MW

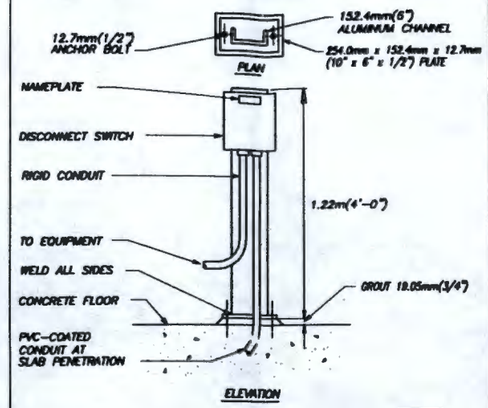

PEDESTAL MOUNTED DISCONNECT SWITCH — C — MW

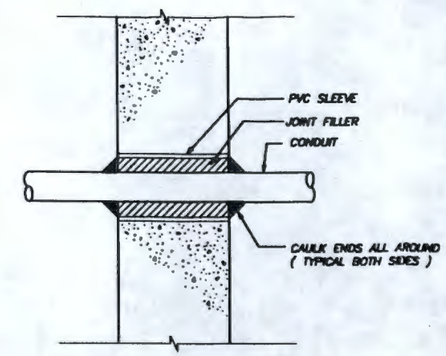

CONDUIT PENETRATION AT NEW WALL OR SLAB — D — MW

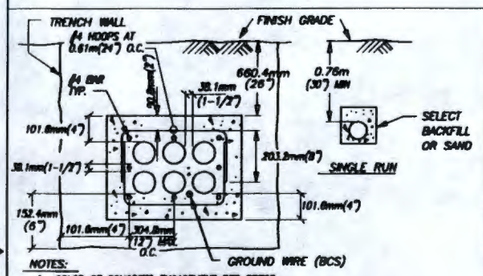

NOTES:
1. COLOR OF CONCRETE ENCASEMENT PER SPECS.
2. TRENCH FOR DUCT BANK SHALL BE MADE MIN. 50.8mm(2") WIDER ON EACH SIDE AND 50.8mm(2") DEEPER THAN DUCT BANK
3. ALL EARTH THAT FALLS BETWEEN AND BELOW CONDUIT WITHIN DUCT BANK AREA SHALL BE REMOVED BEFORE CONCRETE IS POURED AROUND DUCTS
4. SUPPORT CONDUIT AT BOTTOM OF TRENCH ON 152.4mm(6") BLOCK TO ALLOW POURED CONCRETE TO FULLY ENCASE CONDUIT AND REBAR
5. PROVIDE REBAR ONLY WHERE DUCTS ROUTE UNDER ROAD, HEAVY WORK AREA OR AS DEFINED
6. NUMBER OF CONDUITS IN DUCT BANK VARIES; GROUND WIRES ARE NOT REQUIRED FOR ALL DUCT BANKS. SEE DUCT BANK SCHEDULE.

TYPICAL DUCT BANK — F — MW

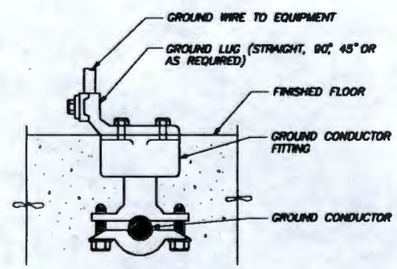

NOTE: BOLTS SHALL BE INSERTED IN BOLT HOLES BEFORE CONNECTOR IS EMBEDDED.

GROUNDING INSERT — G — MW

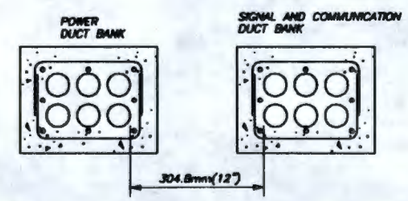

NOTE: REBAR REQUIRED FOR DUCT BANKS UNDER ROADWAYS ONLY.

DUCT BANK SPACING — H — MW

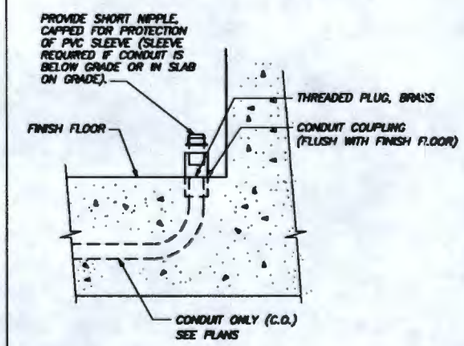

CONDUIT TERMINATION FOR FUTURE EQUIPMENT — J — MW

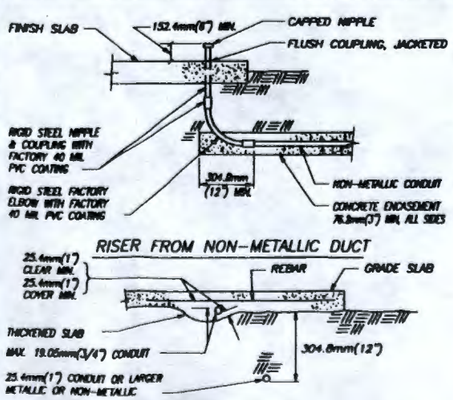

CONDUIT PLACEMENT — K — MW

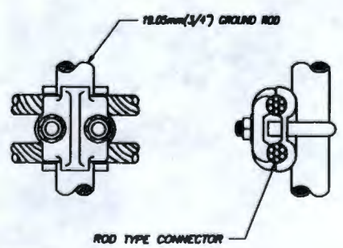

CABLE TO ROD CONNECTION — L — MW

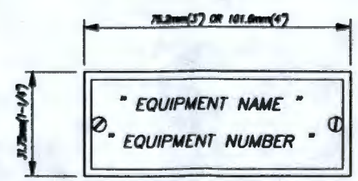

NOTES
1. ALL LETTERS TO BE 6.35mm(1/4") UNLESS NOTED OTHERWISE.
2. ALL NAMEPLATES TO BE MOUNTED ON THE VERTICAL CENTERLINE OF THE CUBICAL OR DEVICE.
3. ATTACH ALL NAMEPLATES WITH STAINLESS STEEL SCREWS.
4. PROVIDE BLANK NAMEPLATES FOR ALL SPARE AND FUTURE DEVICES.

NAMEPLATE DETAIL — M — MW

NOTES

100% REVIEW SUBMITTAL NOT FOR CONSTRUCTION

REV.	DATE	DESCRIPTION	DRAWN BY	CHK'D BY	DESIG/ ENGRG	MGRS DATE	SR.ENGR APPROVAL	ENGR DATE
C	1/30/08	ISSUED FOR 100% DESIGN REVIEW	PDH	MGM	SIL	LMA		
B	11/21/07	ISSUED FOR 80% DESIGN REVIEW	PDH	MGM	SIL	LMA		
A	10/7/07	ISSUED FOR 30% DESIGN REVIEW	PDH	MGM	SIL	LMA		

SEALD

U.S. DEPARTMENT OF ENERGY
DOE FIELD OFFICE, RICHLAND
HANFORD ENVIRONMENTAL RESTORATION PROGRAM

BECHTEL HANFORD INC. RICHLAND, WASHINGTON | MONTGOMERY WATSON RICHLAND, WASHINGTON

ENVIRONMENTAL RESTORATION DISPOSAL FACILITY
CELLS 3 & 4
ELECTRICAL DETAILS - 1

BECHTEL JOB NO.	DOE CONTRACT NO.	CADD FILENAME
22192	DE-AC06-93RL12367	6xde0040.DWG

TASK	DRAWING NO.	REV. NO.
600	0600X-DD-E0040	C

RECORD INFORMATION

RECORD NO.	BLDG NO.	INDEX NO.
H-6-14821 SHT 1	600G	7100

DRAWING NO.	REV. NO.
0600X-DD-E0041	C

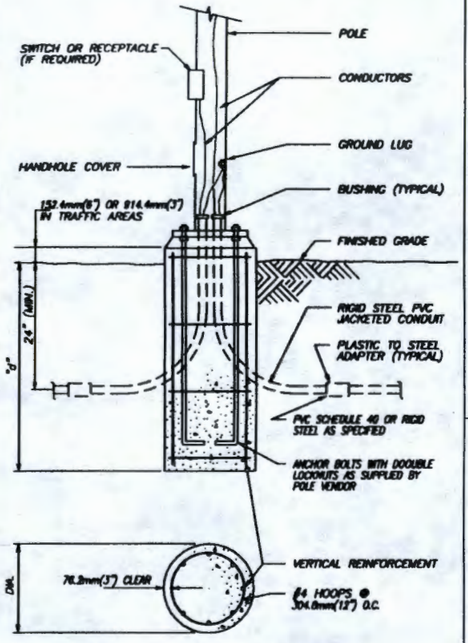

POLE HGT.	"d"	DIA.	VERT. REINF.
15.24m (50')	2.29m (7'-6")	914.4mm (36")	8/#6
7.62m (25')	1.91m (6'-3")	457.2mm (18")	6/#5
4.57m (15')	1.30m (4'-3")	457.2mm (18")	6/#5

UNDER GROUND CONDUIT TO POLE LIGHT | N | MW

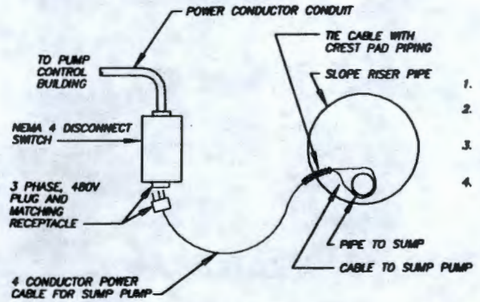

NOTES

1. TRANSDUCER CABLE CONNECTION SIMILAR WITHOUT DISCONNECT.
2. ATTACH WIRE MESH CABLE SUPPORT GRIP NEAR OUTSIDE END OF RISER PIPE
3. PLUGS AND RECEPTACLES SHALL BE HEAVY DUTY, THREADED CONNECTING, WEATHER PROOF PIN AND SLEEVE DISIGNED CONNECTORS
4. PROVIDE SIGN ON FRONT OF DISCONNECT SWITCH "HIGH VOLTAGE - DO NOT UNPLUG"

TRENCH PUMP CABLE SUPPORT AND TERMINATION | T | MW

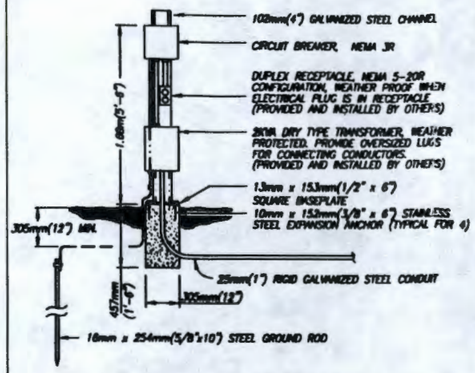

AIR MONITORING STATION ELECTRICAL SERVICE | V | MW

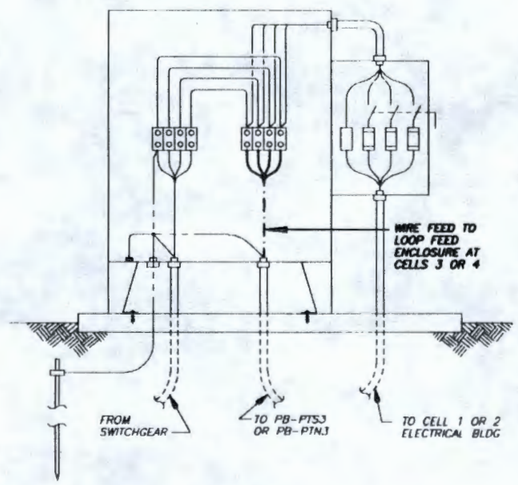

LOOP FEED ENCLOSURE AT CELLS 1 OR 2

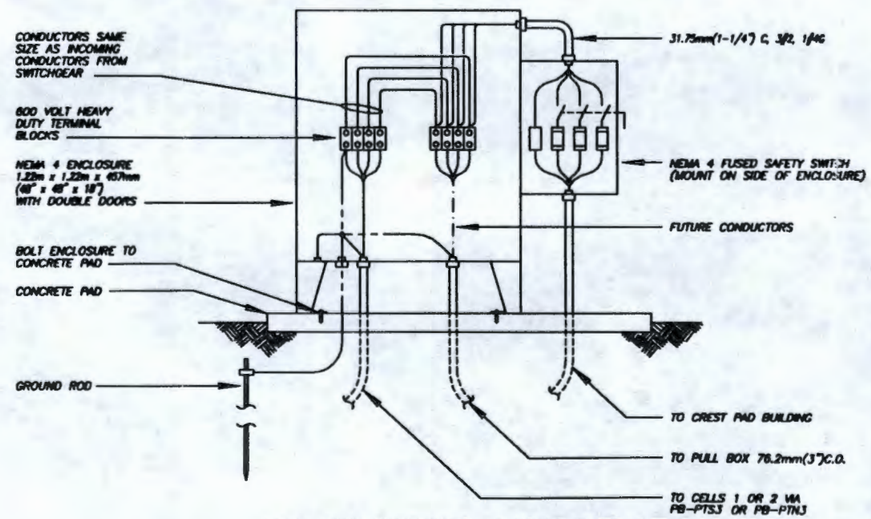

LOOP FEED ENCLOSURE AT CELLS 3 OR 4

LEGEND
EXISTING
NEW

LOOP FEED ENCLOSURE DETAIL | R | MW

NOTES

100%
REVIEW SUBMITTAL
NOT FOR CONSTRUCTION

REV.	DATE	DESCRIPTION	DRAWN BY	CHK'T DFT	DES/ ENGR	SUPR DFT	CL/TD DFTSM	PE ENGR
C	1/20/98	ISSUED FOR 100% DESIGN REVIEW	PDH	MGM	SIL	LHA		
B	11/21/97	ISSUED FOR 60% DESIGN REVIEW	PDH	MGM	SIL	LHA		
A	10/7/97	ISSUED FOR 30% DESIGN REVIEW	PDH	MGM	SIL	LHA		

SCALE:

U.S. DEPARTMENT OF ENERGY
DOE FIELD OFFICE, RICHLAND
HANFORD ENVIRONMENTAL RESTORATION PROGRAM

BECHTEL HANFORD INC.
RICHLAND, WASHINGTON

MONTGOMERY WATSON
RICHLAND, WASHINGTON

ENVIRONMENTAL RESTORATION DISPOSAL FACILITY
CELLS 3 & 4
ELECTRICAL DETAILS - 2

BECHTEL JOB NO.	DOE CONTRACT NO.	CADD FILENAME
22192	DE-AC06-93RL12367	6xde0041.DWG

TASK	DRAWING NO.	REV. NO.
600	0600X-DD-E0041	C

RECORD INFORMATION

RECORD NO.	BLDG NO.	INDEX NO.
H-6-14822 SHT 1	600G	7100

DRAWING NO.	REV. NO.
0600X-DD-E0042	C

CONDUIT NO.	CONDUCTORS	CONDUIT NO.	CONDUIT SIZE	FUNCTION	FROM	TO	ROUTE	REMARKS
C117	6#12, 4-2/C#16SHLD	1	50.8mm(2")	SIGNAL	CELL NO.3 CREST PAD BLDG	PULL BOX PB-STN5	UNDERGROUND	CONTINUE IN C119
C118	4#12	1	50.8mm(2")	SIGNAL	MH-23	PULL BOX PB-STN5	UNDERGROUND	CONTINUE IN C119
C119	10#12, 4-2/C#16SHLD	1	50.8mm(2")	SIGNAL	PULL BOX PB-STN5	LEACHATE PUMP STATION	UNDERGROUND	USE SPARE CONDUITS FROM PULL BOX PB-STN3 TO LEACHATE PUMP STATION
C126	3#8, 1#8GRD	1	25.4mm(1")	POWER	LIGHTING PANEL LP-W	SITE LIGHTS SOUTH AND NORTH EAST OF LOADING/UNLOADING AREA	UNDERGROUND	USE SPARE CONDUITS FROM PB-PN11 TO PB-PN10. INSTALL NEW CONDUIT TO LIGHTING PANEL LP-W FROM PB-PN10
C131	6#12, 4-2/C#16SHLD	1	50.8mm(2")	SIGNAL	CELL NO.4 CREST PAD BLDG	PULL BOX PB-STS5	UNDERGROUND	CONTINUE IN C133
C132	4#12	1	50.8mm(2")	SIGNAL	MH-24	PULL BOX PB-STS5	UNDERGROUND	CONTINUE IN C133
C133	10#12, 4-2/C#16SHLD	1	50.8mm(2")	SIGNAL	PULL BOX PB-STS5	LEACHATE PUMP STATION	UNDERGROUND	USE SPARE CONDUITS FROM PULL BOX PB-STS3 TO LEACHATE PUMP STATION
SG-3B	3-250KCMIL 1#4GRD	1	76.2mm(3")	480V POWER	LOOP FEED ENCLOSURE CELL NO 1	LOOP FEED ENCLOSURE CELL NO 3	UNDERGROUND	CONNECT TO SG-3 IN LOOP FEED ENCLOSURE
SG-2B	3-500KCMIL 1#1/0GRD	1	101.6mm(4")	480V POWER	LOOP FEED ENCLOSURE CELL NO 2	LOOP FEED ENCLOSURE CELL NO 4	UNDERGROUND	CONNECT TO SG-2 IN LOOP FEED ENCLOSURE
SG-3C	3#2, 1#8GRD	1	50.8mm(2")	480V POWER	LOOP FEED ENCLOSURE CELL NO 3	MCC-T3	UNDERGROUND	
SG-2C	3#2, 1#8GRD	1	50.8mm(2")	480V POWER	LOOP FEED ENCLOSURE CELL NO 4	MCC-T4	UNDERGROUND	

DUCT BANK SCHEDULE

SECTION	NEW POWER CONDUIT NUMBERS	NEW SIGNAL CONDUIT NUMBERS
TS4	MCL-13A, SG-2B, 2-102mm(4") C.O.	C133, 3-50.8mm(2") C.O.
TS5	MCL-13A, SG-2B, 2-102mm(4") C.O.	C133, 3-50.8mm(2") C.O.
TN4	MCL-3A, SG-3B, 2-76.2mm(3") C.O.	C118, 3-50.8mm(2") C.O.
TN5	MCL-3A, SG-3B, 2-76.2mm(3") C.O.	C118, 3-50.8mm(2") C.O.

NOTES

1. CONNECT NEW WIRES IN CONDUITS MCL-3A AND MCL-13A TO BREAKER AT MCC-L IN LEACHATE PUMP STATION.

100%
REVIEW SUBMITTAL
NOT FOR CONSTRUCTION

REV.	DATE	DESCRIPTION	DRAWN BY	START DFT	CHECK DSGN	REVIEW DFT	DS/TD APPROV	
C	1/30/98	ISSUED FOR 100% DESIGN REVIEW	PDH	MGM	BIL	LVA		
B	11/21/97	ISSUED FOR 60% DESIGN REVIEW	PDH	MGM	BIL	LVA		
A	10/7/97	ISSUED FOR 30% DESIGN REVIEW	PDH	MGM	BIL	LVA		

SCALE

U.S. DEPARTMENT OF ENERGY
DOE FIELD OFFICE, RICHLAND
HANFORD ENVIRONMENTAL RESTORATION PROGRAM

BECHTEL HANFORD INC.
RICHLAND, WASHINGTON

MONTGOMERY WATSON
RICHLAND, WASHINGTON

ENVIRONMENTAL RESTORATION DISPOSAL FACILITY
CELLS 3 & 4
DUCTBANK, CONDUIT AND CABLE SCHEDULE

BECHTEL JOB NO.	DOE CONTRACT NO.	CADD FILENAME
22192	DE-AC06-93RL12367	6xde0042.DWG

TASK	DRAWING NO.	REV. NO.
600	0600X-DD-E0042	C

RECORD INFORMATION

RECORD NO.	BLDG NO.	INDEX NO.
H-6-14823 SHT 1	600G	7100

DRAWING NO.	REV. NO.
0600X-DD-E0043	C

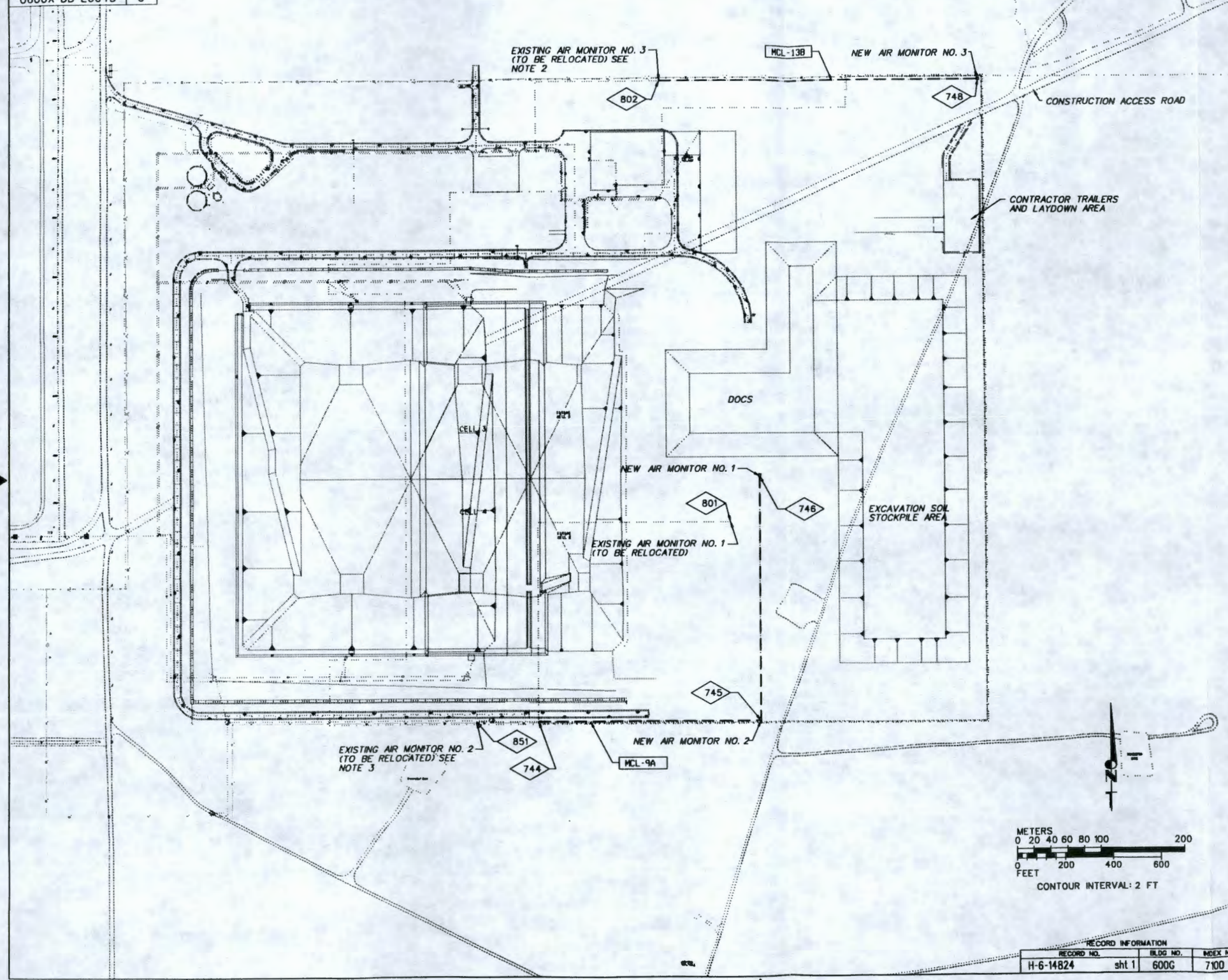

NOTES

1. CONDUITS MCL-9A AND MCL-13B ARE NOT CONCRETE ENCASED.
2. CONNECT TO EXISTING WIRES AND RELOCATE AIR MONITOR 3 TO LOCATION SHOWN.
3. CONNECT TO EXISTING WIRES AND RELOCATE AIR MONITORS 1 AND 2 TO LOCATIONS SHOWN.

100%
REVIEW SUBMITTAL
NOT FOR CONSTRUCTION

REV.	DATE	DESCRIPTION	DRAWN BY	DRAFT CHK	ENGR/ ENGR	CADD CHK	FL/TEL APPROV	DR. ENGR.
G	1/20/98	ISSUED FOR 100% DESIGN REVIEW	PDH	MGM	SIL	LHA		

SCALE:

U.S. DEPARTMENT OF ENERGY
DOE FIELD OFFICE, RICHLAND
HANFORD ENVIRONMENTAL RESTORATION PROGRAM

BECHTEL HANFORD INC.
RICHLAND, WASHINGTON

MONTGOMERY WATSON
RICHLAND, WASHINGTON

ENVIRONMENTAL RESTORATION DISPOSAL FACILITY
CELLS 3 & 4
AIR MONITORING STATION PLAN

BECHTEL JOB NO.	DOE CONTRACT NO.	CADD FILENAME
22192	DE-AC06-93RL12367	6xde0043.dgn

TASK	DRAWING NO.	REV. NO.
600	0600X-DD-E0043	C

RECORD INFORMATION

RECORD NO.	BLDG NO.	INDEX NO.
H-6-14824 sht 1	600G	7100

DRAWING NO.	REV. NO.
0600X-DD-E0044	C

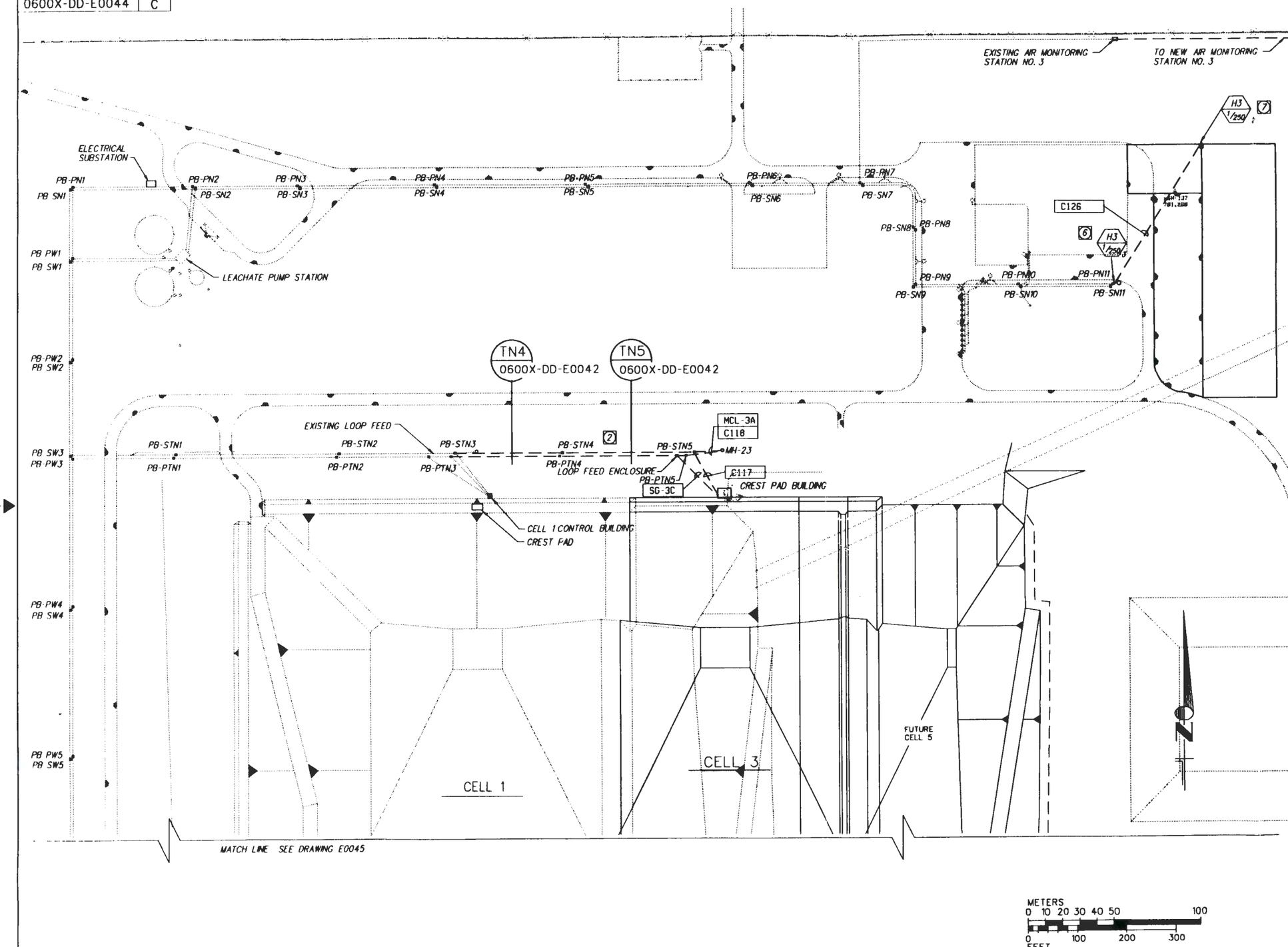

NOTES

1. ALL PULL BOXES SHALL BE 30" W x 48" L x 40" D (INSIDE DIMENSIONS) UNLESS OTHERWISE NOTED
2. ALL CONDUITS TO BE CONCRETE ENCASED UNLESS SPECIFIED OTHERWISE.
3. CONDUIT MCL-13B FROM PB-PN7 TO AIR MONITORING STATION IS NOT CONCRETE ENCASED.
4. PROVIDE 4 JERSEY BARRIES AROUND PB-PN11 AND EACH NEW LIGHT POLE.
5. ALL PULL BOXES ARE EXISTING EXCEPT PB-STN4, PB-STN5, PB-PTN4 AND PB-PTN5.
6. LIGHT CONNECTIONS TO BE AS FOLLOWS
   1 LIGHT - PHASE AB
   1 LIGHT - PHASE BC
   1 LIGHT - PHASE AC
7. LIGHT CONNECTIONS TO BE AS FOLLOWS
   1 LIGHT - PHASE AB
   1 LIGHT - PHASE BC

LEGEND

EXISTING
NEW

100%
REVIEW SUBMITTAL
NOT FOR CONSTRUCTION

REV.	DATE	DESCRIPTION	DRAWN BY	DRAFT CHK	DSGN/ ENGR	DSGN CHK	PL/TEL APPROV	PM APPROV
C	1/20/98	ISSUED FOR 100% DESIGN REVIEW	PDH	MGM	SIL	LHA		
B	11/21/97	ISSUED FOR 60% DESIGN REVIEW	PDH	MGM	SIL	LHA		
A	10/7/97	ISSUED FOR 30% DESIGN REVIEW	PDH	MGM	SIL	LHA		

SCALE:

U.S. DEPARTMENT OF ENERGY
DOE FIELD OFFICE, RICHLAND
HANFORD ENVIRONMENTAL RESTORATION PROGRAM

BECHTEL HANFORD INC.
RICHLAND, WASHINGTON

MONTGOMERY WATSON
RICHLAND, WASHINGTON

ENVIRONMENTAL RESTORATION DISPOSAL FACILITY
CELLS 3 & 4
ELECTRICAL SITE PLAN - 1

BECHTEL JOB NO.	DOE CONTRACT NO.	CADD FILENAME
22192	DE-AC06-93RL12367	6xde0044.dgn

TASK	DRAWING NO.	REV. NO.
600	0600X-DD-E0044	C

RECORD INFORMATION

RECORD NO.	BLDG NO.	INDEX NO.
H-6-14825 sht 1	600G	7100

DRAWING NO.	REV. NO.
0600X-DD-E0045	C

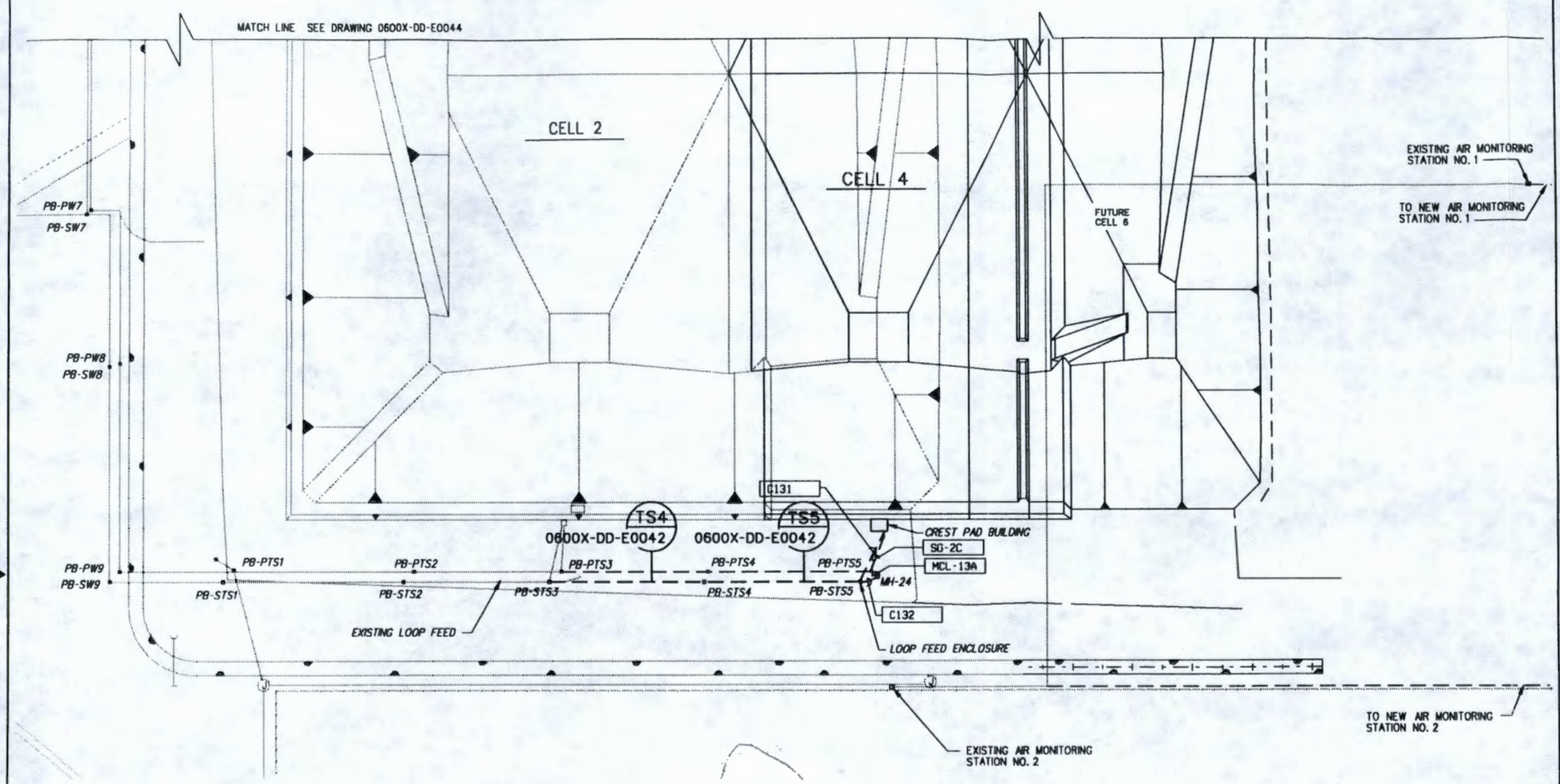

NOTES

1. SEE NOTE 1 ON SHEET 0600X-DD-E0044.
2. ALL CONDUITS ARE CONCRETE ENCASED UNLESS SPECIFIED OTHERWISE.
3. CONDUIT MCL-9A FROM PB-PTS1 TO AIR MONITORING STATIONS IS NOT CONCRETE ENCASED.
4. ALL PULL BOXES ARE EXISTING EXCEPT PB-PTS4, PB-PTS5, PB-STS4 AND PB-STS5.

LEGEND

- EXISTING
- NEW

100%
REVIEW SUBMITTAL
NOT FOR CONSTRUCTION

REV.	DATE	DESCRIPTION	DRAWN BY	DRAFT DATE	ENGR/ EDITOR	ENGR DATE	PL/TEL APPROV	BH CHIEF ENGR
C	1/20/98	ISSUED FOR 100% DESIGN REVIEW	PDH	MGM	SIL	LHA		
B	11/21/97	ISSUED FOR 60% DESIGN REVIEW	PDH	MGM	SIL	LHA		
A	10/7/97	ISSUED FOR 30% DESIGN REVIEW	PDH	MGM	SIL	LHA		

SCALE:

U.S. DEPARTMENT OF ENERGY
DOE FIELD OFFICE, RICHLAND
HANFORD ENVIRONMENTAL RESTORATION PROGRAM

BECHTEL HANFORD INC.
RICHLAND, WASHINGTON

MONTGOMERY WATSON
RICHLAND, WASHINGTON

ENVIRONMENTAL RESTORATION DISPOSAL FACILITY
CELLS 3 & 4
ELECTRICAL SITE PLAN - 2

BECHTEL JOB NO.	DOE CONTRACT NO.	CADD FILENAME
22192	DE-AC06-93RL12367	6xde0045.dgn

TASK	DRAWING NO.	REV. NO.
600	0600X-DD-E0045	C

RECORD INFORMATION

RECORD NO.	BLDG NO.	INDEX NO.
H-6-14826 sht 1	600G	7100

DRAWING NO.	REV. NO.
0600X-DD-E0047	C

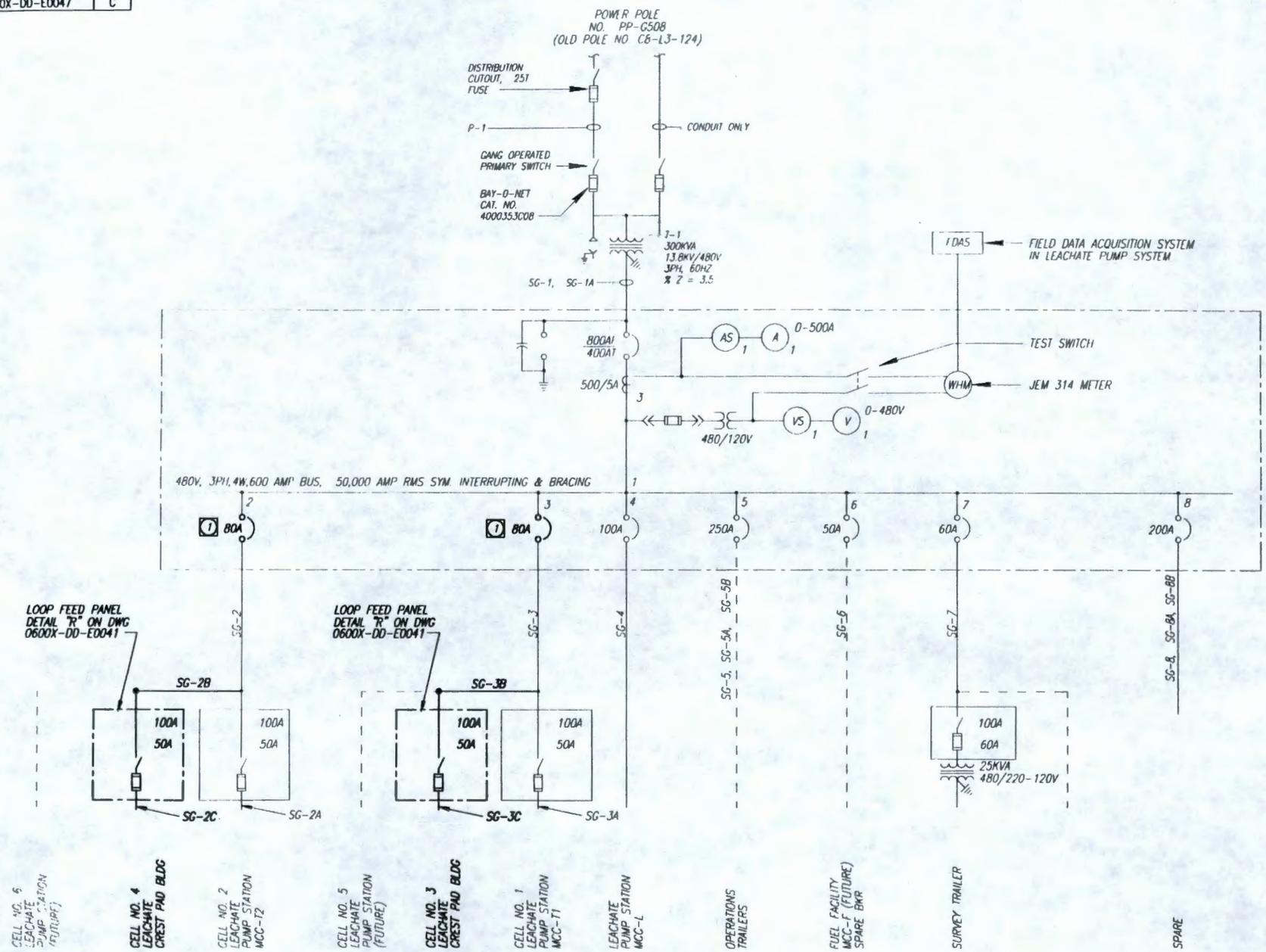

NOTES

1. REPLACE EXISTING 50A BREAKER WITH 80A BREAKER AT ELECTRICAL SUBSTATION.

LEGEND

- EXISTING
- NEW

100%
REVIEW SUBMITTAL
NOT FOR CONSTRUCTION

REV.	DATE	DESCRIPTION	DRAWN BY	CHKT DFT	DSGN CHK	SUPV DFT	EL/TEL APPROV	PM APPR
C	1/30/98	ISSUED FOR 100% DESIGN REVIEW	PGH	MGM	SIL	LMA		
B	11/21/97	ISSUED FOR 60% DESIGN REVIEW	PGH	MGM	SIL	LMA		
A	10/7/97	ISSUED FOR 30% DESIGN REVIEW	PGH	MGM	SIL	LMA		

SCALE

U.S. DEPARTMENT OF ENERGY
DOE FIELD OFFICE, RICHLAND
HANFORD ENVIRONMENTAL RESTORATION PROGRAM

BECHTEL HANFORD INC.
RICHLAND, WASHINGTON

MONTGOMERY WATSON
RICHLAND, WASHINGTON

ENVIRONMENTAL RESTORATION DISPOSAL FACILITY
CELLS 3 & 4
ELECTRICAL SWITCHGEAR ONE LINE DIAGRAM

BECHTEL JOB NO.	DOE CONTRACT NO.	CADD FILENAME
22192	DE-AC06-93RL12367	6xde0047.DWG

TASK	DRAWING NO.	REV. NO.
600	0600X-DD-E0047	C

RECORD INFORMATION

RECORD NO.	BLDG NO.	INDEX NO.
H-6-14828 SHT 1	600G	7100

DRAWING NO.	REV. NO.
0600X-DD-E0048	C

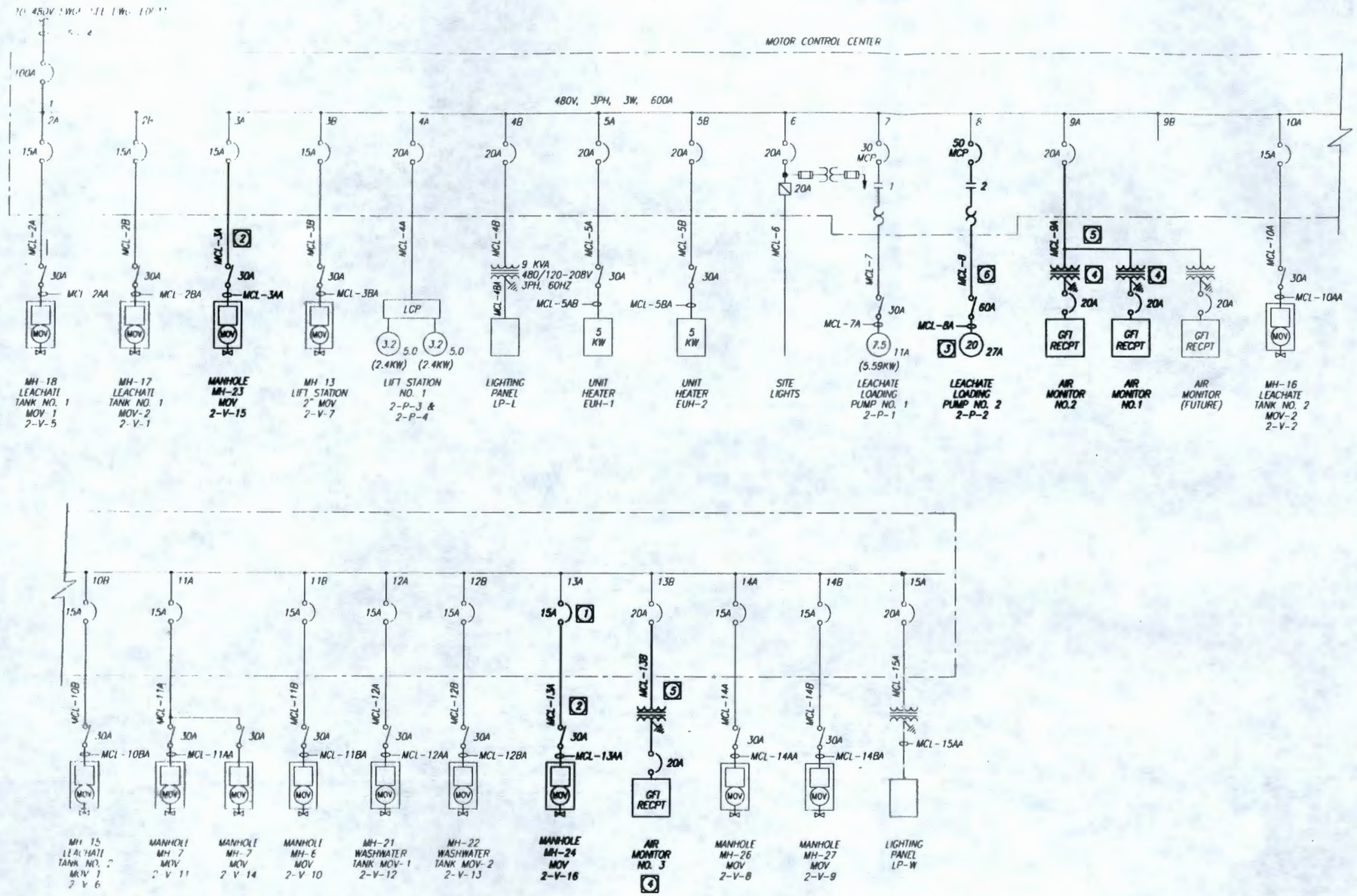

LEACHATE PUMP STATION ONE LINE DIAGRAM

MOTOR CONTROL CENTER MCC-L
(LOCATED IN LEACHATE PUMP STATION)

NOTES

1. REPLACE 30A BREAKER WITH 15A BREAKER.
2. 50.8mm(2")C, 3#12, 1#12G
3. REPLACE EXIST. 7.5HP PUMP WITH 20HP PUMP. REPLACE SIZE 1 FVNR STARTER WITH SIZE 2 FVNR COMBINATION STARTER. REPLACE ALL WIRING TO PUMP. REPLACE 30A SAFETY SWITCH WITH 60A SAFETY SWITCH.
4. RELOCATE AIR MONITOR STATION. SEE DWG 0600X-DD-E0043 FOR LOCATION AND ROUTING AND DETAIL V ON DWG 0600X-DD-E0041 FOR DETAILS.
5. 50.8mm(2")C, 2#8, 1#8G
6. 3#8, 1#8G IN EXISTING 25mm(1")C

LEGEND
EXISTING
NEW

100%
REVIEW SUBMITTAL
NOT FOR CONSTRUCTION

REV.	DATE	DESCRIPTION	DRAWN BY	DRAFT'S CHK	ENGR CHK	ENGR APR	CH/TEC APPROV	PM APPR
C	1/23/98	ISSUED FOR 100% DESIGN REVIEW	PDH	MOW	SIL	LHA		
B	11/21/97	ISSUED FOR 80% DESIGN REVIEW	PDH	MOW	SIL	LHA		
A	10/7/97	ISSUED FOR 30% DESIGN REVIEW	PDH	MOW	SIL	LHA		

SEALS

U.S. DEPARTMENT OF ENERGY
DOE FIELD OFFICE, RICHLAND
HANFORD ENVIRONMENTAL RESTORATION PROGRAM

BECHTEL HANFORD INC.
RICHLAND, WASHINGTON

MONTGOMERY WATSON
RICHLAND, WASHINGTON

ENVIRONMENTAL RESTORATION DISPOSAL FACILITY
CELLS 3 & 4
MCC ONE LINE DIAGRAM - 1

BECHTEL JOB NO.	DOE CONTRACT NO.	CADD FILENAME
22192	DE-AC06-93RL12367	6xde0048.DWG

TASK	DRAWING NO.	REV. NO.
600	0600X-DD-E0048	C

RECORD INFORMATION

RECORD NO.	BLDG NO.	INDEX NO.
H-6-14829 SHT 1	600G	7100

DRAWING NO.	REV. NO.
0600X-DD-E0049	C

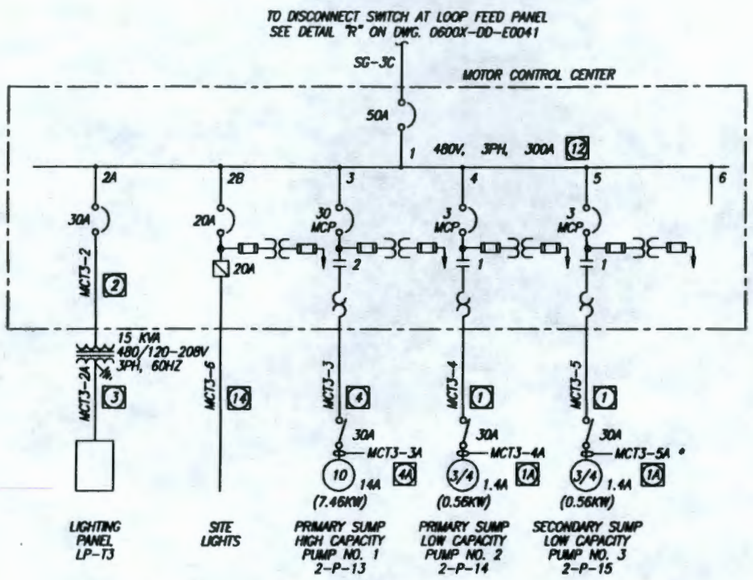

TRENCH CELL 3 ONE LINE DIAGRAM

MOTOR CONTROL CENTER MCC-T3

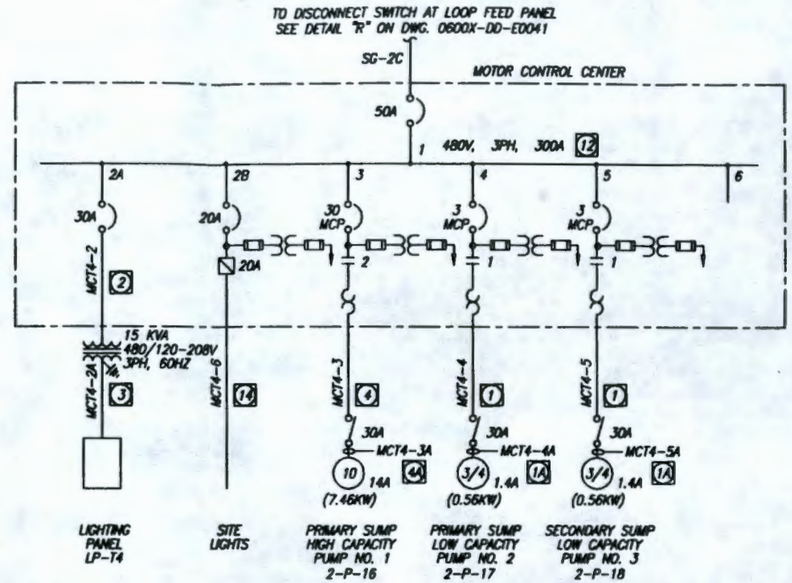

TRENCH CELL 4 ONE LINE DIAGRAM

MOTOR CONTROL CENTER MCC-T4

NOTES

1. 50.8mm(2") C, 3#12, 1#12G
2. 19.05mm(3/4"C), 3#10, 1#10G
3. 19.05mm(3/4") C, 4#8, 1#8G
4. 25.4mm(1") C, 3#10, 1#10G
5. NOT USED
12. 42,000 AMP MINIMUM RMS SHORT CIRCUIT RATING. BREAKERS TO HAVE 25,000 AMP MINIMUM INTERRUPTING CAPACITY
14. SEE DRAWING 0600X-DD-0058 FOR CONDUIT AND CONDUCTORS TO LIGHTS
1A. 4 # 14AWG. VENDOR SUPPLIED
4A. 4 # 12AWG. VENDOR SUPPLIED

100%
REVIEW SUBMITTAL
NOT FOR CONSTRUCTION

REV.	DATE	DESCRIPTION	DRAWN BY	SHAT'T DFT	DESIG ENGR	MANR DFT	CL/TEL SYSTEM	BY CHK
C	1/22/98	ISSUED FOR 100% DESIGN REVIEW	PDH	MGM	SIL	LHA		
B	11/21/97	ISSUED FOR 80% DESIGN REVIEW	PDH	MGM	SIL	LHA		
A	10/7/97	ISSUED FOR 30% DESIGN REVIEW	PDH	MGM	SIL	LHA		

SEALS

U.S. DEPARTMENT OF ENERGY
DOE FIELD OFFICE, RICHLAND
HANFORD ENVIRONMENTAL RESTORATION PROGRAM

BECHTEL HANFORD INC.
RICHLAND, WASHINGTON

MONTGOMERY WATSON
RICHLAND, WASHINGTON

ENVIRONMENTAL RESTORATION DISPOSAL FACILITY
CELLS 3 & 4
MCC ONE LINE DIAGRAM - 2

BECHTEL JOB NO.	DOE CONTRACT NO.	CADD FILENAME
22192	DE-AC06-93RL12367	6xde0049.DWG

TASK	DRAWING NO.	REV. NO.
600	0600X-DD-E0049	C

RECORD INFORMATION

RECORD NO.		BLDG NO.	INDEX NO.
H-6-14830	SHT 1	600G	7100

DRAWING NO.	REV. NO.
0600X-DD-E0050	C

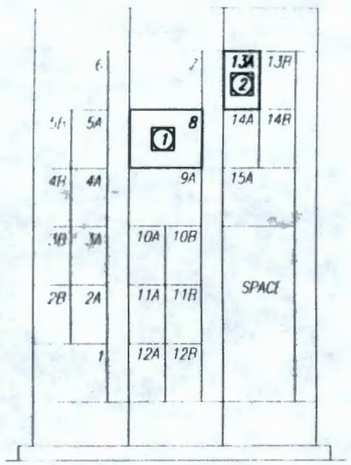

FRONT ELEVATION

MOTOR CONTROL CENTER MCC-L

(EXISTING AT LEACHATE PUMP STATION)

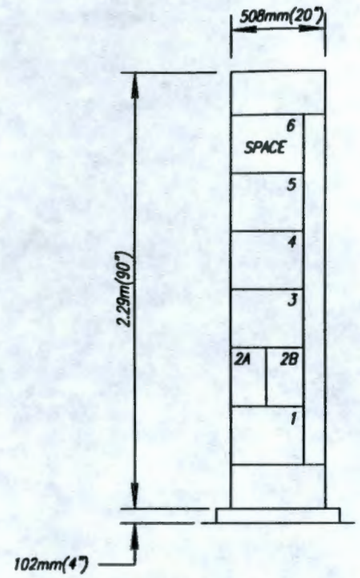

FRONT ELEVATION

MOTOR CONTROL CENTER MCC-T3

(TRENCH CELL 3 CREST PAD BUILDING)

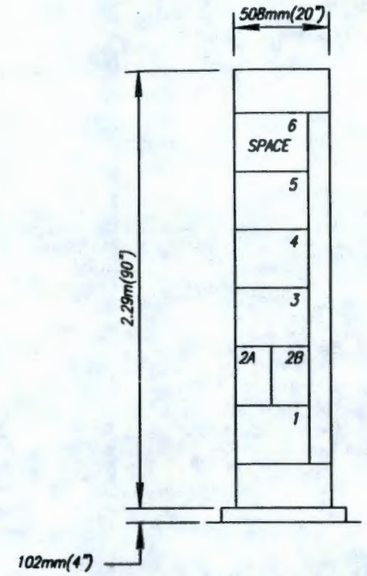

FRONT ELEVATION

MOTOR CONTROL CENTER MCC-T4

(TRENCH CELL 4 CREST PAD BUILDING)

NOTES

1. REPLACE EXISTING SIZE 1 FVNR STARTER WITH SIZE 2 FVNR COMBINATION STARTER.
2. REPLACE EXISTING 30A BREAKER WITH 15A BREAKER.

LEGEND

EXISTING

NEW

100%
REVIEW SUBMITTAL
NOT FOR CONSTRUCTION

REV.	DATE	DESCRIPTION	DRAWN BY	CHKD BY	DSGN/ ENGR	ENGR CHK	SL/TEL APPROV	PE SEAL
C	1/30/98	ISSUED FOR 100% DESIGN REVIEW	PGH	MGM	SIL	LHA		
B	11/21/97	ISSUED FOR 60% DESIGN REVIEW	PGH	MGM	SIL	LHA		
A	10/7/97	ISSUED FOR 30% DESIGN REVIEW	PGH	MGM	SIL	LHA		

SCALE

U.S. DEPARTMENT OF ENERGY
DOE FIELD OFFICE, RICHLAND
HANFORD ENVIRONMENTAL RESTORATION PROGRAM

BECHTEL HANFORD INC.
RICHLAND, WASHINGTON

MONTGOMERY WATSON
RICHLAND, WASHINGTON

ENVIRONMENTAL RESTORATION DISPOSAL FACILITY
CELLS 3 & 4
MCC ELEVATIONS AND DETAILS

BECHTEL JOB NO.	DOE CONTRACT NO.	CADD FILENAME
22192	DE-AC06-93RL12367	6xde0050.DWG

TASK	DRAWING NO.	REV. NO.
600	0600X-DD-E0050	C

RECORD INFORMATION

RECORD NO.	BLDG NO.	INDEX NO.
H-6-14831 SHT 1	600G	7100

DRAWING NO.	REV. NO.
0600X-DD-E0051	C

208-120 VOLTS, 3 ϕ, 4 W — 50 AMP MAIN BREAKER — PANELBOARD LP-13 — LOCATION LEACHATE CELL 3 CREST PAD BUILDING — FEED TOP — MTG SURFACE

LOAD DESCRIPTION	VOLT AMPERE ϕA	ϕB	ϕC	LTG	REC	MIS	CIR	BKR		BKR	CIR	MIS	REC	LTG	VOLT AMPERE ϕA	ϕB	ϕC	LOAD DESCRIPTION
METER ROOM LIGHTS	900			9			1	20		20	2	1			600			CONTROL PANEL
EF-1 ELECT. ROOM		1200				1	3	20		20	4	3				300		FLOW TRANSMITTERS
RECPT'S ELECT. ROOM			400		2		5	20		20/2P	6	1					1600	HEATER METER ROOM
RECPT'S METER ROOM	400				2		7	20			8				1600			
HEATER ELECT. ROOM		1600				1	9	20/2P		20	10	1				1200		EF-2 METER ROOM
			1600				11			20	12	1					300	CHART RECORDER
SPARE							13	20		20	14			5	420			ELECT. RM & OUTSIDE LIGHTS
SPARE							15				16							SPARE
SPACE							17				18							SPACE
SPACE							19				20							SPACE
	1300	2800	2000				TOTAL			TOTAL					2620	1500	1900	
	PHASE TOTAL			TOTAL LOAD														
	3920	4300	3900	12.1 KVA (33.6 AMP)														

208-120 VOLTS, 3 ϕ, 4 W — 50 AMP MAIN BREAKER — PANELBOARD LP-14 — LOCATION LEACHATE CELL 4 CREST PAD BUILDING — FEED TOP — MTG SURFACE

LOAD DESCRIPTION	VOLT AMPERE ϕA	ϕB	ϕC	LTG	REC	MIS	CIR	BKR		BKR	CIR	MIS	REC	LTG	VOLT AMPERE ϕA	ϕB	ϕC	LOAD DESCRIPTION
METER ROOM LIGHTS	900			9			1	20		20	2	1			600			CONTROL PANEL
EF-1 ELECT. ROOM		1200				1	3	20		20	4	3				300		FLOW TRANSMITTERS
RECPT'S ELECT. ROOM			400		2		5	20		20/2P	6	1					1600	HEATER METER ROOM
RECPT'S METER ROOM	400				2		7	20			8				1600			
HEATER ELECT. ROOM		1600				1	9	20/2P		20	10	1				1200		EF-2 METER ROOM
			1600				11			20	12	1					300	CHART RECORDER
SPARE							13	20		20	14			5	420			ELECT. RM & OUTSIDE LIGHTS
SPARE							15				16							SPARE
SPACE							17				18							SPACE
SPACE							19				20							SPACE
	1300	2800	2000				TOTAL			TOTAL					2620	1500	1900	
	PHASE TOTAL			TOTAL LOAD														
	3920	4300	3900	12.1 KVA (33.6 AMP)														

208-120 VOLTS, 3 ϕ, 4 W — 30 AMP MAIN BREAKER — PANELBOARD LP-W — LOCATION IN CONTAINER WASHDOWN AREA — NEMA 4 ENCLOSURE — FEED BOTTOM — MTG SURFACE

LOAD DESCRIPTION	VOLT AMPERE ϕA	ϕB	ϕC	LTG	REC	MIS	CIR	BKR		BKR	CIR	MIS	REC	LTG	VOLT AMPERE ϕA	ϕB	ϕC	LOAD DESCRIPTION
PIPE HEAT TRACING	300				1		1	20		20	2	1			200			RECEPT' AT LTG. PNL
SPARE							3	20		20	4							SPARE
WASHDOWN			400	1			5	20		20	6							SPARE
TRUCK RECEPTACLE 1&2	800				2		7	20		20	8		2		800			TRUCK RECEPTACLE 7&8
TRUCK RECEPTACLE 3&4		800			2		9	20		20	10		2			800		TRUCK RECEPTACLE 9&10
TRUCK RECEPTACLE 5&6			800		2		11	20		20	12		2				800	TRUCK RECEPTACLE 11&12
(1) LOADING/UNLOADING SLAB LIGHTING	600						13	20/3P			14							SPACE
		600		1			15			20	16							SPACE
			300				17				18							SPACE
SPACE							19				20							SPACE
	1700	1400	1500				TOTAL			TOTAL					1000	800	800	
	PHASE TOTAL			TOTAL LOAD														
	2700	2200	2300	7.2 KVA (20.0 AMP)														

LIGHTING FIXTURE SCHEDULE

TYPE	WATTS / LAMP	VOLTS	DESCRIPTION
F5	2-34 W / R.S FLUOR	120	INDUSTRIAL TYPE FLUORESCENT FIXTURE, 304.8mm x 1.22m(1'x4'), 2 LAMP, HEAVY GAGE STEEL REFLECTOR, WHITE POLYESTER POWDER ENAMEL FINISH
H2	50 W / HPS	120	WALL MOUNT, HIGH PRESSURE SODIUM, ROUND OPEN BAFFLE, WEATHERPROOF GASKETING, BRONZE FINISH
H3	250 W / HPS	208	POLE MOUNTED, HIGH PRESSURE SODIUM, LIGHTWEIGHT ALUMINUM, RECTILINEAR SHAPE, CONTINUOUS GASKET, TEMPERED GLASS LENS FLUSH WITH BOTTOM OF FIXTURE, U.L. LISTED FOR WET LOCATIONS. (LITHONIA CAT # TBB250SRP12208DCN CROWFORDSVILLE, IN) 7.62m(25') ROUND TAPERED ALUMINUM POLE SUITABLE FOR 100 MPH WINDS AND MATCHED TO FIXTURE
H4	250 W / HPS	480	POLE MOUNTED, HIGH PRESSURE SODIUM, LIGHTWEIGHT ALUMINUM, RECTILINEAR SHAPE, CONTINUOUS GASKET, TEMPERED GLASS LENS FLUSH WITH BOTTOM OF FIXTURE, U.L. LISTED FOR WET LOCATIONS. (LITHONIA CAT # TBB250SRP12480DCN CROWFORDSVILLE, IN) 7.62m(25') ROUND TAPERED ALUMINUM POLE SUITABLE FOR 100 MPH WINDS AND MATCHED TO FIXTURE

NOTES

(1) INSTALL 20A 3 POLE BREAKER IN EXISTING PANELBOARD SPACES

LEGEND
- EXISTING
- NEW

100% REVIEW SUBMITTAL NOT FOR CONSTRUCTION

REV.	DATE	DESCRIPTION	DRAWN BY	DWN CHK	DSGN ENGR	DSGN CHK	IS/TR SPVSR	
C	1/30/98	ISSUED FOR 100% DESIGN REVIEW	PGH	MGM	SIL	LMA		
B	11/21/97	ISSUED FOR 60% DESIGN REVIEW	PGH	MGM	SIL	LMA		
A	10/7/97	ISSUED FOR 30% DESIGN REVIEW	PGH	MGM	SIL	LMA		

SCALE

U.S. DEPARTMENT OF ENERGY
DOE FIELD OFFICE, RICHLAND
HANFORD ENVIRONMENTAL RESTORATION PROGRAM

BECHTEL HANFORD INC. RICHLAND, WASHINGTON

MONTGOMERY WATSON RICHLAND, WASHINGTON

ENVIRONMENTAL RESTORATION DISPOSAL FACILITY
CELLS 3 & 4
ELECTRICAL SCHEDULES

BECHTEL JOB NO.	DOE CONTRACT NO.	CADD FILENAME
22192	DE-AC06-93RL12367	6xde0051.DWG

TASK	DRAWING NO.	REV. NO.
600	0600X-DD-E0051	C

RECORD INFORMATION

RECORD NO.	BLDG NO.	INDEX NO.
H-6-14832 SHT 1	600G	7100

DRAWING NO.	REV. NO.
0600X-DD-E0052	C

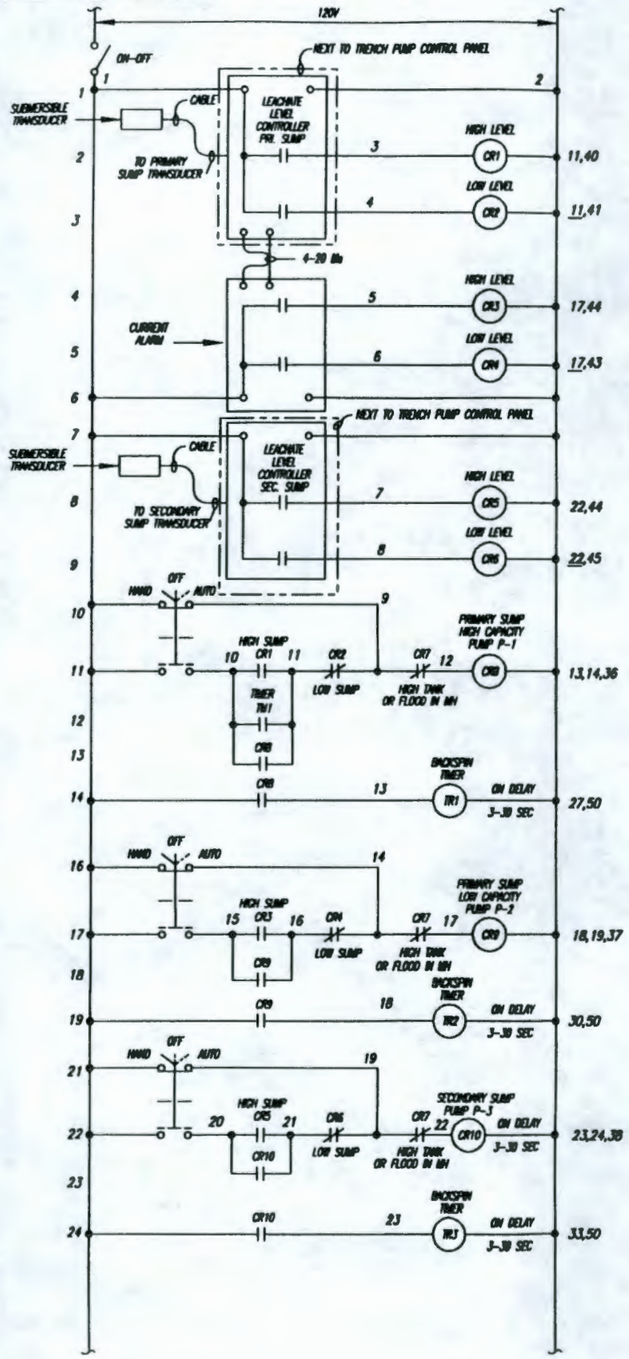

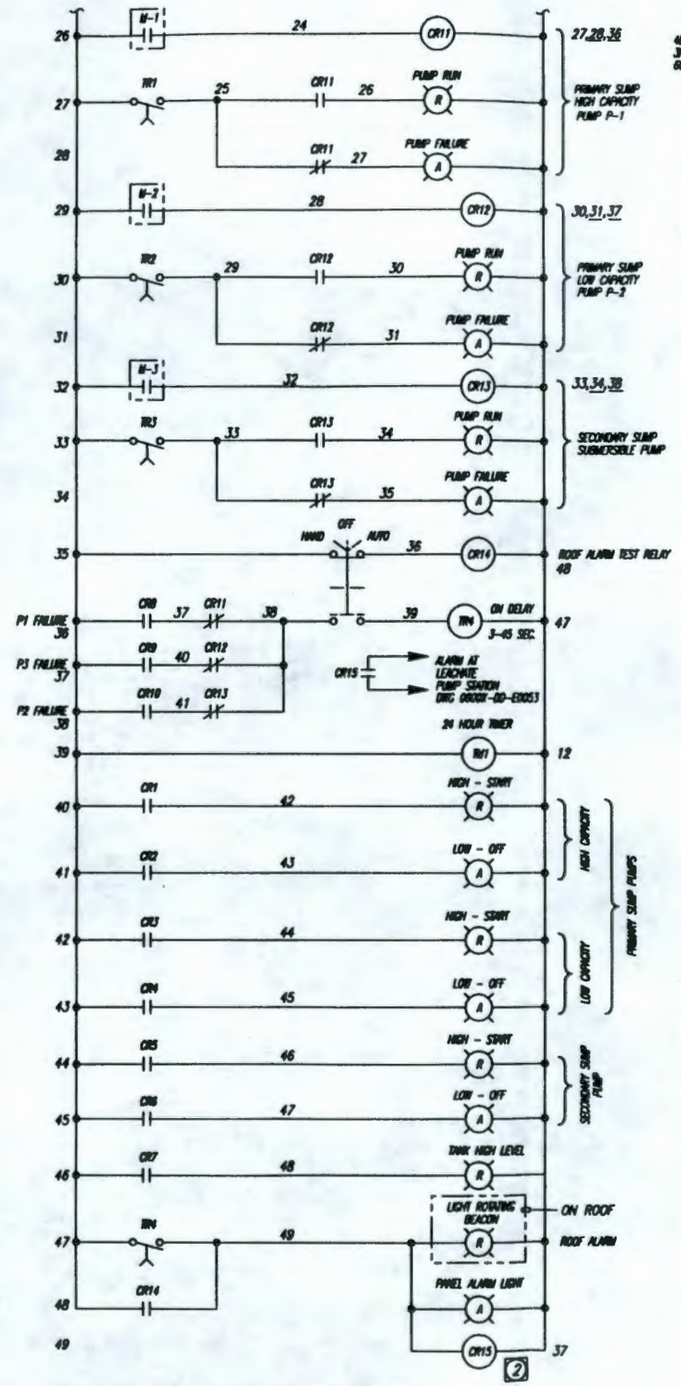

ALL DEVICES ARE ON CONTROL PANEL UNLESS NOTED OTHERWISE

TRENCH PUMP CONTROL SCHEMATIC (1)

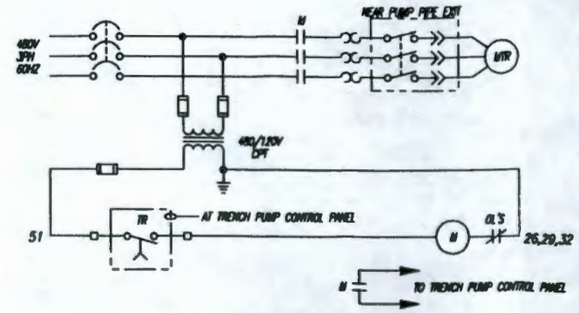

TRENCH PUMP CONTROL SCHEMATIC

TRENCH CELL NO. 3			
TAG NO.	PUMP	M	TR
2-P-13	P-1	M-1	TR1
2-P-14	P-2	M-2	TR2
2-P-15	P-3	M-3	TR3

TRENCH CELL NO. 4			
TAG NO.	PUMP	M	TR
2-P-16	P-1	M-1	TR1
2-P-17	P-2	M-2	TR2
2-P-18	P-3	M-3	TR3

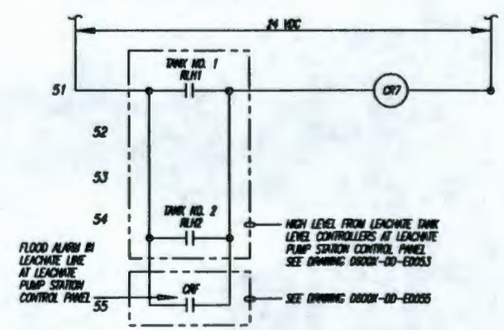

LEVEL AND MANHOLE FLOOD INTERLOCK CONTROL SCHEMATIC (TRENCH PUMP CONTROL PANEL)

NOTES

(1) CONTRACTOR MAY PROVIDE AN ALLEN-BRADLEY TYPE SLC-500 PLC IN PLACE OF THE RELAY SYSTEM.

100% REVIEW SUBMITTAL NOT FOR CONSTRUCTION

REV.	DATE	DESCRIPTION	DRAWN BY	TECH'T CHK'D	ENGR CHK'D	ENGR CHK'D	PL/TEL APPROVAL	PM APPROVAL
C	1/20/98	ISSUED FOR 100% DESIGN REVIEW	PDH	MGM	SRL	LMA		
B	11/21/97	ISSUED FOR 80% DESIGN REVIEW	PDH	MGM	SRL	LMA		
A	10/7/97	ISSUED FOR 30% DESIGN REVIEW	PDH	MGM	SRL	LMA		

SCALE

U.S. DEPARTMENT OF ENERGY
DOE FIELD OFFICE, RICHLAND
HANFORD ENVIRONMENTAL RESTORATION PROGRAM

BECHTEL HANFORD INC.
RICHLAND, WASHINGTON

MONTGOMERY WATSON
RICHLAND, WASHINGTON

ENVIRONMENTAL RESTORATION DISPOSAL FACILITY
CELLS 3 & 4
CONTROL SCHEMATICS - 1

BECHTEL JOB NO.	DOE CONTRACT NO.	CADD FILENAME
22192	DE-AC06-93RL12367	6xde0052.DWG

TASK	DRAWING NO.	REV. NO.
600	0600X-DD-E0052	C

RECORD INFORMATION

RECORD NO.	BLDG. NO.	INDEX NO.
H-6-14938 SHT 1	600G	7100

DRAWING NO.	REV. NO.
0600X-DD-E0053	C

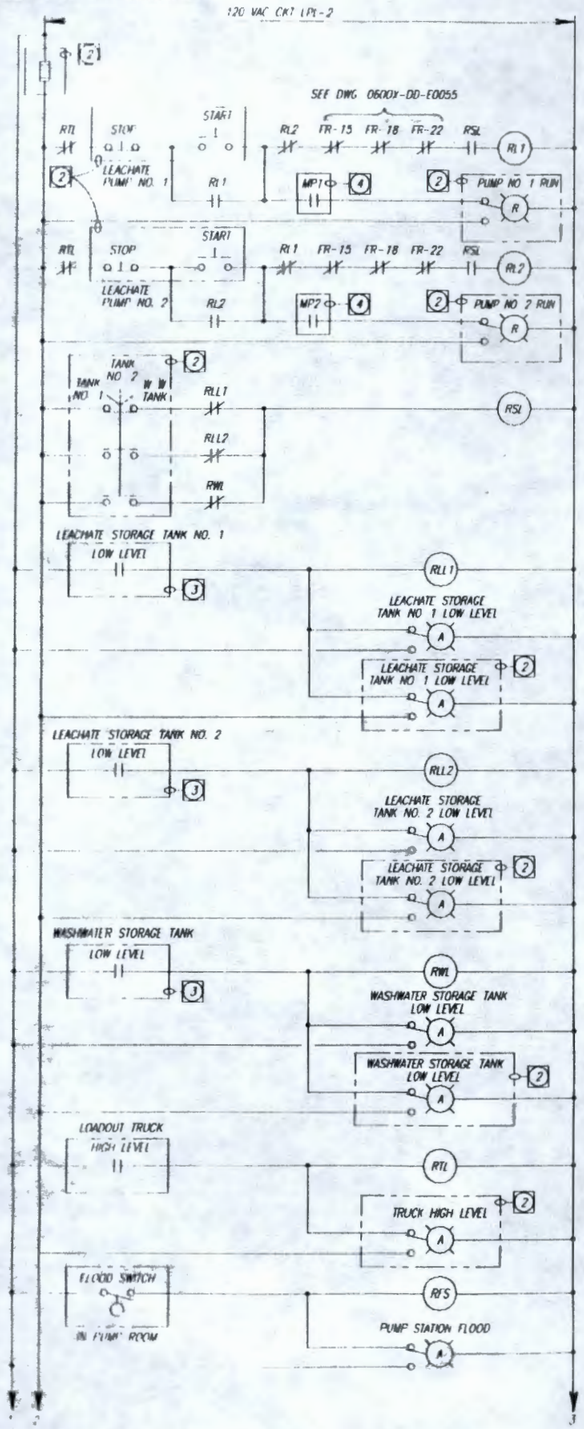

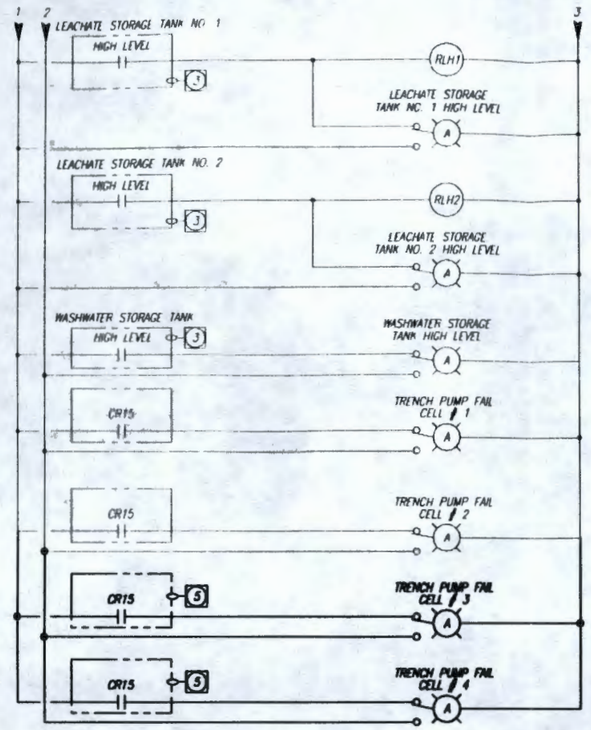

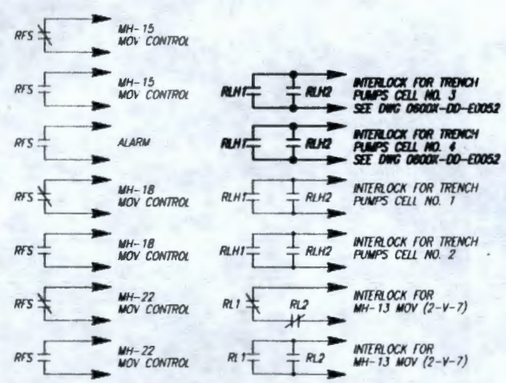

LEACHATE CONTROL PANEL SCHEMATIC

ALL CONTROLS LOCATED IN LEACHATE CONTROL PANEL UNLESS NOTED OTHERWISE (ALSO REF. DWG. 0600X-DD-E0055)

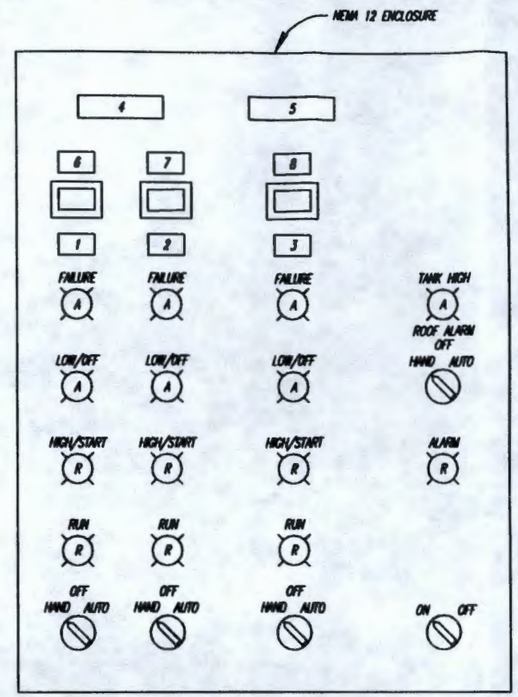

CONTROL ARRANGEMENT TRENCH PUMP CONTROL PANEL

NAMEPLATE SCHEDULE	
NO.	INSCRIPTION
1	PUMP NO. 1
2	PUMP NO. 2
3	PUMP NO. 3
4	PRIMARY SUMP
5	SECONDARY SUMP
6	HIGH FLOW
7	LOW FLOW
8	FLOW

NOTES

1. ALL CONTROL DEVICES LOCATED IN LEACHATE CONTROL PANEL UNLESS NOTED OTHERWISE.

2. AT LEACHATE LOADING STATION LCP
3. LEVEL CONTROLLER
4. FROM MCC MOTOR STARTER
5. AT TRENCH PUMP CONTROL PANEL DWG 0600X-DD-E0052

LEGEND
EXISTING
NEW

100% REVIEW SUBMITTAL NOT FOR CONSTRUCTION

REV.	DATE	DESCRIPTION	DRAWN BY	CHK'T DATE	ENGR/CHRG	CHRG DATE	DR/TR APPROV	DR ENGR
C	1/30/98	ISSUED FOR 100% DESIGN REVIEW	PDH	MGM	SRL	LHA		
B	11/21/97	ISSUED FOR 60% DESIGN REVIEW	PDH	MGM	SRL	LHA		
A	10/7/97	ISSUED FOR 30% DESIGN REVIEW	PDH	MGM	SRL	LHA		

SCALE

U.S. DEPARTMENT OF ENERGY
DOE FIELD OFFICE, RICHLAND
HANFORD ENVIRONMENTAL RESTORATION PROGRAM

BECHTEL HANFORD INC.
RICHLAND, WASHINGTON

MONTGOMERY WATSON
RICHLAND, WASHINGTON

ENVIRONMENTAL RESTORATION DISPOSAL FACILITY
CELLS 3 & 4
CONTROL SCHEMATICS - 2

BECHTEL JOB NO.	DOE CONTRACT NO.	CADD FILENAME
22192	DE-AC06-93RL12367	6xde0053.DWG

TASK	DRAWING NO.	REV. NO.
600	0600X-DD-E0053	C

RECORD INFORMATION

RECORD NO.	BLDG NO.	INDEX NO.
H-6-14939 SHT 1	600G	7100

DRAWING NO.	REV. NO.
0600X-DD-E0054	C

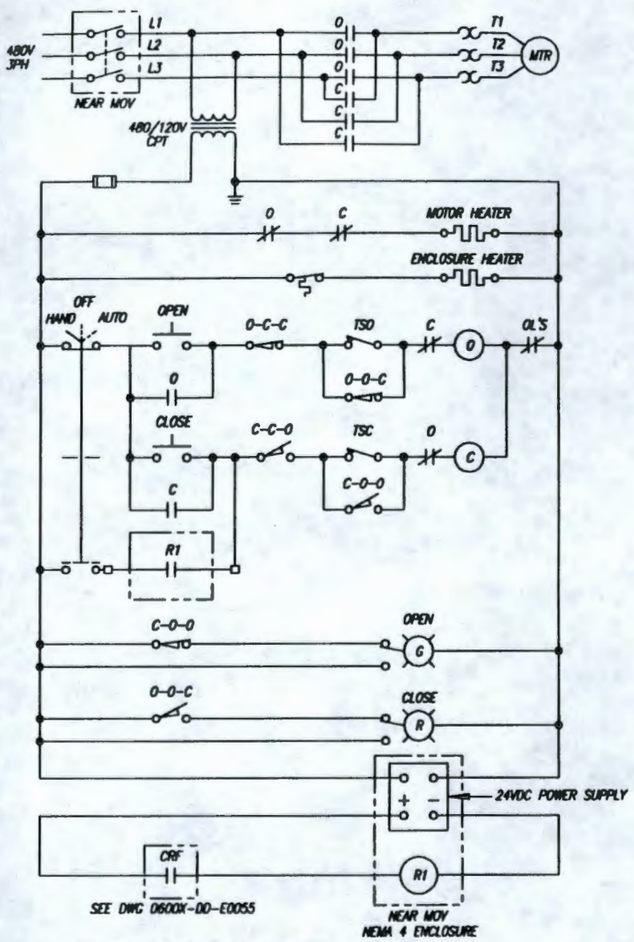

MANHOLE NUMBER	MOV TAG NUMBER	
MH-23	2-V-15	
MH-24	2-V-16	

ALL CONTROLS ARE AT VALVE OPERATOR UNLESS NOTED OTHERWISE

MOTOR OPERATED VALVE (MOV) CONTROL SCHEMATIC

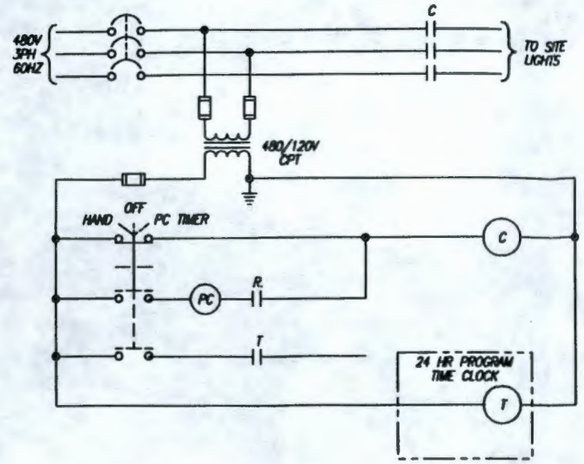

CREST PAD BUILDING OUTSIDE AREA LIGHTING CONTACTOR

UNIT HEATER BLOCK DIAGRAM

TYPICAL FOR EUH-3A, EUH-3B, EUH-4A AND EUH-4B

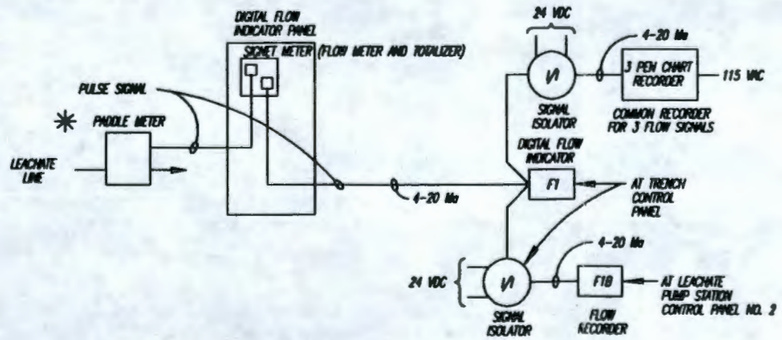

CREST PAD LEACHATE FLOW MEASUREMENT

TYPICAL FOR PADDLEMETER METER NO. 2-M-8, 2-M-9, 2-M-10, 2-M-11, 2-M-12, 2-M-13

✳ SEE MECHANICAL SCHEDULE

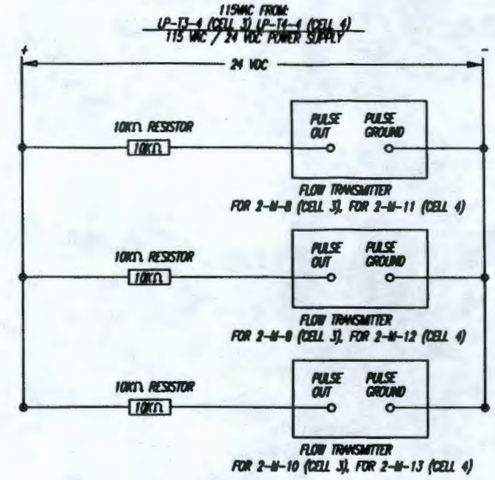

POWER SUPPLY FOR FLOW TRANSMITTERS FOR PADDLE METERS 2-M-8, 9, 10, 11, 12 & 13

✳ SEE DRAWING 0600X-DD-E0057

NOTES

100%
REVIEW SUBMITTAL
NOT FOR CONSTRUCTION

REV.	DATE	DESCRIPTION	DRAWN BY	CHK'D BY	ENGR CHK'D	ENGR APVD	CL/TEL APVD	PM APVD
C	1/30/98	ISSUED FOR 100% DESIGN REVIEW	PDH	MGW	SIL	LVA		
B	11/21/97	ISSUED FOR 80% DESIGN REVIEW	PDH	MGW	SIL	LVA		
A	10/7/97	ISSUED FOR 30% DESIGN REVIEW	PDH	MGW	SIL	LVA		

SEALS

U.S. DEPARTMENT OF ENERGY
DOE FIELD OFFICE, RICHLAND
HANFORD ENVIRONMENTAL RESTORATION PROGRAM

BECHTEL HANFORD INC.
RICHLAND, WASHINGTON

MONTGOMERY WATSON
RICHLAND, WASHINGTON

ENVIRONMENTAL RESTORATION DISPOSAL FACILITY
CELLS 3 & 4
CONTROL SCHEMATICS - 3

BECHTEL JOB NO.	DOE CONTRACT NO.	CADD FILENAME
22192	DE-AC06-93RL12367	6xde0054.DWG

HANFORD	TASK	DRAWING NO.	REV. NO.
	600	0600X-DD-E0054	C

RECORD INFORMATION

RECORD NO.		BLDG NO.	INDEX NO.
H-6-14940	SHT 1	600G	7100

DRAWING NO.	REV. NO.
0600X-DD-E0055	C

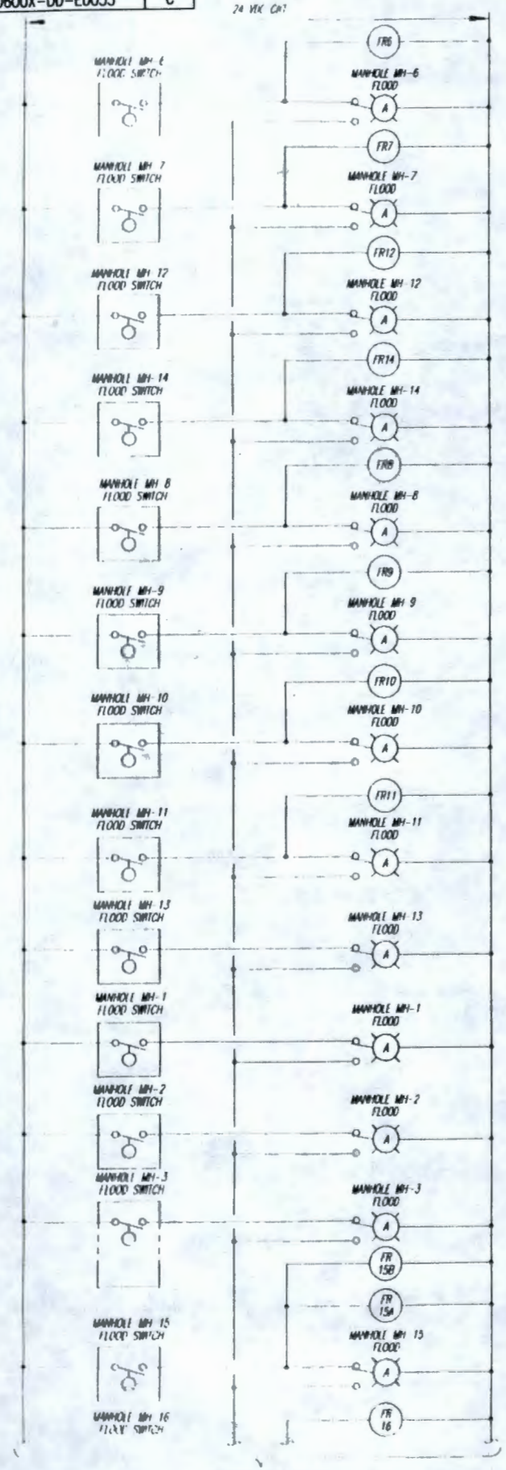

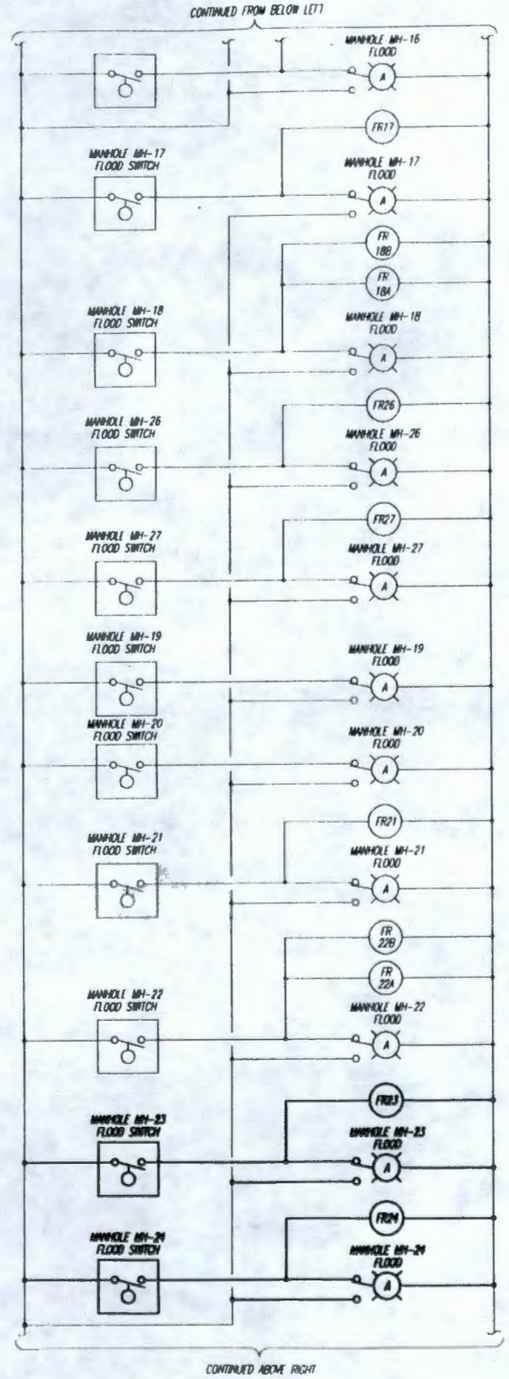

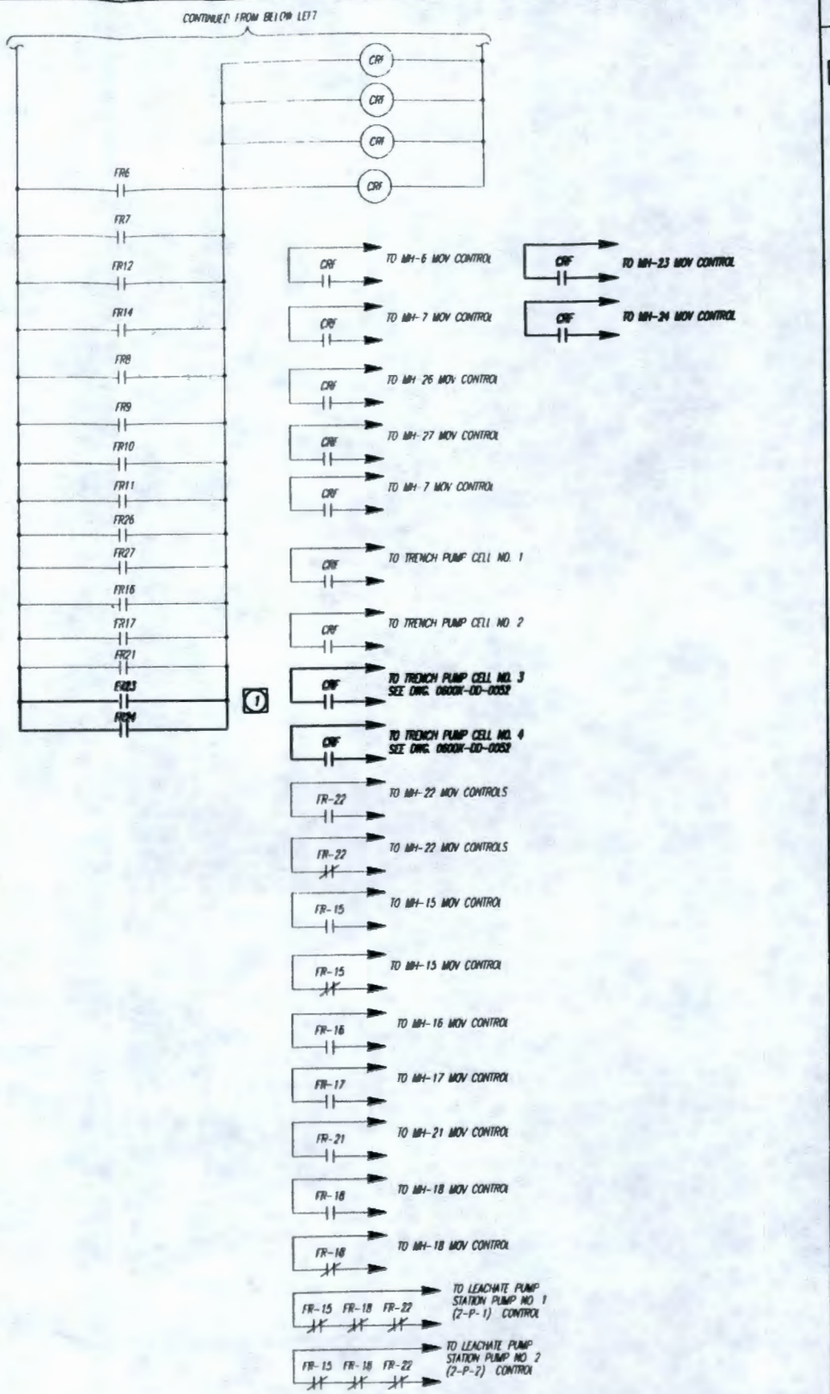

NOTE

ALL CONTROL DEVICES ARE IN LEACHATE PUMP STATION CONTROL PANEL UNLESS NOTED OTHERWISE

LEACHATE PUMP STATION CONTROL PANEL SCHEMATIC

NOTES

1. CONNECT MH-23 & MH-24 FLOOD SWITCH ALARMS INTO SPARE ALARM LIGHTS IN LEACHATE PUMP STATION CONTROL PANEL AND RUN NEW CRF RELAY TO TRENCH PUMPS AT CELLS 3 AND 4.

LEGEND

EXISTING

NEW

100%
REVIEW SUBMITTAL
NOT FOR CONSTRUCTION

REV.	DATE	DESCRIPTION	DRAWN BY	CHKD BY	RESP ENG	CHRG ENG	CL/TL OPERAT	DP MGR
C	1/30/98	ISSUED FOR 100% DESIGN REVIEW	PDH	MCM	SIL	LHA		
B	11/21/97	ISSUED FOR 60% DESIGN REVIEW	PDH	MCM	SIL	LHA		
A	10/7/97	ISSUED FOR 30% DESIGN REVIEW	PDH	MCM	SIL	LHA		

SCALE

U.S. DEPARTMENT OF ENERGY
DOE FIELD OFFICE, RICHLAND
HANFORD ENVIRONMENTAL RESTORATION PROGRAM

BECHTEL HANFORD INC.
RICHLAND, WASHINGTON

MONTGOMERY WATSON
RICHLAND, WASHINGTON

ENVIRONMENTAL RESTORATION DISPOSAL FACILITY
CELLS 3 & 4
CONTROL SCHEMATICS - 4

BECHTEL JOB NO.	DOE CONTRACT NO.	CADD FILENAME
22192	DE-AC06-93RL12367	6xde0055.DWG

TASK	DRAWING NO.	REV. NO.
600	0600X-DD-E0055	C

RECORD INFORMATION

RECORD NO.	BLDG NO.	INDEX NO.
H-6-14941 SHT 1	600G	7100

DRAWING NO.	REV. NO.
0600X-DD-E0056	C

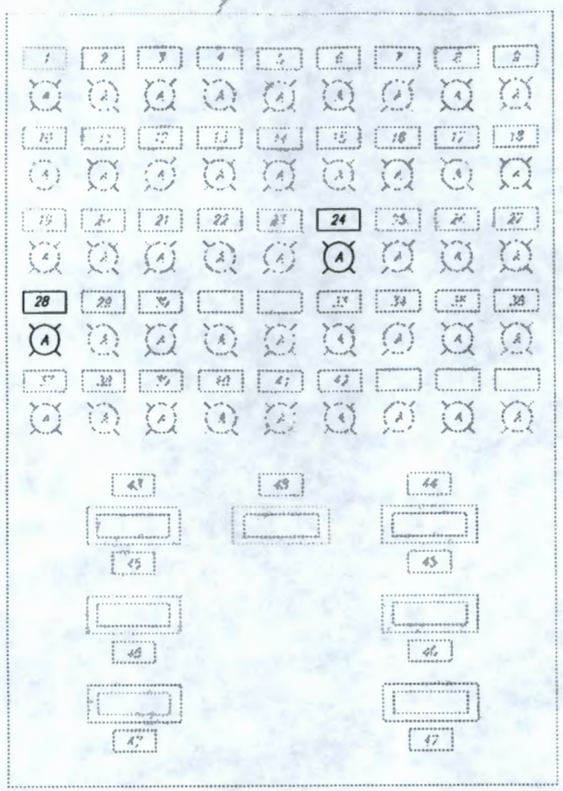

LEACHATE PUMP STATION CONTROL PANEL

NAMEPLATE SCHEDULE

NO.	INSCRIPTION	NO.	INSCRIPTION
1	MH-10 FLOOD	25	MH-16 MOISTURE
2	MH-11 FLOOD	26	MH-17 MOISTURE
3	MH-9 FLOOD	27	MH-18 MOISTURE
4	MH-8 FLOOD	28	MH-24 FLOOD
5	MH-7 FLOOD	29	MH-21 MOISTURE
6	MH-17 FLOOD	30	MH-22 MOISTURE
7	MH-26 FLOOD	31	
8	MH-27 FLOOD	32	
9	MH-6 FLOOD	33	PUMP STATION FLOOD
10	MH-14 FLOOD	34	HIGH LEVEL WET STATION NO. 1
11	MH-15 FLOOD	35	TRENCH CELL 1 PUMP FAIL
12	MH-17 FLOOD	36	TRENCH CELL 2 PUMP FAIL
13	MH-21 FLOOD	37	STORAGE TANK NO. 1 HIGH LEVEL
14	MH-16 FLOOD	38	STORAGE TANK NO. 1 LOW LEVEL
15	MH-20 FLOOD	39	STORAGE TANK NO. 2 HIGH LEVEL
16	MH-22 FLOOD	40	STORAGE TANK NO. 2 LOW LEVEL
17	MH-13 FLOOD	41	WASTEWATER TANK HIGH LEVEL
18	MH-1 FLOOD	42	WASTEWATER TANK LOW LEVEL
19	MH-2 FLOOD	43	TRENCH CELL 1 LEACHATE PUMP FLOW
20	MH-3 FLOOD	44	TRENCH CELL 2 LEACHATE PUMP FLOW
21	MH-14 FLOOD	45	PUMP 1
22	MH-20 FLOOD	46	PUMP 2
23	MH-13 MOISTURE	47	PUMP 3
24	MH-23 FLOOD	48	FLOW TO TANKER TRUCK

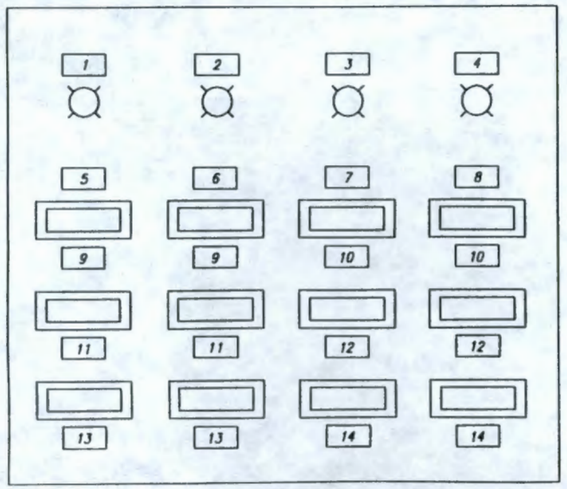

LEACHATE PUMP STATION CONTROL PANEL NO. 2

NAMEPLATE SCHEDULE

NO.	INSCRIPTION
1	TRENCH CELL 3 FAIL
2	TRENCH CELL 4 FAIL
3	
4	
5	TRENCH CELL 3 LEACHATE PUMP FLOW
6	TRENCH CELL 4 LEACHATE PUMP FLOW
7	
8	
9	PUMP 1
10	
11	PUMP 2
12	
13	PUMP 3
14	

NOTES

LEGEND

EXISTING

NEW

100%
REVIEW SUBMITTAL
NOT FOR CONSTRUCTION

REV.	DATE	DESCRIPTION	DRAWN BY	DRAFT CHK	DSGN CHK	CHKD CHK	G/TRL APPROV	BC REV CHK
C	1/20/98	ISSUED FOR 100% DESIGN REVIEW	PDH	MCM	SIL	LHA		
B	11/21/97	ISSUED FOR 60% DESIGN REVIEW	PDH	MCM	SIL	LHA		
A	10/7/97	ISSUED FOR 30% DESIGN REVIEW	PDH	MCM	SIL	LHA		

SCALE:

U.S. DEPARTMENT OF ENERGY
DOE FIELD OFFICE, RICHLAND
HANFORD ENVIRONMENTAL RESTORATION PROGRAM

BECHTEL HANFORD INC.
RICHLAND, WASHINGTON

MONTGOMERY WATSON
RICHLAND, WASHINGTON

ENVIRONMENTAL RESTORATION DISPOSAL FACILITY
CELLS 3 & 4
CONTROL SCHEMATICS - 5

BECHTEL JOB NO.	DOE CONTRACT NO.	CADD FILENAME
22192	DE-AC06-93RL12367	6xde0056.DWG

TASK	DRAWING NO.	REV. NO.
600	0600X-DD-E0056	C

RECORD INFORMATION

RECORD NO.	BLDG. NO.	INDEX NO.
H-6-14942 SHT 1	600G	7100

DRAWING NO.	REV. NO.
0600X-DD-E0057	C

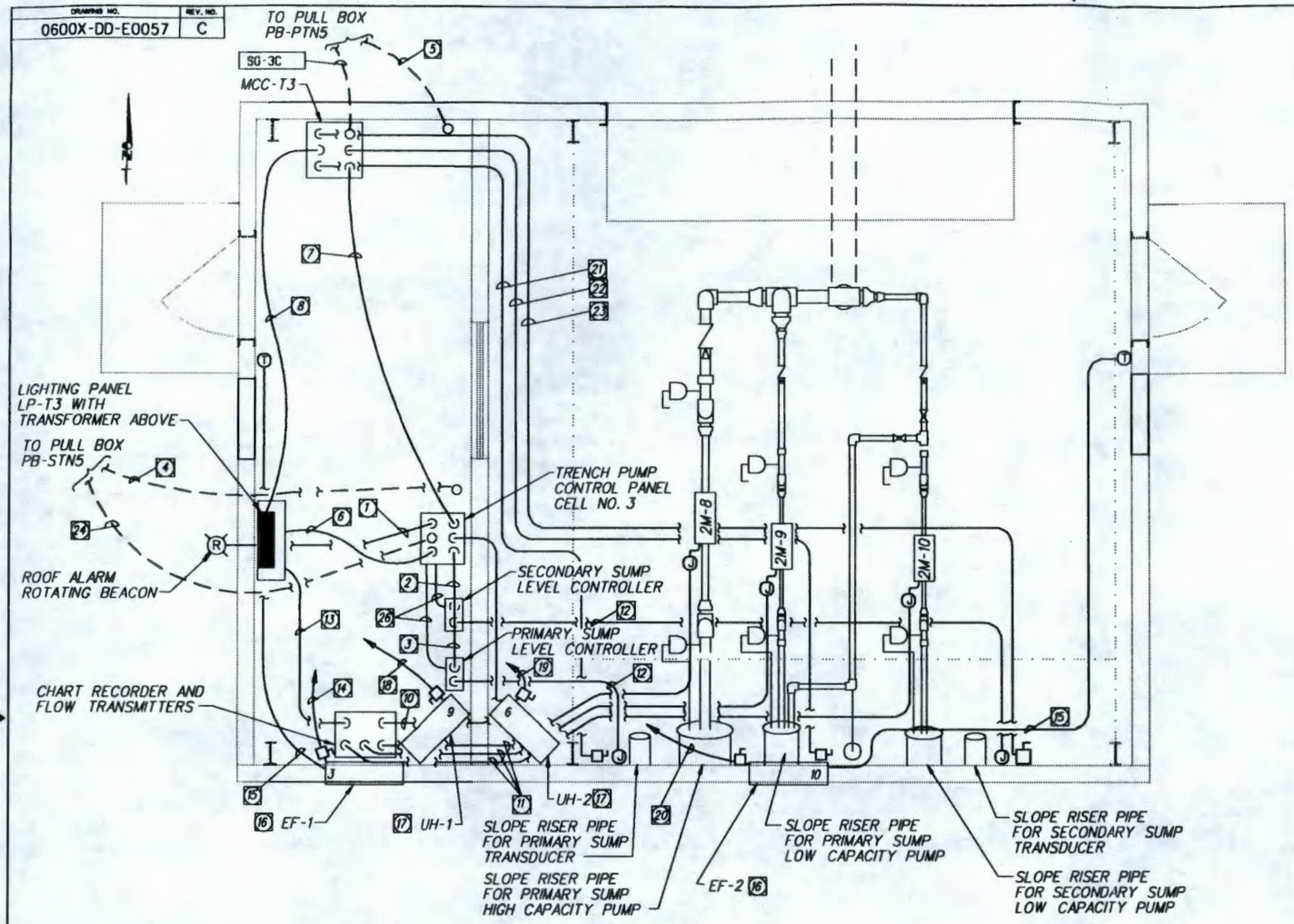

THIS DRAWING SHOWS CONDUIT AND EQUIPMENT FOR LEACHATE COLLECTION AT CELL NO. 3. ARRANGEMENT FOR CELL NO. 4 IS SIMILAR WITH THE TAG NUMBER CHANGES.

CELL 3	CELL 4
MCT3-3	MCT4-3
MCT3-4	MCT4-4
MCT3-5	MCT4-5
LP-T3	LP-T4
MCC-T3	MCC-T4
C117	C131
PB-STN5	PB-STS5
SG-3C	SG-2C
2-M-8	2-M-11
2-M-9	2-M-12
2-M-10	2-M-13
PB-PTN5	PB-PTS5
MCT3-2	MCT4-2
MCT3-2A	MCT4-2A

NOTES

1. 19.05mm(3/4")C, 2•12, 1•12GRD
2. 25.4mm(1")C, 2-2/C •16
3. 25.4mm(1")C, 1-2/C •16
4. 2-50.8mm(2") C.O.
5. 2-50.8mm(2") C.O.
6. 25.4mm(1")C, 2•12, 1•12G
7. 25.4mm(1")C, 20 •14, 1•14GRD
8. MCT3-2
9. NOT USED
10. 50.8mm(2")C, 3-2/C •16 SHLD
11. 19.05mm(3/4")C, 2/C •16 SHLD
12. 25.4mm(1")C, VENDOR CABLE
13. 25.4mm(1")C, 4•12, 1•12GRD
14. 19.05mm(3/4")C, 2•12, 1•12GRD
15. 19.05mm(3/4")C, 2•12, 1•12GRD
16. ½HP 120VAC 1 PHASE PROP TYPE EXHAUST FAN.
17. 3 KW UNIT HEATER
18. ¾"C, 2•12, 1•12G
19. ¾"C, 2•12, 1•12G
20. 19.05mm(3/4")C, 2•12, 1•12G
21. MCT3-3
22. MCT3-4
23. MCT3-5
24. C117
25. FIELD ROUTE ALL CONDUIT ON WALLS.
26. 4•12, 1•12GRD

100% REVIEW SUBMITTAL NOT FOR CONSTRUCTION

METERS 0 1 2 3 4 5
FEET 0 5 10 15

REV.	DATE	DESCRIPTION	DESIGN BY	DRAFT CHK	DESIG CHK	CONST CHK	PL/TEL APPROV	DOE APPROV
C	1/20/98	ISSUED FOR 100% DESIGN REVIEW	PDH	MCM	SIL	LHA		
B	11/21/97	ISSUED FOR 60% DESIGN REVIEW	PDH	MCM	SIL	LHA		
A	10/7/97	ISSUED FOR 30% DESIGN REVIEW	PDH	MCM	SIL	LHA		

SCALE: ¼"=1'-0"

U.S. DEPARTMENT OF ENERGY
DOE FIELD OFFICE, RICHLAND
HANFORD ENVIRONMENTAL RESTORATION PROGRAM

BECHTEL HANFORD INC. RICHLAND, WASHINGTON | MONTGOMERY WATSON RICHLAND, WASHINGTON

ENVIRONMENTAL RESTORATION DISPOSAL FACILITY
CELLS 3 & 4
CREST PAD BLDG - ELEC. POWER PLAN

BECHTEL JOB NO.	DOE CONTRACT NO.	CADD FILENAME
22192	DE-AC06-93RL12367	6xde0057.dgn

TASK	DRAWING NO.	REV. NO.
600	0600X-DD-E0057	C

RECORD INFORMATION

RECORD NO.	BLDG NO.	INDEX NO.
H-6-14943 sht 1	600G	7100

DRAWING NO.	REV. NO.
0600X-DD-E0058	C

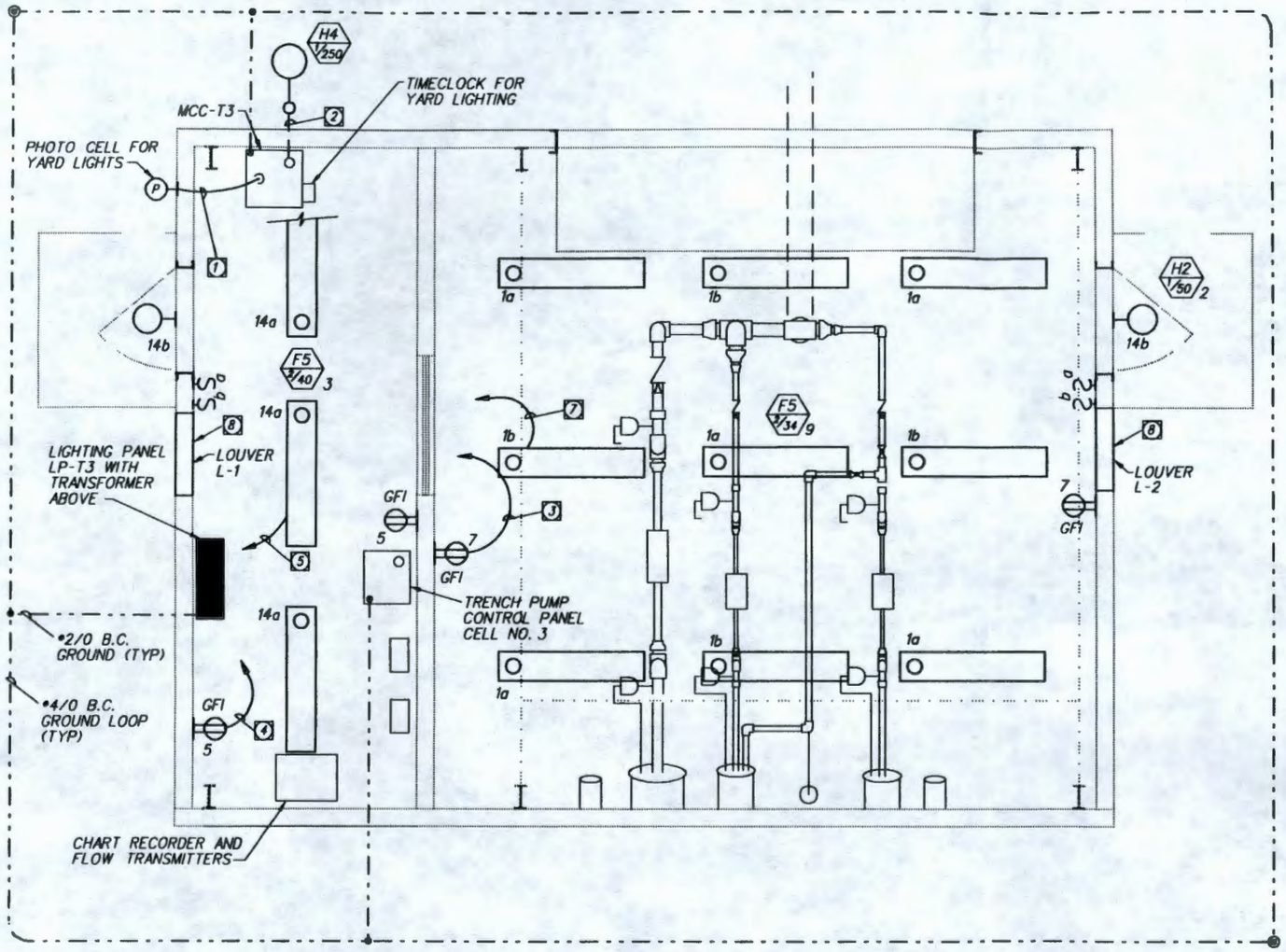

METERS 0 1 2 3 4 5
FEET 0 5 10 15

NOTES

1. 19.05mm(3/4")C, 3•12
2. 25.4mm(1")C, 2•12, 1•12GRD MCT3-2B
3. 19.05mm(3/4")C, 2•12, 1•12GRD
4. 19.05mm(3/4")C, 2•12, 1•12GRD
5. 19.05mm(3/4")C, 2•12, 1•12GRD
6. NOT USED
7. 19.05mm(3/4")C, 2•12, 1•12GRD
8. 609.6mm x 609.6mm(24"x24") LOUVER W/SELF-CLOSING DAMPER

THIS DRAWING SHOWS CONDUIT AND EQUIPMENT FOR LEACHATE COLLECTION AT CELL NO. 3. ARRANGEMENT FOR CELL NO. 4 IS SIMILAR WITH THE TAG NUMBER CHANGES.

CELL 3	CELL 4
LP-T3 MCC-T3 MCT3-6	LP-T4 MCC-T4 MCT4-6

100%
REVIEW SUBMITTAL
NOT FOR CONSTRUCTION

REV.	DATE	DESCRIPTION	DRAWN BY	CHKD BY	DSGN ENGR	CHKD BY	PD/CDL APPROVAL	PE/ ENGR
C	1/20/98	ISSUED FOR 100% DESIGN REVIEW	PDH	MGM	SIL	LHA		
B	11/21/97	ISSUED FOR 60% DESIGN REVIEW	PDH	MGM	SIL	LHA		
A	10/7/97	ISSUED FOR 30% DESIGN REVIEW	PDH	MGM	SIL	LHA		

SCALE: 1/4"=1'-0"

U.S. DEPARTMENT OF ENERGY
DOE FIELD OFFICE, RICHLAND
HANFORD ENVIRONMENTAL RESTORATION PROGRAM

BECHTEL HANFORD INC.
RICHLAND, WASHINGTON

MONTGOMERY WATSON
RICHLAND, WASHINGTON

ENVIRONMENTAL RESTORATION DISPOSAL FACILITY
CELLS 3 & 4
CREST PAD BLDG - LIGHTING, RECP. & GROUNDING PLAN

BECHTEL JOB NO.	DOE CONTRACT NO.	CADD FILENAME
22192	DE-AC06-93RL12367	6xde0058.dgn

TASK	DRAWING NO.	REV. NO.
600	0600X-DD-E0058	C

RECORD INFORMATION

RECORD NO.	BLDG NO.	INDEX NO.
H-6-14944 sht 1	600G	7100

DRAWING NO. 0600X-DD-E0058 | REV. NO. 0

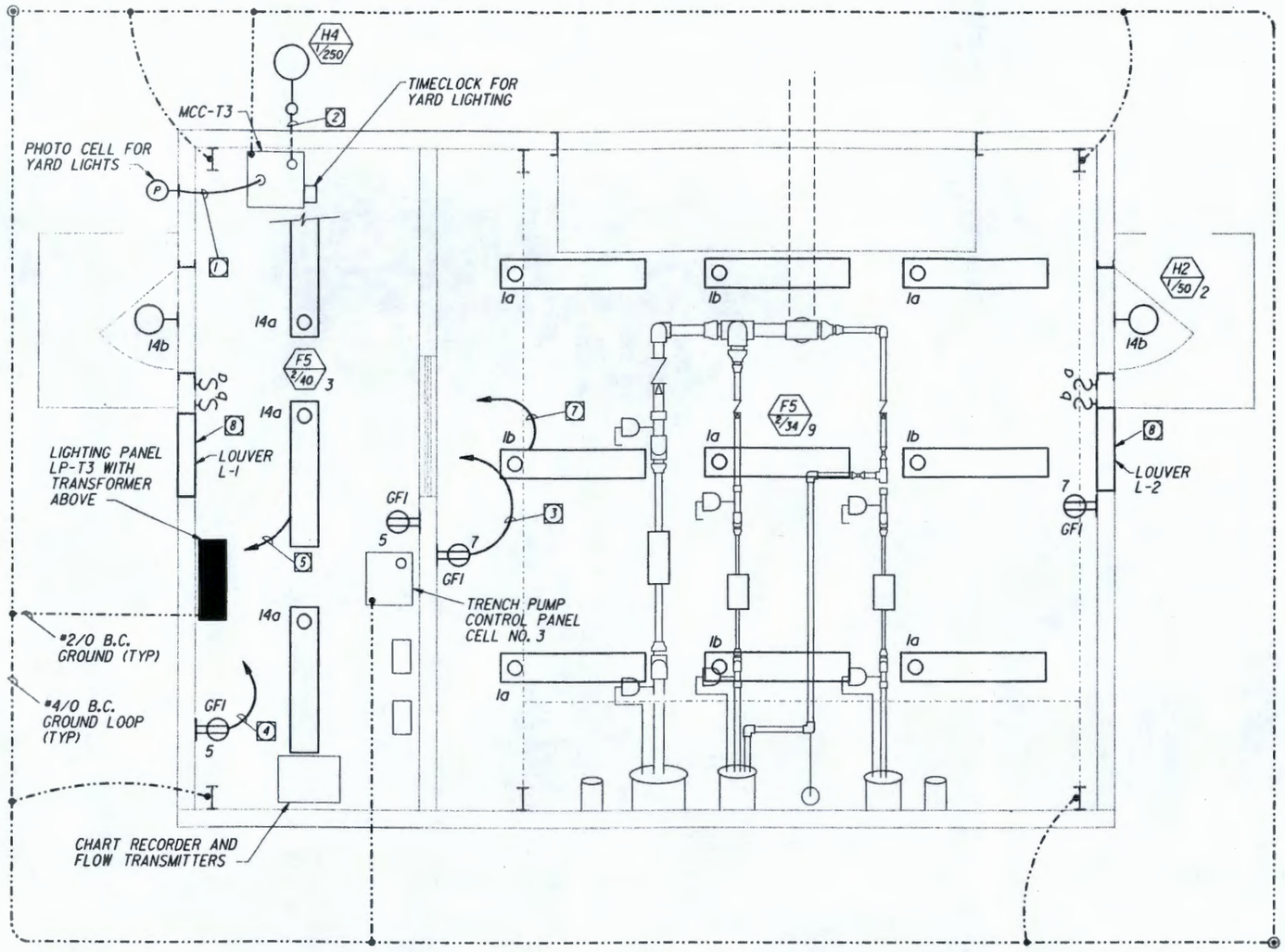

METERS 0 1 2 3 4 5
FEET 0 5 10 15

NOTES

1. 19.05mm(3/4")C, 3#12
2. 25.4mm(1")C, 2#12, 1#12GRD — MCT3-2B
3. 19.05mm(3/4")C, 2#12, 1#12GRD
4. 19.05mm(3/4")C, 2#12, 1#12GRD
5. 19.05mm(3/4")C, 2#12, 1#12GRD
6. NOT USED
7. 19.05mm(3/4")C, 2#12, 1#12GRD
8. 609.6mm x 609.6mm(24"x24") LOUVER W/SELF-CLOSING DAMPER

THIS DRAWING SHOWS CONDUIT AND EQUIPMENT FOR LEACHATE COLLECTION AT CELL NO. 3. ARRANGEMENT FOR CELL NO. 4 IS SIMILAR WITH THE TAG NUMBER CHANGES.

CELL 3	CELL 4
LP-T3 MCC-T3 MCT3-2B	LP-T4 MCC-T4 MCT4-2B

2/9/98

MICHAEL G. MARCHANT
STATE OF WASHINGTON
20016272
REGISTERED PROFESSIONAL ENGINEER
EXPIRES 12-9-99

REV.	DATE	DESCRIPTION	DRAWN BY	DRAFT CHK	ORIG/ ENG'R	ENG'R CHK	QL/TOL APPROV	PROJ ENG'R
0	2-5-98	ISSUED FOR CONSTRUCTION						

SCALE: AS SHOWN

U.S. DEPARTMENT OF ENERGY
DOE FIELD OFFICE, RICHLAND
HANFORD ENVIRONMENTAL RESTORATION PROGRAM

BECHTEL HANFORD INC. RICHLAND, WASHINGTON | MONTGOMERY WATSON RICHLAND, WASHINGTON

ENVIRONMENTAL RESTORATION DISPOSAL FACILITY
CELLS 3 & 4
CREST PAD BLDG - LIGHTING, RECP. & GROUNDING PLAN

BECHTEL JOB NO.	DOE CONTRACT NO.	CADD FILENAME
22192	DE-AC06-93RL12367	6xde0058.dgn

TASK	DRAWING NO.	REV. NO.
600	0600X-DD-E0058	0

RECORD INFORMATION

RECORD NO.	BLDG NO.	INDEX NO.
H-6-14944 sht 1	600G	7100

DRAWING NO.	REV. NO.
0600X-DD-C0088	0

COORDINATES

POINT NO.	DESCRIPTION	NORTH	EAST	ELEVATION	REMARKS
	EXISTING & GENERAL SITE FEATURES				
001	SURVEY CONTROL POINT HSM-149	436000.7378	1861560.7550	669.29	
002	SURVEY CONTROL POINT HSM-142	438947.3668	1861429.3610	678.071	
003	SURVEY CONTROL POINT HSM-136	442215.0768	1864490.3260	690.541	
004	SURVEY CONTROL POINT HSM-143	438966.7238	1864376.9180	680.440	
005	SURVEY CONTROL POINT HSM-150	436034.9668	1864430.9920	655.77	
006	SURVEY CONTROL POINT HSM-144	438966.6118	1867428.5820	704.728	
007	NOT USED				
008	SURVEY CONTROL POINT HSM-138	442270.2478	1870411.8430	733.576	
009	SURVEY CONTROL POINT HSM-145	439312.8478	1870414.9040	722.01	
010	SURVEY CONTROL POINT HSM-139	442458.0198	1873314.5000	745.93	
011	SURVEY CONTROL POINT HSM-140	442510.2408	1876208.3110	739.27	
012	SURVEY CONTROL POINT HSM-141	442459.5518	1879193.4860	744.91	
013	SURVEY CONTROL POINT HSM-135	442045.8388	1861410.8770	692.42	
014	BORING 699-35-68B	440475.56	1867862.63	713.9	
015	BORING 699-35-69B	439789.36	1866279.31	701.4	
016	WELL 699-35-70	439591.81	1865375.65	692.1	
017	WELL 696-35-66	439958.15	1869612.46	732.5	
018	WELL 699-36-70A	440666.01	1865009.84	702.74	
019	WELL 6-38-70	443206.08	1865160.94	714.25	
020	WELL 699-38-68A	442688.78	1867389.45	718.17	
021	WELL 6-38-65	443044.13	1870374.64	756.92	
022	LIMIT OF CONSTRUCTION	442705.21	1868092.89	--	
023	LIMIT OF CONSTRUCTION	442735.21	1868700.89	--	
024	LIMIT OF CONSTRUCTION	439982.66	1868670.89	--	
025	LIMIT OF CONSTRUCTION	439982.66	1866787.03	--	
026	LIMIT OF CONSTRUCTION	440823.07	1866787.03	--	
027	LIMIT OF CONSTRUCTION	440823.07	1868081.22	--	
028	LIMIT OF CONSTRUCTION	440854.88	1868092.89	--	
029	LIMIT OF CONSTRUCTION	442009.50	1868092.89	--	
030	LIMIT OF CONSTRUCTION	442009.50	1867728.23	--	
031	LIMIT OF CONSTRUCTION	441772.93	1867491.67	--	
032	LIMIT OF CONSTRUCTION	441772.93	1867293.00	--	
033	LIMIT OF CONSTRUCTION	441915.02	1867292.61	--	
034	LIMIT OF CONSTRUCTION	441947.93	1867365.03	--	
035	LIMIT OF CONSTRUCTION	442423.13	1867365.03	--	
036	LIMIT OF CONSTRUCTION	442463.63	1867324.53	--	
037	LIMIT OF CONSTRUCTION	442530.00	1867324.53	--	
038	LIMIT OF CONSTRUCTION	442530.00	1866802.00	--	
039	LIMIT OF CONSTRUCTION	442429.82	1866802.00	--	
040	LIMIT OF CONSTRUCTION	442429.82	1866762.00	--	
041	LIMIT OF CONSTRUCTION	442570.00	1866762.00	--	
042	LIMIT OF CONSTRUCTION	442570.00	1868092.89	--	
043	LIMIT OF CONSTRUCTION	442675.21	1868092.89	--	
044	LIMIT OF CONSTRUCTION	442667.09	1864962.16	--	
045	LIMIT OF CONSTRUCTION	442794.57	1864962.16	--	
046	LIMIT OF CONSTRUCTION	442697.47	1865108.72	--	
047	NOT USED	--	--	--	
048	LIMIT OF CONSTRUCTION	442705.21	1868630.89	--	
049	LIMIT OF CONSTRUCTION	442735.21	1868630.89	--	
050	LIMIT OF CONSTRUCTION	442570.21	1868700.89	--	
051	LIMIT OF CONSTRUCTION	442570.21	1868670.89	--	
	FENCING				
100	NEW FENCE TIE-IN	442700 +/-	1868098 +/-	--	
101	NEW FENCE CORNER	442700.21	1868665.88	--	
102	NEW FENCE CORNER	439987.66	1868665.89	--	
103	NEW FENCE TIE-IN	439988 +/-	1866792 +/-	--	
	ROADWAY & GRADING				
200	P.O.B. ACCESS ROAD	442506.00	1868605.78	729 +/-	
201	P.J. ACCESS ROAD	442360.40	1868512.89	--	
202	RADIUS POINT ACCESS ROAD	442341.72	1868576.89	--	
203	P.O.E ACCESS ROAD	442258.37	1868512.89	720.00	
204	CORNER SUPPORT PAD	442258.37	1868500.89	720.00	
205	CORNER SUPPORT PAD	442258.37	1868650.89	720.00	
206	CORNER SUPPORT PAD	441958.37	1868650.89	720.00	
207	CORNER SUPPORT PAD	441958.37	1868500.89	720.00	
208	P.O.C ACCESS ROAD	442376.14	1868522.93	--	
209	P.O.T ACCESS ROAD	442341.72	1868512.89	--	
210	CORNER BULK WATER PAD	441877.9	1867323.0	--	
211	CORNER BULK WATER PAD	441877.9	1867397.0	--	
212	R.P. 10' RADIUS CONTOUR CURVE	441907.22	1867333.24	716.00	
213	R.P. 20' RADIUS CONTOUR CURVE	441935.10	1867358.39	716.00	

POINT NO.	DESCRIPTION	NORTH	EAST	ELEVATION	REMARKS
	YARD PIPING				
300	YARD HYDRANT	441910.43	1867353.22	--	
301	NOT USED				
302	PT TIE-IN / AIR RELEASE	442399.07	1867370.00	715.0 +/-	CENTERLINE
303	305mm(12") ELBOW (90)	442399.1 +/-	1867373.0 +/-	717.5 +/-	CENTERLINE
304	ELEVATION POINT	442219.07	1867373.00	713.00	CENTERLINE
305	NOT USED				
306	305mm(12")x305mm(12")x305mm(12") TEE	441912.93	1867373.00	712.00	CENTERLINE
307	305mm(12") VALVE	441912.93	1867376.69	712.00	CENTERLINE
308	305mm(12") CAP	441912.93	1867391.72	712.00	CENTERLINE
309	152mm(6") VALVE	441912.93	1867348.01	712.00	CENTERLINE
310	152mm(6") ELBOW (BULK WATER STATION)	441912.93	1867343.00	712.00	CENTERLINE
311	PT TIE-IN 76mm(3")	442437.1 +/-	1866792.0 +/-	714.6 +/-	CENTERLINE
312	76mm(3") VALVE	442444.41	1866792.00	716.00	CENTERLINE
313	PT TIE-IN / AIR RELEASE	442454.90	1866792.00	716.00	CENTERLINE
314	NOT USED				
315	76mm(3") ELBOW (90)	442540.00	1866792.00	700.00	CENTERLINE
316	ELEV. PT.	442540.00	1867032.00	700.00	CENTERLINE
317	ELEV. PT.	442540.00	1867352.00	704.33	CENTERLINE
318	ELEV. PT.	442540.00	1867674.66	704.33	CENTERLINE
319	76mm(3") ELBOW (45)	442540.00	1867927.00	706.33	CENTERLINE
320	76mm(3") ELBOW (11-1/4)	442349.07	1868117.93	706.33	CENTERLINE
321	76mm(3") ELBOW (11-1/4)	442334.92	1868132.08	710.33	CENTERLINE
322	76mm(3") ELBOW (45)	442278.37	1868188.63	712.33	CENTERLINE
323	76mm(3") VALVE	442278.37	1868555.26	716.71	CENTERLINE
324	76mm(3") CAP	442278.37	1868565.26	716.83	CENTERLINE
	POWER LINE				
400	POWER POLE (PP-G505)	442743.29	1864985.24	--	
401	POWER POLE	442682.66	1865077.04	--	
402	NOT USED	--	--	--	
403	POWER POLE	442690.2	1868649.9	--	
404	POWER POLE	442283.4	1868649.9	--	
405	NOT USED	--	--	--	
406	POWER POLE	442689.9	1868527.0	--	
407	POWER POLE	442583.4	1868649.9	--	

NOTES

FOR INFORMATION ONLY

BHI-DIS 12/19/97 bdo

REV.	DATE	DESCRIPTION	DRAWN BY	DRAFT CHK	ORIG/ ENGR	ENG'R CHK	CL/ TDL APPROV	BH PROJ ENG'R
0	12-12-97	ISSUED FOR CONSTRUCTION	PGH	MCM	MB	MCM		

SCALE:

U.S. DEPARTMENT OF ENERGY
DOE FIELD OFFICE, RICHLAND
HANFORD ENVIRONMENTAL RESTORATION PROGRAM

BECHTEL HANFORD INC. RICHLAND, WASHINGTON | MONTGOMERY WATSON RICHLAND, WASHINGTON

ENVIRONMENTAL RESTORATION DISPOSAL FACILITY
CELLS 3 & 4 CONSTRUCTION, SITE PREPARATION
COORDINATE TABLE

BECHTEL JOB NO.	DOE CONTRACT NO.	CADD FILENAME
22192	DE-AC06-93RL12367	6xdc0088.dgn

TASK	DRAWING NO.	REV. NO.
600	0600X-DD-C0088	0

RICHARD G. MARCHANT, STATE OF WASHINGTON, 16827, REGISTERED PROFESSIONAL ENGINEER
EXPIRES 12-03-99

RECORD INFORMATION

RECORD NO.	BLDG NO.	INDEX NO.
H-6-14713 sht 1	600G	0000

DE4224 4/95

DRAWING NO.	REV. NO.
0600X-DD-C0089	0

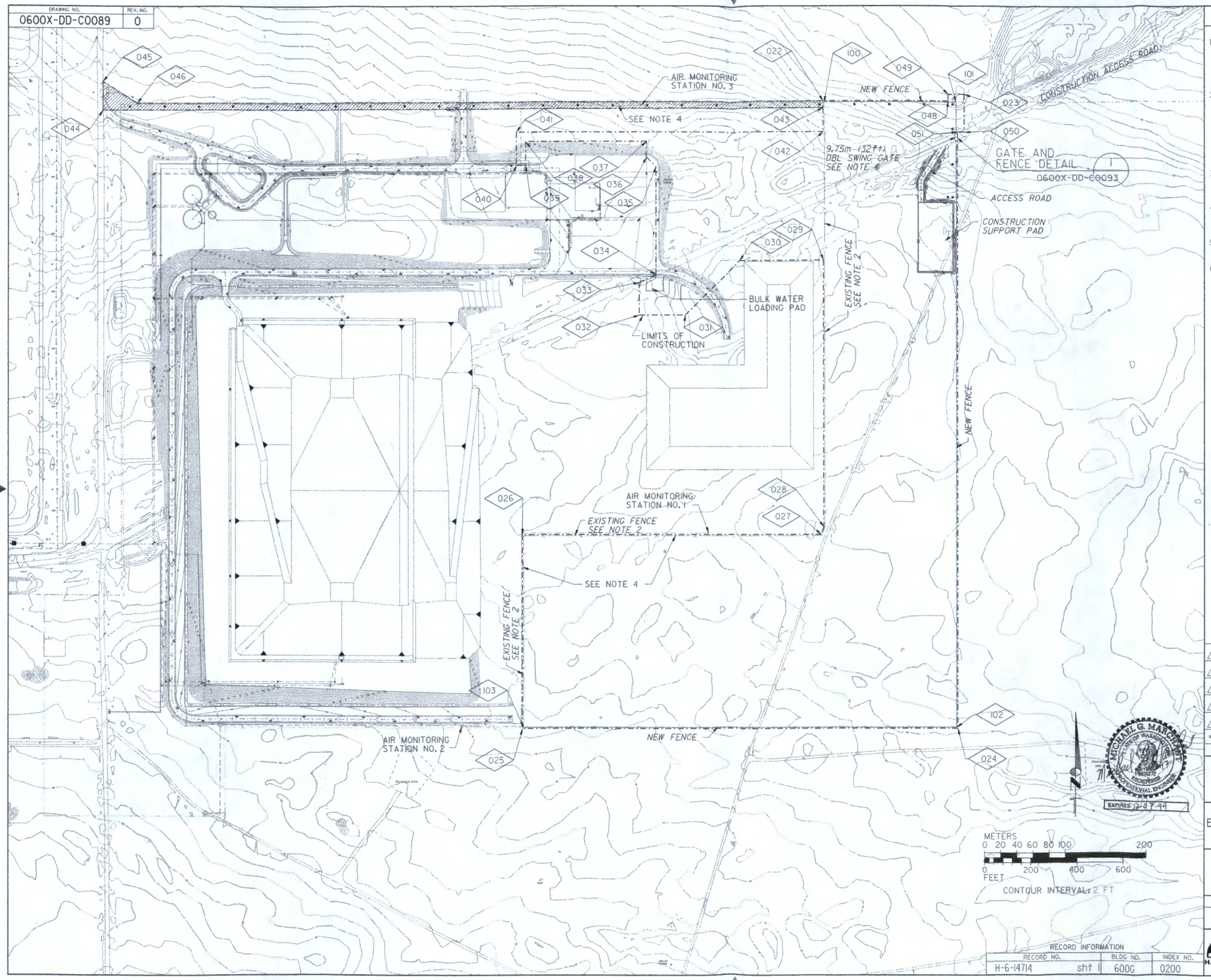

NOTES

1. ALL AREAS WITHIN THE LIMITS OF CONSTRUCTION SHALL BE CLEARED UNLESS OTHERWISE NOTED. ADDITIONALLY, THE CONSTRUCTION SUPPORT PAD, ASSOCIATED ACCESS ROAD AND BULK WATER LOADING PAD SHALL BE GRUBBED. SEE SPEC. SECTION 02110.
2. RELOCATE EXISTING FENCE AND GATE TO NEW FENCE LINE. ADDITIONAL FENCING WILL BE REQUIRED TO COMPLETE THE FENCE. AT ALL TIMES WHEN THE ERDF PERIMETER FENCE IS NOT CONTINUOUS AND SOUND, THE CONTRACTOR SHALL PROVIDE AND MAINTAIN MANNED SECURITY. ONE SECURITY OFFICER SHALL BE PROVIDED AT EACH UNSECURED LOCATION AND FOR EVERY 100m(328 FT) OF UNSECURED FENCE LINE.
3. SURVEY DATUM:
   VERTICAL NAVD 88
   HORIZONTAL NAD 83 (91)
4. LOCATE BURIED UTILITY FOR AIR MONITORING STATIONS AND COORDINATE ANY REQUIRED OUTAGES WITH THE CONTRACTING OFFICER.
5. CONTRACTOR SHALL USE THE CONSTRUCTION SUPPORT PAD AND AREA WEST OF THE PAD FOR STAGING AREA.
6. CONTRACTOR SHALL PROVIDE GATE STOPS WITH KEEPERS ON EACH SIDE OF ROADWAY. SECURE TO POSTS SET IN CONCRETE FILL.

FOR INFORMATION ONLY

CONTRACTOR IS NOT REQUIRED TO CLEAR THIS AREA UNLESS NECESSARY TO FACILITATE THE WORK.

BHI-DIS 12/19/97 bb

REV.	DATE	DESCRIPTION	DRAWN BY	DRAFT CHK	ORIG/ ENG'R	ENG'R CHK	CL/TOL APPROV	BH PROJ ENG'R
0	12-12-97	ISSUED FOR CONSTRUCTION	PDH	MGM	MB	MGM	[illegible]	

SCALE:

U.S. DEPARTMENT OF ENERGY

DOE FIELD OFFICE, RICHLAND
HANFORD ENVIRONMENTAL RESTORATION PROGRAM

BECHTEL HANFORD INC.
RICHLAND, WASHINGTON

MONTGOMERY WATSON
RICHLAND, WASHINGTON

ENVIRONMENTAL RESTORATION DISPOSAL FACILITY
CELLS 3 & 4 CONSTRUCTION, SITE PREPARATION
CLEARING PLAN AND FENCE LOCATION

BECHTEL JOB NO.	DOE CONTRACT NO.	CADD FILENAME
22192	DE-AC06-93RL12367	6xdc0089.dgn

TASK	DRAWING NO.	REV. NO.
600	0600X-DD-C0089	0

RECORD INFORMATION

RECORD NO.	BLDG NO.	INDEX NO.
H-6-14714 sht 1	6006	0200

HANFORD

DE2274 4/95

DRAWING NO.	REV. NO.
0600X-DD-C0090	0

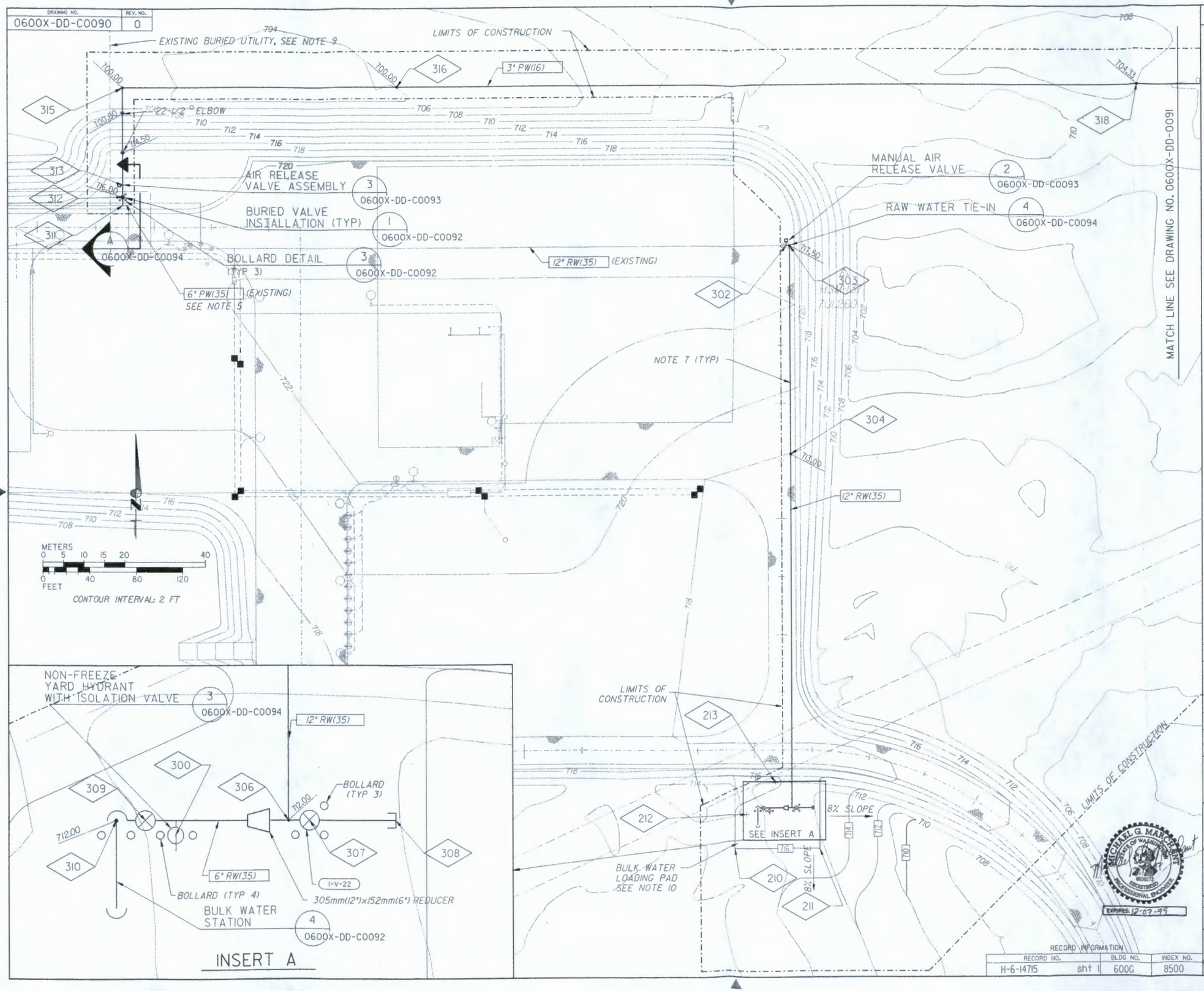

NOTES

1. SURVEY DATUM:
   VERTICAL NAVD 88
   HORIZONTAL NAD 83 (91)
2. MINIMUM BURY FOR ALL PIPES SHALL BE 1.07m (3.50 FT), UNLESS SHOWN OTHERWISE.
3. REFER TO DRAWING 0600X-DD-C0092 FOR PIPE SCHEDULE.
4. CONTRACTOR SHALL PROVIDE ADEQUATE SAMPLE TAPS FOR HYDROSTATIC TESTING AND CHLORINATION.
5. CONTRACTOR SHALL HOT TAP INTO EXISTING POTABLE WATER LINE. TIE-IN LOCATION AND DEPTH IS APPROXIMATE AND SHALL BE FIELD VERIFIED BY THE CONTRACTOR. CONTRACTOR SHALL BE RESPONSIBLE FOR ANY DAMAGE TO EXISTING PIPELINES.
6. PLASTIC MARKING TAPE SHALL BE PLACED OVER ALL NON-METALLIC PIPELINES.
7. WHERE GRAVEL ROADWAYS ARE DISTURBED, CONTRACTOR SHALL PROVIDE 0.51m(20") OF BASE MATERIAL MEETING THE REQUIREMENTS OF WSDOT 9-03.9(3). BASE MATERIAL SHALL BE COMPACTED TO 95% OF MAXIMUM DENSITY.
8. EROSION CONTROL SHALL BE PROVIDED FOR ALL DISTURBED AREAS. SOIL-SEMENT, OR APPROVED EQUAL, SHALL BE USED TO STABILIZE SLOPES GREATER THAN OR EQUAL TO 3H:1V AND THE BULK WATER LOADING PAD. OTHER DISTURBED AREAS SHALL BE COVERED WITH CHIPS AND SLASH LEFT OVER FROM CLEARING OPERATIONS.
9. LOCATE BURIED UTILITY FOR AIR MONITORING STATION AND COORDINATE ANY REQUIRED OUTAGE WITH THE CONTRACTING OFFICER.
10. CONTRACTOR SHALL GRADE BULK WATER LOADING PAD. FILL MATERIAL SHALL BE TAKEN FROM THE DAILY OPERATIONS COVER STOCKPILE AS DIRECTED BY THE CONTRACTING OFFICER.

FOR INFORMATION ONLY

BHI-DIS 12/19/97 bdo

REV.	DATE	DESCRIPTION	DRAWN BY	DRAFT'S CHK	ORIG/ ENG'R	ENG'R CHK	CL/TCL APPROV	BH PROJ ENG'R
0	12-12-97	ISSUED FOR CONSTRUCTION	PGH					

SCALE:

U.S. DEPARTMENT OF ENERGY
DOE FIELD OFFICE, RICHLAND
HANFORD ENVIRONMENTAL RESTORATION PROGRAM

BECHTEL HANFORD INC. RICHLAND, WASHINGTON | MONTGOMERY WATSON RICHLAND, WASHINGTON

ENVIRONMENTAL RESTORATION DISPOSAL FACILITY
CELLS 3 & 4 CONSTRUCTION, SITE PREPARATION
YARD PIPING PLAN I, GRADING PLAN

BECHTEL JOB NO.	DOE CONTRACT NO.	CADD FILENAME
22192	DE-AC06-93RL12367	6xdc0090.dgn

TASK	DRAWING NO.	REV. NO.
600	0600X-DD-C0090	0

RECORD INFORMATION

RECORD NO.	BLDG NO.	INDEX NO.
H-6-14715 sht 1	600G	8500

DRAWING NO.	REV. NO.
0600X-DD-C0091	0

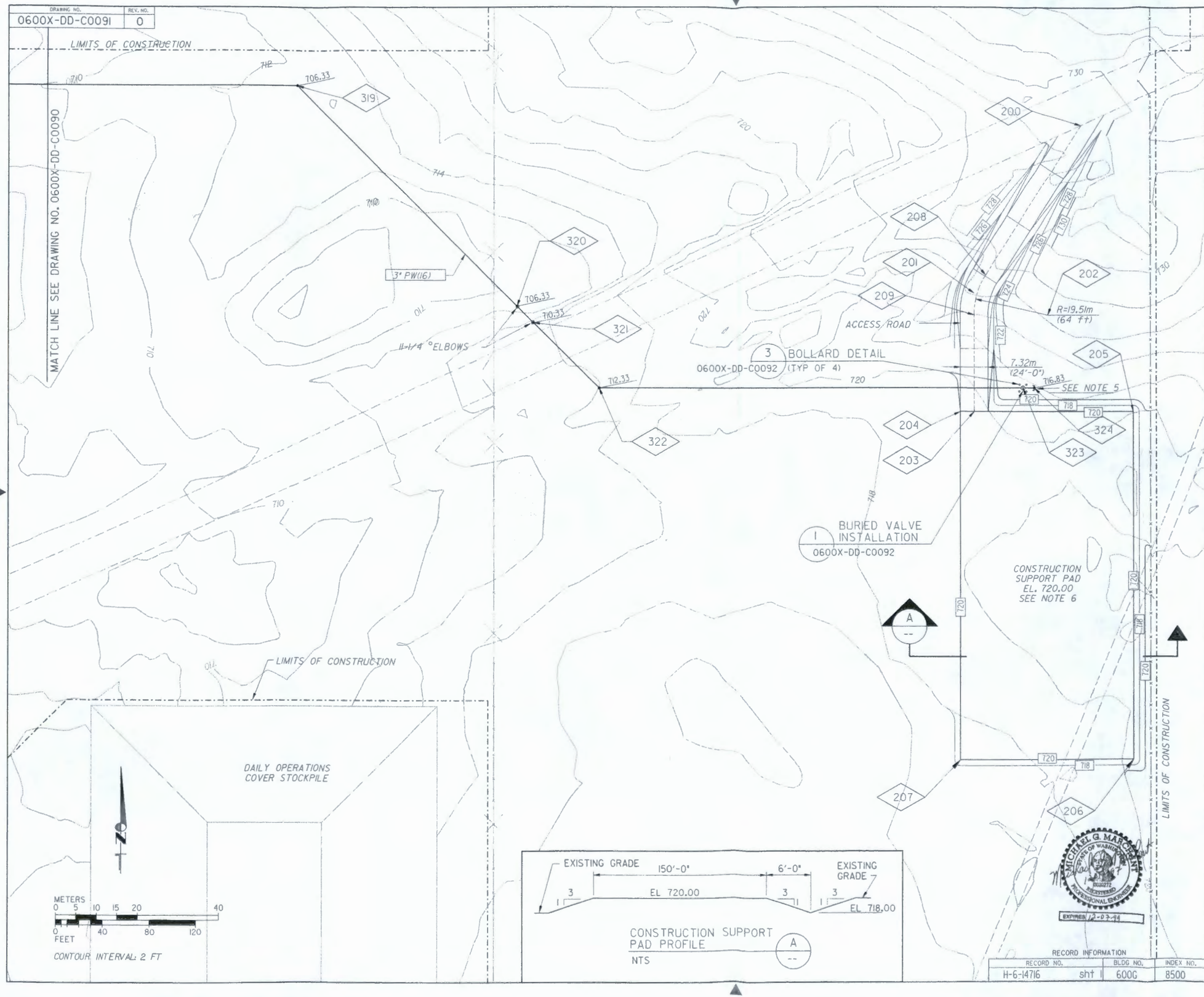

RECORD INFORMATION

RECORD NO.		BLDG NO.	INDEX NO.
H-6-14716	sht 1	600G	8500

NOTES

1. SURVEY DATUM:
   VERTICAL NAVD 88
   HORIZONTAL NAD 83 (91)
2. MINIMUM BURY FOR ALL PIPES SHALL BE 1.07m (3.50 FT), UNLESS SHOWN OTHERWISE.
3. REFER TO DRAWING 0600X-DD-C0092 FOR PIPE SCHEDULE.
4. CONTRACTOR SHALL PROVIDE ADEQUATE SAMPLE TAPS FOR HYDROSTATIC TESTING AND CHLORINATION.
5. CONTRACTOR SHALL PROVIDE MARKER AT LOCATION OF CAPPED WATER LINE.
6. CONTRACTOR SHALL GRADE CONSTRUCTION SUPPORT PAD AND ASSOCIATED ACCESS ROAD. FILL MATERIAL SHALL BE TAKEN FROM THE DAILY OPERATIONS COVER STOCKPILE AS DIRECTED BY THE CONTRACTING OFFICER. SLOPE EMBANKMENTS 3H:1V UNLESS OTHERWISE SHOWN.
7. PLASTIC MARKING TAPE SHALL BE PLACED OVER ALL NON-METALLIC PIPELINES.
8. EROSION CONTROL SHALL BE PROVIDED FOR ALL DISTURBED AREAS. SOIL-SEMENT, OR APPROVED EQUAL, SHALL BE USED TO STABILIZE SLOPES GREATER THAN OR EQUAL TO 3H:1V, ROADWAYS, AND THE CONSTRUCTION SUPPORT PAD. OTHER DISTURBED AREAS SHALL BE COVERED WITH CHIPS AND SLASH LEFT OVER FROM CLEARING OPERATIONS.

FOR INFORMATION ONLY

BHI-DIS 12/19/97 bdo

REV.	DATE	DESCRIPTION	DRAWN BY	DRAFT CHK	ORIG/ ENGR	ENGR CHK	GL/TDL APPROV	PROJ ENGR
0	12-4-97	ISSUED FOR CONSTRUCTION	PDH	MGW	MGB	MGW		

SCALE:

U.S. DEPARTMENT OF ENERGY
DOE FIELD OFFICE, RICHLAND
HANFORD ENVIRONMENTAL RESTORATION PROGRAM

BECHTEL HANFORD INC.
RICHLAND, WASHINGTON

MONTGOMERY WATSON
RICHLAND, WASHINGTON

ENVIRONMENTAL RESTORATION DISPOSAL FACILITY
CELLS 3 & 4 CONSTRUCTION, SITE PREPARATION
YARD PIPING PLAN II, GRADING PLAN

BECHTEL JOB NO.	DOE CONTRACT NO.	CADD FILENAME
22192	DE-AC06-93RL12367	6xdc0091.dgn

HANFORD	TASK	DRAWING NO.	REV. NO.
	600	0600X-DD-C0091	0

BRC274 4/95

DRAWING NO.	REV. NO.
0600X-DD-C0092	0

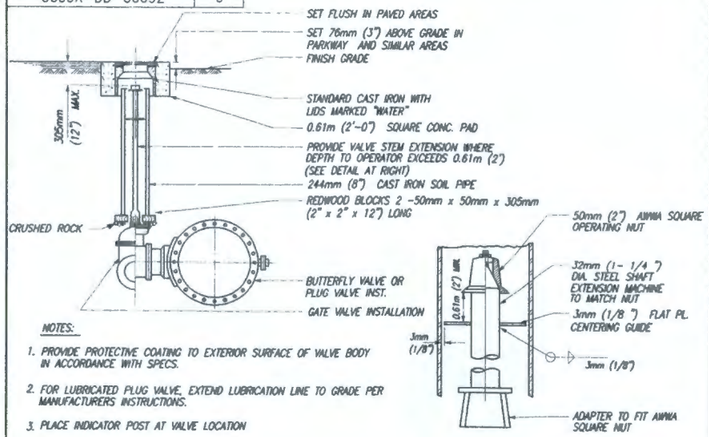

NOTES:

1. PROVIDE PROTECTIVE COATING TO EXTERIOR SURFACE OF VALVE BODY IN ACCORDANCE WITH SPECS.
2. FOR LUBRICATED PLUG VALVE, EXTEND LUBRICATION LINE TO GRADE PER MANUFACTURERS INSTRUCTIONS.
3. PLACE INDICATOR POST AT VALVE LOCATION

BURIED VALVE INSTALLATION — 1 VAR

NTS

1. ALTERNATIVE TRENCH SECTIONS (A,B, AND C) ARE FOR USE ONLY WHERE STABLE, COMPACT SOIL CONDITIONS EXIST.
   A. VERTICAL TRENCH WALLS - SECTION
      1. THE NEED FOR PROTECTIVE SYSTEMS SHALL BE DETERMINED IN ACCORDANCE WITH THE FEDERAL STANDARDS AND REGULATIONS.
      2. PROTECTIVE SYSTEMS SHALL BE DESIGNED AND BUILT IN ACCORDANCE WITH APPLICABLE FEDERAL STANDARDS AND REGULATIONS.
   B. SLOPING TRENCH WALLS - SECTION
      1. SLOPING TRENCH WALL SECTION SHALL NOT BE USED WITHOUT APPROVAL OF THE CONTRACTING OFFICER, UNLESS SPECIFICALLY DESIGNATED ON PLANS OR SPECIFICATIONS.
      2. UNSUPPORTED SLOPING TRENCH WALLS SHALL NOT BE STEEPER THAN ALLOWED BY APPLICABLE SAFETY STANDARDS AND REGULATIONS.
   C. COMBINATION OF VERTICAL AND SLOPING TRENCH WALLS - SECTION
      1. TRENCH DEPTHS NOT EXCEEDING 1.22m (4 FT) SHALL HAVE VERTICAL WALLS IN PIPE ZONE UNLESS OTHERWISE APPROVED, BY THE CONTRACTING OFFICER, OR WHERE SPECIFIED.
      2. FOR TRENCHES WITH COMBINED WALLS AND ANY DEPTH EXCEEDING 1.22m (4 FT), DESIGN CALCULATIONS BY A REGISTERED CIVIL ENGINEER AND APPROVAL BY GOVERNING AGENCY OF SUPPORTED METHODS ARE REQUIRED.
2. WHERE WET, UNSTABLE OR RUNNING SOIL IS ENCOUNTERED, A SYSTEM SHALL BE DESIGNED AND BUILT IN ACCORDANCE WITH APPLICABLE SAFETY STANDARDS AND REGULATIONS TO PROTECT EMPLOYEES AND PREVENT CAVE INS.
3. WHERE TRENCH SECTIONS CROSS ROADWAYS, THE CONTRACTOR SHALL CUT EXISTING ASPHALT AS NECESSARY FOR TRENCH EXCAVATION. AFTER BACKFILLING THE TRENCH AND PRIOR TO PLACING NEW ASPHALT, THE EDGE OF THE EXISTING ASPHALT SHALL BE CLEANED AND AN APPROVED BINDER SHALL BE APPLIED. THE CONTRACTOR SHALL LAY A MINIMUM OF 152mm (6") NEW ASPHALT WHICH SHALL BE PLACED IN TWO SEPARATE LAYERS OF 76mm (3") EACH. EACH LAYER SHALL BE COMPACTED TO 96% DENSITY. PRIOR TO PLACING ASPHALT, THE CONTRACTOR SHALL SUBMIT MIX FOR APPROVEL.
4. THE TRENCH WIDTH SHOWN APPLIES ONLY TO PIPE 610mm (24") AND SMALLER. SEE SPECS SECTION 02210 FOR PIPES LARGER THAN 610mm (24").

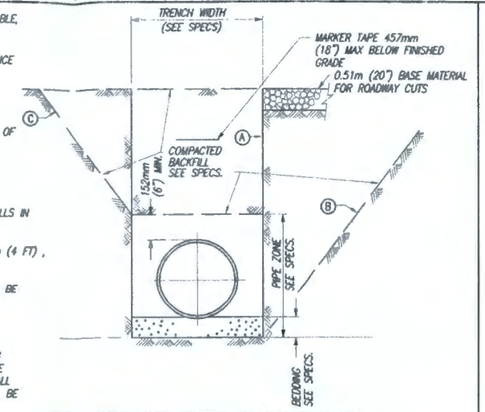

NOTE: TRENCH SECTIONS SHOWN DO NOT DESIGNATE PAY LINES.

TYPICAL TRENCH SECTION — 2 VAR

NTS

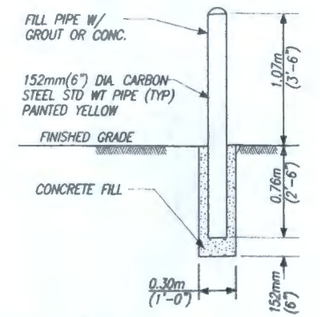

BOLLARD DETAIL — 3 VAR

NTS

NOTES

1. NOT USED.
2. FOR FIELD TEST PROCEDURES AND ADDITIONAL TEST REQUIREMENTS, SEE PIPING SECTION OF SPECIFICATIONS.
3. ANY ALLOWABLE DEVIATION FROM THE PIPING MATERIALS OR FILED TEST REQUIREMENTS SHOWN WILL BE NOTED IN THE SPECIFICATIONS OR ON THE DRAWINGS.
4. FOR VALVES 203mm (8 INCHES) AND LARGER SEE VALVE SCHEDULE. FOR SPECIAL VALVES SEE SPECIFICATIONS.

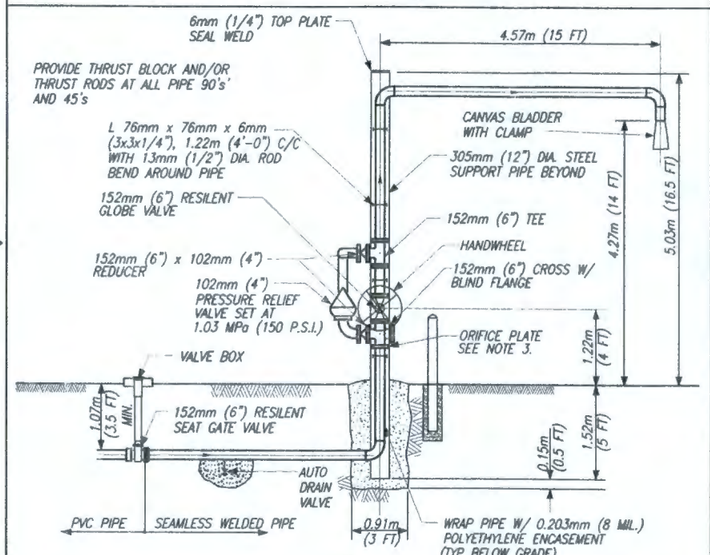

BULK WATER STATION — 4 — 0600X-DD-C0090

NTS

NOTES:

1. AUTO DRAIN VALVE MAY BE SUBSTITUTED WITH MECH. VALVE W/ VALVE BOX AT CONTRACTOR'S OPTION.
2. PAINT PIPES AND SUPPORTS YELLOW. ALKYD ENAMEL PAINT, MIN SOLIDS CONTENT 49%. PRIMER AS RECOMMENDED BY MANUFACTURER.
3. 6.4mm (1/4") CARBON STEEL ORIFICE PLATE WITH 58mm (2-5/16") DIA. OPENING. STAMP HOLE DIAMETER ON TAB.

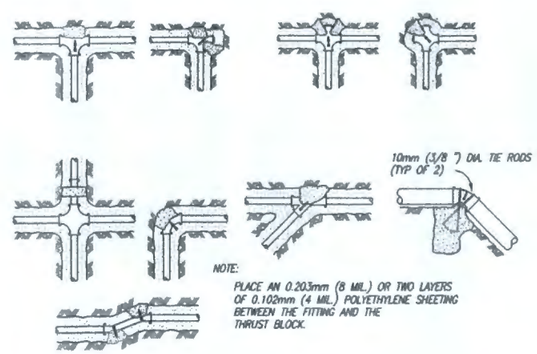

NOTE:

PLACE AN 0.203mm (8 MIL.) OR TWO LAYERS OF 0.102mm (4 MIL.) POLYETHYLENE SHEETING BETWEEN THE FITTING AND THE THRUST BLOCK.

PVC & DUCTILE IRON PIPE 1.03 MPa (150 PSI) TEST PRESSURE

TABLE FOR BEARING AREAS OF THRUST BLOCKS

PIPE SIZE	TEES AND DEAD ENDS *	90 DEGREE BEND *	45 DEGREE BEND *	11-1/4 DEGREE 22-1/2 DEGREE BEND *
102mm (4") & LESS	0.09sqm (0.94)	0.12sqm (1.33)	0.07sqm (0.76)	0.04sqm (0.38)
152mm (6")	0.20sqm (2.12)	0.28sqm (3.01)	0.16sqm (1.71)	0.08sqm (0.86)
203mm (8")	0.36sqm (3.83)	0.50sqm (5.40)	0.29sqm (3.08)	0.15sqm (1.54)
254mm (10")	0.55sqm (5.93)	0.78sqm (8.40)	0.44sqm (4.73)	0.21sqm (2.39)
305mm (12")	0.79sqm (8.48)	1.12sqm (12.0)	0.64sqm (6.83)	0.23sqm (3.46)
356mm (14")	1.07sqm (11.5)	1.52sqm (16.40)	0.87sqm (9.30)	0.44sqm (4.68)
406mm (16")	1.40sqm (15.08)	2.00sqm (21.41)	1.13sqm (12.14)	0.57sqm (6.10)

* ALL BEARING AREAS IN SQUARE METERS (SQUARE FEET).

THRUST BLOCK NOTES:

1. CONCRETE THRUST BLOCKING SHALL BE POURED AGAINST UNDISTURBED EARTH.
2. KEEP CONCRETE CLEAR OF JOINT AND ACCESSORIES.
3. BEARING LOAD IS CALCULATED AT 95 KPa (2,000 LB. PER SQ. FT.)
4. FOR OTHER PRESURES, MULTIPLY TABLE BY RATIO OF NEW PRESSURE TO 1.03MPa (150 psi) (I.E. 250/150 = 1.67)
5. USE MAXIMUM INTERNAL PRESSURE ANTICIPATED (i.e., HYDROSTATIC TEST PRESSURE).
6. ARROW ( ) INDICATES THRUST DIRECTION.
7. CONCRETE FOR THRUST BLOCKS SHALL BE MINIMUM 17.2 MPa (2500 psi) STRENGTH.

CONCRETE THRUST BLOCKS FOR DUCTILE IRON AND P.V.C. PIPE — 5 VAR

NTS

FOR INFORMATION ONLY

12/19/97 bdo

VALVE SCHEDULE (203mm (8") AND LARGER)

VALVE NO.	LOCATION	SERVICE	TYPE	SIZE	PRESSURE	OPERATOR
1-V-22	RAW WATER LINE	RAW WATER	GATE VALVE, BURIED	305 mm (12 in)	1.38 MPa (200 psi)	51mm (2") SQUARE NUT

FLUID ABBREVIATION	FUNCTION	PIPING MATERIALS (SEE SCHEDULE AT RIGHT)				FIELD TEST REQUIREMENTS (SEE NOTES 2 AND 3 IN NOTES COLUMN)		
		EXPOSED PIPING		BURIED PIPING		MINIMUM TEST PRESSURE MPa (PSI)	TEST MEDIUM	LEAKAGE ALLOWANCE
		51mm (2") DIA. AND SMALLER	64mm (2-1/2") DIA. AND LARGER	51mm (2") DIA. AND SMALLER	64mm (2-1/2") DIA. AND LARGER			
PW	POTABLE WATER	2	--	2	16	1.83 (266)	WATER	SEE SPECS
RW	RAW WATER (NON-POTABLE)	2	6	2	6, 35	1.83 (266)	WATER	SEE SPECS

PIPING MATERIAL SCHEDULE (SEE NOTE 3)

GROUP NO.	PIPE	FITTINGS	VALVES, 152mm (6") AND SMALLER (SEE NOTE 4 IN NOTES COLUMN)
2	STEEL, ASTM A53, SCHEDULE 40 WELDED, GALVANIZED.	MALLEABLE IRON, ANSI B16.3, THREADED, BANDED, GALVANIZED, 300 psi.	SEE SPECS
6	STEEL, ASTM A53, SCHEDULE 40, SEAMLESS, BLACK	STEEL, ANSI B16.9 BUTT-WELDED	SEE SPECS
16	POLYVINYL CHLORIDE, SCHEDULE 80, NORMAL IMPACT, ASTM D1785	POLYVINYL CHLORIDE, SCHEDULE 80, NORMAL IMPACT, SOCKET SOLVENT WELD JOINTS, ASTM D2467.	SEE SPECS
35	POLYVINYL CHLORIDE TYPE 1, GRADE 1, 18 ASTM D-1784 AWWA C-900	SHORT BODY CAST IRON OR DUCTILE IRON AWWA C110	SEE SPECS

TYPICAL PIPE DESIGNATION:

2" UW (24)

PIPE DIAMETER — MATERIAL GROUP NUMBER — FLUID ABBREVIATION

MICHAEL G. MARCOTTE — STATE OF WASHINGTON — 13192172 — REGISTERED PROFESSIONAL ENGINEER

EXPIRES 12-07-99

RECORD INFORMATION

RECORD NO.	BLDG NO.	INDEX NO.
H-6-14717 sht 1	600G	8500

REV.	DATE	DESCRIPTION	DRAWN BY	DRAFT CHK	DRSG/ ENG'R	ENG'R CHK	SL/TEL APPROV	BHI ENG'R
0	12-12-97	ISSUED FOR CONSTRUCTION	PDH	MGM	MGB	MGM		

SCALE:

U.S. DEPARTMENT OF ENERGY
DOE FIELD OFFICE, RICHLAND
HANFORD ENVIRONMENTAL RESTORATION PROGRAM

BECHTEL HANFORD INC. RICHLAND, WASHINGTON | MONTGOMERY WATSON RICHLAND, WASHINGTON

ENVIRONMENTAL RESTORATION DISPOSAL FACILITY
CELLS 3 & 4 CONSTRUCTION, SITE PREPARATION
CIVIL DETAILS I

BECHTEL JOB NO.	DOE CONTRACT NO.	CADD FILENAME
22192	DE-AC06-93RL12367	6xdc0092.DWG

HANFORD	TASK	DRAWING NO.	REV. NO.
	600	0600X-DD-C0092	0

DXC2M 4/1/95

DRAWING NO.	REV. NO.
0600X-DD-C0093	0

TWISTED AND BARBED SELVAGE

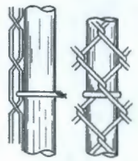

PIPE POST TIE

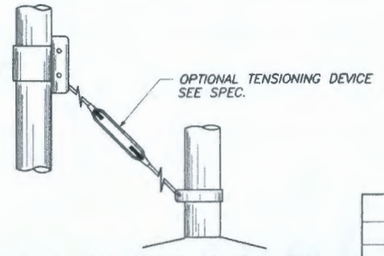

BRACE AND TRUSS CONNECTIONS

HEIGHT OF FABRIC	DEPTH OF POSTS	LENGTH OF END, CORNER OR PULL POSTS	LENGTH OF LINE POSTS	SIZE OF POSTS (O.D.)				
				END, CORNER & PULL		LINE POST (MIN. SIZE)		
				PIPE OPTION	RECTANGULAR OPTION	PIPE OPTION	H POST OPTION	POST OPTION
1.83m (6')	SEE DETAIL	2.74m (9')+	2.64m (8'-8")	76mm (3")	89mm (3 1/2")	64mm (2 1/2")	48mm X 41mm (1 7/8" X 1 5/8")	52mm X 43mm (2 1/16" X 1 11/16")

GATES			
GATE POSTS AND GATE FRAMES			
HEIGHT	GATE OPENING	GATE POST	GATE FRAME
1.83m (6 FT) AND OVER	SINGLE TO 1.83m (6 FT) OR DOUBLE TO 3.66m (12 FT)	64mm (2 1/2")	51mm (2")
	SINGLE OVER 1.83m (6 FT) TO 3.96m (13 FT) OR DOUBLE OVER 3.66m (12 FT) TO 7.32m (24 FT)	102mm (4")	
	SINGLE OVER 3.96m (13 FT) TO 5.49m (18 FT) OR DOUBLE OVER 7.32m (24 FT) TO 10.97m (36 FT)	152mm (6")	
	SINGLE OVER 5.49m (18 FT) OR DOUBLE 10.97m (36 FT)	203mm (8")	

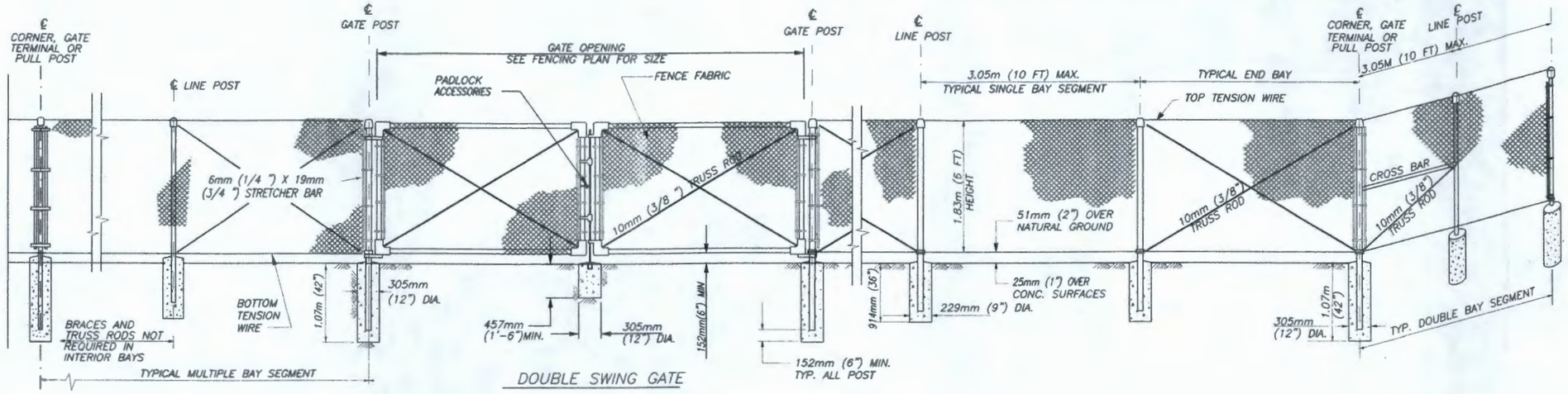

DOUBLE SWING GATE

GATE AND FENCE DETAIL (1 / 0600X-DD-C0089)
NTS

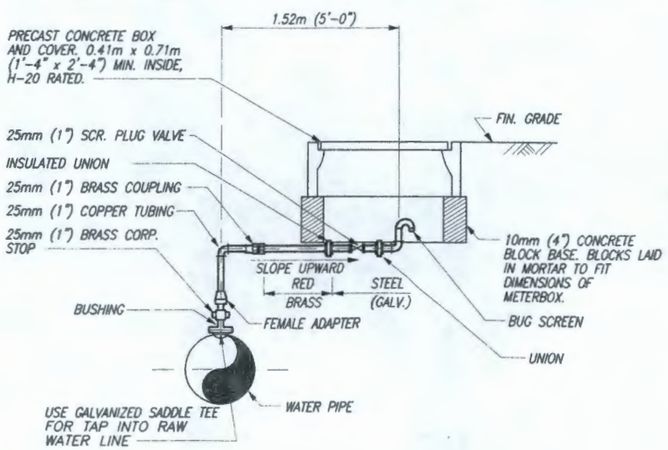

25mm (1") MANUAL AIR RELEASE VALVE (2 / 0600X-DD-C0090)
NTS

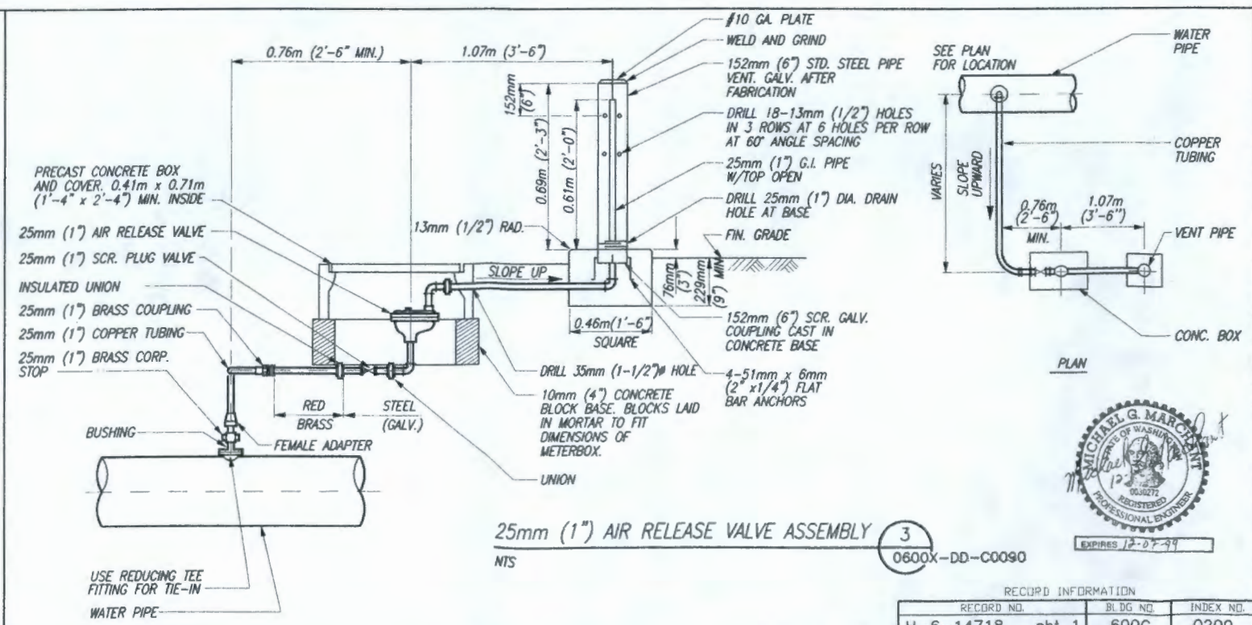

25mm (1") AIR RELEASE VALVE ASSEMBLY (3 / 0600X-DD-C0090)
NTS

MICHAEL G. MARCHANT — STATE OF WASHINGTON — 12 — 00J0271 — REGISTERED PROFESSIONAL ENGINEER
EXPIRES 12-07-99

RECORD INFORMATION

RECORD NO.	BLDG NO.	INDEX NO.
H-6-14718 sht 1	600G	0200

NOTES

FOR INFORMATION ONLY

12/19/97 bdo

REV.	DATE	DESCRIPTION	DRAWN BY	DRAFT CHK.	DRSG/ ENGR	ENGR CHK	CL/TBL APPROV	BH ENGR
0	12-12-97	ISSUED FOR CONSTRUCTION	PDH	MGM	MGB	MGM		

SCALE:

U.S. DEPARTMENT OF ENERGY
DOE FIELD OFFICE, RICHLAND
HANFORD ENVIRONMENTAL RESTORATION PROGRAM

BECHTEL HANFORD INC. RICHLAND, WASHINGTON | MONTGOMERY WATSON RICHLAND, WASHINGTON

ENVIRONMENTAL RESTORATION DISPOSAL FACILITY
CELLS 3 & 4 CONSTRUCTION, SITE PREPARATION
CIVIL DETAILS II

BECHTEL JOB NO.	DOE CONTRACT NO.	CADD FILENAME
22192	DE-AC06-93RL12367	6xdc0093.DWG

HANFORD	TASK	DRAWING NO.	REV. NO.
	600	0600X-DD-C0093	0

DRAWING NO.	REV. NO.
0600X-DD-C0094	0

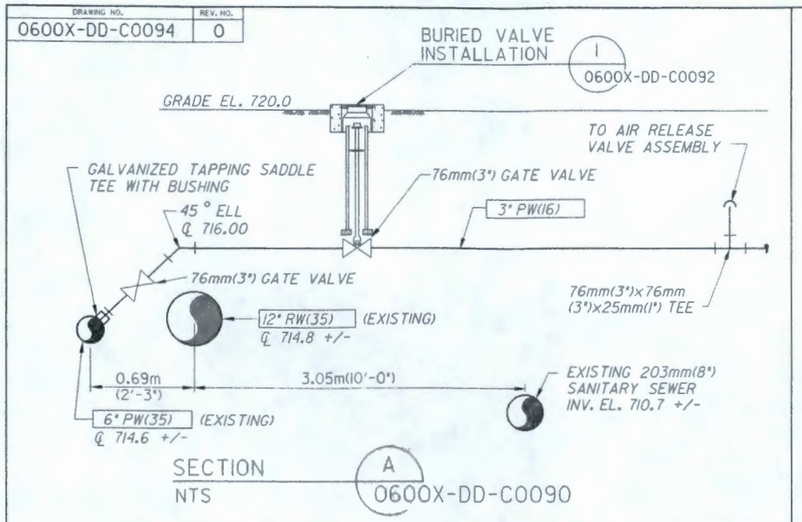

SECTION A
NTS
0600X-DD-C0090

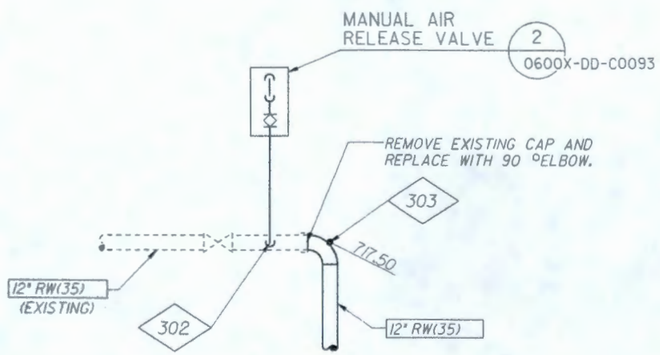

RAW WATER TIE-IN
NTS
4
0600X-DD-C0090

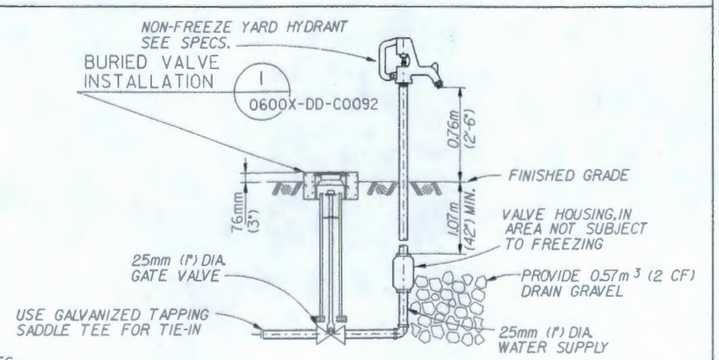

NOTES:

1. PROVIDE WARNING SIGN FOR NON-POTABLE WATER. MATCH EXISTING.

NON-FREEZE YARD HYDRANT WITH ISOLATION VALVE
NTS
3
0600X-DD-C0090

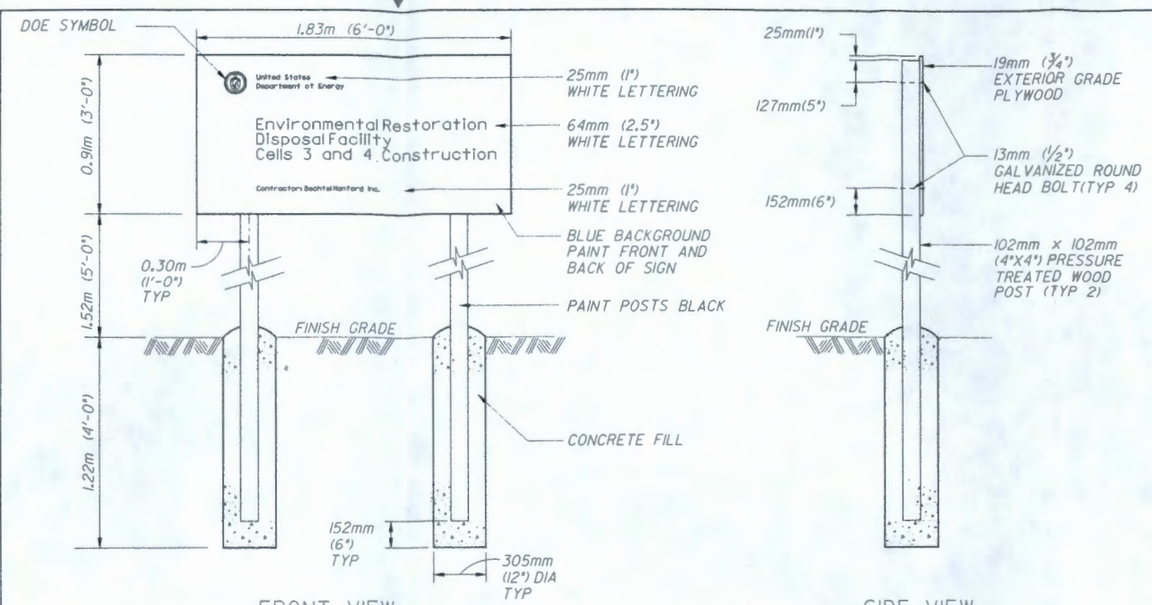

FRONT VIEW

SIDE VIEW

NOTES:

1. TYPEFACE SHALL BE HELVETICA.
2. SIGN LAYOUT AND COLORS SHALL BE IN ACCORDANCE WITH DOE's GRAPHIC DESIGN STANDARD. STANDARD IS AVAIBLE FROM THE CONTRACTING OFFICER.

INTERSECTION SIGN
NTS
1
0600X-DD-C0087

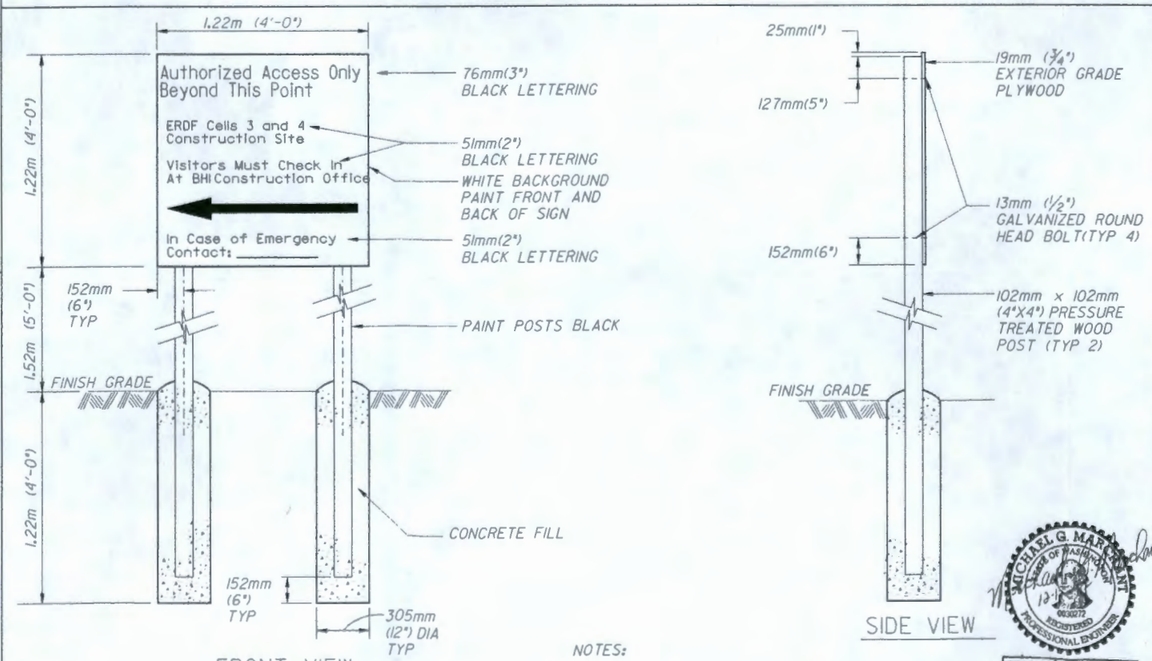

FRONT VIEW

SIDE VIEW

NOTES:

1. TYPEFACE SHALL BE HELVETICA.
2. SIGN LAYOUT AND COLORS SHALL BE IN ACCORDANCE WITH DOE's GRAPHIC DESIGN STANDARD. STANDARD IS AVAIBLE FROM THE CONTRACTING OFFICER.

ENTRANCE SIGN
NTS
2
0600X-DD-C0087

RECORD INFORMATION

RECORD NO.		BLDG NO.	INDEX NO.
H-6-14719	sht 1	600G	8500

NOTES

FOR INFORMATION ONLY

BHI-DIS 12/19/97 bdc

REV.	DATE	DESCRIPTION	DRAWN BY	DRAFT CHK	ORIG/ ENG'R	ENG'R CHK	G.L./TOL APPROV	BHI PROJ ENG'R
0	12-12-97	ISSUED FOR CONSTRUCTION	PDH	MGM	MCB	MGM		

SCALE:

U.S. DEPARTMENT OF ENERGY
DOE FIELD OFFICE, RICHLAND
HANFORD ENVIRONMENTAL RESTORATION PROGRAM

BECHTEL HANFORD INC. RICHLAND, WASHINGTON | MONTGOMERY WATSON RICHLAND, WASHINGTON

ENVIRONMENTAL RESTORATION DISPOSAL FACILITY
CELLS 3 & 4 CONSTRUCTION, SITE PREPARATION
CIVIL DETAILS III

BECHTEL JOB NO.	DOE CONTRACT NO.	CADD FILENAME
22192	DE-AC06-93RL12367	6xdc0094.dgn

TASK	DRAWING NO.	REV. NO.
600	0600X-DD-C0094	0

HANFORD

DRAWING NO.	REV. NO.	
0600X-DD-E0032	0	PLAN

- GROUND BUS
- EXPOSED CONDUIT
- CONDUIT CONCEALED ABOVE FLOOR.
- CONDUIT RUN UNDERGROUND OR IN CONCRETE
- EXPOSED CONDUIT RUN BEHIND OBSTRUCTION
- BARE COPPER GROUND TO GROUND WIRE IN SLAB, OR UNDERGROUND GROUND GRID, SIZE AS NOTED.
- (T) UNDERGROUND TELEMETRY CONDUIT
- LP1-1, 3, 7 — HOME RUN TO PANEL "LP1", CIRCUITS #1, 3, 7. CONDUCTORS SHALL BE NO. 12 UNLESS OTHERWISE NOTED. CONDUIT SHALL BE 3/4", UNLESS OTHERWISE NOTED. CONDUIT SIZES NOT IDENTIFIED SHALL BE 3/4" MINIMUM WITH 2#12. G INDICATES GROUND WIRE.
- T — TELEPHONE CONDUIT ONLY. "UNLESS OTHERWISE NOTED".
- CONDUIT RUN – CHANGE IN ELEVATION
- CONDUIT BENDS TOWARD OBSERVER
- CONDUIT BENDS AWAY FROM OBSERVER
- CONDUIT CAPPED, OR SEALED
- FLEXIBLE LIQUID – TIGHT CONDUIT CONNECTION
- C135 — INDICATES CONDUIT NUMBER
- 2a — CEILING OR PENDANT INCANDESCENT, MERCURY VAPOR, OR SIMILAR LAMP FIXTURE. "2" INDICATES CIRCUIT NUMBER. "a" INDICATES FIXTURE CONTROLLED BY SWITCH "a".
- WALL BRACKET INCANDESCENT, MERCURY VAPOR, OR SIMILAR LAMP FIXTURE WITH EXPOSED BACK BOX AND CONDUIT.
- WALL BRACKET FLOOD OR SPOTLIGHT WITH CONCEALED BACK BOX AND CONDUIT.
- POLE MOUNTED FIXTURE DISTRIBUTION TYPE AS INDICATED ON PLAN
- A 2/40 3 — FIXTURE TYPE A. 2-40 WATT LAMPS 3 – NUMBER OF TYPE "A" FIXTURES
- FLUORESCENT LIGHTING FIXTURE, UNSWITCHED (SWITCHED AT LIGHTING PANEL ONLY)
- E — FLUORESCENT LIGHTING FIXTURE ON EMERGENCY CIRCUIT
- FLUORESCENT LIGHTING FIXTURE
- BATTERY EMERGENCY LIGHT FIXTURE
- S_a — SINGLE POLE SWITCH. "a" INDICATES CIRCUIT CONTROLLED
- S_2 — DOUBLE POLE SWITCH
- S_3 — THREE-WAY SWITCH
- S_4 — FOUR-WAY SWITCH
- S_K — KEY-OPERATED SWITCH
- S_P — SWITCH AND PILOT LIGHT
- S_M — MANUAL MOTOR STARTER

WALL FLOOR

- 120V SINGLE RECEPTACLE, NEMA CONFIGURATION 5-20.
- 120V DUPLEX RECEPTACLE, NEMA CONFIGURATION 5-20
- 240V DUPLEX RECEPTACLE, NEMA CONFIGURATION 6-20
- SINGLE SPECIAL-PURPOSE RECEPTACLE, ASTERISK INDICATES NUMBER, SUCH AS AMPERAGE, TO DIFFERENTIATE BETWEEN TWO OR MORE DIFFERENT TYPES. 120 OR 240 V.A.C.
- 240V SINGLE RECEPTACLE, NEMA CONFIGURATION 6-20
- WELDING RECEPTACLE, 100A, 2W, 3P MOUNT 42" ABOVE FLOOR
- SINGLE SPECIAL PURPOSE RECEPTACLE 480 VAC
- C — CLOCK HANGER RECEPTACLE
- LIGHTING PANEL
- POWER PANEL
- MOTOR CONTROL CENTER
- FLOOR TYPE TELEPHONE OUTLET
- PUBLIC TELEPHONE SYSTEM DEVICE
- PRIVATE TELEPHONE (ANY TYPE) SYSTEM DEVICE
- DISCONNECT SWITCH
- MOTOR STARTER
- M — MOTOR
- SS — PUSHBUTTON STATION "SS" START-STOP, "LOS" LOCKOUT-STOP, "SLOS" START-LOCKOUT-STOP
- JB — RACEWAY BOX "HH" HANDHOLE "JB" JUNCTION BOX "PB" PULLBOX "TB" TERMINAL BOX
- J — JUNCTION BOX OR FITTING
- PSL-1 — FIELD INSTRUMENT I.E. "PSL" PRESSURE SWITCH, "LSH" LEVEL SWITCH, "SV" SOLENOID VALVE
- SV — SOLENOID VALVE
- T — THERMOSTAT
- H — HEATER
- HORN
- 1 — DENOTES REFERENCE TO NOTE 1 I.E. – " SEE NOTE 1 "
- GROUND ROD 3/4" x 10" – 0" (UNLESS OTHERWISE NOTED)
- GROUND ROD AND GROUND WELL
- GROUND CONNECTION BOLTED TYPE
- GROUND CONNECTION – EXOTHEMIC TYPE
- M — MOTOR OPERATED VALVE

SINGLE LINE DIAGRAM

- BUS
- 2 — ACROSS-THE-LINE, NON-REVERSING NEMA SIZE 2 MAGNETIC STARTER
- 30A — CONTACTOR, SIZE AS NOTED
- 50A OR 225AF 125AT — MOLDED CASE CIRCUIT BREAKER, 3 POLE UNLESS OTHERWISE NOTED: 50A.-TRIP RATING IN AMPERE NA- NON-AUTOMATIC MCP – MOTOR CIRCUIT PROTECTOR AT-TRIP RATING (125 AMPS NOTED)
- 52 — MEDIUM OR HIGH VOLTAGE DRAWOUT BREAKER
- DRAWOUT BREAKER, SIZE AS NOTED EO – DENOTES ELECTRICALLY OPERATED
- MEDIUM OR HIGH VOLTAGE STARTER
- SURGE ARRESTOR
- 10 — MOTOR – 10 HP NOTED
- 480/120V — TRANSFORMER WITH GROUNDED SECONDARY, KVA SIZE & VOLTAGE RATIO AS NOTED.
- PT (2) — POTENTIAL TRANSFORMER, RATIO AND NUMBER OF PT'S AS NOTED
- CT 100/5 (3) — CURRENT TRANSFORMER, RATIO AND NUMBER OF CT'S AS NOTED
- I — ELECTRICAL INTERLOCK
- ELECTRICAL ENCLOSURE OUTLINE
- MOV — ELECTRICAL MOTOR OPERATED VALVE, WITH INTEGRAL REVERSING STARTER
- DISCONNECT SWITCH, SIZE AS NOTED
- FUSED CUTOUT
- 10 KVAR — CAPACITOR, KVAR AS NOTED
- KWH DM — KILOWATTHOUR METER WITH DEMAND REGISTER
- AM — AMMETER
- VM — VOLTMETER
- PF — POWER FACTOR METER
- VAR — VARMETER
- AS — AMMETER SWITCH
- VS — VOLTMETER SWITCH

SCHEMATIC DIAGRAM

- CONTROL RELAY OR COIL
  - EXAMPLE: TD2 TIME DELAY RELAY NO. 2; CR1 CONTROL RELAY; 1M STARTER NO. 1 MAIN COIL
- N.O. CONTACT
- N.C. CONTACT
- TORQUE SWITCH (SPECIFY WHEN OPEN)
- NORMALLY OPEN LIMIT SWITCH
- NORMALLY CLOSED LIMIT SWITCH
- FLOAT TYPE LIQUID LEVEL SWITCH, CLOSING ON RISING LEVEL
- FLOAT TYPE LIQUID LEVEL SWITCH, OPENING ON RISING LEVEL
- VACUUM OR PRESSURE SWITCH, CLOSING ON RISING PRESSURE
- VACUUM OR PRESSURE SWITCH, OPENING ON RISING PRESSURE
- TEMPERATURE ACTUATED SWITCH; CLOSING ON RISING TEMPERATURE
- TEMPERATURE ACTUATED SWITCH; OPENING ON RISING TEMPERATURE
- FLOW SWITCH (AIR, WATER, ETC.); CLOSING ON FLOW INCREASE
- FLOW SWITCH (AIR, WATER, ETC.); OPENING ON FLOW INCREASE
- NORMALLY OPEN PUSHBUTTON, MOMENTARY CLOSE
- NORMALLY CLOSED PUSHBUTTON, MOMENTARY OPEN
- NO/NC MAINTAINED PUSHBUTTON
- ON OFF — TWO-POSITION SELECTOR SWITCH: H-HAND, M-MANUAL, R-REMOTE, L-LOCAL, A-AUTOMATIC, O-OFF
- H O A — THREE-POSITION SELECTOR SWITCH. (SAME AS ABOVE)
- THREE-POSITION SPRING RETURN-TO-CENTER MOMENTARY CONTACT SWITCH ("LATCH-UNLATCH," "ON-OFF," ETC.)
- SINGLE POLE TOGGLE SWITCH ("ON-OFF", ETC.)
- OL — OVERLOAD RELAY CONTACTS (MAGNETIC)

TIMED CONTACTS – CONTACT ACTION DELAYED AFTER COIL IS:

ENERGIZED

- NORMALLY OPEN WITH TIME DELAY CLOSING
- NORMALLY CLOSED WITH TIME DELAY OPENING

DE-ENERGIZED

- NORMALLY OPEN WITH INSTANT CLOSING AND TIME DELAY OPENING
- NORMALLY CLOSED WITH INSTANT OPENING AND TIME DELAY CLOSING
- MANUAL MOTOR STARTER WITH OVERLOAD PROTECTION
- FUSE
- RES — RESISTOR (FIXED) POTENTIOMETER TYPE
- RESISTOR (CONTINUOUSLY ADJUSTABLE)
- R — PUSH-TO-TEST INDICATING LIGHT
- ETM — ELAPSED TIME METER
- HEATER
- CROSSING OF CONDUCTORS-NOT CONNECTED
- CONNECTION OF CONDUCTORS, FITTING AS REQUIRED
- DISCONNECT SWITCH
- GROUND CONNECTION
- SURGE SUPPRESSOR
- ELECTRICAL CORD CONNECTOR
- G — INDICATING LIGHT G – GREEN R – RED A – AMBER
- SIGNAL ISOLATOR
- M — SIGNAL PHASE MOTOR
- GFI — GROUND FAULT

MICHAEL G. MARCHANT, STATE OF WASHINGTON, 08/10/73, REGISTERED PROFESSIONAL ENGINEER

EXPIRES 12-07-99

RECORD INFORMATION

RECORD NO.	BLDG NO.	INDEX NO.
H-6-14813 sht 1	600G	8001

NOTES

FOR INFORMATION ONLY

12/19/97 bdo

REV.	DATE	DESCRIPTION	DRAWN BY	DRAFT CHK	DESIG/ ENGR	ENGR CHK	GL/TSL APPROV	BHI PROJ ENGR
0	12-12-97	ISSUED FOR CONSTRUCTION	PDH	MGM	SIL	MGM		

SCALE:

U.S. DEPARTMENT OF ENERGY
DOE FIELD OFFICE, RICHLAND
HANFORD ENVIRONMENTAL RESTORATION PROGRAM

BECHTEL HANFORD INC. RICHLAND, WASHINGTON | MONTGOMERY WATSON RICHLAND, WASHINGTON

ENVIRONMENTAL RESTORATION DISPOSAL FACILITY
CELLS 3 & 4 CONSTRUCTION, SITE PREPARATION
ELECTRICAL SYMBOLS

BECHTEL JOB NO.	DOE CONTRACT NO.	CADD FILENAME
22192	DE-AC06-93RL12367	6xde0032.DWG

TASK	DRAWING NO.	REV. NO.
600	0600X-DD-E0032	0

HANFORD

DE0032N 1/1/95

DRAWING NO.	REV. NO.
0600X-DD-E0033	0

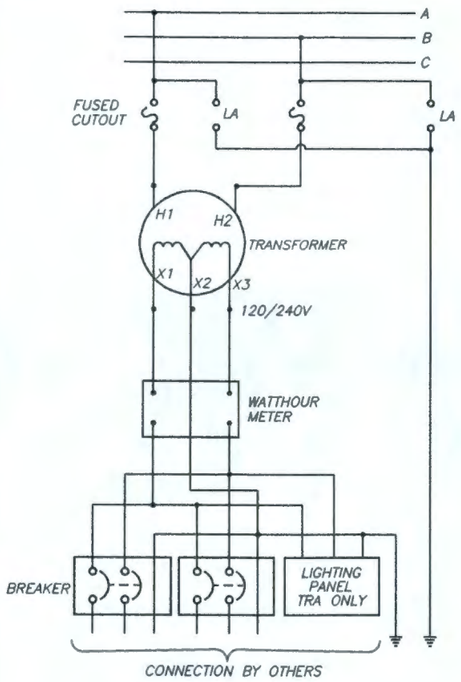

WIRING DIAGRAM

SIMILAR FOR EACH TRANSFORMER

CONNECT TRA PRIMARY TO PHASE A & B.

CONNECT TRB PRIMARY TO PHASE A & C.

CONNECT TRC PRIMARY TO PHASE B & C.

120/240 VOLTS 3 ϕ 4 W
100A-2P AMP MAIN BREAKER

PANELBOARD T1
LOCATION TRANSFORMER POLES

FEED TOP
MTG POLE

LOAD DESCRIPTION	VOLT AMPERE ϕA	VOLT AMPERE ϕB	LTG	REC	M/S	CIR	BKR		BKR	CIR	M/S	REC	LTG	VOLT AMPERE ϕA	VOLT AMPERE ϕB	LOAD DESCRIPTION
TRANS. POLE REC.	200			1		1	20/2P		20A/2P	2			2	500		LIGHT ON TRANS. POLE
TRANS. POLE REC.		200		1		3				4					500	
SPARE						5				6			1	250		LIGHT ON POWER POLE @ COORD. NO. 407
SPARE						7				8					250	
SPACE						9				10						SPACE
SPACE						11				12						SPACE
	200	200				TOTAL				TOTAL				750	750	
	PHASE TOTAL		TOTAL LOAD													
	950	950	1.9 KVA (7.92 AMP)													

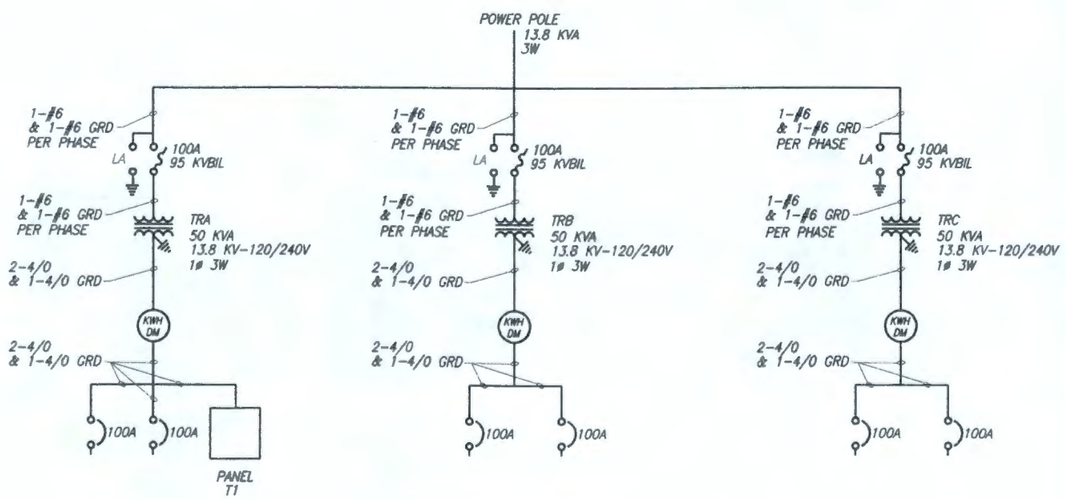

SINGLE LINE DIAGRAM

LIST OF MATERIAL

ITEM NO.	DESCRIPTION
1	CROSSARM, 117mm(4-5/8") x 92mm(3-5/8") x 2.44m(8'-0"), INDEX # C1-2
2	BRACE, CROSSARM, FLAT, 762mm(30") x 6.4mm(1/4") x 32mm(1-1/4"), INDEX # B2-1
3	BOLT, 16mm(5/8"), WITH TWO 57mm(2-1/4") x 57mm(2-1/4") x 4.8mm (3/16") FLAT WASHERS, INDEX # B1-X & W1-2
4	BOLT, CARRIAGE, 9.5mm(3/8") x 127mm(5") W/NUT AND 9.5mm(3/8") LOCKNUT INDEX # B1-3 & N1-1
5	WASHER, SQUARE CURVED 57mm(2-1/4") WASHER, DOUBLE COIL SPRING LOCK, 16mm(5/8"), INDEX # W1-8
6	POLE, WESTERN RED CEDAR, 12.2m(40') LENGTH OR AS NOTED, ANSI CLASS 2, INDEX # P1-40
7	INSULATOR, PIN TYPE 'F' NECK, 15KV PORCELAIN 25mm(1") THREAD, INDEX # I1-1
8	PIN INSULATOR, FORGED STEEL, 25mm(1") THREAD W/ 16mm(5/8") SHANK x 273mm(10-3/4"), INDEX # P2-1
9	INSULATOR TIE, PREFORMED, TO SUIT CONDUCTOR
10	PIN, POLE TOP, 25mm(1") THREAD x 508mm(20"), INDEX # P2-2
11	JUMPER, BARE STRANDED, # 6 OR AS REQUIRED, INDEX # W2-1
12	JUMPER, SECONDARY, INSULATED, 4/0, INDEX # C4-1
13	INSULATOR, DEADEND, GRAY,15 KV, 15,000#, INDEX # I1-2
14	BOLT, DOUBLE ARMING, 16mm(5/8"), WITH FOUR 57mm(2-1/4") x 57mm (2-1/4") x 4.8mm(3/16") FLAT WASHERS AND FOUR NUTS, INDEX # B1-X & W1-2
15	OVAL EYENUT, 16mm(5/8"), INDEX # N1-6
16	CLAMP, AUTOMATIC DEADEND, CLEVIS TYPE, TO SUIT CONDUCTORS, INDEX # C2-X
17	CONNECTOR, SIZE TO SUIT CONDUCTORS, INDEX # C2-X OR C3-X
18	CROSSARM 117mm(4-5/8") x 92mm(3-5/8") x 6.1m(20'-0")
19	LOCKNUTS, INDEX # N1-X
20	SURGE ARRESTOR, DISTRIBUTION TYPE, 18KV MOV, GRAY, PORCELAIN, WITH MOUNTING BRACKET, INDEX # A2-1 & B1-31
21	FUSE CUTOUT, 100A, 15KV, 95KV BIL WITH MOUNTING BRACKET, INDEX # C7-1, B3-4 & B3-2
22	INSULATED CONDUCTORS
23	TRANSFORMER 50KVA
24	CONDUIT, RIGID NON-METALLIC (PVC), 76mm(3"), INDEX # C6-3
25	CONDUIT SUPPORT BRACKET AND CLAMP, 3.05m(10 FT) SPACING, INDEX # B3-3 & C2-27
26	WEATHERHEAD, INDEX # F1-5
27	#4 ACSR LINE WIRE
28	LAG SCREW, 13mm(1/2") x 102mm(4") AS REQUIRED, INDEX # S1-3
29	RESERVED
30	RESERVED
31	GROUND ROD, 19mm(3/4") x 3.05m(10'-0"), COPPER CLAD STEEL, INDEX # R1-3
32	CLAMP, GROUND ROD, INDEX # C2-18
33	WIRE, #2 COPPER, BARE SOLID SOFT DRAWN
34	STAPLES, 76mm(3") x 27mm(1-1/16")x 6.4mm(1/4"), INDEX # S3-1.
35	RESERVED
36	GROUND WIRE MOULDING, 19mm(3/4") x 2.44m(8'-0")
37	ANCHOR , CONCRETE CONE, INDEX # A1-1.
38	ANCHOR ROD, DOUBLE-EYE W/NUT, INDEX # R1-1; & WASHER, INDEX # W1-2.
39	RESERVED
40	GUY GUARD, INDEX # G2-1.
41	GUY GRIP, 9.5mm(3/8"), INDEX # G1-1.
42	INSULATOR, GUY, ANSI CLASS 54-3, INDEX # I1-3.
43	HOOK GUY, INDEX # H1-1.
44	RESERVED
45	BOLT, MACHINE, 16mm(5/8"), W/NUT, INDEX # B1-X; WASHER, SQUARE CURVED, 57mm(2-1/4") x 57mm(2-1/4") x 4.8mm(3/16") THK, 17mm(11/16") DIA HOLE, INDEX # W1-4; WASHER, SPRING LOCK, 16mm(5/8"), INDEX # W1-8.
46	GUY STRAND, GALVANIZED STEEL, INDEX # S2-1.
47	CROSSARM, 117mm(4-5/8") x 92mm(3-5/8") x 3.05m(10'-0"), INDEX # C1-3
48	BRACE, CROSSARM, WOOD, 1.52m(60") SPAN AND 762mm(30") DROP, INDEX # B2-3
49	BOLT, MACHINE, SQ LTD, 12.8mm(1/2") x 152mm(6") W/NUT, INDEX # B1-9
50	WASHER, ROUND, 34.9mm(1-3/8") OD, INDEX # W1-14
51	NUT, MF LOCKS, SQ 12.8mm(1/2"), INDEX # N1-2
52	WASHER, DOUBLE COIL SPRING LOCK 15.9mm(5/8"), INDEX # W1-12

NOTES

1. PROPRIETARY NAMES HAVE BEEN QUOTED FOR IDENTIFICATION PURPOSES ONLY. SUBSTITUTIONS WILL BE PERMITTED SUBJECT TO PROVISIONS OF THE SPECIFICATIONS.
2. INDEX NUMBERS REFERENCE HEU METERIAL LIST LOCATED IN APPENDIX A OF SPECIFICATION SECTION 16370.
3. AN "X" IN THE INDEX NUMBER INDICATES THAT MORE THAN ONE SIZE OR TYPE IS USED. REFER TO INDEX FOR SIZES AND TYPES, TO DETERMINE THE APPROPRIATE PRODUCT THAT COMPLIES WITH THE SPECIFICATIONS AND DRAWINGS.

FOR INFORMATION ONLY

12/18/97 bdo

MICHAEL G. MARGRANT STATE OF WASHINGTON 12 0030272 REGISTERED PROFESSIONAL ENGINEER

EXPIRES 12-07-99

REV.	DATE	DESCRIPTION	DRAWN BY	DRAFT CHK	ENGR/ ENGR	ENGR CHK	QA/TEC APPROV	PM/ PROJ ENGR
0	12-12-97	ISSUED FOR CONSTRUCTION	PDH	MGM		MGM		

SCALE:

U.S. DEPARTMENT OF ENERGY
DOE FIELD OFFICE, RICHLAND
HANFORD ENVIRONMENTAL RESTORATION PROGRAM

BECHTEL HANFORD INC. RICHLAND, WASHINGTON

MONTGOMERY WATSON RICHLAND, WASHINGTON

ENVIRONMENTAL RESTORATION DISPOSAL FACILITY
CELLS 3 & 4 CONSTRUCTION, SITE PREPARATION
SINGLE LINE, PANEL SCHEDULE & MATERIAL LIST

BECHTEL JOB NO.	DOE CONTRACT NO	CADD FILENAME
22192	DE-AC06-93RL12367	6xde0033.DWG

TASK	DRAWING NO	REV. NO.
600	0600X-DD-E0033	0

HANFORD

RECORD INFORMATION

RECORD NO.	BLDG NO.	INDEX NO.
H-6-14814 sht 1	600G	8001

DE22X 4/95

DRAWING NO.	REV. NO.
0600X-DD-E0034	0

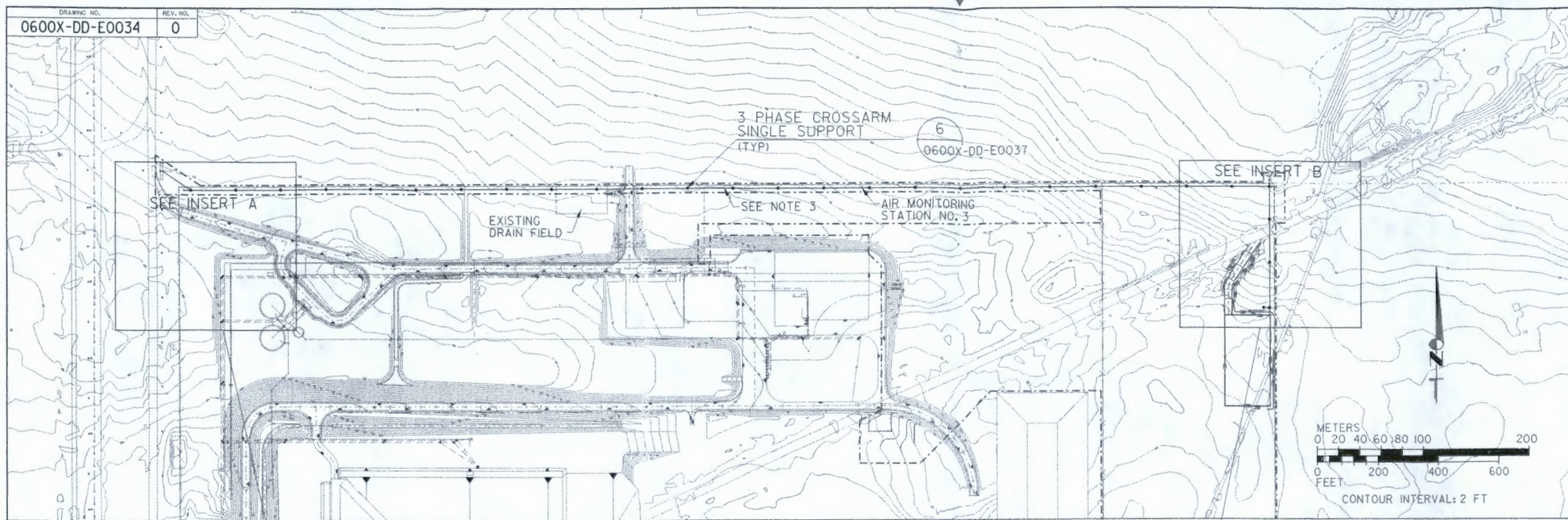

PLAN

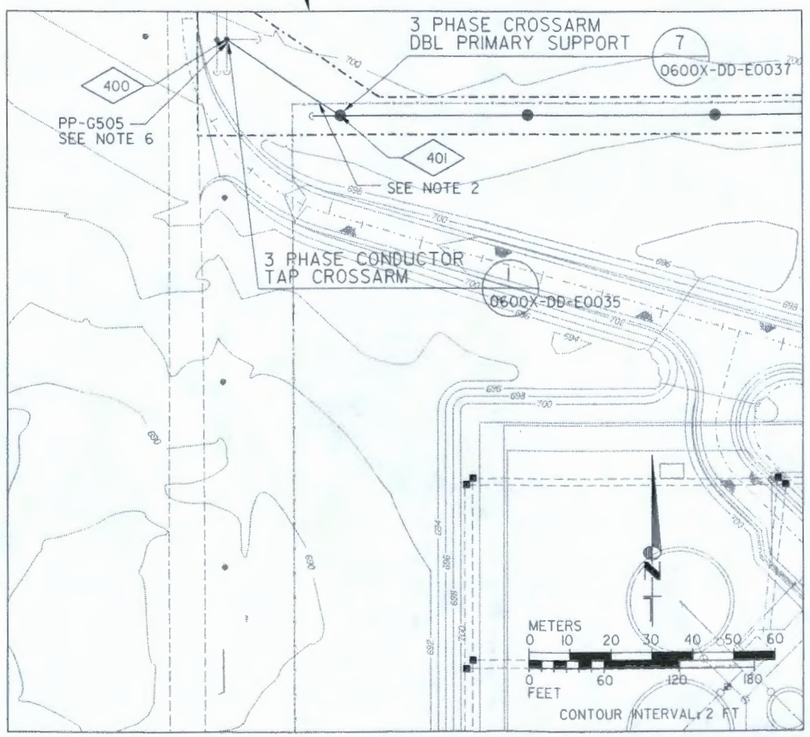

INSERT A

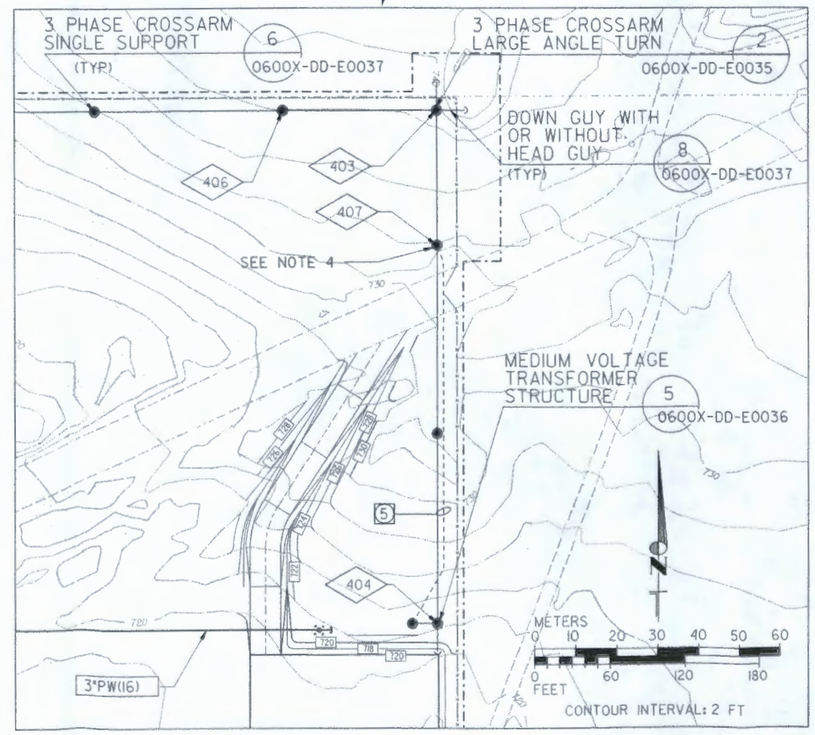

INSERT B

NOTES

1. TYPICAL POLE SPACING IS 45.7m (150 FT) UNLESS OTHERWISE SHOWN.
2. WHERE POWER LINE CROSSES FENCE, GROUND FENCE POLES 6.1m (20 FT) ON EACH SIDE OF CROSSING. SEE DETAIL 4 ON DRAWING 0600X-DD-E0035.
3. LOCATE BURIED UTILITY FOR AIR MONITORING STATION AND COORDINATE ANY REQUIRED OUTAGE WITH THE CONTRACTING OFFICER. ADJUST POLES AS NECESSARY TO AVOID BURIED LINE.
4. PROVIDE ADJUSTABLE 400W, 240V, HPS FLOODLIGHT FIXTURE ON POLE 20 FEET ABOVE FINISH GRADE. AIM LIGHT TO ILLUMINATE FENCE GATE.
5. 25mm(1") GALVANIZED STEEL CONDUIT, PVC COATED, FROM POWER DISTRIBUTION PANEL BOARD TO LIGHT FIXTURE ON POLE. MINIMUM BEND RADIUS SHALL BE 12 TIMES NOMINAL DIAMETER OF CONDUIT.
6. TIE INTO EXISTING POWER LINE AT POLE PP-G505.
7. PROVIDE FINAL COORDINATES FOR ALL POLE LOCATIONS TWO WEEKS PRIOR TO ENERGIZING THE NEW 13.8 KV LINE.

FOR INFORMATION ONLY

MICHAEL G. MARCHANT — STATE OF WASHINGTON — 0030272 — REGISTERED PROFESSIONAL ENGINEER

EXPIRES: 12-07-99

BHI-DIS 12/19/97 bdo

REV.	DATE	DESCRIPTION	DRAWN BY	DRAFT CHK	ORIG/ ENG'R	ENG'R CHK	G.I./TDI APPROV	BHI PROJ ENG'R
0	12-12-97	ISSUED FOR CONSTRUCTION	PDH					

SCALE:

U.S. DEPARTMENT OF ENERGY
DOE FIELD OFFICE, RICHLAND
HANFORD ENVIRONMENTAL RESTORATION PROGRAM

BECHTEL HANFORD INC.
RICHLAND, WASHINGTON

MONTGOMERY WATSON
RICHLAND, WASHINGTON

ENVIRONMENTAL RESTORATION DISPOSAL FACILITY
CELLS 3 & 4 CONSTRUCTION, SITE PREPARATION

ELECTRICAL SITE PLAN

BECHTEL JOB NO.	DOE CONTRACT NO.	CADD FILENAME
22192	DE-AC06-93RL12367	6xde0034.dgn

TASK	DRAWING NO.	REV. NO.
600	0600X-DD-E0034	0

RECORD INFORMATION

RECORD NO.	BLDG NO.	INDEX NO.
H-6-14815 sht 1	600G	0102

DRAWING NO.	REV. NO.
0600X-DD-E0035	0

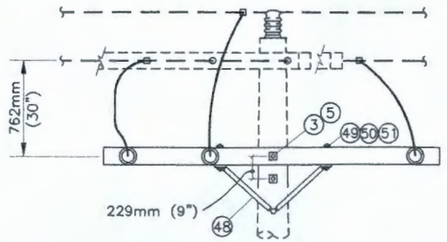

SECTION A

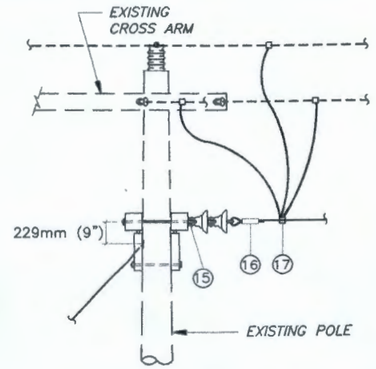

SECTION B

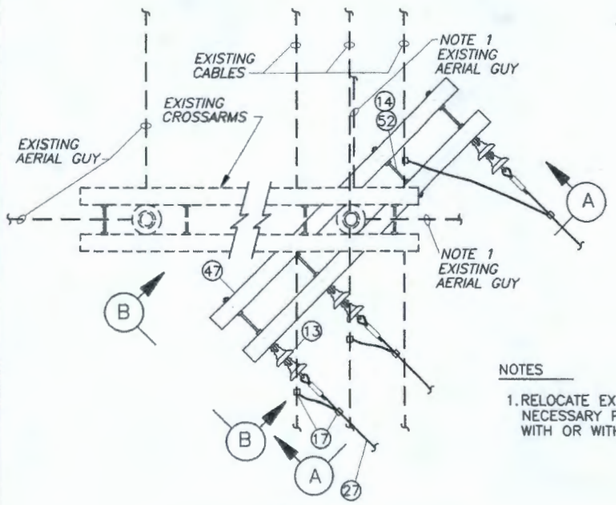

PLAN

NOTES

1. RELOCATE EXISTING GUYS AS NECESSARY PER DOWN GUY WITH OR WITHOUT HEAD GUY (8) 0600X-DD-E0037

3 PHASE CONDUCTOR TAP CROSSARM (1) 0600X-DD-E0034
NTS

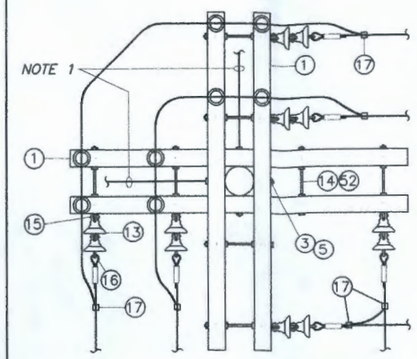

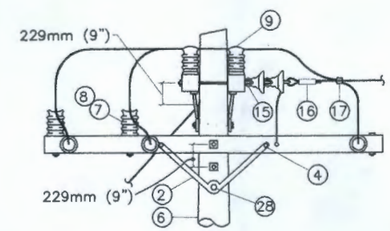

NOTES

1. INSTALL GUYS PER DOWN GUY WITH OR WITHOUT HEAD GUY (8) 0600X-DD-E0037
2. PLACE CROSSARM PERPENDICULAR TO LEAD.
3. 2.29m (7'-6") OF POLE BURRIED IN GROUND (MIN).

3 PHASE CROSSARM LARGE ANGLE TURN (2) 0600X-DD-E0034
NTS

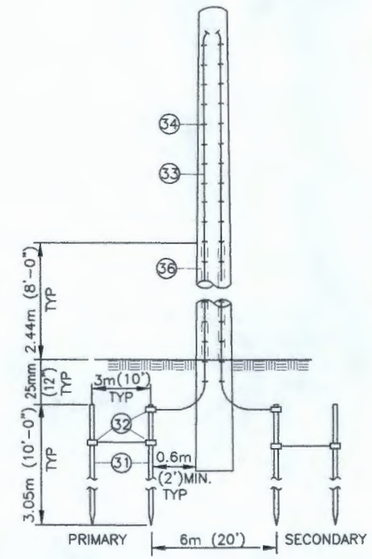

NOTES:

1. INSTALL GROUND WIRE MOLDING TO 2.44m (8'-0") ABOVE GROUND LEVEL.
2. STAPLES ON GROUND WIRE OR MOLDING SHALL BE AT 0.61m (2'-0") INTERVALS EXCEPT FOR A DISTANCE OF 2.44m (8'-0") FROM TOP OF POLE WHERE THEY SHALL BE 305mm (12") APART.
3. GROUND WIRE TO CLEAR ALL HARDWARE BUY 51mm (2") MIN. AND SHALL BE STAPLED TO MAINTAIN THIS POSITION.

EQUIPMENT GROUNDING (3) 0600X-DD-E0036
NTS

NOTES

1. PROPRIETARY NAMES HAVE BEEN QUOTED FOR IDENTIFICATION PURPOSES ONLY. SUBSTITUTIONS WILL BE PERMITTED SUBJECT TO PROVISIONS OF THE SPECIFICATIONS.
2. FOR DESCRIPTION OF MATERIALS SEE MATERIAL LIST ON DRAWING 0600X-DD-E0033.

FOR INFORMATION ONLY

12/19/97 bdo

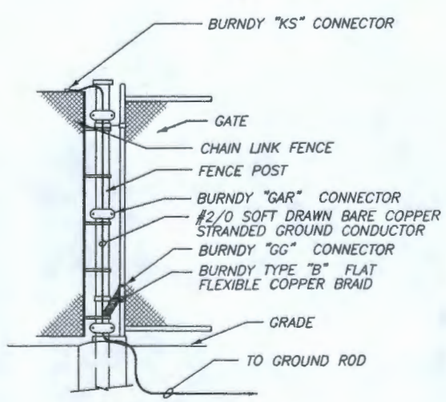

GATE AND FENCE GROUNDING (4) 0600X-DD-E0034
NTS, SEE NOTE 1.

REV.	DATE	DESCRIPTION	DRAWN BY	DRAFT CHK	DRIG/ ENGR	ENG'R CHK	CL/TBL APPROV	BEC PROJ ENGR
0	12-19-97	ISSUED FOR CONSTRUCTION	PDH	MGM	SIL	MGM		

SCALE:

U.S. DEPARTMENT OF ENERGY
DOE FIELD OFFICE, RICHLAND
HANFORD ENVIRONMENTAL RESTORATION PROGRAM

BECHTEL HANFORD INC. RICHLAND, WASHINGTON | MONTGOMERY WATSON RICHLAND, WASHINGTON

ENVIRONMENTAL RESTORATION DISPOSAL FACILITY
CELLS 3 & 4 CONSTRUCTION, SITE PREPARATION
ELECTRICAL DETAILS I

BECHTEL JOB NO.	DOE CONTRACT NO.	CADD FILENAME
22192	DE-AC06-93RL12367	6xde0035.DWG

TASK	DRAWING NO.	REV. NO.
600	0600X-DD-E0035	0

MICHAEL G. MARTIN STATE OF WASHINGTON 9620272 REGISTERED PROFESSIONAL ENGINEER
EXPIRES 12-07-99

RECORD INFORMATION

RECORD NO.	BLDG NO	INDEX NO.
H-6-14816 sht 1	600G	8001

DR225A 10/95

DRAWING NO.	REV. NO.
0600X-DD-E0036	0

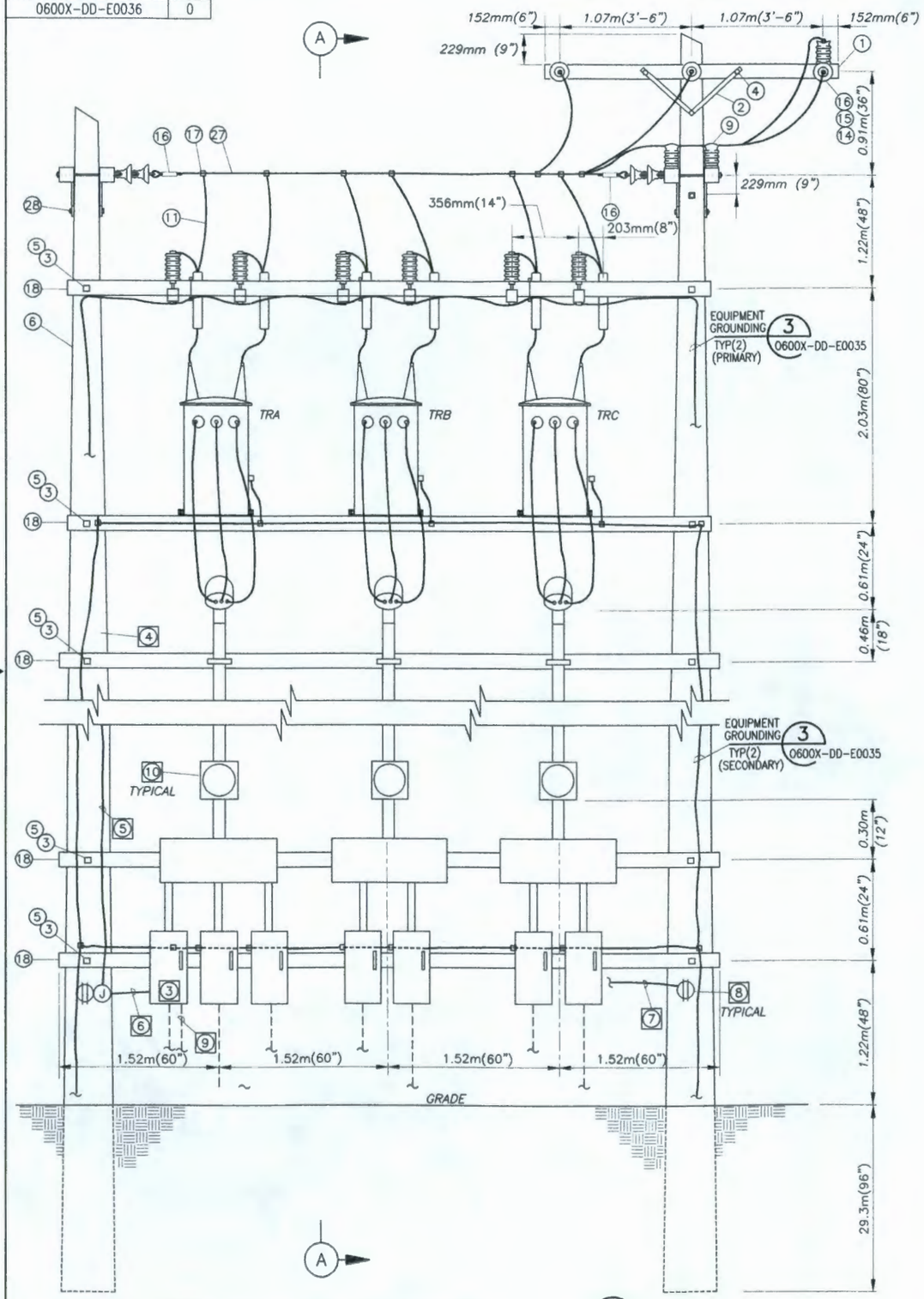

MEDIUM VOLTAGE TRANSFORMER STRUCTURE
NTS
5
0600X-DD-E0034

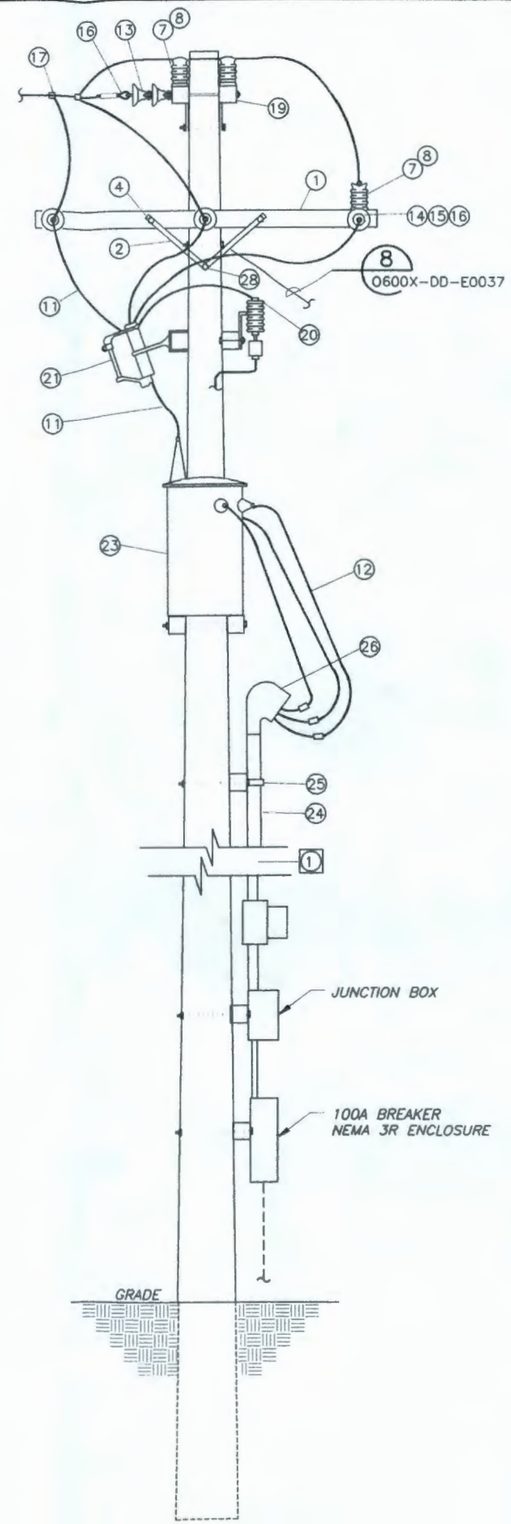

SECTION
NTS
A
--

NOTES

1. INTERMEDIATE CONDUIT SUPPORT NOT SHOWN.
2. FOR DESCRIPTION OF MATERIALS SEE MATERIAL LIST ON DRAWING 0600X-DD-E0033.
3. NEMA 3R POWER DISTRIBUTION PANELBOARD WITH 100A MAIN BREAKER, PROVIDE WITH 2-2 POLE 20A, AND 4-1 POLE 20A BREAKERS WITH SPACE FOR MINIMUM 4 SINGLE POLE BREAKERS.
4. PROVIDE TWIN, ADJUSTABLE, 400W, 240V HPS FLOODLIGHTS MOUNTED ON POLE 4.6m(15') ABOVE FINISH GRADE. AIM LIGHTS TO ILLUMINATE CONSTRUCTION SUPPORT PAD.
5. 19mm(3/4")C, 2#12, 1#12G TO LIGHT FIXTURES.
6. 19mm(3/4")C, 4#12, 1#12G
7. 19mm(3/4")C, 2#12, 1#12G TO PANELBOARD.
8. WEATHERPROOF, GFI DUPLEX RECEPTACLE.
9. 25mm(1")C, 2#12, 1#12G TO LIGHT FIXTURE ON POLE AT COORDINATE NO. 407.
10. METER SOCKET AND WATTHOUR METER.

FOR INFORMATION ONLY

12/19/97 bdo

REV.	DATE	DESCRIPTION	DRAWN BY	DRAFT CHK	ORIG/ ENGR	ENGR CHK	QL/TRL APPROV	DOE PROJ ENGR
0	12-12-97	ISSUED FOR CONSTRUCTION	PDH	MGM	SL	MGM		

SCHLD:

U.S. DEPARTMENT OF ENERGY
DOE FIELD OFFICE, RICHLAND
HANFORD ENVIRONMENTAL RESTORATION PROGRAM

BECHTEL HANFORD INC.
RICHLAND, WASHINGTON

MONTGOMERY WATSON
RICHLAND, WASHINGTON

ENVIRONMENTAL RESTORATION DISPOSAL FACILITY
CELLS 3 & 4 CONSTRUCTION, SITE PREPARATION
ELECTRICAL DETAILS II

MICHAEL G. MARCHANT
STATE OF WASHINGTON
REGISTERED PROFESSIONAL ENGINEER
EXPIRES 12-07-99

BECHTEL JOB NO.	DOE CONTRACT NO.	CADD FILENAME
22192	DE-AC06-93RL12367	6xde0036.DWG

TASK	DRAWING NO.	REV. NO.
600	0600X-DD-E0036	0

HANFORD

RECORD INFORMATION

RECORD NO.	BLDG NO.	INDEX NO.
H-6-14817 sht 1	600G	8001

DRAWING NO.	REV. NO.
0600X-DD-E0037	0

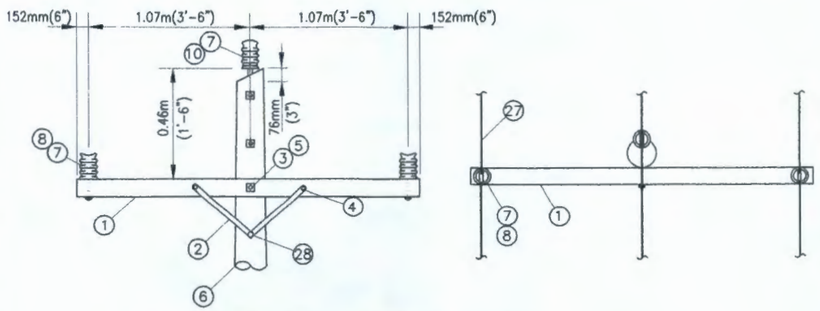

3 PHASE CROSS ARM – SINGLE SUPPORT
0° TO 5° ANGLE

NTS

6 0600X-DD-E0034

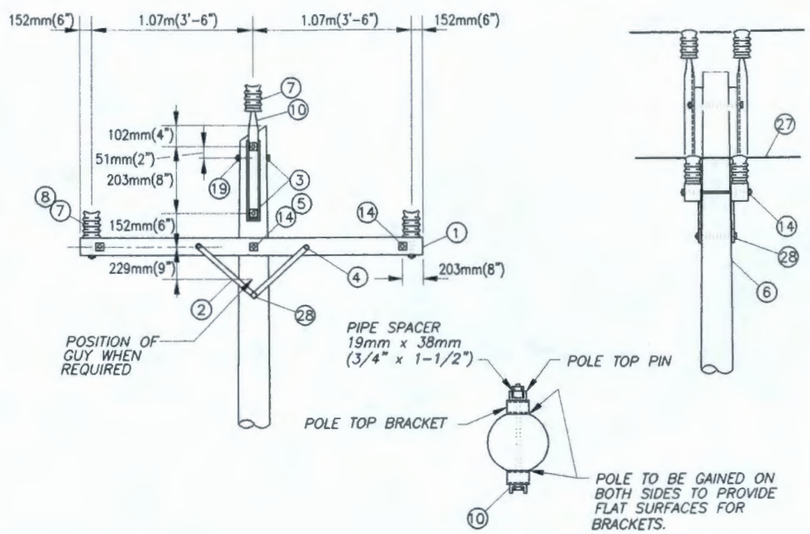

POLE TOP PIN ASSEMBLY

3 PHASE CROSS ARM – DOUBLE PRIMARY SUPPORT
MAX. TRANSVERSE LOADING 2.22KN(500 LBS.)/PIN
5° TO 35° MAX ANGLE

NTS

7 0600X-DD-E0034

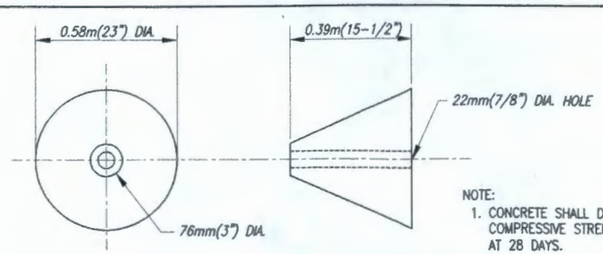

GUY ANCHOR 9 --

NTS

NOTE:
1. CONCRETE SHALL DEVELOP A MINIMUM COMPRESSIVE STRENGTH OF 21 MPA (3000 PSI) AT 28 DAYS.
2. COARSE AGGREGATE SHALL BE 19mm (3/4") MAXIMUM.
3. THE CONCRETE SHALL BE WELL-COMPACTED.

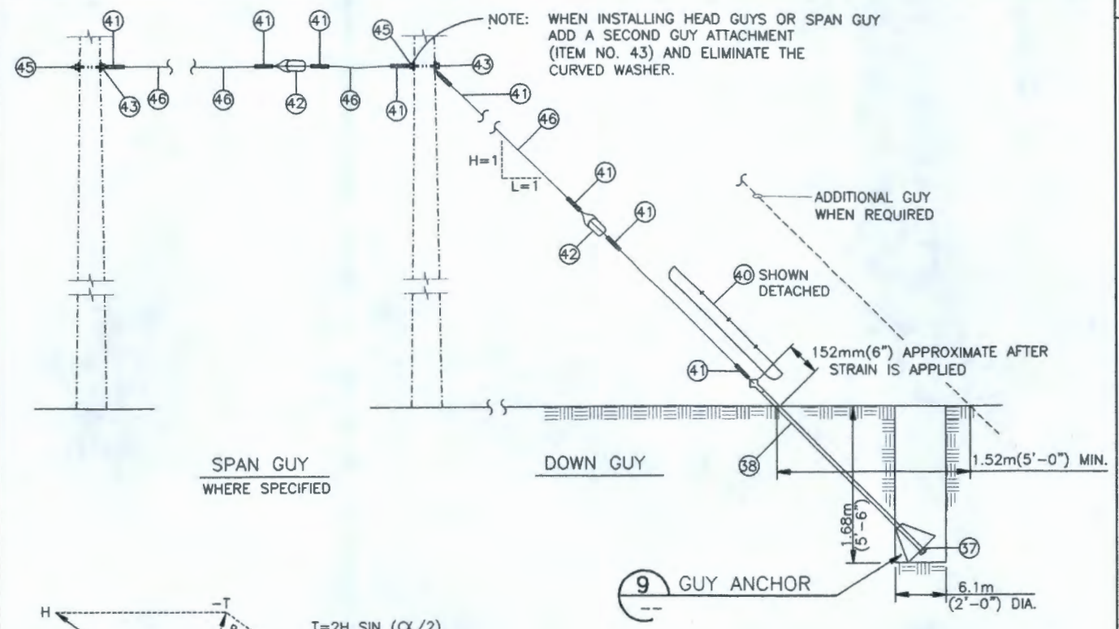

SPAN GUY
WHERE SPECIFIED

DOWN GUY

9 GUY ANCHOR --

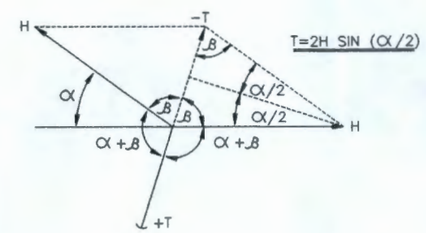

BISECTOR DOWN GUY REQUIREMENTS

α = LINE TURNING ANGLE
β = 90 – (α/2)
H = HEAD GUY STRENGTH REQUIREMENTS FOR DEADENDS
T = BISECTOR HORIZONTAL STRENGTH REQUIRED TO HOLD H

NOTE: BISECTOR DOWN GUY REQUIRMENTS FOLLOW SIZE AND L/H RECOMMENDATION FOR HEAD GUY SIZES >T

NOTES:

1. L/H RATIO OF 1 IS REQUIRED UNLESS OTHERWISE APPROVED BY THE CONTRACTING OFFICER.
2. L/H RATIOS LESS THAN THOSE INDICATED WILL REQUIRE HEAVIER GUYING TO RESTRAIN HORIZONTAL TENSIONS AS INDICATED FOR HEAD GUYS, TO A MINIMUM OF L/H = 0.30.
3. GUY STRENGTH REQUIREMENTS INDICATED REPRESENT A SAFETY FACTOR OF APPROXIMATELY 2.0.
4. ANCHOR INSTALLATION IS SHOWN FOR A DOWN GUY AT 45 DEGREES (L/H=1). REQUIRED ANCHOR DEPTH WILL VARY WITH DOWN GUY GEOMETRY AND LOCAL SOIL CONDITIONS. CONTRACTOR SHALL BURY ANCHOR AT A DEPTH APPROPRIATE FOR THE SPECIFIC INSTALLATION.
5. DETERMINE BISECTOR DOWN GUY REQUIREMENTS FOR EACH APPLICATION USING DIAGRAM AND EQUATION SHOWN ABOVE.

DOWN GUY WITH OR WITHOUT HEAD GUY 8 VAR

NTS

NOTES

1. FOR DESCRIPTION OF MATERIALS SEE MATERAIL LIST ON DRAWING 0600X-DD-E0033.

FOR INFORMATION ONLY

12/19/97 bdo

REV.	DATE	DESCRIPTION	DRAWN BY	DRAFT CHK.	DRSG/ ENG'R	ENG'R CHK.	CL/TEL APPROV	NI PROJ ENG'R
0	12-12-97	ISSUED FOR CONSTRUCTION	PDH	MGM	SIL	MGM		

SCALE:

U.S. DEPARTMENT OF ENERGY
DOE FIELD OFFICE, RICHLAND
HANFORD ENVIRONMENTAL RESTORATION PROGRAM

BECHTEL HANFORD INC. RICHLAND, WASHINGTON | MONTGOMERY WATSON RICHLAND, WASHINGTON

ENVIRONMENTAL RESTORATION DISPOSAL FACILITY
CELLS 3 & 4 CONSTRUCTION, SITE PREPARATION
ELECTRICAL DETAILS III

BECHTEL JOB NO.	DOE CONTRACT NO.	CADD FILENAME
22192	DE-AC06-93RL12367	6xde0037.DWG

TASK	DRAWING NO.	REV. NO.
600	0600X-DD-E0037	0

HANFORD

MICHAEL G. MARCHANT STATE OF WASHINGTON 18004172 REGISTERED PROFESSIONAL ENGINEER
EXPIRES 12-03-99

RECORD INFORMATION

RECORD NO.	BLDG NO.	INDEX NO.
H-6-14818 sht 1	600G	8001