0057677

JUL 02 2002 Sta. 15

ENGINEERING DATA TRANSMITTAL

Page 1 of 1

1. EDT 631627

2. To: (Receiving Organization) Distribution	3. From: (Originating Organization) Duratek Federal Services, Inc., NW	4. Related EDT No.: NA
5. Proj./Prog./Dept./Div.: 111454/ES36 KW-KE Wastewater Characterization	6. Design Authority/Design Agent/Cog. Engr.: C. K. Girres HPAC 0844	7. Purchase Order No.: NA
8. Originator Remarks: For review and comment.		9. Equip./Component No.: NA
		10. System/Bldg./Facility: NA
		12. Major Assm. Dwg. No.: NA
11. Receiver Remarks:	11A. Design Baseline Document? ☐ Yes ☒ No	13. Permit/Permit Application No.: NA
		14. Required Response Date: July 1, 2002

15. DATA TRANSMITTED

(A) Item No.	(B) Document/Drawing No.	(C) Sheet No.	(D) Rev. No.	(E) Title or Description of Data Transmitted	(F) Approval Designator	(G) Reason for Transmittal	(H) Originator Disposition	(I) Receiver Disposition
1	HNF-11208	NA	0	Sampling and Analysis Plan for Characterization of 105-K West Basin Waste-water	NA	1	1	

16. KEY

Approval Designator (F)	Reason for Transmittal (G)	Disposition (H) & (I)
E, S, Q, D OR N/A (See WHC-CM-3-5, Sec. 12.7)	1. Approval 2. Release 3. Information 4. Review 5. Post-Review 6. Dist. (Receipt Acknow. Required)	1. Approved 2. Approved w/comment 3. Disapproved w/comment 4. Reviewed no/comment 5. Reviewed w/comment 6. Receipt acknowledged

17. SIGNATURE/DISTRIBUTION (See Approval Designator for required signatures)

(G) Reason	(H) Disp.	(J) Name	(K) Signature	(L) Date	(M) MSIN	(G) Reason	(H) Disp.	(J) Name	(K) Signature	(L) Date	(M) MSIN
		Design Authority									
		Design Agent									
		Cog. Eng.									
2	1	Cog. Mgr. C. K. Girres	CK Girres	7-2-02	H1-11						
2	1	QA C. K. Girres	dep 7-2-02		H1-11						
		Safety									
		Env.									

18.	19.	20.	21. DOE APPROVAL (If required)
CK Girres C. K. Girres 7-2-02 Signature of EDT Originator / Date	Authorized Representative for Receiving Organization / Date	CK Girres C. K. Girres 7-2-02 Design Authority/ Cognizant Manager / Date	Ctrl No. ☐ Approved ☐ Approved w/comments ☐ Disapproved w/comments

BD-7400-172-2 (10/97)

BD-7400-172-1

DISTRIBUTION SHEET

To	From	
Distribution	Duratek Fed. Services, Inc., NW	Page 1 of 1
Project Title/Work Order		Date July 1, 2002
HNF-11208, Rev. 0, Sampling and Analysis Plan for Characterization of 105-K West Basin Wastewater		EDT No. 631627
		ECN No.

Name	MSIN	Text With All Attach.	Text Only	Attach./ Appendix Only	EDT/ECN Only
L. T. Blackford (H)	T3-04	x			
M. W. Bowman (H)	S6-72	x			
R. R. Connolly (H)	T3-04	x			
P. T. Day (H)	X3-80	x			
D. L. Flyckt (H)	S6-71	x			
M. K. French (H)	T3-06	x			
C. K. Girres (H)	H1-11	x			
M. A. Green (H)	X3-74	x			
M. A. Hahn (H)	T3-05	x			
M. J. Hall (H)	S3-30	x			
R. M. Jochen (H)	X3-74	x			
C. A. Rodriguez (H)	A4-79	x			
D. J. Watson (H)	X3-79	x			
FH Central Files (H)	B1-07	x			
DFSNW Records Mgmt. (S. A. Myers) (H)	H1-11	x			
RL Reading Room (H)	H2-53	x			

A-6000-135 (10/97)

HNF-11208
Revision 0

Sampling and Analysis Plan for Characterization of 105-K West Basin Wastewater

Prepared for the U.S. Department of Energy
Assistant Secretary for Environmental Management
Project Hanford Management Contractor for the
U.S. Department of Energy under Contract DE-AC06-96RL13200
Fluor Hanford
P.O. Box 1000
Richland, Washington

Approved for public release; further dissemination unlimited

HNF-11208
Revision 0
EDT 631627

Sampling and Analysis Plan for Characterization of 105-K West Basin Wastewater

Document Type: WP Division: WM

M. J. Hall
Fluor Hanford, Inc.

Date Published
July 2002

Prepared for the U.S. Department of Energy
Assistant Secretary for Environmental Management

Project Hanford Management Contractor for the
U.S. Department of Energy under Contract DE-AC06-96RL13200

Fluor Hanford
P.O. Box 1000
Richland, Washington

JUL 02 2002
DATE:
STA: 15
HANFORD RELEASE
ID:

Chris Willingham 7/2/02
Release Approval Date

Release Stamp

Approved for public release; further dissemination unlimited

TRADEMARK DISCLAIMER

Reference herein to any specific commercial product, process, or service by trade name, trademark, manufacturer, or otherwise, does not necessarily constitute or imply its endorsement, recommendation, or favoring by the United States Government or any agency thereof or its contractors or subcontractors.

This report has been reproduced from the best available copy.

Printed in the United States of America

Total Pages: 26

Key Words: Sampling; Analysis; Characterization; Wastewater.

Abstract: This sampling and analysis plan (SAP) presents the rationale and strategy for sampling and analysis activities to support transfer of water from the 105-K West Basin (KW Basin) via tanker truck to the Liquid Effluent Retention Facility (LERF)/Effluent Treatment Facility (ETF). This SAP is required per U.S. Department of Energy, Richland Operations Office (RL) DOE/RL 99-89, *Remedial Design Report and Remedial Action Work Plan for the K Basins Interim Remedial Action.*

This SAP details the necessary steps to ensure that adequate information is obtained to meet applicable requirements for acceptance of the waste stream at the LERF/ETF. Characterization will be based on a combination of process knowledge and analytical data. Sampling may be reduced once a baseline is established and process knowledge is confirmed. Constituents of concern will be sampled and analyzed as outlined in this SAP.

HNF-11208
Rev. 0

Sampling and Analysis Plan for Characterization of 105-K West Basin Wastewater

M. J. Hall

June 25, 2002

Prepared for Fluor Hanford, Inc.
by
Duratek Federal Services, Inc., Northwest Operations
Richland, Washington

Signature Page

for M.A. Green — 06/25/02

M. A. Green, Manager
Spent Nuclear Fuel Balance of Plant
Fluor Hanford, Inc., Richland, Washington.

Date

6-25-02

D. J. Watson, Environmental Compliance Officer
Spent Nuclear Fuel Environmental Protection
Fluor Hanford, Inc., Richland, Washington.

Date

6/25/02

L. T. Blackford, Manager
Waste Services
Duratek Federal Services of Hanford

Date

6/25/02

M. A. Hahn
Waste Services Quality Assurance/Quality Control
Fluor Hanford, Inc., Richland, Washington.

Date

6/25/02

D. L. Flyckt, ~~Acting~~ Manager
Liquid Waste Processing Facility
Duratek Federal Services of Hanford

Date

CONTENTS

1.0 INTRODUCTION 1
2.0 DATA QUALITY OBJECTIVES 1
2.1 GENERAL INFORMATION 1
2.2 WASTE STREAM DESCRIPTION 2
2.3 CHARACTERIZATION OBJECTIVES 4
2.4 EXISTING CHARACTERIZATION DATA 5
2.5 PARAMETERS AND/OR CONSTITUENTS OF CONCERN TO COMPLETE CHARACTERIZATION 8
2.6 DECISION RULE 9
2.7 SAMPLE COLLECTION STRATEGY 10
2.8 REVIEW OF SAMPLE COLLECTION DESIGN 11
3.0 PROJECT RESPONSIBILITIES AND POINTS OF CONTACT 11
3.1 PROJECT MANAGER 11
3.2 SAMPLING COORDINATOR 11
3.3 ANALYTICAL LABORATORY 12
4.0 SAMPLING METHODS AND REQUIREMENTS 12
4.1 COLLECTION OF SAMPLES 12
4.2 QUALITY CONTROL SAMPLES 14
4.3 EQUIPMENT, SAMPLE CONTAINERS, AND SAMPLE PRESERVATION 14
4.4 SAMPLE IDENTIFICATION AND CHAIN OF CUSTODY 14
4.5 DOCUMENTATION 15
4.6 PROBLEMS OR DEVIATIONS FROM SAMPLING PROCEDURES 15
5.0 SAMPLE ANALYSIS METHODS AND REQUIREMENTS 15
5.1 LABORATORY 15
5.2 ANALYSIS METHODS AND HOLDING TIMES 16
5.3 QUALITY CONTROL 16
5.4 ANALYSIS REPORT 16
5.5 PROBLEMS OR DEVIATIONS FROM ANALYSIS METHODS 16
5.6 UNUSED SAMPLE PORTIONS 16
6.0 DATA EVALUATION 16
7.0 RECORDS 17
8.0 REFERENCES 17

FIGURE

Figure 1. KW Basin IWTS Sample Points 13

TABLES

Table 1. Sampling and Analysis Requirements. 4
Table 2. IXM Process Sample Results, as Averages. 6
Table 3. Center of Basin Anion Sample Results 7
Table 4. Constituents of Concern 9

TERMS

DFSNW	Duratek Federal Services, Inc., Northwest Operations
DOE/RL	U.S. Department of Energy, Richland Operations Office
EPA	U.S. Environmental Protection Agency
ERDF	Environmental Restoration Disposal Facility
ETF	Effluent Treatment Facility
FH	Fluor Hanford, Inc.
gal	gallon
IWTS	Integrated Water Treatment System
IXM	ion exchange module
KW Basin	105-K West Basin
L	liter
LERF	Liquid Effluent Retention Facility
LWPF	Liquid Waste Processing Facilities
µm	micrometer
µg	microgram
µS/cm	microsiemens per centimeter
MDA	minimum detectable activity
MDL	maximum detectable limit
pc/L	picocurie per Liter
PCB	polychlorinated biphenyl
PQL	practical quantification limit
ppb	part per billion
psi	pounds per square inch
RL	U.S. Department of Energy, Richland Operations Office
SAP	sampling and analysis plan
SNF	Spent Nuclear Fuel
WAC	*Washington Administrative Code*
water	KW Basin waste water
WMP	Waste Management Project

1.0 INTRODUCTION

This sampling and analysis plan (SAP) presents the rationale and strategy for sampling and analysis activities to support transfer of water from the 105-K West Basin (KW Basin) via tanker truck to the Liquid Effluent Retention Facility (LERF)/Effluent Treatment Facility (ETF). This SAP is required per U.S. Department of Energy, Richland Operations Office (RL) DOE/RL 99-89, *Remedial Design Report and Remedial Action Work Plan for the K Basins Interim Remedial Action*. This SAP is applicable for current Spent Nuclear Fuel (SNF) removal operations and will be reviewed, and revised as necessary, prior to KW Basin water removal associated with deactivation.

The KW Basin contains approximately 4.9 million L (1.3 million gal) of water used to shield and cool the SNF. Water that will be sent to the LERF/ETF is currently maintained in a closed-loop system and is continually recycled from the basins, circulated through existing treatment systems, then returned to the basins. This treatment is required to maintain adequate water quality and temperatures in the basin and also functions to reduce concentrations of soluble radionuclides. The primary contaminants in the water are soluble (e.g., ^{3}H) and partially soluble radionuclides (e.g., ^{134}Cs and ^{137}Cs). Based on concentrations of chemical constituents, the water is not currently regulated as mixed waste or as a polychlorinated biphenyl (PCB) remediation waste.

This SAP details the necessary steps to ensure that adequate information is obtained to meet applicable requirements for acceptance of the waste stream at the LERF/ETF. Characterization will be based on a combination of process knowledge and analytical data. Sampling may be reduced once a baseline is established and process knowledge is confirmed. Constituents of concern will be sampled and analyzed as outlined in this SAP.

2.0 DATA QUALITY OBJECTIVES

This section of the SAP provides a summary of the KW Basin wastewater (referred to as water in this SAP) characterization and the data needed to confirm process knowledge and define waste management requirements. The process used to determine this information is generally aligned with the seven-step process outlined in U.S. Environmental Protection Agency (EPA) guidance. However, a less involved process was used because the KW Basin water stream is well within the LERF/ETF waste acceptance criteria.

2.1 GENERAL INFORMATION

Decisions for this characterization effort are based on the Fluor Hanford, Inc. (FH) SNF Project and the Waste Management Project (WMP). Duratek Federal Services, Inc., Northwest Operations (DFSNW), or another qualified contractor, will be utilized to perform sampling.

FH Analytical Services has provided input regarding analytical capabilities and will coordinate completion of the analytical activities required per this SAP. Upon completion of sampling and analysis, the SNF Project and WMP Waste Services will evaluate the process knowledge and analysis data and complete the ETF waste profile sheet. The FH WMP Liquid Waste Processing Facilities (LWPF) will review the waste profile and make the final acceptance decision to the LERF/ETF. RL and EPA staff provided input to the approach and characterization requirements to be finalized in this SAP.

FH is currently the contractor responsible for the work scope in this SAP. This SAP will not be revised if names, performing organizations, or contractors change. The new contractor or organization will assume the responsibilities and requirements in this SAP.

2.2 WASTE STREAM DESCRIPTION

The water in the KW Basin is circulated through closed-loop treatment systems and most of the water is returned to the basin users. Water that exceeds the needs of the basin users is returned to the basin via the south loadout pit. Treatment occurs using two separate and distinct water treatment systems. One system is the Skimmer Water Cleanup System, which takes water near the surface of the basin. This system has been in operation for many years and there is existing process knowledge. The other system is the Integrated Water Treatment System (IWTS), which takes water near the canister decapping station, machine washing, and dump table. The IWTS has been in service for several years and there is existing radionuclide process knowledge. The IWTS will be the primary water discharge system to the tanker truck that will transport water to the ETF/LERF.

The Skimmer Water Cleanup System removes radioactive and nonradioactive ionic species by processing the water through IXMs, and maintains water clarity by processing the water through a sand filter. During normal operation of the Skimmer Water Cleanup System in cleanup mode, the basin water enters three weirs at 455 to 569 L/min (120 to 150 gal/min) per weir and is pumped through the sand filter for particulate removal. When the flow exits the sand filter in the KW Basin, it is split with a normal flow of 606 L/min (160 gal/min) going through IXM-4. The ion exchange module (IXM) removes radioactive ^{137}Cs and ^{90}Sr ions. The remainder of the flow is diverted by valves to either the west bay of the basin or to the south loadout pit. Proportional samplers collect routine water samples at sample point 10 (center of basin) and sample point 16 (IXM 4 outlet). Since the IWTS will be the primary discharge point of the KW water, the Skimmer Water Cleanup System will not be part of the tanker truck water transfer process.

The IWTS is a four-stage water filtration system consisting of three submerged pumps, a knockout pot, ten settling tanks, three filtration modules and three ion exchange modules with associated structure and piping. The feed rate is 1,213 L/min (320 gal/min) at a system pressure of 112 psi. The pumps suction material from the Fuel Retrieval System with one pump dedicated to each of the major subsystems of the Fuel Retrieval System. To prevent the transfer of large particulate to the downstream sections of the IWTS, the common pump header discharges to one of the submerged knockout pots located in the west bay of the basin. As the flow passes through the knockout pot and screen, particulate larger than 500 μm will be captured in the knockout pot.

From the knockout pots, the flow is routed to the submerged particulate settlers located in the weasel pit at the east end of the basin. In the settler, the incoming fluid process stream velocity is dramatically reduced and particulate larger than 15 to 50 μm will settle out.

The particulate settler's output is routed to the booster pump located in the transfer area above the basin water level. The booster pump discharge, including any remaining particulate matter, is routed to the annular filter vessels located in the transfer area. The flow is distributed among three annular filter vessels with a nominal 5 μm filter capability.

The flow from the annular filter vessels is routed to IXM-1, IXM-2, and IXM-3 located in the transfer area. The IXMs are loaded with a mixture of cation and anion organic bead resins optimized to remove cesium and other dissolved radionuclides and control pool chemistry. The effluent of the IXMs is directed to the various basin users. Water that exceeds the needs of the basin users is returned to the basin via the south loadout pit. Water can be removed via a connection located in the transfer bay and pumped to a tanker truck. The three annular filter vessels provide the 5 μm filtering required before transferring the water to the tanker truck.

The inlet and outlet water of the IXMs has composite sampling performed weekly to estimate the quantity of the following constituents contained in the operating IXM and then monthly for IXM characterization for disposal. The constituents are analyzed monthly unless indicated as weekly. Figure 1, "KW Basin IWTS Sample Points," shows the locations of the composite samplers. The detection limits for the following radionuclides are low enough to ensure that the LERF/ETF acceptance criteria are met.

- Total alpha (weekly)
- ^{238}Pu
- $^{239/240}Pu$
- ^{137}Cs (weekly and monthly)
- ^{90}Sr
- ^{234}U
- ^{235}U
- ^{238}U
- ^{241}Am
- ^{144}Ce
- $^{144}Ce/Pr$
- ^{60}Co
- ^{152}Eu
- ^{154}Eu
- ^{155}Eu
- ^{94}Nb
- ^{103}Ru
- ^{106}Ru
- ^{125}Sb
- ^{113}Sn
- ^{65}Zn
- ^{3}H

2.3 CHARACTERIZATION OBJECTIVES

Data obtained from the sampling and analysis activities, in combination with process sample data, will be used to determine if the waste stream meets the LERF/ETF acceptance requirements given in HNF-3172, *Liquid Waste Processing Facilities Waste Acceptance Criteria*. The sampling and analysis requirements are provided in Table 1. The constituents of concern were determined by comparing KW Basin water process sample results against the LWPF waste acceptance criteria. If adequate process sample results exist and the results fall within LWPF waste acceptance criteria then no further sampling is required. If process sample results do not exist for LWPF waste acceptance parameters then further sampling is required.

Table 1. Sampling and Analysis Requirements. (2 sheets total)

Compound	Container	Preservative	Maximum Holding Time	MDL/MDA	PQL	Method
METALS						
Aluminum	Glass or Plastic	HNO_3; pH < 2	180 days; Mercury, 28 days	28 µg/L	280 µg/L	6010
Antimony				0.5 µg/L	5 µg/L	EPA-600, 200.8
Arsenic				0.4 µg/L	4 µg/L	EPA-600, 200.8
Barium				4.4 µg/L	44 µg/L	6010
Cadmium				0.1 µg/L	1 µg/L	EPA-600, 200.8
Calcium				23 µg/L	230 µg/L	6010
Chromium				0.3 µg/L	3 µg/L	EPA-600, 200.8
Copper				4.4 µg/L	44 µg/L	6010
Iron				21 µg/L	210 µg/L	6010
Lead				1.2 µg/L	12 µg/L	EPA-600, 200.8
Magnesium				61 µg/L	610 µg/L	6010
Manganese				4.4 µg/L	44 µg/L	6010
Mercury				0.1 µg/L	1 µg/L	EPA-600, 200.8
Nickel				11 µg/L	111 µg/L	6010
Potassium				655 µg/L	6550 µg/L	6010
Selenium				0.3 µg/L	3 µg/L	EPA-600, 200.8
Silicon				22 µg/L	220 µg/L	6010
Silver				4.4 µg/L	44 µg/L	6010
Sodium				32 µg/L	320 µg/L	6010
Uranium				0.1 µg/L	1 µg/L	EPA-600, 200.8
Vanadium				5.6 µg/L	56 µg/L	6010
Zinc				4.4 µg/L	44 µg/L	6010
ORGANICS						
PCBs	Amber Glass	Cool to 4 °C by refrigeration	7 days to extract/40 days after ext.			
Aroclor-1016					0.2 ppb	8082
Aroclor-1221					0.4 ppb	8082
Aroclor-1232					0.2 ppb	8082
Aroclor-1242					0.2 ppb	8082
Aroclor-1248					0.2 ppb	8082
Aroclor-1254					0.2 ppb	8082
Aroclor-1260					0.2 ppb	8082
Total Organic Carbon	Amber Glass	H_2S0_4, Cool to 4 °C	28 days		0.3 mg/L	9060

Table 1. Sampling and Analysis Requirements. (2 sheets total)

Compound	Container	Preservative	Maximum Holding Time	MDL/MDA	PQL	Method
GENERAL CHEMISTRY						
Total Suspended Solids		Cool to 4°C by refrigeration	7 days		1 mg/L	EPA 160.2
pH			As soon as practical			EPA 150.1
Gross Alpha	Glass	HNO_3; pH < 2	180 Days	3 pCi/L		Proportional Counter
Gross Beta	Glass	HNO_3; pH < 2	180 Days	4 pCi/L		Proportional Counter

Notes:

- Another method may be substituted, with sampling coordinator concurrence, if the PQL can still be met.
- Method modifications are documented and approved by Washington State Department of Ecology or U.S. Environmental Protection Agency.
- Container size will be determined by the laboratory.
- Analytical limits are based on the quality of the KW Basin water. Limits can be changed, with prior approval by the sampling coordinator. Reported detection limits will be indicated on the final report.
- PCBs will be reported down to the MDL. Values on the analytical report for PCBs falling between the MDL and PQL will be J-flagged.

°C = degree Celsius
EPA = U.S. Environmental Protection Agency
MDA = minimum detectable activity
MDL = maximum detectable limit
µg/L = microgram per Liter
mg/L = milligram per Liter
PCB = polychlorinated biphenyl
pCi/L = picocurie per Liter
ppb = part per billion
PQL = practical quantification limit

2.4 EXISTING CHARACTERIZATION DATA

Extensive data on the source and nature of the KW Basin water already exists. These data include radiological data from periodic sampling done on the KW Basin water, sludge characterization data, PCB data, radiological data from routine process sampling, and process knowledge.

The source-term for all of the radionuclides that could reasonably be expected in the K Basins is from N Reactor fuel and associated activation products. Physical and chemical processes occurring as the basin water contacted the fuel are known to alter the ratios of various radionuclides. A summary of the existing radiological data is found in HNF-6495, *Sampling and Analysis Plan for K Basins' Debris*. Radionuclide process samples results for sample points 420-1 (IXM Outlet #1), 420-2 (IXM Outlet #2) and 420-3 (IXM Outlet #3) are listed in Table 2. The existing radionuclide data will be used to characterize the waste for LERF/ETF processing. Future characterization samples will not be analyzed for detailed radionuclides based on the consistency of the data.

Extensive data exists for anionic species for KW Basin composite water samples taken from sample point 10 (center of basin). These results are presented in Table 3 and demonstrate that the anion results are consistently very low. The existing anion data will be used to characterize the waste for LERF/ETF processing. Future characterization samples will not be analyzed for anions.

Table 2. IXM Process Sample Results, as Averages.

Radionuclide (pCi/L)	420-1	420-2	420-3
^{241}Am	2.53 E+00	4.42 E+00	3.05 E+00
^{60}Co		1.45 E+00	
^{137}Cs	2.46 E+01	1.97 E+01	3.71 E+01
^{125}Sb	1.27 E+02	2.15 E+02	1.72 E+02
Gross Beta	1.24 E+03	2.65 E+02	3.45 E+02
Total Alpha	3.53 E+01	8.34 E+00	8.79 E+00
^{238}Pu	6.28 E-01	7.00 E-01	6.25 E-01
$^{239/240}Pu$	1.31 E+00	6.14 E+00	3.56 E+00
^{90}Sr	2.58 E+03	5.11 E+02	1.12 E+02
^{3}H	3.93 E+05	3.93 E+05	4.05 E+05
^{234}U	3.19 E-01	3.80 E-01	5.08 E-01
^{235}U	9.00 E-02	1.65 E-01	1.81 E-01
^{238}U	8.50 E-02	1.88 E-01	2.30 E-01
Conductivity (µS/cm)	2.13 E+00	1.13 E+01	1.23 E+00

IXM = ion exchange module
µS/cm = microsiemens per centimeter
pCi/L = picocurie per Liter

Table 3. Center of Basin Anion Sample Results.

KBasin Anion Analysis (105KW)
(see below Multi-Canister Overpack [MCO] limits)

Sample#	Sample Date	Sample Results Date	Report Number	Lab	Bromide	Chloride	Fluoride	Nitrate	Nitrite	Phosphate	Sulfate
					mg/L (ppm)						
072KWB10	05/02/2000	05/17/2000	20000187	222-S	<0.125	<0.017	<0.012	<0.139	<0.108	<0.12	<0.138
101KWB10	06/06/2000	06/26/2000	20000223	222-S	<0.125	<0.017	<0.012	<0.139	<0.108	<0.12	<0.138
124KWB10	07/05/2000	07/10/2000	20000242	222-S	<0.125	<0.017	<0.012	<0.139	<0.108	<0.12	<0.138
153KWB10	08/08/2000	08/21/2000	20001258	WSCF	<0.10	<0.03	<0.007	<0.04	<0.02	<0.06	<0.20
178KWBD*	09/05/2000	09/07/2000	20001430	WSCF	<0.10	<0.03	<0.007	<0.04	<0.02	<0.06	<0.20
184KWB10	09/12/2000	09/18/2000	20001465	WSCF	<0.10	<0.03	<0.007	<0.04	<0.02	<0.06	<0.20
202KWB10	10/10/2000	10/16/2000	20001608	WSCF	<0.10	<0.03	<0.007	<0.04	<0.02	<0.06	[illegible]
232KWB10	11/14/2000	11/16/2000	20001777	WSCF	<0.10	0.035	0.036	<0.04	<0.02	<0.06	<0.20
251KWB10	12/12/2000	12/21/2000	20001904	WSCF	<0.10	0.064	<0.007	<0.04	<0.02	<0.06	<0.20
012KWB10	01/09/2001	01/11/2001	20010033	WSCF	<0.10	<0.03	<0.007	<0.04	<0.02	<0.06	<0.20
042KWB10	02/13/2001	02/22/2001	20010233	WSCF	<0.10	0.104	0.039	<0.04	<0.02	<0.06	[illegible]
065KWB10	03/13/2001	03/19/2001	2001385	WSCF	<0.10	0.044	<0.007	<0.04	<0.02	<0.06	<0.20
088KWB10	04/10/2001	04/16/2001	20010517	WSCF	<0.10	0.044	<0.007	<0.04	<0.02	<0.06	<0.20
108KWB10	05/07/2001	05/07/2001	20010653	WSCF	<0.10	0.044	<0.007	<0.04	<0.02	<0.06	<0.20
141KWB10	06/12/2001	06/18/2001	20010811	WSCF	<0.10	<0.03	<0.007	<0.04	<0.02	<0.06	<0.20
165KWB10	07/10/2001	07/12/2001	20010921	WSCF	<0.10	<0.03	<0.007	0.043	<0.02	<0.06	<0.20
197KWB10	08/14/2001	08/16/2001	20011101	WSCF	<0.10	<0.03	<0.007	<0.04	<0.02	<0.06	<0.20
221KWB10	08/12/2001	08/25/2001	20011230	WSCF	<0.10	<0.03	<0.007	<0.04	<0.02	<0.06	<0.20
245KWB10	10/09/2001	10/16/2001	20011352	WSCF	<0.10	<0.03	<0.007	<0.04	<0.02	<0.06	<0.20
275KWB10	11/13/2001	11/16/2001	20011517	WSCF	<0.10	<0.03	<0.007	<0.04	<0.02	<0.06	<0.20
299KWB10	12/11/2001	12/12/2001	20011628	WSCF	<0.10	<0.03	<0.007	<0.04	<0.02	<0.06	<0.20
013KWB10	01/08/2002	01/17/2002	20020031	WSCF	<0.10	<0.03	<0.007	<0.04	<0.02	<0.06	<0.20
039KWB10	02/11/2002	02/14/2002	20020211	WSCF	<0.10	<0.03	<0.007	<0.04	<0.02	<0.06	<0.20
067KWB10	03/12/2002	03/21/2002	20020334	WSCF	<0.10	<0.03	<0.007	<0.04	<0.02	<0.06	[illegible]
092KWB10	04/09/2002	04/16/2002	20020442	WSCF	<0.10	<0.03	<0.007	<0.04	<0.02	<0.06	<0.20
125KWB10	05/14/2002	05/20/2002	20020693	WSCF	<0.10	<0.03	<0.007	<0.04	<0.02	<0.06	[illegible]
147KWB10	06/11/2002	06/17/2002	20020847	WSCF	<0.10	<0.03	<0.007	<0.04	<0.02	<0.06	[illegible]
Maximum Constituent Concentration to Date[a]					0	0.104	0.039	0.043	0	0	[illegible]
MCO Limits per HNF-S-0426 Rev. 6 "Performace Spec for MCO"					N/A	< 1.0 ppm	<0.25 ppm	< 1.0 ppm	N/A	< 1.0 ppm	< 1.0 ppm

*** KW Demin water analysis from makeup water system**

[a]Sampling was initiated in May 2000 to confirm MCO performance specifications are met.

Shaded = Caution warning range used for evaluation against MCO performance specifications.
ETF uses this data only for evaluation against acceptance criteria.

A waste designation was recently completed on the sludge from the K Basins. The results demonstrated that the sludge is not a dangerous waste. The rationale for this designation is documented in RL Letter 01-SFO-051, *Completion of Waste Designation for K Basin Sludge Waste Streams* and Letter FH-0100738, *Completion of Waste Designation for K Basin Sludge Waste Streams*. Neither the fuel nor the sludge is regulated as a dangerous waste under *Washington Administrative Code* (WAC) 173-303. Therefore, the basin water is not considered a dangerous waste just because it has been in contact with the fuel or the sludge. Dissolved metals (cations), total dissolved solids, and pH sampling will be performed to confirm the waste is not a characteristic dangerous waste.

Sludge and water from the KW canisters have been sampled and analyzed for PCBs and contain Aroclors 1016/1242, 1221, 1248, 1258, and 1260. The concentration of PCBs in the KW water was reported as <0.2 µg/L (ppb). The complete results are documented in HNF-1728, *Analysis of Sludge from Hanford K West Basin Canisters*. PCBs are not expected in the KW Basin water; however, PCB sampling will be performed to confirm the water meets the LERF/ETF acceptance criteria.

Volatile organics are not present in the K Basins based on chemical characteristics and administrative controls. Any chemicals that historically could have been used would have volatilized and would no longer be present. Currently, administrative controls limit the introduction of chemicals in the basin water, including administrative procedure OP-2-025-01, "Basin Water Quality Control," Section 6.4, "Review of Chemical Products Used in the Basins." Prior to their use in the basin areas, Operations support personnel review all chemical products that have the potential to leak or spill into the basins. They do this to determine if there would be potential adverse effects. Operations support personnel also approve all chemical products that are used in construction, maintenance, and operational activities to ensure that they will not adversely impact basin water chemistry. Because no volatile organics are present in the basins, volatile organic analysis and semi-volatile organic analysis will not be required to characterize the waste. Total organic carbon sampling will be performed to confirm the waste does not contain organics.

The LWPF require that the water be filtered through a 5 µm filter to avoid accumulation of solids in the tanker truck and the LERF Basins. Because the KW Basin water meets this criterion through filtration in the annular filters, sampling for total suspended solids is not required to characterize the waste.

2.5 PARAMETERS AND/OR CONSTITUENTS OF CONCERN TO COMPLETE CHARACTERIZATION

The constituents of concern were determined by comparing KW Basin water process sample results against the LWPF waste acceptance criteria. If adequate process sample results exist and the results fall within LWPF waste acceptance criteria, then no further sampling is required. If process sample results do not exist for LWPF waste acceptance parameters, then further sampling is required. Process sample results (Table 2) confirmed all radionuclides are less than 10% of the most stringent radionuclide waste acceptance criteria (the LERF source term limits). Process sample results for anion species were very low and much lower than the acceptance criteria (Table 3). Adequate process sample results do not exist for total organic carbon, metals,

and PCBs. Additional PCB data are needed to confirm that the KW Basin water meets the LERF/ETF acceptance criteria.

Based on these results, further routine characterization sampling will consist of the constituents in Table 4. Sampling frequency is defined in Section 2.7.

Table 4. Constituents of Concern.

Constituents	Rationale
pH	Confirm process knowledge.
Metals	Confirm process knowledge.
Total dissolved solids	Confirm process knowledge.
Total organic carbon	Confirm process knowledge.
PCBs—Aroclors 1016/1242, 1221, 1232, 1248, 1254, and 1260	Confirm process knowledge.

PCB = polychlorinated biphenyl

2.6 DECISION RULE

The decision will be made on the following basis.

If the concentration of constituents in the KW Basin meets the LERF/ETF waste acceptance criteria, the waste is acceptable for transfer to LERF/ETF. The waste acceptance process evaluates the waste against the following criteria.

- Is filtration required to remove solids present in the waste?
- Is the waste compatible with the LERF/ETF materials of construction?
- Are the concentrations of the constituents in the waste within the treatability limits in the approved influent constituent list required by *State Waste Discharge Permit Number ST 4500* (ST 4500)?
- Are the concentrations and quantities of radionuclides in the waste within the limits in LERF/ETF safety documentation?

- Are the concentrations and quantities of radionuclides and toxic chemicals in the waste within the limits of air emission documents?

- If the waste is designated as dangerous waste, are the waste codes included in Ecology 94-05-001, *Dangerous Waste Portion of the Resource Conservation and Recovery Act Permit for the Treatment, Storage, and Disposal of Dangerous Waste*, Permit No. WA7890008967?

- Is the powder generated at ETF from treating water approved for disposal at the Environmental Restoration Disposal Facility (ERDF)?

Further information about waste acceptance at the LERF/ETF is available in HNF-3172. Several of the criteria involve evaluating the KW Basin waste in conjunction with other wastes received at LERF/ETF. For example, air emissions requirements limit the annual throughput of radionuclides at LERF and ETF, so all radionuclides from all waste streams for the year must be considered in the evaluation.

The PCB concentration in the water will determine the management policy. If the PCB concentration in the water is less than 0.5 µg/L, it is not *Toxic Substances Control Act of 1976* (TSCA)-regulated waste, and the water is acceptable for unrestricted disposal at ETF. If the PCB concentration is greater than 0.5 µg/L, the water will be classified as PCB remediation waste. In addition, if the PCB concentration in the water is less than 150 µg/L, the water is acceptable for storage at LERF. The LERF/ETF limits may be re-evaluated at such time that ETF receives approval from EPA to treat PCB remediation waste. If all the Aroclors are less than the Practical Quantitation Limit (PQL) defined in Table 1, the value of the highest PQL will be used to represent the total PCB concentration. If any Aroclors are reported above their respective PQL, the sum of all the detected Aroclors will be used to represent the total PCB concentration.

The powder generated at ETF from treating KW Basin water will be disposed of at ERDF if (1) it meets the ERDF waste acceptance criteria; (2) the K Basins water is not combined with other liquid effluent whose treatment residue is not authorized for ERDF disposal; and (3) the residue from treatment of K Basins water is not combined with waste that is not authorized for ERDF disposal.

2.7 SAMPLE COLLECTION STRATEGY

Initially, one representative sample will be taken from the IXM outlets. It is expected that, given the consistency of previous sample results, additional samples will give similar results. If results of the first sampling show the water is acceptable for receipt at LERF/ETF, water transfers can begin immediately following LWPF approval. A second sample of the IXM outlet water will be analyzed for the constituents in Table 4 to confirm the water is of similar quality and is adequately characterized. The second sampling will occur at least 30 days after the initial sampling. An evaluation of the results will be used to determine if additional sampling is required.

Process control sample results for Total Alpha and ^{137}Cs will be routinely evaluated to determine if any significant changes in water quality have occurred. If a significant change in water quality

should occur, the constituents of concern will be determined and additional sampling and analysis will be performed. At a minimum, this re-evaluation will occur prior to KW Basin water removal associated with deactivation.

2.8 REVIEW OF SAMPLE COLLECTION DESIGN

Sample results from the IXM outlets, including monthly process sample results, will be provided to the SNF Project, WMP Waste Services, and WMP LWPF personnel. Any shifts/trends will be evaluated to determine if expansion or modification of the constituents of concern is required.

The LERF/ETF *Resource Conservation and Recovery Act of 1976* (RCRA) permit requires reevaluation of the waste if LWPF believes the waste process has changed. Reevaluation of required sampling and analysis will occur if any significant change should occur in the KW Basin processes that could affect water quality.

3.0 PROJECT RESPONSIBILITIES AND POINTS OF CONTACT

This section establishes roles and responsibilities for the sampling and analysis effort.

3.1 PROJECT MANAGER

The project manager is designated by the SNF Project Director, Project Support and has the following responsibilities under this SAP:

- Provide resources to complete activities defined by this SAP
- Resolve any questions or problems communicated by the sampling coordinator
- Document and resolve deviations from this SAP.

3.2 SAMPLING COORDINATOR

The sampling coordinator is designated by the project manager and has the following responsibilities under this SAP:

- Ensure that sampling activities, including documentation and transportation to the laboratory, are performed in accordance with this SAP
- Address any questions regarding this SAP to the project manager prior to beginning sampling activities
- Maintain the primary interface with SNF, analytical laboratory, and the LWPF

- Notify the project manager of any deviations from this SAP that affect the data quality as soon as possible for resolution
- Transmit laboratory data to all data users.

3.3 ANALYTICAL LABORATORY

The analytical laboratory contracted by the SNF Project has the following responsibilities under this SAP:

- Receive and log in samples
- Analyze samples by the methods specified by this SAP and any specific client agreement, including meeting specified holding times
- Address any questions regarding the analyses to the sampling coordinator as soon as possible for resolution
- Dispose of any unused sample.

4.0 SAMPLING METHODS AND REQUIREMENTS

This section describes the methods for obtaining representative samples and the applicable documentation and quality control requirements.

4.1 COLLECTION OF SAMPLES

The SNF Project operations personnel will manage sampling activities. The DFSNW sampling organization will perform the sampling. DFSNW will direct sampling in accordance with DFSNW-SSPM-001, *Sampling Services Procedure Manual*, procedure SP 7-1, "Drum Sampling/Containerized Material Sampling." Alternatively, another contractor with equivalent procedures may be utilized. A representative sample will be obtained using the sample collection strategy described below.

The KW Basin IWTS is described in HNF-SD-WM-SAR-062, *K Basins Safety Analysis Report*. A schematic showing the system and sampling points is included in Figure 1.

Figure 1. KW Basin IWTS Sample Points.

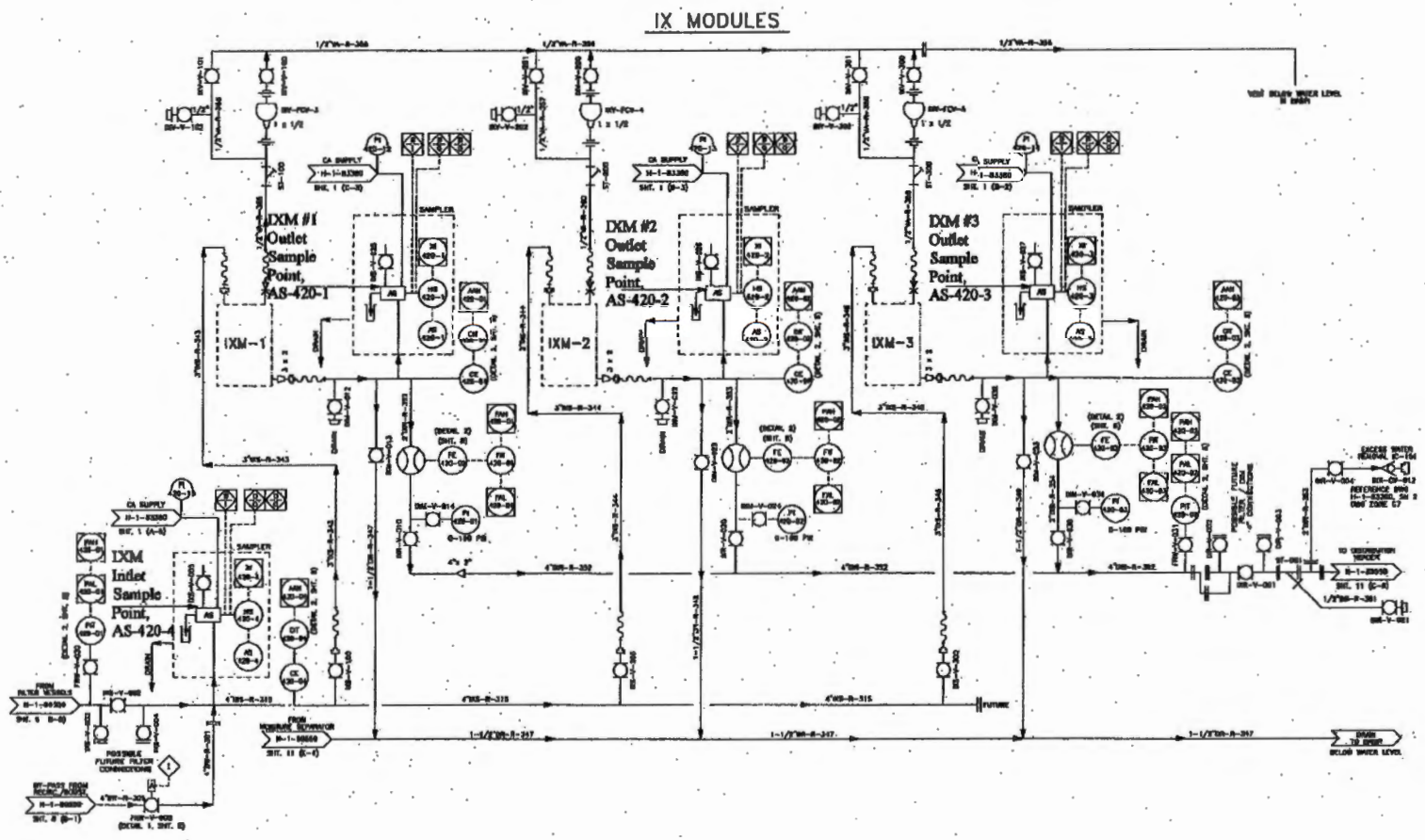

The KW Basin IWTS has three different areas for sampling water prior to the water being transferred to the tanker truck. Auto sampler 420-1 samples water from IXM Outlet #1, auto sampler 420-2 samples water from IXM Outlet #2, and auto sampler 420-3 samples water from IXM Outlet #3. Any of the three sampling points can be used.

4.2 QUALITY CONTROL SAMPLES

As a minimum, a quality assurance/quality control field duplicate will be sent to the laboratory for each IWTS IXM system sampling campaign and whenever rebaselining or verification is necessary.

4.3 EQUIPMENT, SAMPLE CONTAINERS, AND SAMPLE PRESERVATION

DFSNW, or other approved contractor will provide sample collection materials (i.e., containers, labels, tools, etc.). Sample bottle requirements are specified in Table 1. All containers, except those used for radiochemical analysis, must be Level-1 protocol per manufacturer for RCRA samples. Sample equipment must be new or cleaned in accordance with DFSNW-SSPM-001, procedure SP 2-5, "Laboratory Cleaning of Sampling Equipment," or equivalent procedure.

Samples must be preserved as specified in Table 1. Samples shall be submitted to the laboratory promptly to meet holding times. The laboratory will be provided 24-hour advance notification of the sampling schedule whenever possible.

4.4 SAMPLE IDENTIFICATION AND CHAIN OF CUSTODY

The sampling organization will manage the samples in accordance with WMP-200, *Fluor Hanford Waste Management Project Procedures*, Section 3.12, "Chain of Custody for Environmental Media and Waste Samples," or equivalent procedure, and DFSNW-SSPM-001, procedure SP 1-1, "Chain of Custody," or equivalent procedure.

The sample collection organization will be responsible for initiating and maintaining the chain of custody from the time of sampling until transfer of custody. All samples will include a sample-screening vial that contains a representative portion of the sample for radiological screening.

4.5 DOCUMENTATION

A record of the sampling activities will be documented in a bound, sequentially numbered field logbook. The logbook will describe the general location of the sampling activity, type (matrix) of material sampled, sample method, sample source, sample number (corresponding to the sample label), date and time of sample collection, and any problems encountered or deviations from this SAP. Field-generated notes will be attached (e.g., taped) to the field logbook. Drawings, diagrams, and photographs should be used when needed to clearly describe the sampling event. Each page in the logbook will be signed and dated by the person making the logbook entry.

Any field measurements (e.g., radiological surveys, industrial hygiene survey measurements) will be documented and maintained by the SNF Project.

On completion of the sampling project, a photocopy of the chain of custody form(s) and field logbook pages pertaining to the sampling activity will be provided to the sampling coordinator.

4.6 PROBLEMS OR DEVIATIONS FROM SAMPLING PROCEDURES

Any problems encountered during sampling or deviations from this SAP must be documented in the field logbook and communicated to the sampling coordinator as quickly as possible. Where a problem or deviation could affect the usability of the data, the sampling coordinator will contact the project manager to determine the appropriate action to be taken (e.g., discontinue sampling, modify the sampling procedure, or continue sampling). Any deviations from this SAP will be documented in a form for which EPA review and approval can be obtained.

5.0 SAMPLE ANALYSIS METHODS AND REQUIREMENTS

This section describes sample analysis methods and requirements for the selected laboratory. Client agreements will be used with the laboratory as necessary to establish any laboratory-specific requirements.

5.1 LABORATORY

The Waste Sampling and Characterization Facility is currently the laboratory contracted to perform the required analysis. An alternate laboratory may be used provided that the laboratory has an approved Quality Assurance program that is based on and meets the requirements of DOE/RL 96-68, *Hanford Analytical Services Quality Assurance Requirements Document*.

5.2 ANALYSIS METHODS AND HOLDING TIMES

Samples shall be analyzed by the methods identified in Table 1. The laboratory shall meet the holding times specified in Table 1.

5.3 QUALITY CONTROL

The contracted laboratory will conduct all sample analyses utilizing the EPA or Washington Department of Ecology accepted quality control practices. An approved Quality Assurance Program Plan must be in place that is based on and implements the requirements of DOE/RL-96-68.

5.4 ANALYSIS REPORT

The laboratory shall provide the final analysis report within 30 calendar days from samples arriving at the laboratory, unless a quicker turnaround is negotiated on a case-by-case basis. Data will be qualified in the narrative or by using standard laboratory data qualifiers.

5.5 PROBLEMS OR DEVIATIONS FROM ANALYSIS METHODS

Any problems during analysis or deviations from the analysis method, including holding time requirements, must be communicated to the sampling coordinator as quickly as possible. The analytical laboratory contact shall contact the sampling coordinator to determine the appropriate action to be taken (e.g., discontinue analysis, use an alternate procedure, continue analysis despite problems). Problems or deviations and actions taken will be documented and provided to the sampling coordinator. Any deviations from this SAP will be documented in a form for which EPA review and approval can be obtained.

5.6 UNUSED SAMPLE PORTIONS

All unused portions of samples will be disposed of by the laboratory staff after the final results have been reviewed and accepted by the sampling coordinator and LWPF.

6.0 DATA EVALUATION

The SNF Project and WMP Waste Services will evaluate the data collected under this SAP and complete the ETF waste profile based on the results. Analysis results will be forwarded to the WMP LWPF. The LWPF acceptance personnel will evaluate the data collected under this SAP

to ensure that the LERF/ETF waste acceptance criteria are met and give final approval for acceptance of the waste stream.

7.0 RECORDS

All records generated during this sampling and analysis campaign (e.g., field notes, radiological surveys) will be managed per project Records Inventory Disposition Schedule.

8.0 REFERENCES

01-SFO-051, 2001, *Completion of Waste Designation for K Basin Sludge Waste Streams*, (letter to D. R. Sherwood, EPA and M. A. Wilson, WDOE, March 27), U.S. Department of Energy, Richland Operations Office, Richland, Washington.

DFSNW-SSPM-001, *Sampling Services Procedure Manual*, Duratek Federal Services, Inc., Northwest Operations, Richland, Washington.
SP 1-1, "Chain of Custody"
SP 2-5, "Laboratory Cleaning of Sampling Equipment"
SP 7-1, "Drum Sampling/Containerized Material Sampling"

DOE/RL-96-68, 1996, *Hanford Analytical Services Quality Assurance Requirements Documents*, U.S. Department of Energy, Richland Operations Office, Richland, Washington.

DOE/RL-99-89, 2001, *Remedial Design Report and Remedial Action Work Plan for the K Basins Interim Remedial Action*, Rev. 1, U.S. Department of Energy, Richland Operations Office, Richland, Washington.

Ecology 94-05-001, 2001, *Dangerous Waste Portion of the Resource Conservation and Recovery Act Permit for the Treatment, Storage, and Disposal of Dangerous Waste*, Permit No. WA7890008967, Rev. 7, Washington State Department of Ecology, Kennewick, Washington.

FH, 2000, *Spent Nuclear Fuel Project Administrative Procedure*, OP-2-025-01 "Basin Water Quality Control," Fluor Hanford, Inc., Richland, Washington.

FH-0100738, 2001, *Completion of Waste Designation for K Basin Sludge Waste Streams*, (letter to P. G. Loscoe, RL, February 7), Fluor Hanford, Inc., Richland, Washington.

HNF-1728, 1998, *Analysis of Sludge from Hanford K West Basin Canisters*, Rev. 0, Fluor Hanford, Inc., Richland, Washington.

HNF-3172, 2001, *Liquid Waste Processing Facilities Waste Acceptance Criteria*, Rev. 1, Fluor Hanford, Inc., Richland, Washington.

HNF-6495, 2001, *Sampling and Analysis Plan for K Basins' Debris*, Rev. 1, Fluor Hanford, Inc., Richland, Washington.

HNF-SD-WM-SAR-062, 2000, *K Basins Safety Analysis Report*, Rev. 4-B, Fluor Hanford, Inc., Richland, Washington.

RCRA, *Resource Conservation and Recovery Act of 1976*, 42 USC 6901 et seq.

ST 4500, 2000, *State Waste Discharge Permit Number ST 4500*, State of Washington Department of Ecology, Kennewick, Washington.

TSCA, *Toxic Substances Control Act of 1976*, 15 USC 2601 et seq.

WAC 173-303, "Dangerous Waste Regulations," *Washington Administrative Code*, as amended.

WMP-200, *Fluor Hanford Waste Management Project Procedures*, Section 3.12, "Chain of Custody for Environmental Media and Waste Samples," Rev. 2, Waste Management Project, Richland, Washington.